Basic equipment

From model year 2001

Main fuse

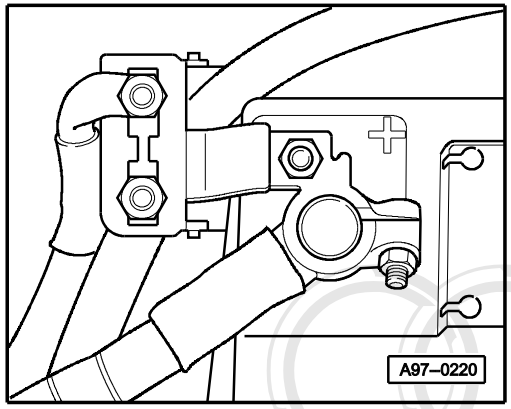

3-point relay carrier (in footwell)

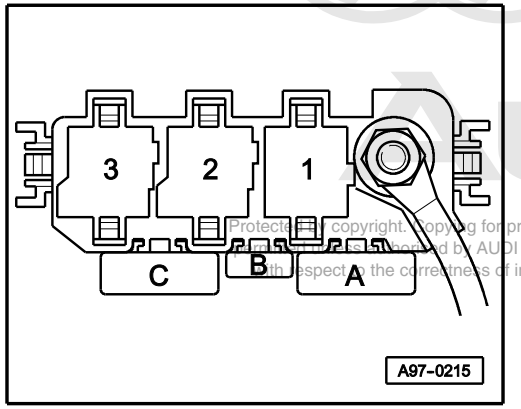

Position of fuses:

C – Securing system for electric steering

9-point relay carrier (in dash panel)

Fuse box

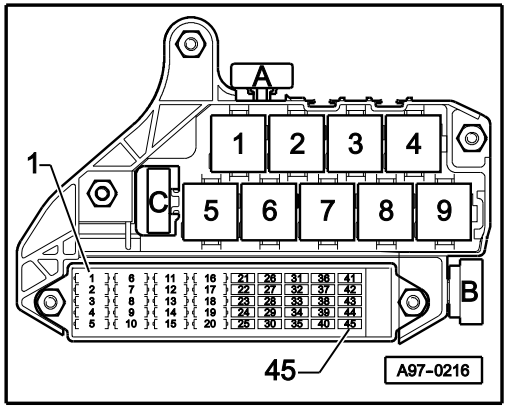

Position of relays:

3 - Brake light suppression relay (J508)

5 - Dual tone horn relay (J4)

9 - X contact relief relay (J59)

Fuse colours

30 A – green
25 A – white
20 A – yellow
15 A – blue
10 A – red
7.5A – orange
5A – beige

Protected by copyright. Copying for private or commercial purposes, in part or in whole, is not permitted unless authorised by AUDI AG. AUDI AG does not guarantee or accept any liability with respect to the correctness of information in this document. Copyright by AUDI AG.

6+6-point relay carrier (in footwell)

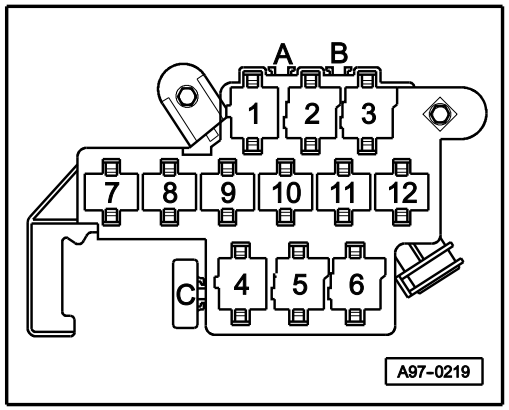

Position of relays:

2
3 Automatic intermittent wash/wipe relay (J31)

Protected by copyright. Copying for private or commercial purposes, in part or in whole, is not permitted unless authorised by AUDI AG. AUDI AG does not guarantee or accept any liability with respect to the correctness of information in this document. Copyright by AUDI AG.

Earth connections

3	Earth strap, engine - body
44	Earth point, lower part of left A-pillar
50	Earth point, on left luggage compartment
52	Earth point, in tailgate/boot lid, left
98	Earth connection, in tailgate/boot lid wiring harness
119	Earth connection -1-, in headlight wiring harness
179	Earth connection, in left headlight wiring harness
284	Earth connection -6-, in interior wiring harness

Protected by copyright. Copying for private or commercial purposes, in part or in whole, is not permitted unless authorised by AUDI AG. AUDI AG does not guarantee or accept any liability with respect to the correctness of information in this document. Copyright by AUDI AG.

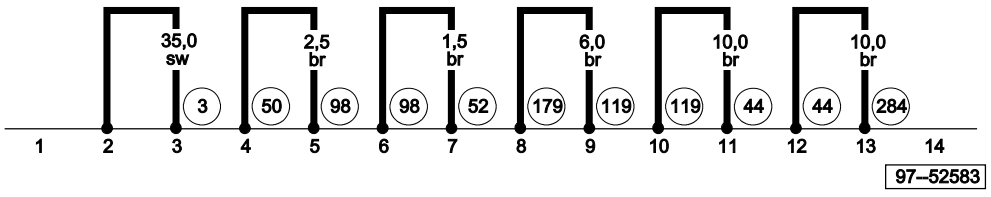

ws	=	white
sw	=	black
ro	=	red
br	=	brown
gn	=	green
bl	=	blue
gr	=	grey
li	=	purple
ge	=	yellow
or	=	orange
rs	=	pink

Earth connections

43	Earth point, lower part of right A pillar
50	Earth point, on left luggage compartment
176	Earth connection, in right headlight wiring harness
238	Earth connection -1-, in interior wiring harness
249	Earth connection -2-, in interior wiring harness
277	Earth connection -3-, in interior wiring harness
279	Earth connection -5-, in interior wiring harness
284	Earth connection -6-, in interior wiring harness

Protected by copyright. Copying for private or commercial purposes, in part or in whole, is not permitted unless authorised by AUDI AG. AUDI AG does not guarantee or accept any liability with respect to the correctness of information in this document. Copyright by AUDI AG.

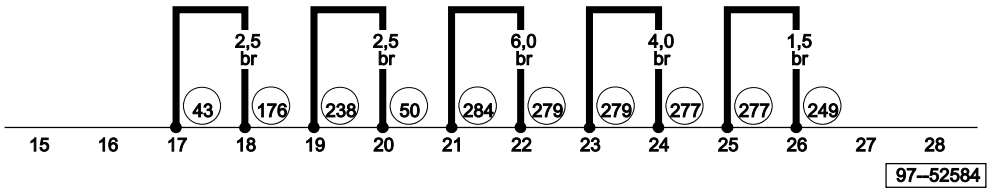

ws	=	white
sw	=	black
ro	=	red
br	=	brown
gn	=	green
bl	=	blue
gr	=	grey
li	=	purple
ge	=	yellow
or	=	orange
rs	=	pink

Ignition/starter switch, X contact relief relay

B	Starter
D	Ignition/starter switch
J59	X contact relief relay
T17b	17-pin connector, white, in footwell, front left
249	Earth connection -2-, in interior wiring harness
A21	Connection (86s), in dash panel wiring harness
A86	Connection (50a), in dash panel wiring harness
B138	Positive (+) connection -1- (x), in interior wiring harness
*	Applies to diesel engines only
**	Applies to fuel injection engines only
***	Only models with heated washer jets

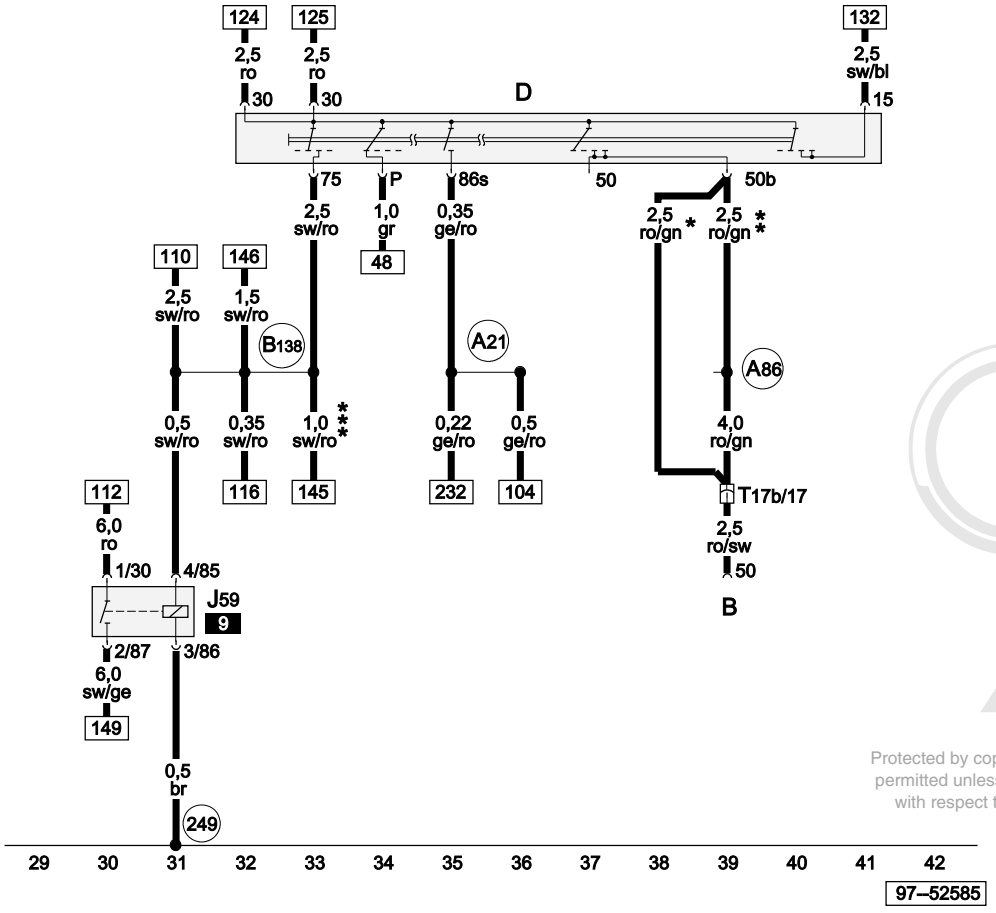

ws = white
sw = black
ro = red
br = brown
gn = green
bl = blue
gr = grey
li = purple
ge = yellow
or = orange
rs = pink

Protected by copyright. Copying for private or commercial purposes, in part or in whole, is not permitted unless authorised by AUDI AG. AUDI AG does not guarantee or accept any liability with respect to the correctness of information in this document. Copyright by AUDI AG.

Lighting switch, steering column switch - left

E1	Lighting switch
E2	Turn signal switch
E4	Headlight dipper/flasher switch
E19	Parking light switch
E23	Front and rear fog light switch
E27	Side light switch
L9	Lighting switch light bulb
L40	Rear fog light switch bulb
249	Earth connection -2-, in interior wiring harness
B9	Connection (56), in steering column switch wiring harness
B139	Connection (PLL), in interior wiring harness
B140	Connection (PLR), in interior wiring harness

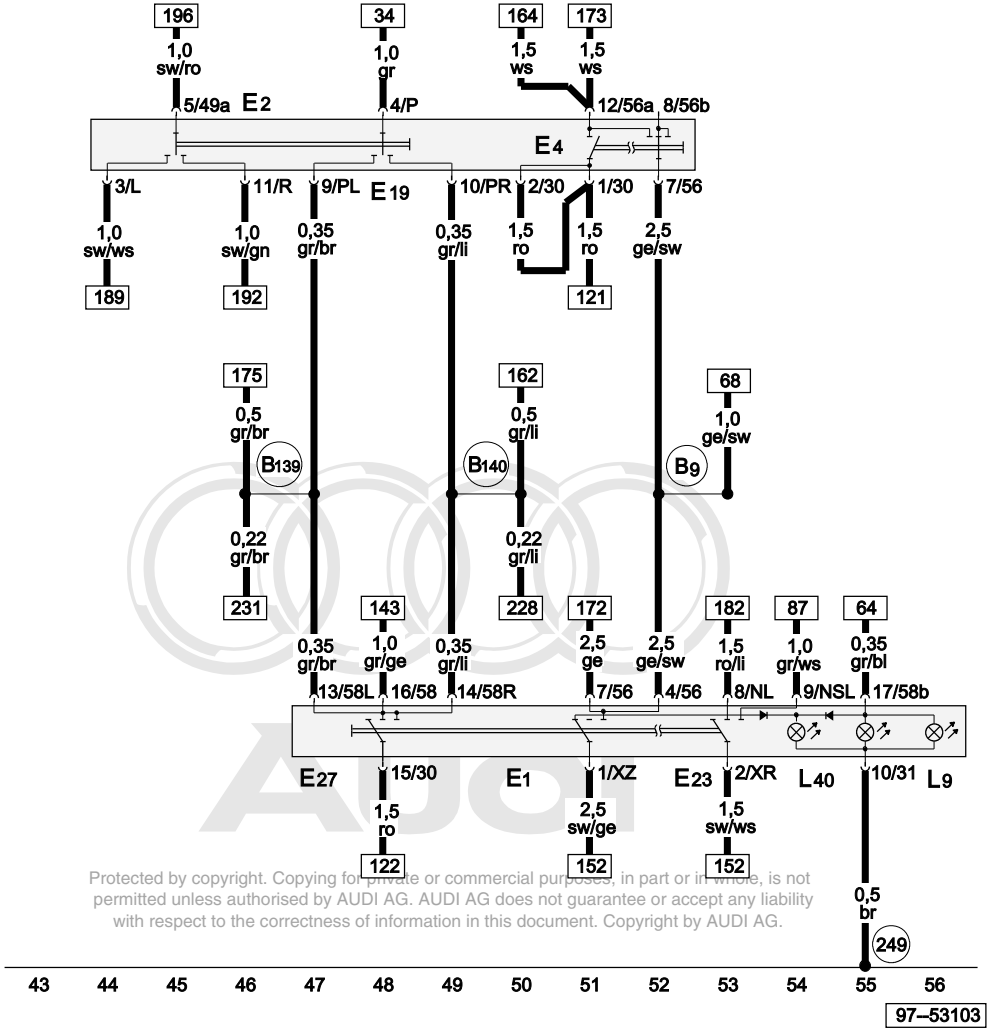

Protected by copyright. Copying for private or commercial purposes, in part or in whole, is not permitted unless authorised by AUDI AG. AUDI AG does not guarantee or accept any liability with respect to the correctness of information in this document. Copyright by AUDI AG.

ws	=	white
sw	=	black
ro	=	red
br	=	brown
gn	=	green
bl	=	blue
gr	=	grey
li	=	purple
ge	=	yellow
or	=	orange
rs	=	pink

Switches and instruments - lighting control, headlight range control adjuster

E20	Switches and instruments, lighting control
E102	Headlight range control adjuster
L54	Headlight range control adjuster light bulb
249	Earth connection -2-, in interior wiring harness
269	Earth connection (sender earth) -1-, in dash panel wiring harness
B145	Positive (+) connection (58b), in interior wiring harness
*	Models without air conditioner

Protected by copyright. Copying for private or commercial purposes, in part or in whole, is not permitted unless authorised by AUDI AG. AUDI AG does not guarantee or accept any liability with respect to the correctness of information in this document. Copyright by AUDI AG.

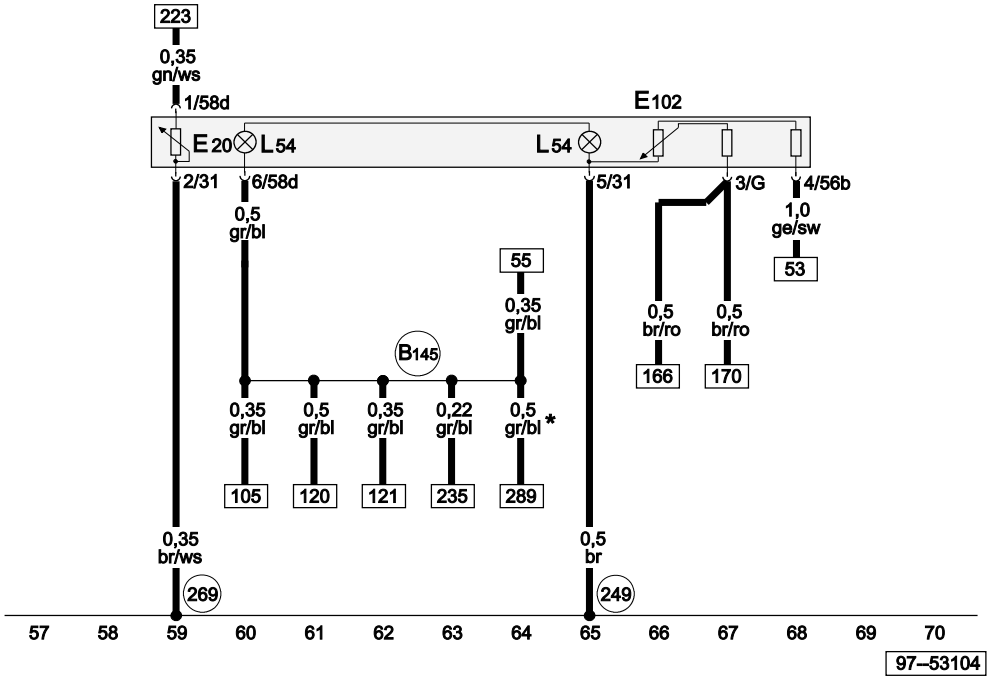

ws	=	white
sw	=	black
ro	=	red
br	=	brown
gn	=	green
bl	=	blue
gr	=	grey
li	=	purple
ge	=	yellow
or	=	orange
rs	=	pink

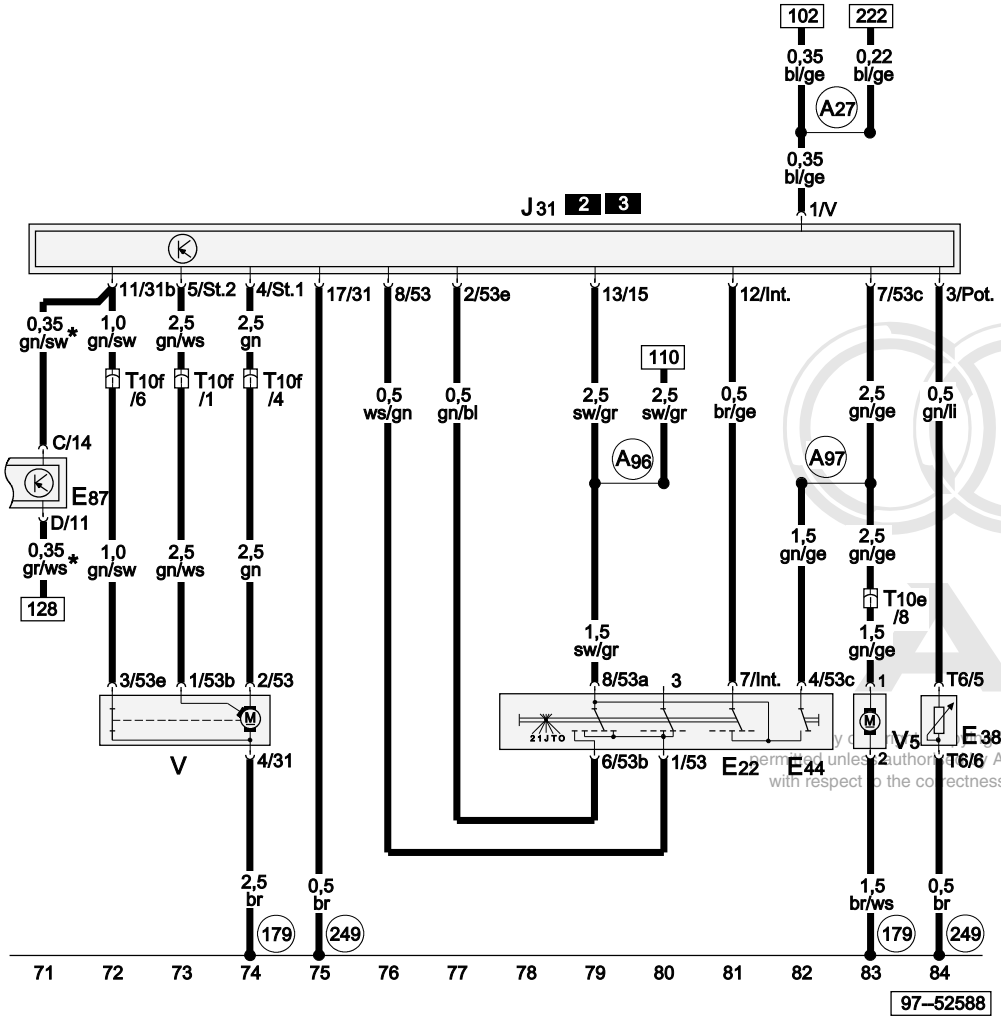

Wiper/washer system

E22	Intermittent wiper switch
E38	Intermittent wiper control
E44	Windscreen washer pump switch
E87	Control and display unit for air conditioner
J31	Automatic intermittent wash/wipe relay
T6	6-pin connector, brown, behind steering column switch trim
T10e	10-pin connector, red, connector point, A pillar, left
T10f	10-pin connector, blue, connector point, A pillar, left
V	Windscreen wiper motor
V5	Windscreen washer pump
179	Earth connection, in left headlight wiring harness
249	Earth connection -2-, in interior wiring harness
A27	Connection (speed signal), in dash panel wiring harness
A96	Connection (53a), in dash panel wiring harness
A97	Connection (53), in dash panel wiring harness
*	Only models with air conditioner

ws	=	white
sw	=	black
ro	=	red
br	=	brown
gn	=	green
bl	=	blue
gr	=	grey
li	=	purple
ge	=	yellow
or	=	orange
rs	=	pink

Copyright by AUDI AG. Reproduction, duplication or transmission to third parties for private or commercial purposes, in part or in whole, is not permitted unless authorized by AUDI AG. AUDI AG does not guarantee or accept any liability with respect to the correctness of information in this document. Copyright by AUDI AG.

Tail lights, brake lights, reversing lights, rear fog light, number plate light

F	Brake light switch
F4	Reversing light switch
J508	Brake light suppression relay
L46	Rear fog light bulb, left
M2	Tail light bulb, right
M4	Tail light bulb, left
M6	Turn signal bulb, rear left
M8	Turn signal bulb, rear right
M9	Brake light bulb, left
M10	Brake light bulb, right
M16	Reversing light bulb, left
M17	Reversing light bulb, right
M25	High level brake light bulb
T17e	17-pin connector, blue, in footwell, front left
X	Number plate light
98	Earth connection, in tailgate wiring harness
238	Earth connection -1-, in interior wiring harness
A87	Connection (RF (reversing light)), in dash panel wiring harness
B131	Connection (54), in interior wiring harness
B132	Connection (number plate light), in interior wiring harness
B185	Connection -2- (54), in interior wiring harness
W1	Positive (+) connection (54), in rear wiring harness

Protected by copyright. Copying for private or commercial purposes, in part or in whole, is not permitted unless authorised by AUDI AG. AUDI AG does not guarantee or accept any liability with respect to the correctness and completeness of this document's contents.

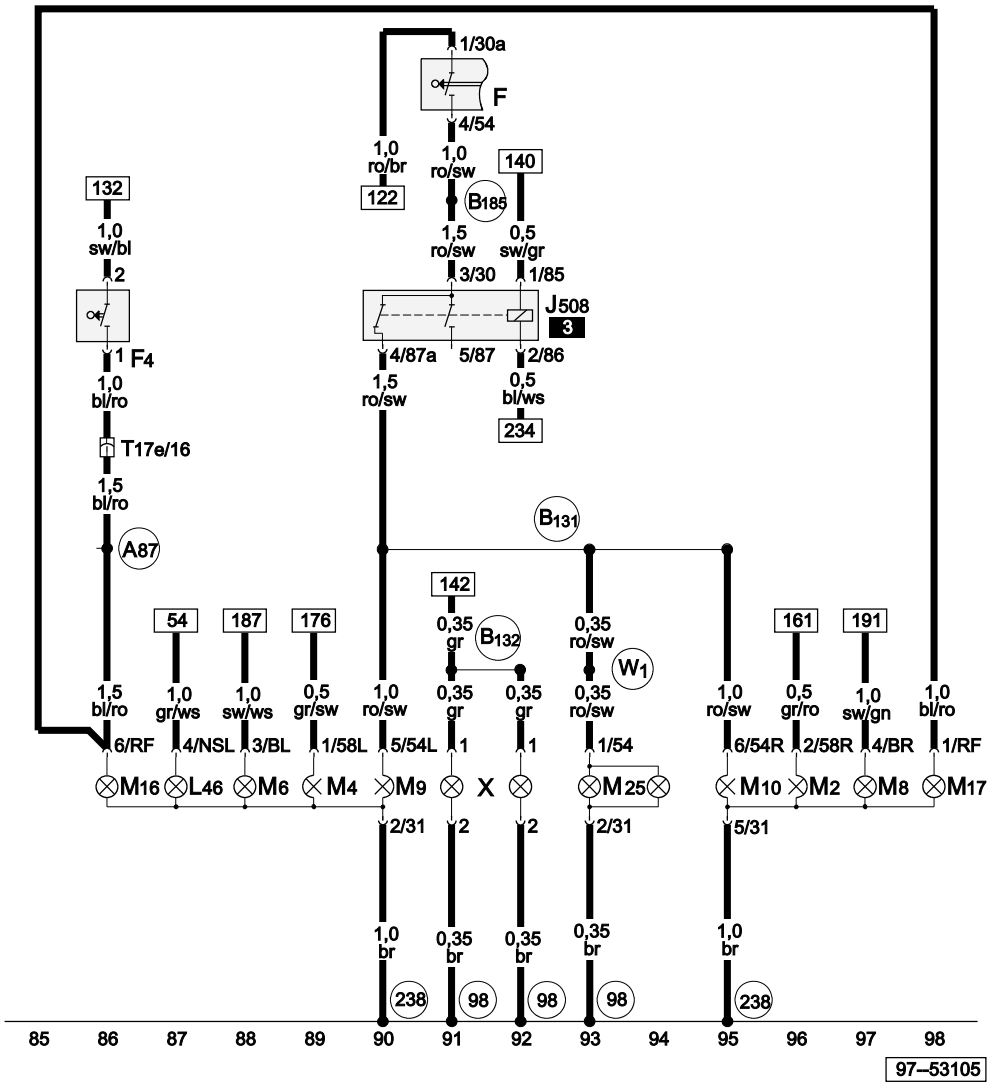

ws	=	white
sw	=	black
ro	=	red
br	=	brown
gn	=	green
bl	=	blue
gr	=	grey
li	=	purple
ge	=	yellow
or	=	orange
rs	=	pink

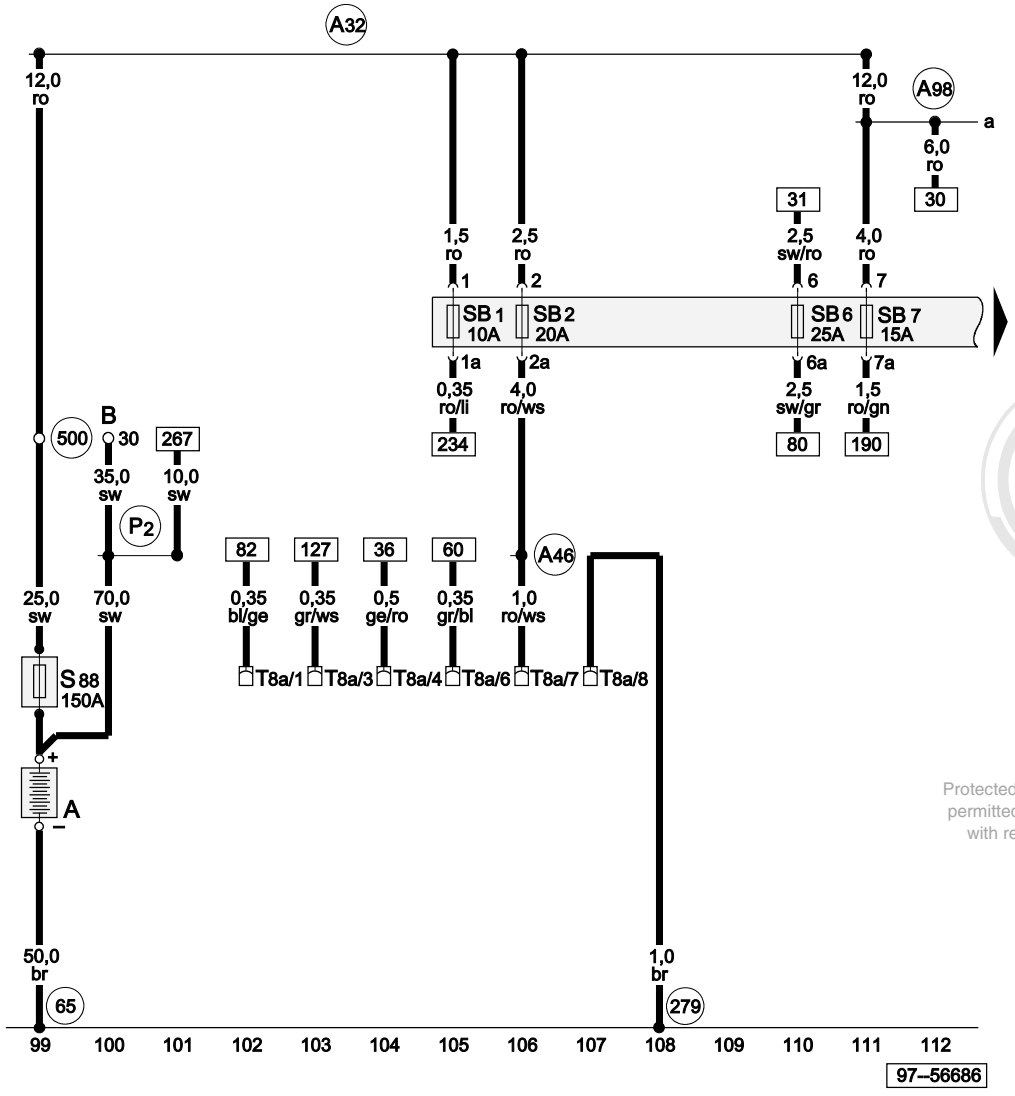

Fuse box, provision for radio

A	Battery
B	Starter
S88	Strip fuse
SB1	Fuse -1- on fuse box
SB2	Fuse -2- on fuse box
SB6	Fuse -6- on fuse box
SB7	Fuse -7- on fuse box
T8a	8-pin connector, black, radio connector III
65	Earth point, left longitudinal member, rear, between B and C pillar
279	Earth connection -5-, in interior wiring harness
500	Screw connection -1- (30), on relay plate
A32	Positive (+) connection (30), in dash panel wiring harness
A46	Positive (+) connection (30 - from radio), in dash panel wiring harness
A98	Positive (+) connection -4- (30), in dash panel wiring harness
P2	Positive (+) connection (30), in battery wiring harness

Protected by copyright. Copying for private or commercial purposes, in part or in whole, is not permitted unless authorised by AUDI AG. AUDI AG does not guarantee or accept any liability with respect to the correctness of information in this document. Copyright by AUDI AG.

ws	=	white
sw	=	black
ro	=	red
br	=	brown
gn	=	green
bl	=	blue
gr	=	grey
li	=	purple
ge	=	yellow
or	=	orange
rs	=	pink

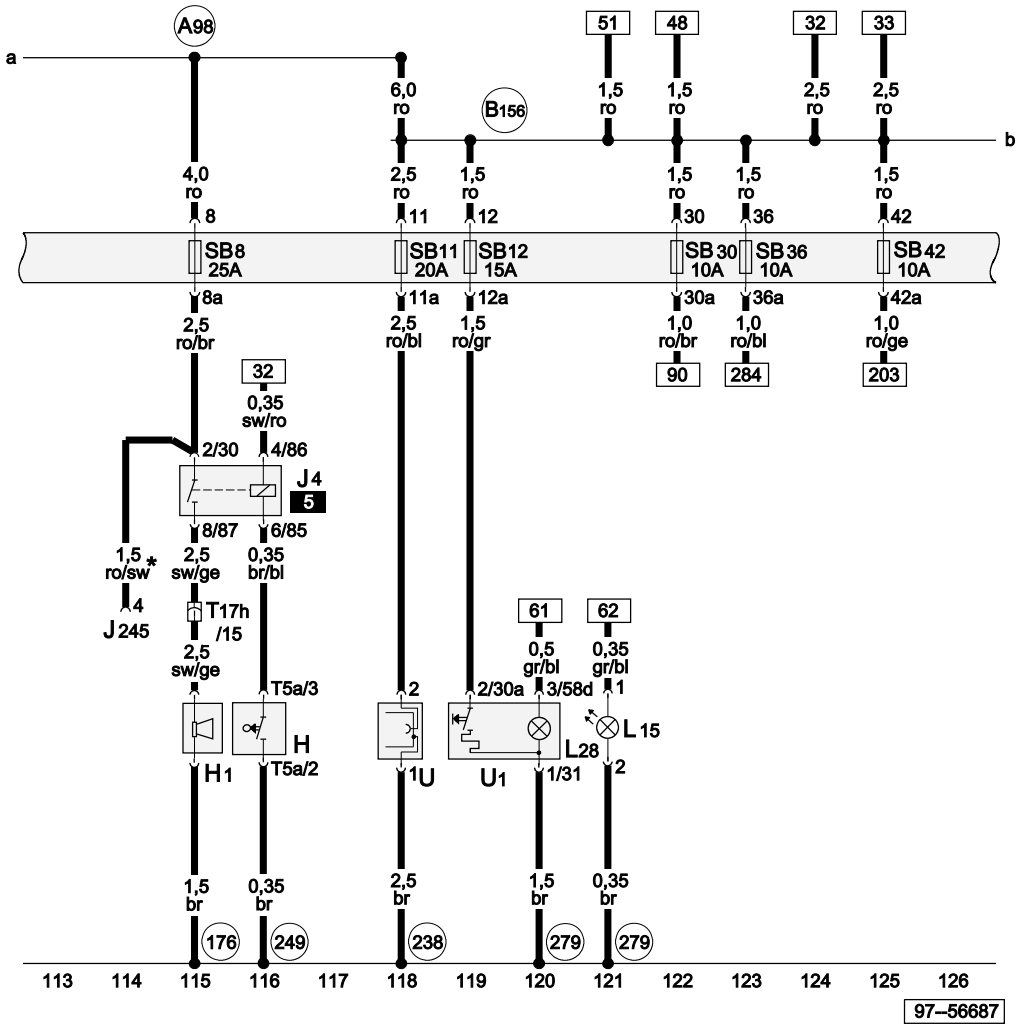

Fuse box, horn, socket, cigarette lighter

H	Horn plate
H1	Horn/dual tone horn
J4	Dual tone horn relay
J245	Sliding sunroof adjustment control unit
L15	Ashtray light bulb
L28	Cigarette lighter light bulb
SB8	Fuse -8- on fuse box
SB11	Fuse -11- on fuse box
SB12	Fuse -12- on fuse box
SB30	Fuse -30- on fuse box
SB36	Fuse -36- on fuse box
SB42	Fuse -42- on fuse box
T5a	5-pin connector, yellow, behind steering column switch trim
T17h	17-pin connector, green, connector point, A pillar, right
U	Socket
U1	Cigarette lighter
176	Earth connection, in right headlight wiring harness
238	Earth connection -1-, in interior wiring harness
249	Earth connection -2-, in interior wiring harness
279	Earth connection -5-, in interior wiring harness
A98	Positive (+) connection -4- (30), in dash panel wiring harness
B156	Positive (+) connection (30a), in interior wiring harness
*	Only applies to models with sliding/tilting sunroof

Protected by copyright. Copying for private or commercial purposes, in part or in whole, is not permitted unless authorised by AUDI AG. AUDI AG does not guarantee or accept any liability with respect to the correctness of information in this document. Copyright by AUDI AG.

ws	=	white
sw	=	black
ro	=	red
br	=	brown
gn	=	green
bl	=	blue
gr	=	grey
li	=	purple
ge	=	yellow
or	=	orange
rs	=	pink

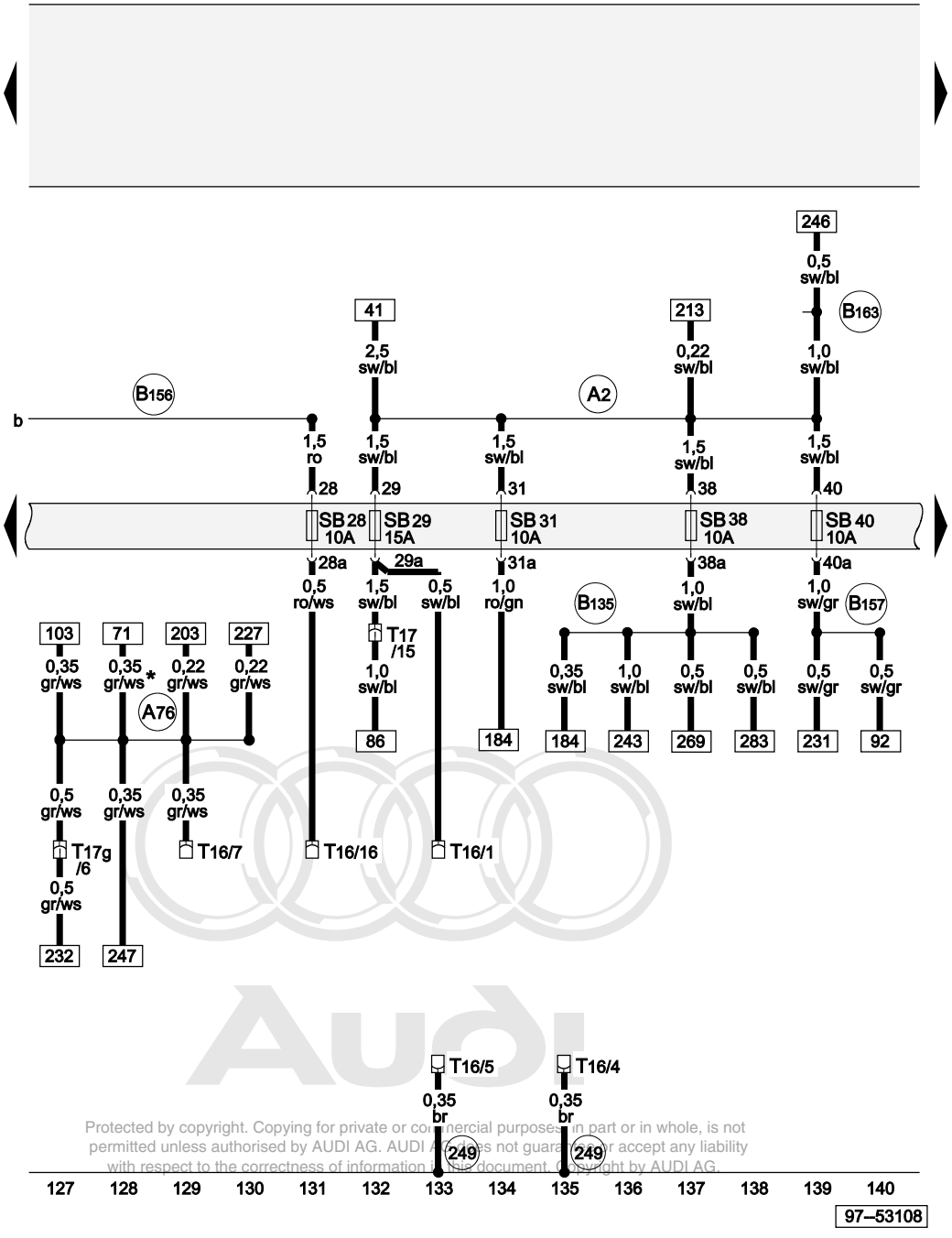

Protected by copyright. Copying for private or commercial purposes, in part or in whole, is not permitted unless authorised by AUDI AG. AUDI AG does not guarantee or accept any liability with respect to the correctness of information in this document. Copyright by AUDI AG.

ws = white
sw = black
ro = red
br = brown
gn = green
bl = blue
gr = grey
li = purple
ge = yellow
or = orange
rs = pink

Fuse box, diagnostic connector

SB28	Fuse -28- on fuse box
SB29	Fuse -29- on fuse box
SB31	Fuse -31- on fuse box
SB38	Fuse -38- on fuse box
SB40	Fuse -40- on fuse box
T16	16-pin connector, diagnostic connector, black, near fuse box
T17	17-pin connector, brown, in footwell, front left
T17g	17-pin connector, red, connector point, A pillar, left
249	Earth connection -2-, in interior wiring harness
A2	Positive (+) connection (15), in dash panel wiring harness
A76	Connection (diagnosis wire K), in dash panel wiring harness
B135	Connection -1- (15a), in interior wiring harness
B156	Positive (+) connection (30a), in interior wiring harness
B157	Positive (+) connection -3- (15a), in interior wiring harness
B163	Positive (+) connection -1- (15), in interior wiring harness
*	Only applies to models with air conditioner

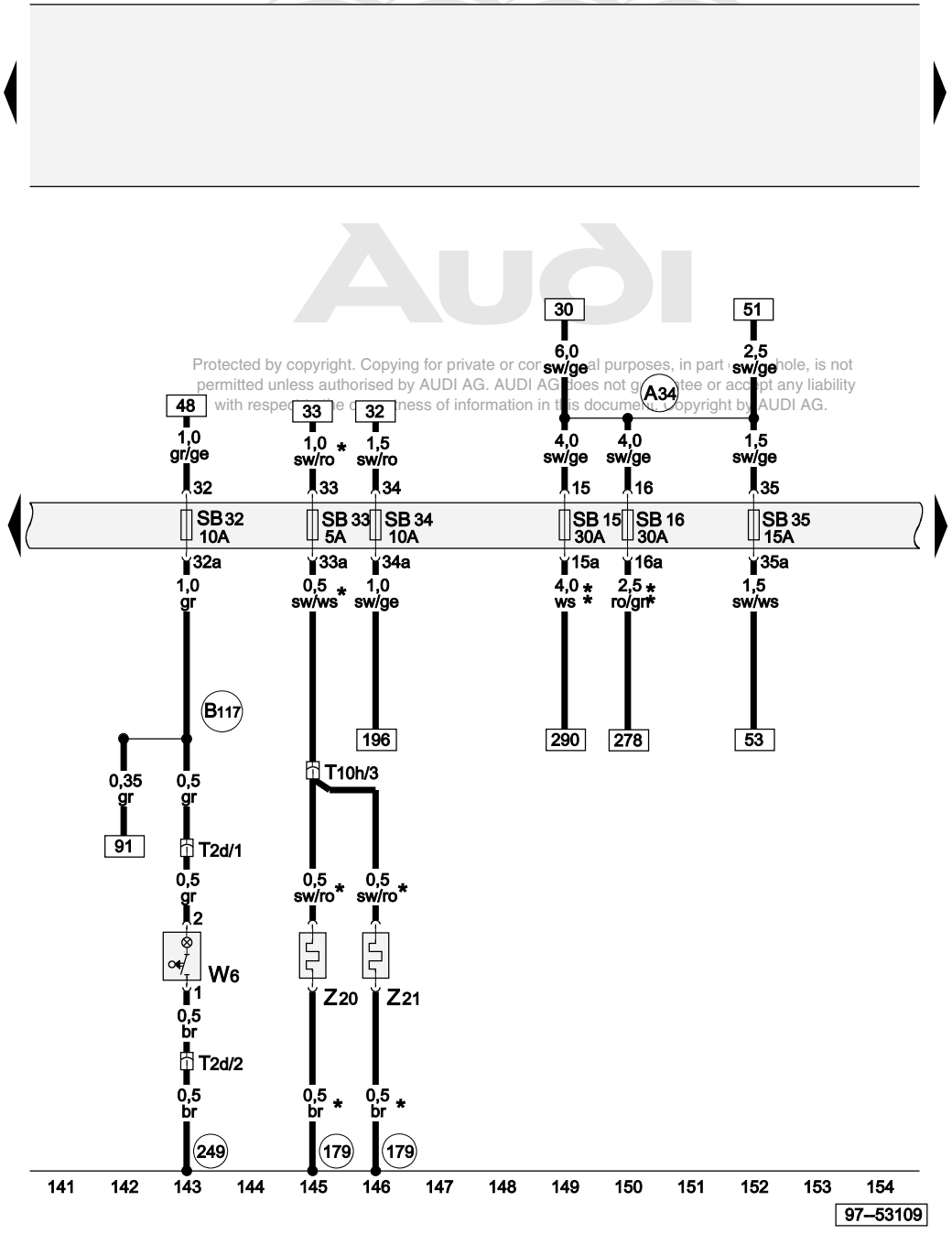

Protected by copyright. Copying for private or commercial purposes, in part or in whole, is not permitted unless authorised by AUDI AG. AUDI AG does not guarantee or accept any liability with respect to the correctness of information in this document. Copyright by AUDI AG.

ws = white
sw = black
ro = red
br = brown
gn = green
bl = blue
gr = grey
li = purple
ge = yellow
or = orange
rs = pink

Fuse box, glove box light, heated washer jets

SB15	Fuse -15- on fuse box
SB16	Fuse -16- on fuse box
SB32	Fuse -32- on fuse box
SB33	Fuse -33- on fuse box
SB34	Fuse -34- on fuse box
SB35	Fuse -35- on fuse box
T2d	2-pin connector
T10h	10-pin connector, white, connector point, A pillar, left
W6	Glove box light
Z20	Heater element, left washer jet
Z21	Heater element, right washer jet
179	Earth connection, in left headlight wiring harness
249	Earth connection -2-, in interior wiring harness
A34	Connection (75x), in dash panel wiring harness
B117	Connection (58a, right), in interior wiring harness
*	Only models with heated washer jets
**	Models without air conditioner

Fuse box, right headlight, right side turn signal, front right fog light bulb

L2	Twin filament bulb for headlight, right
L23	Fog light bulb, right
M3	Side light bulb, right
M7	Turn signal bulb, front right
M19	Side turn signal bulb, right
SB21	Fuse -21- on fuse box
SB23	Fuse -23- on fuse box
SB26	Fuse -26- on fuse box
T10i	10-pin connector, black, connector point, A pillar, right
T10l	10-pin connector, black, headlight, right
V49	Headlight range control motor, right
176	Earth connection, in right headlight wiring harness
179	Earth connection, in left headlight wiring harness
A51	Connection (56), in dash panel wiring harness
A95	Connection -1- (56a), in dash panel wiring harness
C19	Connection -1- (turn signal, right), in headlight wiring harness

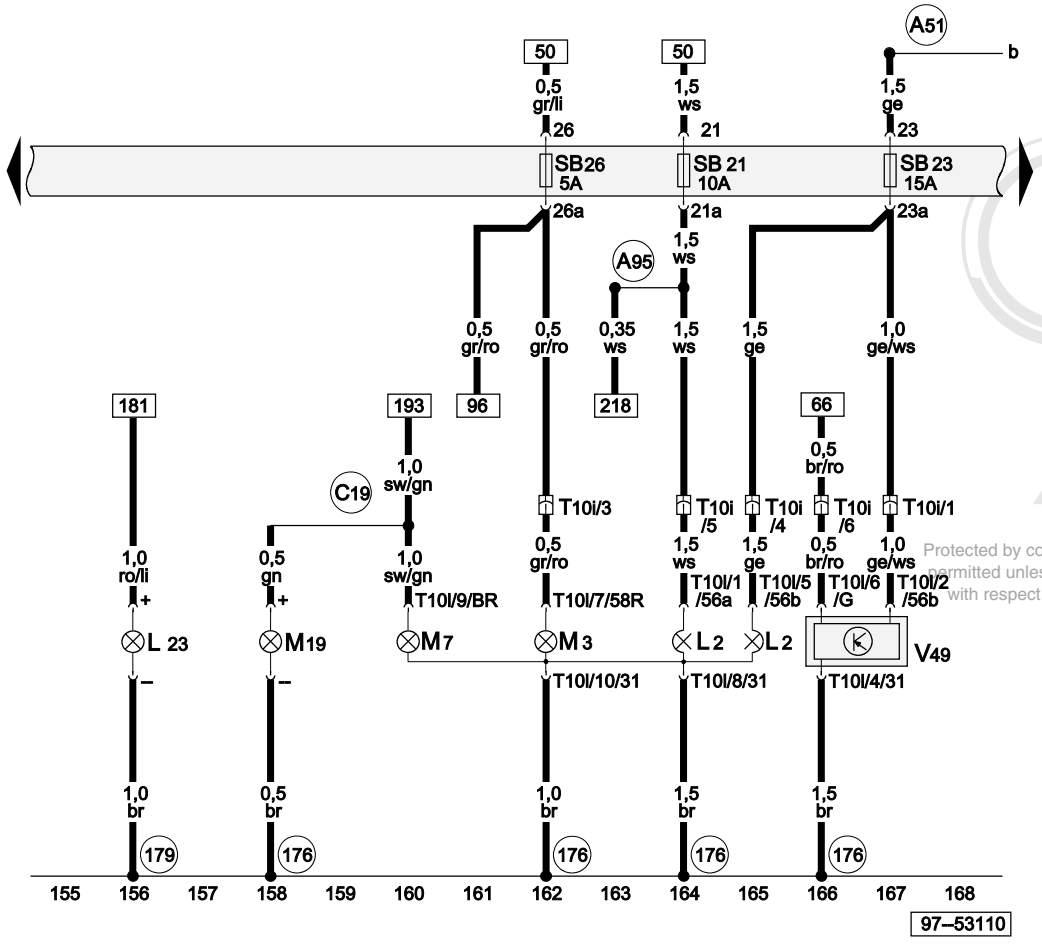

ws	=	white
sw	=	black
ro	=	red
br	=	brown
gn	=	green
bl	=	blue
gr	=	grey
li	=	purple
ge	=	yellow
or	=	orange
rs	=	pink

Protected by copyright. Copying for private or commercial purposes, in part or in whole, is not permitted unless authorised by AUDI AG. AUDI AG does not guarantee or accept any liability with respect to the correctness of information in this document. Copyright by AUDI AG.

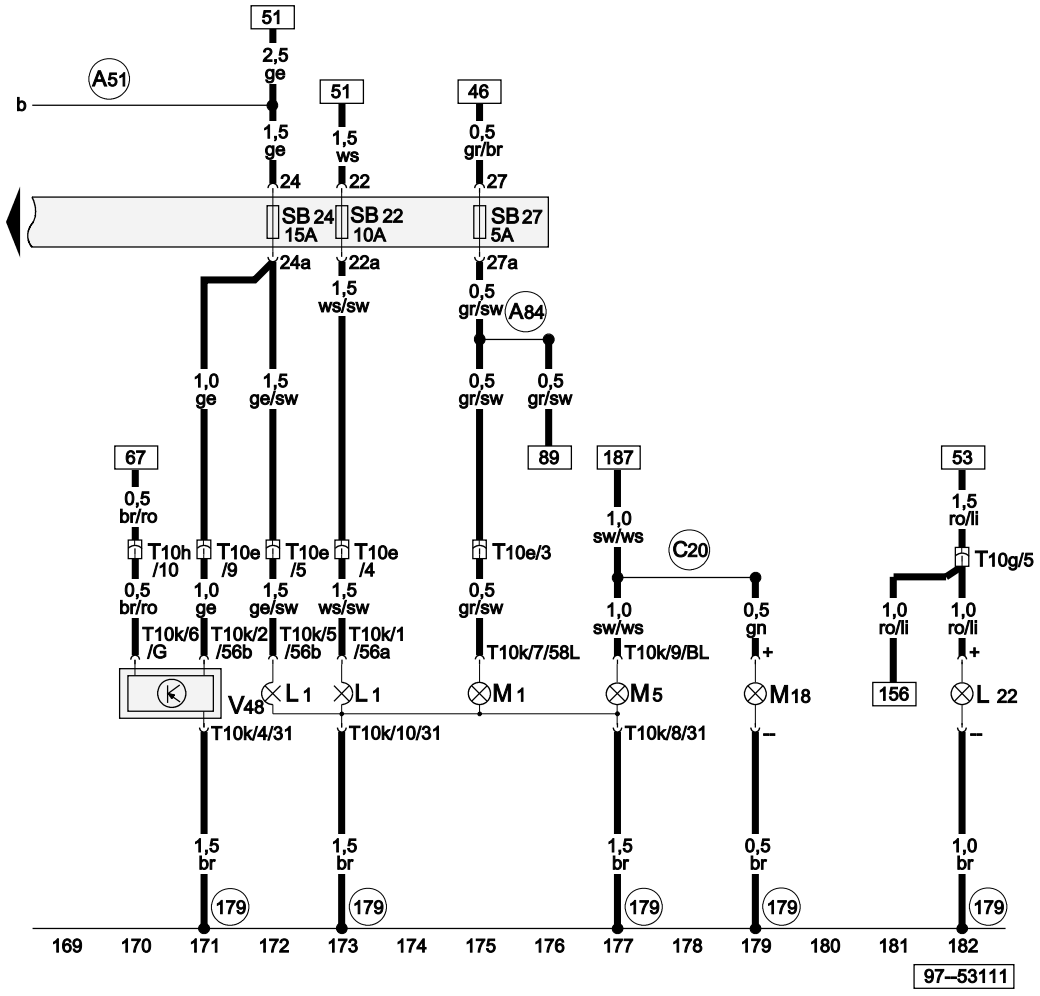

ws = white
sw = black
ro = red
br = brown
gn = green
bl = blue
gr = grey
li = purple
ge = yellow
or = orange
rs = pink

Fuse box, left headlight, left side turn signal, front left fog light bulb

L1	Twin filament bulb for headlight, left
L22	Fog light bulb, left
M1	Side light bulb, left
M5	Turn signal bulb, front left
M18	Side turn signal bulb, left
SB22	Fuse -22- on fuse box
SB24	Fuse -24- on fuse box
SB27	Fuse -27- on fuse box
T10e	10-pin connector, red, connector point, A pillar, left
T10g	10-pin connector, grey, connector point, A pillar, left
T10h	10-pin connector, white, connector point, A pillar, left
T10k	10-pin connector, black, headlight, left
V48	Headlight range control motor, left
179	Earth connection, in left headlight wiring harness
A51	Connection (56), in dash panel wiring harness
A84	Connection (58L), in dash panel wiring harness
C20	Connection (turn signal, left), in headlight wiring harness

...tected by copyright. Copying for private or commercial purposes, in part or in whole, is not ...rmitted unless authorized by AUDI AG. AUDI AG does not guarantee or accept any liability with respect to the correctness of information in this document. Copyright by AUDI AG.

Turn signals and hazard warning lights

E3	Hazard warning light switch
E45	Cruise control system switch
J2	Hazard warning light relay
T10e	10-pin connector, red, connector point, A pillar, left
T10i	10-pin connector, black, connector point, A pillar, right
249	Earth connection -2-, in interior wiring harness
A125	Connection (crash signal), in dash panel wiring harness
B149	Positive (+) connection -2- (15a), in interior wiring harness
B152	Connection (TSL), in interior wiring harness
B153	Connection (TSR), in interior wiring harness
*	Only models with cruise control system

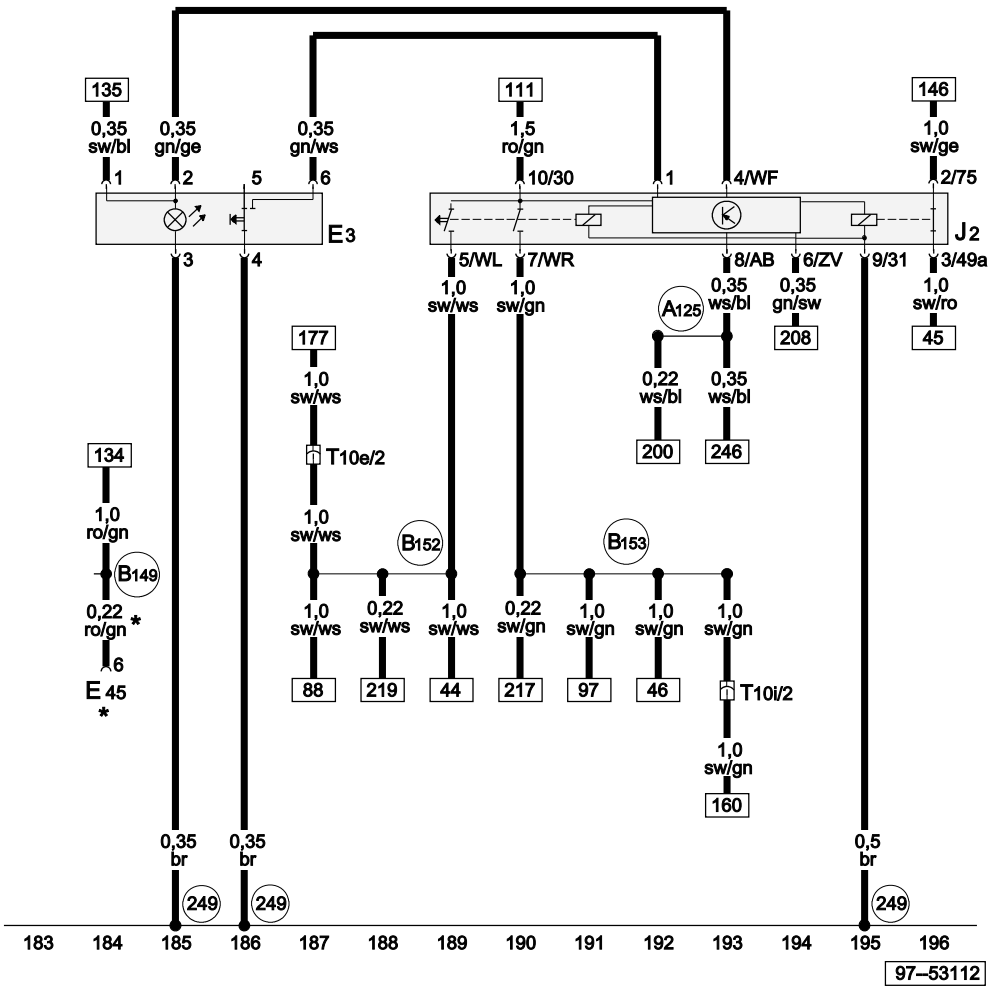

ws = white
sw = black
ro = red
br = brown
gn = green
bl = blue
gr = grey
li = purple
ge = yellow
or = orange
rs = pink

Protected by copyright. Copying for private or commercial purposes, in part or in whole, is not permitted unless authorised by AUDI AG. AUDI AG does not guarantee or accept any liability with respect to the correctness of information in this document. Copyright by AUDI AG.

Convenience system central control unit, luggage compartment light on left-hand side, handbrake warning switch

F9	Handbrake warning switch
J393	Convenience system central control unit
W18	Luggage compartment light, left
238	Earth connection -1-, in interior wiring harness
284	Earth connection -6-, in interior wiring harness
A24	Connection (brake system monitoring), in dash panel wiring harness
A29	Connection (interior light), in dash panel wiring harness
B115	Positive (+) connection (30, central electrics), in interior wiring harness
B229	Connection (high bus), in interior wiring harness
B230	Connection (low bus), in interior wiring harness
*	Models without air conditioner

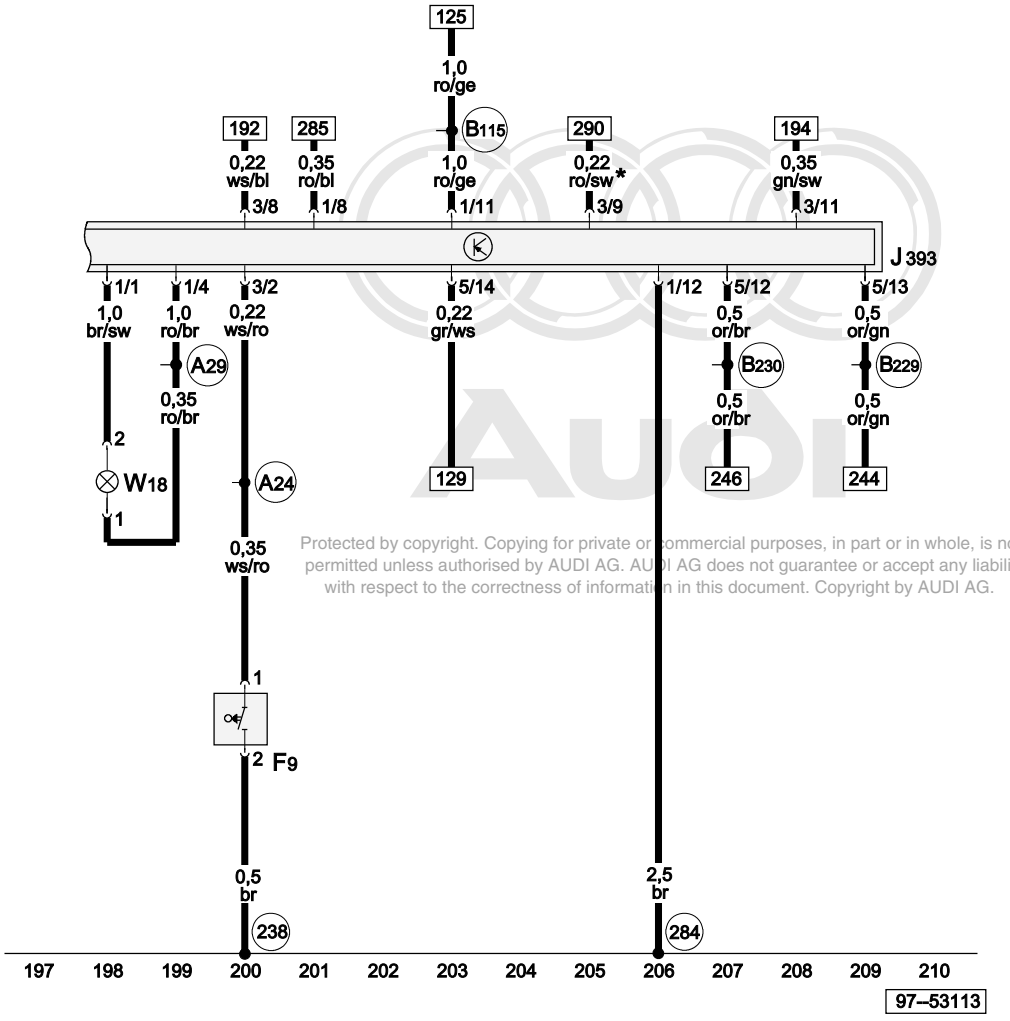

Protected by copyright. Copying for private or commercial purposes, in part or in whole, is not permitted unless authorised by AUDI AG. AUDI AG does not guarantee or accept any liability with respect to the correctness of information in this document. Copyright by AUDI AG.

ws	=	white
sw	=	black
ro	=	red
br	=	brown
gn	=	green
bl	=	blue
gr	=	grey
li	=	purple
ge	=	yellow
or	=	orange
rs	=	pink

Control unit with display in dash panel insert, warning lamps

C	Alternator
F1	Oil pressure switch
J285	Control unit with display in dash panel insert
K1	Main beam warning lamp
K2	Alternator warning lamp
K14	Handbrake warning lamp
K18	Trailer operation warning lamp
K65	Left turn signal warning lamp
K86	Traction control system warning lamp
K94	Right turn signal warning lamp
K132	Electronic power control fault lamp
K134	Self-levelling suspension warning lamp
K149	Engine electronics warning lamp
T17e	17-pin connector, blue, in footwell, front left
T32	32-pin connector, blue, on dash panel insert
T32a	32-pin connector, green, on dash panel insert
249	Earth connection -2-, in interior wiring harness
B177	Connection (61), in interior wiring harness

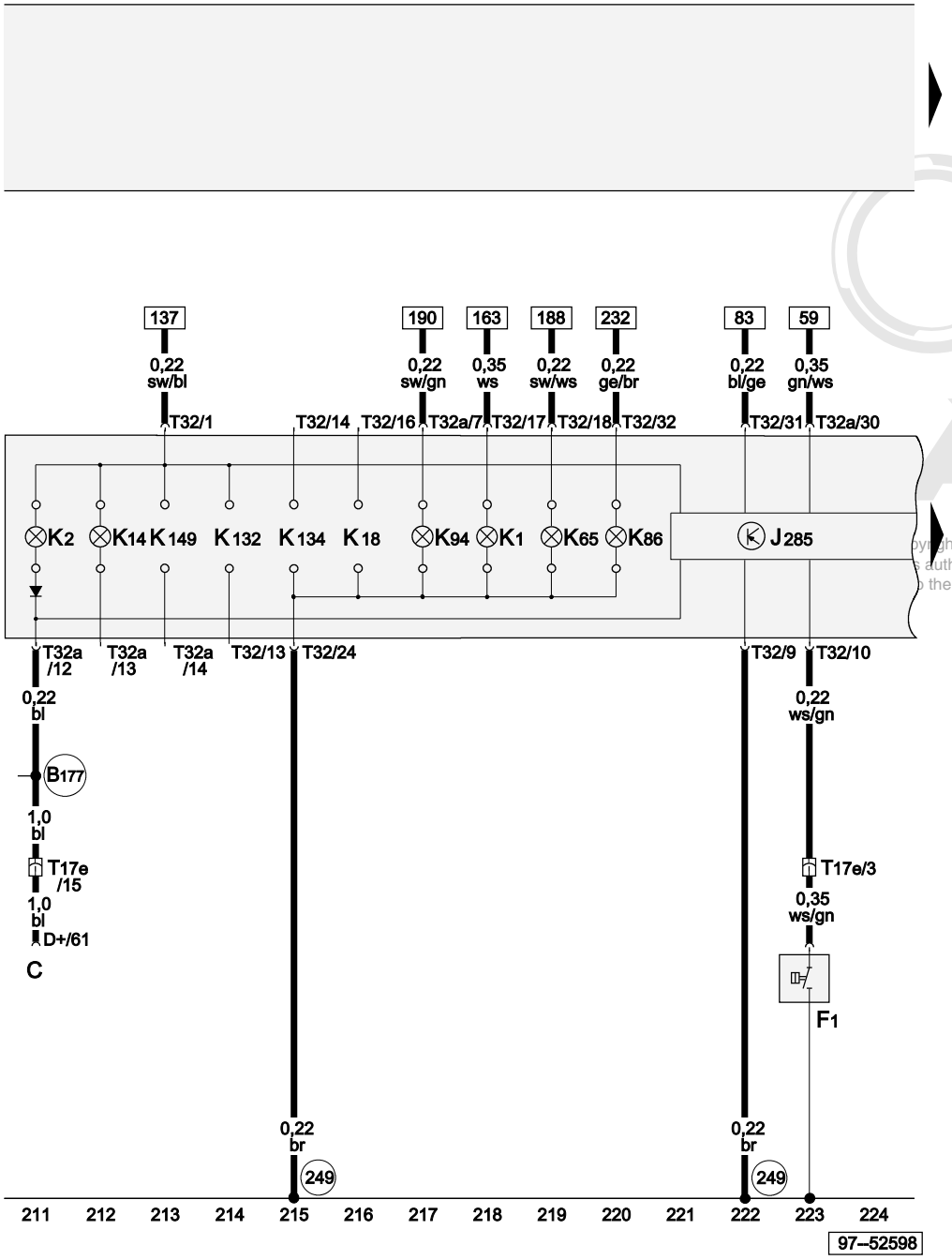

ws = white
sw = black
ro = red
br = brown
gn = green
bl = blue
gr = grey
li = purple
ge = yellow
or = orange
rs = pink

Copyright. Copying for private or commercial purposes, in part or in whole, is not permitted unless authorised by AUDI AG. AUDI AG does not guarantee or accept any liability with respect to the correctness of information in this document. Copyright by AUDI AG.

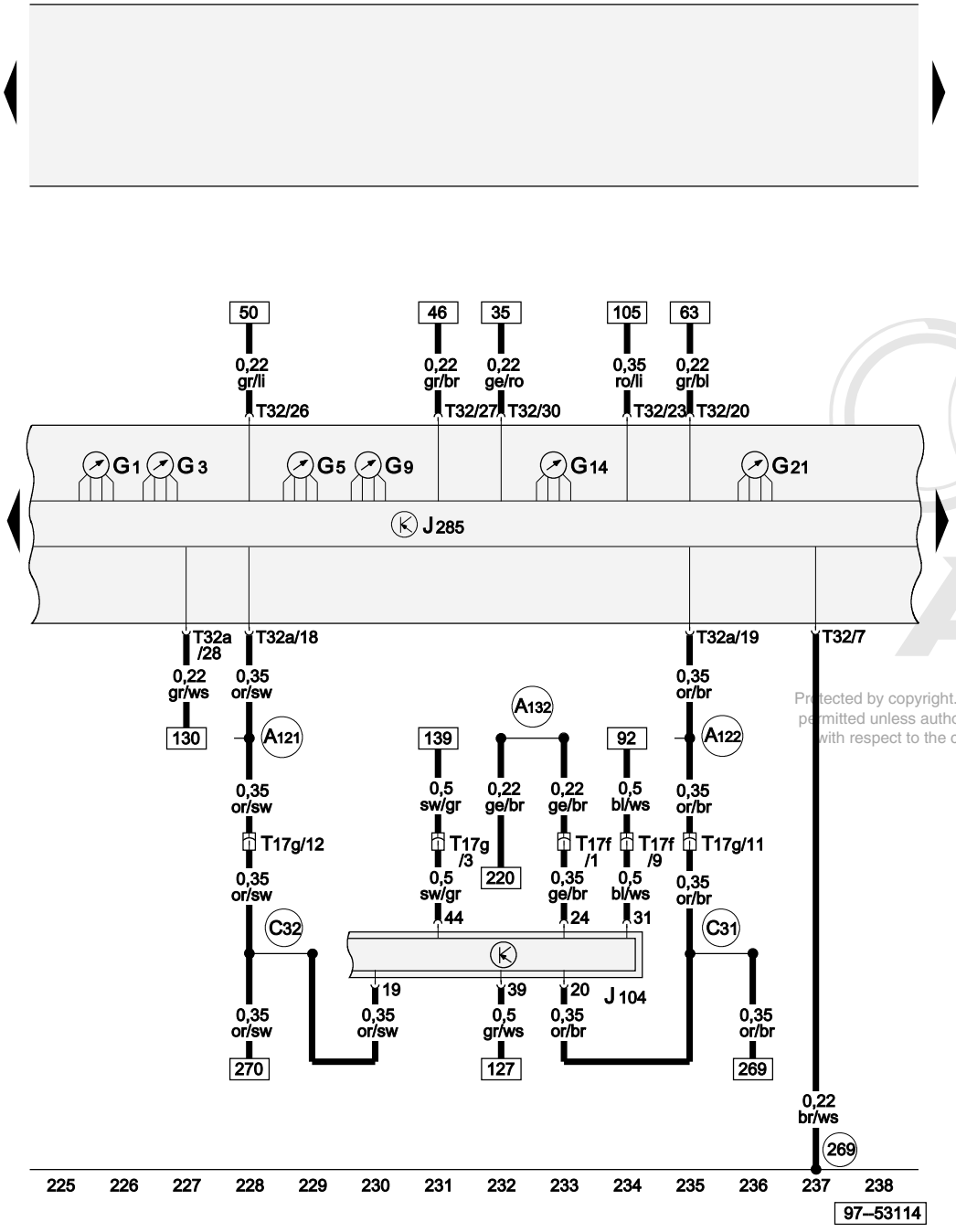

ws = white
sw = black
ro = red
br = brown
gn = green
bl = blue
gr = grey
li = purple
ge = yellow
or = orange
rs = pink

Control unit with display in dash panel insert, ABS with EDL control unit

G1	Fuel gauge
G3	Coolant temperature gauge
G5	Rev. counter
G9	Oil temperature gauge
G14	Voltmeter
G21	Speedometer
J104	ABS with EDL control unit
J285	Control unit with display in dash panel insert
T17f	17-pin connector, white, connector point, A pillar, left
T17g	17-pin connector, red, connector point, A pillar, left
T32	32-pin connector, blue, on dash panel insert
T32a	32-pin connector, green, on dash panel insert
269	Earth connection (sender earth) -1-, in dash panel wiring harness
A121	Connection (high bus), in dash panel wiring harness
A122	Connection (low bus), in dash panel wiring harness
A132	Connection (TCS/ESP), in dash panel wiring harness
C31	Connection -3-, in headlight wiring harness
C32	Connection -4-, in headlight wiring harness

Protected by copyright. Copying for private or commercial purposes, in part or in whole, is not permitted unless authorised by AUDI AG. AUDI AG does not guarantee or accept any liability with respect to the correctness of information in this document. Copyright by AUDI AG.

Belt switch - driver's side, ambient temperature sensor, oil level/oil temperature sender, airbag control unit

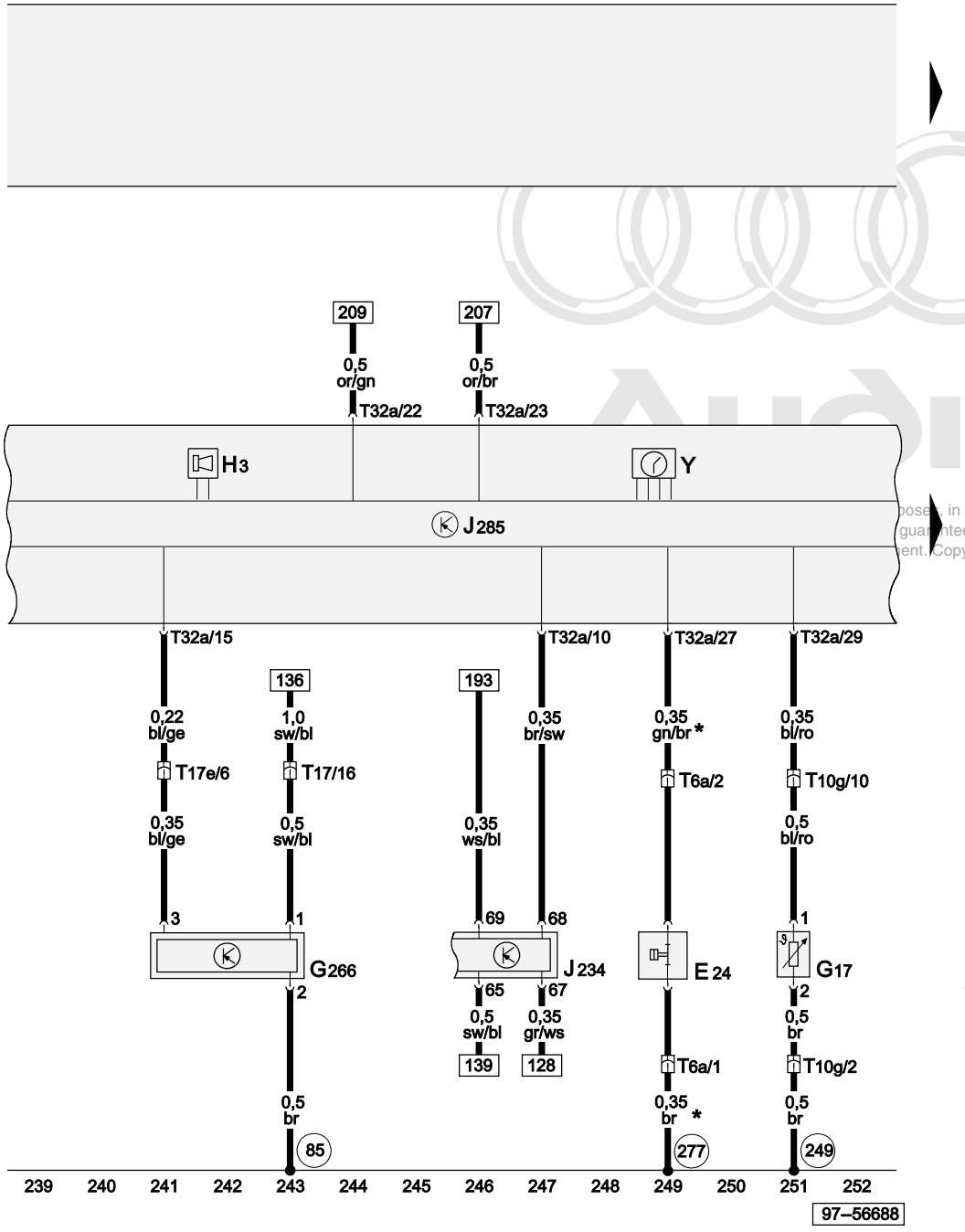

...posed, in part or in whole, is not ...guarantee or accept any liability ...ent. Copyright by AUDI AG.

E24	Belt switch, driver's side
G17	Ambient temperature sensor
G266	Oil level/oil temperature sender
H3	Buzzer/gong
J234	Airbag control unit
J285	Control unit with display in dash panel insert
T6a	6-pin connector, red, under driver's seat
T10g	10-pin connector, grey, connector point, A pillar, left
T17	17-pin connector, brown, in footwell, front left
T17e	17-pin connector, blue, in footwell, front left
T32a	32-pin connector, green, on dash panel insert
Y	Analogue clock
85	Earth connection -1-, in engine compartment wiring harness
249	Earth connection -2-, in interior wiring harness
277	Earth connection -3-, in interior wiring harness
*	Only applies to models with seat belt warning

ws	=	white
sw	=	black
ro	=	red
br	=	brown
gn	=	green
bl	=	blue
gr	=	grey
li	=	purple
ge	=	yellow
or	=	orange
rs	=	pink

Immobilizer reading coil, brake fluid level warning contact, control unit with display in dash panel insert, warning lamps

D2	Immobilizer reading coil
F34	Brake fluid level warning contact
F66	Coolant shortage indicator switch
G34	Brake lining/pad wear sender, front left
J285	Control unit with display in dash panel insert
K4	Side light warning lamp
K19	Seat belt warning system warning lamp
K47	ABS warning lamp
K75	Airbag warning lamp
K117	Immobilizer warning lamp
T10d	10-pin connector, red, radio connector IV
T10f	10-pin connector, blue, connector point, A pillar, left
T17g	17-pin connector, red, connector point, A pillar, left
T32	32-pin connector, blue, on dash panel insert
T32a	32-pin connector, green, on dash panel insert
179	Earth connection, in left headlight wiring harness
269	Earth connection (sender earth) -1-, in dash panel wiring harness
B116	Connection (58d), in interior wiring harness
C15	Connection -1-, in headlight wiring harness
*	Only applies to models without air conditioner

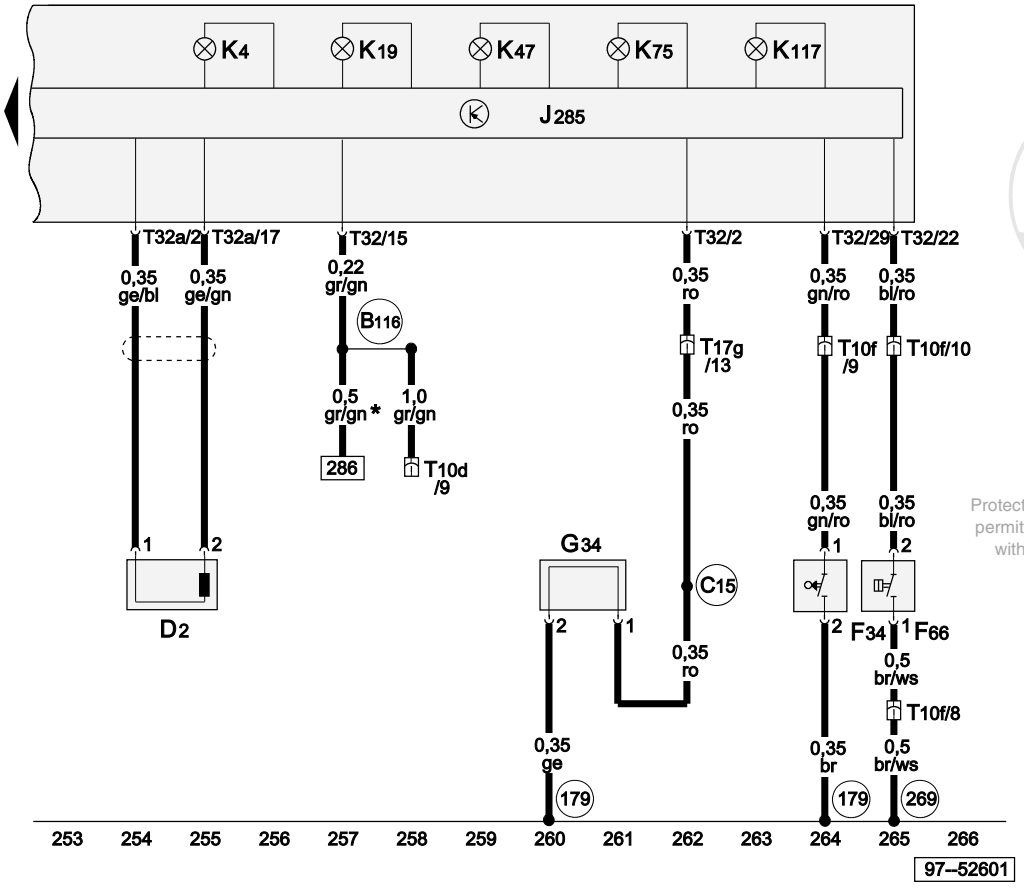

Protected by copyright. Copying for private or commercial purposes, in part or in whole, is not permitted unless authorised by AUDI AG. AUDI AG does not guarantee or accept any liability with respect to the correctness of information in this document. Copyright by AUDI AG.

ws	=	white
sw	=	black
ro	=	red
br	=	brown
gn	=	green
bl	=	blue
gr	=	grey
li	=	purple
ge	=	yellow
or	=	orange
rs	=	pink

Fresh air blower switch, power steering control unit, fresh air blower with overheating fuse series resistor

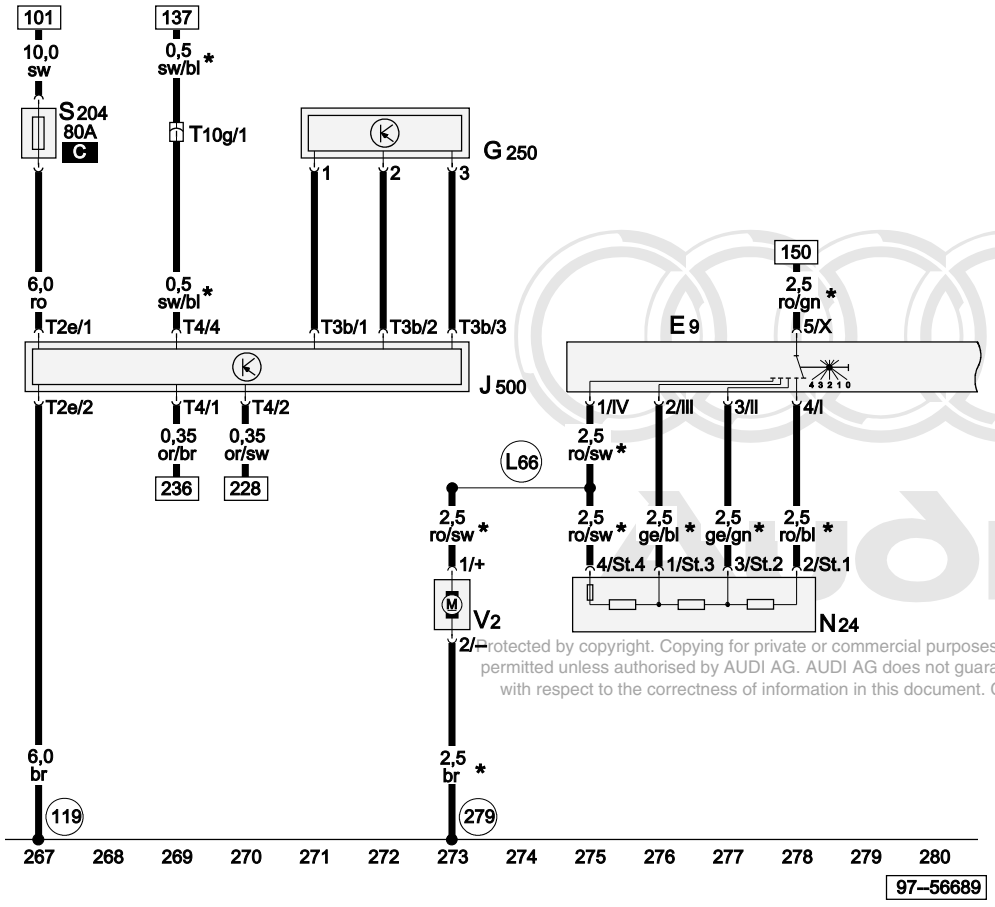

E9	Fresh air blower switch
G250	Power steering sensor
J500	Power steering control unit
N24	Fresh air blower with overheating fuse series resistor
S204	Fuse -1- (30)
T2e	2-pin connector, black, on power steering control unit
T3b	3-pin connector, on power steering control unit
T4	4-pin connector, black, on power steering control unit
T10g	10-pin connector, grey, connector point, A pillar, left
V2	Fresh air blower
119	Earth connection -1-, in headlight wiring harness
279	Earth connection -5-, in interior wiring harness
L66	Connection, in heater blower wiring harness
*	Only applies to models without air conditioner

ws	=	white
sw	=	black
ro	=	red
br	=	brown
gn	=	green
bl	=	blue
gr	=	grey
li	=	purple
ge	=	yellow
or	=	orange
rs	=	pink

Protected by copyright. Copying for private or commercial purposes, in part or in whole, is not permitted unless authorised by AUDI AG. AUDI AG does not guarantee or accept any liability with respect to the correctness of information in this document. Copyright by AUDI AG.

Fresh air blower (without air conditioner), heated rear window

E15	Heated rear window switch
E87	Control and display unit for air conditioner
E159	Fresh air/air recirculating flap switch
E288	Additional heating button (ECON)
J9	Heated rear window relay
J248	Diesel direct injection system control unit
T17e	17-pin connector, blue, in footwell, front left
V154	Fresh/recirculating air flap control motor
Z1	Heated rear window
73	Earth point, rear roof rail
277	Earth connection -3-, in interior wiring harness
B108	Earth connection, in rear right interior wiring harness
B111	Positive (+) connection -2- (30a), in interior wiring harness
B180	Connection (heated rear window), in interior wiring harness
B248	Connection -2- (heated rear window), in interior wiring harness
*	Models without air conditioner
**	Only models with diesel engine
***	with air conditioner

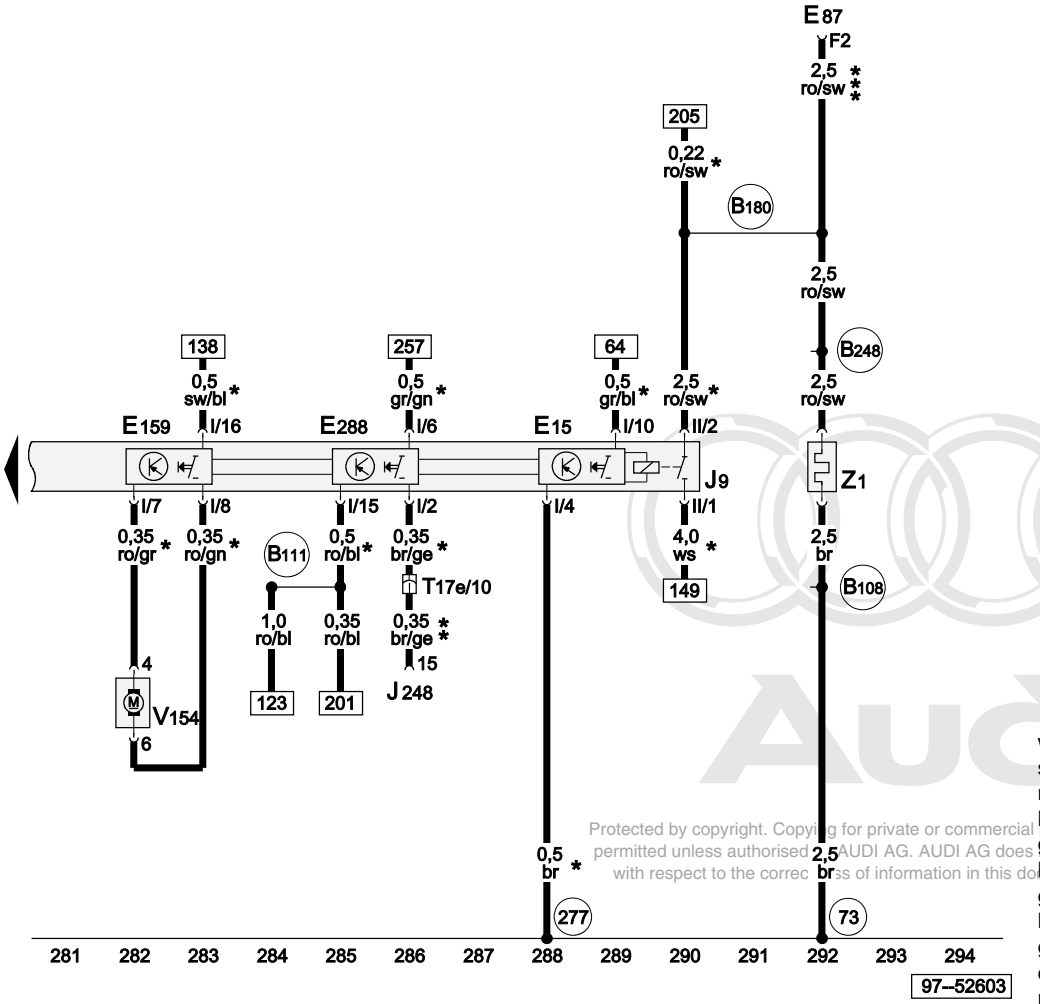

ws = white
sw = black
ro = red
br = brown
gn = green
bl = blue
gr = grey
li = purple
ge = yellow
or = orange
rs = pink

Protected by copyright. Copying for private or commercial purposes, in part or in whole, is not permitted unless authorised by AUDI AG. AUDI AG does not guarantee or accept any liability with respect to the correctness of information in this document. Copyright by AUDI AG.

1.4 litre fuel injection engine (55 kW - Magneti Marelli - 4-cylinder), engine code AUA

From model year 2001

Main fuse

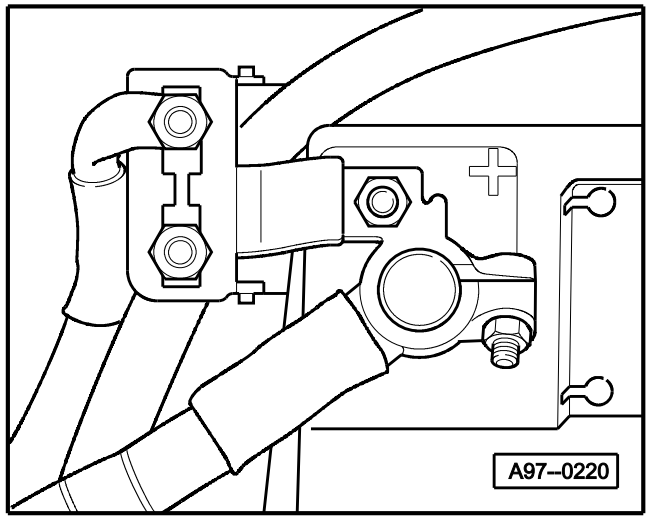

- On battery

9-point relay carrier, fuse box

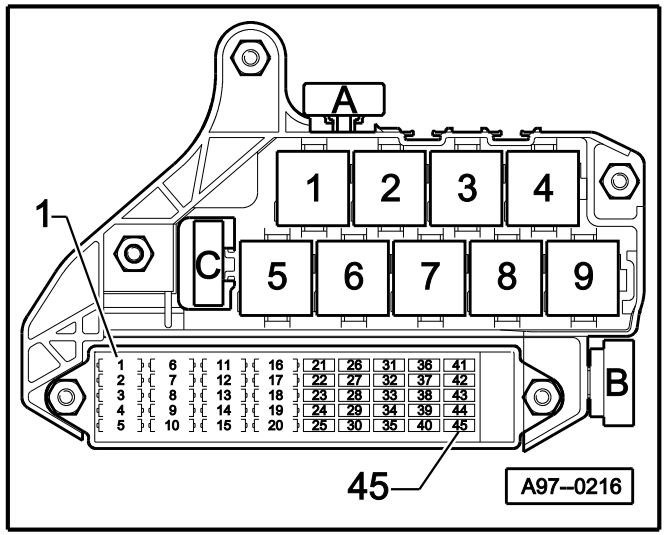

Protected by copyright. Copying for private or commercial purposes, in part or in whole, is not permitted unless authorised by AUDI AG. AUDI AG does not guarantee or accept any liability with respect to the correctness of information in this document. Copyright by AUDI AG.

♦ In dash panel, driver's side

Fuse colours

5 A - beige
7.5 A - brown
10 A - red
15 A - blue
20 A - yellow
25 A - white
30 A - green

3-point relay carrier

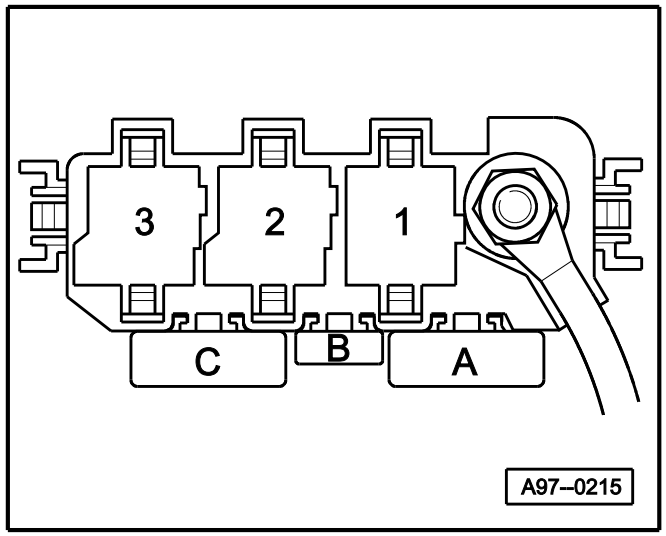

♦ In footwell, front left

C - Fuse -1- (30) for power steering (S204)

Protected by copyright. Copying for private or commercial purposes, in part or in whole, is not permitted unless authorised by AUDI AG. AUDI AG does not guarantee or accept any liability with respect to the correctness of information in this document. Copyright by AUDI AG.

6+6-point relay carrier

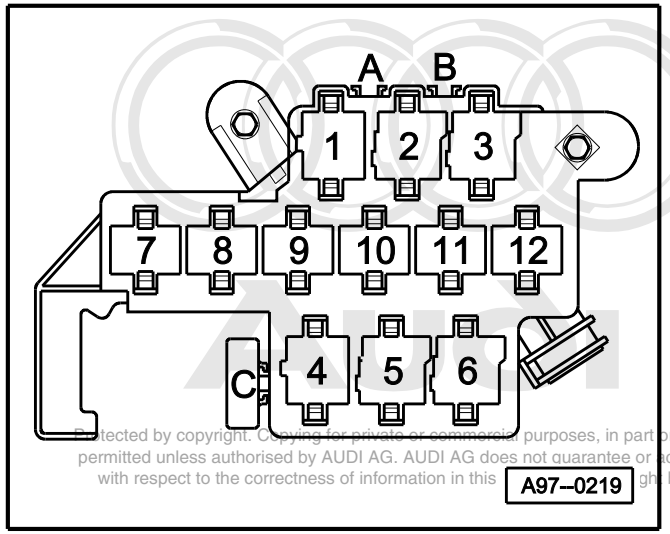

Protected by copyright. Copying for private or commercial purposes, in part or in whole, is not permitted unless authorised by AUDI AG. AUDI AG does not guarantee or accept any liability with respect to the correctness of information in this ... ght by AUDI AG.

- In footwell, front left

5 - Fuel pump relay (J17)

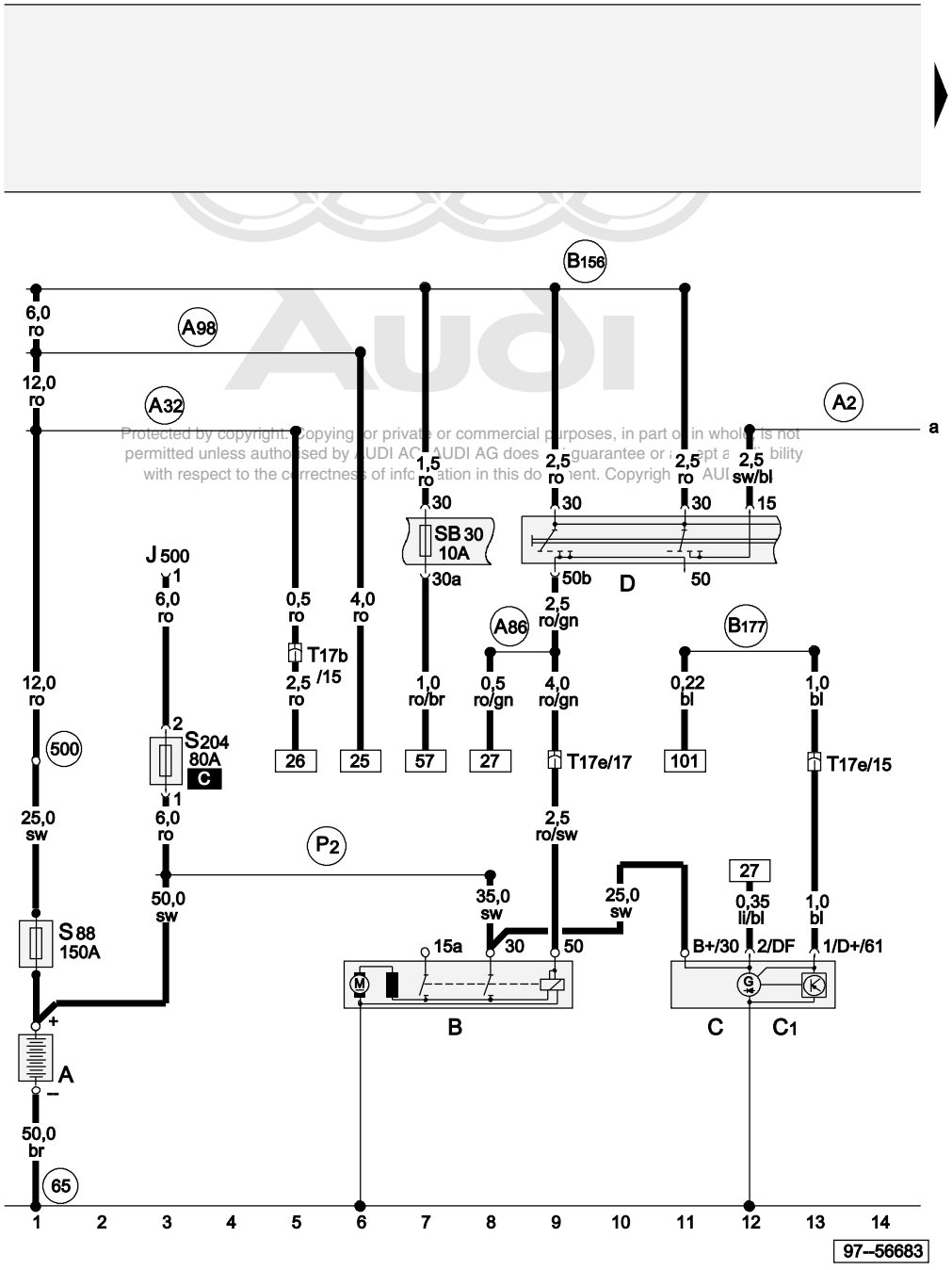

Protected by copyright. Copying for private or commercial purposes, in part or in whole, is not permitted unless authorised by AUDI AG. AUDI AG does not guarantee or accept any liability with respect to the correctness of information in this document. Copyright by AUDI AG.

ws = white
sw = black
ro = red
br = brown
gn = green
bl = blue
gr = grey
li = purple
ge = yellow
or = orange
rs = pink

Battery, starter, alternator, ignition/starter switch, strip fuse

A	Battery
B	Starter
C	Alternator
C1	Voltage regulator
D	Ignition/starter switch
S88	Strip fuse
S204	Fuse -1- (30)
T17b	17-pin connector, white, in footwell, front left
T17e	17-pin connector, blue, in footwell, front left
65	Earth point, left longitudinal member, rear
500	Screw connection -1- (30), on relay plate
A2	Positive (+) connection (15), in dash panel wiring harness
A32	Positive (+) connection (30), in dash panel wiring harness
A86	Connection (50a), in dash panel wiring harness
A98	Positive (+) connection -4- (30), in dash panel wiring harness
B156	Positive (+) connection (30a), in interior wiring harness
B177	Connection (61), in interior wiring harness
P2	Positive (+) connection (30), in battery wiring harness

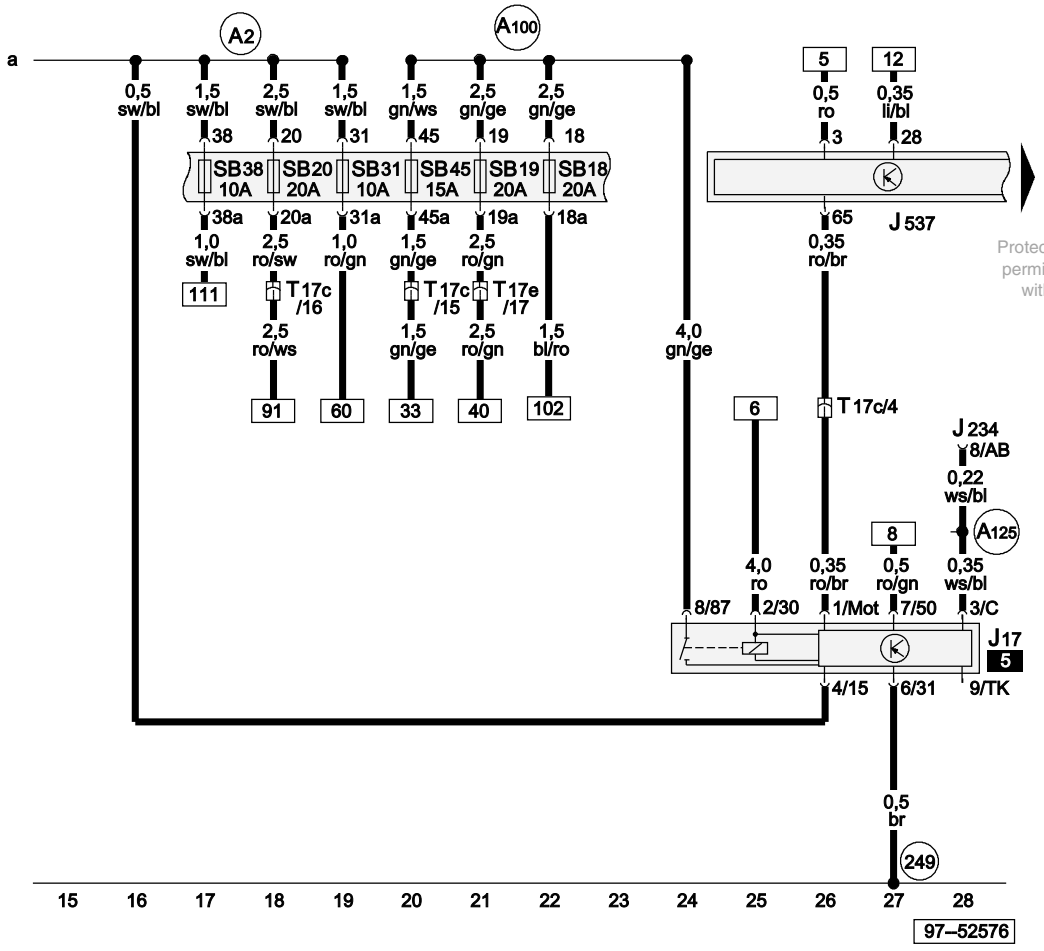

Fuses, 4LV (injection system) control unit, fuel pump relay

J17	Fuel pump relay
J234	Airbag control unit
J537	4LV (injection system) control unit
SB18	Fuse -18- on fuse box
SB19	Fuse -19- on fuse box
SB20	Fuse -20- on fuse box
SB31	Fuse -31- on fuse box
SB38	Fuse -38- on fuse box
SB45	Fuse -45- on fuse box
T17c	17-pin connector, black, in footwell, front left
T17e	17-pin connector, blue, in footwell, front left
249	Earth connection -2-, in interior wiring harness
A2	Positive (+) connection (15), in dash panel wiring harness
A100	Connection -2- (87), in dash panel wiring harness
A125	Connection (crash signal), in dash panel wiring harness

Protected by copyright. Copying for private or commercial purposes, in part or in whole, is not permitted unless authorised by AUDI AG. AUDI AG does not guarantee or accept any liability with respect to the correctness of information in this document. Copyright by AUDI AG.

ws	=	white
sw	=	black
ro	=	red
br	=	brown
gn	=	green
bl	=	blue
gr	=	grey
li	=	purple
ge	=	yellow
or	=	orange
rs	=	pink

Lambda probes, 4LV (injection system) control unit, activated charcoal filter system solenoid valve, injectors

G39	Lambda probe
G130	Lambda probe downstream of catalytic converter
J537	4LV (injection system) control unit
N30	Injector, cylinder 1
N31	Injector, cylinder 2
N32	Injector, cylinder 3
N33	Injector, cylinder 4
N80	Activated charcoal filter system solenoid valve 1
T4a	4-pin connector, brown, in electronics box, footwell, left
T6b	6-pin connector, black, in engine compartment, right
Z19	Lambda probe heater
Z29	Lambda probe 1 heater, downstream of catalytic converter
D80	Positive (+) connection (87a - for activated charcoal filter system solenoid valve), in engine compartment wiring harness
D140	Connection (injectors), in engine prewiring wiring harness

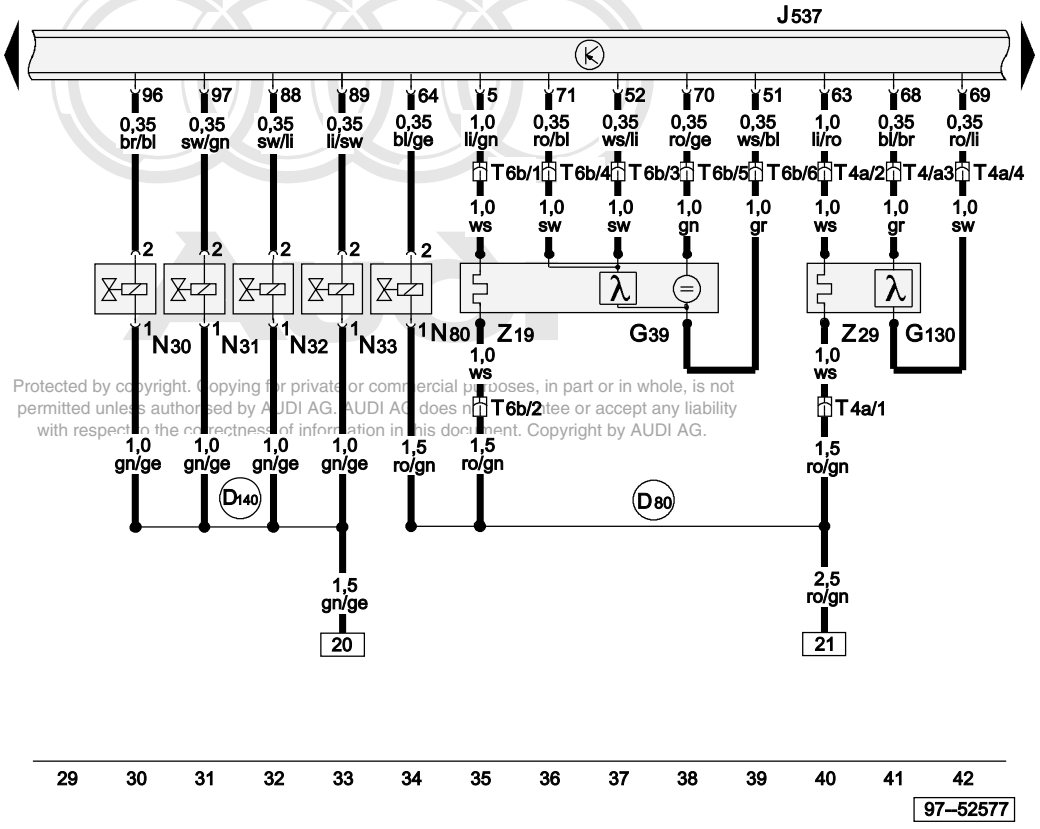

Protected by copyright. Copying for private or commercial purposes, in part or in whole, is not permitted unless authorised by AUDI AG. AUDI AG does not guarantee or accept any liability with respect to the correctness of information in this document. Copyright by AUDI AG.

ws	=	white
sw	=	black
ro	=	red
br	=	brown
gn	=	green
bl	=	blue
gr	=	grey
li	=	purple
ge	=	yellow
or	=	orange
rs	=	pink

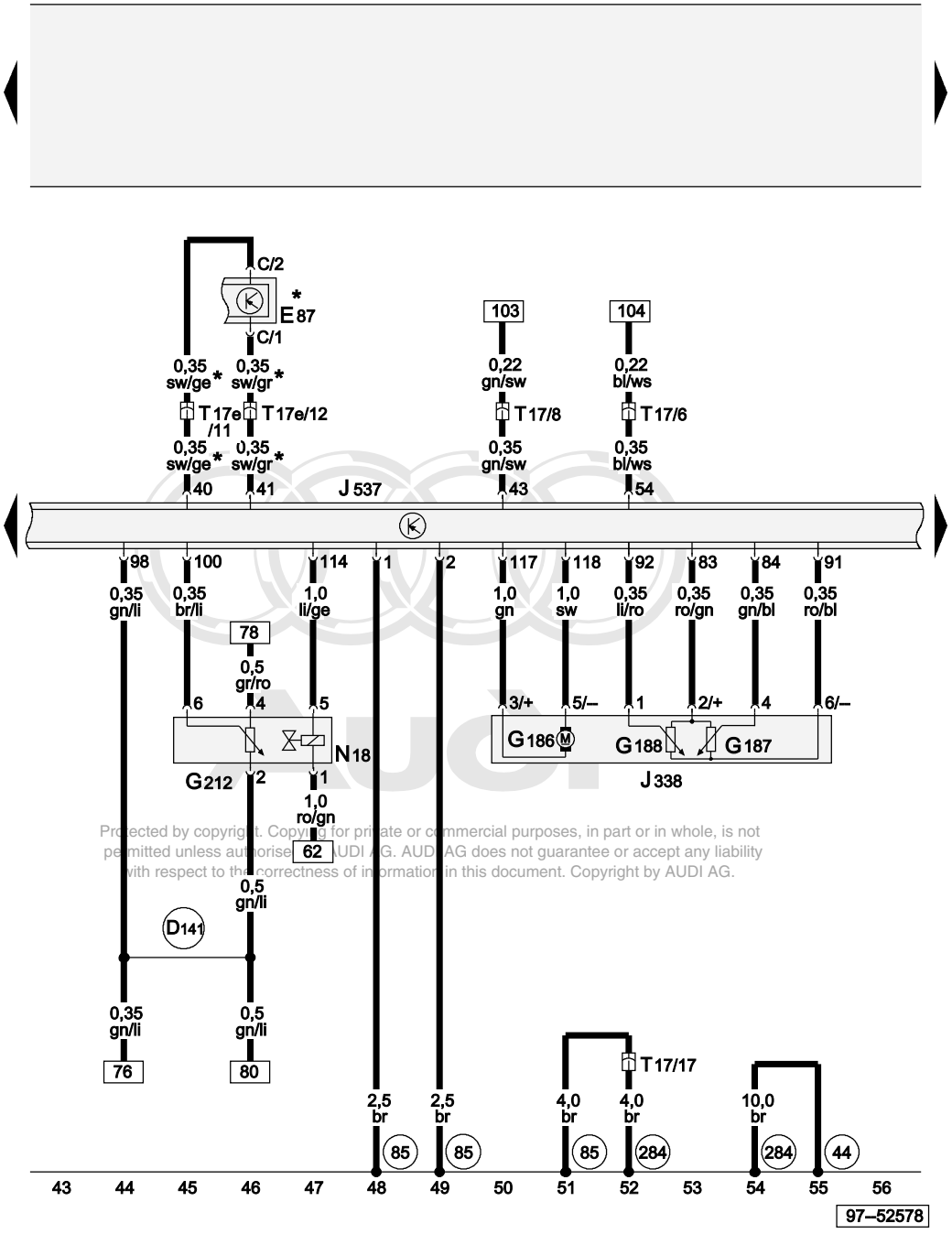

Protected by copyright. Copying for private or commercial purposes, in part or in whole, is not permitted unless authorised by AUDI AG. AUDI AG does not guarantee or accept any liability with respect to the correctness of information in this document. Copyright by AUDI AG.

ws = white
sw = black
ro = red
br = brown
gn = green
bl = blue
gr = grey
li = purple
ge = yellow
or = orange
rs = pink

Throttle valve control unit, 4LV (injection system) control unit, exhaust gas recirculation valve

E87	Control and display unit for air conditioner/Climatronic
G186	Throttle valve drive (electric power control)
G187	Throttle valve drive angle sender -1- (electric power control)
G188	Throttle valve drive angle sender -2- (electric power control)
G212	Exhaust gas recirculation potentiometer
J338	Throttle valve control unit
J537	4LV (injection system) control unit
N18	Exhaust gas recirculation valve
T17	17-pin connector, brown, in footwell, front left
T17e	17-pin connector, blue, in footwell, front left
44	Earth point, lower part of left A pillar
85	Earth connection -1-, in engine compartment wiring harness
284	Earth connection -6-, in interior wiring harness
D141	Connection (5V), in engine prewiring wiring harness
*	Only applies to models with air conditioner

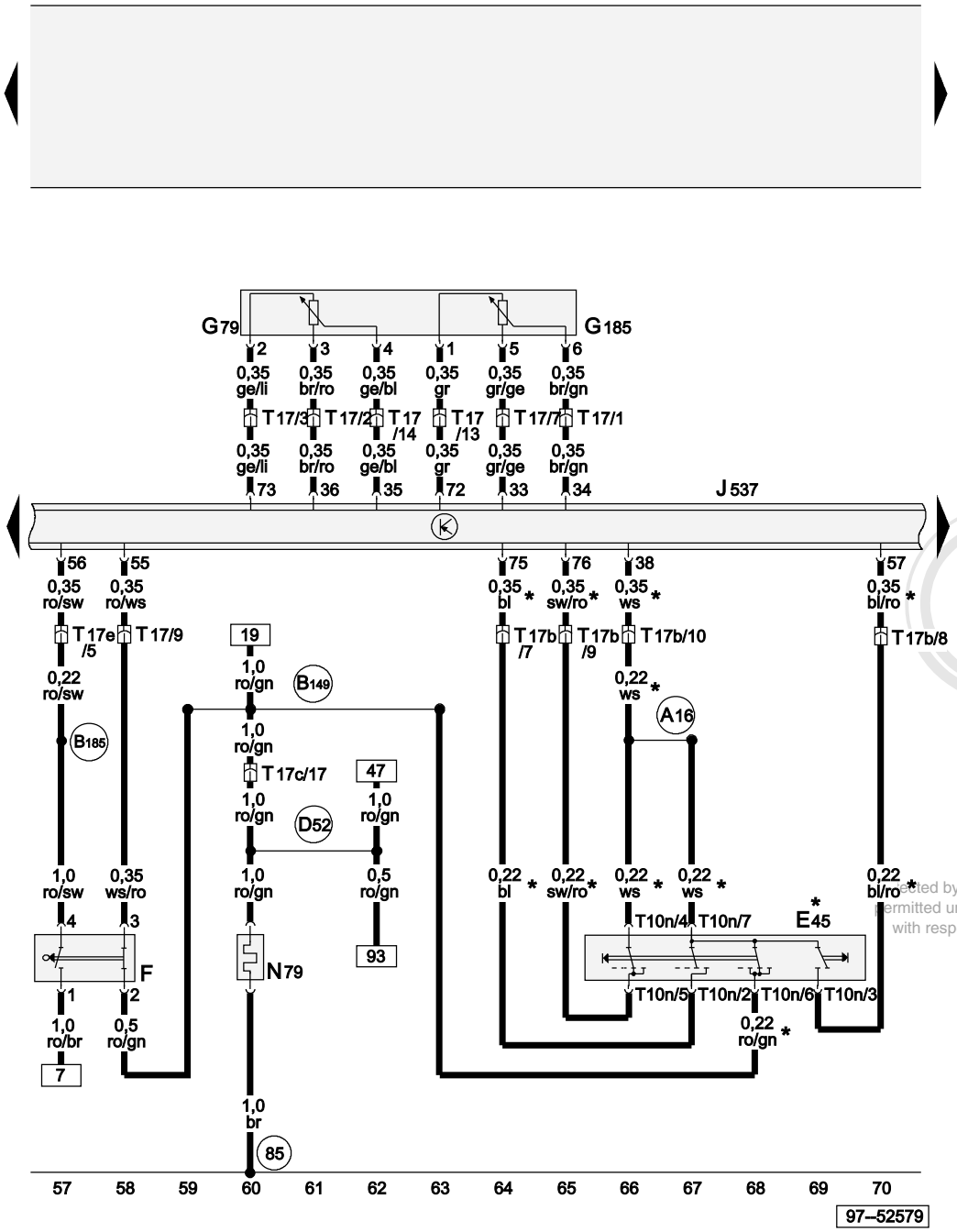

ws = white
sw = black
ro = red
br = brown
gn = green
bl = blue
gr = grey
li = purple
ge = yellow
or = orange
rs = pink

4LV (injection system) control unit, accelerator pedal position senders

E45	Cruise control system switch
F	Brake light switch
G79	Accelerator pedal position sender
G185	Accelerator pedal position sender -2-
J537	4LV (injection system) control unit
N79	Heater element (crankcase breather)
T10n	10-pin connector, black, behind steering column switch trim
T17	17-pin connector, brown, in footwell, front left
T17b	17-pin connector, white, in footwell, front left
T17c	17-pin connector, black, in footwell, front left
T17e	17-pin connector, blue, in footwell, front left
85	Earth connection -1-, in engine compartment wiring harness
A16	Connection (cruise control system), in dash panel wiring harness
B149	Positive (+) connection -2- (15a), in interior wiring harness
B185	Connection -2- (54), in interior wiring harness
D52	Positive (+) connection (15a), in engine compartment wiring harness
*	Only applies to models with cruise control system

Audi

Protected by copyright. Copying for private or commercial purposes, in part or in whole, is not permitted unless authorised by AUDI AG. AUDI AG does not guarantee or accept any liability with respect to the correctness of information in this document. Copyright by AUDI AG.

4LV (injection system) control unit, knock sensor, Hall sender, coolant temperature senders, intake manifold pressure sender, intake manifold temperature sender, engine speed sender

G2	Coolant temperature sender
G28	Engine speed sender
G71	Intake manifold pressure sender
G72	Intake manifold temperature sender
G40	Hall sender
G61	Knock sensor I
G62	Coolant temperature sender
J537	4LV (injection system) control unit
T17	17-pin connector, brown, in footwell, front left
220	Earth connection (sender earth), in engine wiring harness
269	Earth connection (sender earth) -1-, in dash panel wiring harness

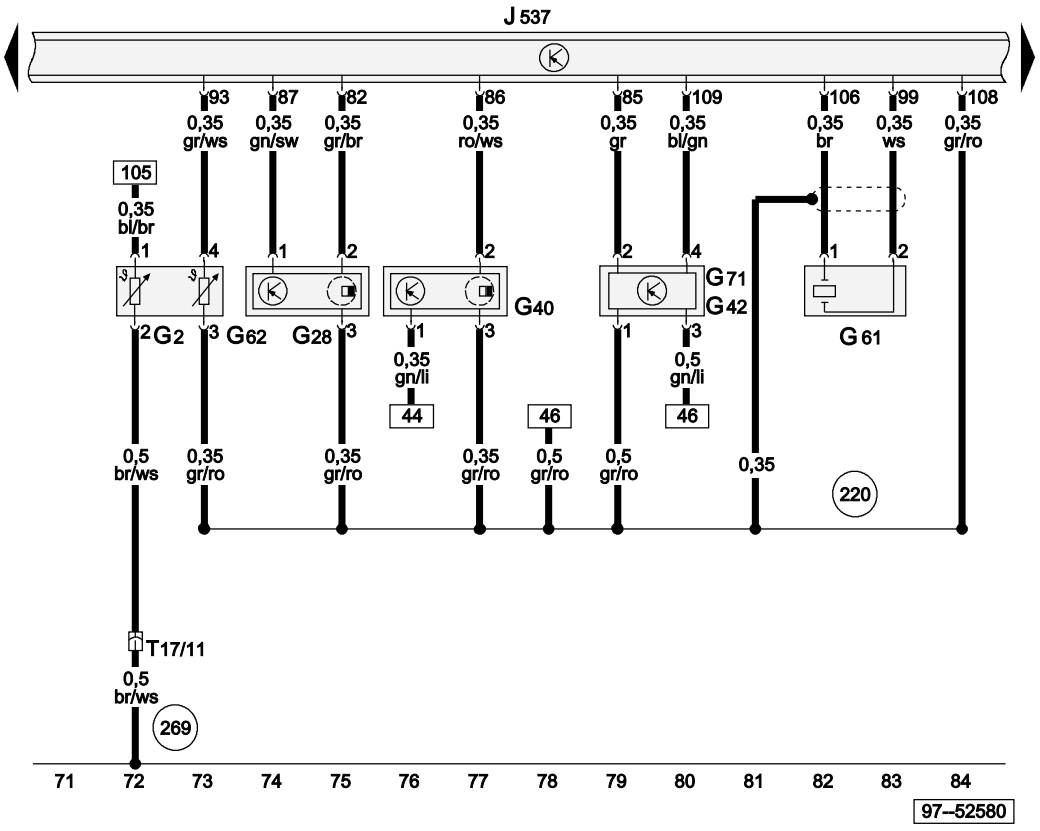

ws	=	white
sw	=	black
ro	=	red
br	=	brown
gn	=	green
bl	=	blue
gr	=	grey
li	=	purple
ge	=	yellow
or	=	orange
rs	=	pink

Protected by copyright. Copying for private or commercial purposes, in part or in whole, is not permitted unless authorised by AUDI AG. AUDI AG does not guarantee or accept any liability with respect to the correctness of information in this document. Copyright by AUDI AG.

4LV (injection system) control unit, ignition coil, spark plugs, clutch pedal switch

F36	Clutch pedal switch
J537	4LV (injection system) control unit
N	Ignition coil
N122	Final output stage
N128	Ignition coil 2
P	Spark plug connector
Q	Spark plugs
T16	16-pin connector, black, diagnostic connector, near fuse box
T17b	17-pin connector, white, in footwell, front left
T17e	17-pin connector, blue, in footwell, front left
85	Earth connection -1-, in engine compartment wiring harness
A121	Connection (high bus), in dash panel wiring harness
A122	Connection (low bus), in dash panel wiring harness
D51	Positive (+) connection -1- (15), in engine compartment wiring harness
*	Only models with manual gearbox
•	CAN bus (data bus)

Protected by copyright. Copying for private or commercial purposes, in part or in whole, is not permitted unless authorised by AUDI AG. AUDI AG does not guarantee or accept any liability with respect to the correctness of information in this document. Copyright by AUDI AG.

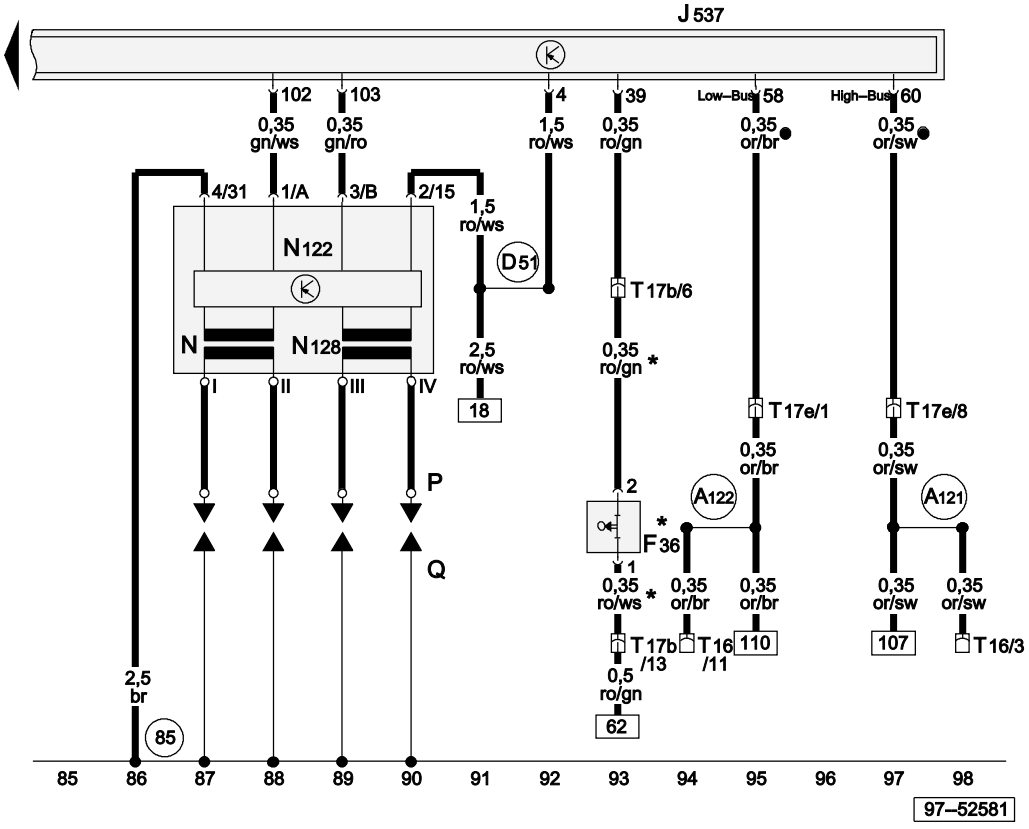

ws	=	white
sw	=	black
ro	=	red
br	=	brown
gn	=	green
bl	=	blue
gr	=	grey
li	=	purple
ge	=	yellow
or	=	orange
rs	=	pink

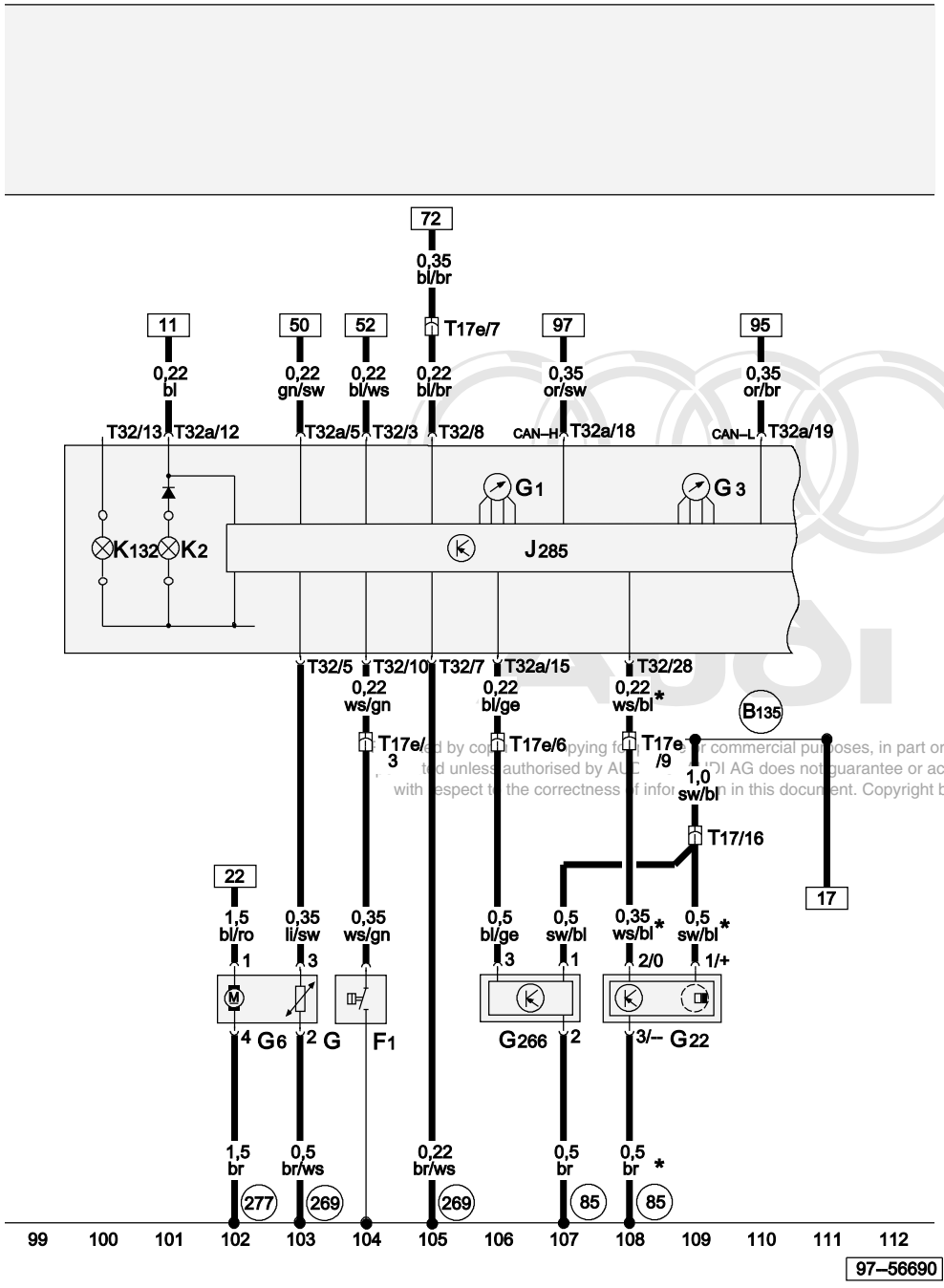

...ed by copyright. Copying for ... commercial purposes, in part or in whole, is not ...ted unless authorised by AUDI AG does not guarantee or accept any liability with respect to the correctness of information in this document. Copyright by AUDI AG.

ws = white
sw = black
ro = red
br = brown
gn = green
bl = blue
gr = grey
li = purple
ge = yellow
or = orange
rs = pink

Fuel pump, control unit with display in dash panel insert

F1	Oil pressure switch
G	Fuel gauge sender
G1	Fuel gauge
G3	Coolant temperature gauge
G6	Fuel pump (pre-supply pump)
G22	Speedometer sender (Hall sender, on gearbox)
G266	Oil level/oil temperature sender
J285	Control unit with display in dash panel insert
K2	Alternator warning lamp
K132	Electronic power control fault lamp
T17	17-pin connector, brown, in footwell, front left
T17e	17-pin connector, blue, in footwell, front left
T32	32-pin connector, blue, on dash panel insert
T32a	32-pin connector, green, on dash panel insert
85	Earth connection -1-, in engine compartment wiring harness
269	Earth connection (sender earth) -1-, in dash panel wiring harness
277	Earth connection -3-, in interior wiring harness
B135	Connection -1- (15a), in interior wiring harness
*	No longer fitted, phased-in modification

Anti-lock brake system (ABS) with electronic stability program (ESP)

From model year 2001

Main fuse

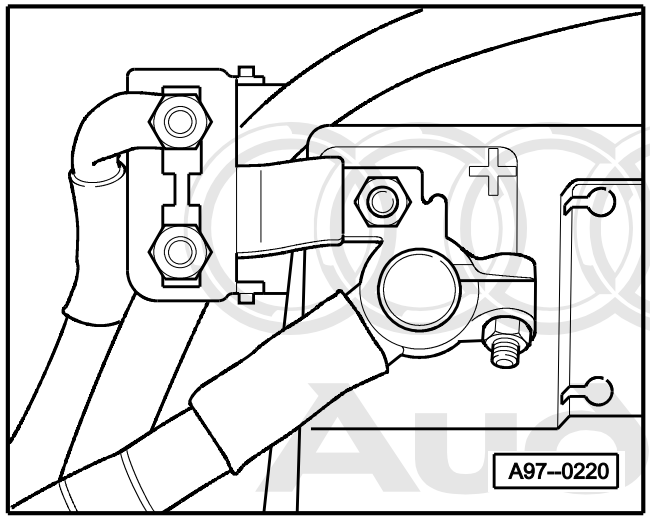

Protected by copyright. Copying for private or commercial purposes, in part or in whole, is not permitted unless authorised by AUDI AG. AUDI AG does not guarantee or accept any liability with respect to the correctness of information in this document. Copyright by AUDI AG.

- On battery

9-point relay carrier, fuse box

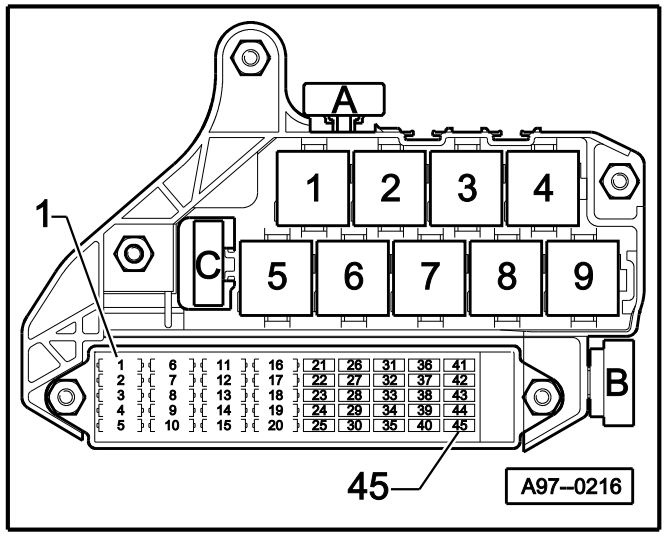

♦ In dash panel, driver's side

3.1 - Brake light suppression relay (J508)

Fuse colours

5 A - beige
7.5 A - brown
10 A - red
15 A - blue
20 A - yellow
25 A - white
30 A - green

6+6-point relay carrier

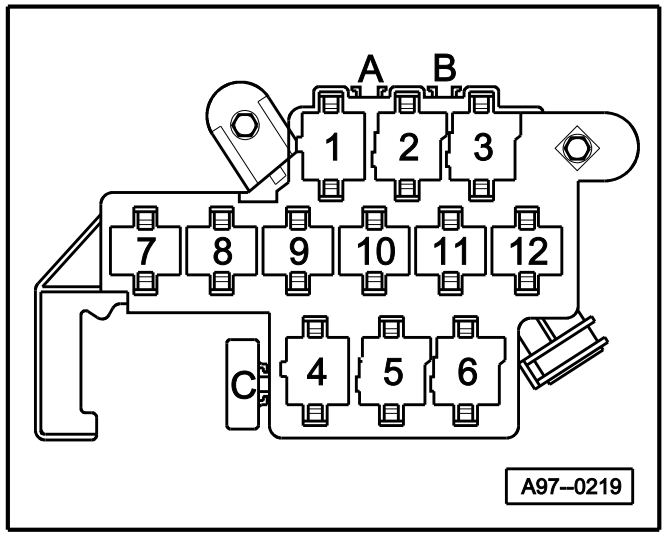

♦ In footwell, front left

C - ABS control unit fuse -1- (S123)

Protected by copyright. Copying for private or commercial purposes, in part or in whole, is not permitted unless authorised by AUDI AG. AUDI AG does not guarantee or accept any liability with respect to the correctness of information in this document. Copyright by AUDI AG.

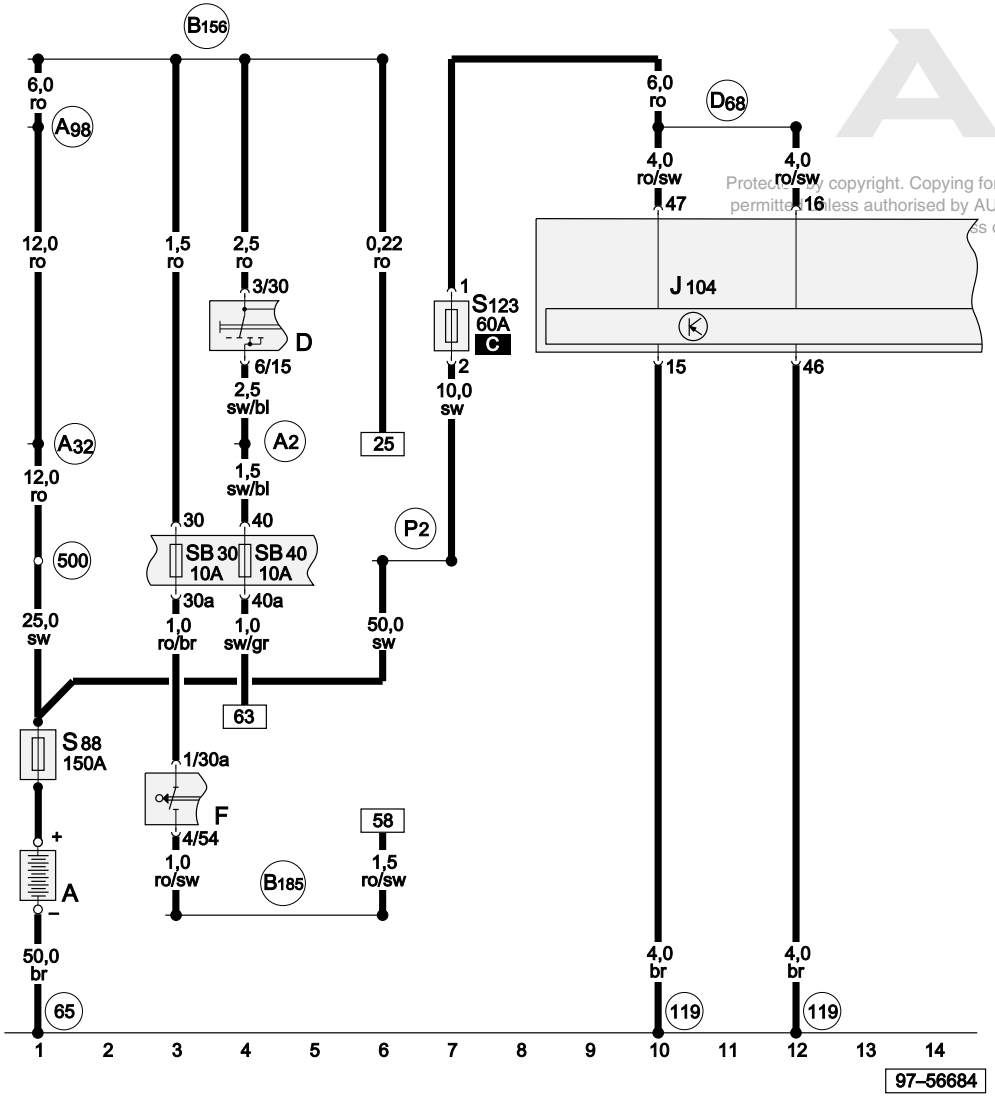

ws = white
sw = black
ro = red
br = brown
gn = green
bl = blue
gr = grey
li = purple
ge = yellow
or = orange
rs = pink

Battery, ignition/starter switch, brake light switch, fuses

A	Battery
D	Ignition/starter switch
F	Brake light switch
J104	ABS with EDL control unit
S88	Strip fuse
S123	ABS control unit fuse 1
SB30	Fuse -30- on fuse box
SB40	Fuse -40- on fuse box
65	Earth point, left longitudinal member, rear
500	Screw connection -1- (30), on relay plate
A2	Positive (+) connection (15), in dash panel wiring harness
A32	Positive (+) connection (30), in dash panel wiring harness
A98	Positive (+) connection -4- (30), in dash panel wiring harness
B156	Positive (+) connection (30a), in interior wiring harness
B185	Connection -2- (54), in interior wiring harness
D68	Positive (+) connection (30 - for ABS), in engine compartment wiring harness
P2	Positive (+) connection (30), in battery wiring harness
119	Earth connection -1-, in headlight wiring harness

Protected by copyright. Copying for private or commercial purposes, in part or in whole, is not permitted unless authorised by AUDI AG. AUDI AG does not guarantee or accept any liability with respect to the correctness of information in this document. Copyright by AUDI AG.

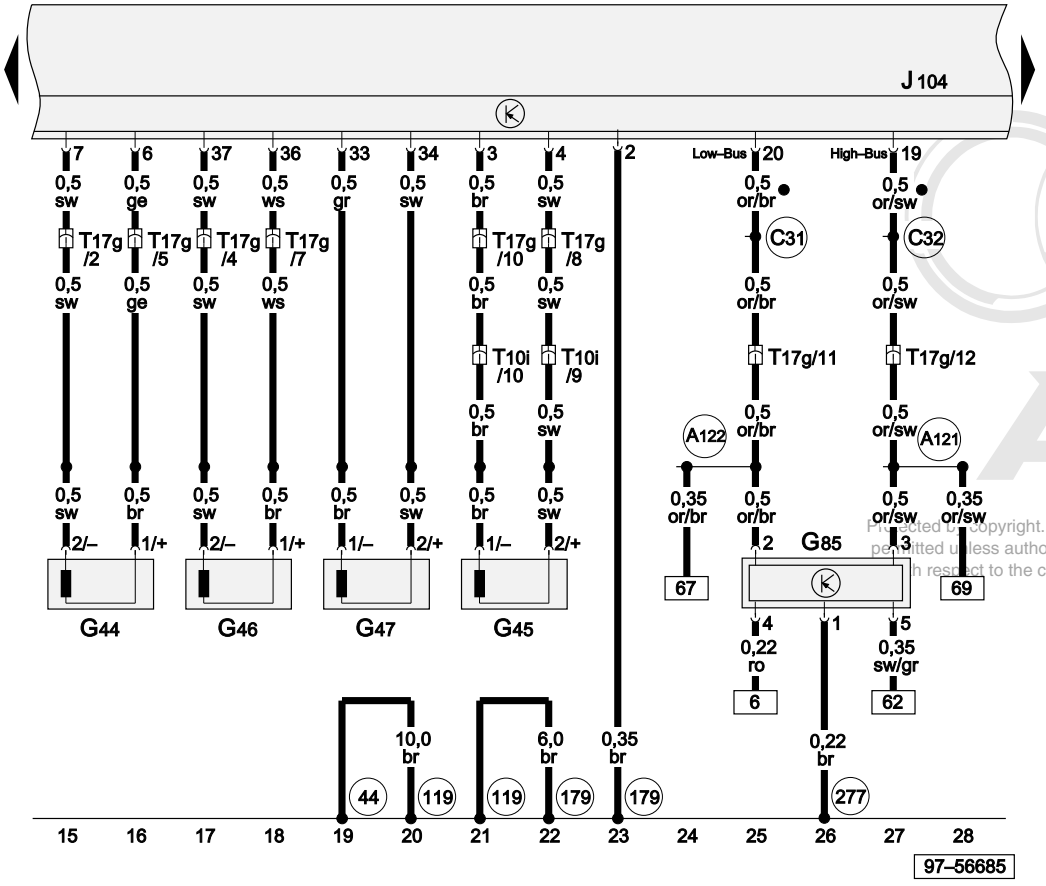

ws = white
sw = black
ro = red
br = brown
gn = green
bl = blue
gr = grey
li = purple
ge = yellow
or = orange
rs = pink

Speed sensors, steering angle sender, ABS with EDL control unit

G44	Rear right speed sensor
G45	Front right speed sensor
G46	Rear left speed sensor
G47	Front left speed sensor
G85	Steering angle sender
J104	ABS with EDL control unit
T10i	10-pin connector, black, connector point, A pillar, right
T17g	17-pin connector, red, connector point, A pillar, left
44	Earth point, lower part of left A pillar
119	Earth connection -1-, in headlight wiring harness
179	Earth connection, in left headlight wiring harness
277	Earth connection -2-, in interior wiring harness
A121	Connection (high bus), in dash panel wiring harness
A122	Connection (low bus), in dash panel wiring harness
C31	Connection -3-, in headlight wiring harness
C32	Connection -4-, in headlight wiring harness
•	CAN bus (data bus)

Protected by copyright. Copying for private or commercial purposes, in part or in whole, is not permitted unless authorised by AUDI AG. AUDI AG does not guarantee or accept any liability with respect to the correctness of information in this document. Copyright by AUDI AG.

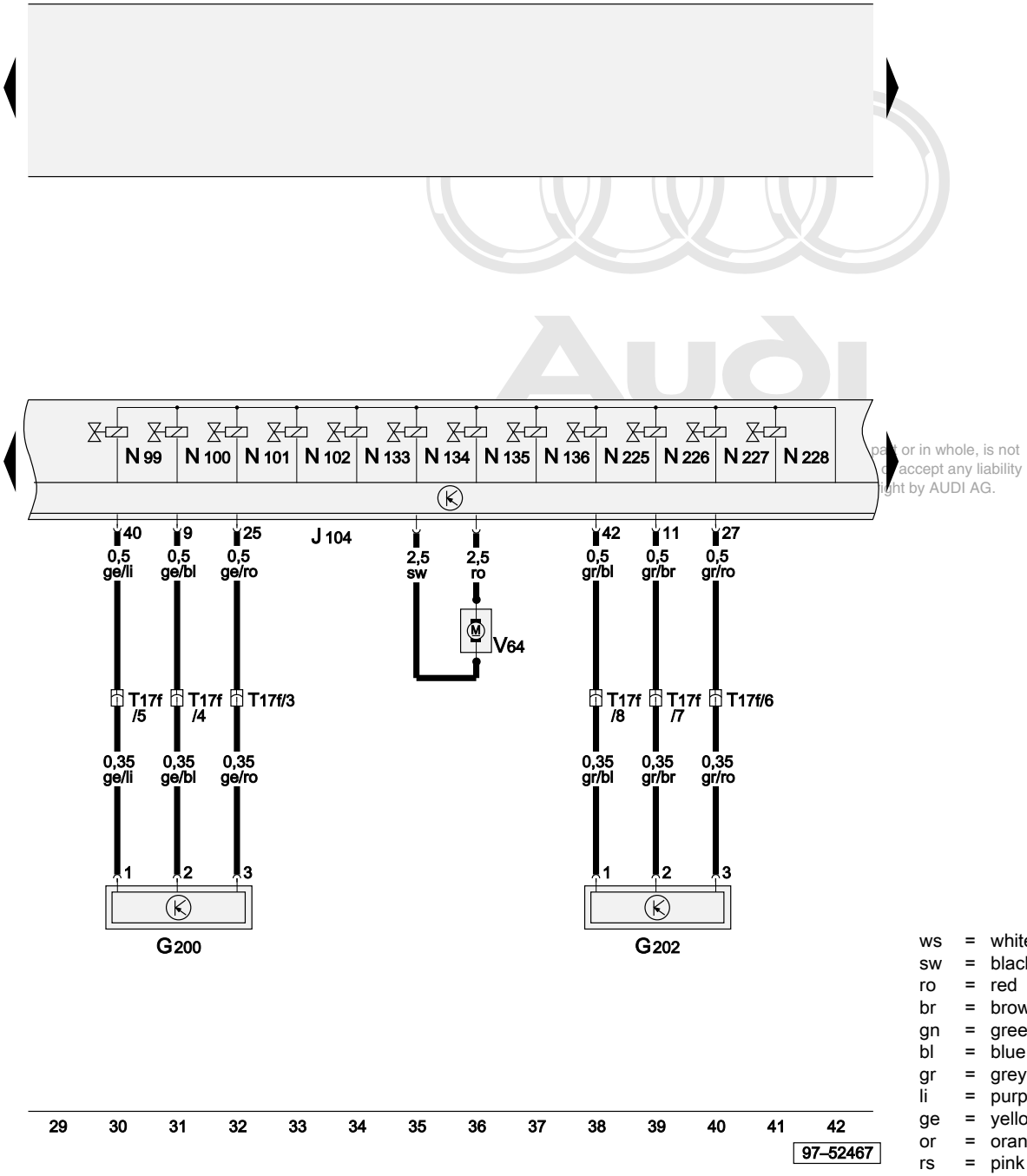

part or in whole, is not
accept any liability
ight by AUDI AG.

Lateral acceleration sender, yaw rate sender, ABS with EDL control unit, ABS valves, ABS hydraulic pump

G200	Lateral acceleration sender
G202	Yaw rate sender
J104	ABS with EDL control unit
N99	ABS inlet valve, front right
N100	ABS outlet valve, front right
N101	ABS inlet valve, front left
N102	ABS outlet valve, front left
N133	ABS inlet valve, rear right
N134	ABS inlet valve, rear left
N135	ABS outlet valve, rear right
N136	ABS outlet valve, rear left
N225	Electronic stability program switch valve -1-
N226	Electronic stability program switch valve -2-
N227	Electronic stability program high pressure valve -1-
N228	Electronic stability program high pressure valve -2-
T17f	17-pin connector, white, connector point, A pillar, left
V64	ABS hydraulic pump

ws	=	white
sw	=	black
ro	=	red
br	=	brown
gn	=	green
bl	=	blue
gr	=	grey
li	=	purple
ge	=	yellow
or	=	orange
rs	=	pink

Brake detection switch - ESP, brake pressure senders, ABS with EDL control unit

F83	Brake detection switch, ESP
G201	Brake pressure sender -1-
G214	Brake pressure sender -2-
J104	ABS with EDL control unit
R	Radio
T17f	17-pin connector, white, connector point, A pillar, left
T26	26-pin connector, black, radio connector
D146	Connection (rear left speed sensor +), in engine compartment wiring harness
*	Only applies to models with navigation system (double DIN size)

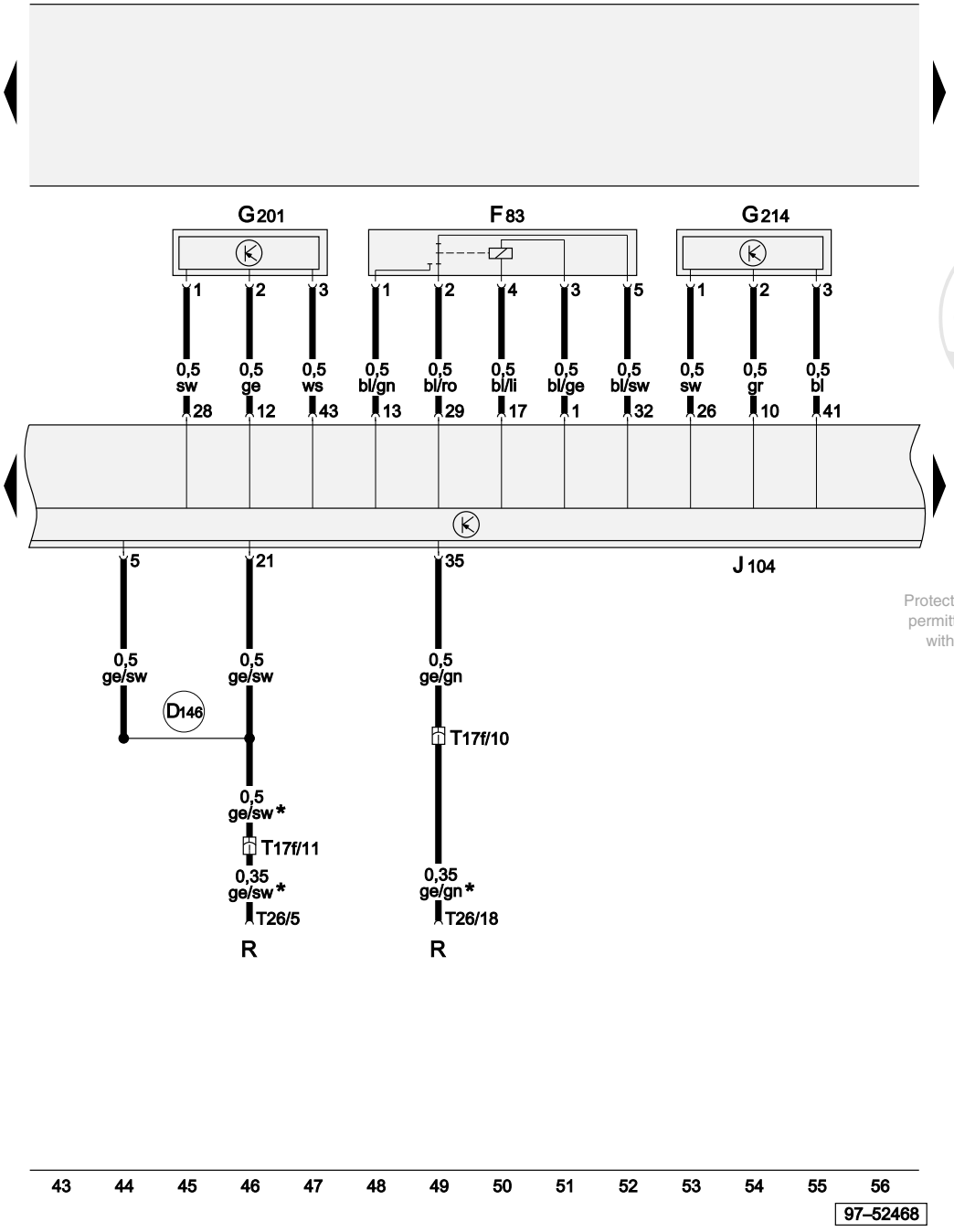

Protected by copyright. Copying for private or commercial purposes, in part or in whole, is not permitted unless authorised by AUDI AG. AUDI AG does not guarantee or accept any liability with respect to the correctness of information in this document. Copyright by AUDI AG.

ws	=	white
sw	=	black
ro	=	red
br	=	brown
gn	=	green
bl	=	blue
gr	=	grey
li	=	purple
ge	=	yellow
or	=	orange
rs	=	pink

Traction control system switch, ABS with EDL control unit, brake light suppression relay

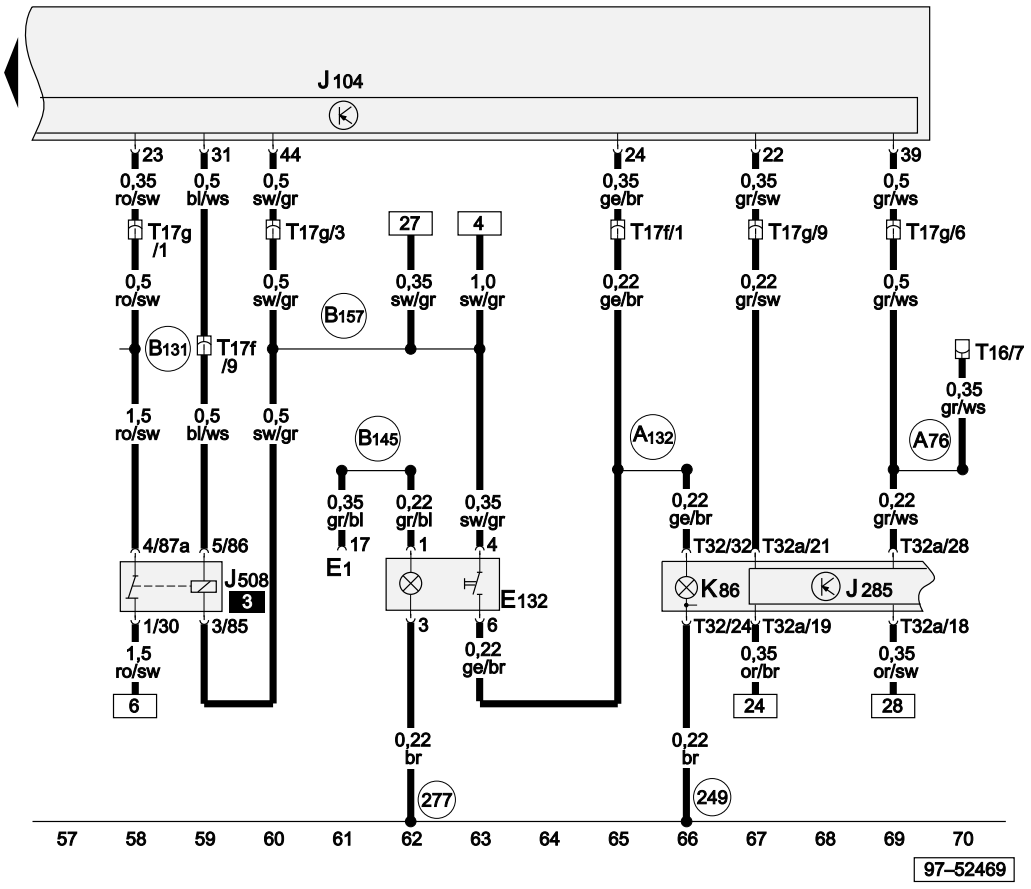

ws = white
sw = black
ro = red
br = brown
gn = green
bl = blue
gr = grey
li = purple
ge = yellow
or = orange
rs = pink

E1	Lighting switch
E132	Traction control system switch
J104	ABS with EDL control unit
J285	Control unit with display in dash panel insert
J508	Brake light suppression relay
K86	Traction control system warning lamp
T16	Diagnostic connector, black, near fuse box
T17f	17-pin connector, white, connector point, A pillar, left
T17g	17-pin connector, red, connector point, A pillar, left
T32	32-pin connector, blue, on dash panel insert
T32a	32-pin connector, green, on dash panel insert
249	Earth connection -2-, in interior wiring harness
277	Earth connection -3-, in interior wiring harness
A76	Connection (diagnosis wire K), in dash panel wiring harness
A132	Connection (TCS/ESP), in dash panel wiring harness
B131	Connection (54), in interior wiring harness
B145	Positive (+) connection (58b), in interior wiring harness
B157	Positive (+) connection -3- (15a), in interior wiring harness

Protected by copyright. Copying for private or commercial purposes, in part or in whole, is not permitted unless authorised by AUDI AG. AUDI AG does not guarantee or accept any liability with respect to the correctness of information in this document. Copyright by AUDI AG.

Airbags for driver and front passenger with belt tensioners and side airbags

From model year 2001

Protected by copyright. Copying for private or commercial purposes, in part or in whole, is not permitted unless authorised by AUDI AG. AUDI AG does not guarantee or accept any liability with respect to the correctness of information in this document. Copyright by AUDI AG.

Main fuse

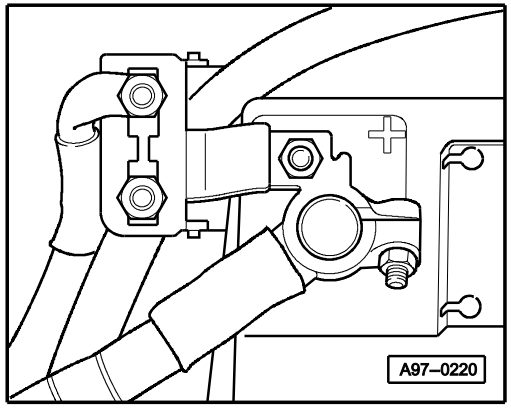

3-point relay carrier (in footwell)

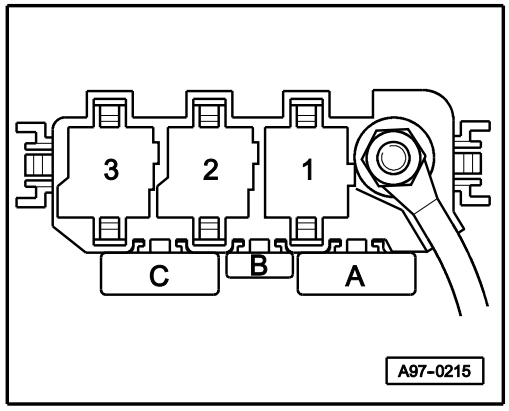

9-point relay carrier (in dash panel)

Fuse box

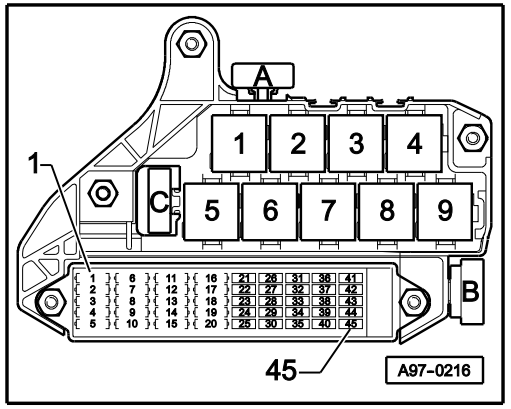

Fuse colours

30 A – green
25 A – white
20 A – yellow
15 A – blue
10 A – red
7.5A – orange
5A – beige

Airbags on driver's and front passenger's side, belt tensioners, igniters

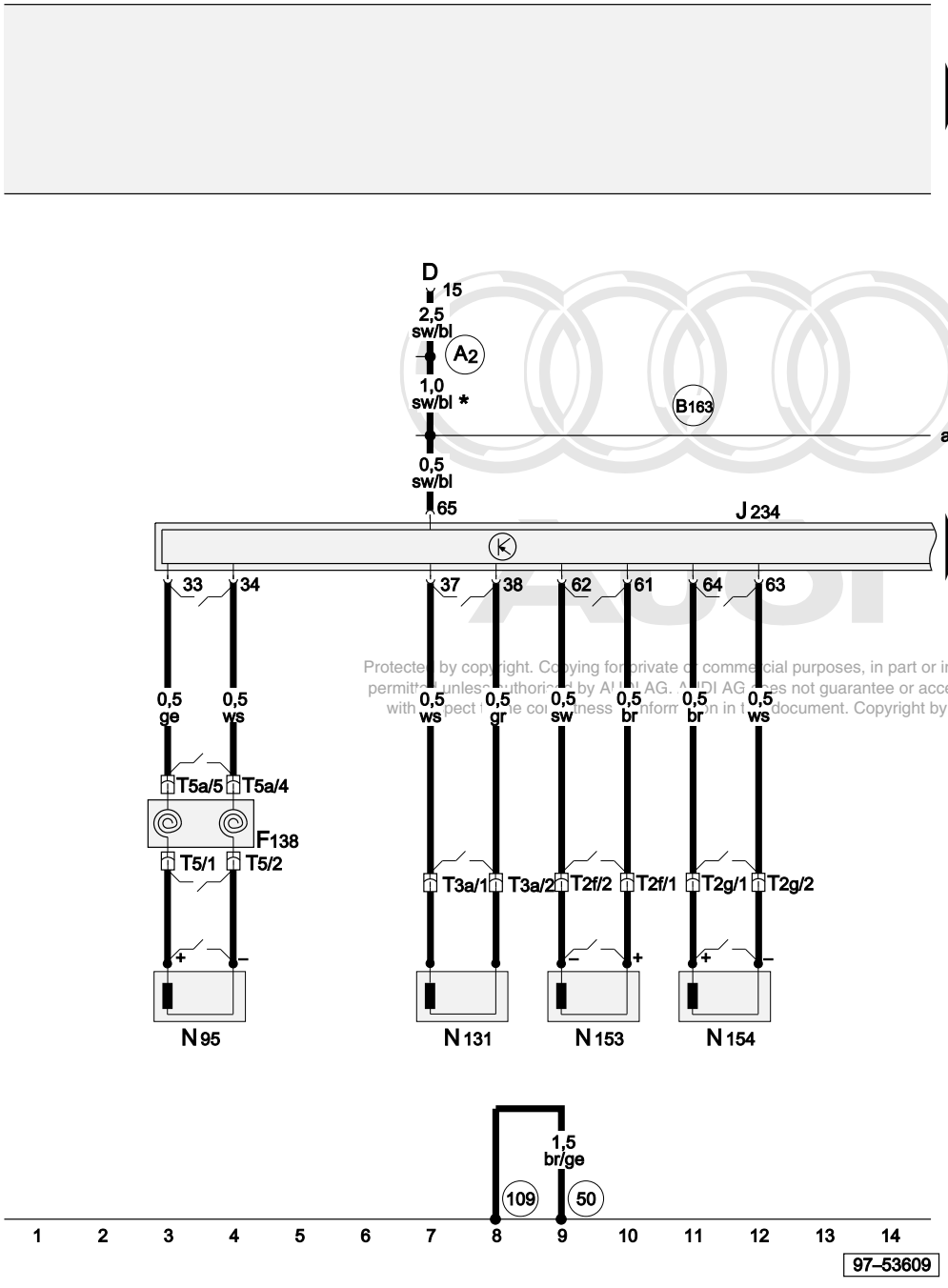

Protected by copyright. Copying for private or commercial purposes, in part or in whole, is not permitted unless authorised by AUDI AG. AUDI AG does not guarantee or accept any liability with respect to the correctness of information in this document. Copyright by AUDI AG.

ws	=	white
sw	=	black
ro	=	red
br	=	brown
gn	=	green
bl	=	blue
gr	=	grey
li	=	purple
ge	=	yellow
or	=	orange
rs	=	pink

D	Ignition/starter switch
F138	Airbag coil connector, return spring with slip ring
J234	Airbag control unit
N95	Airbag igniter, driver's side
N131	Airbag igniter 1, front passenger's side
N153	Belt tensioner igniter -1-, driver's side
N154	Belt tensioner igniter -2-, front passenger's side
T2f	2-pin connector, at B pillar, left
T2g	2-pin connector, at B pillar, right
T3a	3-pin connector, yellow, behind airbag unit
T5	5-pin connector, yellow, in steering wheel
T5a	5-pin connector, yellow, behind steering column switch trim
50	Earth point, luggage compartment, left
109	Earth connection, in airbag wiring harness
A2	Positive (+) connection (15), in dash panel wiring harness
B163	Positive (+) connection -1- (15), in interior wiring harness
*	Models with 1.2 litre engine, see Current Flow Diagram No. 28 (Basic equipment for 1.2 litre TDI engine)
<fo:external-graphic src="/../PDOC/samba/tools/png-convert/out//slp/ft_icons/kurzbr_l.png" content-width="20pt" scaling="uniform"/>	Short circuit bridge becomes effective when connector is unplugged.

Airbag deactivation on front passenger's side, curtain airbags on driver's and front passenger's side, igniters

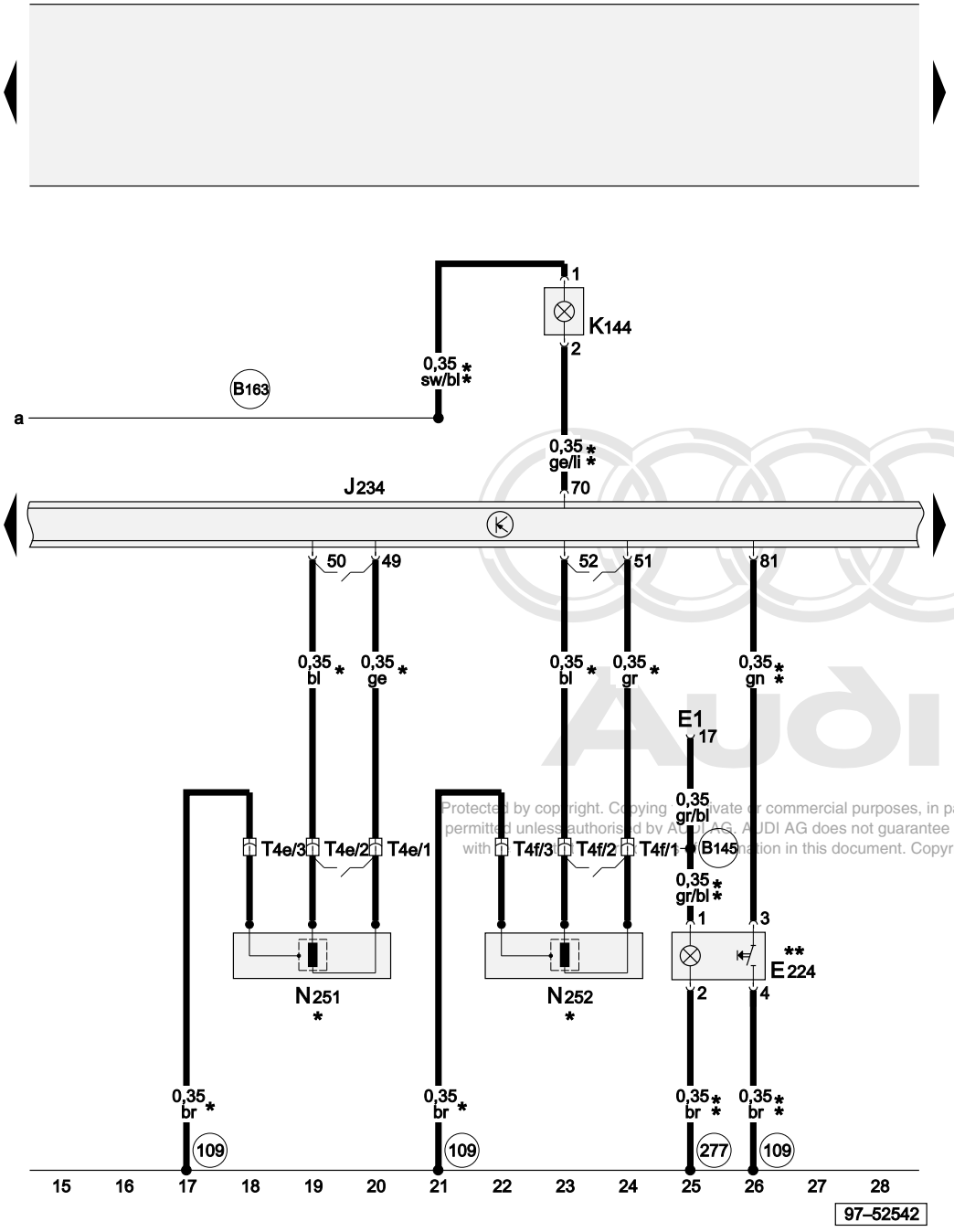

Protected by copyright. Copying for private or commercial purposes, in part or in whole, is not permitted unless authorised by AUDI AG. AUDI AG does not guarantee or accept any liability with respect to the information in this document. Copyright by AUDI AG.

ws	=	white
sw	=	black
ro	=	red
br	=	brown
gn	=	green
bl	=	blue
gr	=	grey
li	=	purple
ge	=	yellow
or	=	orange
rs	=	pink

E1	Lighting switch
E224	Airbag disabling key switch, front passenger's side
J234	Airbag control unit
K144	Airbag disabled warning lamp, driver's side
N251	Curtain airbag igniter, driver's side
N252	Curtain airbag igniter, front passenger's side
T4e	4-pin connector, yellow, under driver's seat
T4f	4-pin connector, yellow, under front passenger's seat
109	Earth connection, in airbag wiring harness
277	Earth connection -3-, in interior wiring harness
B145	Positive (+) connection (58b), in interior wiring harness
B163	Positive (+) connection -1- (15), in interior wiring harness
*	Only models with curtain airbag
**	Only models with airbag disabling key switch
<fo:external-graphic src="/../PDOC/samba/tools/png-convert/out//slp/ft_icons/kurzbr_l.png" content-width="20pt" scaling="uniform"/>	Short circuit bridge becomes effective when connector is unplugged

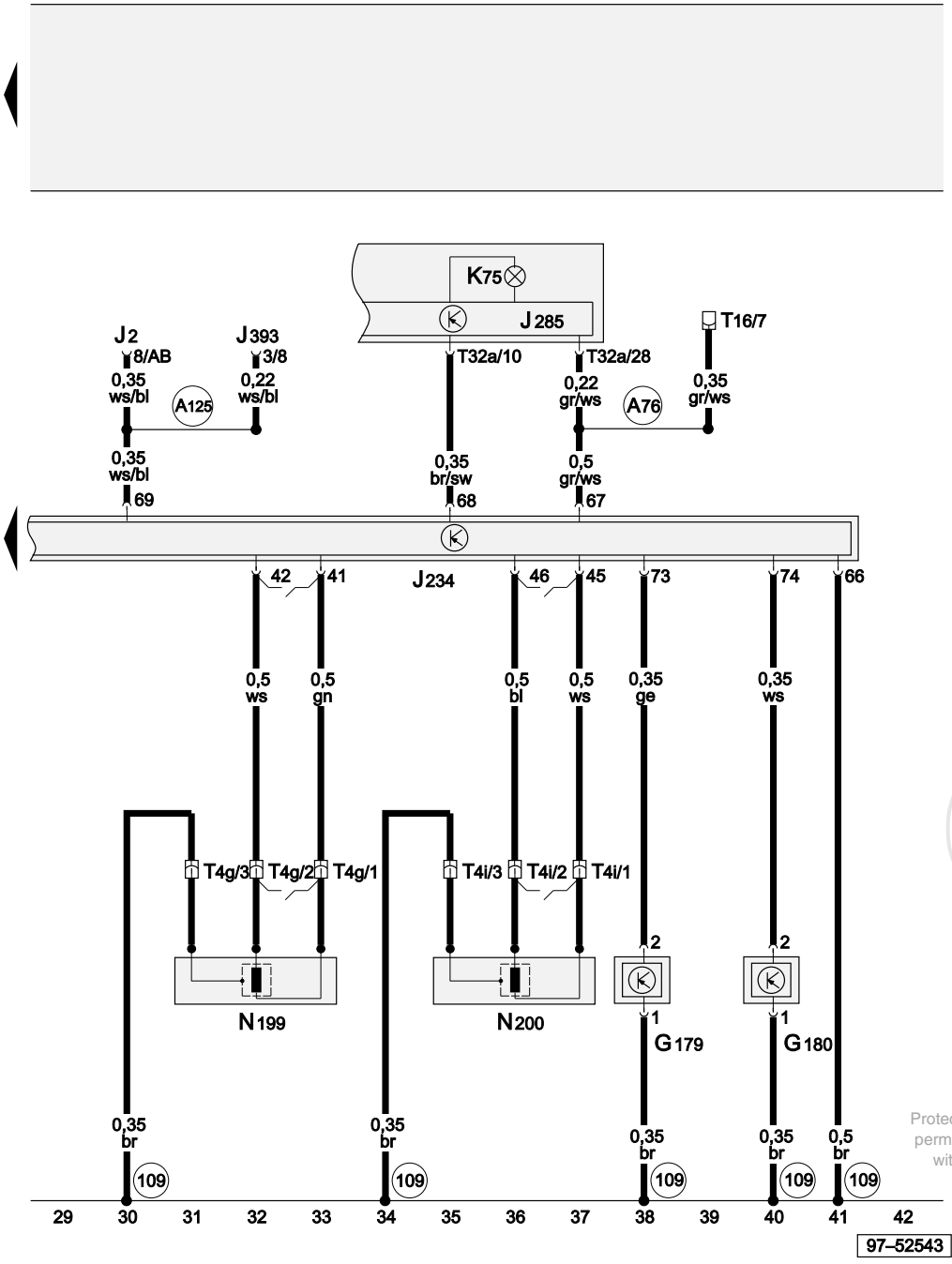

Side airbag driver's and front passenger's side, hazard warning light relay, igniter

G179	Side airbag crash sensor, driver's side
G180	Side airbag crash sensor, front passenger's side
J2	Hazard warning light relay
J234	Airbag control unit
J285	Control unit with display in dash panel insert
J393	Convenience system central control unit
K75	Airbag warning lamp
N199	Side airbag igniter, driver's side
N200	Side airbag igniter, front passenger's side
T4g	4-pin connector, yellow, under driver's seat
T4i	4-pin connector, yellow, under front passenger's seat
T16	16-pin connector, diagnostic connector, black, near fuse box
T32a	32-pin connector, green, on dash panel insert
109	Earth connection, in airbag wiring harness
A76	Connection (diagnosis wire K), in dash panel wiring harness
A125	Connection (crash signal), in dash panel wiring harness
<fo:exter	Short circuit bridge becomes effective when connector is unplugged

nal-graphic src="/../PDOC/samba/tools/png-convert/out//slp/ft_icons/kurzbr_l.png" content-width="20pt" scaling="uniform"/>

ws	=	white
sw	=	black
ro	=	red
br	=	brown
gn	=	green
bl	=	blue
gr	=	grey
li	=	purple
ge	=	yellow
or	=	orange
rs	=	pink

Protected by copyright. Copying for private or commercial purposes, in part or in whole, is not permitted unless authorised by AUDI AG. AUDI AG does not guarantee or accept any liability with respect to the correctness of information in this document. Copyright by AUDI AG.

Air conditioner

From model year 2001

3-point relay carrier (in footwell)

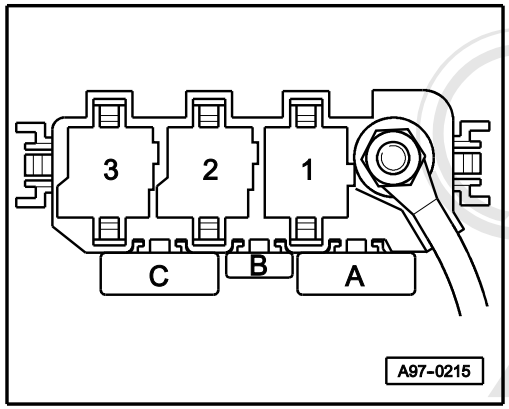

6+6-point relay carrier (in footwell)

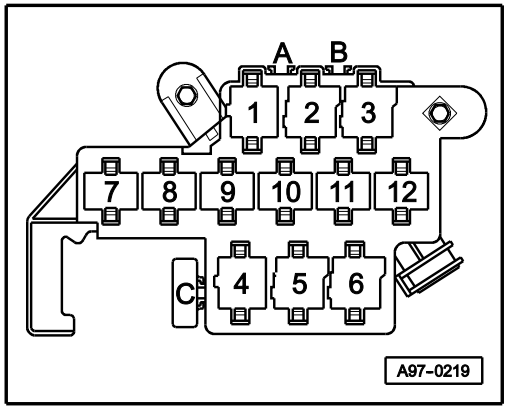

Position of relays:

2 3 – Automatic intermittent wash/wipe relay (J31)

9-point relay carrier (in dash panel)

Protected by copyright. Copying for private or commercial purposes, in part or in whole, is not permitted unless authorised by AUDI AG. AUDI AG does not guarantee or accept any liability with respect to the correctness of information in this document. Copyright by AUDI AG.

Fuse box

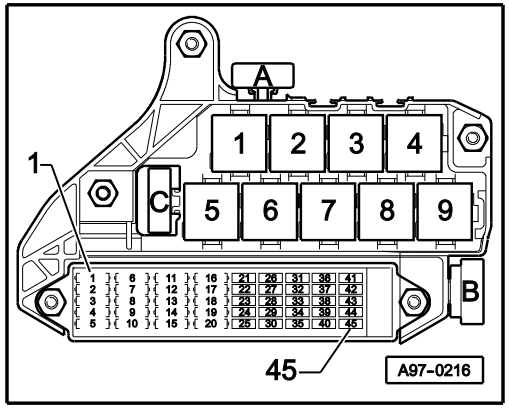

Position of fuses:

C - Radiator fan fuse (S205)

9 - X contact relief relay (J59)

Fuse colours

30 A – green
25 A – white
20 A – yellow
15 A – blue
10 A – red
7.5A – orange
5A – beige

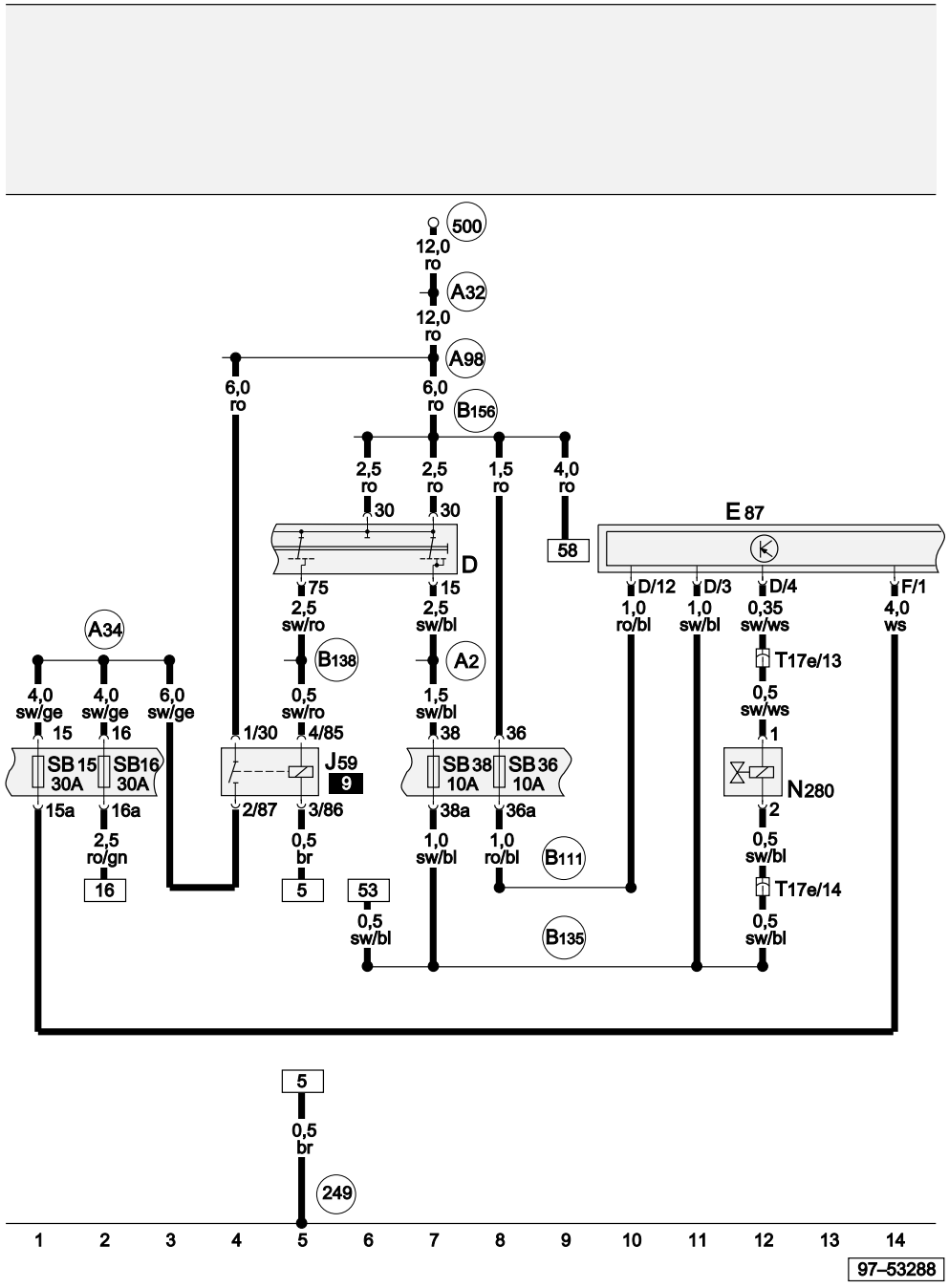

ws = white
sw = black
ro = red
br = brown
gn = green
bl = blue
gr = grey
li = purple
ge = yellow
or = orange
rs = pink

Control and display unit for air conditioner/Climatronic, compressor regulating valve, fuses

D	Ignition/starter switch
E87	Control and display unit for air conditioner/Climatronic
J59	X contact relief relay
N280	Compressor regulating valve, air conditioning system
SB15	Fuse -15- on fuse box
SB16	Fuse -16- on fuse box
SB36	Fuse -36- on fuse box
SB38	Fuse -38- on fuse box
T17e	17-pin connector, blue, in footwell, front left
249	Earth connection -2-, in interior wiring harness
500	Screw connection -1- (30), on relay plate
A2	Positive (+) connection (15), in dash panel wiring harness
A32	Positive (+) connection (30), in dash panel wiring harness
A34	Connection (75x), in dash panel wiring harness
A98	Positive (+) connection -4- (30), in dash panel wiring harness
B111	Positive (+) connection -1- (30a), in interior wiring harness
B135	Connection -1- (15a), in interior wiring harness
B138	Positive (+) connection (X), in interior wiring harness
B156	Positive (+) connection (30a), in interior wiring harness

Protected by copyright. Copying for private or commercial purposes, in part or in whole, is not permitted unless authorised by AUDI AG. AUDI AG does not guarantee or accept any liability with respect to the correctness of information in this document. Copyright by AUDI AG.

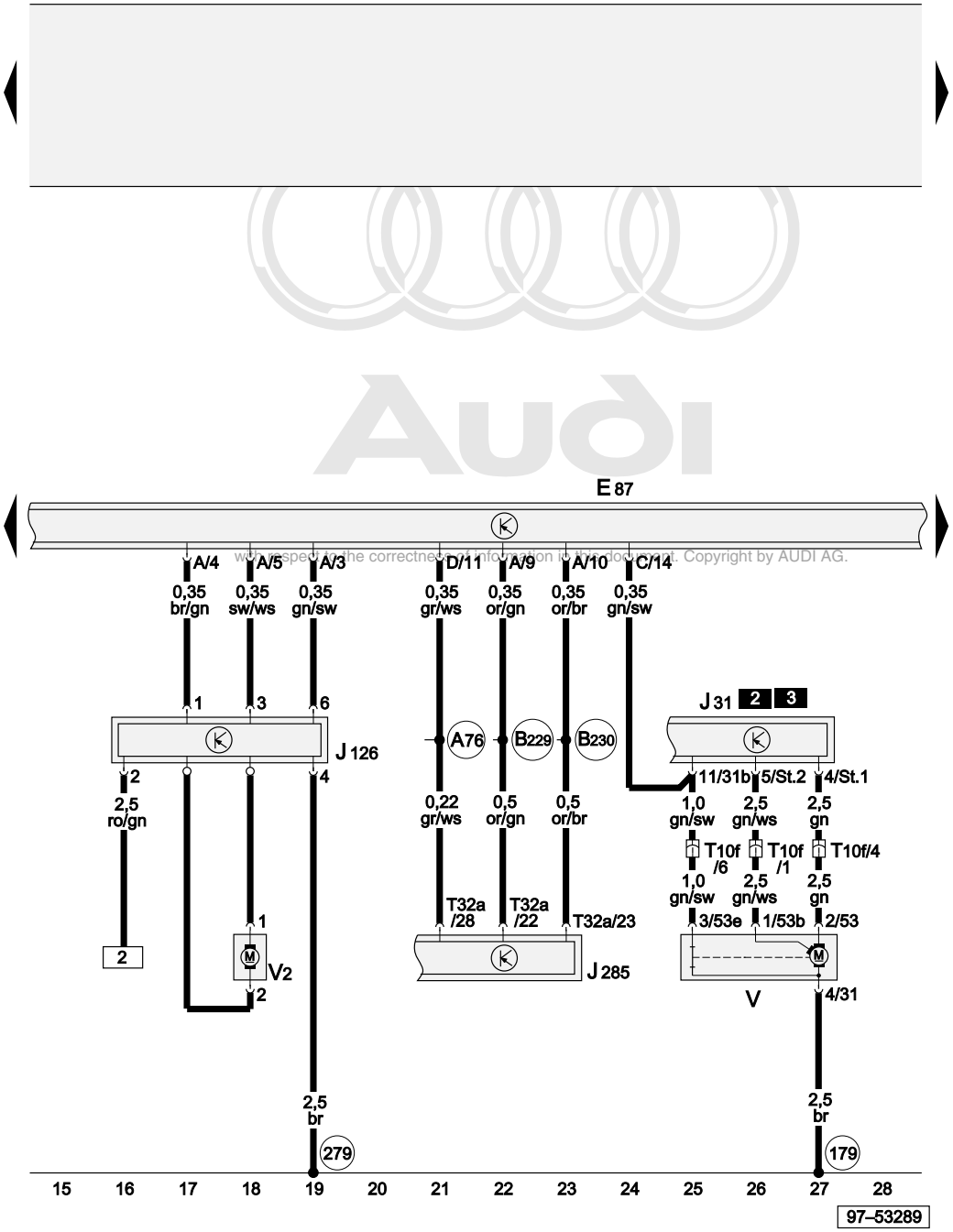

with respect to the correctness of information in this document. Copyright by AUDI AG.

ws = white
sw = black
ro = red
br = brown
gn = green
bl = blue
gr = grey
li = purple
ge = yellow
or = orange
rs = pink

Control and display unit for air conditioner/Climatronic, fresh air blower control unit

E87	Control and display unit for air conditioner/Climatronic
J31	Automatic intermittent wash/wipe relay
J126	Fresh air blower control unit
J285	Control unit with display in dash panel insert
T10f	10-pin connector, blue, connector point, A pillar, left
T32a	32-pin connector, green, on dash panel insert
V	Windscreen wiper motor
V2	Fresh air blower
179	Earth connection, in left headlight wiring harness
279	Earth connection -5-, in interior wiring harness
A76	Connection (diagnosis wire K), in dash panel wiring harness
B229	Connection (high bus), in interior wiring harness
B230	Connection (low bus), in interior wiring harness

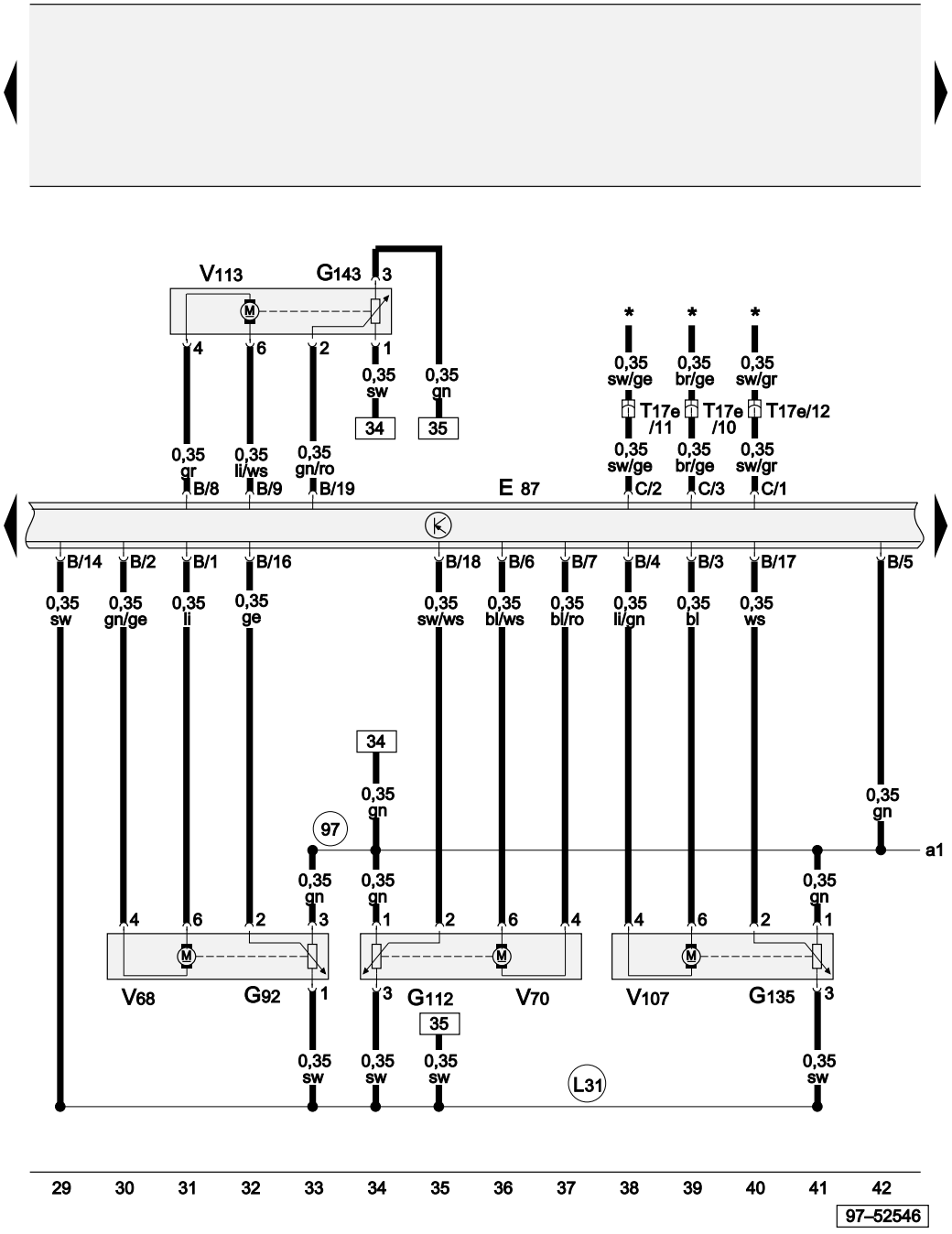

ws = white
sw = black
ro = red
br = brown
gn = green
bl = blue
gr = grey
li = purple
ge = yellow
or = orange
rs = pink

Control and display unit for air conditioner/Climatronic, potentiometer, control motor

E87	Control and display unit for air conditioner/Climatronic
G92	Control motor potentiometer, temperature flap
G112	Control motor potentiometer, central flap
G135	Control motor potentiometer, defroster flap
G143	Control motor potentiometer, air recirculation flap
T17e	17-pin connector, blue, in footwell, front left
V68	Temperature flap control motor
V70	Central flap control motor
V107	Defroster flap control motor
V113	Air recirculation flap control motor
97	Earth connection -1-, in air conditioner wiring harness
L31	Connection (5V), in air conditioner wiring harness
*	See applicable engine version

Protected by copyright. Copying for private or commercial purposes, in part or in whole, is not permitted unless authorised by AUDI AG. AUDI AG does not guarantee or accept any liability with respect to the correctness of information in this document. Copyright by AUDI AG.

Control and display unit for air conditioner/Climatronic, air conditioner pressure switch, ambient temperature sensor

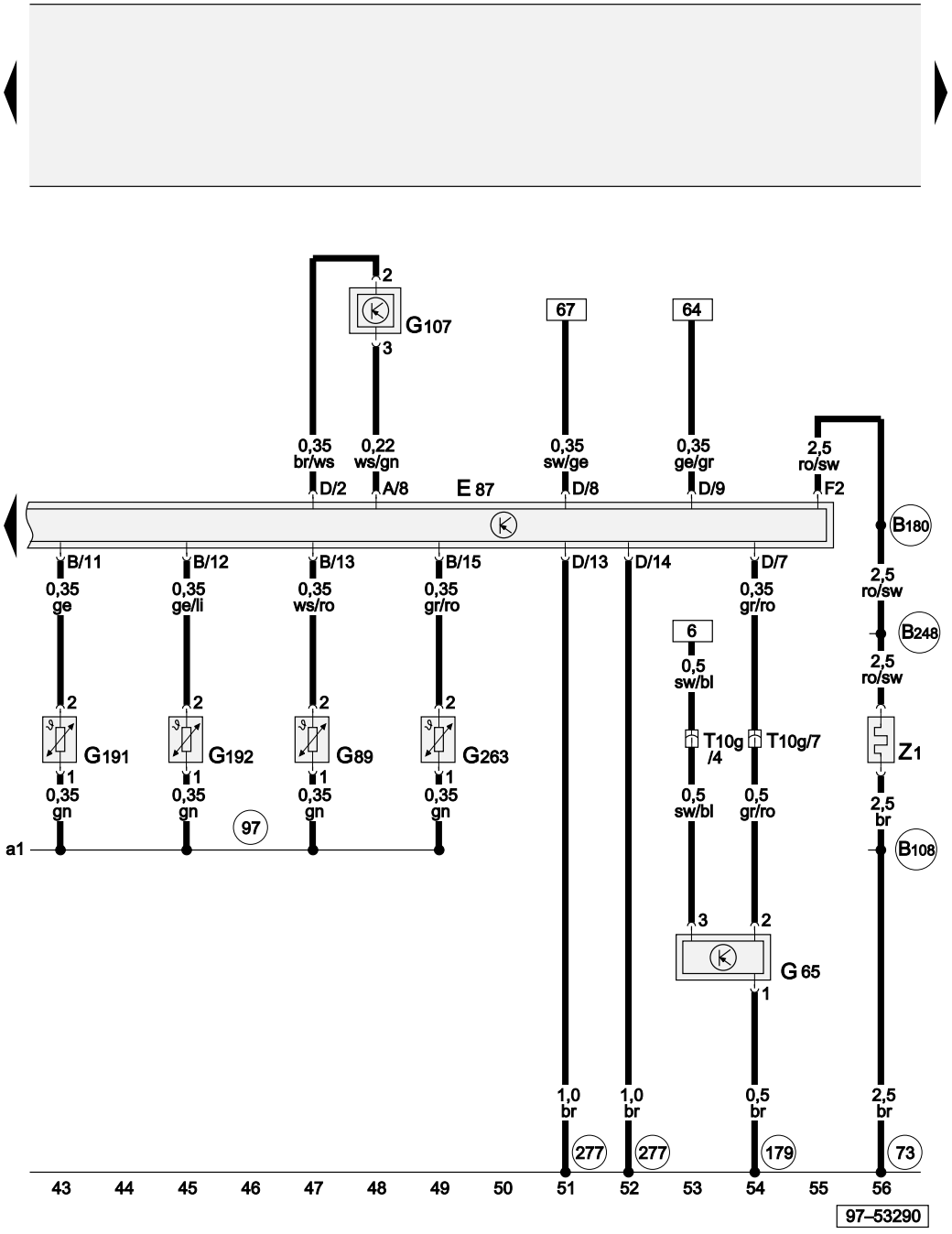

ws = white
sw = black
ro = red
br = brown
gn = green
bl = blue
gr = grey
li = purple
ge = yellow
or = orange
rs = pink

E87	Control and display unit for air conditioner/Climatronic
G65	High pressure sender
G89	Fresh air intake duct temperature sensor
G107	Sunlight penetration photosensor
G191	Vent temperature sender, centre
G192	Vent temperature sender, footwell
G263	Evaporator outflow temperature sender
T10g	10-pin connector, grey, connector point, A pillar, left
Z1	Heated rear window
73	Earth point, rear roof rail
97	Earth connection -1-, in air conditioner wiring harness
179	Earth connection, in left headlight wiring harness
277	Earth connection -3-, in interior wiring harness
B108	Earth connection, in interior wiring harness, rear right
B180	Connection (heated rear window), in interior wiring harness
B248	Connection -2- (heated rear window), in interior wiring harness

Audi
Protected by copyright. Copying for private or commercial purposes, in part or in whole, is not permitted unless authorised by AUDI AG. AUDI AG does not guarantee or accept any liability with respect to the correctness of information in this document. Copyright by AUDI AG.

Radiator fan thermo-switches, radiator fan control unit

C	Alternator
F18	Radiator fan thermo-switch
F54	Radiator fan thermo-switch
J293	Radiator fan control unit
S205	Radiator fan fuse -2- (30)
T10g	10-pin connector, grey, connector point, A pillar, left
T10h	10-pin connector, white, connector point, A pillar, left
T17e	17-pin connector, blue, in footwell, front left
V7	Radiator fan
44	Earth point, lower part of left A pillar
119	Earth connection -1-, in headlight wiring harness
179	Earth connection, in left headlight wiring harness
B177	Connection (61), in interior wiring harness
C35	Connection (air conditioner), in headlight / air conditioner wiring harness

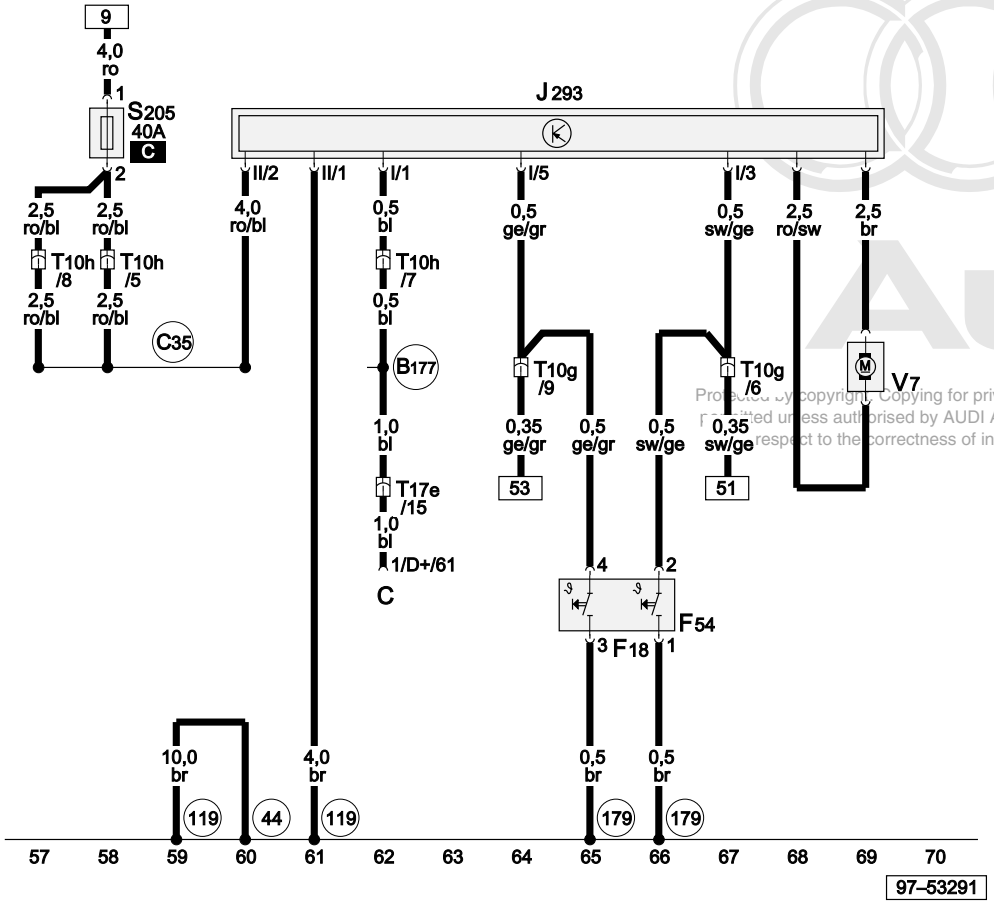

ws	=	white
sw	=	black
ro	=	red
br	=	brown
gn	=	green
bl	=	blue
gr	=	grey
li	=	purple
ge	=	yellow
or	=	orange
rs	=	pink

Protected by copyright. Copying for private or commercial purposes, in part or in whole, is not permitted unless authorised by AUDI AG. AUDI AG does not guarantee or accept any liability with respect to the correctness of information in this document. Copyright by AUDI AG.

Rear parking aid

From model year 2001

Main fuse

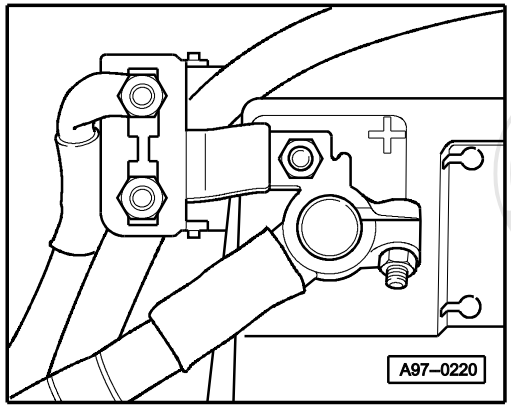

9-point relay carrier (in dash panel)

Fuse box

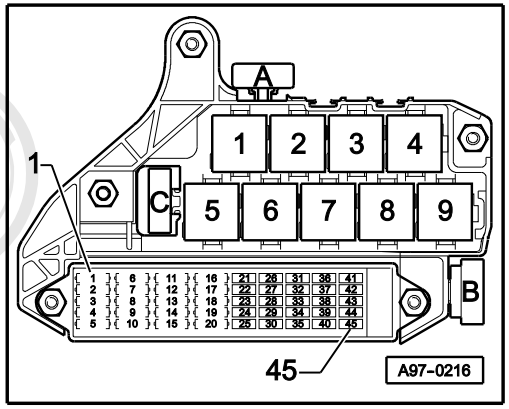

Fuse colours

30 A – green
25 A – white
20 A – yellow
15 A – blue
10 A – red
7.5A – orange
5A – beige

3-point relay carrier (in footwell)

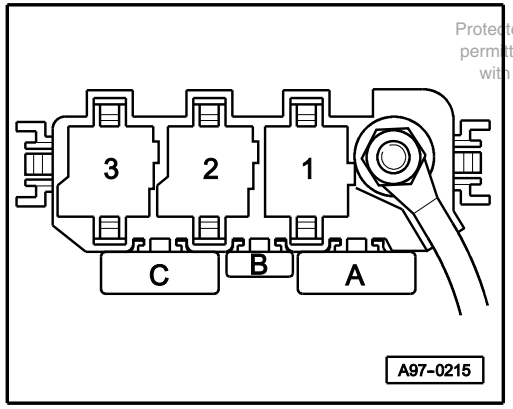

Protected by copyright. Copying for private or commercial purposes, in part or in whole, is not permitted unless authorised by AUDI AG. AUDI AG does not guarantee or accept any liability with respect to the correctness of information in this document. Copyright by AUDI AG.

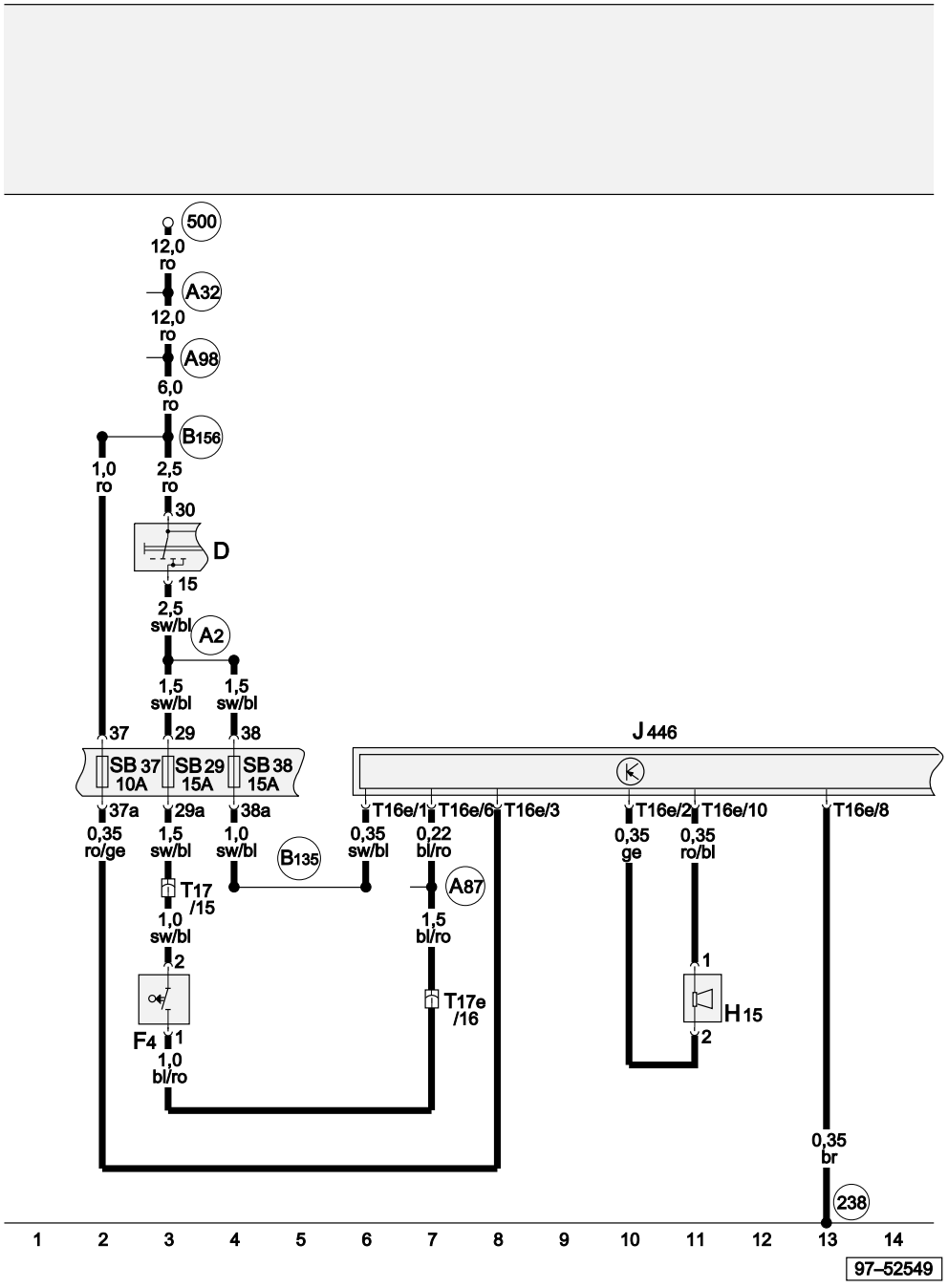

Parking aid control unit, fuses

D	Ignition/starter switch
F4	Reversing light switch
H15	Rear parking aid warning buzzer
J446	Parking aid control unit
SB29	Fuse -29- on fuse box
SB37	Fuse -37- on fuse box
SB38	Fuse -38- on fuse box
T16e	16-pin connector, black, on right luggage compartment
T17	17-pin connector, brown, in footwell, front left
T17e	17-pin connector, blue, in footwell, front left
238	Earth connection -1-, in interior wiring harness
500	Screw connection -1- (30), on relay plate
A2	Positive (+) connection (15), in dash panel wiring harness
A32	Positive (+) connection (30), in dash panel wiring harness
A87	Connection (RL), in dash panel wiring harness
A98	Positive (+) connection -4- (30), in dash panel wiring harness
B135	Connection -1- (15a), in interior wiring harness
B156	Positive (+) connection (30a), in interior wiring harness

Protected by copyright. Copying for private or commercial purposes, in part or in whole, is not permitted unless authorised by AUDI AG. AUDI AG does not guarantee or accept any liability with respect to the correctness of information in this document. Copyright by AUDI AG.

ws	=	white
sw	=	black
ro	=	red
br	=	brown
gn	=	green
bl	=	blue
gr	=	grey
li	=	purple
ge	=	yellow
or	=	orange
rs	=	pink

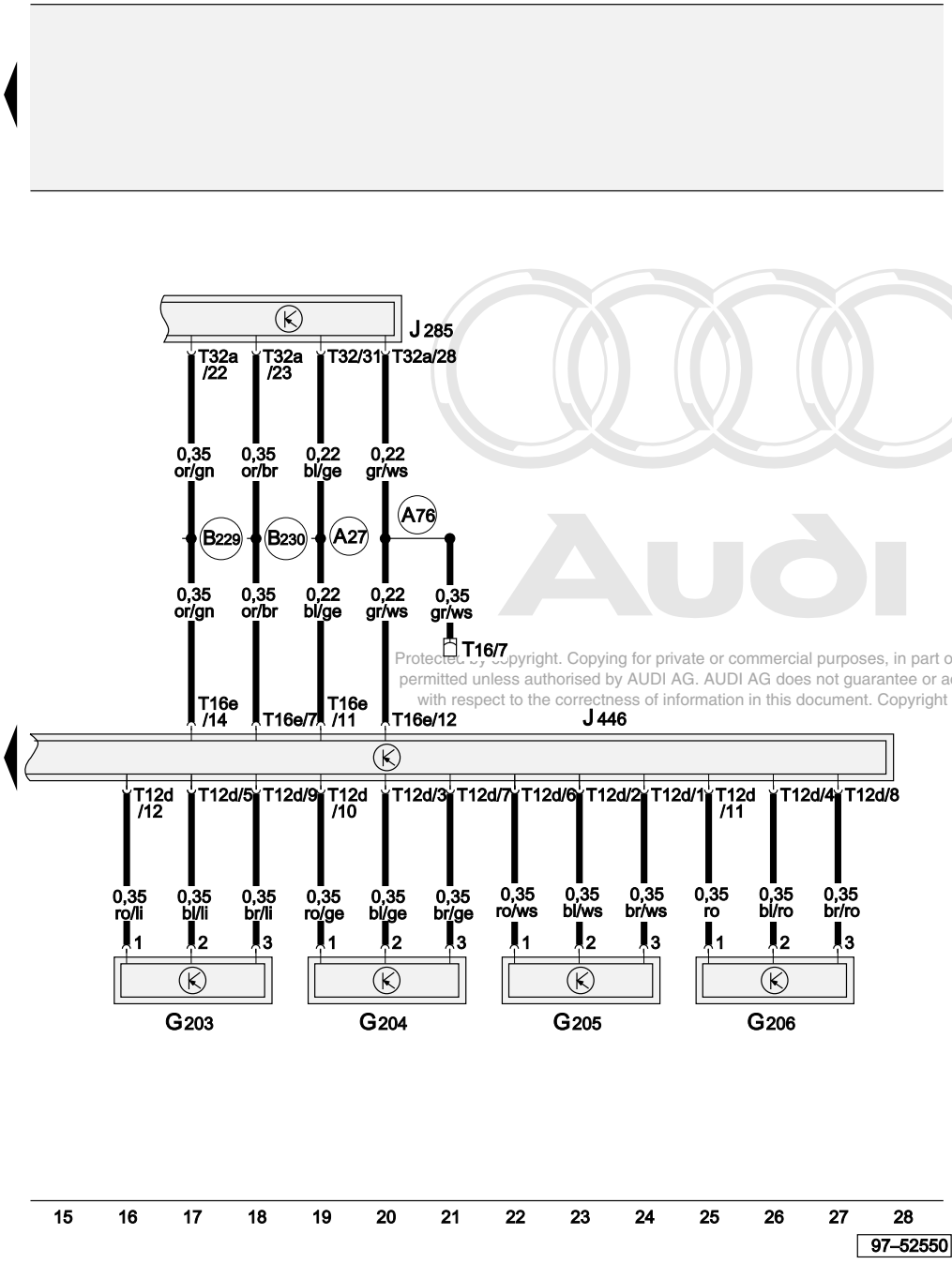

Protected by copyright. Copying for private or commercial purposes, in part or in whole, is not permitted unless authorised by AUDI AG. AUDI AG does not guarantee or accept any liability with respect to the correctness of information in this document. Copyright by AUDI AG.

ws = white
sw = black
ro = red
br = brown
gn = green
bl = blue
gr = grey
li = purple
ge = yellow
or = orange
rs = pink

Parking aid control unit, parking aid sender

G203	Rear left parking aid sender
G204	Centre rear left parking aid sender
G205	Centre rear right parking aid sender
G206	Rear right parking aid sender
J285	Control unit with display in dash panel insert
J446	Parking aid control unit
T12d	12-pin connector, on right luggage compartment
T16	Diagnostic connector, black, near fuse box
T16e	16-pin connector, black, on right luggage compartment
T32	32-pin connector, blue, on dash panel insert
T32a	32-pin connector, green, on dash panel insert
A27	Connection (speed signal), in dash panel wiring harness
A76	Connection (diagnosis wire K), in dash panel wiring harness
B229	Connection (high bus), in interior wiring harness
B230	Connection (low bus), in interior wiring harness

Convenience electrics

- Exterior mirror, heated and adjustable
- Anti-theft alarm system
- Window lifters
- Interior lights
- Luggage compartment lights
- Central locking

From model year 2001

Main fuse

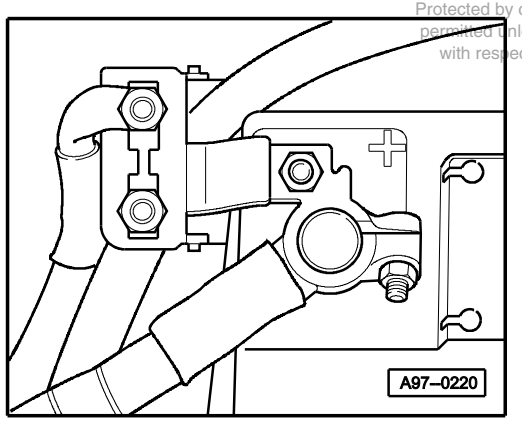

3-point relay carrier (in footwell)

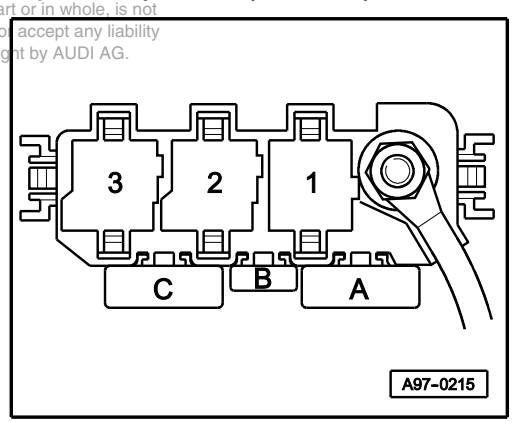

Protected by copyright. Copying for private or commercial purposes, in part or in whole, is not permitted unless authorised by AUDI AG. AUDI AG does not guarantee or accept any liability with respect to the correctness of information in this document. Copyright by AUDI AG.

9-point relay carrier (in dash panel)

Fuse box

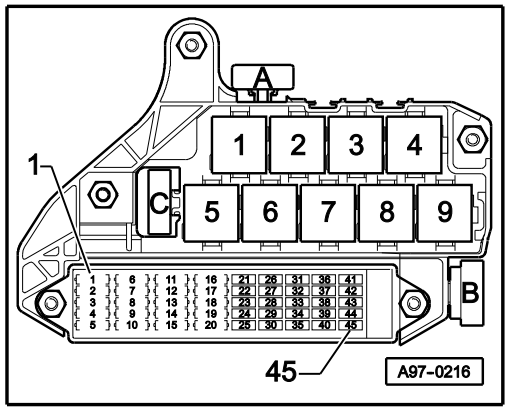

Fuse colours

30 A – green
25 A – white
20 A – yellow
15 A – blue
10 A – red
7.5A – orange
5A – beige

Connector carrier, A pillar, left

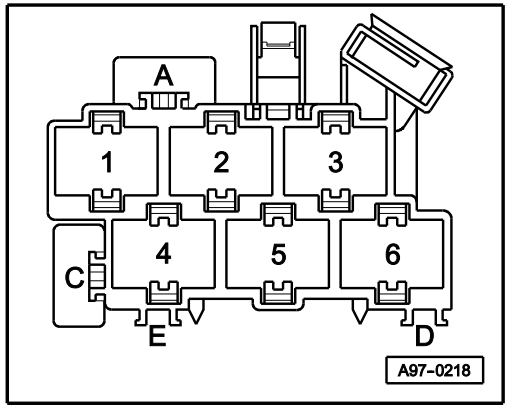

A - Window lifter single fuse (S37)

Connector carrier, A pillar, right

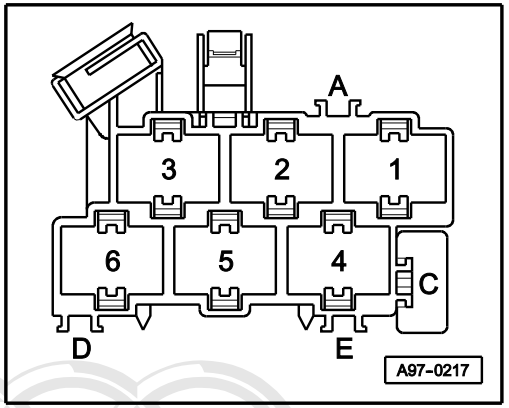

B - Window lifter single fuse 2 (S280)

Protected by copyright. Copying for private or commercial purposes, in part or in whole, is not permitted unless authorised by AUDI AG. AUDI AG does not guarantee or accept any liability with respect to the correctness of information in this document. Copyright by AUDI AG.

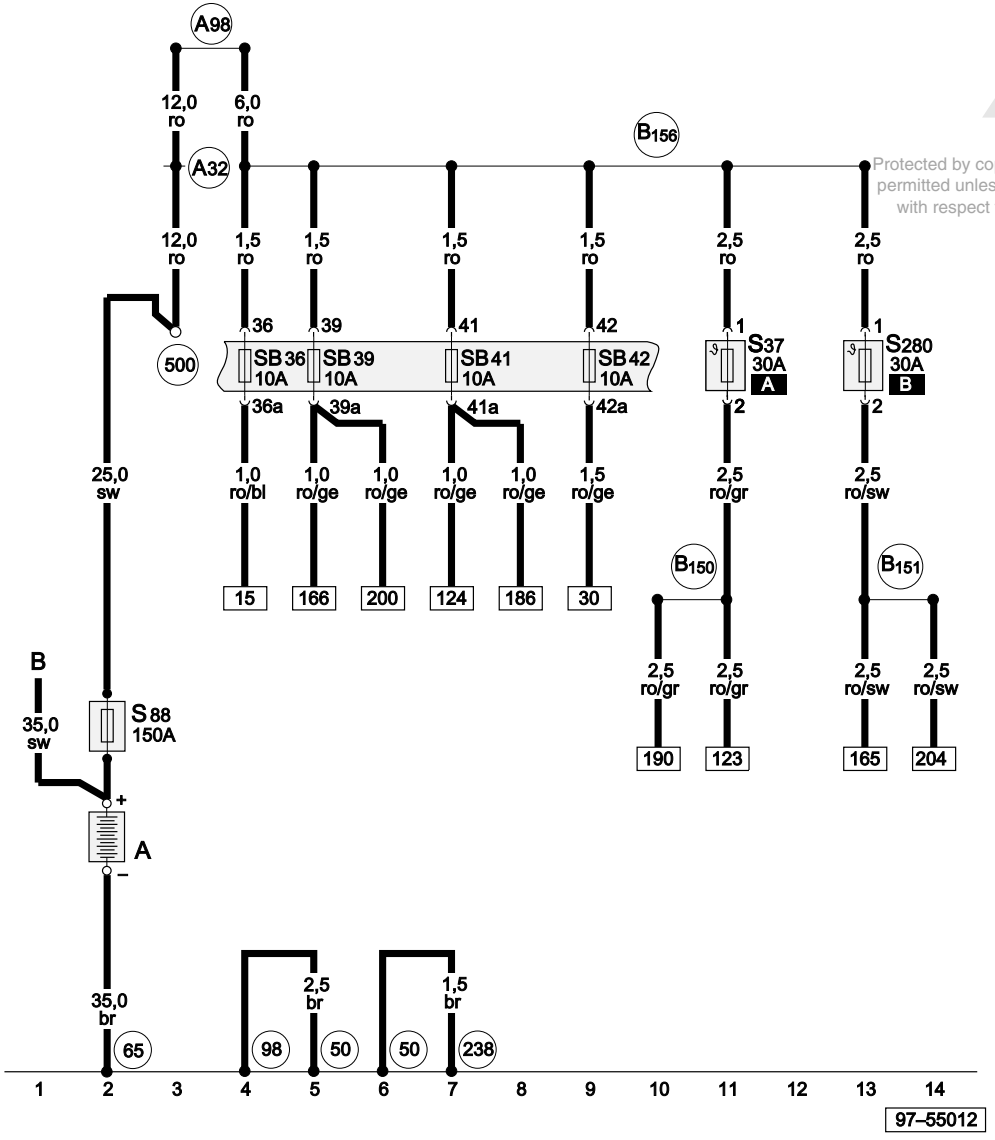

ws = white
sw = black
ro = red
br = brown
gn = green
bl = blue
gr = grey
li = purple
ge = yellow
or = orange
rs = pink

Current supply

A	Battery
B	Starter
S37	Electric window single fuse
S88	Strip fuse
S280	Electric window single fuse 2
SB36	Fuse -36- on fuse box
SB39	Fuse -39- on fuse box
SB41	Fuse -41- on fuse box
SB42	Fuse -42- on fuse box
50	Earth point, luggage compartment, left
65	Earth point, left longitudinal member, rear
98	Earth connection, in tailgate/boot lid wiring harness
238	Earth connection -1-, in interior wiring harness
500	Screw connection -1- (30), on relay plate
A32	Positive (+) connection (30), in dash panel wiring harness
A98	Positive (+) connection -4- (30), in dash panel wiring harness
B150	Positive (+) connection -2- (30a), in interior wiring harness
B151	Positive (+) connection -3- (30a), in interior wiring harness
B156	Positive (+) connection -4- (30), in interior wiring harness

Protected by copyright. Copying for private or commercial purposes, in part or in whole, is not permitted unless authorised by AUDI AG. AUDI AG does not guarantee or accept any liability with respect to the correctness of information in this document. Copyright by AUDI AG.

Convenience system central control unit, tank filler flap remote release, interior monitor switch, aerial for central locking and anti-theft alarm system

E183	Interior monitor switch
E204	Tank filler flap remote release switch
J393	Convenience system central control unit
R47	Central locking and anti-theft alarm system aerial
V155	Tank filler flap release motor
238	Earth connection -1-, in interior wiring harness
284	Earth connection -6-, in interior wiring harness
B111	Positive (+) connection -1- (30a), in interior wiring harness
B155	Connection -2- (TK (door contact)), in interior wiring harness
*	Only models with anti-theft alarm system

Protected by copyright. Copying for private or commercial purposes, in part or in whole, is not permitted unless authorized by AUDI AG. AUDI AG does not guarantee or accept any liability with respect to the correctness of information in this document. Copyright by AUDI AG.

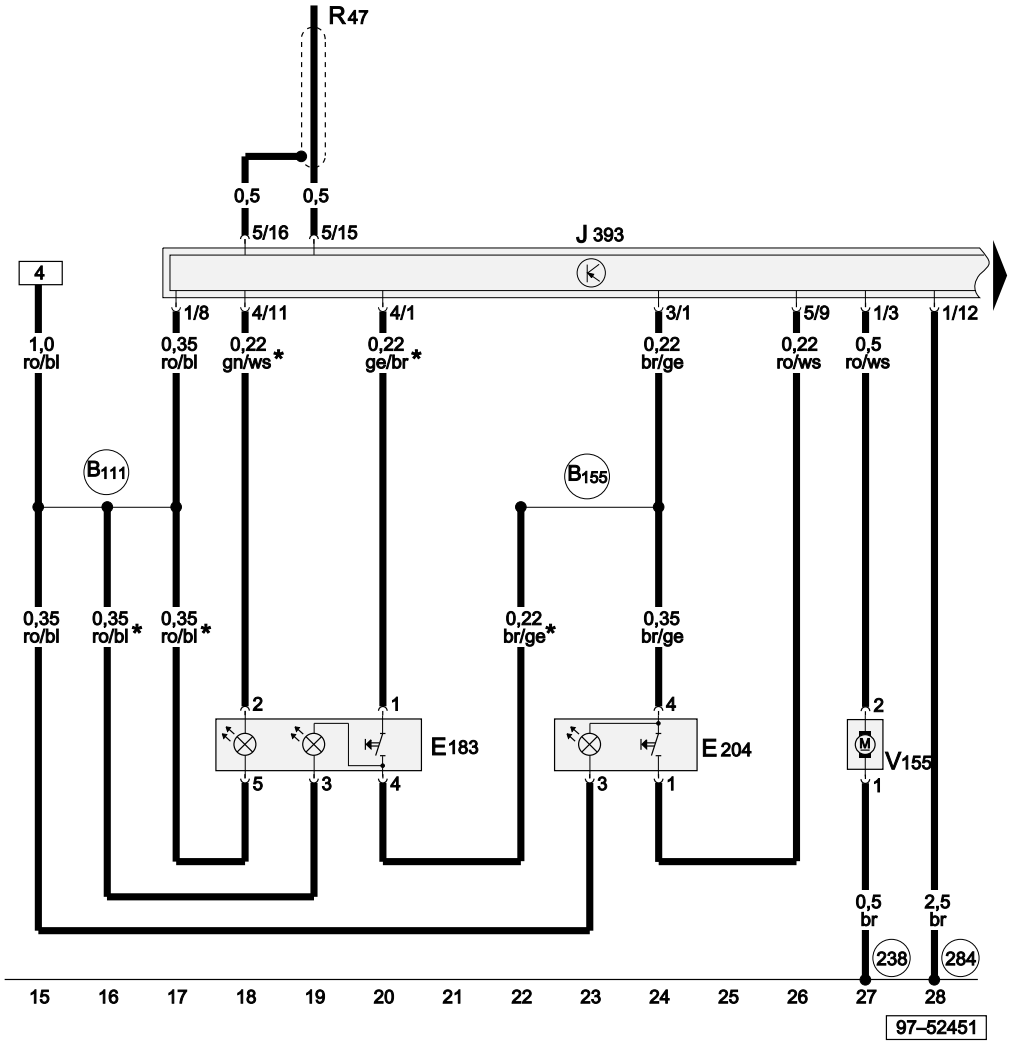

ws	=	white
sw	=	black
ro	=	red
br	=	brown
gn	=	green
bl	=	blue
gr	=	grey
li	=	purple
ge	=	yellow
or	=	orange
rs	=	pink

Convenience system central control unit, bonnet contact switch, anti-theft alarm ultra-sonic sensor, anti-theft alarm system horn

F266	Bonnet contact switch
G209	Anti-theft alarm ultra-sonic sensor
H8	Anti-theft alarm system horn
J285	Control unit with display in dash panel insert
J393	Convenience system central control unit
T16	10-pin connector, black, diagnostic connector, near fuse box
T17g	17-pin connector, red, connector point, A pillar, left
T32	32-pin connector, blue, on dash panel insert
T32a	32-pin connector, green, on dash panel insert
179	Earth connection, in left headlight wiring harness
238	Earth connection -1-, in interior wiring harness
249	Earth connection -2-, in interior wiring harness
A76	Connection (diagnosis wire K), in dash panel wiring harness
B115	Positive (+) connection (30, central electrics), in interior wiring harness
B214	Connection -1- (central locking), in interior wiring harness
*	Only models with anti-theft alarm system

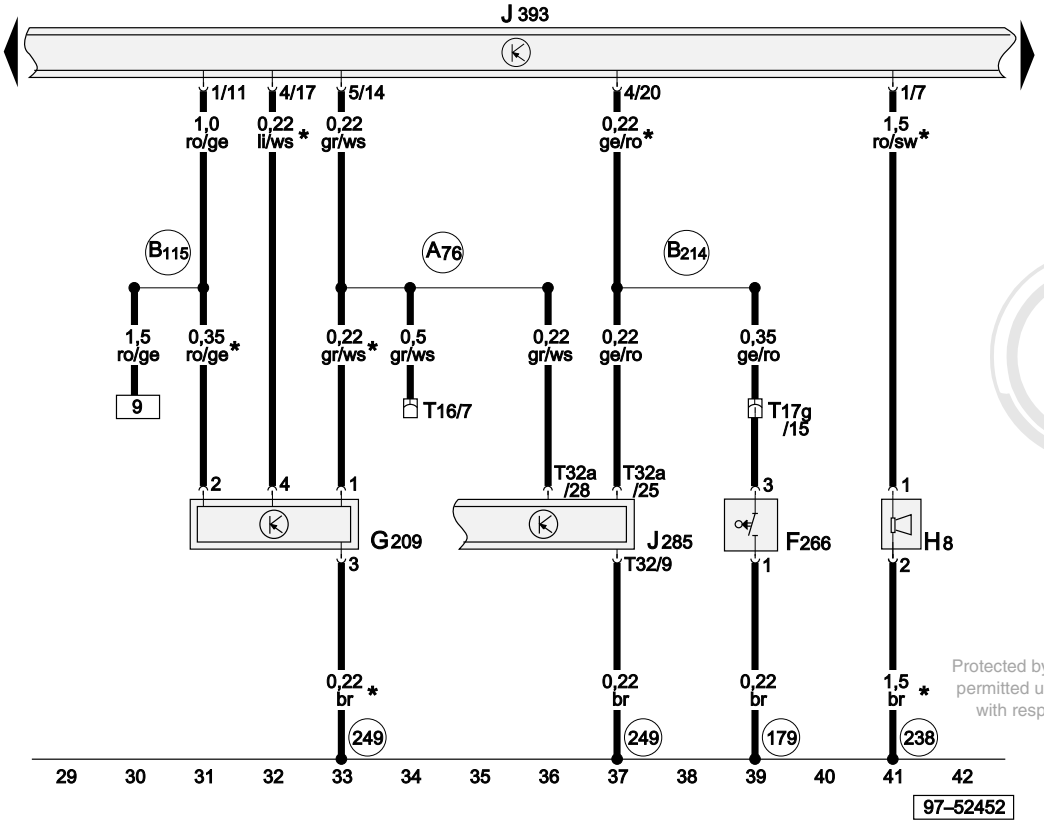

ws = white
sw = black
ro = red
br = brown
gn = green
bl = blue
gr = grey
li = purple
ge = yellow
or = orange
rs = pink

Protected by copyright. Copying for private or commercial purposes, in part or in whole, is not permitted unless authorised by AUDI AG. AUDI AG does not guarantee or accept any liability with respect to the correctness of information in this document. Copyright by AUDI AG.

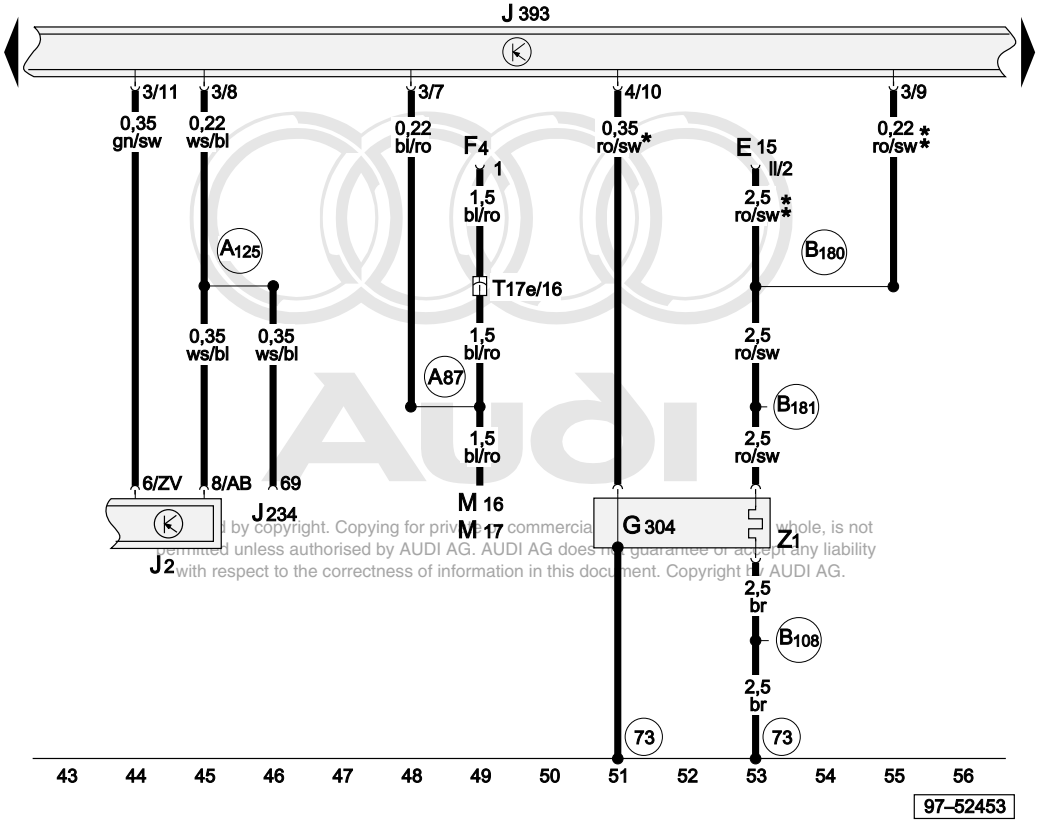

Audi
... by copyright. Copying for private or commercial ... whole, is not permitted unless authorised by AUDI AG. AUDI AG does not guarantee or accept any liability with respect to the correctness of information in this document. Copyright by AUDI AG.

ws = white
sw = black
ro = red
br = brown
gn = green
bl = blue
gr = grey
li = purple
ge = yellow
or = orange
rs = pink

Convenience system central control unit, glass breakage sensor, rear window, tailgate/boot lid release

E15	Heated rear window switch
F4	Reversing light switch
G304	Glass breakage sensor, rear window
J2	Hazard warning light relay
J234	Airbag control unit
J393	Convenience system central control unit
M16	Reversing light bulb, left
M17	Reversing light bulb, right
T17e	17-pin connector, blue, in footwell, front left
Z1	Heated rear window
73	Earth point, rear roof rail
A87	Connection (RL), in dash panel wiring harness
A125	Connection (crash signal), in dash panel wiring harness
B108	Earth connection, in rear right interior wiring harness
B180	Connection (heated rear window), in interior wiring harness
B181	Connection (heated windscreen), in interior wiring harness
*	Only models with anti-theft alarm system
**	Not with air conditioner

Convenience system central control unit, interior light front, luggage compartment light, rear interior light

E1	Lighting switch
J393	Convenience system central control unit
W	Interior light, front
W13	Reading light, front passenger's side
W18	Luggage compartment light, left
W19	Reading light, driver's side
W43	Rear interior light
249	Earth connection -2-, in interior wiring harness
A29	Connection (interior light), in dash panel wiring harness
B145	Positive (+) connection (58b), in interior wiring harness
B154	Connection -1- (DC), in interior wiring harness

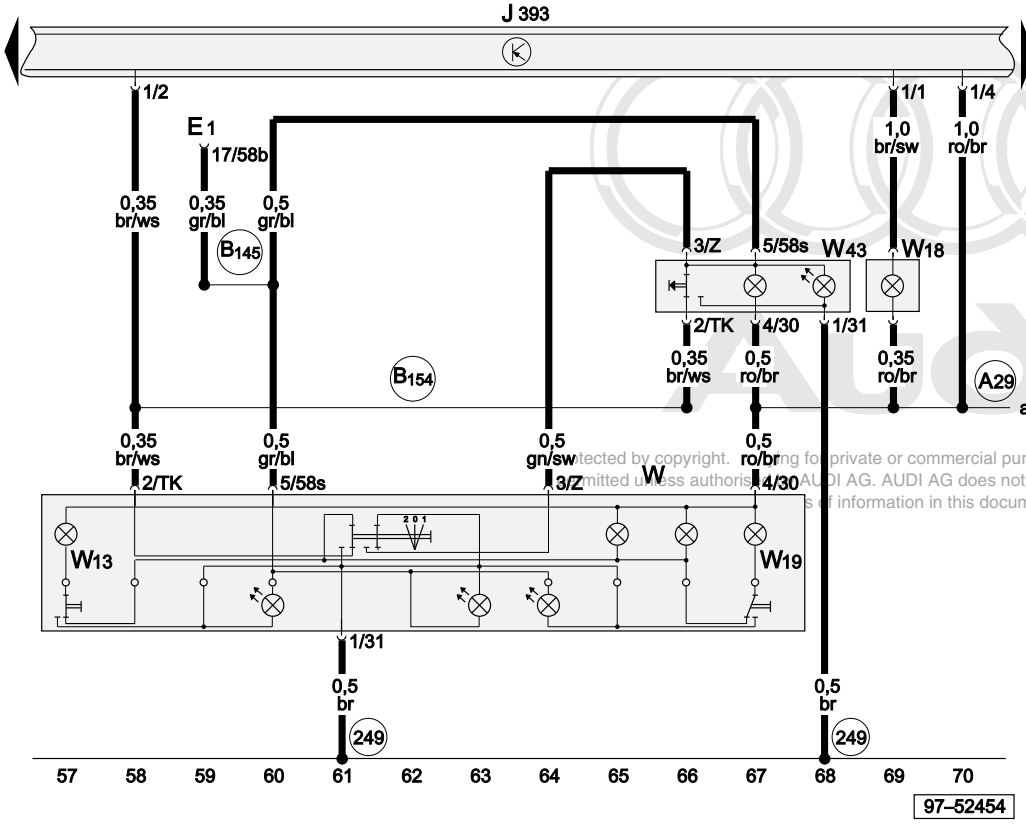

Audi
tected by copyright. ng for private or commercial purposes, in part or in whole, is not
mitted unless authoris AUDI AG. AUDI AG does not guarantee or accept any liability
s of information in this document. Copyright by AUDI AG.

ws	=	white
sw	=	black
ro	=	red
br	=	brown
gn	=	green
bl	=	blue
gr	=	grey
li	=	purple
ge	=	yellow
or	=	orange
rs	=	pink

Convenience system central control unit, tailgate/boot lid contact switch for anti-theft alarm, tailgate/boot lid release

F9	Handbrake warning switch
F123	Tailgate/boot lid contact switch for anti-theft alarm
F147	Make-up mirror contact switch, driver's side
F148	Make-up mirror contact switch, front passenger's side
F248	Release button for tailgate/boot lid lock cylinder
J393	Convenience system central control unit
J534	Handbrake warning lamp control unit
L31	Make-up mirror light bulb
V139	Tailgate/boot lid release motor
98	Earth connection, in tailgate/boot lid wiring harness
238	Earth connection -1-, in interior wiring harness
249	Earth connection -2-, in interior wiring harness
A24	Connection (brake system monitoring), in dash panel wiring harness
A29	Connection (interior light), in dash panel wiring harness
*	Only models with illuminated make-up mirror

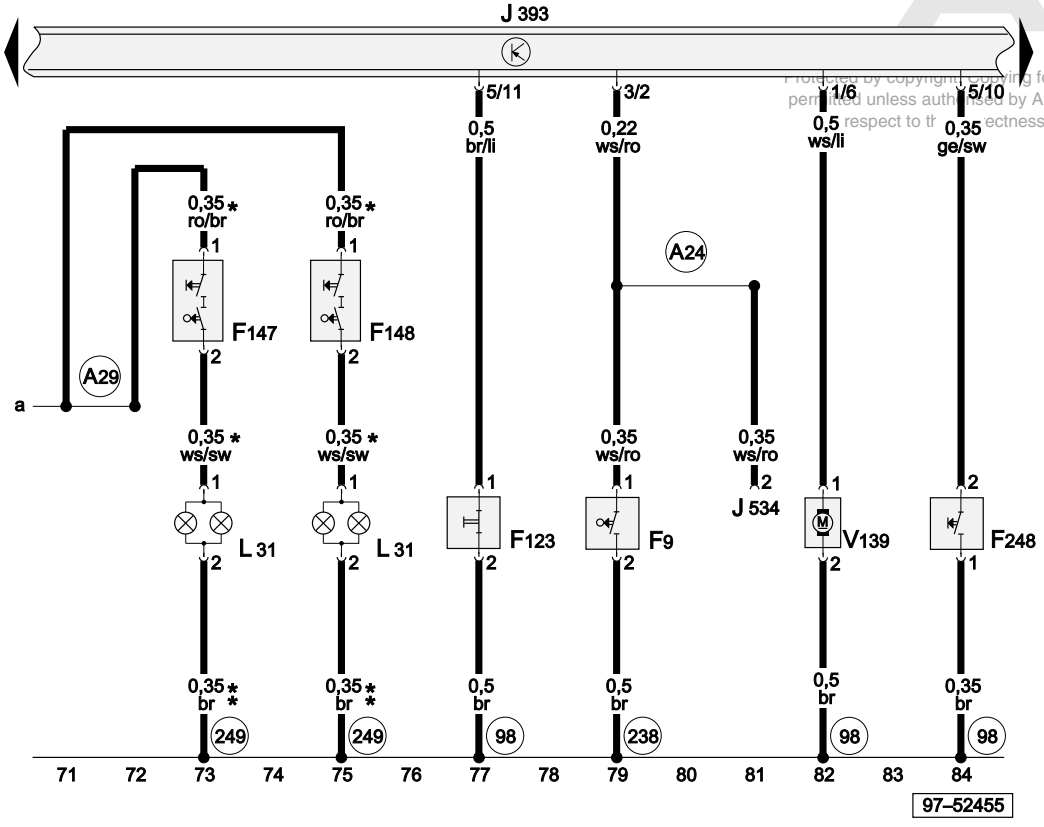

ws = white
sw = black
ro = red
br = brown
gn = green
bl = blue
gr = grey
li = purple
ge = yellow
or = orange
rs = pink

Protected by copyright. Copying for private or commercial purposes, in part or in whole, is not permitted unless authorised by AUDI AG. AUDI AG does not guarantee or accept any liability with respect to the correctness of information in this document. Copyright by AUDI AG.

Convenience system central control unit, central locking lock unit, rear left, without window lifter rear

F10	Rear left door contact switch
F132	Central locking actuator, rear left
F222	Central locking lock unit, rear left
F245	Central locking actuator (Safe), rear left door
J393	Convenience system central control unit
T8c	8-pin connector, black, rear left door
T10c	10-pin connector, black, at B pillar, left
V115	Central locking motor, rear left door
V163	Central locking motor (Safe), rear left door
(249)	Earth connection -2-, in interior wiring harness

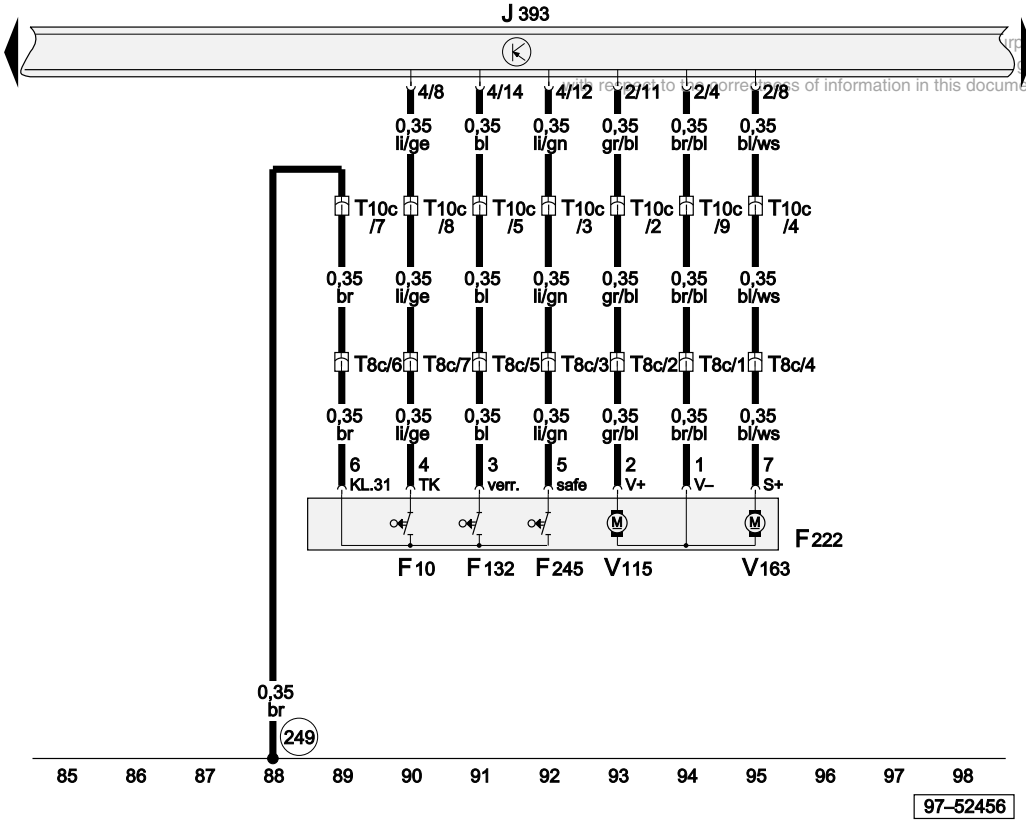

ws = white
sw = black
ro = red
br = brown
gn = green
bl = blue
gr = grey
li = purple
ge = yellow
or = orange
rs = pink

...rposes, in part or in whole, is not ...with respect to the correctness of information in this document. Copyright by AUDI AG. ...guarantee or accept any liability

Convenience system central control unit, central locking lock unit, rear right, without window lifter rear

F11	Rear right door contact switch
F134	Central locking actuator, rear right
F223	Central locking lock unit, rear right
F246	Central locking actuator (Safe), rear right door
J393	Convenience system central control unit
T8d	8-pin connector, black, rear right door
T10b	10-pin connector, black, at B pillar, right
V97	Central locking motor, rear right door
V164	Central locking motor (Safe), rear right door
249	Earth connection -2-, in interior wiring harness

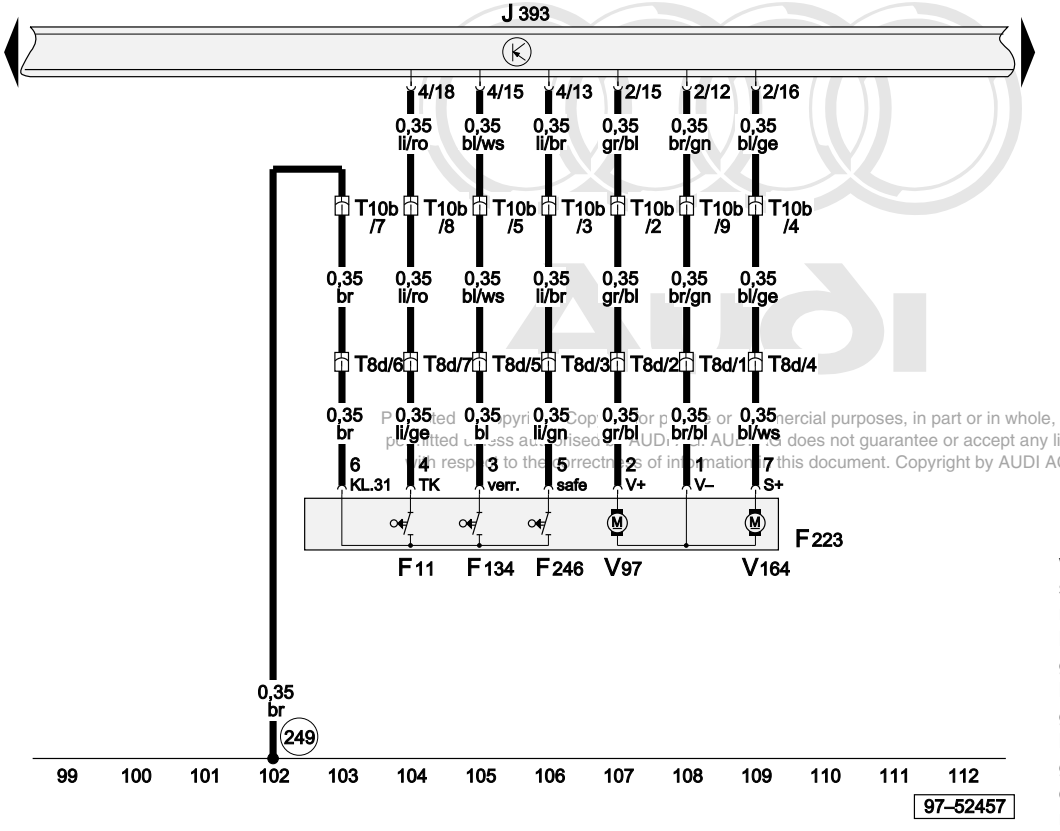

Protected by copyright. Copying for private or commercial purposes, in part or in whole, is not permitted unless authorised by AUDI AG. AUDI AG does not guarantee or accept any liability with respect to the correctness of information in this document. Copyright by AUDI AG.

ws	=	white
sw	=	black
ro	=	red
br	=	brown
gn	=	green
bl	=	blue
gr	=	grey
li	=	purple
ge	=	yellow
or	=	orange
rs	=	pink

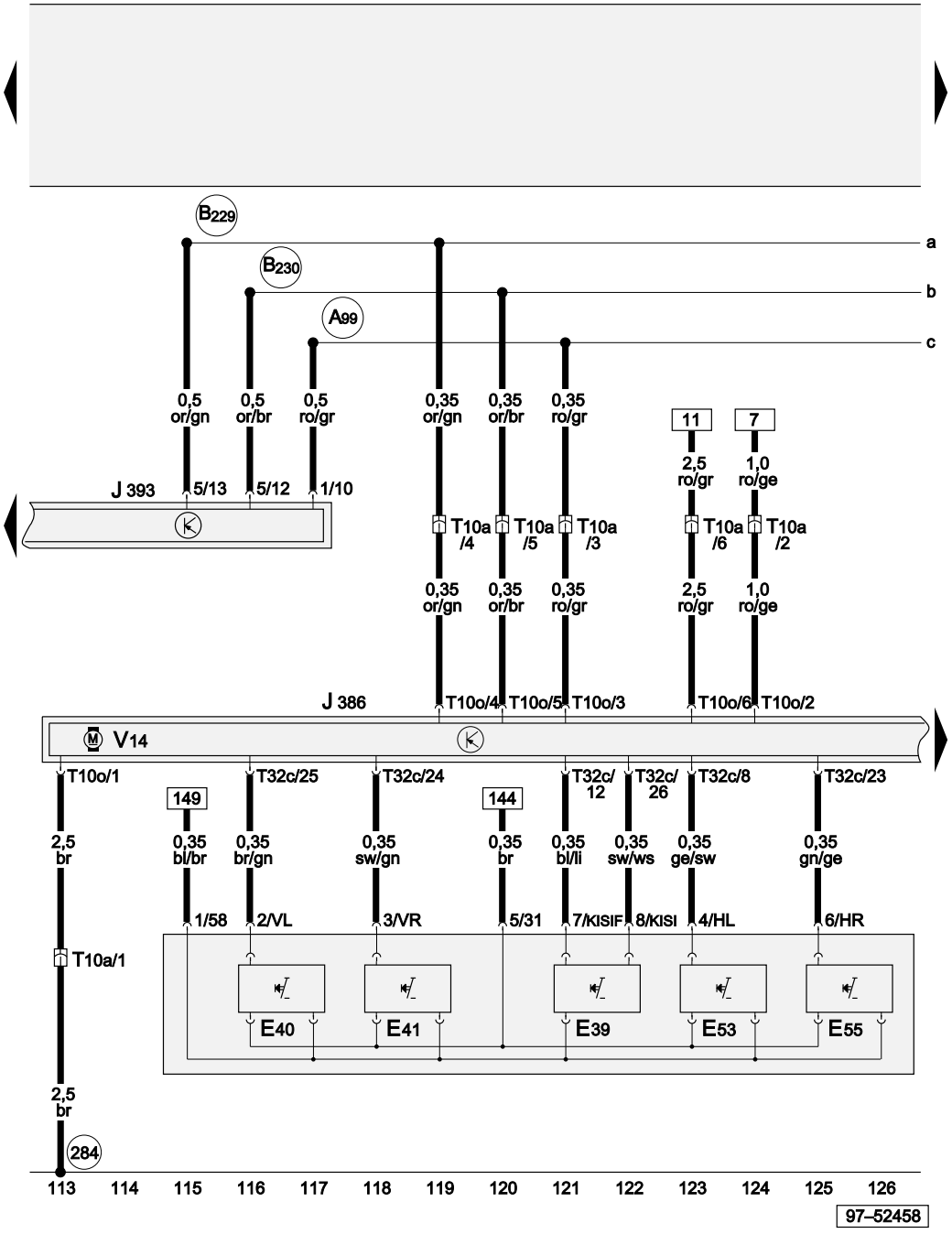

ws = white
sw = black
ro = red
br = brown
gn = green
bl = blue
gr = grey
li = purple
ge = yellow
or = orange
rs = pink

Door control unit, driver's side, convenience system central control unit, window lifter motor, left

E39	Rear window lifter isolation switch
E40	Window lifter switch, front left
E41	Window lifter switch, front right
E53	Window lifter switch, rear left, driver's
E55	Window lifter switch, rear right, driver's
J386	Door control unit, driver's side
J393	Convenience system central control unit
T10a	10-pin connector, black, at B pillar, left
T10o	10-pin connector, black, on door control unit, driver's door
T32c	32-pin connector, grey, door control unit, driver's door
V14	Window lifter motor, left
284	Earth connection -6-, in interior wiring harness
A99	Connection -1- (87), in dash panel wiring harness
B229	Connection (high bus), in interior wiring harness
B230	Connection (low bus), in interior wiring harness

Protected by copyright. Copying for private or commercial purposes, in part or in whole, is not permitted unless authorised by AUDI AG. AUDI AG does not guarantee or accept any liability with respect to the correctness and completeness of this Current Flow Diagram (CFD).

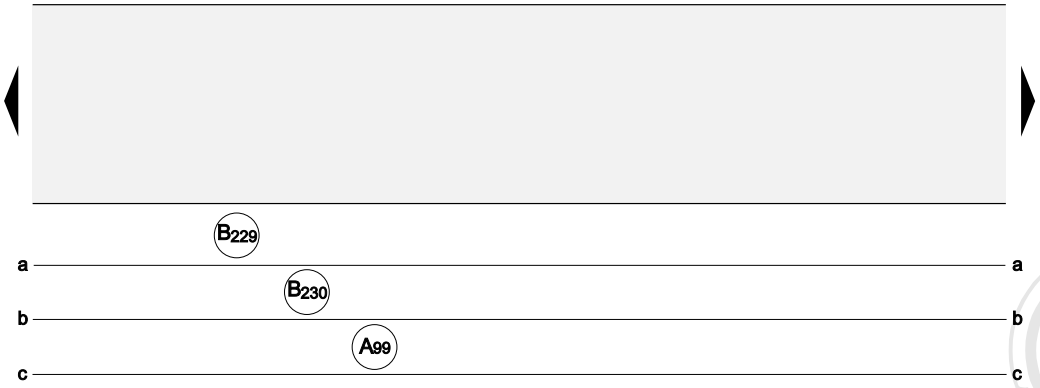

Door control unit, driver's side, central locking lock unit, driver's side, door contact switch, driver's side

F2	Door contact switch, driver's side
F131	Central locking actuator, front left
F220	Central locking lock unit, driver's side
F241	Contact switch in lock cylinder, driver's side
F243	Central locking actuator (Safe), driver's door
J386	Door control unit, driver's side
T12	12-pin connector, black, in door control unit, driver's side
V56	Central locking motor, driver´s door
V161	Central locking motor (Safe), driver's door
A99	Connection -1- (87), in dash panel wiring harness
B229	Connection (high bus), in interior wiring harness
B230	Connection (low bus), in interior wiring harness

Protected by copyright. Copying for private or commercial purposes, in part or in whole, is not permitted unless authorised by AUDI AG. AUDI AG does not guarantee or accept any liability with respect to the correctness of information in this document. Copyright by AUDI AG.

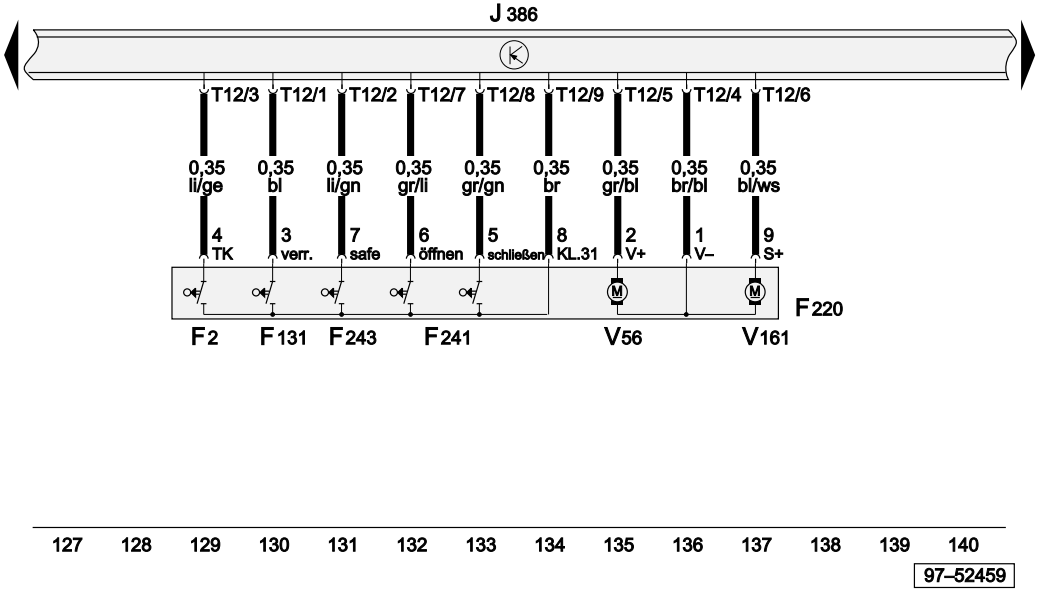

ws	=	white
sw	=	black
ro	=	red
br	=	brown
gn	=	green
bl	=	blue
gr	=	grey
li	=	purple
ge	=	yellow
or	=	orange
rs	=	pink

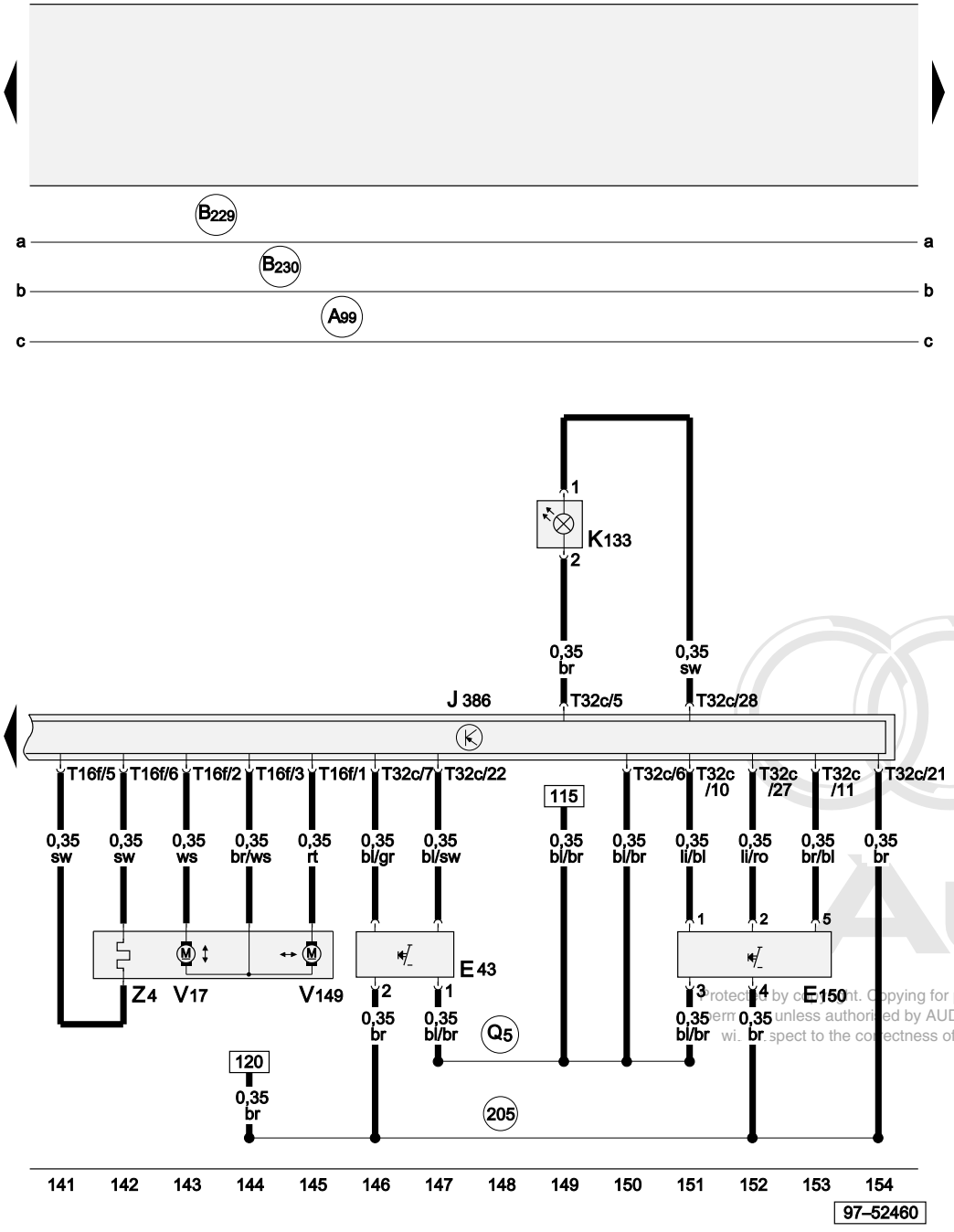

Door control unit, driver's side, mirror adjustment motor, driver' side, heated exterior mirror, driver's side

E43	Mirror adjustment switch
E150	Interior locking switch, driver's side
J386	Door control unit, driver's side
K133	Central locking warning lamp -SAFE-
T16f	16-pin connector, door control unit, driver's door
T32c	32-pin connector, grey, door control unit, driver's door
V17	Mirror adjustment motor, driver's side
V149	Mirror adjustment motor, driver's side
Z4	Heated exterior mirror, driver's side
205	Earth connection, in door wiring harness - driver's side
A99	Connection -1- (87), in dash panel wiring harness
B229	Connection (high bus), in interior wiring harness
B230	Connection (low bus), in interior wiring harness
Q5	Positive (+) connection (58), in window lifter/central locking and door contact switch wiring harness

ws	=	white
sw	=	black
ro	=	red
br	=	brown
gn	=	green
bl	=	blue
gr	=	grey
li	=	purple
ge	=	yellow
or	=	orange
rs	=	pink

Protected by copyright. Copying for private or commercial purposes, in part or in whole, is not permitted unless authorised by AUDI AG. AUDI AG does not guarantee or accept any liability with respect to the correctness of information in this document. Copyright by AUDI AG.

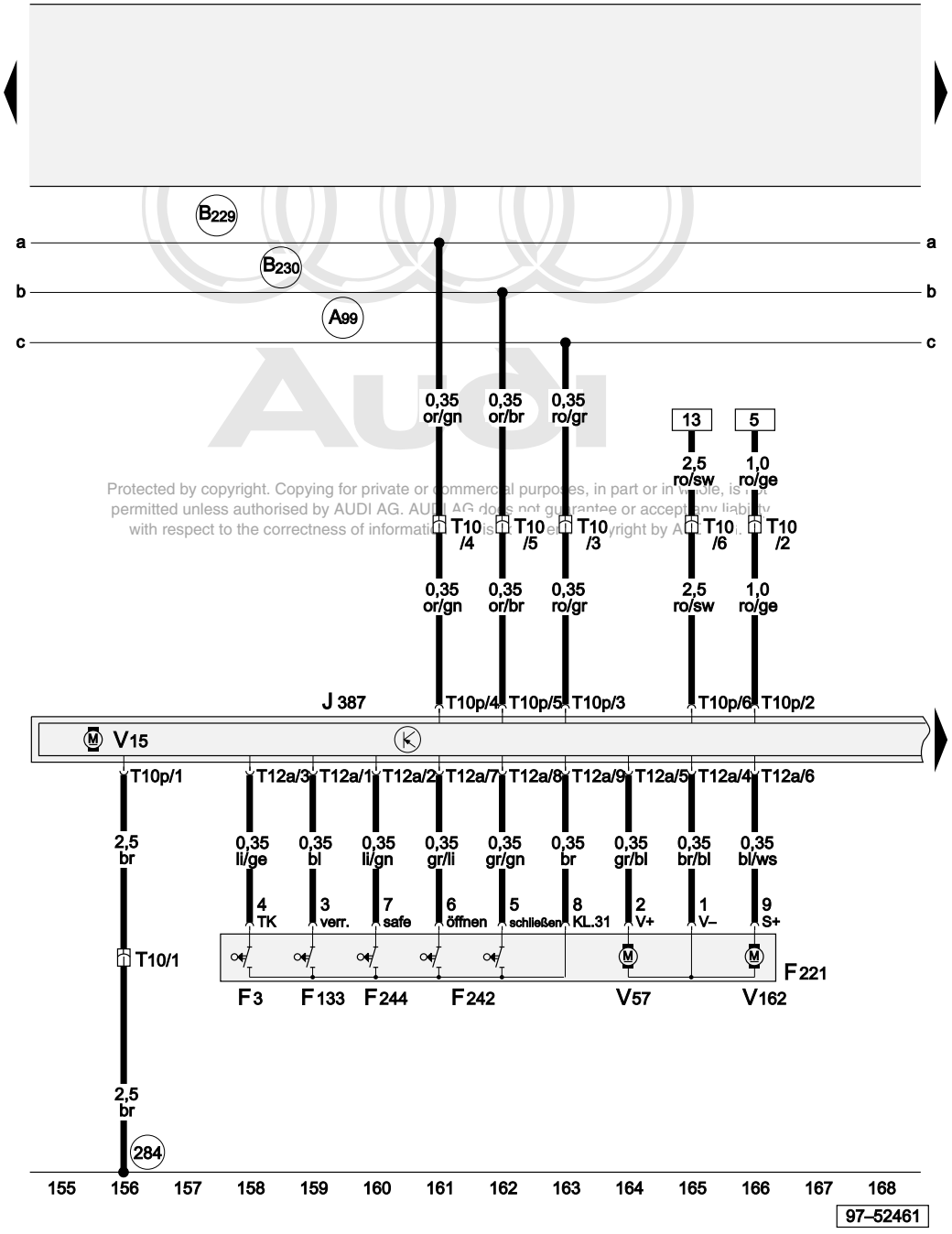

Protected by copyright. Copying for private or commercial purposes, in part or in whole, is not permitted unless authorised by AUDI AG. AUDI AG does not guarantee or accept any liability with respect to the correctness of information in this document. Copyright by AUDI AG.

ws = white
sw = black
ro = red
br = brown
gn = green
bl = blue
gr = grey
li = purple
ge = yellow
or = orange
rs = pink

Door control unit, front passenger's side, central locking lock unit, front passenger's side, door contact switch, front passenger's side, window lifter motor, right

F3	Door contact switch, front passenger's side
F133	Central locking actuator, front right
F221	Central locking lock unit, front passenger's side
F242	Contact switch in lock cylinder, front passenger's side
F244	Central locking actuator (Safe), front passenger's door
J387	Door control unit, front passenger's side
T10	10-pin connector, black, at A pillar, right
T10p	10-pin connector, black, front right door
T12a	12-pin connector, black, on door control unit, front passenger's side
V15	Window lifter motor, right
V57	Central locking motor, front passenger's door
V162	Central locking motor (Safe), front passenger's door
284	Earth connection -6-, in interior wiring harness
A99	Connection -1- (87), in dash panel wiring harness
B229	Connection (high bus), in interior wiring harness
B230	Connection (low bus), in interior wiring harness

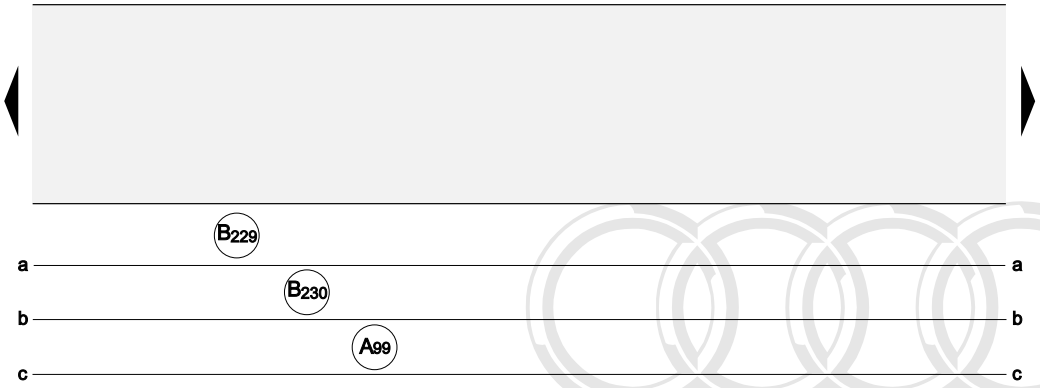

Door control unit, front passenger's side, mirror adjustment motor, front passenger's side, heated exterior mirror, front passenger's side, window lifter switch, in front passenger's door

E107	Window lifter switch, in front passenger's door
J387	Door control unit, front passenger's side
T16g	16-pin connector, door control unit, front passenger's door
T32d	32-pin connector, grey, door control unit, front passenger's door
V25	Mirror adjustment motor, front passenger's side
V150	Mirror adjustment motor, front passenger's side
Z5	Heated exterior mirror, front passenger's side
A99	Connection -1- (87), in dash panel wiring harness
B229	Connection (high bus), in interior wiring harness
B230	Connection (low bus), in interior wiring harness

Protected by copyright. Copying for private or commercial purposes, in part or in whole, is not permitted unless authorised by AUDI AG. AUDI AG does not guarantee or accept any liability with respect to the correctness of information in this document. Copyright by AUDI AG.

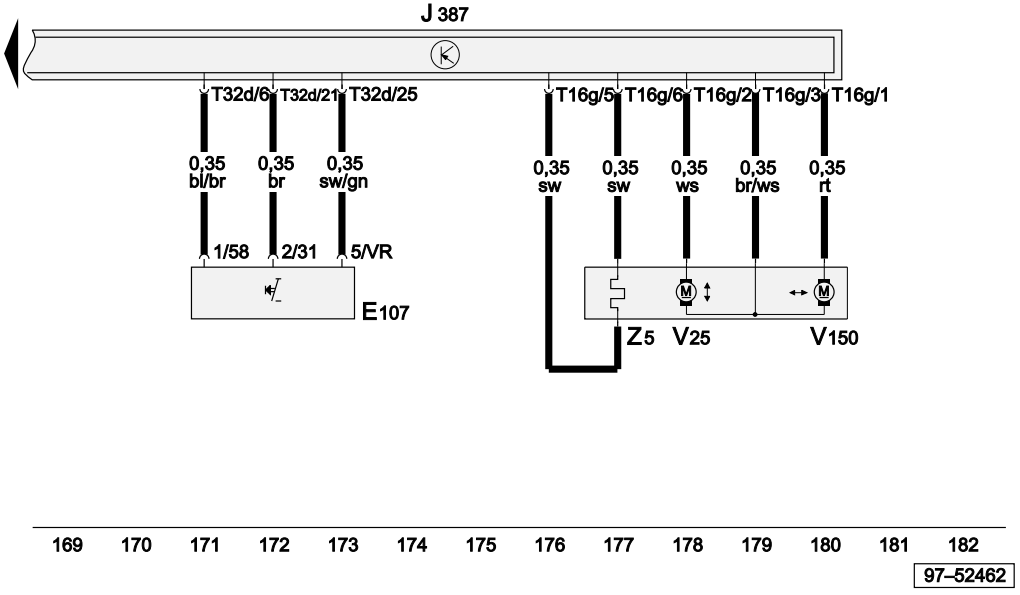

ws	=	white
sw	=	black
ro	=	red
br	=	brown
gn	=	green
bl	=	blue
gr	=	grey
li	=	purple
ge	=	yellow
or	=	orange
rs	=	pink

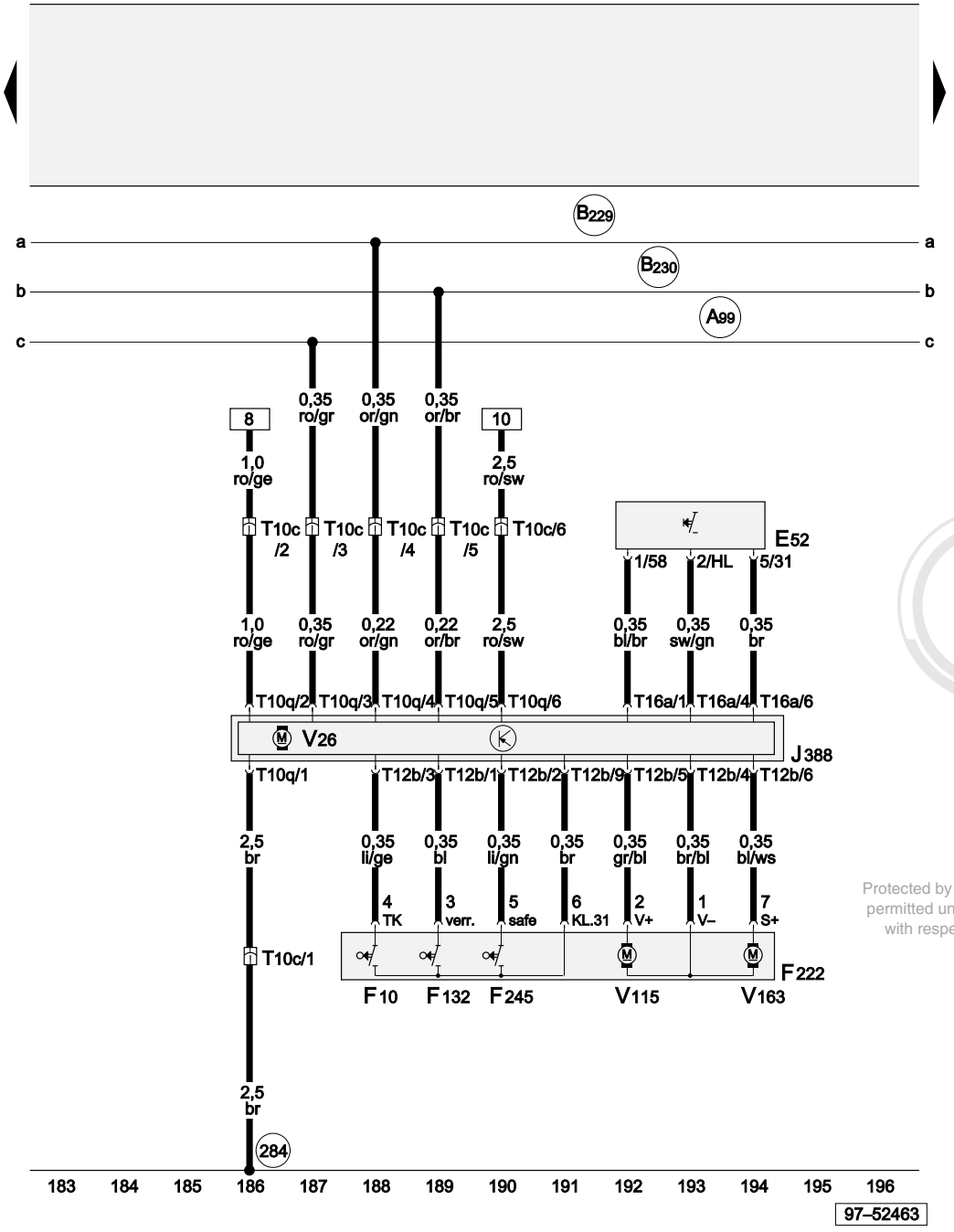

Door control unit, rear left, central locking lock unit, rear left, rear left door contact switch, window lifter motor, rear left

E52	Window lifter switch, rear left (in door)
F10	Rear left door contact switch
F132	Central locking actuator, rear left
F222	Central locking lock unit, rear left
F245	Central locking actuator (Safe), rear left door
J388	Door control unit, rear left
T10c	10-pin connector, black, at B pillar, left
T10q	10-pin connector, black, on door control unit, rear left
T12b	12-pin connector, black, on door control unit, rear left
T16a	16-pin connector, brown, on door control unit, rear left
V26	Window lifter motor, rear left
V115	Central locking motor, rear left door
V163	Central locking motor (Safe), rear left door
284	Earth connection -6-, in interior wiring harness
A99	Connection -1- (87), in dash panel wiring harness
B229	Connection (high bus), in interior wiring harness
B230	Connection (low bus), in interior wiring harness

Protected by copyright. Copying for private or commercial purposes, in part or in whole, is not permitted unless authorised by AUDI AG. AUDI AG does not guarantee or accept any liability with respect to the correctness of information in this document. Copyright by AUDI AG.

ws	=	white
sw	=	black
ro	=	red
br	=	brown
gn	=	green
bl	=	blue
gr	=	grey
li	=	purple
ge	=	yellow
or	=	orange
rs	=	pink

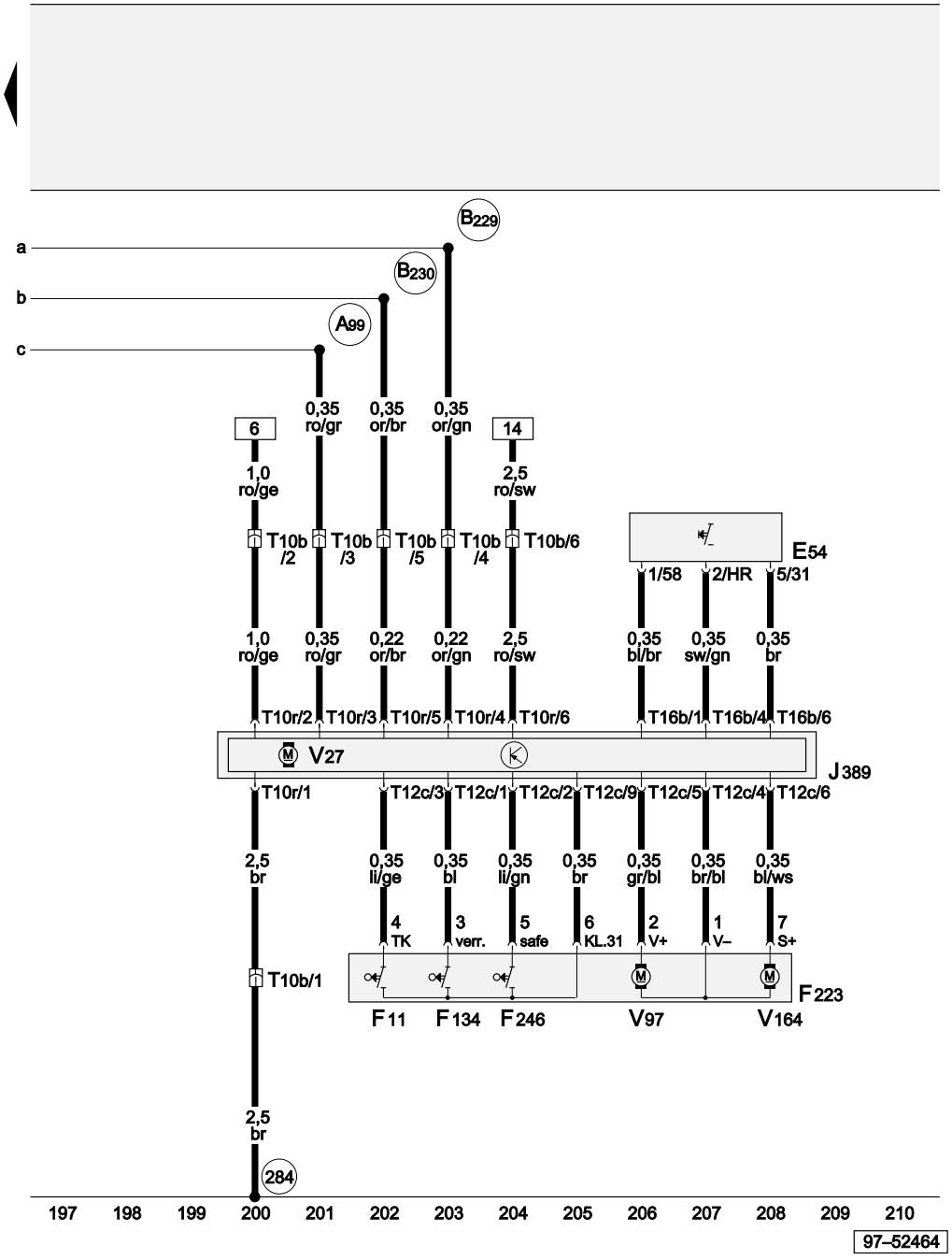

ws = white
sw = black
ro = red
br = brown
gn = green
bl = blue
gr = grey
li = purple
ge = yellow
or = orange
rs = pink

Door control unit, rear right, central locking lock unit, rear right, rear right door contact switch, window lifter motor, rear right

E54	Window lifter switch, rear right (in door)
F11	Rear right door contact switch
F134	Central locking actuator, rear right
F223	Central locking lock unit, rear right
F246	Central locking actuator (Safe), rear right door
J389	Door control unit, rear right
T10b	10-pin connector, black, at B pillar, right
T10r	10-pin connector, black, rear right door
T12c	12-pin connector, black, rear right door
T16b	16-pin connector, brown, rear right door
V27	Window lifter motor, rear right
V97	Central locking motor, rear right door
V164	Central locking motor (Safe), rear right door
284	Earth connection -6-, in interior wiring harness
A99	Connection -1- (87), in dash panel wiring harness
B229	Connection (high bus), in interior wiring harness
B230	Connection (low bus), in interior wiring harness

Protected by copyright. Copying for private or commercial purposes, in part or in whole, is not permitted unless authorised by AUDI AG. AUDI AG does not guarantee or accept any liability with respect to the correctness and completeness of this document's contents. Copyright by AUDI AG.

Radio

- Chorus
- Concert

From model year 2001

Main fuse

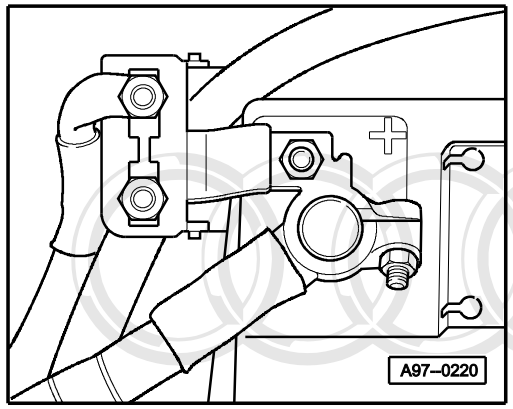

3-point relay carrier (in footwell)

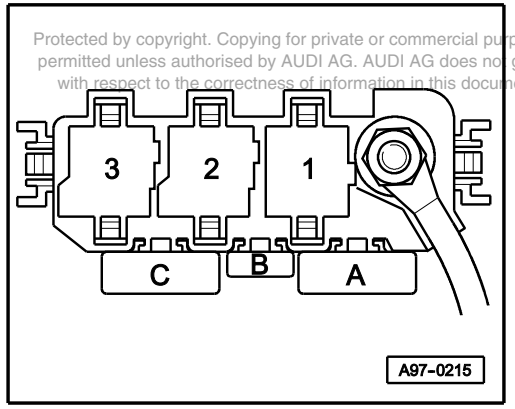

Protected by copyright. Copying for private or commercial purposes, in part or in whole, is not permitted unless authorised by AUDI AG. AUDI AG does not guarantee or accept any liability with respect to the correctness of information in this document. Copyright by AUDI AG.

9-point relay carrier (in dash panel)

Fuse box

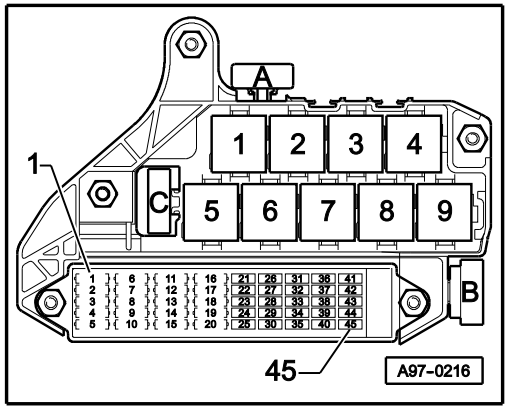

Fuse colours

30 A - green
25 A - white
20 A - yellow
15 A - blue
10 A - red
7.5 A - orange
5 A - beige

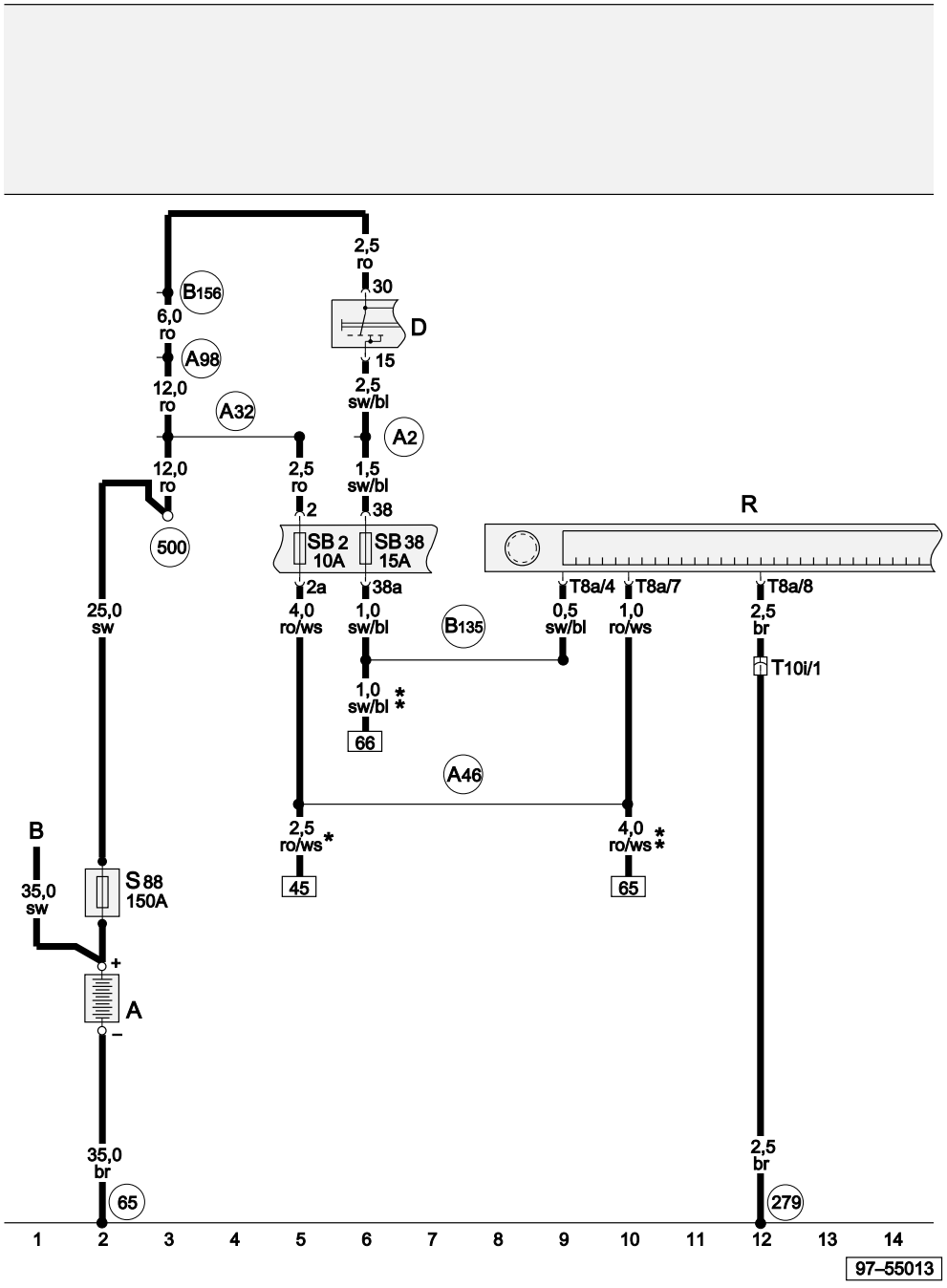

Voltage supply

A	Battery
B	Starter
D	Ignition/starter switch
R	Radio
S88	Strip fuse
SB2	Fuse on fuse box
SB38	Fuse on fuse box
T8a	8-pin connector, black, radio connector III
T10i	10-pin connector, black, connector point, A pillar, right
65	Earth point, left longitudinal member, rear
279	Earth connection -5-, in interior wiring harness
500	Screw connection -1- (30), on relay plate
A2	Positive (+) connection (15), in dash panel wiring harness
A32	Positive (+) connection (30), in dash panel wiring harness
A46	Positive (+) connection (30 - from radio), in dash panel wiring harness
A98	Positive (+) connection -4- (30), in dash panel wiring harness
B135	Connection -1- (15a), in interior wiring harness
B156	Positive (+) connection (30a), in interior wiring harness
*	Only models with active loudspeakers
**	Only models with Bose loudspeakers

Protected by copyright. Copying for private or commercial purposes, in part or in whole, is not permitted unless authorised by AUDI AG. AUDI AG does not guarantee or accept any liability with respect to the correctness of information in this document. Copyright by AUDI AG.

ws	=	white
sw	=	black
ro	=	red
br	=	brown
gn	=	green
bl	=	blue
gr	=	grey
li	=	purple
ge	=	yellow
or	=	orange
rs	=	pink

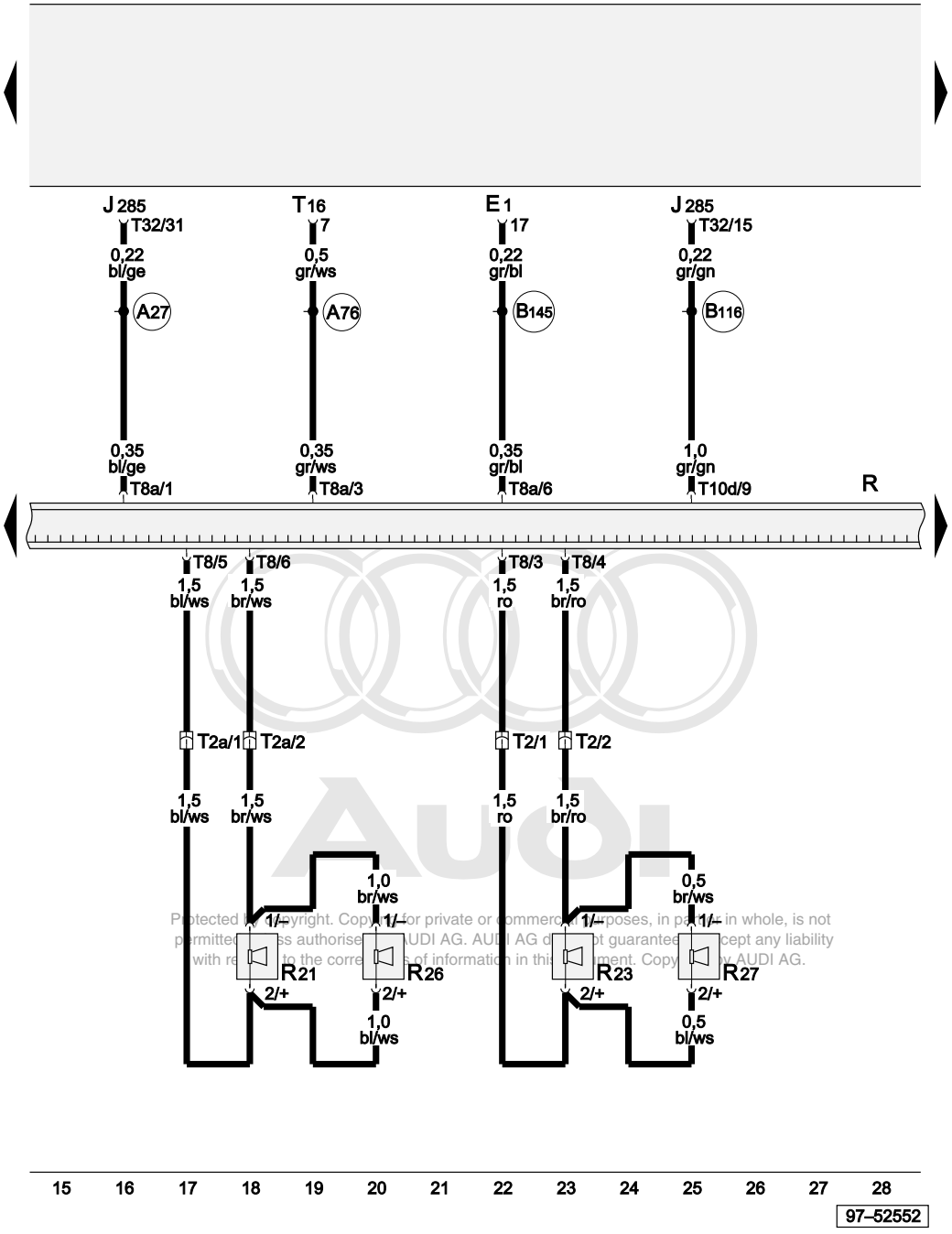

Protected by copyright. Copying for private or commercial purposes, in part or in whole, is not permitted unless authorised by AUDI AG. AUDI AG does not guarantee or accept any liability with respect to the correctness of information in this document. Copyright by AUDI AG.

ws = white
sw = black
ro = red
br = brown
gn = green
bl = blue
gr = grey
li = purple
ge = yellow
or = orange
rs = pink

Front loudspeakers

E1	Lighting switch
J285	Control unit with display in dash panel insert
R	Radio
R21	Bass loudspeaker, front left
R23	Bass loudspeaker, front right
R26	Middle-high tone loudspeaker, front left
R27	Middle-high tone loudspeaker, front right
T2	2-pin connector, black, at A pillar, right
T2a	2-pin connector, black, at A pillar, left
T8	8-pin connector, brown, radio connector II
T8a	8-pin connector, black, radio connector III
T10d	10-pin connector, red, radio connector IV
T16	16-pin connector, black, diagnostic connector
T32	32-pin connector, blue, on dash panel insert
A27	Connection (speed signal), in dash panel wiring harness
A76	Connection (diagnosis wire K), in dash panel wiring harness
B116	Connection (58d), in interior wiring harness
B145	Positive (+) connection (58b), in interior wiring harness

Rear loudspeakers

R	Radio
R15	Bass loudspeaker, rear left
R17	Bass loudspeaker, rear right
R34	Middle-treble tone loudspeaker, rear left
R35	Middle-treble tone loudspeaker, rear right
T2b	2-pin connector, black, at B pillar, right
T2c	2-pin connector, black, at B pillar, left
T8	8-pin connector, brown, radio connector II

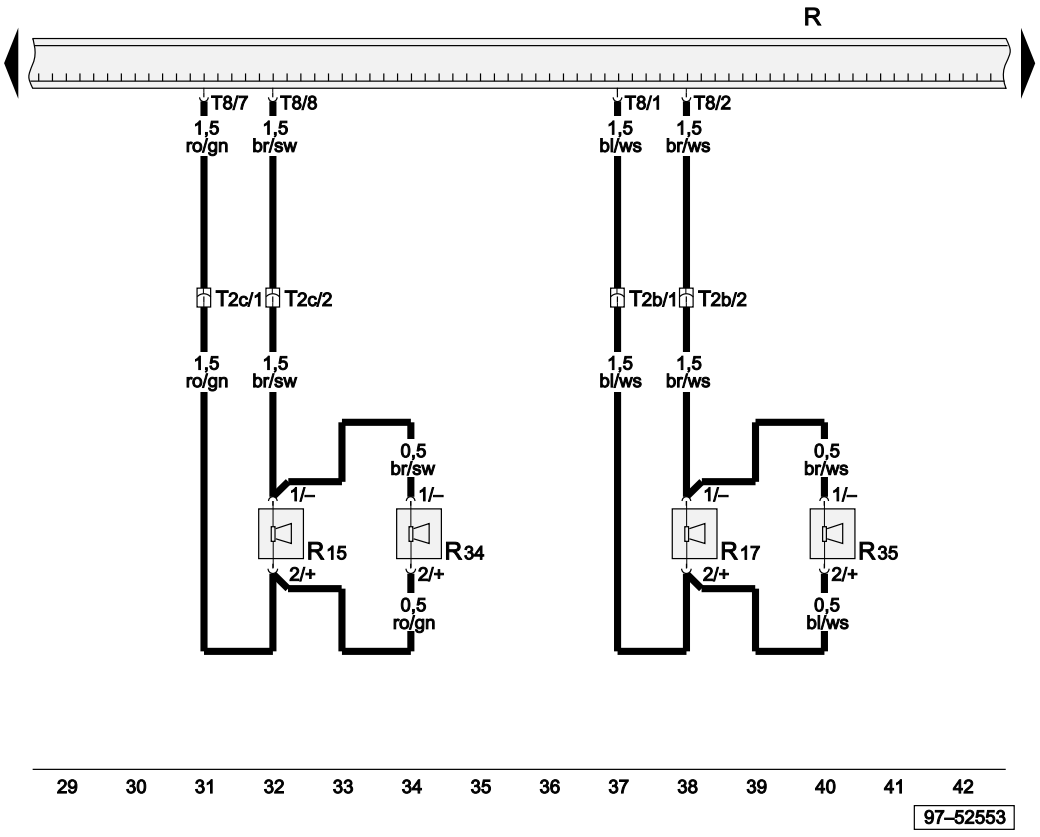

ws = white
sw = black
ro = red
br = brown
gn = green
bl = blue
gr = grey
li = purple
ge = yellow
or = orange
rs = pink

Protected by copyright. Copying for private or commercial purposes, in part or in whole, is not permitted unless authorised by AUDI AG. AUDI AG does not guarantee or accept any liability with respect to the correctness of information in this document. Copyright by AUDI AG.

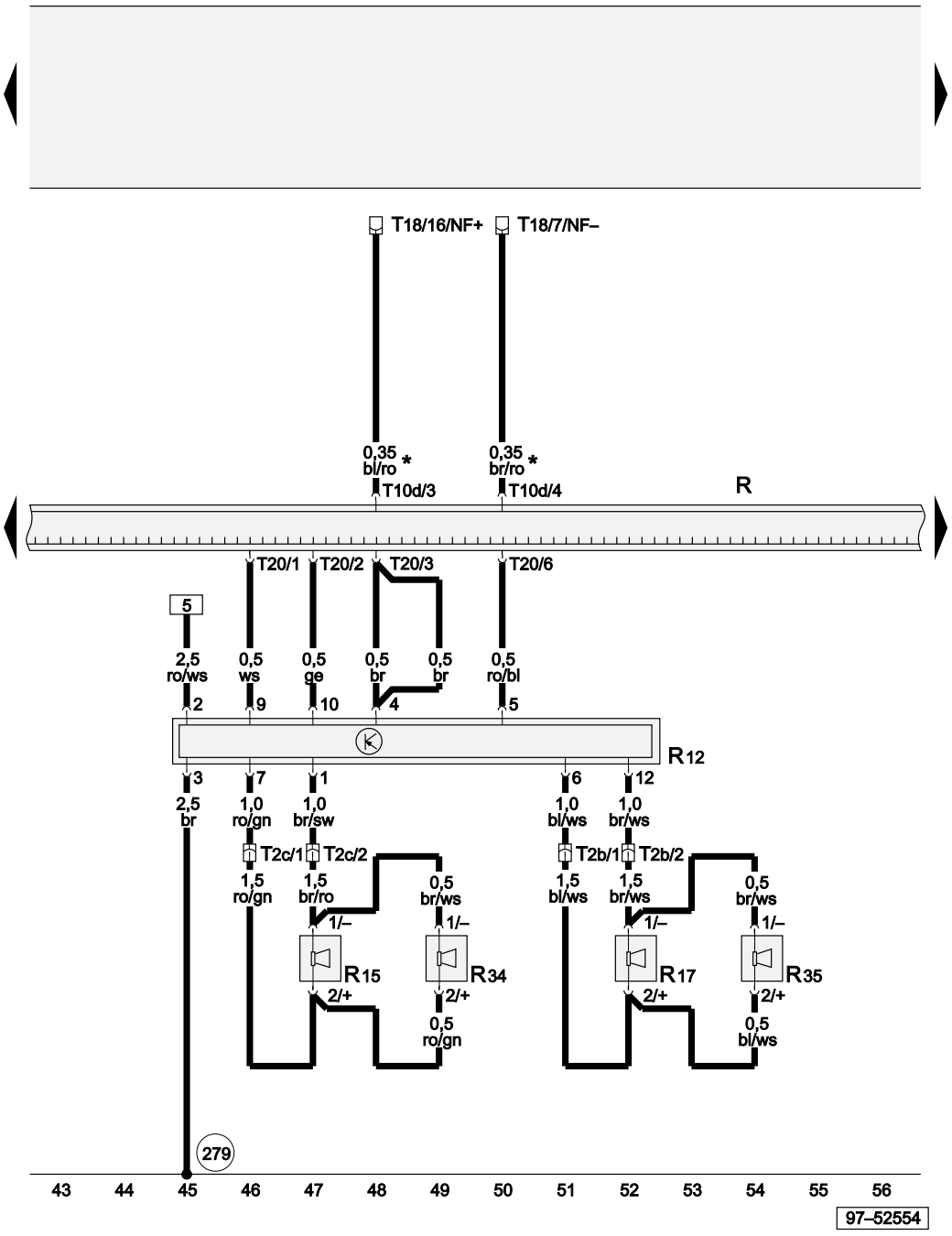

Active loudspeakers, rear

R	Radio
R12	Amplifier
R15	Bass loudspeaker, rear left
R17	Bass loudspeaker, rear right
R34	Middle-treble tone loudspeaker, rear left
R35	Middle-treble tone loudspeaker, rear right
T2b	2-pin connector, black, at B pillar, left
T2c	2-pin connector, black, at B pillar, right
T10d	10-pin connector, red, radio connector IV
T18	18-pin connector, black, mobile phone interface, in front passenger's footwell
T20	20-pin connector, black, radio connector I
279	Earth connection 5, in interior wiring harness
*	Only models with provision for mobile phone

Protected by copyright. Copying for private or commercial purposes, in part or in whole, is not permitted unless authorised by AUDI AG. AUDI AG does not guarantee or accept any liability with respect to the correctness of information in this document. Copyright by AUDI AG.

ws	=	white
sw	=	black
ro	=	red
br	=	brown
gn	=	green
bl	=	blue
gr	=	grey
li	=	purple
ge	=	yellow
or	=	orange
rs	=	pink

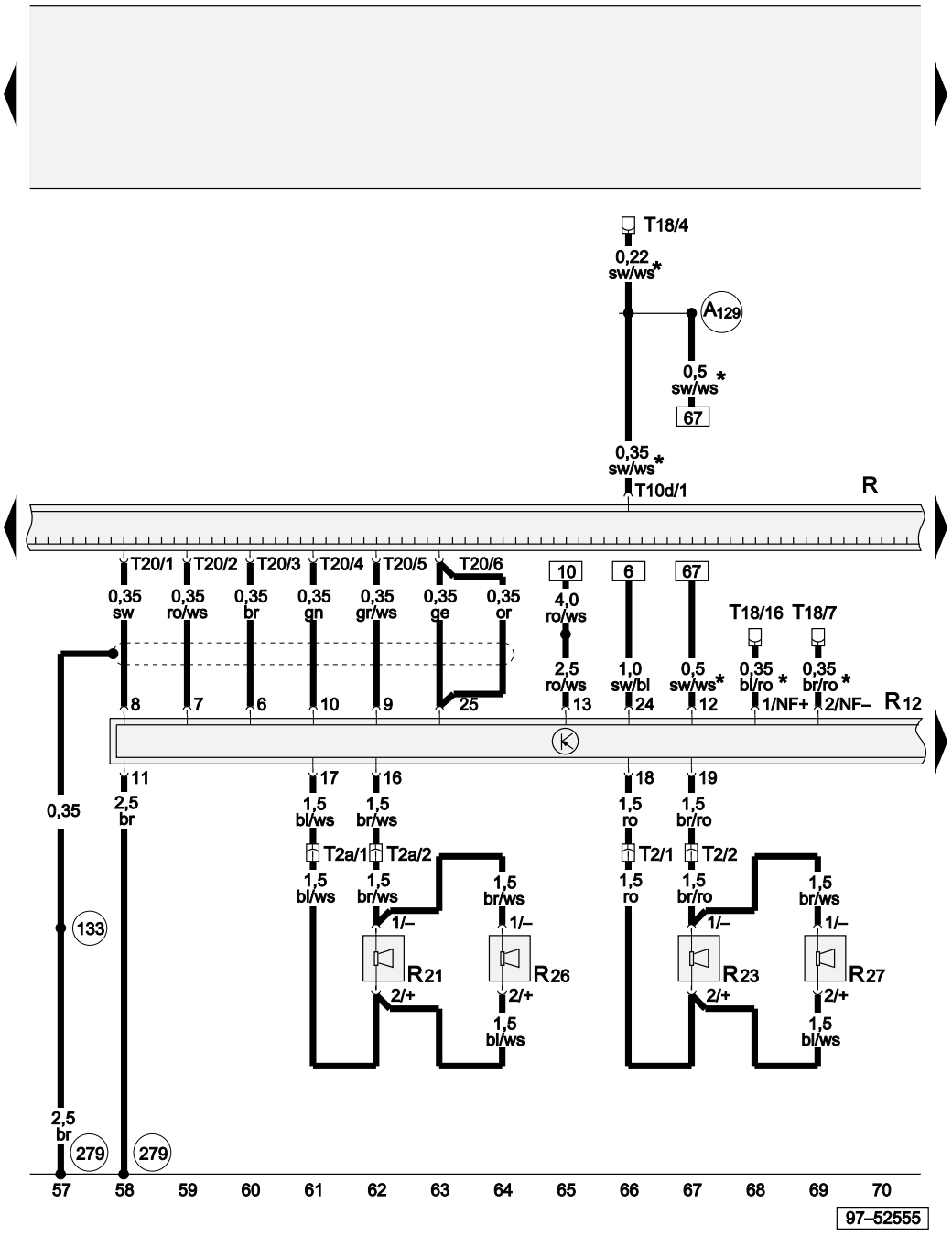

Bose loudspeakers, front

R	Radio
R12	Amplifier
R21	Bass loudspeaker, front left
R23	Bass loudspeaker, front right
R26	Middle-high tone loudspeaker, front left
R27	Middle-high tone loudspeaker, front right
T2	2-pin connector, black, at A pillar, right
T2a	2-pin connector, black, at A pillar, left
T10d	10-pin connector, red, radio connector IV
T18	18-pin connector, black, mobile phone interface, in front passenger's footwell
T20	20-pin connector, black, radio connector I
133	Earth connection, in loudspeaker wiring harness
279	Earth connection -5-, in interior wiring harness
A129	Connection (muting), in dash panel wiring harness
*	Only models with provision for mobile phone

Protected by copyright. Copying for private or commercial purposes, in part or in whole, is not permitted unless authorised by AUDI AG. AUDI AG does not guarantee or accept any liability with respect to the correctness of information in this document. Copyright by AUDI AG.

ws	=	white
sw	=	black
ro	=	red
br	=	brown
gn	=	green
bl	=	blue
gr	=	grey
li	=	purple
ge	=	yellow
or	=	orange
rs	=	pink

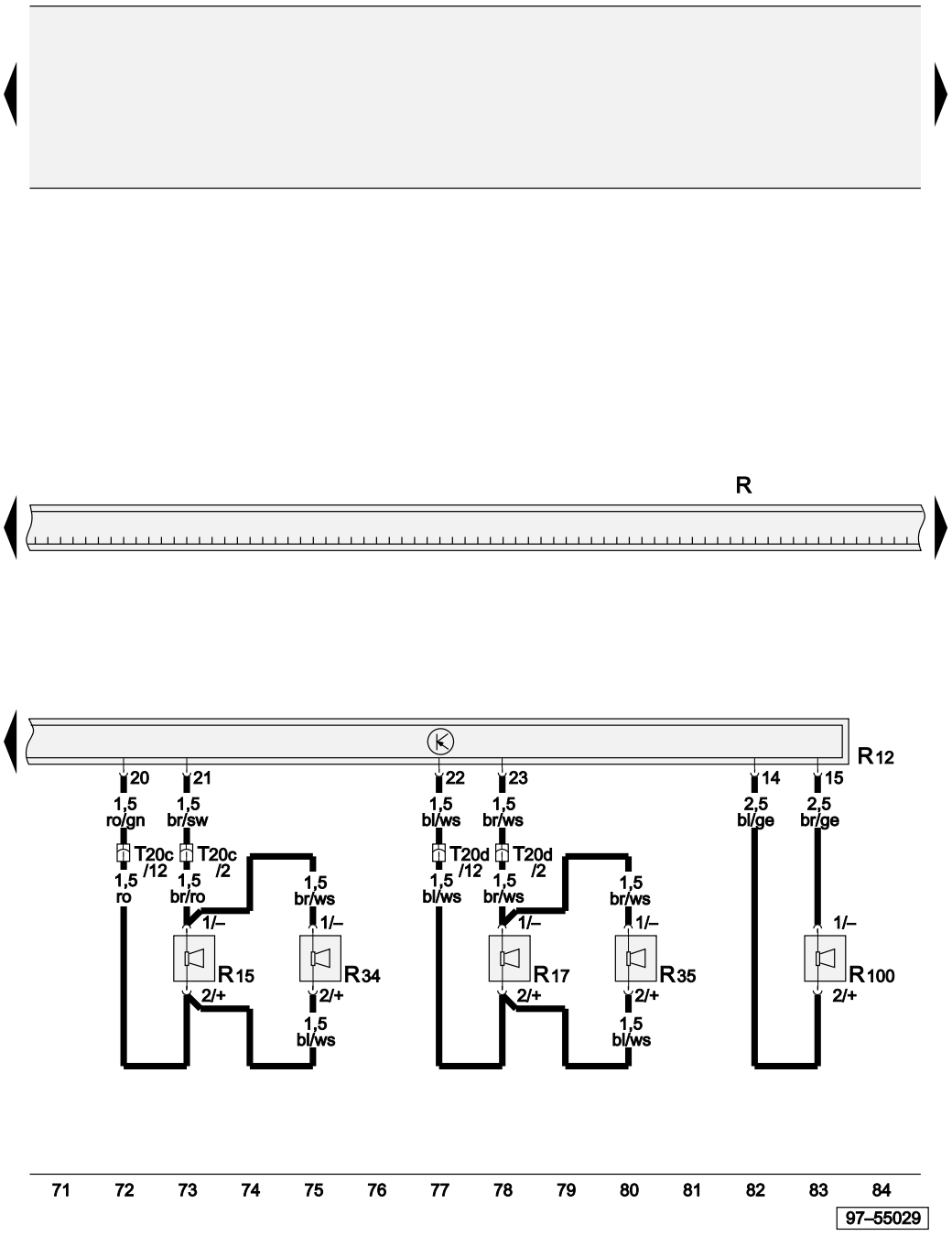

Bose loudspeakers, rear

R	Radio
R12	Amplifier
R15	Bass loudspeaker, rear left
R17	Bass loudspeaker, rear right
R34	Middle-treble tone loudspeaker, rear left
R35	Middle-treble tone loudspeaker, rear right
R100	Bass loudspeaker (subwoofer), in luggage compartment, in intermediate floor panel
T20c	20-pin connector, black, at B pillar, left
T20d	20-pin connector, black, at B pillar, right

Protected by copyright. Copying for private or commercial purposes, in part or in whole, is not permitted unless authorised by AUDI AG. AUDI AG does not guarantee or accept any liability with respect to the correctness of information in this document. Copyright by AUDI AG.

ws	=	white
sw	=	black
ro	=	red
br	=	brown
gn	=	green
bl	=	blue
gr	=	grey
li	=	purple
ge	=	yellow
or	=	orange
rs	=	pink

CD changer

R	Radio
R41	CD changer
T20	20-pin connector, black, radio connector I
V14	Connection (screening), in CD changer wiring harness
*	Applies to radio Concert only

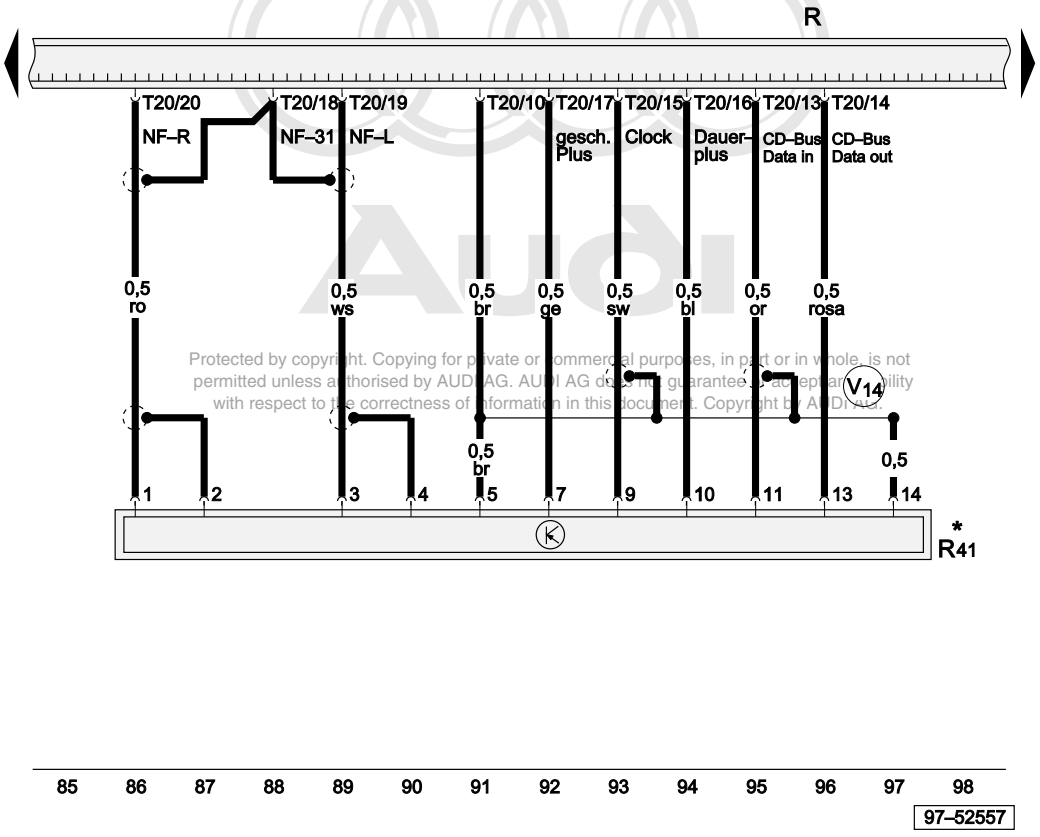

Protected by copyright. Copying for private or commercial purposes, in part or in whole, is not permitted unless authorised by AUDI AG. AUDI AG does not guarantee or accept any liability with respect to the correctness of information in this document. Copyright by AUDI AG.

ws	=	white
sw	=	black
ro	=	red
br	=	brown
gn	=	green
bl	=	blue
gr	=	grey
li	=	purple
ge	=	yellow
or	=	orange
rs	=	pink

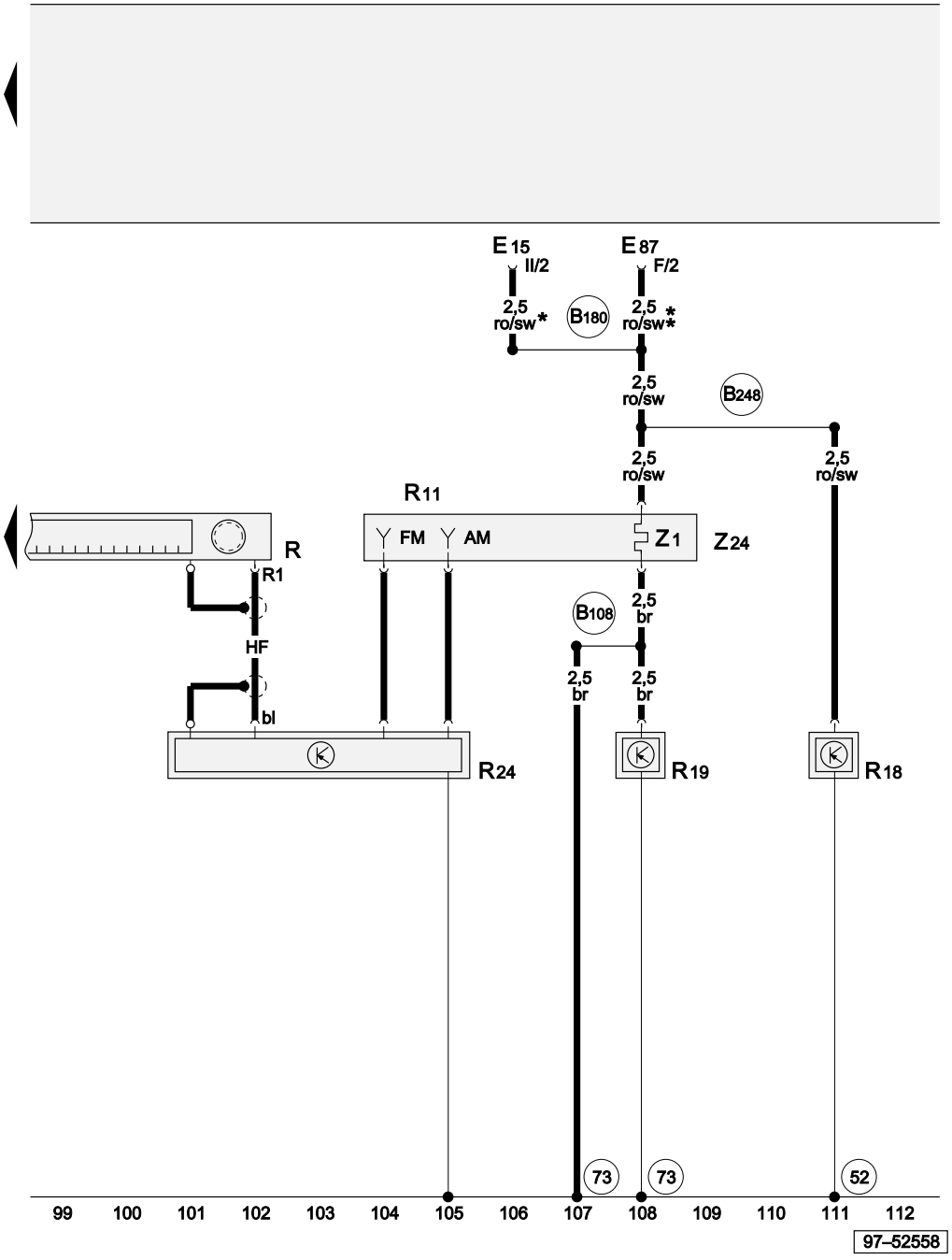

Aerial

E15	Heated rear window switch
E87	Control and display unit for air conditioner/Climatronic
R	Radio
R11	Aerial
R18	Frequency switch, left
R19	Frequency switch, right
R24	Aerial amplifier
Z1	Heated rear window
Z24	Heated rear window with window aerial
52	Earth point, in tailgate/boot lid, left
73	Earth point, rear roof rail
B108	Earth connection, in rear right interior wiring harness
B180	Connection (heated rear window), in interior wiring harness
B248	Connection -2- (heated rear window), in interior wiring harness
*	Does not apply to models with air conditioner
**	Only models with air conditioner

ws	=	white
sw	=	black
ro	=	red
br	=	brown
gn	=	green
bl	=	blue
gr	=	grey
li	=	purple
ge	=	yellow
or	=	orange
rs	=	pink

Protected by copyright. Copying for private or commercial purposes, in part or in whole, is not permitted unless authorised by AUDI AG. AUDI AG does not guarantee or accept any liability with respect to the correctness of information in this document. Copyright by AUDI AG.

1.4 litre unit injector, TDI engine (55 kW - 3-cylinder), engine code AMF

From model year 2001

Main fuse (on battery)

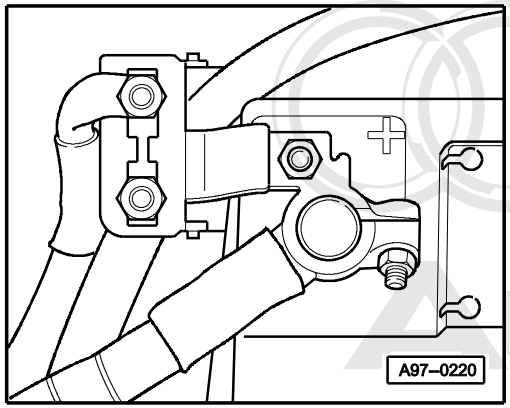

9-point relay carrier (dash panel, left)

Fuse box

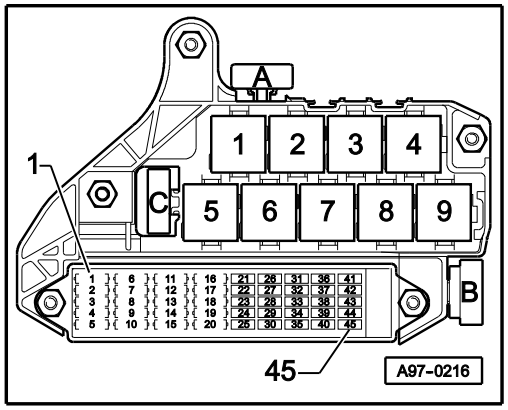

4 - High heat output relay (J360)

8 - Low heat output relay (J359)

B - Additional heater fuse (S126)

Fuse colours

30 A - green
25 A - white
20 A - yellow
15 A - blue
10 A - red
7.5 A - orange
5 A - beige

Protected by copyright. Copying for private or commercial purposes, in part or in whole, is not permitted unless authorised by AUDI AG. AUDI AG does not guarantee or accept any liability with respect to the correctness of information in this document. Copyright by AUDI AG.

3-point relay carrier (footwell, left)

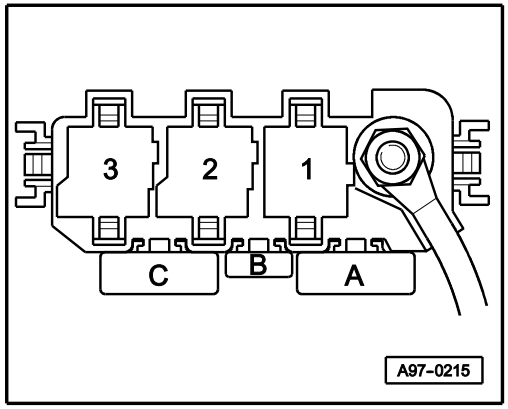

1 - Relay for glow plugs (J52)

2 - Terminal 30 voltage supply relay (J317)

A - Strip fuse for glow plugs (engine) (S39)

B - Engine control unit fuse (S102)

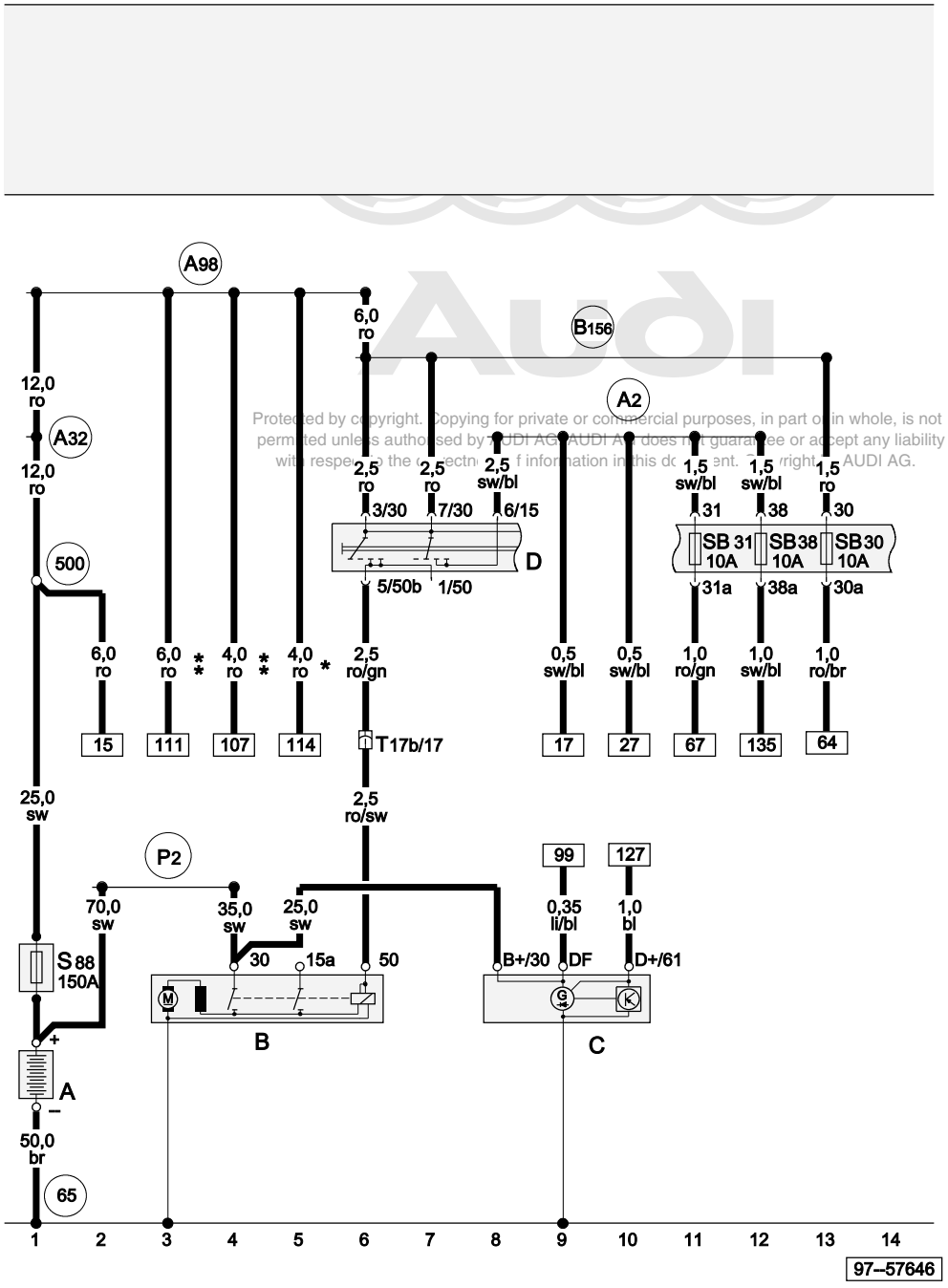

Protected by copyright. Copying for private or commercial purposes, in part or in whole, is not permitted unless authorised by AUDI AG. AUDI AG does not guarantee or accept any liability with respect to the correctness of information in this document. Copyright by AUDI AG.

Battery, starter, alternator, ignition/starter switch

A	Battery
B	Starter
C	Alternator
D	Ignition/starter switch
S88	Strip fuse
SB30	Fuse -30- on fuse box
SB31	Fuse -31- on fuse box
SB38	Fuse -38- on fuse box
T17b	17-pin connector, white, in footwell, front left
65	Earth point, left longitudinal member, rear, between B and C pillar
500	Screw connection -1- (30), on relay plate
A2	Positive (+) connection (15), in dash panel wiring harness
A32	Positive (+) connection (30), in dash panel wiring harness
A98	Positive (+) connection -4- (30), in dash panel wiring harness
B156	Positive (+) connection (30a), in interior wiring harness
P2	Positive (+) connection (30), in battery wiring harness
*	Only applies to models with fuel-burning additional heater
**	Only applies to models with electric additional heater (PTC 900 W)

ws	=	white
sw	=	black
ro	=	red
br	=	brown
gn	=	green
bl	=	blue
gr	=	grey
li	=	purple
ge	=	yellow
or	=	orange
rs	=	pink

Relay for glow plugs, diesel direct injection system control unit, terminal 30 voltage supply relay, glow plugs (engine)

J52	Glow plug relay
J248	Diesel direct injection system control unit
J317	Terminal 30 voltage supply relay
Q6	Glow plugs (engine)
S39	Strip fuse for glow plugs - engine
T17	17-pin connector, brown, in footwell, front left
T17e	17-pin connector, blue, in footwell, front left
44	Earth point, lower part of left A pillar
85	Earth connection -1-, in engine compartment wiring harness
277	Earth connection -3-, in interior wiring harness
279	Earth connection -5-, in interior wiring harness
284	Earth connection -6-, in interior wiring harness
D16	Connection (glow plugs), in front right wiring harness
F31	Connection (glow plugs - engine), in diesel direct injection system wiring harness
*	No longer fitted, phased-in modification
**	Phased-in modification

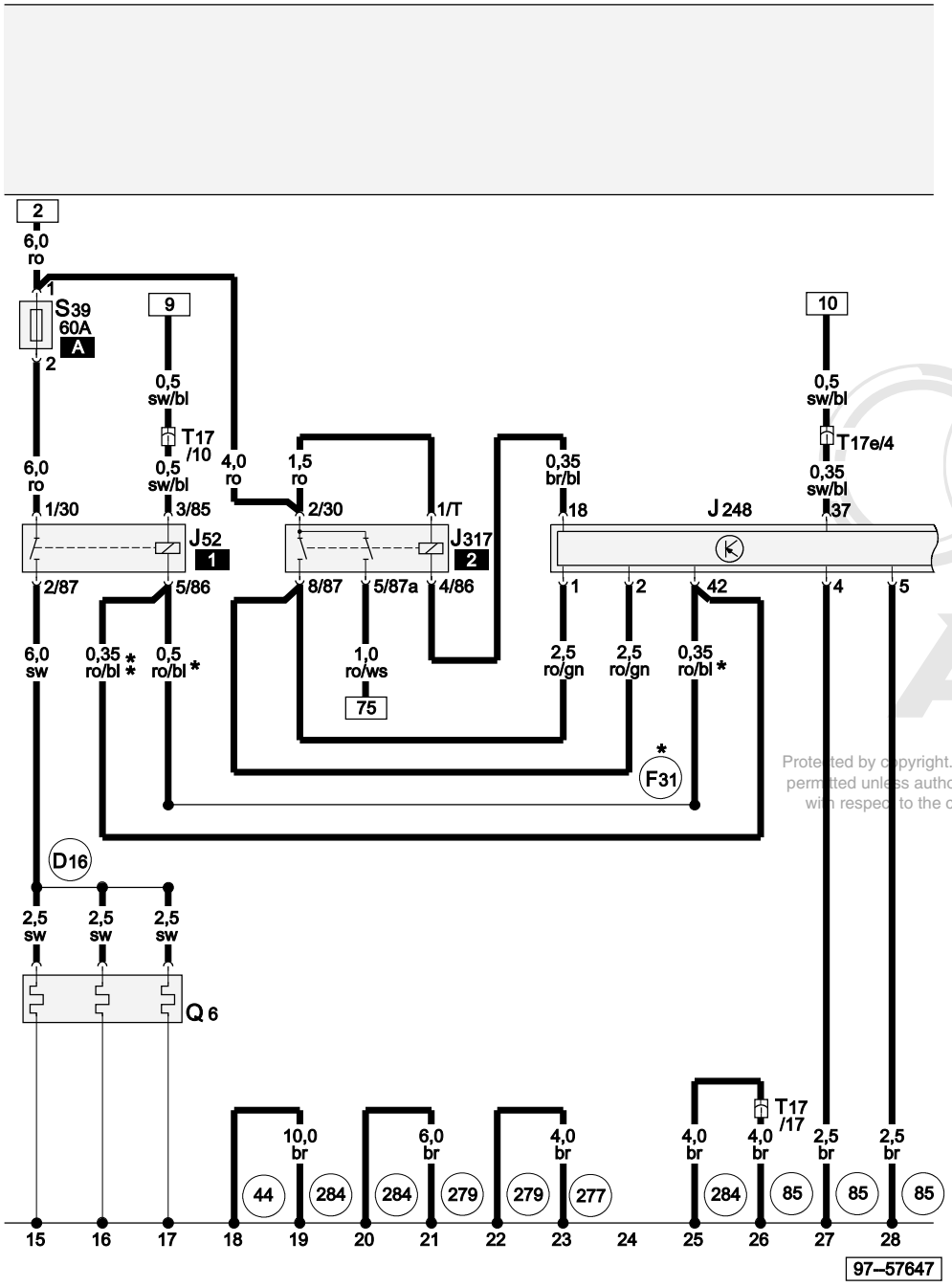

ws	=	white
sw	=	black
ro	=	red
br	=	brown
gn	=	green
bl	=	blue
gr	=	grey
li	=	purple
ge	=	yellow
or	=	orange
rs	=	pink

Protected by copyright. Copying for private or commercial purposes, in part or in whole, is not permitted unless authorised by AUDI AG. AUDI AG does not guarantee or accept any liability with respect to the correctness of information in this document. Copyright by AUDI AG.

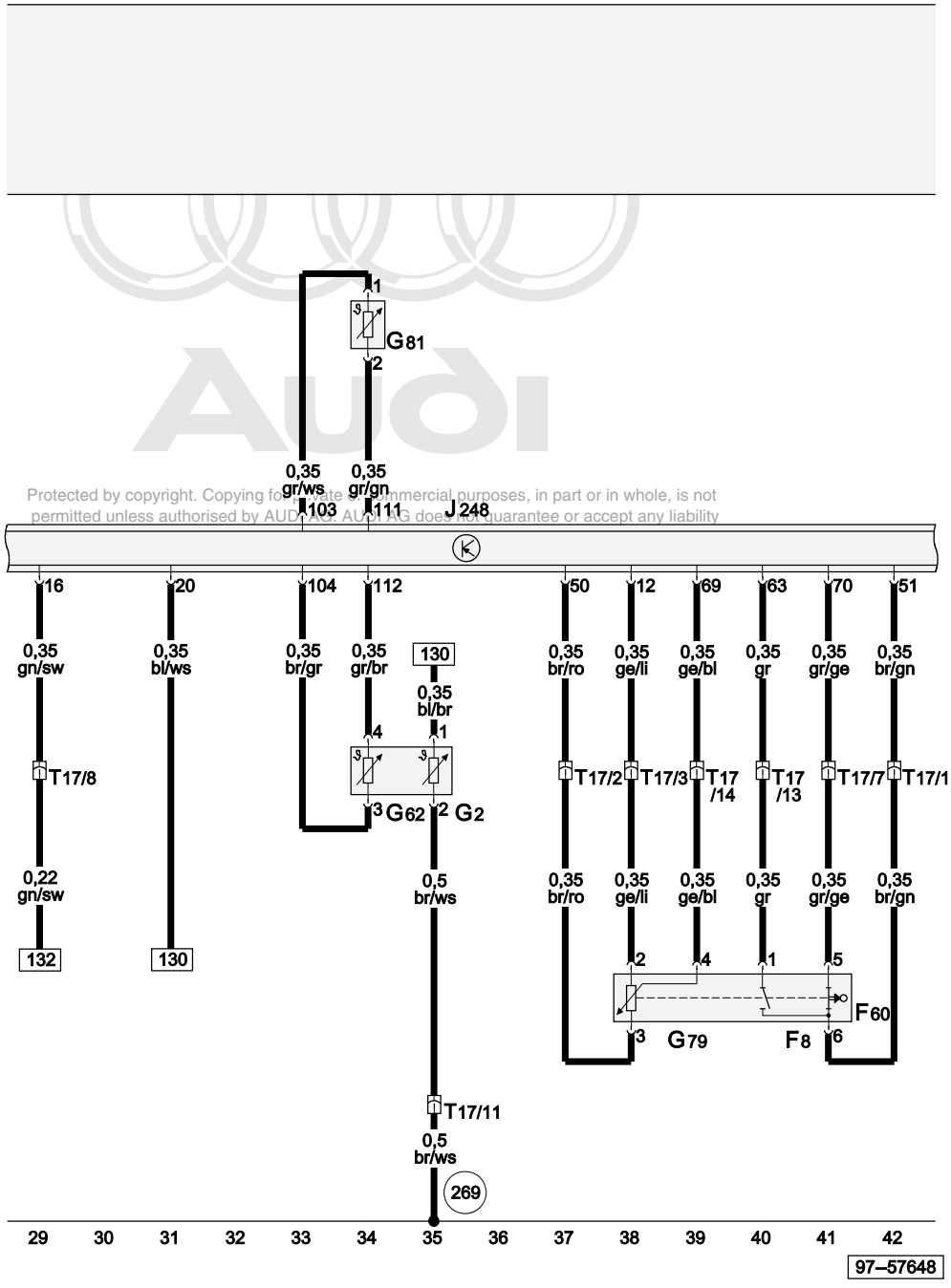

Protected by copyright. Copying for private or commercial purposes, in part or in whole, is not permitted unless authorised by AUDI AUDI AG. AUDI AG does not guarantee or accept any liability

Kick-down switch, idling switch, coolant temperature senders, accelerator pedal position sender, fuel temperature sender

F8	Kick-down switch
F60	Idling switch
G2	Coolant temperature sender
G62	Coolant temperature sender
G79	Accelerator pedal position sender
G81	Fuel temperature sender
J248	Diesel direct injection system control unit
T17	17-pin connector, brown, in footwell, front left
269	Earth connection (sender earth) -1-, in dash panel wiring harness

ws	=	white
sw	=	black
ro	=	red
br	=	brown
gn	=	green
bl	=	blue
gr	=	grey
li	=	purple
ge	=	yellow
or	=	orange
rs	=	pink

Cruise control system switch, airbag control unit, diesel direct injection system control unit

E45	Cruise control system switch
J234	Airbag control unit
J248	Diesel direct injection system control unit
T10n	10-pin connector, black, behind steering column switch trim
T17b	17-pin connector, white, in footwell, front left
T17d	17-pin connector, green, in footwell, front left
T17e	17-pin connector, blue, in footwell, front left
A16	Connection (cruise control system), in dash panel wiring harness
A121	Connection (high bus), in dash panel wiring harness
A122	Connection (low bus), in dash panel wiring harness
A125	Connection (crash signal), in dash panel wiring harness
*	Only applies to models with cruise control system

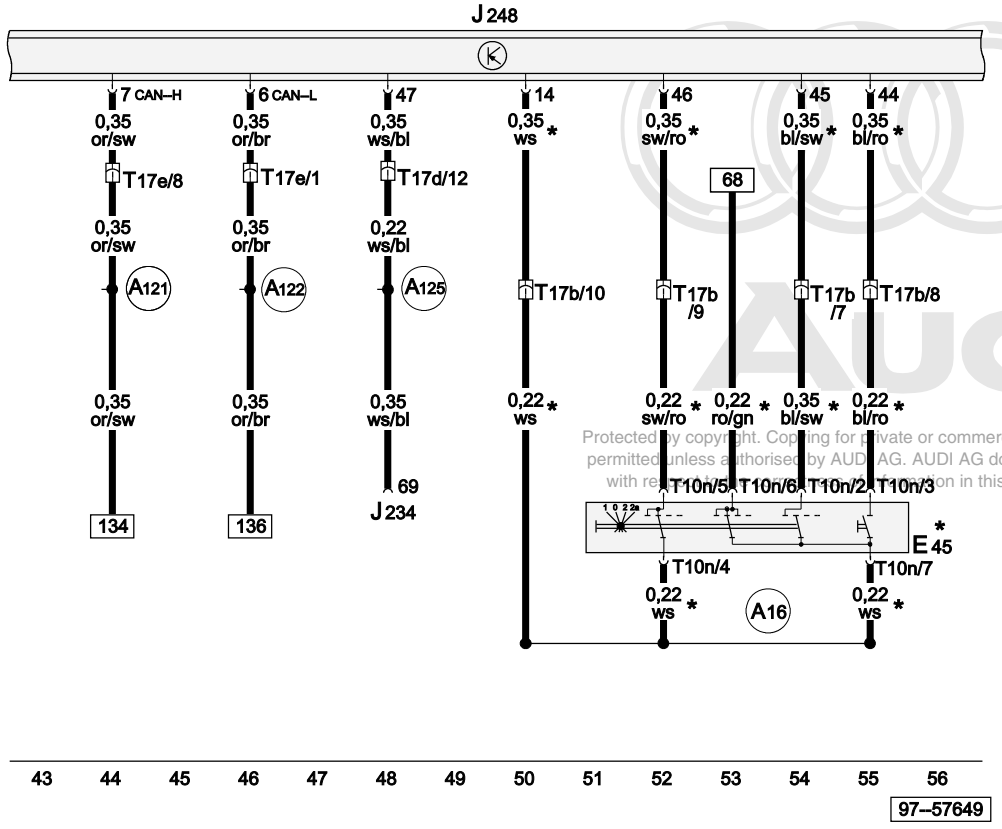

ws	=	white
sw	=	black
ro	=	red
br	=	brown
gn	=	green
bl	=	blue
gr	=	grey
li	=	purple
ge	=	yellow
or	=	orange
rs	=	pink

Protected by copyright. Copying for private or commercial purposes, in part or in whole, is not permitted unless authorised by AUDI AG. AUDI AG does not guarantee or accept any liability with respect to the correctness of information in this document. Copyright by AUDI AG.

Protected by copyright. Copying for private or commercial purposes, in part or in whole, is not permitted unless authorised by AUDI AG. AUDI AG does not guarantee or accept any liability with respect to the correctness of information in this document. Copyright by AUDI AG.

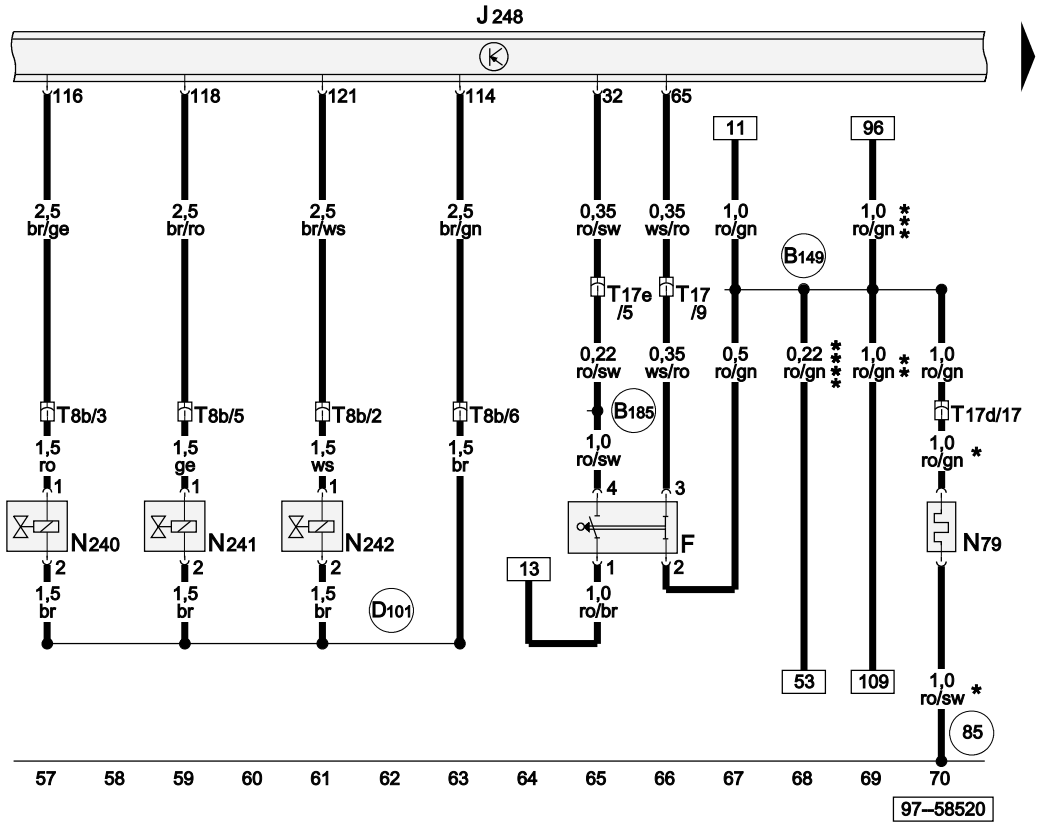

ws = white
sw = black
ro = red
br = brown
gn = green
bl = blue
gr = grey
li = purple
ge = yellow
or = orange
rs = pink

Brake light switch, diesel direct injection system control unit, heater element (crankcase breather), unit injector solenoid valves

F	Brake light switch
J248	Diesel direct injection system control unit
N79	Heater element (crankcase breather)
N240	Unit injector solenoid valve, No. 1 cylinder
N241	Unit injector solenoid valve, No. 2 cylinder
N242	Unit injector solenoid valve, No. 3 cylinder
T8b	8-pin connector, black, at unit injector solenoid valves
T17	17-pin connector, brown, in footwell, front left
T17d	17-pin connector, green, in footwell, front left
T17e	17-pin connector, blue, in footwell, front left
85	Earth connection -1-, in engine compartment wiring harness
B149	Positive (+) connection -2- (15a), in interior wiring harness
B185	Connection -2- (54), in interior wiring harness
D101	Connection -1-, in engine compartment wiring harness
*	Only applies to models with heater element (crankcase breather)
**	Only applies to models with electric additional heater (PTC 900 W)
***	Phased-in modification
****	Only applies to models with cruise control system

Clutch pedal switch, engine speed sender, Hall sender, diesel direct injection system control unit, engine control unit fuse

F36	Clutch pedal switch
G28	Engine speed sender
G40	Hall sender
J248	Diesel direct injection system control unit
S102	Engine control unit fuse
T17b	17-pin connector, white, in footwell, front left
T17d	17-pin connector, green, in footwell, front left
F25	Connection -1-, in diesel direct injection system wiring harness
F27	Connection (screening), in diesel direct injection system wiring harness
*	No longer fitted, phased-in modification
**	Phased-in modification

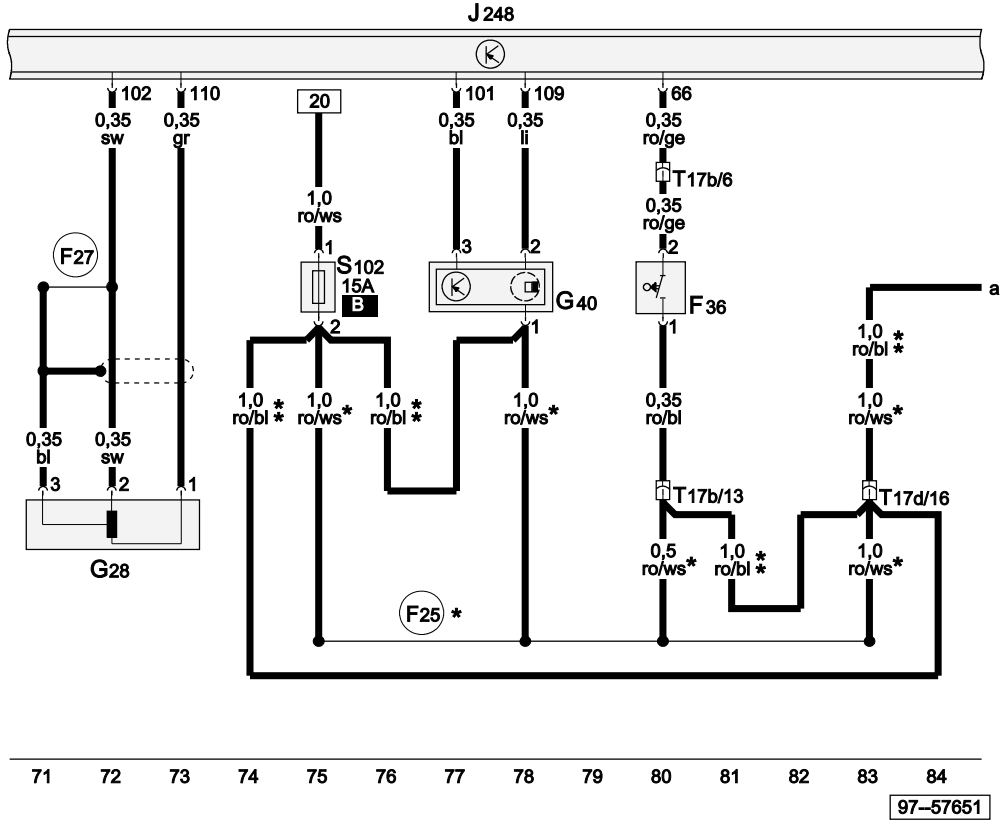

ws = white
sw = black
ro = red
br = brown
gn = green
bl = blue
gr = grey
li = purple
ge = yellow
or = orange
rs = pink

Protected by copyright. Copying for private or commercial purposes, in part or in whole, is not permitted unless authorised by AUDI AG. AUDI AG does not guarantee or accept any liability with respect to the correctness of information in this document. Copyright by AUDI AG.

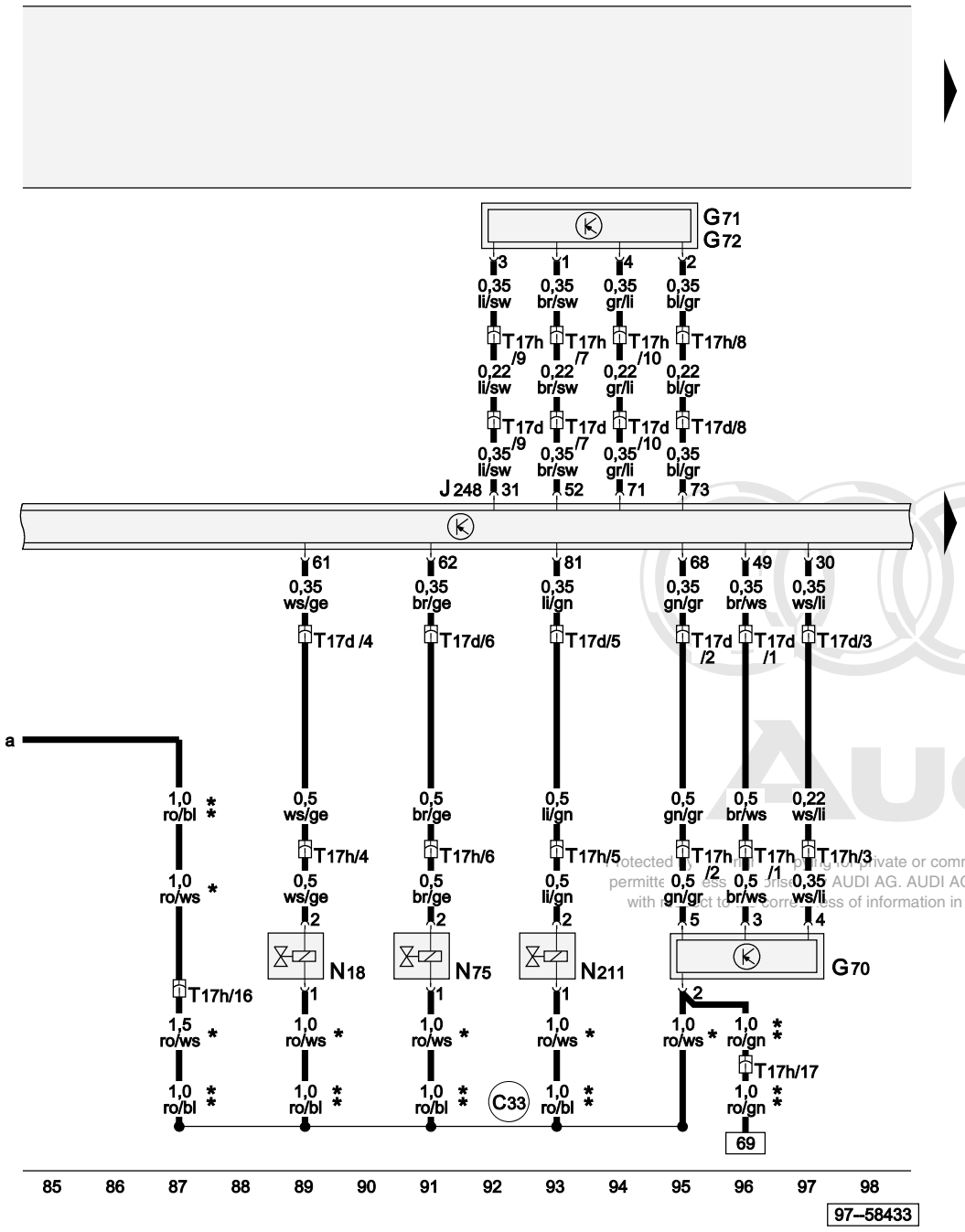

Air mass meter, intake manifold pressure sender, exhaust gas recirculation valve, charge pressure control solenoid valve, throttle butterfly valve

G70	Air mass meter
G71	Intake manifold pressure sender
G72	Intake manifold temperature sender
J248	Diesel direct injection system control unit
N18	Exhaust gas recirculation valve
N75	Charge pressure control solenoid valve
N211	Throttle butterfly valve
T17d	17-pin connector, green, in footwell, front left
T17h	17-pin connector, green, connector point, A pillar, right
C33	Connection -5-, in headlight wiring harness
*	No longer fitted, phased-in modification
**	Phased-in modification

ws	=	white
sw	=	black
ro	=	red
br	=	brown
gn	=	green
bl	=	blue
gr	=	grey
li	=	purple
ge	=	yellow
or	=	orange
rs	=	pink

Protected by copyright. Copying for private or commercial purposes, in part or in whole, is not permitted unless authorised by AUDI AG. AUDI AG does not guarantee or accept any liability with respect to the correctness of information in this document. Copyright by AUDI AG.

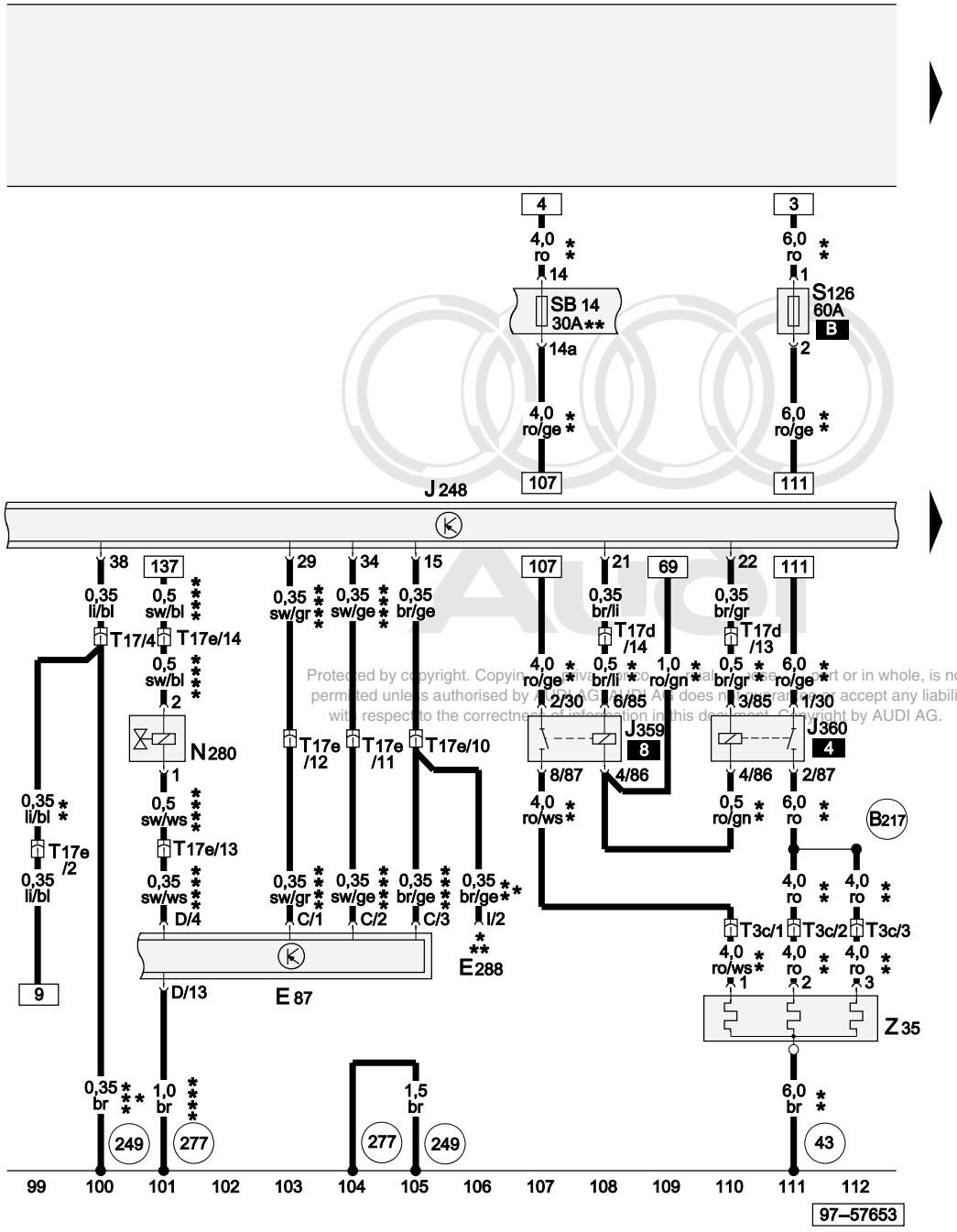

ws = white
sw = black
ro = red
br = brown
gn = green
bl = blue
gr = grey
li = purple
ge = yellow
or = orange
rs = pink

Air conditioning system/Climatronic operating and display unit, additional heating button (ECON), additional heating heater element

E87	Air conditioning system/Climatronic operating and display unit
E288	Additional heating button (ECON)
J248	Diesel direct injection system control unit
J359	Low heat output relay
J360	High heat output relay
N280	Air conditioning system compressor regulating valve
S126	Additional heater fuse
SB14	Fuse -14- on fuse box
T3c	3-pin connector, black, behind driver's storage compartment
T17	17-pin connector, brown, in footwell, front left
T17d	17-pin connector, green, in footwell, front left
T17e	17-pin connector, blue, in footwell, front left
Z35	Additional heating heater element
43	Earth point, lower part of right A pillar
249	Earth connection -2-, in interior wiring harness
277	Earth connection -3-, in interior wiring harness
B217	Connection (additional heater), in interior wiring harness

* Only applies to models with fuel-burning additional heater
** Only applies to models with electric additional heater (PTC 900 W)
*** Only applies to models without additional heater
**** Only applies to models with air conditioning system

Protected by copyright. Copying for private or commercial purposes, in part or in whole, is not permitted unless authorised by AUDI AG. AUDI AG does not guarantee or accept any liability with respect to the correctness of information in this document. Copyright by AUDI AG.

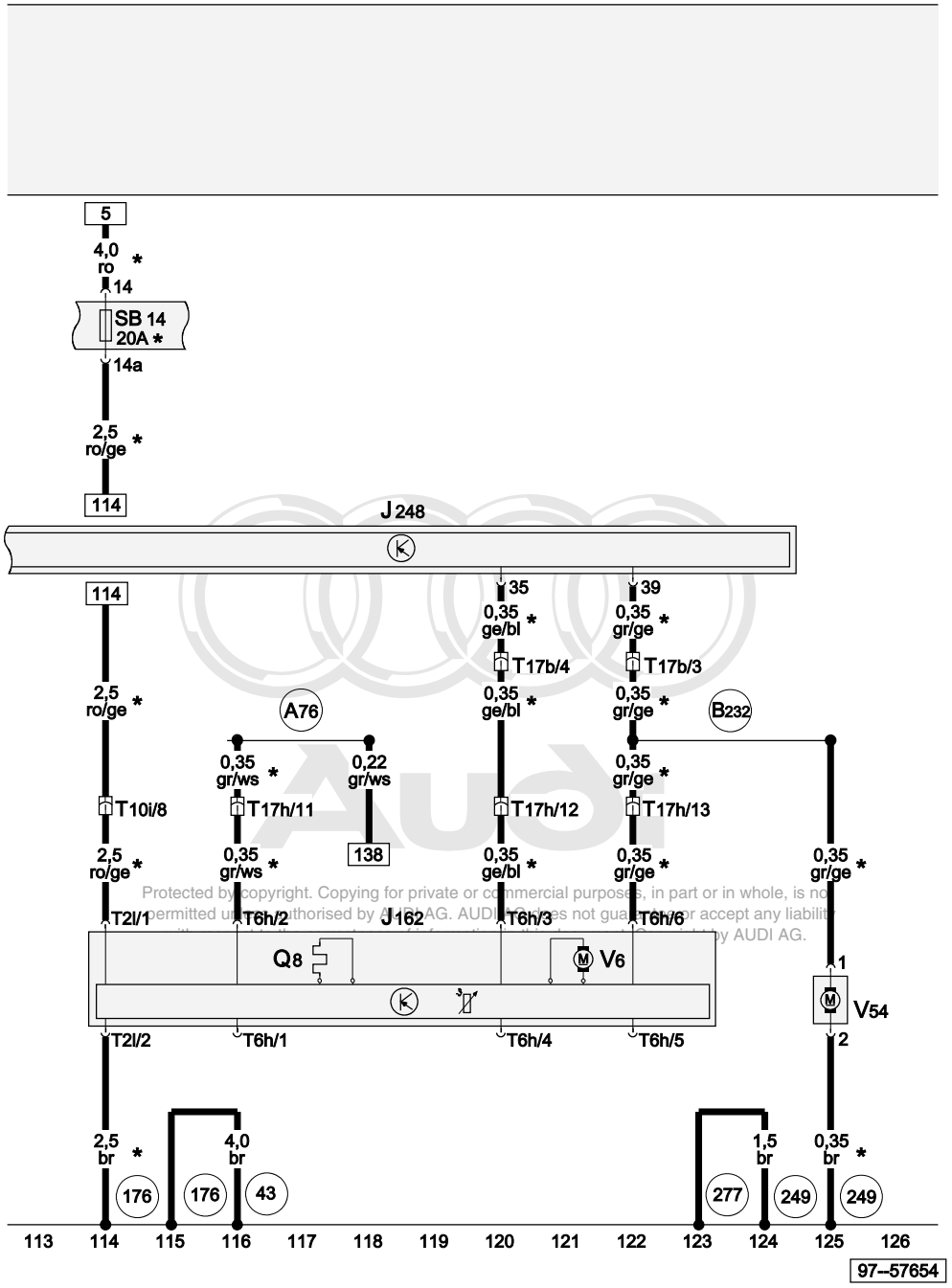

Protected by copyright. Copying for private or commercial purposes, in part or in whole, is not permitted unless authorised by AUDI AG. AUDI AG does not guarantee or accept any liability with respect to the correctness of information. Copyright by AUDI AG.

ws = white
sw = black
ro = red
br = brown
gn = green
bl = blue
gr = grey
li = purple
ge = yellow
or = orange
rs = pink

Heater control unit, diesel direct injection system control unit, glow plug with flame monitor, combustion air blower, metering pump

J162	Heater control unit
J248	Diesel direct injection system control unit
Q8	Glow plug with flame monitor
SB14	Fuse -14- on fuse box
T2l	2-pin connector, black, on heater control unit
T6h	6-pin connector, black, on heater control unit
T10i	10-pin connector, black, connector point, A pillar, right
T17b	17-pin connector, white, in footwell, front left
T17h	17-pin connector, green, connector point, A pillar, right
V6	Combustion air blower
V54	Metering pump
(43)	Earth point, lower part of right A pillar
(176)	Earth connection, in right headlight wiring harness
(249)	Earth connection -2-, in interior wiring harness
(277)	Earth connection -3-, in interior wiring harness
(A76)	Connection (diagnosis wire K), in dash panel wiring harness
(B232)	Connection (additional heater), in interior wiring harness
*	Only applies to models with fuel-burning additional heater

Oil pressure switch, fuel gauge sender, oil level/oil temperature sender, control unit with display in dash panel insert

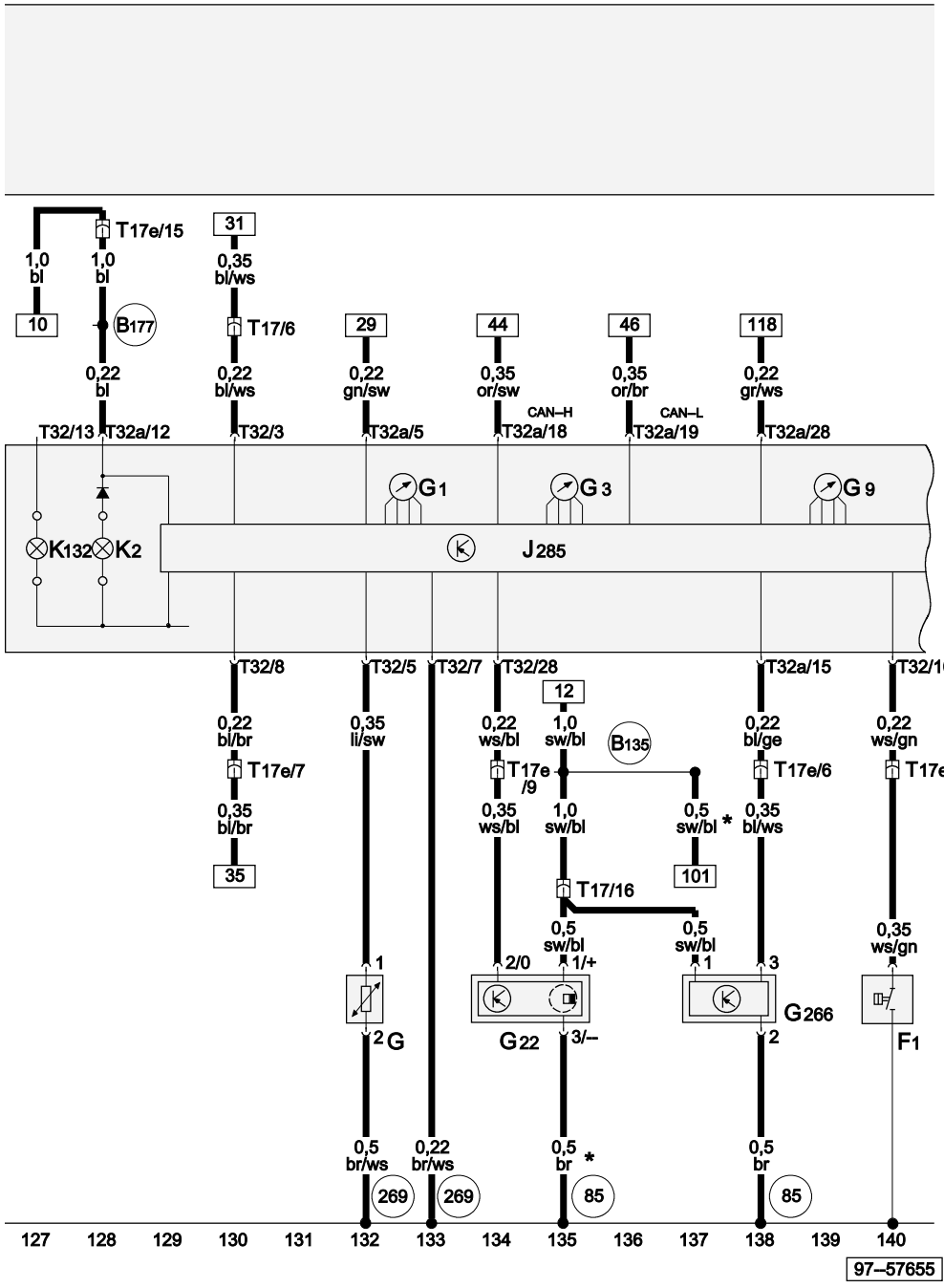

ws	=	white
sw	=	black
ro	=	red
br	=	brown
gn	=	green
bl	=	blue
gr	=	grey
li	=	purple
ge	=	yellow
or	=	orange
rs	=	pink

F1	Oil pressure switch
G	Fuel gauge sender
G1	Fuel gauge
G3	Coolant temperature gauge
G9	Oil temperature gauge
G22	Speedometer sender (Hall sender, on gearbox)
G266	Oil level/oil temperature sender
J285	Control unit with display in dash panel insert
K2	Alternator warning lamp
K132	Electronic power control fault lamp
T17	17-pin connector, brown, in footwell, front left
T17e	17-pin connector, blue, in footwell, front left
T32	32-pin connector, blue, on dash panel insert
T32a	32-pin connector, green, on dash panel insert
85	Earth connection -1-, in engine compartment wiring harness
269	Earth connection (sender earth) -1-, in dash panel wiring harness
B135	Connection -1- (15a), in interior wiring harness
B177	Connection (61), in interior wiring harness
*	Only applies to models with air conditioner

Protected by copyright. Copying for private or commercial purposes, in part or in whole, is not permitted unless authorised by AUDI AG. AUDI AG does not guarantee or accept any liability with respect to the correctness of information in this document. Copyright by AUDI AG.

Sliding/tilting sunroof

From model year 2001

Main fuse

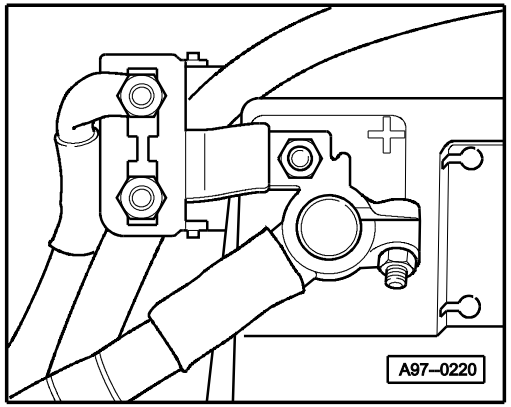

9-point relay carrier (in dash panel)

Fuse box

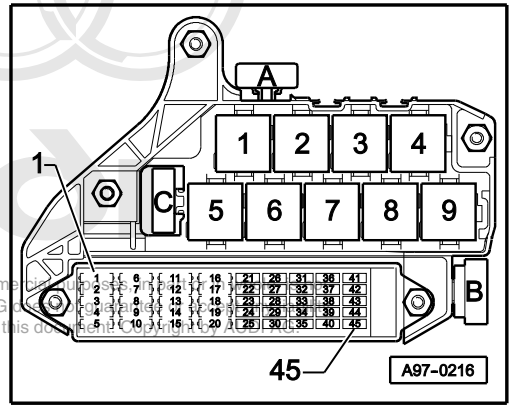

Fuse colours

30 A – green
25 A – white
20 A – yellow
15 A – blue
10 A – red
7.5A – orange
5A – beige

3-point relay carrier (in footwell)

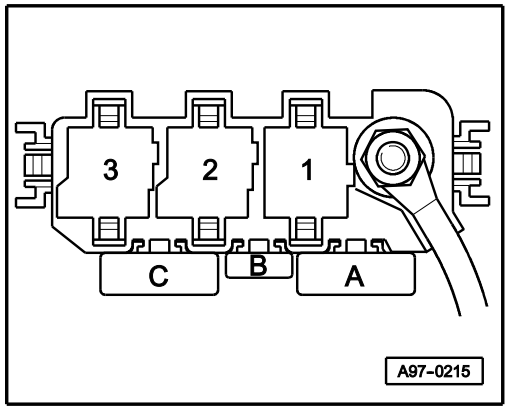

Protected by copyright. Copying for private or commercial purposes, in part or in whole, is not permitted unless authorised by AUDI AG. AUDI AG does not guarantee or accept any liability with respect to the correctness of information in this document. Copyright by AUDI AG.

Sliding/tilting sunroof

A	Battery
B	Starter
E8	Sunroof switch
J4	Dual tone horn relay
J393	Convenience system central control unit
S88	Strip fuse
SB8	Fuse -8- on fuse box
V1	Sliding sunroof motor
W	Interior light, front
65	Earth point, left longitudinal member, rear
279	Earth connection -5-, in interior wiring harness
500	Screw connection -1- (30), on relay plate
A32	Positive (+) connection (30), in dash panel wiring harness
A98	Positive (+) connection -4- (30), in dash panel wiring harness
A99	Connection -1- (87), in dash panel wiring harness

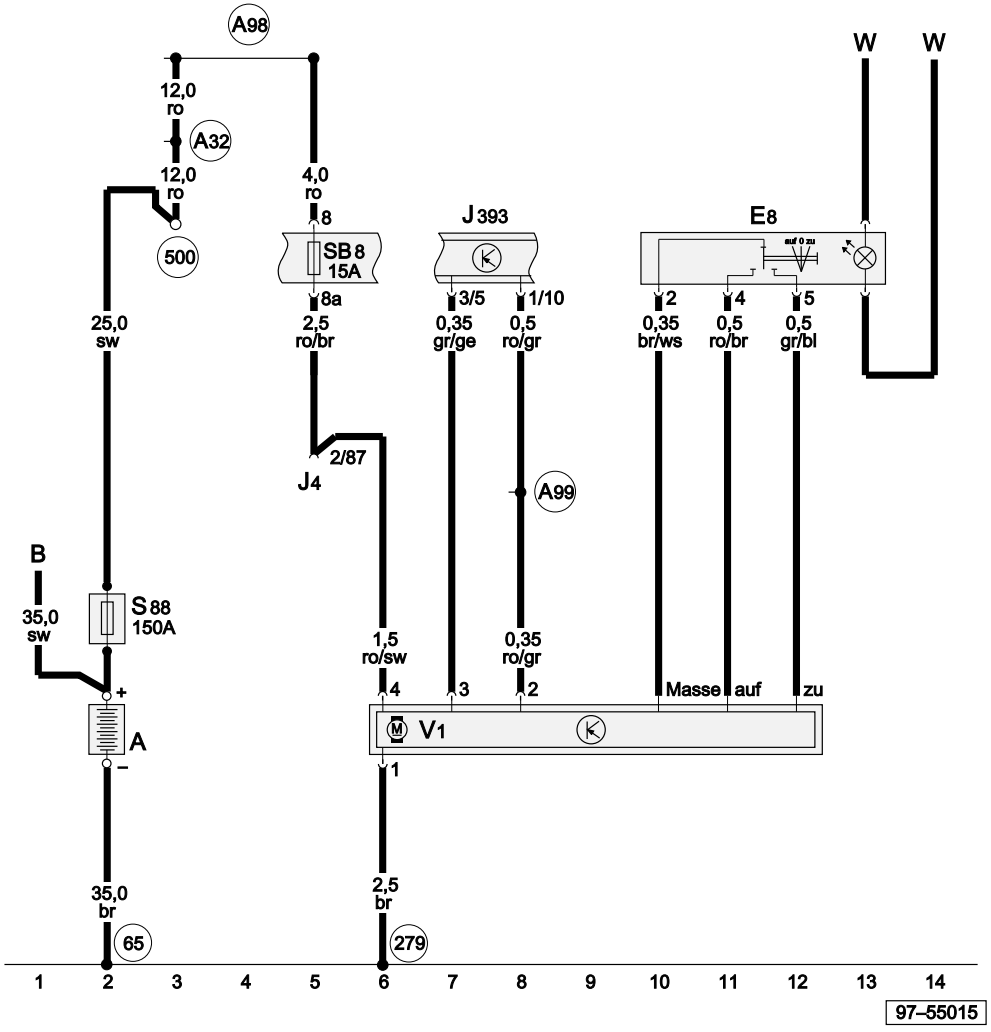

ws = white
sw = black
ro = red
br = brown
gn = green
bl = blue
gr = grey
li = purple
ge = yellow
or = orange
rs = pink

Protected by copyright. Copying for private or commercial purposes, in part or in whole, is not permitted unless authorised by AUDI AG. AUDI AG does not guarantee or accept any liability with respect to the correctness of information in this document. Copyright by AUDI AG.

Automatic anti-dazzle interior mirror

From model year 2001

Main fuse

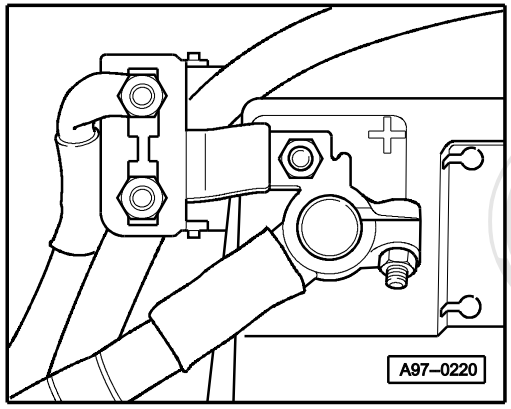

3-point relay carrier (in footwell)

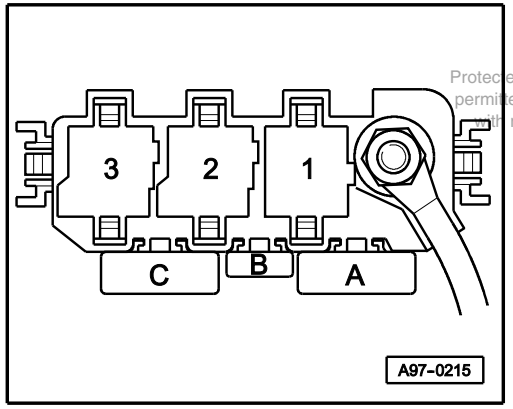

9-point relay carrier (in dash panel)

Fuse box

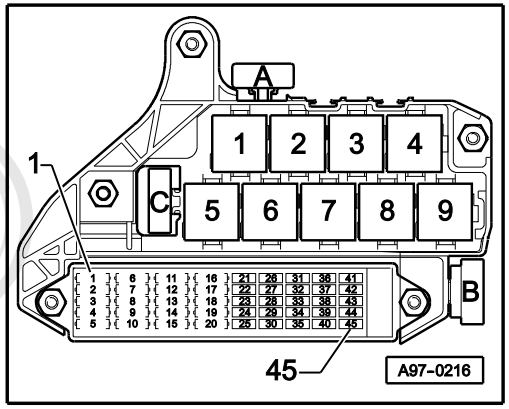

Fuse colours

30 A – green
25 A – white
20 A – yellow
15 A – blue
10 A – red
7.5A – orange
5A – beige

Protected by copyright. Copying for private or commercial purposes, in part or in whole, is not permitted unless authorised by AUDI AG. AUDI AG does not guarantee or accept any liability with respect to the correctness of information in this document. Copyright by AUDI AG.

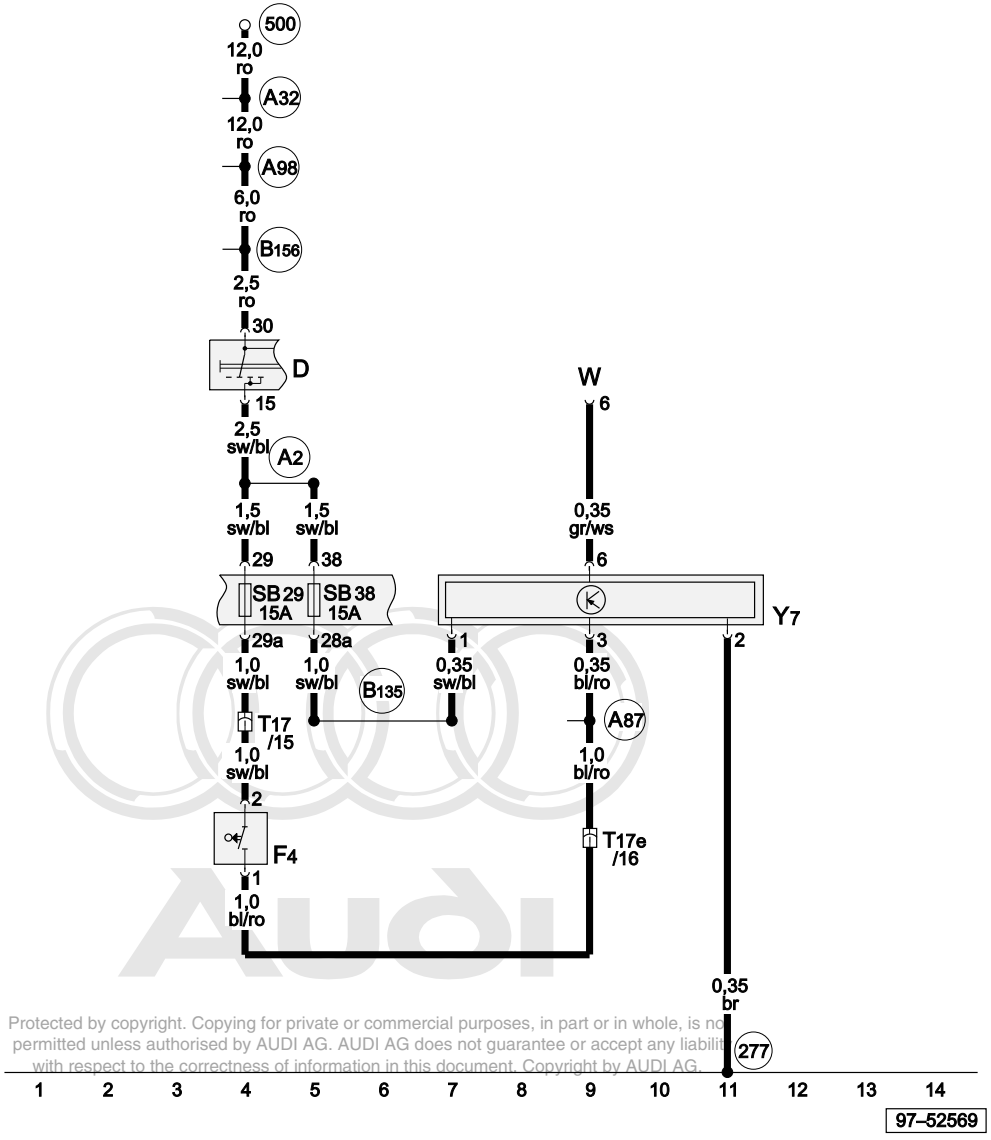

Protected by copyright. Copying for private or commercial purposes, in part or in whole, is not permitted unless authorised by AUDI AG. AUDI AG does not guarantee or accept any liability with respect to the correctness of information in this document. Copyright by AUDI AG.

ws = white
sw = black
ro = red
br = brown
gn = green
bl = blue
gr = grey
li = purple
ge = yellow
or = orange
rs = pink

Automatic anti-dazzle interior mirror

D	Ignition/starter switch
F4	Reversing light switch
SB29	Fuse -29- on fuse box
SB38	Fuse -38- on fuse box
T17	17-pin connector, brown, in footwell, front left
T17e	17-pin connector, blue, in footwell, front left
W	Interior light, front
Y7	Automatic anti-dazzle interior mirror
277	Earth connection -3-, in interior wiring harness
500	Screw connection -1- (30), on relay plate
A2	Positive (+) connection (15), in dash panel wiring harness
A32	Positive (+) connection (30), in dash panel wiring harness
A87	Connection (RL), in dash panel wiring harness
A98	Positive (+) connection -4- (30), in dash panel wiring harness
B135	Connection -1- (15a), in interior wiring harness
B156	Positive (+) connection (30a), in interior wiring harness

Headlight washer system

From model year 2001

3-point relay carrier (in footwell)

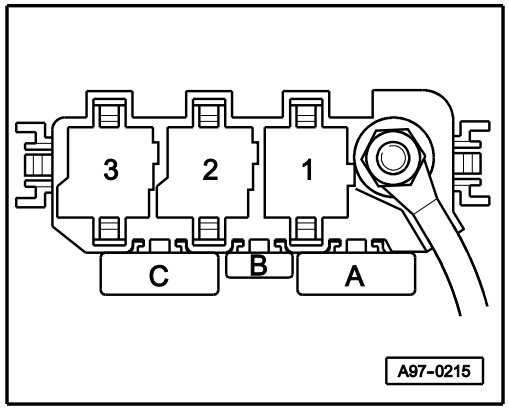

6+6-point relay carrier (in footwell)

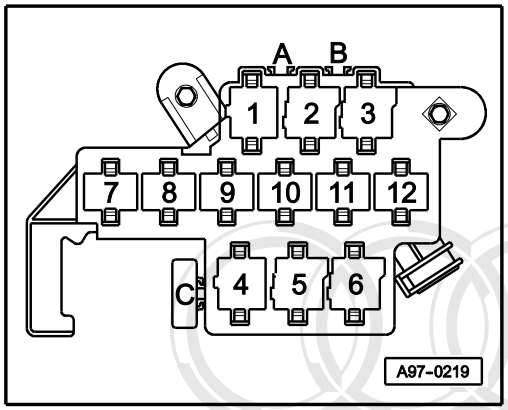

Position of relays:

2 – Automatic intermittent wash/wipe relay (J31)

3 – Automatic intermittent wash/wipe relay (J31)

9-point relay carrier (in dash panel)

Fuse box

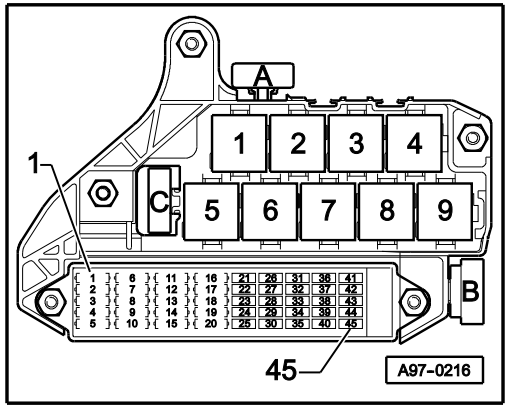

Fuse colours

30 A – green
25 A – white
20 A – yellow
15 A – blue
10 A – red
7.5A – orange
5A – beige

Protected by copyright. Copying for private or commercial purposes, in part or in whole, is not permitted unless authorised by AUDI AG. AUDI AG does not guarantee or accept any liability with respect to the correctness of information in this document. Copyright by AUDI AG.

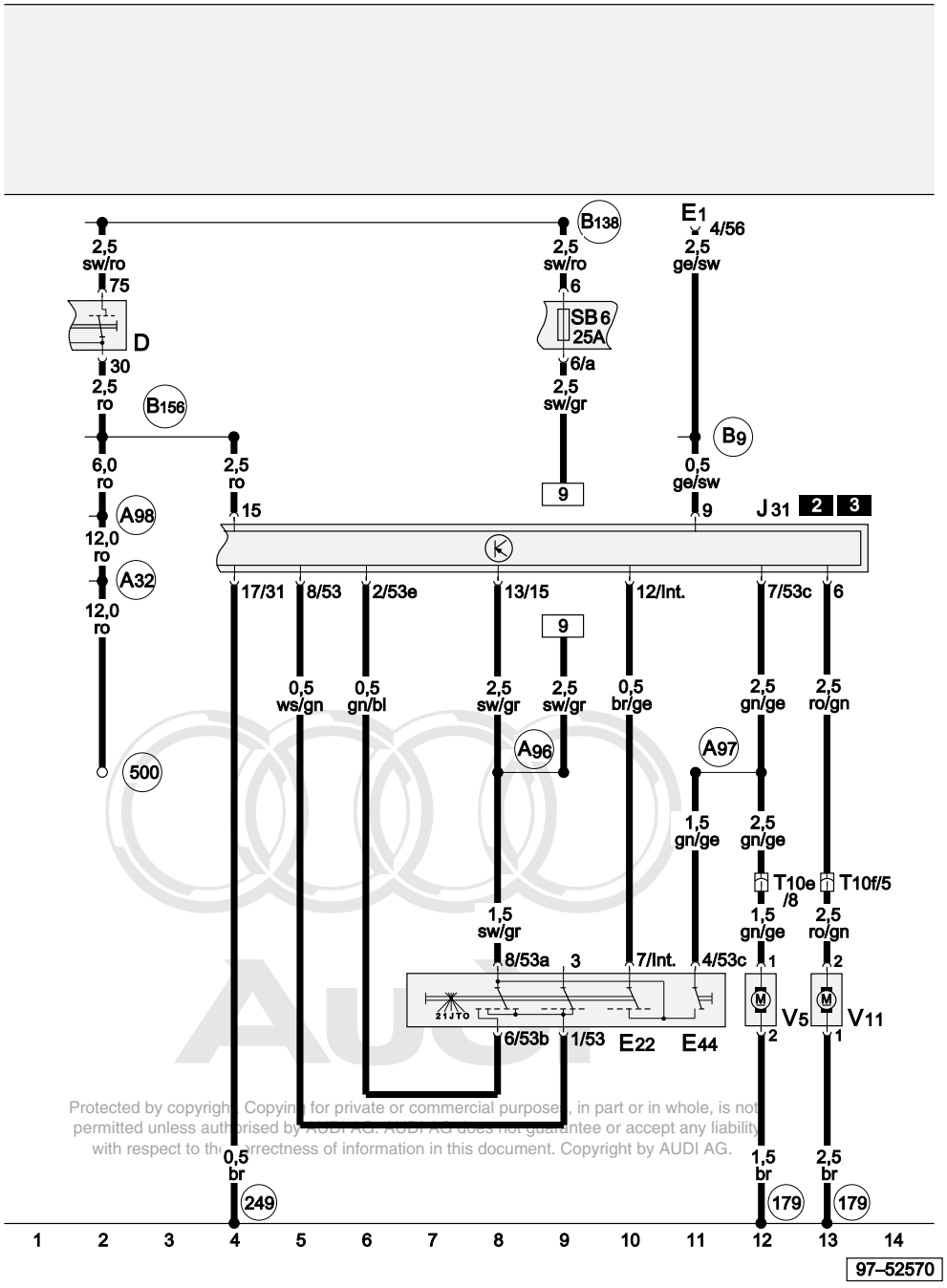

Protected by copyright. Copying for private or commercial purposes, in part or in whole, is not permitted unless authorised by AUDI AG. AUDI AG does not guarantee or accept any liability with respect to the correctness of information in this document. Copyright by AUDI AG.

ws = white
sw = black
ro = red
br = brown
gn = green
bl = blue
gr = grey
li = purple
ge = yellow
or = orange
rs = pink

Automatic intermittent wash/wipe relay, windscreen washer pump switch, headlight washer system pump

D	Ignition/starter switch
E1	Lighting switch
E22	Intermittent wiper switch
E44	Windscreen washer pump switch
J31	Automatic intermittent wash/wipe relay
SB6	Fuse -6- on fuse box
T10e	10-pin connector, red, connector point, A pillar, left
T10f	10-pin connector, blue, connector point, A pillar, left
V5	Windscreen washer pump
V11	Headlight washer system pump
179	Earth connection, in left headlight wiring harness
249	Earth connection -2-, in interior wiring harness
500	Screw connection -1- (30), on relay plate
A32	Positive (+) connection (30), in dash panel wiring harness
A96	Connection (53a), in dash panel wiring harness
A97	Connection (53), in dash panel wiring harness
A98	Positive (+) connection -4- (30), in dash panel wiring harness
B9	Connection (56), in steering column switch wiring harness
B138	Positive (+) connection (X), in interior wiring harness
B156	Positive (+) connection (30a), in interior wiring harness

Radiator fan control - 80W (without air conditioner)

- 1.2 litre unit injector, TDI engine (45 kW - 3-cylinder), engine code ANY
- 1.4 litre fuel injection engine (55 kW - Magneti Marelli - 4-cylinder), engine code AUA

From model year 2001

Main fuse

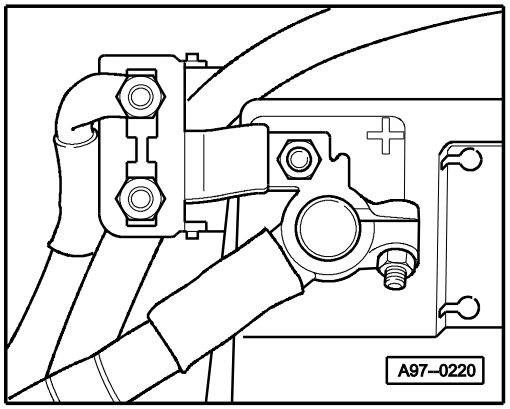

9-point relay carrier (in dash panel)

Fuse box

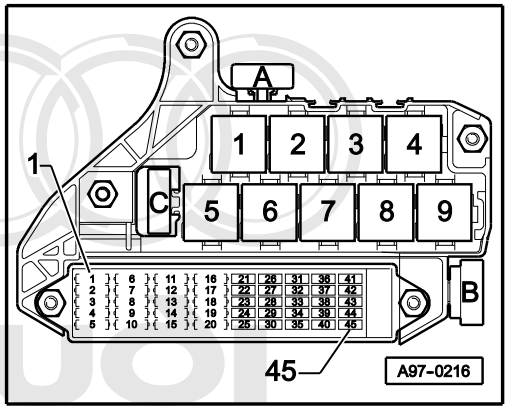

Fuse colours

30 A - green
25 A - white
20 A - yellow
15 A - blue
10 A - red
7.5 A - orange
5 A - beige

Protected by copyright. Copying for private or commercial purposes, in part or in whole, is not permitted unless authorised by AUDI AG. AUDI AG does not guarantee or accept any liability with respect to the correctness of information in this document. Copyright by AUDI AG.

3-point relay carrier (in footwell)

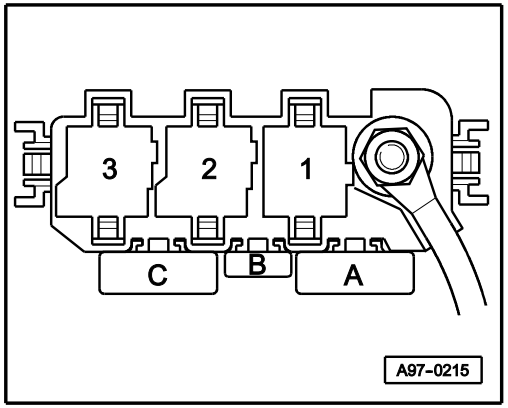

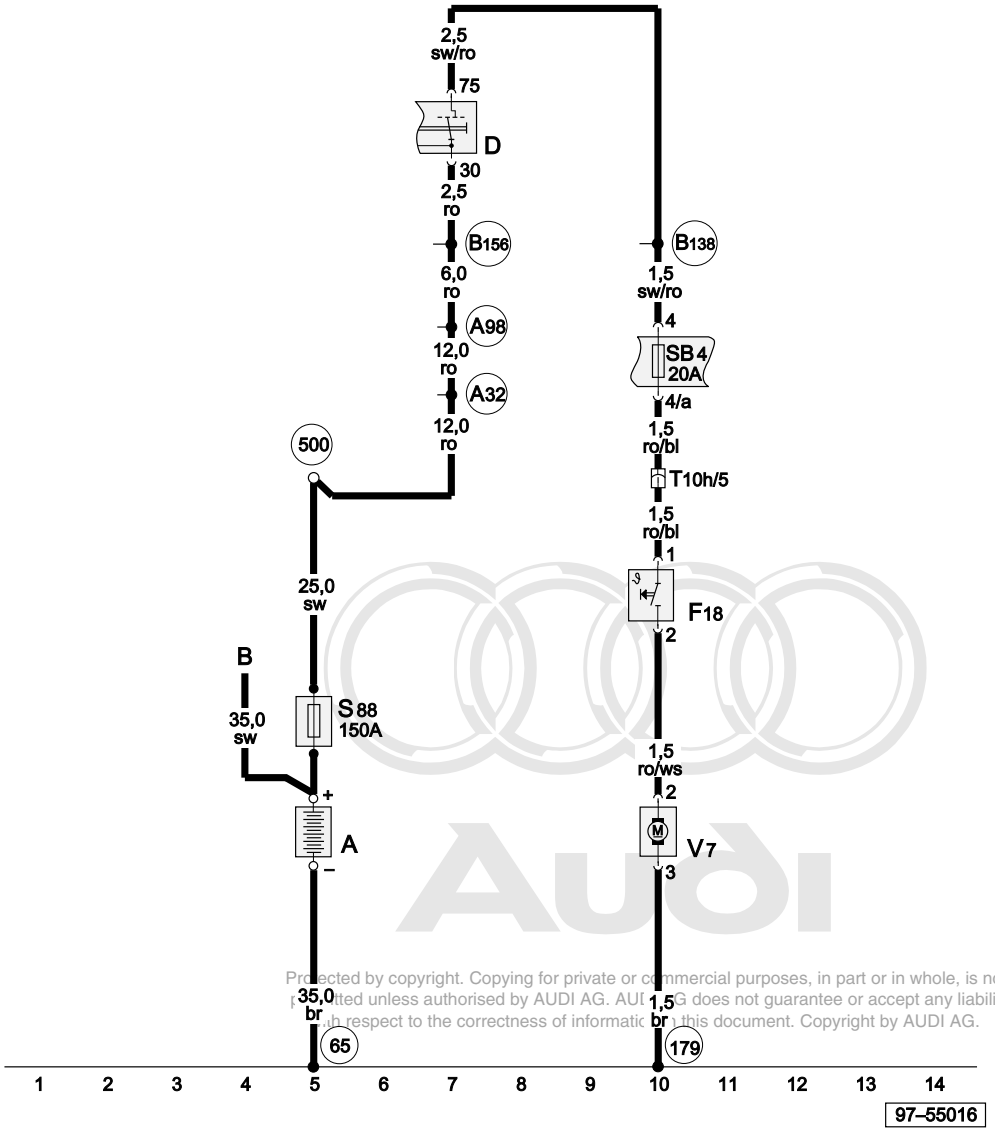

Protected by copyright. Copying for private or commercial purposes, in part or in whole, is not permitted unless authorised by AUDI AG. AUDI AG does not guarantee or accept any liability with respect to the correctness of information in this document. Copyright by AUDI AG.

ws = white
sw = black
ro = red
br = brown
gn = green
bl = blue
gr = grey
li = purple
ge = yellow
or = orange
rs = pink

Thermo-switch, radiator fan, fuse

A	Battery
B	Starter
D	Ignition/starter switch
F18	Radiator fan thermo-switch
S88	Strip fuse
SB4	Fuse -4- on fuse box
T10h	10-pin connector, white, connector point, A pillar, left
V7	Radiator fan
65	Earth point, left longitudinal member, rear
179	Earth connection, in left headlight wiring harness
500	Screw connection -1- (30), on relay plate
A32	Positive (+) connection (30), in dash panel wiring harness
A98	Positive (+) connection -4- (30), in dash panel wiring harness
B138	Positive (+) connection (X), in interior wiring harness
B156	Positive (+) connection (30a), in interior wiring harness

Radiator fan control - 60W/100W (without air conditioner)

- 1.4 litre unit injector, TDI engine (55 kW - 3-cylinder), engine code AMF

From model year 2001

Main fuse

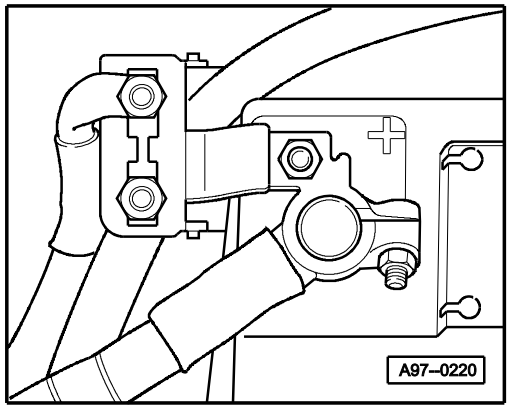

9-point relay carrier (in dash panel)
Fuse box

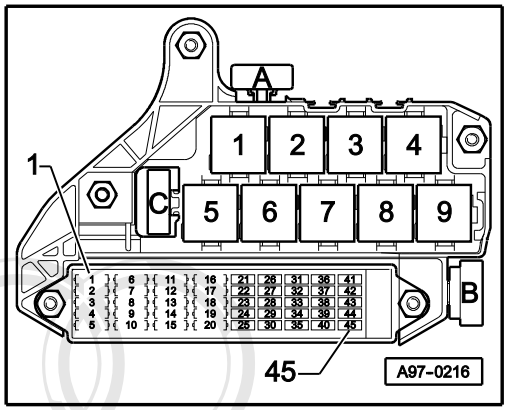

Fuse colours

30 A - green
25 A - white
20 A - yellow
15 A - blue
10 A - red
7.5 A - orange
5 A - beige

3-point relay carrier (in footwell)

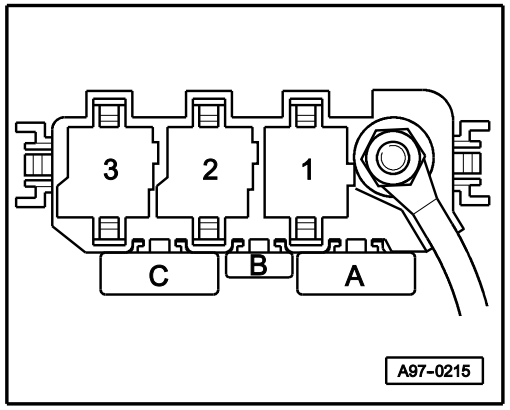

Protected by copyright. Copying for private or commercial purposes, in part or in whole, is not permitted unless authorised by AUDI AG. AUDI AG does not guarantee or accept any liability with respect to the correctness of information in this document. Copyright by AUDI AG.

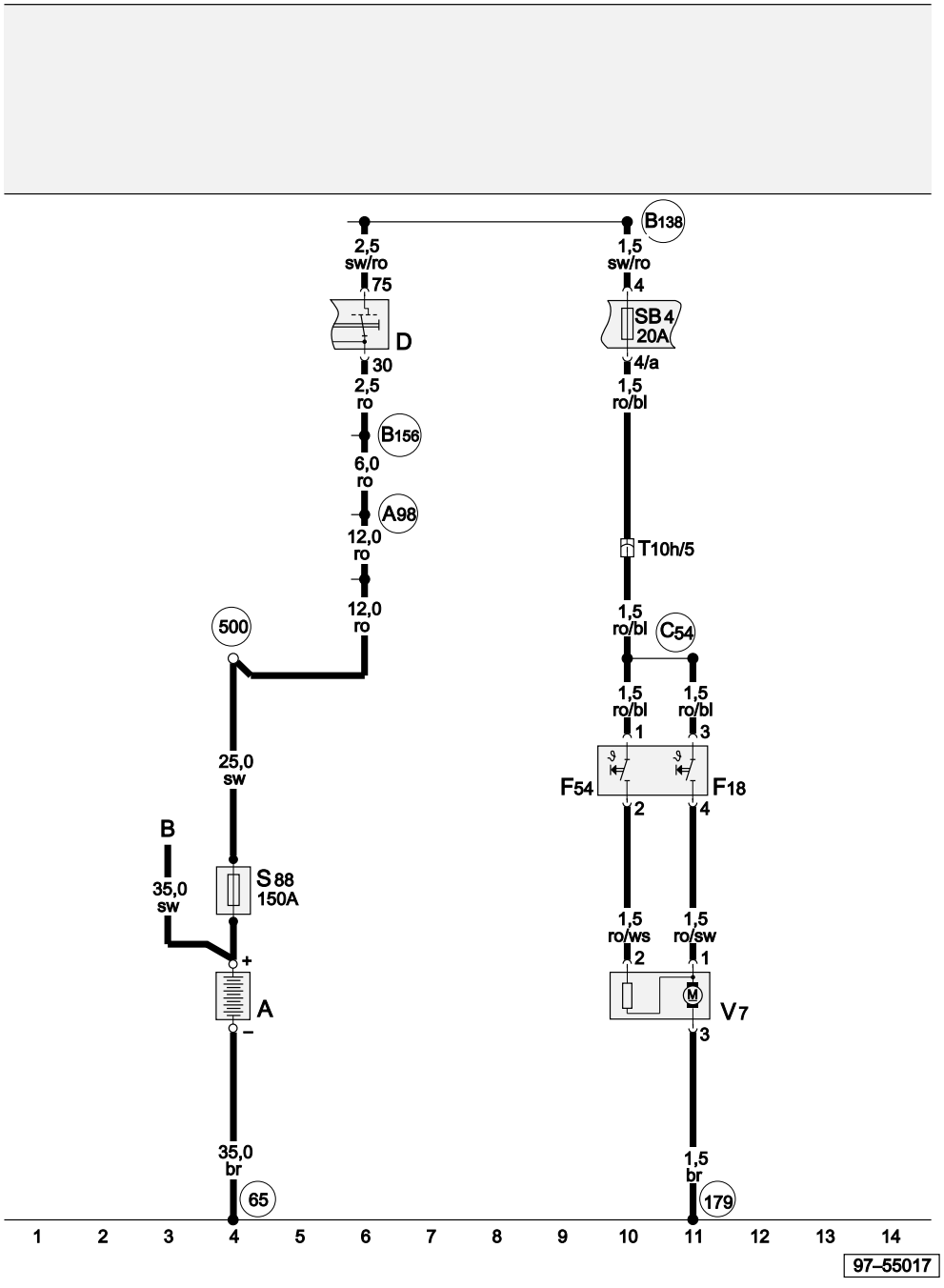

ws = white
sw = black
ro = red
br = brown
gn = green
bl = blue
gr = grey
li = purple
ge = yellow
or = orange
rs = pink

Thermo-switch, radiator fan, fuse

A	Battery
B	Starter
D	Ignition/starter switch
F18	Radiator fan thermo-switch
F54	Radiator fan thermo-switch
S88	Strip fuse (main fuse)
SB4	Fuse -4- on fuse box
T10h	10-pin connector, white, connector point, A pillar, left
V7	Radiator fan
65	Earth point, left longitudinal member, rear
179	Earth connection, in left headlight wiring harness
500	Screw connection -1- (30), on relay plate
A98	Positive (+) connection -4- (30), in dash panel wiring harness
B138	Positive (+) connection (X), in interior wiring harness
B156	Positive (+) connection (30a), in interior wiring harness
C54	Connection (radiator fan stage II), in front left wiring harness

Protected by copyright. Copying for private or commercial purposes, in part or in whole, is not permitted unless authorised by AUDI AG. AUDI AG does not guarantee or accept any liability with respect to the correctness of information in this document. Copyright by AUDI AG.

Provision for mobile phone

From model year 2001

Main fuse

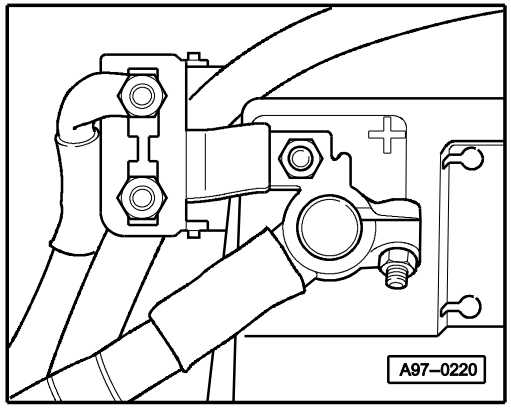

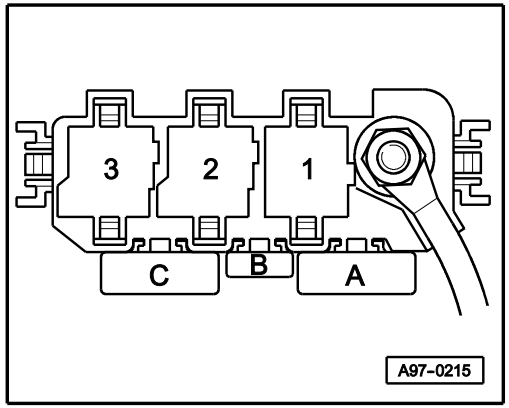

9-point relay carrier (in dash panel)

Fuse box

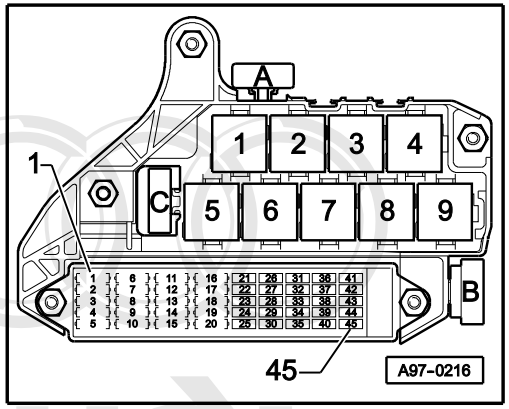

Fuse colours

30 A – green
25 A – white
20 A – yellow
15 A – blue
10 A – red
7.5A – orange
5A – beige

Protected by copyright. Copying for private or commercial purposes, in part or in whole, is not permitted unless authorised by AUDI AG. AUDI AG does not guarantee or accept any liability with respect to the correctness of information in this document. Copyright by AUDI AG.

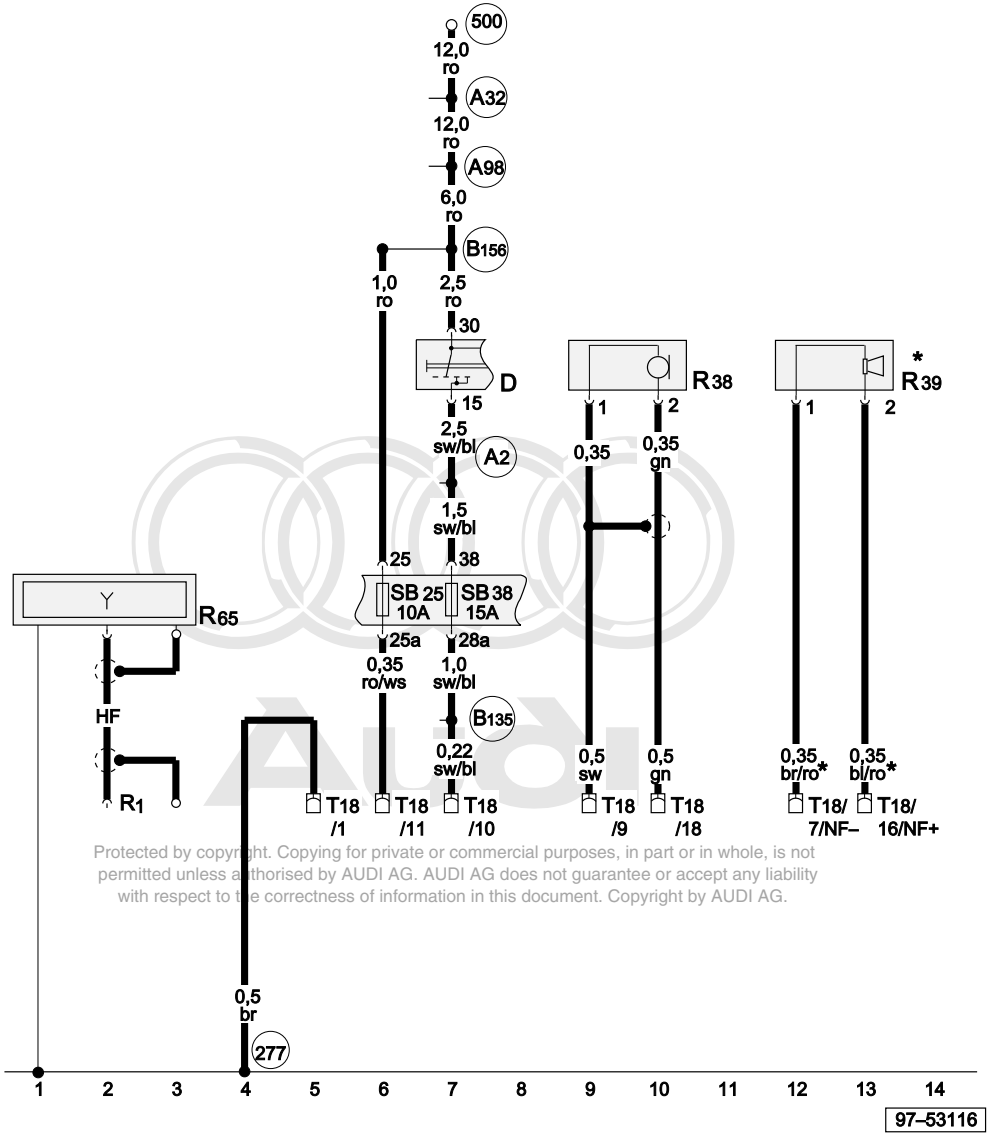

Protected by copyright. Copying for private or commercial purposes, in part or in whole, is not permitted unless authorised by AUDI AG. AUDI AG does not guarantee or accept any liability with respect to the correctness of information in this document. Copyright by AUDI AG.

Microphone for telephone, loudspeaker, fuse

D	Ignition/starter switch
R1	Aerial connection
R38	Telephone microphone
R39	Telephone/navigation systems loudspeaker
R65	Telephone aerial
SB25	Fuse -25- on fuse box
SB38	Fuse -38- on fuse box
T18	18-pin connector, black, mobile phone interface, in front passenger's footwell
277	Earth connection -3-, in interior wiring harness
500	Screw connection -1- (30), on relay plate
A2	Positive (+) connection (15), in dash panel wiring harness
A32	Positive (+) connection (30), in dash panel wiring harness
A98	Positive (+) connection -4- (30), in dash panel wiring harness
B135	Connection -1- (15a), in interior wiring harness
B156	Positive (+) connection (30a), in interior wiring harness
*	Only applies to models without factory-fitted radio

ws	=	white
sw	=	black
ro	=	red
br	=	brown
gn	=	green
bl	=	blue
gr	=	grey
li	=	purple
ge	=	yellow
or	=	orange
rs	=	pink

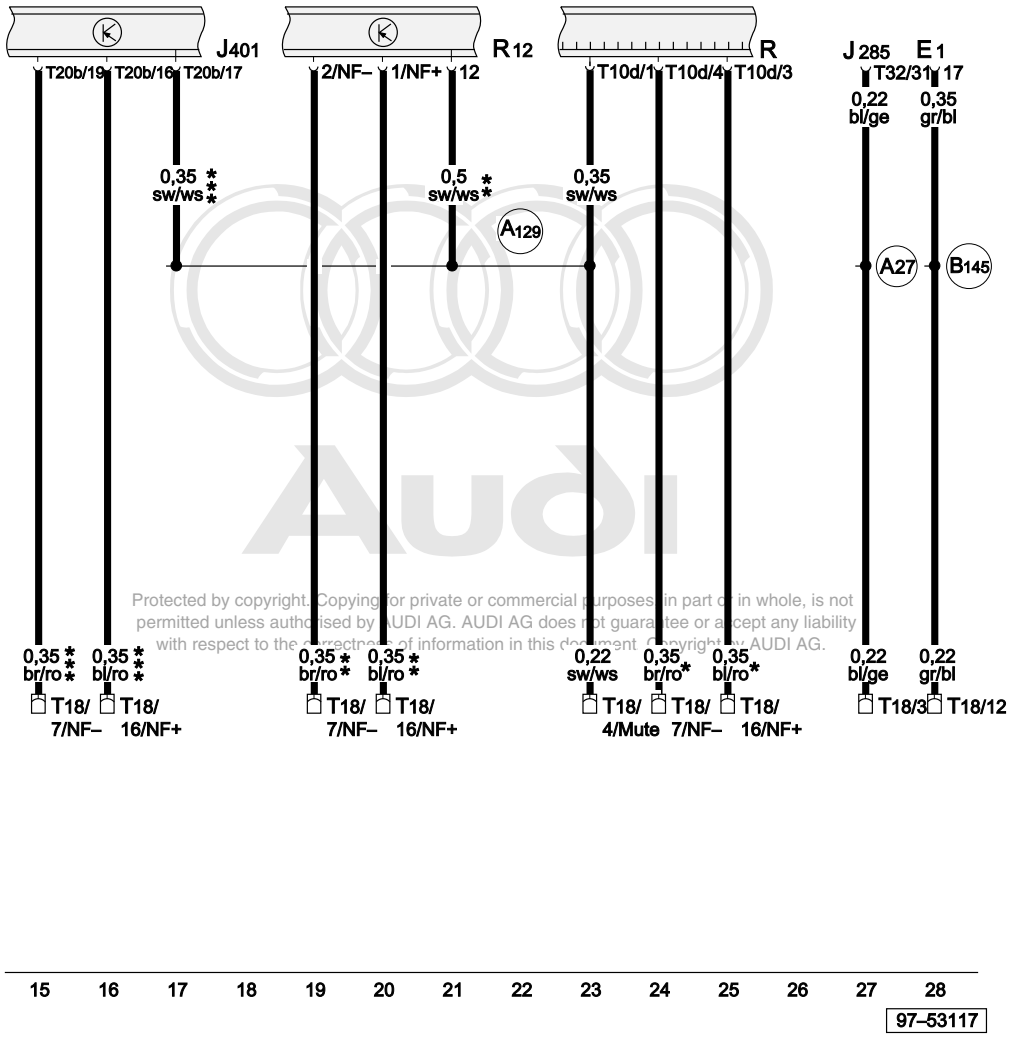

Protected by copyright. Copying for private or commercial purposes, in part or in whole, is not permitted unless authorised by AUDI AG. AUDI AG does not guarantee or accept any liability with respect to the correctness of information in this document. Copyright by AUDI AG.

Provision for mobile phone, radio

E1	Lighting switch
J285	Control unit with display in dash panel insert
J401	Navigation system with CD drive control unit
R	Radio
R12	Amplifier
T10d	10-pin connector, red, radio connector IV
T18	18-pin connector, black, mobile phone interface, in front passenger's footwell
T20b	20-pin connector, black, navigation system with CD drive control unit
T32	32-pin connector, blue, on dash panel insert
A27	Connection (speed signal), in dash panel wiring harness
A129	Connection (muting), in dash panel wiring harness
B145	Positive (+) connection (58b), in interior wiring harness
*	Does not apply to Bose loudspeakers
**	Only applies to Bose loudspeakers
***	Only models with navigation system NS Low

ws	=	white
sw	=	black
ro	=	red
br	=	brown
gn	=	green
bl	=	blue
gr	=	grey
li	=	purple
ge	=	yellow
or	=	orange
rs	=	pink

Diagnostic connector

From model year 2001

Main fuse

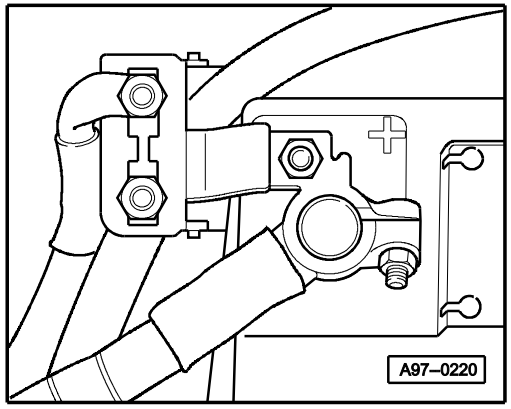

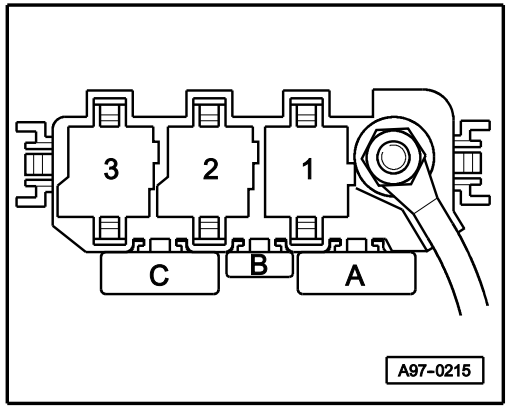

9-point relay carrier (in dash panel)

Fuse box

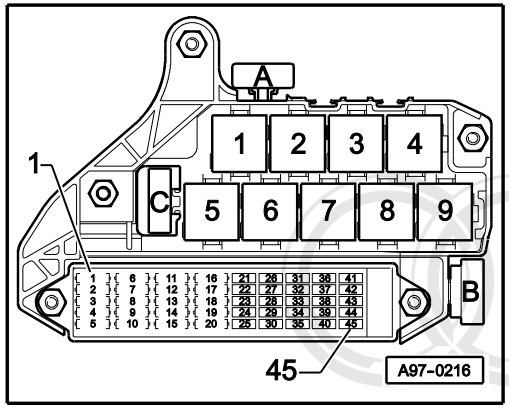

Fuse colours

30 A – green
25 A – white
20 A – yellow
15 A – blue
10 A – red
7.5A – orange
5A – beige

Protected by copyright. Copying for private or commercial purposes, in part or in whole, is not permitted unless authorised by AUDI AG. AUDI AG does not guarantee or accept any liability with respect to the correctness of information in this document. Copyright by AUDI AG.

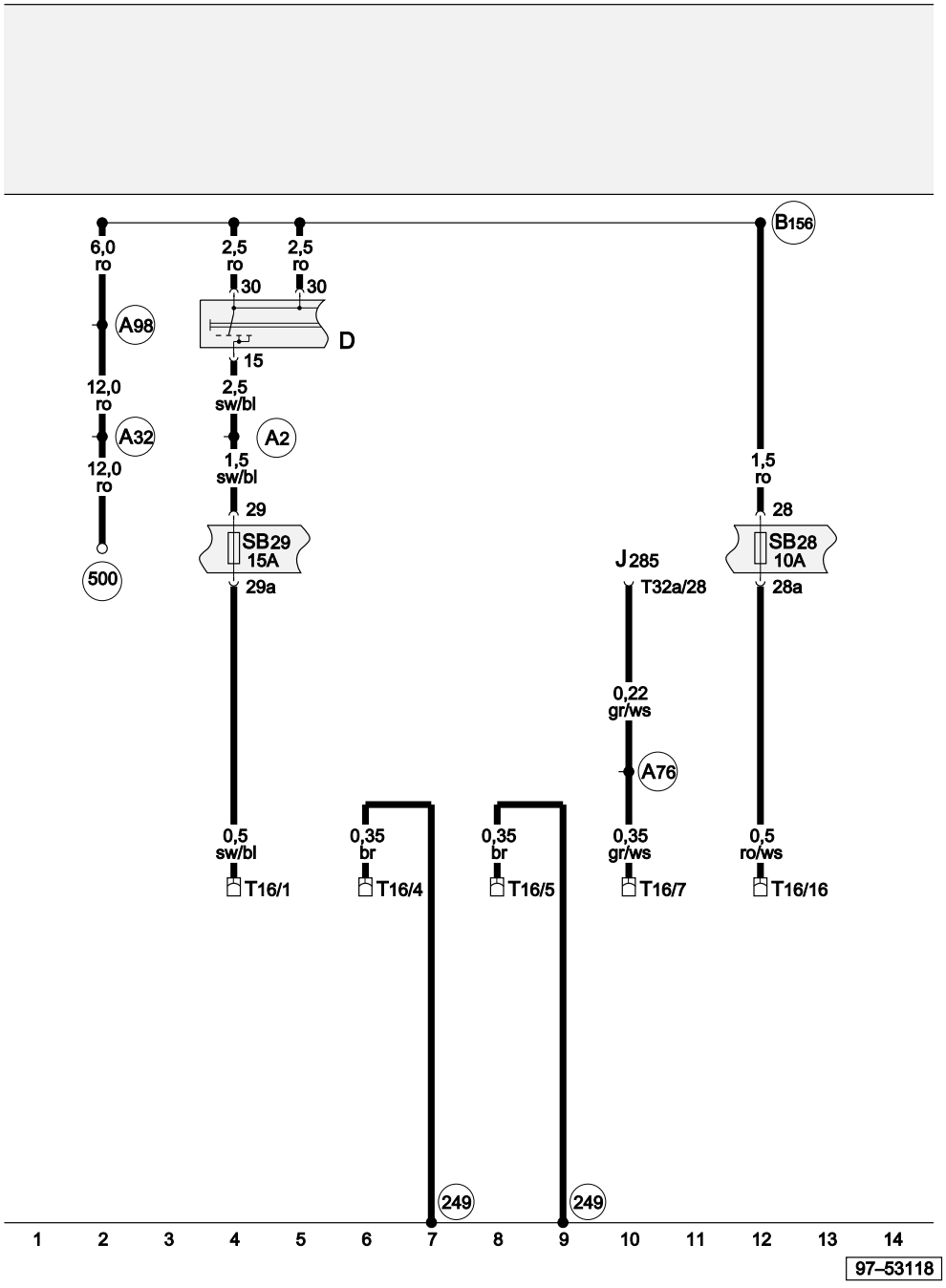

Diagnostic connector

D	Ignition/starter switch
J285	Control unit with display in dash panel insert
SB28	Fuse -28- on fuse box
SB29	Fuse -29- on fuse box
T16	16-pin connector, black, diagnostic connector
T32a	32-pin connector, green, on dash panel insert
249	Earth connection -2-, in interior wiring harness
500	Screw connection -1- (30), on relay plate
A2	Positive (+) connection (15), in dash panel wiring harness
A32	Positive (+) connection (30), in dash panel wiring harness
A76	Connection (diagnosis wire K), in dash panel wiring harness
A98	Positive (+) connection -4- (30), in dash panel wiring harness
B156	Positive (+) connection (30a), in interior wiring harness

Protected by copyright. Copying for private or commercial purposes, in part or in whole, is not permitted unless authorised by AUDI AG. AUDI AG does not guarantee or accept any liability with respect to the correctness of information in this document. Copyright by AUDI AG.

ws	=	white
sw	=	black
ro	=	red
br	=	brown
gn	=	green
bl	=	blue
gr	=	grey
li	=	purple
ge	=	yellow
or	=	orange
rs	=	pink

Electric lumbar support adjustment

From model year 2001

Main fuse

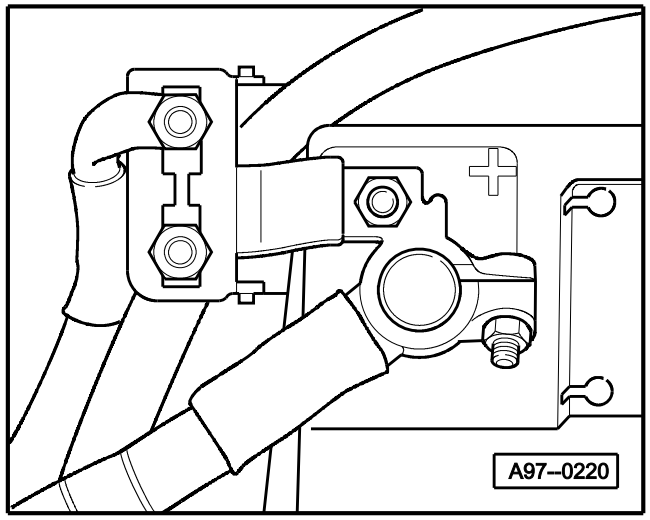

- On battery

9-point relay carrier, fuse box

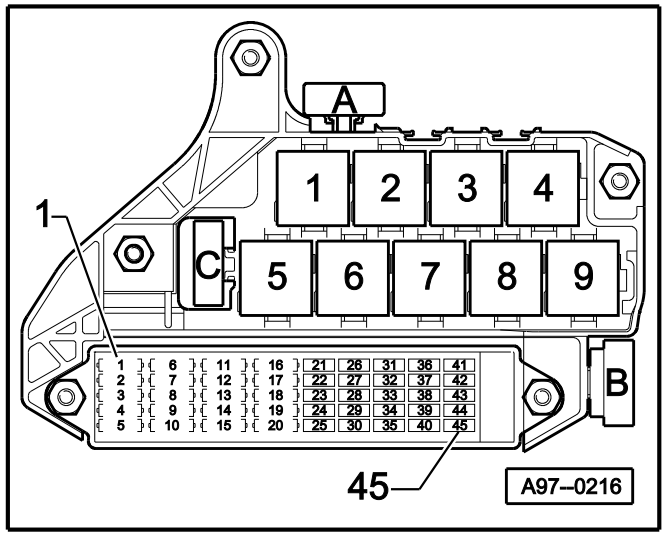

Protected by copyright. Copying for private or commercial purposes, in part or in whole, is not permitted unless authorised by AUDI AG. AUDI AG does not guarantee or accept any liability with respect to the correctness of information in this document. Copyright by AUDI AG.

♦ In dash panel, driver's side

Fuse colours

5 A - beige
7.5 A - brown
10 A - red
15 A - blue
20 A - yellow
25 A - white
30 A - green

Connector point, A pillar, left

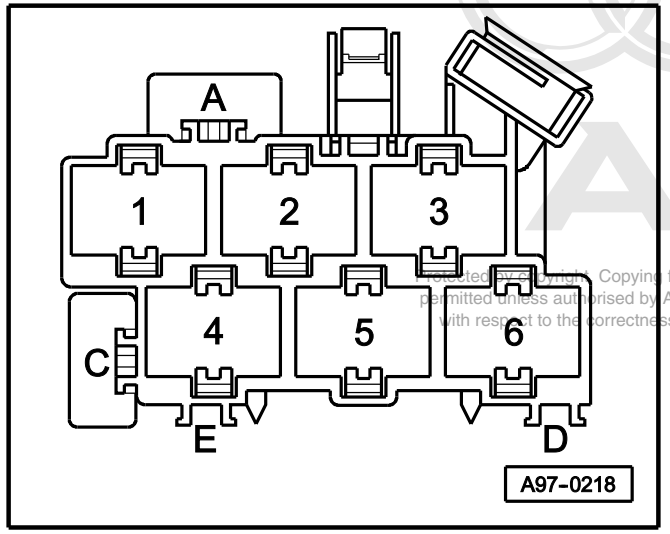

Protected by copyright. Copying for private or commercial purposes, in part or in whole, is not permitted unless authorised by AUDI AG. AUDI AG does not guarantee or accept any liability with respect to the correctness of information in this document. Copyright by AUDI AG.

♦ At A pillar, left, behind trim

C - Seat adjustment fuse (S45)

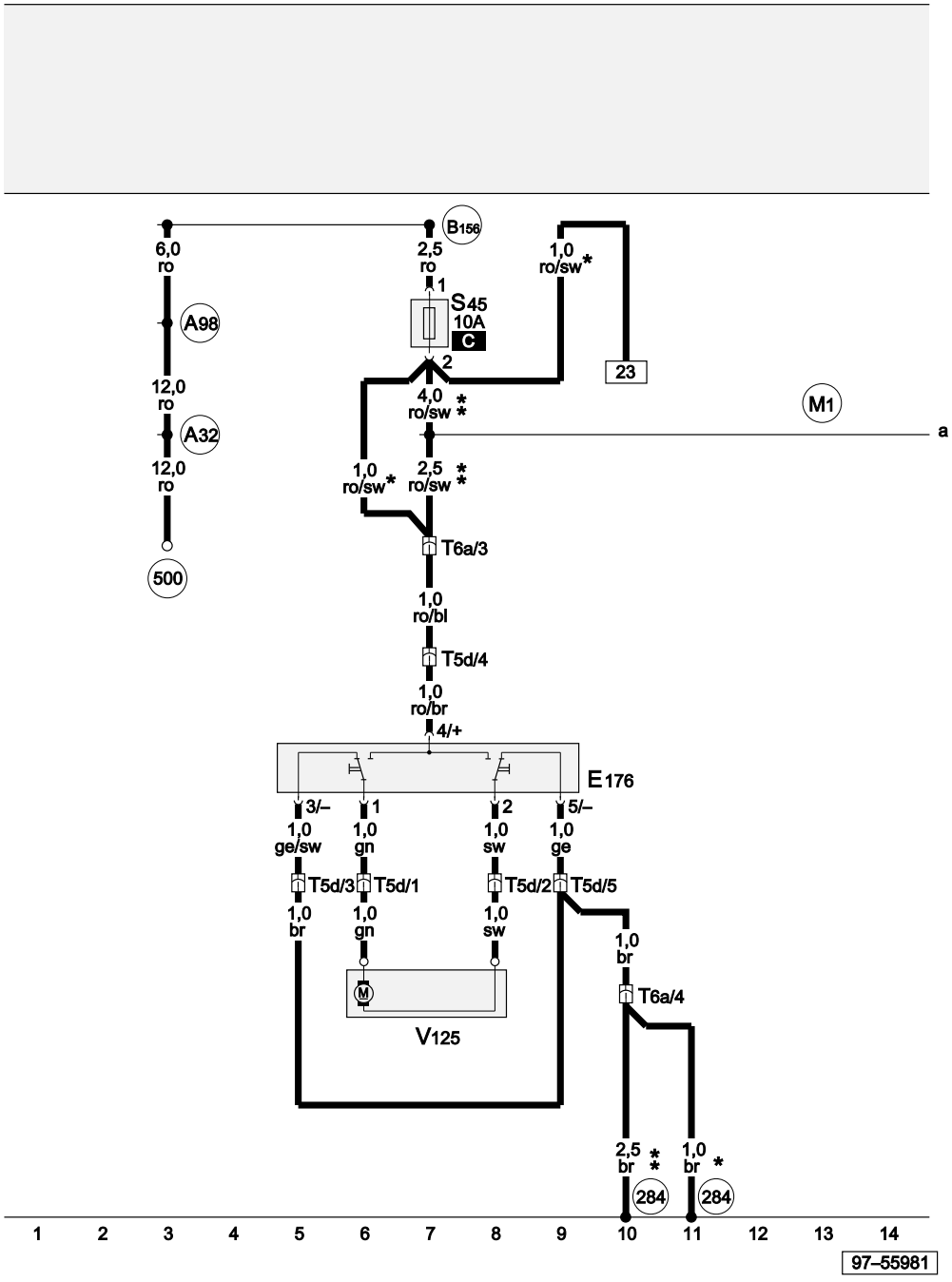

ws = white
sw = black
ro = red
br = brown
gn = green
bl = blue
gr = grey
li = purple
ge = yellow
or = orange
rs = pink

Driver's seat lumbar support adjustment switch, fuse, driver's seat lumbar support adjustment motor

E176	Lumbar support adjustment switch, driver's seat
S45	Seat adjustment fuse
T5d	5-pin connector, on driver's seat
T6a	6-pin connector, red, under driver's seat
V125	Lumbar support longitudinal adjustment motor, driver's seat
284	Earth connection -6-, in interior wiring harness
500	Screw connection -1- (30), on relay plate
A32	Positive (+) connection (30), in dash panel wiring harness
A98	Positive (+) connection -4- (30), in dash panel wiring harness
B156	Positive (+) connection (30a), in interior wiring harness
M1	Positive (+) connection -1- (30), in seat adjustment wiring harness
*	Phased-in modification
**	No longer fitted, phased-in modification

Protected by copyright. Copying for private or commercial purposes, in part or in whole, is not permitted unless authorised by AUDI AG. AUDI AG does not guarantee or accept any liability with respect to the correctness of information in this document. Copyright by AUDI AG.

Front passenger's seat lumbar support adjustment switch, front passenger's seat lumbar support adjustment motor

E177	Lumbar support adjustment switch, front passenger's seat
T5c	5-pin connector, on front passenger's seat
T6e	6-pin connector, red, under front passenger's seat
V126	Lumbar support longitudinal adjustment motor, front passenger's seat
277	Earth connection -3-, in interior wiring harness
M1	Positive (+) connection -1- (30), in seat adjustment wiring harness
*	Phased-in modification
**	No longer fitted, phased-in modification

Protected by copyright. Copying for private or commercial purposes, in part or in whole, is not permitted unless authorised by AUDI AG. AUDI AG does not guarantee or accept any liability with respect to the correctness of information in this document. Copyright by AUDI AG.

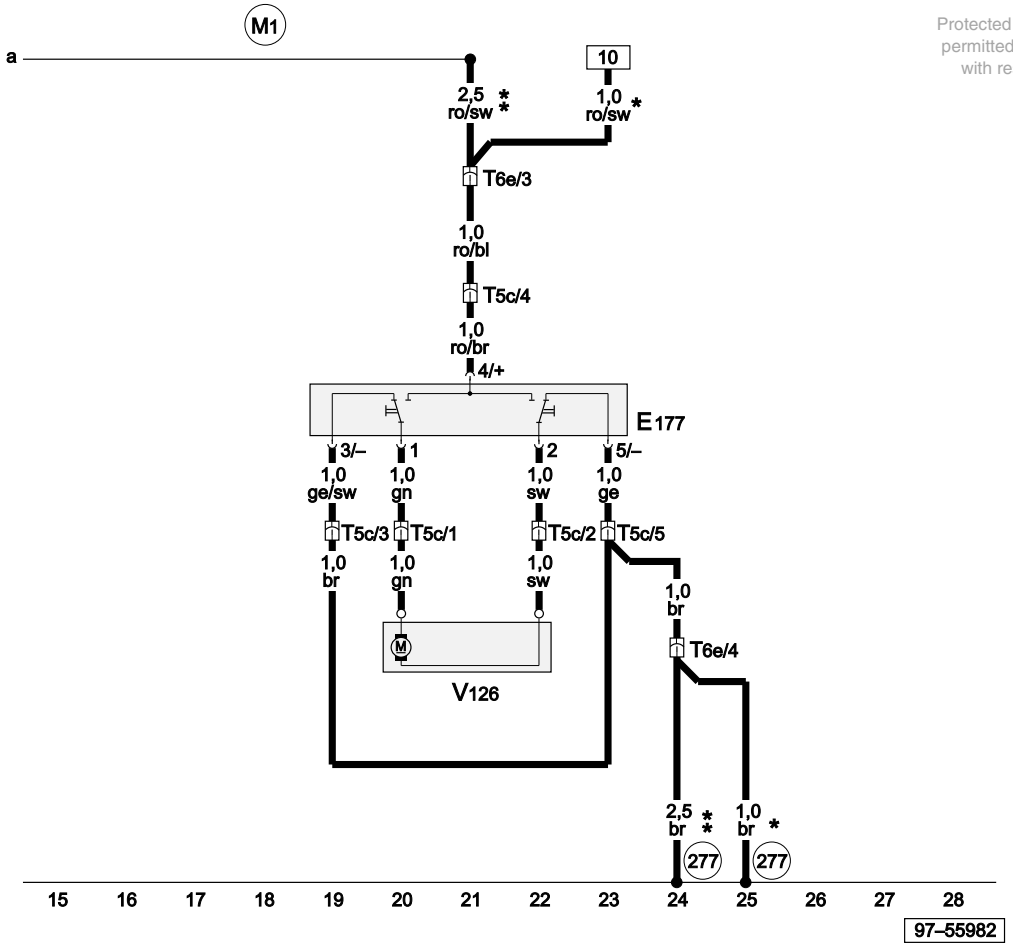

ws	=	white
sw	=	black
ro	=	red
br	=	brown
gn	=	green
bl	=	blue
gr	=	grey
li	=	purple
ge	=	yellow
or	=	orange
rs	=	pink

Navigation system "NS LOW"

From model year 2001

Main fuse

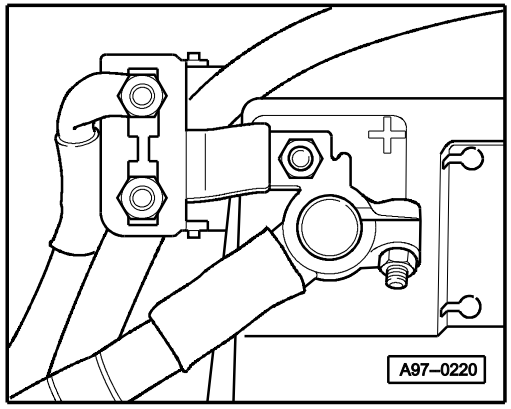

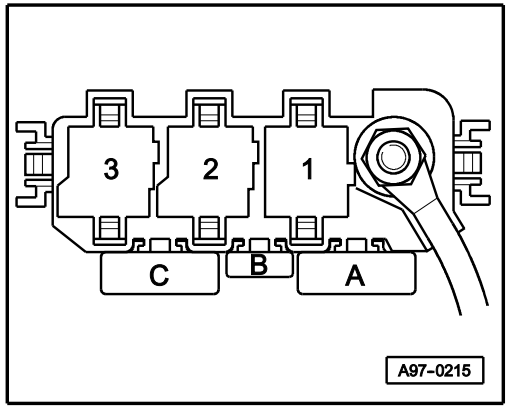

9-point relay carrier (in dash panel)

Fuse box

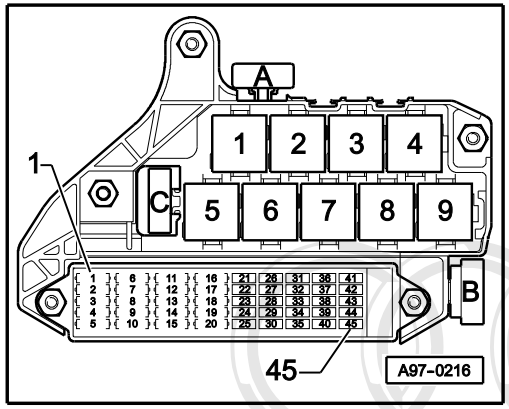

Fuse colours

30 A – green
25 A – white
20 A – yellow
15 A – blue
10 A – red
7.5A – orange
5A – beige

Protected by copyright. Copying for private or commercial purposes, in part or in whole, is not permitted unless authorised by AUDI AG. AUDI AG does not guarantee or accept any liability with respect to the correctness of information in this document. Copyright by AUDI AG.

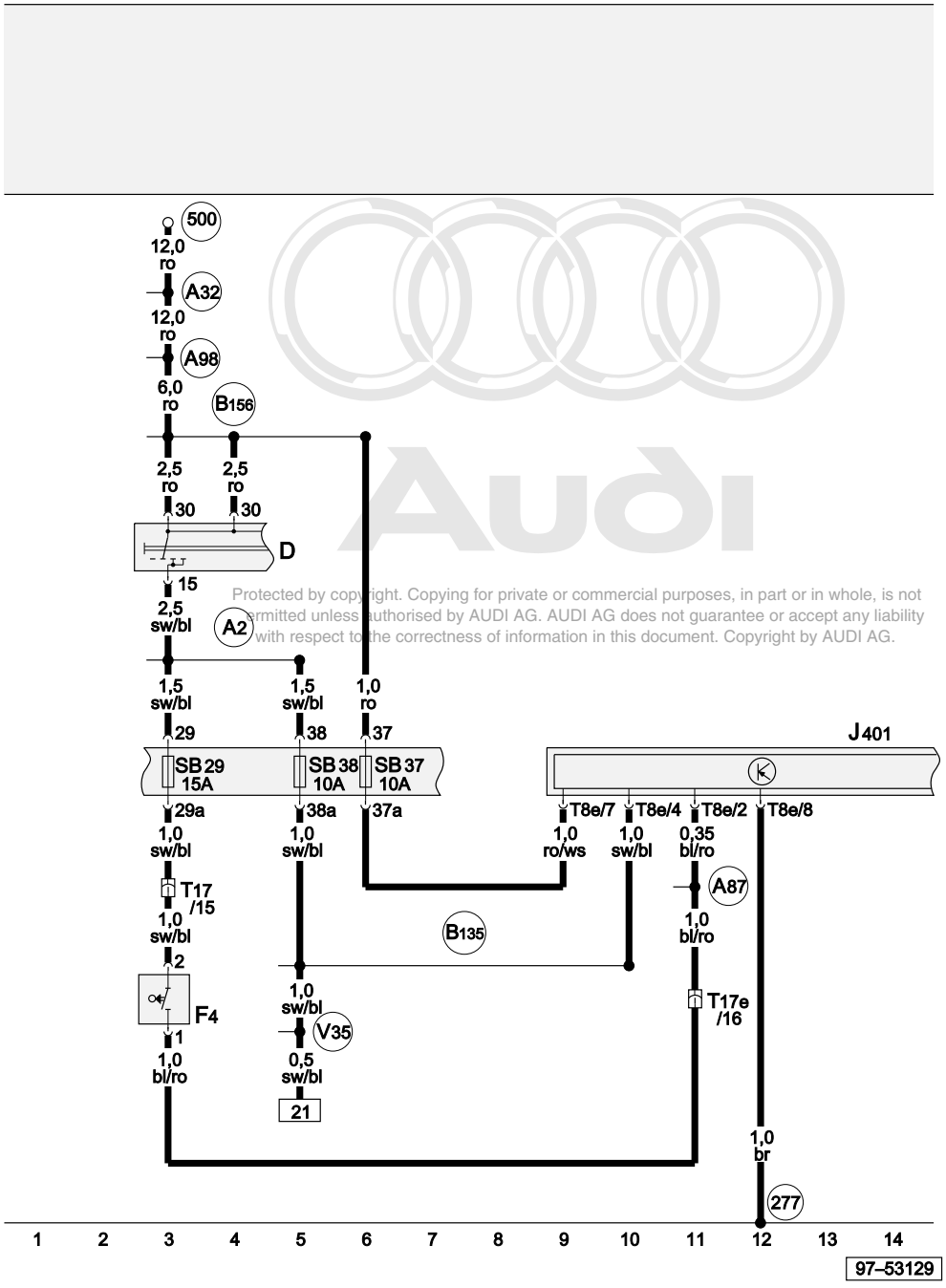

Protected by copyright. Copying for private or commercial purposes, in part or in whole, is not permitted unless authorised by AUDI AG. AUDI AG does not guarantee or accept any liability with respect to the correctness of information in this document. Copyright by AUDI AG.

ws = white
sw = black
ro = red
br = brown
gn = green
bl = blue
gr = grey
li = purple
ge = yellow
or = orange
rs = pink

Navigation system with CD drive control unit, fuses

D	Ignition/starter switch
F4	Reversing light switch
J401	Navigation system with CD drive control unit
SB29	Fuse -29- on fuse box
SB37	Fuse -37- on fuse box
SB38	Fuse -38- on fuse box
T8e	8-pin connector, black, navigation system with CD drive control unit
T17	17-pin connector, brown, in footwell, front left
T17e	17-pin connector, blue, in footwell, front left
277	Earth connection -3-, in interior wiring harness
500	Screw connection -1- (30), on relay plate
A2	Positive (+) connection (15), in dash panel wiring harness
A32	Positive (+) connection (30), in dash panel wiring harness
A87	Connection (RL), in dash panel wiring harness
A98	Positive (+) connection -4- (30), in dash panel wiring harness
B135	Connection -1- (15a), in interior wiring harness
B156	Positive (+) connection (30a), in interior wiring harness
V35	Positive (+) connection (15a), in radio wiring harness

Navigation system with CD drive control unit, telephone/ navigation systems loudspeaker

J401	Navigation system with CD drive control unit
R	Radio
R12	Amplifier
R39	Telephone/navigation systems loudspeaker
T10d	10-pin connector, red, radio connector IV
T18	18-pin connector, black, mobile phone interface, in front passenger's footwell
T20b	20-pin connector, black, navigation system with CD drive control unit
A129	Connection (muting), in dash panel wiring harness
*	Models without radio (only export versions)
**	Models with radio
***	Models with Bose sound system
****	Models with provision for mobile phone

Protected by copyright. Copying for private or commercial purposes, in part or in whole, is not permitted unless authorised by AUDI AG. AUDI AG does not guarantee or accept any liability with respect to the correctness of information in this document. Copyright by AUDI AG.

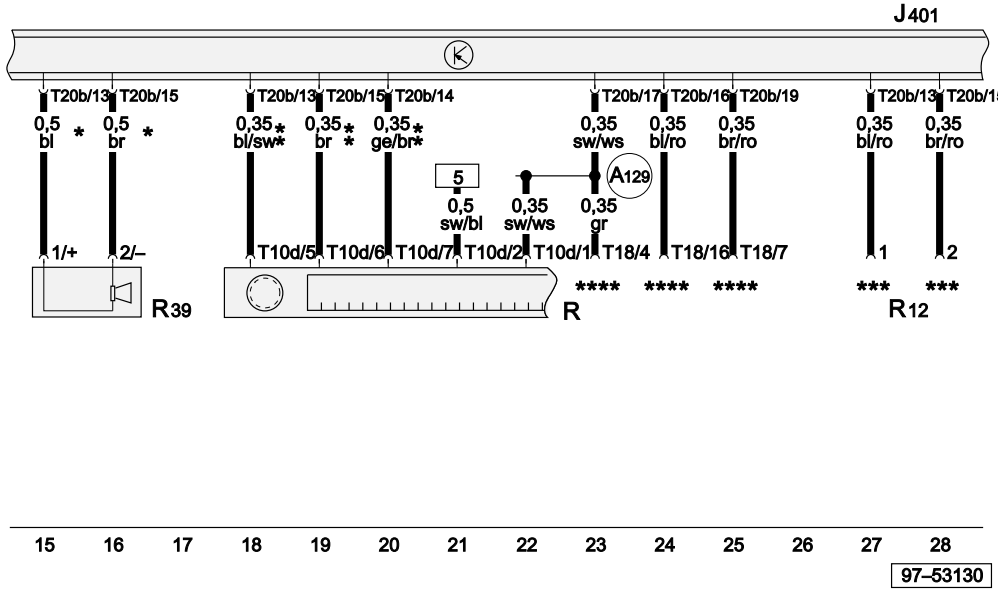

ws	=	white
sw	=	black
ro	=	red
br	=	brown
gn	=	green
bl	=	blue
gr	=	grey
li	=	purple
ge	=	yellow
or	=	orange
rs	=	pink

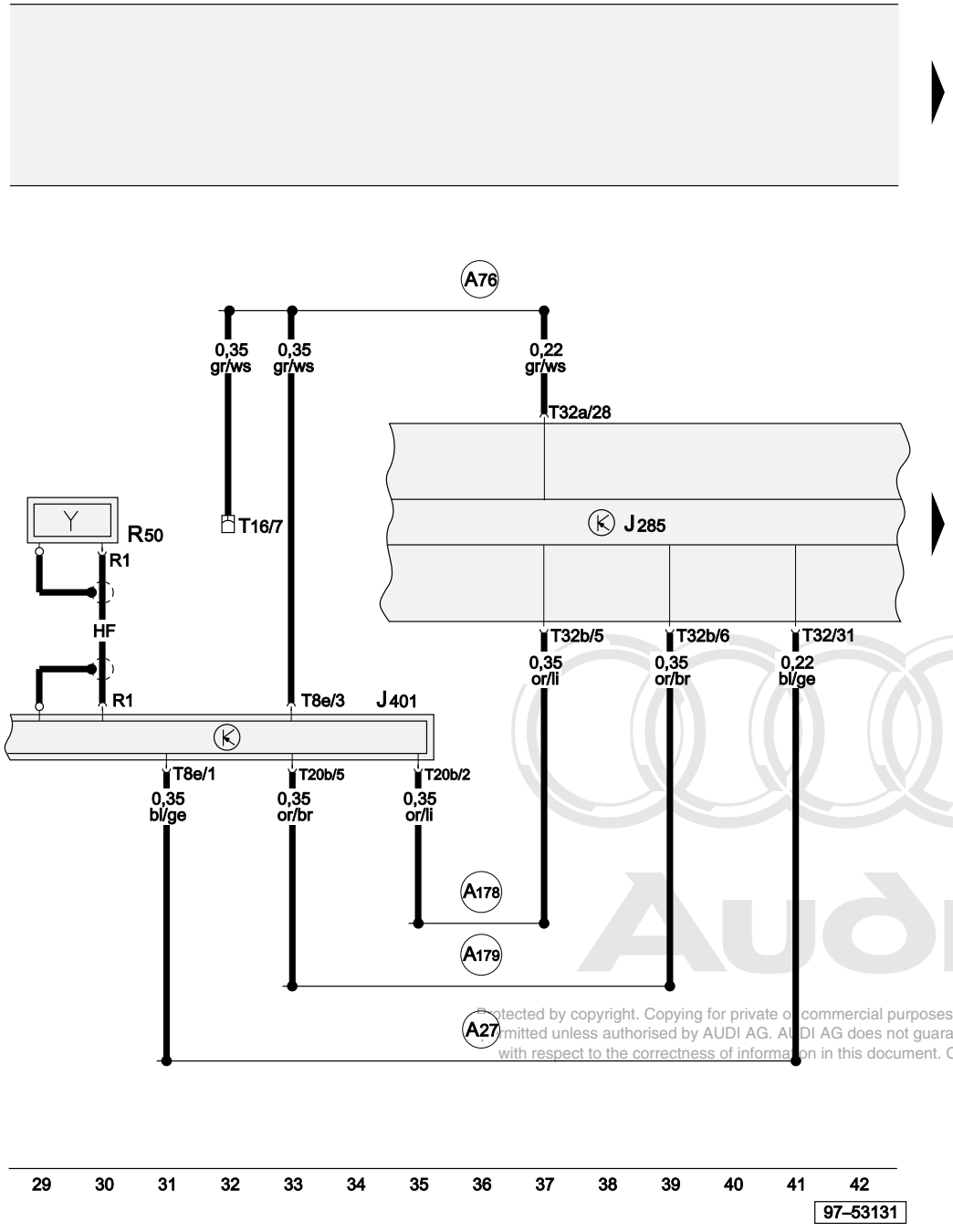

ws = white
sw = black
ro = red
br = brown
gn = green
bl = blue
gr = grey
li = purple
ge = yellow
or = orange
rs = pink

Protected by copyright. Copying for private or commercial purposes, in part or in whole, is not permitted unless authorised by AUDI AG. AUDI AG does not guarantee or accept any liability with respect to the correctness of information in this document. Copyright by AUDI AG.

Control unit with display in dash panel insert, navigation system with CD drive control unit

J285	Control unit with display in dash panel insert
J401	Navigation system with CD drive control unit
R1	Aerial connection
R50	Navigation aerial (GPS)
T8e	8-pin connector, black, navigation system with CD drive control unit
T16	16-pin connector, black, diagnostic connector
T20b	20-pin connector, black, navigation system with CD drive control unit
T32	32-pin connector, blue, on dash panel insert
T32a	32-pin connector, green, on dash panel insert
T32b	32-pin connector, grey, on dash panel insert
A27	Connection (speed signal), in dash panel wiring harness
A76	Connection (diagnosis wire K), in dash panel wiring harness
A178	Connection (infotainment CAN bus, high), in dash panel wiring harness
A179	Connection (infotainment CAN bus, low), in dash panel wiring harness

Function selection switch II, control unit with display in dash panel insert

E272	Function selection switch II
J285	Control unit with display in dash panel insert
T32	32-pin connector, blue, on dash panel insert
T32b	32-pin connector, grey, on dash panel insert
278	Earth connection -4-, in interior wiring harness
B145	Positive (+) connection (58b), in interior wiring harness

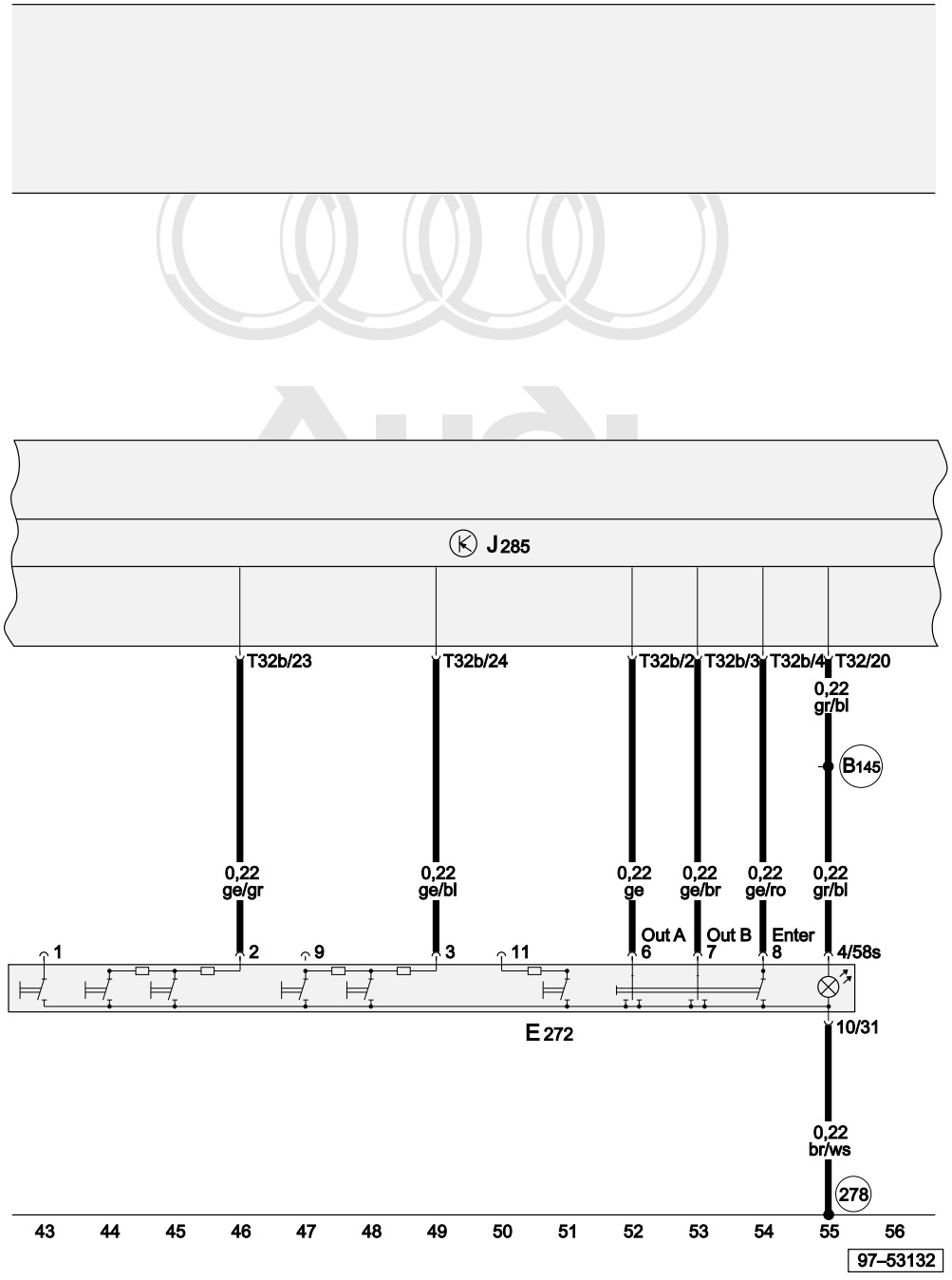

ws = white
sw = black
ro = red
br = brown
gn = green
bl = blue
gr = grey
li = purple
ge = yellow
or = orange
rs = pink

Seat heating

From model year 2001

Main fuse

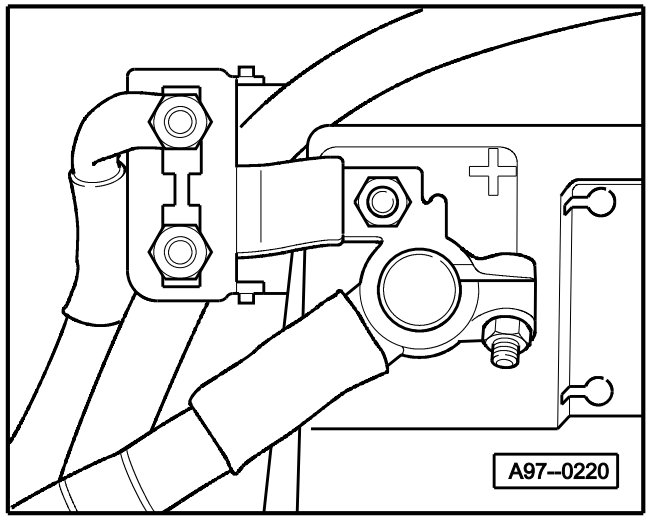

- On battery

9-point relay carrier, fuse box

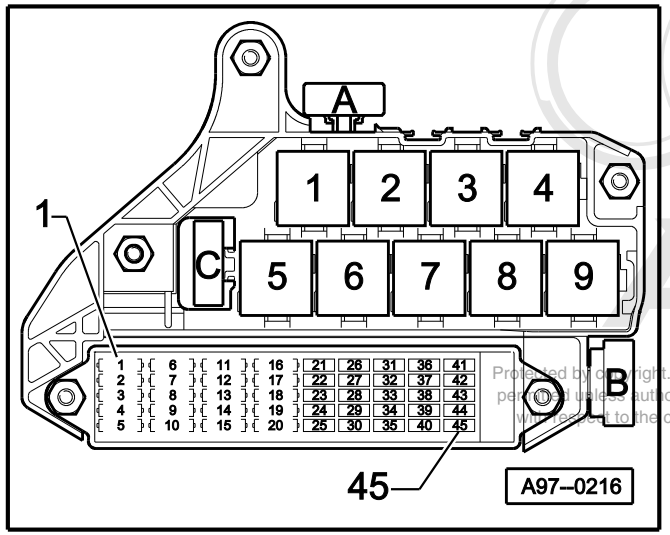

Protected by copyright. Copying for private or commercial purposes, in part or in whole, is not permitted unless authorised by AUDI AG. AUDI AG does not guarantee or accept any liability with respect to the correctness of information in this document. Copyright by AUDI AG.

- In dash panel

Fuse colours

5 A - beige
7.5 A - brown
10 A - red
15 A - blue
20 A - yellow
25 A - white
30 A - green

Protected by copyright. Copying for private or commercial purposes, in part or in whole, is not permitted unless authorised by AUDI AG. AUDI AG does not guarantee or accept any liability with respect to the correctness of information in this document. Copyright by AUDI AG.

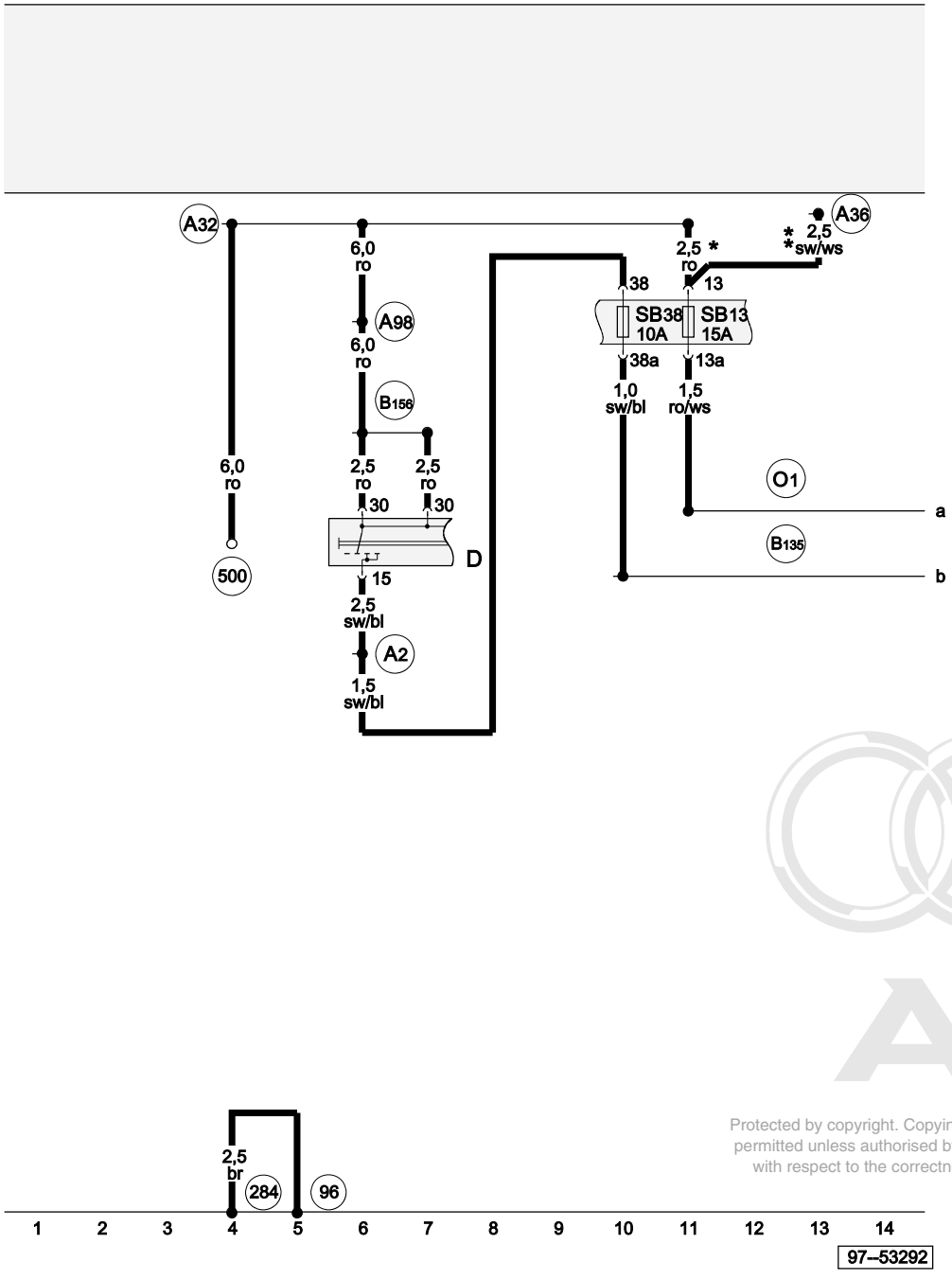

Ignition/starter switch, fuses

D	Ignition/starter switch
SB13	Fuse -13- on fuse box
SB38	Fuse -38- on fuse box
96	Earth connection -1-, in seat heating wiring harness
284	Earth connection -6-, in interior wiring harness
500	Screw connection -1- (30), on relay plate
A2	Positive (+) connection (15), in dash panel wiring harness
A32	Positive (+) connection (30), in dash panel wiring harness
A36	Connection (75a), in dash panel wiring harness
A98	Positive (+) connection -4- (30), in dash panel wiring harness
B135	Connection -1- (15a), in interior wiring harness
B156	Positive (+) connection (30a), in interior wiring harness
O1	Positive (+) connection (30), in heated seats wiring harness
*	Only applies to models without 1.2 litre TDI engine
**	Only applies to models with 1.2 litre TDI engine

ws	=	white
sw	=	black
ro	=	red
br	=	brown
gn	=	green
bl	=	blue
gr	=	grey
li	=	purple
ge	=	yellow
or	=	orange
rs	=	pink

Protected by copyright. Copying for private or commercial purposes, in part or in whole, is not permitted unless authorised by AUDI AG. AUDI AG does not guarantee or accept any liability with respect to the correctness of information in this document. Copyright by AUDI AG.

Heated driver's seat regulator, driver's seat temperature sensor, heated driver's seat cushion, heated driver's seat backrest, driver's seat cushion lateral support heater

E94	Heated driver's seat regulator
G59	Driver's seat temperature sensor
J285	Control unit with display in dash panel insert
T2h	2-pin connector, in driver's seat
T6c	6-pin connector, green, under driver's seat
T32	32-pin connector, blue, on dash panel insert
Z6	Heated driver's seat cushion
Z7	Heated driver's seat backrest
Z31	Driver's seat cushion lateral support heater
96	Earth connection -1-, in seat heating wiring harness
277	Earth connection -3-, in interior wiring harness
B135	Connection -1- (15a), in interior wiring harness
B145	Positive (+) connection (58b), in interior wiring harness
O1	Positive (+) connection (30), in heated seats wiring harness

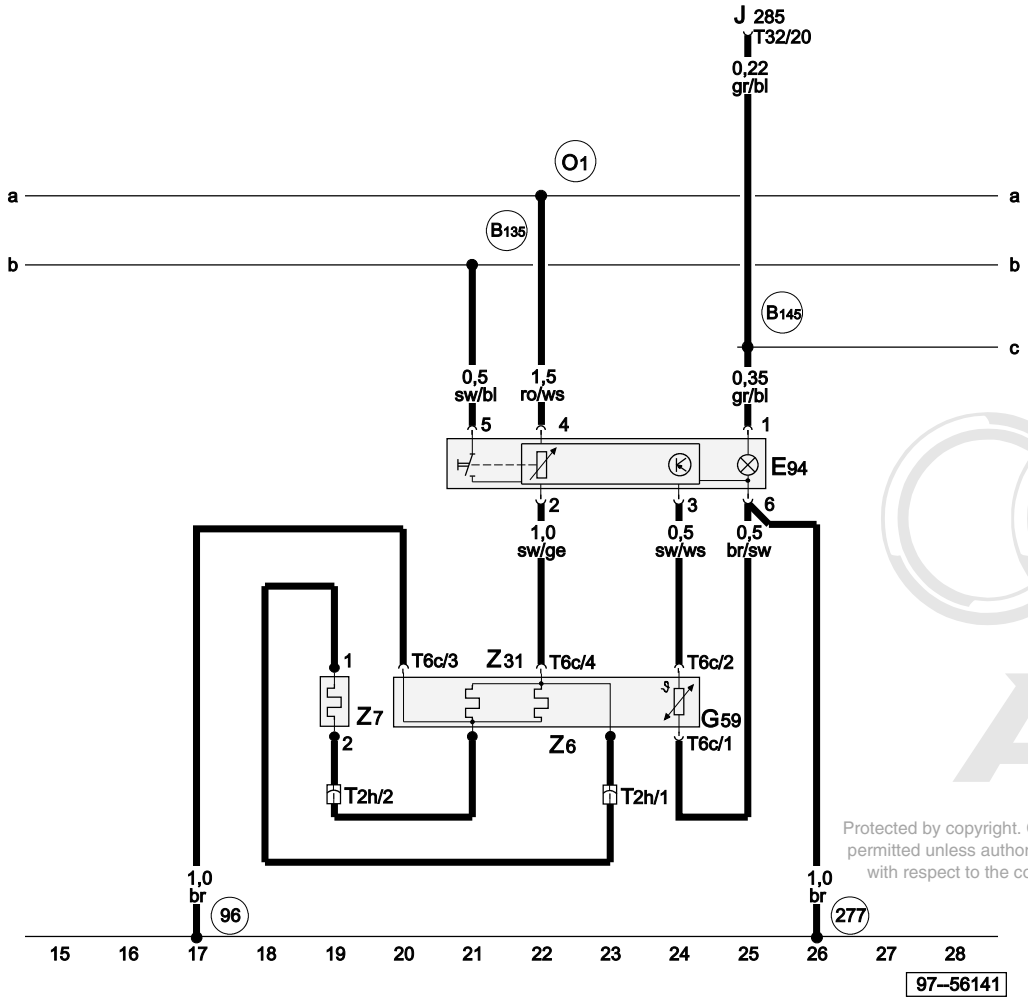

ws = white
sw = black
ro = red
br = brown
gn = green
bl = blue
gr = grey
li = purple
ge = yellow
or = orange
rs = pink

Protected by copyright. Copying for private or commercial purposes, in part or in whole, is not permitted unless authorised by AUDI AG. AUDI AG does not guarantee or accept any liability with respect to the correctness of information in this document. Copyright by AUDI AG.

Heated front passenger's seat regulator, front passenger's seat temperature sensor, heated front passenger's seat cushion, heated front passenger's seat backrest, front passenger's seat cushion lateral support heater

E95	Heated front passenger's seat regulator
G60	Front passenger's seat temperature sensor
T2i	2-pin connector, in front passenger's seat
T6d	6-pin connector, green, under front passenger's seat
Z8	Heated front passenger's seat cushion
Z9	Heated front passenger's seat backrest
Z33	Front passenger's seat cushion lateral support heater
96	Earth connection -1-, in seat heating wiring harness
277	Earth connection -3-, in interior wiring harness
B135	Connection -1- (15a), in interior wiring harness
B145	Positive (+) connection (58b), in interior wiring harness
O1	Positive (+) connection (30), in heated seats wiring harness

Protected by copyright. Copying for private or commercial purposes, in part or in whole, is not permitted unless authorised by AUDI AG. AUDI AG does not guarantee or accept any liability with respect to the correctness of information in this document. Copyright by AUDI AG.

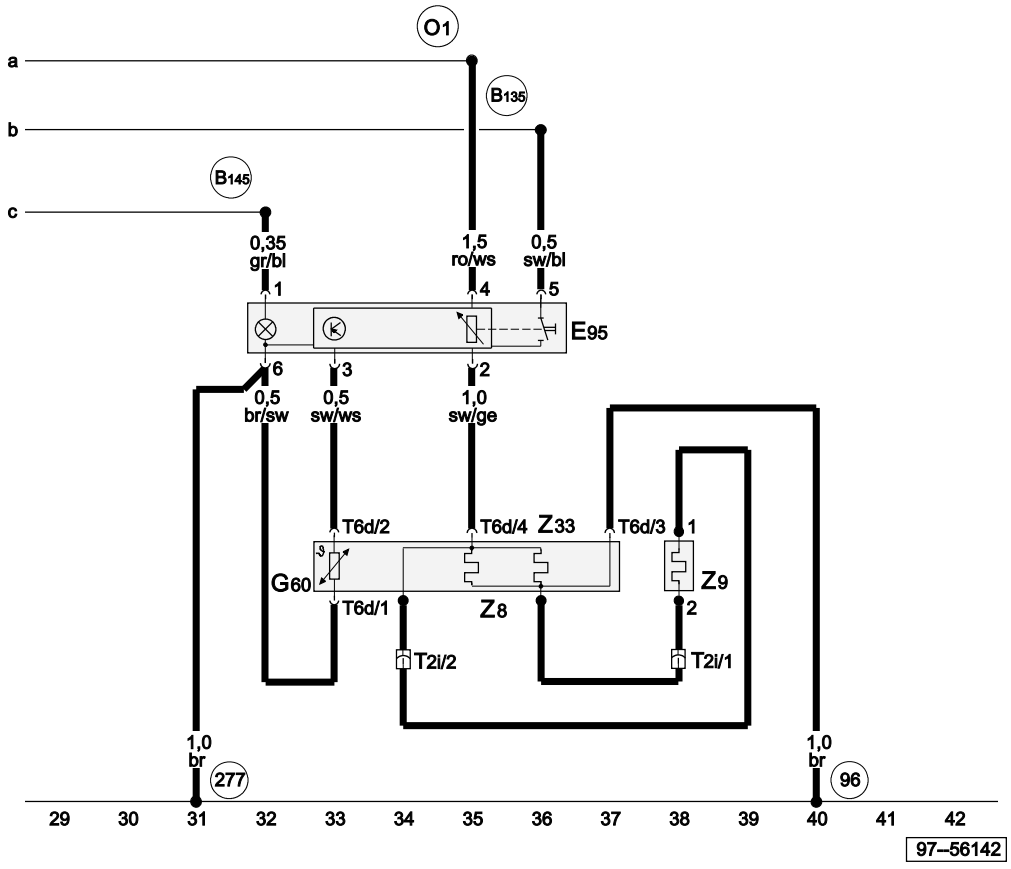

ws	=	white
sw	=	black
ro	=	red
br	=	brown
gn	=	green
bl	=	blue
gr	=	grey
li	=	purple
ge	=	yellow
or	=	orange
rs	=	pink

Daytime driving lights with fog lights

From model year 2001

Protected by copyright. Copying for private or commercial purposes, in part or in whole, is not permitted unless authorised by AUDI AG. AUDI AG does not guarantee or accept any liability with respect to the correctness of information in this document. Copyright by AUDI AG.

Main fuse

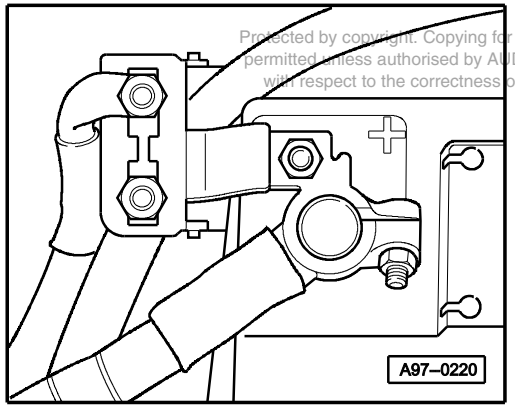

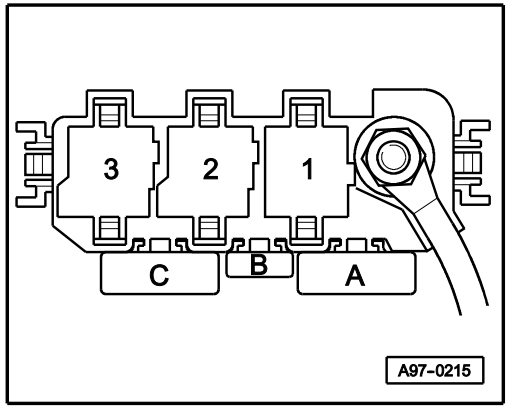

9-point relay carrier (in dash panel)

Fuse box

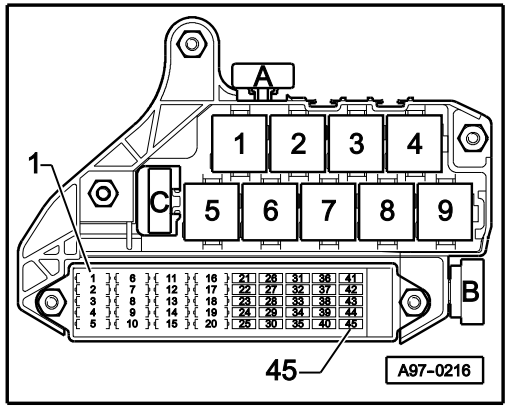

Fuse colours

30 A – green
25 A – white
20 A – yellow
15 A – blue
10 A – red
7.5A – orange
5A – beige

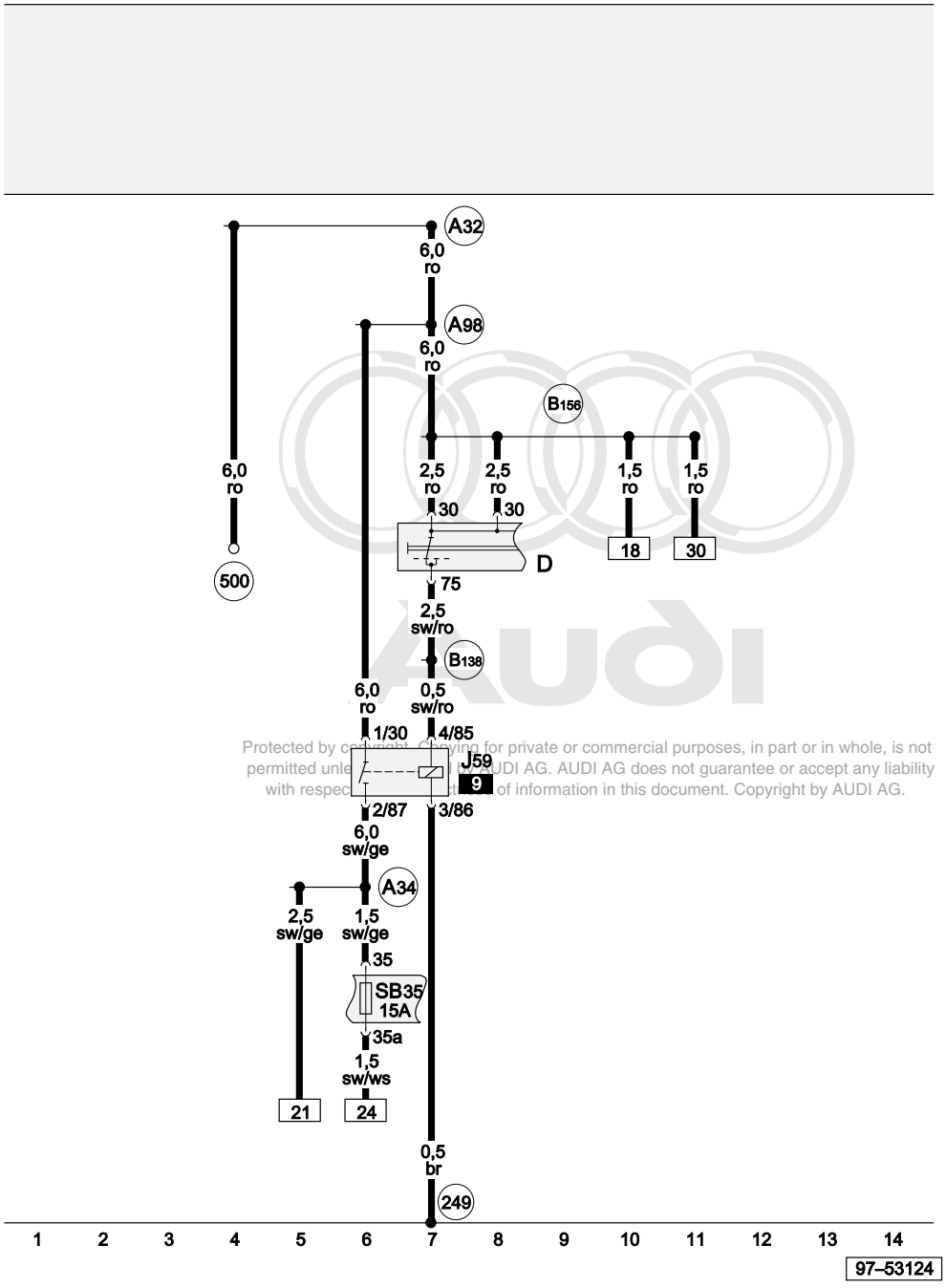

Protected by copyright. Copying for private or commercial purposes, in part or in whole, is not permitted unless authorised by AUDI AG. AUDI AG does not guarantee or accept any liability with respect to the correctness of information in this document. Copyright by AUDI AG.

Ignition/starter switch, X contact relief relay, fuse

D	Ignition/starter switch
J59	X contact relief relay
SB35	Fuse -35- on fuse box
249	Earth connection -2-, in interior wiring harness
500	Screw connection -1- (30), on relay plate
A32	Positive (+) connection (30), in dash panel wiring harness
A34	Connection (75x), in dash panel wiring harness
A98	Positive (+) connection -4- (30), in dash panel wiring harness
B138	Connection -1- (15a), in interior wiring harness
B156	Positive (+) connection (30a), in interior wiring harness

ws	=	white
sw	=	black
ro	=	red
br	=	brown
gn	=	green
bl	=	blue
gr	=	grey
li	=	purple
ge	=	yellow
or	=	orange
rs	=	pink

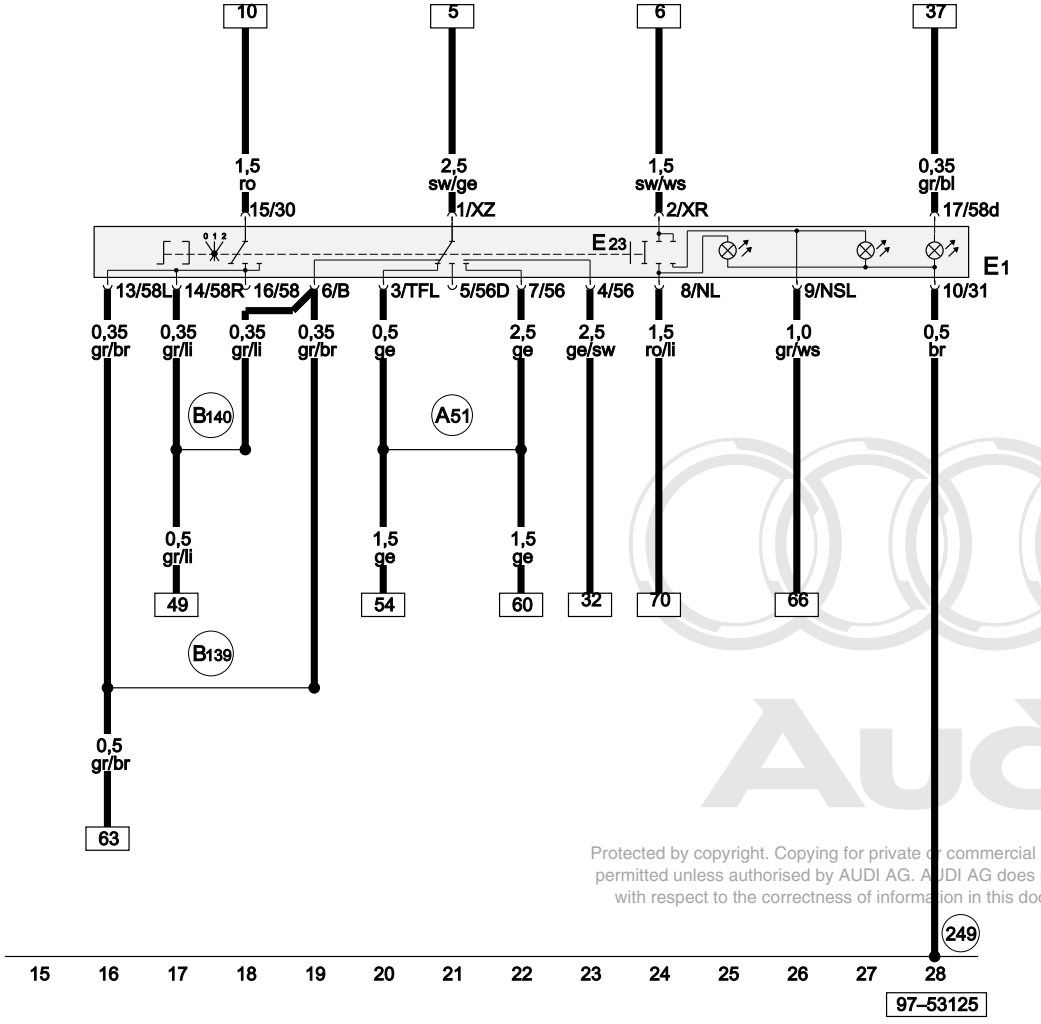

Lighting switch

E1 Lighting switch
E23 Front and rear fog light switch

249 Earth connection -2-, in interior wiring harness

A51 Connection (56), in dash panel wiring harness

B139 Connection (PLL), in interior wiring harness

B140 Connection (PLR), in interior wiring harness

ws = white
sw = black
ro = red
br = brown
gn = green
bl = blue
gr = grey
li = purple
ge = yellow
or = orange
rs = pink

Protected by copyright. Copying for private or commercial purposes, in part or in whole, is not permitted unless authorised by AUDI AG. AUDI AG does not guarantee or accept any liability with respect to the correctness of information in this document. Copyright by AUDI AG.

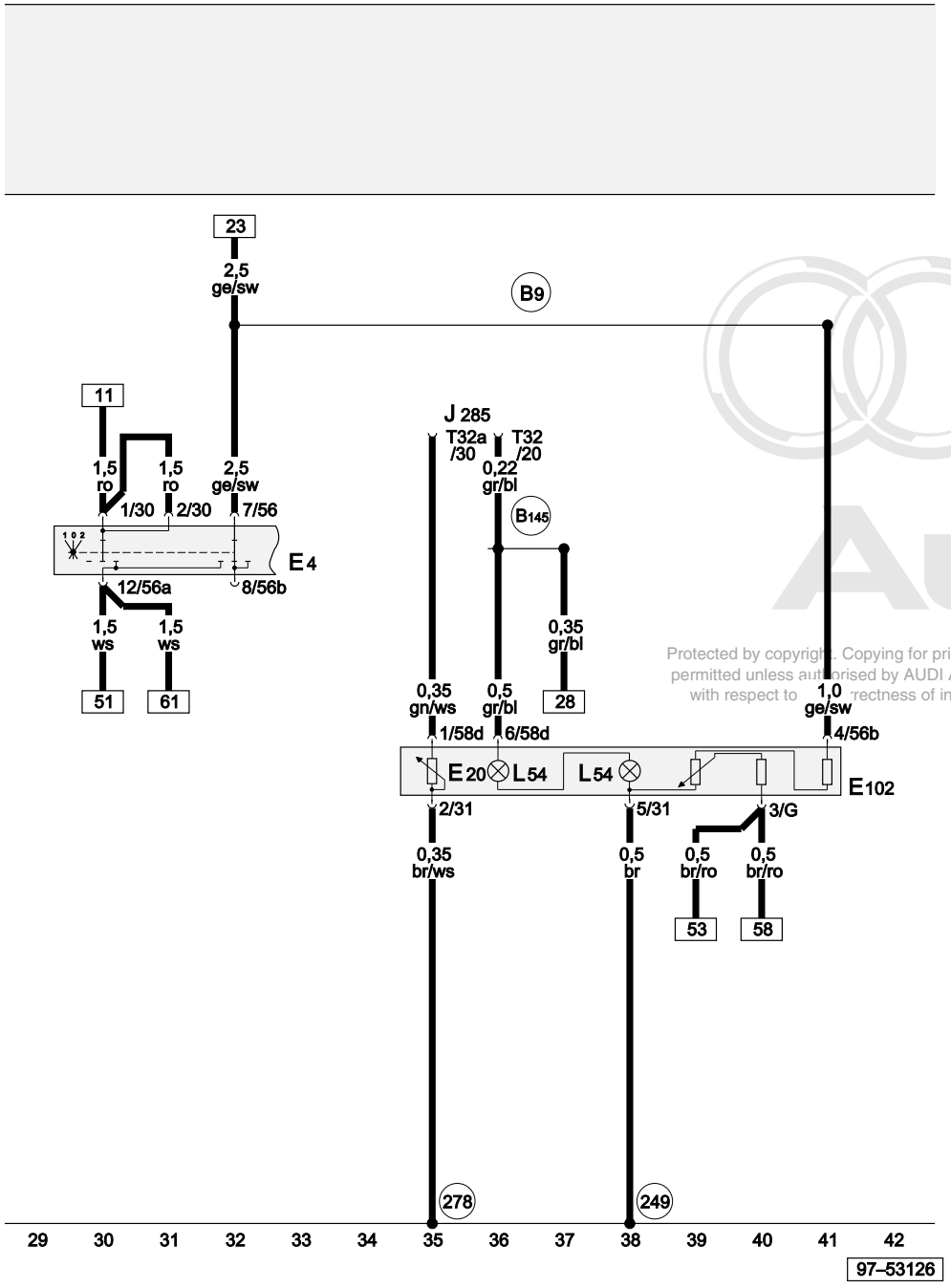

Headlight dipper/flasher switch, headlight range control adjuster

E4	Headlight dipper/flasher switch
E20	Switches and instruments, lighting control
E102	Headlight range control adjuster
J285	Control unit with display in dash panel insert
L54	Headlight range control adjuster light bulb
T32	32-pin connector, blue, on dash panel insert
T32a	32-pin connector, green, on dash panel insert
249	Earth connection -2-, in interior wiring harness
278	Earth connection -4-, in interior wiring harness
B9	Connection (56), in steering column switch wiring harness
B145	Positive (+) connection (58b), in interior wiring harness

Protected by copyright. Copying for private or commercial purposes, in part or in whole, is not permitted unless authorised by AUDI AG. AUDI AG does not guarantee or accept any liability with respect to the correctness of information in this document. Copyright by AUDI AG.

ws	=	white
sw	=	black
ro	=	red
br	=	brown
gn	=	green
bl	=	blue
gr	=	grey
li	=	purple
ge	=	yellow
or	=	orange
rs	=	pink

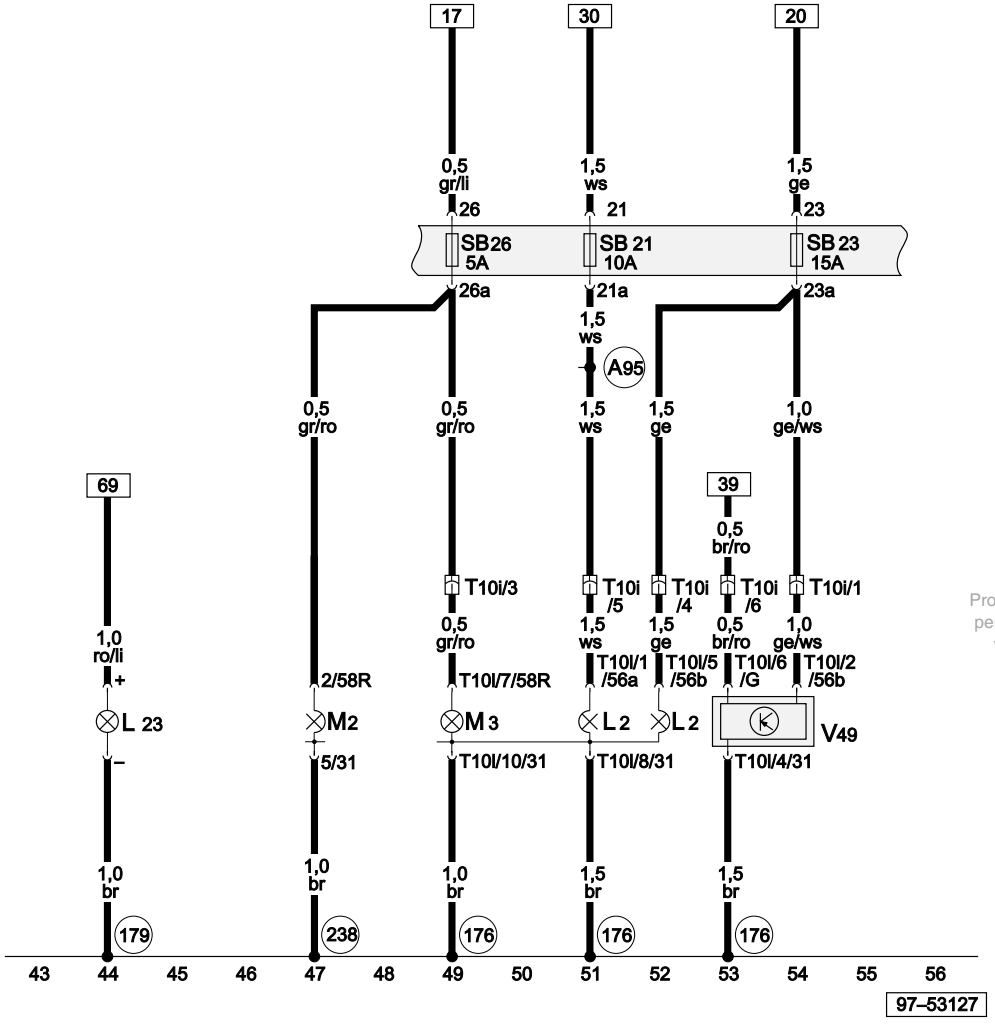

Right headlight, right fog light, fuses

L2	Twin filament bulb/sealed beam insert, right
L23	Fog light bulb, right
M2	Tail light bulb, right
M3	Side light bulb, right
SB21	Fuse -21- on fuse box
SB23	Fuse -23- on fuse box
SB26	Fuse -26- on fuse box
T10i	10-pin connector, black, connector point, A pillar, right
T10l	10-pin connector, black, headlight, right
V49	Headlight range control motor, right
176	Earth connection, in right headlight wiring harness
179	Earth connection, in left headlight wiring harness
238	Earth connection -1-, in interior wiring harness
A95	Connection -1- (56a), in dash panel wiring harness

Protected by copyright. Copying for private or commercial purposes, in part or in whole, is not permitted unless authorised by AUDI AG. AUDI AG does not guarantee or accept any liability with respect to the correctness of information in this document. Copyright by AUDI AG.

ws	=	white
sw	=	black
ro	=	red
br	=	brown
gn	=	green
bl	=	blue
gr	=	grey
li	=	purple
ge	=	yellow
or	=	orange
rs	=	pink

Left headlight, left fog light, rear fog light, fuses

L1	Twin filament bulb/sealed beam insert, left
L22	Fog light bulb, left
L46	Rear fog light bulb, left
M1	Side light bulb, left
M4	Tail light bulb, left
SB22	Fuse -22- on fuse box
SB24	Fuse -24- on fuse box
SB27	Fuse -27- on fuse box
T10e	10-pin connector, red, connector point, A pillar, left
T10g	10-pin connector, grey, connector point, A pillar, left
T10h	10-pin connector, white, connector point, A pillar, left
T10k	10-pin connector, black, headlight, left
V48	Headlight range control motor, left
179	Earth connection, in left headlight wiring harness
238	Earth connection -1-, in interior wiring harness
A84	Connection (58L), in dash panel wiring harness

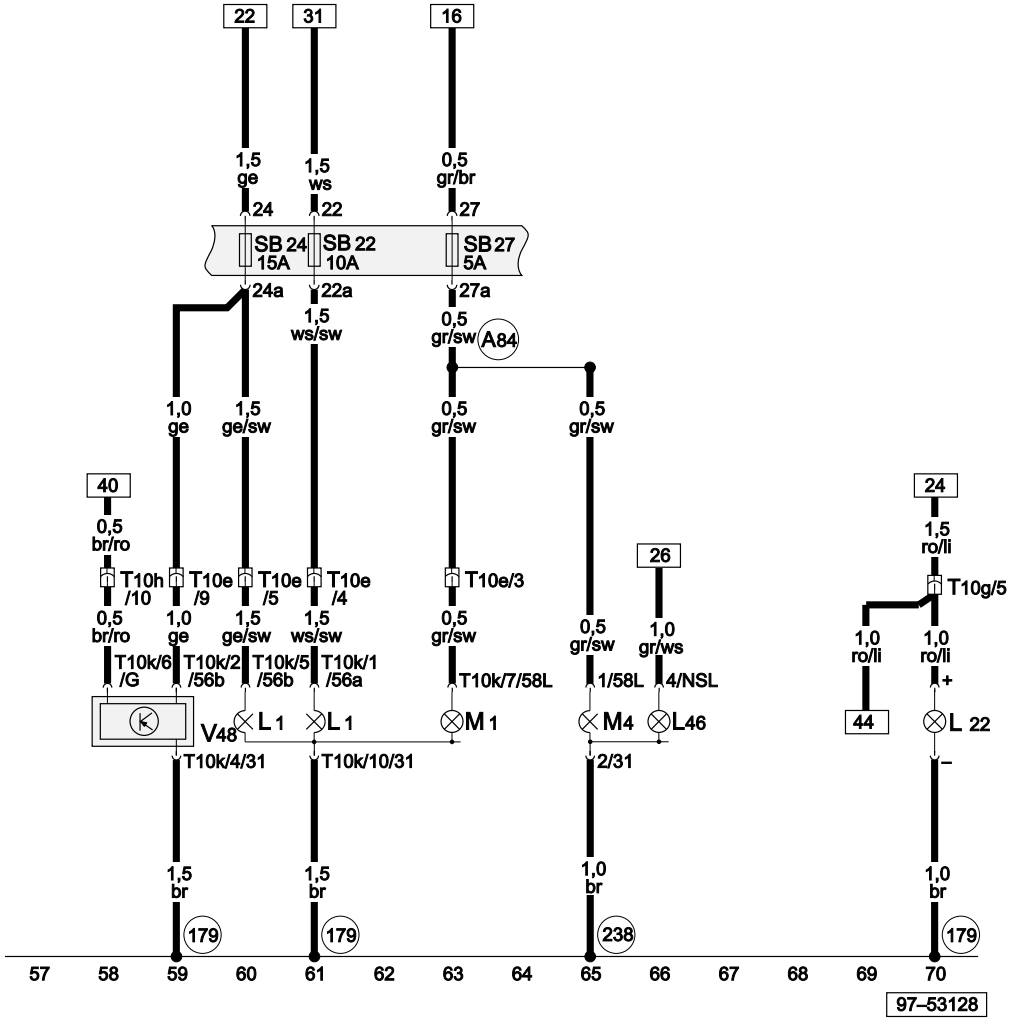

ws = white
sw = black
ro = red
br = brown
gn = green
bl = blue
gr = grey
li = purple
ge = yellow
or = orange
rs = pink

Protected by copyright. Copying for private or commercial purposes, in part or in whole, is not permitted unless authorised by AUDI AG. AUDI AG does not guarantee or accept any liability with respect to the correctness of information in this document. Copyright by AUDI AG.

Basic equipment for 1.2 litre TDI engine, engine code ANY

From model year 2001

Main fuse

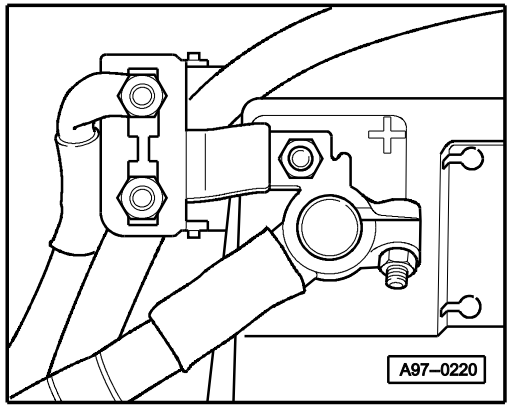

3-point relay carrier (in footwell)

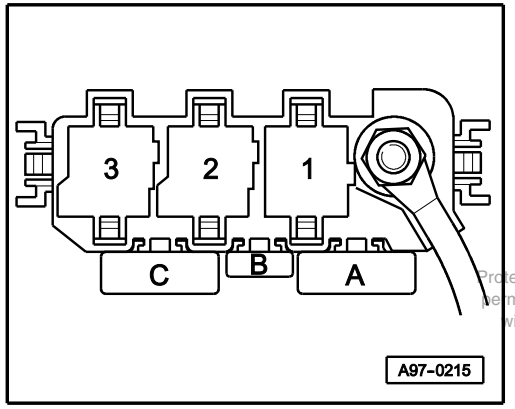

Position of fuses:

C - Fuse for power steering

9-point relay carrier (in dash panel)

Fuse box

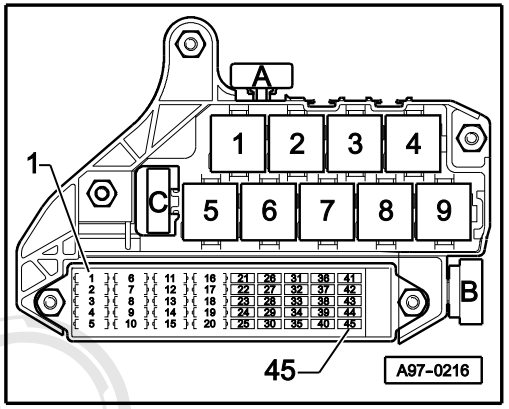

Position of relays:

3 - Brake light suppression relay (J508)

5 - Dual tone horn relay (J4)

9 - X contact relief relay (J59)

Fuse colours

30 A – green
25 A – white
20 A – yellow
15 A – blue
10 A – red
7.5A – orange
5A – beige

Protected by copyright. Copying for private or commercial purposes, in part or in whole, is not permitted unless authorised by AUDI AG. AUDI AG does not guarantee or accept any liability with respect to the correctness of information in this document. Copyright by AUDI AG.

6+6-point relay carrier (in footwell)

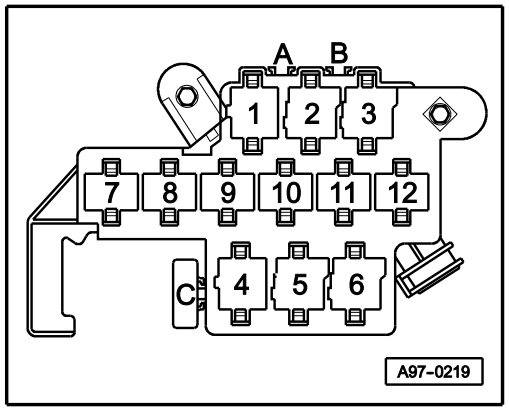

Position of relays:

2
3 Automatic intermittent wash/wipe relay (J31)

Protected by copyright. Copying for private or commercial purposes, in part or in whole, is not permitted unless authorised by AUDI AG. AUDI AG does not guarantee or accept any liability with respect to the correctness of information in this document. Copyright by AUDI AG.

Earth connections

3	Earth strap, engine - body
43	Earth point, lower part of right A pillar
44	Earth point, lower part of left A pillar
50	Earth point, luggage compartment, left
52	Earth point, in tailgate/boot lid, left
98	Earth connection, in tailgate/boot lid wiring harness
119	Earth connection -1-, in headlight wiring harness
176	Earth connection, in right headlight wiring harness
179	Earth connection, in left headlight wiring harness
238	Earth connection -1-, in interior wiring harness

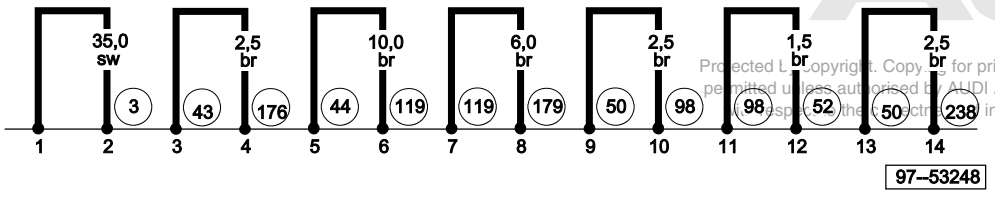

ws = white
sw = black
ro = red
br = brown
gn = green
bl = blue
gr = grey
li = purple
ge = yellow
or = orange
rs = pink

Protected by copyright. Copying for private or commercial purposes, in part or in whole, is not permitted unless authorised by AUDI AG. AUDI AG does not guarantee or accept any liability with respect to the correctness of information in this document. Copyright by AUDI AG.

Earth connections

44	Earth point, lower part of left A pillar
249	Earth connection -2-, in interior wiring harness
277	Earth connection -3-, in interior wiring harness
279	Earth connection -5-, in interior wiring harness
284	Earth connection -6-, in interior wiring harness

Protected by copyright. Copying for private or commercial purposes, in part or in whole, is not permitted unless authorised by AUDI AG. AUDI AG does not guarantee or accept any liability with respect to the correctness of information in this document. Copyright by AUDI AG.

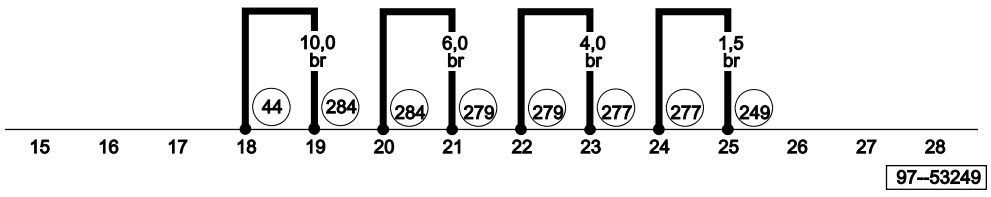

ws	=	white
sw	=	black
ro	=	red
br	=	brown
gn	=	green
bl	=	blue
gr	=	grey
li	=	purple
ge	=	yellow
or	=	orange
rs	=	pink

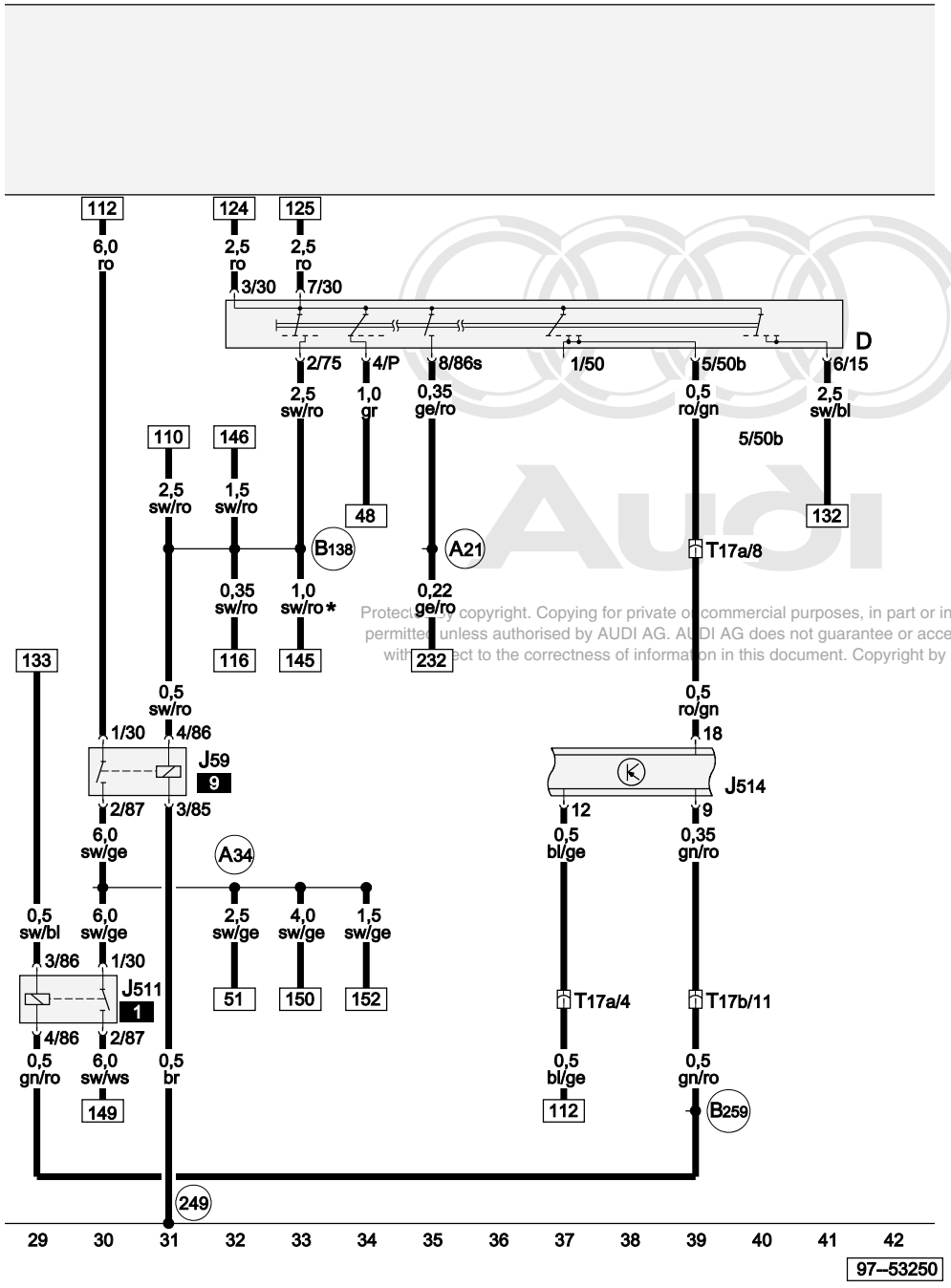

Protected by copyright. Copying for private or commercial purposes, in part or in whole, is not permitted unless authorised by AUDI AG. AUDI AG does not guarantee or accept any liability with respect to the correctness of information in this document. Copyright by AUDI AG.

Ignition/starter switch, X contact relief relay, consumer switch-off relay

D	Ignition/starter switch
J59	X contact relief relay
J511	Consumer switch-off relay
J514	Electronic manual gearbox control unit
T17a	17-pin connector, red, in footwell, front left
T17b	17-pin connector, white, in footwell, front left
249	Earth connection -2-, in interior wiring harness
A21	Connection (86s), in dash panel wiring harness
A34	Connection (75x), in dash panel wiring harness
B138	Positive (+) connection -1- (x), in interior wiring harness
B259	Connection (start/stop signal), in interior wiring harness
*	Only models with heated washer jets

ws	=	white
sw	=	black
ro	=	red
br	=	brown
gn	=	green
bl	=	blue
gr	=	grey
li	=	purple
ge	=	yellow
or	=	orange
rs	=	pink

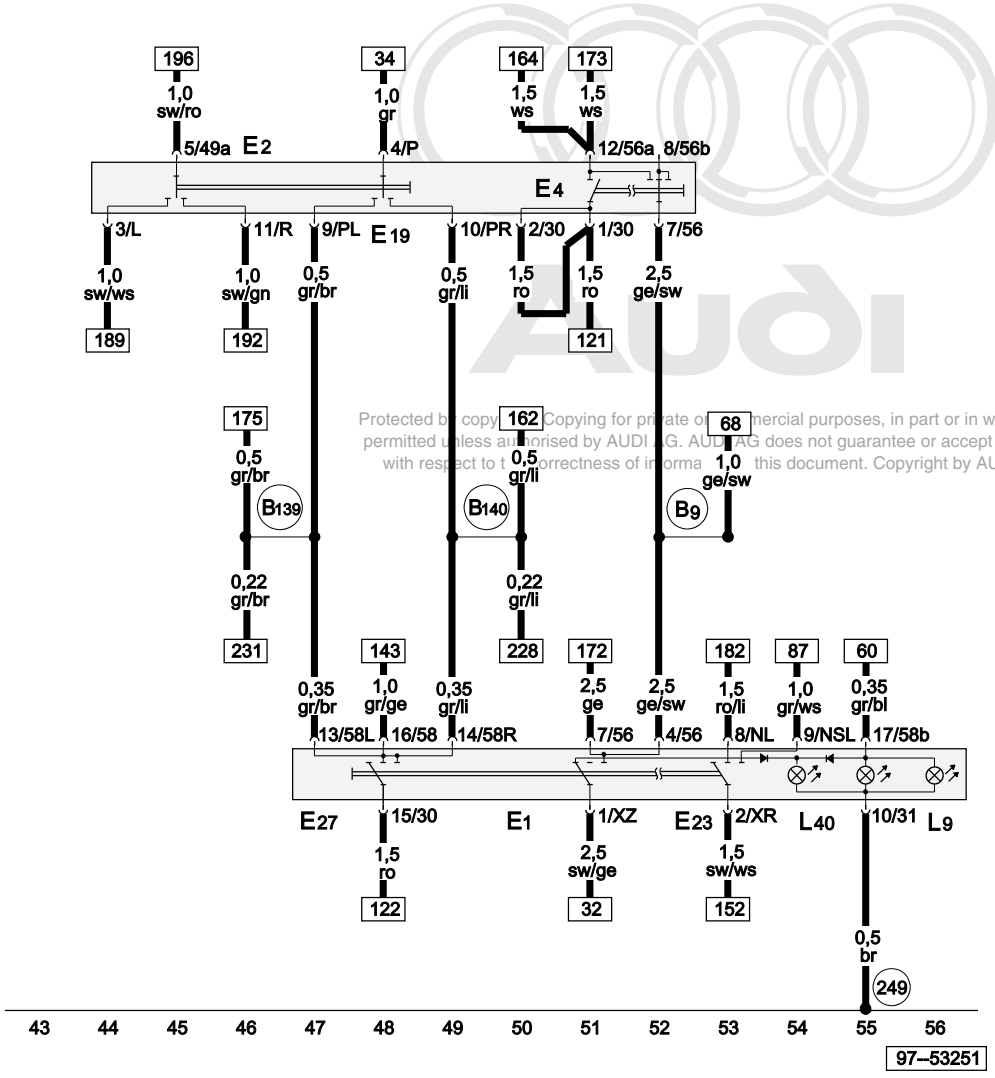

Protected by copyright. Copying for private or commercial purposes, in part or in whole, is not permitted unless authorised by AUDI AG. AUDI AG does not guarantee or accept any liability with respect to the correctness of information in this document. Copyright by AUDI AG.

ws = white
sw = black
ro = red
br = brown
gn = green
bl = blue
gr = grey
li = purple
ge = yellow
or = orange
rs = pink

Lighting switch, steering column switch - left

E1	Lighting switch
E2	Turn signal switch
E4	Headlight dipper/flasher switch
E19	Parking light switch
E23	Front and rear fog light switch
E27	Side light switch
L9	Lighting switch light bulb
L40	Rear fog light switch bulb
249	Earth connection -2-, in interior wiring harness
B9	Connection (56), in steering column switch wiring harness
B139	Connection (PLL), in interior wiring harness
B140	Connection (PLR), in interior wiring harness

Switches and instruments - lighting control, headlight range control adjuster

E20 Switches and instruments, lighting control
E102 Headlight range control adjuster
L54 Headlight range control adjuster light bulb

249 Earth connection -2-, in interior wiring harness

269 Earth connection (sender earth) -1-, in dash panel wiring harness

B145 Positive (+) connection (58b), in interior wiring harness

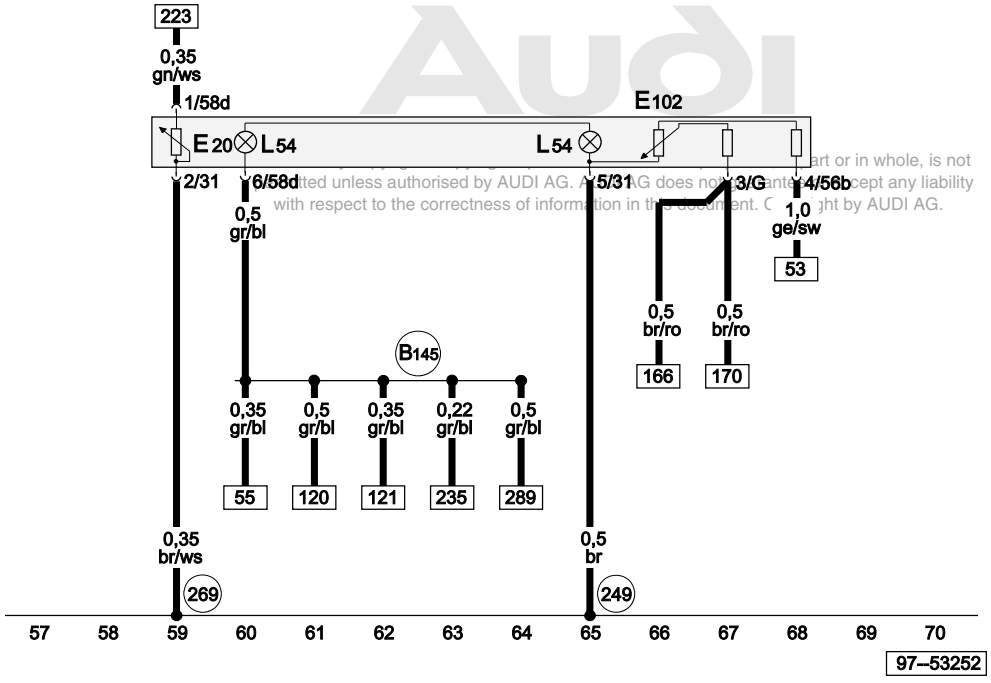

ws = white
sw = black
ro = red
br = brown
gn = green
bl = blue
gr = grey
li = purple
ge = yellow
or = orange
rs = pink

Audi
Copying for private or commercial purposes, in part or in whole, is not permitted unless authorised by AUDI AG. AUDI AG does not guarantee or accept any liability with respect to the correctness of information in this document. Copyright by AUDI AG.

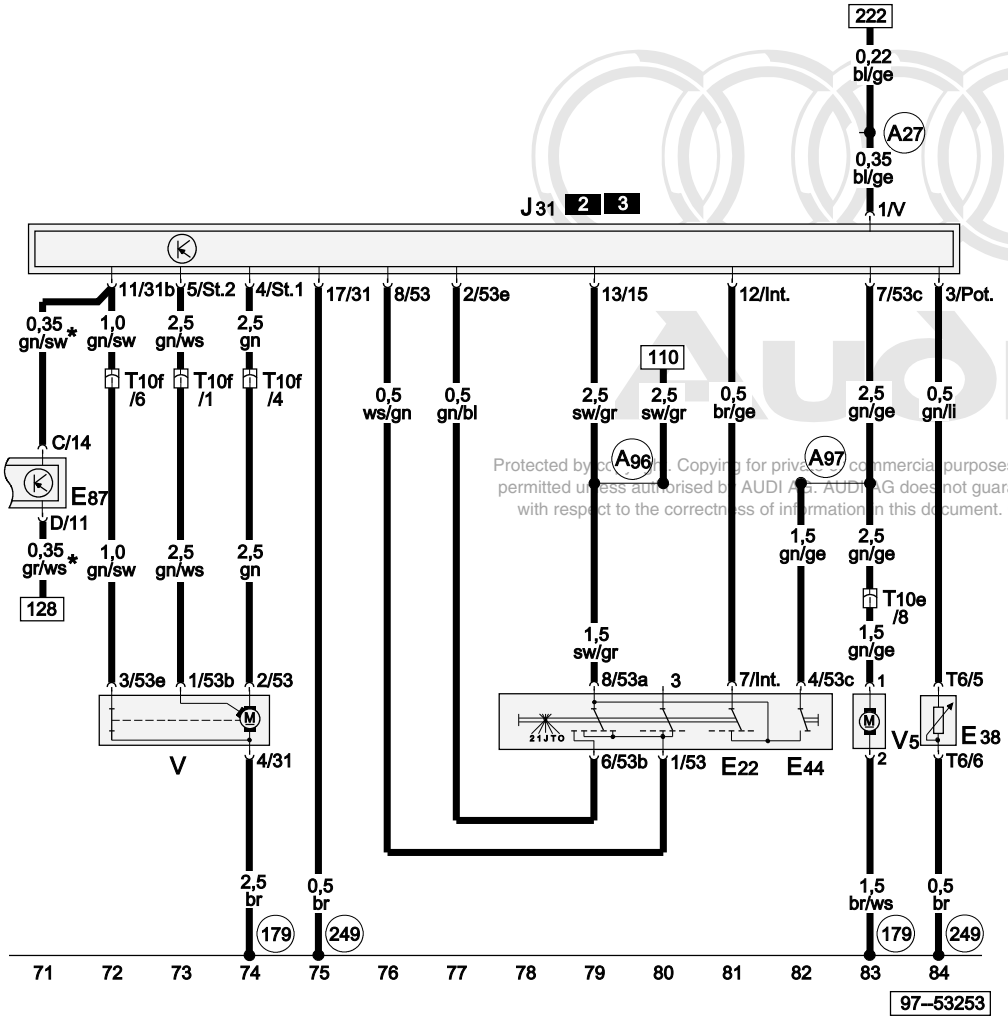

ws = white
sw = black
ro = red
br = brown
gn = green
bl = blue
gr = grey
li = purple
ge = yellow
or = orange
rs = pink

Wiper/washer system

E22	Intermittent wiper switch
E38	Intermittent wiper control
E44	Windscreen washer pump switch
E87	Control and display unit for air conditioner
J31	Automatic intermittent wash/wipe relay
T6	6-pin connector, brown, behind steering column switch trim
T10e	10-pin connector, red, connector point, A pillar, left
T10f	10-pin connector, blue, connector point, A pillar, left
V	Windscreen wiper motor
V5	Windscreen washer pump
179	Earth connection, in left headlight wiring harness
249	Earth connection -2-, in interior wiring harness
A27	Connection (speed signal), in dash panel wiring harness
A96	Connection (53a), in dash panel wiring harness
A97	Connection (53), in dash panel wiring harness
*	Only models with air conditioner

Protected by copyright. Copying for private or commercial purposes, in part or in whole, is not permitted unless authorised by AUDI AG. AUDI AG does not guarantee or accept any liability with respect to the correctness of information in this document. Copyright by AUDI AG.

Tail lights, brake lights, reversing lights, rear fog light, number plate light

F	Brake light switch
F4	Reversing light switch
J508	Brake light suppression relay
L46	Rear fog light bulb, left
M2	Tail light bulb, right
M4	Tail light bulb, left
M6	Turn signal bulb, rear left
M8	Turn signal bulb, rear right
M9	Brake light bulb, left
M10	Brake light bulb, right
M16	Reversing light bulb, left
M17	Reversing light bulb, right
M25	High level brake light bulb
T17e	17-pin connector, blue, in footwell, front left
X	Number plate light
98	Earth connection, in tailgate wiring harness
238	Earth connection -1-, in interior wiring harness
A87	Connection (RF (reversing light)), in dash panel wiring harness
B131	Connection (54), in interior wiring harness
B132	Connection (number plate light), in interior wiring harness
B185	Connection -2- (54), in interior wiring harness
W1	Positive (+) connection -1- (54), in rear wiring harness

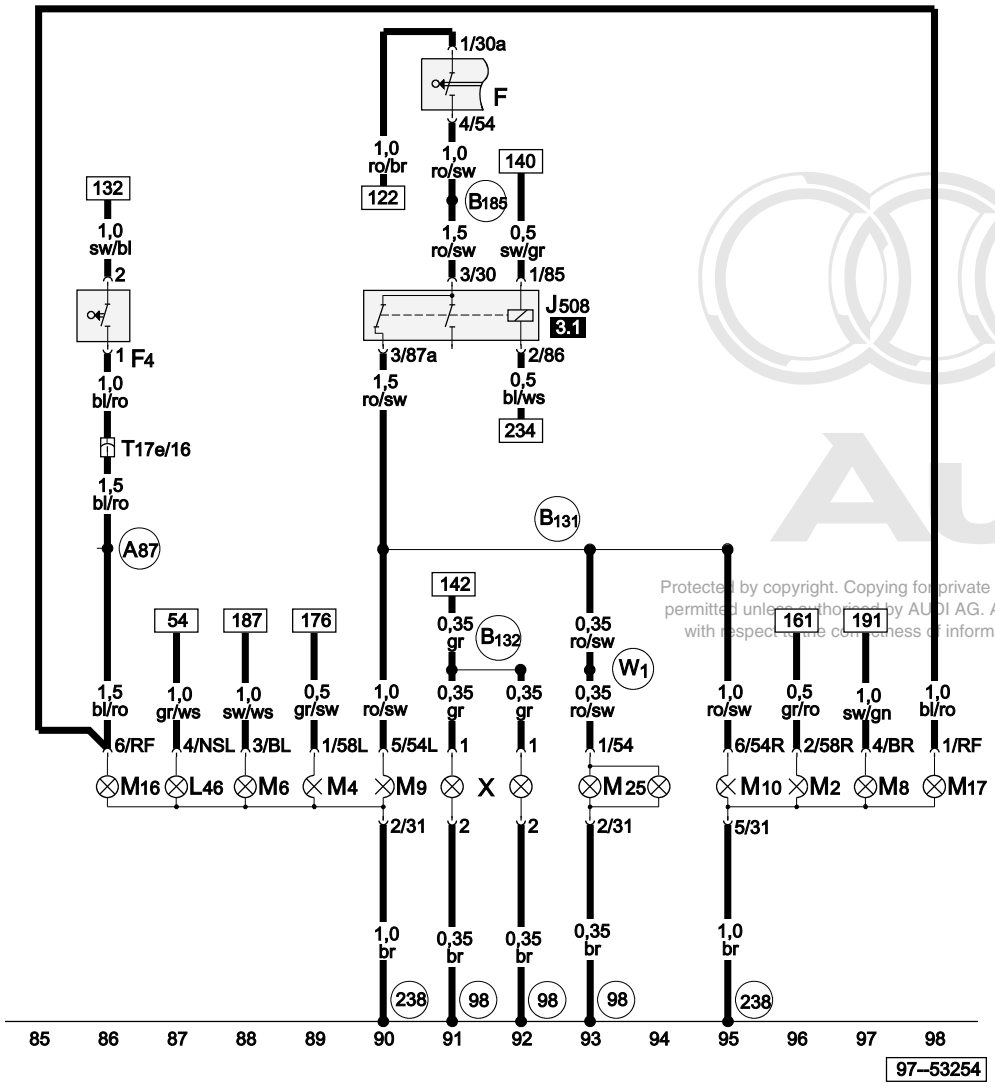

ws = white
sw = black
ro = red
br = brown
gn = green
bl = blue
gr = grey
li = purple
ge = yellow
or = orange
rs = pink

Protected by copyright. Copying for private or commercial purposes, in part or in whole, is not permitted unless authorised by AUDI AG. AUDI AG does not guarantee or accept any liability with respect to the correctness of information in this document. Copyright by AUDI AG.

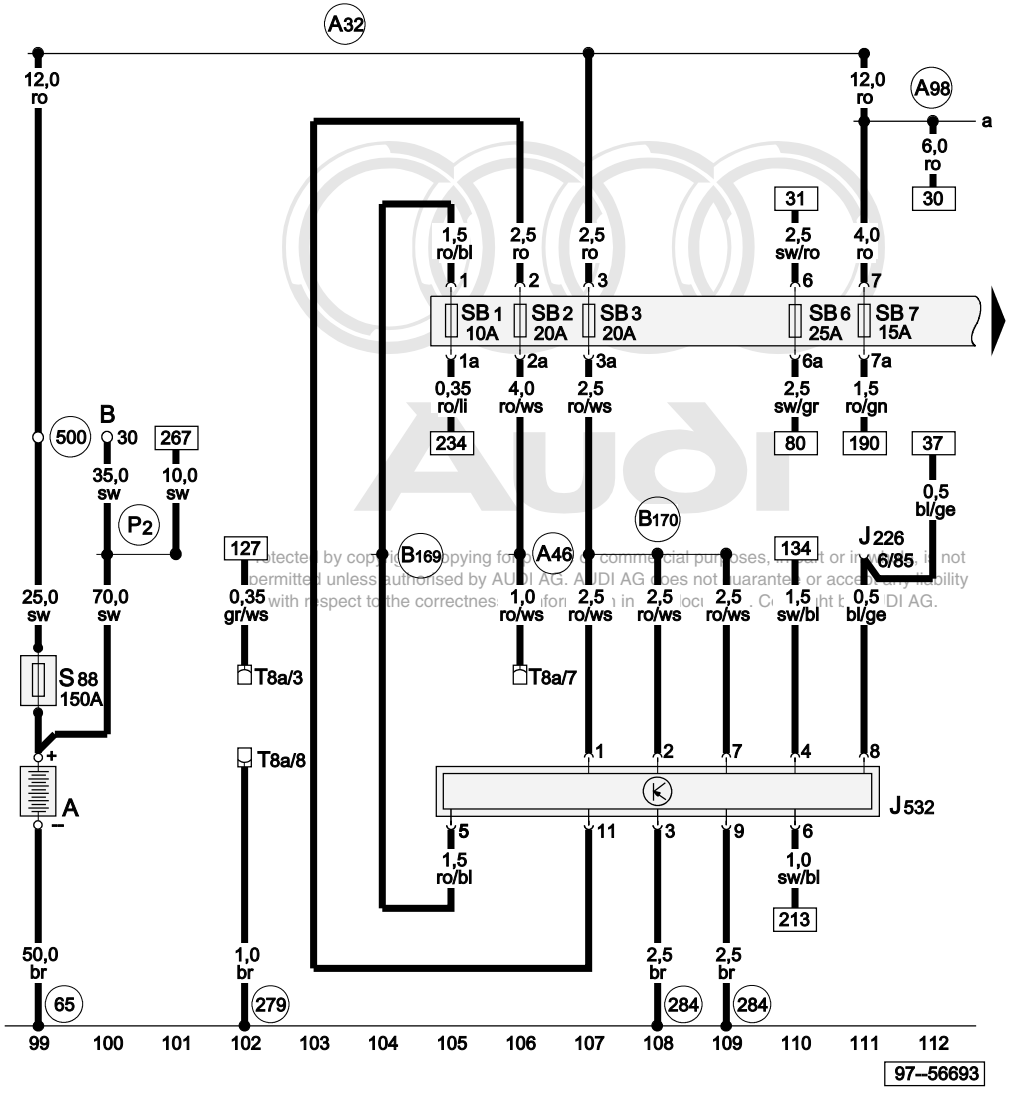

Audi
Protected by copyright. Copying for private or commercial purposes, in part or in whole, is not permitted unless authorised by AUDI AG. AUDI AG does not guarantee or accept any liability with respect to the correctness of information in this document. Copyright by AUDI AG.

ws = white
sw = black
ro = red
br = brown
gn = green
bl = blue
gr = grey
li = purple
ge = yellow
or = orange
rs = pink

Fuse box, voltage stabiliser

A	Battery
B	Starter
J226	Starter inhibitor and reversing light relay
J532	Voltage stabiliser
SB1	Fuse -1- on fuse box
SB2	Fuse -2- on fuse box
SB3	Fuse -3- on fuse box
SB6	Fuse -6- on fuse box
SB7	Fuse -7- on fuse box
SB8	Fuse -8- on fuse box
T8a	8-pin connector, black, radio connector III
65	Earth point, left longitudinal member, rear, between B and C pillar
279	Earth connection -5-, in interior wiring harness
284	Earth connection -6-, in interior wiring harness
500	Screw connection -1- (30), on relay plate
A32	Positive (+) connection (30), in dash panel wiring harness
A46	Positive (+) connection (30 - from radio), in dash panel wiring harness
A98	Positive (+) connection -4- (30), in dash panel wiring harness
B169	Positive (+) connection -1- (30), in interior wiring harness
B170	Positive (+) connection -2- (30), in interior wiring harness
P2	Positive (+) connection (30), in battery wiring harness

Protected by copyright. Copying for private or commercial purposes, in part or in whole, is not permitted unless authorised by AUDI AG. AUDI AG does not guarantee or accept any liability with respect to the correctness of information in this document. Copyright by AUDI AG.

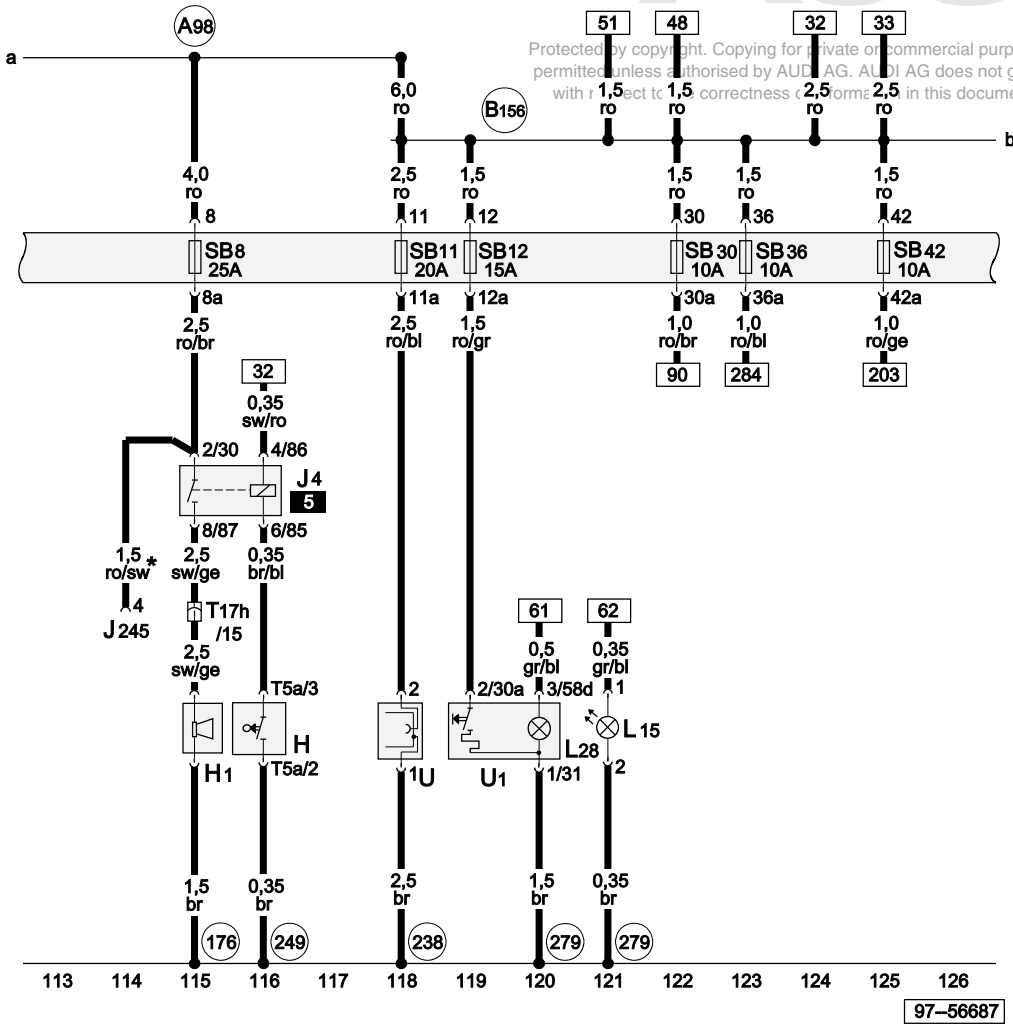

ws = white
sw = black
ro = red
br = brown
gn = green
bl = blue
gr = grey
li = purple
ge = yellow
or = orange
rs = pink

Fuse box, horn, socket, cigarette lighter

H	Horn plate
H1	Horn/dual tone horn
J4	Dual tone horn relay
J245	Sliding sunroof adjustment control unit
L15	Ashtray light bulb
L28	Cigarette lighter light bulb
SB8	Fuse -8- on fuse box
SB11	Fuse -11- on fuse box
SB12	Fuse -12- on fuse box
SB30	Fuse -30- on fuse box
SB36	Fuse -36- on fuse box
SB42	Fuse -42- on fuse box
T5a	5-pin connector, yellow, behind steering column switch trim
T17h	17-pin connector, green, connector point, A pillar, right
U	Socket
U1	Cigarette lighter
176	Earth connection, in right headlight wiring harness
238	Earth connection -1-, in interior wiring harness
249	Earth connection -2-, in interior wiring harness
279	Earth connection -5-, in interior wiring harness
A98	Positive (+) connection -4- (30), in dash panel wiring harness
B156	Positive (+) connection (30a), in interior wiring harness
*	Only applies to models with sliding/tilting sunroof

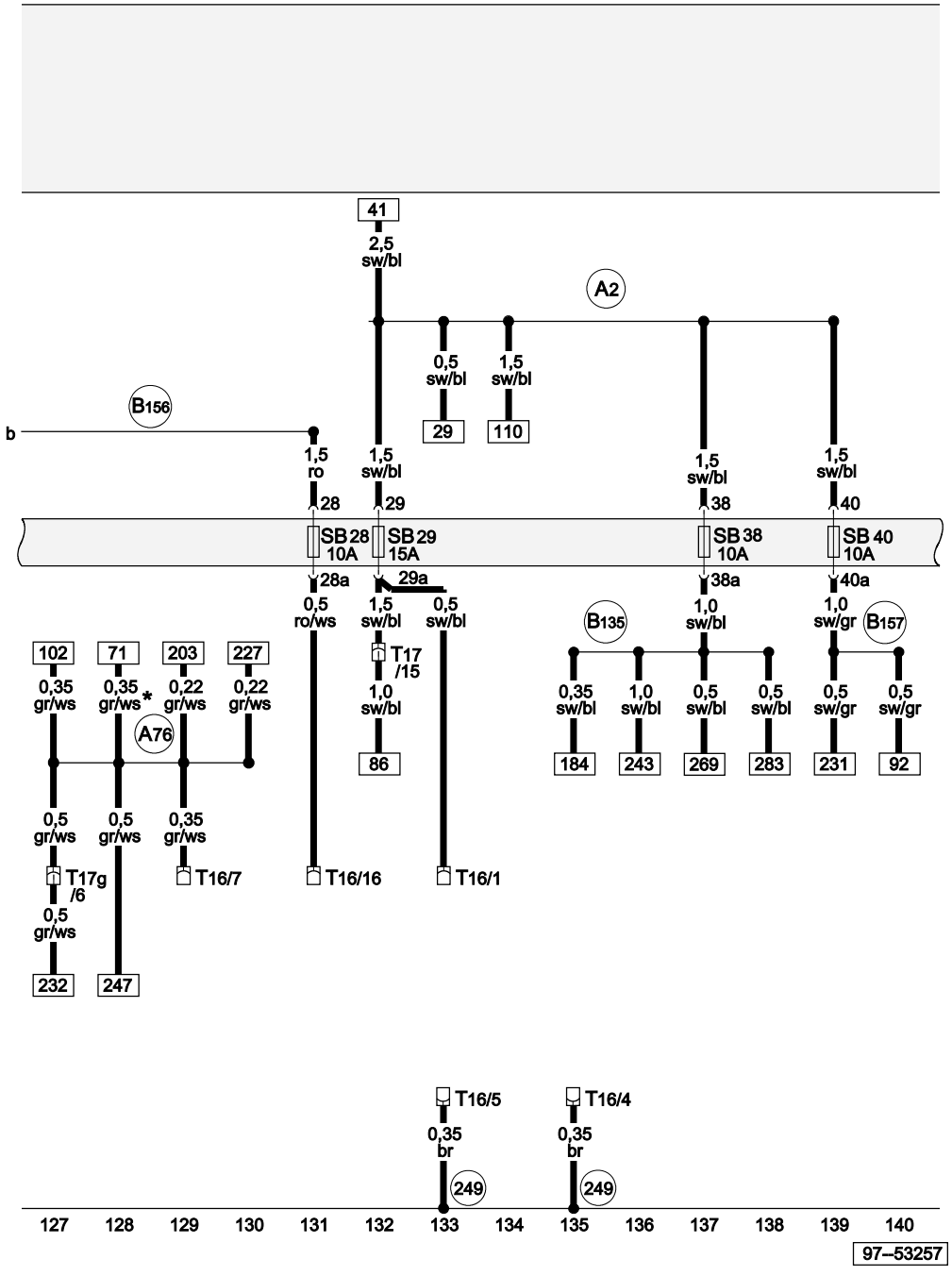

Fuse box, diagnostic connector

SB28	Fuse -28- on fuse box
SB29	Fuse -29- on fuse box
SB38	Fuse -38- on fuse box
SB40	Fuse -40- on fuse box
T16	16-pin connector, diagnostic connector, black, near fuse box
T17	17-pin connector, brown, in footwell, front left
T17g	17-pin connector, red, connector point, A pillar, left
249	Earth connection -2-, in interior wiring harness
A2	Positive (+) connection (15), in dash panel wiring harness
A76	Connection (diagnosis wire K), in dash panel wiring harness
B135	Connection -1- (15a), in interior wiring harness
B156	Positive (+) connection (30a), in interior wiring harness
B157	Positive (+) connection -3- (15a), in interior wiring harness
*	Only applies to models with air conditioner

Protected by copyright. Copying for private or commercial purposes, in part or in whole, is not permitted unless authorised by AUDI AG. AUDI AG does not guarantee or accept any liability with respect to the correctness of information in this document. Copyright by AUDI AG.

ws	=	white
sw	=	black
ro	=	red
br	=	brown
gn	=	green
bl	=	blue
gr	=	grey
li	=	purple
ge	=	yellow
or	=	orange
rs	=	pink

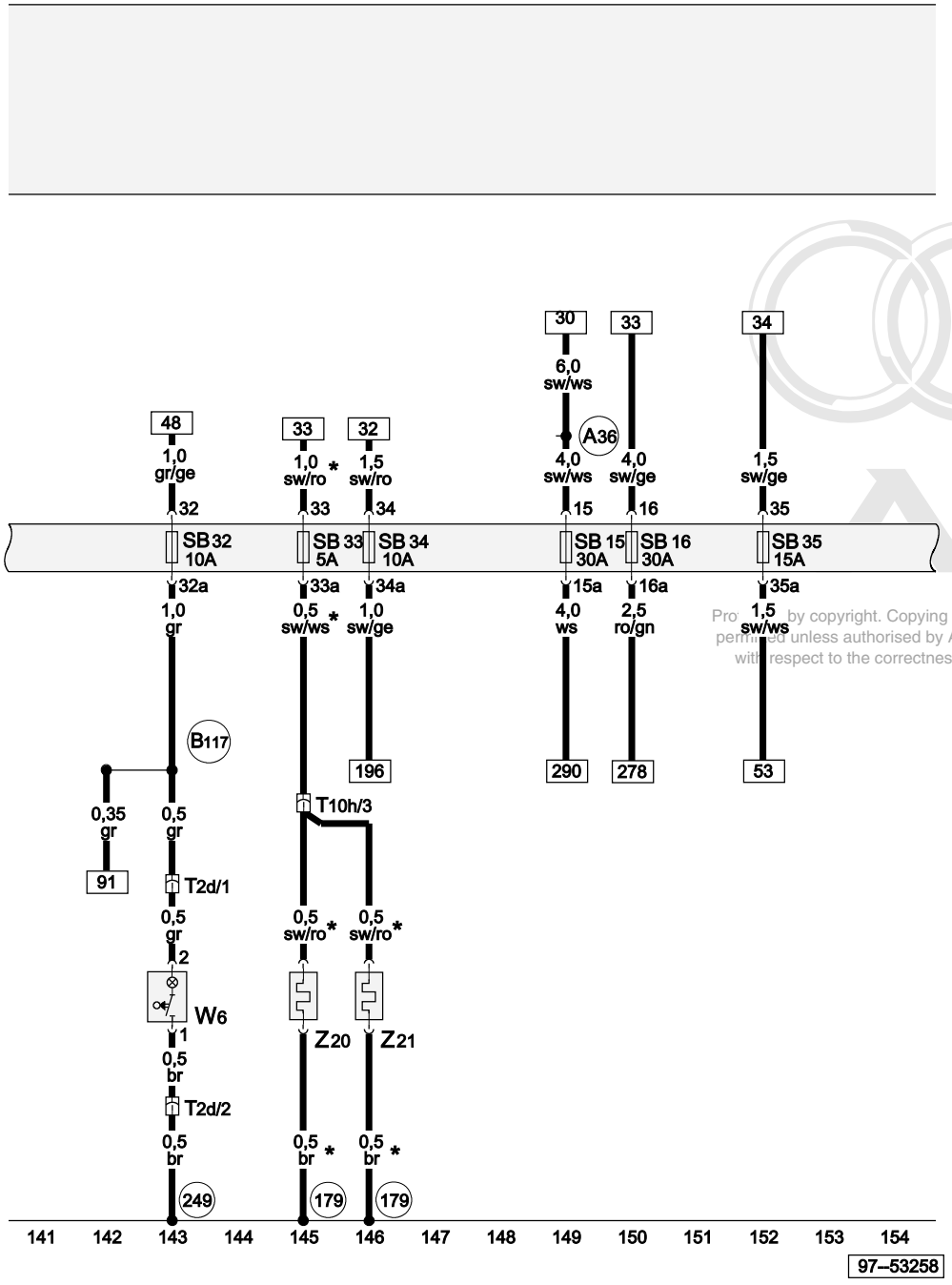

Fuse box, glove box light, heated washer jets

SB15	Fuse -15- on fuse box
SB16	Fuse -16- on fuse box
SB32	Fuse -32- on fuse box
SB33	Fuse -33- on fuse box
SB34	Fuse -34- on fuse box
SB35	Fuse -35- on fuse box
T2d	2-pin connector
T10h	10-pin connector, white, connector point, A pillar, left
W6	Glove box light
Z20	Heater element, left washer jet
Z21	Heater element, right washer jet
179	Earth connection, in left headlight wiring harness
249	Earth connection -2-, in interior wiring harness
A36	Connection (75a), in dash panel wiring harness
B117	Connection (58a, right), in interior wiring harness
*	Only models with heated washer jets

Pro by copyright. Copying for private or commercial purposes, in part or in whole, is not permitted unless authorised by AUDI AG. AUDI AG does not guarantee or accept any liability with respect to the correctness of information in this document. Copyright by AUDI AG.

ws	=	white
sw	=	black
ro	=	red
br	=	brown
gn	=	green
bl	=	blue
gr	=	grey
li	=	purple
ge	=	yellow
or	=	orange
rs	=	pink

Fuse box, right headlight, right side turn signal, front right fog light bulb

L2	Twin filament bulb for headlight, right
L23	Fog light bulb, right
M3	Side light bulb, right
M7	Turn signal bulb, front right
M19	Side turn signal bulb, right
SB21	Fuse -21- on fuse box
SB23	Fuse -23- on fuse box
SB26	Fuse -26- on fuse box
T10i	10-pin connector, black, connector point, A pillar, right
T10l	10-pin connector, black, headlight, right
V49	Headlight range control motor, right
176	Earth connection, in right headlight wiring harness
179	Earth connection, in left headlight wiring harness
A51	Connection (56), in dash panel wiring harness
A95	Connection -1- (56a), in dash panel wiring harness
C19	Connection -1- (turn signal, right), in headlight wiring harness

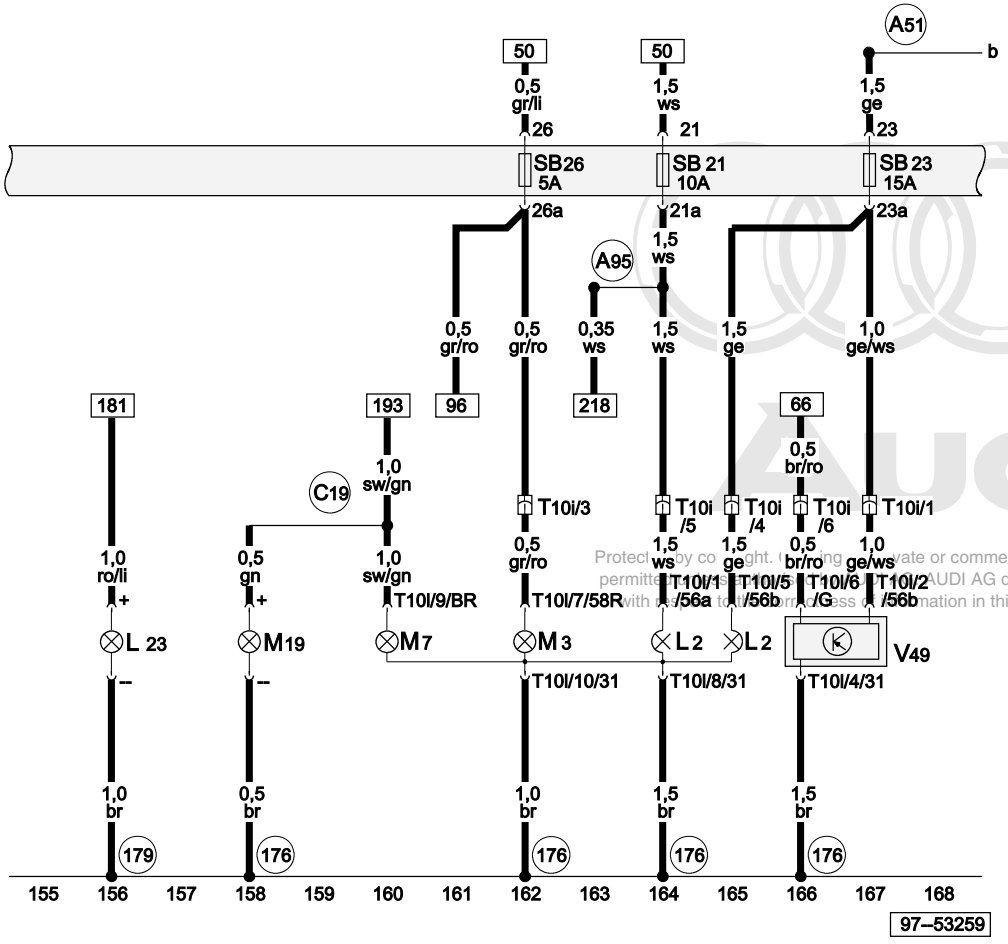

ws = white
sw = black
ro = red
br = brown
gn = green
bl = blue
gr = grey
li = purple
ge = yellow
or = orange
rs = pink

Protected by copyright. Copying for private or commercial purposes, in part or in whole, is not permitted unless authorised by AUDI AG. AUDI AG does not guarantee or accept any liability with respect to the correctness and completeness of information in this document. Copyright by AUDI AG.

Fuse box, left headlight, left side turn signal, front left fog light bulb

L1	Twin filament bulb for headlight, left
L22	Fog light bulb, left
M1	Side light bulb, left
M5	Turn signal bulb, front left
M18	Side turn signal bulb, left
SB22	Fuse -22- on fuse box
SB24	Fuse -24- on fuse box
SB27	Fuse -27- on fuse box
T10e	10-pin connector, red, connector point, A pillar, left
T10g	10-pin connector, grey, connector point, A pillar, left
T10h	10-pin connector, white, connector point, A pillar, left
T10k	10-pin connector, black, headlight, left
V48	Headlight range control motor, left
179	Earth connection, in left headlight wiring harness
A51	Connection (56), in dash panel wiring harness
A84	Connection (58L), in dash panel wiring harness
C20	Connection (turn signal, left), in headlight wiring harness

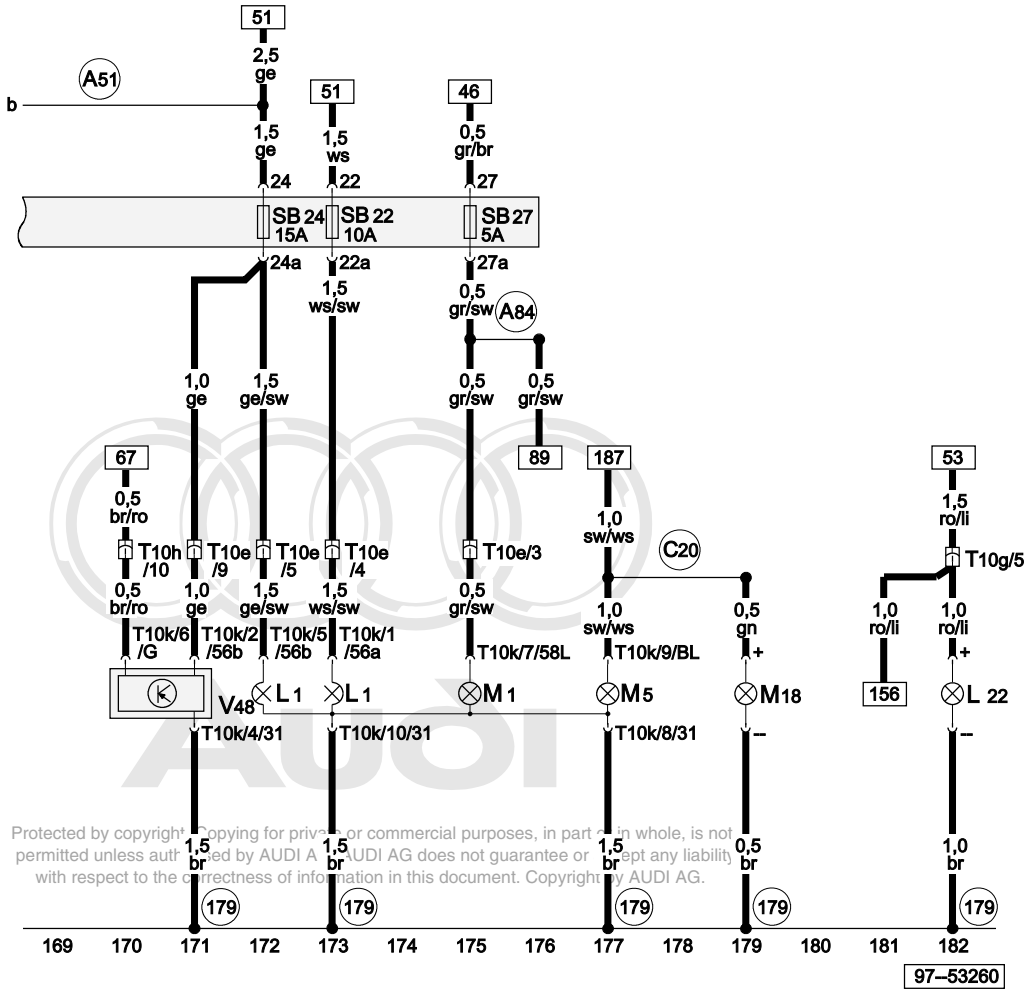

ws	=	white
sw	=	black
ro	=	red
br	=	brown
gn	=	green
bl	=	blue
gr	=	grey
li	=	purple
ge	=	yellow
or	=	orange
rs	=	pink

Protected by copyright. Copying for private or commercial purposes, in part or in whole, is not permitted unless authorised by AUDI AG. AUDI AG does not guarantee or accept any liability with respect to the correctness of information in this document. Copyright by AUDI AG.

Turn signals and hazard warning lights

E3	Hazard warning light switch
J2	Hazard warning light relay
T10e	10-pin connector, red, connector point, A pillar, left
T10i	10-pin connector, black, connector point, A pillar, right
249	Earth connection -2-, in interior wiring harness
A125	Connection (crash signal), in dash panel wiring harness
B152	Connection (TSL), in interior wiring harness
B153	Connection (TSR), in interior wiring harness

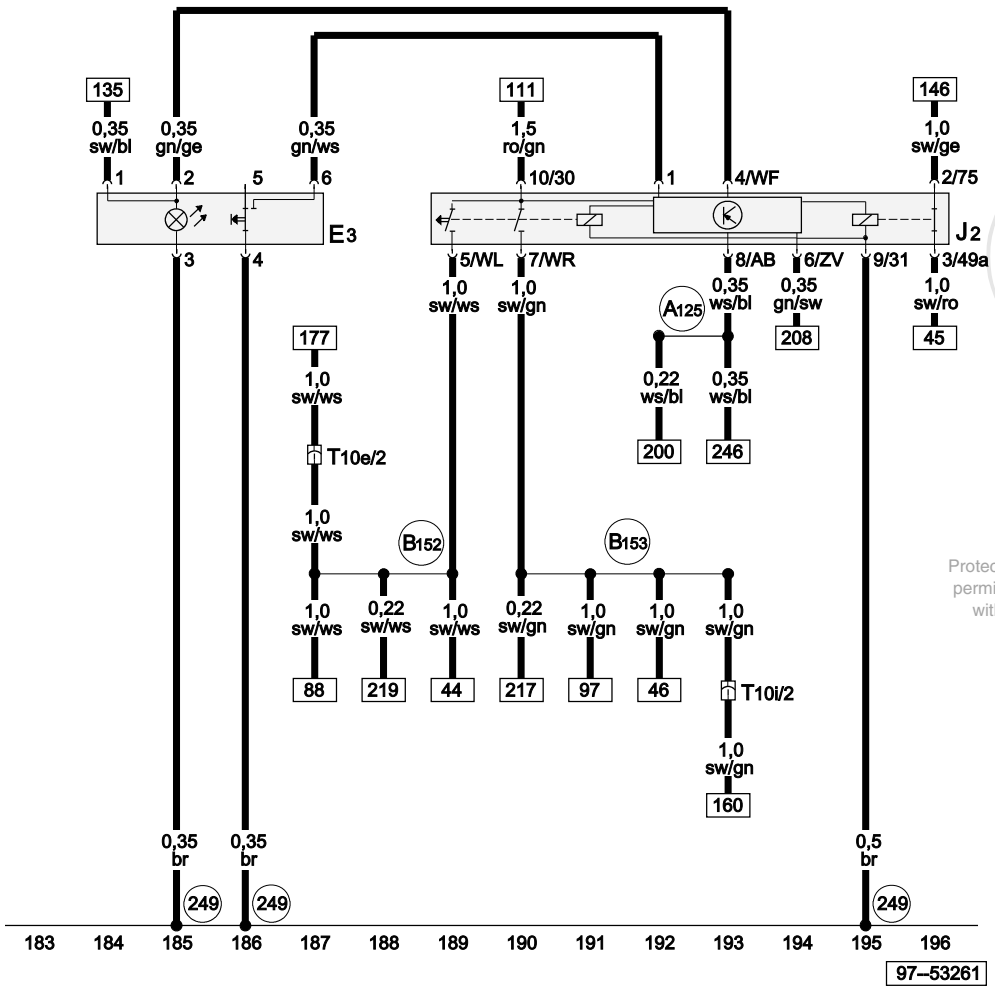

Protected by copyright. Copying for private or commercial purposes, in part or in whole, is not permitted unless authorised by AUDI AG. AUDI AG does not guarantee or accept any liability with respect to the correctness of information in this document. Copyright by AUDI AG.

ws	=	white
sw	=	black
ro	=	red
br	=	brown
gn	=	green
bl	=	blue
gr	=	grey
li	=	purple
ge	=	yellow
or	=	orange
rs	=	pink

Convenience system central control unit, luggage compartment light on left-hand side, handbrake warning switch

F9 Handbrake warning switch
J393 Convenience system central control unit
W18 Luggage compartment light, left

238 Earth connection -1-, in interior wiring harness

284 Earth connection -6-, in interior wiring harness

A24 Connection (brake system monitoring), in dash panel wiring harness

A29 Connection (interior light), in dash panel wiring harness

B115 Positive (+) connection (30, central electrics), in interior wiring harness

B229 Connection (high bus), in interior wiring harness

B230 Connection (low bus), in interior wiring harness

Protected by copyright. Copying for private or commercial purposes, in part or in whole, is not permitted unless authorised by AUDI AG. AUDI AG does not guarantee or accept any liability with respect to the correctness of information in this document. Copyright by AUDI AG.

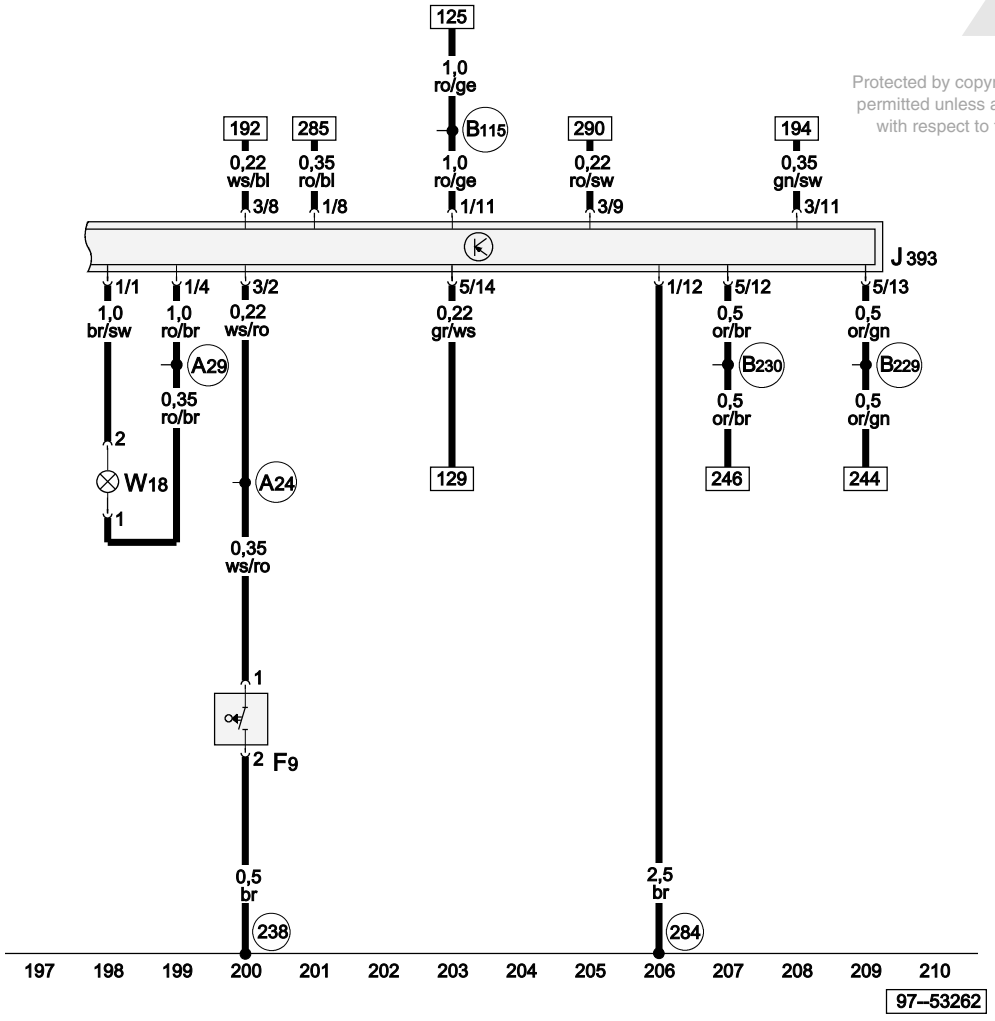

ws = white
sw = black
ro = red
br = brown
gn = green
bl = blue
gr = grey
li = purple
ge = yellow
or = orange
rs = pink

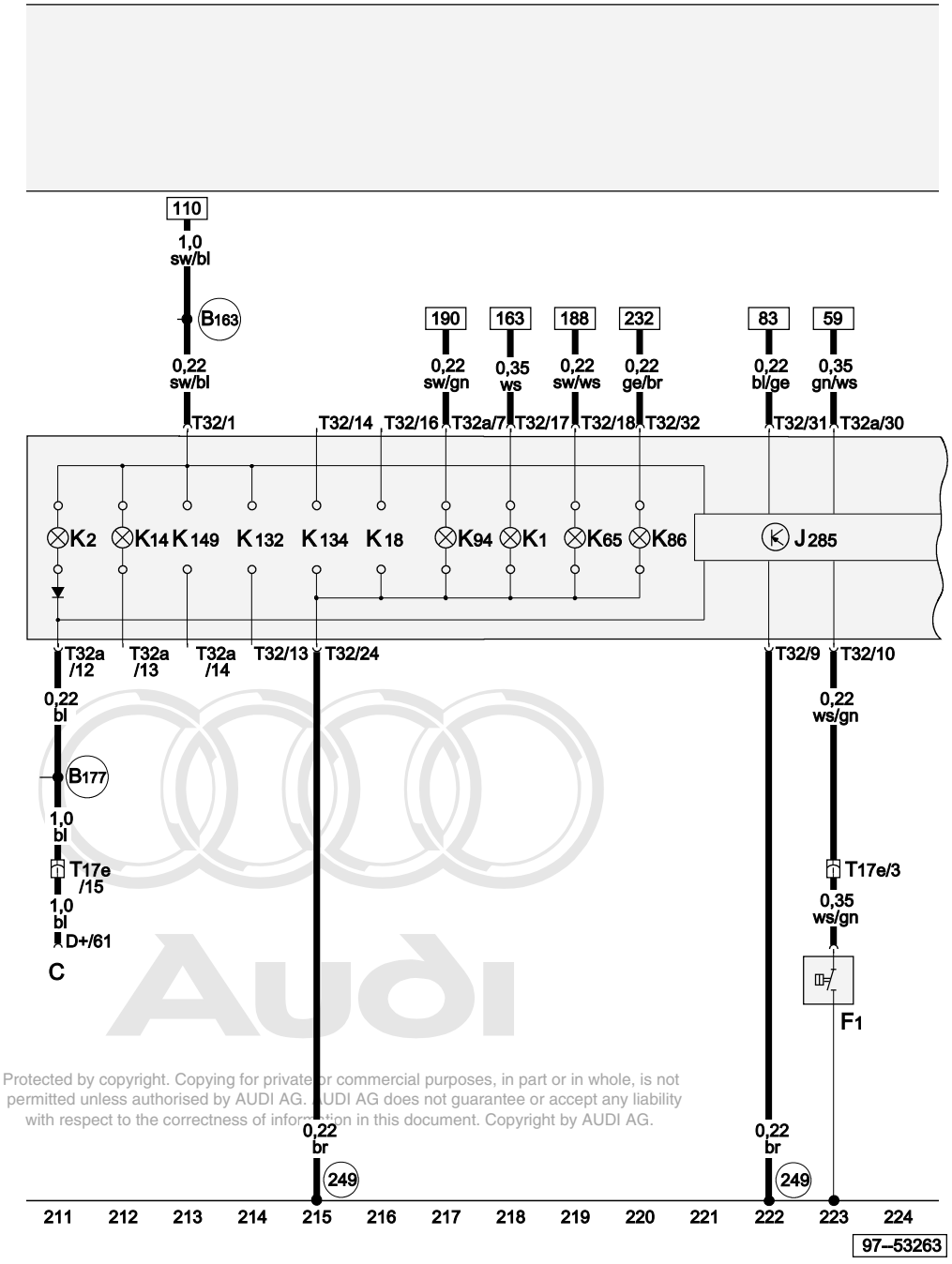

Protected by copyright. Copying for private or commercial purposes, in part or in whole, is not permitted unless authorised by AUDI AG. AUDI AG does not guarantee or accept any liability with respect to the correctness of information in this document. Copyright by AUDI AG.

Control unit with display in dash panel insert, warning lamps

C	Alternator
F1	Oil pressure switch
J285	Control unit with display in dash panel insert
K1	Main beam warning lamp
K2	Alternator warning lamp
K14	Handbrake warning lamp
K18	Trailer operation warning lamp
K65	Left turn signal warning lamp
K86	Traction control system warning lamp
K94	Right turn signal warning lamp
K132	Electronic power control fault lamp
K134	Self-levelling suspension warning lamp
K149	Engine electronics warning lamp
T17e	17-pin connector, blue, in footwell, front left
T32	32-pin connector, blue, on dash panel insert
T32a	32-pin connector, green, on dash panel insert
249	Earth connection -2-, in interior wiring harness
B177	Connection (61), in interior wiring harness
B163	Positive (+) connection -1- (15), in interior wiring harness

ws	=	white
sw	=	black
ro	=	red
br	=	brown
gn	=	green
bl	=	blue
gr	=	grey
li	=	purple
ge	=	yellow
or	=	orange
rs	=	pink

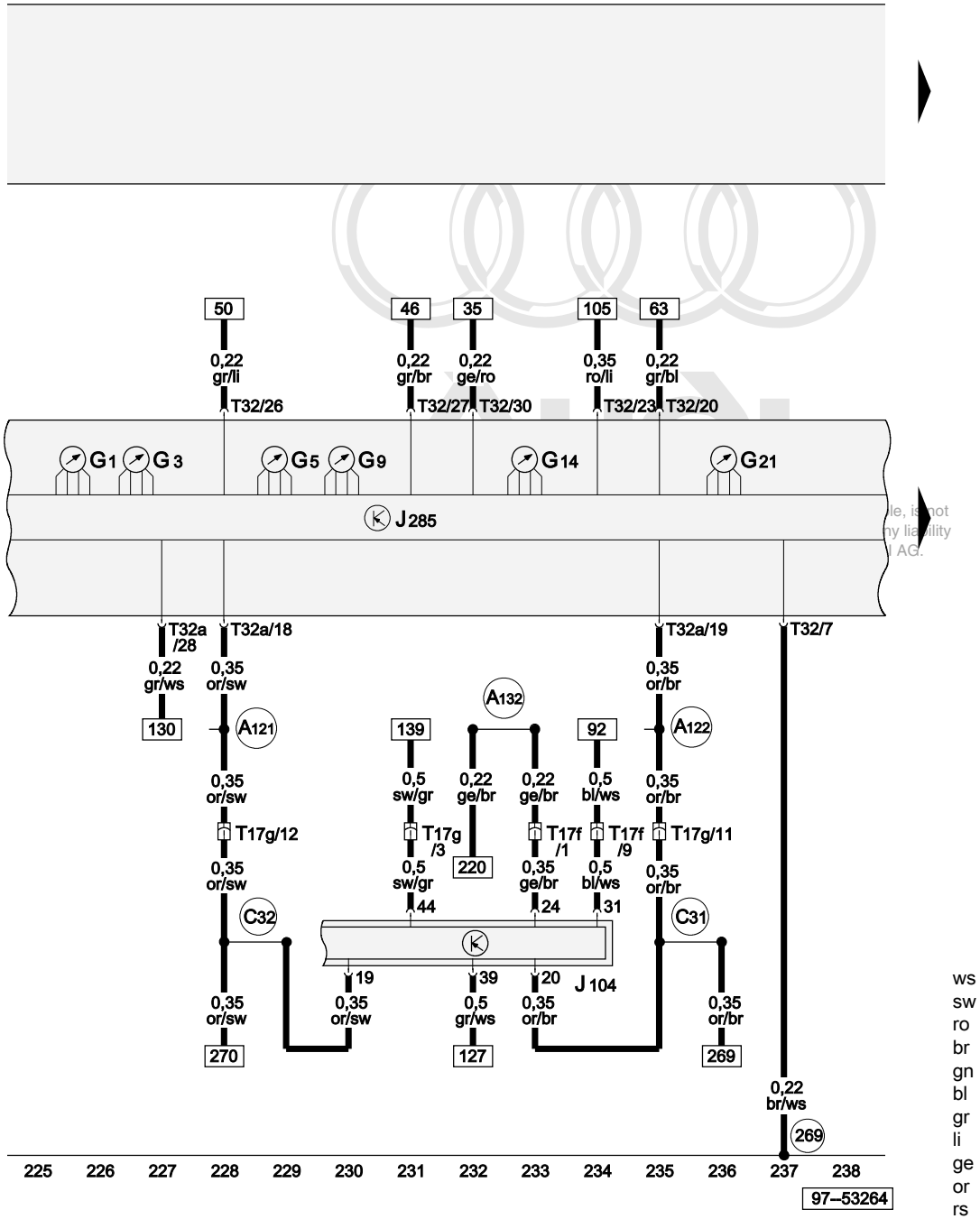

Control unit with display in dash panel insert

G1	Fuel gauge
G3	Coolant temperature gauge
G5	Rev. counter
G9	Oil temperature gauge
G14	Voltmeter
G21	Speedometer
J104	ABS with EDL control unit
J285	Control unit with display in dash panel insert
T17f	17-pin connector, white, connector point, A pillar, left
T17g	17-pin connector, red, connector point, A pillar, left
T32	32-pin connector, blue, on dash panel insert
T32a	32-pin connector, green, on dash panel insert
269	Earth connection (sender earth) -1-, in dash panel wiring harness
A121	Connection (high bus), in dash panel wiring harness
A122	Connection (low bus), in dash panel wiring harness
A132	Connection (TCS/ESP), in dash panel wiring harness
C31	Connection -3-, in headlight wiring harness
C32	Connection -4-, in headlight wiring harness

ws	=	white
sw	=	black
ro	=	red
br	=	brown
gn	=	green
bl	=	blue
gr	=	grey
li	=	purple
ge	=	yellow
or	=	orange
rs	=	pink

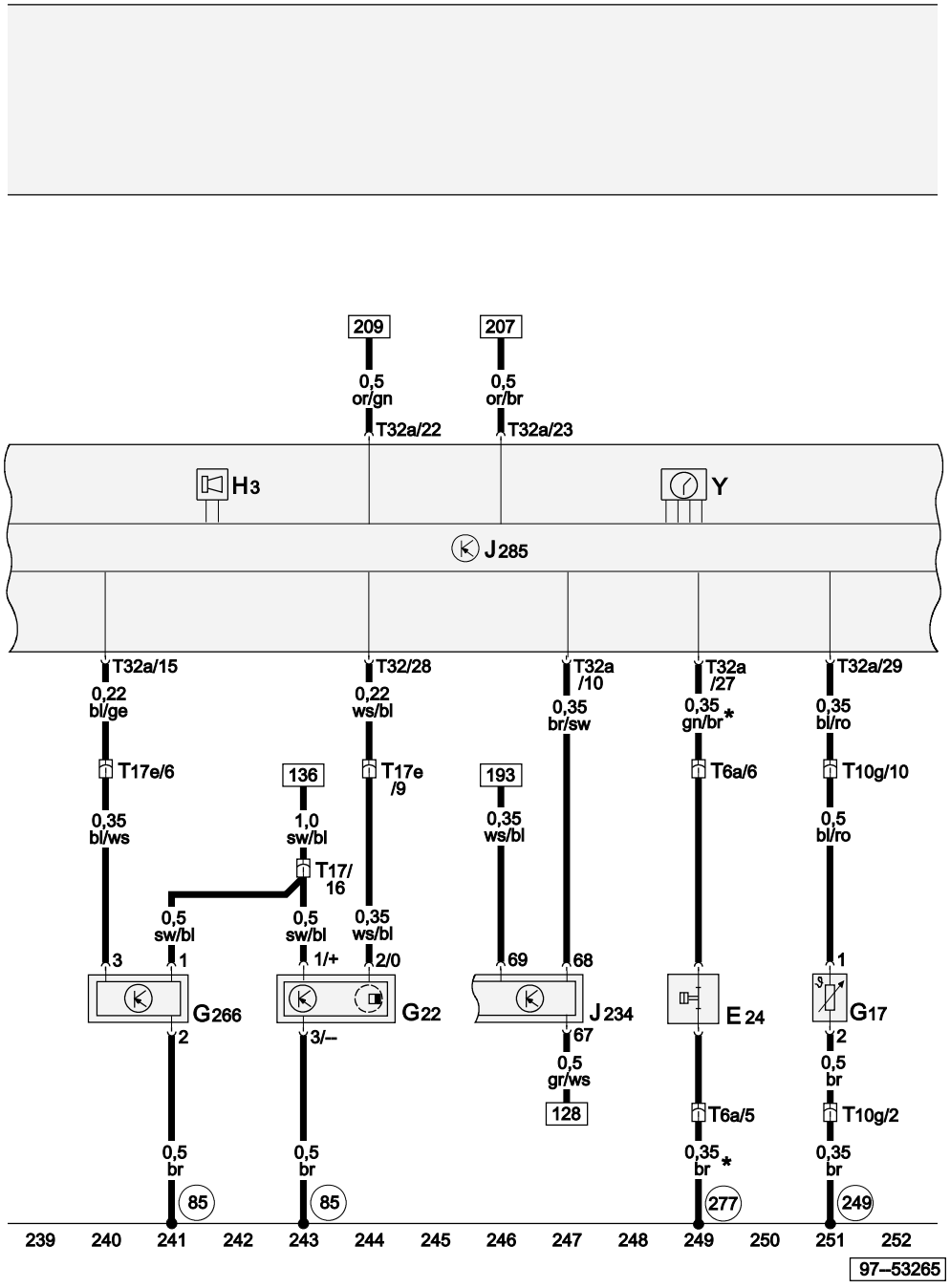

Belt switch on driver's side, ambient temperature sensor, speedometer sender, oil level/oil temperature sender, control unit with display in dash panel insert

E24	Belt switch, driver's side
G17	Ambient temperature sensor
G22	Speedometer sender (Hall sender, on gearbox)
G266	Oil level/oil temperature sender
H3	Buzzer/gong
J234	Airbag control unit
J285	Control unit with display in dash panel insert
T6a	6-pin connector, red, under driver's seat
T10g	10-pin connector, grey, connector point, A pillar, left
T17	17-pin connector, brown, in footwell, front left
T17e	17-pin connector, blue, in footwell, front left
T32	32-pin connector, blue, on dash panel insert
T32a	32-pin connector, green, on dash panel insert
Y	Analogue clock
85	Earth connection -1-, in engine compartment wiring harness
249	Earth connection -2-, in interior wiring harness
277	Earth connection -3-, in interior wiring harness
*	Only models with belt warning

Protected by copyright. Copying for private or commercial purposes, in part or in whole, is not permitted unless authorised by AUDI AG. AUDI AG does not guarantee or accept any liability with respect to the correctness of information in this document. Copyright by AUDI AG.

ws	=	white
sw	=	black
ro	=	red
br	=	brown
gn	=	green
bl	=	blue
gr	=	grey
li	=	purple
ge	=	yellow
or	=	orange
rs	=	pink

Immobilizer reading coil, brake fluid level warning contact, control unit with display in dash panel insert, warning lamps

D2	Immobilizer reading coil
F34	Brake fluid level warning contact
F66	Coolant shortage indicator switch
G34	Brake lining/pad wear sender, front left
J285	Control unit with display in dash panel insert
K4	Side light warning lamp
K19	Seat belt warning system warning lamp
K47	ABS warning lamp
K75	Airbag warning lamp
K117	Immobilizer warning lamp
T10d	10-pin connector, red, radio connector IV
T10f	10-pin connector, blue, connector point, A pillar, left
T17g	17-pin connector, red, connector point, A pillar, left
T32	32-pin connector, blue, on dash panel insert
T32a	32-pin connector, green, on dash panel insert
179	Earth connection, in left headlight wiring harness
269	Earth connection (sender earth) -1-, in dash panel wiring harness
B116	Connection (58d), in interior wiring harness
C15	Connection -1-, in headlight wiring harness

Protected by copyright. Copying for private or commercial purposes, in part or in whole, is not permitted unless authorised by AUDI AG. AUDI AG does not guarantee or accept any liability with respect to the correctness of information in this document. Copyright by AUDI AG.

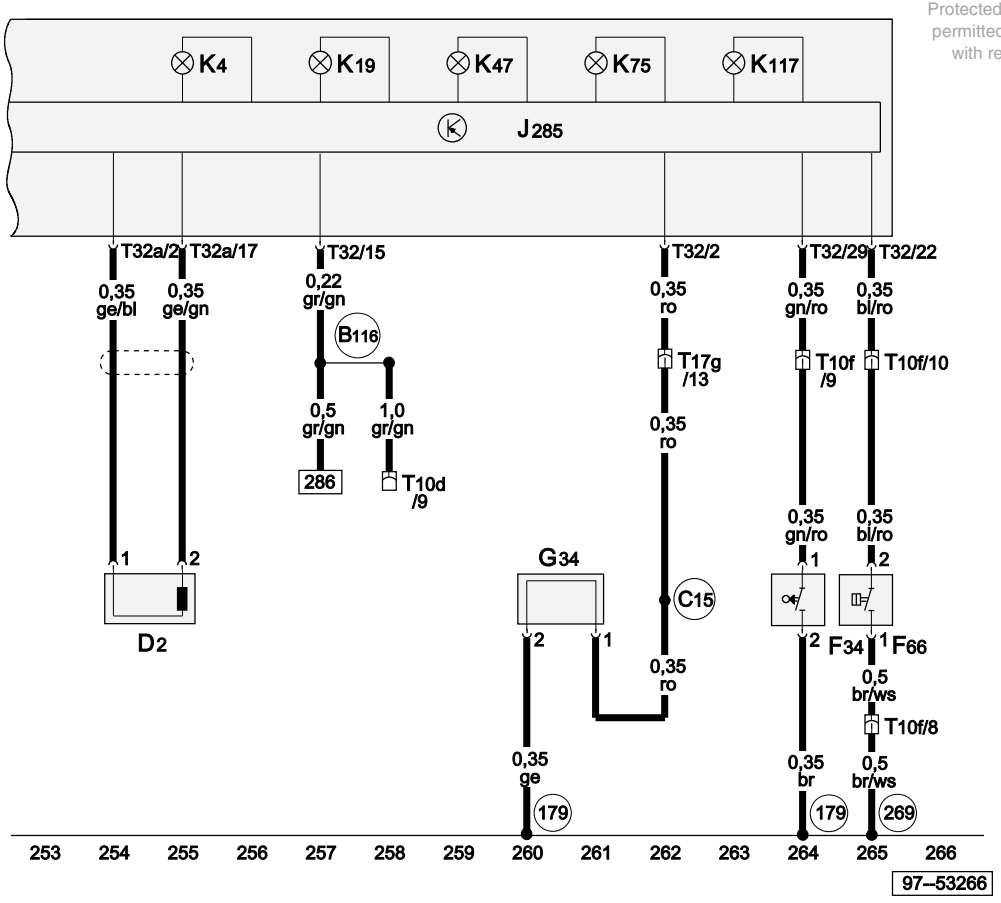

ws	=	white
sw	=	black
ro	=	red
br	=	brown
gn	=	green
bl	=	blue
gr	=	grey
li	=	purple
ge	=	yellow
or	=	orange
rs	=	pink

Fresh air blower switch, power steering control unit, fresh air blower with overheating fuse series resistor

E9	Fresh air blower switch
G250	Power steering sensor
J500	Power steering control unit
N24	Fresh air blower with overheating fuse series resistor
S204	Fuse -1- (30)
T2e	2-pin connector, black, on power steering control unit
T3b	3-pin connector, on power steering control unit
T4	4-pin connector, black, on power steering control unit
T10g	10-pin connector, grey, connector point, A pillar, left
V2	Fresh air blower
119	Earth connection -1-, in headlight wiring harness
279	Earth connection -5-, in interior wiring harness
L66	Connection, in heater blower wiring harness
*	Only applies to models without air conditioner

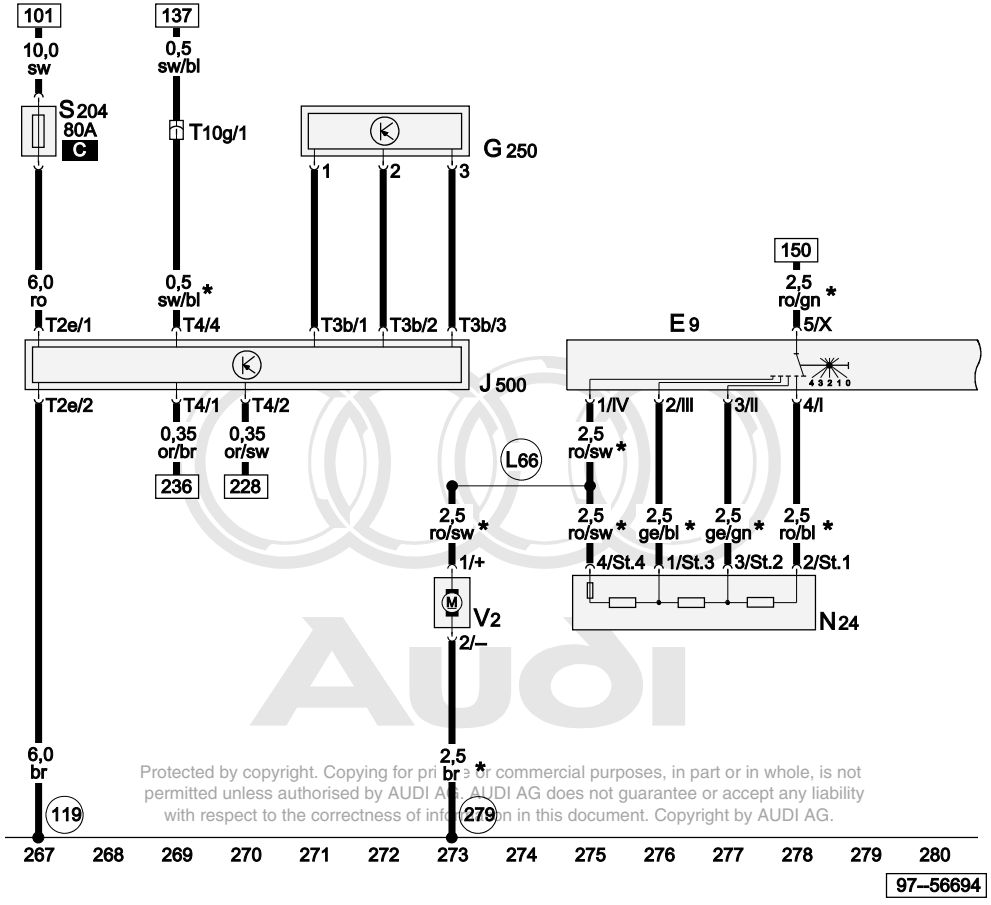

ws	=	white
sw	=	black
ro	=	red
br	=	brown
gn	=	green
bl	=	blue
gr	=	grey
li	=	purple
ge	=	yellow
or	=	orange
rs	=	pink

Protected by copyright. Copying for private or commercial purposes, in part or in whole, is not permitted unless authorised by AUDI AG. AUDI AG does not guarantee or accept any liability with respect to the correctness of information in this document. Copyright by AUDI AG.

Fresh air blower (without air conditioner), heated rear window

E15	Heated rear window switch
E159	Fresh air/air recirculating flap switch
E288	Additional heating button (ECON)
J9	Heated rear window relay
J248	Diesel direct injection system control unit
T17e	17-pin connector, blue, in footwell, front left
V154	Fresh/recirculating air flap control motor
Z1	Heated rear window
73	Earth point, rear roof rail
277	Earth connection -3-, in interior wiring harness
B108	Earth connection, in interior wiring harness, rear right
B111	Positive (+) connection -2- (30a), in interior wiring harness
B180	Connection (heated rear window), in interior wiring harness
B248	Connection -2- (heated rear window), in interior wiring harness
*	Models without air conditioner

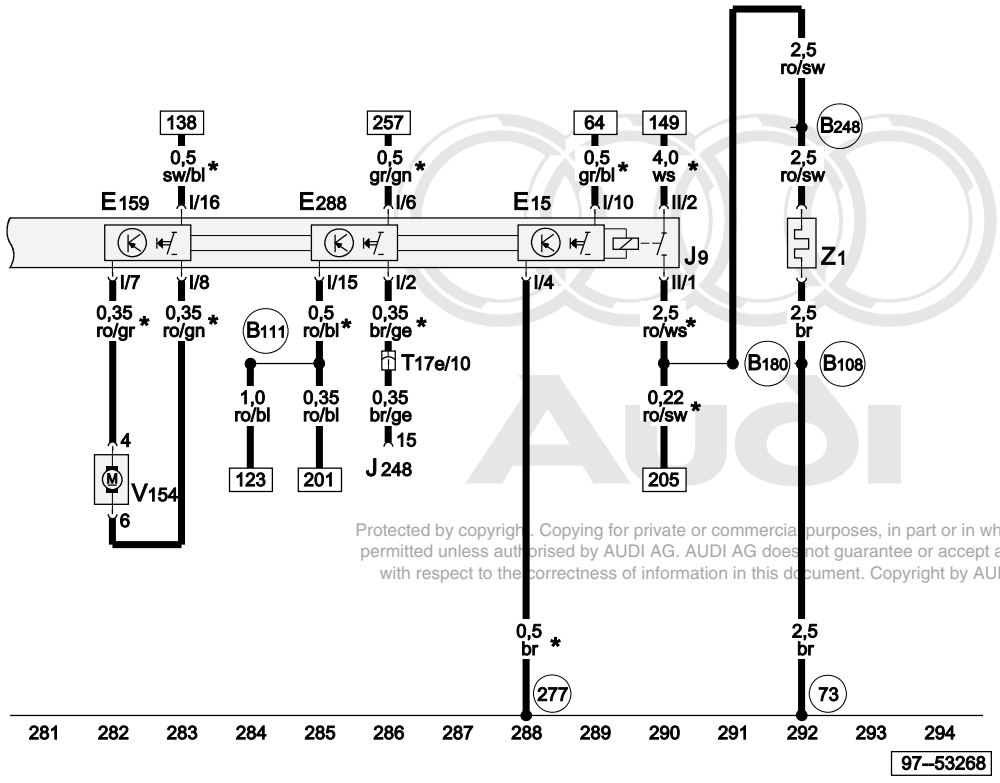

ws = white
sw = black
ro = red
br = brown
gn = green
bl = blue
gr = grey
li = purple
ge = yellow
or = orange
rs = pink

Protected by copyright. Copying for private or commercial purposes, in part or in whole, is not permitted unless authorised by AUDI AG. AUDI AG does not guarantee or accept any liability with respect to the correctness of information in this document. Copyright by AUDI AG.

1.2 litre unit injector, TDI engine (45 kW - 3-cylinder), engine code ANY

From model year 2001

Main fuse (on battery)

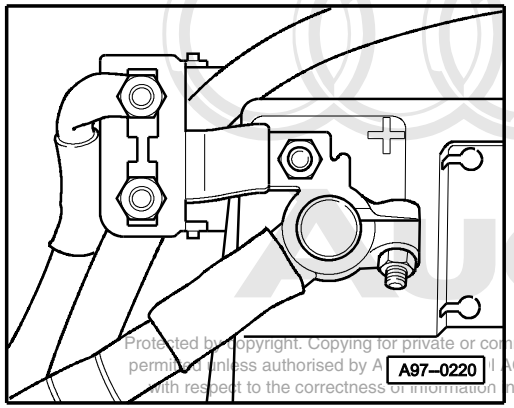

Protected by copyright. Copying for private or commercial purposes, in part or in whole, is not permitted unless authorised by AUDI AG. AUDI AG does not guarantee or accept any liability with respect to the correctness of information in this document. Copyright by AUDI AG.

9-point relay carrier (dash panel, left)

Fuse box

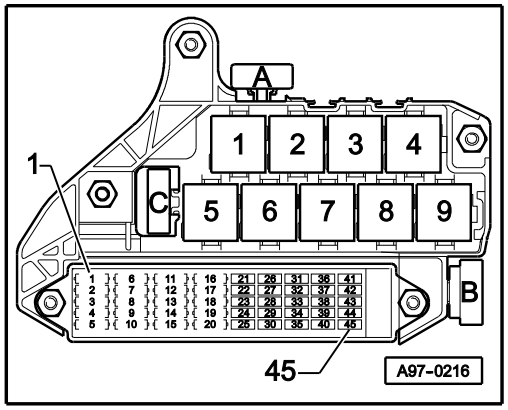

4 - High heat output relay (J360)

8 - Low heat output relay (J359)

B - Additional heater fuse (S126)

Fuse colours

30 A - green
25 A - white
20 A - yellow
15 A - blue
10 A - red
7.5 A - orange
5 A - beige

3-point relay carrier (footwell, left)

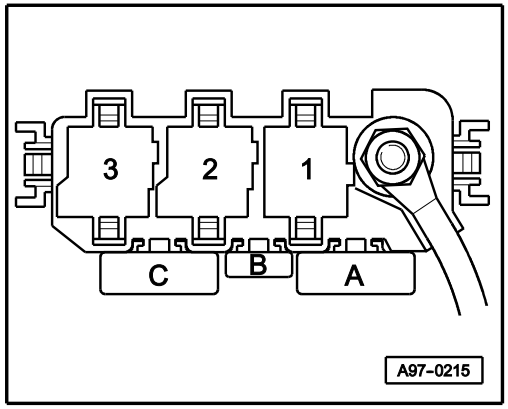

1 - Relay for glow plugs (J52)

2 - Terminal 30 voltage supply relay (J317)

A - Strip fuse for glow plugs (engine) (S39)

B - Engine control unit fuse (S102)

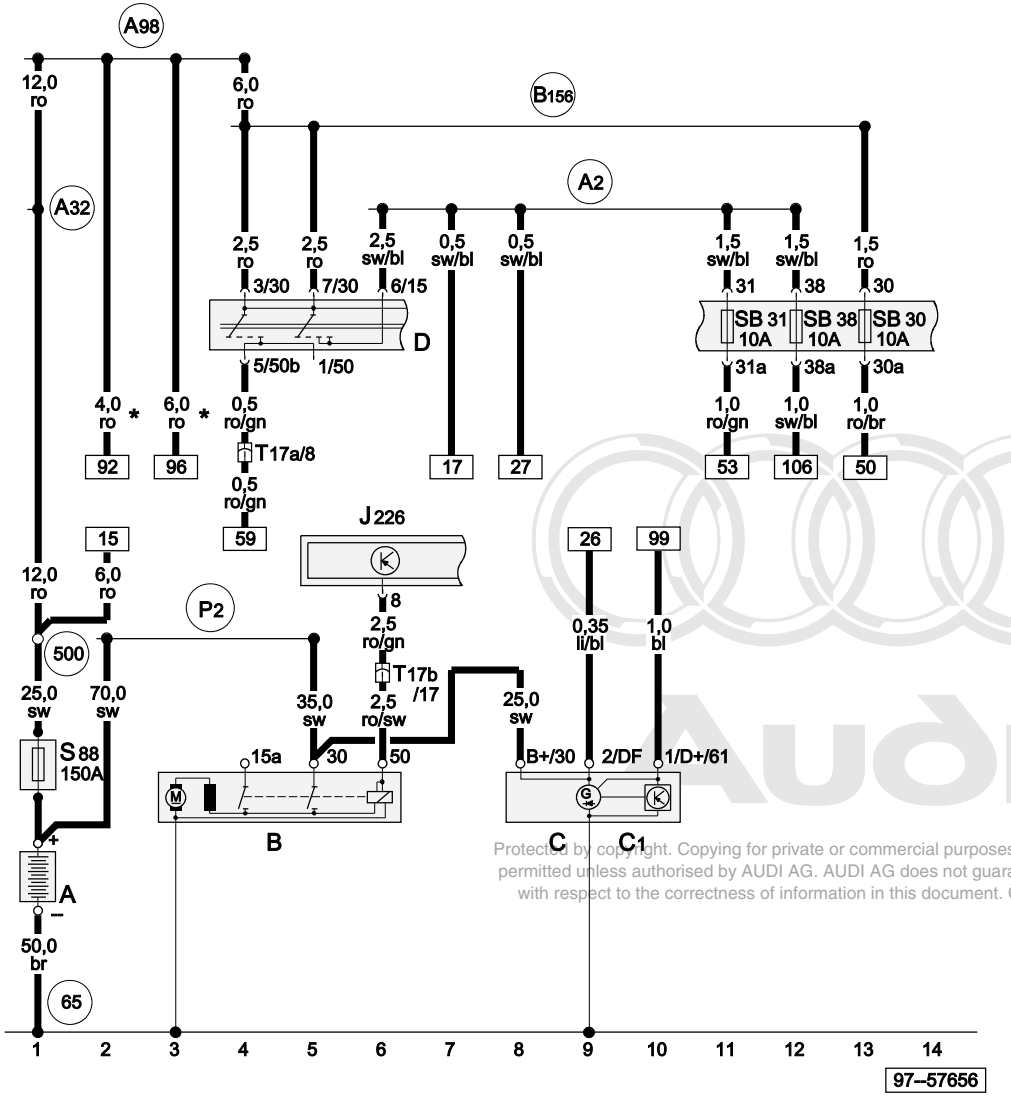

ws = white
sw = black
ro = red
br = brown
gn = green
bl = blue
gr = grey
li = purple
ge = yellow
or = orange
rs = pink

Protected by copyright. Copying for private or commercial purposes, in part or in whole, is not permitted unless authorised by AUDI AG. AUDI AG does not guarantee or accept any liability with respect to the correctness of information in this document. Copyright by AUDI AG.

Battery, starter, alternator, ignition/starter switch, starter inhibitor and reversing light relay

A	Battery
B	Starter
C	Alternator
C1	Voltage regulator
D	Ignition/starter switch
J226	Starter inhibitor and reversing light relay
S88	Strip fuse
SB30	Fuse -30- on fuse box
SB31	Fuse -31- on fuse box
SB38	Fuse -38- on fuse box
T17a	17-pin connector, red, in footwell, front left
T17b	17-pin connector, white, in footwell, front left
65	Earth point, left longitudinal member, rear, between B and C pillar
500	Screw connection -1- (30), on relay plate
A2	Positive (+) connection (15), in dash panel wiring harness
A32	Positive (+) connection (30), in dash panel wiring harness
A98	Positive (+) connection -4- (30), in dash panel wiring harness
B156	Positive (+) connection (30a), in interior wiring harness
P2	Positive (+) connection (30), in battery wiring harness
*	Only applies to models with electric additional heater (PTC 900 W)

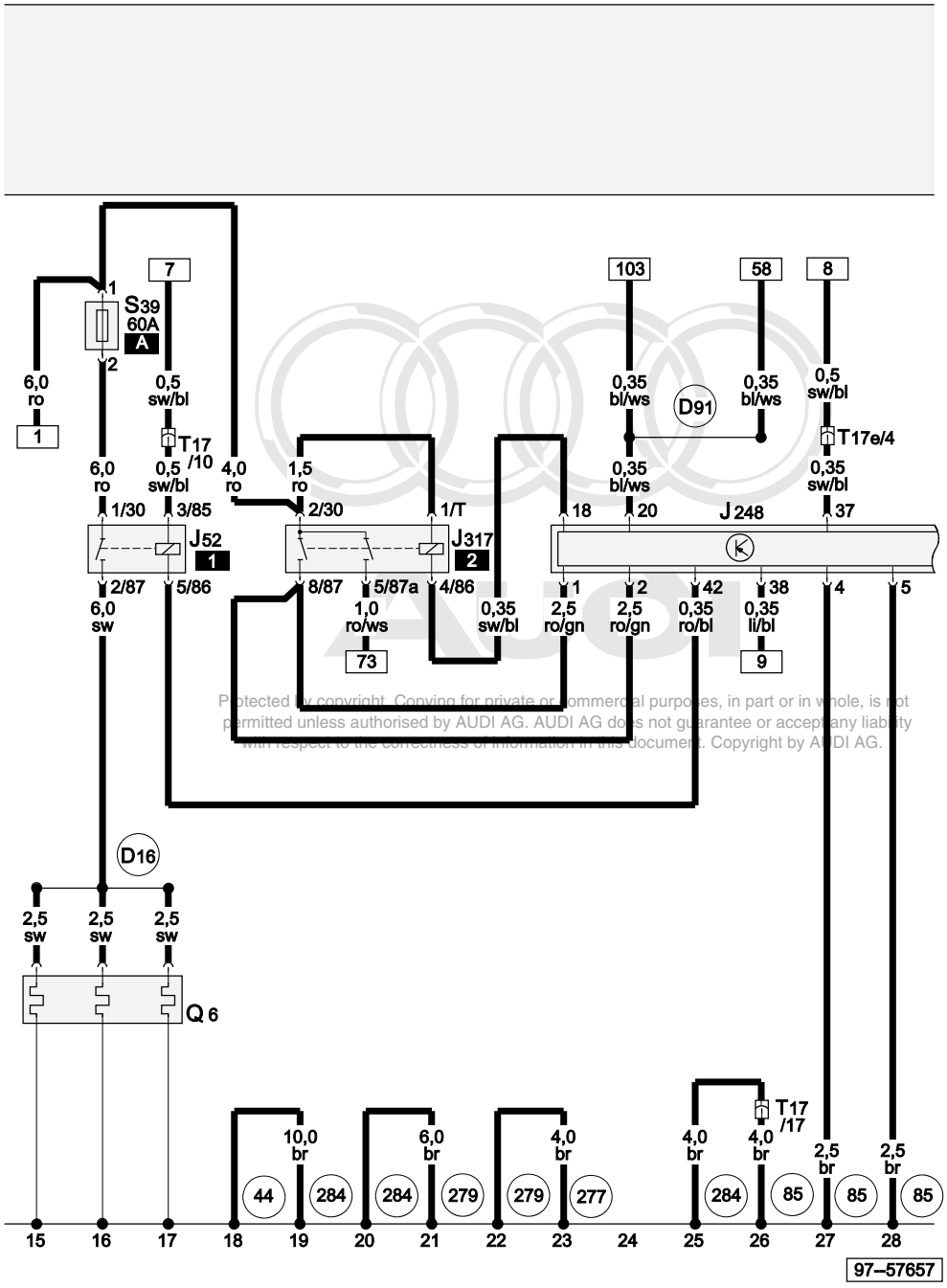

Protected by copyright. Copying for private or commercial purposes, in part or in whole, is not permitted unless authorised by AUDI AG. AUDI AG does not guarantee or accept any liability with respect to the correctness of information in this document. Copyright by AUDI AG.

ws = white
sw = black
ro = red
br = brown
gn = green
bl = blue
gr = grey
li = purple
ge = yellow
or = orange
rs = pink

Relay for glow plugs, diesel direct injection system control unit, terminal 30 voltage supply relay, glow plugs (engine)

J52	Glow plug relay
J248	Diesel direct injection system control unit
J317	Terminal 30 voltage supply relay
Q6	Glow plugs (engine)
S39	Strip fuse for glow plugs - engine
T17	17-pin connector, brown, in footwell, front left
T17e	17-pin connector, blue, in footwell, front left
44	Earth point, lower part of left A pillar
85	Earth connection -1-, in engine compartment wiring harness
277	Earth connection -3-, in interior wiring harness
279	Earth connection -5-, in interior wiring harness
284	Earth connection -6-, in interior wiring harness
D16	Connection (glow plugs), in front right wiring harness
D91	Connection (speed signal), in engine compartment wiring harness

Kick-down switch, idling switch, coolant temperature senders, accelerator pedal position sender, fuel temperature sender

F8	Kick-down switch
F60	Idling switch
G2	Coolant temperature sender
G62	Coolant temperature sender
G79	Accelerator pedal position sender
G81	Fuel temperature sender
J234	Airbag control unit
J248	Diesel direct injection system control unit
T17	17-pin connector, brown, in footwell, front left
T17d	17-pin connector, green, in footwell, front left
269	Earth connection (sender earth) -1-, in dash panel wiring harness
A125	Connection (crash signal), in dash panel wiring harness

Protected by copyright. Copying for private or commercial purposes, in part or in whole, is not permitted unless authorised by AUDI AG. AUDI AG does not guarantee or accept any liability with respect to the correctness of information in this document. Copyright by AUDI AG.

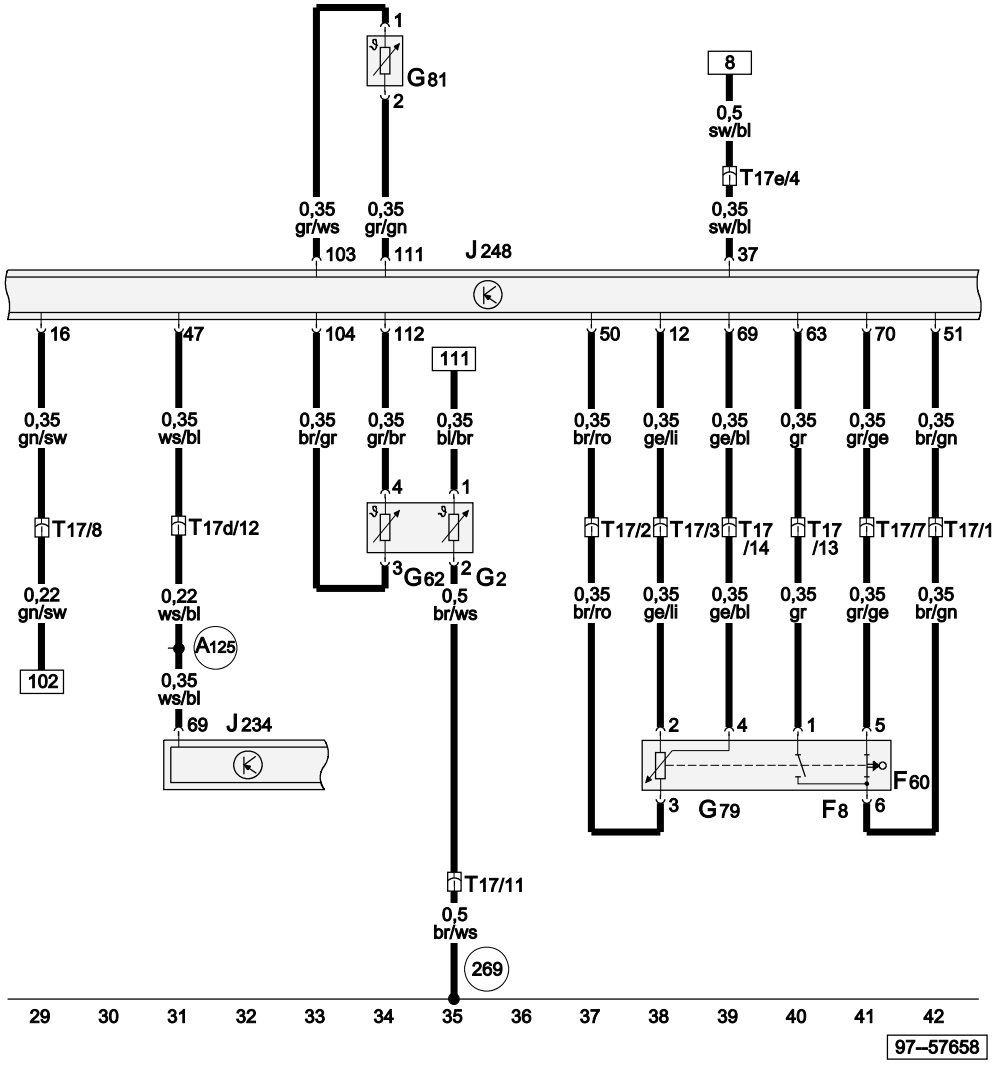

ws	=	white
sw	=	black
ro	=	red
br	=	brown
gn	=	green
bl	=	blue
gr	=	grey
li	=	purple
ge	=	yellow
or	=	orange
rs	=	pink

Brake light switch, diesel direct injection system control unit, heater element (crankcase breather), unit injector solenoid valves

F	Brake light switch
J248	Diesel direct injection system control unit
N79	Heater element (crankcase breather)
N240	Unit injector solenoid valve, No. 1 cyl.
N241	Unit injector solenoid valve, No. 2 cyl.
N242	Unit injector solenoid valve, No. 3 cyl.
T8b	8-pin connector, black, at unit injector solenoid valves
T17	17-pin connector, brown, in footwell, front left
T17e	17-pin connector, blue, in footwell, front left
T17h	17-pin connector, green, connector point, A pillar, right
43	Earth point, lower part of right A pillar
176	Earth connection, in right headlight wiring harness
B149	Positive (+) connection -2- (15a), in interior wiring harness
B185	Connection -2- (54), in interior wiring harness
D101	Connection -1-, in engine compartment wiring harness
*	Only applies to models with electric additional heater (PTC 900 W)
**	Only applies to models with heater element (crankcase breather)

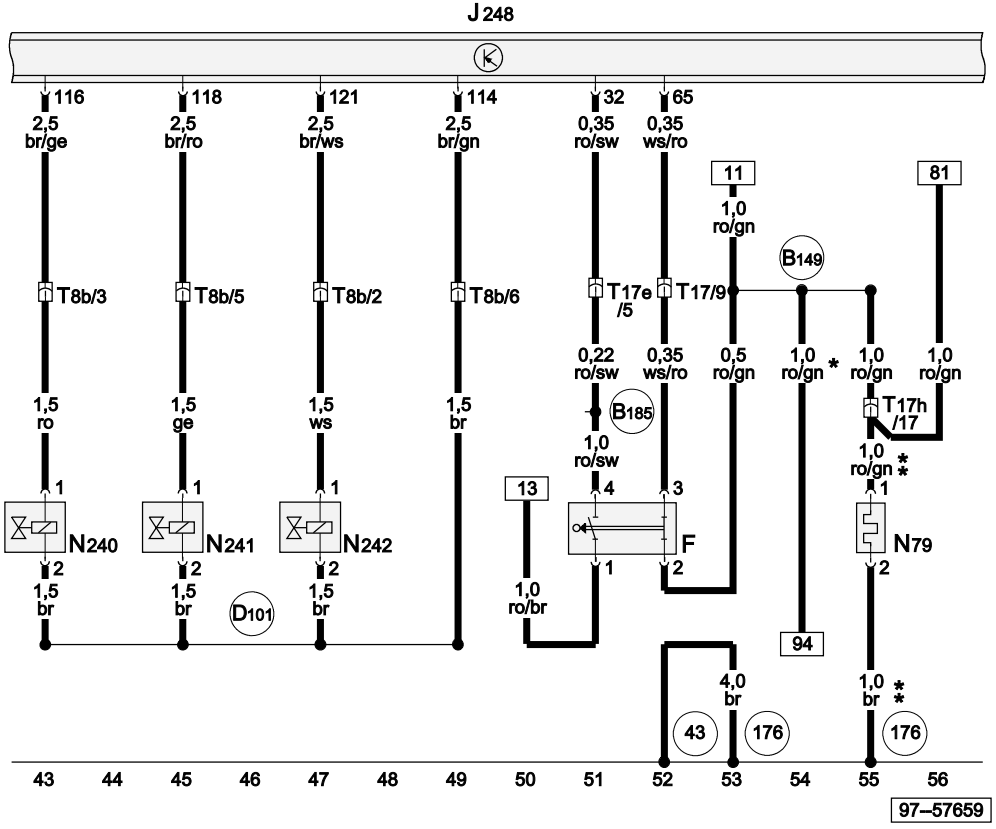

ws = white
sw = black
ro = red
br = brown
gn = green
bl = blue
gr = grey
li = purple
ge = yellow
or = orange
rs = pink

Protected by copyright. Copying for private or commercial purposes, in part or in whole, is not permitted unless authorised by AUDI AG. AUDI AG does not guarantee or accept any liability with respect to the correctness of information in this document. Copyright by AUDI AG.

Engine speed sender, Hall sender, diesel direct injection system control unit, electronic manual gearbox control unit

G28	Engine speed sender
G40	Hall sender
J248	Diesel direct injection system control unit
J514	Electronic manual gearbox control unit
T17e	17-pin connector, blue, in footwell, front left
A121	Connection (high bus), in dash panel wiring harness
A122	Connection (low bus), in dash panel wiring harness
D159	Connection (high bus), in engine compartment wiring harness
D160	Connection (low bus), in engine compartment wiring harness
F27	Connection (screening), in diesel direct injection wiring harness

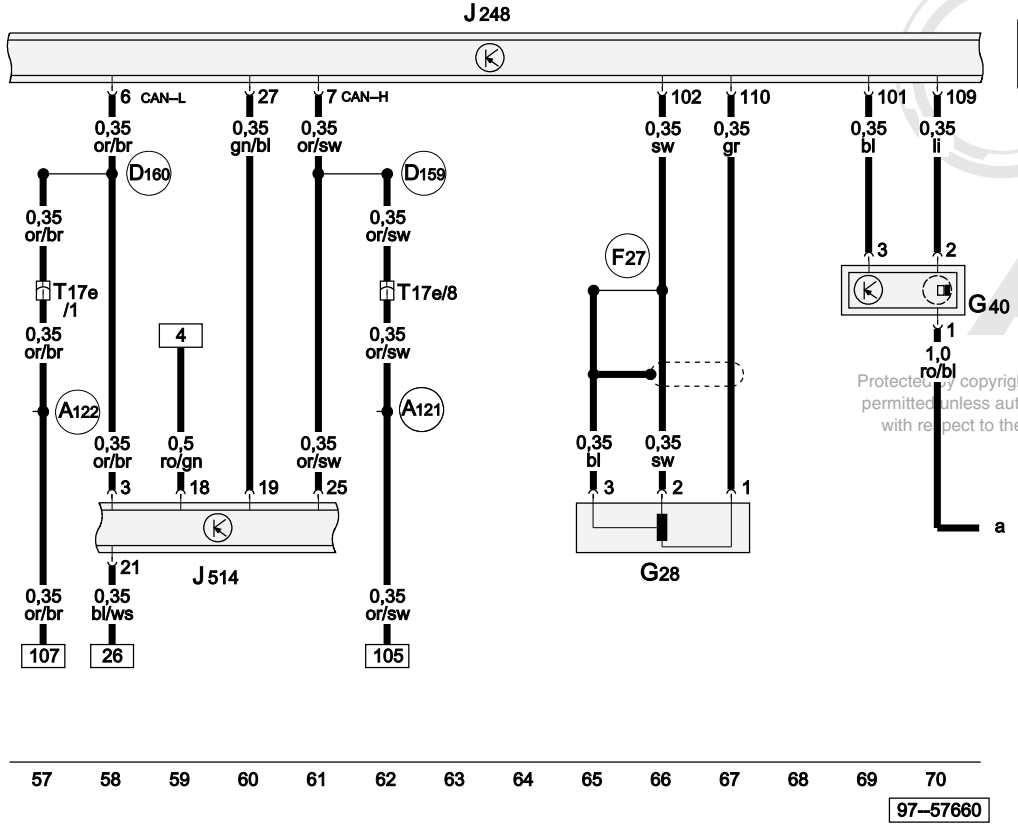

ws = white
sw = black
ro = red
br = brown
gn = green
bl = blue
gr = grey
li = purple
ge = yellow
or = orange
rs = pink

Protected by copyright. Copying for private or commercial purposes, in part or in whole, is not permitted unless authorised by AUDI AG. AUDI AG does not guarantee or accept any liability with respect to the correctness of information in this document. Copyright by AUDI AG.

Air mass meter, intake manifold pressure sender, exhaust gas recirculation valve, charge pressure control solenoid valve, throttle butterfly valve

G70	Air mass meter
G71	Intake manifold pressure sender
G72	Intake manifold temperature sender
J248	Diesel direct injection system control unit
N18	Exhaust gas recirculation valve
N75	Charge pressure control solenoid valve
N211	Throttle butterfly valve
S102	Engine control unit fuse
T17d	17-pin connector, green, in footwell, front left
T17h	17-pin connector, green, connector point, A pillar, right
C33	Connection -5-, in headlight wiring harness

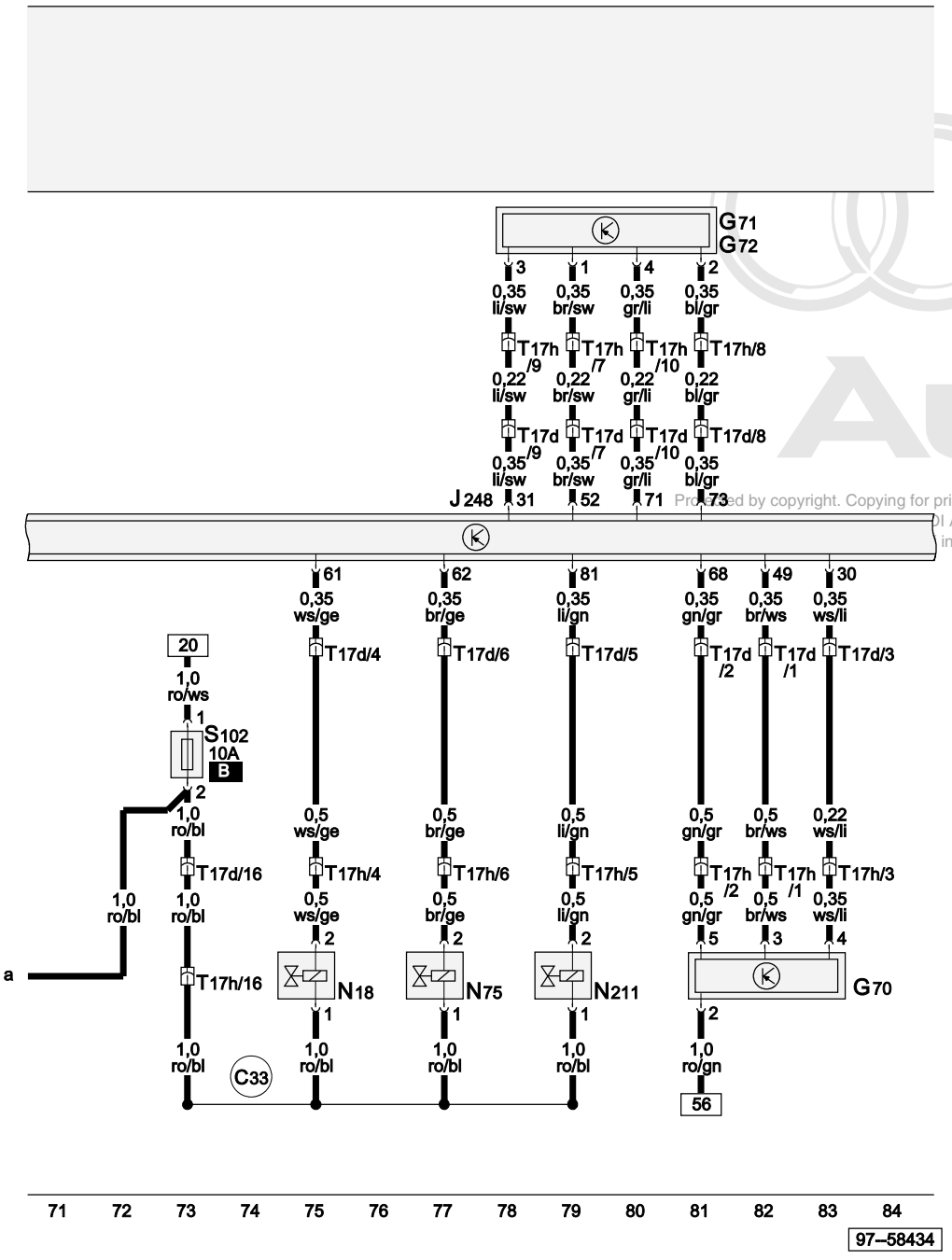

ws = white
sw = black
ro = red
br = brown
gn = green
bl = blue
gr = grey
li = purple
ge = yellow
or = orange
rs = pink

Protected by copyright. Copying for private or commercial purposes, in part or in whole, is not ... AUDI AG does not guarantee or accept any liability ... information in this document. Copyright by AUDI AG.

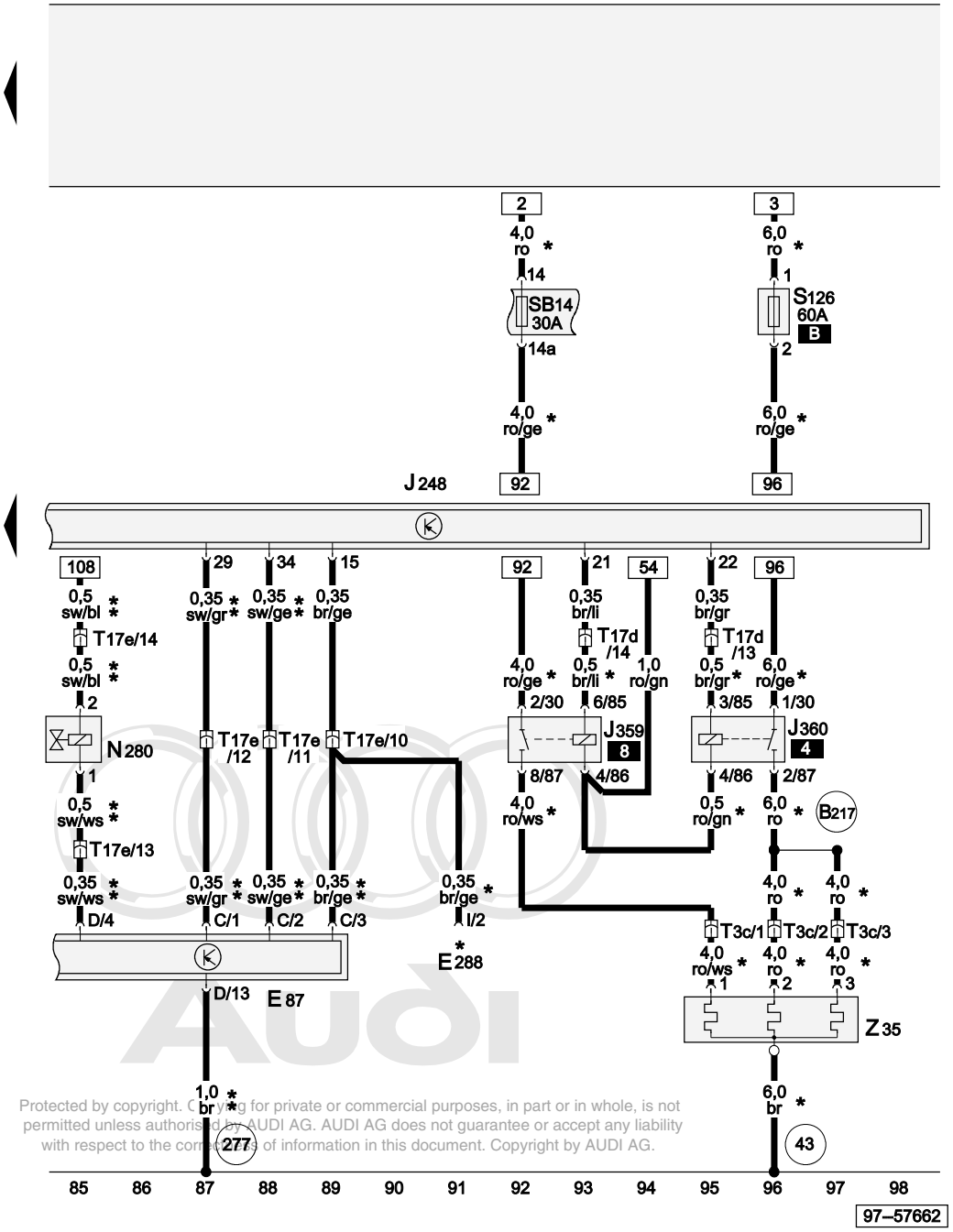

Protected by copyright. Copying for private or commercial purposes, in part or in whole, is not permitted unless authorised by AUDI AG. AUDI AG does not guarantee or accept any liability with respect to the correctness of information in this document. Copyright by AUDI AG.

Air conditioning system/Climatronic operating and display unit, additional heating button (ECON), additional heating heater element

E87	Air conditioning system/Climatronic operating and display unit
E288	Additional heating button (ECON)
J248	Diesel direct injection system control unit
J359	Low heat output relay
J360	High heat output relay
N280	Air conditioning system compressor regulating valve
S126	Additional heater fuse
SB14	Fuse -14- on fuse box
T3c	3-pin connector, black, behind driver's storage compartment
T17d	17-pin connector, green, in footwell, front left
T17e	17-pin connector, blue, in footwell, front left
Z35	Additional heating heater element
43	Earth point, lower part of right A pillar
277	Earth connection -3-, in interior wiring harness
B217	Connection (additional heater), in interior wiring harness
*	Only applies to models with electric additional heater (PTC 900 W)
**	Only applies to models with air conditioning system

ws	=	white
sw	=	black
ro	=	red
br	=	brown
gn	=	green
bl	=	blue
gr	=	grey
li	=	purple
ge	=	yellow
or	=	orange
rs	=	pink

Oil pressure switch, fuel gauge sender, speedometer sender, oil level/oil temperature sender

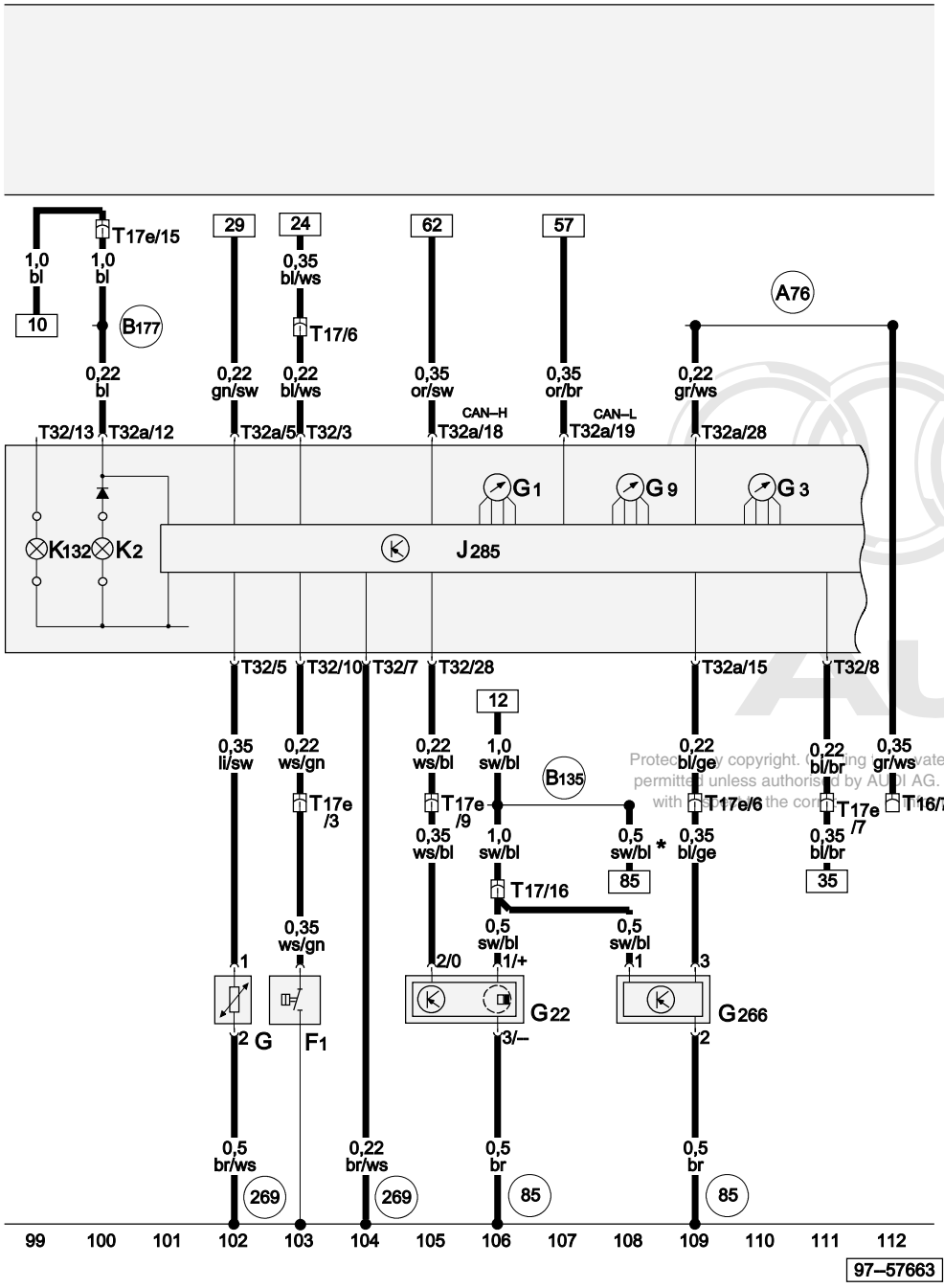

ws	=	white
sw	=	black
ro	=	red
br	=	brown
gn	=	green
bl	=	blue
gr	=	grey
li	=	purple
ge	=	yellow
or	=	orange
rs	=	pink

F1	Oil pressure switch
G	Fuel gauge sender
G1	Fuel gauge
G3	Coolant temperature gauge
G9	Oil temperature gauge
G22	Speedometer sender (Hall sender, on gearbox)
G266	Oil level/oil temperature sender
J285	Control unit with display in dash panel insert
K2	Alternator warning lamp
K132	Electronic power control fault lamp
T16	16-pin connector, diagnostic connector, black, near fuse box
T17	17-pin connector, brown, in footwell, front left
T17e	17-pin connector, blue, in footwell, front left
T32	32-pin connector, blue, on dash panel insert
T32a	32-pin connector, green, on dash panel insert
85	Earth connection -1-, in engine compartment wiring harness
269	Earth connection (sender earth) -1-, in dash panel wiring harness
A76	Connection (diagnosis wire K), in dash panel wiring harness
B135	Connection -1- (15a), in interior wiring harness
B177	Connection (61), in interior wiring harness
*	Only applies to models with air conditioner

Protected by copyright. Copying for private or commercial purposes, in part or in whole, is not permitted unless authorised by AUDI AG. AUDI AG does not guarantee or accept any liability with respect to the correctness of information in this document. Copyright by AUDI AG.

5-speed manual gearbox 085 DS

From model year 2001

Main fuse

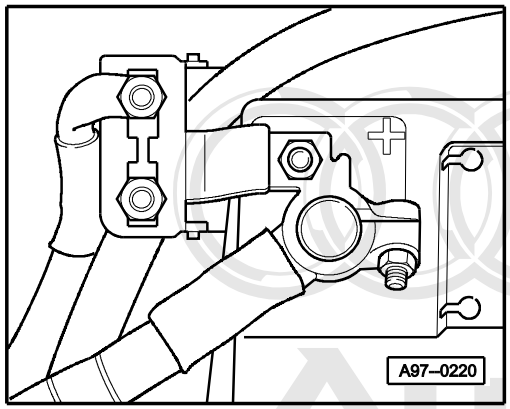

9-point relay carrier (in dash panel) Fuse box

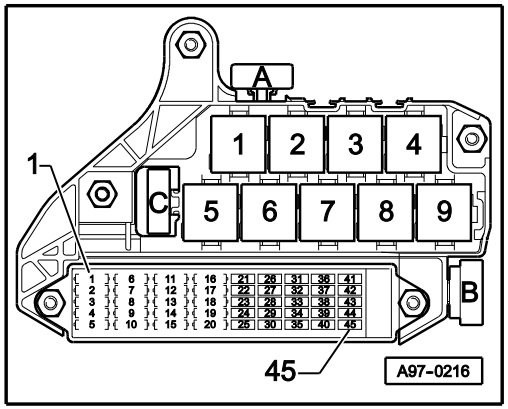

Fuse colours:

30 A - green
25 A - white
20 A - yellow
15 A - blue
10 A - red
7,5 A - orange
5 A - beige

6+6-point relay carrier (in footwell)

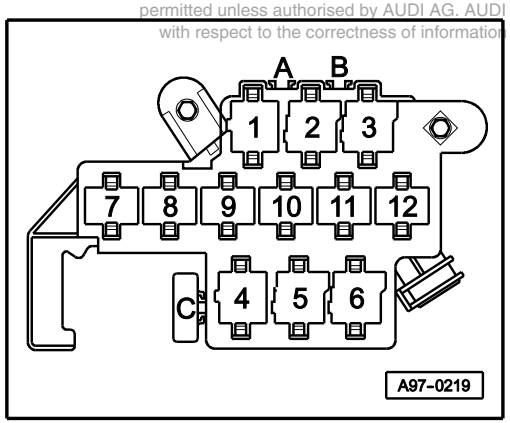

Protected by copyright. Copying for private or commercial purposes, in part or in whole, is not permitted unless authorised by AUDI AG. AUDI AG does not guarantee or accept any liability with respect to the correctness of information in this document. Copyright by AUDI AG.

1 - Starter inhibitor relay (J226)

4 - Gearbox hydraulic pump relay (J510)

5 - Ignition key withdrawal lock control unit (J557)

6 - Ignition key withdrawal lock control unit (J557)

A - Hydraulic pump relay fuse (S279)

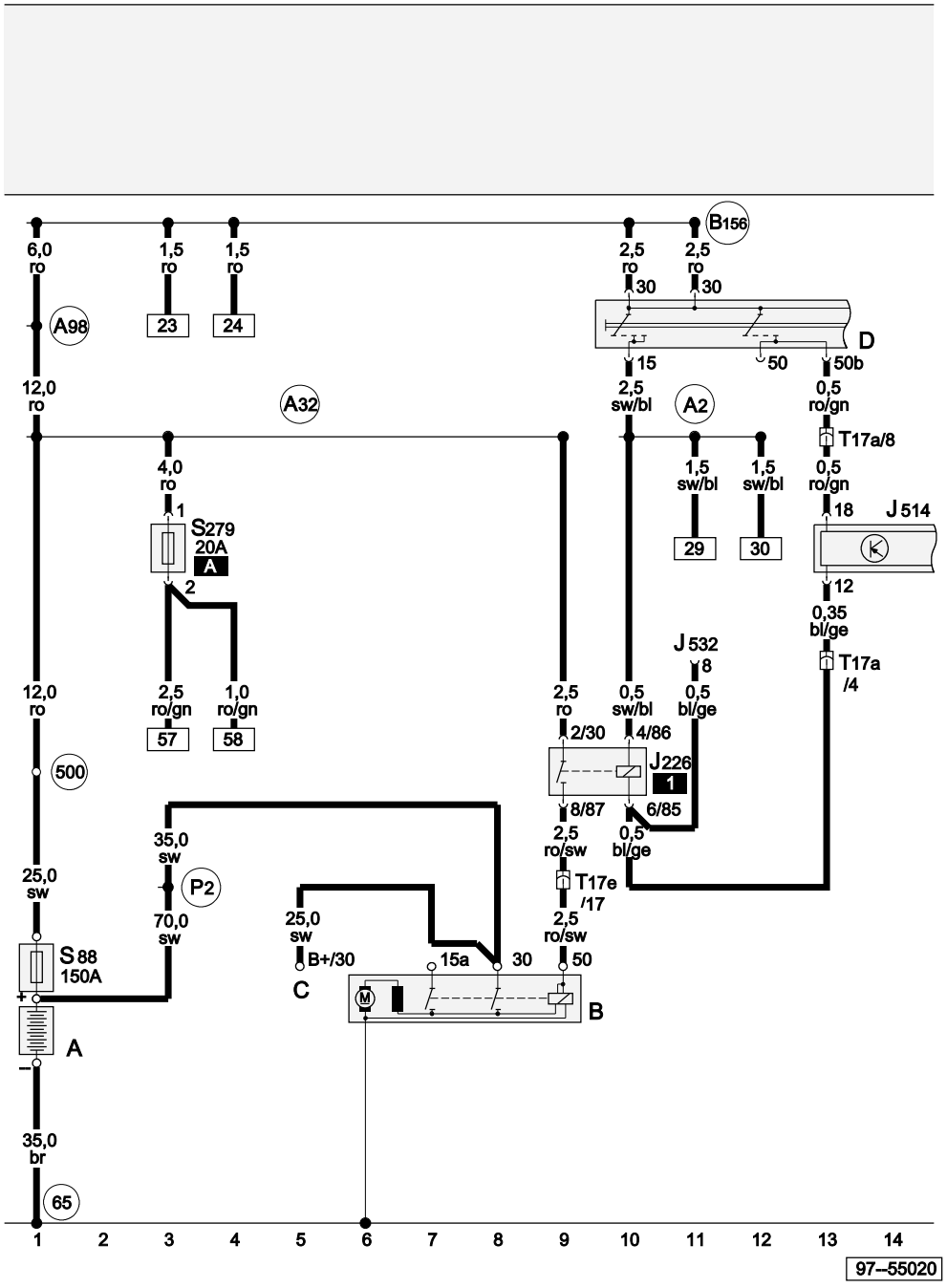

Battery, starter, starter inhibitor and reversing light relay

A	Battery
B	Starter
C	Alternator
D	Ignition/starter switch
J226	Starter inhibitor and reversing light relay
J514	Electronic manual gearbox control unit
J532	Voltage stabiliser
S88	Strip fuse
S279	Hydraulic pump relay fuse
T17a	17-pin connector, red, in footwell, front left
T17e	17-pin connector, blue, in footwell, front left
65	Earth point, left longitudinal member, rear
500	Screw connection -1- (30), on relay plate
A2	Positive (+) connection (15), in dash panel wiring harness
A32	Positive (+) connection (30), in dash panel wiring harness
A98	Positive (+) connection -4- (30), in dash panel wiring harness
B156	Positive (+) connection (30a), in interior wiring harness
P2	Positive (+) connection (30), in battery wiring harness

ws	=	white
sw	=	black
ro	=	red
br	=	brown
gn	=	green
bl	=	blue
gr	=	grey
li	=	purple
ge	=	yellow
or	=	orange
rs	=	pink

Photocopy by copyright. Copying for private or commercial purposes, in part or in whole, is not permitted unless authorised by AUDI AG. AUDI AG does not guarantee or accept any liability with respect to the correctness of information in this document. Copyright by AUDI AG.

Electronic manual gearbox control unit, handbrake warning lamp control unit, ignition key withdrawal lock, fuses

F9	Handbrake warning switch
J285	Control unit with display in dash panel insert
J514	Electronic manual gearbox control unit
J534	Handbrake warning lamp control unit
J557	Ignition key withdrawal lock control unit
N334	Ignition key withdrawal lock solenoid valve
SB43	Fuse -43- on fuse box
SB44	Fuse -44- on fuse box
T17a	17-pin connector, red, in footwell, front left
T17b	17-pin connector, white, in footwell, front left
T32a	32-pin connector, green, on dash panel insert
85	Earth connection -1-, in engine compartment wiring harness
238	Earth connection -1-, in interior wiring harness
277	Earth connection -3-, in interior wiring harness
279	Earth connection -5-, in interior wiring harness
A24	Connection (brake system monitoring), in dash panel wiring harness
B158	Connection (S), in interior wiring harness
B172	Positive (+) connection -4- (30), in interior wiring harness

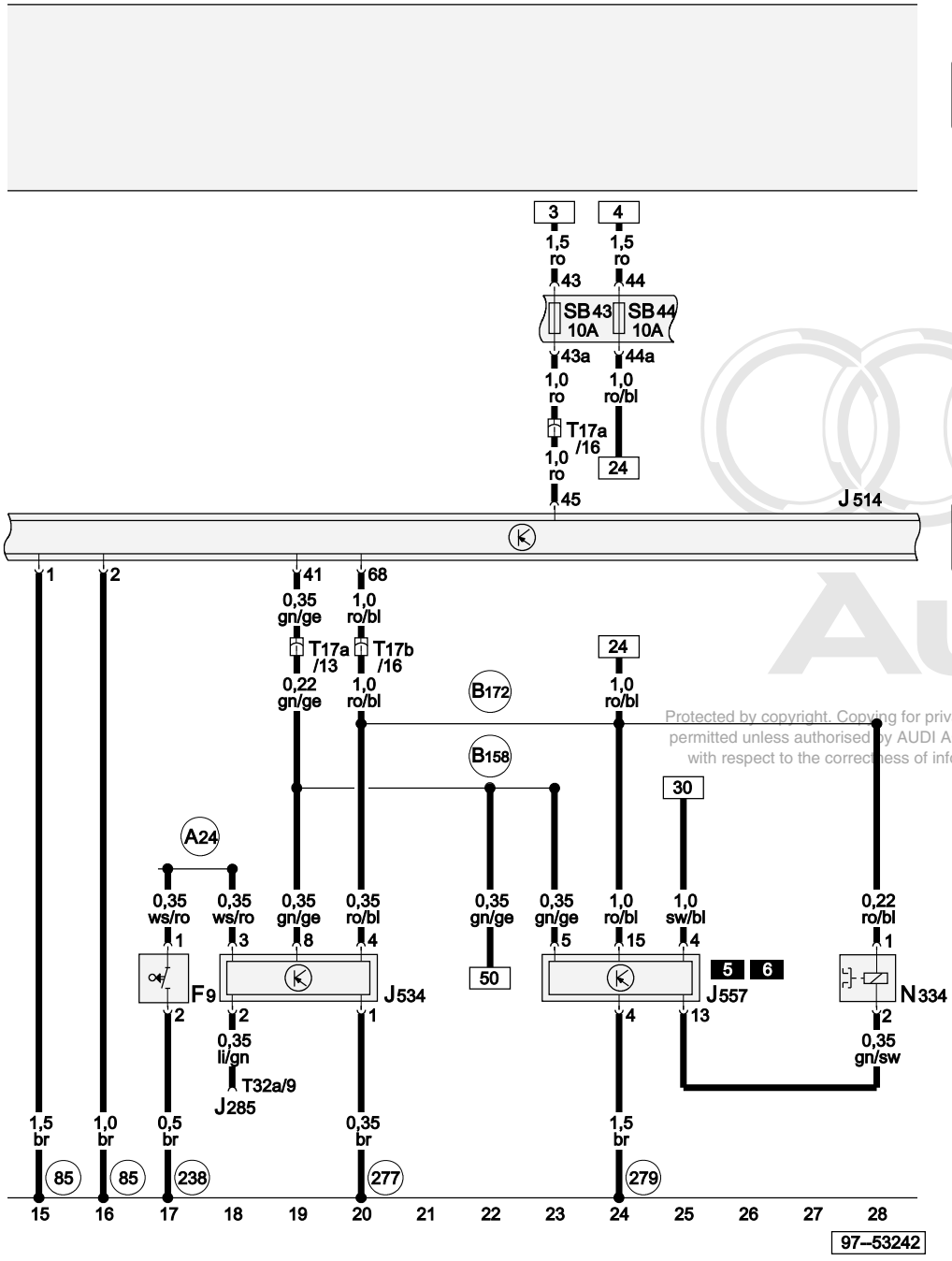

ws = white
sw = black
ro = red
br = brown
gn = green
bl = blue
gr = grey
li = purple
ge = yellow
or = orange
rs = pink

Protected by copyright. Copying for private or commercial purposes, in part or in whole, is not permitted unless authorised by AUDI AG. AUDI AG does not guarantee or accept any liability with respect to the correctness of information in this document. Copyright by AUDI AG.

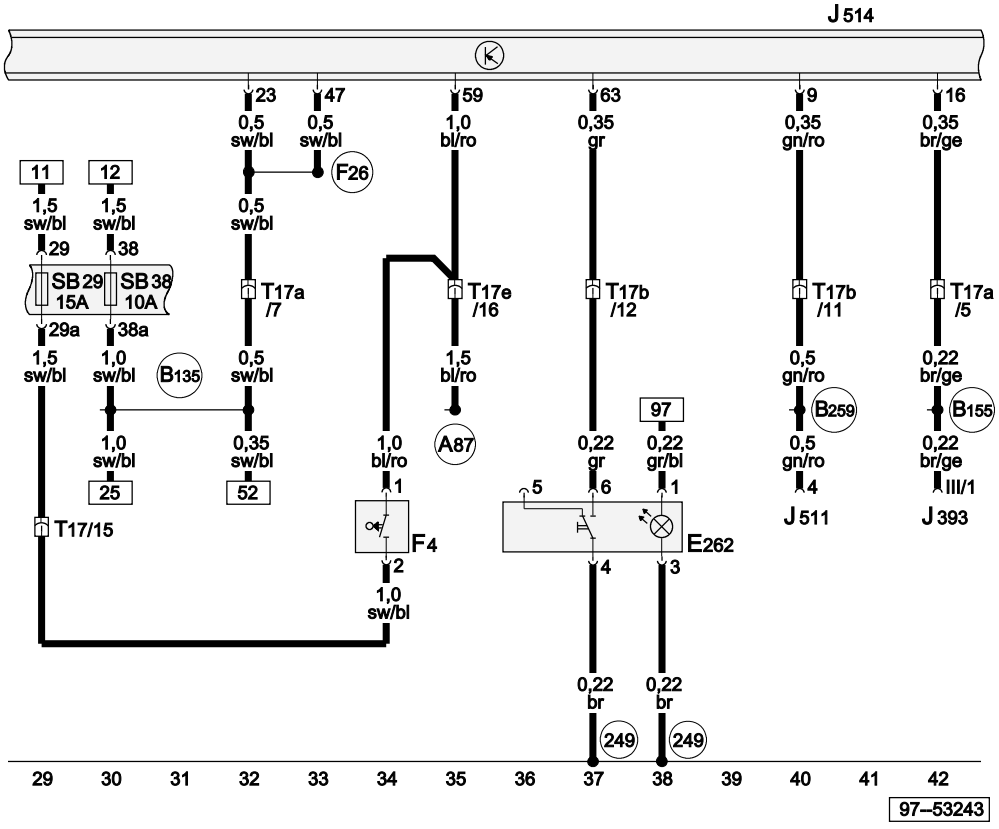

Start/Stop operation switch, electronic manual gearbox control unit, fuses

E262	Start/Stop operation switch
F4	Reversing light switch
J393	Convenience system central control unit
J511	Consumer switch-off relay
J514	Electronic manual gearbox control unit
SB29	Fuse -29- on fuse box
SB38	Fuse -38- on fuse box
T17	17-pin connector, brown, in footwell, front left
T17a	17-pin connector, red, in footwell, front left
T17b	17-pin connector, white, in footwell, front left
T17e	17-pin connector, blue, in footwell, front left
249	Earth connection -2-, in interior wiring harness
A87	Connection (RL), in dash panel wiring harness
B135	Connection -1- (15a), in interior wiring harness
B155	Connection -2- (DC), in interior wiring harness
B259	Connection (start/stop signal), in interior wiring harness
F26	Connection -2-, in diesel direct injection system wiring harness

Protected by copyright. Copying for private or commercial purposes, in part or in whole, is not permitted unless authorised by AUDI AG. AUDI AG does not guarantee or accept any liability with respect to the correctness of information in this document. Copyright by AUDI AG.

ws	=	white
sw	=	black
ro	=	red
br	=	brown
gn	=	green
bl	=	blue
gr	=	grey
li	=	purple
ge	=	yellow
or	=	orange
rs	=	pink

Electronic manual gearbox control unit, gear selector

F207	Diesel engine inhibitor switch
F257	Selector lever gate detector switch
F258	Selector lever detector switch for N
F259	Selector lever detector switch for stopped
G272	Selector lever potentiometer for forwards/backwards
J514	Electronic manual gearbox control unit
L101	Selector lever display illumination
N110	Selector lever lock solenoid
T17a	17-pin connector, red, in footwell, front left
T17b	17-pin connector, white, in footwell, front left
T17i	17-pin connector, black, below gear selector cover
(277)	Earth connection -3-, in interior wiring harness

Protected by copyright. Copying for private or commercial purposes, in part or in whole, is not permitted unless authorised by AUDI AG. AUDI AG does not guarantee or accept any liability with respect to the correctness of information in this document. Copyright by AUDI AG.

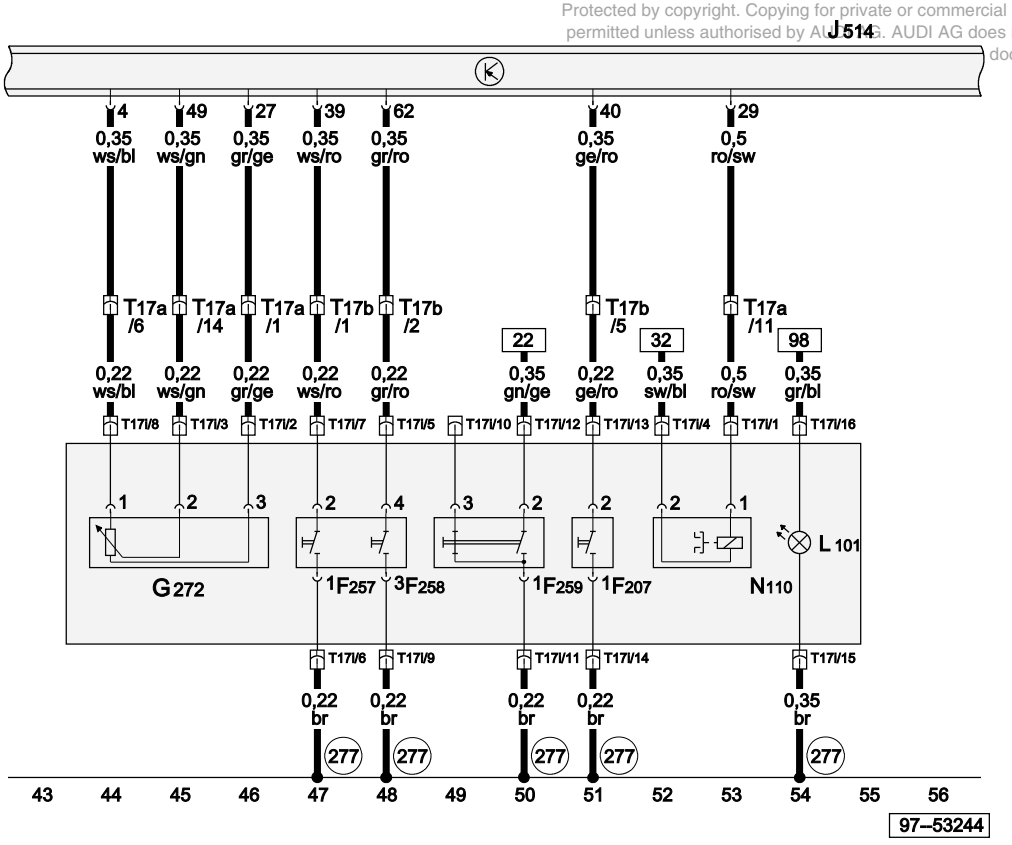

ws	=	white
sw	=	black
ro	=	red
br	=	brown
gn	=	green
bl	=	blue
gr	=	grey
li	=	purple
ge	=	yellow
or	=	orange
rs	=	pink

Brake pressure switch, gear detector potentiometers, electronic manual gearbox control unit, clutch actuator

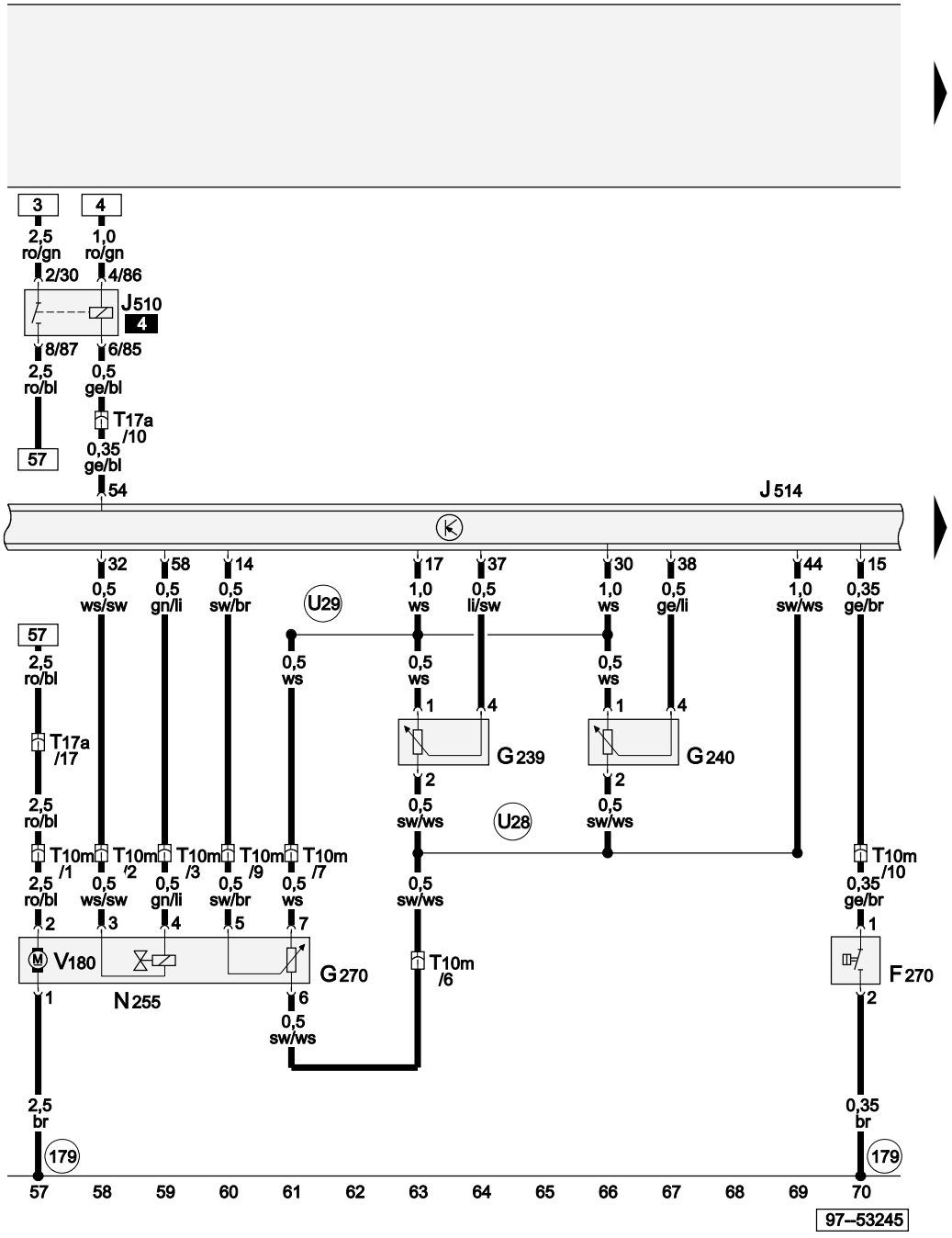

ws	=	white
sw	=	black
ro	=	red
br	=	brown
gn	=	green
bl	=	blue
gr	=	grey
li	=	purple
ge	=	yellow
or	=	orange
rs	=	pink

F270	Brake pressure switch
G239	Gear detector potentiometer -1-
G240	Gear detector potentiometer -2-
G270	Gearbox hydraulic pressure sender
J510	Gearbox hydraulic pump relay
J514	Electronic manual gearbox control unit
N255	Clutch actuator valve
T10m	10-pin connector, black, in footwell, front left
T17a	17-pin connector, red, in footwell, front left
V180	Clutch actuator hydraulic pump
179	Earth connection, in left headlight wiring harness
U28	Connection (0 V), in manual gearbox wiring harness
U29	Connection (5 V), in manual gearbox wiring harness

Protected by copyright. Copying for private or commercial purposes, in part or in whole, is not permitted unless authorised by AUDI AG. AUDI AG does not guarantee or accept any liability with respect to the correctness of information in this document. Copyright by AUDI AG.

Electronic manual gearbox control unit, gearbox speed sender, clutch travel sender, selector lever valves

J514	Electronic manual gearbox control unit
G38	Gearbox speed sender
G162	Clutch travel sender
N284	Selector lever valve 1
N285	Selector lever valve 2
N286	Selector lever valve 3
N287	Selector lever valve 4
U30	Connection -2- (0 V), in manual gearbox wiring harness

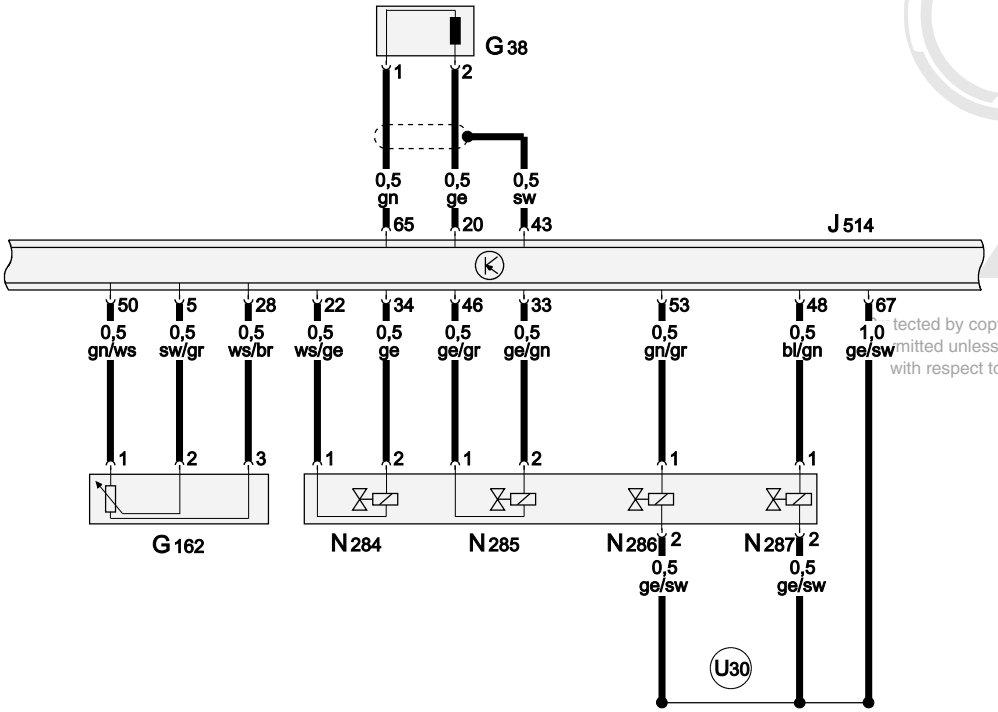

tected by copyright. Copying for private or commercial purposes, in part or in whole, is not mitted unless authorised by AUDI AG. AUDI AG does not guarantee or accept any liability with respect to the correctness of information in this document. Copyright by AUDI AG.

ws	=	white
sw	=	black
ro	=	red
br	=	brown
gn	=	green
bl	=	blue
gr	=	grey
li	=	purple
ge	=	yellow
or	=	orange
rs	=	pink

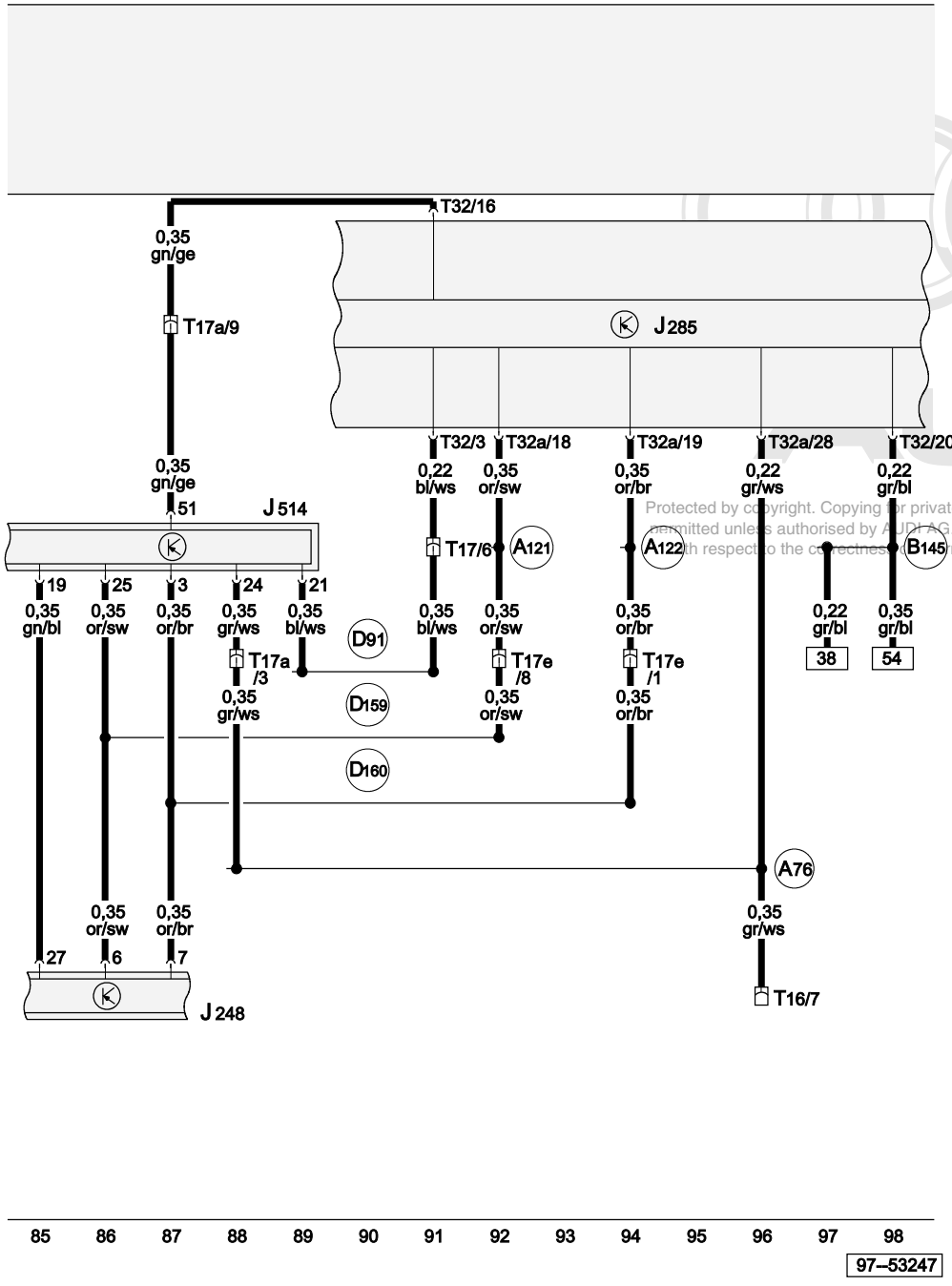

ws = white
sw = black
ro = red
br = brown
gn = green
bl = blue
gr = grey
li = purple
ge = yellow
or = orange
rs = pink

Diesel direct injection system control unit, control unit with display in dash panel insert, electronic manual gearbox control unit

J248	Diesel direct injection system control unit
J285	Control unit with display in dash panel insert
J514	Electronic manual gearbox control unit
T16	16-pin connector, diagnostic connector, black, near fuse box
T17	17-pin connector, brown, in footwell, front left
T17a	17-pin connector, red, in footwell, front left
T17e	17-pin connector, blue, in footwell, front left
T32	32-pin connector, blue, on dash panel insert
T32a	32-pin connector, green, on dash panel insert
A76	Connection (diagnosis wire K), in dash panel wiring harness
A121	Connection (high bus), in dash panel wiring harness
A122	Connection (low bus), in dash panel wiring harness
B145	Positive (+) connection (58b), in interior wiring harness
D91	Connection (speed signal), in engine compartment wiring harness
D159	Positive (+) connection (high bus), in interior wiring harness
D160	Positive (+) connection (low bus), in engine compartment wiring harness

Protected by copyright. Copying for private or commercial purposes, in part or in whole, is not permitted unless authorised by AUDI AG. AUDI AG does not guarantee or accept any liability with respect to the correctness of information in this document. Copyright by AUDI AG.

Air conditioner for 1.2 litre TDI engine, engine code ANY

From model year 2001

3-point relay carrier (in footwell)

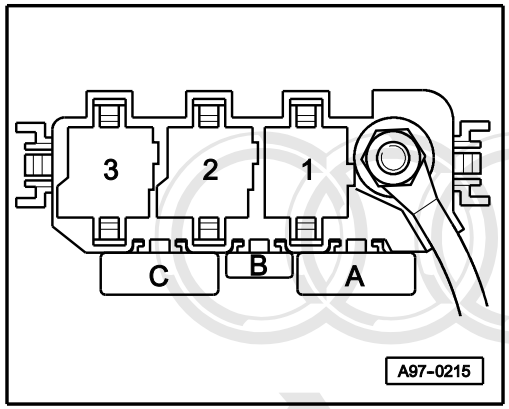

6+6-point relay carrier (in footwell)

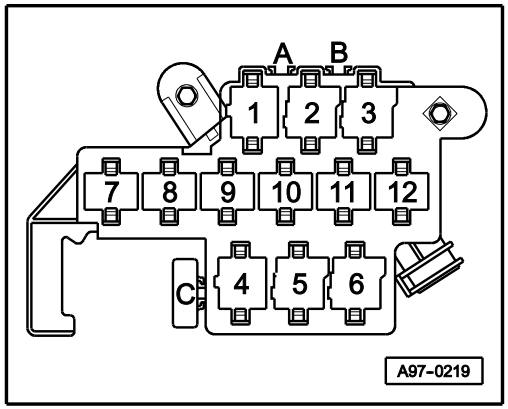

Position of relays:

2 **3** Automatic intermittent wash/wipe relay (J31)

9-point relay carrier (in dash pael)

Fuse box

Protected by copyright. Copying for private or commercial purposes, in part or in whole, is not permitted unless authorised by AUDI AG. AUDI AG does not guarantee or accept any liability with respect to the correctness of information in this document.

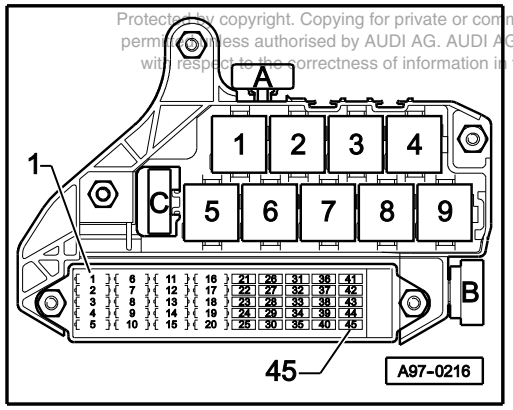

Position of fuses:

C - Radiator fan fuse (S205)

9 - X contact relief relay (J59)

Fuse colours

30 A – green
25 A – white
20 A – yellow
15 A – blue
10 A – red
7.5A – orange
5A – beige

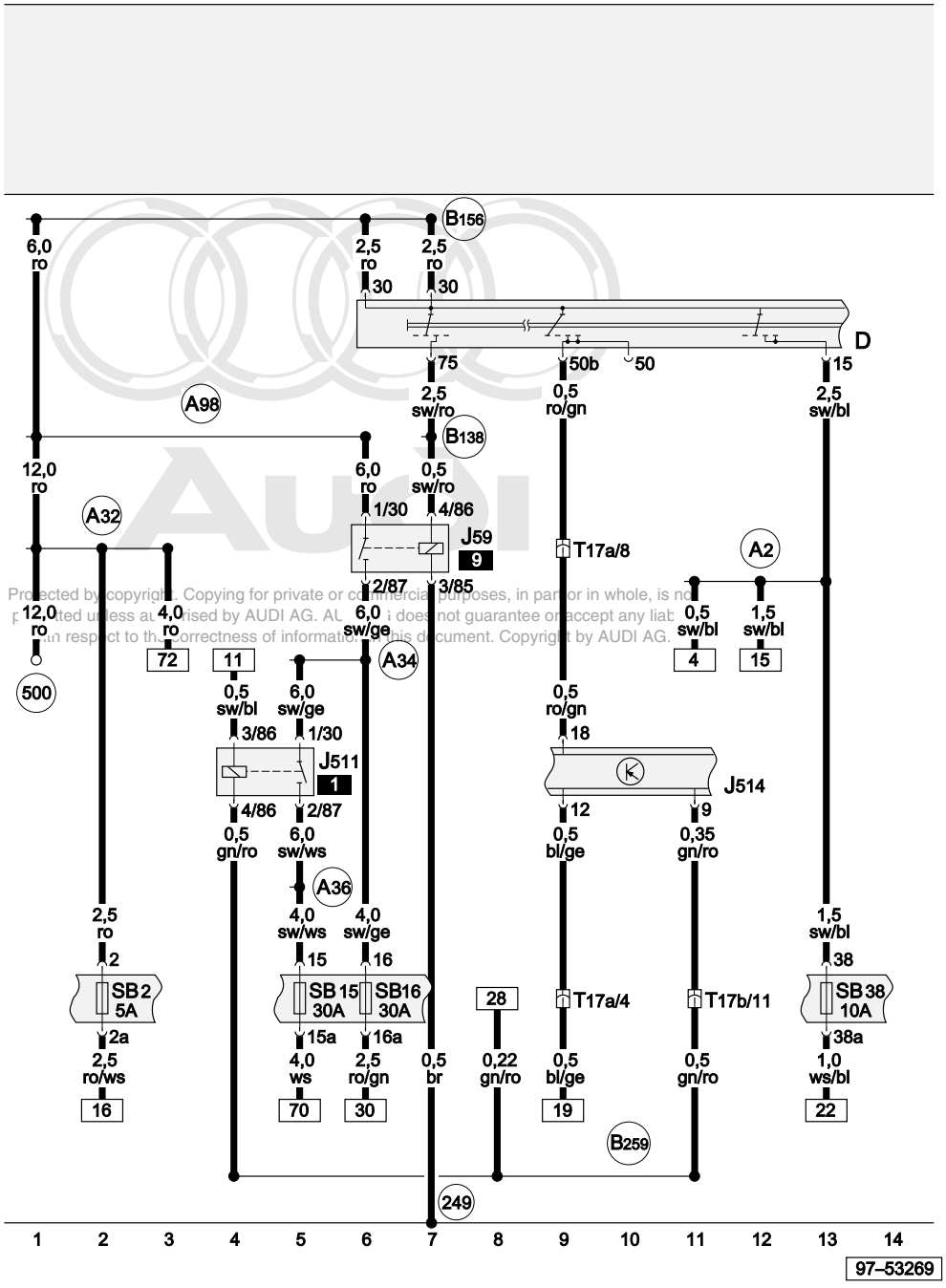

Protected by copyright. Copying for private or commercial purposes, in part or in whole, is not permitted unless authorised by AUDI AG. AUDI AG does not guarantee or accept any liability with respect to the correctness of information in this document. Copyright by AUDI AG.

ws = white
sw = black
ro = red
br = brown
gn = green
bl = blue
gr = grey
li = purple
ge = yellow
or = orange
rs = pink

Ignition/starter switch, X contact relief relay, consumer switch-off relay, fuse

D	Ignition/starter switch
J59	X contact relief relay
J511	Consumer switch-off relay
J514	Electronic manual gearbox control unit
SB2	Fuse -2- on fuse box
SB15	Fuse -15- on fuse box
SB16	Fuse -16- on fuse box
SB38	Fuse -38- on fuse box
T17a	17-pin connector, red, in footwell, front left
T17b	17-pin connector, white, in footwell, front left
249	Earth connection -2-, in interior wiring harness
500	Screw connection -1- (30), on relay plate
A2	Positive (+) connection (15), in dash panel wiring harness
A32	Positive (+) connection (30), in dash panel wiring harness
A34	Connection (75x), in dash panel wiring harness
A36	Connection (75a), in dash panel wiring harness
A98	Positive (+) connection -4- (30), in dash panel wiring harness
B138	Positive (+) connection (X), in interior wiring harness
B156	Positive (+) connection (30a), in interior wiring harness
B259	Connection (start/stop signal), in interior wiring harness

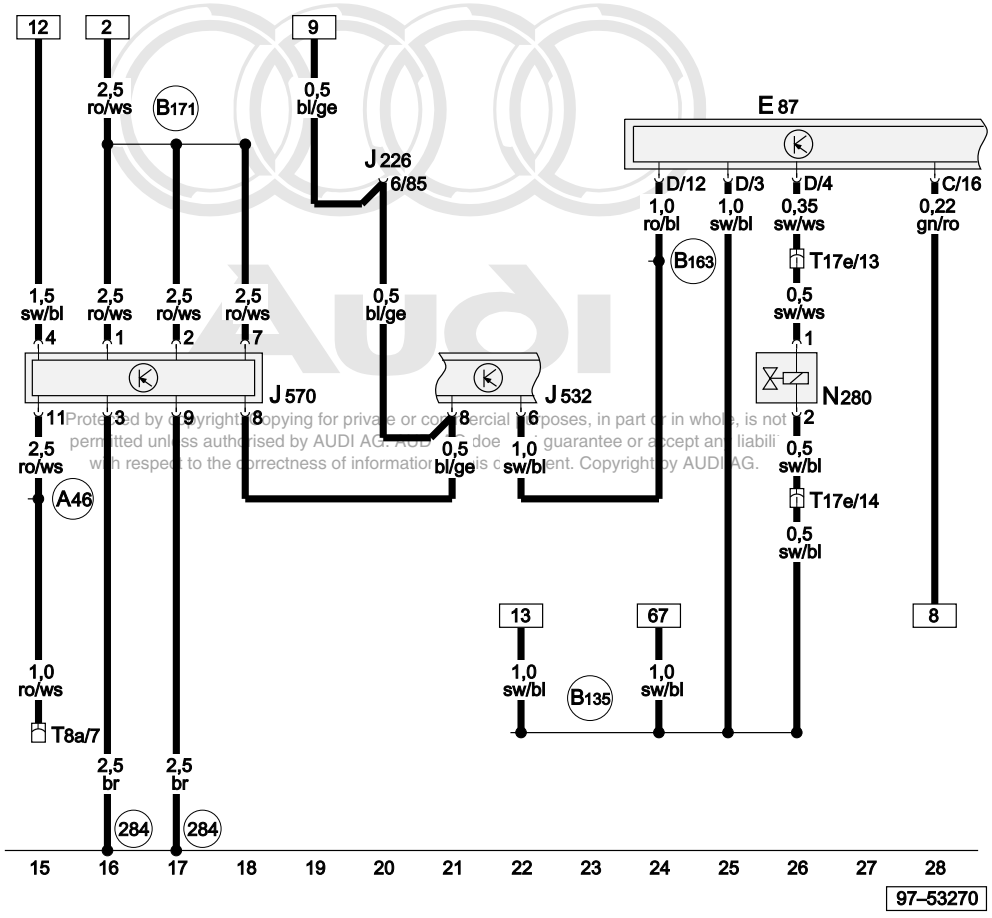

Protected by copyright. Copying for private or commercial purposes, in part or in whole, is not permitted unless authorised by AUDI AG. AUDI AG does not guarantee or accept any liability with respect to the correctness of information in this document. Copyright by AUDI AG.

Control and display unit for air conditioner/Climatronic, voltage stabiliser, compressor regulating valve for air conditioning system

E87	Control and display unit for air conditioner/Climatronic
J532	Voltage stabiliser
J226	Starter inhibitor and reversing light relay
J570	Voltage stabiliser 2
N280	Compressor regulating valve, air conditioning system
T8a	8-pin connector, black, radio connector III
T17e	17-pin connector, blue, in footwell, front left
284	Earth connection -6-, in interior wiring harness
A46	Positive (+) connection (30 - from radio), in dash panel wiring harness
B135	Connection -1- (15a), in interior wiring harness
B163	Positive (+) connection -1- (15), in interior wiring harness
B171	Positive (+) connection -3- (30), in interior wiring harness

ws	=	white
sw	=	black
ro	=	red
br	=	brown
gn	=	green
bl	=	blue
gr	=	grey
li	=	purple
ge	=	yellow
or	=	orange
rs	=	pink

Control and display unit for air conditioner/Climatronic, fresh air blower control unit

E87	Control and display unit for air conditioner/Climatronic
J31	Automatic intermittent wash/wipe relay
J126	Fresh air blower control unit
J285	Control unit with display in dash panel insert
T10f	10-pin connector, blue, connector point, A pillar, left
T32a	32-pin connector, green, on dash panel insert
V	Windscreen wiper motor
V2	Fresh air blower
179	Earth connection, in left headlight wiring harness
279	Earth connection -5-, in interior wiring harness
A76	Connection (diagnosis wire K), in dash panel wiring harness
B229	Connection (high bus), in interior wiring harness
B230	Connection (low bus), in interior wiring harness

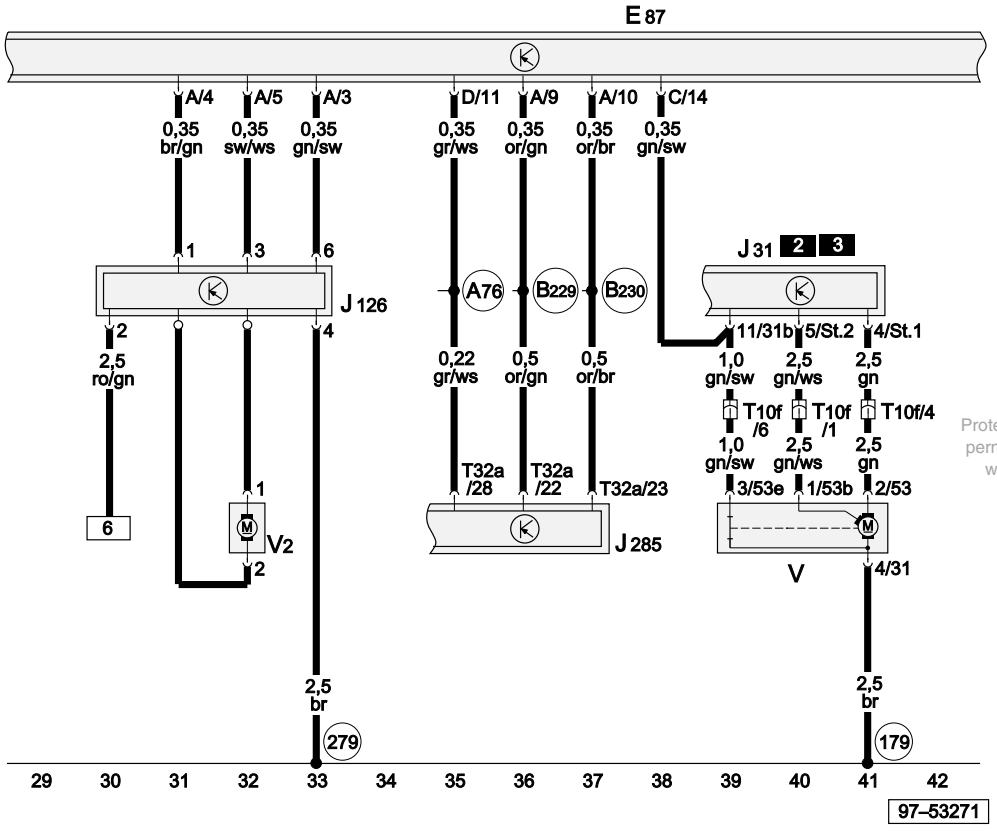

Protected by copyright. Copying for private or commercial purposes, in part or in whole, is not permitted unless authorised by AUDI AG. AUDI AG does not guarantee or accept any liability with respect to the correctness of information in this document. Copyright by AUDI AG.

ws	=	white
sw	=	black
ro	=	red
br	=	brown
gn	=	green
bl	=	blue
gr	=	grey
li	=	purple
ge	=	yellow
or	=	orange
rs	=	pink

Control and display unit for air conditioner/Climatronic, potentiometer, control motor

E87	Control and display unit for air conditioner/Climatronic
G92	Control motor potentiometer, temperature flap
G112	Control motor potentiometer, central flap
G135	Control motor potentiometer, defroster flap
G143	Control motor potentiometer, air recirculation flap
J248	Diesel direct injection system control unit
T17e	17-pin connector, blue, in footwell, front left
V68	Temperature flap control motor
V70	Central flap control motor
V107	Defroster flap control motor
V113	Air recirculation flap control motor
97	Earth connection -1-, in air conditioner wiring harness
L31	Connection (5V), in air conditioner wiring harness

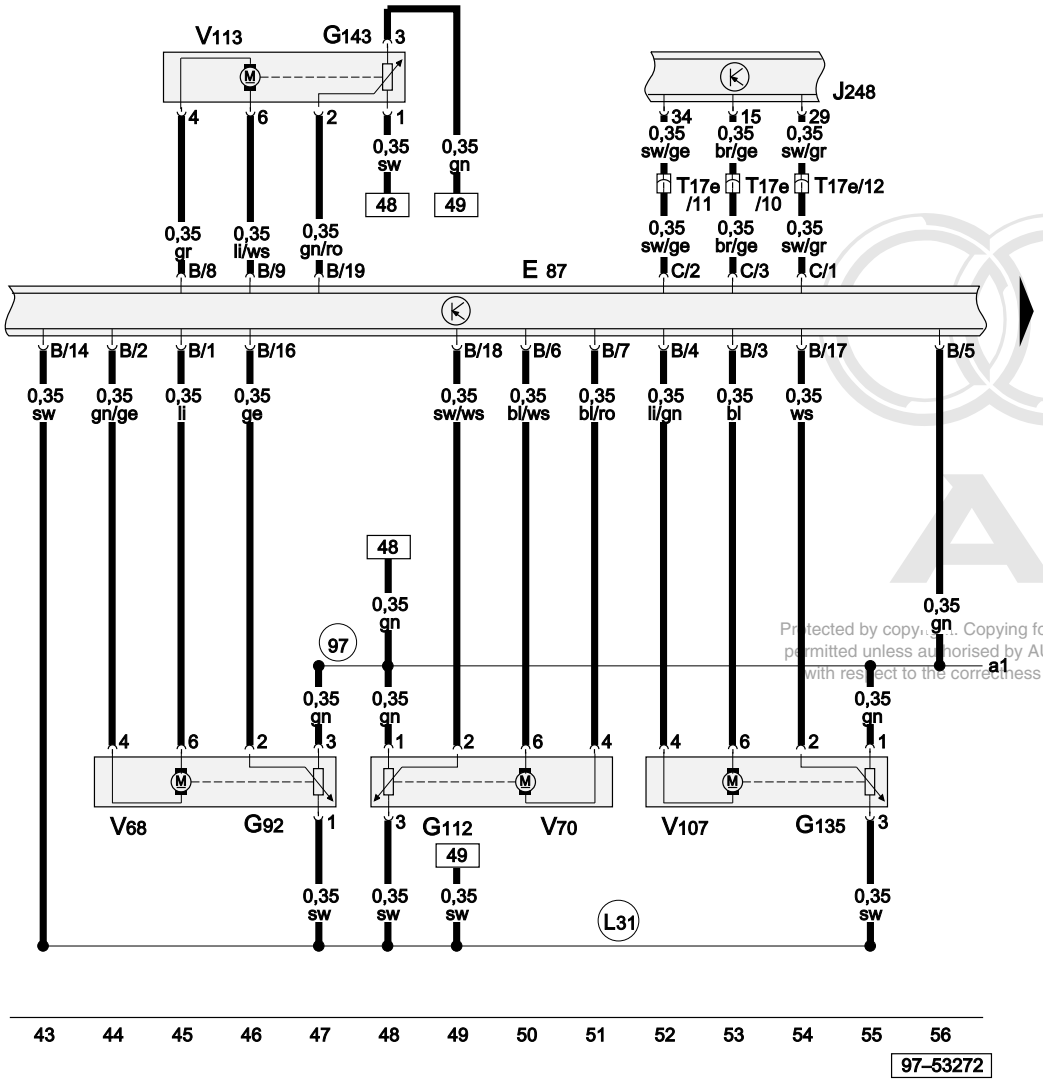

ws	=	white
sw	=	black
ro	=	red
br	=	brown
gn	=	green
bl	=	blue
gr	=	grey
li	=	purple
ge	=	yellow
or	=	orange
rs	=	pink

Protected by copyright. Copying for private or commercial purposes, in part or in whole, is not permitted unless authorised by AUDI AG. AUDI AG does not guarantee or accept any liability with respect to the correctness of information in this document. Copyright by AUDI AG.

Control and display unit for air conditioner/Climatronic, air conditioner pressure switch, ambient temperature sensor

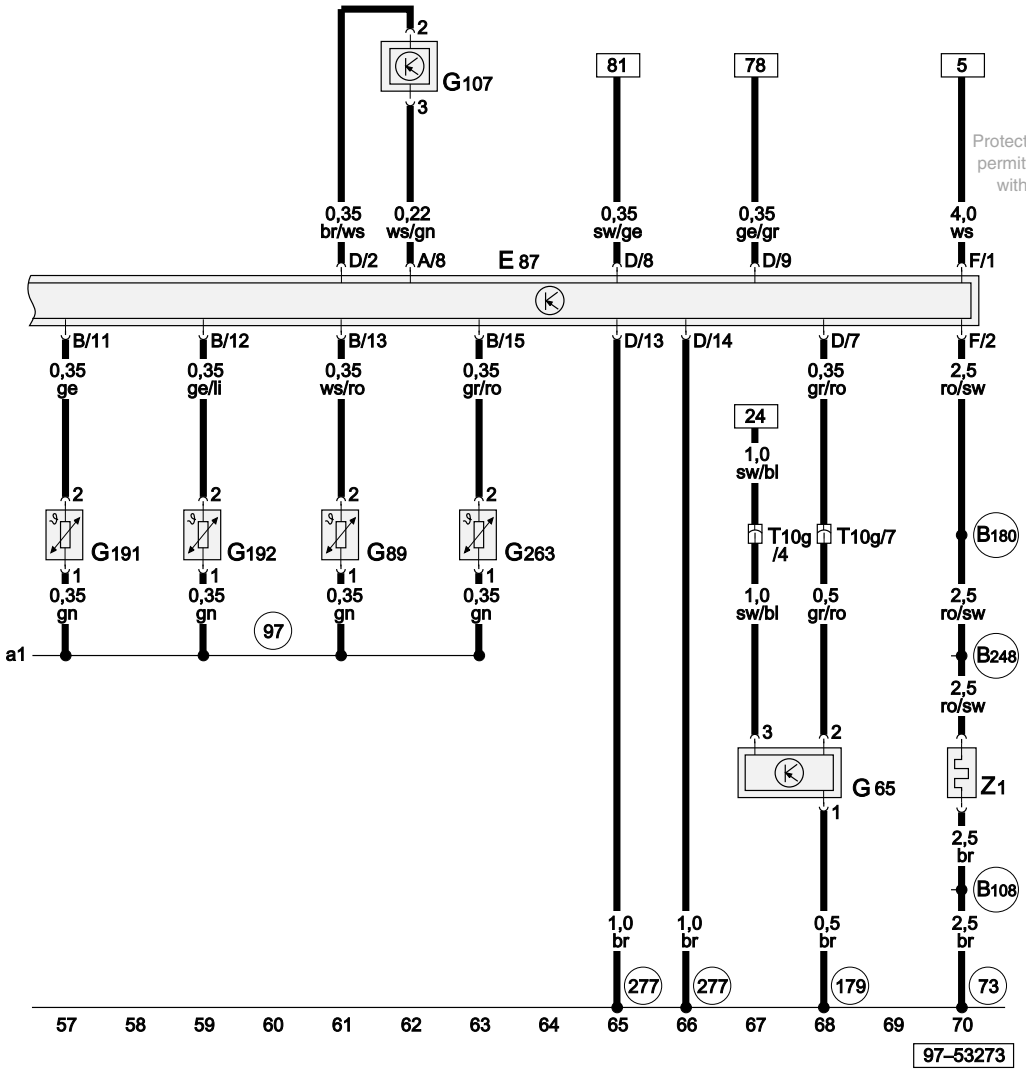

ws = white
sw = black
ro = red
br = brown
gn = green
bl = blue
gr = grey
li = purple
ge = yellow
or = orange
rs = pink

E87 Control and display unit for air conditioner/Climatronic
G65 High pressure sender
G89 Fresh air intake duct temperature sensor
G107 Sunlight penetration photosensor
G191 Vent temperature sender, centre
G192 Vent temperature sender, footwell
G263 Evaporator outflow temperature sender
T10g 10-pin connector, grey, connector point, A pillar, left
Z1 Heated rear window

73 Earth point, rear roof rail

97 Earth connection -1-, in air conditioner wiring harness

179 Earth connection, in left headlight wiring harness

277 Earth connection -3-, in interior wiring harness

B108 Earth connection, in interior wiring harness, rear right

B180 Connection (heated rear window), in interior wiring harness

B248 Connection -2- (heated rear window), in interior wiring harness

Protected by copyright. Copying for private or commercial purposes, in part or in whole, is not permitted unless authorised by AUDI AG. AUDI AG does not guarantee or accept any liability with respect to the correctness of information in this document. Copyright by AUDI AG.

Radiator fan thermo-switches, radiator fan control unit

C	Alternator
F18	Radiator fan thermo-switch
F54	Radiator fan thermo-switch
J293	Radiator fan control unit
S205	Radiator fan fuse -2- (30)
T10g	10-pin connector, grey, connector point, A pillar, left
T10h	10-pin connector, white, connector point, A pillar, left
T17e	17-pin connector, blue, in footwell, front left
V7	Radiator fan
44	Earth point, lower part of left A pillar
119	Earth connection -1-, in headlight wiring harness
179	Earth connection, in left headlight wiring harness
B177	Connection (61), in interior wiring harness
C35	Connection (air conditioner), in headlight / air conditioner wiring harness

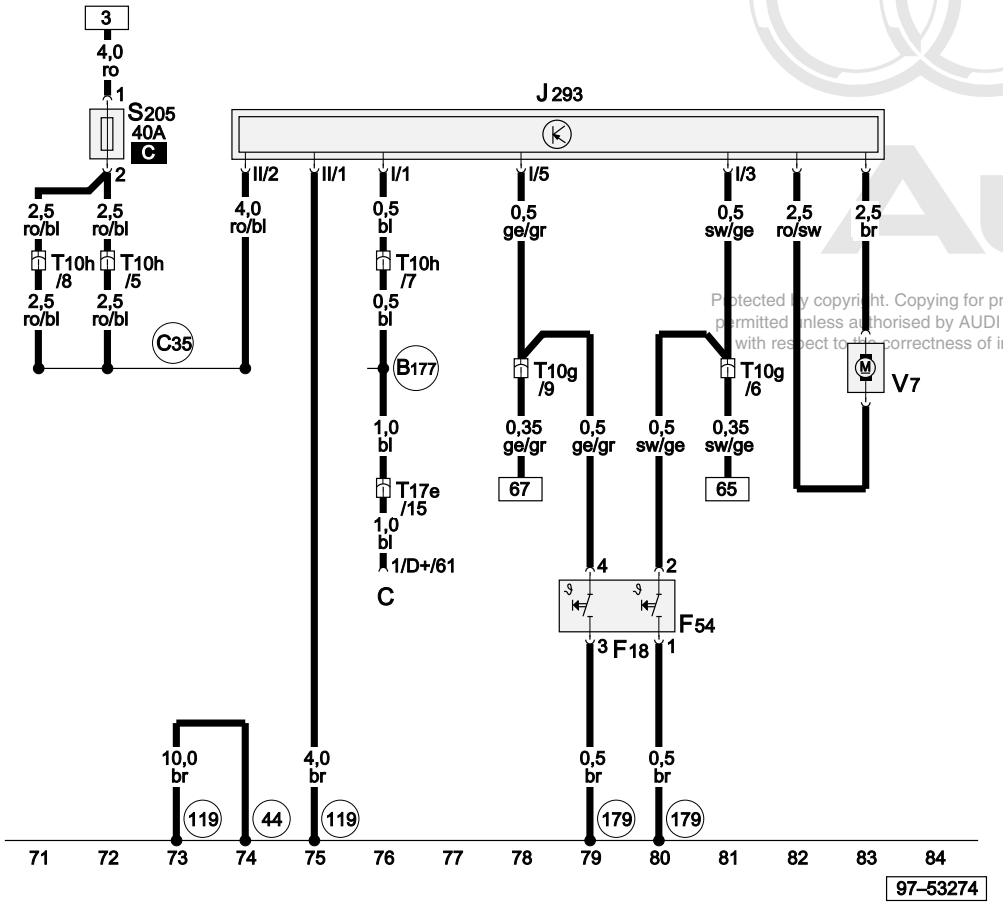

ws	=	white
sw	=	black
ro	=	red
br	=	brown
gn	=	green
bl	=	blue
gr	=	grey
li	=	purple
ge	=	yellow
or	=	orange
rs	=	pink

Protected by copyright. Copying for private or commercial purposes, in part or in whole, is not permitted unless authorised by AUDI AG. AUDI AG does not guarantee or accept any liability with respect to the correctness of information in this document. Copyright by AUDI AG.

Driver information system

From model year 2001

Protected by copyright. Copying for private or commercial purposes, in part or in whole, is not permitted without the prior written consent of AUDI AG. AUDI AG does not guarantee or accept any liability with respect to the correctness of information in this document. Copyright by AUDI AG.

Main fuse

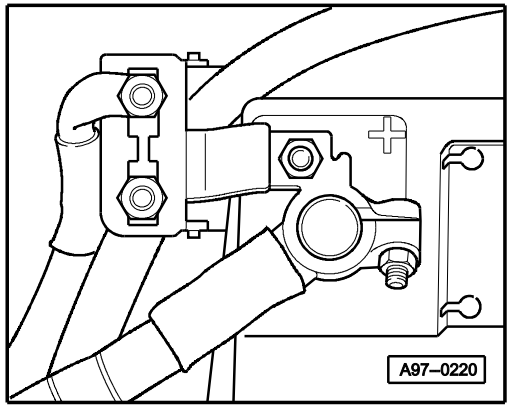

3-point relay carrier (in footwell)

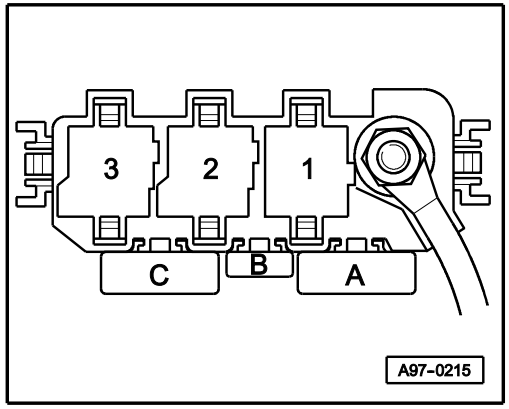

9-point relay carrier (in dash panel)

Fuse box

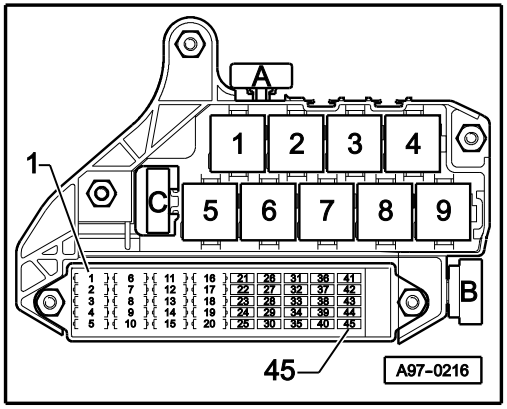

6 - Bulb check warning unit (K41)

7 - Bulb check warning unit (K41)

Fuse colours

30 A – green
25 A – white
20 A – yellow
15 A – blue
10 A – red
7.5A – orange
5A – beige

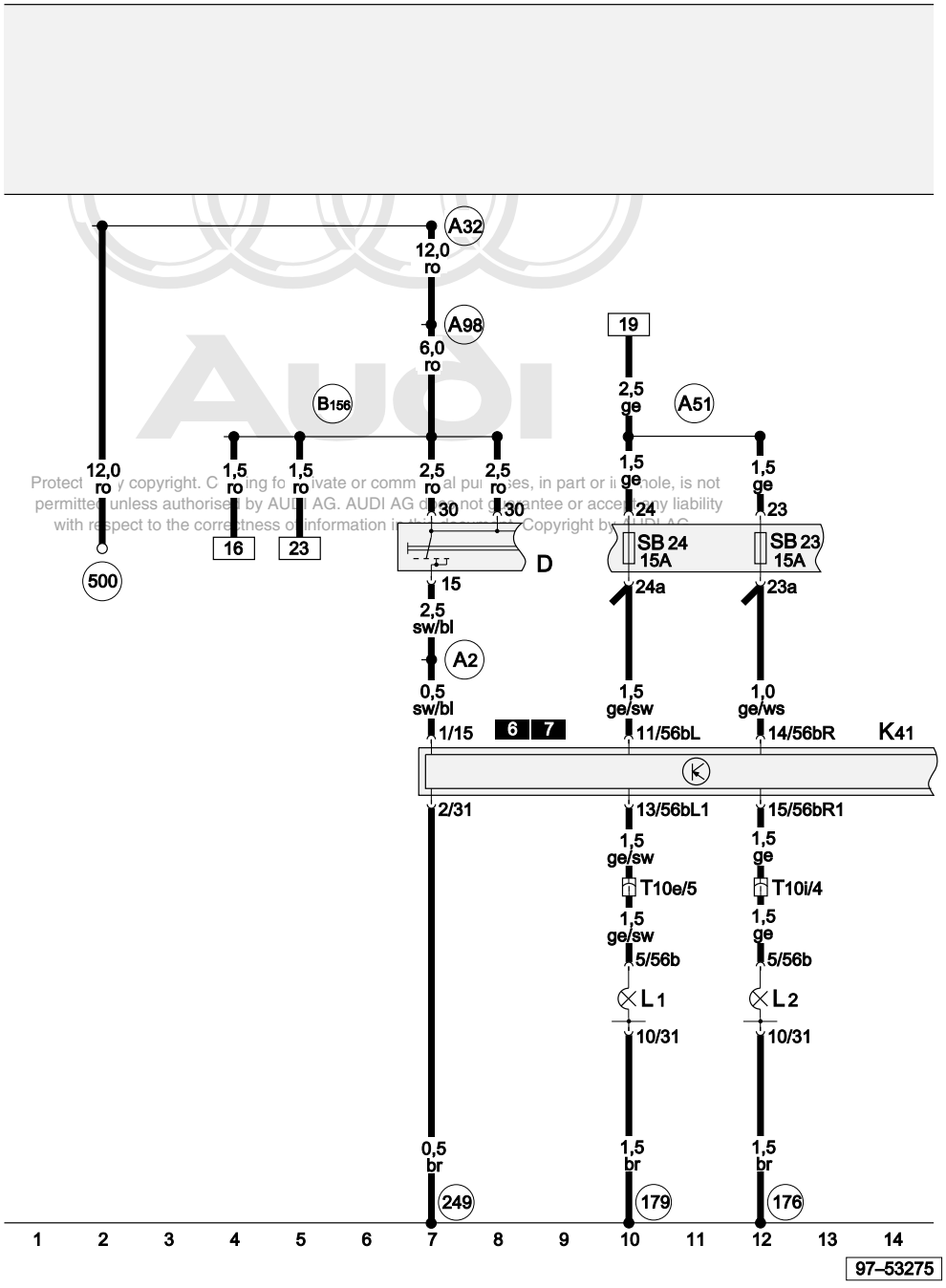

Protect by copyright. Copying for private or commercial purposes, in part or in whole, is not permitted unless authorised by AUDI AG. AUDI AG does not guarantee or accept any liability with respect to the correctness of information in this document. Copyright by AUDI AG

ws = white
sw = black
ro = red
br = brown
gn = green
bl = blue
gr = grey
li = purple
ge = yellow
or = orange
rs = pink

Dipped beam headlights

D	Ignition/starter switch
K41	Bulb check warning unit
L1	Twin filament bulb/sealed beam insert, left
L2	Twin filament bulb/sealed beam insert, right
SB23	Fuse -23- on fuse box
SB24	Fuse -24- on fuse box
T10e	10-pin connector, red, connector point, A pillar, left
T10i	10-pin connector, black, connector point, A pillar, right
500	Screw connection -1- (30), on relay plate
176	Earth connection, in right headlight wiring harness
179	Earth connection, in left headlight wiring harness
249	Earth connection -2-, in interior wiring harness
A2	Positive (+) connection (15), in dash panel wiring harness
A32	Positive (+) connection (30), in dash panel wiring harness
A51	Connection (56), in dash panel wiring harness
A98	Positive (+) connection -4- (30), in dash panel wiring harness
B156	Positive (+) connection (30a), in interior wiring harness

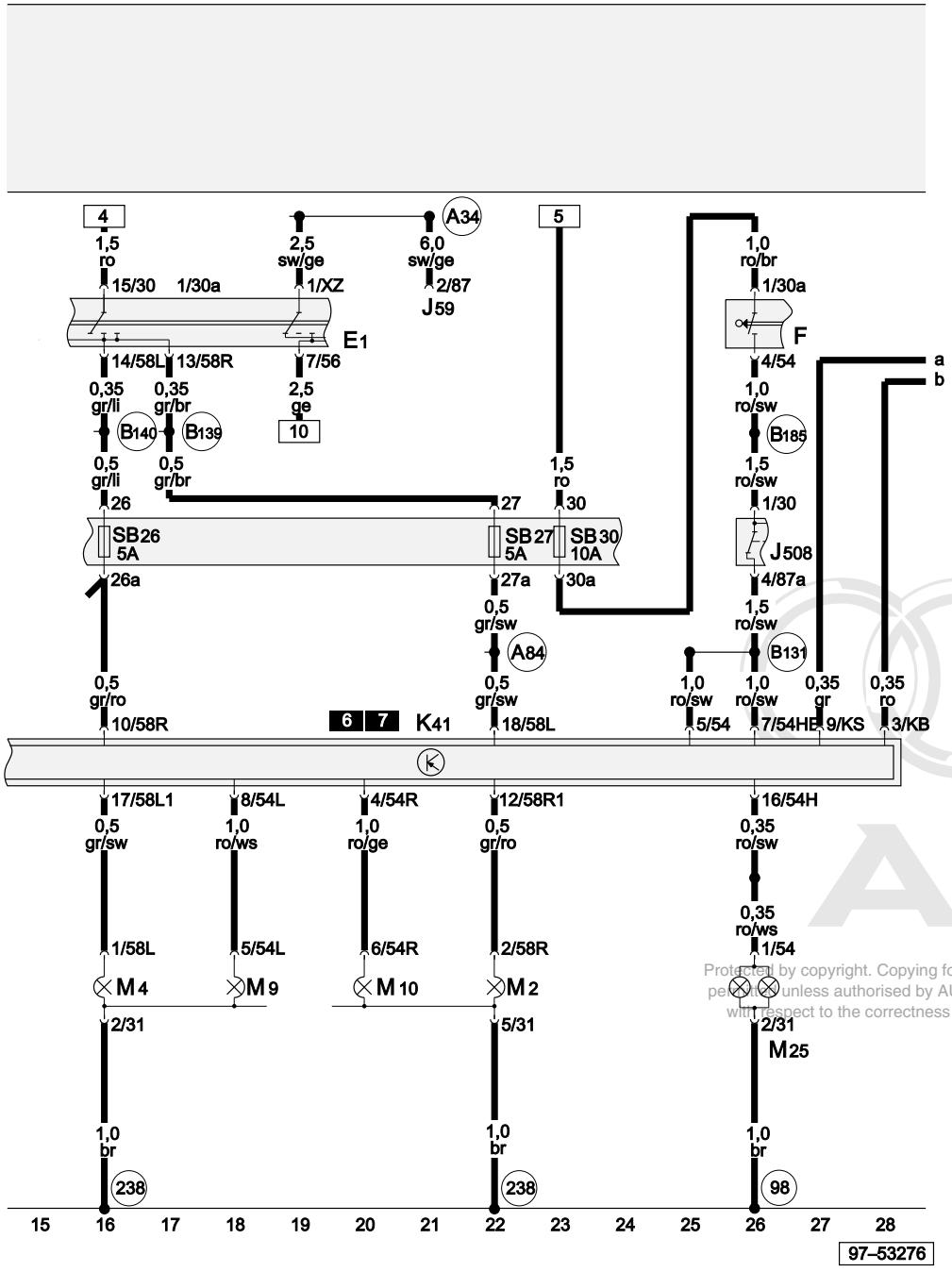

Lighting switch, tail lights, brake lights

E1	Lighting switch
F	Brake light switch
J59	X contact relief relay
J508	Brake light suppression relay
K41	Bulb check warning unit
M2	Tail light bulb, right
M4	Tail light bulb, left
M9	Brake light bulb, left
M10	Brake light bulb, right
M25	High level brake light bulb
SB26	Fuse -26- on fuse box
SB27	Fuse -27- on fuse box
SB30	Fuse -30- on fuse box
98	Earth connection, in tailgate/boot lid wiring harness
238	Earth connection -1-, in interior wiring harness
A34	Connection (75x), in dash panel wiring harness
A84	Connection (58L), in dash panel wiring harness
B131	Connection (54), in interior wiring harness
B139	Connection (PLL), in interior wiring harness
B140	Connection (PLR), in interior wiring harness
B185	Connection -2- (54), in interior wiring harness

Protected by copyright. Copying for private or commercial purposes, in part or in whole, is not permitted unless authorised by AUDI AG. AUDI AG does not guarantee or accept any liability with respect to the correctness of information in this document. Copyright by AUDI AG.

ws	=	white
sw	=	black
ro	=	red
br	=	brown
gn	=	green
bl	=	blue
gr	=	grey
li	=	purple
ge	=	yellow
or	=	orange
rs	=	pink

Function selection switch, control unit with display in dash panel insert, radio

E91	Function selection switch
E92	Reset button
F77	Windscreen washer fluid warning contact
J285	Control unit with display in dash panel insert
R	Radio
T10e	10-pin connector, red, connector point, A pillar, left
T20	20-pin connector, black, radio connector I
T32b	32-pin connector, grey, on dash panel insert
249	Earth connection -2-, in interior wiring harness
269	Earth connection (sender earth) -1-, in dash panel wiring harness
A178	Connection (infotainment CAN bus, high), in dash panel wiring harness
A179	Connection (infotainment CAN bus, low), in dash panel wiring harness
*	Radio generation I
**	Radio generation II

Protected by copyright. Copying for private or commercial purposes, in part or in whole, is not permitted unless authorised by AUDI AG. AUDI AG does not guarantee or accept any liability with respect to the correctness and completeness of this (infotainment CAN bus) document.

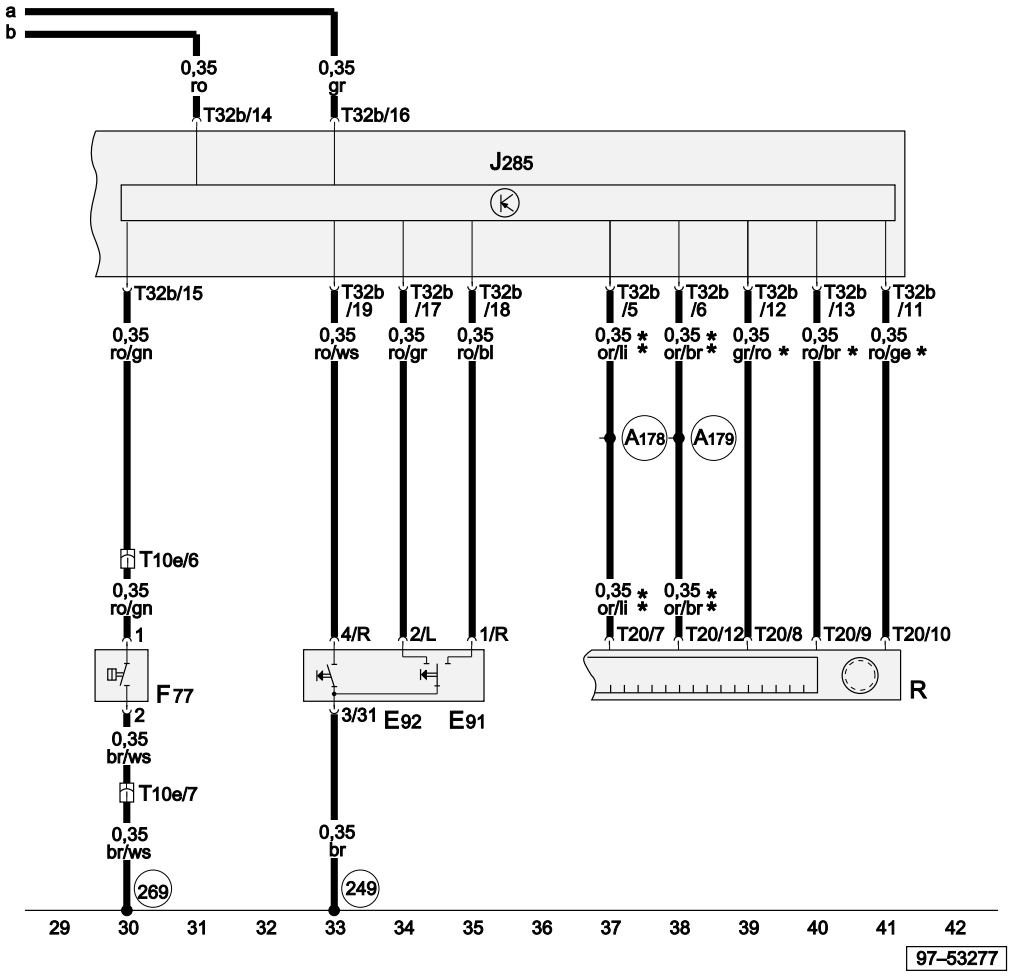

ws	=	white
sw	=	black
ro	=	red
br	=	brown
gn	=	green
bl	=	blue
gr	=	grey
li	=	purple
ge	=	yellow
or	=	orange
rs	=	pink

Radio sound systems (radio generation II)

- Chorus
- Concert
- Symphony

From model year 2001

Main fuse

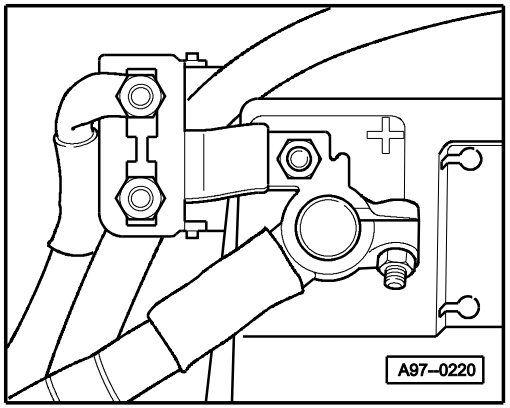

3-point relay carrier (in footwell)

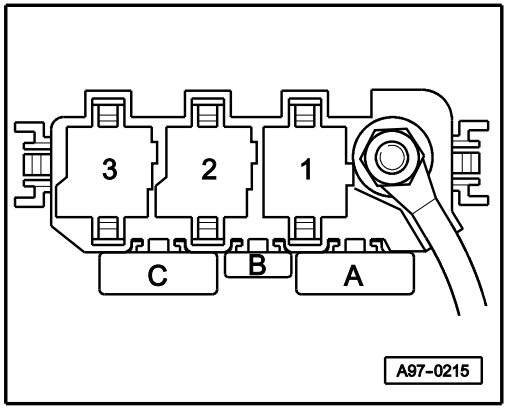

9-point relay carrier (in dash panel)
Fuse box

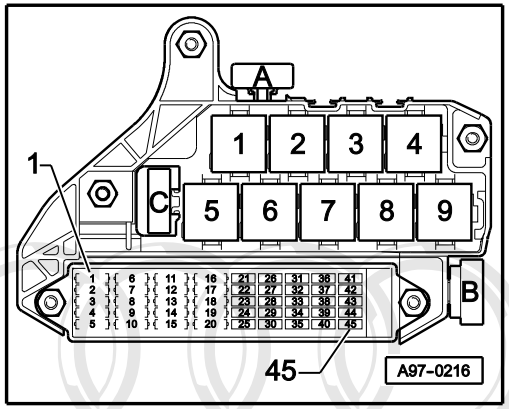

Fuse colours

30 A - green
25 A - white
20 A - yellow
15 A - blue
10 A - red
7.5 A - orange
5 A - beige

Protected by copyright. Copying for private or commercial purposes, in part or in whole, is not permitted unless authorised by AUDI AG. AUDI AG does not guarantee or accept any liability with respect to the correctness of information in this document. Copyright by AUDI AG.

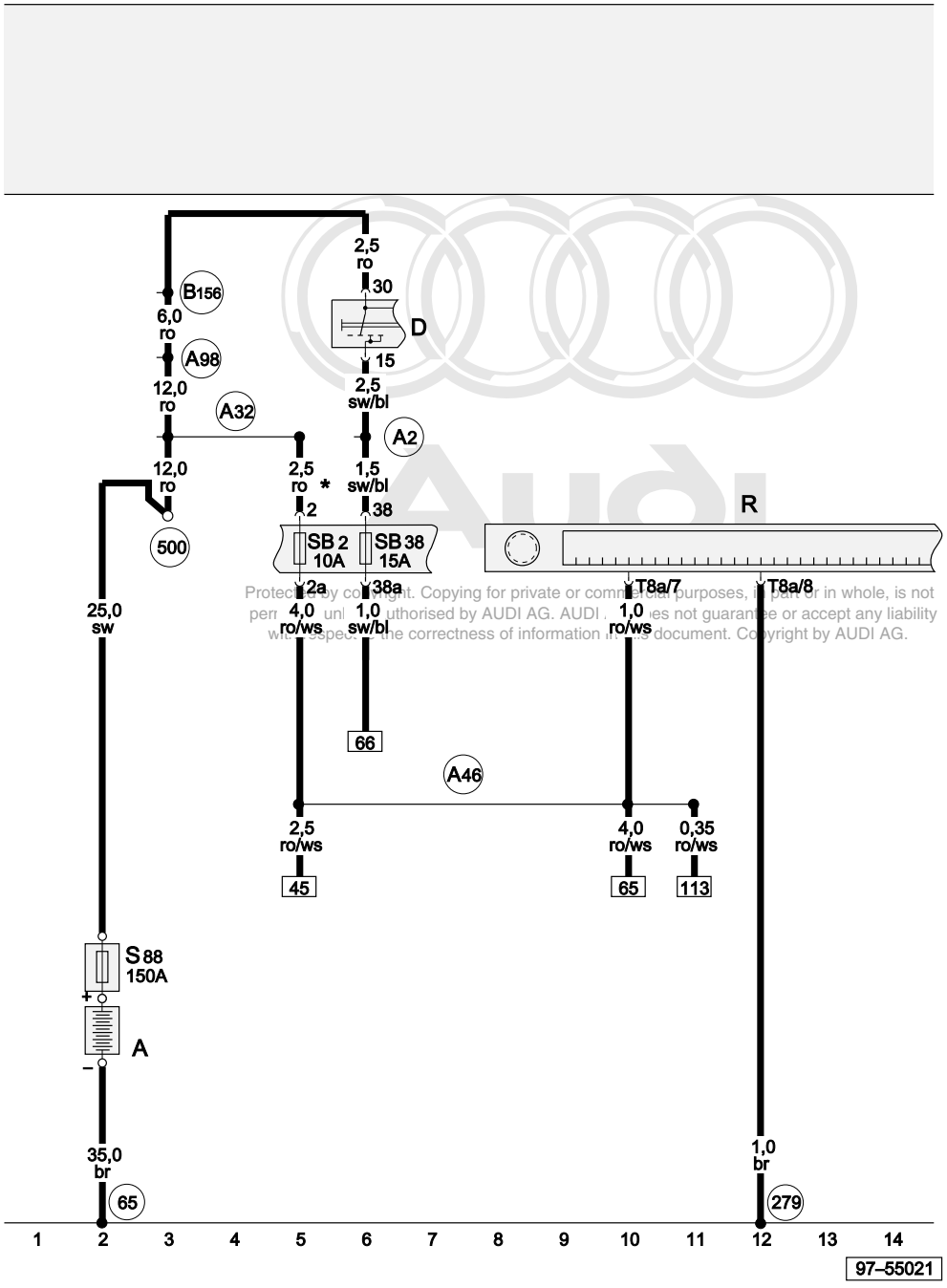

Protected by copyright. Copying for private or commercial purposes, in part or in whole, is not permitted unless authorised by AUDI AG. AUDI AG does not guarantee or accept any liability with respect to the correctness of information in this document. Copyright by AUDI AG.

ws = white
sw = black
ro = red
br = brown
gn = green
bl = blue
gr = grey
li = purple
ge = yellow
or = orange
rs = pink

Voltage supply

A	Battery
D	Ignition/starter switch
R	Radio
S88	Strip fuse
SB2	Fuse on fuse box
SB38	Fuse on fuse box
T8a	8-pin connector, black, radio connector III
65	Earth point, left longitudinal member, rear
279	Earth connection -5-, in interior wiring harness
500	Screw connection -1- (30), on relay plate
A2	Positive (+) connection (15), in dash panel wiring harness
A32	Positive (+) connection (30), in dash panel wiring harness
A46	Positive (+) connection (30 - from radio), in dash panel wiring harness
A98	Positive (+) connection -4- (30), in dash panel wiring harness
B156	Positive (+) connection (30a), in interior wiring harness
*	Models with 1.2 litre engine, see Current Flow Diagram No. 21 (Basic equipment for 1.2 litre TDI engine)

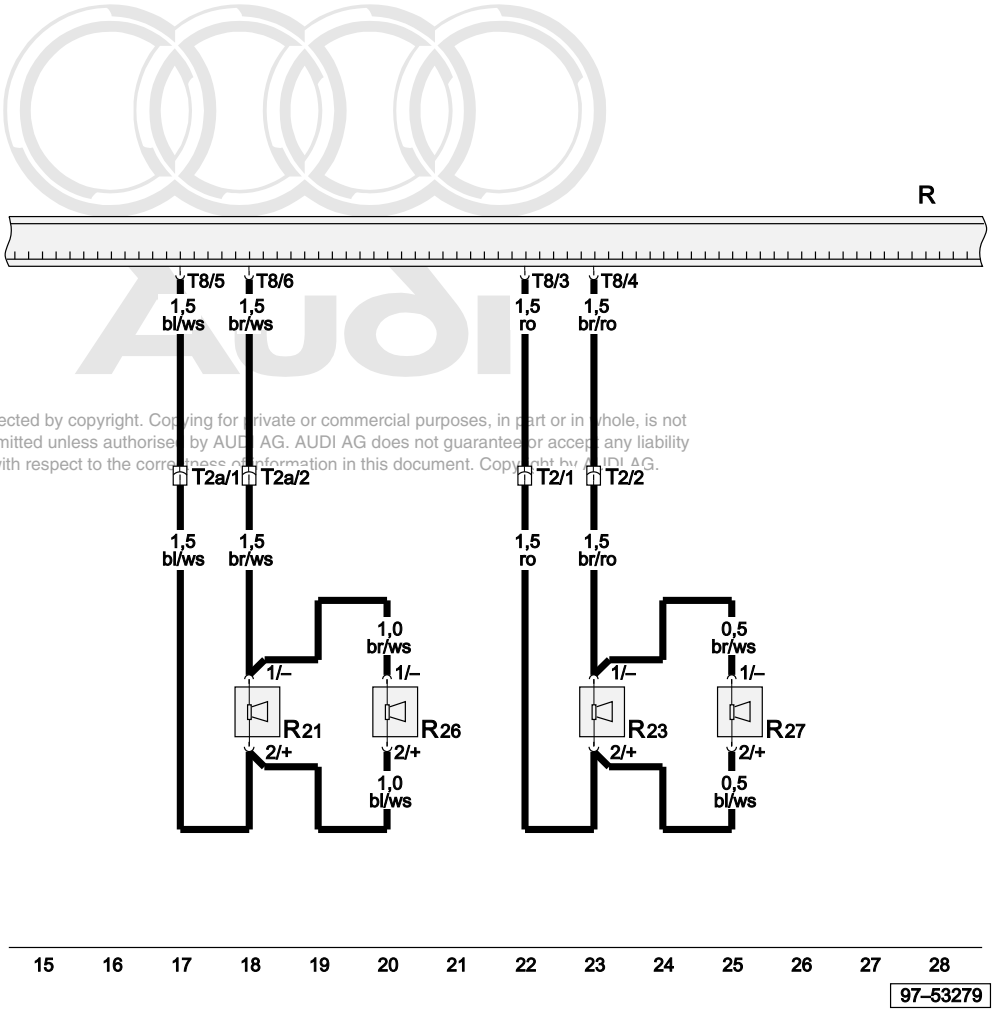

Protected by copyright. Copying for private or commercial purposes, in part or in whole, is not permitted unless authorised by AUDI AG. AUDI AG does not guarantee or accept any liability with respect to the correctness of information in this document. Copyright by AUDI AG.

Front loudspeakers

R	Radio
R21	Bass loudspeaker, front left
R23	Bass loudspeaker, front right
R26	Middle-high tone loudspeaker, front left
R27	Middle-high tone loudspeaker, front right
T2	2-pin connector, black, at A pillar, right
T2a	2-pin connector, black, at A pillar, left
T8	8-pin connector, brown, radio connector II

ws	=	white
sw	=	black
ro	=	red
br	=	brown
gn	=	green
bl	=	blue
gr	=	grey
li	=	purple
ge	=	yellow
or	=	orange
rs	=	pink

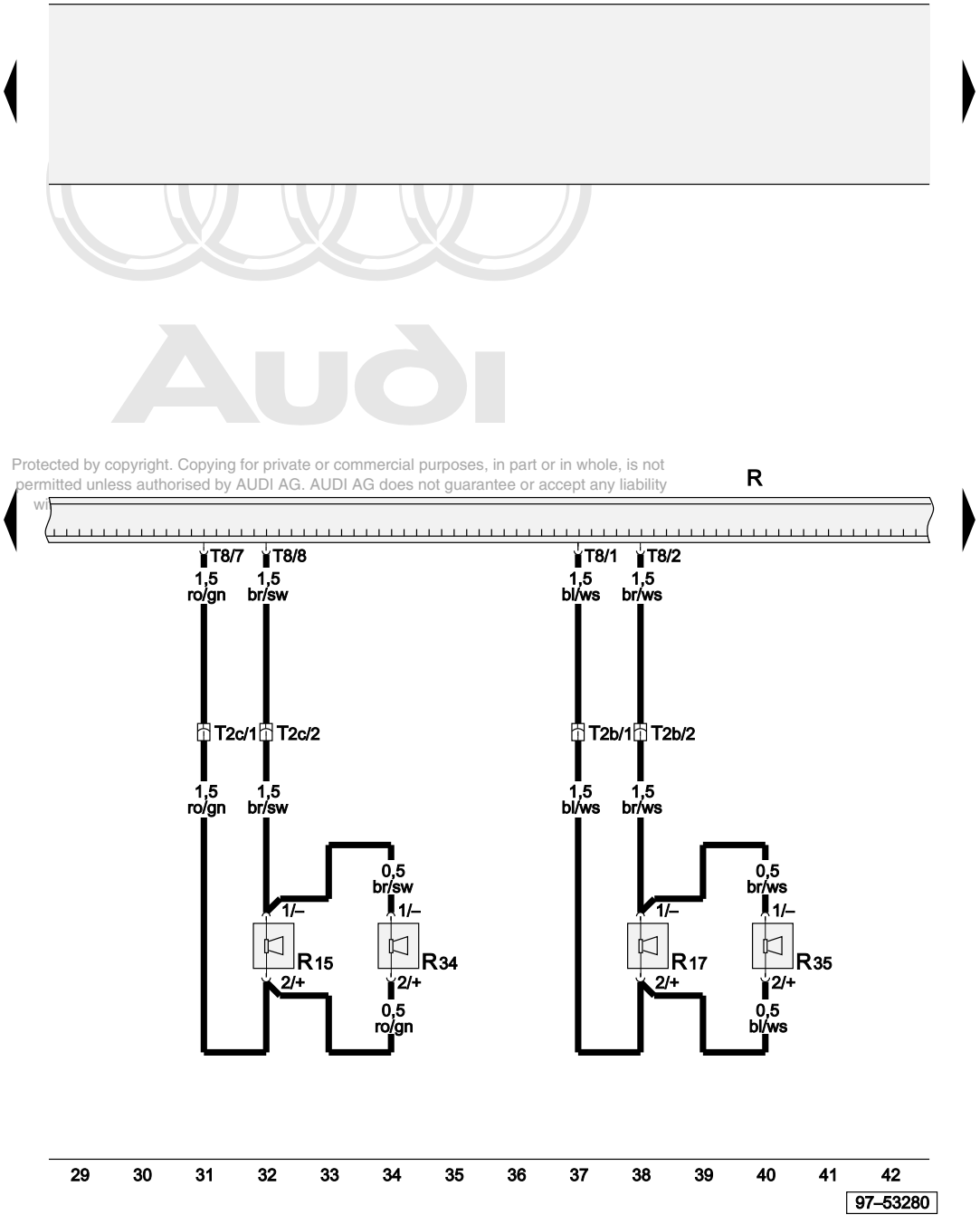

Protected by copyright. Copying for private or commercial purposes, in part or in whole, is not permitted unless authorised by AUDI AG. AUDI AG does not guarantee or accept any liability wi

Rear loudspeakers

R	Radio
R15	Bass loudspeaker, rear left
R17	Bass loudspeaker, rear right
R34	Middle-treble tone loudspeaker, rear left
R35	Middle-treble tone loudspeaker, rear right
T2b	2-pin connector, black, at B pillar, right
T2c	2-pin connector, black, at B pillar, left
T8	8-pin connector, brown, radio connector II

ws	=	white
sw	=	black
ro	=	red
br	=	brown
gn	=	green
bl	=	blue
gr	=	grey
li	=	purple
ge	=	yellow
or	=	orange
rs	=	pink

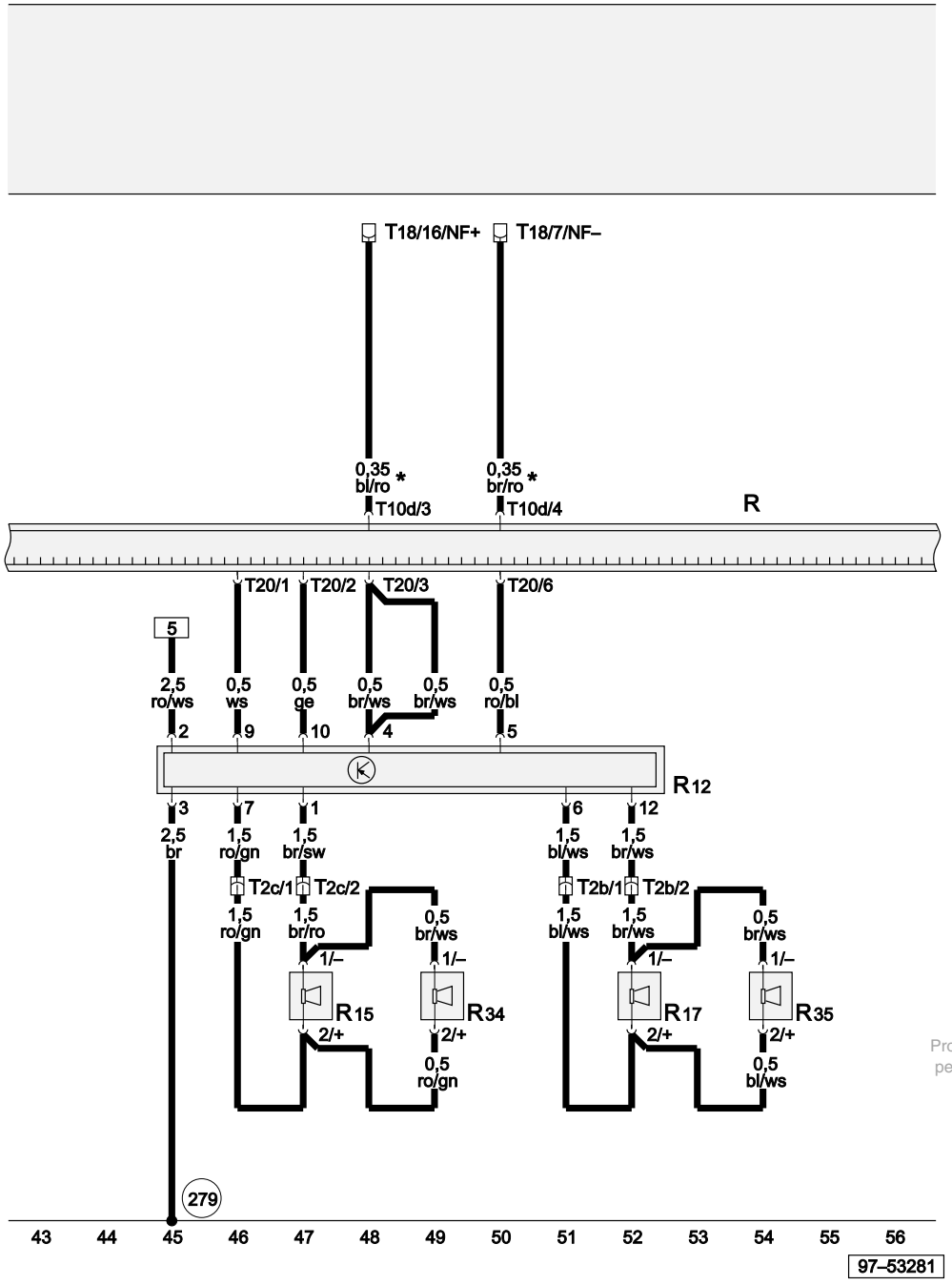

Active loudspeakers, rear

R	Radio
R12	Amplifier
R15	Bass loudspeaker, rear left
R17	Bass loudspeaker, rear right
R34	Middle-treble tone loudspeaker, rear left
R35	Middle-treble tone loudspeaker, rear right
T2b	2-pin connector, black, at B pillar, right
T2c	2-pin connector, black, at B pillar, left
T10d	10-pin connector, red, radio connector IV
T18	18-pin connector, black, mobile phone interface, in front passenger's footwell
T20	20-pin connector, black, radio connector I
(279)	Earth connection -5-, in interior wiring harness
*	Only models with provision for mobile phone

ws = white
sw = black
ro = red
br = brown
gn = green
bl = blue
gr = grey
li = purple
ge = yellow
or = orange
rs = pink

Protected by copyright. Copying for private or commercial purposes, in part or in whole, is not permitted unless authorised by AUDI AG. AUDI AG does not guarantee or accept any liability with respect to the correctness of information in this document. Copyright by AUDI AG.

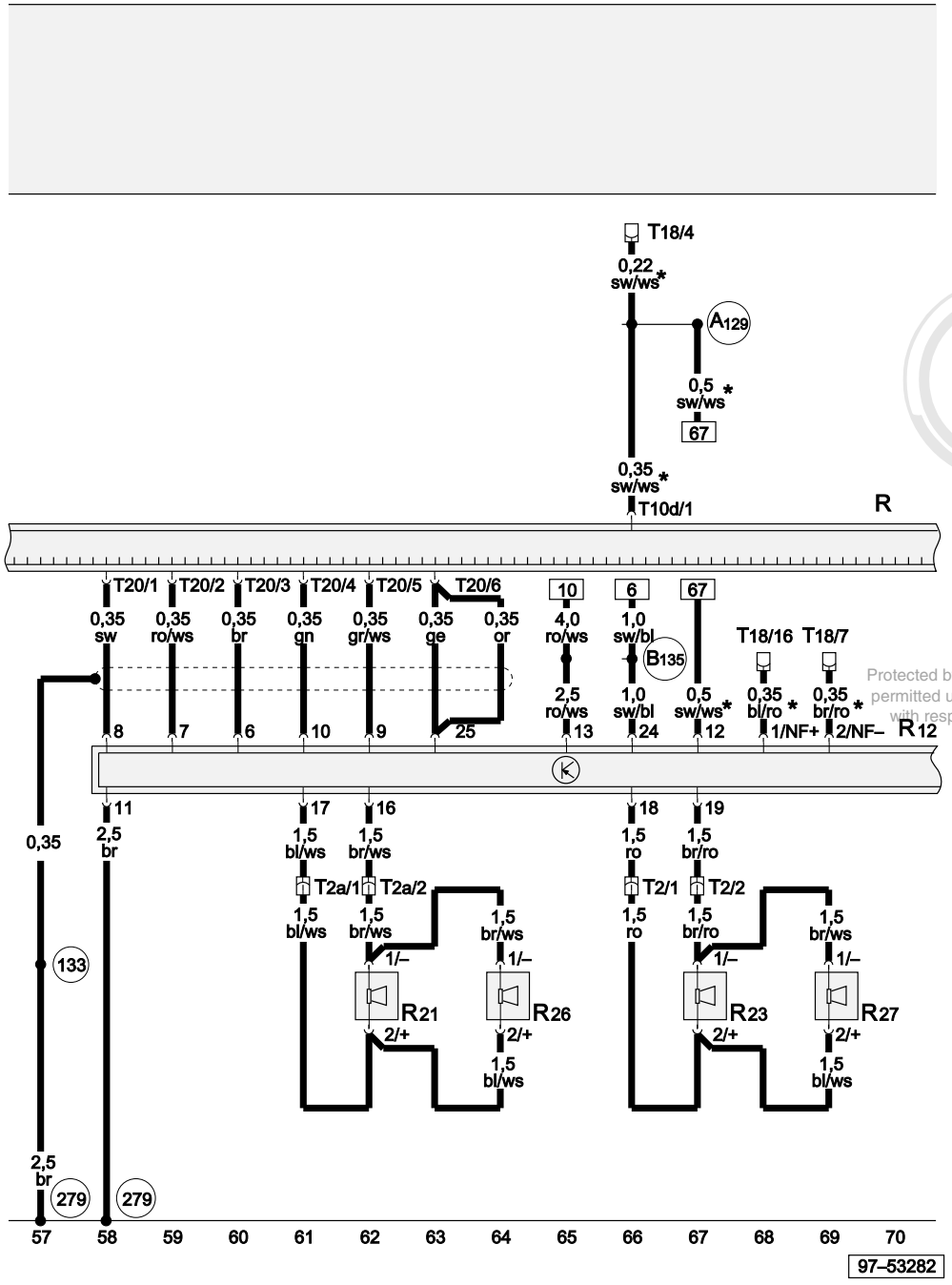

Bose loudspeakers, front

R	Radio
R12	Amplifier
R21	Bass loudspeaker, front left
R23	Bass loudspeaker, front right
R26	Middle-high tone loudspeaker, front left
R27	Middle-high tone loudspeaker, front right
T2	2-pin connector, black, at A pillar, right
T2a	2-pin connector, black, at A pillar, left
T10d	10-pin connector, red, radio connector IV
T18	18-pin connector, black, mobile phone interface, in front passenger's footwell
T20	20-pin connector, black, radio connector I
133	Earth connection, in loudspeaker wiring harness
279	Earth connection -5-, in interior wiring harness
A129	Connection (muting), in dash panel wiring harness
B135	Connection -1- (15a), in interior wiring harness
*	Only models with provision for mobile phone

Protected by copyright. Copying for private or commercial purposes, in part or in whole, is not permitted unless authorised by AUDI AG. AUDI AG does not guarantee or accept any liability with respect to the correctness of information in this document. Copyright by AUDI AG.

ws	=	white
sw	=	black
ro	=	red
br	=	brown
gn	=	green
bl	=	blue
gr	=	grey
li	=	purple
ge	=	yellow
or	=	orange
rs	=	pink

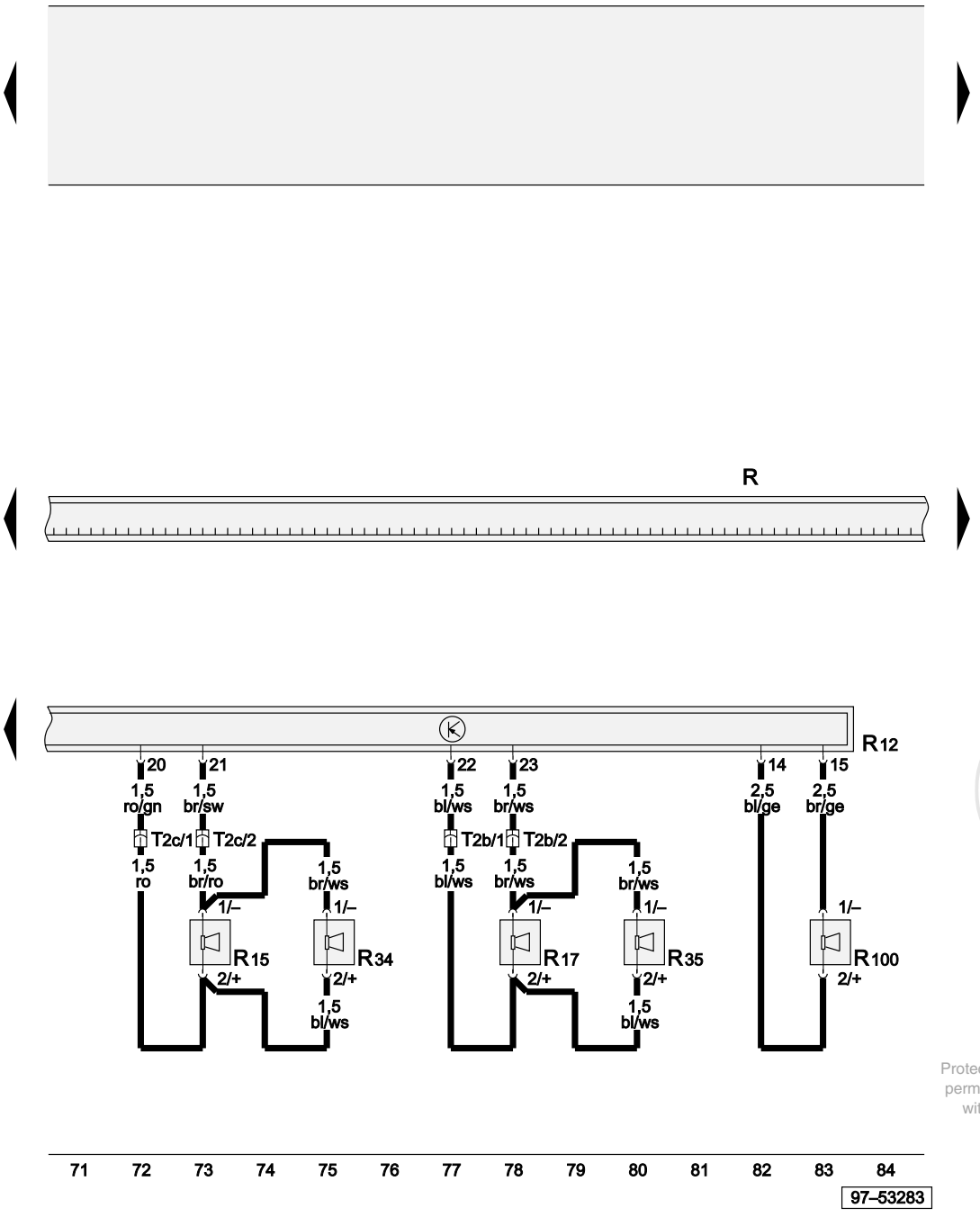

Bose loudspeakers, rear

R	Radio
R12	Amplifier
R15	Bass loudspeaker, rear left
R17	Bass loudspeaker, rear right
R34	Middle-treble tone loudspeaker, rear left
R35	Middle-treble tone loudspeaker, rear right
R100	Bass loudspeaker (subwoofer), in luggage compartment, in intermediate floor panel
T2b	2-pin connector, black, at B pillar, right
T2c	2-pin connector, black, at B pillar, left

ws	=	white
sw	=	black
ro	=	red
br	=	brown
gn	=	green
bl	=	blue
gr	=	grey
li	=	purple
ge	=	yellow
or	=	orange
rs	=	pink

Protected by copyright. Copying for private or commercial purposes, in part or in whole, is not permitted unless authorised by AUDI AG. AUDI AG does not guarantee or accept any liability with respect to the correctness of information in this document. Copyright by AUDI AG.

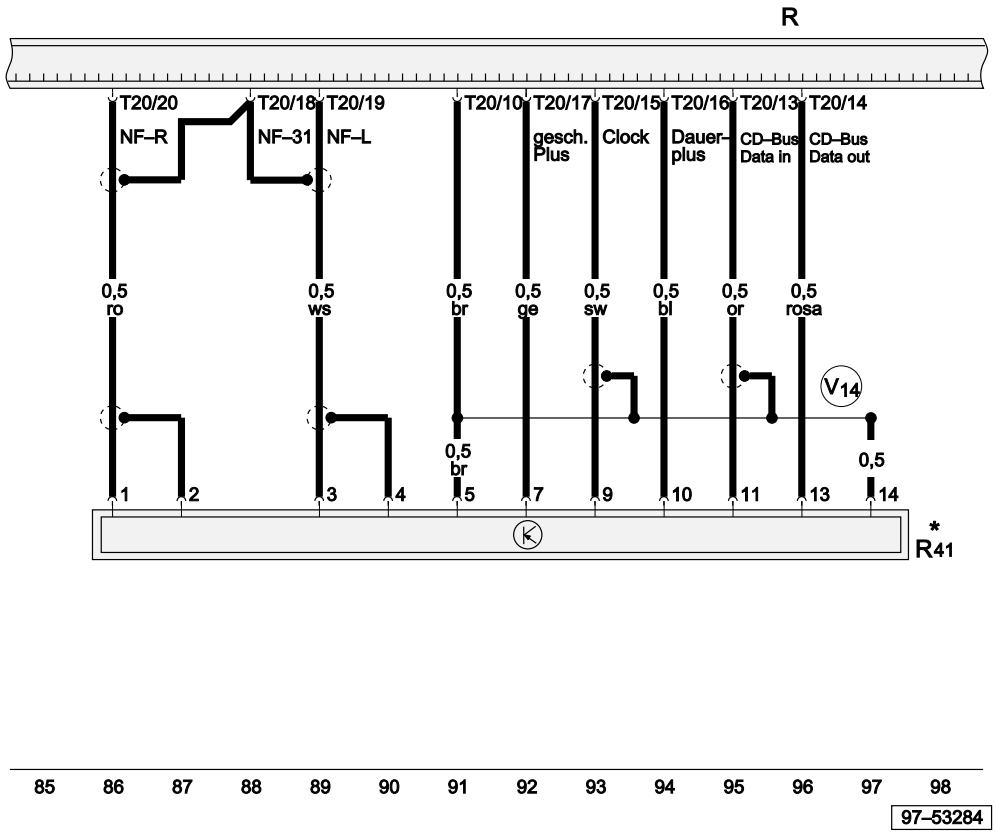

CD changer

R	Radio
R41	CD changer
T20	20-pin connector, black, radio connector I
V14	Connection (screening), in CD changer wiring harness
*	Does not apply to radio Chorus

Protected by copyright. Copying for private or commercial purposes, in part or in whole, is not permitted unless authorised by AUDI AG. AUDI AG does not guarantee or accept any liability with respect to the correctness of information in this document. Copyright by AUDI AG.

ws	=	white
sw	=	black
ro	=	red
br	=	brown
gn	=	green
bl	=	blue
gr	=	grey
li	=	purple
ge	=	yellow
or	=	orange
rs	=	pink

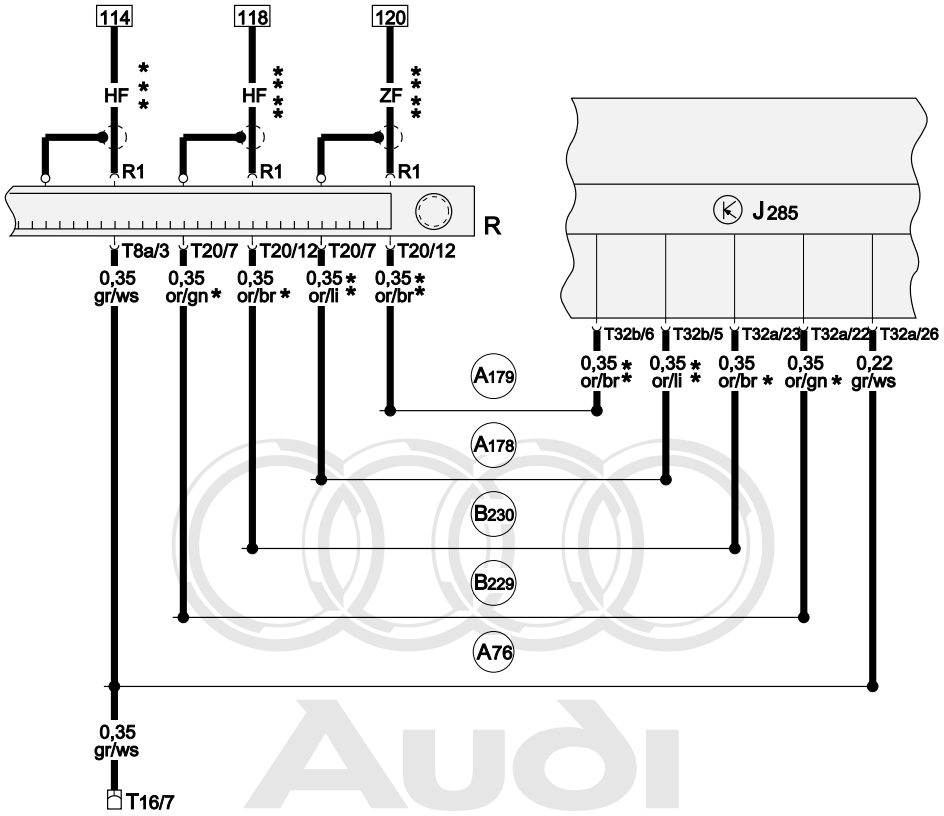

Protected by copyright. Copying for private or commercial purposes, in part or in whole, is not permitted unless authorised by AUDI AG. AUDI AG does not guarantee or accept any liability with respect to the correctness of information in this document. Copyright by AUDI AG.

99 100 101 102 103 104 105 106 107 108 109 110 111 112

97–53285

Control unit with display in dash panel insert

J285	Control unit with display in dash panel insert
R	Radio
T8a	8-pin connector, black, radio connector III
T16	16-pin connector, black, diagnostic connector
T20	20-pin connector, black, radio connector I
T32a	32-pin connector, green, on dash panel insert
T32b	32-pin connector, grey, on dash panel insert
A76	Connection (diagnosis wire K), in dash panel wiring harness
A178	Connection (infotainment CAN bus, high), in dash panel wiring harness
A179	Connection (infotainment CAN bus, low), in dash panel wiring harness
B229	Connection (high bus), in interior wiring harness
B230	Connection (low bus), in interior wiring harness
*	Models without driver information system
**	Models with driver information system
***	Applies to radio Chorus
****	Applies to radio Concert/Symphony

ws	=	white
sw	=	black
ro	=	red
br	=	brown
gn	=	green
bl	=	blue
gr	=	grey
li	=	purple
ge	=	yellow
or	=	orange
rs	=	pink

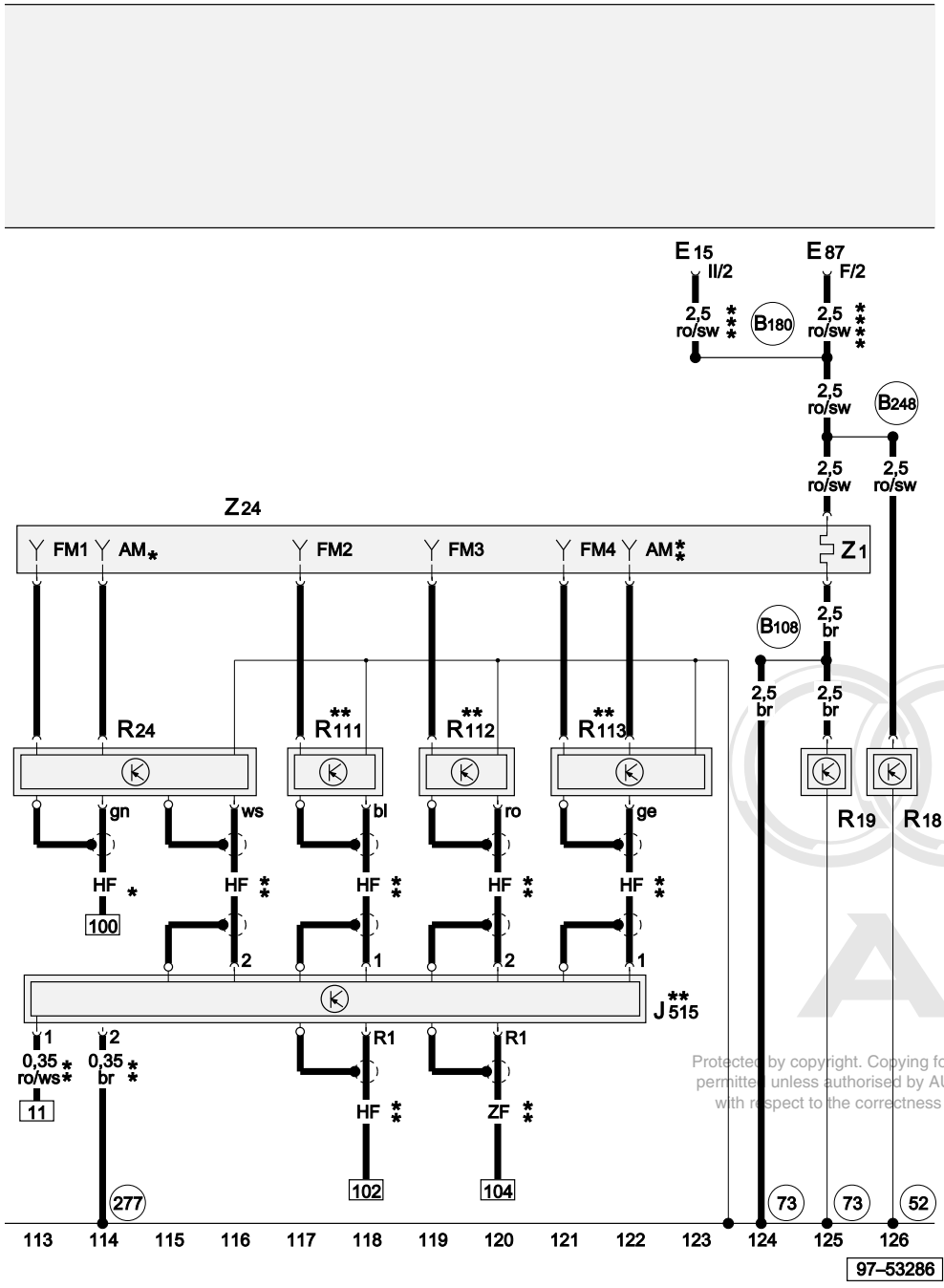

Aerial

E15	Heated rear window switch
E87	Control and display unit for air conditioner/Climatronic
J515	Aerial selection control unit
R18	Frequency switch, left
R19	Frequency switch, right
R24	Aerial amplifier
R111	Aerial amplifier -2-
R112	Aerial amplifier -3-
R113	Aerial amplifier -4-
Z1	Heated rear window
Z24	Heated rear window with window aerial
52	Earth point, in tailgate/boot lid, left
73	Earth point, rear roof rail
277	Earth connection -3-, in interior wiring harness
B108	Earth connection, in interior wiring harness, rear right
B180	Connection (heated rear window), in interior wiring harness
B248	Connection -2- (heated rear window), in interior wiring harness
*	Applies to radio Chorus
**	Applies to radio Concert/Symphony
***	Does not apply to models with air conditioner
****	Only models with air conditioner

ws	=	white
sw	=	black
ro	=	red
br	=	brown
gn	=	green
bl	=	blue
gr	=	grey
li	=	purple
ge	=	yellow
or	=	orange
rs	=	pink

Protected by copyright. Copying for private or commercial purposes, in part or in whole, is not permitted unless authorised by AUDI AG. AUDI AG does not guarantee or accept any liability with respect to the correctness of information in this document. Copyright by AUDI AG.

Basic equipment

From model year 2002

Main fuse

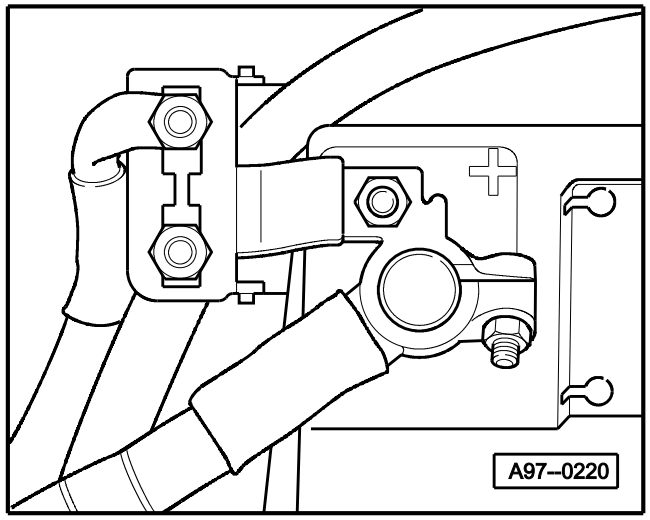

- On battery

9-point relay carrier, fuse box

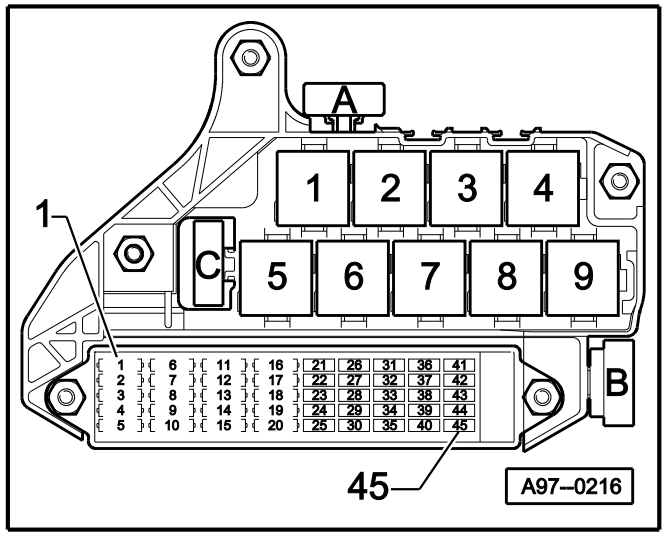

Protected by copyright. Copying for private or commercial purposes, in part or in whole, is not permitted unless authorised by AUDI AG. AUDI AG does not guarantee or accept any liability with respect to the correctness of information in this document. Copyright by AUDI AG.

- In dash panel

3 - Brake light suppression relay (J508)
5 - Dual tone horn relay (J4)
6 - Bulb check warning unit (K41)
7 - Bulb check warning unit (K41)
9 - X contact relief relay (J59)

Fuse colours

5 A - beige
7.5 A - brown
10 A - red
15 A - blue
20 A - yellow
25 A - white
30 A - green

3-point relay carrier

Protected by copyright. Copying for private or commercial purposes, in part or in whole, is not permitted unless authorised by AUDI AG. AUDI AG does not guarantee or accept any liability with respect to the correctness of information in this document. Copyright by AUDI AG.

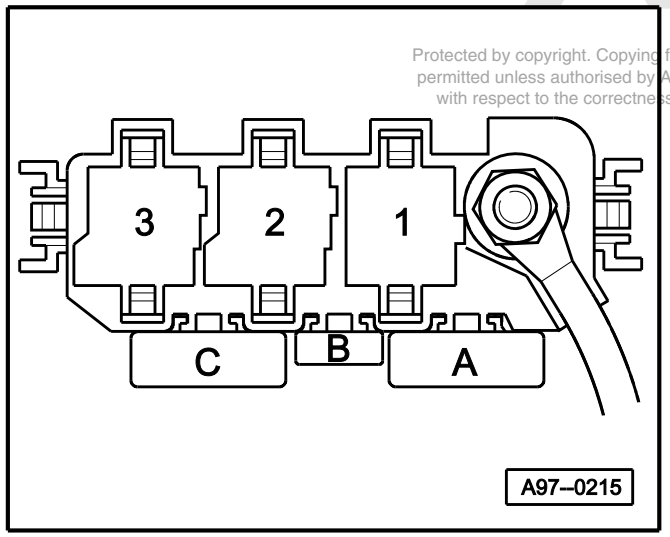

- In footwell

C - Fuse for power steering

6+6-point relay carrier

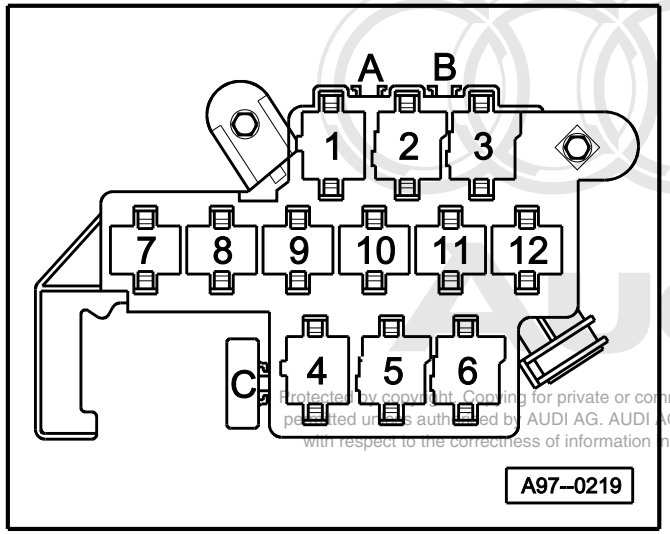

Protected by copyright. Copying for private or commercial purposes, in part or in whole, is not permitted unless authorised by AUDI AG. AUDI AG does not guarantee or accept any liability with respect to the correctness of information in this document. Copyright by AUDI AG.

◆ In footwell

2 - Automatic intermittent wash/wipe relay (J31)
3 - Automatic intermittent wash/wipe relay (J31)

Earth connections

44	Earth point, lower part of left A pillar
50	Earth point, luggage compartment, left
52	Earth point, in tailgate, left
98	Earth connection, in tailgate wiring harness
249	Earth connection -2-, in interior wiring harness
277	Earth connection -3-, in interior wiring harness
279	Earth connection -5-, in interior wiring harness
284	Earth connection -6-, in interior wiring harness

Protected by copyright. Copying for private or commercial purposes, in part or in whole, is not permitted unless authorised by AUDI AG. AUDI AG does not guarantee or accept any liability with respect to the correctness of information in this document. Copyright by AUDI AG.

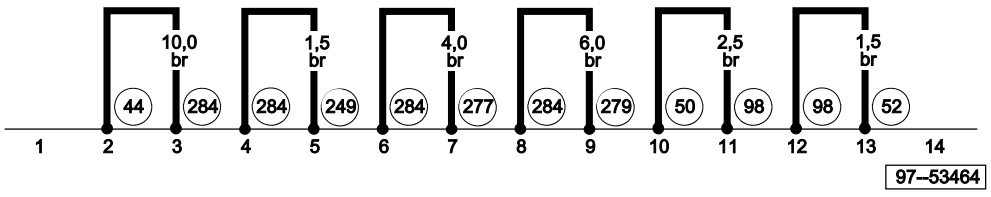

ws	=	white
sw	=	black
ro	=	red
br	=	brown
gn	=	green
bl	=	blue
gr	=	grey
li	=	purple
ge	=	yellow
or	=	orange
rs	=	pink

Protected by copyright. Copying for private or commercial purposes, in part or in whole, is not permitted unless authorised by AUDI AG. AUDI AG does not guarantee or accept any liability with respect to the correctness of information in this document. Copyright by AUDI AG.

Earth connections

12	Earth point, in engine compartment, left
43	Earth point, lower part of right A pillar
44	Earth point, lower part of left A pillar
119	Earth connection -1-, in headlight wiring harness
176	Earth connection, in right headlight wiring harness
179	Earth connection, in left headlight wiring harness

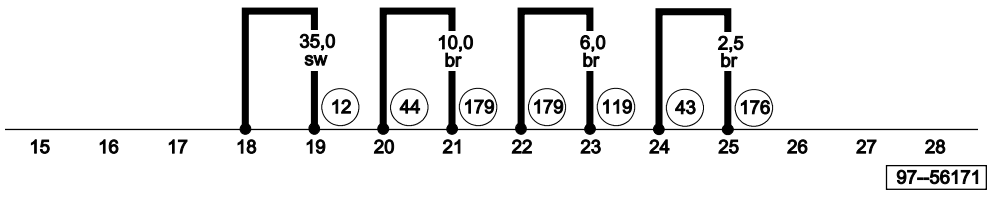

ws	=	white
sw	=	black
ro	=	red
br	=	brown
gn	=	green
bl	=	blue
gr	=	grey
li	=	purple
ge	=	yellow
or	=	orange
rs	=	pink

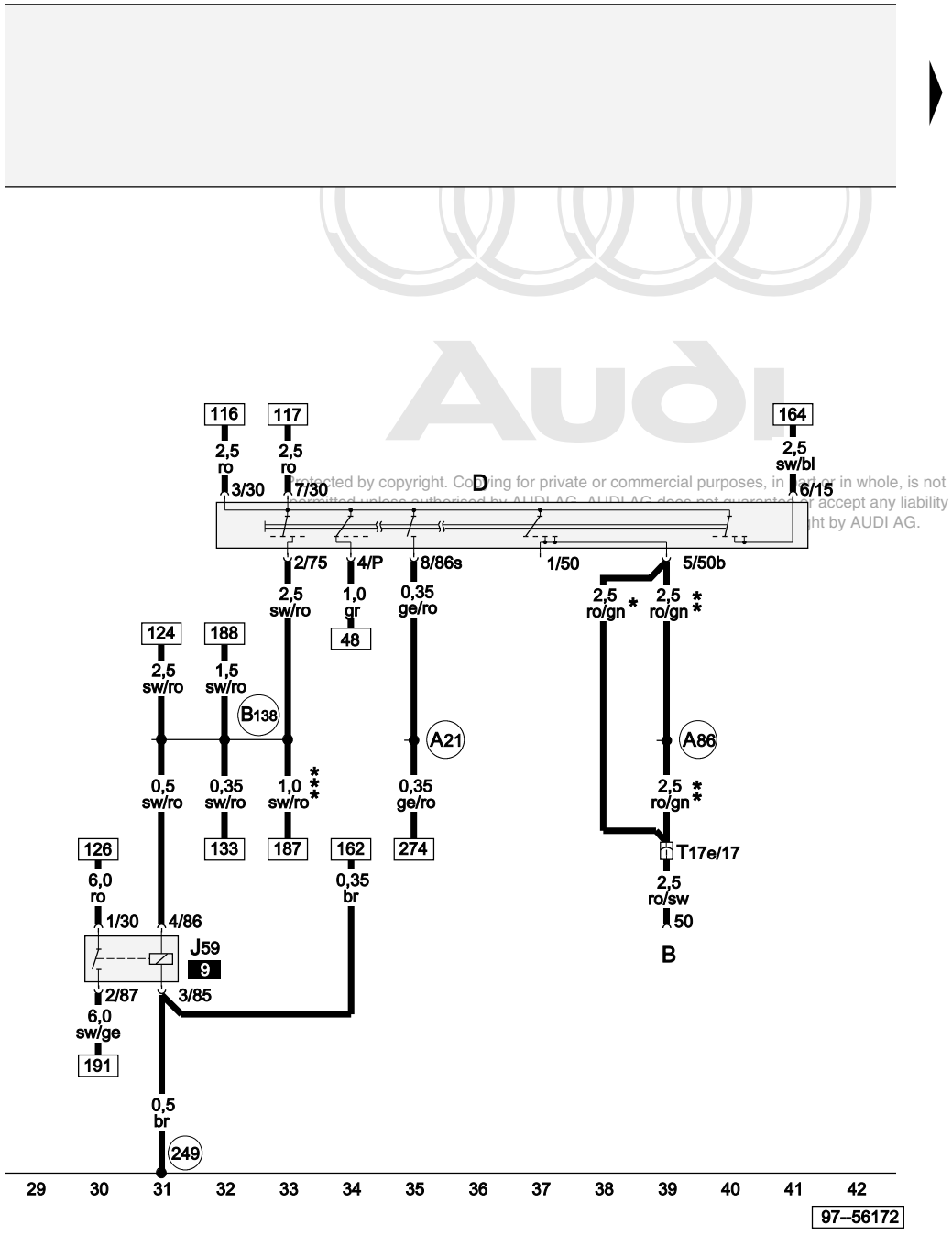

Protected by copyright. Copying for private or commercial purposes, in part or in whole, is not permitted unless authorised by AUDI AG. AUDI AG does not guarantee or accept any liability with respect to the correctness of information in this document. Copyright by AUDI AG.

Ignition/starter switch, X contact relief relay

B	Starter
D	Ignition/starter switch
J59	X contact relief relay
T17e	17-pin connector, blue, in footwell, front left
A21	Connection (86s), in dash panel wiring harness
A86	Connection (50a), in dash panel wiring harness
B138	Positive (+) connection -1- (x), in interior wiring harness
*	Only applies to models with diesel engine
**	Only applies to models with petrol engine
***	Only applies to models with heater element for washer jet

ws	=	white
sw	=	black
ro	=	red
br	=	brown
gn	=	green
bl	=	blue
gr	=	grey
li	=	purple
ge	=	yellow
or	=	orange
rs	=	pink

Lighting switch, turn signal switch, headlight dipper/flasher switch, front and rear fog light switch

E1	Lighting switch
E2	Turn signal switch
E4	Headlight dipper/flasher switch
E19	Parking light switch
E23	Front and rear fog light switch
E27	Side light switch
L9	Lighting switch light bulb
L40	Front and rear fog light switch illumination bulb
249	Earth connection -2-, in interior wiring harness
B9	Connection (56), in steering column switch wiring harness
B139	Connection (PL (parking light, left)), in interior wiring harness
B140	Connection (PR (parking light, right)), in interior wiring harness

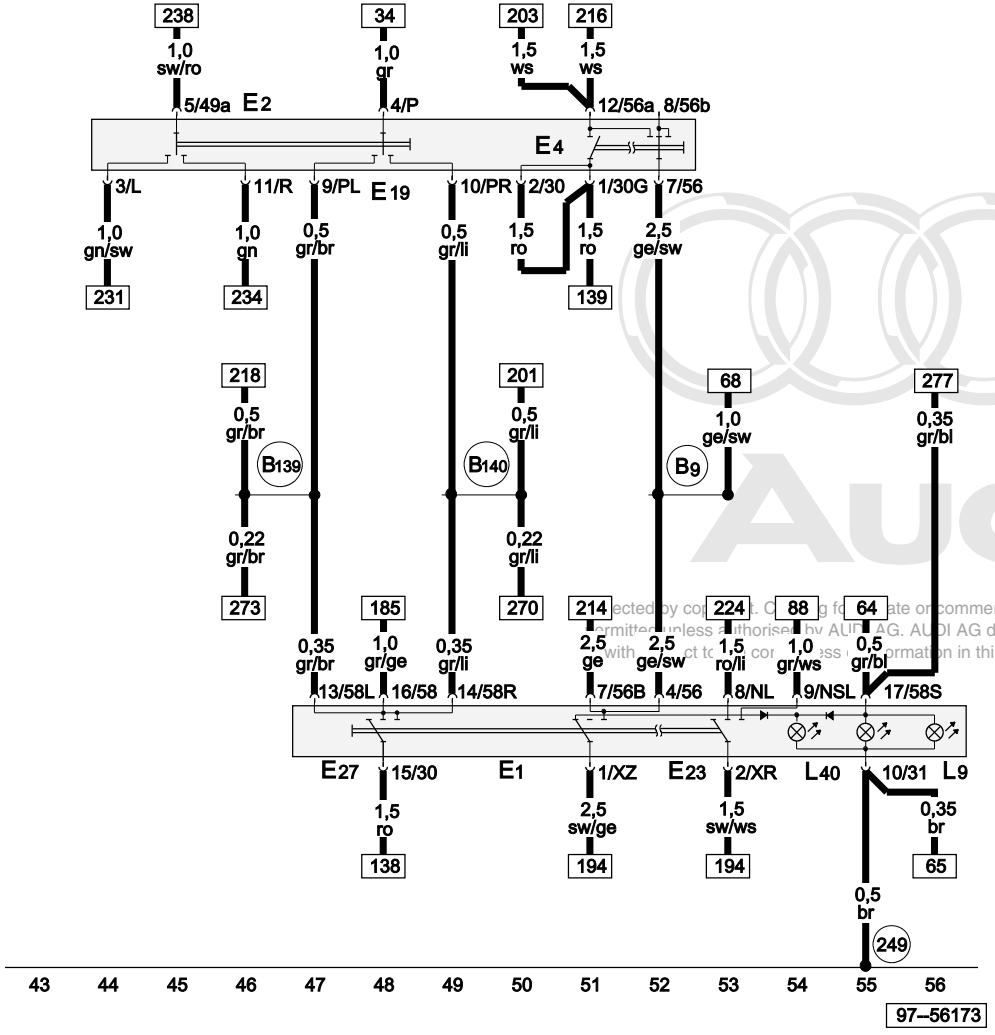

ws = white
sw = black
ro = red
br = brown
gn = green
bl = blue
gr = grey
li = purple
ge = yellow
or = orange
rs = pink

Audi
ected by copyright. Copying for private or commercial purposes, in part or in whole, is not permitted unless authorised by AUDI AG. AUDI AG does not guarantee or accept any liability with respect to the correctness of information in this document. Copyright by AUDI AG.

Switches and instruments light regulator, headlight range control adjuster

E20 Switches and instruments light regulator
E102 Headlight range control adjuster
L54 Headlight range control adjuster light bulb

269 Earth connection (sender earth) -1-, in dash panel wiring harness

B145 Positive (+) connection (58b), in interior wiring harness

* Only applies to models without air conditioner

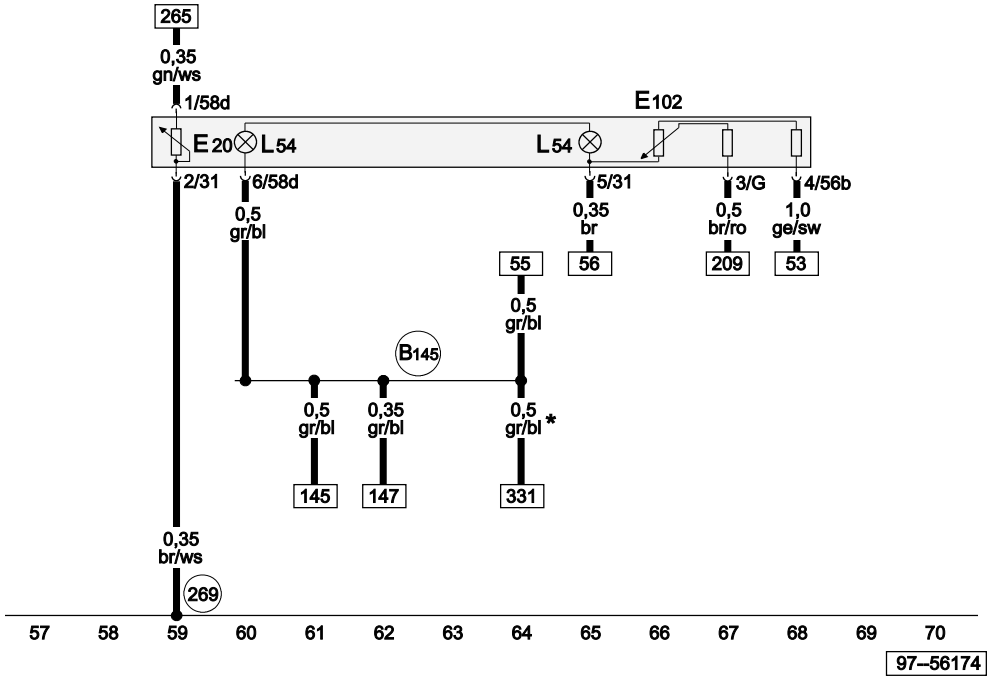

Protected by copyright. Copying for private or commercial purposes, in part or in whole, is not permitted unless authorised by AUDI AG. AUDI AG does not guarantee or accept any liability with respect to the correctness of information in this document. Copyright by AUDI AG.

ws = white
sw = black
ro = red
br = brown
gn = green
bl = blue
gr = grey
li = purple
ge = yellow
or = orange
rs = pink

Automatic intermittent wash/wipe relay, windscreen wiper motor, windscreen washer pump

E22	Intermittent wiper switch
E38	Intermittent wiper control
E44	Windscreen washer pump switch
E87	Control and display unit for air conditioner
J31	Automatic intermittent wash/wipe relay
T6	6-pin connector, brown, behind steering column switch trim
T10e	10-pin connector, red, connector point, A pillar, left
T10f	10-pin connector, blue, connector point, A pillar, left
V	Windscreen wiper motor
V5	Windscreen washer pump
119	Earth connection -1-, in headlight wiring harness
179	Earth connection, in left headlight wiring harness
249	Earth connection -2-, in interior wiring harness
A27	Connection (speed signal), in dash panel wiring harness
A96	Connection (53a), in dash panel wiring harness
A97	Connection (53), in dash panel wiring harness
*	Only applies to models with air conditioner

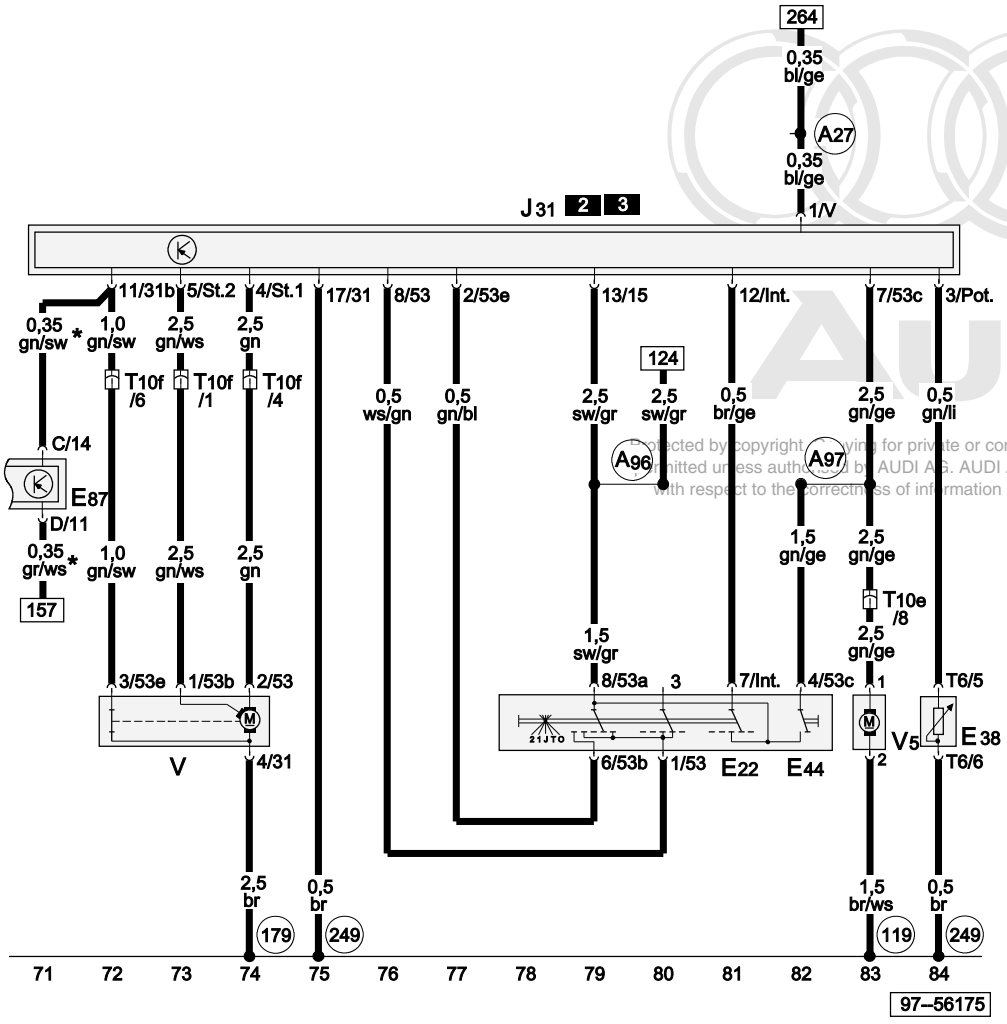

ws	=	white
sw	=	black
ro	=	red
br	=	brown
gn	=	green
bl	=	blue
gr	=	grey
li	=	purple
ge	=	yellow
or	=	orange
rs	=	pink

Protected by copyright. Copying for private or commercial purposes, in part or in whole, is not permitted unless authorised by AUDI AG. AUDI AG does not guarantee or accept any liability with respect to the correctness of information in this document. Copyright by AUDI AG.

Brake light switch, reversing light switch, brake light suppression relay, left tail light bulb, left brake light bulb

F	Brake light switch
F4	Reversing light switch
J104	ABS with EDL control unit
J508	Brake light suppression relay
L46	Rear fog light bulb, left
M4	Tail light bulb, left
M6	Turn signal bulb, rear left
M9	Brake light bulb, left
M16	Reversing light bulb, left
T17e	17-pin connector, blue, in footwell, front left
T17g	17-pin connector, red, connector point, A pillar, left
238	Earth connection -1-, in interior wiring harness
A87	Connection (RF (reversing light)), in dash panel wiring harness
B131	Connection (54), in interior wiring harness
B185	Connection -2- (54), in interior wiring harness
*	With the introduction of MK 60 no longer fitted, phased-in modification
**	Applicable with the introduction of MK 60, phased-in modification

Protected by copyright. Copying for private or commercial purposes, in part or in whole, is not permitted unless authorised by AUDI AG. AUDI AG does not guarantee or accept any liability with respect to the correctness of information in this document. Copyright by AUDI AG.

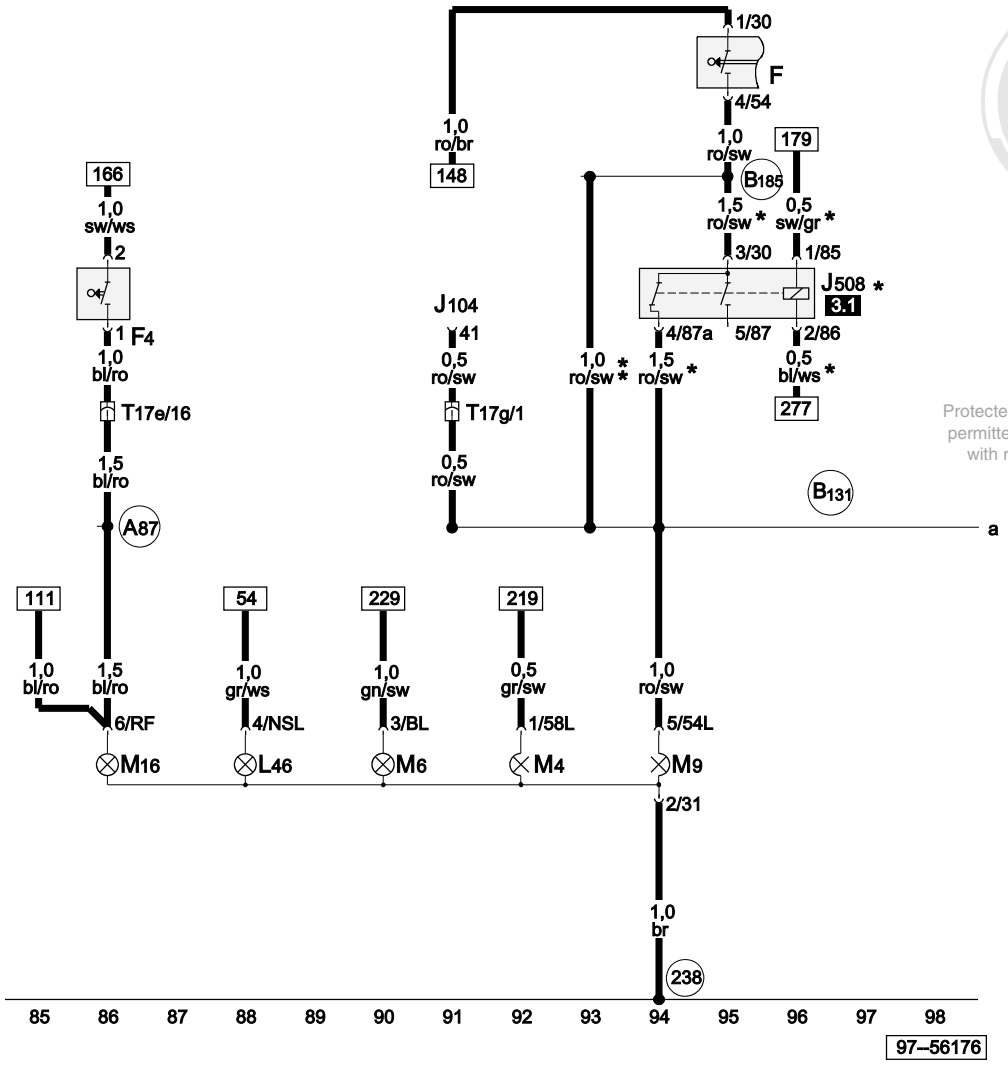

ws	=	white
sw	=	black
ro	=	red
br	=	brown
gn	=	green
bl	=	blue
gr	=	grey
li	=	purple
ge	=	yellow
or	=	orange
rs	=	pink

Bulb check warning unit, right tail light bulb, right brake light bulb, high level brake light bulb, number plate light

K41	Bulb check warning unit
M2	Tail light bulb, right
M8	Turn signal bulb, rear right
M10	Brake light bulb, right
M17	Reversing light bulb, right
M25	High level brake light bulb
X	Number plate light
98	Earth connection, in tailgate wiring harness
238	Earth connection -1-, in interior wiring harness
B131	Connection (54), in interior wiring harness
B132	Connection (number plate light), in interior wiring harness
W1	Positive (+) connection (54), in rear wiring harness
*	Only applies to models with driver information system

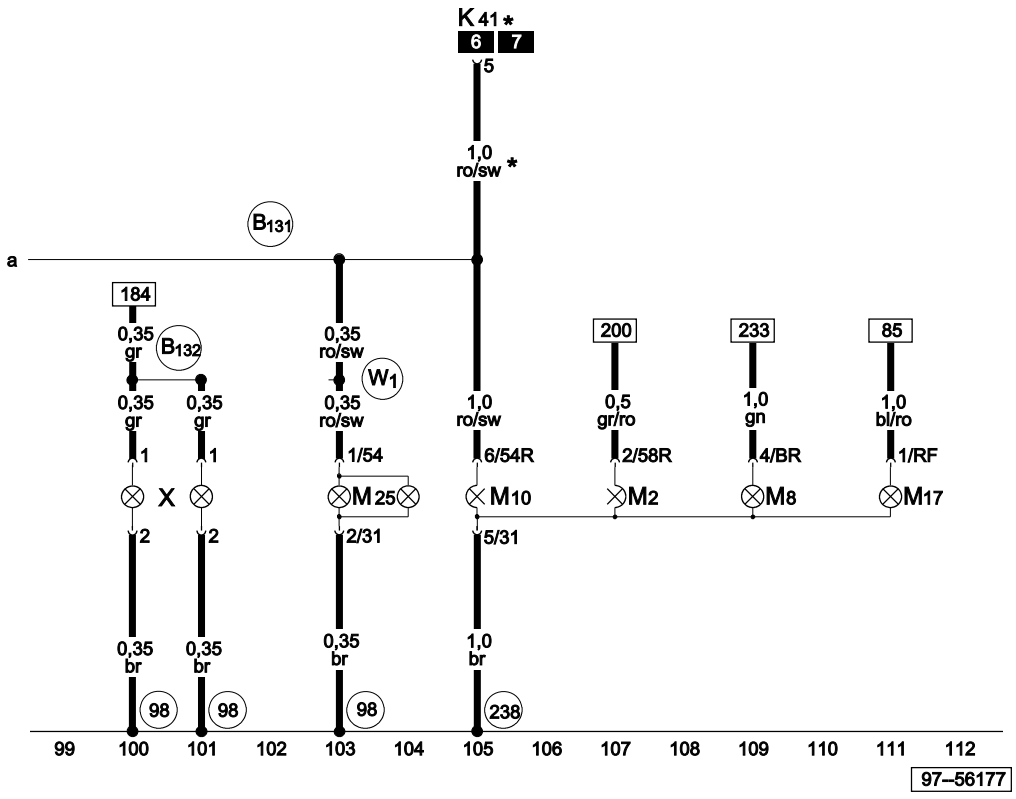

ws	=	white
sw	=	black
ro	=	red
br	=	brown
gn	=	green
bl	=	blue
gr	=	grey
li	=	purple
ge	=	yellow
or	=	orange
rs	=	pink

Protected by copyright. Copying for private or commercial purposes, in part or in whole, is not permitted unless authorised by AUDI AG. AUDI AG does not guarantee or accept any liability with respect to the correctness of information in this document. Copyright by AUDI AG.

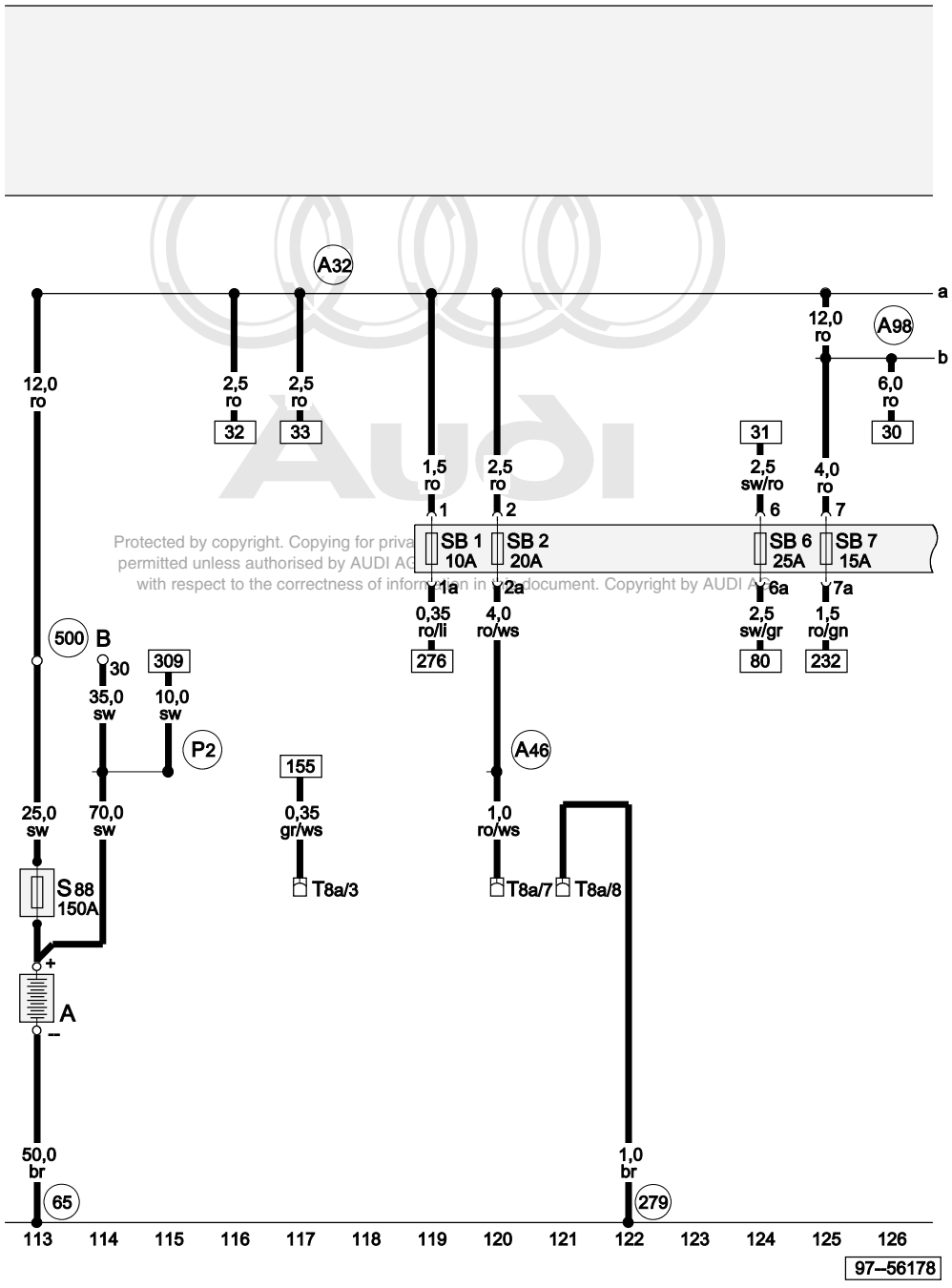

Protected by copyright. Copying for private or commercial purposes, in part or in whole, is not permitted unless authorised by AUDI AG. AUDI AG does not guarantee or accept any liability with respect to the correctness of information in this document. Copyright by AUDI AG.

Battery, fuse on fuse box, strip fuse

A	Battery
B	Starter
SB1	Fuse -1- on fuse box
SB2	Fuse -2- on fuse box
SB6	Fuse -6- on fuse box
SB7	Fuse -7- on fuse box
S88	Strip fuse
T8a	8-pin connector, black, radio connector III
65	Earth point, left longitudinal member, rear
279	Earth connection -5-, in interior wiring harness
500	Screw connection -1- (30), on relay plate
A32	Positive (+) connection (30), in dash panel wiring harness
A46	Positive (+) connection (30 - from radio), in dash panel wiring harness
A98	Positive (+) connection -4- (30), in dash panel wiring harness
P2	Positive (+) connection (30), in battery wiring harness

ws	=	white
sw	=	black
ro	=	red
br	=	brown
gn	=	green
bl	=	blue
gr	=	grey
li	=	purple
ge	=	yellow
or	=	orange
rs	=	pink

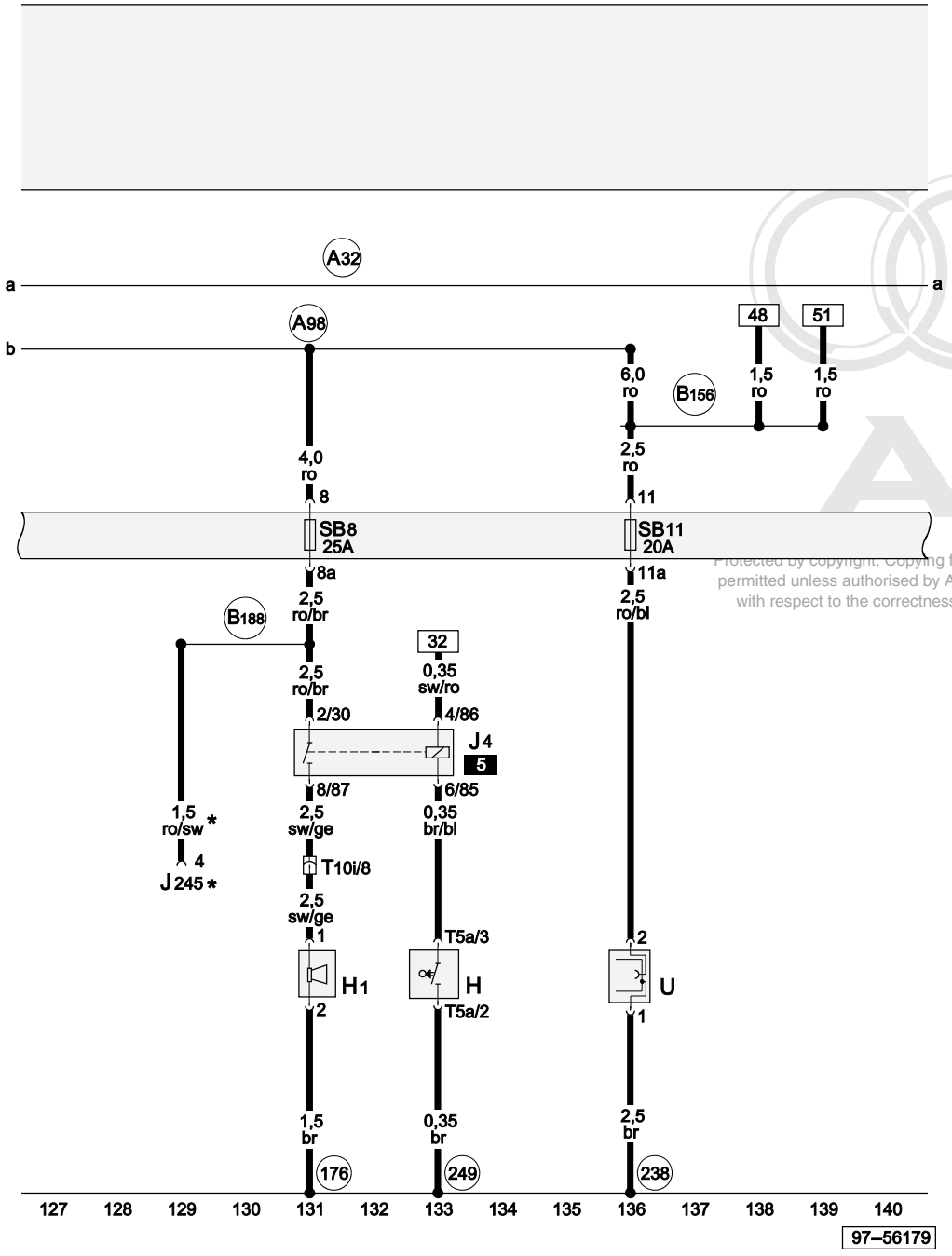

ws = white
sw = black
ro = red
br = brown
gn = green
bl = blue
gr = grey
li = purple
ge = yellow
or = orange
rs = pink

Horn plate, horn/dual tone horn, dual tone horn relay, fuse, socket

H	Horn plate
H1	Horn/dual tone horn
J4	Dual tone horn relay
J245	Sliding sunroof adjustment control unit
SB8	Fuse -8- on fuse box
SB11	Fuse -11- on fuse box
T5a	5-pin connector, yellow, behind steering column switch trim
T10i	10-pin connector, black, connector point, A pillar, right
U	Socket
176	Earth connection, in right headlight wiring harness
238	Earth connection -1-, in interior wiring harness
249	Earth connection -2-, in interior wiring harness
A32	Positive (+) connection (30), in dash panel wiring harness
A98	Positive (+) connection -4- (30), in dash panel wiring harness
B156	Positive (+) connection -4- (30), in interior wiring harness
B188	Positive (+) connection -5- (30), in interior wiring harness
*	Only applies to models with sliding/tilting sunroof

Protected by copyright. Copying for private or commercial purposes, in part or in whole, is not permitted unless authorised by AUDI AG. AUDI AG does not guarantee or accept any liability with respect to the correctness of information in this document. Copyright by AUDI AG.

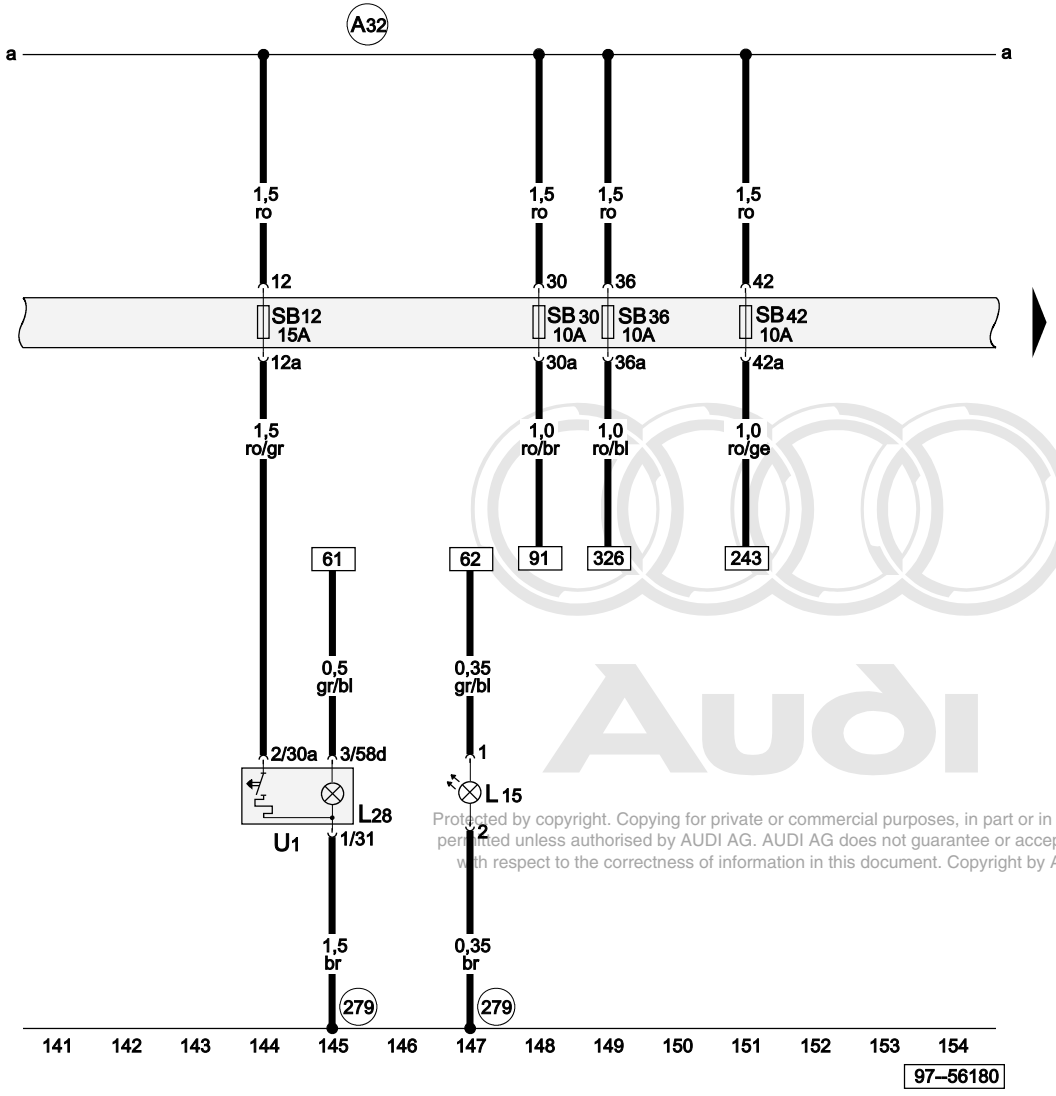

Protected by copyright. Copying for private or commercial purposes, in part or in whole, is not permitted unless authorised by AUDI AG. AUDI AG does not guarantee or accept any liability with respect to the correctness of information in this document. Copyright by AUDI AG.

ws = white
sw = black
ro = red
br = brown
gn = green
bl = blue
gr = grey
li = purple
ge = yellow
or = orange
rs = pink

Ashtray light bulb, cigarette lighter light bulb, fuse, cigarette lighter

L15	Ashtray light bulb
L28	Cigarette lighter light bulb
SB12	Fuse -12- on fuse box
SB30	Fuse -30- on fuse box
SB36	Fuse -36- on fuse box
SB42	Fuse -42- on fuse box
U1	Cigarette lighter
279	Earth connection -5-, in interior wiring harness
A32	Positive (+) connection (30), in dash panel wiring harness

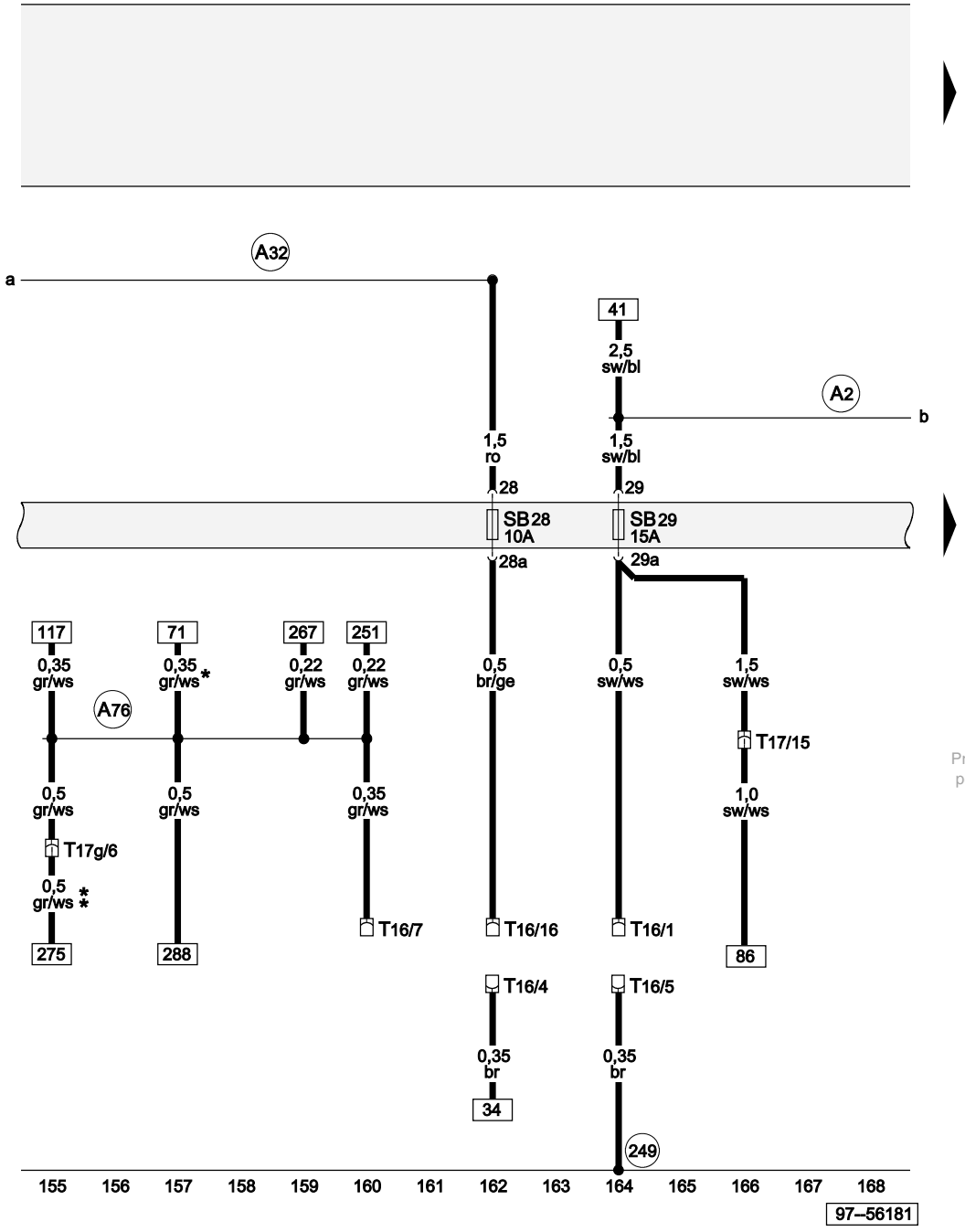

Fuse on fuse box, diagnostic connector

SB28	Fuse -28- on fuse box
SB29	Fuse -29- on fuse box
T16	16-pin connector, diagnostic connector, black, near fuse box
T17	17-pin connector, brown, in footwell, front left
T17g	17-pin connector, red, connector point, A pillar, left
249	Earth connection -2-, in interior wiring harness
A2	Positive (+) connection (15), in dash panel wiring harness
A32	Positive (+) connection (30), in dash panel wiring harness
A76	Connection (diagnosis wire K), in dash panel wiring harness
*	Only applies to models with air conditioner
**	With the introduction of MK 60 no longer fitted, phased-in modification

Protected by copyright. Copying for private or commercial purposes, in part or in whole, is not permitted unless authorised by AUDI AG. AUDI AG does not guarantee or accept any liability with respect to the correctness of information in this document. Copyright by AUDI AG.

ws	=	white
sw	=	black
ro	=	red
br	=	brown
gn	=	green
bl	=	blue
gr	=	grey
li	=	purple
ge	=	yellow
or	=	orange
rs	=	pink

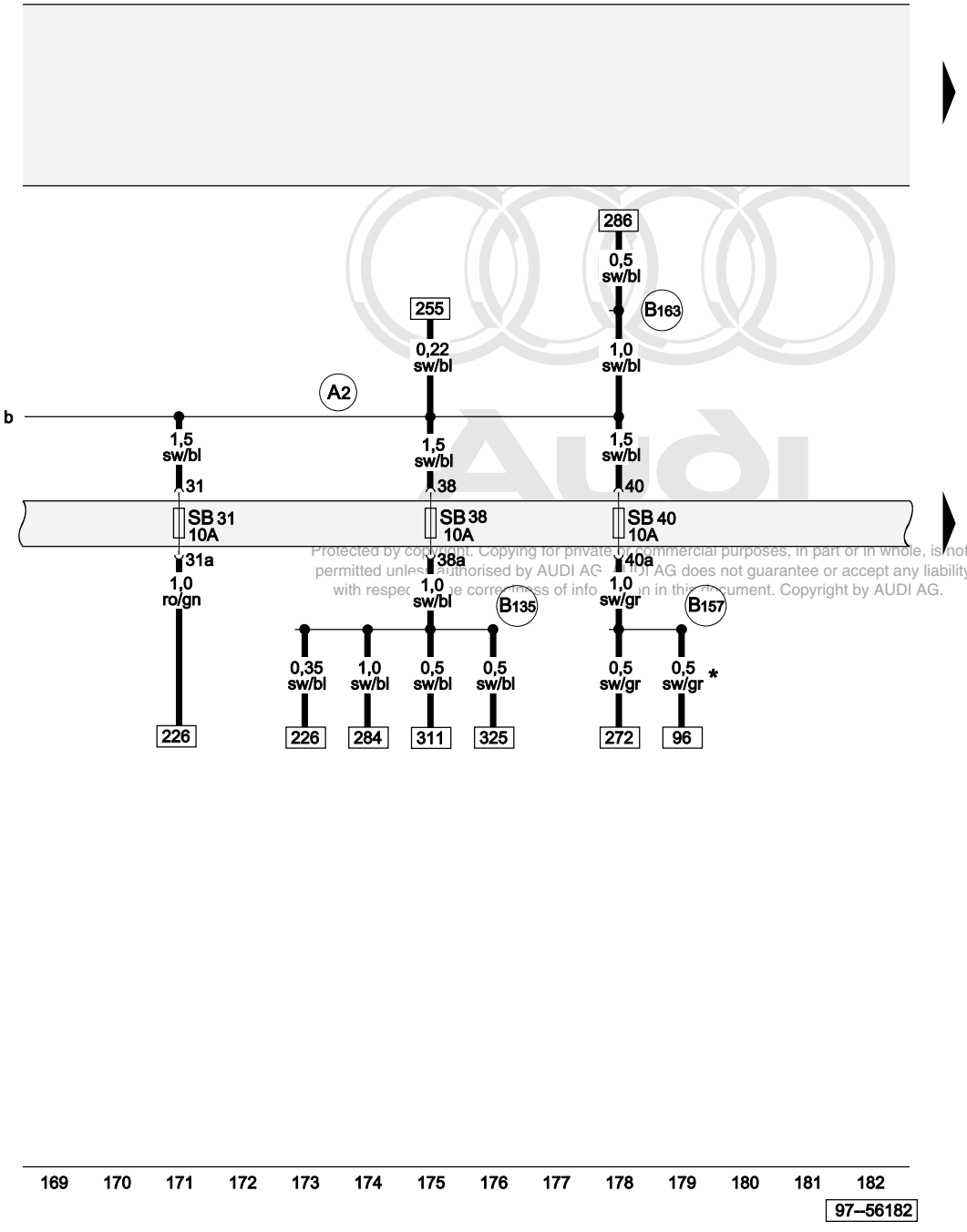

Protected by copyright. Copying for private or commercial purposes, in part or in whole, is not permitted unless authorised by AUDI AG. AUDI AG does not guarantee or accept any liability with respect to the correctness of information in this document. Copyright by AUDI AG.

Fuse on fuse box

SB31 Fuse -31- on fuse box
SB38 Fuse -38- on fuse box
SB40 Fuse -40- on fuse box

A2 Positive (+) connection (15), in dash panel wiring harness

B135 Connection -1- (15a), in interior wiring harness

B157 Positive (+) connection -3- (15a), in interior wiring harness

B163 Positive (+) connection -1- (15), in interior wiring harness

* With the introduction of MK 60 no longer fitted, phased-in modification

ws = white
sw = black
ro = red
br = brown
gn = green
bl = blue
gr = grey
li = purple
ge = yellow
or = orange
rs = pink

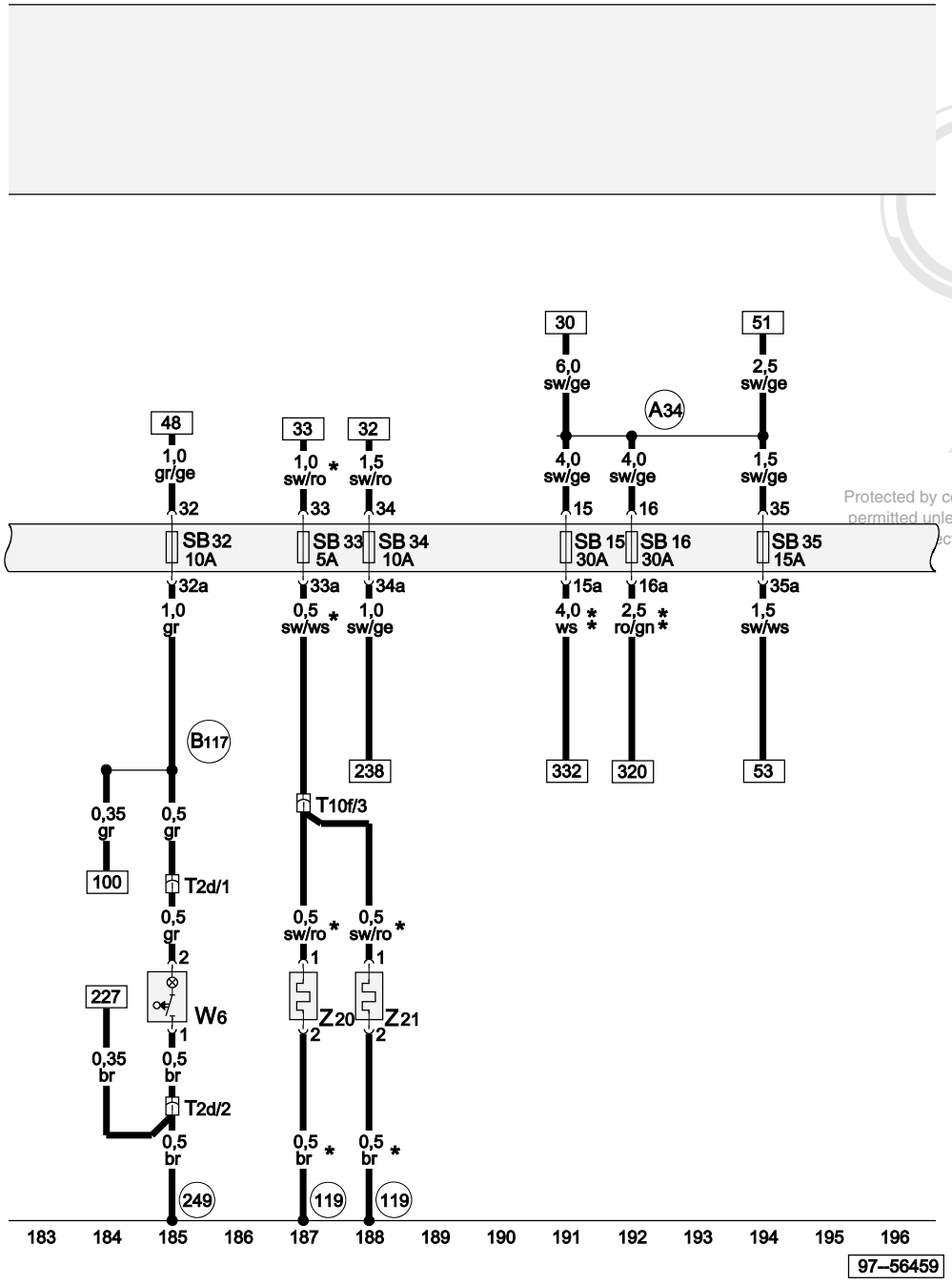

Fuse on fuse box, glove box light, heater element for washer jet

SB15	Fuse -15- on fuse box
SB16	Fuse -16- on fuse box
SB32	Fuse -32- on fuse box
SB33	Fuse -33- on fuse box
SB34	Fuse -34- on fuse box
SB35	Fuse -35- on fuse box
T2d	2-pin connector
T10f	10-pin connector, blue, connector point, A pillar, left
W6	Glove box light
Z20	Heater element, left washer jet
Z21	Heater element, right washer jet
119	Earth connection -1-, in headlight wiring harness
249	Earth connection -2-, in interior wiring harness
A34	Connection (75x), in dash panel wiring harness
B117	Connection (58a, right), in interior wiring harness
*	Only applies to models with heater element for washer jet
**	Only applies to models without air conditioner

Protected by copyright. Copying for private or comm... purposes, in part or in whole, is not permitted unless authorised by AUDI AG. AUDI AG ... ect to the correctness of information in ... ument. Copyright by AUDI AG.

ws	=	white
sw	=	black
ro	=	red
br	=	brown
gn	=	green
bl	=	blue
gr	=	grey
li	=	purple
ge	=	yellow
or	=	orange
rs	=	pink

Twin filament bulb for right headlight, front right fog light bulb, right side light bulb, right side turn signal bulb

L2	Twin filament bulb for headlight, right
L23	Fog light bulb, right
M3	Side light bulb, right
M7	Turn signal bulb, front right
M19	Side turn signal bulb, right
SB21	Fuse -21- on fuse box
SB23	Fuse -23- on fuse box
SB26	Fuse -26- on fuse box
T10i	10-pin connector, black, connector point, A pillar, right
T10l	10-pin connector, black, headlight, right
V49	Headlight range control motor, right
119	Earth connection -1-, in headlight wiring harness
176	Earth connection, in right headlight wiring harness
A51	Connection (56), in dash panel wiring harness
A95	Connection -1- (56a), in dash panel wiring harness

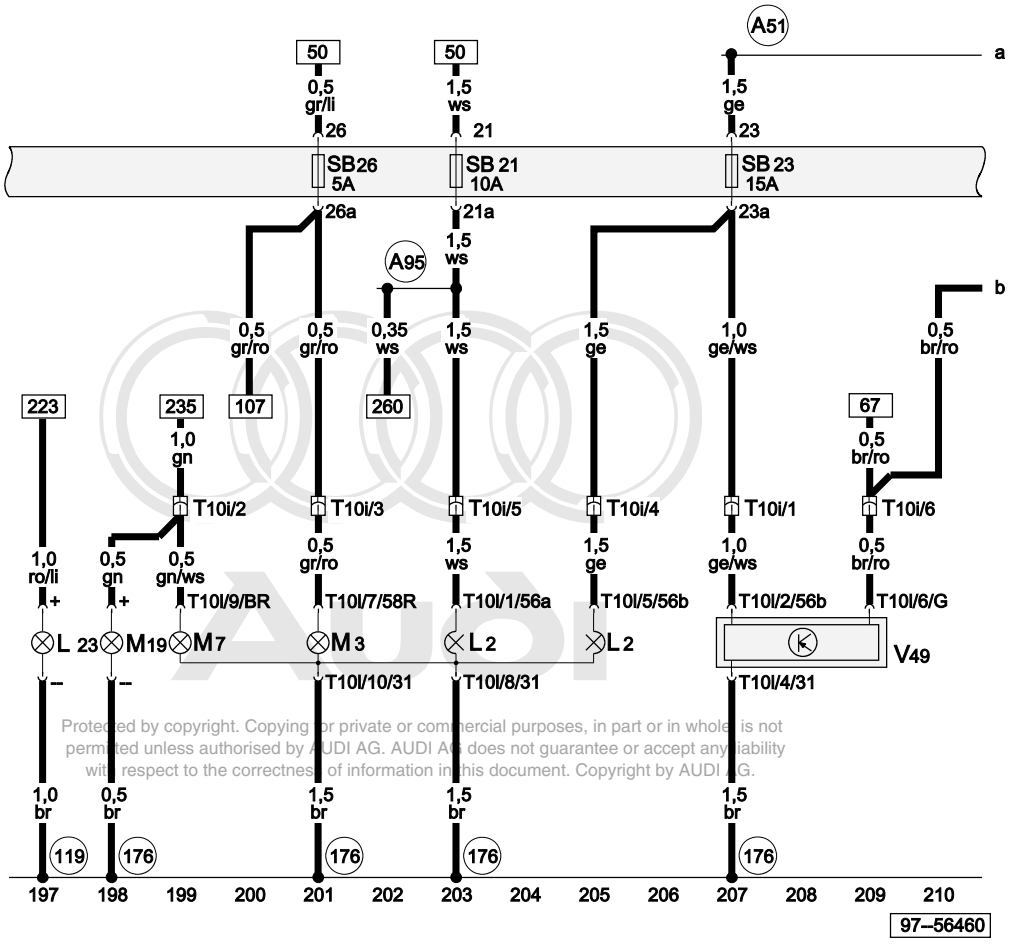

Protected by copyright. Copying for private or commercial purposes, in part or in whole, is not permitted unless authorised by AUDI AG. AUDI AG does not guarantee or accept any liability with respect to the correctness of information in this document. Copyright by AUDI AG.

ws	=	white
sw	=	black
ro	=	red
br	=	brown
gn	=	green
bl	=	blue
gr	=	grey
li	=	purple
ge	=	yellow
or	=	orange
rs	=	pink

Twin filament bulb for left headlight, front left fog light bulb, left side light bulb, left side turn signal bulb

L1	Twin filament bulb for headlight, left
L22	Fog light bulb, left
M1	Side light bulb, left
M5	Turn signal bulb, front left
M18	Side turn signal bulb, left
SB22	Fuse -22- on fuse box
SB24	Fuse -24- on fuse box
SB27	Fuse -27- on fuse box
T10e	10-pin connector, red, connector point, A pillar, left
T10g	10-pin connector, grey, connector point, A pillar, left
T10k	10-pin connector, black, headlight, left
V48	Headlight range control motor, left
119	Earth connection -1-, in headlight wiring harness
179	Earth connection, in left headlight wiring harness
A51	Connection (56), in dash panel wiring harness
A84	Connection (58L), in dash panel wiring harness

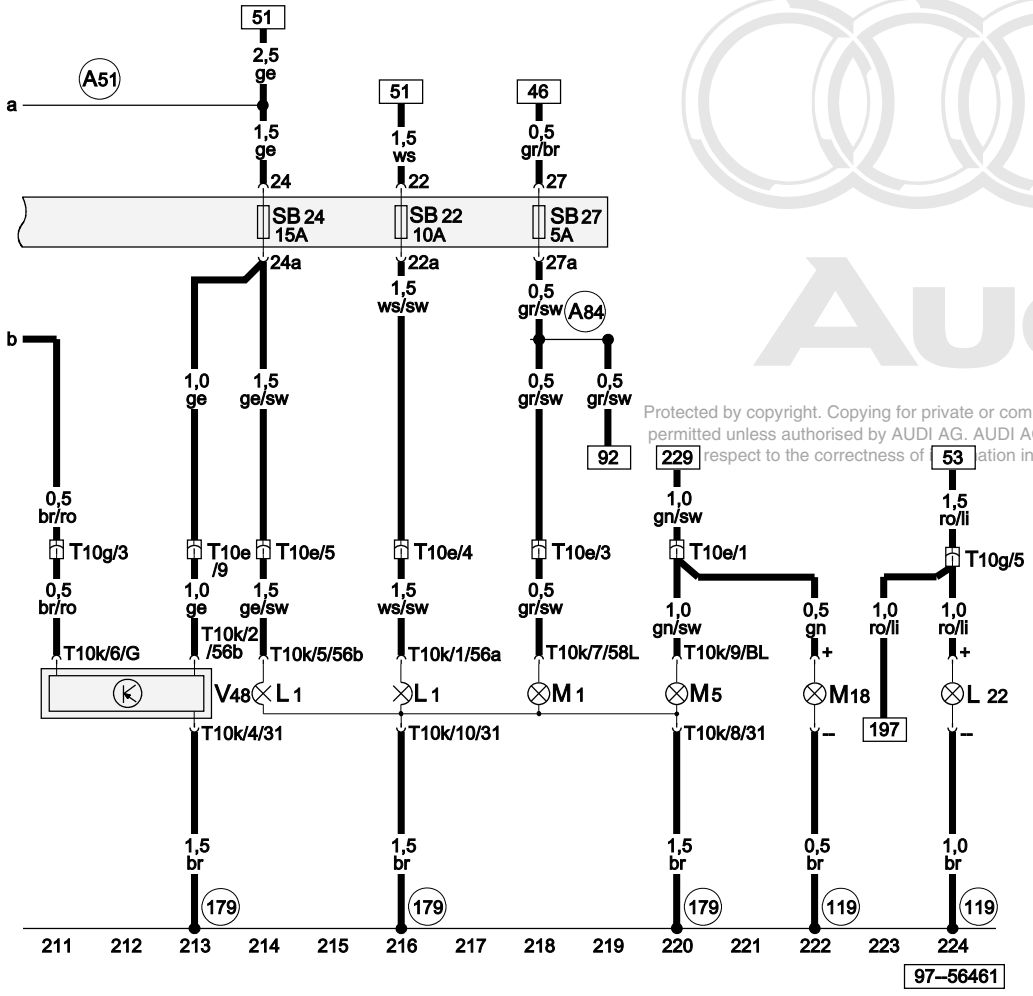

ws	=	white
sw	=	black
ro	=	red
br	=	brown
gn	=	green
bl	=	blue
gr	=	grey
li	=	purple
ge	=	yellow
or	=	orange
rs	=	pink

Protected by copyright. Copying for private or commercial purposes, in part or in whole, is not permitted unless authorised by AUDI AG. AUDI AG does not guarantee or accept any liability respect to the correctness of ation in this document. Copyright by AUDI AG.

Hazard warning light switch, cruise control system switch, hazard warning light relay

E3 Hazard warning light switch
E45 Cruise control system switch
J2 Hazard warning light relay

249 Earth connection -2-, in interior wiring harness

A125 Connection (crash signal), in dash panel wiring harness

B149 Positive (+) connection -2- (15a), in interior wiring harness

B152 Connection (BL (turn signal, left)), in interior wiring harness

B153 Connection (BR (turn signal, right)), in interior wiring harness

* Only applies to models with cruise control system

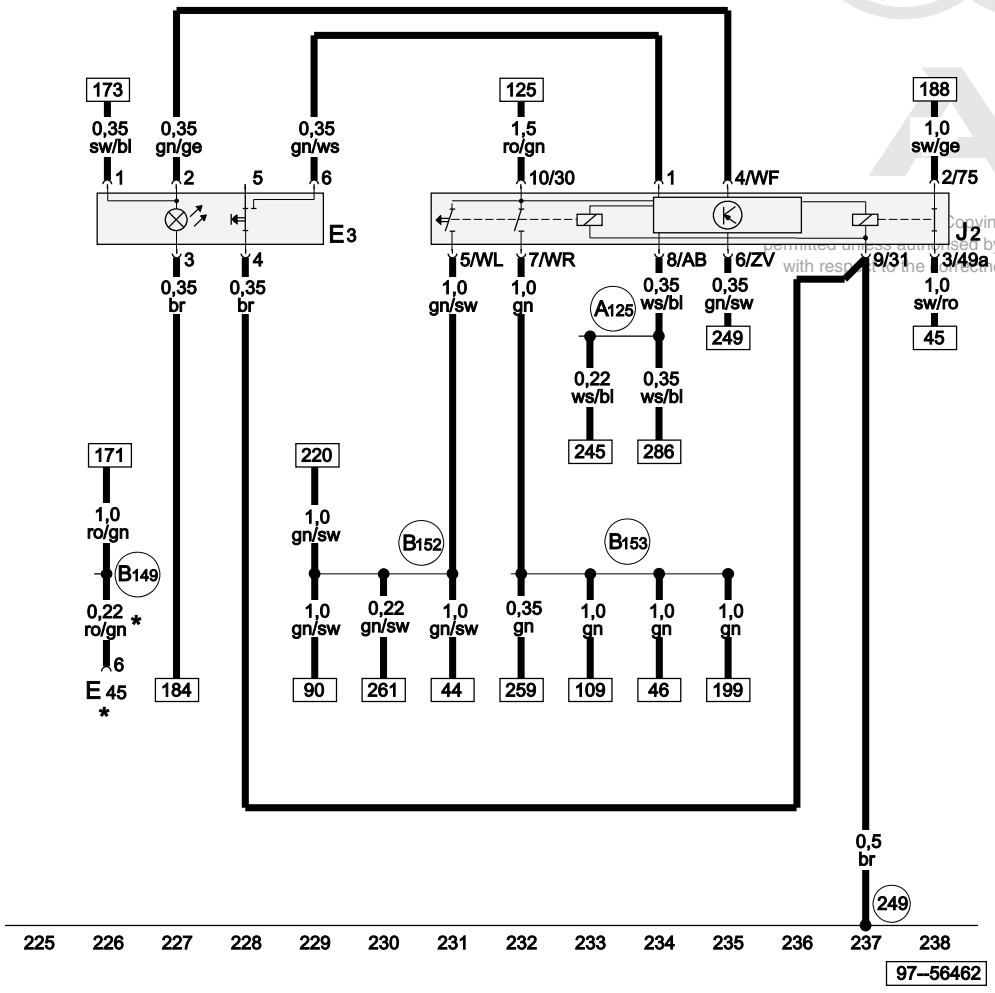

ws = white
sw = black
ro = red
br = brown
gn = green
bl = blue
gr = grey
li = purple
ge = yellow
or = orange
rs = pink

Copying for private or commercial purposes, in part or in whole, is not permitted unless authorised by AUDI AG. AUDI AG does not guarantee or accept any liability with respect to the correctness of information in this document. Copyright by AUDI AG.

Handbrake warning switch, convenience system central control unit, luggage compartment light, left

F9 Handbrake warning switch
J393 Convenience system central control unit
W18 Luggage compartment light, left

284 Earth connection -6-, in interior wiring harness

A29 Connection (interior light), in dash panel wiring harness

B115 Positive (+) connection (30, central electrics), in interior wiring harness

B229 Connection (high bus), in interior wiring harness

B230 Connection (low bus), in interior wiring harness

* Only applies to models without air conditioner
** No longer fitted, phased-in modification

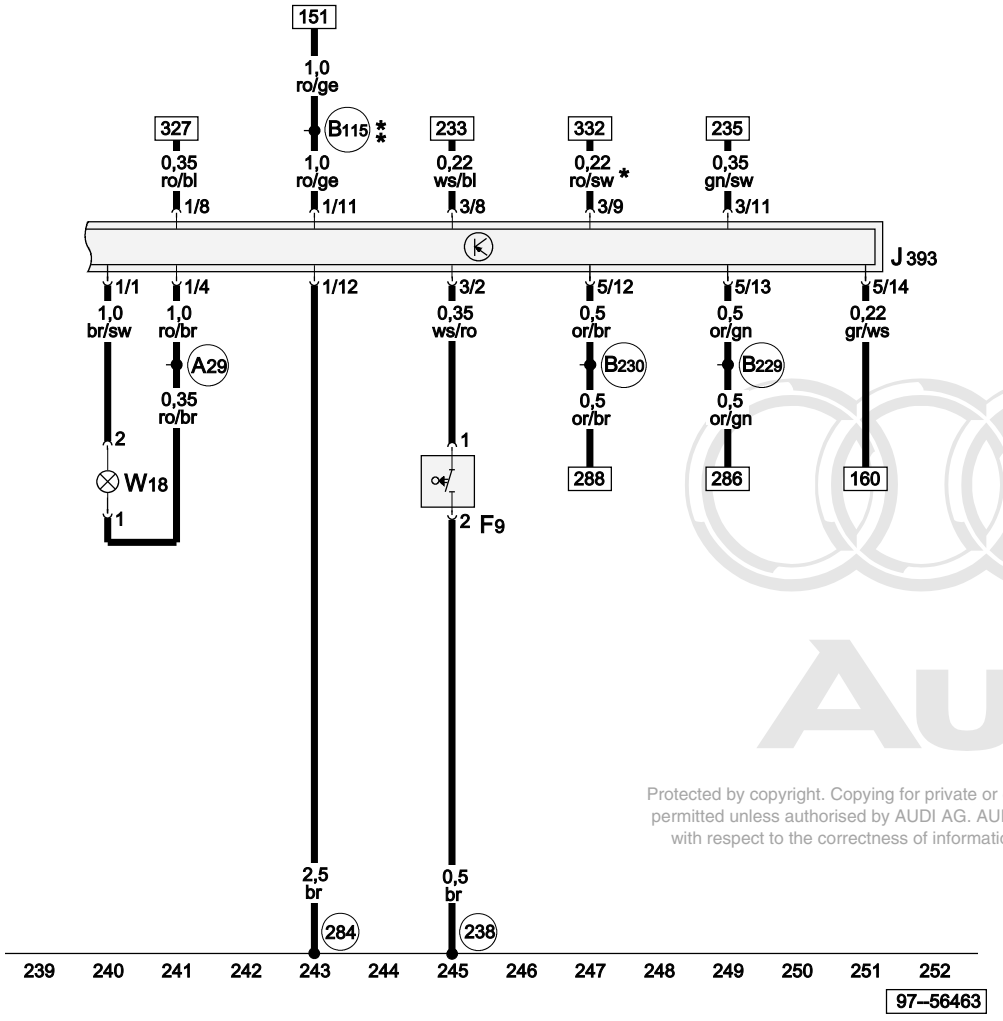

ws = white
sw = black
ro = red
br = brown
gn = green
bl = blue
gr = grey
li = purple
ge = yellow
or = orange
rs = pink

Protected by copyright. Copying for private or commercial purposes, in part or in whole, is not permitted unless authorised by AUDI AG. AUDI AG does not guarantee or accept any liability with respect to the correctness of information in this document. Copyright by AUDI AG.

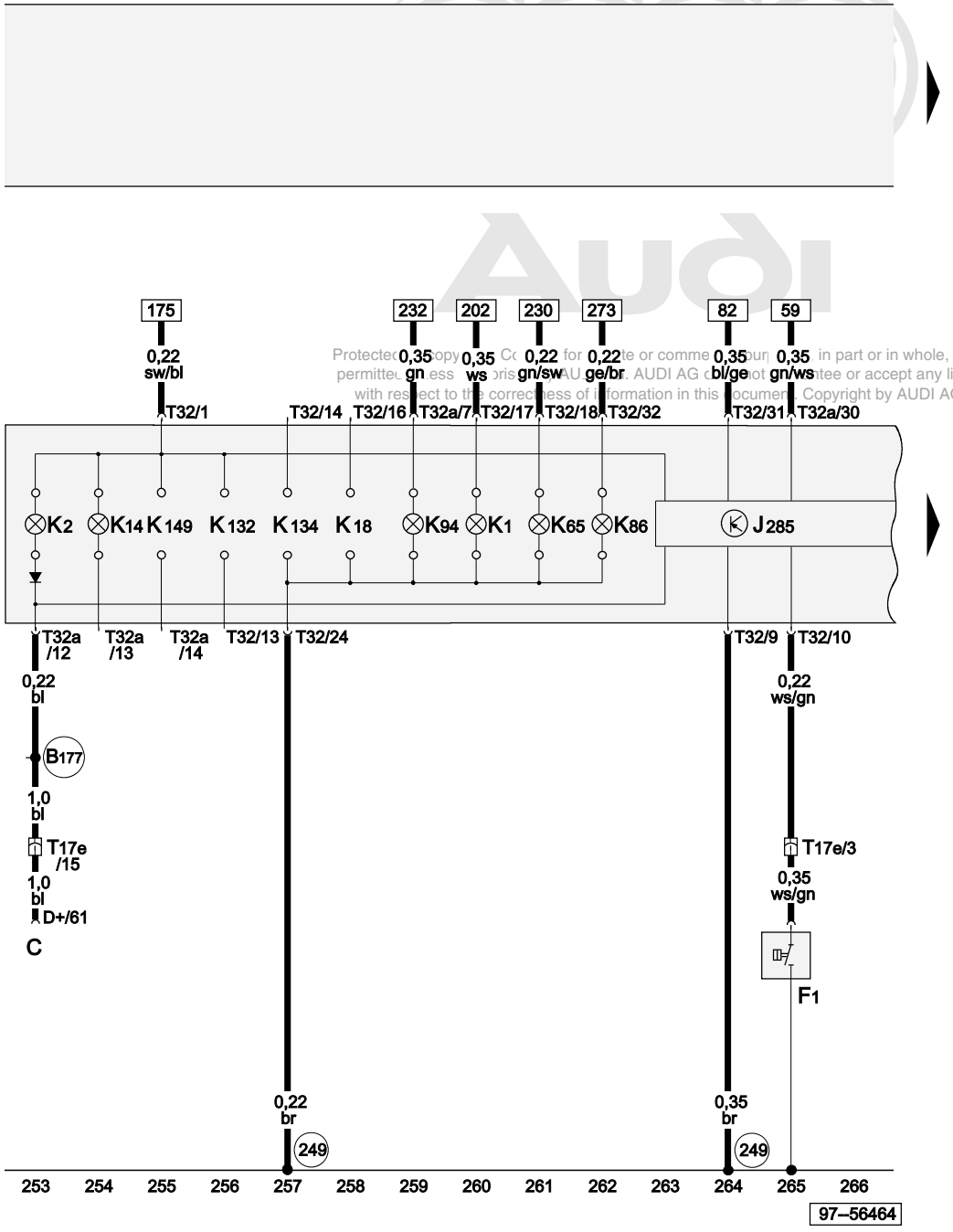

Protected copyright. Copying for private or commercial purposes, in part or in whole, is not permitted unless authorised by AUDI AG. AUDI AG does not guarantee or accept any liability with respect to the correctness of information in this document. Copyright by AUDI AG.

Alternator, oil pressure switch, control unit with display in dash panel insert, warning lamps

C	Alternator
F1	Oil pressure switch
J285	Control unit with display in dash panel insert
K1	Main beam warning lamp
K2	Alternator warning lamp
K14	Handbrake warning lamp
K18	Trailer operation warning lamp
K65	Left turn signal warning lamp
K86	Traction control system warning lamp
K94	Right turn signal warning lamp
K132	Electronic power control fault lamp
K134	Self-levelling suspension warning lamp
K149	Engine electronics warning lamp
T17e	17-pin connector, blue, in footwell, front left
T32	32-pin connector, blue, on dash panel insert
T32a	32-pin connector, green, on dash panel insert
249	Earth connection -2-, in interior wiring harness
B177	Connection (61), in interior wiring harness

ws	=	white
sw	=	black
ro	=	red
br	=	brown
gn	=	green
bl	=	blue
gr	=	grey
li	=	purple
ge	=	yellow
or	=	orange
rs	=	pink

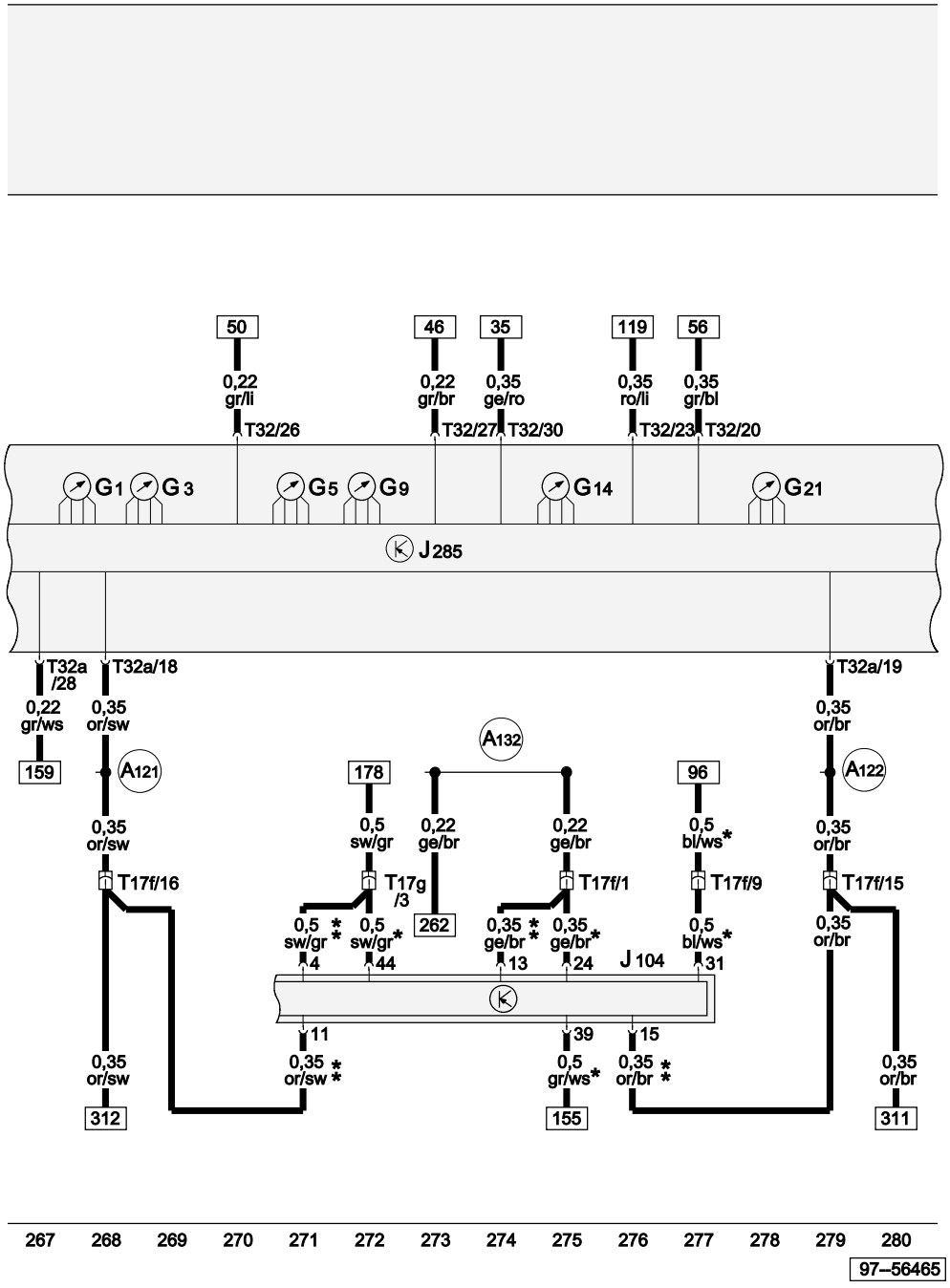

ABS with EDL control unit, control unit with display in dash panel insert

G1	Fuel gauge
G3	Coolant temperature gauge
G5	Rev. counter
G9	Oil temperature gauge
G14	Voltmeter
G21	Speedometer
J104	ABS with EDL control unit
J285	Control unit with display in dash panel insert
T17f	17-pin connector, white, connector point, A pillar, left
T17g	17-pin connector, red, connector point, A pillar, left
T32	32-pin connector, blue, on dash panel insert
T32a	32-pin connector, green, on dash panel insert
A121	Connection (high bus), in dash panel wiring harness
A122	Connection (low bus), in dash panel wiring harness
A132	Connection (TCS/ESP), in dash panel wiring harness
*	With the introduction of MK 60 no longer fitted, phased-in modification
**	Applicable with the introduction of MK 60, phased-in modification

ws	=	white
sw	=	black
ro	=	red
br	=	brown
gn	=	green
bl	=	blue
gr	=	grey
li	=	purple
ge	=	yellow
or	=	orange
rs	=	pink

Protected by copyright. Copying for private or commercial purposes, in part or in whole, is not permitted unless authorised by AUDI AG. AUDI AG does not guarantee or accept any liability with respect to the correctness of information in this document. Copyright by AUDI AG.

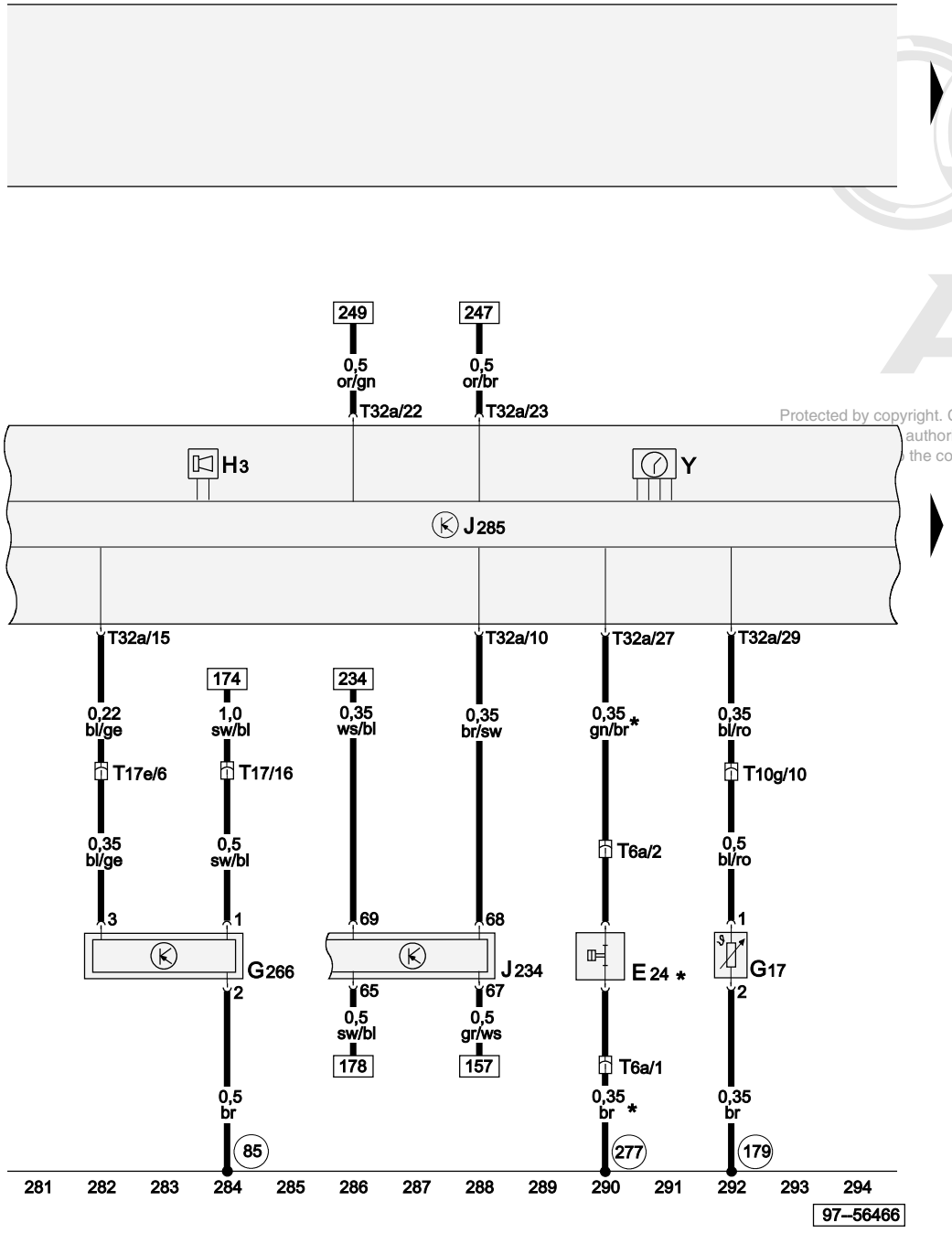

Belt switch on driver's side, ambient temperature sensor, oil level/oil temperature sender, control unit with display in dash panel insert

E24	Belt switch, driver's side
G17	Ambient temperature sensor
G266	Oil level/oil temperature sender
H3	Buzzer/gong
J234	Airbag control unit
J285	Control unit with display in dash panel insert
T6a	6-pin connector, red, under driver's seat
T10g	10-pin connector, grey, connector point, A pillar, left
T17	17-pin connector, brown, in footwell, front left
T17e	17-pin connector, blue, in footwell, front left
T32a	32-pin connector, green, on dash panel insert
Y	Analogue clock
(85)	Earth connection -1-, in engine compartment wiring harness
(179)	Earth connection, in left headlight wiring harness
(277)	Earth connection -3-, in interior wiring harness
*	Only applies to models with seat belt warning system

Protected by copyright. Copying for private or commerc... authorised by AUDI AG. AUDI AG do... the correctness of information in this document. Copyright by AUDI AG.

ws	=	white
sw	=	black
ro	=	red
br	=	brown
gn	=	green
bl	=	blue
gr	=	grey
li	=	purple
ge	=	yellow
or	=	orange
rs	=	pink

Control unit with display in dash panel insert, warning lamps

D2	Immobilizer reading coil
F34	Brake fluid level warning contact
F66	Coolant shortage indicator switch
G34	Brake lining/pad wear sender, front left
J285	Control unit with display in dash panel insert
K4	Side light warning lamp
K19	Seat belt warning system warning lamp
K47	ABS warning lamp
K75	Airbag warning lamp
K117	Immobilizer warning lamp
T10f	10-pin connector, blue, connector point, A pillar, left
T17g	17-pin connector, red, connector point, A pillar, left
T32	32-pin connector, blue, on dash panel insert
T32a	32-pin connector, green, on dash panel insert
119	Earth connection -1-, in headlight wiring harness
269	Earth connection (sender earth) -1-, in dash panel wiring harness
B116	Connection (58d), in interior wiring harness
*	No longer fitted, phased-in modification

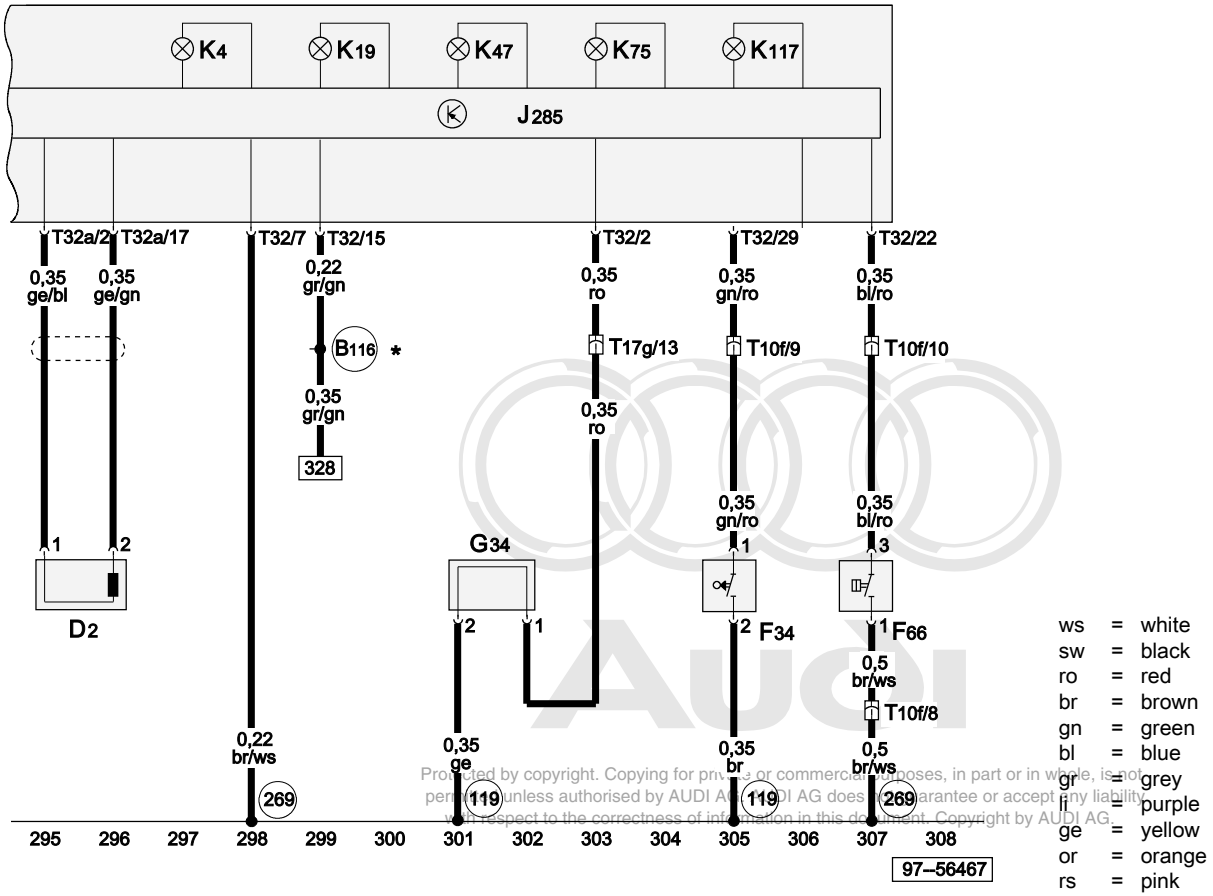

ws = white
sw = black
ro = red
br = brown
gn = green
bl = blue
gr = grey
li = purple
ge = yellow
or = orange
rs = pink

Protected by copyright. Copying for private or commercial purposes, in part or in whole, is not permitted unless authorised by AUDI AG. AUDI AG does not guarantee or accept any liability with respect to the correctness of information in this document. Copyright by AUDI AG.

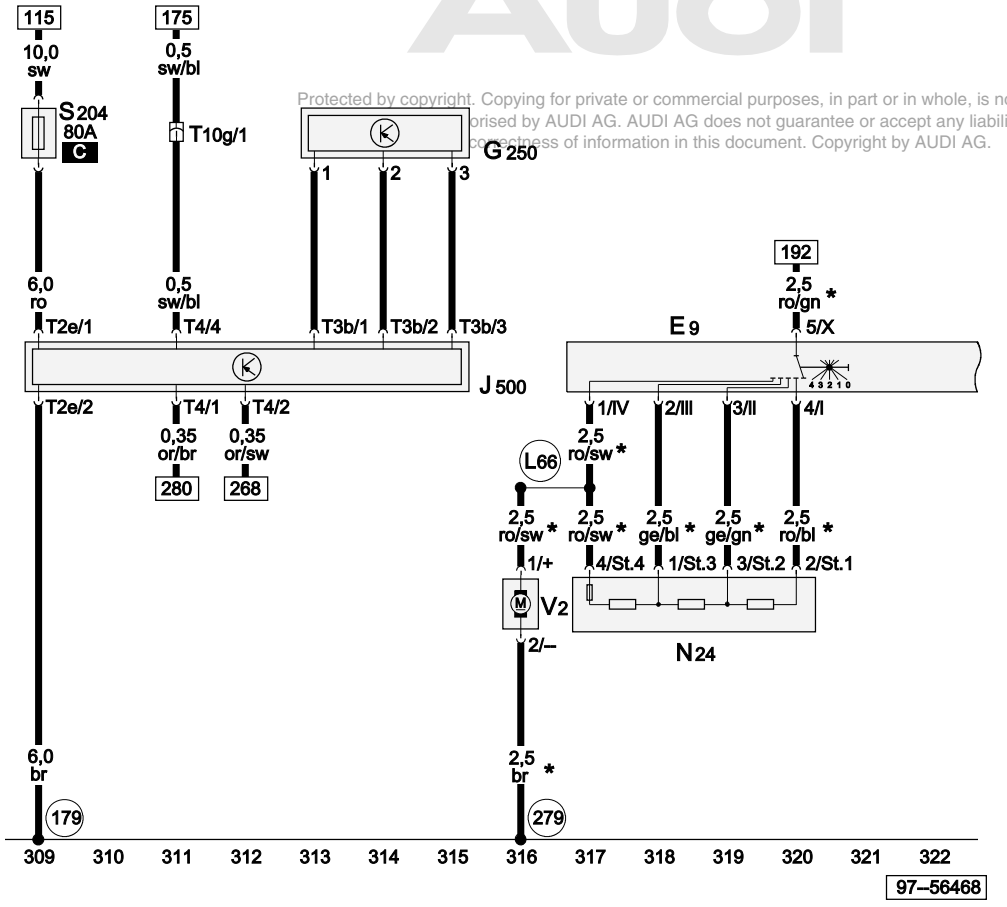

Protected by copyright. Copying for private or commercial purposes, in part or in whole, is not permitted unless authorised by AUDI AG. AUDI AG does not guarantee or accept any liability with respect to the correctness of information in this document. Copyright by AUDI AG.

Fresh air blower switch, power steering sensor, power steering control unit, fresh air blower with overheating fuse series resistor

E9	Fresh air blower switch
G250	Power steering sensor
J500	Power steering control unit
N24	Fresh air blower with overheating fuse series resistor
S204	Fuse -1- (30), for power steering control unit
T2e	2-pin connector, black, on power steering control unit
T3b	3-pin connector, on power steering control unit
T4	4-pin connector, black, on power steering control unit
T10g	10-pin connector, grey, connector point, A pillar, left
V2	Fresh air blower
179	Earth connection, in left headlight wiring harness
279	Earth connection -5-, in interior wiring harness
L66	Connection, in heater blower wiring harness
*	Only applies to models without air conditioner

ws	=	white
sw	=	black
ro	=	red
br	=	brown
gn	=	green
bl	=	blue
gr	=	grey
li	=	purple
ge	=	yellow
or	=	orange
rs	=	pink

Heated rear window switch, fresh air/air recirculating flap switch, additional heating button (ECON), heated rear window relay

E15	Heated rear window switch
E87	Control and display unit for air conditioner
E159	Fresh air/air recirculating flap switch
E288	Additional heating button (ECON)
J9	Heated rear window relay
J248	Diesel direct injection system control unit
T17e	17-pin connector, blue, in footwell, front left
V154	Fresh air/air recirculating flap control motor
Z1	Heated rear window
62	Earth point, C pillar, right
277	Earth connection -3-, in interior wiring harness
B111	Positive (+) connection -2- (30a), in interior wiring harness
B180	Connection (heated rear window), in interior wiring harness
B248	Connection -2- (heated rear window), in interior wiring harness
*	Only applies to models without air conditioner
**	Only applies to models with diesel engine
***	Only applies to models with air conditioner

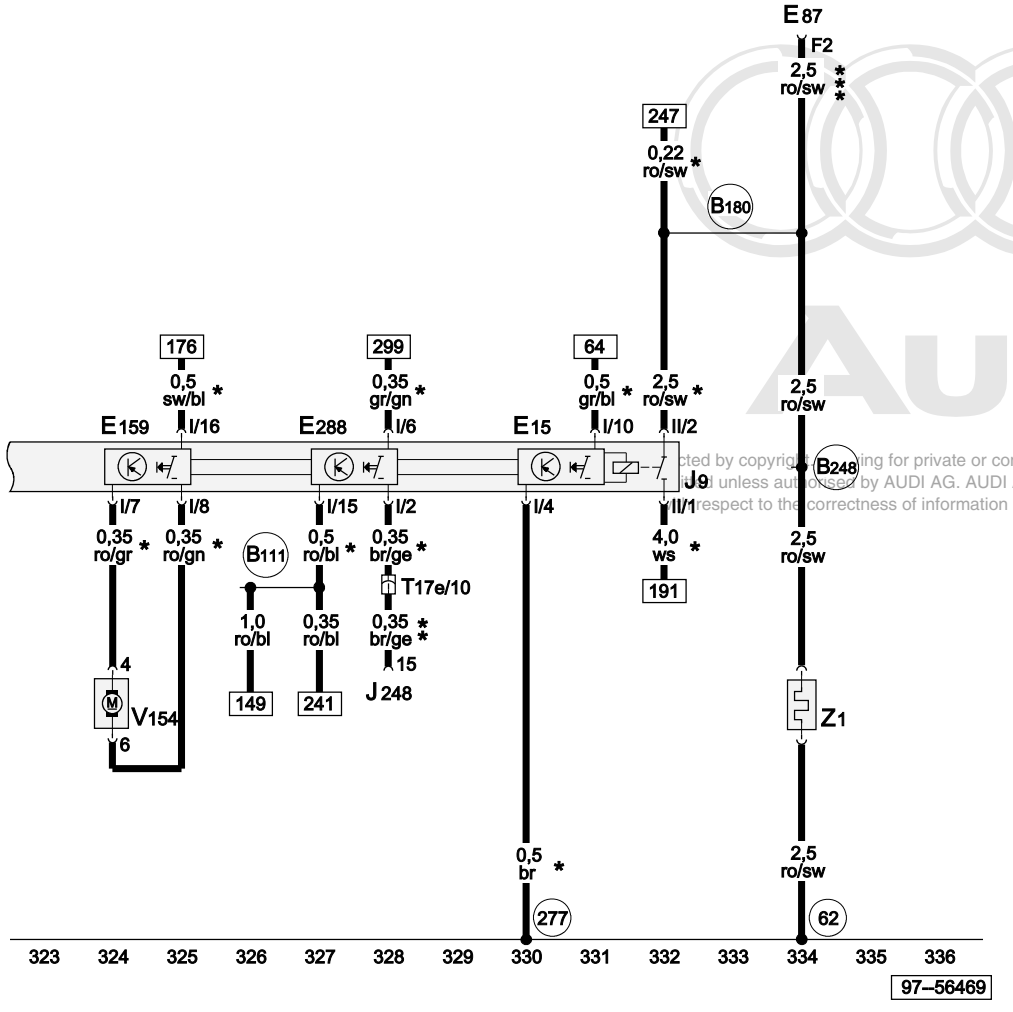

ws	=	white
sw	=	black
ro	=	red
br	=	brown
gn	=	green
bl	=	blue
gr	=	grey
li	=	purple
ge	=	yellow
or	=	orange
rs	=	pink

cted by copyright ing for private or commercial purposes, in part or in whole, is not
d unless authorised by AUDI AG. AUDI AG does not guarantee or accept any liability
respect to the correctness of information in this document. Copyright by AUDI AG.

Basic equipment for 1.2 litre TDI engine, engine code ANY

From model year 2002

Main fuse

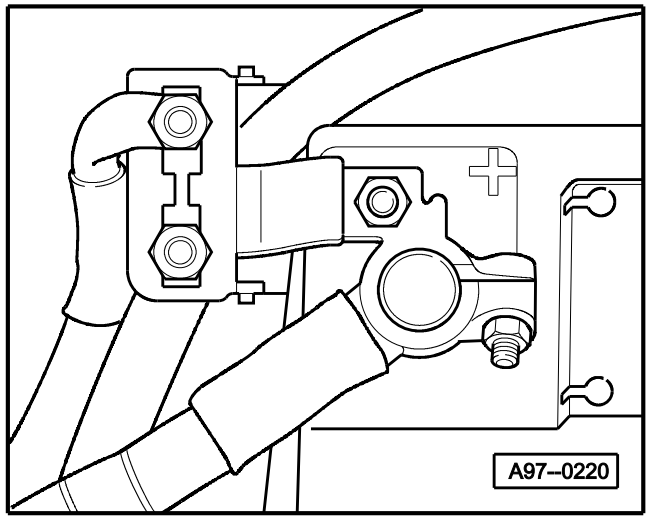

- On battery

9-point relay carrier, fuse box

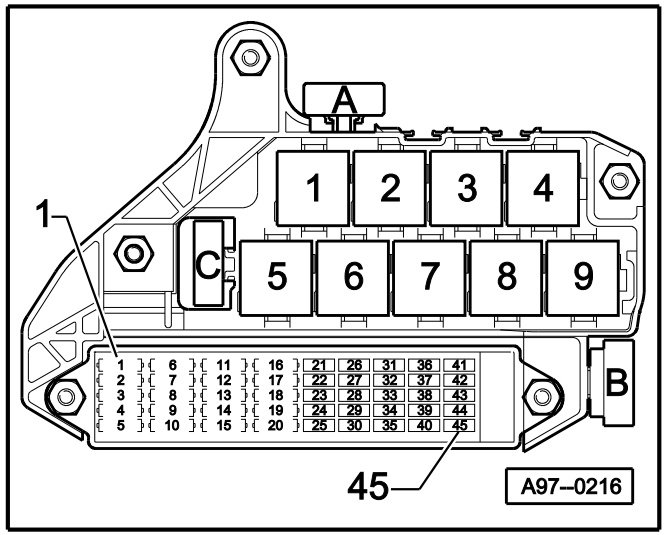

Protected by copyright. Copying for private or commercial purposes, in part or in whole, is not permitted unless authorised by AUDI AG. AUDI AG does not guarantee or accept any liability with respect to the correctness of information in this document. Copyright by AUDI AG.

♦ In dash panel, driver's side

1 - Consumer switch-off relay (J511)
3.1 - Brake light suppression relay (J508)
5 - Dual tone horn relay (J4)
6 - Bulb check warning unit (K41)
7 - Bulb check warning unit (K41)
9 - X contact relief relay (J59)

Fuse colours

5 A - beige
7.5 A - brown
10 A - red
15 A - blue
20 A - yellow
25 A - white
30 A - green

Protected by copyright. Copying for private or commercial purposes, in part or in whole, is not permitted unless authorised by AUDI AG. AUDI AG does not guarantee or accept any liability with respect to the correctness of information in this document. Copyright by AUDI AG.

3-point relay carrier

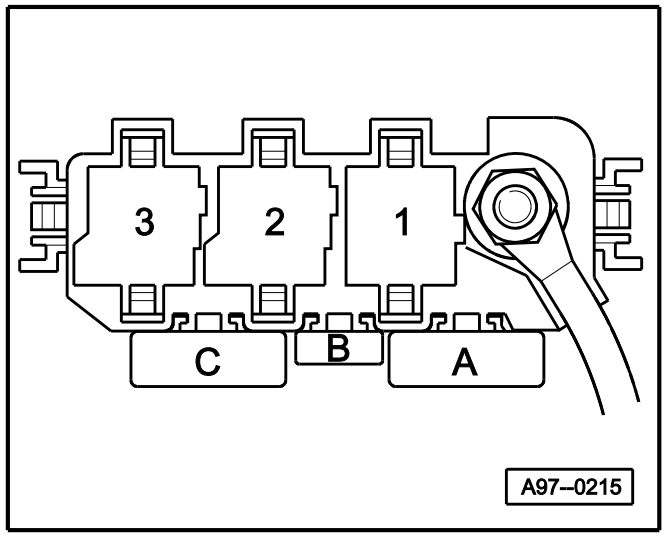

♦ In footwell, front left

C - Fuse -1- (30) for power steering (S204)

6+6-point relay carrier

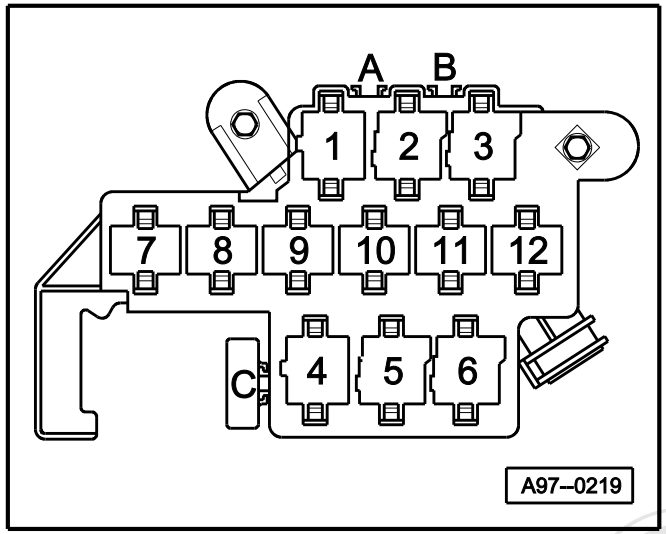

- In footwell, front left

2 - Automatic intermittent wash/wipe relay (J31)
3 - Automatic intermittent wash/wipe relay (J31)

Protected by copyright. Copying for private or commercial purposes, in part or in whole, is not permitted unless authorised by AUDI AG. AUDI AG does not guarantee or accept any liability with respect to the correctness of information in this document. Copyright by AUDI AG.

Earth connections

44	Earth point, lower part of left A pillar
50	Earth point, luggage compartment, left
98	Earth connection, in tailgate wiring harness
238	Earth connection -1-, in interior wiring harness
249	Earth connection -2-, in interior wiring harness
277	Earth connection -3-, in interior wiring harness
279	Earth connection -5-, in interior wiring harness
284	Earth connection -6-, in interior wiring harness

Protected by copyright. Copying for private or commercial purposes, in part or in whole, is not permitted unless authorised by AUDI AG. AUDI AG does not guarantee or accept any liability with respect to the correctness of information in this document. Copyright by AUDI AG.

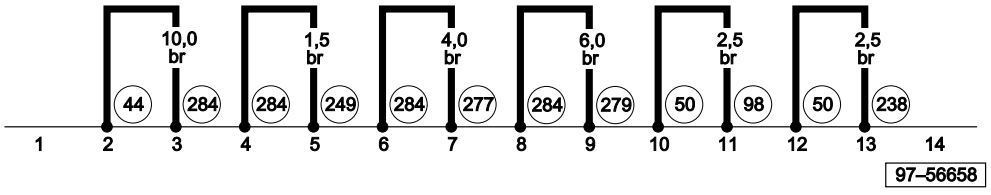

ws	=	white
sw	=	black
ro	=	red
br	=	brown
gn	=	green
bl	=	blue
gr	=	grey
li	=	purple
ge	=	yellow
or	=	orange
rs	=	pink

Earth connections

T17 17-pin connector, brown, in footwell, front left

43 Earth point, lower part of right A pillar

44 Earth point, lower part of left A pillar

65 Earth point, left longitudinal member, rear

85 Earth connection -1-, in engine compartment wiring harness

119 Earth connection -1-, in headlight wiring harness

176 Earth connection, in right headlight wiring harness

179 Earth connection, in left headlight wiring harness

284 Earth connection -6-, in interior wiring harness

Protected by copyright. Copying for private or commercial purposes, in part or in whole, is not permitted unless authorised by AUDI AG. AUDI AG does not guarantee or accept any liability with respect to the correctness of information in this document. Copyright by AUDI AG.

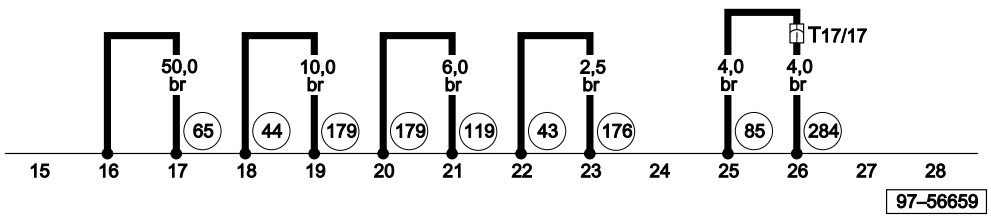

ws = white
sw = black
ro = red
br = brown
gn = green
bl = blue
gr = grey
li = purple
ge = yellow
or = orange
rs = pink

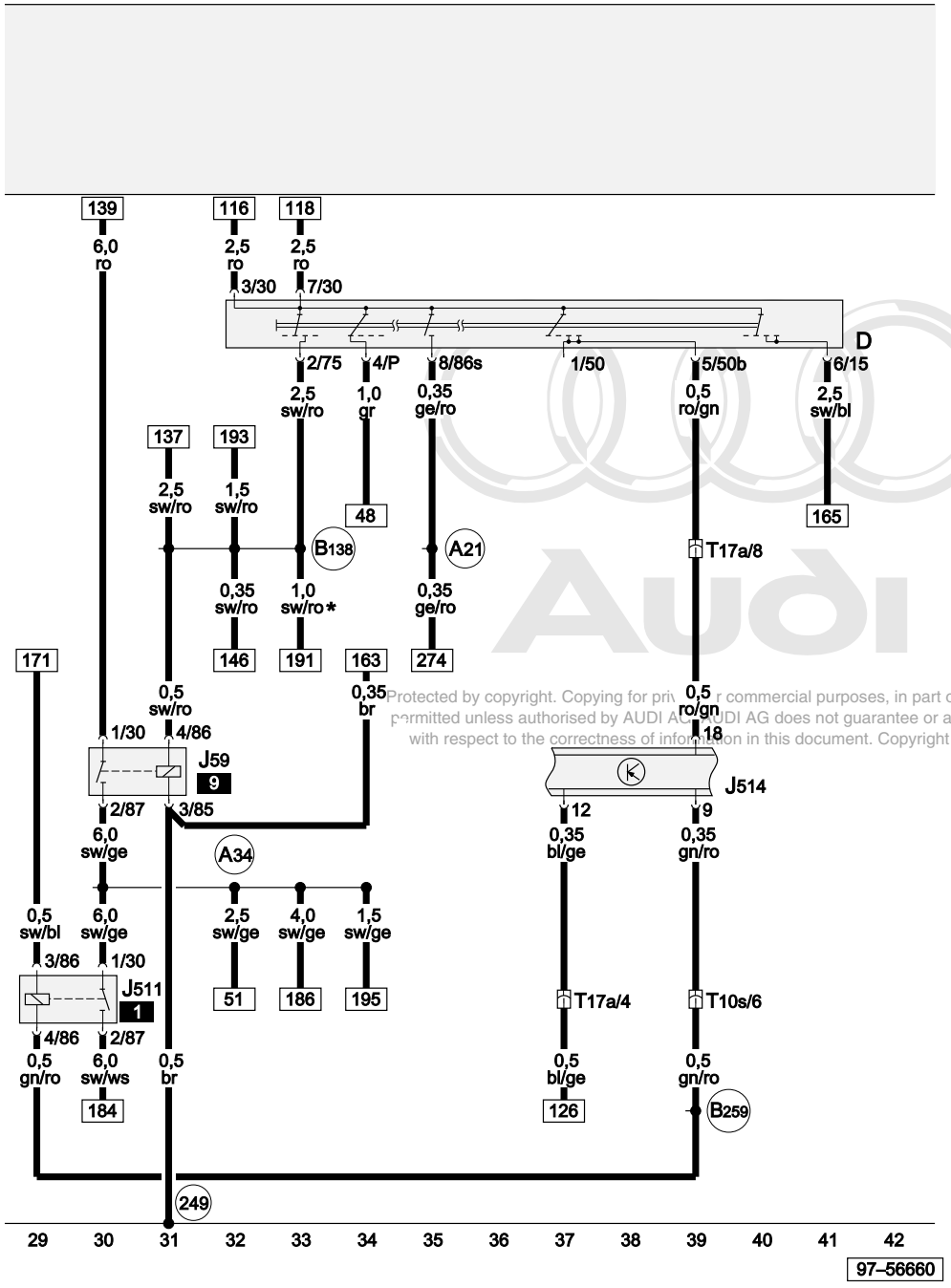

Protected by copyright. Copying for private or commercial purposes, in part or in whole, is not permitted unless authorised by AUDI AG. AUDI AG does not guarantee or accept any liability with respect to the correctness of information in this document. Copyright by AUDI AG.

Ignition/starter switch, X contact relief relay, consumer switch-off relay, electronic manual gearbox control unit

D	Ignition/starter switch
J59	X contact relief relay
J511	Consumer switch-off relay
J514	Electronic manual gearbox control unit
T10s	10-pin connector, white, in footwell, front left
T17a	17-pin connector, red, in footwell, front left
249	Earth connection -2-, in interior wiring harness
A21	Connection (86s), in dash panel wiring harness
A34	Connection (75x), in dash panel wiring harness
B138	Positive (+) connection -1- (x), in interior wiring harness
B259	Connection (start/stop signal), in interior wiring harness
*	Only applies to models with heater element for washer jet

ws	=	white
sw	=	black
ro	=	red
br	=	brown
gn	=	green
bl	=	blue
gr	=	grey
li	=	purple
ge	=	yellow
or	=	orange
rs	=	pink

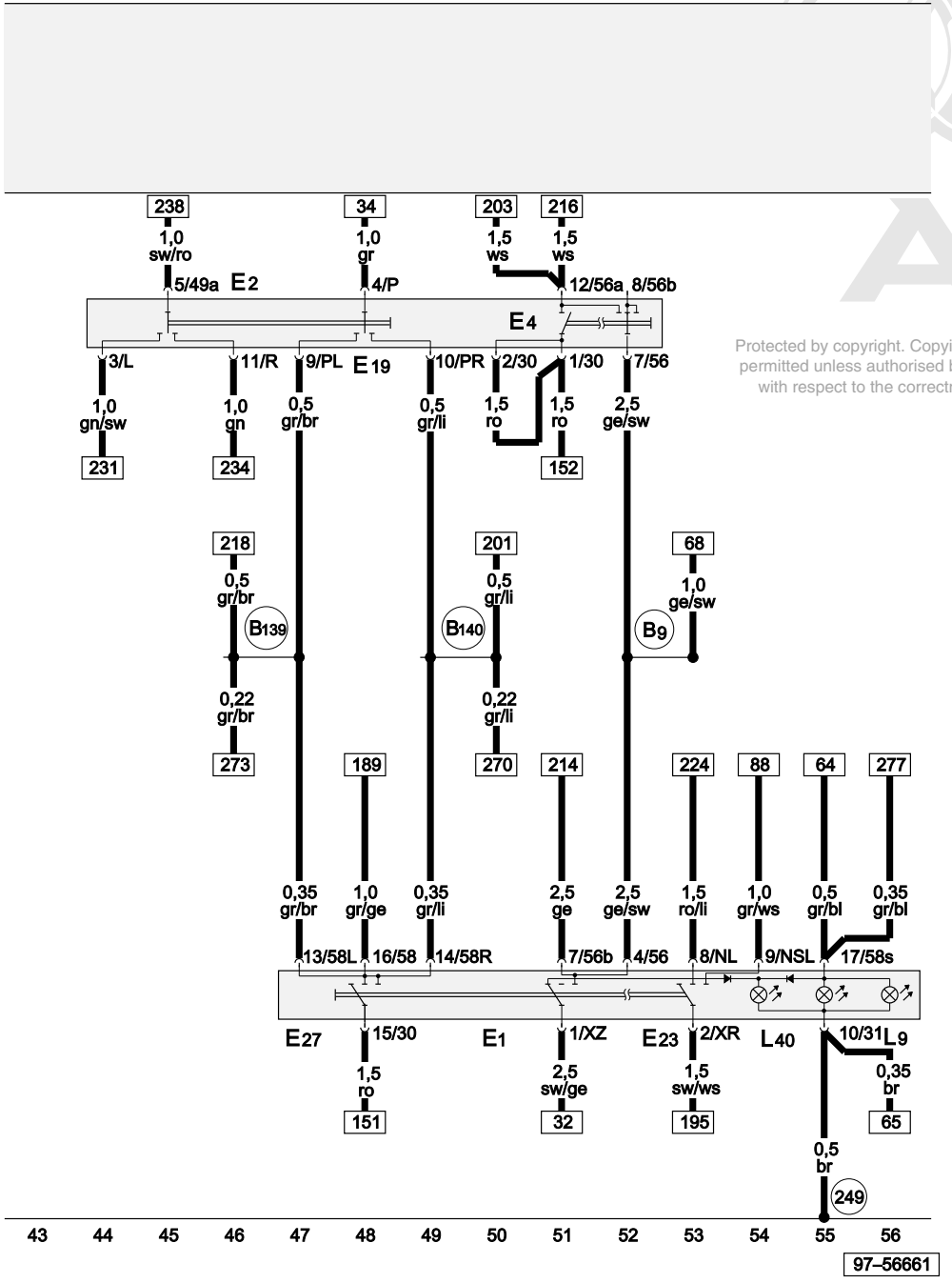

Protected by copyright. Copying for private or commercial purposes, in part, is not permitted unless authorised by AUDI AG. AUDI AG does not guarantee or accept any liability with respect to the correctness of information in this document. Copyright by AUDI AG.

Lighting switch

E1	Lighting switch
E2	Turn signal switch
E4	Headlight dipper/flasher switch
E19	Parking light switch
E23	Front and rear fog light switch
E27	Side light switch
L9	Lighting switch light bulb
L40	Rear fog light switch illumination bulb
249	Earth connection -2-, in interior wiring harness
B9	Connection (56), in steering column switch wiring harness
B139	Connection (PL (parking light, left), in interior wiring harness
B140	Connection (PR (parking light, right), in interior wiring harness

ws	=	white
sw	=	black
ro	=	red
br	=	brown
gn	=	green
bl	=	blue
gr	=	grey
li	=	purple
ge	=	yellow
or	=	orange
rs	=	pink

Switches and instruments light regulator, headlight range control adjuster

E20	Switches and instruments light regulator
E102	Headlight range control adjuster
L54	Headlight range control adjuster light bulb
269	Earth connection (sender earth) -1-, in dash panel wiring harness
B145	Positive (+) connection (58b), in interior wiring harness
*	Only applies to models without air conditioner

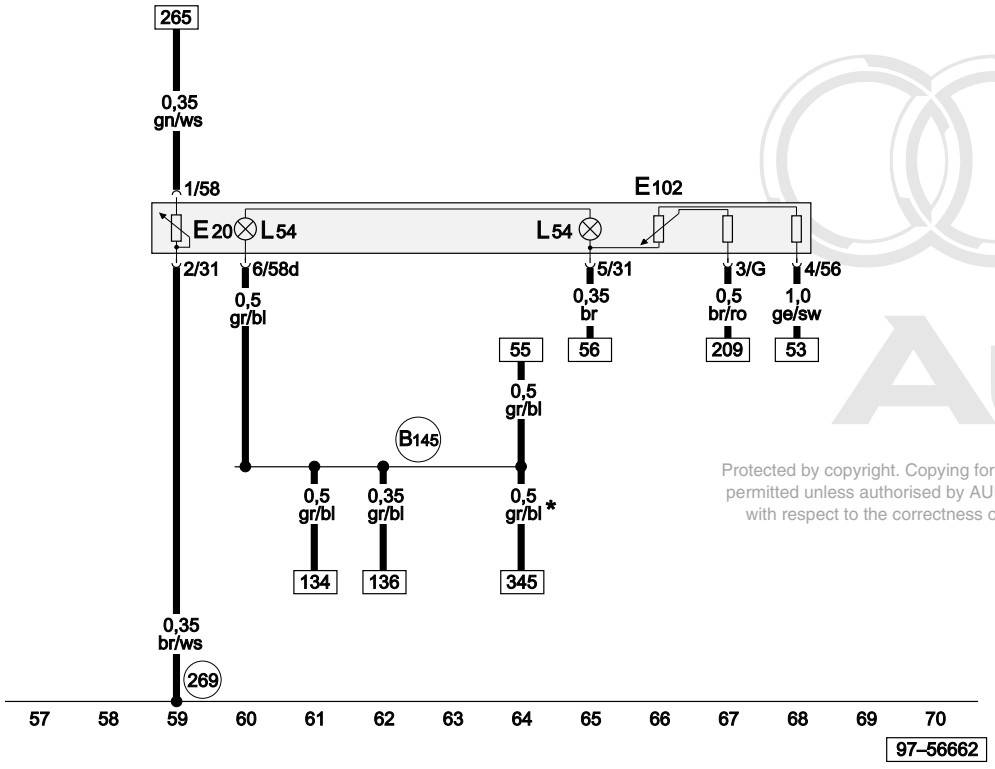

Protected by copyright. Copying for private or commercial purposes, in part or in whole, is not permitted unless authorised by AUDI AG. AUDI AG does not guarantee or accept any liability with respect to the correctness of information in this document. Copyright by AUDI AG.

ws	=	white
sw	=	black
ro	=	red
br	=	brown
gn	=	green
bl	=	blue
gr	=	grey
li	=	purple
ge	=	yellow
or	=	orange
rs	=	pink

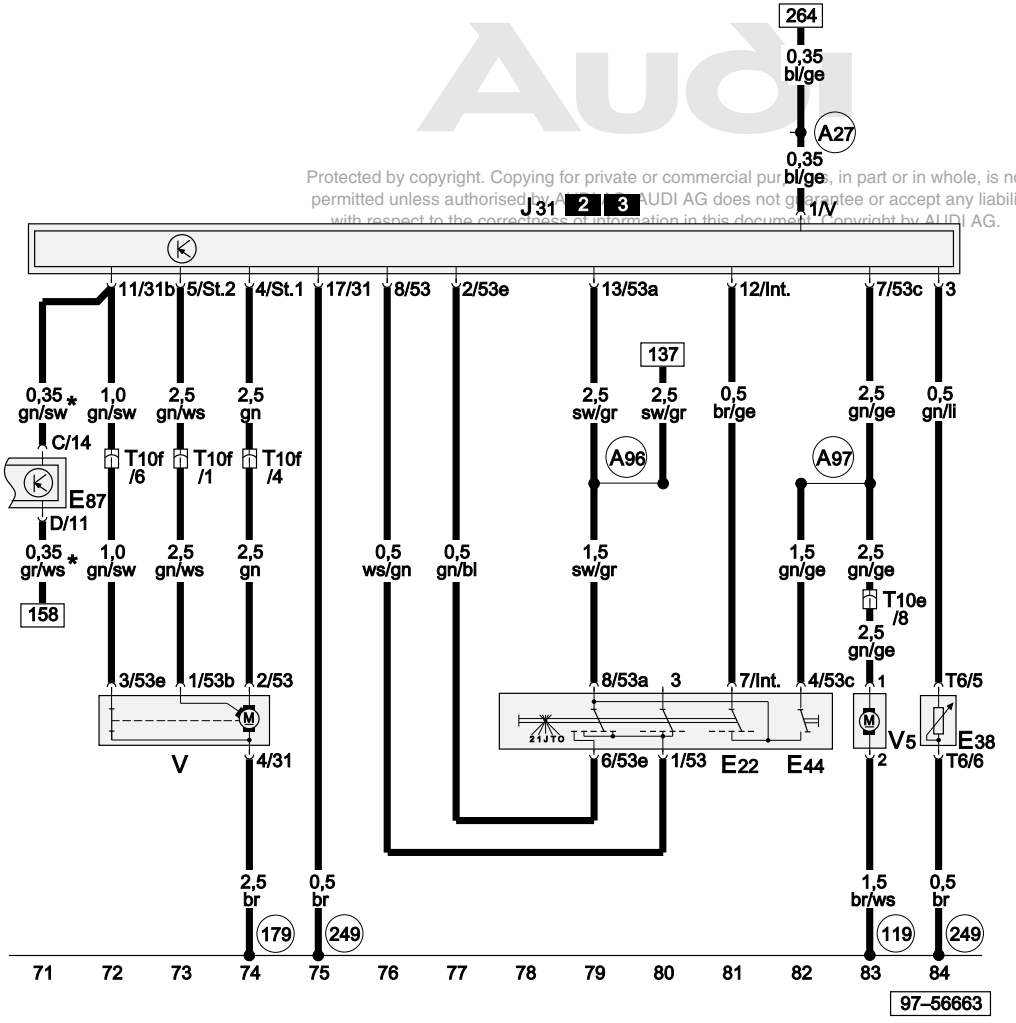

ws = white
sw = black
ro = red
br = brown
gn = green
bl = blue
gr = grey
li = purple
ge = yellow
or = orange
rs = pink

Intermittent wiper switch, windscreen washer pump switch, automatic intermittent wash/wipe relay

E22	Intermittent wiper switch
E38	Intermittent wiper control
E44	Windscreen washer pump switch
E87	Control and display unit for air conditioner
J31	Automatic intermittent wash/wipe relay
T6	6-pin connector, brown, behind steering column switch trim
T10e	10-pin connector, brown, connector point, A pillar, left
T10f	10-pin connector, blue, connector point, A pillar, left
V	Windscreen wiper motor
V5	Windscreen washer pump
119	Earth connection -1-, in headlight wiring harness
179	Earth connection, in left headlight wiring harness
249	Earth connection -2-, in interior wiring harness
A27	Connection (speed signal), in dash panel wiring harness
A96	Connection (53a), in dash panel wiring harness
A97	Connection (53), in dash panel wiring harness
*	Only applies to models with air conditioner

Protected by copyright. Copying for private or commercial purposes, in part or in whole, is not permitted unless authorised by AUDI AG. AUDI AG does not guarantee or accept any liability with respect to the correctness of information in this document. Copyright by AUDI AG.

Brake light switch, reversing light switch, brake light suppression relay, rear left fog light bulb, left tail light bulb

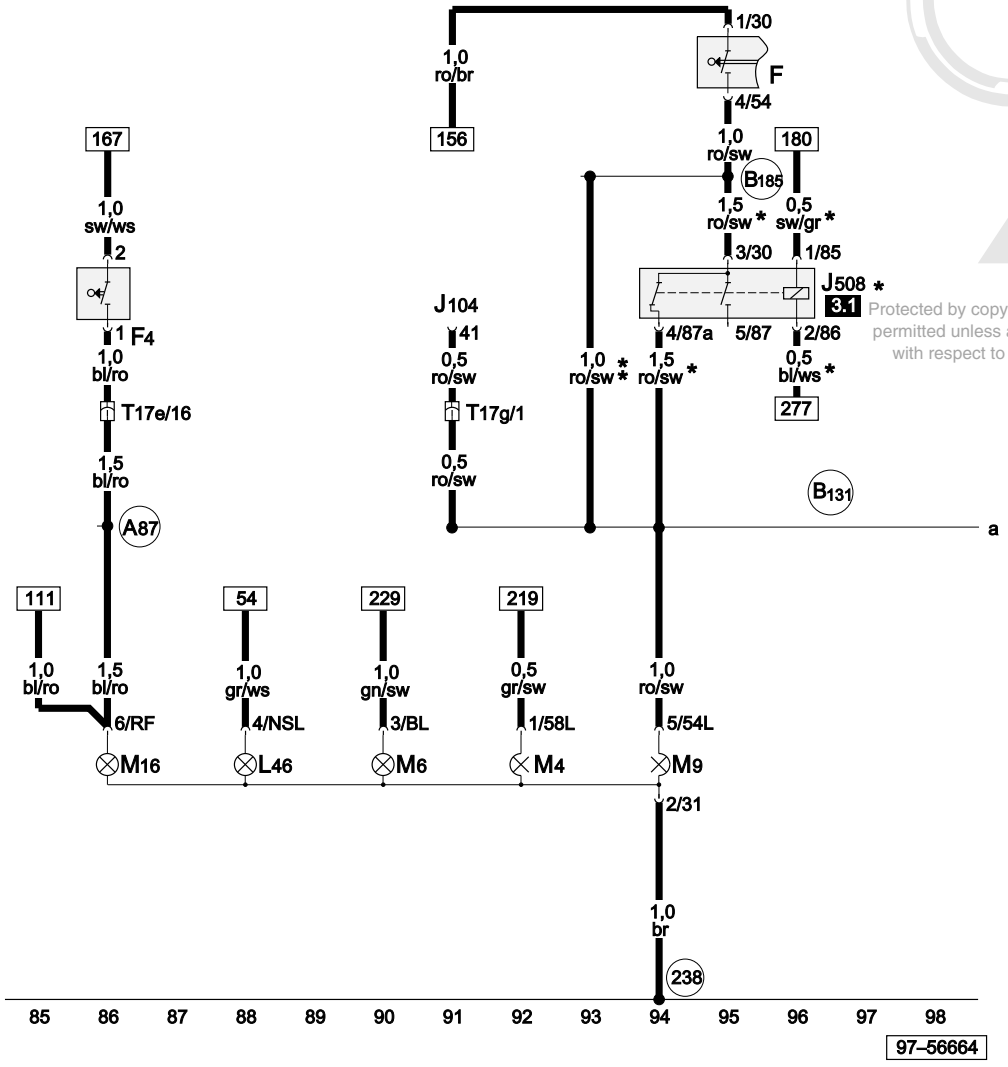

F	Brake light switch
F4	Reversing light switch
J104	ABS with EDL control unit
J508	Brake light suppression relay
L46	Rear fog light bulb, left
M4	Tail light bulb, left
M6	Turn signal bulb, rear left
M9	Brake light bulb, left
M16	Reversing light bulb, left
T17e	17-pin connector, blue, in footwell, front left
T17g	17-pin connector, red, connector point, A pillar, left
238	Earth connection -1-, in interior wiring harness
A87	Connection (RF (reversing light)), in dash panel wiring harness
B131	Connection (54), in interior wiring harness
B185	Connection -2- (54), in interior wiring harness
*	With the introduction of MK 60 no longer fitted, phased-in modification
**	Applicable with the introduction of MK 60, phased-in modification

ws	=	white
sw	=	black
ro	=	red
br	=	brown
gn	=	green
bl	=	blue
gr	=	grey
li	=	purple
ge	=	yellow
or	=	orange
rs	=	pink

Protected by copyright. Copying for private or commercial purposes, in part or in whole, is not permitted unless authorised by AUDI AG. AUDI AG does not guarantee or accept any liability with respect to the correctness of information in this document. Copyright by AUDI AG.

Bulb check warning unit, right tail light bulb, right brake light bulb, high level brake light bulb, number plate light

K41	Bulb check warning unit
M2	Tail light bulb, right
M8	Turn signal bulb, rear right
M10	Brake light bulb, right
M17	Reversing light bulb, right
M25	High level brake light bulb
X	Number plate light
98	Earth connection, in tailgate wiring harness
238	Earth connection -1-, in interior wiring harness
B131	Connection (54), in interior wiring harness
B132	Connection (number plate light), in interior wiring harness
W1	Positive (+) connection (54), in rear wiring harness
*	Only applies to models with driver information system

Protected by copyright. Copying for private or commercial purposes, in part or in whole, is not permitted unless authorised by AUDI AG. AUDI AG does not guarantee or accept any liability with respect to the correctness of information in this document. Copyright by AUDI AG.

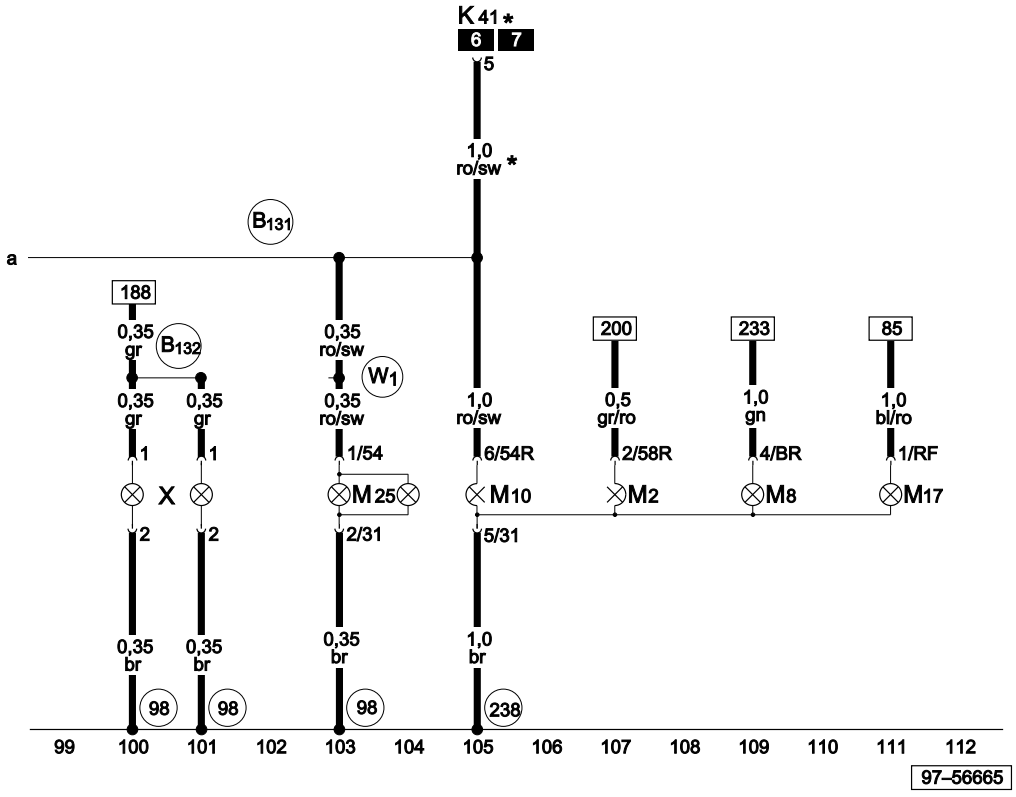

ws	=	white
sw	=	black
ro	=	red
br	=	brown
gn	=	green
bl	=	blue
gr	=	grey
li	=	purple
ge	=	yellow
or	=	orange
rs	=	pink

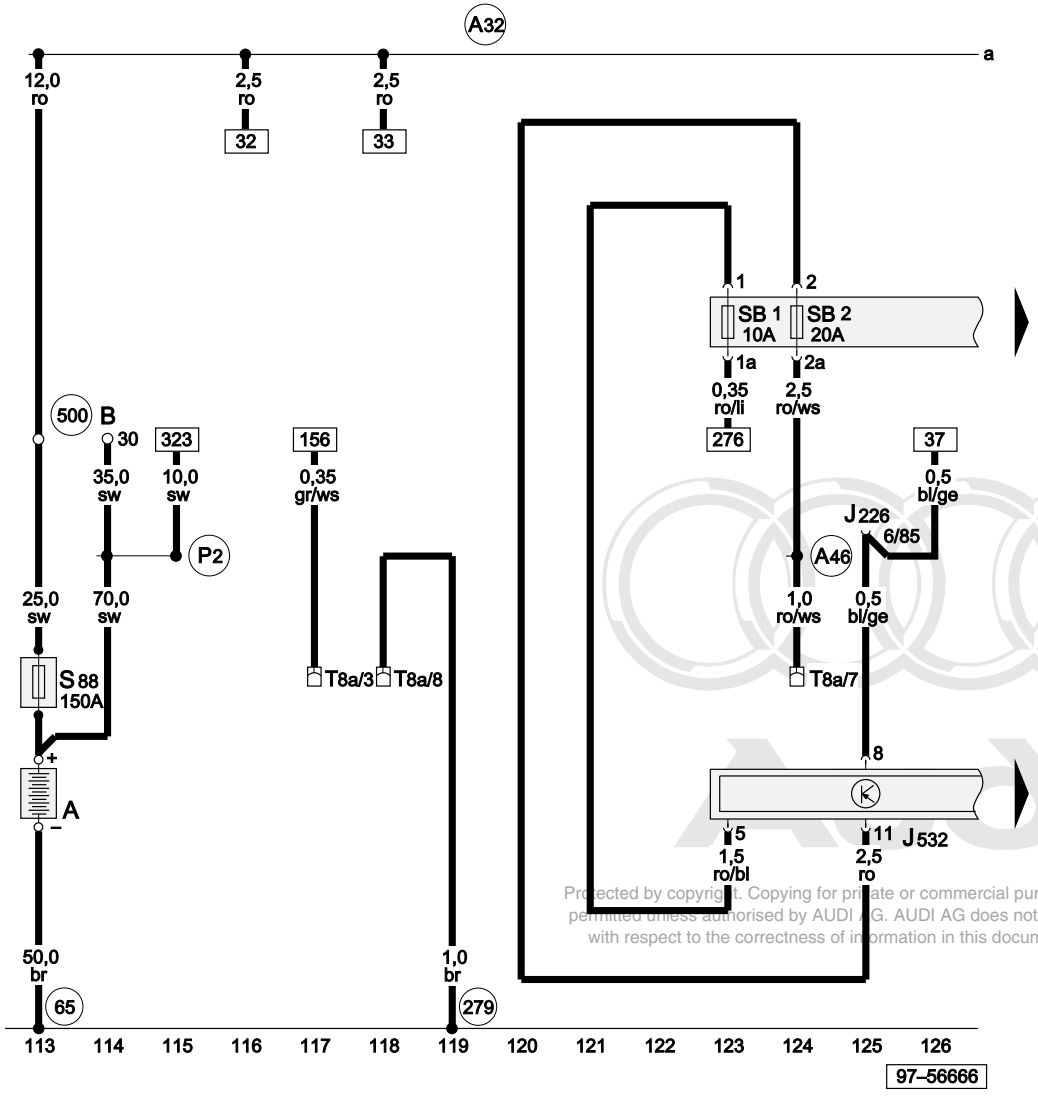

Battery, voltage stabiliser, fuses on fuse box, strip fuse

A	Battery
B	Starter
J226	Starter inhibitor and reversing light relay
J532	Voltage stabiliser
SB1	Fuse -1- on fuse box
SB2	Fuse -2- on fuse box
S88	Strip fuse
T8a	8-pin connector, black, radio connector III
65	Earth point, left longitudinal member, rear
279	Earth connection -5-, in interior wiring harness
500	Screw connection -1- (30), on relay plate
A32	Positive (+) connection (30), in dash panel wiring harness
A46	Positive (+) connection (30 - from radio), in dash panel wiring harness
P2	Positive (+) connection (30), in battery wiring harness

ws	=	white
sw	=	black
ro	=	red
br	=	brown
gn	=	green
bl	=	blue
gr	=	grey
li	=	purple
ge	=	yellow
or	=	orange
rs	=	pink

Protected by copyright. Copying for private or commercial purposes, in part or in whole, is not permitted unless authorised by AUDI AG. AUDI AG does not guarantee or accept any liability with respect to the correctness of information in this document. Copyright by AUDI AG.

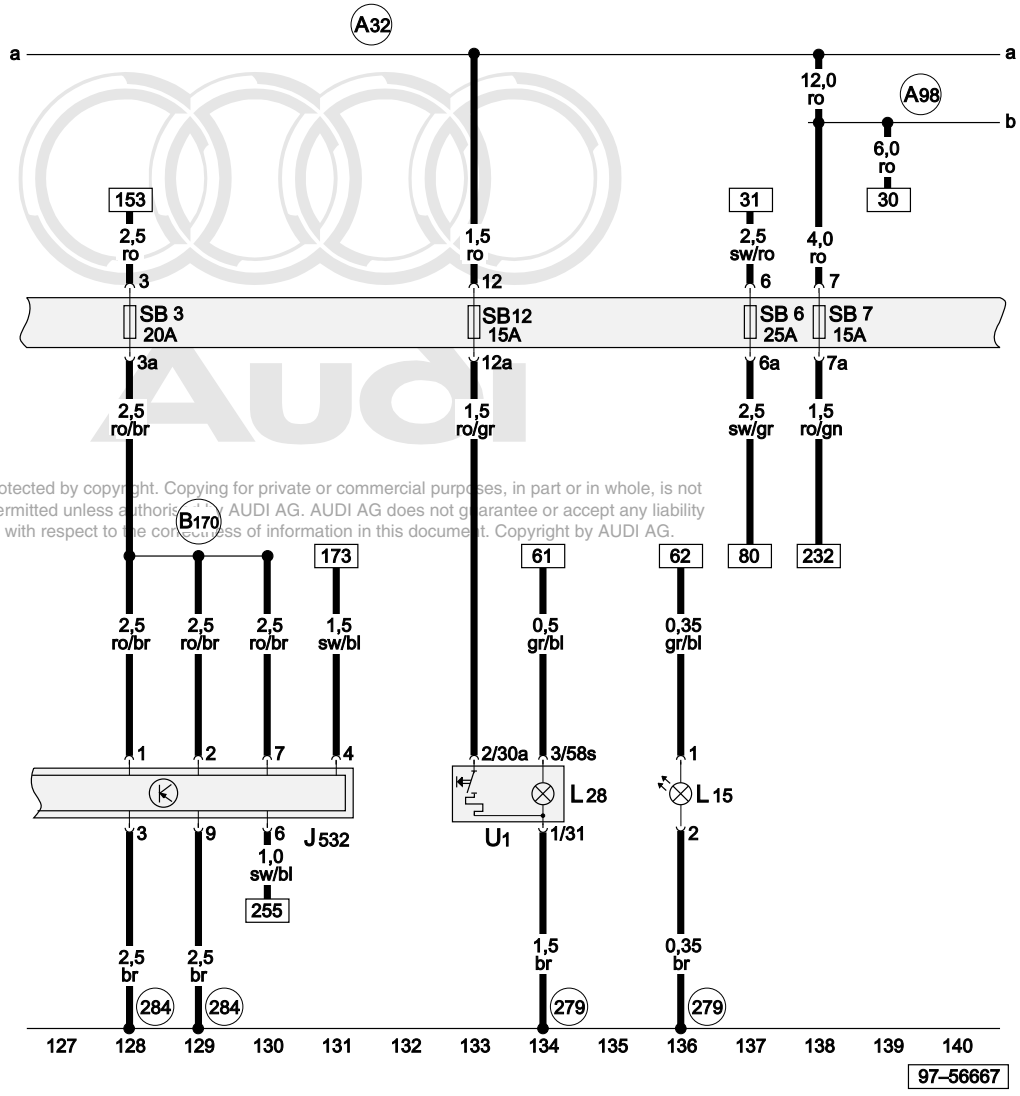

Protected by copyright. Copying for private or commercial purposes, in part or in whole, is not permitted unless authorised by AUDI AG. AUDI AG does not guarantee or accept any liability with respect to the correctness of information in this document. Copyright by AUDI AG.

Voltage stabiliser, ashtray light bulb, cigarette lighter light bulb, fuses on fuse box

J532	Voltage stabiliser
L15	Ashtray light bulb
L28	Cigarette lighter light bulb
SB3	Fuse -3- on fuse box
SB6	Fuse -6- on fuse box
SB7	Fuse -7- on fuse box
SB12	Fuse -12- on fuse box
U1	Cigarette lighter
279	Earth connection -5-, in interior wiring harness
284	Earth connection -6-, in interior wiring harness
A32	Positive (+) connection (30), in dash panel wiring harness
A98	Positive (+) connection -4- (30), in dash panel wiring harness
B170	Positive (+) connection -2- (30), in interior wiring harness

ws	=	white
sw	=	black
ro	=	red
br	=	brown
gn	=	green
bl	=	blue
gr	=	grey
li	=	purple
ge	=	yellow
or	=	orange
rs	=	pink

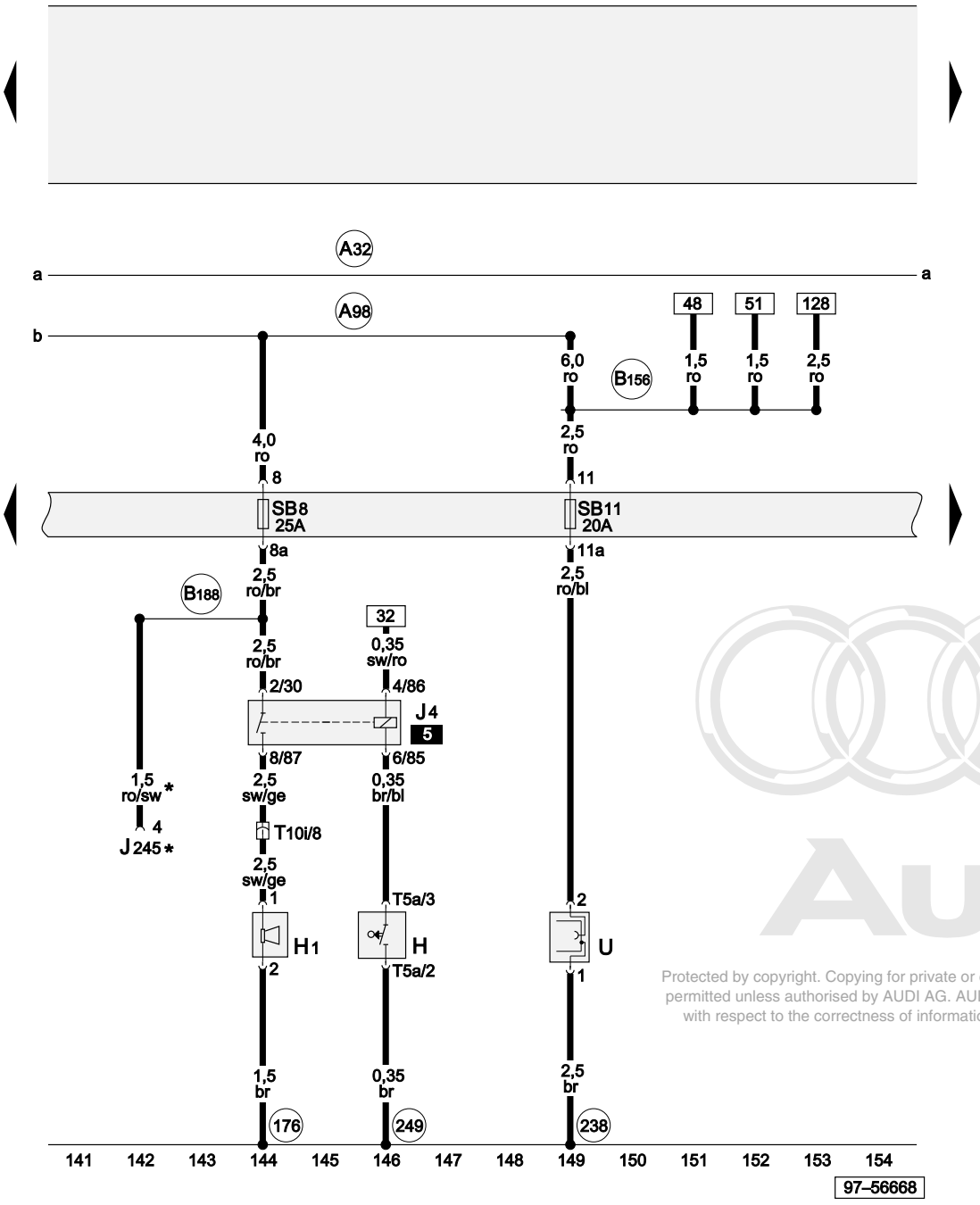

Horn plate, horn/dual tone horn, dual tone horn relay, fuses on fuse box

H	Horn plate
H1	Horn/dual tone horn
J4	Dual tone horn relay
J245	Sliding sunroof adjustment control unit
SB8	Fuse -8- on fuse box
SB11	Fuse -11- on fuse box
T5a	5-pin connector, yellow, behind steering column switch trim
T10i	10-pin connector, black, connector point, A pillar, right
U	Socket
176	Earth connection, in right headlight wiring harness
238	Earth connection -1-, in interior wiring harness
249	Earth connection -2-, in interior wiring harness
A32	Positive (+) connection (30), in dash panel wiring harness
A98	Positive (+) connection -4- (30), in dash panel wiring harness
B156	Positive (+) connection -4- (30), in interior wiring harness
B188	Positive (+) connection -5- (30), in interior wiring harness
*	Only applies to models with sliding/tilting sunroof

Protected by copyright. Copying for private or commercial purposes, in part or in whole, is not permitted unless authorised by AUDI AG. AUDI AG does not guarantee or accept any liability with respect to the correctness of information in this document. Copyright by AUDI AG.

ws	=	white
sw	=	black
ro	=	red
br	=	brown
gn	=	green
bl	=	blue
gr	=	grey
li	=	purple
ge	=	yellow
or	=	orange
rs	=	pink

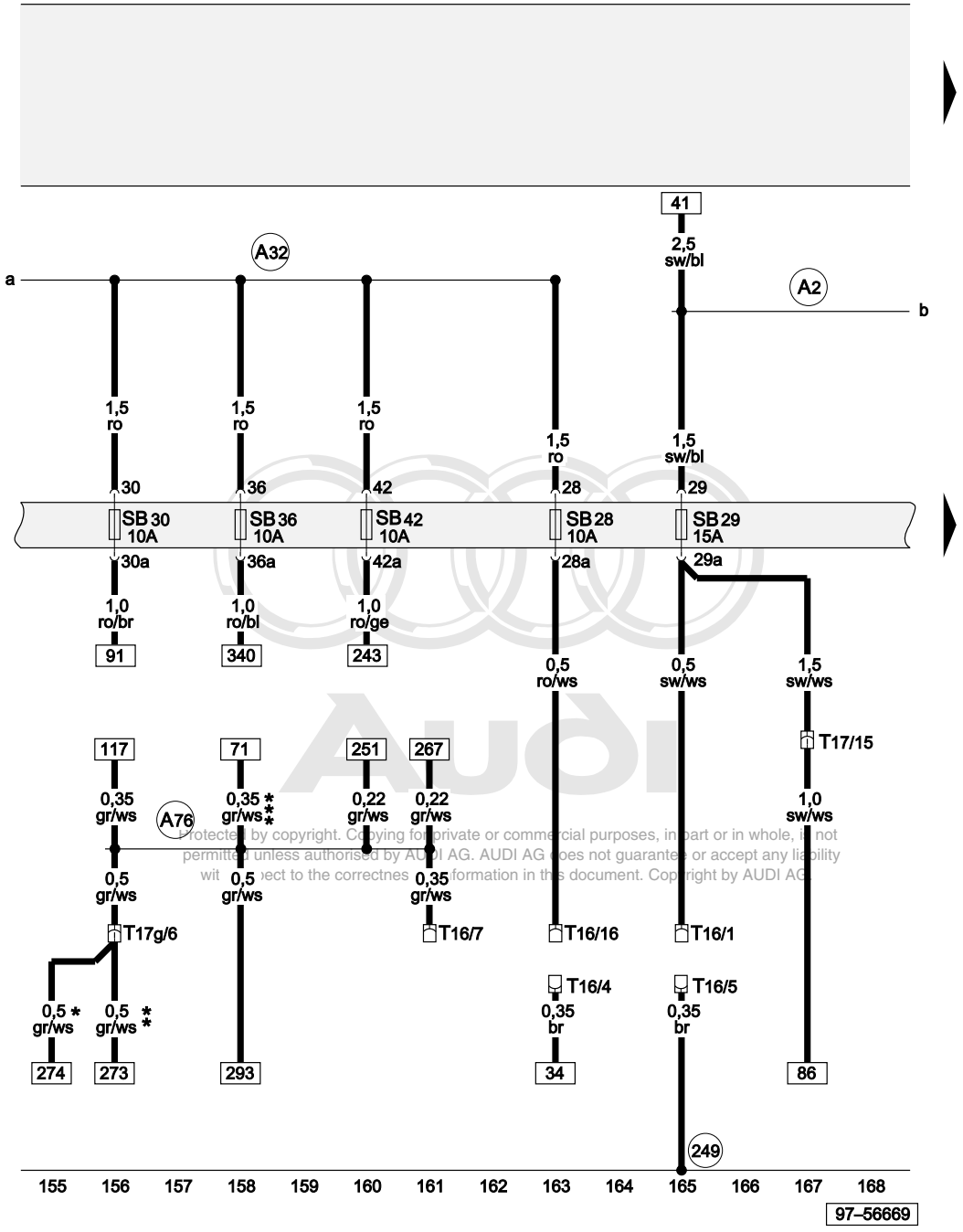

Protected by copyright. Copying for private or commercial purposes, in part or in whole, is not permitted unless authorised by AUDI AG. AUDI AG does not guarantee or accept any liability with respect to the correctness of information in this document. Copyright by AUDI AG.

Fuses on fuse box, diagnostic connector

SB28	Fuse -28- on fuse box
SB29	Fuse -29- on fuse box
SB30	Fuse -30- on fuse box
SB36	Fuse -36- on fuse box
SB42	Fuse -42- on fuse box
T16	16-pin connector, diagnostic connector, black, near fuse box
T17	17-pin connector, brown, in footwell, front left
T17g	17-pin connector, red, connector point, A pillar, left
249	Earth connection -2-, in interior wiring harness
A2	Positive (+) connection (15), in dash panel wiring harness
A32	Positive (+) connection (30), in dash panel wiring harness
A76	Connection (diagnosis wire K), in dash panel wiring harness
*	With the introduction of MK 60 no longer fitted, phased-in modification
**	Applicable with the introduction of MK 60, phased-in modification
***	Only applies to models with air conditioner

ws	=	white
sw	=	black
ro	=	red
br	=	brown
gn	=	green
bl	=	blue
gr	=	grey
li	=	purple
ge	=	yellow
or	=	orange
rs	=	pink

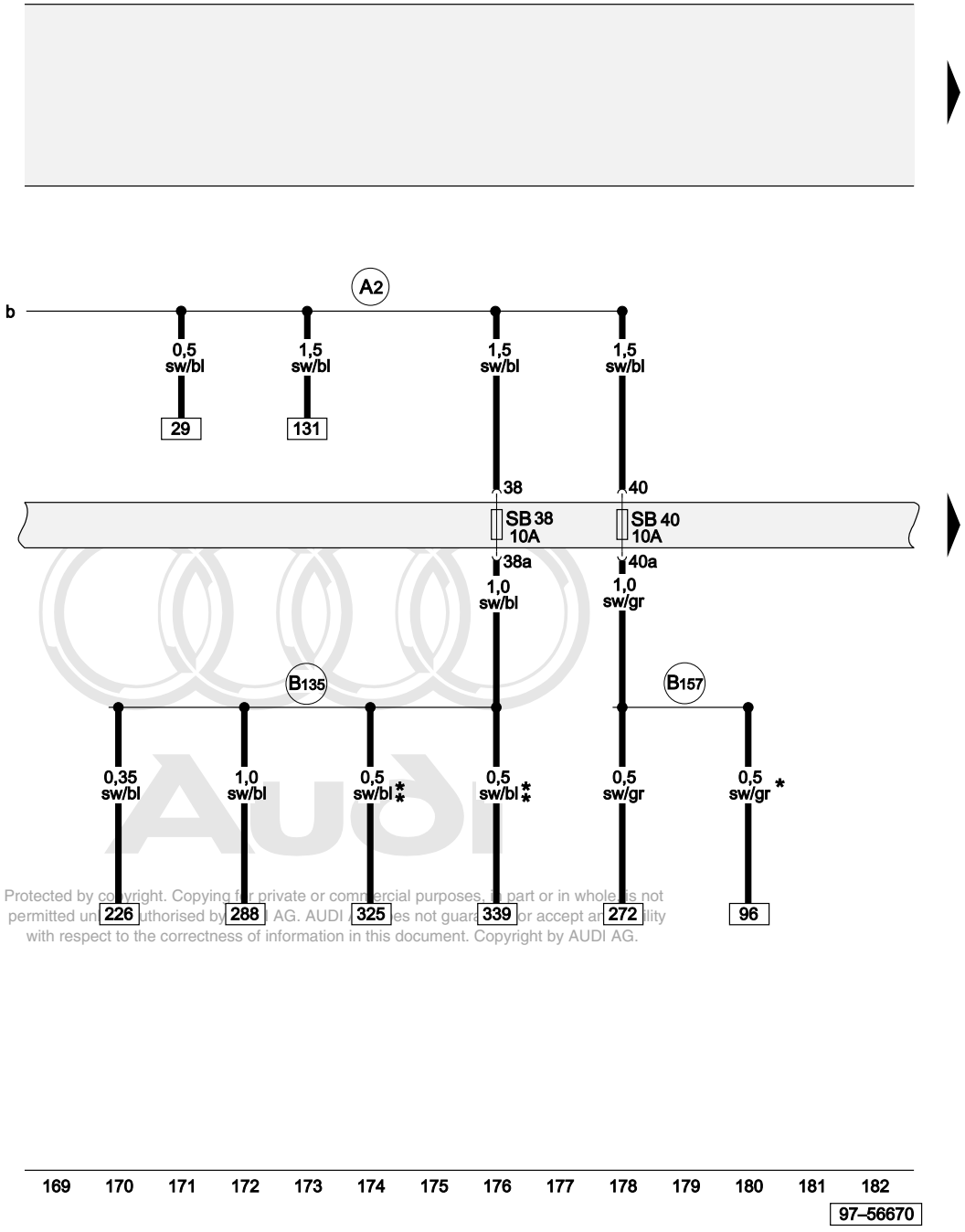

Protected by copyright. Copying for private or commercial purposes, in part or in whole, is not permitted unless authorised by AUDI AG. AUDI AG does not guarantee or accept any liability with respect to the correctness of information in this document. Copyright by AUDI AG.

Fuses on fuse box

SB38 Fuse -38- on fuse box
SB40 Fuse -40- on fuse box

A2 Positive (+) connection (15), in dash panel wiring harness

B135 Connection -1- (15a), in interior wiring harness

B157 Positive (+) connection -3- (15a), in interior wiring harness

* With the introduction of MK 60 no longer fitted, phased-in modification

** Only applies to models without air conditioner

ws = white
sw = black
ro = red
br = brown
gn = green
bl = blue
gr = grey
li = purple
ge = yellow
or = orange
rs = pink

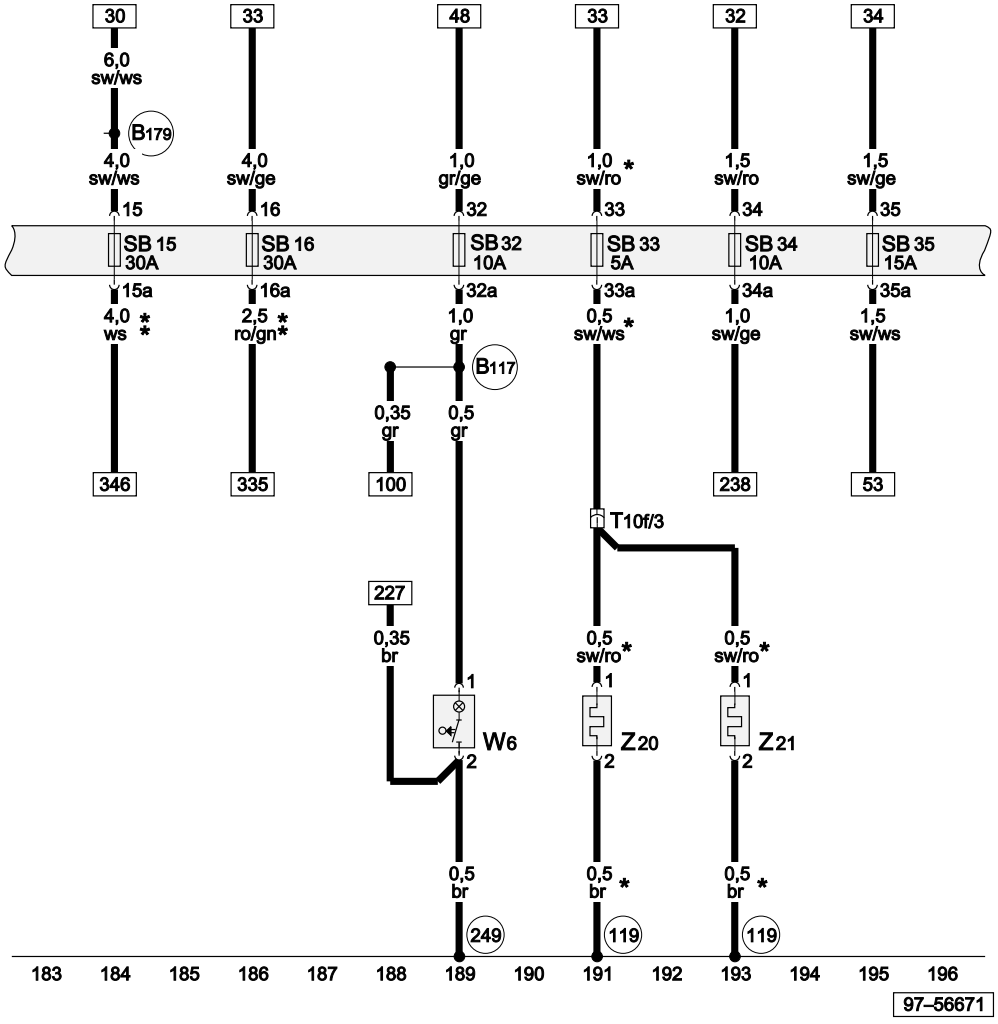

Fuses on fuse box, glove box light, heater element for washer jet

SB15	Fuse -15- on fuse box
SB16	Fuse -16- on fuse box
SB32	Fuse -32- on fuse box
SB33	Fuse -33- on fuse box
SB34	Fuse -34- on fuse box
SB35	Fuse -35- on fuse box
T10f	10-pin connector, blue, connector point, A pillar, left
W6	Glove box light
Z20	Heater element, left washer jet
Z21	Heater element, right washer jet
119	Earth connection -1-, in headlight wiring harness
249	Earth connection -2-, in interior wiring harness
B117	Connection (58a, right), in interior wiring harness
B179	Positive (+) connection (consumer switch-off), in interior wiring harness
*	Only applies to models with heater element for washer jet
**	Only applies to models without air conditioner

Protected by copyright. Copying for private or commercial purposes, in part or in whole, is not permitted unless authorised by AUDI AG. AUDI AG does not guarantee or accept any liability with respect to the correctness of information in this document. Copyright by AUDI AG.

ws	=	white
sw	=	black
ro	=	red
br	=	brown
gn	=	green
bl	=	blue
gr	=	grey
li	=	purple
ge	=	yellow
or	=	orange
rs	=	pink

Twin filament bulb for right headlight, front right fog light bulb, right side light bulb, right side turn signal bulb

L2	Twin filament bulb for headlight, right
L23	Fog light bulb, right
M3	Side light bulb, right
M7	Turn signal bulb, front right
M19	Side turn signal bulb, right
SB21	Fuse -21- on fuse box
SB23	Fuse -23- on fuse box
SB26	Fuse -26- on fuse box
T10i	10-pin connector, black, connector point, A pillar, right
T10l	10-pin connector, black, headlight, right
V49	Headlight range control motor, right
119	Earth connection -1-, in headlight wiring harness
176	Earth connection, in right headlight wiring harness
A51	Connection (56), in dash panel wiring harness
A95	Connection -1- (56a), in dash panel wiring harness

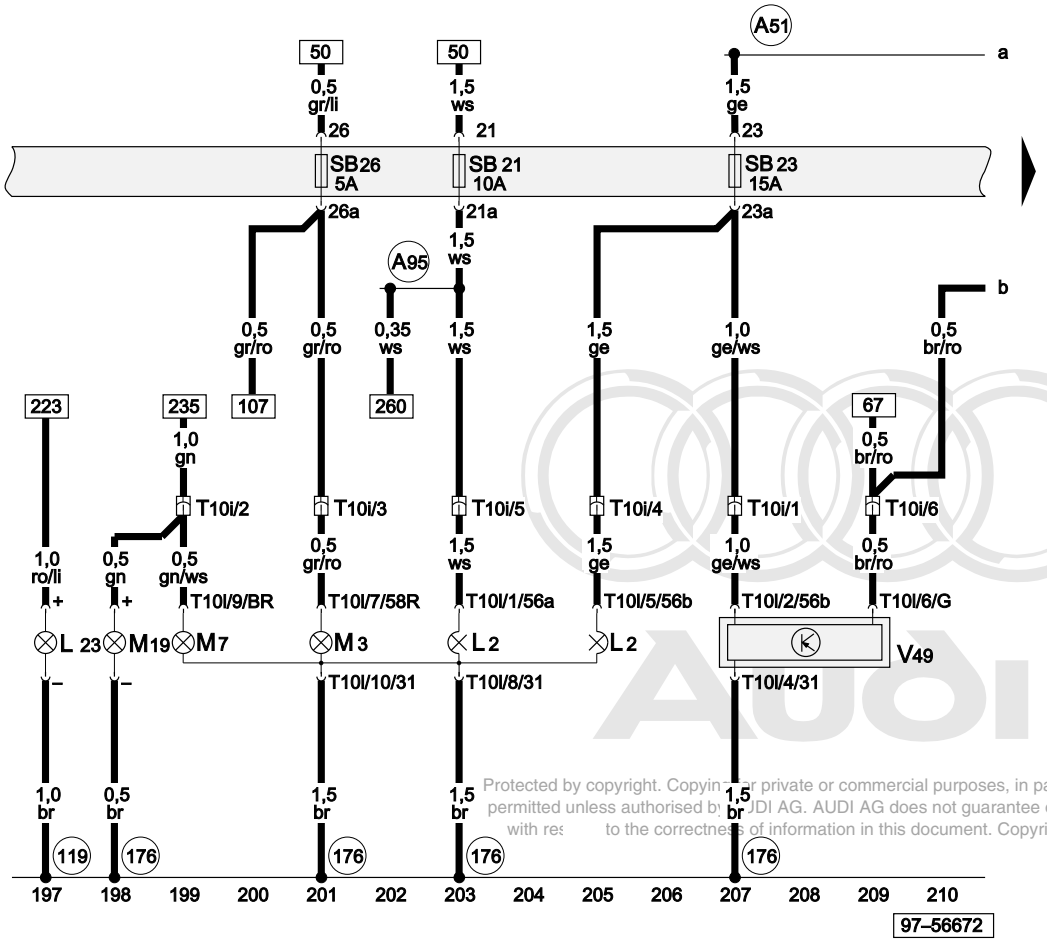

ws = white
sw = black
ro = red
br = brown
gn = green
bl = blue
gr = grey
li = purple
ge = yellow
or = orange
rs = pink

Protected by copyright. Copying for private or commercial purposes, in part or in whole, is not permitted unless authorised by AUDI AG. AUDI AG does not guarantee or accept any liability with respect to the correctness of information in this document. Copyright by AUDI AG.

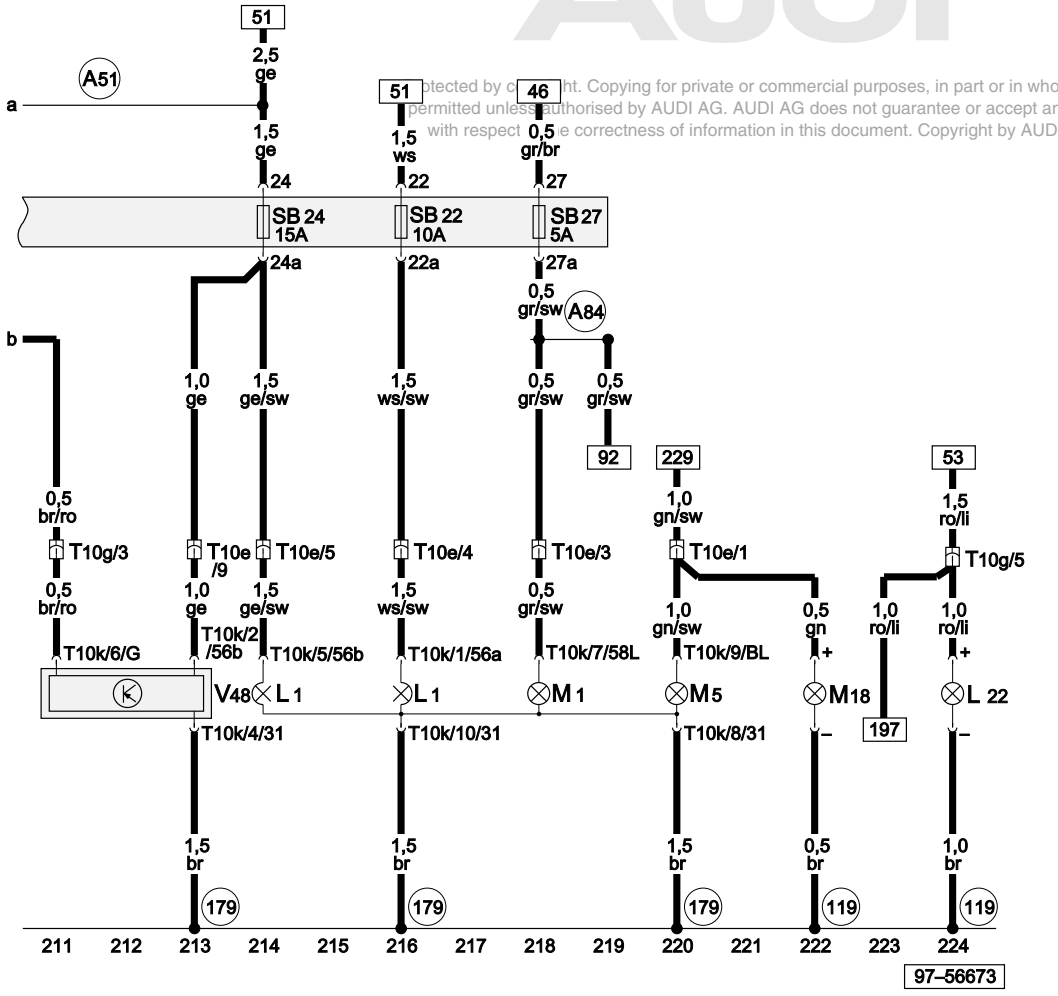

ws = white
sw = black
ro = red
br = brown
gn = green
bl = blue
gr = grey
li = purple
ge = yellow
or = orange
rs = pink

Twin filament bulb for left headlight, front left fog light bulb, left side light bulb, left side turn signal bulb

L1	Twin filament bulb for headlight, left
L22	Fog light bulb, left
M1	Side light bulb, left
M5	Turn signal bulb, front left
M18	Side turn signal bulb, left
SB22	Fuse -22- on fuse box
SB24	Fuse -24- on fuse box
SB27	Fuse -27- on fuse box
T10e	10-pin connector, red, connector point, A pillar, left
T10g	10-pin connector, grey, connector point, A pillar, left
T10k	10-pin connector, black, headlight, left
V48	Headlight range control motor, left
119	Earth connection -1-, in headlight wiring harness
179	Earth connection, in left headlight wiring harness
A51	Connection (56), in dash panel wiring harness
A84	Connection (58L), in dash panel wiring harness

Audi
Protected by copyright. Copying for private or commercial purposes, in part or in whole, is not permitted unless authorised by AUDI AG. AUDI AG does not guarantee or accept any liability with respect to the correctness of information in this document. Copyright by AUDI AG.

Hazard warning light switch, hazard warning light relay

E3 Hazard warning light switch
J2 Hazard warning light relay

249 Earth connection -2-, in interior wiring harness

A125 Connection (crash signal), in dash panel wiring harness

B152 Connection (BL (turn signal, left)), in interior wiring harness

B153 Connection (BR (turn signal, right)), in interior wiring harness

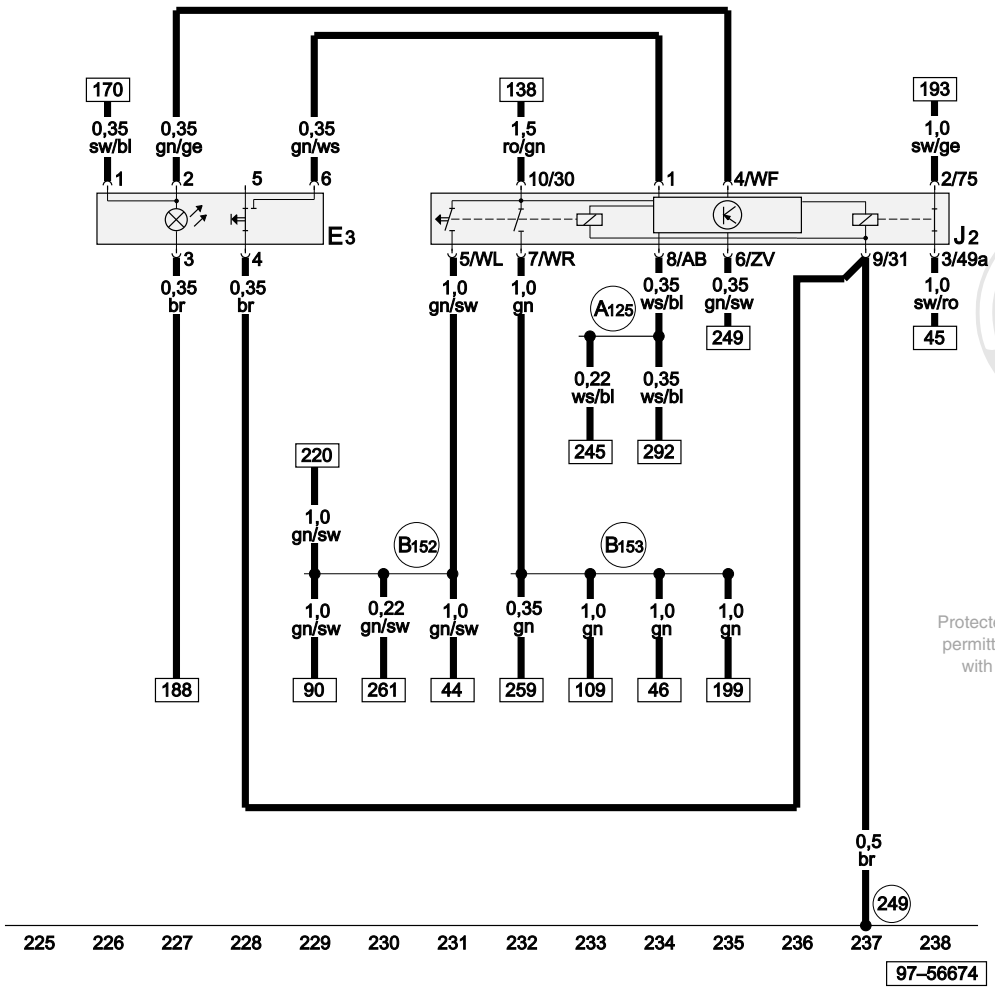

Protected by copyright. Copying for private or commercial purposes, in part or in whole, is not permitted unless authorised by AUDI AG. AUDI AG does not guarantee or accept any liability with respect to the correctness of information in this document. Copyright by AUDI AG.

ws = white
sw = black
ro = red
br = brown
gn = green
bl = blue
gr = grey
li = purple
ge = yellow
or = orange
rs = pink

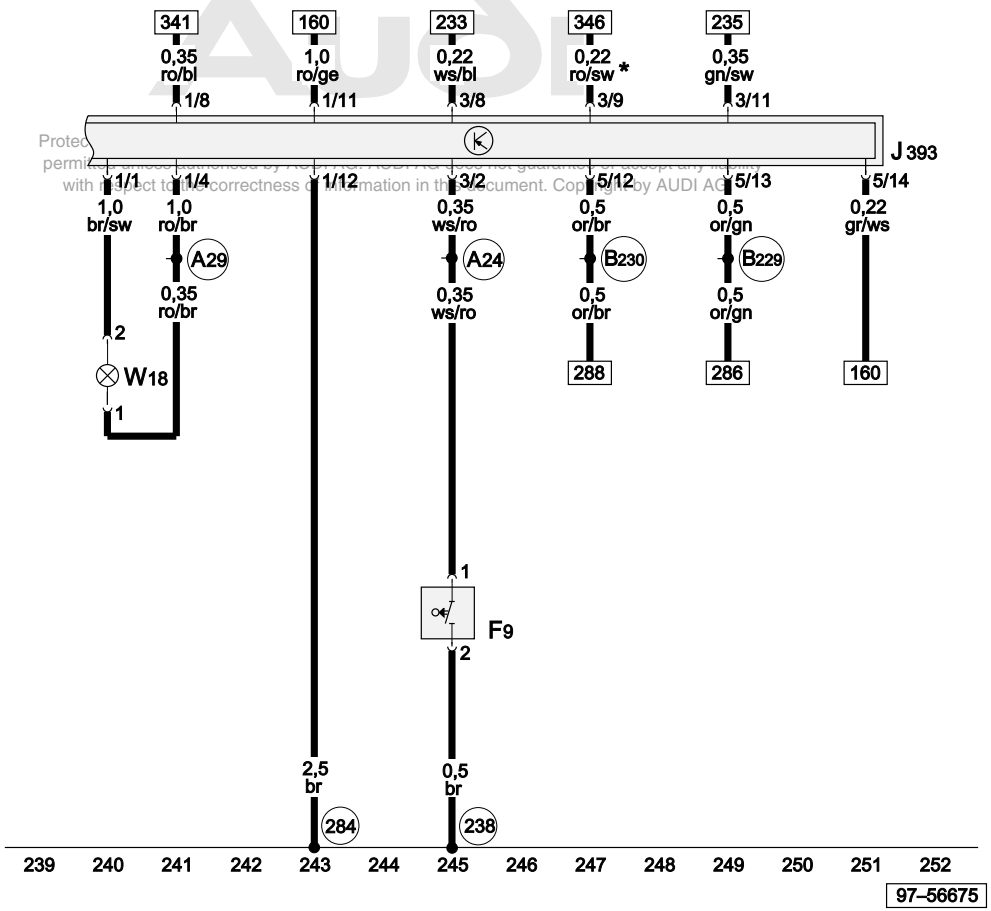

Handbrake warning switch, convenience system central control unit, luggage compartment light, left

F9	Handbrake warning switch
J393	Convenience system central control unit
W18	Luggage compartment light, left
238	Earth connection -1-, in interior wiring harness
284	Earth connection -6-, in interior wiring harness
A24	Connection (brake system monitoring), in dash panel wiring harness
A29	Connection (interior light), in dash panel wiring harness
B229	Connection (high bus), in interior wiring harness
B230	Connection (low bus), in interior wiring harness
*	Only applies to models without air conditioner

ws = white
sw = black
ro = red
br = brown
gn = green
bl = blue
gr = grey
li = purple
ge = yellow
or = orange
rs = pink

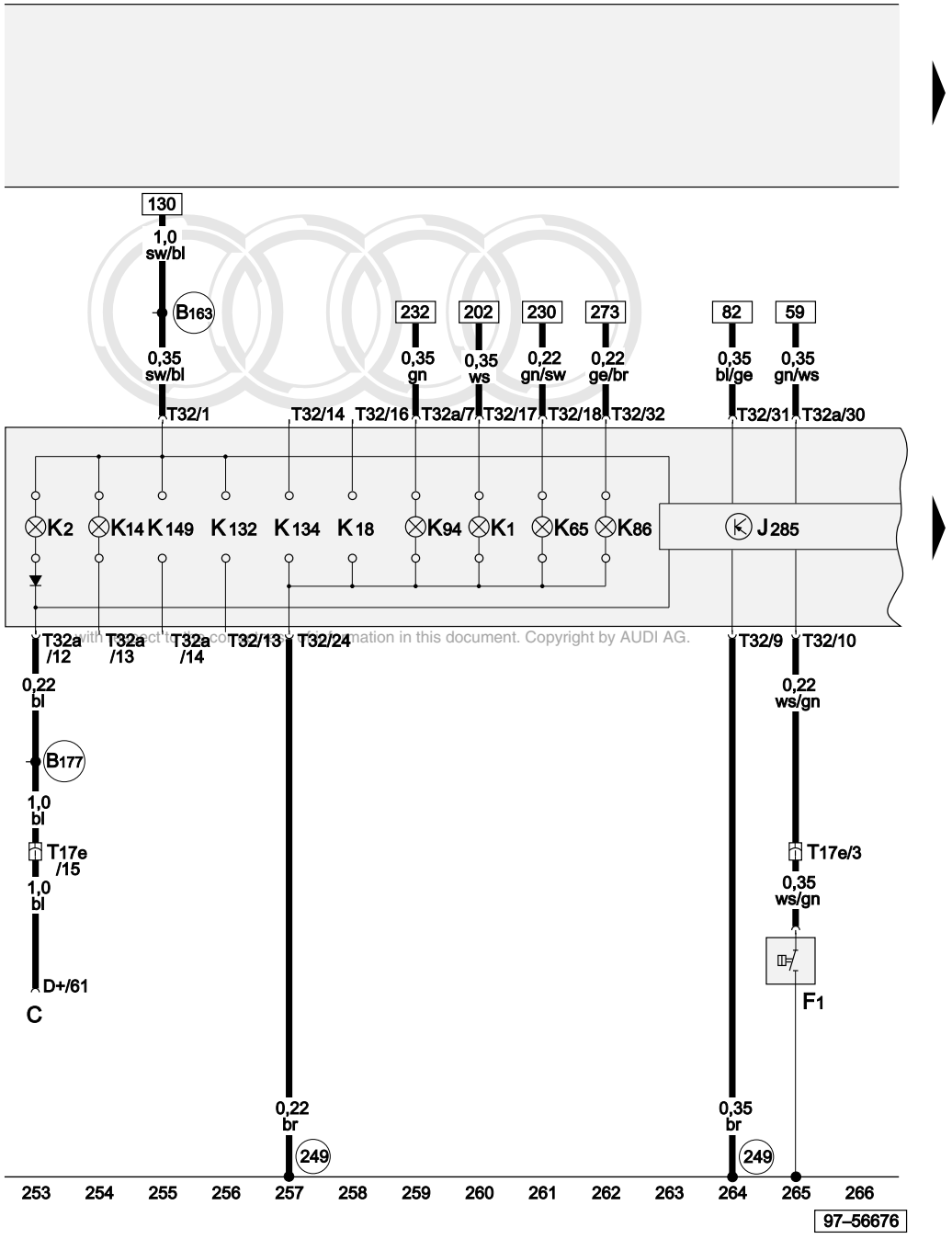

with respect to the correctness of information in this document. Copyright by AUDI AG.

Oil pressure switch, control unit with display in dash panel insert, warning lamps

C	Alternator
F1	Oil pressure switch
J285	Control unit with display in dash panel insert
K1	Main beam warning lamp
K2	Alternator warning lamp
K14	Handbrake warning lamp
K18	Trailer operation warning lamp
K65	Left turn signal warning lamp
K86	Traction control system warning lamp
K94	Right turn signal warning lamp
K132	Electronic power control fault lamp
K134	Self-levelling suspension warning lamp
K149	Engine electronics warning lamp
T17e	17-pin connector, blue, in footwell, front left
T32	32-pin connector, blue, on dash panel insert
T32a	32-pin connector, green, on dash panel insert
249	Earth connection -2-, in interior wiring harness
B163	Positive (+) connection -1- (15), in interior wiring harness
B177	Connection (61), in interior wiring harness

ws	=	white
sw	=	black
ro	=	red
br	=	brown
gn	=	green
bl	=	blue
gr	=	grey
li	=	purple
ge	=	yellow
or	=	orange
rs	=	pink

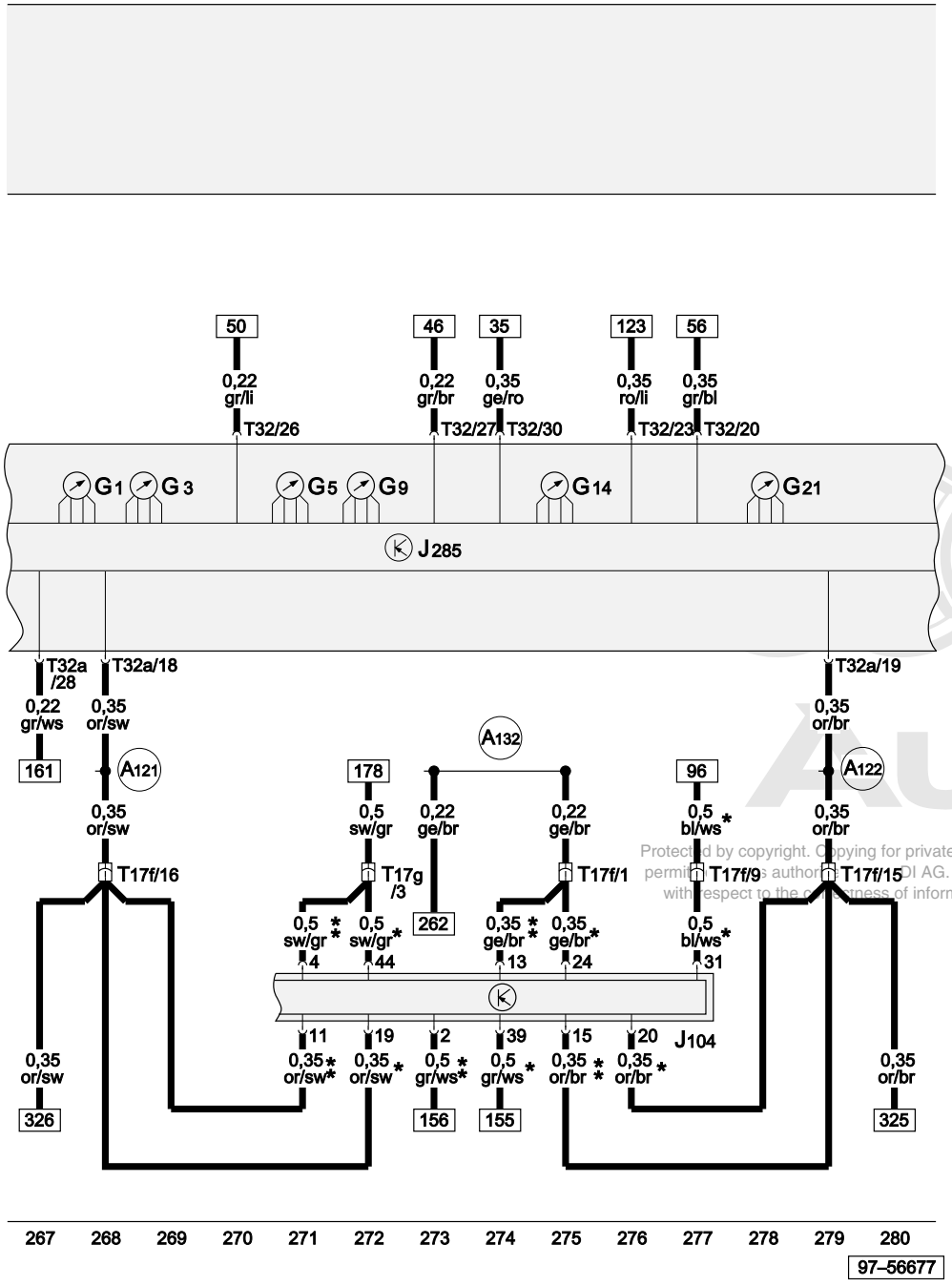

ABS with EDL control unit, control unit with display in dash panel insert

G1	Fuel gauge
G3	Coolant temperature gauge
G5	Rev. counter
G9	Oil temperature gauge
G14	Voltmeter
G21	Speedometer
J104	ABS with EDL control unit
J285	Control unit with display in dash panel insert
T17f	17-pin connector, white, connector point, A pillar, left
T17g	17-pin connector, red, connector point, A pillar, left
T32	32-pin connector, blue, on dash panel insert
T32a	32-pin connector, green, on dash panel insert
A121	Connection (high bus), in dash panel wiring harness
A122	Connection (low bus), in dash panel wiring harness
A132	Connection (TCS/ESP), in dash panel wiring harness
*	With the introduction of MK 60 no longer fitted, phased-in modification
**	Applicable with the introduction of MK 60, phased-in modification

Protected by copyright. Copying for private or commercial purposes, in part or in whole, is not permitted unless authorised by AUDI AG. AUDI AG does not guarantee or accept any liability with respect to the correctness of information in this document. Copyright by AUDI AG.

ws	=	white
sw	=	black
ro	=	red
br	=	brown
gn	=	green
bl	=	blue
gr	=	grey
li	=	purple
ge	=	yellow
or	=	orange
rs	=	pink

Speedometer sender, oil level/oil temperature sender, airbag control unit, control unit with display in dash panel insert

G22	Speedometer sender (Hall sender, on gearbox)
G266	Oil level/oil temperature sender
H3	Buzzer/gong
J234	Airbag control unit
J285	Control unit with display in dash panel insert
T17	17-pin connector, brown, in footwell, front left
T17e	17-pin connector, blue, in footwell, front left
T32	32-pin connector, blue, on dash panel insert
T32a	32-pin connector, green, on dash panel insert
85	Earth connection -1-, in engine compartment wiring harness
269	Earth connection (sender earth) -1-, in dash panel wiring harness

Copyright. Copying for private or commercial purposes, in part or in whole, is not permitted unless authorised by AUDI AG. AUDI AG does not guarantee or accept any liability with respect to the correctness of information in this document. Copyright by AUDI AG.

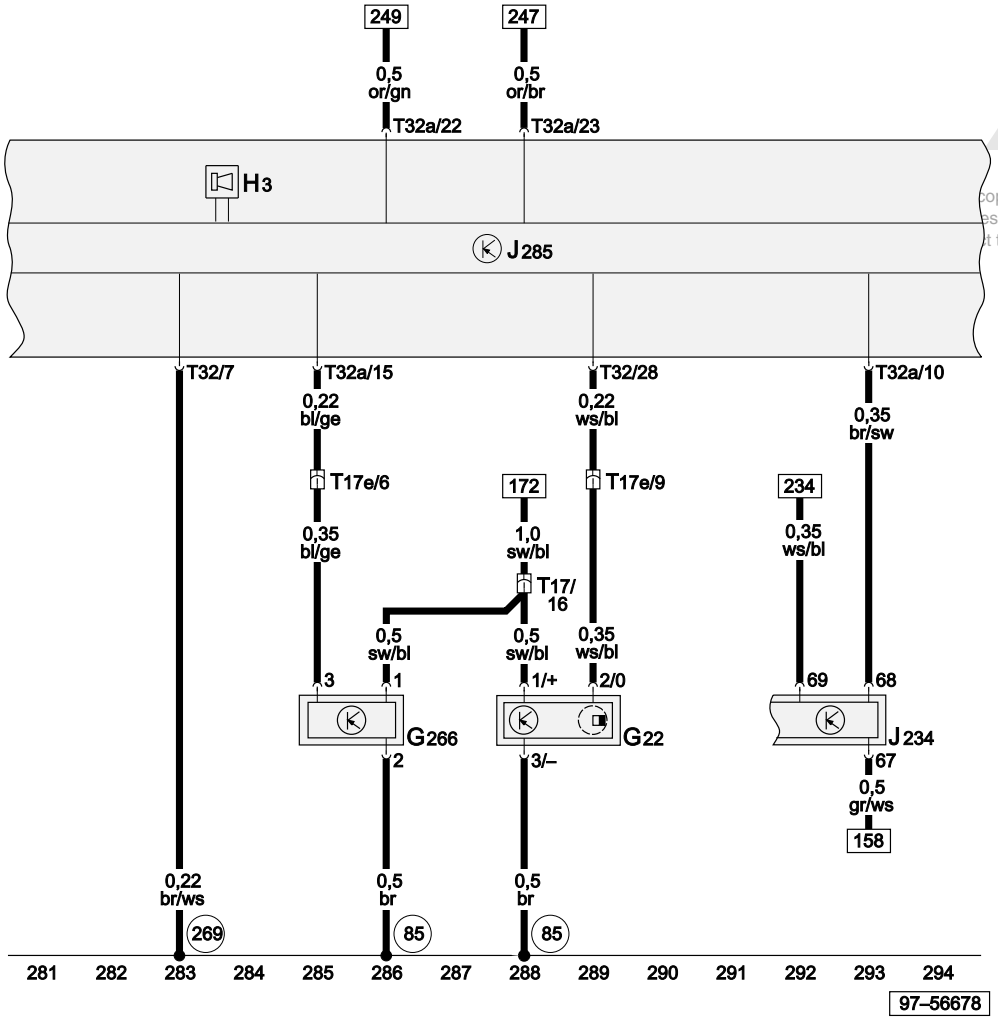

ws	=	white
sw	=	black
ro	=	red
br	=	brown
gn	=	green
bl	=	blue
gr	=	grey
li	=	purple
ge	=	yellow
or	=	orange
rs	=	pink

Immobilizer reading coil, belt switch - driver's side, ambient temperature sensor, control unit with display in dash panel insert

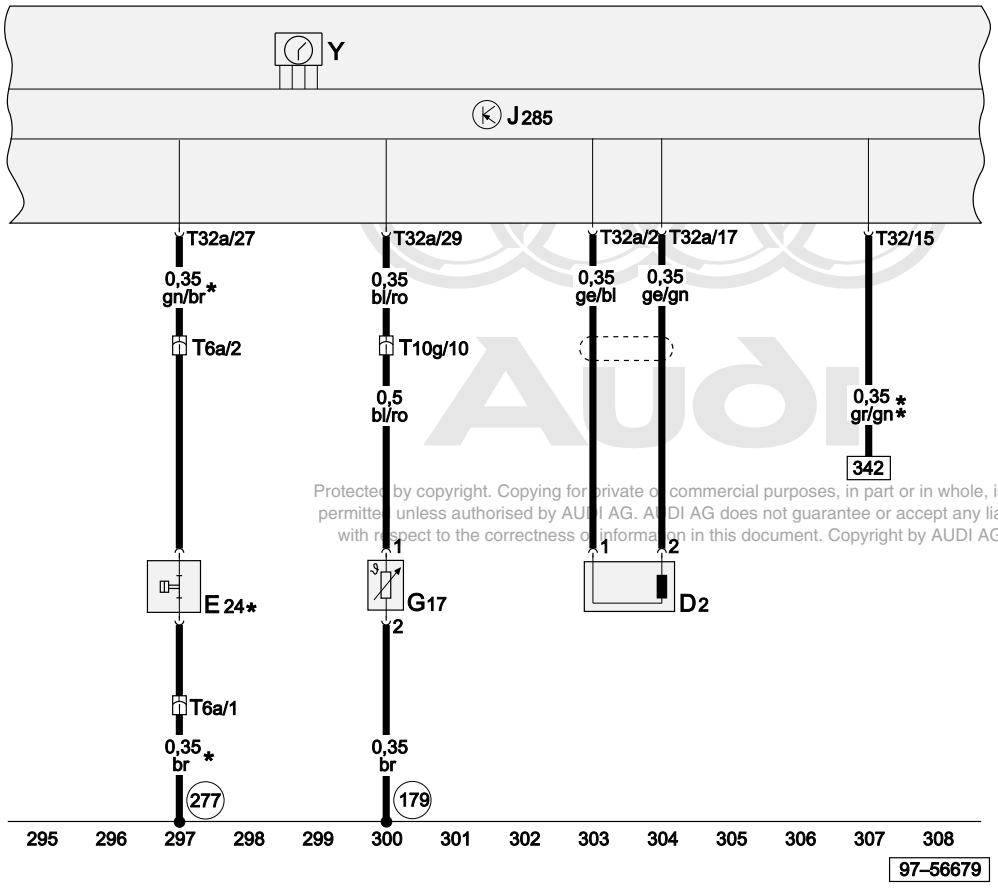

Protected by copyright. Copying for private or commercial purposes, in part or in whole, is not permitted unless authorised by AUDI AG. AUDI AG does not guarantee or accept any liability with respect to the correctness of information in this document. Copyright by AUDI AG.

D2	Immobilizer reading coil
E24	Belt switch, driver's side
G17	Ambient temperature sensor
J285	Control unit with display in dash panel insert
Y	Analogue clock
T6a	6-pin connector, red, under driver's seat
T10g	10-pin connector, grey, connector point, A pillar, left
T32	32-pin connector, blue, on dash panel insert
T32a	32-pin connector, green, on dash panel insert
179	Earth connection, in left headlight wiring harness
277	Earth connection -3-, in interior wiring harness
*	Only applies to models with seat belt warning system
**	Only applies to models without air conditioner

ws	=	white
sw	=	black
ro	=	red
br	=	brown
gn	=	green
bl	=	blue
gr	=	grey
li	=	purple
ge	=	yellow
or	=	orange
rs	=	pink

Brake fluid level warning contact, coolant shortage indicator switch, brake lining/pad wear sender, front left

F34	Brake fluid level warning contact
F66	Coolant shortage indicator switch
G34	Brake lining/pad wear sender, front left
J285	Control unit with display in dash panel insert
K4	Side light warning lamp
K19	Seat belt warning system warning lamp
K47	ABS warning lamp
K75	Airbag warning lamp
K117	Immobilizer warning lamp
T10f	10-pin connector, blue, connector point, A pillar, left
T17g	17-pin connector, red, connector point, A pillar, left
T32	32-pin connector, blue, on dash panel insert
119	Earth connection -1-, in headlight wiring harness
269	Earth connection (sender earth) -1-, in dash panel wiring harness

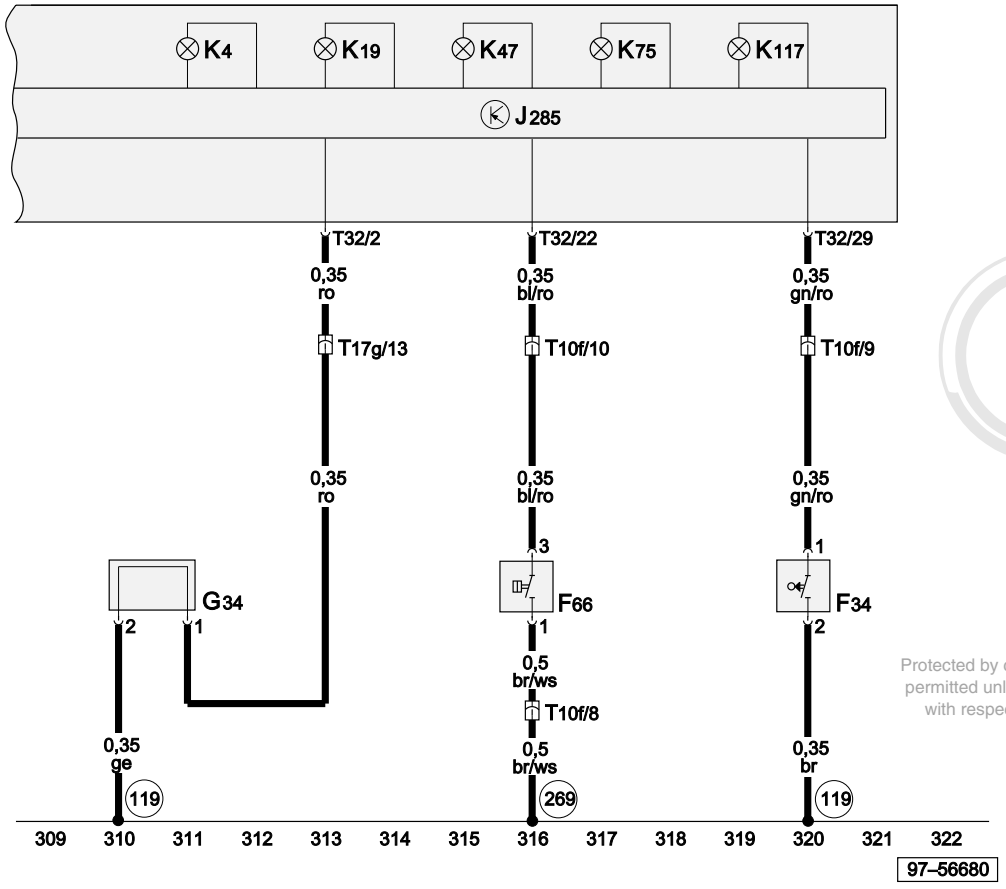

ws = white
sw = black
ro = red
br = brown
gn = green
bl = blue
gr = grey
li = purple
ge = yellow
or = orange
rs = pink

Protected by copyright. Copying for private or commercial purposes, in part or in whole, is not permitted unless authorised by AUDI AG. AUDI AG does not guarantee or accept any liability with respect to the correctness of information in this document. Copyright by AUDI AG.

Fresh air blower switch, power steering sensor, power steering control unit, fresh air blower with overheating fuse series resistor

E9	Fresh air blower switch
G250	Power steering sensor
J500	Power steering control unit
N24	Fresh air blower with overheating fuse series resistor
S204	Fuse -1- (30)
T2e	2-pin connector, black, on power steering control unit
T3b	3-pin connector, on power steering control unit
T4	4-pin connector, black, on power steering control unit
T10g	10-pin connector, grey, connector point, A pillar, left
V2	Fresh air blower
179	Earth connection, in left headlight wiring harness
279	Earth connection -5-, in interior wiring harness
L66	Connection, in heater blower wiring harness
*	Only applies to models without air conditioner

Protected by copyright. Copying for private or commercial purposes, in part or in whole, is not permitted unless authorised by AUDI AG. AUDI AG does not guarantee or accept any liability with respect to the correctness of information in this document. Copyright by AUDI AG.

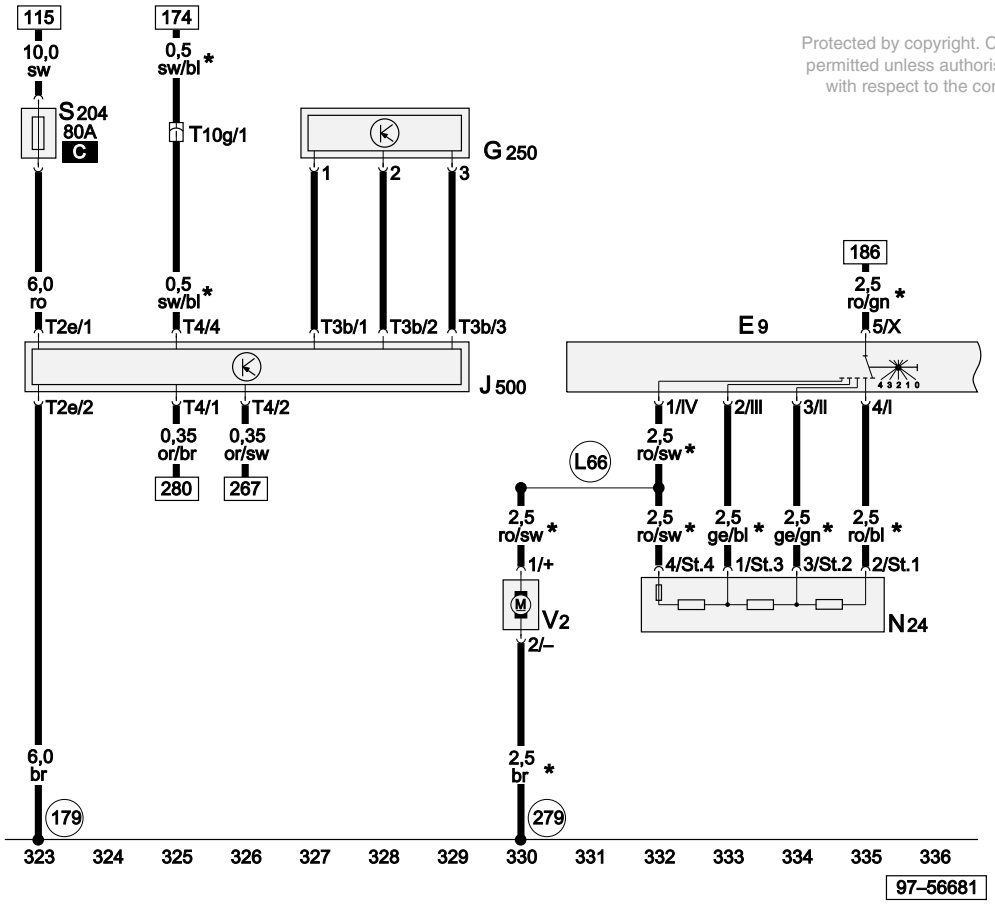

ws	=	white
sw	=	black
ro	=	red
br	=	brown
gn	=	green
bl	=	blue
gr	=	grey
li	=	purple
ge	=	yellow
or	=	orange
rs	=	pink

Heated rear window switch, fresh air/air recirculating flap switch, additional heating button (ECON), heated rear window relay

E15	Heated rear window switch
E87	Control and display unit for air conditioner
E159	Fresh air/air recirculating flap switch
E288	Additional heating button (ECON)
J9	Heated rear window relay
V154	Fresh air/air recirculating flap control motor
Z1	Heated rear window
62	Earth point, C pillar, right
277	Earth connection -3-, in interior wiring harness
B111	Positive (+) connection -2- (30a), in interior wiring harness
B180	Connection (heated rear window), in interior wiring harness
B248	Connection -2- (heated rear window), in interior wiring harness
*	Only applies to models without air conditioner
**	Only applies to models with air conditioner

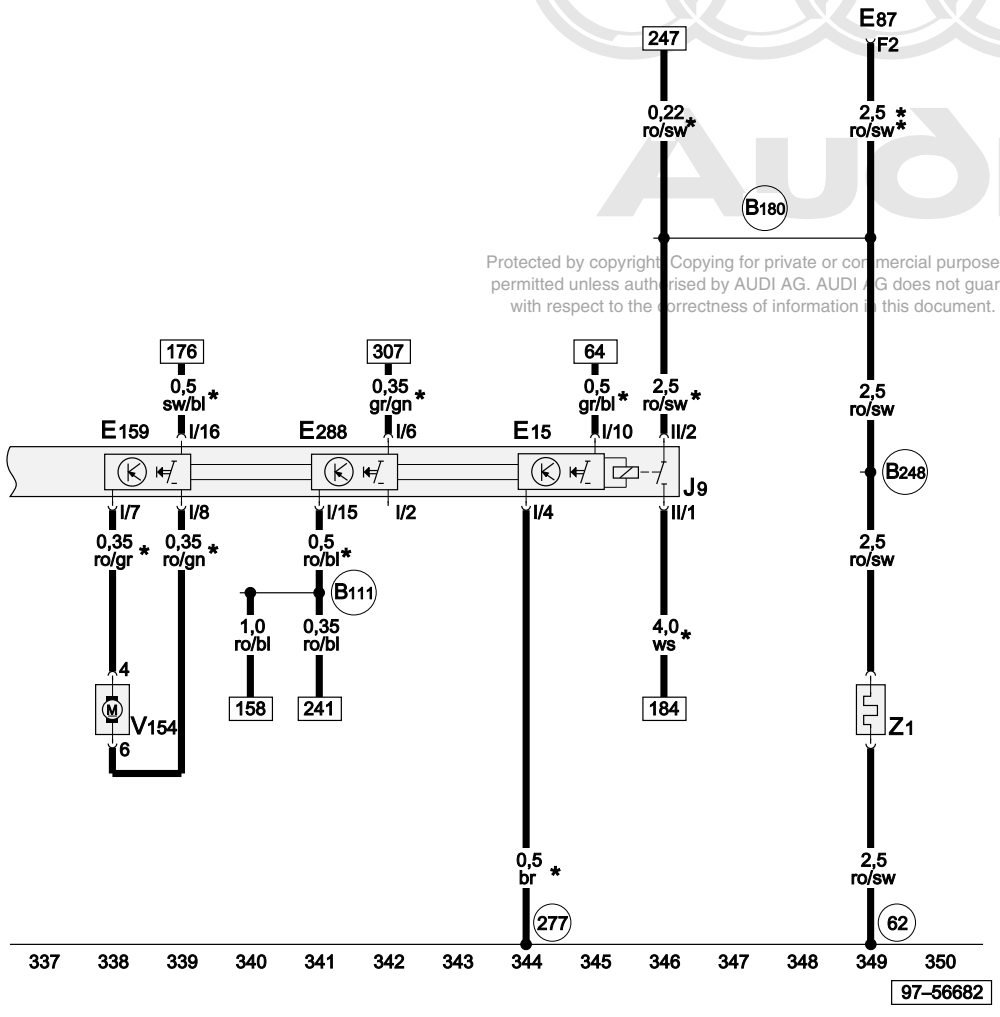

ws = white
sw = black
ro = red
br = brown
gn = green
bl = blue
gr = grey
li = purple
ge = yellow
or = orange
rs = pink

Protected by copyright. Copying for private or commercial purposes, in part or in whole, is not permitted unless authorised by AUDI AG. AUDI AG does not guarantee or accept any liability with respect to the correctness of information in this document. Copyright by AUDI AG.

1.4 litre fuel injection engine (55 kW - Magneti Marelli - 4-cylinder), engine code AUA

From model year 2002

Main fuse

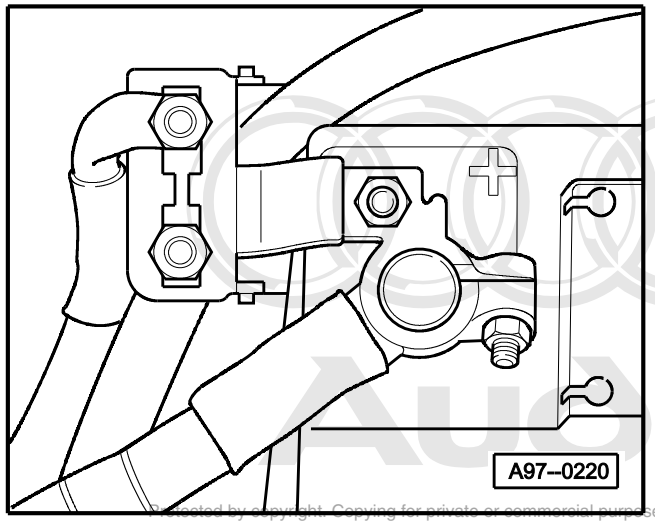

Protected by copyright. Copying for private or commercial purposes, in part or in whole, is not permitted unless authorised by AUDI AG. AUDI AG does not guarantee or accept any liability with respect to the correctness of information in this document. Copyright by AUDI AG.

♦ On battery

9-point relay carrier, fuse box

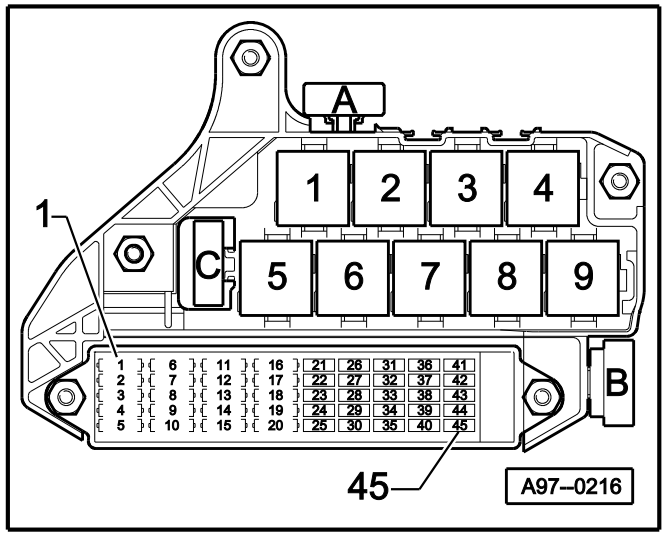

♦ In dash panel

Fuse colours

5 A - beige
7.5 A - brown
10 A - red
15 A - blue
20 A - yellow
25 A - white
30 A - green

3-point relay carrier

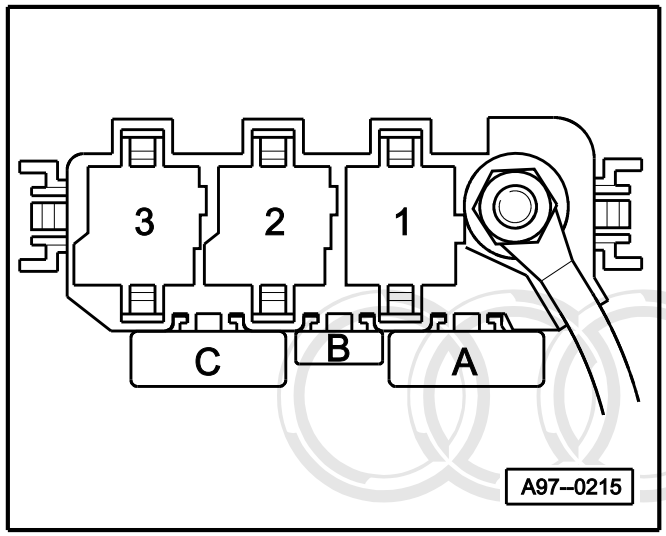

♦ In footwell

C - Fuse for power steering

Protected by copyright. Copying for private or commercial purposes, in part or in whole, is not permitted unless authorised by AUDI AG. AUDI AG does not guarantee or accept any liability with respect to the correctness of information in this document. Copyright by AUDI AG.

6+6-point relay carrier

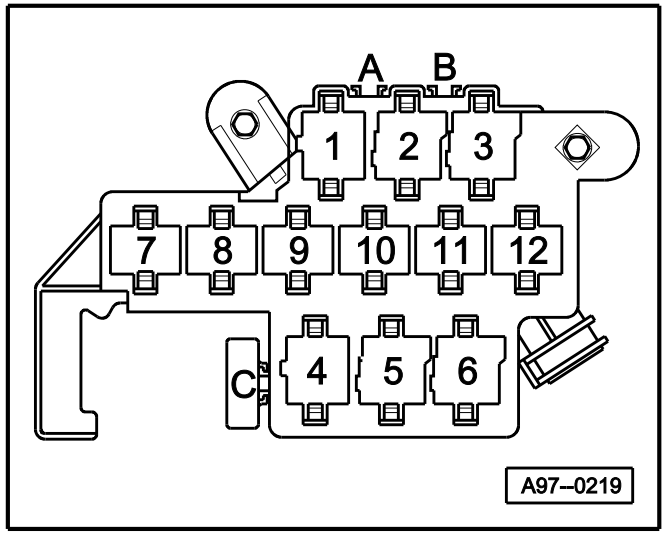

◆ In footwell

5 - Fuel pump relay (J17)

Protected by copyright. Copying for private or commercial purposes, in part or in whole, is not permitted unless authorised by AUDI AG. AUDI AG does not guarantee or accept any liability with respect to the correctness of information in this document. Copyright by AUDI AG.

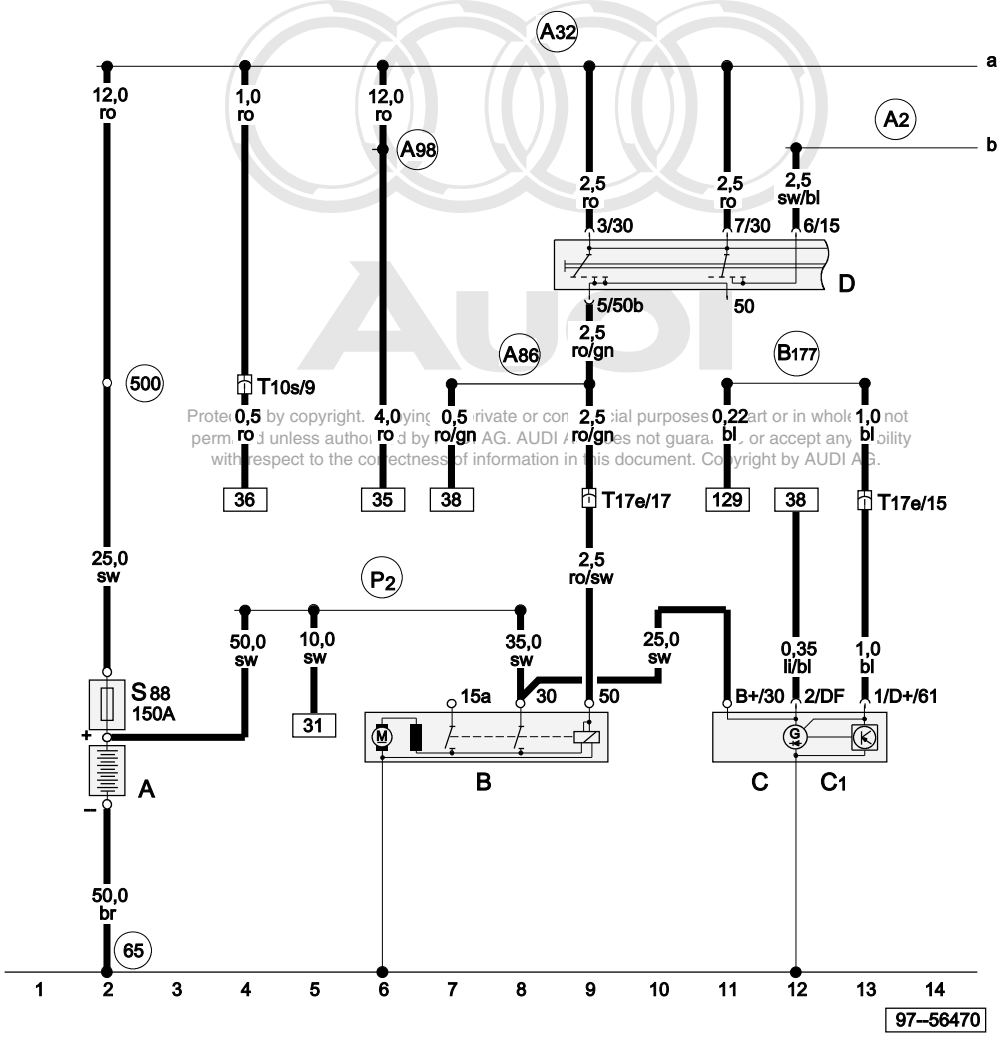

Protected by copyright. Copying for private or commercial purposes, in part or in whole, is not permitted unless authorised by AUDI AG. AUDI AG does not guarantee or accept any liability with respect to the correctness of information in this document. Copyright by AUDI AG.

ws = white
sw = black
ro = red
br = brown
gn = green
bl = blue
gr = grey
li = purple
ge = yellow
or = orange
rs = pink

Battery, starter, alternator, ignition/starter switch, strip fuse

A	Battery
B	Starter
C	Alternator
C1	Voltage regulator
D	Ignition/starter switch
S88	Strip fuse
T10s	10-pin connector, white, in footwell, front left
T17e	17-pin connector, blue, in footwell, front left
65	Earth point, left longitudinal member, rear
500	Screw connection -1- (30), on relay plate
A2	Positive (+) connection (15), in dash panel wiring harness
A32	Positive (+) connection (30), in dash panel wiring harness
A86	Connection (50a), in dash panel wiring harness
A98	Positive (+) connection -4- (30), in dash panel wiring harness
B177	Connection (61), in interior wiring harness
P2	Positive (+) connection (30), in battery wiring harness

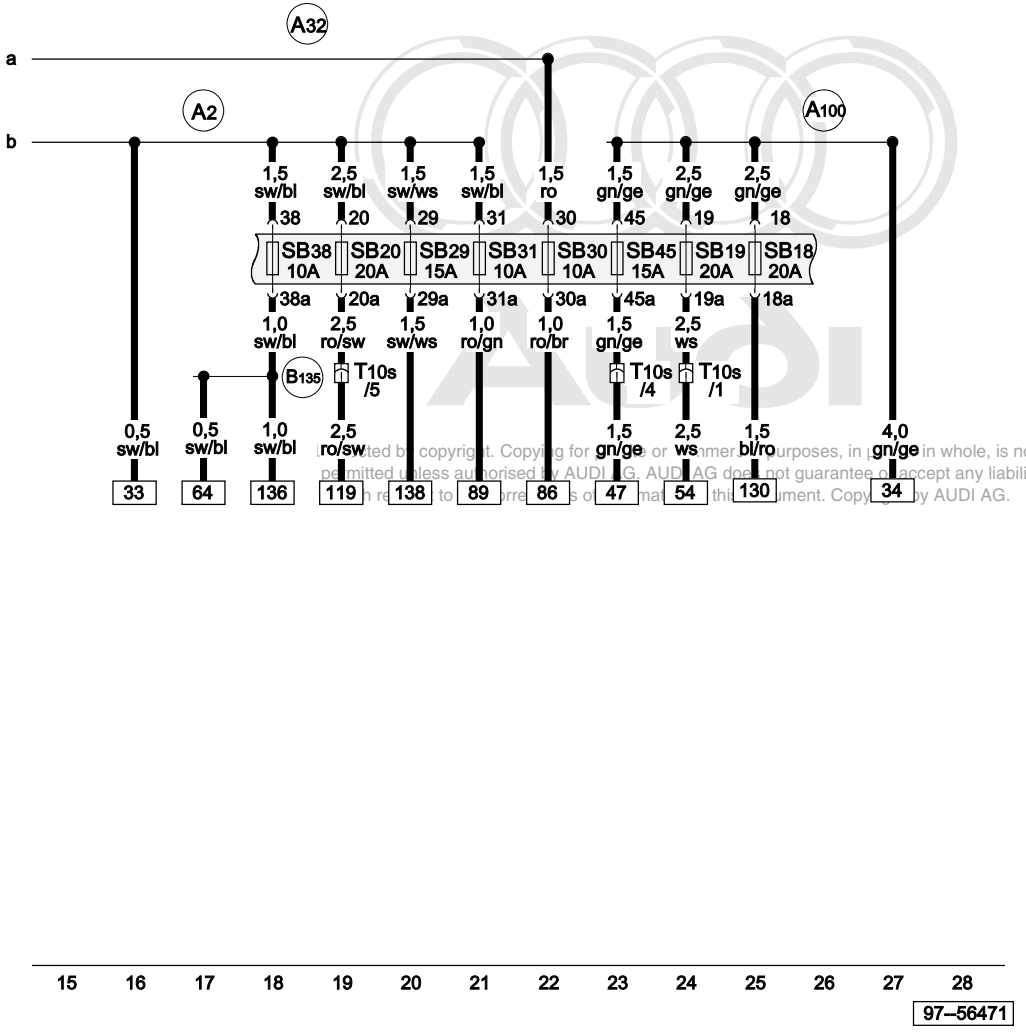

Protected by copyright. Copying for private or commercial purposes, in part or in whole, is not permitted unless authorised by AUDI AG. AUDI AG does not guarantee or accept any liability with respect to the correctness of information in this document. Copyright by AUDI AG.

Fuses on fuse box

SB18	Fuse -18- on fuse box
SB19	Fuse -19- on fuse box
SB20	Fuse -20- on fuse box
SB29	Fuse -29- on fuse box
SB30	Fuse -30- on fuse box
SB31	Fuse -31- on fuse box
SB38	Fuse -38- on fuse box
SB45	Fuse -45- on fuse box
T10s	10-pin connector, white, in footwell, front left
A2	Positive (+) connection (15), in dash panel wiring harness
A32	Positive (+) connection (30), in dash panel wiring harness
A100	Connection -2- (87), in dash panel wiring harness
B135	Connection -1- (15a), in interior wiring harness

ws	=	white
sw	=	black
ro	=	red
br	=	brown
gn	=	green
bl	=	blue
gr	=	grey
li	=	purple
ge	=	yellow
or	=	orange
rs	=	pink

Fuel pump relay, airbag control unit, power steering control unit, 4LV (injection system) control unit, fuse

J17	Fuel pump relay
J234	Airbag control unit
J500	Power steering control unit
J537	4LV (injection system) control unit
S204	Fuse -1- (30)
T2e	2-pin connector, black, on power steering control unit
T10s	10-pin connector, white, in footwell, front left
249	Earth connection -2-, in interior wiring harness
A125	Connection (crash signal), in dash panel wiring harness

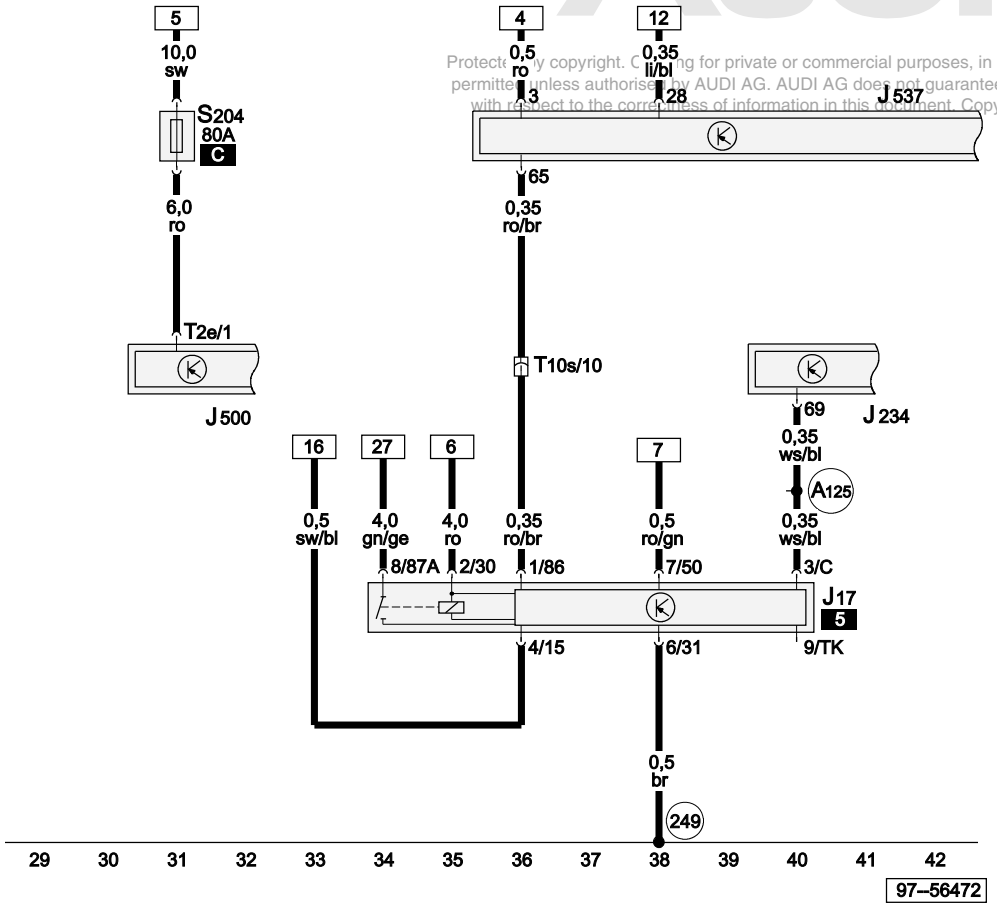

Protected by copyright. Copying for private or commercial purposes, in part or in whole, is not permitted unless authorised by AUDI AG. AUDI AG does not guarantee or accept any liability with respect to the correctness of information in this document. Copyright by AUDI AG.

ws	=	white
sw	=	black
ro	=	red
br	=	brown
gn	=	green
bl	=	blue
gr	=	grey
li	=	purple
ge	=	yellow
or	=	orange
rs	=	pink

Lambda probes, 4LV (injection system) control unit, activated charcoal filter system solenoid valve, injectors

G39	Lambda probe
G130	Lambda probe downstream of catalytic converter
J537	4LV (injection system) control unit
N30	Injector, cylinder 1
N31	Injector, cylinder 2
N32	Injector, cylinder 3
N33	Injector, cylinder 4
N80	Activated charcoal filter system solenoid valve 1
T4a	4-pin connector, brown, in engine compartment, left
T6b	6-pin connector, black, in engine compartment, right
Z19	Lambda probe heater
Z29	Lambda probe 1 heater, downstream of catalytic converter
D80	Positive (+) connection (87a - for activated charcoal filter system solenoid valve), in engine compartment wiring harness
D140	Connection (injectors), in engine prewiring wiring harness

Protected by copyright. Copying for private or commercial pu in part or in whole, is not permitted unless authorised by AUDI AG. AUDI AG does not guarantee or accept any liability correctness of information in this document. Copyright by AUDI AG.

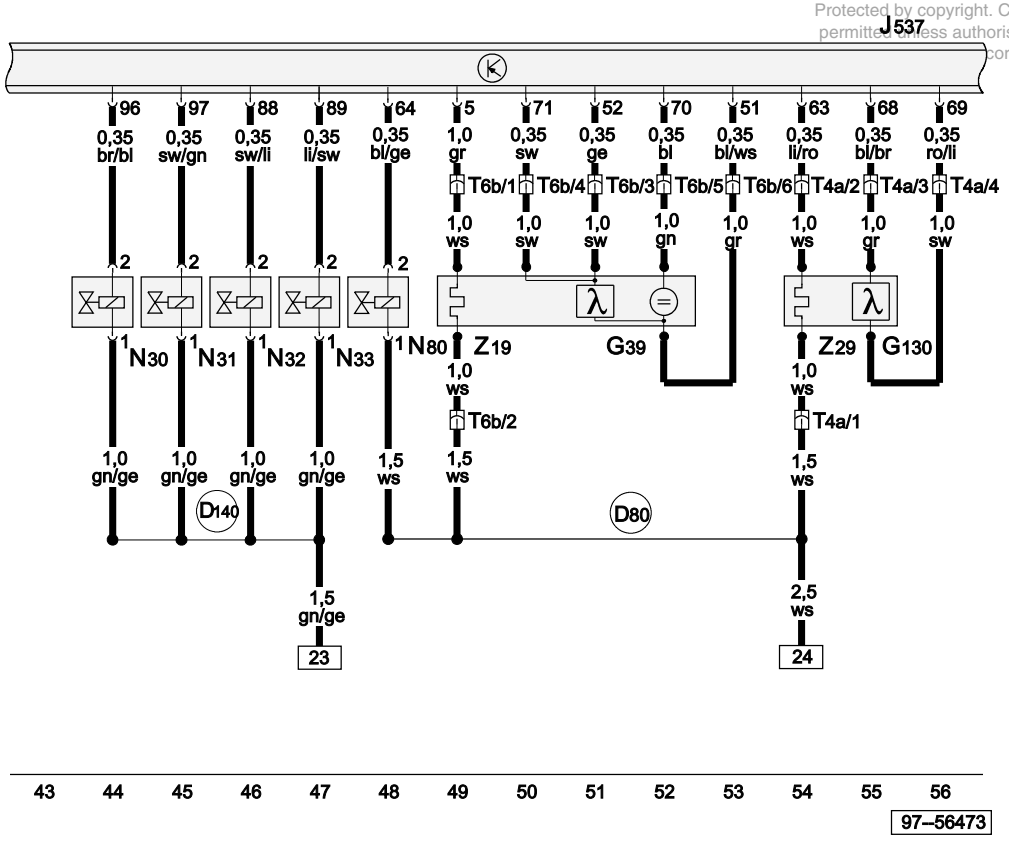

ws	=	white
sw	=	black
ro	=	red
br	=	brown
gn	=	green
bl	=	blue
gr	=	grey
li	=	purple
ge	=	yellow
or	=	orange
rs	=	pink

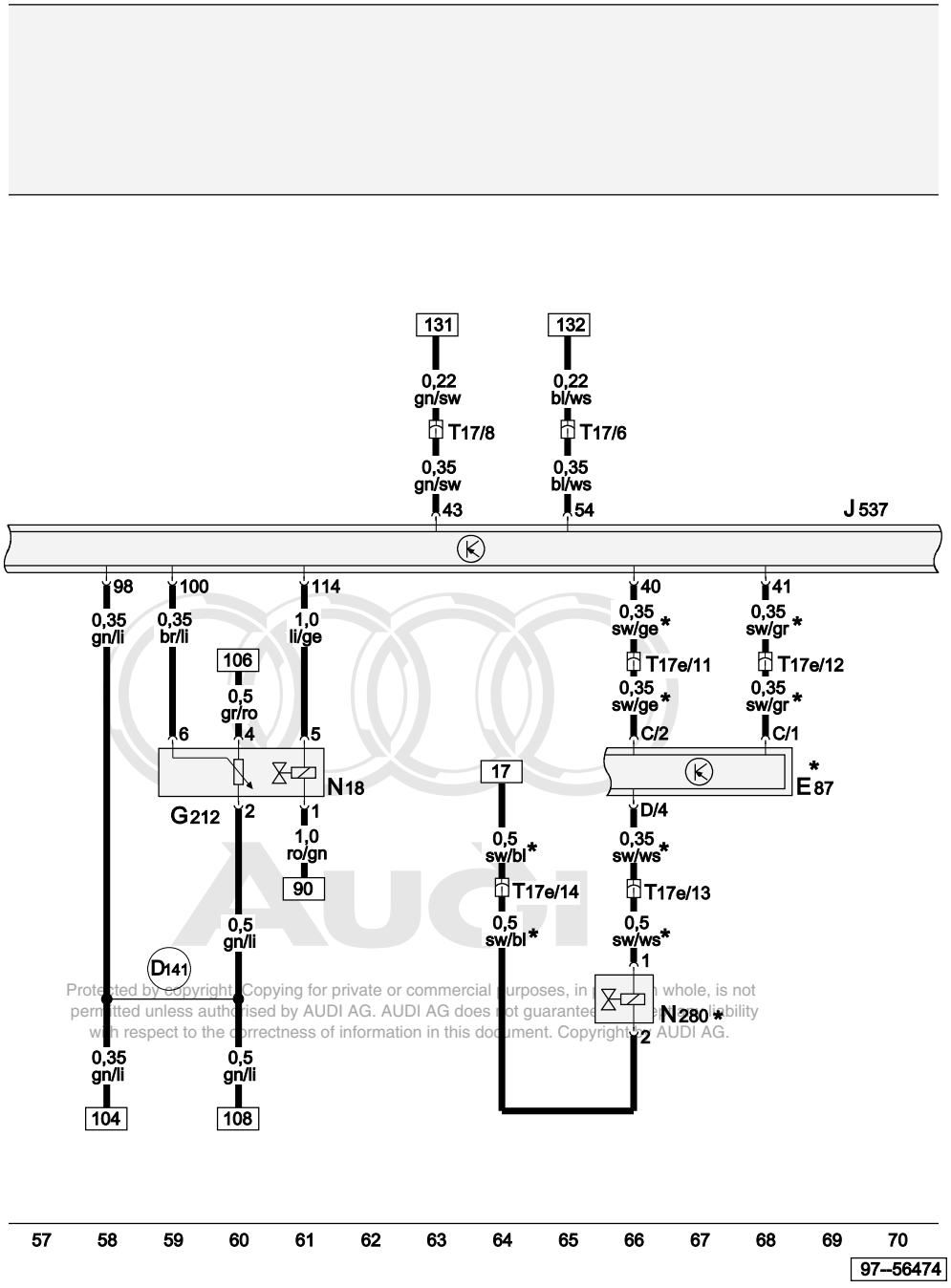

Protected by copyright. Copying for private or commercial purposes, in part or in whole, is not permitted unless authorised by AUDI AG. AUDI AG does not guarantee or accept any liability with respect to the correctness of information in this document. Copyright by AUDI AG.

Control and display unit for air conditioner/Climatronic, exhaust gas recirculation potentiometer, 4LV (injection system) control unit

E87	Control and display unit for air conditioner/Climatronic
G212	Exhaust gas recirculation potentiometer
J537	4LV (injection system) control unit
N18	Exhaust gas recirculation valve
N280	Air conditioning system compressor regulating valve
T17	17-pin connector, brown, in footwell, front left
T17e	17-pin connector, blue, in footwell, front left
D141	Connection (5V), in engine prewiring wiring harness
*	Only applies to models with air conditioner

ws	=	white
sw	=	black
ro	=	red
br	=	brown
gn	=	green
bl	=	blue
gr	=	grey
li	=	purple
ge	=	yellow
or	=	orange
rs	=	pink

Accelerator pedal position senders, throttle valve control unit, 4LV (injection system) control unit

G79	Accelerator pedal position sender
G185	Accelerator pedal position sender -2-
G186	Throttle valve drive (electric power control)
G187	Throttle valve drive angle sender -1- (electric power control)
G188	Throttle valve drive angle sender -2- (electric power control)
J338	Throttle valve control unit
J537	4LV (injection system) control unit
T17	17-pin connector, brown, in footwell, front left
44	Earth point, lower part of left A pillar
85	Earth connection -1-, in engine compartment wiring harness
284	Earth connection -6-, in interior wiring harness

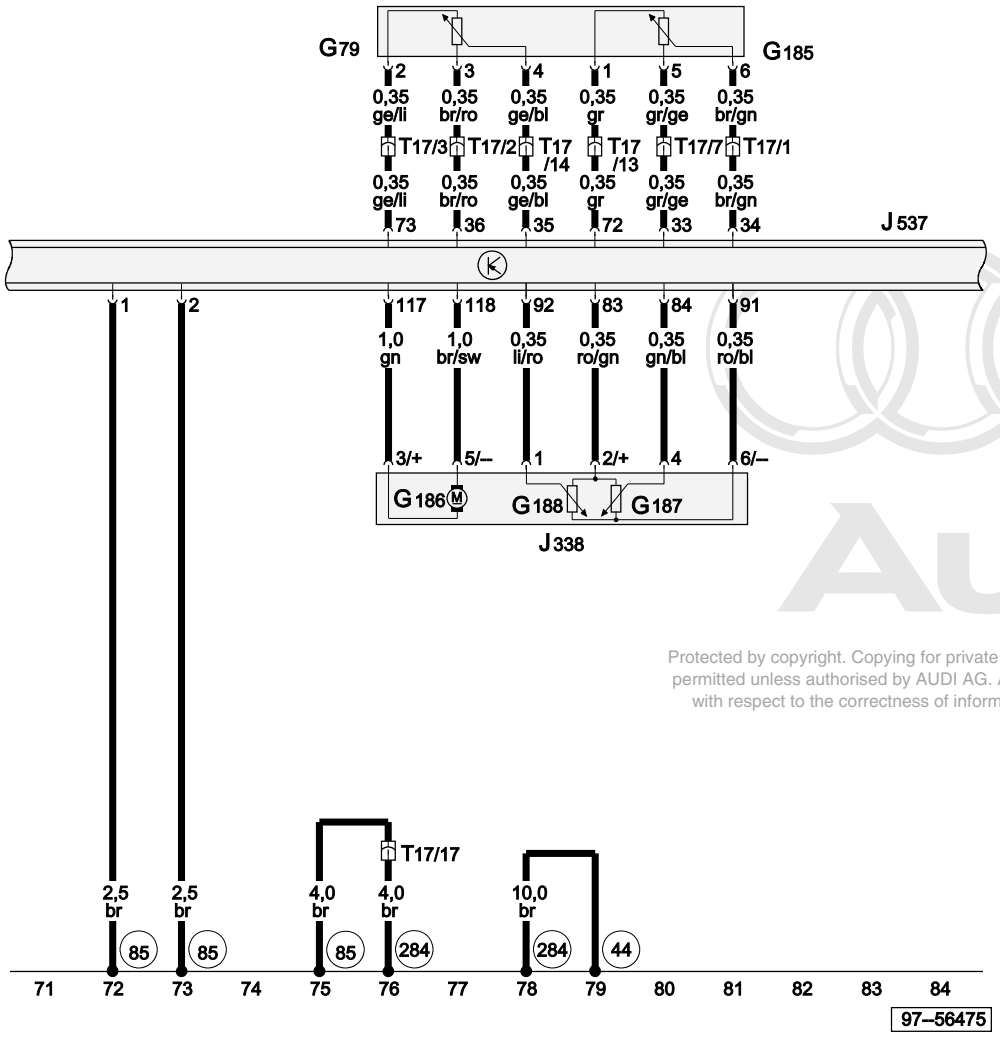

Protected by copyright. Copying for private or commercial purposes, in part or in whole, is not permitted unless authorised by AUDI AG. AUDI AG does not guarantee or accept any liability with respect to the correctness of information in this document. Copyright by AUDI AG.

ws	=	white
sw	=	black
ro	=	red
br	=	brown
gn	=	green
bl	=	blue
gr	=	grey
li	=	purple
ge	=	yellow
or	=	orange
rs	=	pink

Cruise control system switch, brake light switch, 4LV (injection system) control unit, heater element (crankcase breather)

E45	Cruise control system switch
F	Brake light switch
J537	4LV (injection system) control unit
N79	Heater element (crankcase breather)
T10n	10-pin connector, black, behind steering column switch trim
T10s	10-pin connector, white, in footwell, front left
T17	17-pin connector, brown, in footwell, front left
T17e	17-pin connector, blue, in footwell, front left
85	Earth connection -1-, in engine compartment wiring harness
A16	Connection (cruise control system), in dash panel wiring harness
B149	Positive (+) connection -2- (15a), in interior wiring harness
B185	Connection -2- (54), in interior wiring harness
*	Only applies to models with cruise control system
**	Only applies to models with manual gearbox

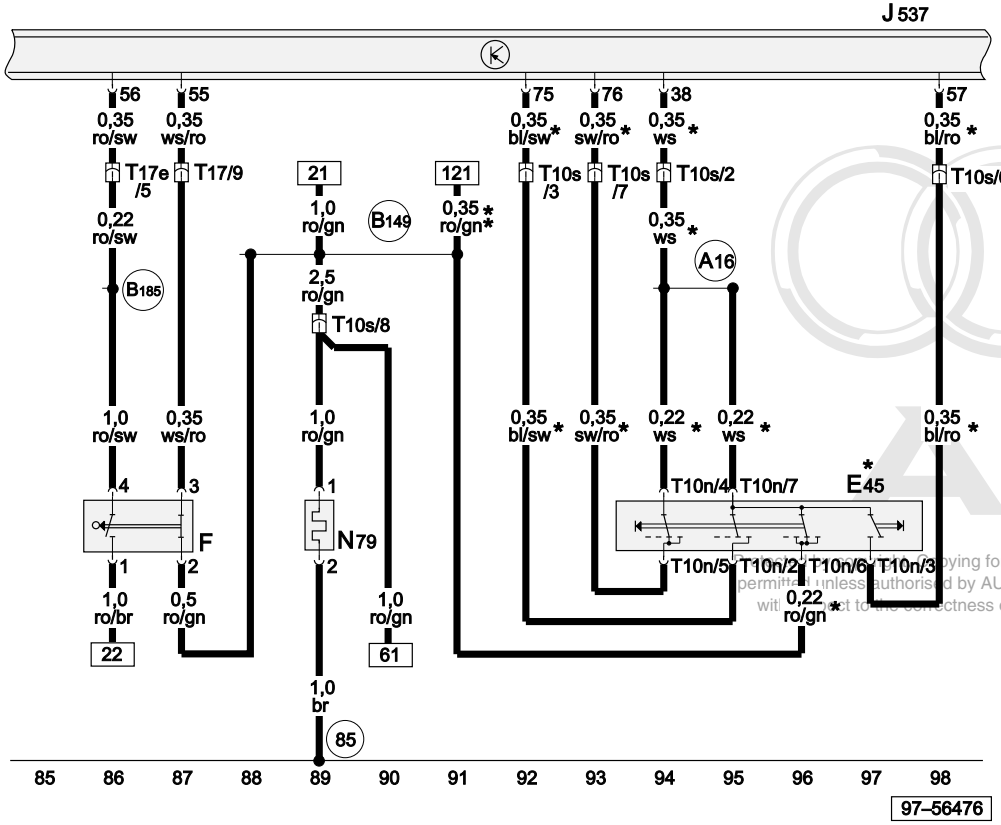

ws = white
sw = black
ro = red
br = brown
gn = green
bl = blue
gr = grey
li = purple
ge = yellow
or = orange
rs = pink

Copying for private or commercial purposes, in part or in whole, is not permitted unless authorised by AUDI AG. AUDI AG does not guarantee or accept any liability with respect to the correctness of information in this document. Copyright by AUDI AG.

Coolant temperature senders, engine speed sender, Hall sender, knock sensor, intake manifold pressure sender, 4LV (injection system) control unit

G2	Coolant temperature sender
G28	Engine speed sender
G40	Hall sender
G61	Knock sensor I
G62	Coolant temperature sender
G71	Intake manifold pressure sender
G72	Intake manifold temperature sender
J537	4LV (injection system) control unit
T17	17-pin connector, brown, in footwell, front left
220	Earth connection (sender earth), in engine wiring harness
269	Earth connection (sender earth) -1-, in dash panel wiring harness

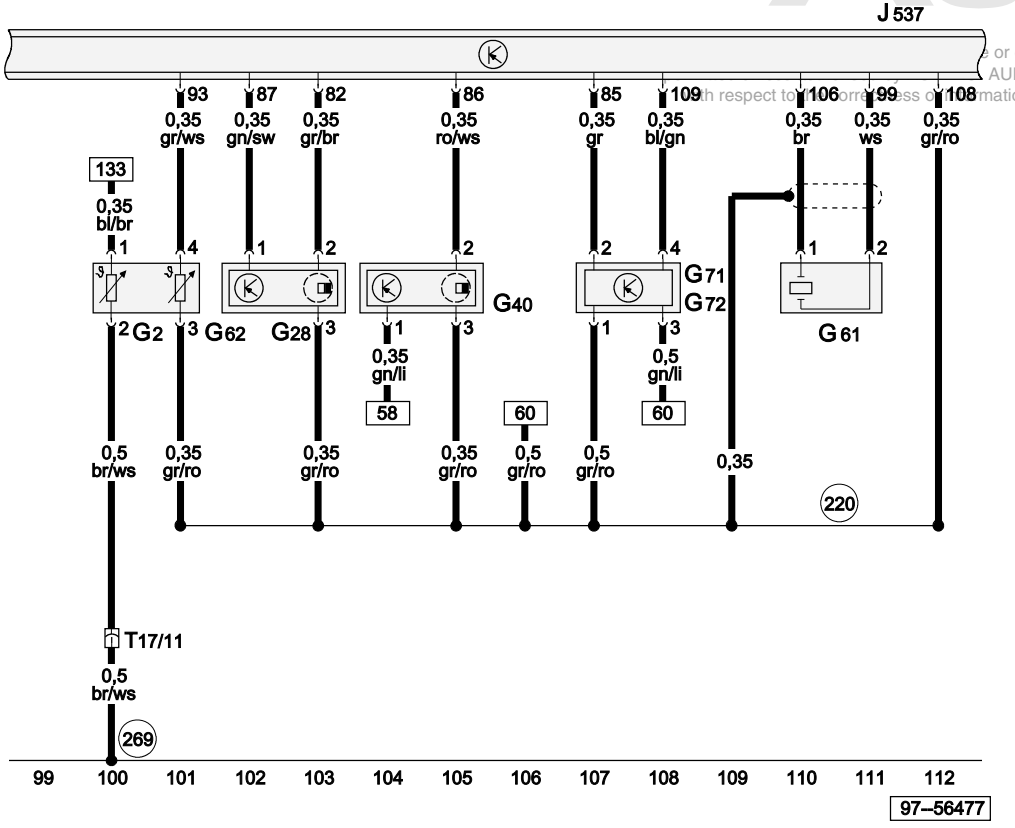

ws	=	white
sw	=	black
ro	=	red
br	=	brown
gn	=	green
bl	=	blue
gr	=	grey
li	=	purple
ge	=	yellow
or	=	orange
rs	=	pink

...or commercial purposes, in part or in whole, is not ... AUDI AG does not guarantee or accept any liability ...th respect to ...correctness of information in this document. Copyright by AUDI AG.

Clutch pedal switch, 4LV (injection system) control unit, ignition coil, spark plugs

F36	Clutch pedal switch
J537	4LV (injection system) control unit
N	Ignition coil
N122	Final output stage
N128	Ignition coil 2
P	Spark plug connector
Q	Spark plugs
T17	17-pin connector, brown, in footwell, front left
T17e	17-pin connector, blue, in footwell, front left
85	Earth connection -1-, in engine compartment wiring harness
A121	Connection (high bus), in dash panel wiring harness
A122	Connection (low bus), in dash panel wiring harness
D51	Positive (+) connection -1- (15), in engine compartment wiring harness
*	Only models with manual gearbox

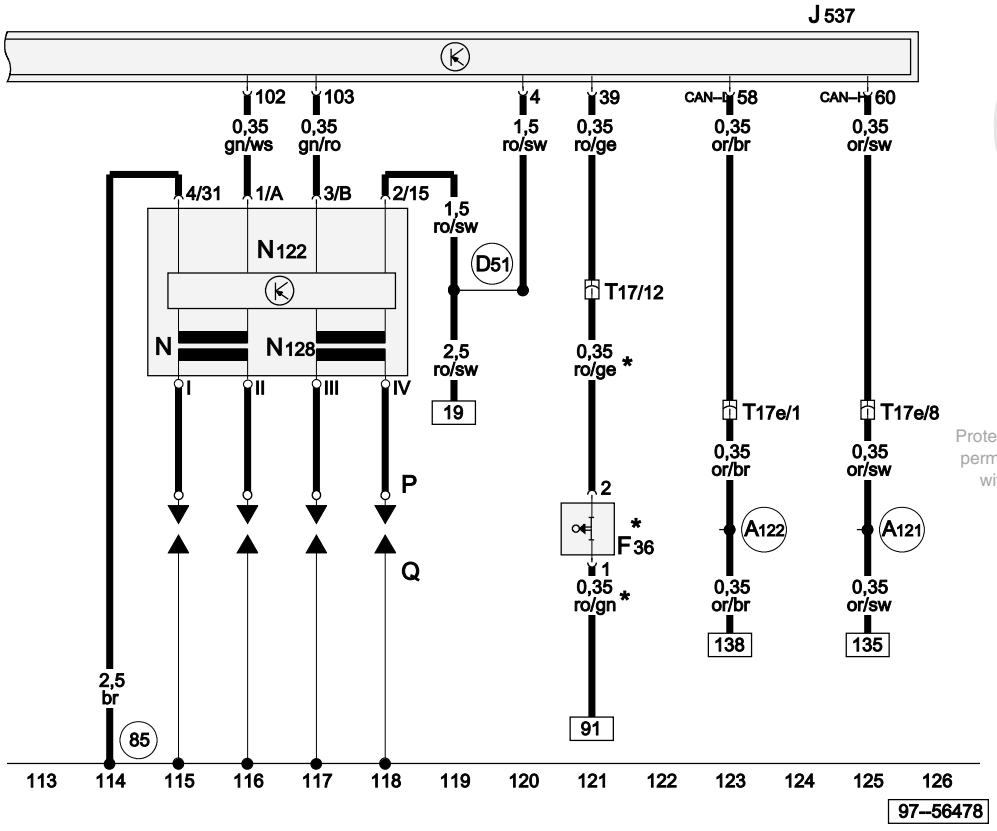

Protected by copyright. Copying for private or commercial purposes, in part or in whole, is not permitted unless authorised by AUDI AG. AUDI AG does not guarantee or accept any liability with respect to the correctness of information in this document. Copyright by AUDI AG.

ws	=	white
sw	=	black
ro	=	red
br	=	brown
gn	=	green
bl	=	blue
gr	=	grey
li	=	purple
ge	=	yellow
or	=	orange
rs	=	pink

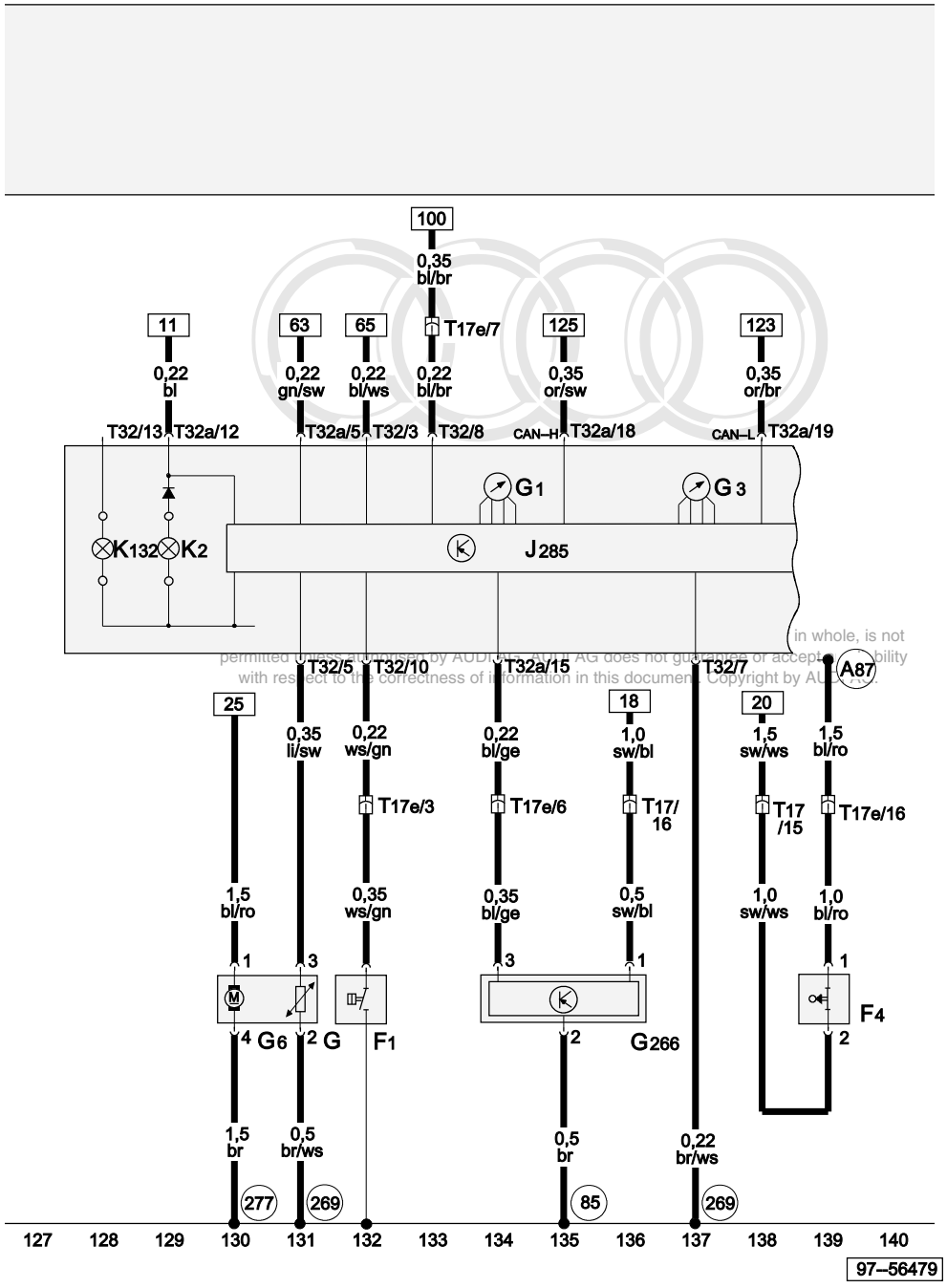

in whole, is not permitted unless authorised by AUDI AG. AUDI AG does not guarantee or accept any liability with respect to the correctness of information in this document. Copyright by AUDI AG.

ws = white
sw = black
ro = red
br = brown
gn = green
bl = blue
gr = grey
li = purple
ge = yellow
or = orange
rs = pink

Oil pressure switch, fuel gauge sender, fuel pump (pre-supply pump), control unit with display in dash panel insert

F1	Oil pressure switch
F4	Reversing light switch
G	Fuel gauge sender
G1	Fuel gauge
G3	Coolant temperature gauge
G6	Fuel pump (pre-supply pump)
G266	Oil level/oil temperature sender
J285	Control unit with display in dash panel insert
K2	Alternator warning lamp
K132	Electronic power control fault lamp
T17	17-pin connector, brown, in footwell, front left
T17e	17-pin connector, blue, in footwell, front left
T32	32-pin connector, blue, on dash panel insert
T32a	32-pin connector, green, on dash panel insert
85	Earth connection -1-, in engine compartment wiring harness
269	Earth connection (sender earth) -1-, in dash panel wiring harness
277	Earth connection -3-, in interior wiring harness
A87	Connection (RF (reversing light)), in dash panel wiring harness

1.2 litre unit injector, TDI engine (45 kW - 3-cylinder), engine code ANY

From model year 2002

Main fuse (on battery)

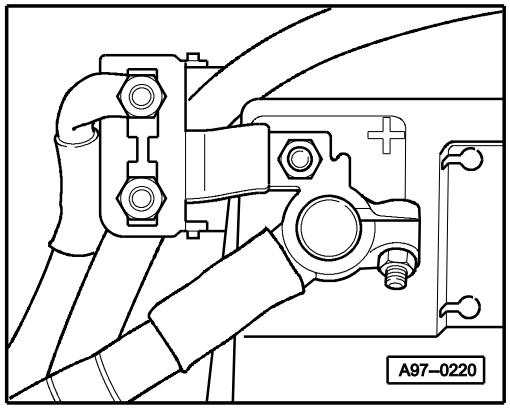

9-point relay carrier (dash panel, left)

Fuse box

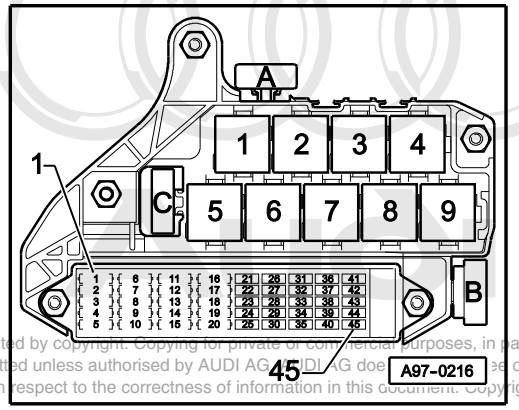

4 - High heat output relay (J360)

8 - Low heat output relay (J359)

B - Additional heater fuse (S126)

Fuse colours

30 A - green
25 A - white
20 A - yellow
15 A - blue
10 A - red
7,5 A - orange
5 A - beige

Protected by copyright. Copying for private or commercial purposes, in part or in whole, is not permitted unless authorised by AUDI AG. AUDI AG does not guarantee or accept any liability with respect to the correctness of information in this document. Copyright by AUDI AG.

3-point relay carrier (footwell, left)

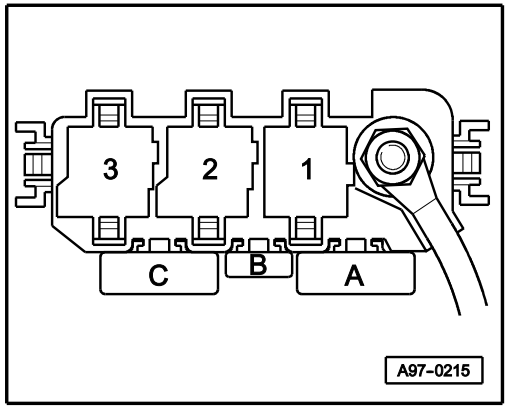

1 - Relay for glow plugs (J52)

2 - Terminal 30 voltage supply relay (J317)

A - Strip fuse for glow plugs (engine) (S39)

B - Engine control unit fuse (S102)

Battery, starter, alternator, ignition/starter switch, starter inhibitor and reversing light relay

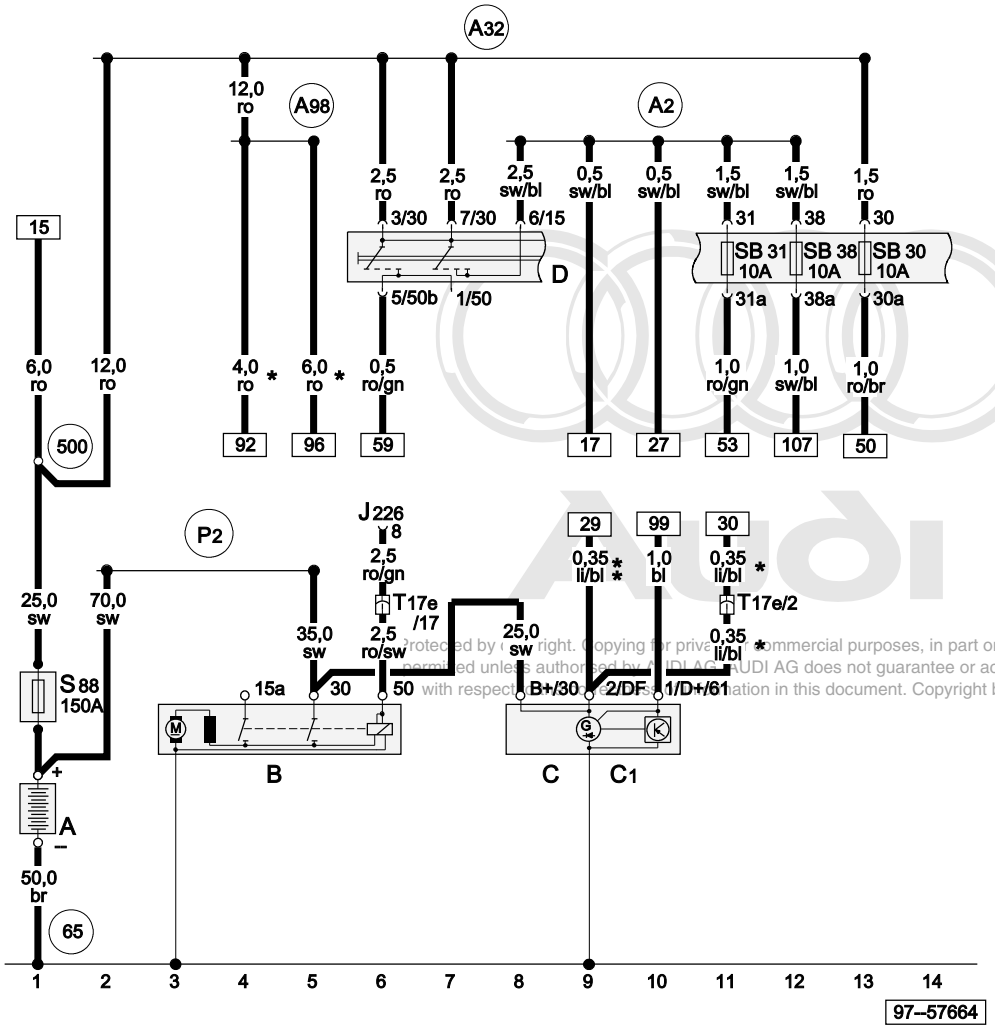

Audi
protected by copyright. Copying for private or commercial purposes, in part or in whole, is not permitted unless authorised by AUDI AG. AUDI AG does not guarantee or accept any liability with respect to the correctness of information in this document. Copyright by AUDI AG.

ws	= white
sw	= black
ro	= red
br	= brown
gn	= green
bl	= blue
gr	= grey
li	= purple
ge	= yellow
or	= orange
rs	= pink

A	Battery
B	Starter
C	Alternator
C1	Voltage regulator
D	Ignition/starter switch
J226	Starter inhibitor and reversing light relay
S88	Strip fuse
SB30	Fuse -30- on fuse box
SB31	Fuse -31- on fuse box
SB38	Fuse -38- on fuse box
T17e	17-pin connector, blue, in footwell, front left
65	Earth point, left longitudinal member, rear, between B and C pillar
500	Screw connection -1- (30), on relay plate
A2	Positive (+) connection (15), in dash panel wiring harness
A32	Positive (+) connection (30), in dash panel wiring harness
A98	Positive (+) connection -4- (30), in dash panel wiring harness
P2	Positive (+) connection (30), in battery wiring harness
*	Only applies to models with electric additional heater (PTC 900 W)
**	Only applies to models without additional heater

Relay for glow plugs, diesel direct injection system control unit, terminal 30 voltage supply relay, glow plugs (engine)

J52	Glow plug relay
J248	Diesel direct injection system control unit
J317	Terminal 30 voltage supply relay
Q6	Glow plugs (engine)
S39	Strip fuse for glow plugs - engine
T17	17-pin connector, brown, in footwell, front left
T17e	17-pin connector, blue, in footwell, front left
44	Earth point, lower part of left A pillar
85	Earth connection -1-, in engine compartment wiring harness
277	Earth connection -3-, in interior wiring harness
284	Earth connection -6-, in interior wiring harness
D16	Connection (glow plugs), in front right wiring harness

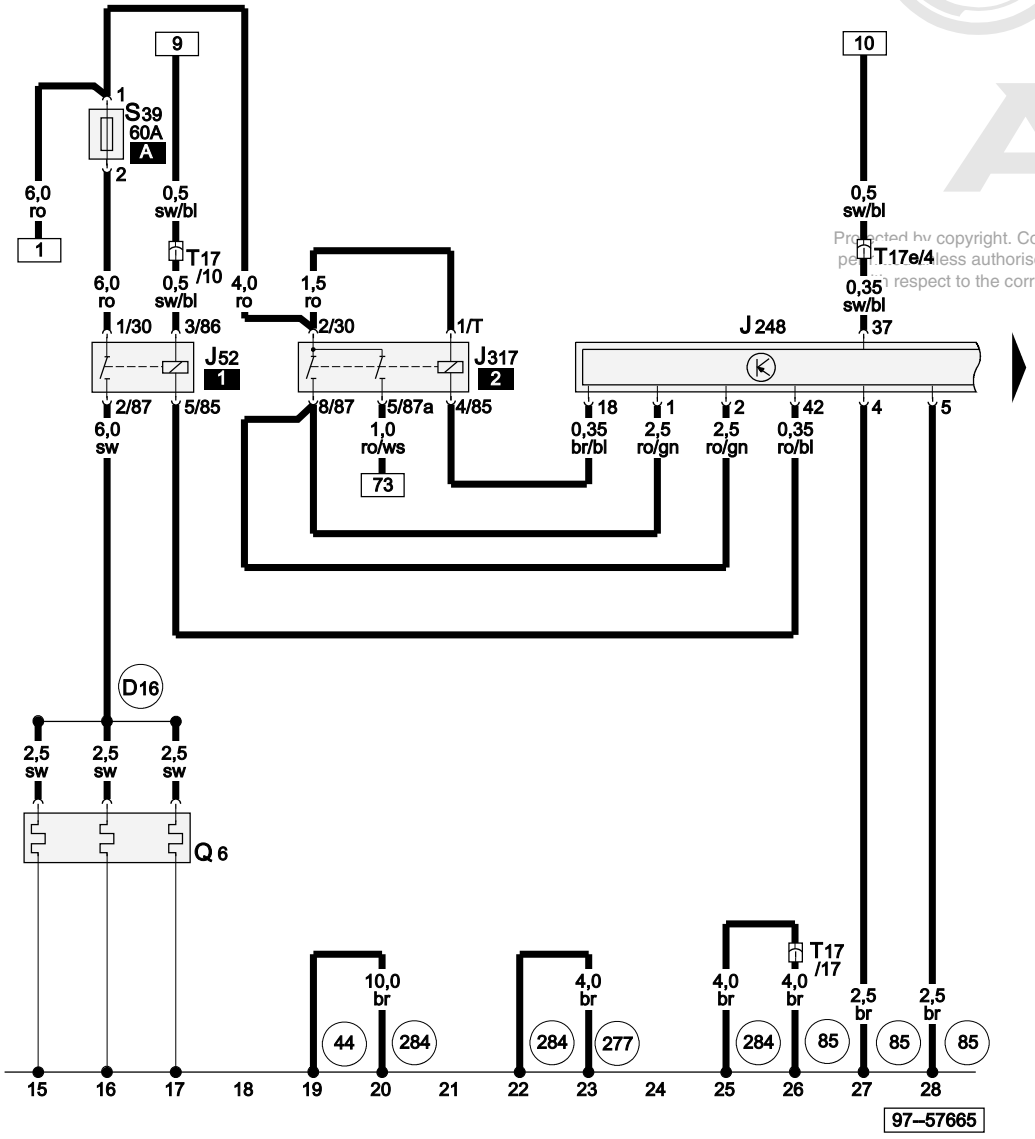

ws	=	white
sw	=	black
ro	=	red
br	=	brown
gn	=	green
bl	=	blue
gr	=	grey
li	=	purple
ge	=	yellow
or	=	orange
rs	=	pink

Protected by copyright. Copying for private or commercial purposes, in part or in whole, is not permitted unless authorised by AUDI AG. AUDI AG does not guarantee or accept any liability with respect to the correctness of information in this document. Copyright by AUDI AG.

Kick-down switch, idling switch, coolant temperature senders, accelerator pedal position sender, fuel temperature sender

F8	Kick-down switch
F60	Idling switch
G2	Coolant temperature sender
G62	Coolant temperature sender
G79	Accelerator pedal position sender
G81	Fuel temperature sender
J234	Airbag control unit
J248	Diesel direct injection system control unit
T17	17-pin connector, brown, in footwell, front left
T17d	17-pin connector, green, in footwell, front left
269	Earth connection (sender earth) -1-, in dash panel wiring harness
A125	Connection (crash signal), in dash panel wiring harness
*	Only applies to models with electric additional heater (PTC 900 W)
**	Only applies to models without additional heater

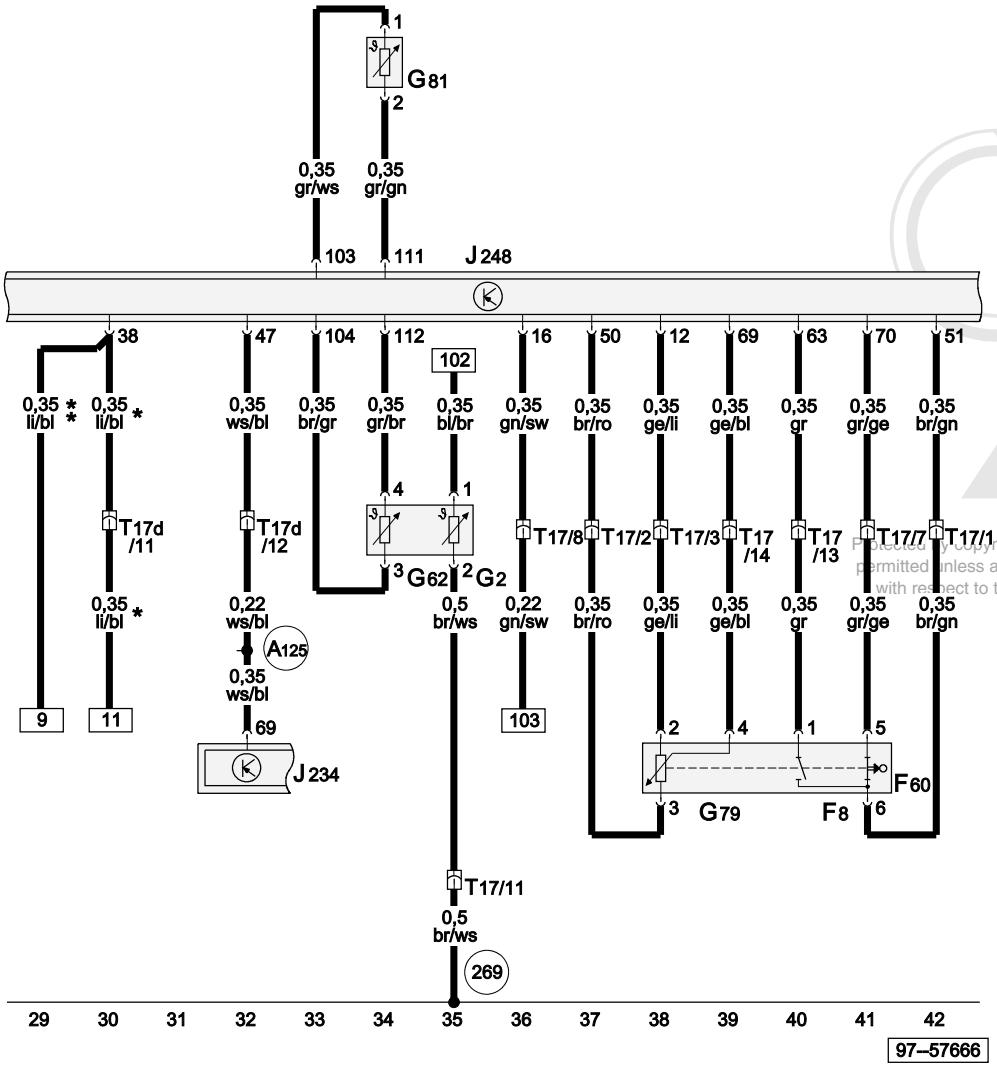

ws	=	white
sw	=	black
ro	=	red
br	=	brown
gn	=	green
bl	=	blue
gr	=	grey
li	=	purple
ge	=	yellow
or	=	orange
rs	=	pink

Protected by Copyright. Copying for private or commercial purposes, in part or in whole, is not permitted unless authorised by AUDI AG. AUDI AG does not guarantee or accept any liability with respect to the correctness of information in this document. Copyright by AUDI AG.

Brake light switch, diesel direct injection system control unit, heater element (crankcase breather), unit injector solenoid valves

F	Brake light switch
J248	Diesel direct injection system control unit
N79	Heater element (crankcase breather)
N240	Unit injector solenoid valve, No. 1 cyl.
N241	Unit injector solenoid valve, No. 2 cyl.
N242	Unit injector solenoid valve, No. 3 cyl.
T8b	8-pin connector, black, at unit injector solenoid valves
T17	17-pin connector, brown, in footwell, front left
T17e	17-pin connector, blue, in footwell, front left
T17h	17-pin connector, green, connector point, A pillar, right
43	Earth point, lower part of right A pillar
176	Earth connection, in right headlight wiring harness
B149	Positive (+) connection -2- (15a), in interior wiring harness
B185	Connection -2- (54), in interior wiring harness
D101	Connection -1-, in engine compartment wiring harness
*	Only applies to models with electric additional heater (PTC 900 W)
**	Only applies to models with heater element (crankcase breather)

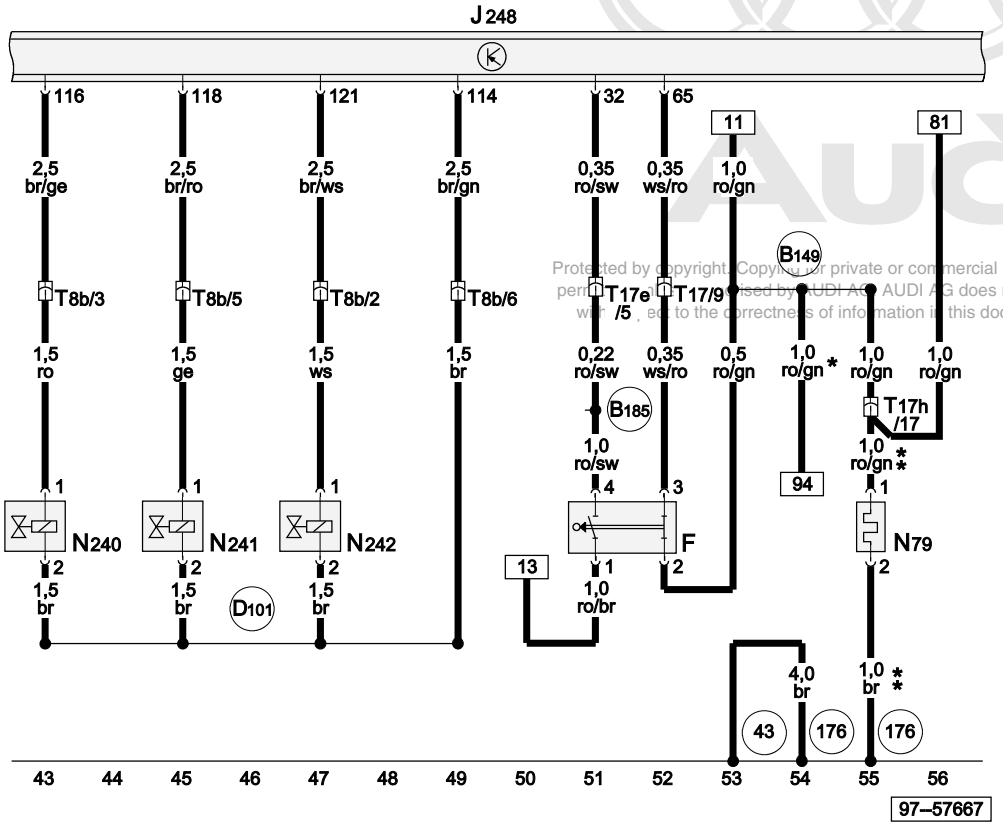

ws	=	white
sw	=	black
ro	=	red
br	=	brown
gn	=	green
bl	=	blue
gr	=	grey
li	=	purple
ge	=	yellow
or	=	orange
rs	=	pink

Protected by copyright. Copying for private or commercial purposes, in part or in whole, is not permitted unless authorised by AUDI AG. AUDI AG does not guarantee or accept any liability with respect to the correctness of information in this document. Copyright by AUDI AG.

Engine speed sender, Hall sender, diesel direct injection system control unit, electronic manual gearbox control unit

G28	Engine speed sender
G40	Hall sender
J248	Diesel direct injection system control unit
J514	Electronic manual gearbox control unit
T10s	10-pin connector, white, in footwell, front left
T17a	17-pin connector, red, in footwell, front left
T17d	17-pin connector, green, in footwell, front left
A121	Connection (high bus), in dash panel wiring harness
A122	Connection (low bus), in dash panel wiring harness
F27	Connection (screening), in diesel direct injection wiring harness

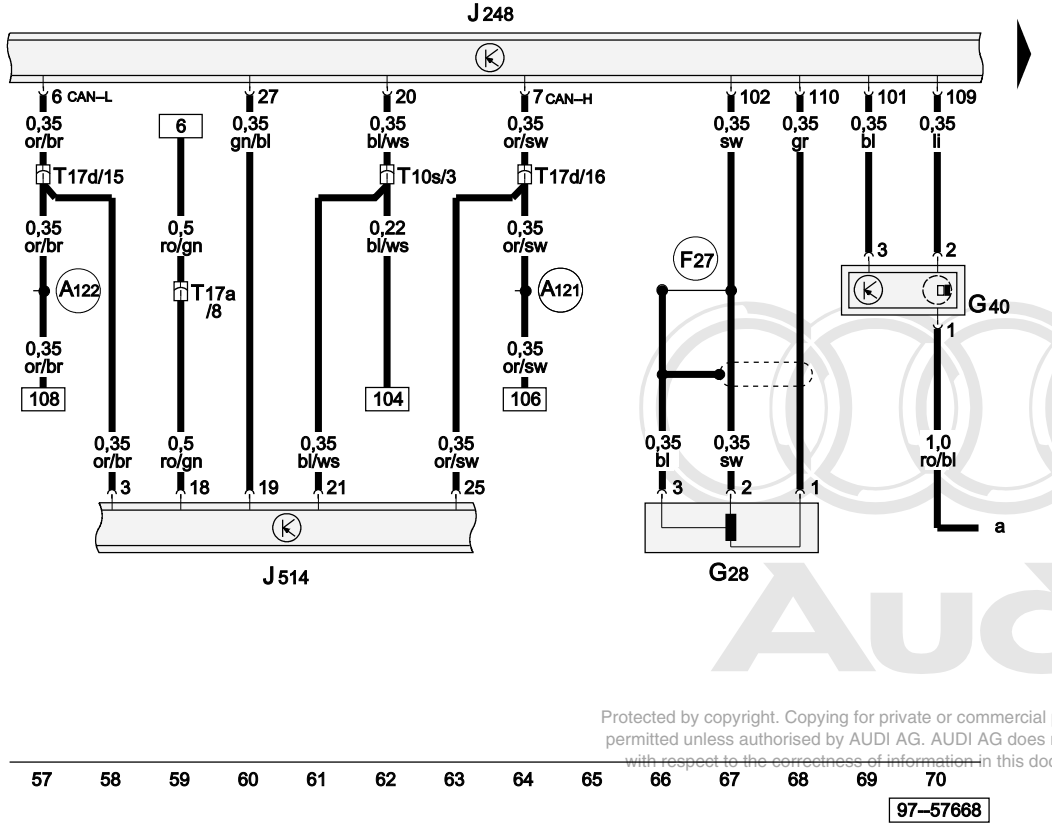

ws = white
sw = black
ro = red
br = brown
gn = green
bl = blue
gr = grey
li = purple
ge = yellow
or = orange
rs = pink

Protected by copyright. Copying for private or commercial purposes, in part or in whole, is not permitted unless authorised by AUDI AG. AUDI AG does not guarantee or accept any liability with respect to the correctness of information in this document. Copyright by AUDI AG.

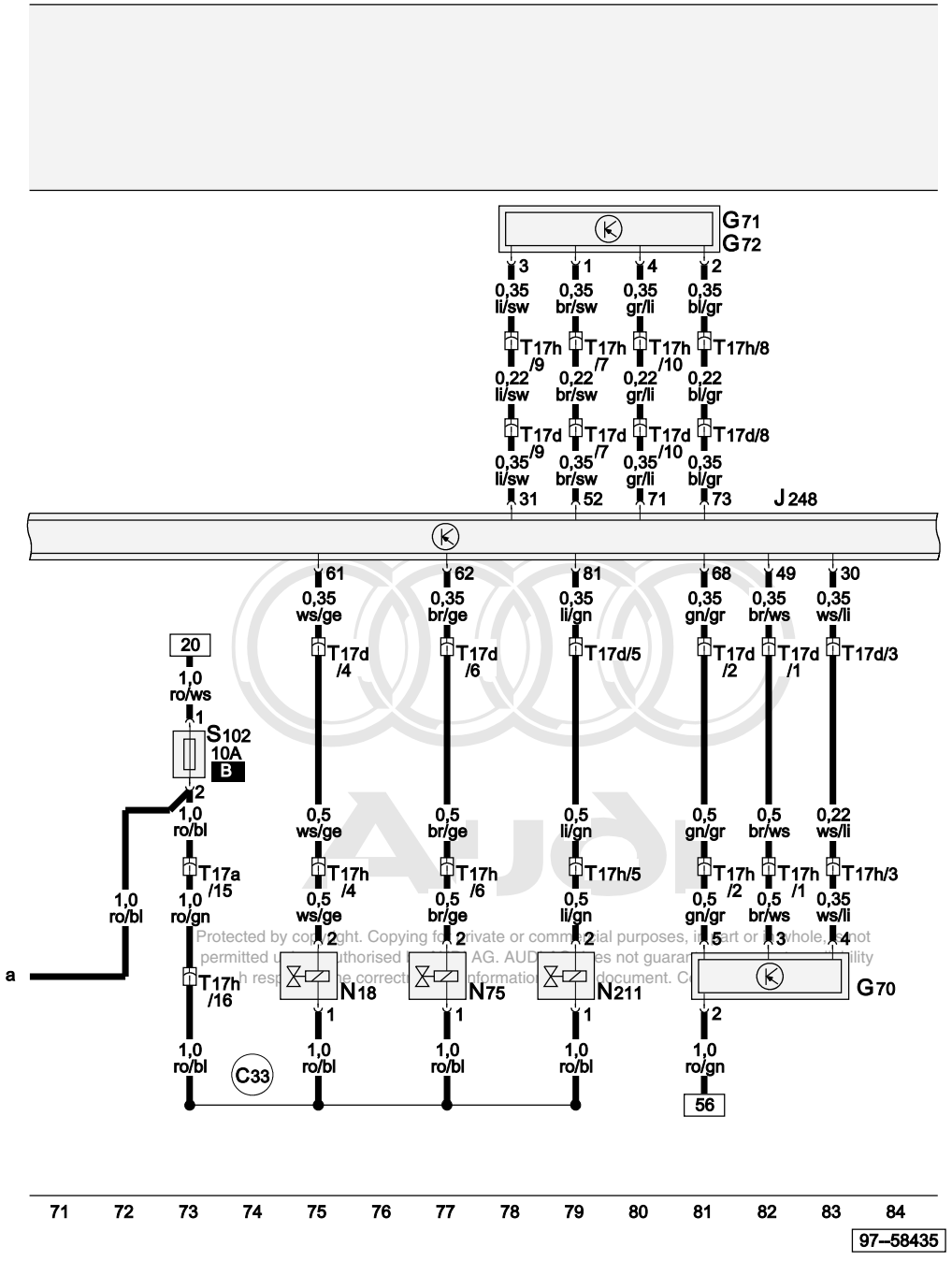

Protected by copyright. Copying for private or commercial purposes, in part or in whole, is not permitted unless authorised by AUDI AG. AUDI AG does not guarantee or accept any liability with respect to the correctness of information in this document. Copyright by AUDI AG.

Air mass meter, intake manifold pressure sender, exhaust gas recirculation valve, charge pressure control solenoid valve, throttle butterfly valve

G70	Air mass meter
G71	Intake manifold pressure sender
G72	Intake manifold temperature sender
J248	Diesel direct injection system control unit
N18	Exhaust gas recirculation valve
N75	Charge pressure control solenoid valve
N211	Throttle butterfly valve
S102	Engine control unit fuse
T17a	17-pin connector, red, in footwell, front left
T17d	17-pin connector, green, in footwell, front left
T17h	17-pin connector, green, connector point, A pillar, right
C33	Connection -5-, in headlight wiring harness

ws	=	white
sw	=	black
ro	=	red
br	=	brown
gn	=	green
bl	=	blue
gr	=	grey
li	=	purple
ge	=	yellow
or	=	orange
rs	=	pink

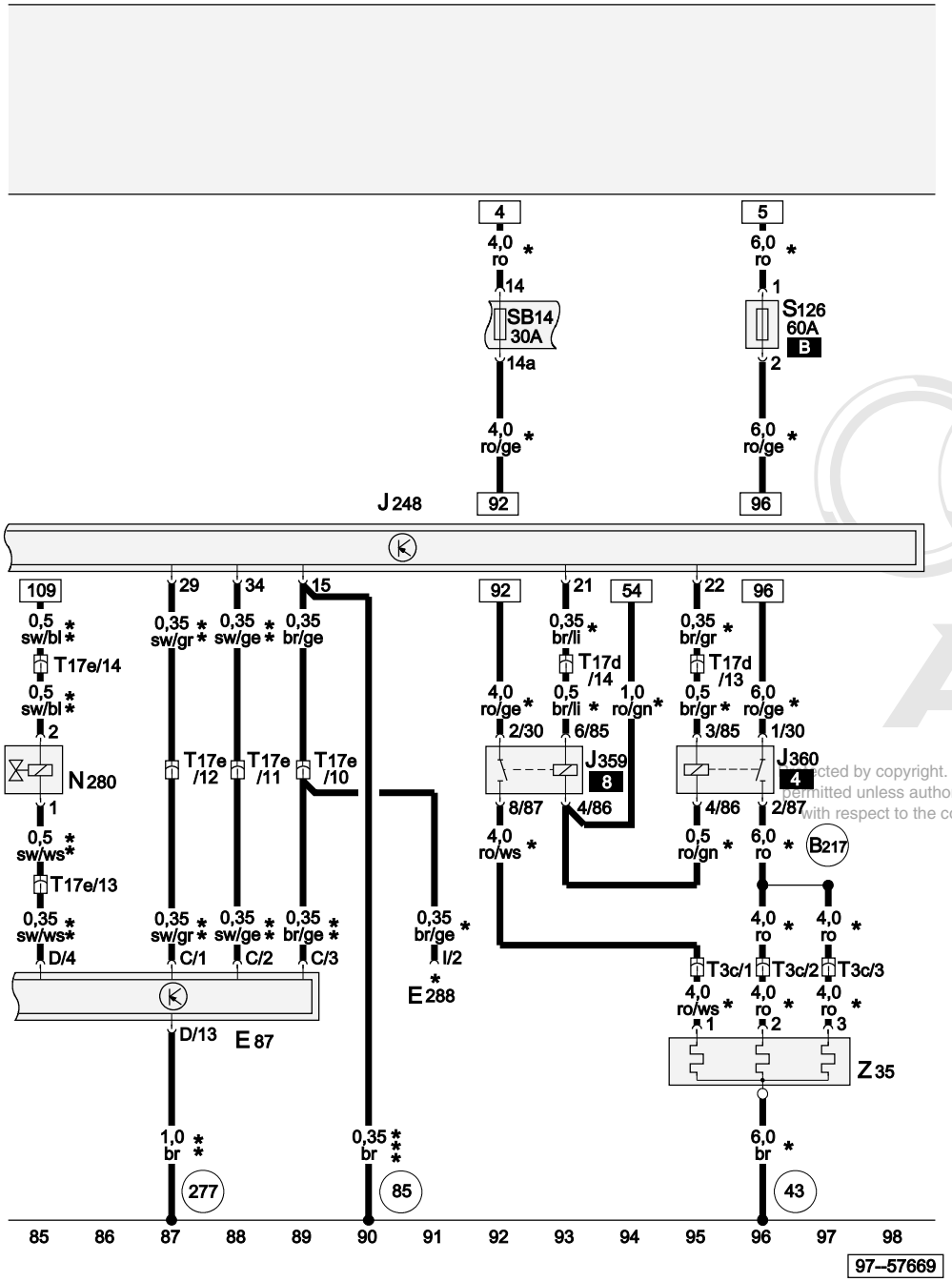

ws = white
sw = black
ro = red
br = brown
gn = green
bl = blue
gr = grey
li = purple
ge = yellow
or = orange
rs = pink

Air conditioning system/Climatronic operating and display unit, additional heating button (ECON), additional heating heater element

E87	Air conditioning system/Climatronic operating and display unit
E288	Additional heating button (ECON)
J248	Diesel direct injection system control unit
J359	Low heat output relay
J360	High heat output relay
N280	Air conditioning system compressor regulating valve
S126	Additional heater fuse
SB14	Fuse -14- on fuse box
T3c	3-pin connector, black, behind driver's storage compartment
T17d	17-pin connector, green, in footwell, front left
T17e	17-pin connector, blue, in footwell, front left
Z35	Additional heating heater element
43	Earth point, lower part of right A pillar
85	Earth connection -1-, in engine compartment wiring harness
277	Earth connection -3-, in interior wiring harness
B217	Connection (additional heater), in interior wiring harness
*	Only applies to models with electric additional heater (PTC 900 W)
**	Only applies to models with air conditioning system
***	Only applies to models without air conditioning system

Audi
...ected by copyright. Copying for private or commercial purposes, in part or in whole, is not ...mitted unless authorised by AUDI AG. AUDI AG does not guarantee or accept any liability ...with respect to the correctness of information in this document. Copyright by AUDI AG.

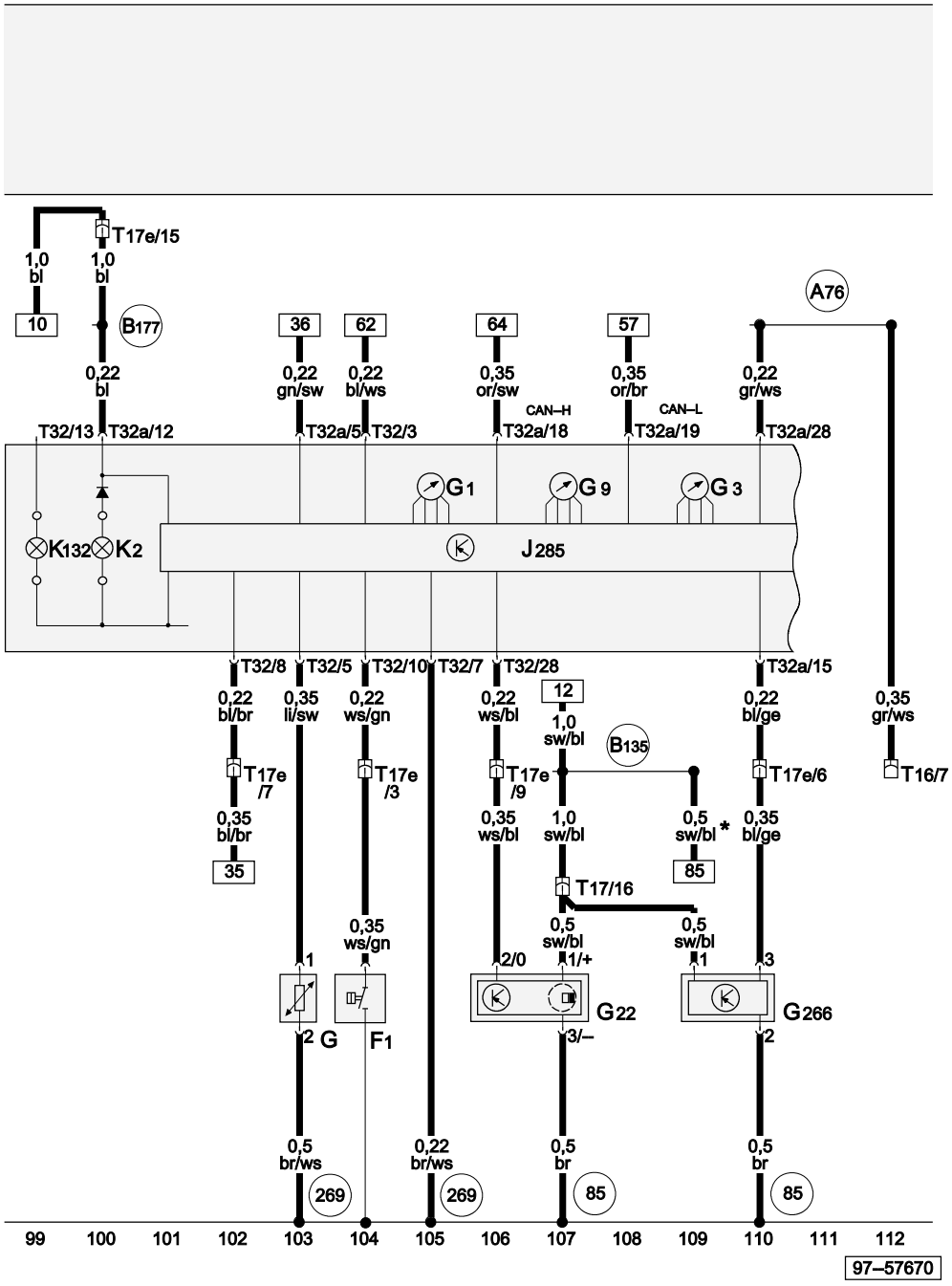

ws = white
sw = black
ro = red
br = brown
gn = green
bl = blue
gr = grey
li = purple
ge = yellow
or = orange
rs = pink

Oil pressure switch, fuel gauge sender, speedometer sender, oil level/oil temperature sender

F1	Oil pressure switch
G	Fuel gauge sender
G1	Fuel gauge
G3	Coolant temperature gauge
G9	Oil temperature gauge
G22	Speedometer sender (Hall sender, on gearbox)
G266	Oil level/oil temperature sender
J285	Control unit with display in dash panel insert
K2	Alternator warning lamp
K132	Electronic power control fault lamp
T16	16-pin connector, diagnostic connector, black, near fuse box
T17	17-pin connector, brown, in footwell, front left
T17e	17-pin connector, blue, in footwell, front left
T32	32-pin connector, blue, on dash panel insert
T32a	32-pin connector, green, on dash panel insert
85	Earth connection -1-, in engine compartment wiring harness
269	Earth connection (sender earth) -1-, in dash panel wiring harness
A76	Connection (diagnosis wire K), in dash panel wiring harness
B135	Connection -1- (15a), in interior wiring harness
B177	Connection (61), in interior wiring harness
*	Only applies to models with air conditioner

Protected by copyright. Copying for private or commercial purposes, in part or in whole, is not permitted unless authorised by AUDI AG. AUDI AG does not guarantee or accept any liability with respect to the correctness of information in this document. Copyright by AUDI AG.

1.4 litre unit injector, TDI engine (55 kW - 3-cylinder), engine code AMF

From model year 2002

Main fuse

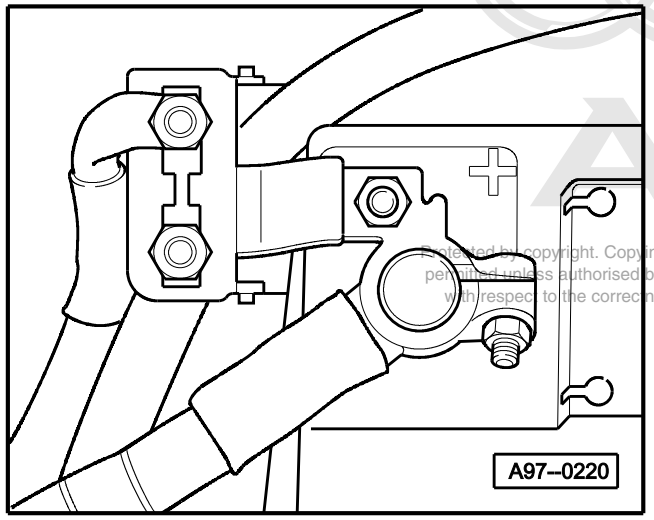

Protected by copyright. Copying for private or commercial purposes, in part or in whole, is not permitted unless authorised by AUDI AG. AUDI AG does not guarantee or accept any liability with respect to the correctness of information in this document. Copyright by AUDI AG.

- On battery

9-point relay carrier, fuse box

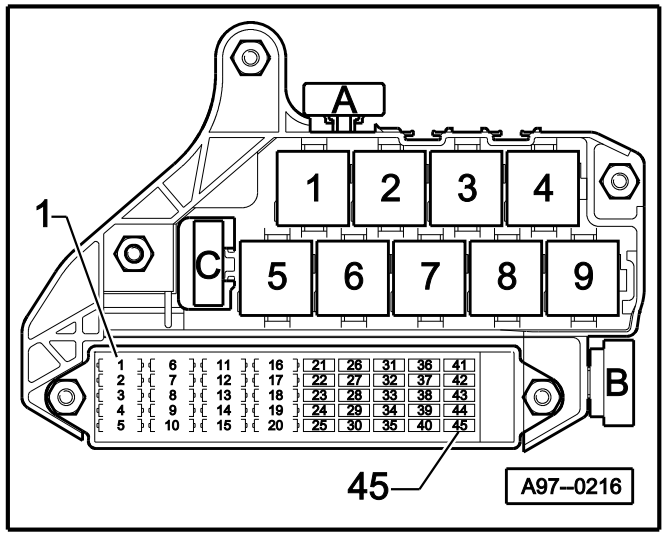

♦ Dash panel, left

4 - High heat output relay (J360)
8 - Low heat output relay (J359)
B - Additional heater fuse (S126)

Fuse colours

5 A - beige
7.5 A - brown
10 A - red
15 A - blue
20 A - yellow
25 A - white
30 A - green

3-point relay carrier

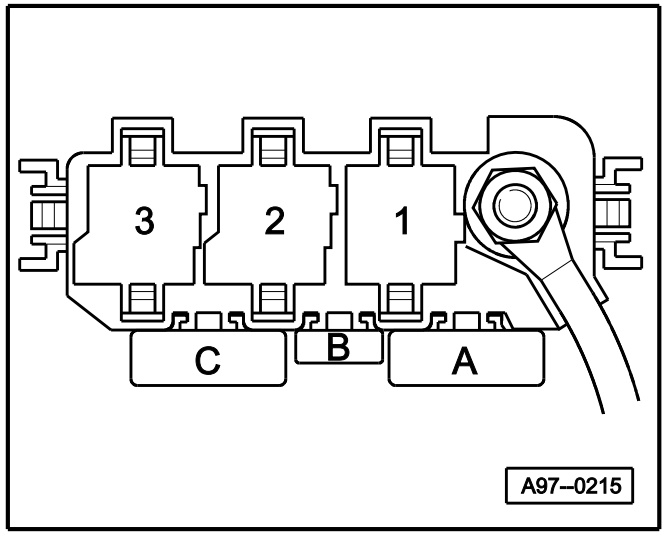

♦ Footwell, left

1 - Relay for glow plugs (J52)
2 - Terminal 30 voltage supply relay (J317)
A - Strip fuse for glow plugs - engine (S39)
B - Engine control unit fuse (S102)

Protected by copyright. Copying for private or commercial purposes, in part or in whole, is not permitted unless authorised by AUDI AG. AUDI AG does not guarantee or accept any liability with respect to the correctness of information in this document. Copyright by AUDI AG.

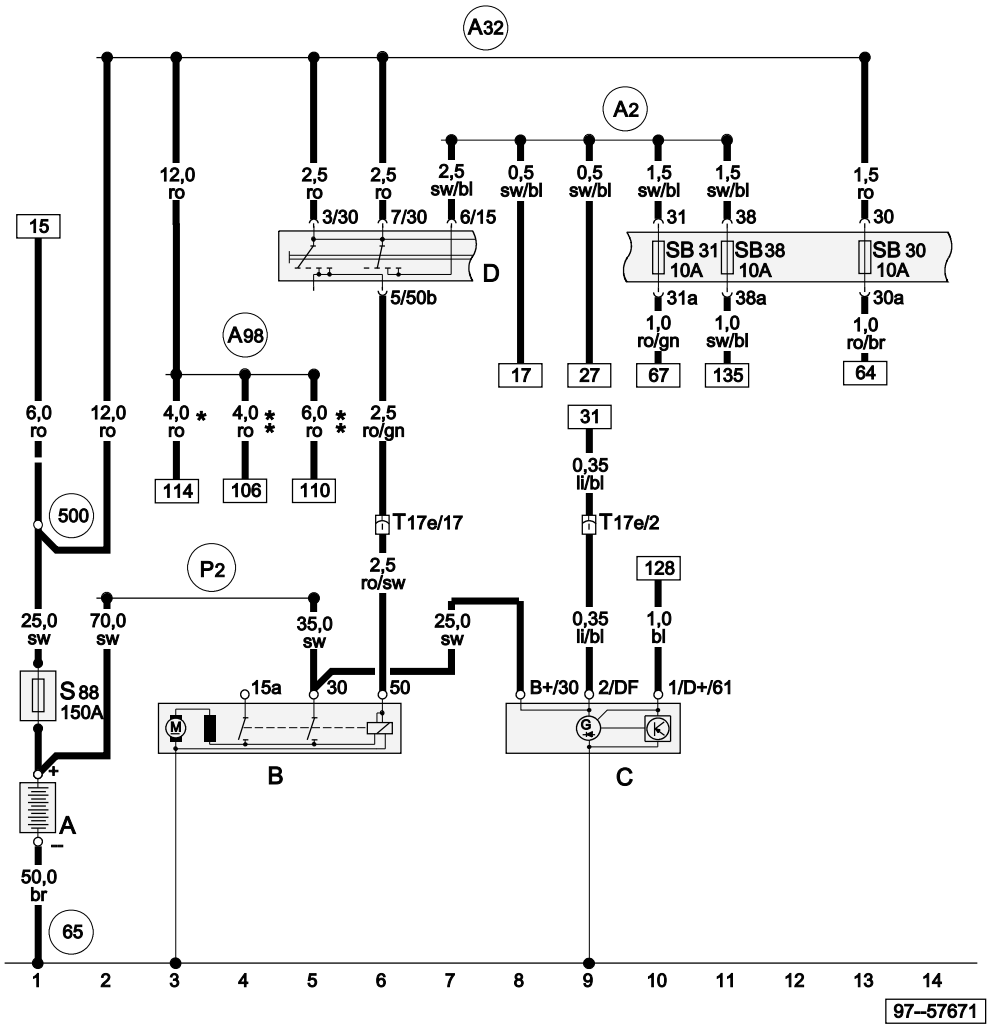

Battery, starter, alternator, ignition/starter switch

A	Battery
B	Starter
C	Alternator
D	Ignition/starter switch
S88	Strip fuse
SB30	Fuse -30- on fuse box
SB31	Fuse -31- on fuse box
SB38	Fuse -38- on fuse box
T17e	17-pin connector, blue, in footwell, front left
65	Earth point, left longitudinal member, rear, between B and C pillar
500	Screw connection -1- (30), on relay plate
A2	Positive (+) connection (15), in dash panel wiring harness
A32	Positive (+) connection (30), in dash panel wiring harness
A98	Positive (+) connection -4- (30), in dash panel wiring harness
P2	Positive (+) connection (30), in battery wiring harness
*	Only applies to models with fuel-burning additional heater
**	Only applies to models with electric additional heater (PTC 900 W)

Protected by copyright. Copying for private or commercial purposes, in part or in whole, is not permitted unless authorised by AUDI AG. AUDI AG does not guarantee or accept any liability with respect to the correctness of information in this document. Copyright by AUDI AG.

ws	=	white
sw	=	black
ro	=	red
br	=	brown
gn	=	green
bl	=	blue
gr	=	grey
li	=	purple
ge	=	yellow
or	=	orange
rs	=	pink

Relay for glow plugs, diesel direct injection system control unit, terminal 30 voltage supply relay, glow plugs - (engine)

J52	Glow plug relay
J248	Diesel direct injection system control unit
J317	Terminal 30 voltage supply relay
Q6	Glow plugs - (engine)
S39	Strip fuse for glow plugs - engine
T17	17-pin connector, brown, in footwell, front left
T17e	17-pin connector, blue, in footwell, front left
44	Earth point, lower part of left A pillar
85	Earth connection -1-, in engine compartment wiring harness
249	Earth connection -2-, in interior wiring harness
277	Earth connection -3-, in interior wiring harness
284	Earth connection -6-, in interior wiring harness
D16	Connection (glow plugs), in front right wiring harness

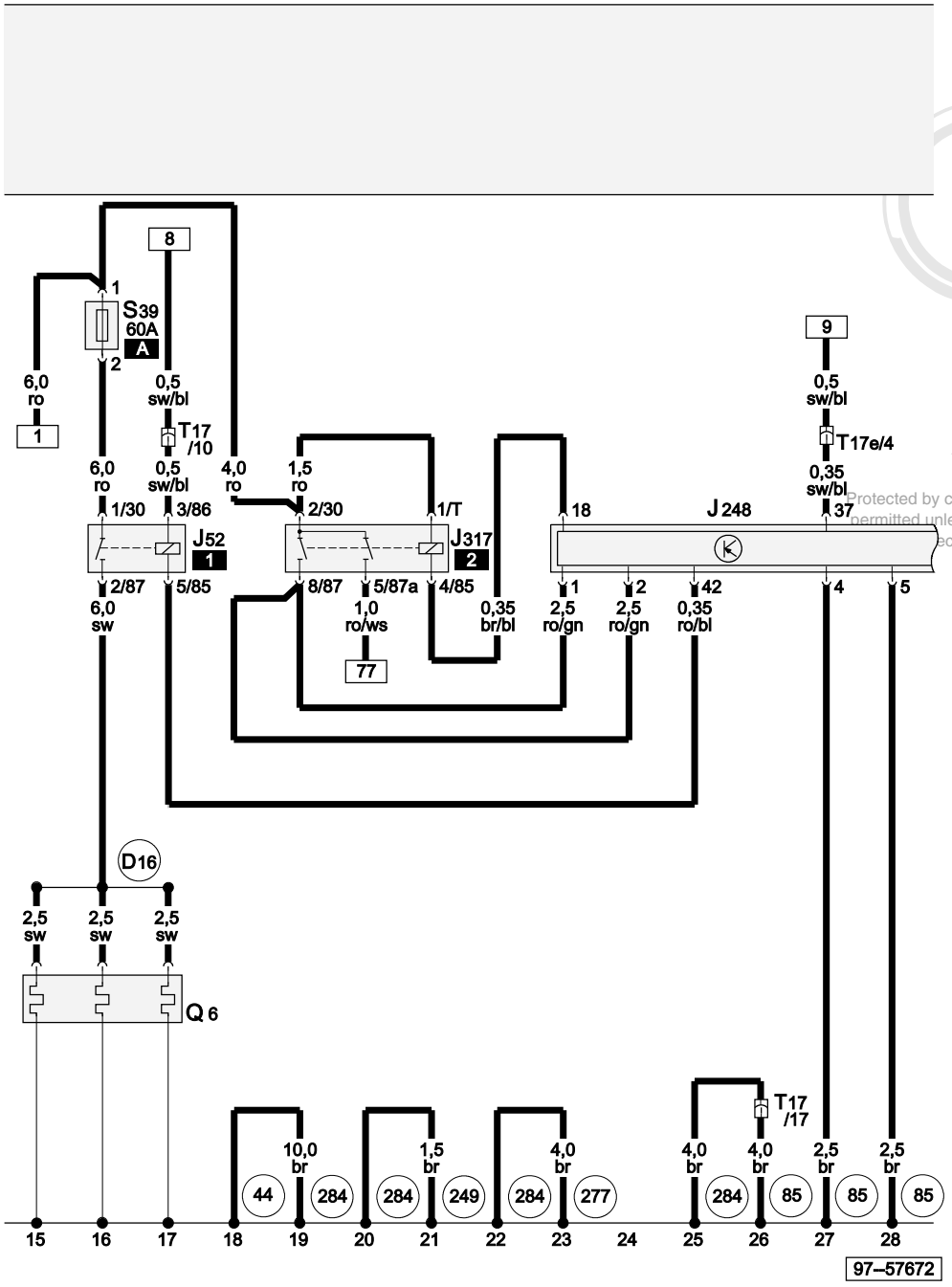

ws = white
sw = black
ro = red
br = brown
gn = green
bl = blue
gr = grey
li = purple
ge = yellow
or = orange
rs = pink

Protected by copyright. Copying for private or commercial purposes, in part or in whole, is not permitted unless authorised by AUDI AG. AUDI AG does not guarantee or accept any liability with respect to the correctness of information in this document. Copyright by AUDI AG.

Kick-down switch, idling switch, coolant temperature senders, accelerator pedal position sender, fuel temperature sender

F8	Kick-down switch
F60	Idling switch
G2	Coolant temperature sender
G62	Coolant temperature sender
G79	Accelerator pedal position sender
G81	Fuel temperature sender
J248	Diesel direct injection system control unit
T17	17-pin connector, brown, in footwell, front left
T17d	17-pin connector, green, in footwell, front left
269	Earth connection (sender earth) -1-, in dash panel wiring harness

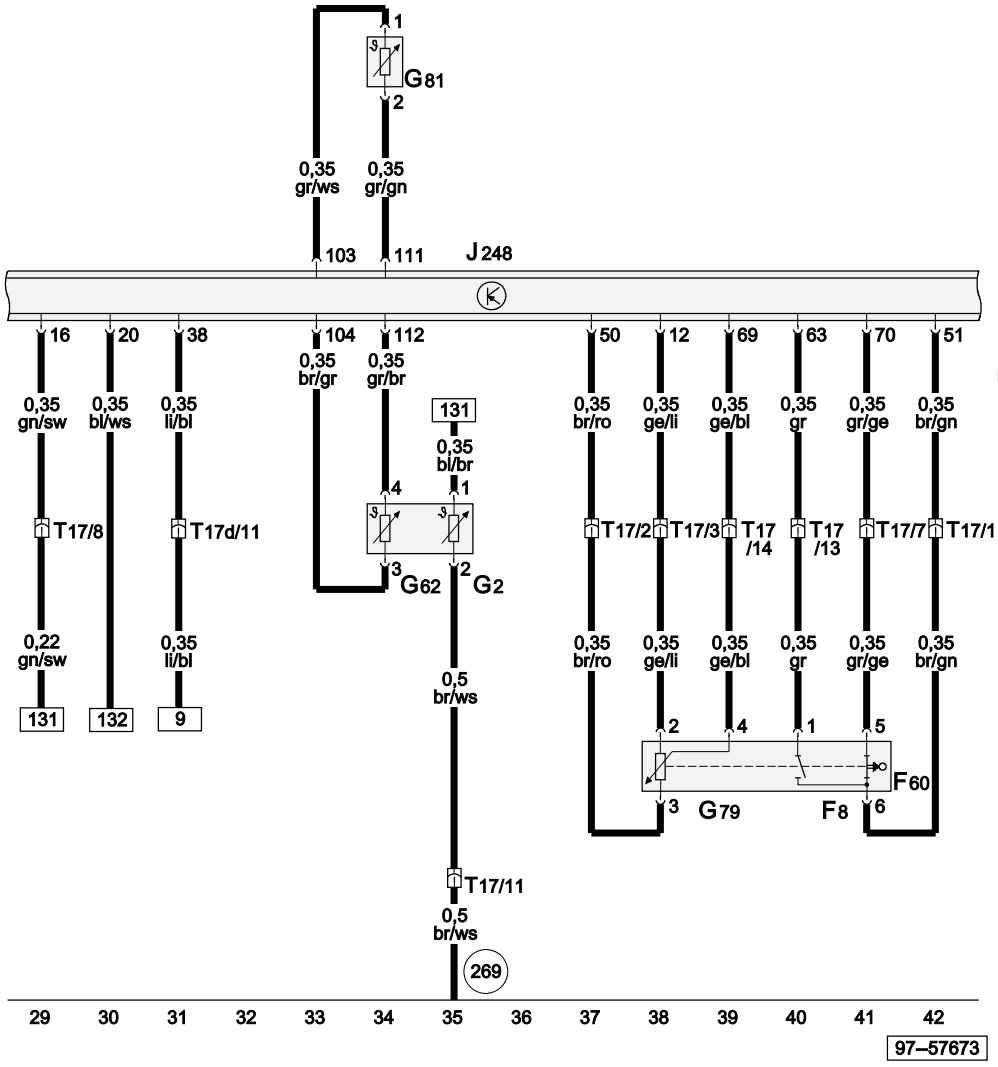

ws	=	white
sw	=	black
ro	=	red
br	=	brown
gn	=	green
bl	=	blue
gr	=	grey
li	=	purple
ge	=	yellow
or	=	orange
rs	=	pink

Protected by copyright. Copying for private or commercial purposes, in part or in whole, is not permitted unless authorised by AUDI AG. AUDI AG does not guarantee or accept any liability with respect to the correctness of information in this document. Copyright by AUDI AG.

Cruise control system switch, airbag control unit, diesel direct injection system control unit

E45	Cruise control system switch
J234	Airbag control unit
J248	Diesel direct injection system control unit
T10n	10-pin connector, black, behind steering column switch trim
T10s	10-pin connector, white, in footwell, front left
T17d	17-pin connector, green, in footwell, front left
T17e	17-pin connector, blue, in footwell, front left
A16	Connection (cruise control system), in dash panel wiring harness
A121	Connection (high bus), in dash panel wiring harness
A122	Connection (low bus), in dash panel wiring harness
A125	Connection (crash signal), in dash panel wiring harness
*	Only applies to models with cruise control system

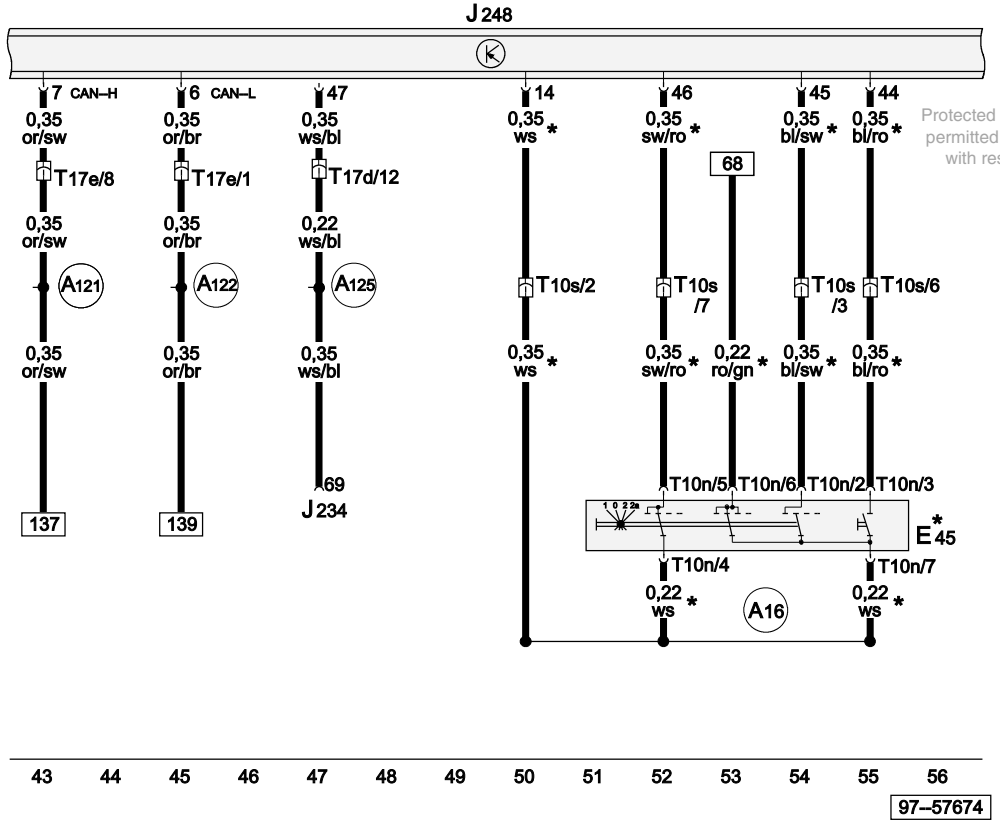

ws	=	white
sw	=	black
ro	=	red
br	=	brown
gn	=	green
bl	=	blue
gr	=	grey
li	=	purple
ge	=	yellow
or	=	orange
rs	=	pink

Protected by copyright. Copying for private or commercial purposes, in part or in whole, is not permitted unless authorised by AUDI AG. AUDI AG does not guarantee or accept any liability with respect to the correctness of information in this document. Copyright by AUDI AG.

Brake light switch, diesel direct injection system control unit, heater element (crankcase breather), unit injector solenoid valves

F	Brake light switch
J248	Diesel direct injection system control unit
N79	Heater element (crankcase breather)
N240	Unit injector solenoid valve, No. 1 cylinder
N241	Unit injector solenoid valve, No. 2 cylinder
N242	Unit injector solenoid valve, No. 3 cylinder
T8b	8-pin connector, black, at unit injector solenoid valves
T17	17-pin connector, brown, in footwell, front left
T17d	17-pin connector, green, in footwell, front left
T17e	17-pin connector, blue, in footwell, front left
85	Earth connection -1-, in engine compartment wiring harness
B149	Positive (+) connection -2- (15a), in interior wiring harness
B185	Connection -2- (54), in interior wiring harness
D101	Connection -1-, in engine compartment wiring harness
*	Only applies to models with electric additional heater (PTC 900 W)
**	Only applies to models with heater element (crankcase breather)
***	Only applies to models with cruise control system

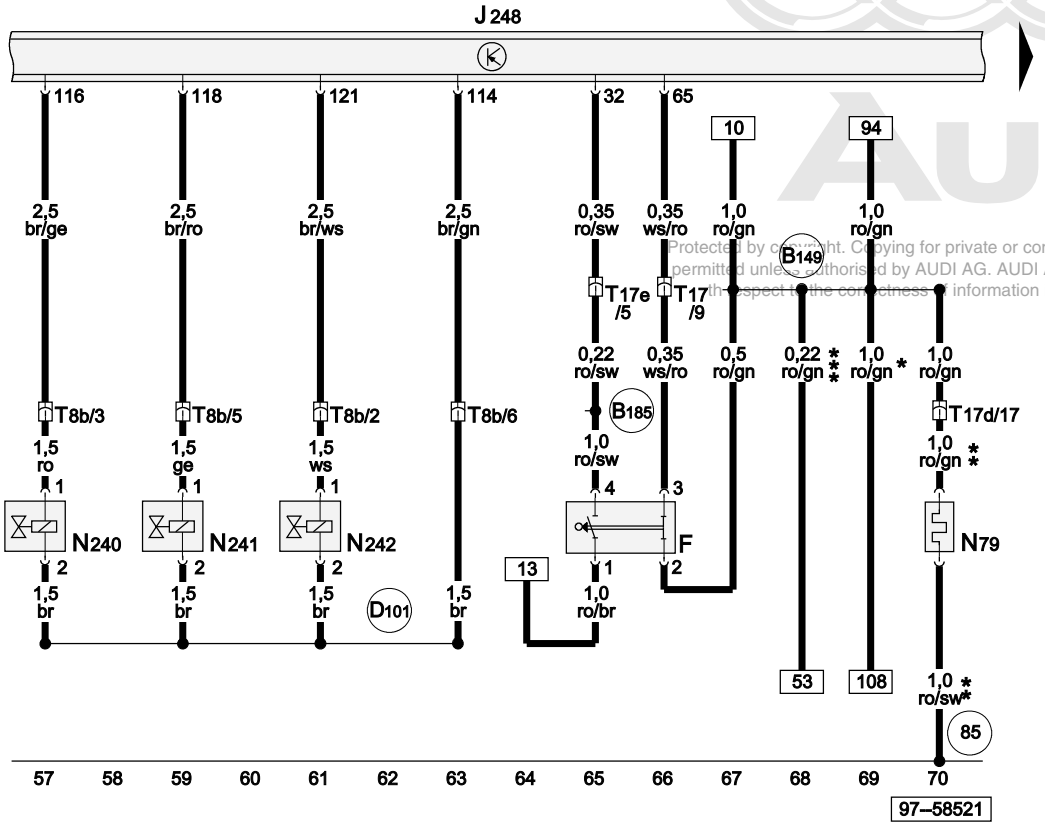

ws	=	white
sw	=	black
ro	=	red
br	=	brown
gn	=	green
bl	=	blue
gr	=	grey
li	=	purple
ge	=	yellow
or	=	orange
rs	=	pink

Protected by copyright. Copying for private or commercial purposes, in part or in whole, is not permitted unless authorised by AUDI AG. AUDI AG does not guarantee or accept any liability with respect to the correctness of information in this document. Copyright by AUDI AG.

Clutch pedal switch, engine speed sender, Hall sender, diesel direct injection system control unit, engine control unit fuse

F36	Clutch pedal switch
G28	Engine speed sender
G40	Hall sender
J248	Diesel direct injection system control unit
S102	Engine control unit fuse
T17	17-pin connector, brown, in footwell, front left
T17d	17-pin connector, green, in footwell, front left
F27	Connection (screening), in diesel direct injection system wiring harness

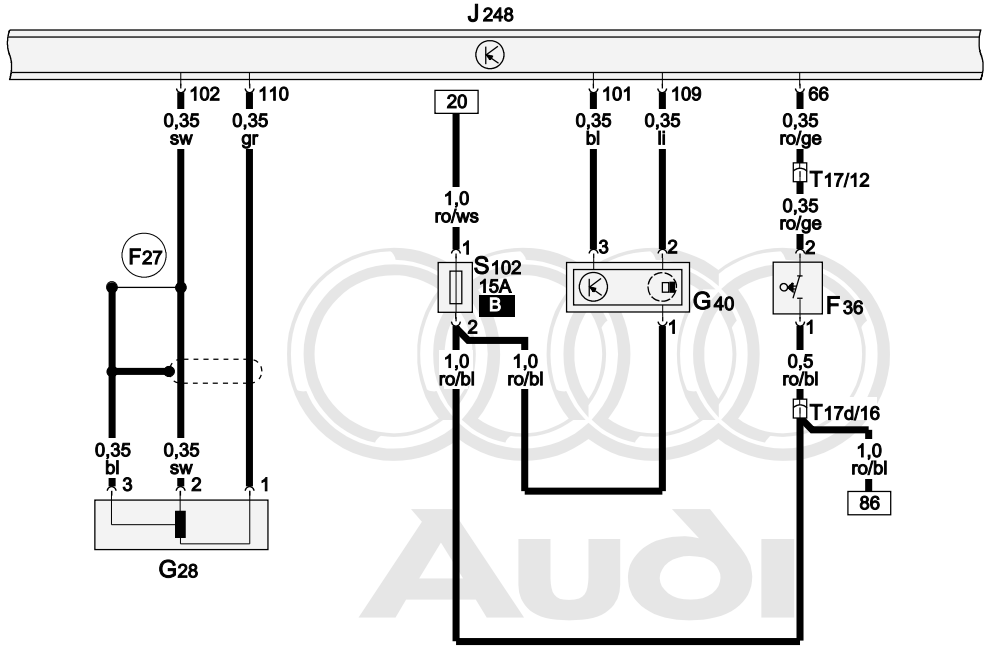

Protected by copyright. Copying for private or commercial purposes, in part or in whole, is not permitted unless authorised by AUDI AG. AUDI AG does not guarantee or accept any liability with respect to the correctness of information in this document. Copyright by AUDI AG.

ws	=	white
sw	=	black
ro	=	red
br	=	brown
gn	=	green
bl	=	blue
gr	=	grey
li	=	purple
ge	=	yellow
or	=	orange
rs	=	pink

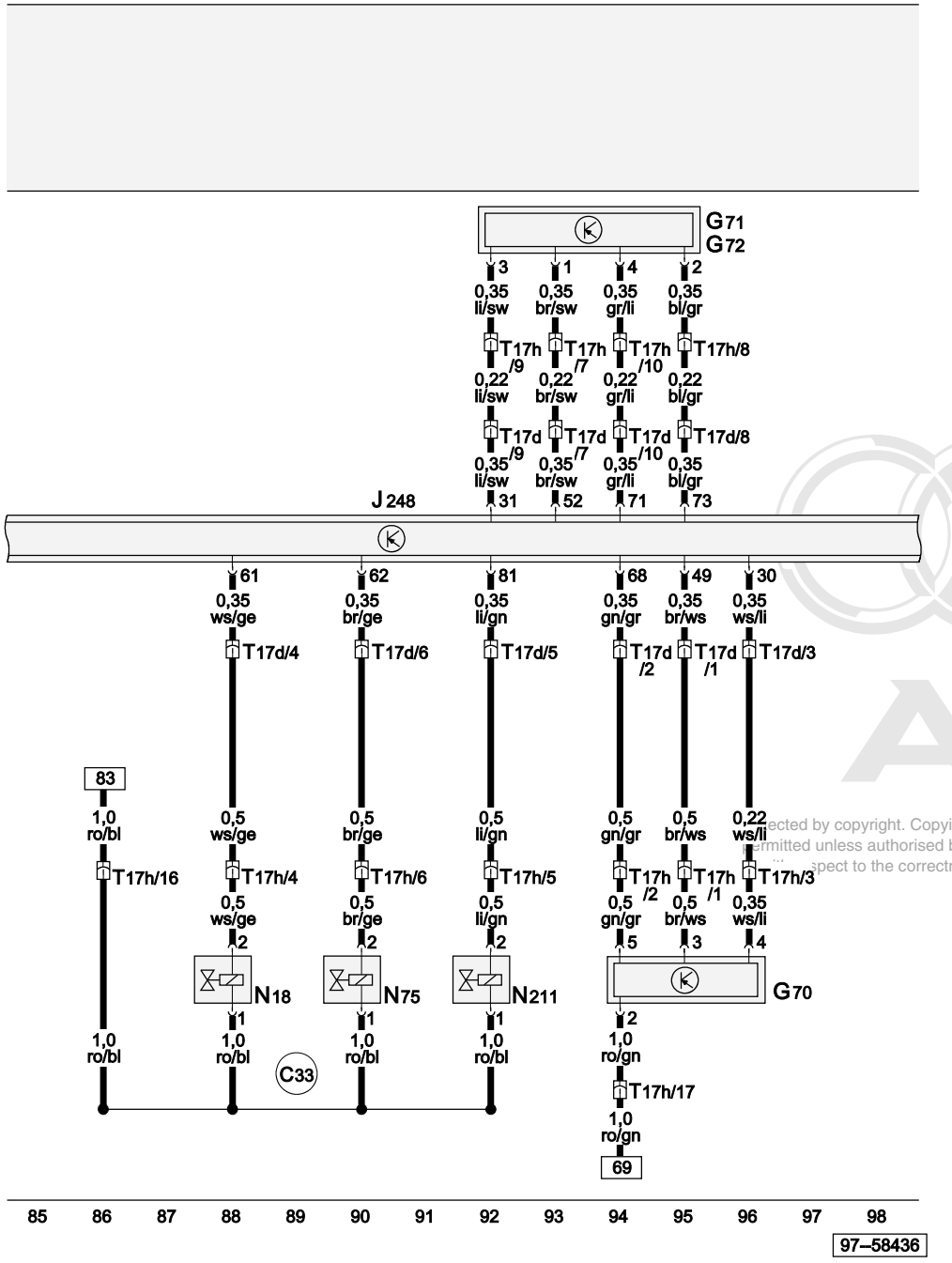

Air mass meter, intake manifold pressure sender, exhaust gas recirculation valve, charge pressure control solenoid valve, throttle butterfly valve

G70	Air mass meter
G71	Intake manifold pressure sender
G72	Intake manifold temperature sender
J248	Diesel direct injection system control unit
N18	Exhaust gas recirculation valve
N75	Charge pressure control solenoid valve
N211	Throttle butterfly valve
T17d	17-pin connector, green, in footwell, front left
T17h	17-pin connector, green, connector point, A pillar, right
C33	Connection -5-, in headlight wiring harness

ected by copyright. Copying for private or commercial purposes, in part or in whole, is not permitted unless authorised by AUDI AG. AUDI AG does not guarantee or accept any liability ... spect to the correctness of information in this document. Copyright by AUDI AG.

ws	=	white
sw	=	black
ro	=	red
br	=	brown
gn	=	green
bl	=	blue
gr	=	grey
li	=	purple
ge	=	yellow
or	=	orange
rs	=	pink

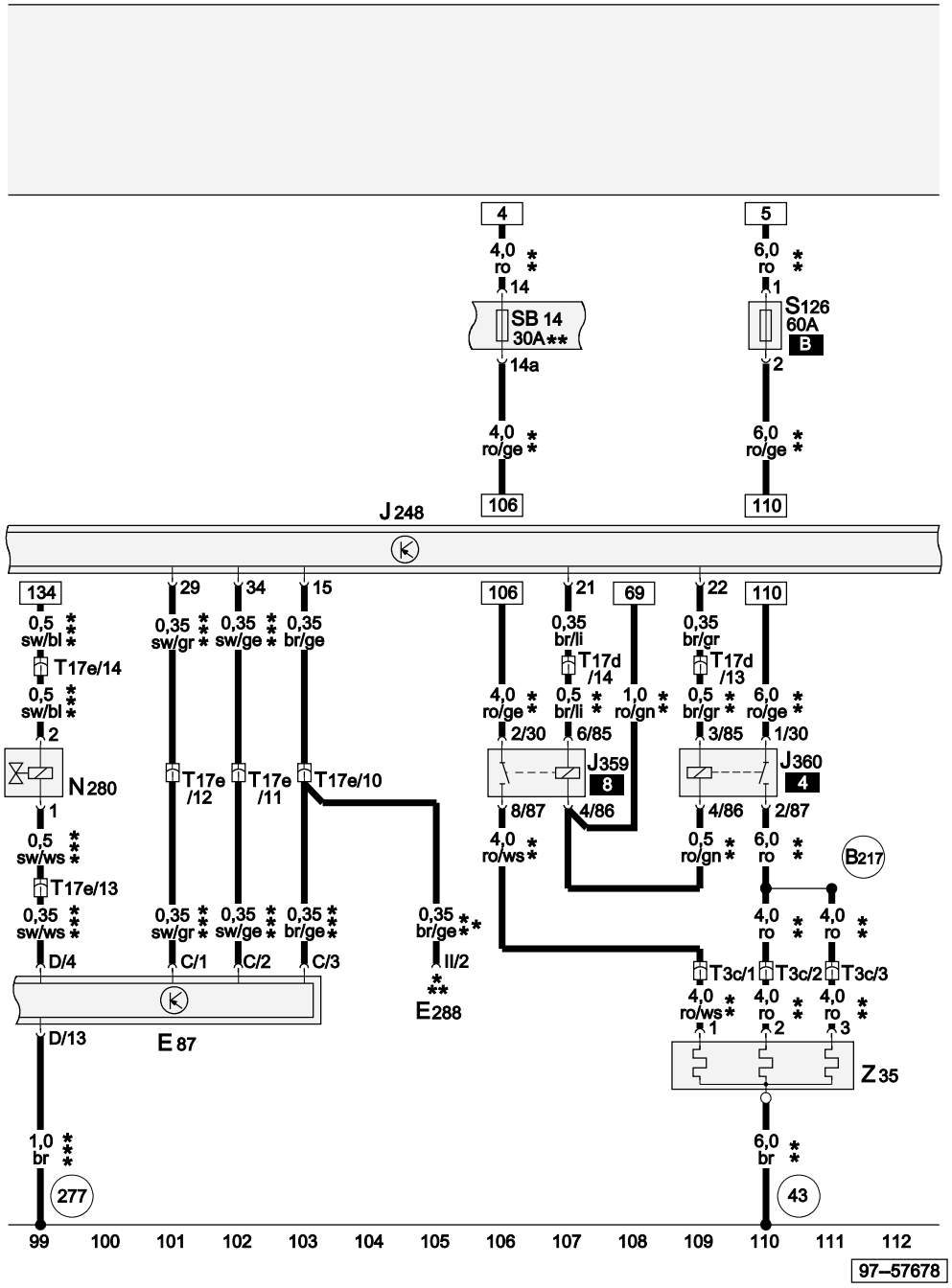

Air conditioning system/Climatronic operating and display unit, additional heating button (ECON), additional heating heater element

E87	Air conditioning system/Climatronic operating and display unit
E288	Additional heating button (ECON)
J248	Diesel direct injection system control unit
J359	Low heat output relay
J360	High heat output relay
N280	Air conditioning system compressor regulating valve
S126	Additional heater fuse
SB14	Fuse -14- on fuse box
T3c	3-pin connector, black, behind driver's storage compartment
T17d	17-pin connector, green, in footwell, front left
T17e	17-pin connector, blue, in footwell, front left
Z35	Additional heating heater element
43	Earth point, lower part of right A pillar
277	Earth connection -3-, in interior wiring harness
B217	Connection (additional heater), in interior wiring harness
*	Only applies to models with fuel-burning additional heater
**	Only applies to models with electric additional heater (PTC 900 W)
***	Only applies to models with air conditioning system

ws	=	white
sw	=	black
ro	=	red
br	=	brown
gn	=	green
bl	=	blue
gr	=	grey
li	=	purple
ge	=	yellow
or	=	orange
rs	=	pink

Protected by copyright. Copying for private or commercial purposes, in part or in whole, is not permitted unless authorised by AUDI AG. AUDI AG does not guarantee or accept any liability with respect to the correctness of information in this document. Copyright by AUDI AG.

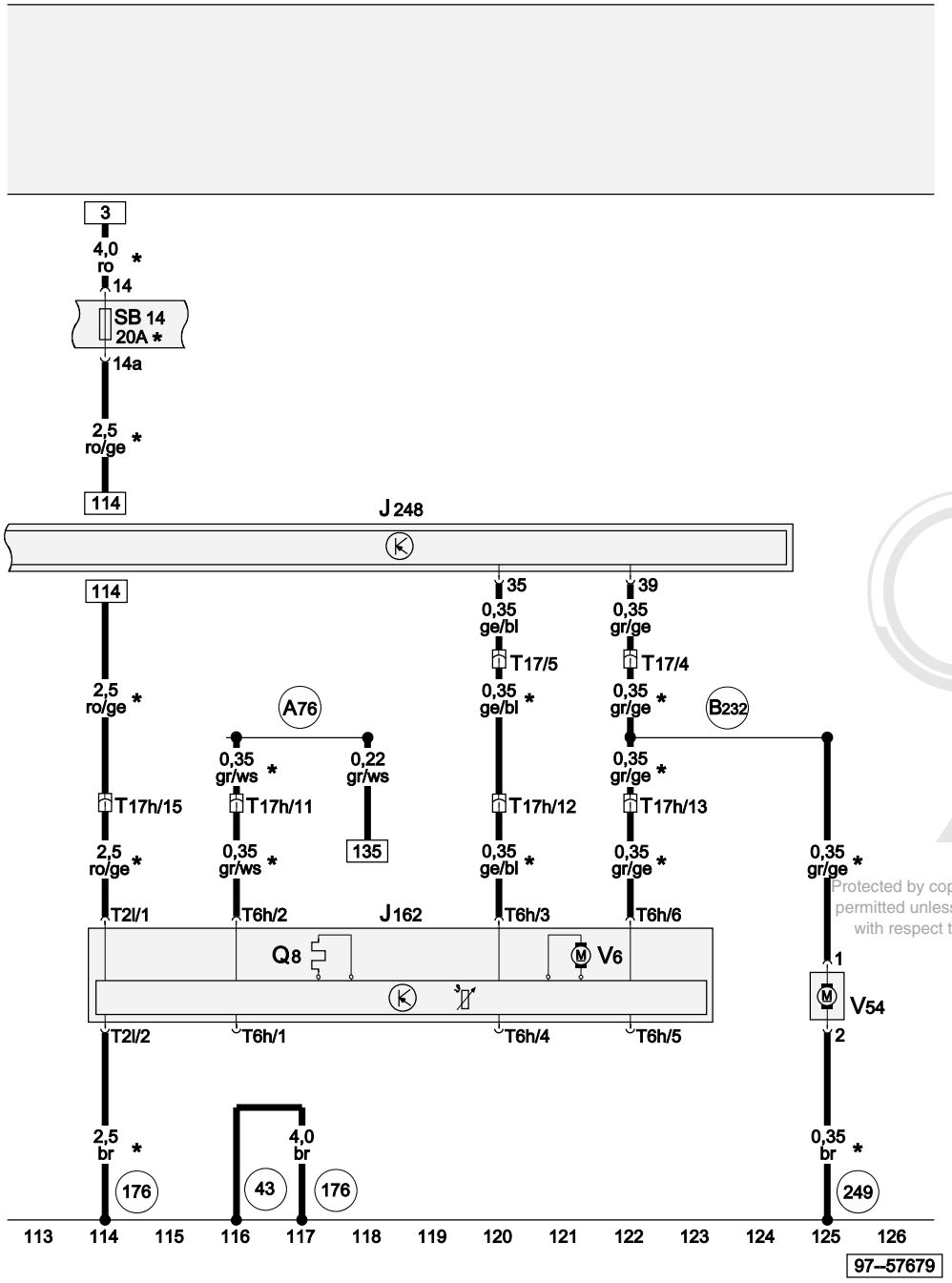

Heater control unit, diesel direct injection system control unit, glow plug with flame monitor, combustion air blower, metering pump

J162	Heater control unit
J248	Diesel direct injection system control unit
Q8	Glow plug with flame monitor
SB14	Fuse -14- on fuse box
V6	Combustion air blower
V54	Metering pump
T2l	2-pin connector, black, on heater control unit
T6h	6-pin connector, black, on heater control unit
T17	17-pin connector, brown, in footwell, front left
T17h	17-pin connector, green, connector point, A pillar, right
(43)	Earth point, lower part of right A pillar
(176)	Earth connection, in right headlight wiring harness
(249)	Earth connection -2-, in interior wiring harness
(A76)	Connection (diagnosis wire K), in dash panel wiring harness
(B232)	Connection (additional heater), in interior wiring harness
*	Only applies to models with fuel-burning additional heater

Protected by copyright. Copying for private or commercial purposes, in part or in whole, is not permitted unless authorised by AUDI AG. AUDI AG does not guarantee or accept any liability with respect to the correctness of information in this document. Copyright by AUDI AG.

ws	=	white
sw	=	black
ro	=	red
br	=	brown
gn	=	green
bl	=	blue
gr	=	grey
li	=	purple
ge	=	yellow
or	=	orange
rs	=	pink

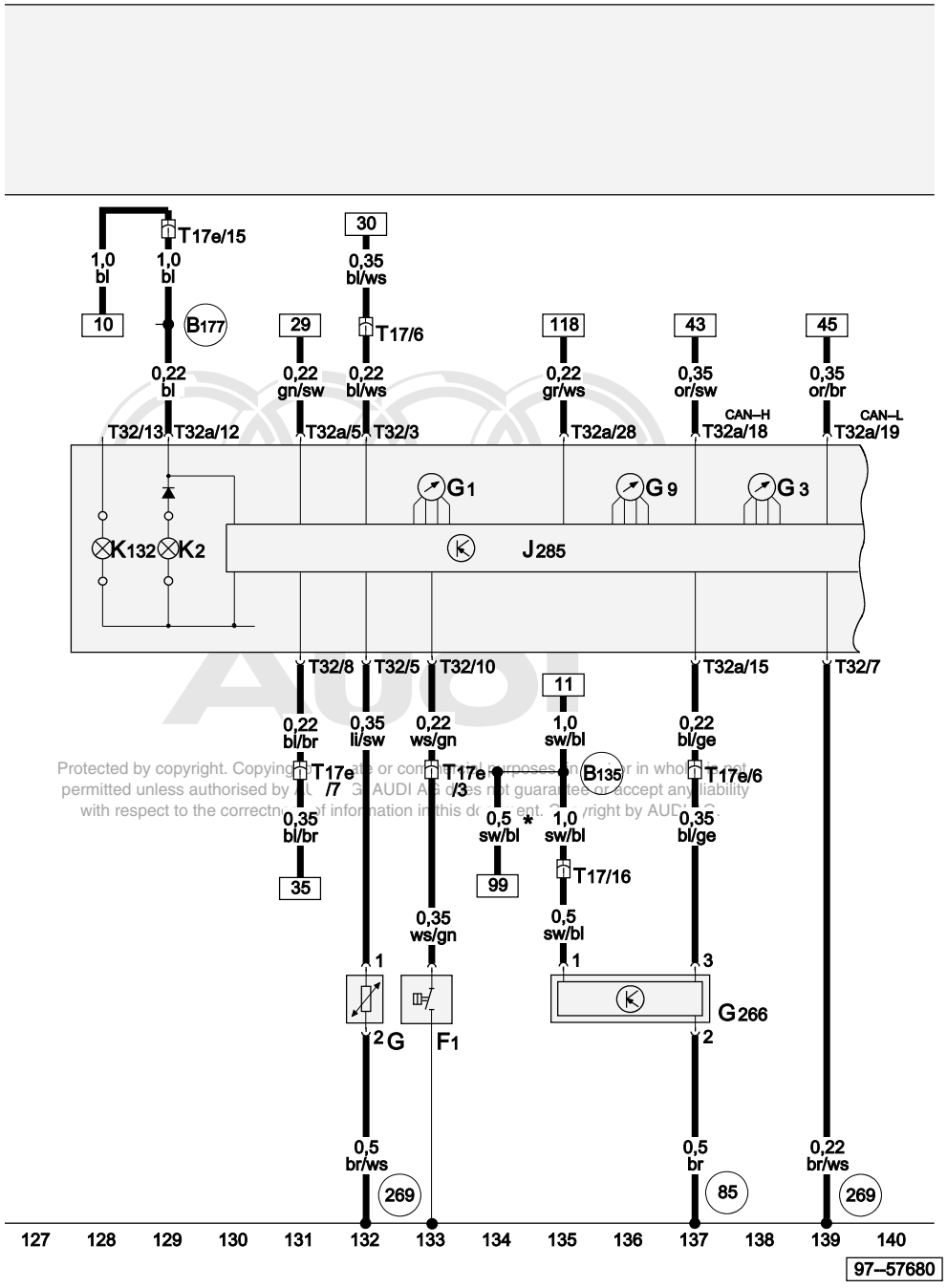

Protected by copyright. Copying for private or commercial purposes, in part or in whole, is not permitted unless authorised by AUDI AG. AUDI AG does not guarantee or accept any liability with respect to the correctness of information in this document. Copyright by AUDI AG.

ws = white
sw = black
ro = red
br = brown
gn = green
bl = blue
gr = grey
li = purple
ge = yellow
or = orange
rs = pink

Oil pressure switch, fuel gauge sender, oil level/oil temperature sender, control unit with display in dash panel insert

F1	Oil pressure switch
G	Fuel gauge sender
G1	Fuel gauge
G3	Coolant temperature gauge
G9	Oil temperature gauge
G266	Oil level/oil temperature sender
J285	Control unit with display in dash panel insert
K2	Alternator warning lamp
K132	Electronic power control fault lamp
T17	17-pin connector, brown, in footwell, front left
T17e	17-pin connector, blue, in footwell, front left
T32	32-pin connector, blue, on dash panel insert
T32a	32-pin connector, green, on dash panel insert
85	Earth connection -1-, in engine compartment wiring harness
269	Earth connection (sender earth) -1-, in dash panel wiring harness
B135	Connection -1- (15a), in interior wiring harness
B177	Connection (61), in interior wiring harness
*	Only applies to models with air conditioning system

5-speed manual gearbox 085 DS

From model year 2002

Protected by copyright. Copying for private or commercial purposes, in part or in whole, is not permitted unless authorised by AUDI AG. AUDI AG does not guarantee or accept any liability with respect to the correctness of information in this document. Copyright by AUDI AG.

Main fuse

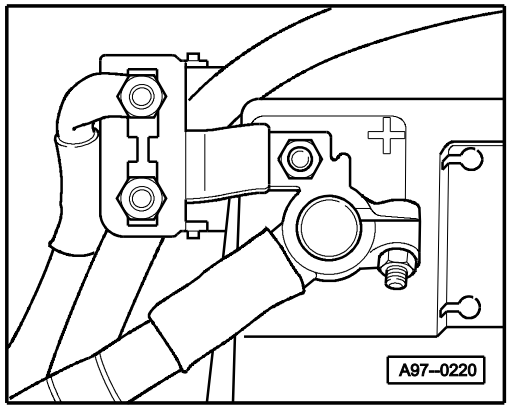

9-point relay carrier (in dash panel) Fuse box

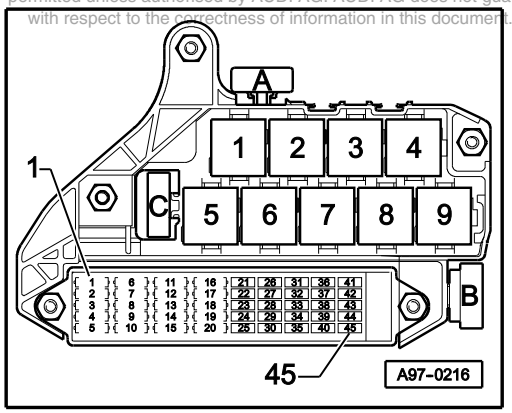

Fuse colours:

30 A - green
25 A - white
20 A - yellow
15 A - blue
10 A - red
7,5 A - orange
5 A - beige

6+6-point relay carrier (in footwell)

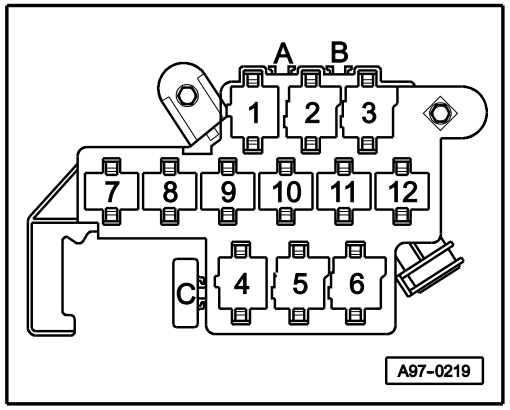

1 - Starter inhibitor relay (J226)

4 - Gearbox hydraulic pump relay (J510)

5 - Ignition key withdrawal lock control unit (J557)

6 - Ignition key withdrawal lock control unit (J557)

A - Hydraulic pump relay fuse (S279)

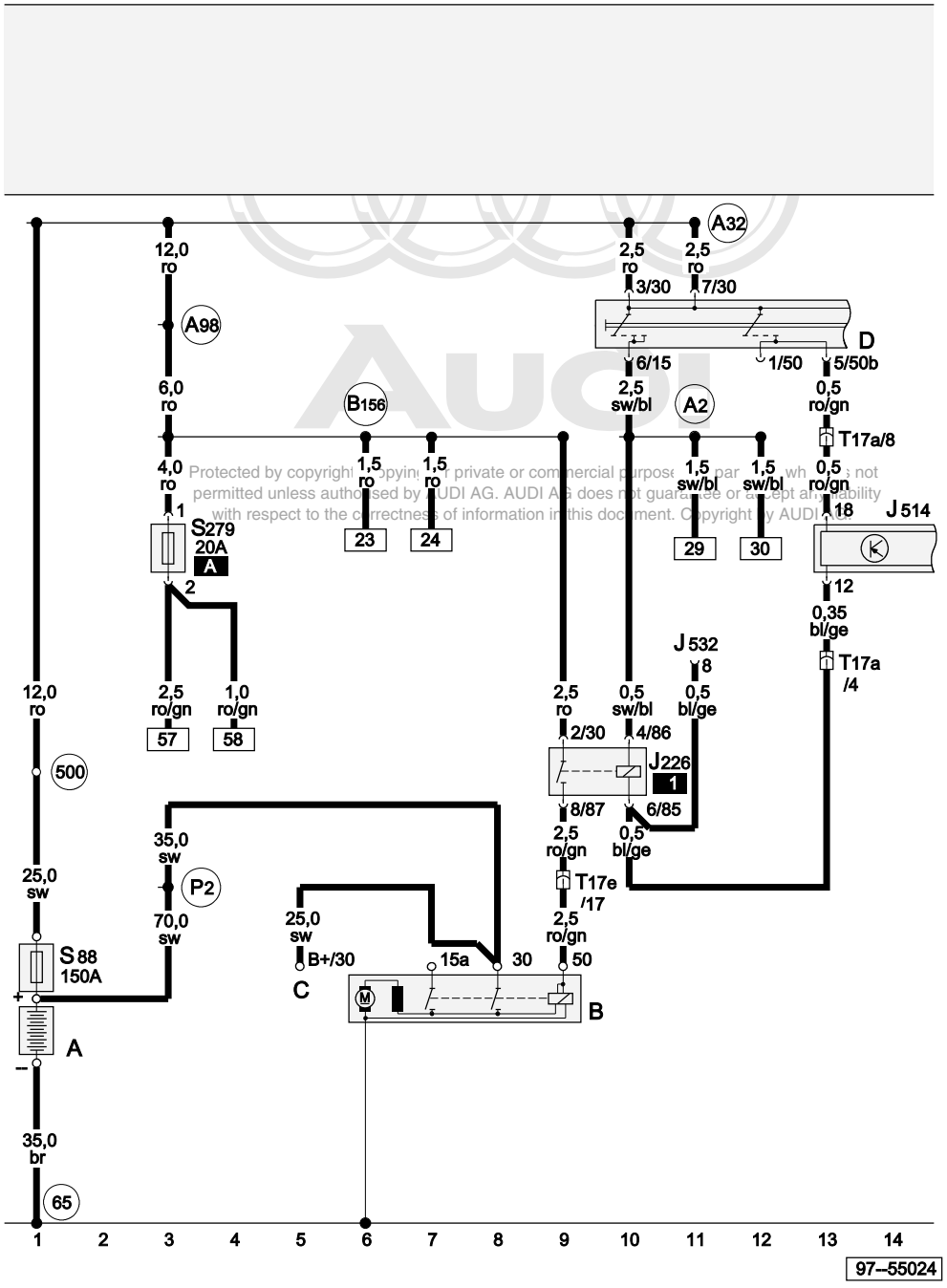

Protected by copyright. Copying for private or commercial purposes, par wh is not permitted unless authorised by AUDI AG. AUDI AG does not guarantee or accept any liability with respect to the correctness of information in this document. Copyright by AUDI AG.

ws = white
sw = black
ro = red
br = brown
gn = green
bl = blue
gr = grey
li = purple
ge = yellow
or = orange
rs = pink

Battery, starter, starter inhibitor and reversing light relay

A	Battery
B	Starter
C	Alternator
D	Ignition/starter switch
J226	Starter inhibitor and reversing light relay
J514	Electronic manual gearbox control unit
J532	Voltage stabiliser
S88	Strip fuse
S279	Hydraulic pump relay fuse
T17a	17-pin connector, red, in footwell, front left
T17e	17-pin connector, blue, in footwell, front left
65	Earth point, left longitudinal member, rear
500	Screw connection -1- (30), on relay plate
A2	Positive (+) connection (15), in dash panel wiring harness
A32	Positive (+) connection (30), in dash panel wiring harness
A98	Positive (+) connection -4- (30), in dash panel wiring harness
B156	Positive (+) connection (30a), in interior wiring harness
P2	Positive (+) connection (30), in battery wiring harness

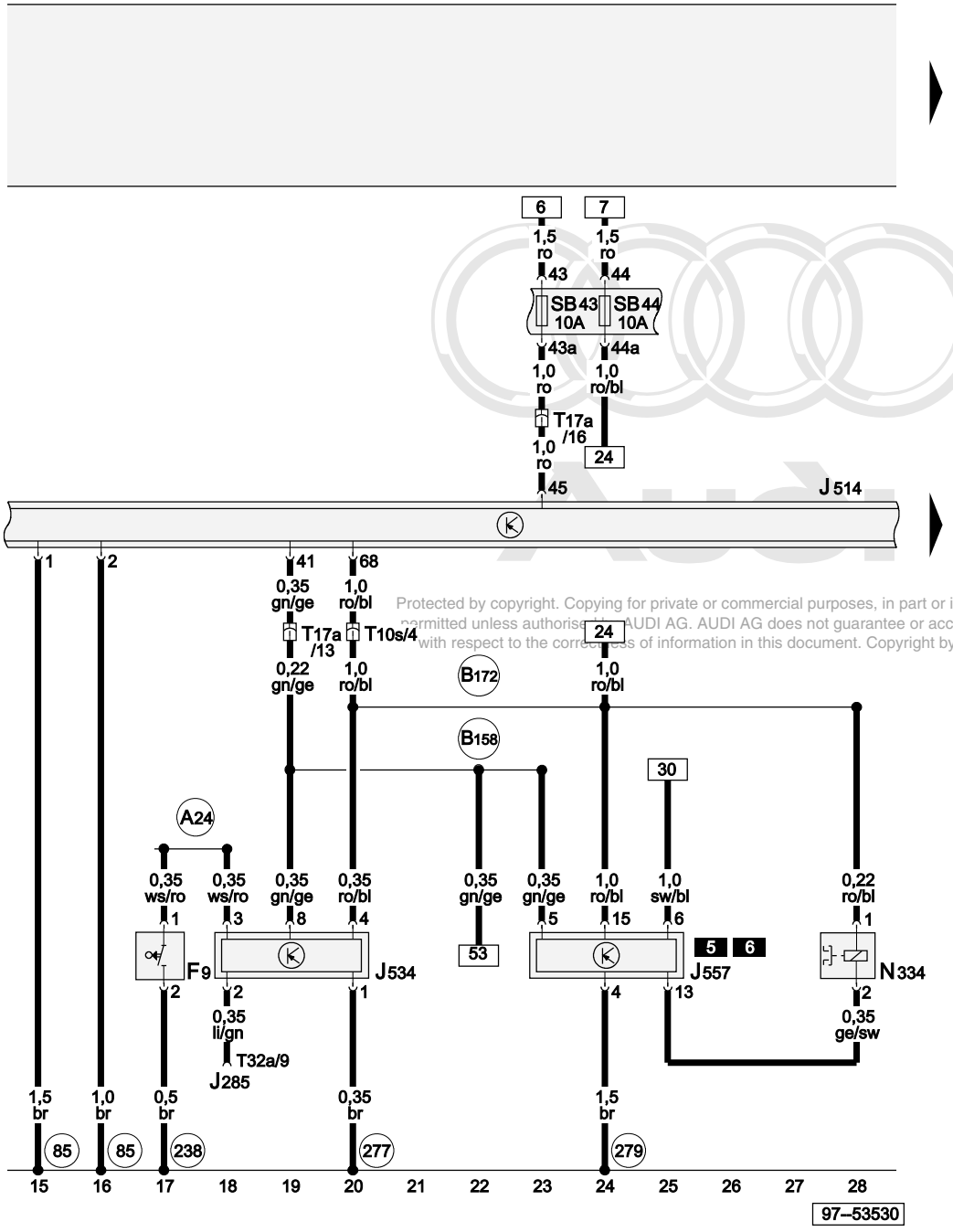

Protected by copyright. Copying for private or commercial purposes, in part or in whole, is not permitted unless authorised by AUDI AG. AUDI AG does not guarantee or accept any liability with respect to the correctness of information in this document. Copyright by AUDI AG.

ws = white
sw = black
ro = red
br = brown
gn = green
bl = blue
gr = grey
li = purple
ge = yellow
or = orange
rs = pink

Electronic manual gearbox control unit, handbrake warning lamp control unit, ignition key withdrawal lock, fuses

F9	Handbrake warning switch
J285	Control unit with display in dash panel insert
J514	Electronic manual gearbox control unit
J534	Handbrake warning lamp control unit
J557	Ignition key withdrawal lock control unit
N334	Ignition key withdrawal lock solenoid valve
SB43	Fuse -43- on fuse box
SB44	Fuse -44- on fuse box
T10s	10-pin connector, white, in footwell, front left
T17a	17-pin connector, red, in footwell, front left
T32a	32-pin connector, green, on dash panel insert
85	Earth connection -1-, in engine compartment wiring harness
238	Earth connection -1-, in interior wiring harness
277	Earth connection -3-, in interior wiring harness
279	Earth connection -5-, in interior wiring harness
A24	Connection (brake system monitoring), in dash panel wiring harness
B158	Connection (S), in interior wiring harness
B172	Positive (+) connection -4- (30), in interior wiring harness

Start/Stop operation switch, electronic manual gearbox control unit, fuses

E262	Start/Stop operation switch
F4	Reversing light switch
J393	Convenience system central control unit
J511	Consumer switch-off relay
J514	Electronic manual gearbox control unit
SB29	Fuse -29- on fuse box
SB38	Fuse -38- on fuse box
T10s	10-pin connector, white, in footwell, front left
T17	17-pin connector, brown, in footwell, front left
T17a	17-pin connector, red, in footwell, front left
T17e	17-pin connector, blue, in footwell, front left
249	Earth connection -2-, in interior wiring harness
A87	Connection (reversing light), in dash panel wiring harness
B135	Connection -1- (15a), in interior wiring harness
B155	Connection -2- (DC), in interior wiring harness
B259	Connection (start/stop signal), in interior wiring harness

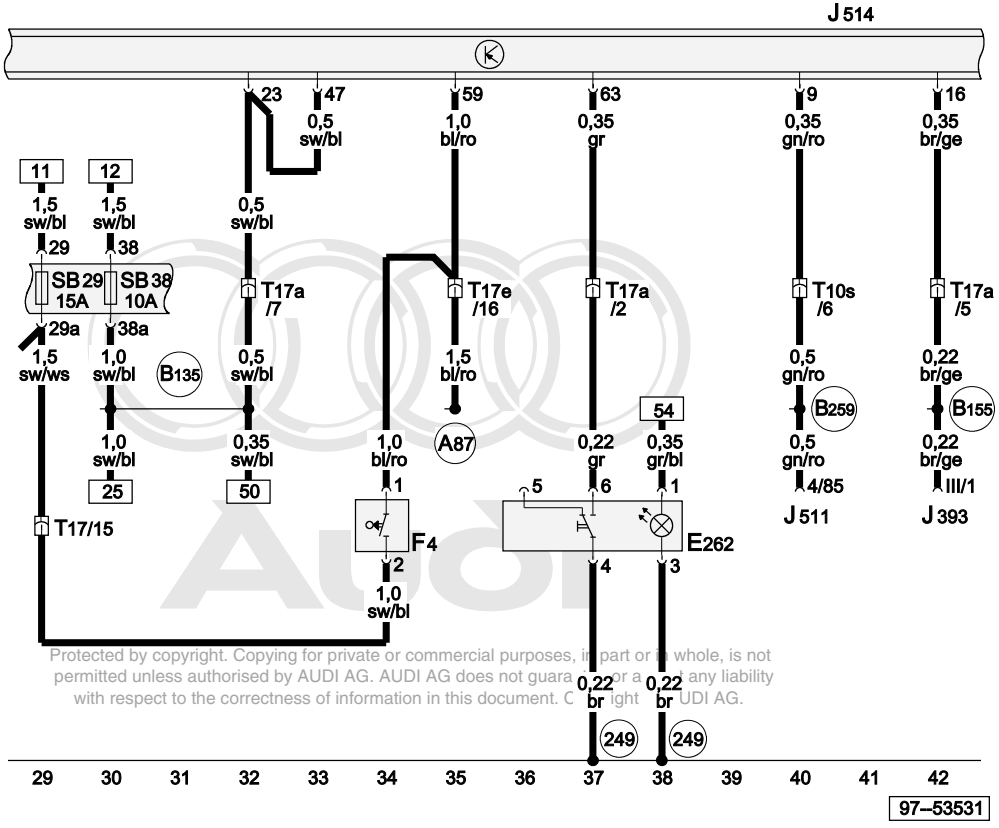

Protected by copyright. Copying for private or commercial purposes, in part or in whole, is not permitted unless authorised by AUDI AG. AUDI AG does not guarantee or accept any liability with respect to the correctness of information in this document. Copyright by AUDI AG.

ws	=	white
sw	=	black
ro	=	red
br	=	brown
gn	=	green
bl	=	blue
gr	=	grey
li	=	purple
ge	=	yellow
or	=	orange
rs	=	pink

Electronic manual gearbox control unit, gear selector

F207	Diesel engine inhibitor switch
F257	Selector lever gate detector switch
F258	Selector lever detector switch for N
F259	Selector lever detector switch for stopped
G272	Selector lever potentiometer for forwards/backwards
J514	Electronic manual gearbox control unit
L101	Selector lever display illumination
N110	Selector lever lock solenoid
T10s	10-pin connector, white, in footwell, front left
T17a	17-pin connector, red, in footwell, front left
T17i	17-pin connector, black, below gear selector cover
249	Earth connection -2-, in interior wiring harness

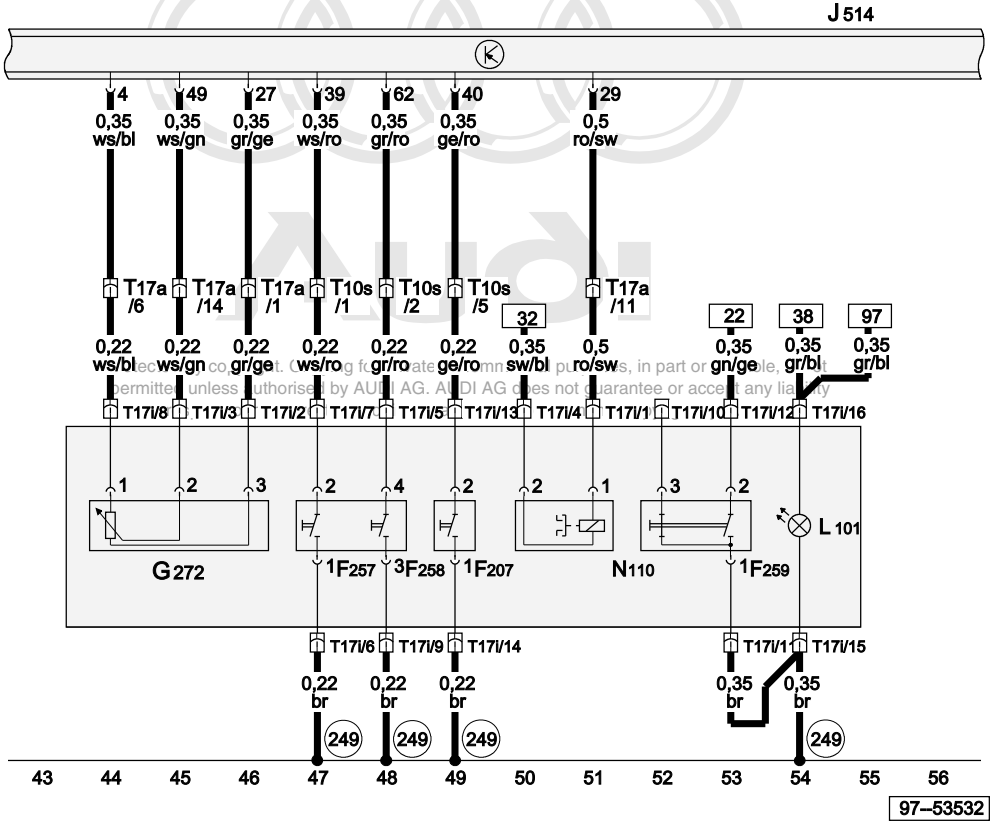

ws	=	white
sw	=	black
ro	=	red
br	=	brown
gn	=	green
bl	=	blue
gr	=	grey
li	=	purple
ge	=	yellow
or	=	orange
rs	=	pink

Electronic copy of this document is protected by copyright. Copying for private and commercial purposes, in part or in whole, is not permitted unless authorised by AUDI AG. AUDI AG does not guarantee or accept any liability

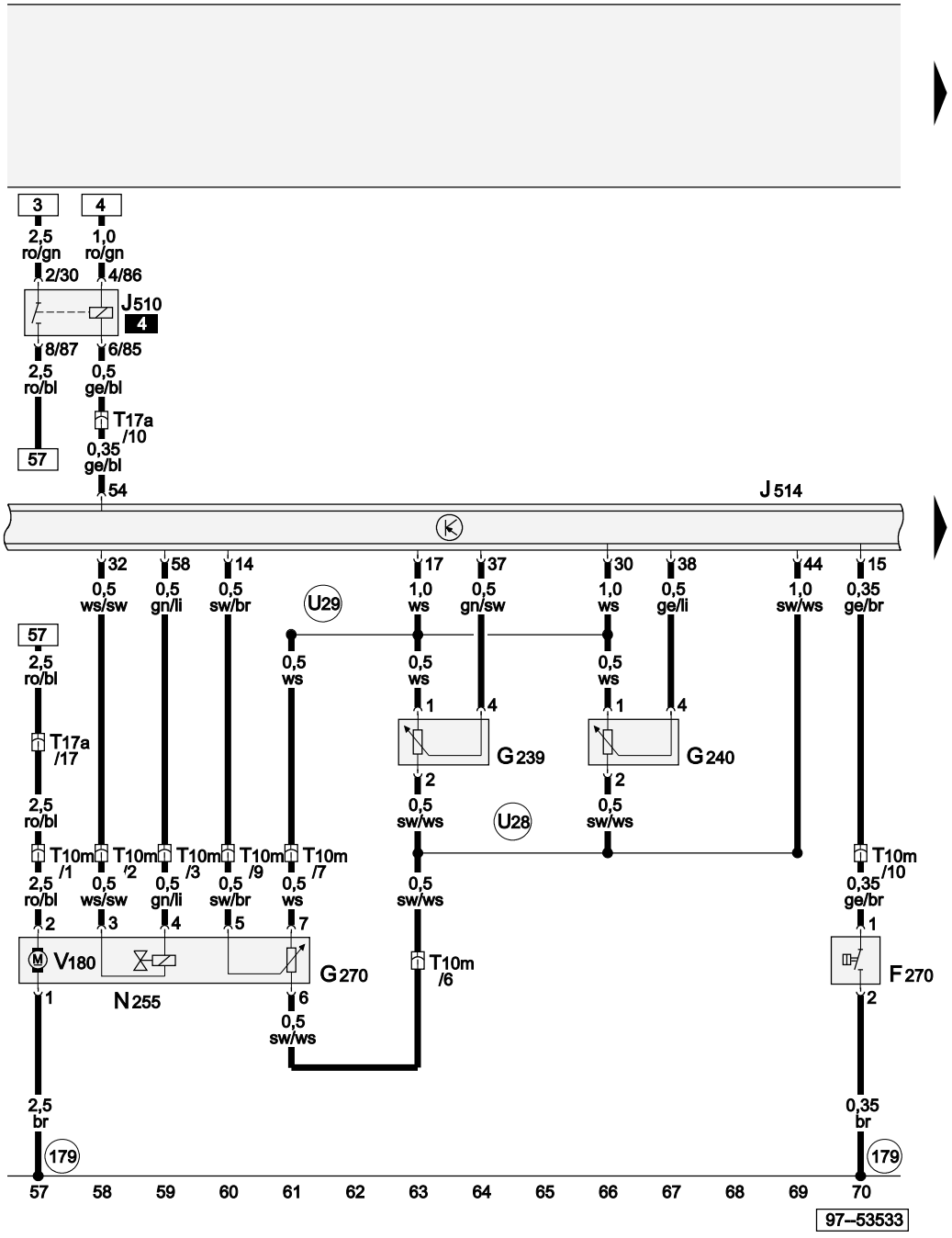

ws = white
sw = black
ro = red
br = brown
gn = green
bl = blue
gr = grey
li = purple
ge = yellow
or = orange
rs = pink

Brake pressure switch, gear detector potentiometers, electronic manual gearbox control unit, clutch actuator

F270	Brake pressure switch
G239	Gear detector potentiometer -1-
G240	Gear detector potentiometer -2-
G270	Gearbox hydraulic pressure sender
J510	Gearbox hydraulic pump relay
J514	Electronic manual gearbox control unit
N255	Clutch actuator valve
T10m	10-pin connector, black, in footwell, front left
T17a	17-pin connector, red, in footwell, front left
V180	Clutch actuator hydraulic pump
179	Earth connection, in left headlight wiring harness
U28	Connection (0 V), in manual gearbox wiring harness
U29	Connection (5 V), in manual gearbox wiring harness

Protected by copyright. Copying for private or commercial purposes, in part or in whole, is not permitted unless authorised by AUDI AG. AUDI AG does not guarantee or accept any liability with respect to the correctness of information in this document. Copyright by AUDI AG.

Electronic manual gearbox control unit, gearbox speed sender, clutch travel sender, selector lever valves

J514	Electronic manual gearbox control unit
G38	Gearbox speed sender
G162	Clutch travel sender
N284	Selector lever valve 1
N285	Selector lever valve 2
N286	Selector lever valve 3
N287	Selector lever valve 4
U30	Connection -2- (0 V), in manual gearbox wiring harness

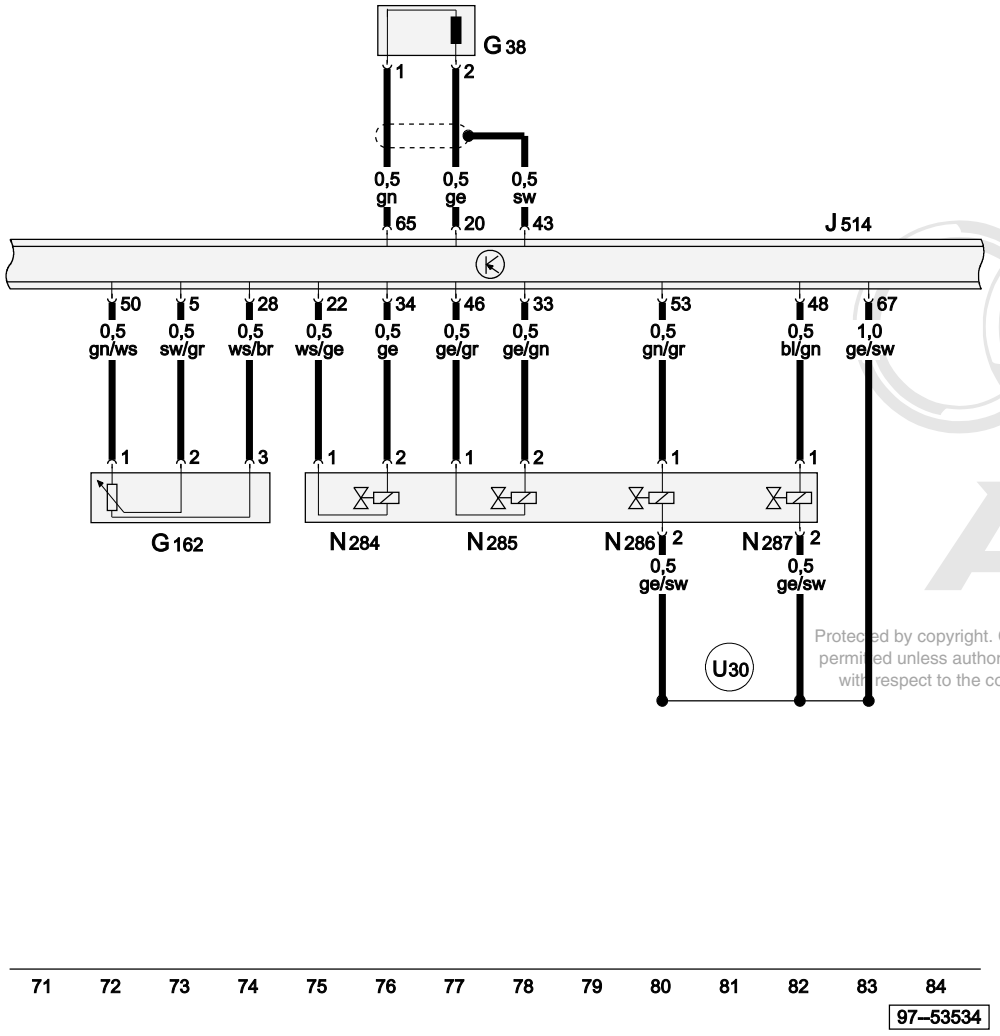

Protected by copyright. Copying for private or commercial purposes, in part or in whole, is not permitted unless authorised by AUDI AG. AUDI AG does not guarantee or accept any liability with respect to the correctness of information in this document. Copyright by AUDI AG.

ws	=	white
sw	=	black
ro	=	red
br	=	brown
gn	=	green
bl	=	blue
gr	=	grey
li	=	purple
ge	=	yellow
or	=	orange
rs	=	pink

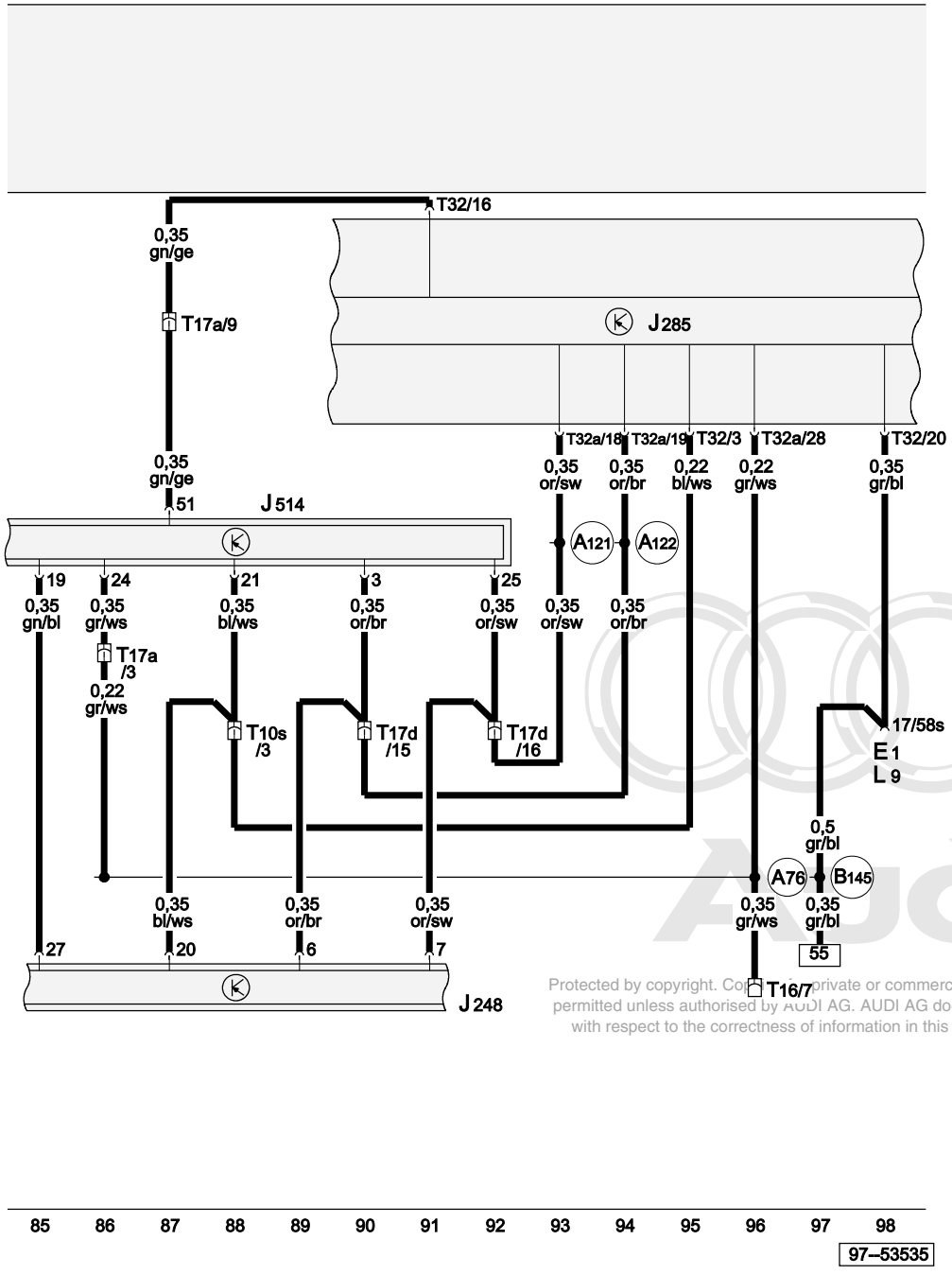

Protected by copyright. Copying for private or commercial purposes, in part or in whole, is not permitted unless authorised by AUDI AG. AUDI AG does not guarantee or accept any liability with respect to the correctness of information in this document. Copyright by AUDI AG.

Diesel direct injection system control unit, control unit with display in dash panel insert, electronic manual gearbox control unit

E1	Lighting switch
J248	Diesel direct injection system control unit
J285	Control unit with display in dash panel insert
J514	Electronic manual gearbox control unit
L9	Lighting switch light bulb
T10s	10-pin connector, white, in footwell, front left
T16	16-pin connector, diagnostic connector, black, near fuse box
T17a	17-pin connector, red, in footwell, front left
T17d	17-pin connector, green, in footwell, front left
T32	32-pin connector, blue, on dash panel insert
T32a	32-pin connector, green, on dash panel insert
A76	Connection (diagnosis wire K), in dash panel wiring harness
A121	Connection (high bus), in dash panel wiring harness
A122	Connection (low bus), in dash panel wiring harness
B145	Positive (+) connection (58b), in interior wiring harness

ws	=	white
sw	=	black
ro	=	red
br	=	brown
gn	=	green
bl	=	blue
gr	=	grey
li	=	purple
ge	=	yellow
or	=	orange
rs	=	pink

Anti-lock brake system (ABS) with electronic stability program (ESP)

From model year 2002

Main fuse

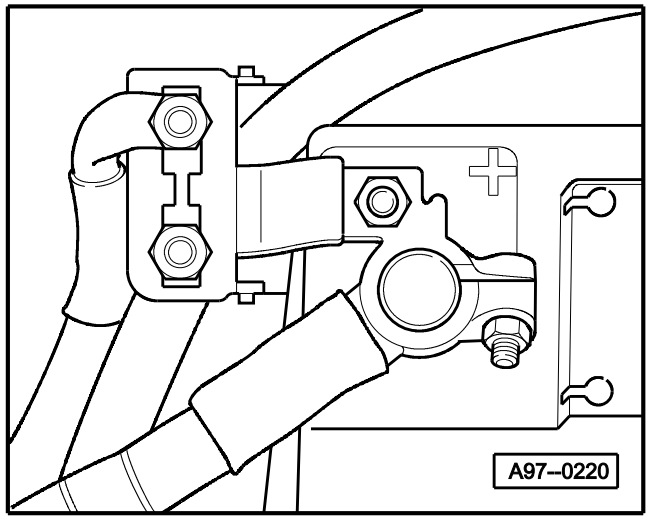

- On battery

9-point relay carrier, fuse box

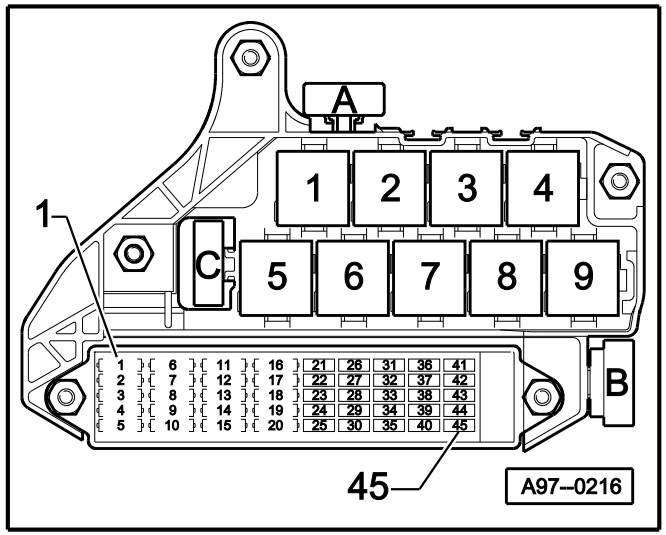

Protected by copyright. Copying for private or commercial purposes, in part or in whole, is not permitted unless authorised by AUDI AG. AUDI AG does not guarantee or accept any liability with respect to the correctness of information in this document. Copyright by AUDI AG.

♦ In dash panel, driver's side

3.1 - Brake light suppression relay (J508)

Fuse colours

5 A - beige
7.5 A - brown
10 A - red
15 A - blue
20 A - yellow
25 A - white
30 A - green

6+6-point relay carrier

Protected by copyright. Copying for private or commercial purposes, in part or in whole, is not permitted unless authorised by AUDI AG. AUDI AG does not guarantee or accept any liability with respect to the correctness of information in this document. Copyright by AUDI AG.

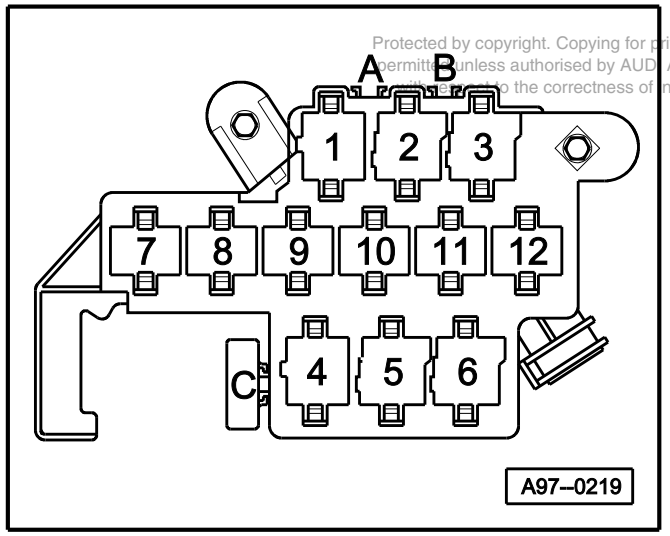

♦ In footwell, front left

C - ABS control unit fuse 1 (S123)

Battery, starter, ignition/starter switch, brake light switch, fuses

A	Battery
B	Starter
D	Ignition/starter switch
F	Brake light switch
S88	Strip fuse
S123	ABS control unit fuse 1
SB30	Fuse -30- on fuse box
SB40	Fuse -40- on fuse box
65	Earth point, left longitudinal member, rear
500	Screw connection -1- (30), on relay plate
A2	Positive (+) connection (15), in dash panel wiring harness
A32	Positive (+) connection (30), in dash panel wiring harness
A98	Positive (+) connection -4- (30), in dash panel wiring harness
B156	Positive (+) connection (30a), in interior wiring harness
B185	Connection -2- (54), in interior wiring harness
P2	Positive (+) connection (30), in battery wiring harness

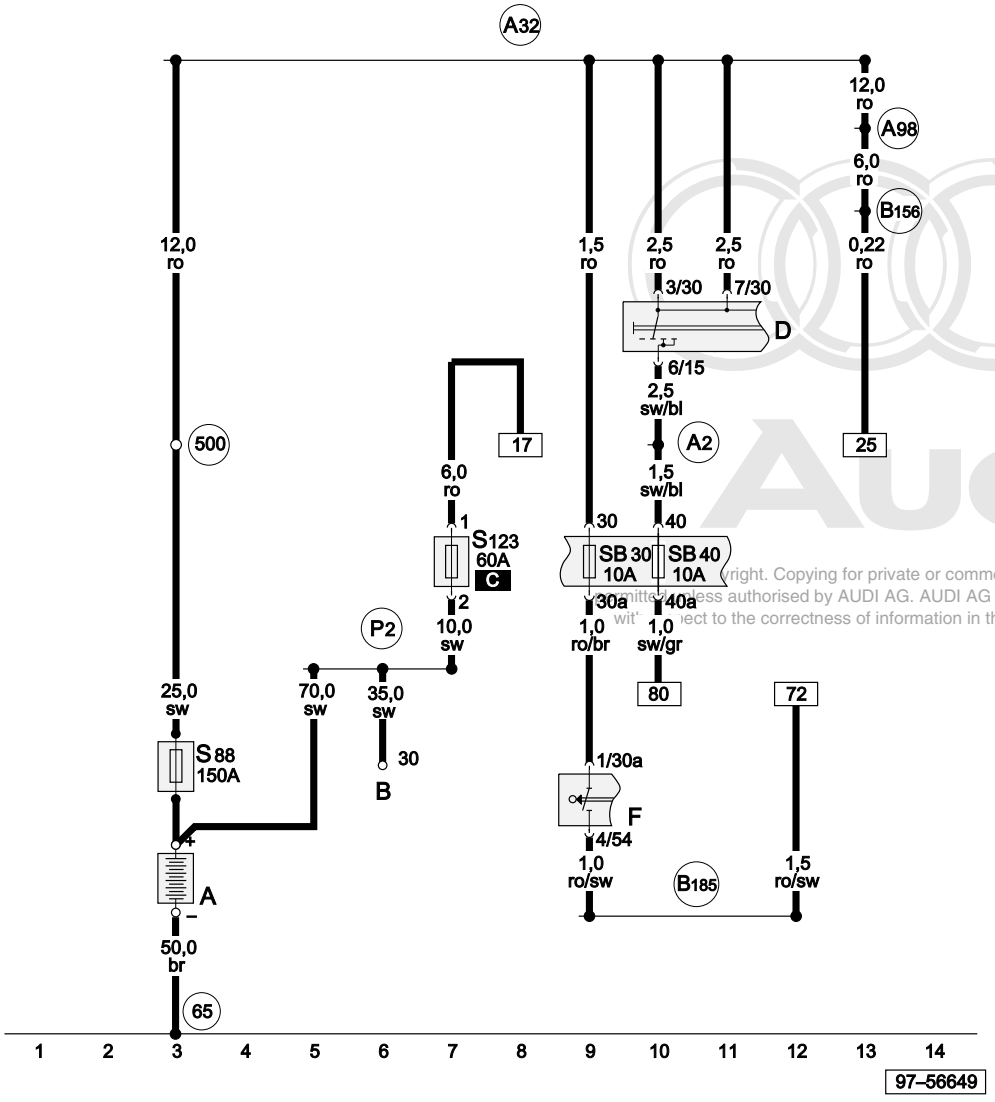

ws	=	white
sw	=	black
ro	=	red
br	=	brown
gn	=	green
bl	=	blue
gr	=	grey
li	=	purple
ge	=	yellow
or	=	orange
rs	=	pink

...right. Copying for private or commercial purposes, in part or in whole, is not ...mitted unless authorised by AUDI AG. AUDI AG does not guarantee or accept any liability ...with respect to the correctness of information in this document. Copyright by AUDI AG.

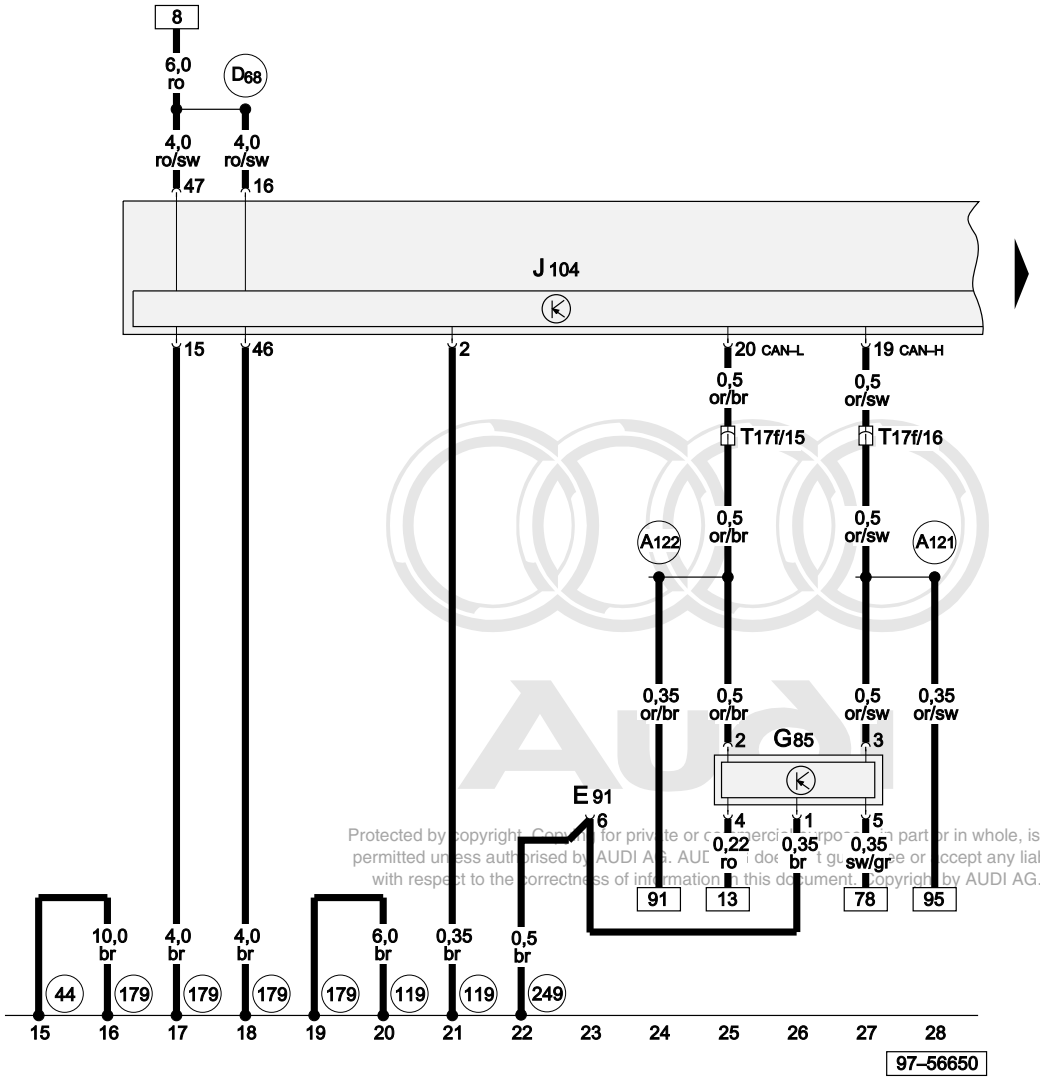

Protected by copyright. Copying for private or commercial purposes, in part or in whole, is not permitted unless authorised by AUDI AG. AUDI AG does not guarantee or accept any liability with respect to the correctness of information in this document. Copyright by AUDI AG.

ws = white
sw = black
ro = red
br = brown
gn = green
bl = blue
gr = grey
li = purple
ge = yellow
or = orange
rs = pink

Function selection switch, steering angle sender, ABS with EDL control unit

E91 Function selection switch
G85 Steering angle sender
J104 ABS with EDL control unit
T17f 17-pin connector, white, connector point, A pillar, left

44 Earth point, lower part of left A pillar

119 Earth connection -1-, in headlight wiring harness

179 Earth connection, in left headlight wiring harness

249 Earth connection -2-, in interior wiring harness

A121 Connection (high bus), in dash panel wiring harness

A122 Connection (low bus), in dash panel wiring harness

D68 Positive (+) connection (30 - for ABS), in engine compartment wiring harness

Rear right speed sensor, front right speed sensor, rear left speed sensor, front left speed sensor, ABS with EDL control unit

G44	Rear right speed sensor
G45	Front right speed sensor
G46	Rear left speed sensor
G47	Front left speed sensor
J104	ABS with EDL control unit
T10i	10-pin connector, black, connector point, A pillar, right
T17g	17-pin connector, red, connector point, A pillar, left

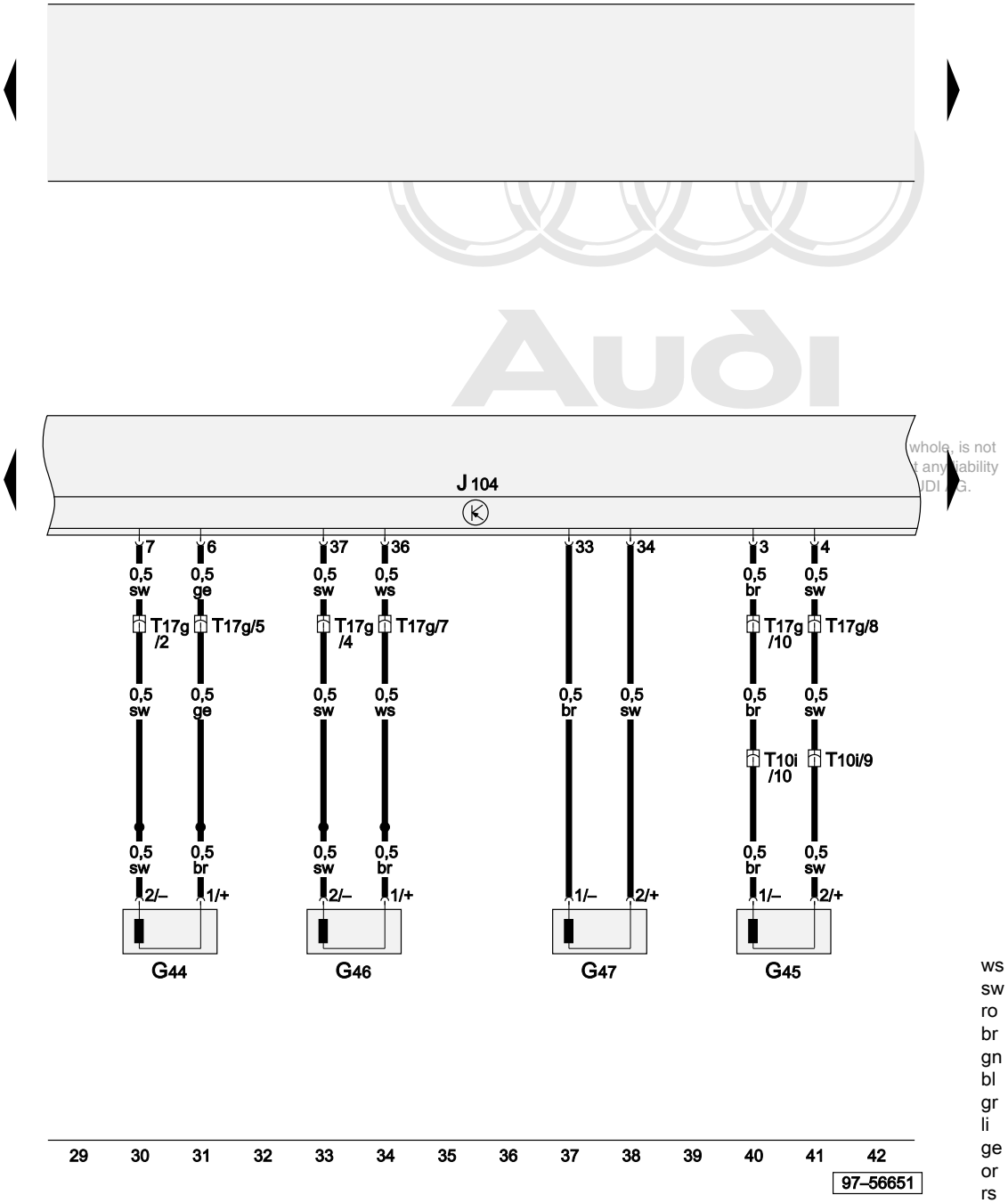

ws = white
sw = black
ro = red
br = brown
gn = green
bl = blue
gr = grey
li = purple
ge = yellow
or = orange
rs = pink

Protected by copyright. Copying for private or commercial purposes, in part or in whole, is not

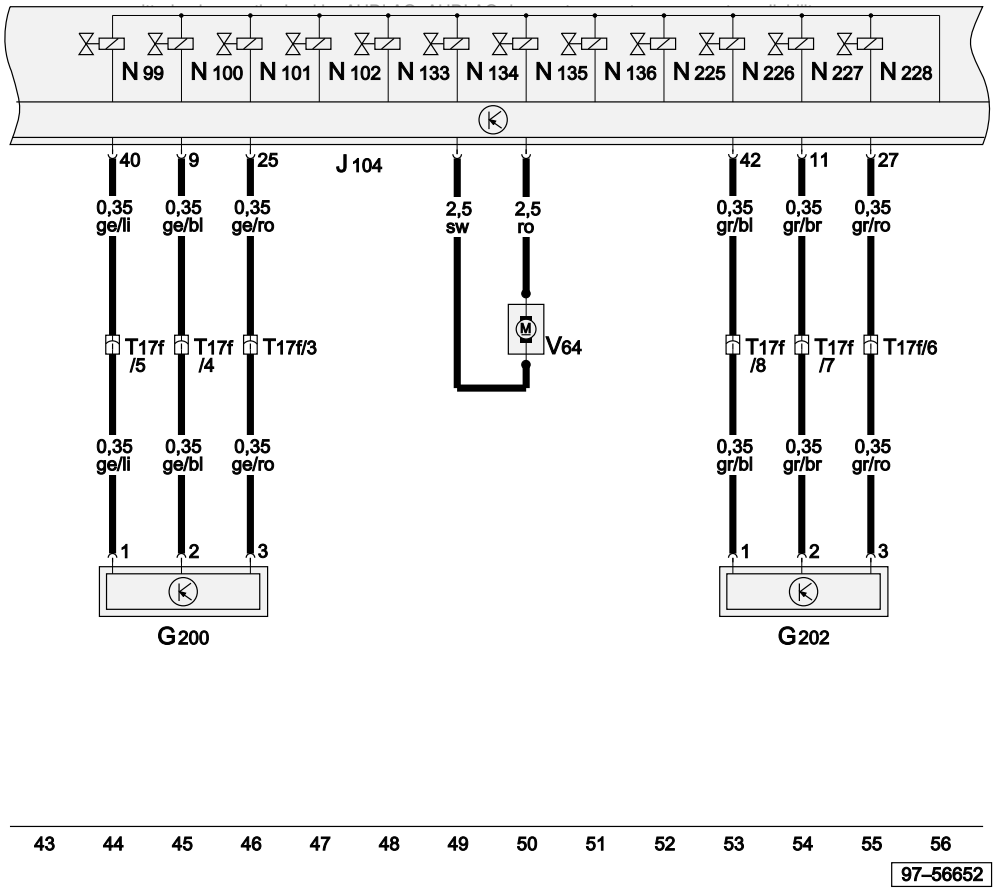

Lateral acceleration sender, yaw rate sender, ABS with EDL control unit

G200	Lateral acceleration sender
G202	Yaw rate sender
J104	ABS with EDL control unit
N99	ABS inlet valve, front right
N100	ABS outlet valve, front right
N101	ABS inlet valve, front left
N102	ABS outlet valve, front left
N133	ABS inlet valve, rear right
N134	ABS inlet valve, rear left
N135	ABS outlet valve, rear right
N136	ABS outlet valve, rear left
N225	Electronic stability program switch valve -1-
N226	Electronic stability program switch valve -2-
N227	Electronic stability program high pressure valve -1-
N228	Electronic stability program high pressure valve -2-
T17f	17-pin connector, white, connector point, A pillar, left
V64	ABS hydraulic pump

ws	=	white
sw	=	black
ro	=	red
br	=	brown
gn	=	green
bl	=	blue
gr	=	grey
li	=	purple
ge	=	yellow
or	=	orange
rs	=	pink

Brake detection switch - ESP, brake pressure senders, ABS with EDL control unit

F83	Brake detection switch, ESP
G201	Brake pressure sender -1-
G214	Brake pressure sender -2-
J104	ABS with EDL control unit
J402	Operating electronics control unit, navigation
T17g	17-pin connector, red, connector point, A pillar, left
T26	26-pin connector, black, radio connector
*	Models with standard equipment
**	Models with 1.2 litre engine without power steering
***	1.2 litre TDI engine with power steering
****	Models with radio navigation system (RNS-D)

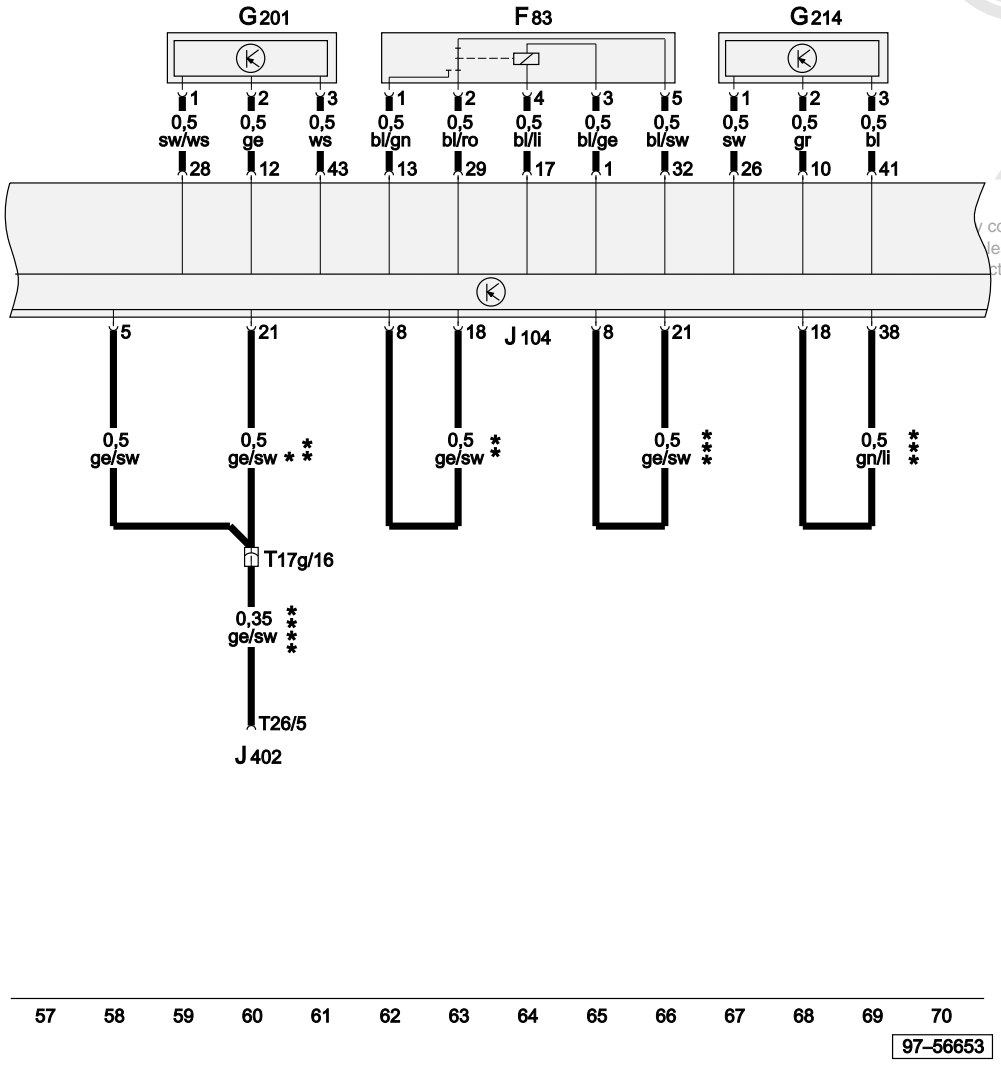

ws	=	white
sw	=	black
ro	=	red
br	=	brown
gn	=	green
bl	=	blue
gr	=	grey
li	=	purple
ge	=	yellow
or	=	orange
rs	=	pink

y copyright. Copying for private or commercial purposes, in part or in whole, is not
less authorised by AUDI AG. AUDI AG does not guarantee or accept any liability
ct to the correctness of information in this document. Copyright by AUDI AG.

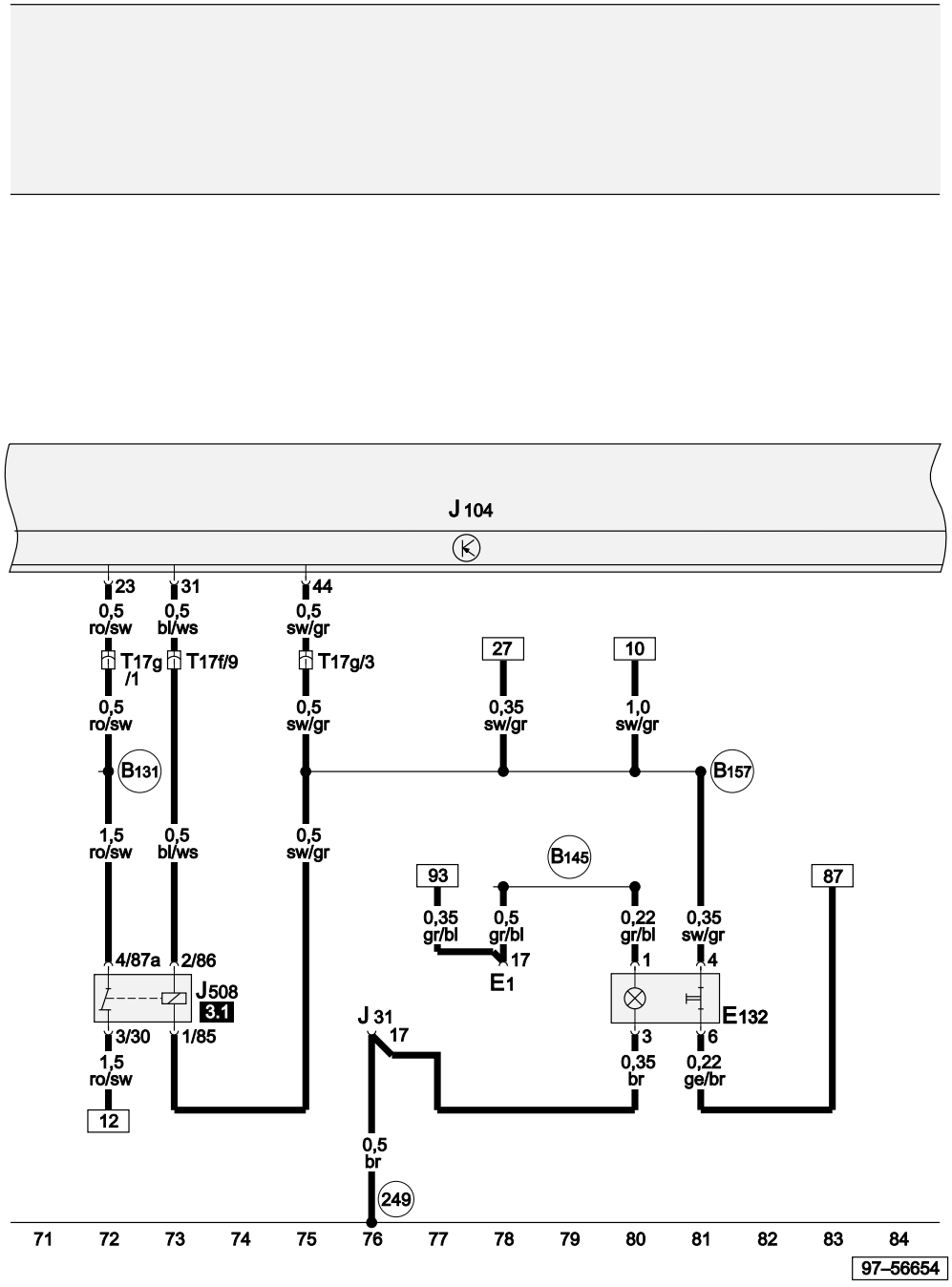

ws = white
sw = black
ro = red
br = brown
gn = green
bl = blue
gr = grey
li = purple
ge = yellow
or = orange
rs = pink

Traction control system switch, ABS with EDL control unit, brake light suppression relay

E1	Lighting switch
E132	Traction control system switch
J31	Automatic intermittent wash/wipe relay
J104	ABS with EDL control unit
J508	Brake light suppression relay
T17f	17-pin connector, white, connector point, A pillar, left
T17g	17-pin connector, red, connector point, A pillar, left
249	Earth connection -2-, in interior wiring harness
B131	Connection (54), in interior wiring harness
B145	Positive (+) connection (58b), in interior wiring harness
B157	Positive (+) connection -3- (15a), in interior wiring harness

Protected by copyright. Copying for private or commercial purposes, in part or in whole, is not permitted unless authorised by AUDI AG. AUDI AG does not guarantee or accept any liability with respect to the correctness of information in this document. Copyright by AUDI AG.

ABS with EDL control unit, control unit with display in dash panel insert, traction control system warning lamp

J104	ABS with EDL control unit
J285	Control unit with display in dash panel insert
K86	Traction control system warning lamp
T16	16-pin connector, diagnostic connector, black, near fuse box
T17f	17-pin connector, white, connector point, A pillar, left
T17g	17-pin connector, red, connector point, A pillar, left
T32	32-pin connector, blue, on dash panel insert
T32a	32-pin connector, green, on dash panel insert
249	Earth connection -2-, in interior wiring harness
A76	Connection (diagnosis wire K), in dash panel wiring harness
A132	Connection (TCS/ESP), in dash panel wiring harness

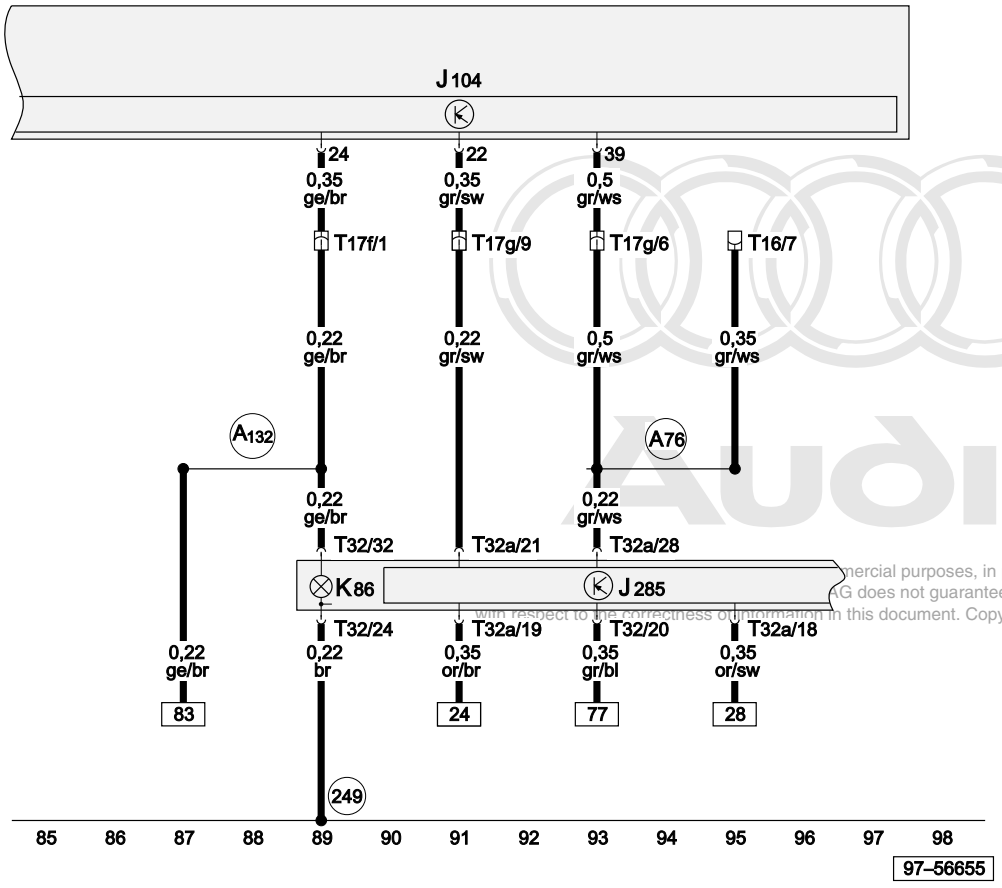

ws	=	white
sw	=	black
ro	=	red
br	=	brown
gn	=	green
bl	=	blue
gr	=	grey
li	=	purple
ge	=	yellow
or	=	orange
rs	=	pink

mercial purposes, in part or in whole, is not
AG does not guarantee or accept any liability
with respect to the correctness of information in this document. Copyright by AUDI AG.

Automatic anti-dazzle interior mirror

From model year 2002

Main fuse

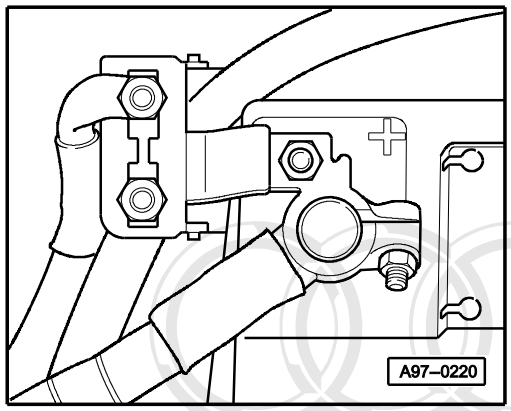

9-point relay carrier (in dash panel)

Fuse box

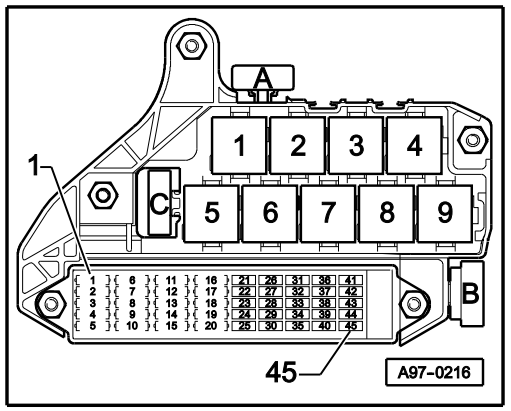

Fuse colours

30 A – green
25 A – white
20 A – yellow
15 A – blue
10 A – red
7.5A – orange
5 A – beige

3-point relay carrier (in footwell)

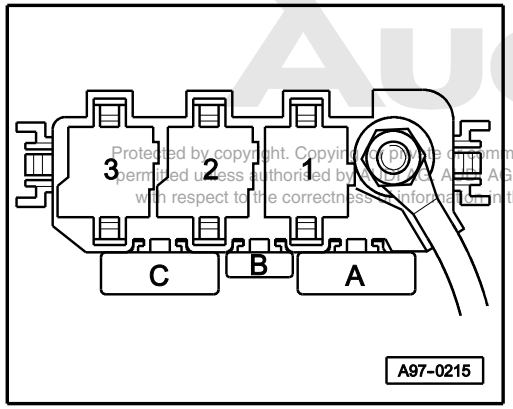

Protected by copyright. Copying for private or commercial purposes, in part or in whole, is not permitted unless authorised by AUDI AG. AUDI AG does not guarantee or accept any liability with respect to the correctness of information in this document. Copyright by AUDI AG.

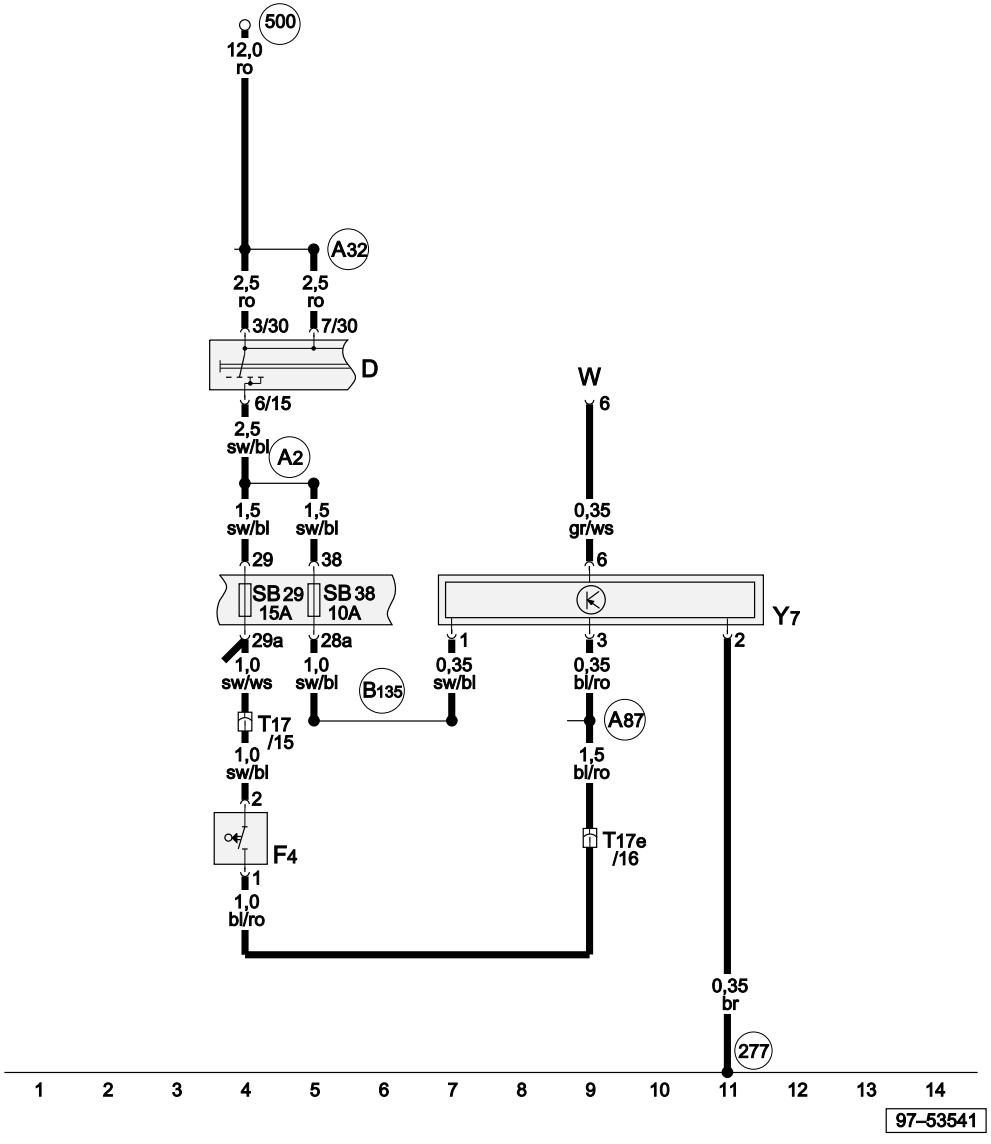

ws = white
sw = black
ro = red
br = brown
gn = green
bl = blue
gr = grey
li = purple
ge = yellow
or = orange
rs = pink

Automatic anti-dazzle interior mirror

D	Ignition/starter switch
F4	Reversing light switch
SB29	Fuse -29- on fuse box
SB38	Fuse -38- on fuse box
T17	17-pin connector, brown, in footwell, front left
T17e	17-pin connector, blue, in footwell, front left
W	Interior light, front
Y7	Automatic anti-dazzle interior mirror
277	Earth connection -3-, in interior wiring harness
500	Screw connection -1- (30), on relay plate
A2	Positive (+) connection (15), in dash panel wiring harness
A32	Positive (+) connection (30), in dash panel wiring harness
A87	Connection (reversing light), in dash panel wiring harness
B135	Connection -1- (15a), in interior wiring harness

Protected by copyright. Copying for private or commercial purposes, in part or in whole, is not permitted unless authorised by AUDI AG. AUDI AG does not guarantee or accept any liability with respect to the correctness of information in this document. Copyright by AUDI AG.

Diagnostic connector

From model year 2002

Main fuse

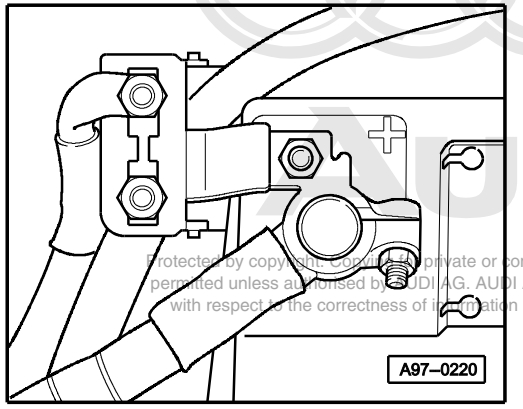

9-point relay carrier (in dash panel)

Fuse box

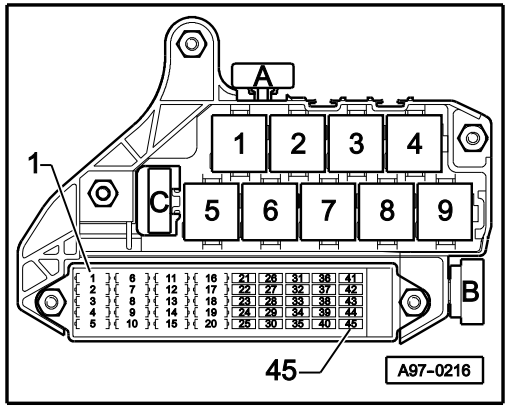

Fuse colours

30 A – green
25 A – white
20 A – yellow
15 A – blue
10 A – red
7.5A – orange
5 A – beige

3-point relay carrier (in footwell)

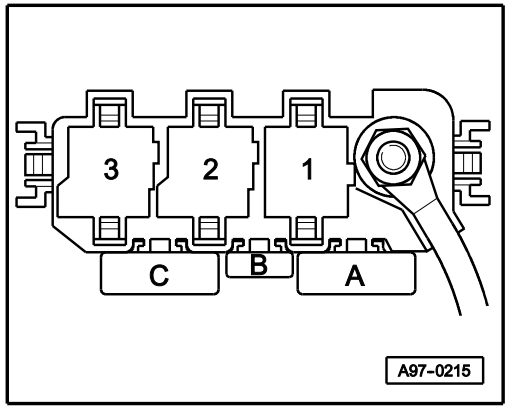

Protected by copyright. Copying for private or commercial purposes, in part or in whole, is not permitted unless authorised by AUDI AG. AUDI AG does not guarantee or accept any liability with respect to the correctness of information in this document. Copyright by AUDI AG.

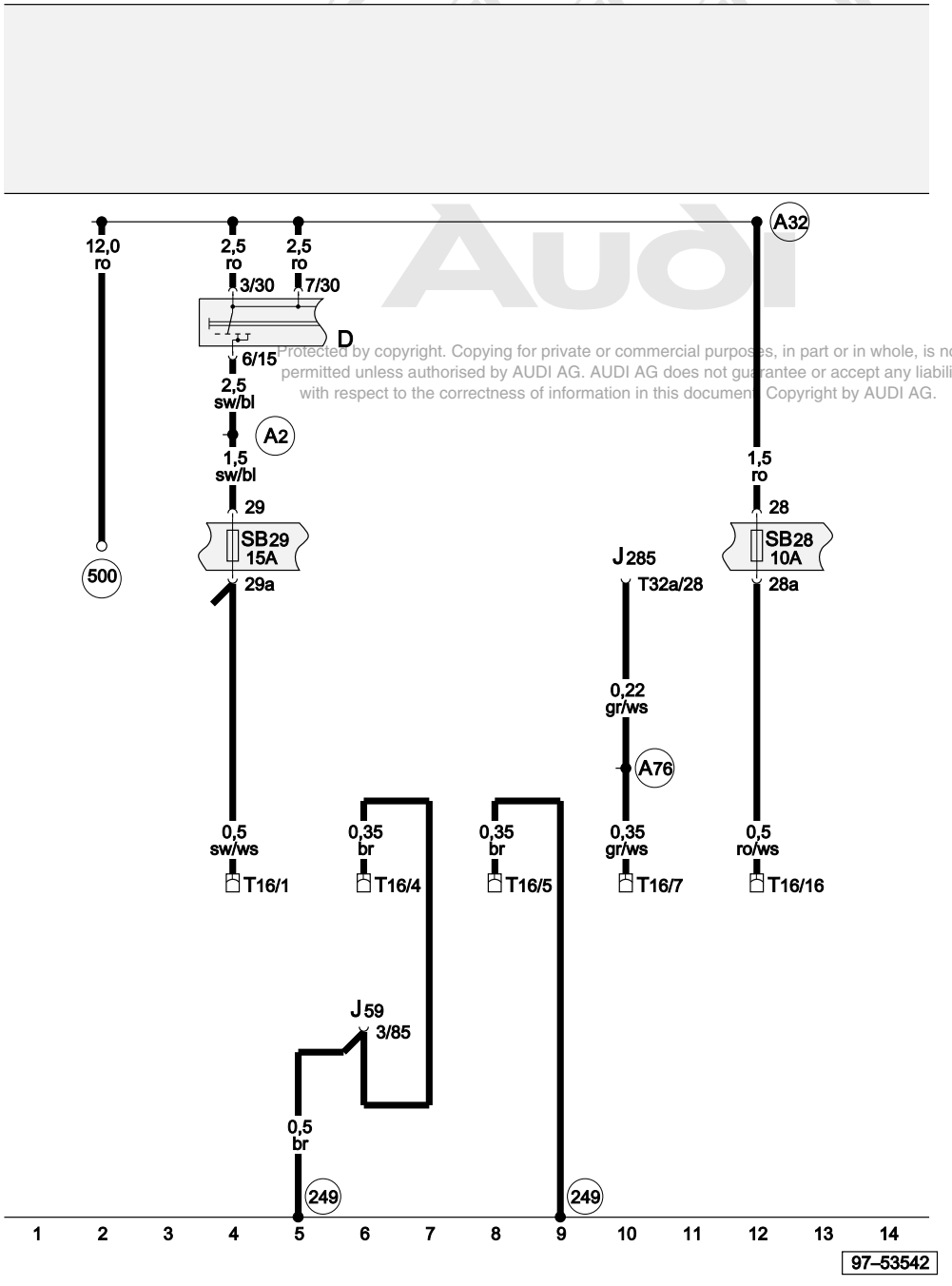

Protected by copyright. Copying for private or commercial purposes, in part or in whole, is not permitted unless authorised by AUDI AG. AUDI AG does not guarantee or accept any liability with respect to the correctness of information in this document. Copyright by AUDI AG.

ws = white
sw = black
ro = red
br = brown
gn = green
bl = blue
gr = grey
li = purple
ge = yellow
or = orange
rs = pink

Diagnostic connector

D	Ignition/starter switch
J59	X contact relief relay
J285	Control unit with display in dash panel insert
SB28	Fuse -28- on fuse box
SB29	Fuse -29- on fuse box
T16	16-pin connector, black, diagnostic connector
T32a	32-pin connector, green, on dash panel insert
249	Earth connection -2-, in interior wiring harness
500	Screw connection -1- (30), on relay plate
A2	Positive (+) connection (15), in dash panel wiring harness
A32	Positive (+) connection (30), in dash panel wiring harness
A76	Connection (diagnosis wire K), in dash panel wiring harness

Parking aid, rear

From model year 2002

Main fuse

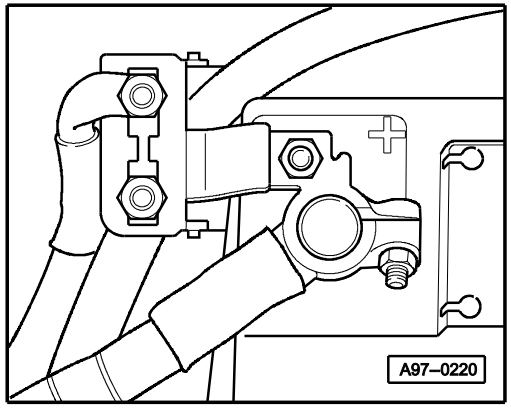

3-point relay carrier (in footwell)

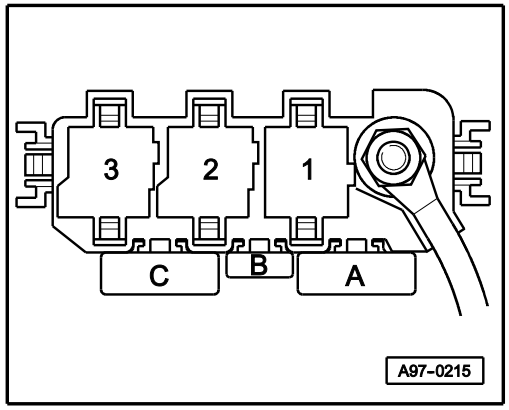

9-point relay carrier (in dash panel)

Fuse box

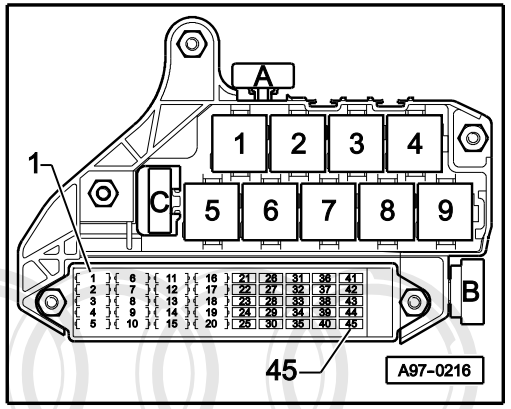

Fuse colours

30 A – green
25 A – white
20 A – yellow
15 A – blue
10 A – red
7.5A – orange
5 A – beige

Protected by copyright. Copying for private or commercial purposes, in part or in whole, is not permitted unless authorised by AUDI AG. AUDI AG does not guarantee or accept any liability with respect to the correctness of information in this document. Copyright by AUDI AG.

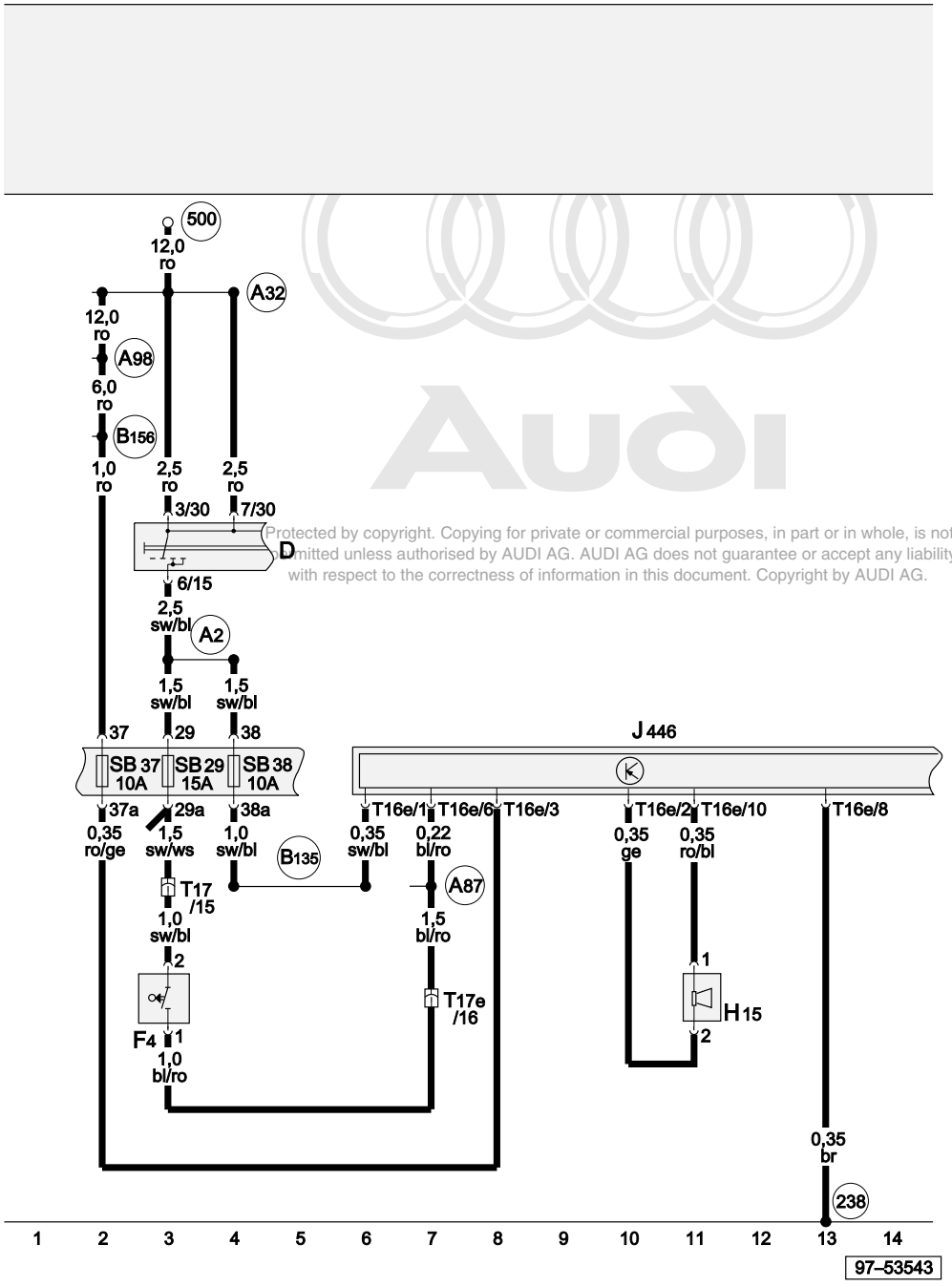

Protected by copyright. Copying for private or commercial purposes, in part or in whole, is not permitted unless authorised by AUDI AG. AUDI AG does not guarantee or accept any liability with respect to the correctness of information in this document. Copyright by AUDI AG.

ws = white
sw = black
ro = red
br = brown
gn = green
bl = blue
gr = grey
li = purple
ge = yellow
or = orange
rs = pink

Parking aid control unit, fuses

D	Ignition/starter switch
F4	Reversing light switch
H15	Parking aid warning buzzer
J446	Parking aid control unit
SB29	Fuse -29- on fuse box
SB37	Fuse -37- on fuse box
SB38	Fuse -38- on fuse box
T16e	16-pin connector, black, in luggage compartment, right
T17	17-pin connector, brown, in footwell, front left
T17e	17-pin connector, blue, in footwell, front left
238	Earth connection -1-, in interior wiring harness
500	Screw connection -1- (30), on relay plate
A2	Positive (+) connection (15), in dash panel wiring harness
A32	Positive (+) connection (30), in dash panel wiring harness
A87	Connection (reversing light), in dash panel wiring harness
A98	Positive (+) connection -4- (30), in dash panel wiring harness
B135	Connection -1- (15a), in interior wiring harness
B156	Positive (+) connection (30a), in interior wiring harness

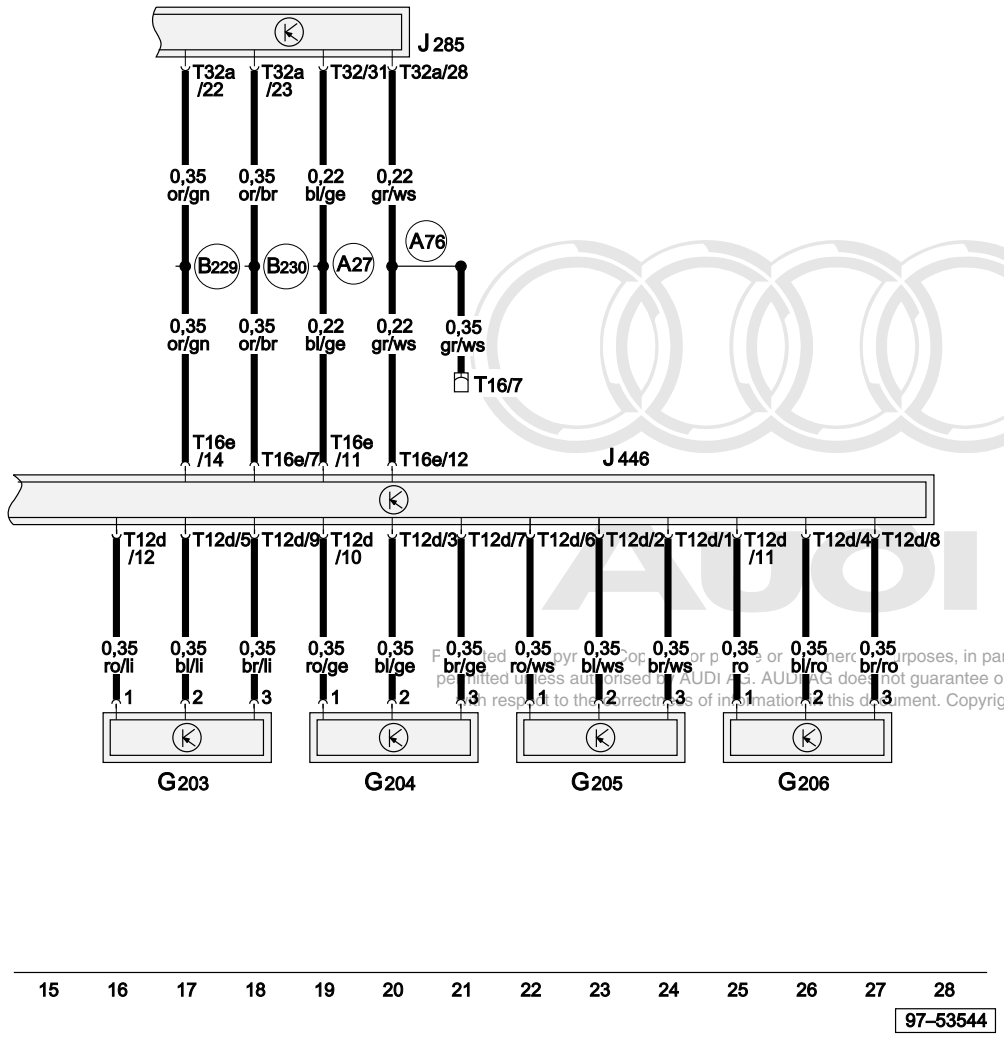

Protected by copyright. Copying for private or commercial purposes, in part or in whole, is not permitted unless authorised by AUDI AG. AUDI AG does not guarantee or accept any liability with respect to the correctness of information in this document. Copyright by AUDI AG.

ws = white
sw = black
ro = red
br = brown
gn = green
bl = blue
gr = grey
li = purple
ge = yellow
or = orange
rs = pink

Parking aid control unit, parking aid senders

G203	Rear left parking aid sender
G204	Centre rear left parking aid sender
G205	Centre rear right parking aid sender
G206	Rear right parking aid sender
J285	Control unit with display in dash panel insert
J446	Parking aid control unit
T12d	12-pin connector, in luggage compartment, right
T16	Diagnostic connector, black, near fuse box
T16e	16-pin connector, black, in luggage compartment, right
T32	32-pin connector, blue, on dash panel insert
T32a	32-pin connector, green, on dash panel insert
A27	Connection (speed signal), in dash panel wiring harness
A76	Connection (diagnosis wire K), in dash panel wiring harness
B229	Connection (high bus), in interior wiring harness
B230	Connection (low bus), in interior wiring harness

Driver information system

From model year 2002

Main fuse

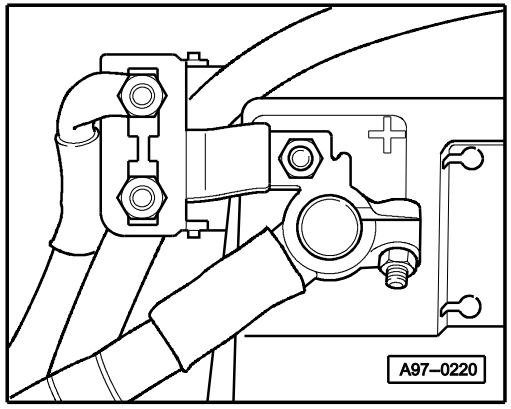

3-point relay carrier (in footwell)

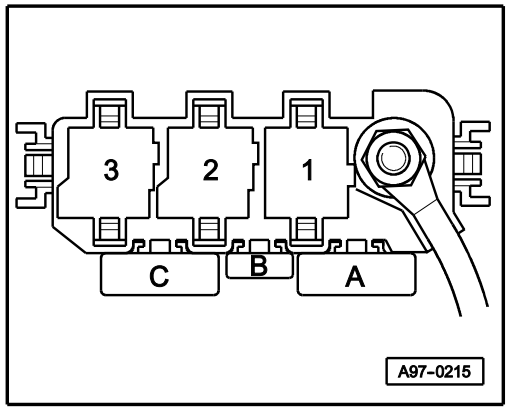

9-point relay carrier (in dash panel)

Fuse box

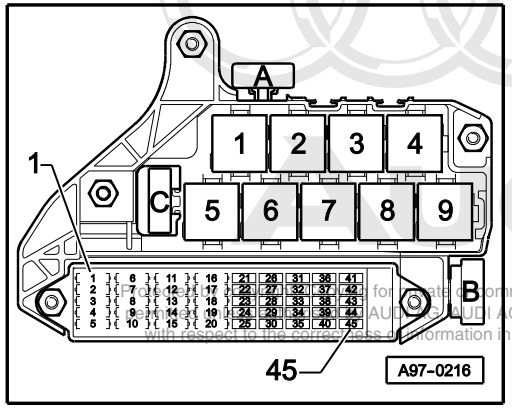

6 - Bulb check warning unit (K41)

7 - Bulb check warning unit (K41)

Fuse colours

30 A – green
25 A – white
20 A – yellow
15 A – blue
10 A – red
7.5A – orange
5 A – beige

Protected by copyright. Copyright by AUDI AG. Reproduction for private or commercial purposes, in part or in whole, is not permitted without the prior written consent of AUDI AG. AUDI AG does not guarantee or accept any liability with respect to the correctness of information in this document. Copyright by AUDI AG.

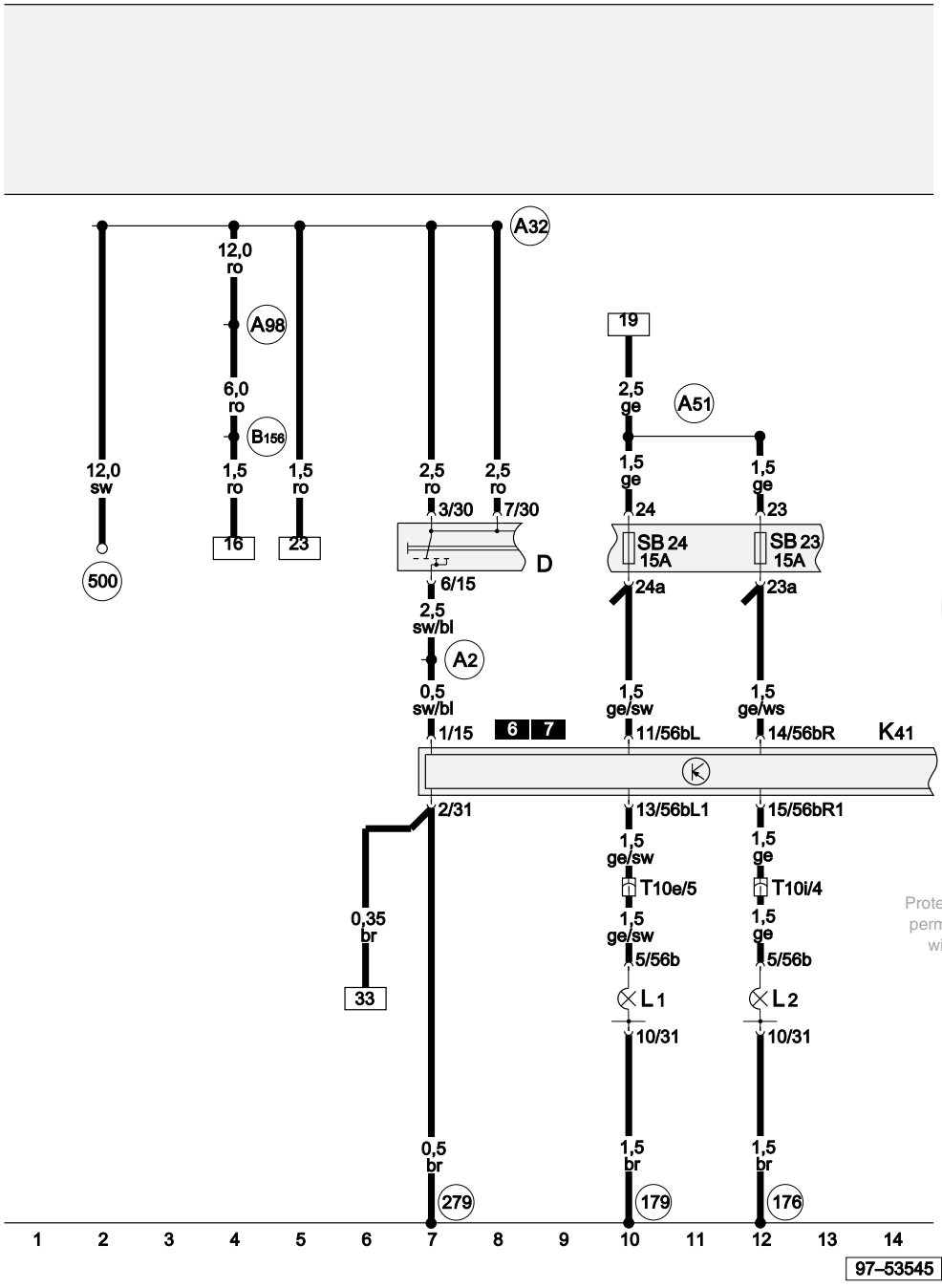

Dipped beam headlights

D	Ignition/starter switch
K41	Bulb check warning unit
L1	Twin filament bulb/sealed beam insert, left
L2	Twin filament bulb/sealed beam insert, right
SB23	Fuse -23- on fuse box
SB24	Fuse -24- on fuse box
T10e	10-pin connector, red, connector point, A pillar, left
T10i	10-pin connector, black, connector point, A pillar, right
500	Screw connection -1- (30), on relay plate
176	Earth connection, in right headlight wiring harness
179	Earth connection, in left headlight wiring harness
279	Earth connection -5-, in interior wiring harness
A2	Positive (+) connection (15), in dash panel wiring harness
A32	Positive (+) connection (30), in dash panel wiring harness
A51	Connection (56), in dash panel wiring harness
A98	Positive (+) connection -4- (30), in dash panel wiring harness
B156	Positive (+) connection (30a), in interior wiring harness

Protected by copyright. Copying for private or commercial purposes, in part or in whole, is not permitted unless authorised by AUDI AG. AUDI AG does not guarantee or accept any liability with respect to the correctness of information in this document. Copyright by AUDI AG.

ws	=	white
sw	=	black
ro	=	red
br	=	brown
gn	=	green
bl	=	blue
gr	=	grey
li	=	purple
ge	=	yellow
or	=	orange
rs	=	pink

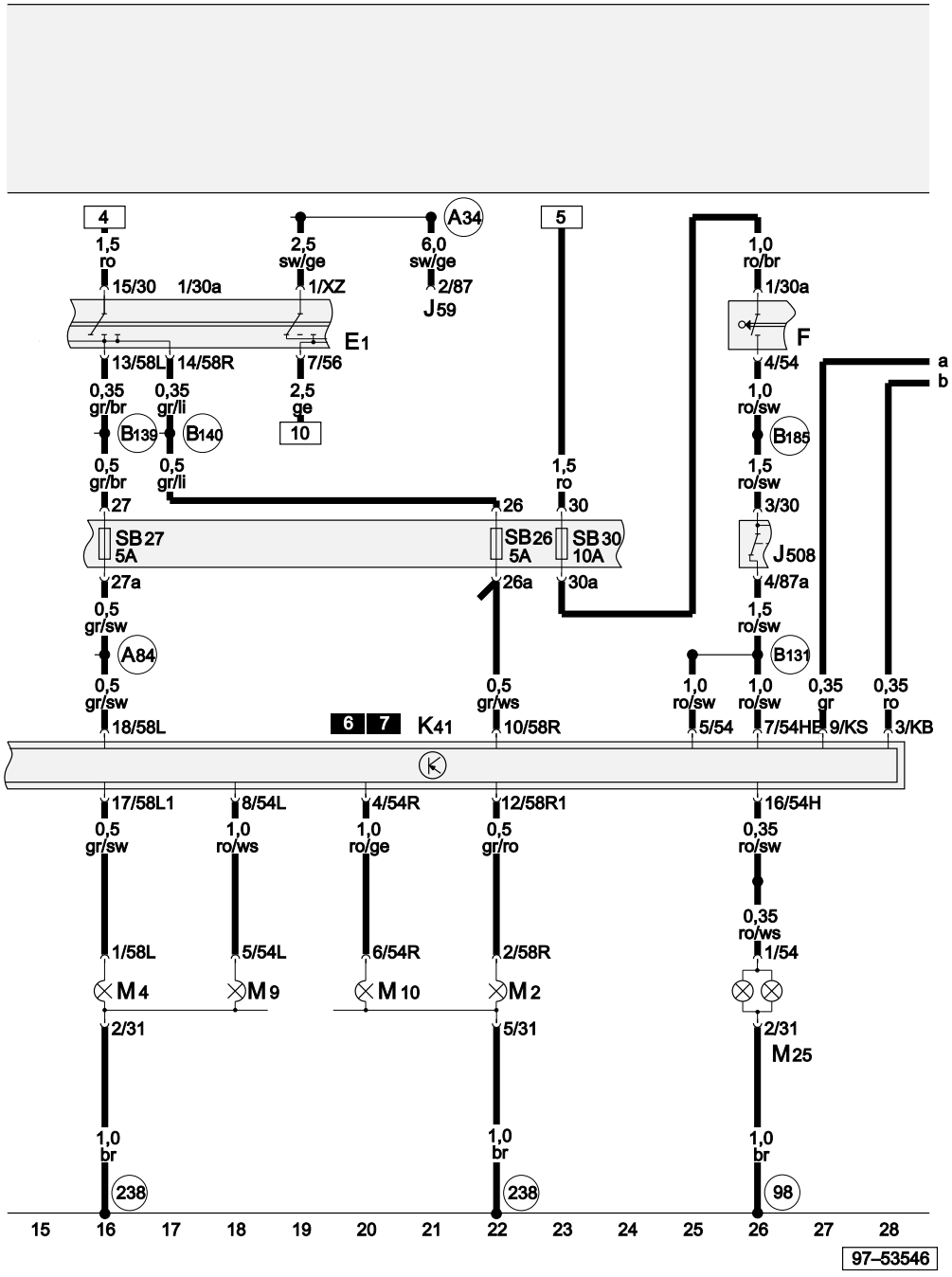

ws = white
sw = black
ro = red
br = brown
gn = green
bl = blue
gr = grey
li = purple
ge = yellow
or = orange
rs = pink

Lighting switch, tail lights, brake lights

E1	Lighting switch
F	Brake light switch
J59	X contact relief relay
J508	Brake light suppression relay
K41	Bulb check warning unit
M2	Tail light bulb, right
M4	Tail light bulb, left
M9	Brake light bulb, left
M10	Brake light bulb, right
M25	High level brake light bulb
SB26	Fuse -26- on fuse box
SB27	Fuse -27- on fuse box
SB30	Fuse -30- on fuse box
98	Earth connection, in tailgate/boot lid wiring harness
238	Earth connection -1-, in interior wiring harness
A34	Connection (75x), in dash panel wiring harness
A84	Connection (58L), in dash panel wiring harness
B131	Connection (54), in interior wiring harness
B139	Connection (PLL), in interior wiring harness
B140	Connection (PLR), in interior wiring harness
B185	Connection -2- (54), in interior wiring harness

Protected by copyright. Copying for private or commercial purposes, in part or in whole, is not permitted unless authorised by AUDI AG. AUDI AG does not guarantee or accept any liability with respect to the correctness of information in this document. Copyright by AUDI AG.

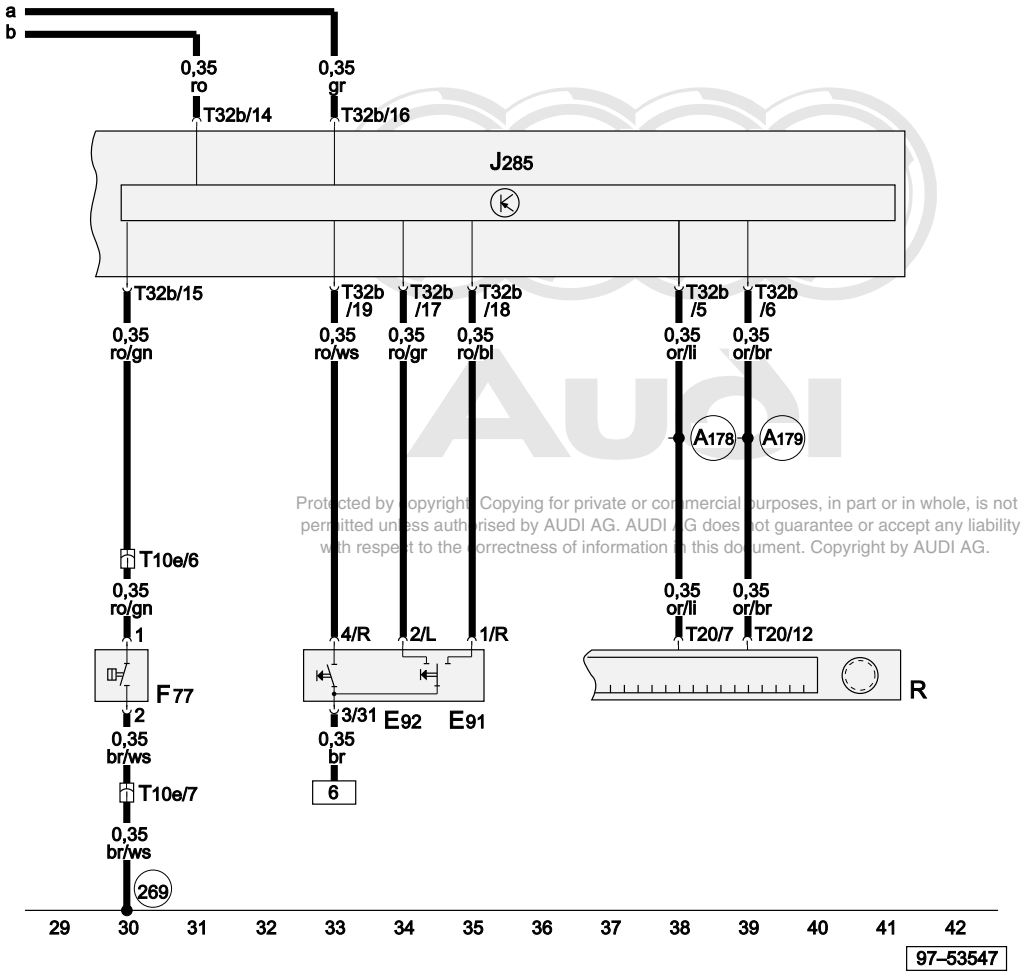

ws = white
sw = black
ro = red
br = brown
gn = green
bl = blue
gr = grey
li = purple
ge = yellow
or = orange
rs = pink

Function selection switch, control unit with display in dash panel insert, radio

E91	Function selection switch
E92	Reset button
F77	Windscreen washer fluid warning contact
J285	Control unit with display in dash panel insert
R	Radio
T10e	10-pin connector, red, connector point, A pillar, left
T20	20-pin connector, black, radio connector I
T32b	32-pin connector, grey, on dash panel insert
269	Earth connection (sender earth) -1-, in dash panel wiring harness
A178	Connection (infotainment CAN bus, high), in dash panel wiring harness
A179	Connection (infotainment CAN bus, low), in dash panel wiring harness

Protected by copyright. Copying for private or commercial purposes, in part or in whole, is not permitted unless authorised by AUDI AG. AUDI AG does not guarantee or accept any liability with respect to the correctness of information in this document. Copyright by AUDI AG.

Provision for mobile phone

From model year 2002

Protected by copyright. Copying for private or commercial purposes, in part or in whole, is not permitted unless authorised by AUDI AG. AUDI AG does not guarantee or accept any liability with respect to the correctness of information in this document. Copyright by AUDI AG.

Main fuse

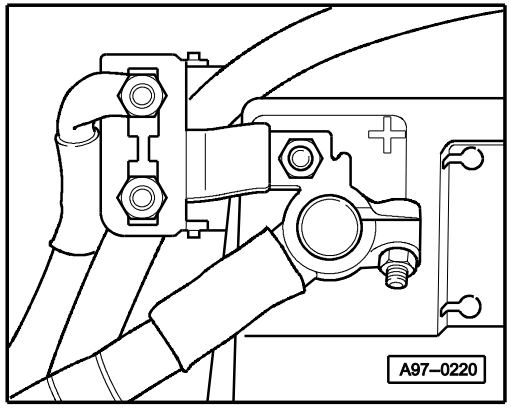

3-point relay carrier (in footwell)

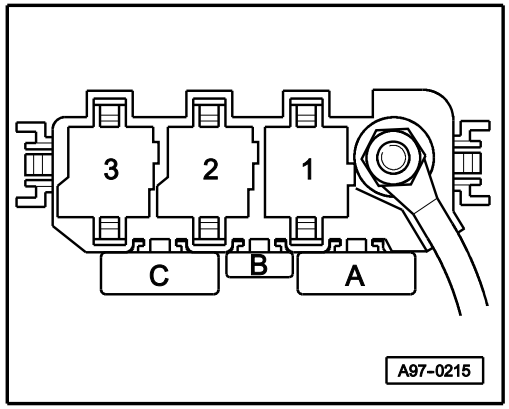

9-point relay carrier (in dash panel)

Fuse box

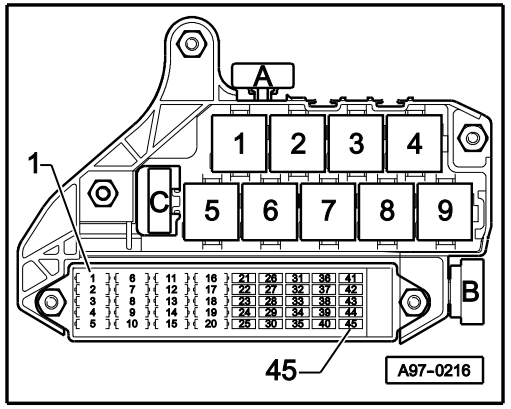

Fuse colours

30 A – green
25 A – white
20 A – yellow
15 A – blue
10 A – red
7.5A – orange
5 A – beige

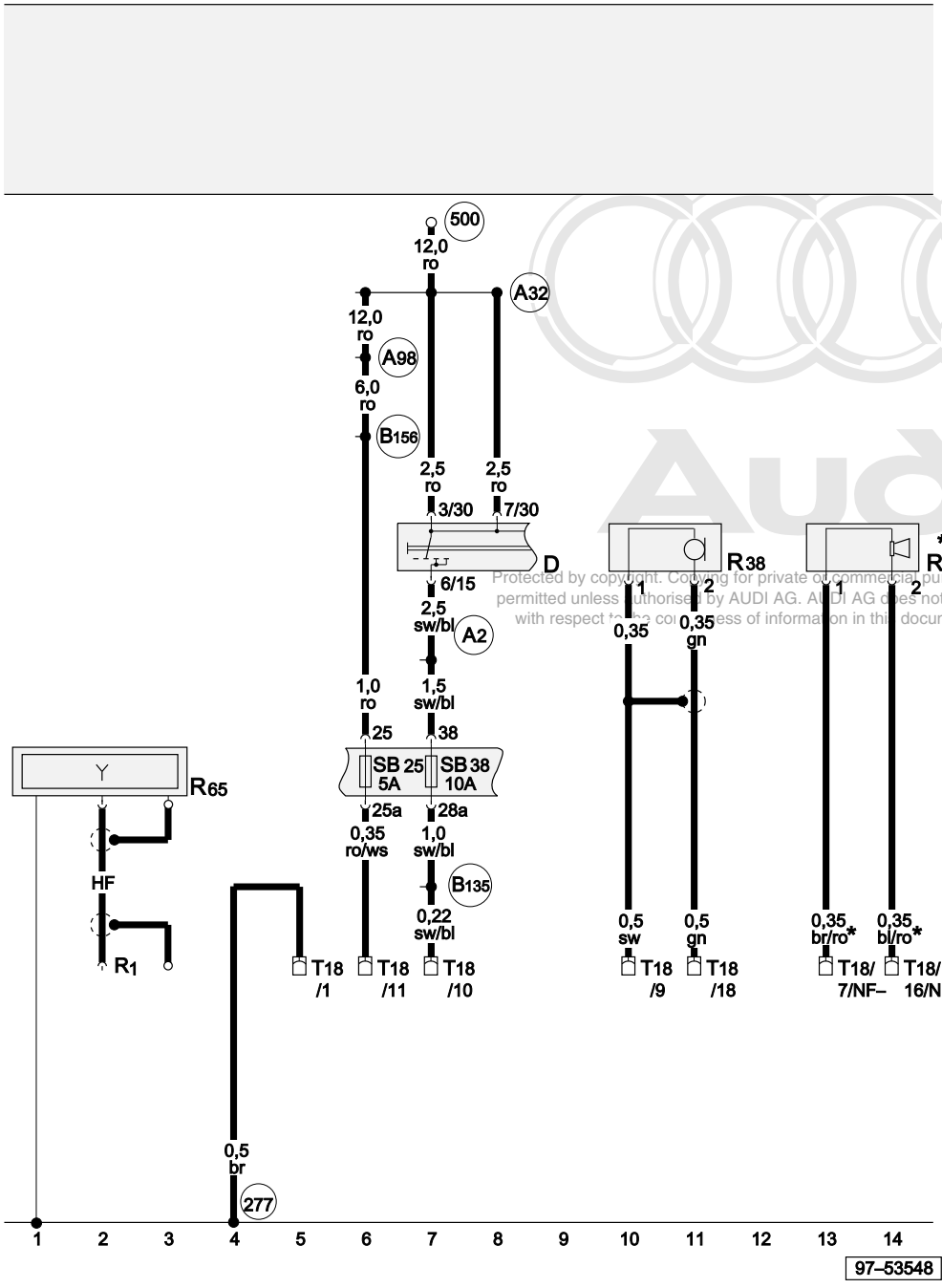

Protected by copyright. Copying for private or commercial purposes, in part or in whole, is not permitted unless authorised by AUDI AG. AUDI AG does not guarantee or accept any liability with respect to the correctness of information in this document. Copyright by AUDI AG.

ws = white
sw = black
ro = red
br = brown
gn = green
bl = blue
gr = grey
li = purple
ge = yellow
or = orange
rs = pink

Microphone for telephone, loudspeaker, fuse

D	Ignition/starter switch
R1	Aerial connection
R38	Telephone microphone
R39	Telephone/navigation systems loudspeaker
R65	Telephone aerial
SB25	Fuse -25- on fuse box
SB38	Fuse -38- on fuse box
T18	18-pin connector, black, mobile phone interface, in front passenger's footwell
277	Earth connection -3-, in interior wiring harness
500	Screw connection -1- (30), on relay plate
A2	Positive (+) connection (15), in dash panel wiring harness
A32	Positive (+) connection (30), in dash panel wiring harness
A98	Positive (+) connection -4- (30), in dash panel wiring harness
B135	Connection -1- (15a), in interior wiring harness
B156	Positive (+) connection (30a), in interior wiring harness
*	Only applies to models without factory-fitted radio

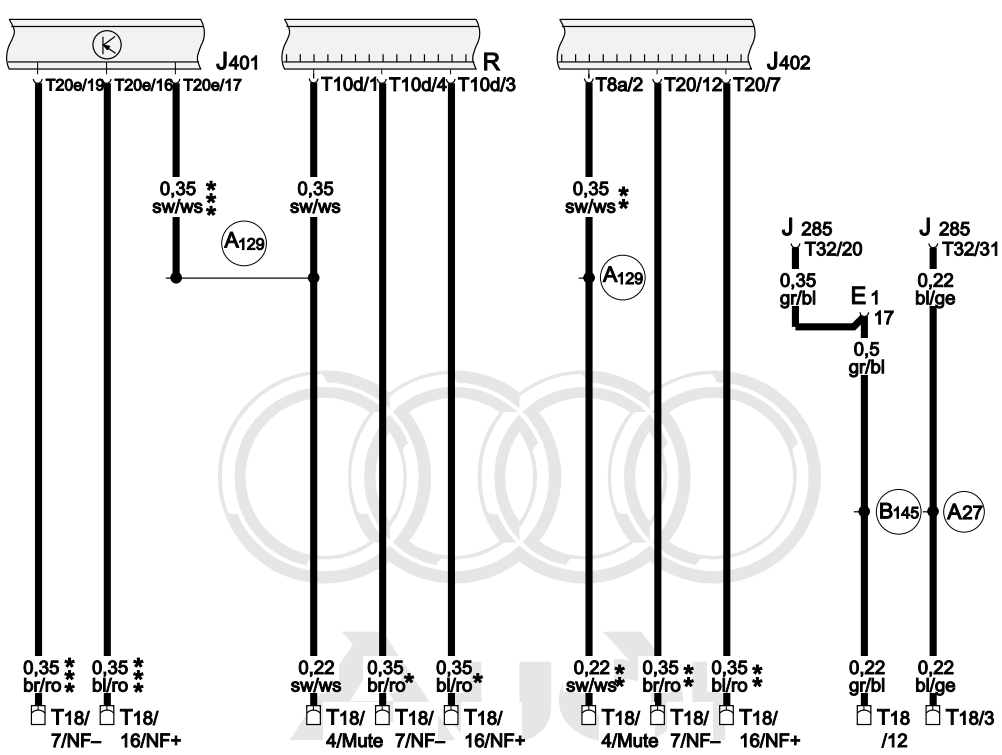

Protected by copyright. Copying for private or commercial purposes, in part or in whole, is not permitted unless authorised by AUDI AG. AUDI AG does not guarantee or accept any liability with respect to the correctness of information in this document. Copyright by AUDI AG.

ws = white
sw = black
ro = red
br = brown
gn = green
bl = blue
gr = grey
li = purple
ge = yellow
or = orange
rs = pink

Provision for mobile phone, radio

E1	Lighting switch
J285	Control unit with display in dash panel insert
J401	Navigation system with CD drive control unit
J402	Operating electronics control unit, navigation
R	Radio
T8a	8-pin connector, black, radio connector III
T10d	10-pin connector, red, radio connector IV
T18	18-pin connector, black, mobile phone interface, in front passenger's footwell
T20	20-pin connector, black, radio connector I
T20e	20-pin connector, black, navigation system with CD drive control unit
T32	32-pin connector, blue, on dash panel insert
A27	Connection (speed signal), in dash panel wiring harness
A129	Connection (muting), in dash panel wiring harness
B145	Positive (+) connection (58b), in interior wiring harness
*	Does not apply to Bose loudspeakers
**	Only applies to Bose loudspeakers
***	Only models with navigation system NS Low

Air conditioner

From model year 2002

3-point relay carrier (in footwell)

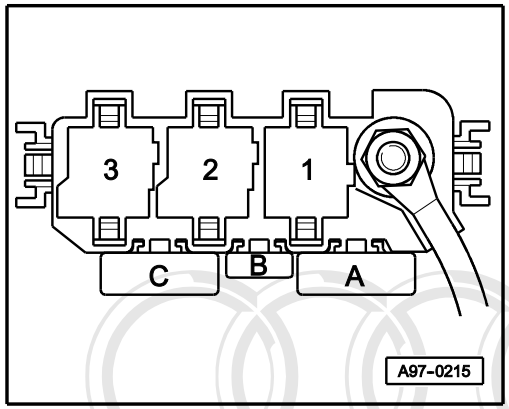

6+6-point relay carrier (in footwell)

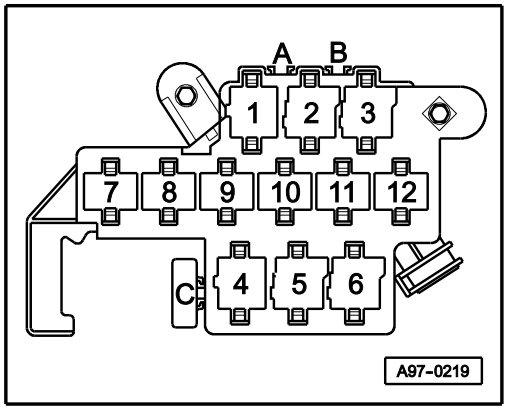

Position of relays:

2 **3** – Automatic intermittent wash/wipe relay (J31)

9-point relay carrier (in dash panel)

Fuse box

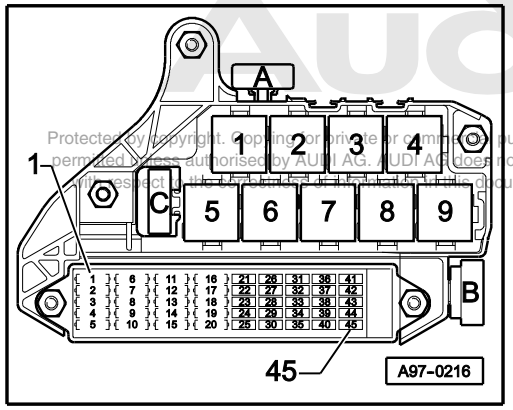

Position of fuses:

C - Radiator fan fuse (S205)

9 - X contact relief relay (J59)

Fuse colours

30 A – green
25 A – white
20 A – yellow
15 A – blue
10 A – red
7.5A – orange
5 A – beige

Protected by copyright. Copying for private or commercial purposes, in part or in whole, is not permitted unless authorised by AUDI AG. AUDI AG does not guarantee or accept any liability with respect to the correctness of information in this document. Copyright by AUDI AG.

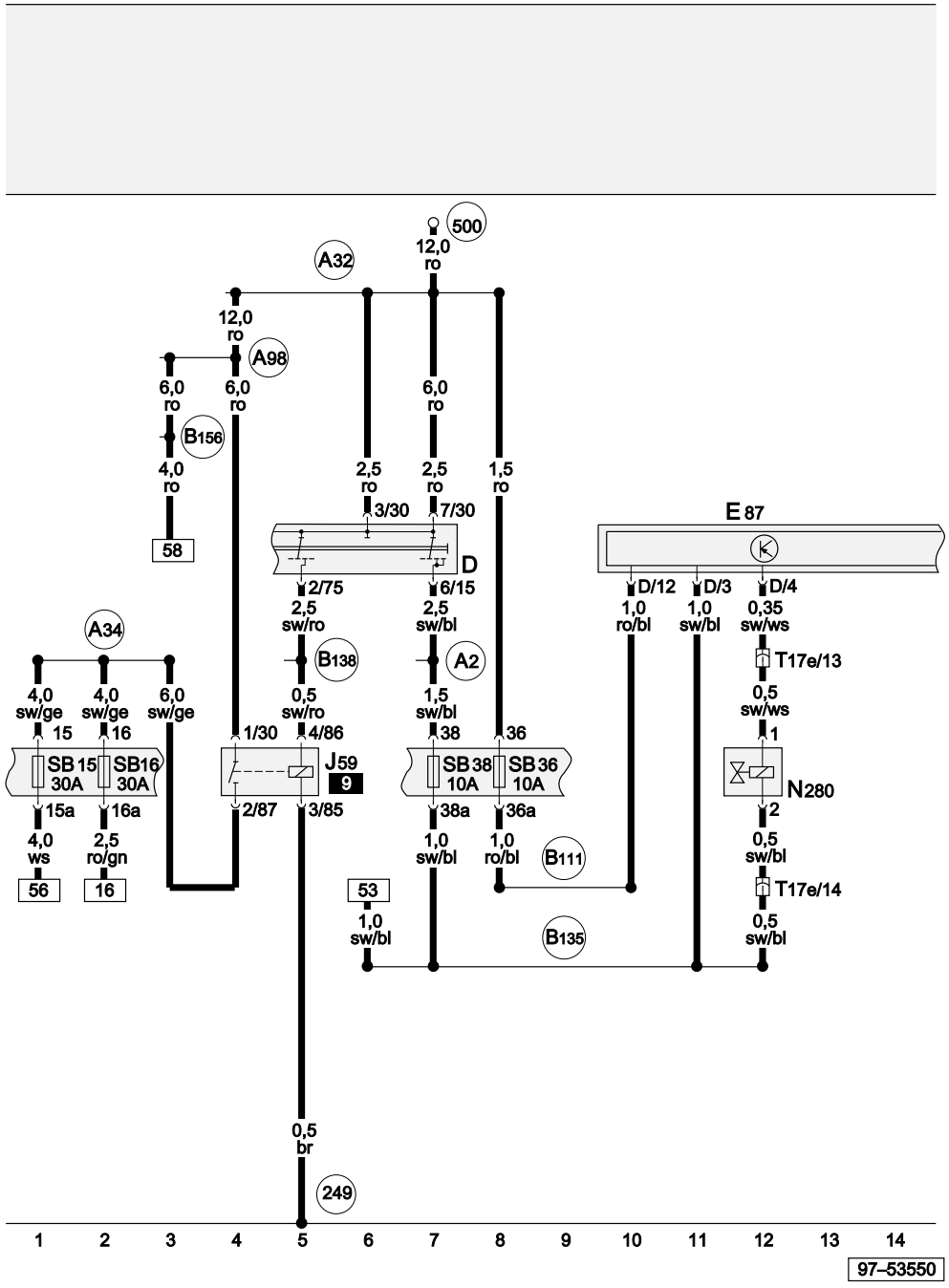

Control and display unit for air conditioner/Climatronic, compressor regulating valve, fuses

D	Ignition/starter switch
E87	Control and display unit for air conditioner/Climatronic
J59	X contact relief relay
N280	Compressor regulating valve, air conditioning system
SB15	Fuse -15- on fuse box
SB16	Fuse -16- on fuse box
SB36	Fuse -36- on fuse box
SB38	Fuse -38- on fuse box
T17e	17-pin connector, blue, in footwell, front left
249	Earth connection -2-, in interior wiring harness
500	Screw connection -1- (30), on relay plate
A2	Positive (+) connection (15), in dash panel wiring harness
A32	Positive (+) connection (30), in dash panel wiring harness
A34	Connection (75x), in dash panel wiring harness
A98	Positive (+) connection -4- (30), in dash panel wiring harness
B111	Positive (+) connection -1- (30a), in interior wiring harness
B135	Connection -1- (15a), in interior wiring harness
B138	Positive (+) connection (X), in interior wiring harness
B156	Positive (+) connection (30a), in interior wiring harness

Protected by copyright. Copying for private or commercial purposes, in part or in whole, is not permitted unless authorised by AUDI AG. AUDI AG does not guarantee or accept any liability with respect to the correctness of information in this document. Copyright by AUDI AG.

ws	=	white
sw	=	black
ro	=	red
br	=	brown
gn	=	green
bl	=	blue
gr	=	grey
li	=	purple
ge	=	yellow
or	=	orange
rs	=	pink

Control and display unit for air conditioner/Climatronic, fresh air blower control unit

E87	Control and display unit for air conditioner/Climatronic
J31	Automatic intermittent wash/wipe relay
J126	Fresh air blower control unit
J285	Control unit with display in dash panel insert
T10f	10-pin connector, blue, connector point, A pillar, left
T32a	32-pin connector, green, on dash panel insert
V	Windscreen wiper motor
V2	Fresh air blower
179	Earth connection, in left headlight wiring harness
279	Earth connection -5-, in interior wiring harness
A76	Connection (diagnosis wire K), in dash panel wiring harness
B229	Connection (high bus), in interior wiring harness
B230	Connection (low bus), in interior wiring harness

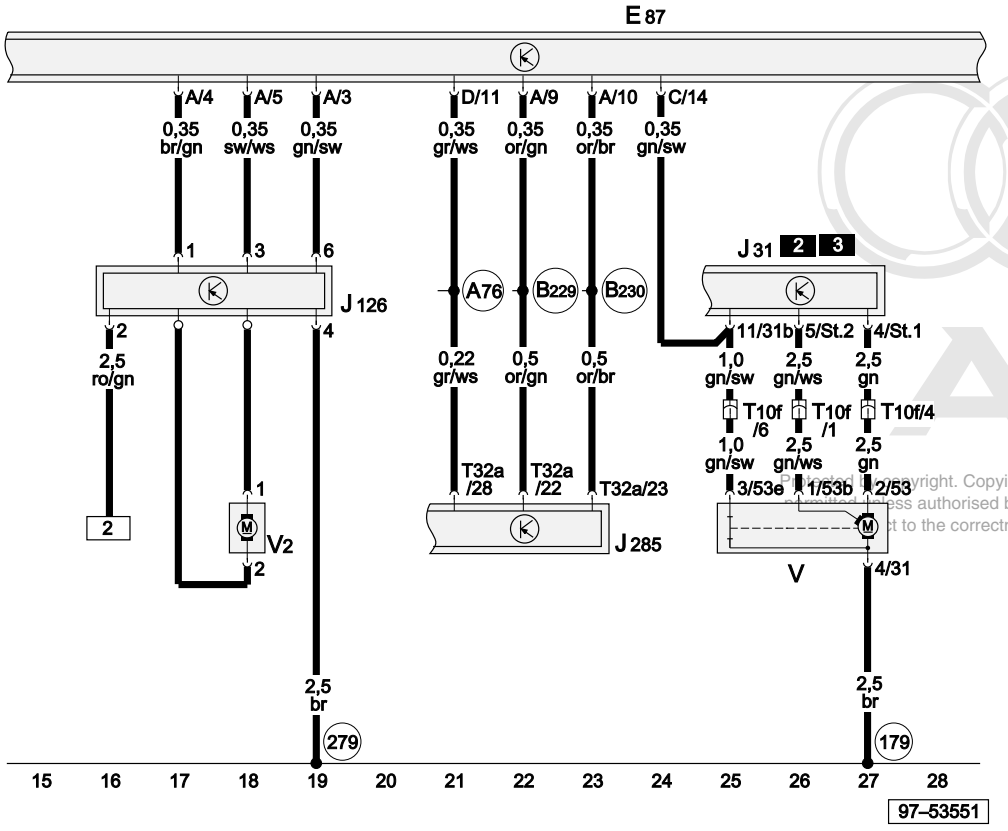

ws = white
sw = black
ro = red
br = brown
gn = green
bl = blue
gr = grey
li = purple
ge = yellow
or = orange
rs = pink

Protected by copyright. Copying for private or commercial purposes, in part or in whole, is not permitted unless authorised by AUDI AG. AUDI AG does not guarantee or accept any liability with respect to the correctness of information in this document. Copyright by AUDI AG.

Control and display unit for air conditioner/Climatronic, potentiometer, control motor

E87	Control and display unit for air conditioner/Climatronic
G92	Control motor potentiometer, temperature flap
G112	Control motor potentiometer, central flap
G135	Control motor potentiometer, defroster flap
G143	Control motor potentiometer, air recirculation flap
T17e	17-pin connector, blue, in footwell, front left
V68	Temperature flap control motor
V70	Central flap control motor
V107	Defroster flap control motor
V113	Air recirculation flap control motor
97	Earth connection -1-, in air conditioner wiring harness
L31	Connection (5V), in air conditioner wiring harness
*	See applicable engine version

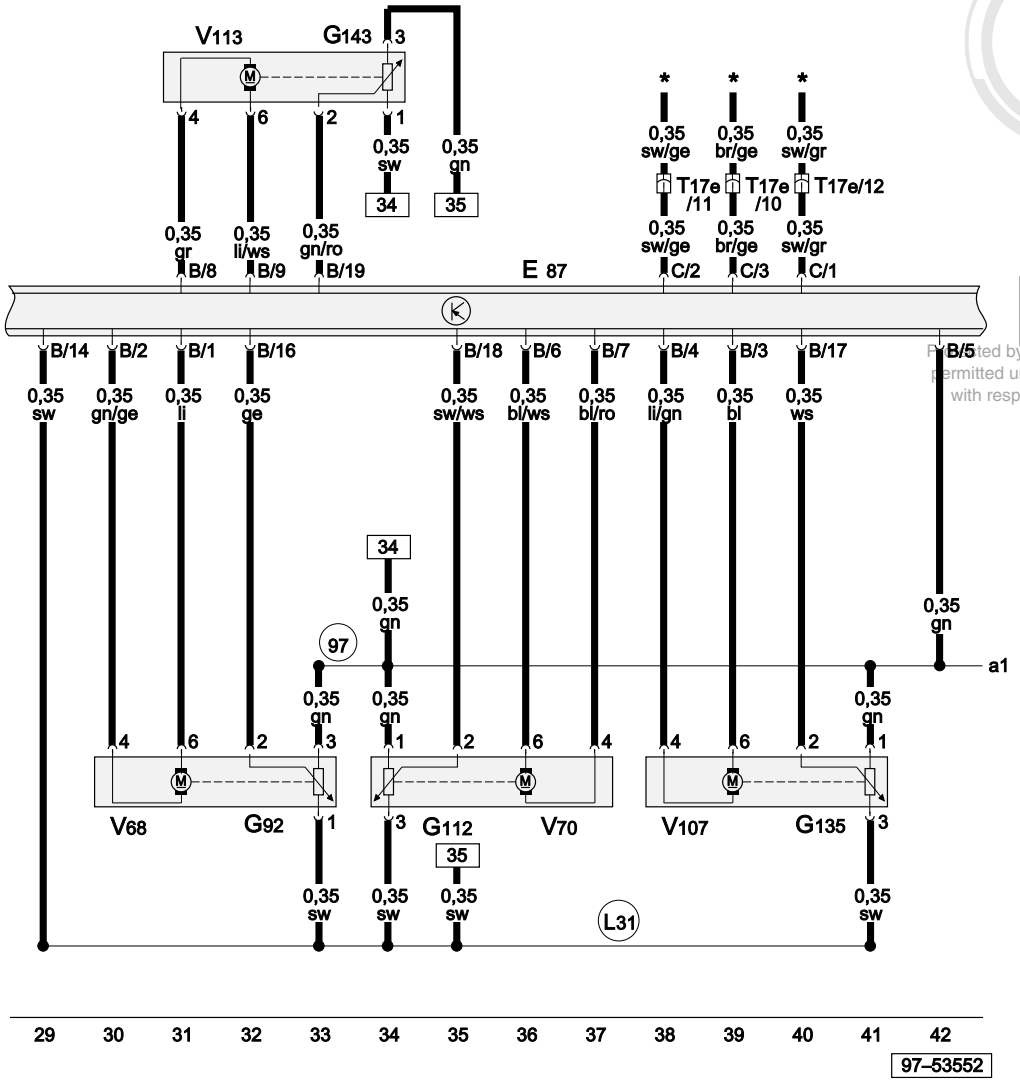

Protected by copyright. Copying for private or commercial purposes, in part or in whole, is not permitted unless authorised by AUDI AG. AUDI AG does not guarantee or accept any liability with respect to the correctness of information in this document. Copyright by AUDI AG.

ws	=	white
sw	=	black
ro	=	red
br	=	brown
gn	=	green
bl	=	blue
gr	=	grey
li	=	purple
ge	=	yellow
or	=	orange
rs	=	pink

Control and display unit for air conditioner/Climatronic, air conditioner pressure switch, ambient temperature sensor

E87	Control and display unit for air conditioner/Climatronic
G65	High pressure sender
G89	Fresh air intake duct temperature sensor
G107	Sunlight penetration photo sensor
G191	Vent temperature sender, centre
G192	Vent temperature sender, footwell
G263	Evaporator outflow temperature sender
R18	Frequency switch, left
R19	Frequency switch, right
T10g	10-pin connector, grey, connector point, A pillar, left
Z1	Heated rear window
73	Earth point, rear roof rail
97	Earth connection -1-, in air conditioner wiring harness
179	Earth connection, in left headlight wiring harness
277	Earth connection -3-, in interior wiring harness
B180	Connection (heated rear window), in interior wiring harness
B248	Connection -2- (heated rear window), in interior wiring harness

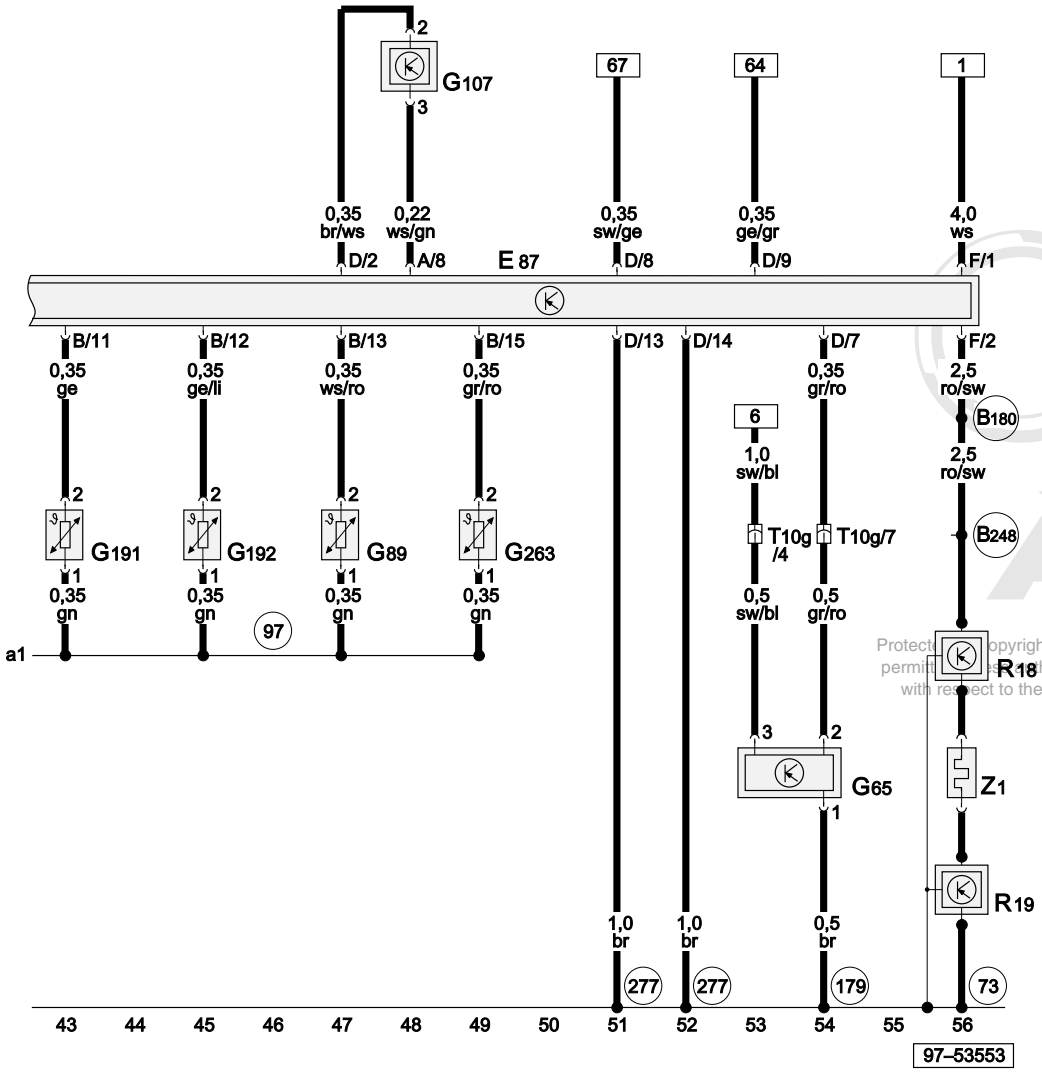

ws	=	white
sw	=	black
ro	=	red
br	=	brown
gn	=	green
bl	=	blue
gr	=	grey
li	=	purple
ge	=	yellow
or	=	orange
rs	=	pink

Protected by copyright. Copying for private or commercial purposes, in part or in whole, is not permitted unless authorised by AUDI AG. AUDI AG does not guarantee or accept any liability with respect to the correctness of information in this document. Copyright by AUDI AG.

Protected by copyright. Copying for private or commercial purposes, in part or in whole, is not permitted unless authorised by AUDI AG. AUDI AG does not guarantee or accept any liability with respect to the correctness of information in this document. Copyright by AUDI AG.

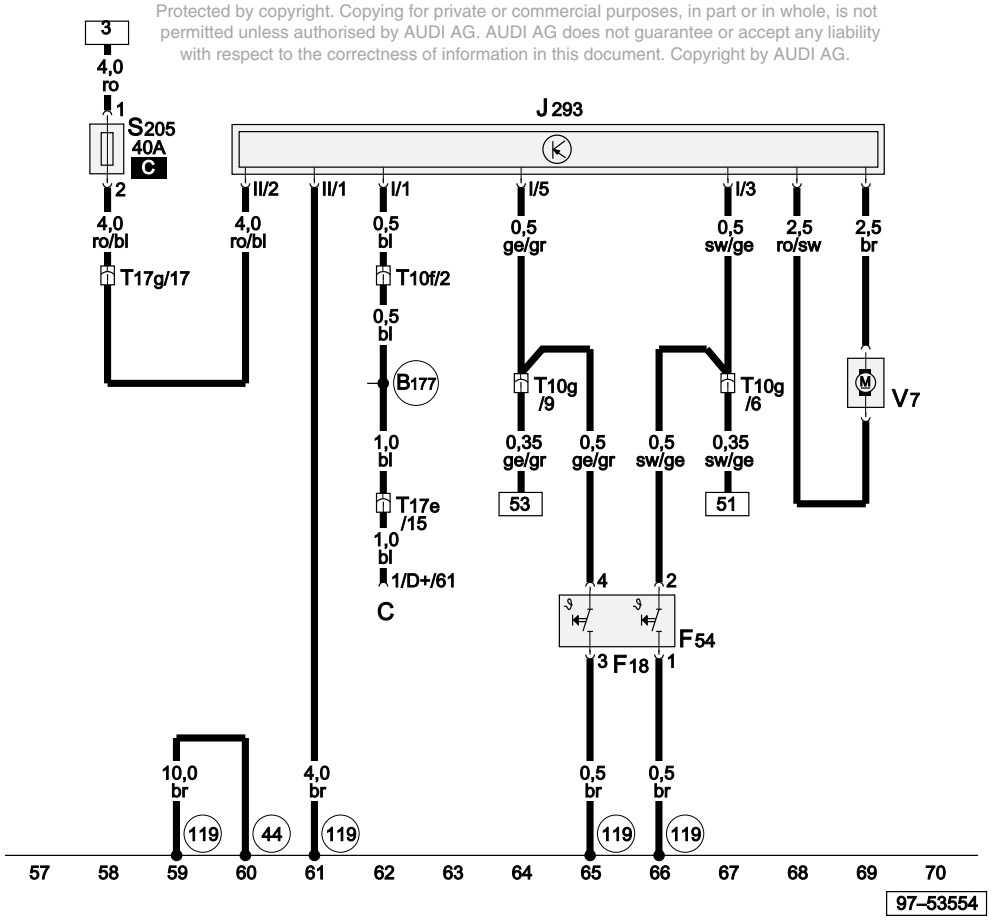

ws = white
sw = black
ro = red
br = brown
gn = green
bl = blue
gr = grey
li = purple
ge = yellow
or = orange
rs = pink

Radiator fan thermo-switches, radiator fan control unit

C	Alternator
F18	Radiator fan thermo-switch
F54	Radiator fan thermo-switch
J293	Radiator fan control unit
S205	Radiator fan fuse -2- (30)
T10f	10-pin connector, blue, connector point, A pillar, left
T10g	10-pin connector, grey, connector point, A pillar, left
T17e	17-pin connector, blue, in footwell, front left
T17g	17-pin connector, red, connector point, A pillar, left
V7	Radiator fan
44	Earth point, lower part of left A pillar
119	Earth connection -1-, in headlight wiring harness
B177	Connection (61), in interior wiring harness

Air conditioner for 1.2 litre TDI engine, engine code ANY

From model year 2002

3-point relay carrier (in footwell)

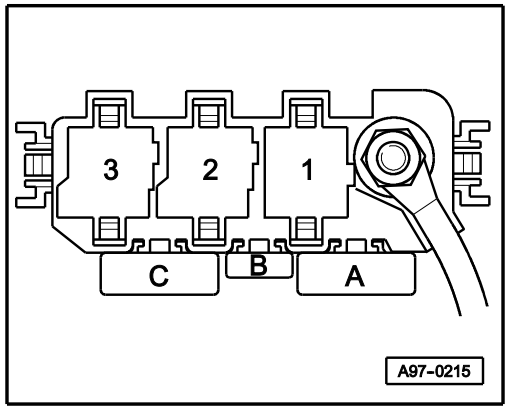

6+6-point relay carrier (in footwell)

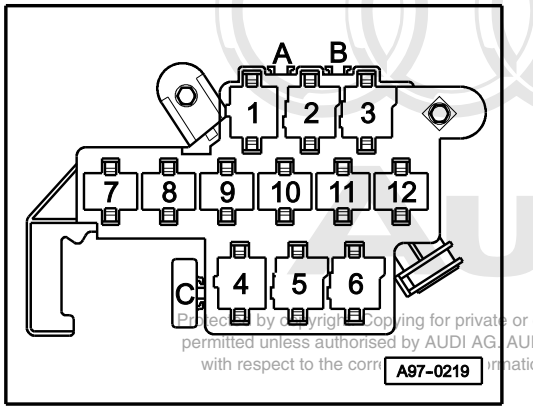

Position of relays:

2 - Automatic intermittent wash/wipe relay (J31)

3

Protected by copyright. Copying for private or commercial purposes, in part or in whole, is not permitted unless authorised by AUDI AG. AUDI AG does not guarantee or accept any liability with respect to the correctness of information in this document. Copyright by AUDI AG.

9-point relay carrier (in dash panel)

Fuse box

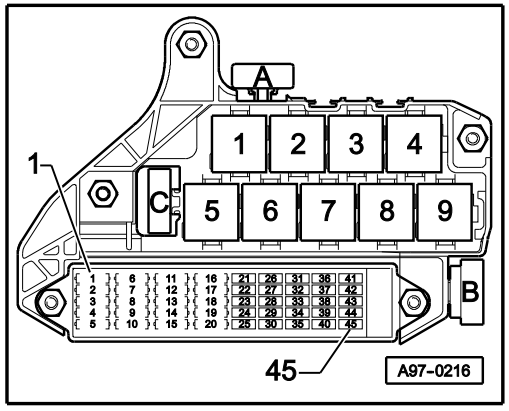

Position of fuses:

C - Radiator fan fuse (S205)

9 - X contact relief relay (J59)

Fuse colours

30 A – green
25 A – white
20 A – yellow
15 A – blue
10 A – red
7.5A – orange
5 A – beige

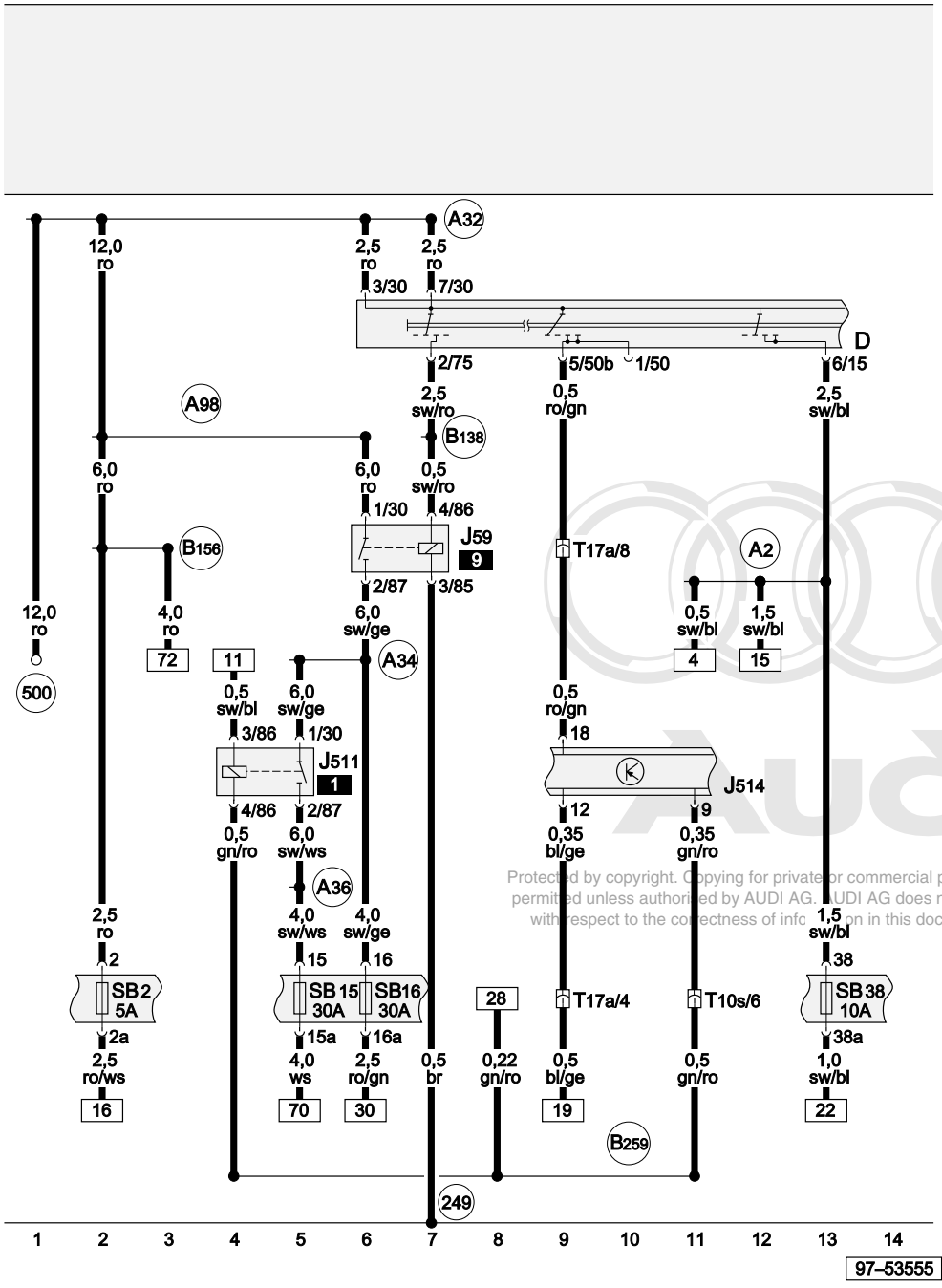

Protected by copyright. Copying for private or commercial purposes, in part or in whole, is not permitted unless authorised by AUDI AG. AUDI AG does not guarantee or accept any liability with respect to the correctness of information in this document. Copyright by AUDI AG.

ws = white
sw = black
ro = red
br = brown
gn = green
bl = blue
gr = grey
li = purple
ge = yellow
or = orange
rs = pink

Ignition/starter switch, X contact relief relay, consumer switch-off relay, fuse

D	Ignition/starter switch
J59	X contact relief relay
J511	Consumer switch-off relay
J514	Electronic manual gearbox control unit
SB2	Fuse -2- on fuse box
SB15	Fuse -15- on fuse box
SB16	Fuse -16- on fuse box
SB38	Fuse -38- on fuse box
T10s	10-pin connector, white, in footwell, front left
T17a	17-pin connector, red, in footwell, front left
249	Earth connection -2-, in interior wiring harness
500	Screw connection -1- (30), on relay plate
A2	Positive (+) connection (15), in dash panel wiring harness
A32	Positive (+) connection (30), in dash panel wiring harness
A34	Connection (75x), in dash panel wiring harness
A36	Connection (75a), in dash panel wiring harness
A98	Positive (+) connection -4- (30), in dash panel wiring harness
B138	Positive (+) connection (X), in interior wiring harness
B156	Positive (+) connection (30a), in interior wiring harness
B259	Connection (start/stop signal), in interior wiring harness

Control and display unit for air conditioner/Climatronic, voltage stabiliser, compressor regulating valve for air conditioning system

E87	Control and display unit for air conditioner/Climatronic
J226	Starter inhibitor and reversing light relay
J532	Voltage stabiliser
J570	Voltage stabiliser 2
N280	Compressor regulating valve, air conditioning system
T8a	8-pin connector, black, radio connector III
T17e	17-pin connector, blue, in footwell, front left
284	Earth connection -6-, in interior wiring harness
A46	Positive (+) connection (30 - from radio), in dash panel wiring harness
B135	Connection -1- (15a), in interior wiring harness
B163	Positive (+) connection -1- (15), in interior wiring harness
B169	Positive (+) connection -1- (30), in interior wiring harness
B171	Positive (+) connection -3- (30), in interior wiring harness

Protected by copyright. Copying for private or commercial purposes, in part or in whole, is not permitted unless authorised by AUDI AG. AUDI AG does not guarantee or accept any liability with respect to the correctness of information in this document. Copyright by AUDI AG.

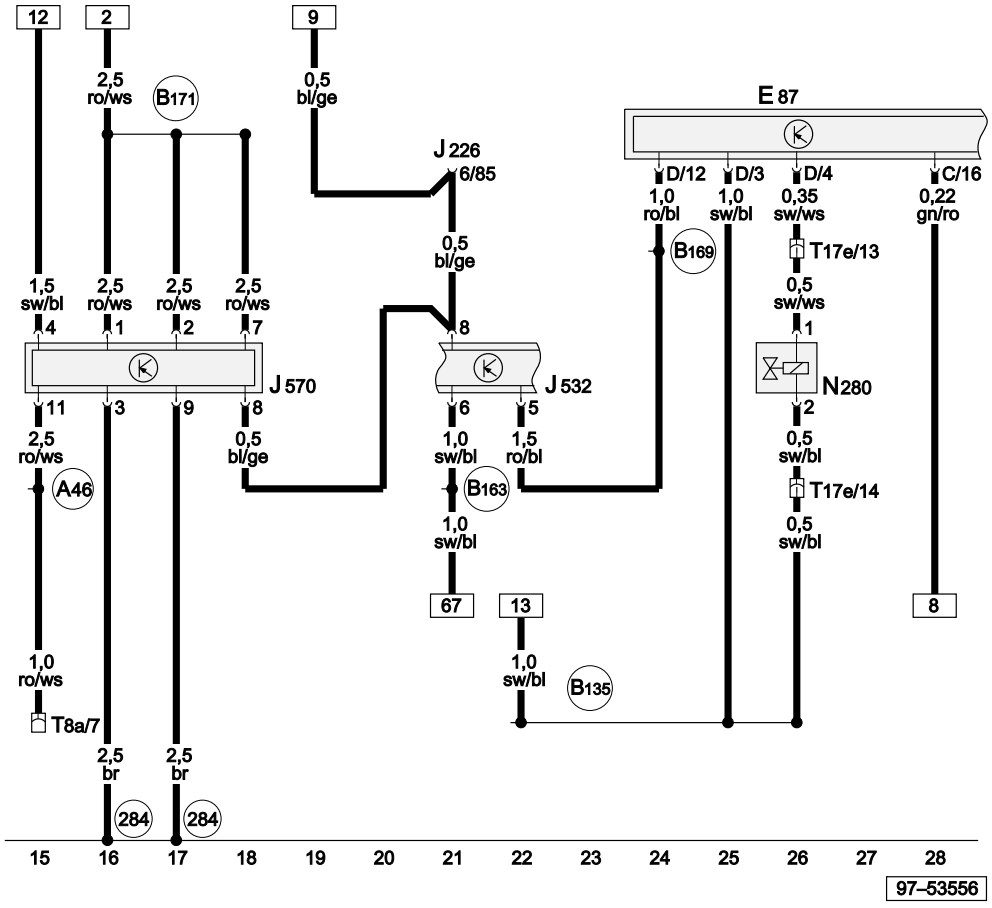

ws	=	white
sw	=	black
ro	=	red
br	=	brown
gn	=	green
bl	=	blue
gr	=	grey
li	=	purple
ge	=	yellow
or	=	orange
rs	=	pink

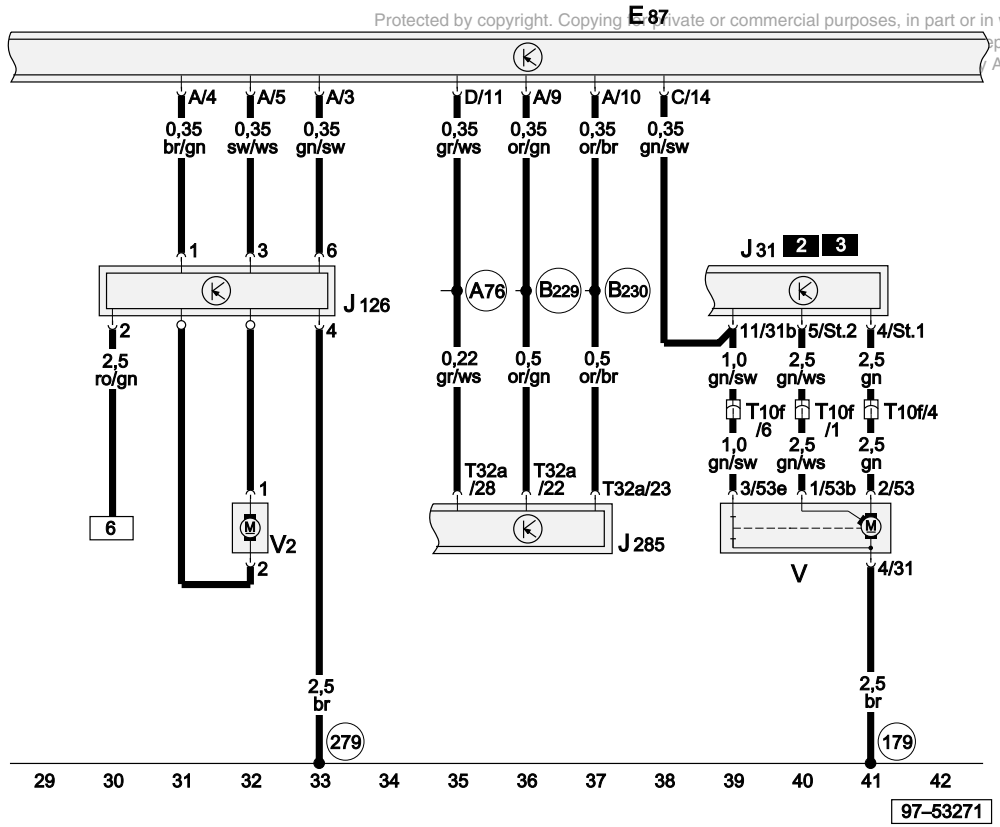

Protected by copyright. Copying for private or commercial purposes, in part or in whole, is not ... ept any liability ... AUDI AG.

ws = white
sw = black
ro = red
br = brown
gn = green
bl = blue
gr = grey
li = purple
ge = yellow
or = orange
rs = pink

Control and display unit for air conditioner/Climatronic, fresh air blower control unit

E87	Control and display unit for air conditioner/Climatronic
J31	Automatic intermittent wash/wipe relay
J126	Fresh air blower control unit
J285	Control unit with display in dash panel insert
T10f	10-pin connector, blue, connector point, A pillar, left
T32a	32-pin connector, green, on dash panel insert
V	Windscreen wiper motor
V2	Fresh air blower
179	Earth connection, in left headlight wiring harness
279	Earth connection -5-, in interior wiring harness
A76	Connection (diagnosis wire K), in dash panel wiring harness
B229	Connection (high bus), in interior wiring harness
B230	Connection (low bus), in interior wiring harness

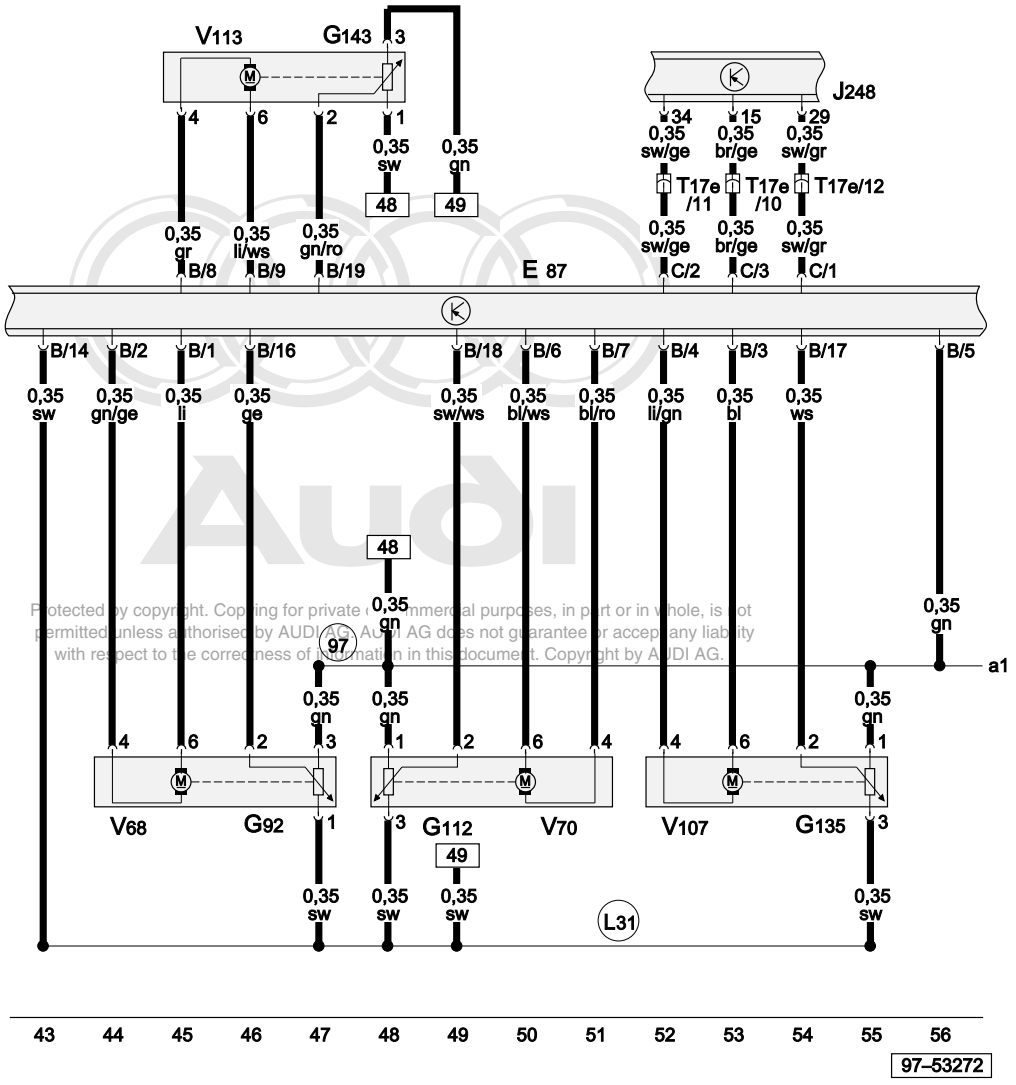

Protected by copyright. Copying for private or commercial purposes, in part or in whole, is not permitted unless authorised by AUDI AG. Audi AG does not guarantee or accept any liability with respect to the correctness of information in this document. Copyright by AUDI AG.

Control and display unit for air conditioner/Climatronic, potentiometer, control motor

E87	Control and display unit for air conditioner/Climatronic
G92	Control motor potentiometer, temperature flap
G112	Control motor potentiometer, central flap
G135	Control motor potentiometer, defroster flap
G143	Control motor potentiometer, air recirculation flap
J248	Diesel direct injection system control unit
T17e	17-pin connector, blue, in footwell, front left
V68	Temperature flap control motor
V70	Central flap control motor
V107	Defroster flap control motor
V113	Air recirculation flap control motor
97	Earth connection -1-, in air conditioner wiring harness
L31	Connection (5V), in air conditioner wiring harness

ws	=	white
sw	=	black
ro	=	red
br	=	brown
gn	=	green
bl	=	blue
gr	=	grey
li	=	purple
ge	=	yellow
or	=	orange
rs	=	pink

Control and display unit for air conditioner/Climatronic, air conditioner pressure switch, ambient temperature sensor

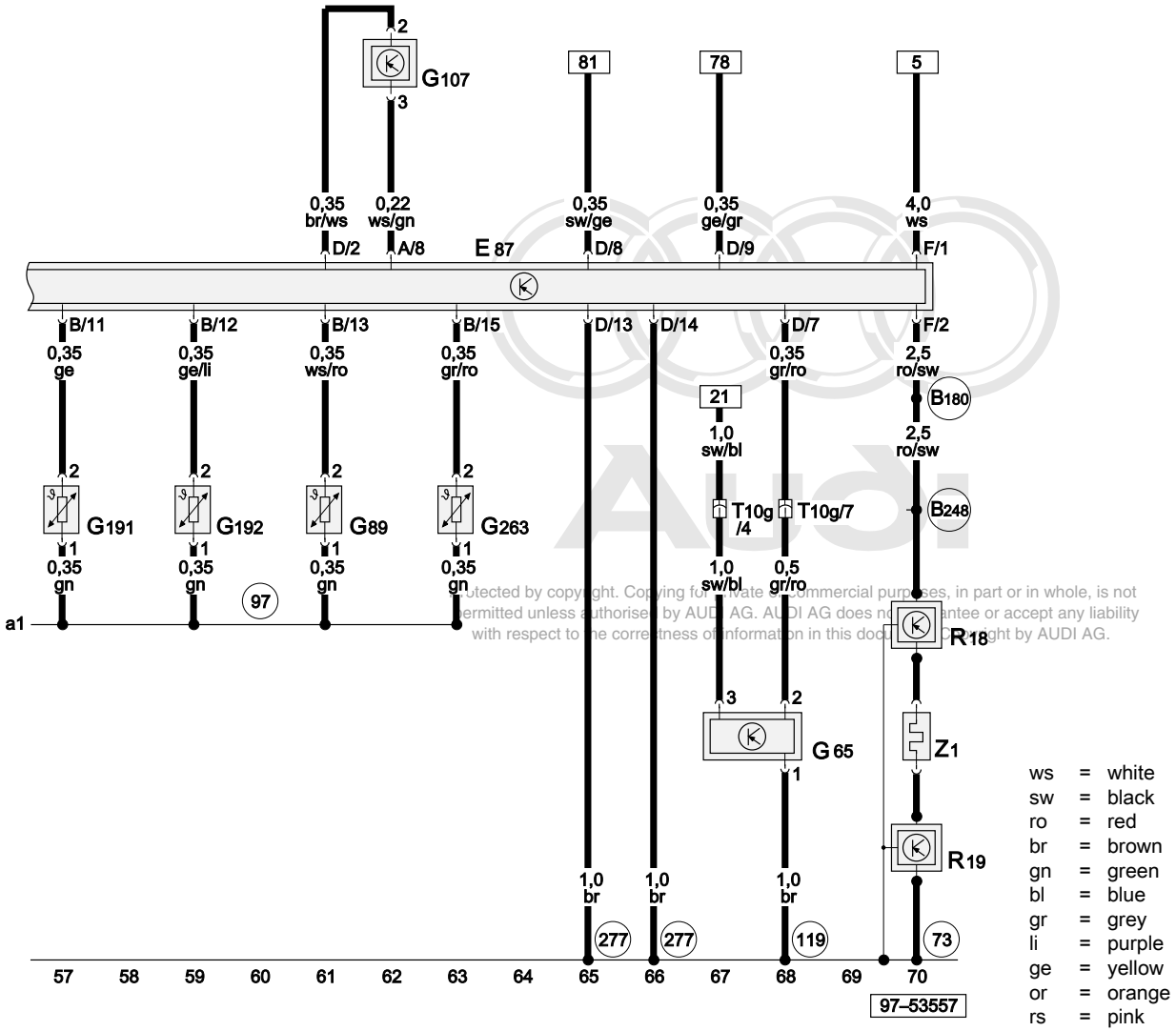

ws	=	white
sw	=	black
ro	=	red
br	=	brown
gn	=	green
bl	=	blue
gr	=	grey
li	=	purple
ge	=	yellow
or	=	orange
rs	=	pink

E87	Control and display unit for air conditioner/Climatronic
G65	High pressure sender
G89	Fresh air intake duct temperature sensor
G107	Sunlight penetration photo sensor
G191	Vent temperature sender, centre
G192	Vent temperature sender, footwell
G263	Evaporator outflow temperature sender
R18	Frequency switch, left
R19	Frequency switch, right
T10g	10-pin connector, grey, connector point, A pillar, left
Z1	Heated rear window
73	Earth point, rear roof rail
119	Earth connection -1-, in headlight wiring harness
97	Earth connection -1-, in air conditioner wiring harness
277	Earth connection -3-, in interior wiring harness
B180	Connection (heated rear window), in interior wiring harness
B248	Connection -2- (heated rear window), in interior wiring harness

Protected by copyright. Copying for private or commercial purposes, in part or in whole, is not permitted unless authorised by AUDI AG. AUDI AG does not guarantee or accept any liability with respect to the correctness of information in this document. Copyright by AUDI AG.

Radiator fan thermo-switches, radiator fan control unit

C	Alternator
F18	Radiator fan thermo-switch
F54	Radiator fan thermo-switch
J293	Radiator fan control unit
S205	Radiator fan fuse -2- (30)
T10f	10-pin connector, blue, connector point, A pillar, left
T10g	10-pin connector, grey, connector point, A pillar, left
T17e	17-pin connector, blue, in footwell, front left
T17g	17-pin connector, red, connector point, A pillar, left
V7	Radiator fan
44	Earth point, lower part of left A pillar
119	Earth connection -1-, in headlight wiring harness
B177	Connection (61), in interior wiring harness

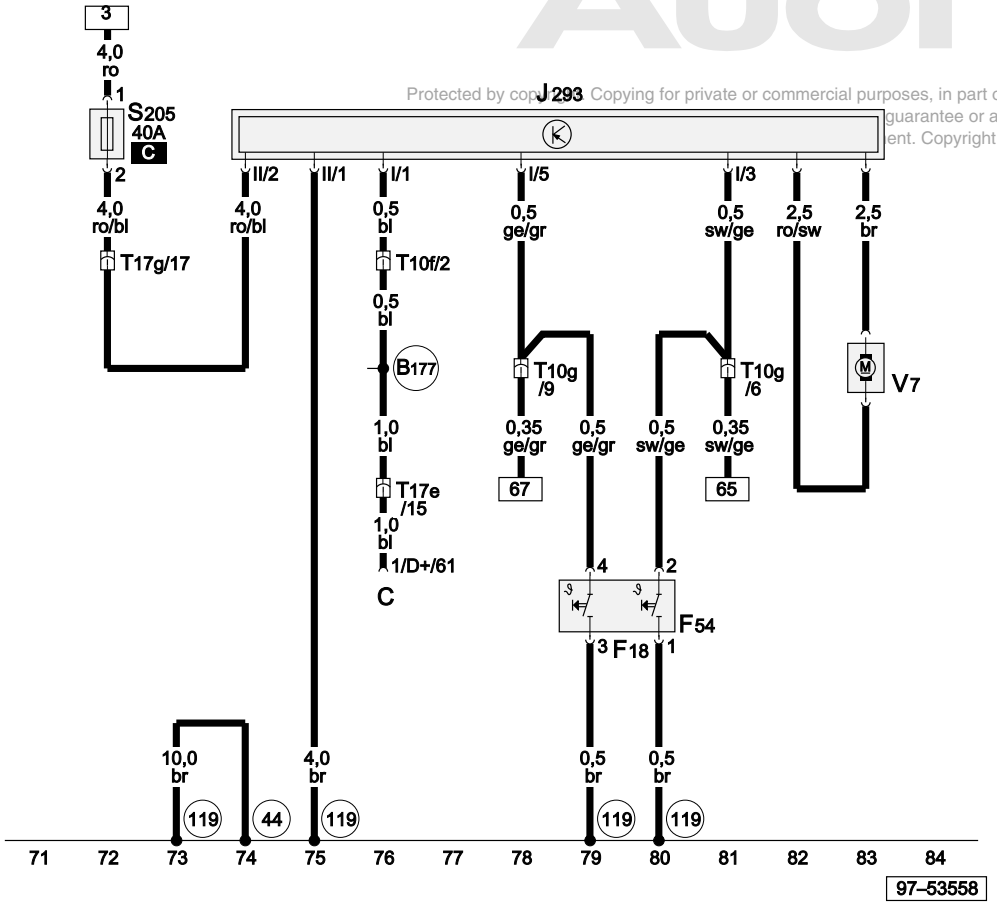

ws	=	white
sw	=	black
ro	=	red
br	=	brown
gn	=	green
bl	=	blue
gr	=	grey
li	=	purple
ge	=	yellow
or	=	orange
rs	=	pink

Protected by copyright. Copying for private or commercial purposes, in part or in whole, is not guarantee or accept any liability ent. Copyright by AUDI AG.

Convenience electrics

- Electrically adjustable and heated exterior mirrors
- Anti-theft alarm system
- Electric windows
- Interior lights
- Luggage compartment lights
- Central locking

From model year 2002

Main fuse

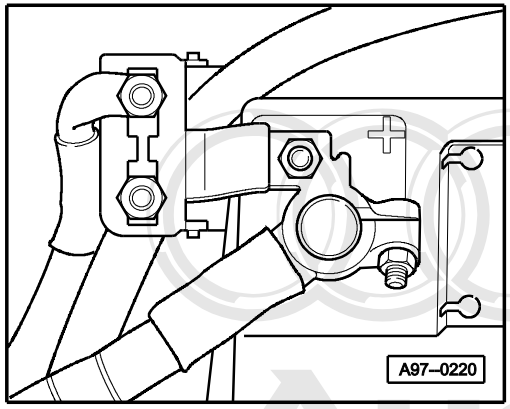

3-point relay carrier (in footwell)

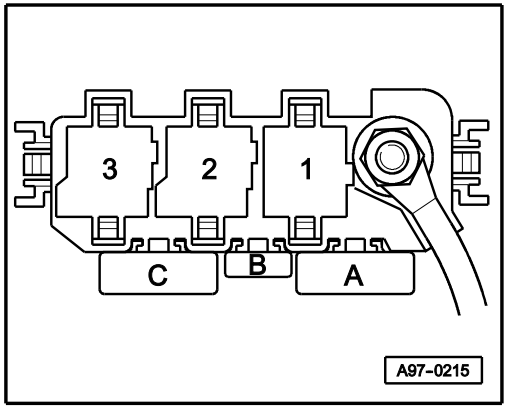

Protected by copyright. Copying for private or commercial purposes, in part or in whole, is not permitted unless authorised by AUDI AG. AUDI AG does not guarantee or accept any liability with respect to the correctness of information in this document. Copyright by AUDI AG.

9-point relay carrier (in dash panel)
Fuse box

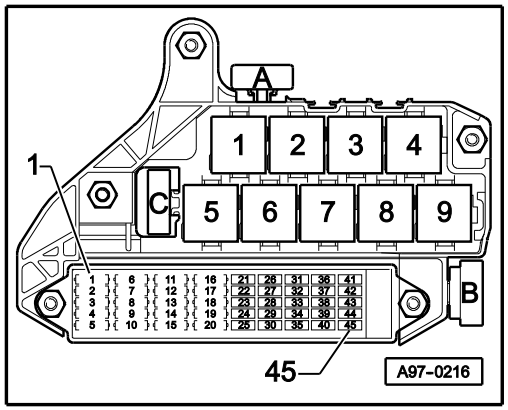

Connector carrier, A pillar, left

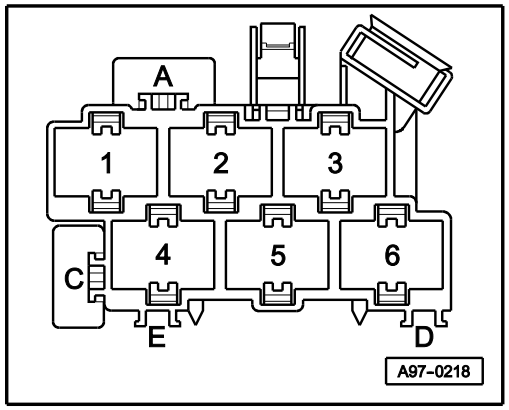

Connector carrier, A pillar, right

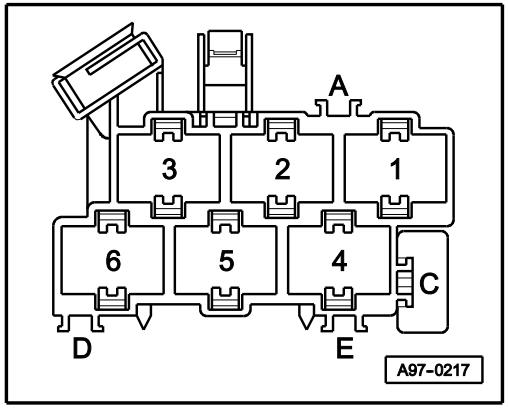

Fuse colours

30 A – green
25 A – white
20 A – yellow
15 A – blue
10 A – red
7.5A – orange
5 A – beige

A - Electric window single fuse (S37)

B - Electric window single fuse 2 (S280)

Protected by copyright. Copying for private or commercial purposes, in part or in whole, is not permitted unless authorised by AUDI AG. AUDI AG does not guarantee or accept any liability with respect to the correctness of information in this document. Copyright by AUDI AG.

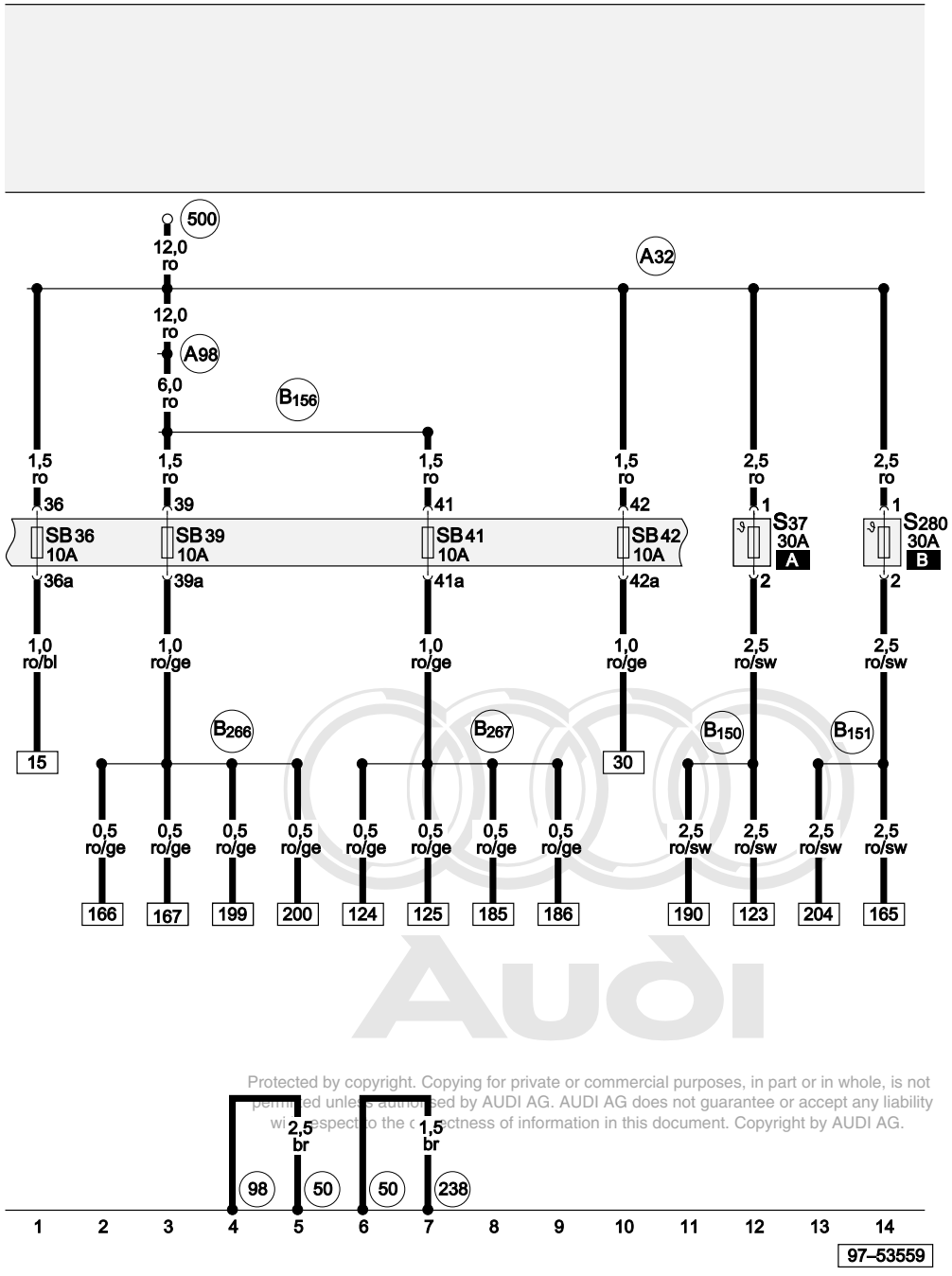

Protected by copyright. Copying for private or commercial purposes, in part or in whole, is not permitted unless authorised by AUDI AG. AUDI AG does not guarantee or accept any liability with respect to the correctness of information in this document. Copyright by AUDI AG.

ws = white
sw = black
ro = red
br = brown
gn = green
bl = blue
gr = grey
li = purple
ge = yellow
or = orange
rs = pink

Current supply

S37	Electric window single fuse
S280	Electric window single fuse 2
SB36	Fuse -36- on fuse box
SB39	Fuse -39- on fuse box
SB41	Fuse -41- on fuse box
SB42	Fuse -42- on fuse box
50	Earth point, luggage compartment, left
98	Earth connection, in tailgate/boot lid wiring harness
238	Earth connection -1-, in interior wiring harness
500	Screw connection -1- (30), on relay plate
A32	Positive (+) connection (30), in dash panel wiring harness
A98	Positive (+) connection -4- (30), in dash panel wiring harness
B150	Positive (+) connection -2- (30a), in interior wiring harness
B151	Positive (+) connection -3- (30a), in interior wiring harness
B156	Positive (+) connection -4- (30), in interior wiring harness
B266	Positive (+) connection -1- (30a, door control unit), in interior wiring harness
B267	Positive (+) connection -2- (30a, door control unit), in interior wiring harness

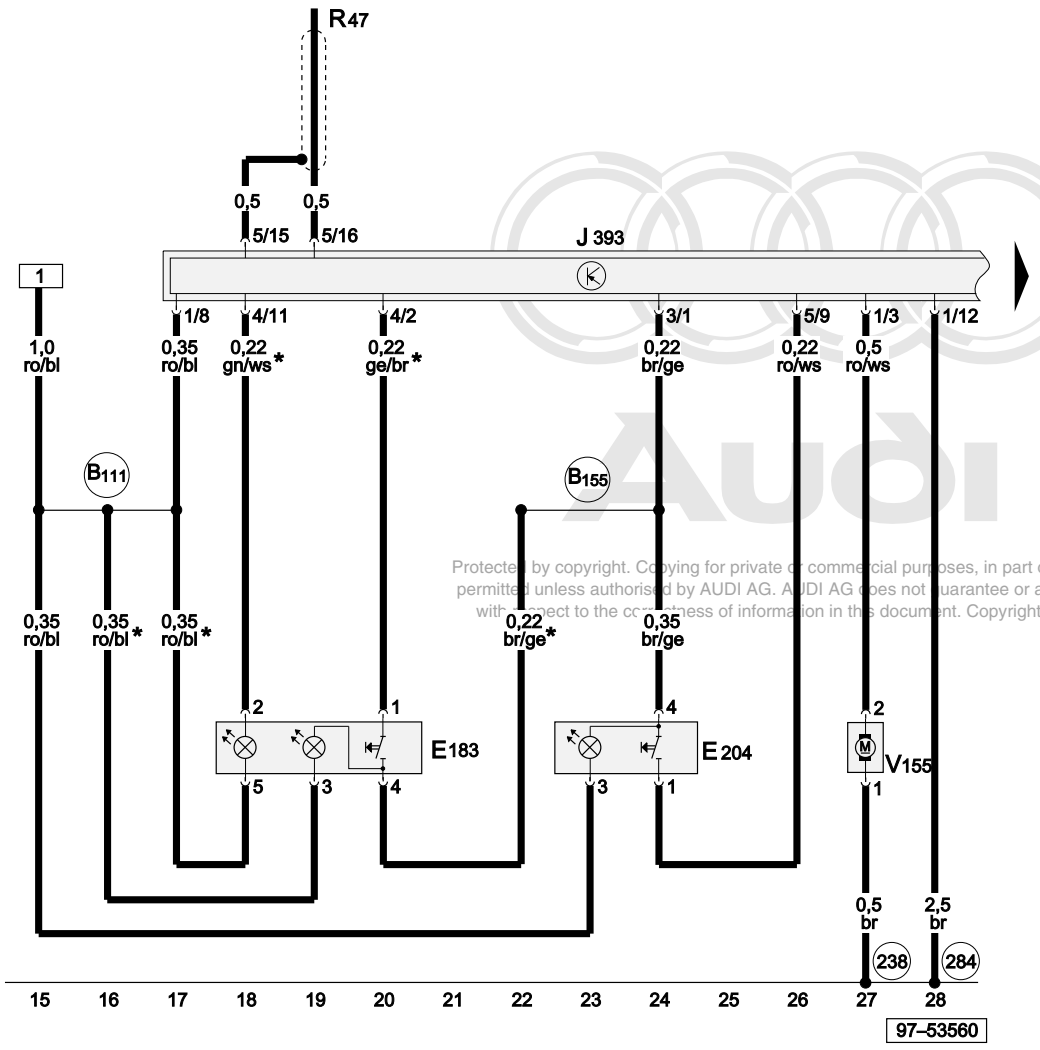

Protected by copyright. Copying for private or commercial purposes, in part or in whole, is not permitted unless authorised by AUDI AG. AUDI AG does not guarantee or accept any liability with respect to the correctness of information in this document. Copyright by AUDI AG.

ws = white
sw = black
ro = red
br = brown
gn = green
bl = blue
gr = grey
li = purple
ge = yellow
or = orange
rs = pink

Convenience system central control unit, tank filler flap remote release, interior monitor switch, aerial for central locking and anti-theft alarm system

E183	Interior monitor switch
E204	Tank filler flap remote release switch
J393	Convenience system central control unit
R47	Central locking and anti-theft alarm system aerial
V155	Tank filler flap release motor
238	Earth connection -1-, in interior wiring harness
284	Earth connection -6-, in interior wiring harness
B111	Positive (+) connection -1- (30a), in interior wiring harness
B155	Connection -2- (DC), in interior wiring harness
*	Only models with anti-theft alarm system

Convenience system central control unit, bonnet contact switch, anti-theft alarm ultra-sonic sensor, anti-theft alarm system horn

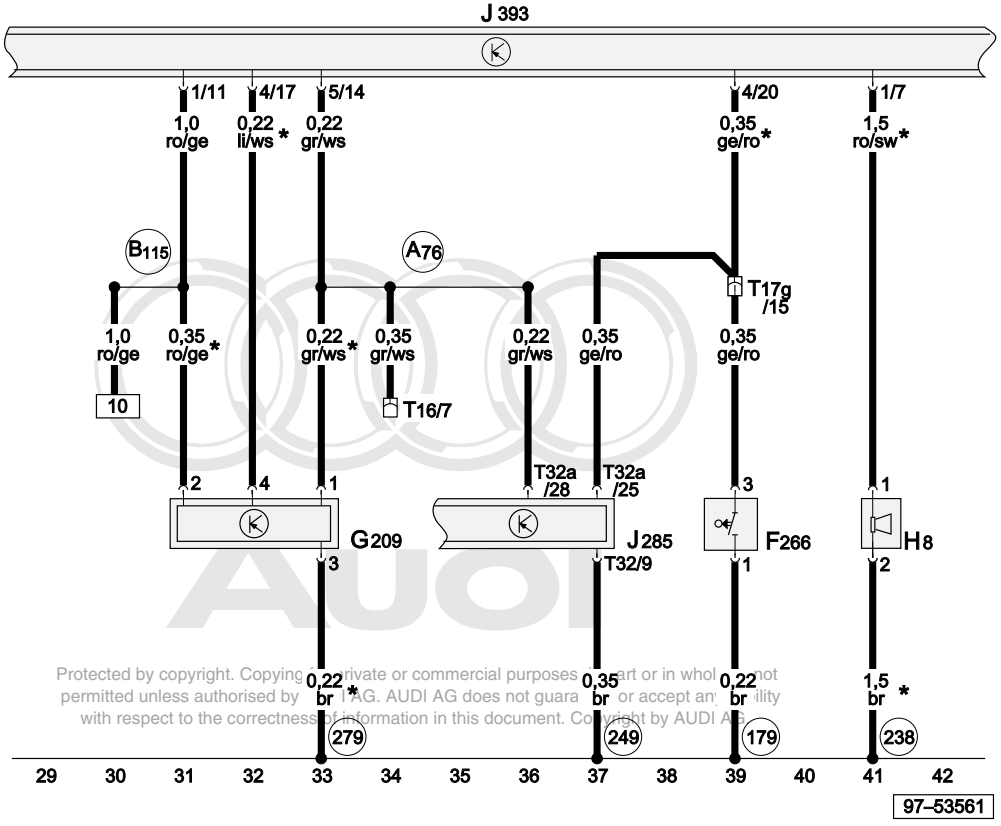

Protected by copyright. Copying for private or commercial purposes, in part or in whole, is not permitted unless authorised by AUDI AG. AUDI AG does not guarantee or accept any liability with respect to the correctness of information in this document. Copyright by AUDI AG.

F266	Bonnet contact switch
G209	Anti-theft alarm ultra-sonic sensor
H8	Anti-theft alarm system horn
J285	Control unit with display in dash panel insert
J393	Convenience system central control unit
T16	16-pin connector, black, diagnostic connector, near fuse box
T17g	17-pin connector, red, connector point, A pillar, left
T32	32-pin connector, blue, dash panel insert
T32a	32-pin connector, green, dash panel insert
179	Earth connection, in left headlight wiring harness
238	Earth connection -1-, in interior wiring harness
249	Earth connection -2-, in interior wiring harness
279	Earth connection -5-, in interior wiring harness
A76	Connection (diagnosis wire K), in dash panel wiring harness
B115	Positive (+) connection (30, central electrics), in interior wiring harness
*	Only models with anti-theft alarm system

ws	=	white
sw	=	black
ro	=	red
br	=	brown
gn	=	green
bl	=	blue
gr	=	grey
li	=	purple
ge	=	yellow
or	=	orange
rs	=	pink

Convenience system central control unit, glass breakage sensor for rear window, tailgate/boot lid unlocking

E15	Heated rear window switch
F4	Reversing light switch
G304	Glass breakage sensor, rear window
J2	Hazard warning light relay
J234	Airbag control unit
J393	Convenience system central control unit
R	Radio
M16	Reversing light bulb, left
M17	Reversing light bulb, right
T17e	17-pin connector, blue, in footwell, front left
Z1	Heated rear window
73	Earth point, rear roof rail
A87	Connection (reversing light), in dash panel wiring harness
A125	Connection (crash signal), in dash panel wiring harness
B108	Earth connection, in interior wiring harness, rear right
B248	Connection -2- (heated rear window), in interior wiring harness
*	Only models with anti-theft alarm system
**	Does not apply to models with air conditioner

Protected by copyright. Copying for private or commercial purposes, in part or whole, is not permitted unless authorised by AUDI AG. AUDI AG does not guarantee or accept any liability with respect to the correctness of information in this document. Copyright by AUDI AG.

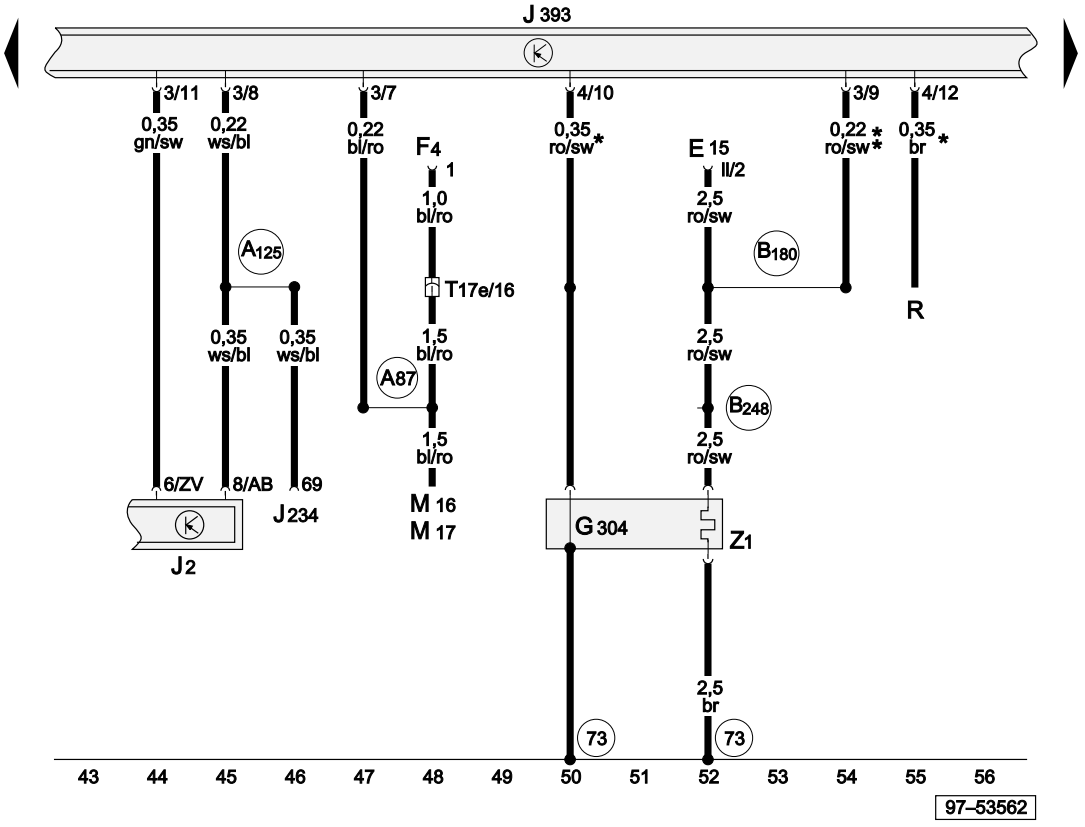

ws	=	white
sw	=	black
ro	=	red
br	=	brown
gn	=	green
bl	=	blue
gr	=	grey
li	=	purple
ge	=	yellow
or	=	orange
rs	=	pink

Convenience system central control unit, front interior light, luggage compartment light, rear interior light

E1	Lighting switch
J393	Convenience system central control unit
W	Interior light, front
W13	Front passenger reading lamp
W18	Luggage compartment light, left
W19	Reading lamp, driver's side
W43	Rear interior light
249	Earth connection -2-, in interior wiring harness
A29	Connection (interior light), in dash panel wiring harness
B145	Positive (+) connection (58b), in interior wiring harness

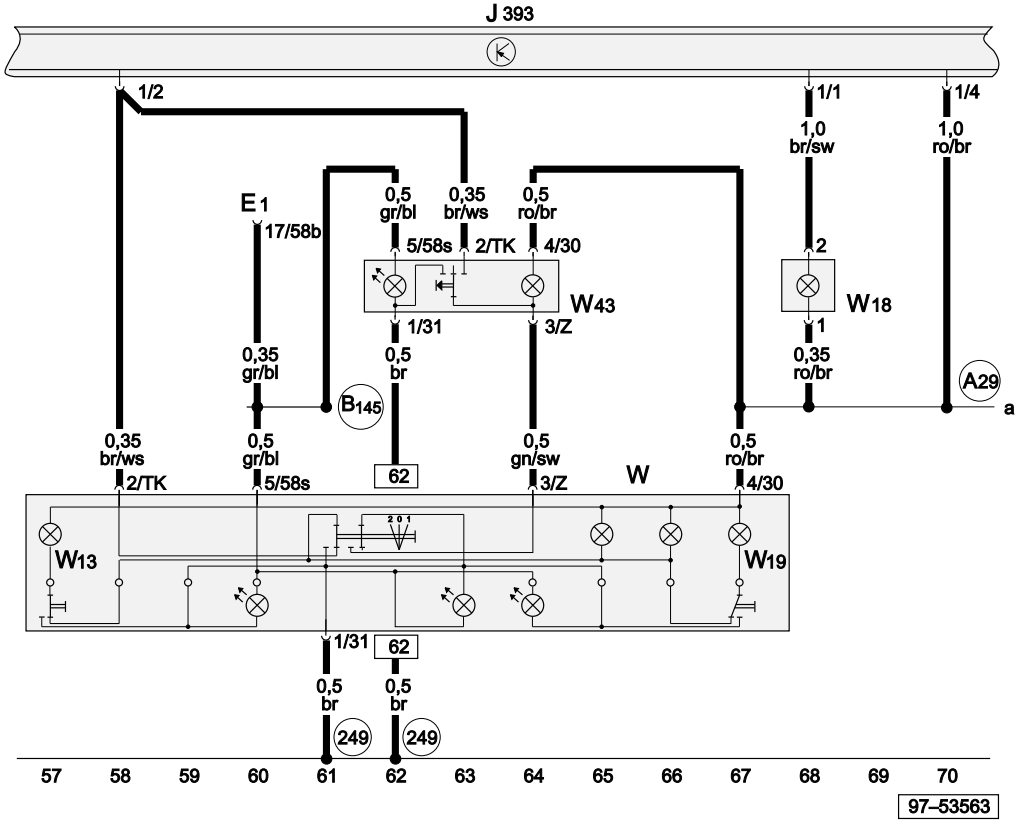

ws	=	white
sw	=	black
ro	=	red
br	=	brown
gn	=	green
bl	=	blue
gr	=	grey
li	=	purple
ge	=	yellow
or	=	orange
rs	=	pink

Protected by copyright. Copying for private or commercial purposes, in part or in whole, is not permitted unless authorised by AUDI AG. AUDI AG does not guarantee or accept any liability with respect to the correctness of information in this document. Copyright by AUDI AG.

Convenience system central control unit, tailgate/boot lid contact switch for anti-theft alarm, tailgate/boot lid unlocking

F9	Handbrake warning switch
F123	Tailgate/boot lid contact switch for anti-theft alarm
F147	Vanity mirror contact switch, driver's side
F148	Vanity mirror contact switch, front passenger's side
F248	Release button for tailgate/boot lid lock cylinder
J393	Convenience system central control unit
J534	Handbrake warning lamp control unit
L31	Vanity mirror light bulb
98	Earth connection, in tailgate/boot lid wiring harness
238	Earth connection -1-, in interior wiring harness
279	Earth connection -5-, in interior wiring harness
A24	Connection (brake system monitoring), in dash panel wiring harness
A29	Connection (interior light), in dash panel wiring harness
*	Only models with illuminated vanity mirrors
**	Only applies to 1.2 litre TDI engines

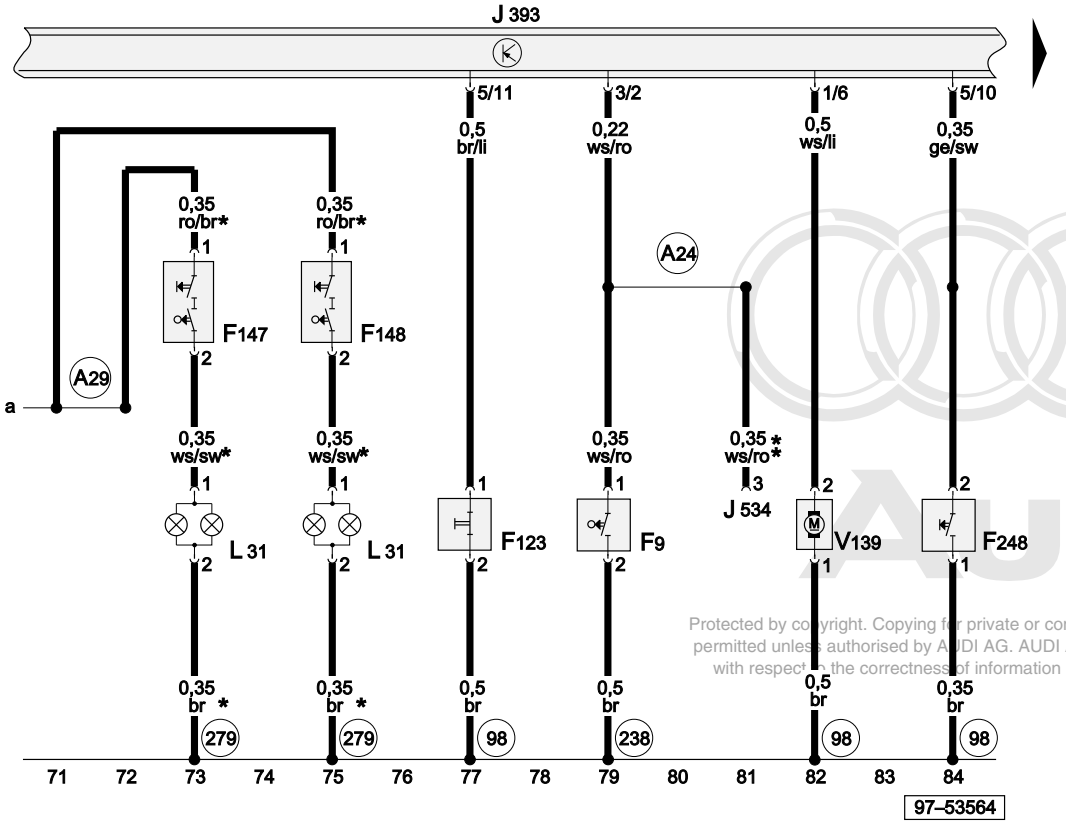

ws = white
sw = black
ro = red
br = brown
gn = green
bl = blue
gr = grey
li = purple
ge = yellow
or = orange
rs = pink

Protected by copyright. Copying for private or commercial purposes, in part or in whole, is not permitted unless authorised by AUDI AG. AUDI AG does not guarantee or accept any liability with respect to the correctness of information in this document. Copyright by AUDI AG.

Convenience system central control unit, rear left central locking lock unit (without rear electric windows)

F10	Rear left door contact switch
F132	Central locking actuator, rear left
F222	Central locking lock unit, rear left
F245	Central locking actuator (Safe), rear left door
J393	Convenience system central control unit
T8c	8-pin connector, black, door, rear left
T20c	20-pin connector, black, at B pillar, left
V115	Central locking motor, rear left door
V163	Central locking motor (Safe), rear left door
238	Earth connection -1-, in interior wiring harness

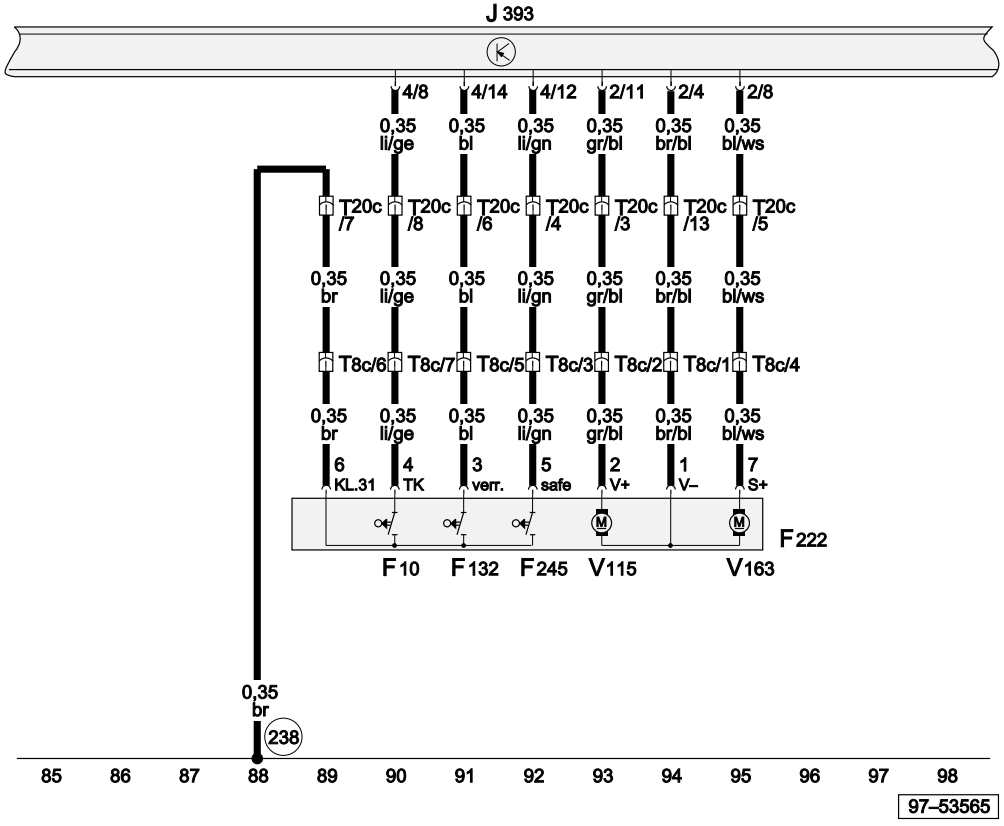

ws	=	white
sw	=	black
ro	=	red
br	=	brown
gn	=	green
bl	=	blue
gr	=	grey
li	=	purple
ge	=	yellow
or	=	orange
rs	=	pink

Protected by copyright. Copying for private or commercial purposes, in part or in whole, is not permitted unless authorised by AUDI AG. AUDI AG does not guarantee or accept any liability with respect to the correctness of information in this document. Copyright by AUDI AG.

Convenience system central control unit, rear right central locking lock unit (without rear electric windows)

F11	Rear right door contact switch
F134	Central locking actuator, rear right
F223	Central locking lock unit, rear right
F246	Central locking actuator (Safe), rear right door
J393	Convenience system central control unit
T8d	8-pin connector, black, door, rear right
T20d	20-pin connector, black, at B pillar, right
V97	Central locking motor, rear right door
V164	Central locking motor (Safe), rear right door
279	Earth connection -5-, in interior wiring harness

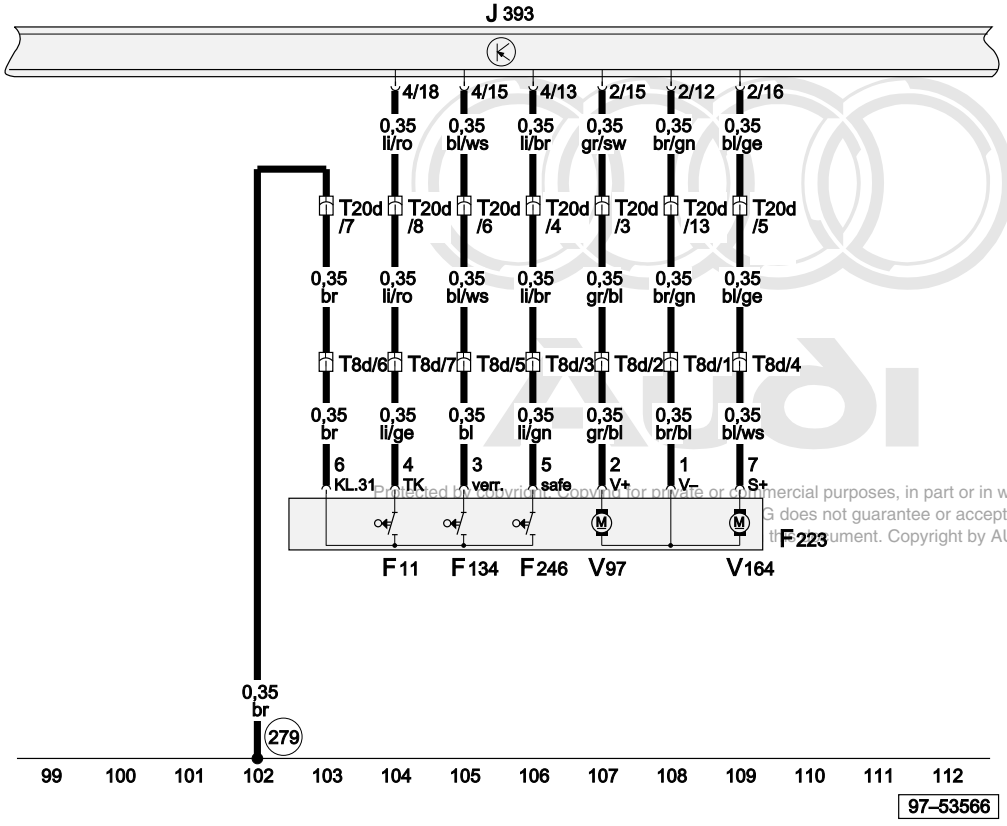

Protected by copyright. Copying for private or commercial purposes, in part or in whole, is not ... does not guarantee or accept any liability ... document. Copyright by AUDI AG.

ws	=	white
sw	=	black
ro	=	red
br	=	brown
gn	=	green
bl	=	blue
gr	=	grey
li	=	purple
ge	=	yellow
or	=	orange
rs	=	pink

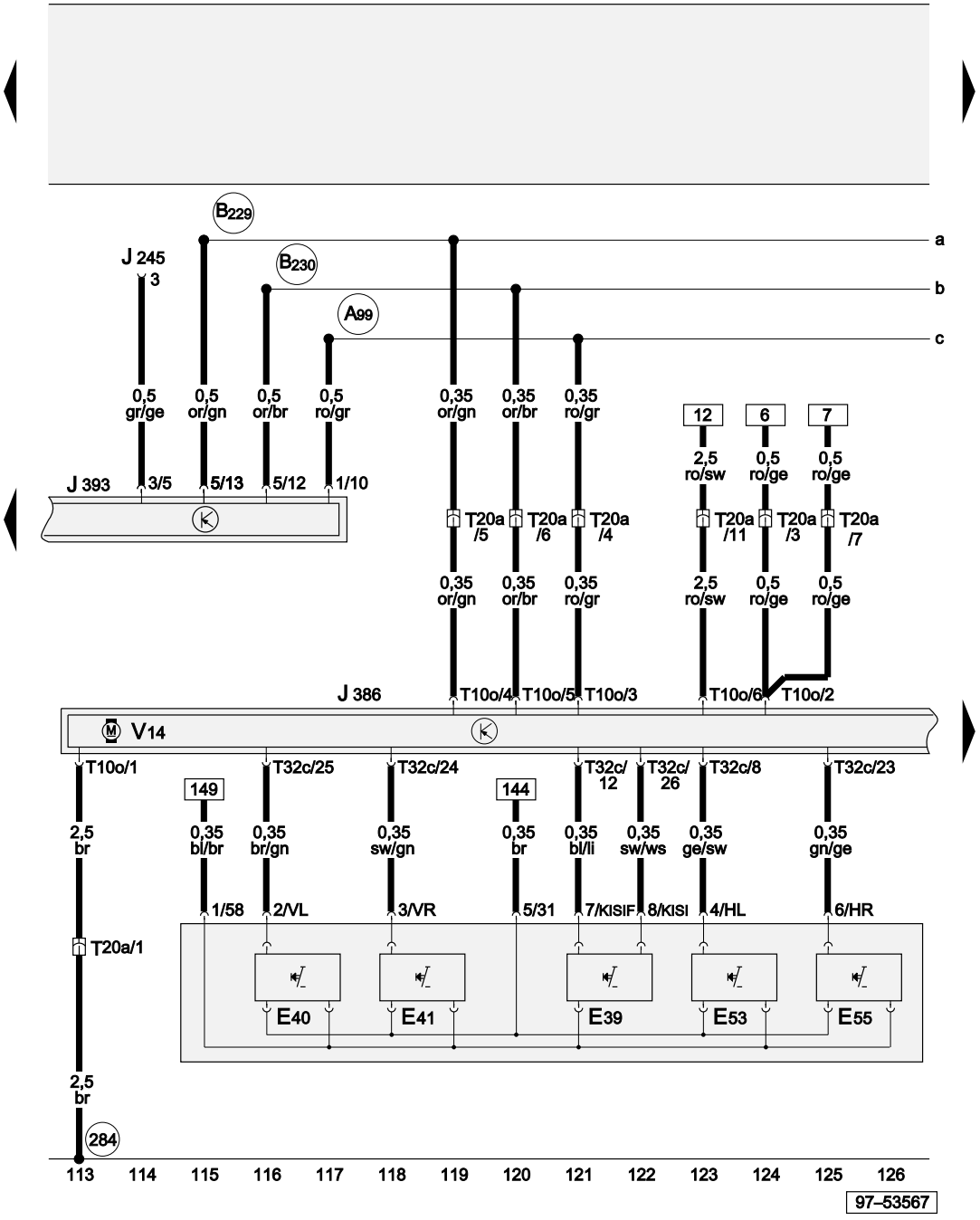

ws = white
sw = black
ro = red
br = brown
gn = green
bl = blue
gr = grey
li = purple
ge = yellow
or = orange
rs = pink

Door control unit on driver's side, convenience system central control unit, electric window motor, left

E39	Rear electric window isolation switch
E40	Front left electric window switch
E41	Front right electric window switch
E53	Rear left electric window switch, driver's side
E55	Rear right electric window switch, driver's side
J386	Door control unit, driver's side
J393	Convenience system central control unit
J245	Sliding sunroof adjustment control unit
T10o	10-pin connector, black, door control unit, driver's door
T20a	20-pin connector, black, at B pillar, left
T32c	32-pin connector, grey, door control unit, driver's door
V14	Electric window motor, left
284	Earth connection -6-, in interior wiring harness
A99	Connection -1- (87), in dash panel wiring harness
B229	Connection (high bus), in interior wiring harness
B230	Connection (low bus), in interior wiring harness

Protected by copyright. Copying for private or commercial purposes, in part or in whole, is not permitted unless authorised by AUDI AG. AUDI AG does not guarantee or accept any liability with respect to the correctness of information in this document. Copyright by AUDI AG.

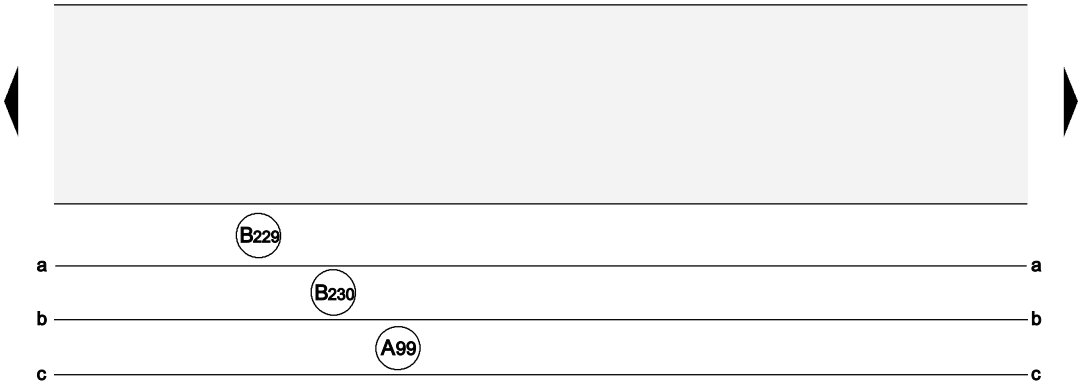

Door control unit on driver's side, central locking lock unit on driver's side, door contact switch on driver's side

F2	Door contact switch, driver's side
F131	Central locking actuator, front left
F220	Central locking lock unit, driver's side
F241	Contact switch in lock cylinder, driver's side
F243	Central locking actuator (Safe), driver's door
J386	Door control unit, driver's side
T12	12-pin connector, black, on door control unit, driver's side
V56	Central locking motor, driver's door
V161	Central locking motor (Safe), driver's door
A99	Connection -1- (87), in dash panel wiring harness
B229	Connection (high bus), in interior wiring harness
B230	Connection (low bus), in interior wiring harness

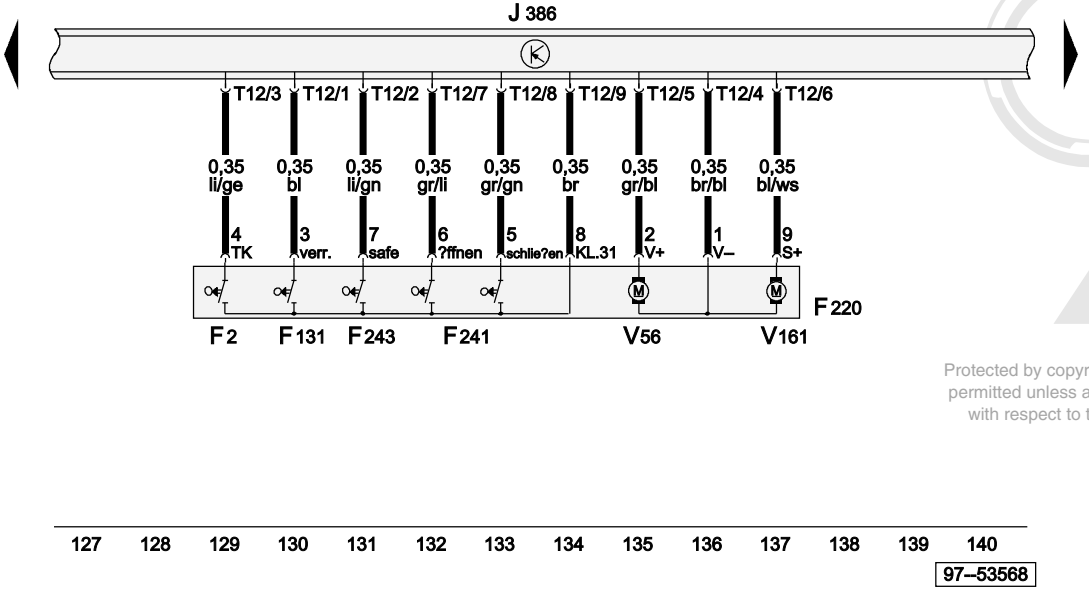

ws = white
sw = black
ro = red
br = brown
gn = green
bl = blue
gr = grey
li = purple
ge = yellow
or = orange
rs = pink

Protected by copyright. Copying for private or commercial purposes, in part or in whole, is not permitted unless authorised by AUDI AG. AUDI AG does not guarantee or accept any liability with respect to the correctness of information in this document. Copyright by AUDI AG.

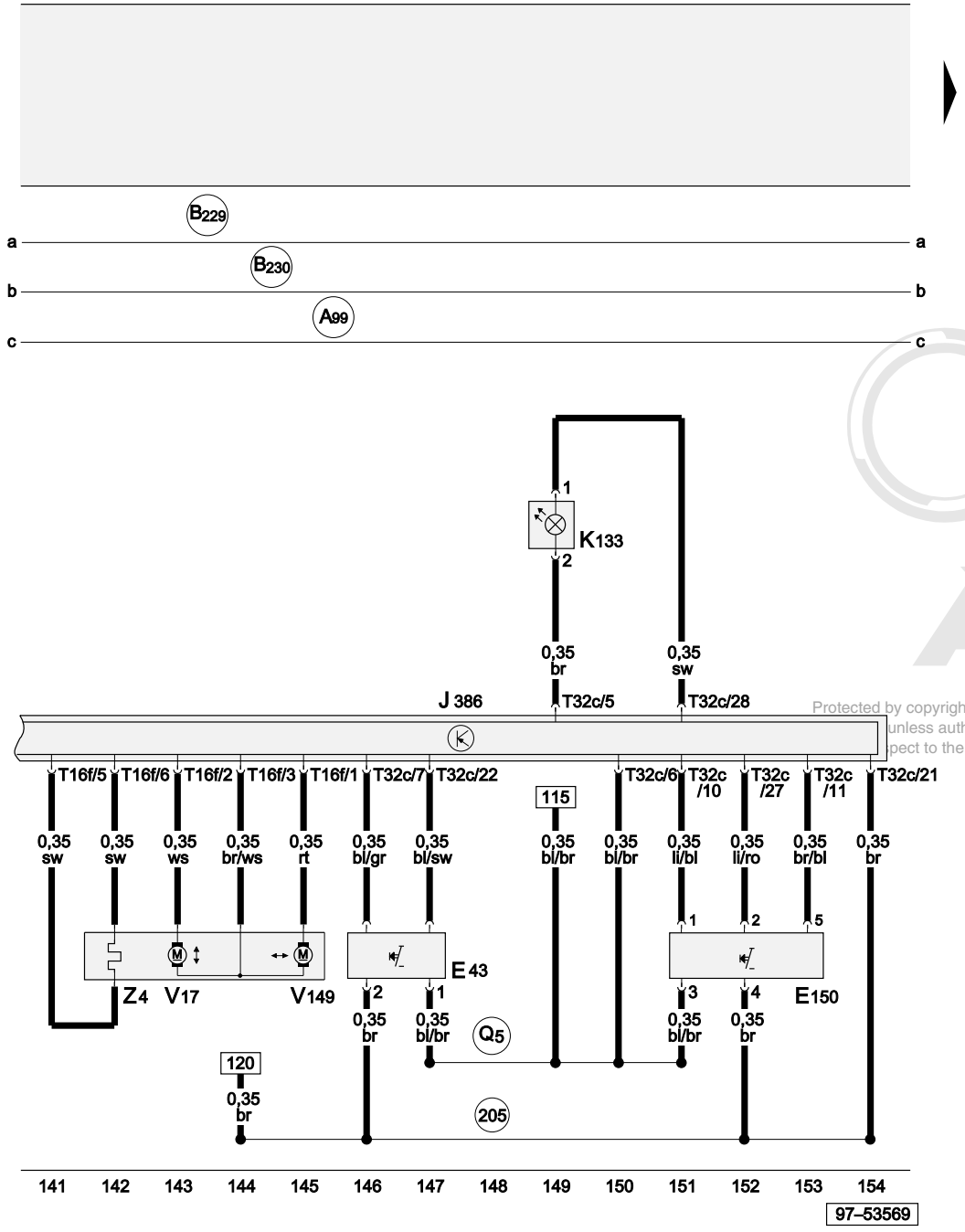

Door control unit on driver's side, mirror adjustment motor on driver's side, heated exterior mirror on driver's side

E43	Mirror adjustment switch
E150	Interior locking switch, driver's side
J386	Door control unit, driver's side
K133	Central locking warning lamp -SAFE-
T16f	16-pin connector, door control unit, driver's door
T32c	32-pin connector, grey, door control unit, driver's door
V17	Mirror adjustment motor, driver's side
V149	Mirror adjustment motor, driver's side
Z4	Heated exterior mirror, driver's side
205	Earth connection, in door wiring harness - driver's side
A99	Connection -1- (87), in dash panel wiring harness
B229	Connection (high bus), in interior wiring harness
B230	Connection (low bus), in interior wiring harness
Q5	Positive (+) connection (58), in electric window/central locking and door contact switch wiring harness

Protected by copyright. Copying for private or commercial purposes, in part or in whole, is not unless authorised by AUDI AG. AUDI AG does not guarantee or accept any liability pect to the correctness of information in this document. Copyright by AUDI AG.

ws	=	white
sw	=	black
ro	=	red
br	=	brown
gn	=	green
bl	=	blue
gr	=	grey
li	=	purple
ge	=	yellow
or	=	orange
rs	=	pink

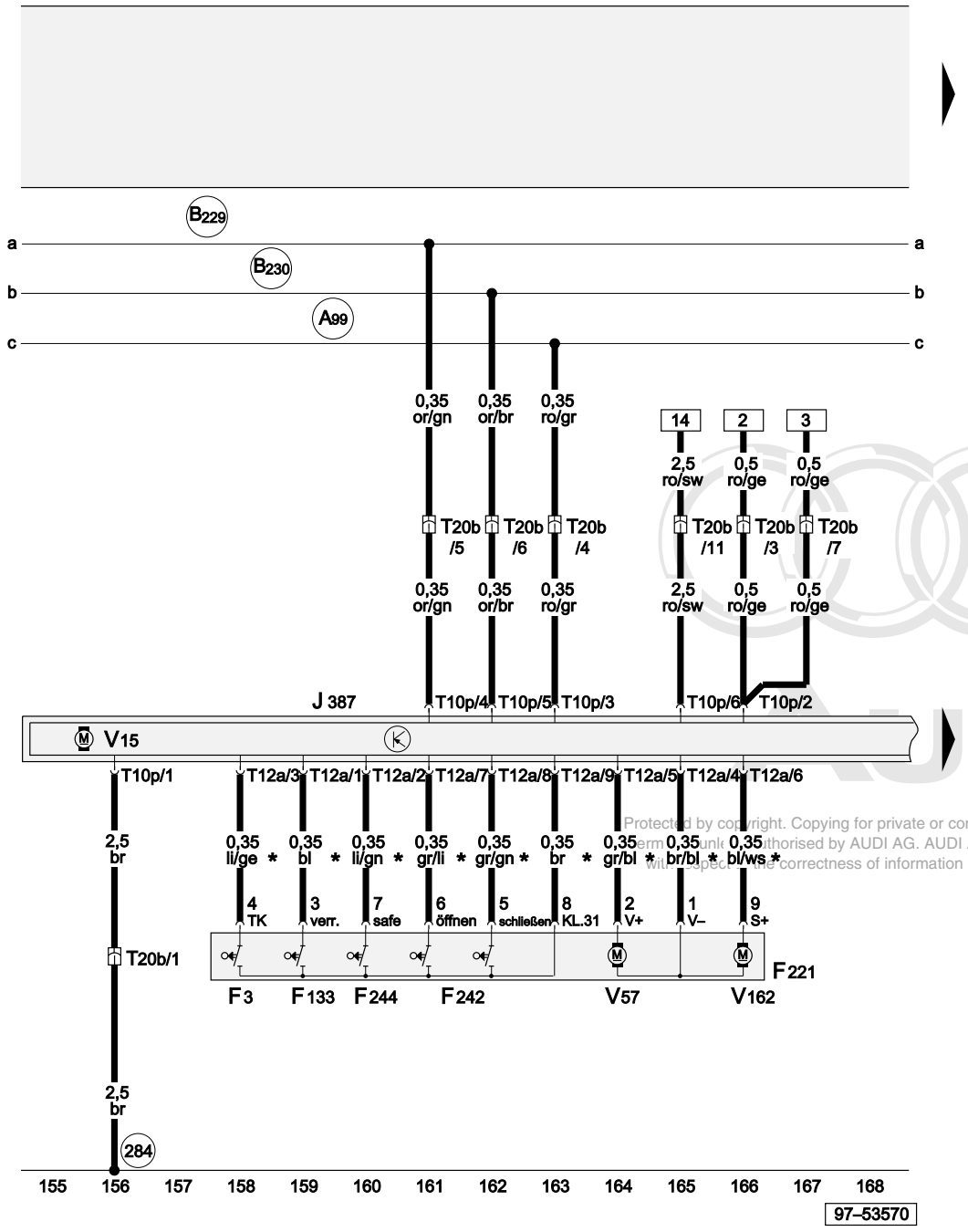

Door control unit on front passenger's side, central locking lock unit on front passenger's side, door contact switch on front passenger's side, electric window motor, right

F3	Door contact switch, front passenger's side
F133	Central locking actuator, front right
F221	Central locking lock unit, front passenger's side
F242	Contact switch in lock cylinder, front passenger's side
F244	Central locking actuator (Safe), front passenger's door
J387	Door control unit, front passenger's side
T10p	10-pin connector, black, door, front right
T12a	12-pin connector, black, on door control unit, front passenger's side
T20b	20-pin connector, black, at A pillar, right
V15	Electric window motor, right
V57	Central locking motor, front passenger's door
V162	Central locking motor (Safe), front passenger's door
284	Earth connection -6-, in interior wiring harness
A99	Connection -1- (87), in dash panel wiring harness
B229	Connection (high bus), in interior wiring harness
B230	Connection (low bus), in interior wiring harness
*	Without remote control for central locking system

ws	=	white
sw	=	black
ro	=	red
br	=	brown
gn	=	green
bl	=	blue
gr	=	grey
li	=	purple
ge	=	yellow
or	=	orange
rs	=	pink

Protected by copyright. Copying for private or commercial purposes, in part or in whole, is not permitted unless authorised by AUDI AG. AUDI AG does not guarantee or accept any liability with respect to the correctness of information in this document. Copyright by AUDI AG.

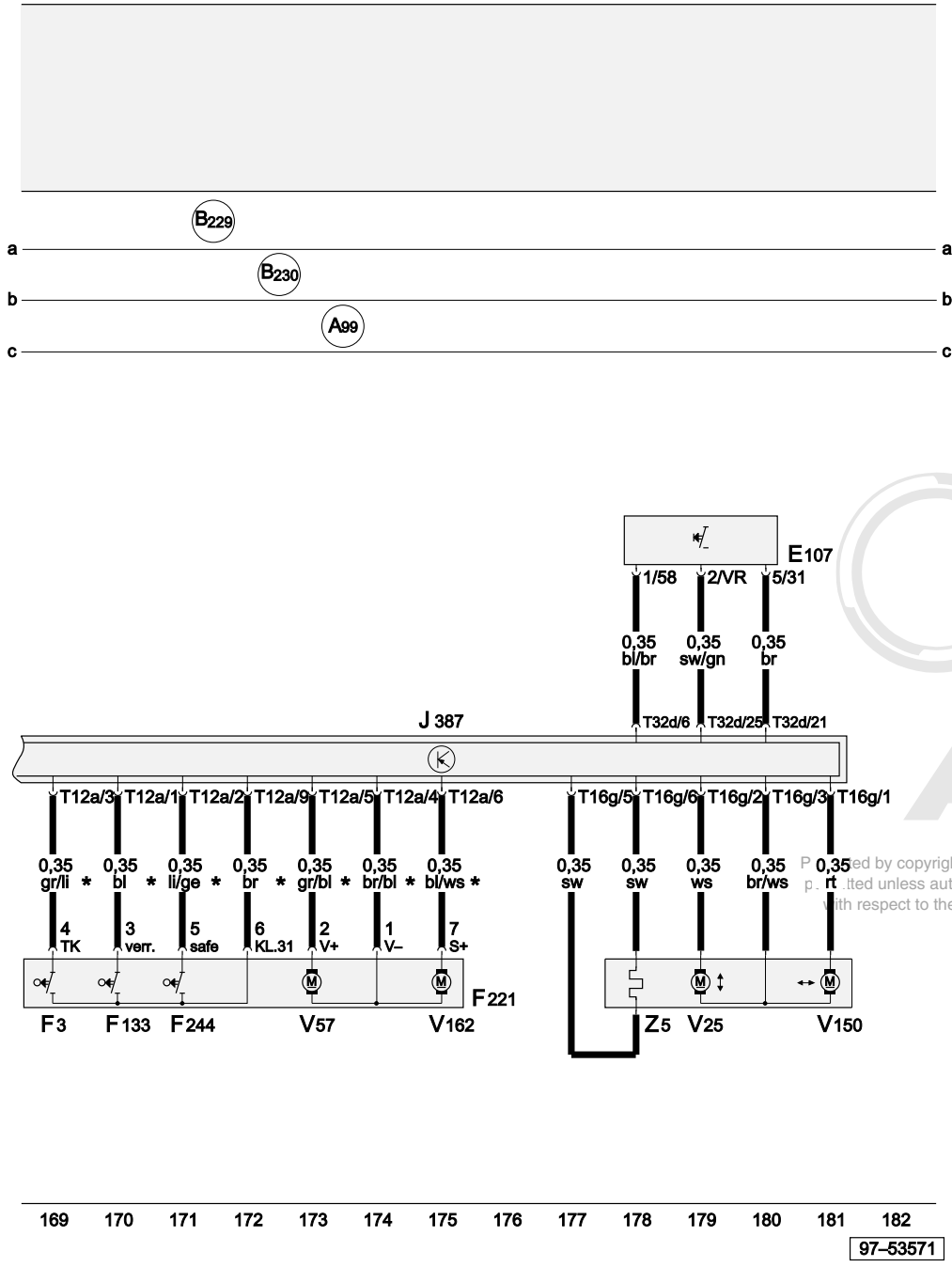

Door control unit on front passenger's side, mirror adjustment motor on front passenger's side, heated exterior mirror on front passenger's side, electric window switch in front passenger's door, central locking lock unit

E107	Electric window switch, in front passenger's door
F3	Door contact switch, front passenger's side
F133	Central locking actuator, front right
F221	Central locking lock unit, front passenger's side
F244	Central locking actuator (Safe), front passenger's door
J387	Door control unit, front passenger's side
T12a	12-pin connector, black, on door control unit, front passenger's side
T16g	16-pin connector, door control unit, front passenger's door
T32d	32-pin connector, grey, door control unit, front passenger's door
V25	Mirror adjustment motor, front passenger's side
V57	Central locking motor, front passenger's door
V150	Mirror adjustment motor, front passenger's side
V162	Central locking motor (Safe), front passenger's door
Z5	Heated exterior mirror, front passenger's side
A99	Connection -1- (87), in dash panel wiring harness
B229	Connection (high bus), in interior wiring harness
B230	Connection (low bus), in interior wiring harness
*	With remote control for central locking system

Protected by copyright. Copying for private or commercial purposes, in part or in whole, is not permitted unless authorised by AUDI AG. AUDI AG does not guarantee or accept any liability with respect to the correctness of information in this document. Copyright by AUDI AG.

ws	=	white
sw	=	black
ro	=	red
br	=	brown
gn	=	green
bl	=	blue
gr	=	grey
li	=	purple
ge	=	yellow
or	=	orange
rs	=	pink

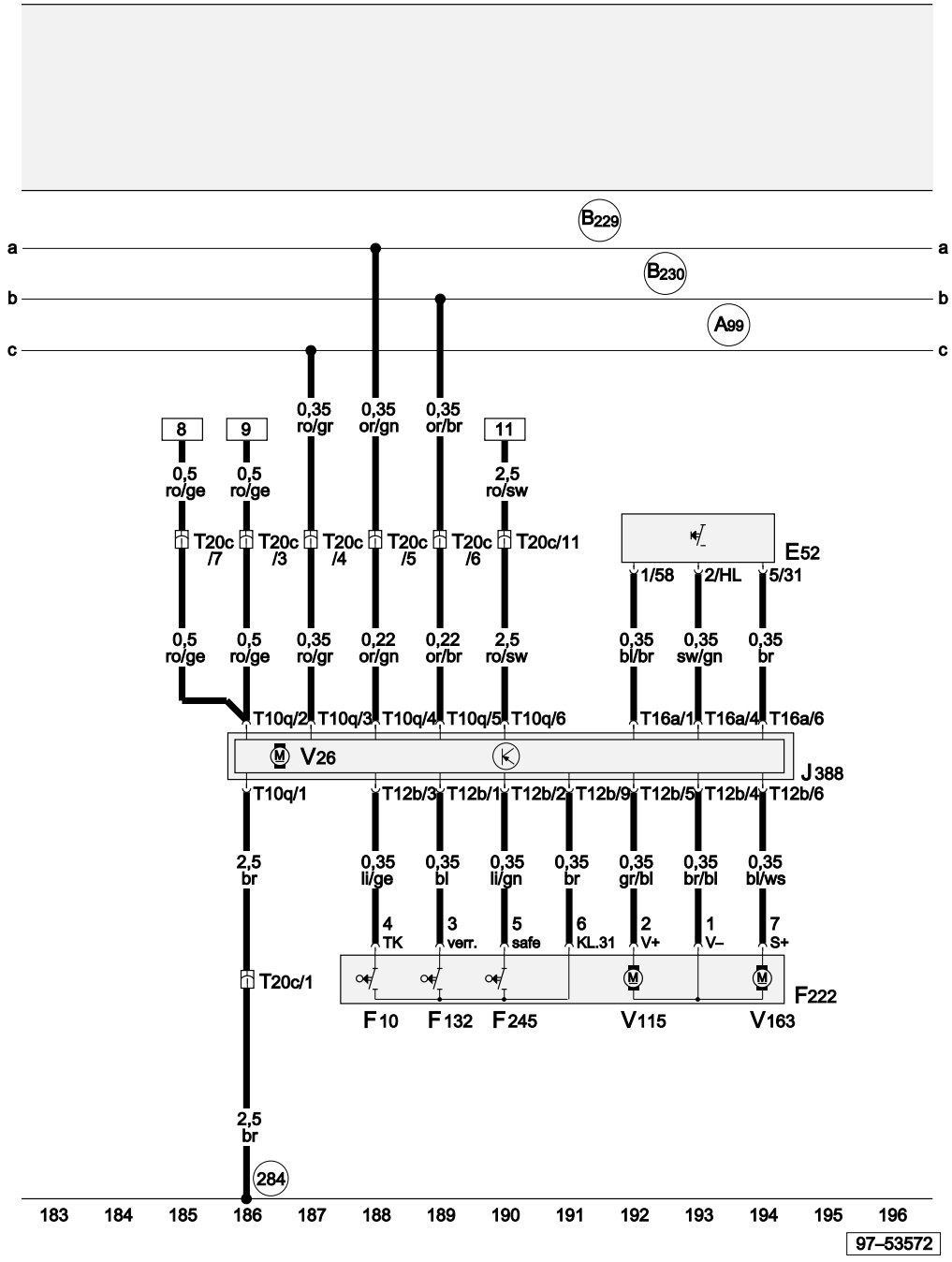

Rear left door control unit, rear left central locking lock unit, rear left door contact switch, rear left electric window motor

E52	Electric window switch, rear left (in door)
F10	Rear left door contact switch
F132	Central locking actuator, rear left
F222	Central locking lock unit, rear left
F245	Central locking actuator (Safe), rear left door
J388	Door control unit, rear left
T10q	10-pin connector, black, door control unit, rear left
T12b	12-pin connector, black, door control unit, rear left
T16a	16-pin connector, brown, door control unit, rear left
T20c	20-pin connector, black, at B pillar, left
V26	Electric window motor, rear left
V115	Central locking motor, rear left door
V163	Central locking motor (Safe), rear left door
284	Earth connection -6-, in interior wiring harness
A99	Connection -1- (87), in dash panel wiring harness
B229	Connection (high bus), in interior wiring harness
B230	Connection (low bus), in interior wiring harness

ws = white
sw = black
ro = red
br = brown
gn = green
bl = blue
gr = grey
li = purple
ge = yellow
or = orange
rs = pink

Protected by copyright. Copying for private or commercial purposes, in part or in whole, is not permitted unless authorised by AUDI AG. AUDI AG does not guarantee or accept any liability with respect to the correctness of information in this document. Copyright by AUDI AG.

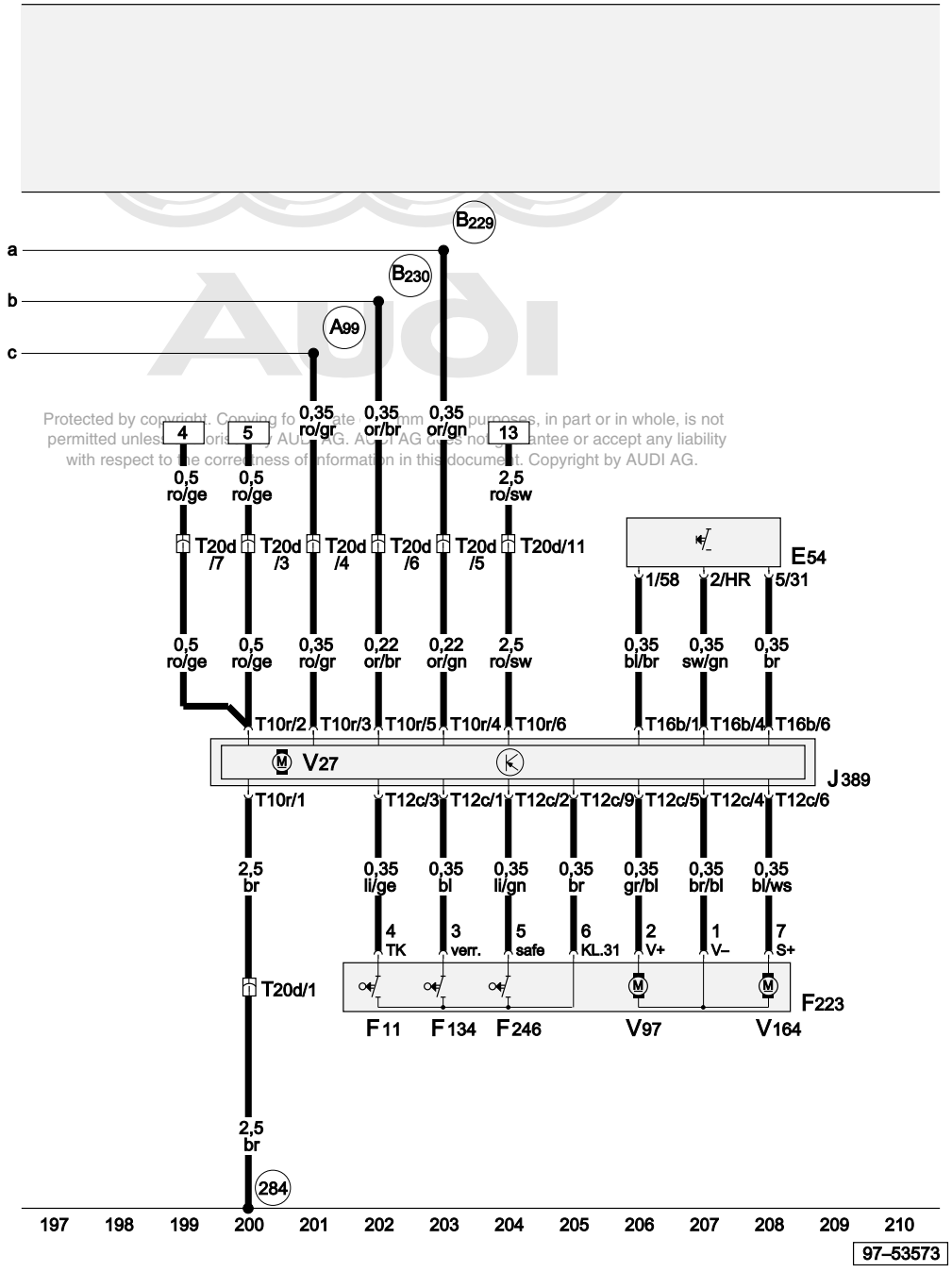

ws = white
sw = black
ro = red
br = brown
gn = green
bl = blue
gr = grey
li = purple
ge = yellow
or = orange
rs = pink

Rear right door control unit, rear right central locking lock unit, rear right door contact switch, rear right electric window motor

E54	Rear right electric window switch, in door
F11	Rear right door contact switch
F134	Central locking actuator, rear right
F223	Central locking lock unit, rear right
F246	Central locking actuator (Safe), rear right door
J389	Door control unit, rear right
T10r	10-pin connector, black, door, rear right
T12c	12-pin connector, black, door, rear right
T16b	16-pin connector, brown, door, rear right
T20d	20-pin connector, black, at B pillar, right
V27	Electric window motor, rear right
V97	Central locking motor, rear right door
V164	Central locking motor (Safe), rear right door
284	Earth connection -6-, in interior wiring harness
A99	Connection -1- (87), in dash panel wiring harness
B229	Connection (high bus), in interior wiring harness
B230	Connection (low bus), in interior wiring harness

Protected by copyright. Copying for private or commercial purposes, in part or in whole, is not permitted unless authorised by AUDI AG. AUDI AG does not guarantee or accept any liability with respect to the correctness of information in this document. Copyright by AUDI AG.

Radiator fan control - 80W (without air conditioner)

⇒ **1.2 litre unit injector, TDI engine (45 kW - 3-cylinder), engine code ANY**

⇒ **1.4 litre fuel injection engine (55 kW - Magneti Marelli - 4-cylinder), engine code AUA**

From model year 2002

Main fuse

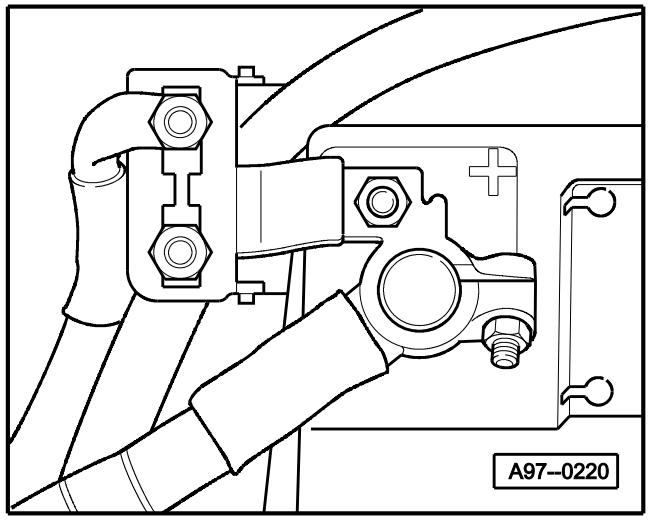

◆ On battery

Protected by copyright. Copying for private or commercial purposes, in part or in whole, is not permitted unless authorised by AUDI AG. AUDI AG does not guarantee or accept any liability with respect to the correctness of information in this document. Copyright by AUDI AG.

9-point relay carrier, fuse box

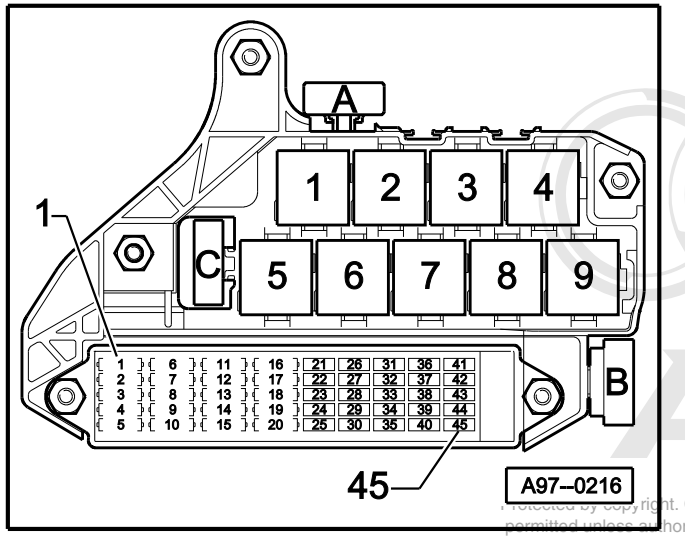

Protected by copyright. Copying for private or commercial purposes, in part or in whole, is not permitted unless authorised by AUDI AG. AUDI AG does not guarantee or accept any liability with respect to the correctness of information in this document. Copyright by AUDI AG.

- In dash panel, driver's side

Fuse colours

5 A - beige
7.5 A - brown
10 A - red
15 A - blue
20 A - yellow
25 A - white
30 A - green

Battery, starter, ignition/starter switch, radiator fan thermo-switch, fuses, radiator fan

A	Battery
B	Starter
D	Ignition/starter switch
F18	Radiator fan thermo-switch
S88	Strip fuse
SB4	Fuse -4- on fuse box
T17f	17-pin connector, white, connector point, A pillar, left
V7	Radiator fan
44	Earth point, lower part of left A pillar
65	Earth point, left longitudinal member, rear
119	Earth connection -1-, in headlight wiring harness
179	Earth connection, in left headlight wiring harness
500	Screw connection -1- (30), on relay plate
A32	Positive (+) connection (30), in dash panel wiring harness
B138	Positive (+) connection (X), in interior wiring harness
P2	Positive (+) connection (30), in battery wiring harness

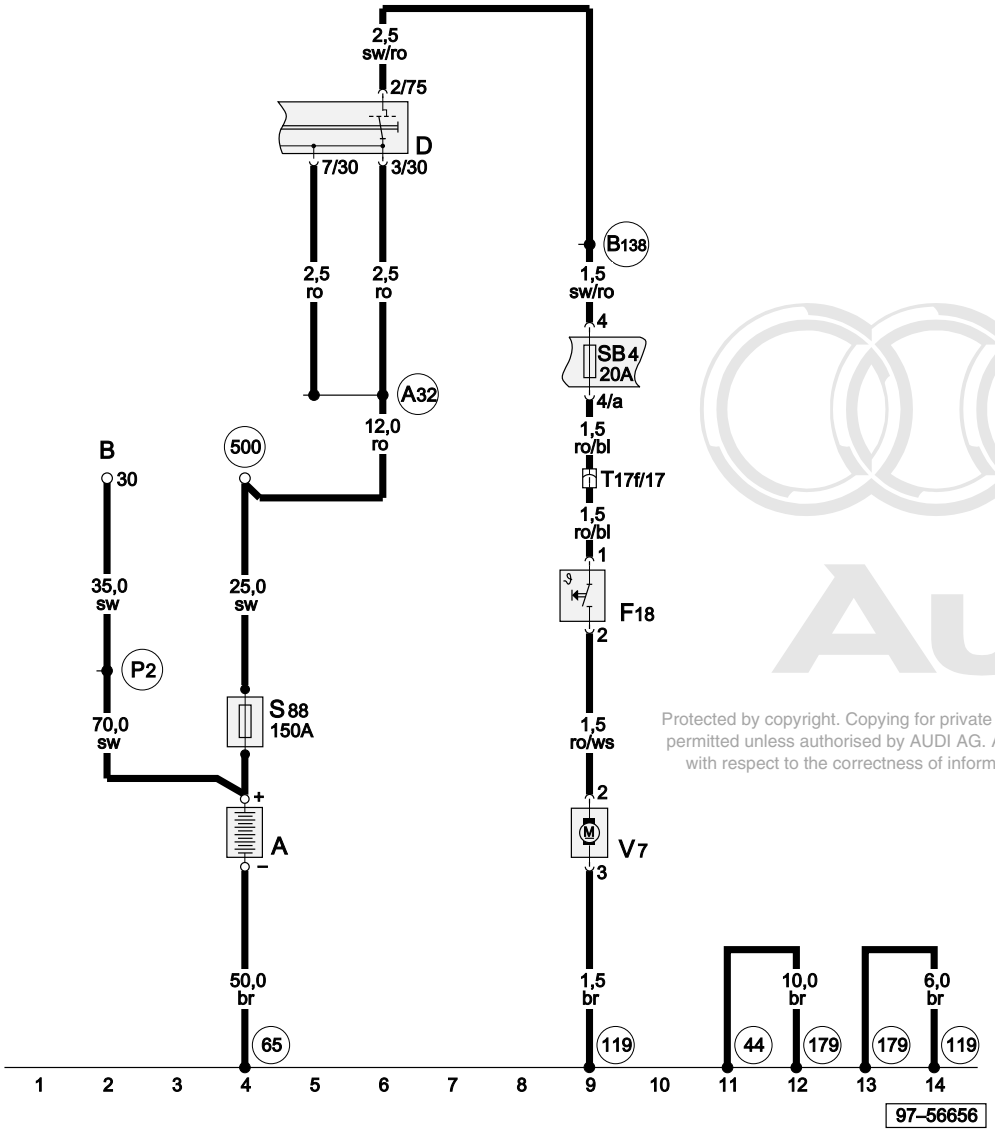

Protected by copyright. Copying for private or commercial purposes, in part or in whole, is not permitted unless authorised by AUDI AG. AUDI AG does not guarantee or accept any liability with respect to the correctness of information in this document. Copyright by AUDI AG.

ws	=	white
sw	=	black
ro	=	red
br	=	brown
gn	=	green
bl	=	blue
gr	=	grey
li	=	purple
ge	=	yellow
or	=	orange
rs	=	pink

Radiator fan control - 60W/100W (without air conditioner)

⇒ **1.4 litre unit injector, TDI engine (55 kW - 3-cylinder), engine code AMF**

From model year 2002

Main fuse

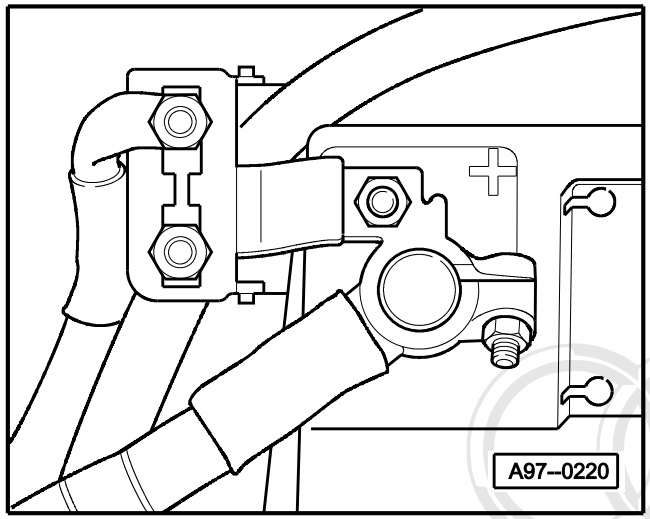

♦ On battery

9-point relay carrier, fuse box

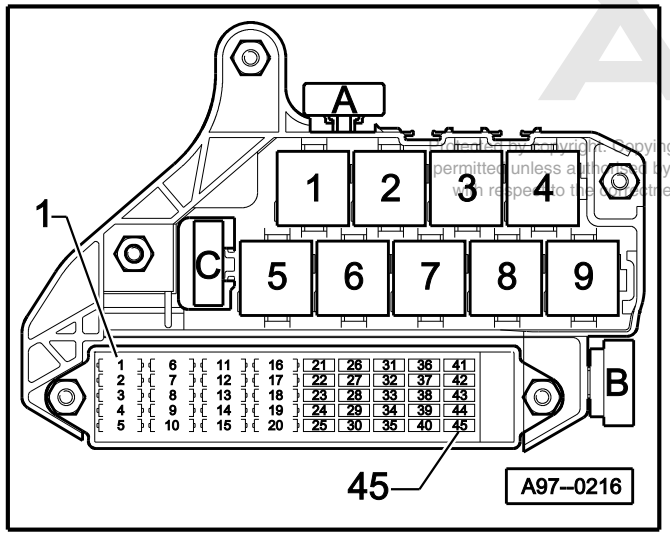

Protected by copyright. Copying for private or commercial purposes, in part or in whole, is not permitted unless authorised by AUDI AG. AUDI AG does not guarantee or accept any liability with respect to the correctness of information in this document. Copyright by AUDI AG.

- In dash panel, driver's side

Fuse colours

5 A - beige
7.5 A - brown
10 A - red
15 A - blue
20 A - yellow
25 A - white
30 A - green

Protected by copyright. Copying for private or commercial purposes, in part or in whole, is not permitted unless authorised by AUDI AG. AUDI AG does not guarantee or accept any liability with respect to the correctness of information in this document. Copyright by AUDI AG.

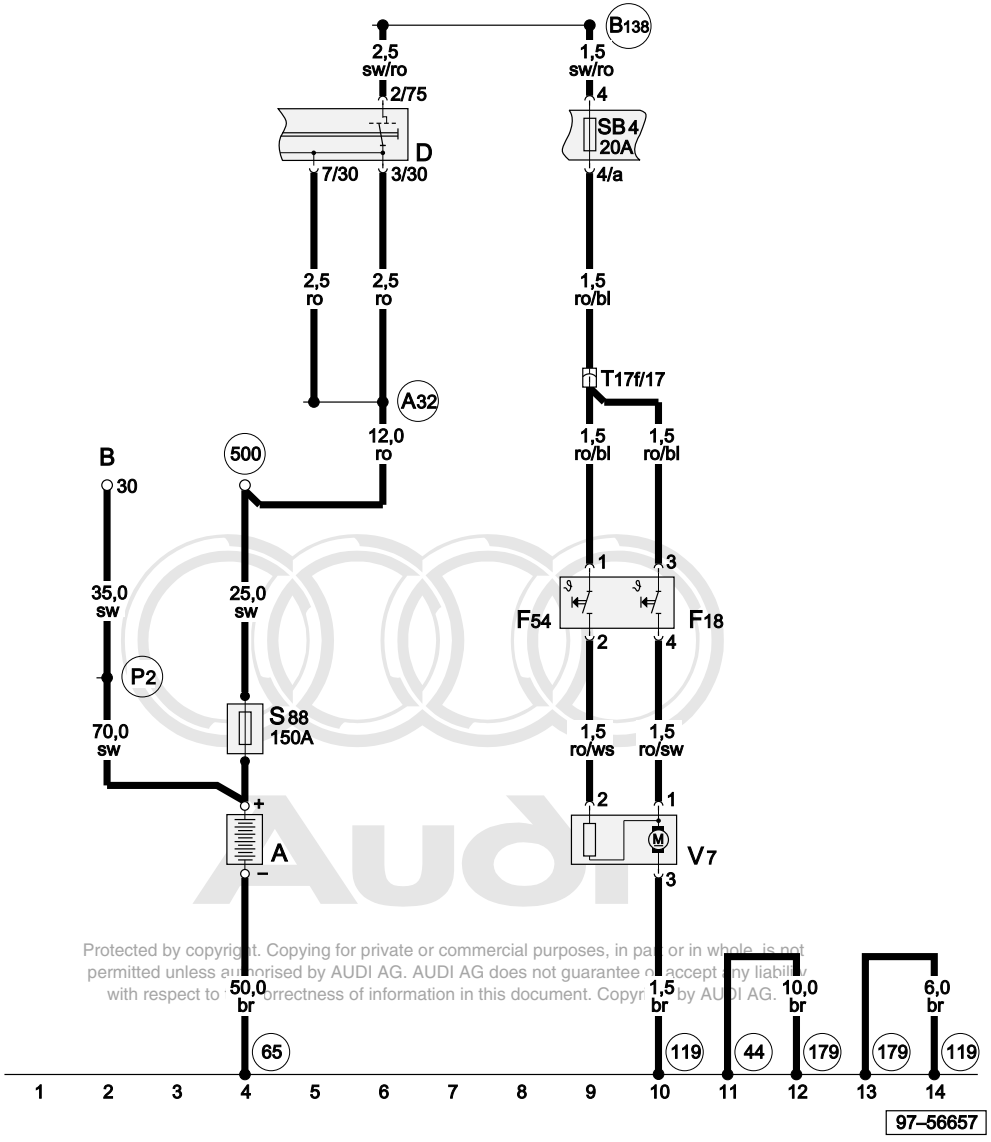

Protected by copyright. Copying for private or commercial purposes, in part or in whole, is not permitted unless authorised by AUDI AG. AUDI AG does not guarantee or accept any liability with respect to the correctness of information in this document. Copyright by AUDI AG.

ws = white
sw = black
ro = red
br = brown
gn = green
bl = blue
gr = grey
li = purple
ge = yellow
or = orange
rs = pink

Battery, starter, ignition/starter switch, radiator fan thermo-switch, fuses, radiator fan

A	Battery
B	Starter
D	Ignition/starter switch
F18	Radiator fan thermo-switch
F54	Radiator fan thermo-switch
S88	Strip fuse
SB4	Fuse -4- on fuse box
T17f	17-pin connector, white, connector point, A pillar, left
V7	Radiator fan
44	Earth point, lower part of left A pillar
65	Earth point, left longitudinal member, rear
119	Earth connection -1-, in headlight wiring harness
179	Earth connection, in left headlight wiring harness
500	Screw connection -1- (30), on relay plate
A32	Positive (+) connection (30), in dash panel wiring harness
B138	Positive (+) connection (X), in interior wiring harness
P2	Positive (+) connection (30), in battery wiring harness

Navigation system "NS LOW"

From model year 2002

Main fuse

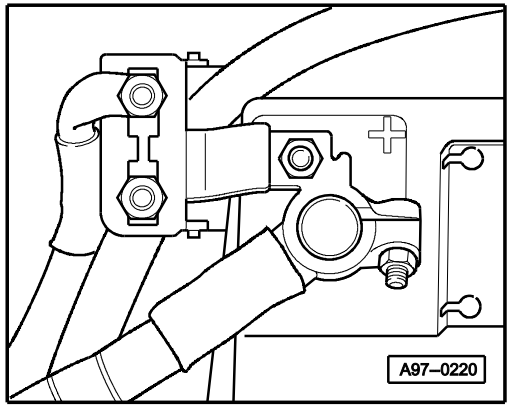

9-point relay carrier (in dash panel)

Fuse box

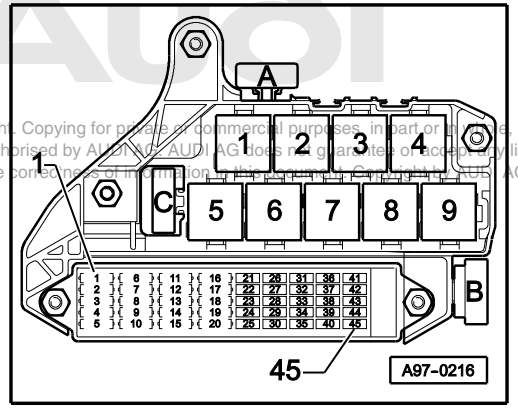

Fuse colours

30 A – green
25 A – white
20 A – yellow
15 A – blue
10 A – red
7.5A – orange
5 A – beige

3-point relay carrier (in footwell)

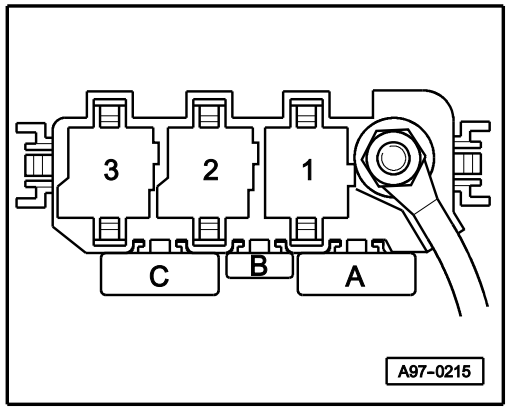

Protected by copyright. Copying for private or commercial purposes, in part or in whole, is not permitted unless authorised by AUDI AG. AUDI AG does not guarantee or accept any liability with respect to the correctness of information. Copyright by AUDI AG.

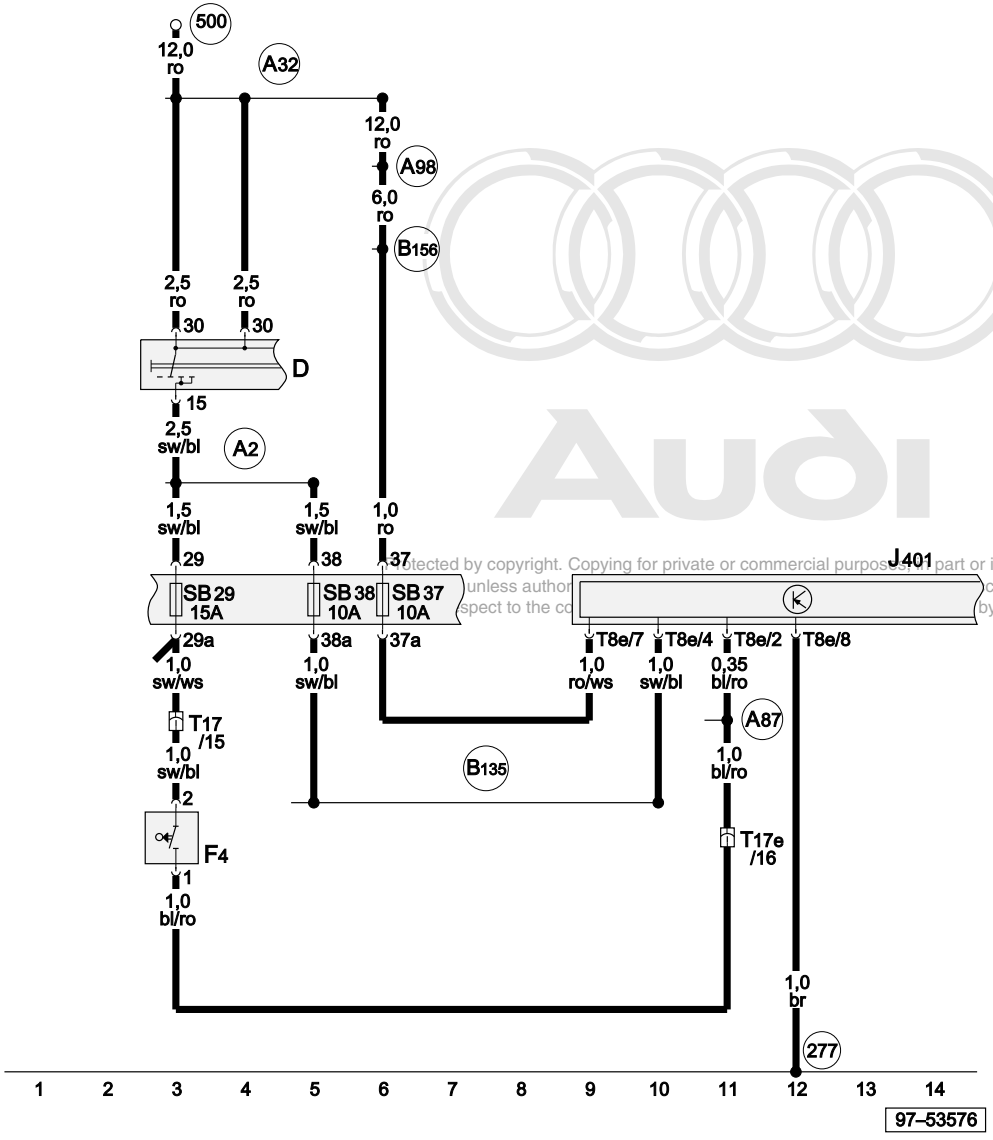

Protected by copyright. Copying for private or commercial purposes, in part or in whole, is not unless author... cep... any liability spect to the co... by AUDI AG.

ws = white
sw = black
ro = red
br = brown
gn = green
bl = blue
gr = grey
li = purple
ge = yellow
or = orange
rs = pink

Navigation system with CD drive control unit, fuses

D	Ignition/starter switch
F4	Reversing light switch
J401	Navigation system with CD drive control unit
SB29	Fuse -29- on fuse box
SB37	Fuse -37- on fuse box
SB38	Fuse -38- on fuse box
T8e	8-pin connector, black, navigation system with CD drive control unit
T17	17-pin connector, brown, in footwell, front left
T17e	17-pin connector, blue, in footwell, front left
277	Earth connection -3-, in interior wiring harness
500	Screw connection -1- (30), on relay plate
A2	Positive (+) connection (15), in dash panel wiring harness
A32	Positive (+) connection (30), in dash panel wiring harness
A87	Connection (reversing light), in dash panel wiring harness
A98	Positive (+) connection -4- (30), in dash panel wiring harness
B135	Connection -1- (15a), in interior wiring harness
B156	Positive (+) connection (30a), in interior wiring harness

Protected by copyright. Copying for private or commercial purposes, in part or in whole, is not permitted unless authorised by AUDI AG. AUDI AG does not guarantee or accept any liability with respect to the correctness of information in this document. Copyright by AUDI AG.

Navigation system with CD drive control unit, telephone/ navigation systems loudspeaker

J401	Navigation system with CD drive control unit
J526	Telephone/telematics control unit
R	Radio
R39	Telephone/navigation systems loudspeaker
T10d	10-pin connector, red, radio connector IV
T18	18-pin connector, black, mobile phone interface, in front passenger's footwell
T20e	20-pin connector, black, navigation system with CD drive control unit
A129	Connection (muting), in dash panel wiring harness
*	Models without radio (only export versions)
**	Models with radio
***	Models with provision for mobile phone
****	Models with telematics

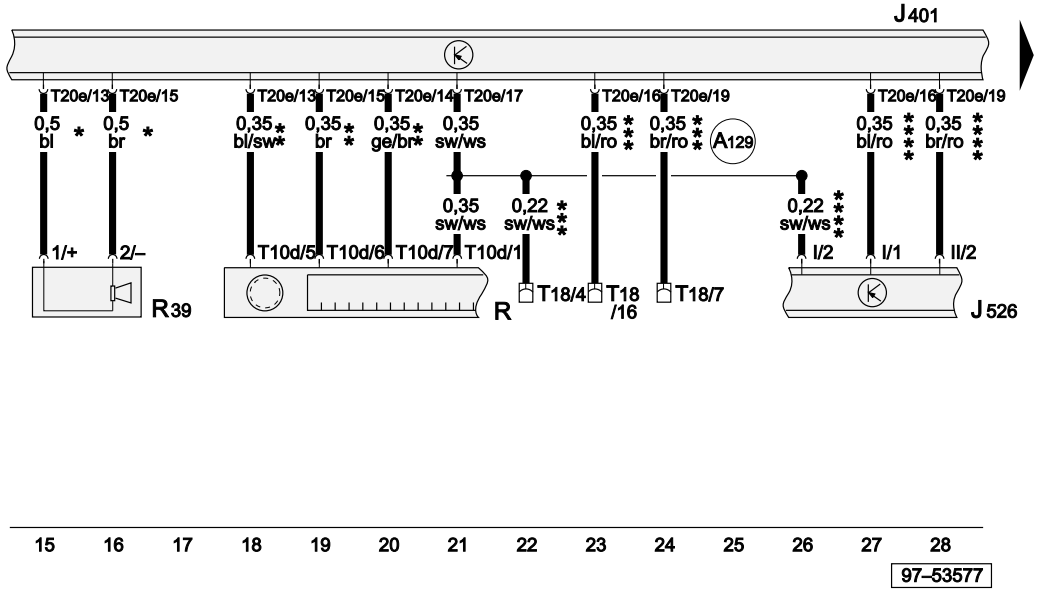

ws	=	white
sw	=	black
ro	=	red
br	=	brown
gn	=	green
bl	=	blue
gr	=	grey
li	=	purple
ge	=	yellow
or	=	orange
rs	=	pink

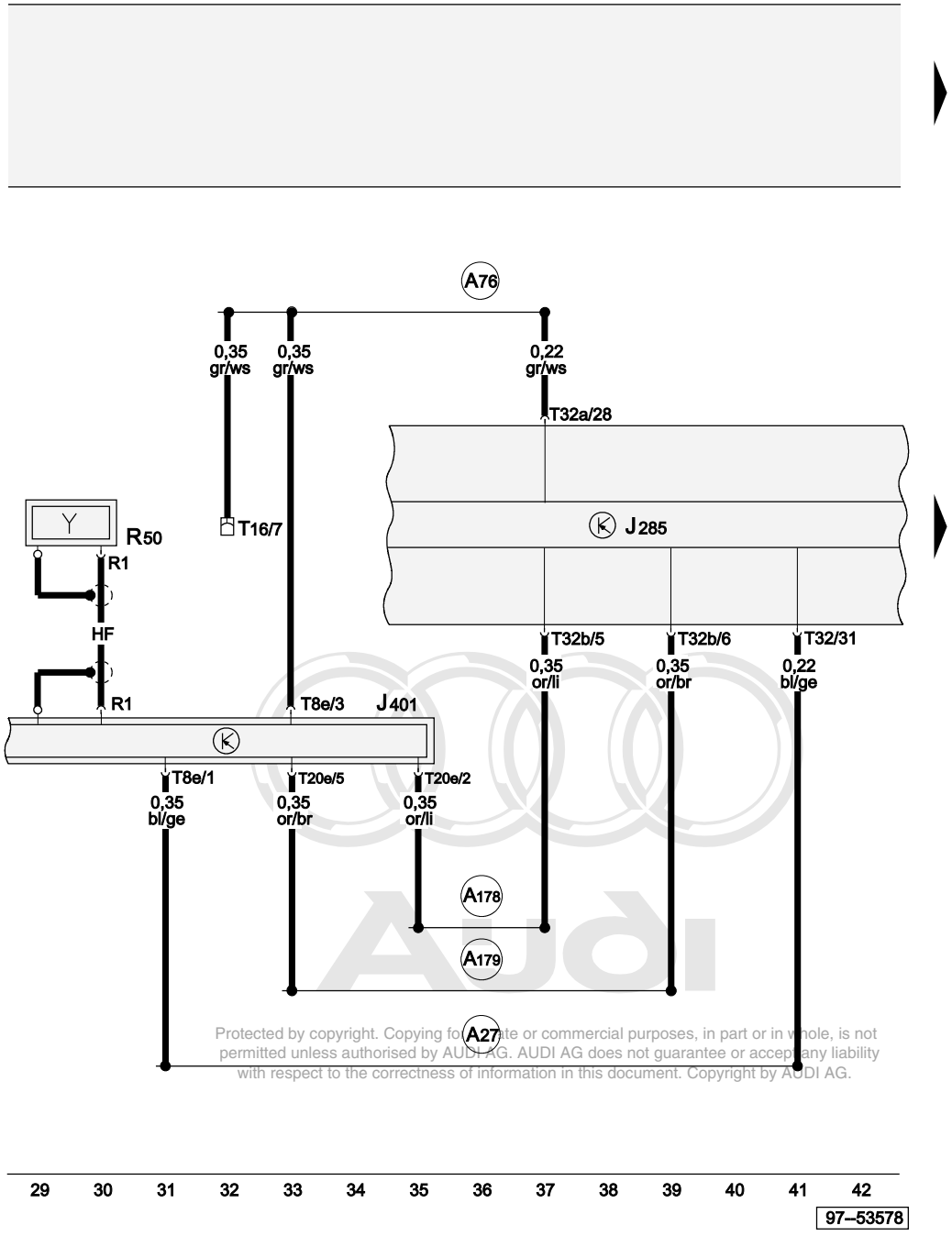

Protected by copyright. Copying for private or commercial purposes, in part or in whole, is not permitted unless authorised by AUDI AG. AUDI AG does not guarantee or accept any liability with respect to the correctness of information in this document. Copyright by AUDI AG.

Control unit with display in dash panel insert, navigation system with CD drive control unit

J285	Control unit with display in dash panel insert
J401	Navigation system with CD drive control unit
R1	Aerial connection
R50	Navigation aerial (GPS)
T8e	8-pin connector, black, navigation system with CD drive control unit
T16	16-pin connector, black, diagnostic connector
T20e	20-pin connector, black, navigation system with CD drive control unit
T32	32-pin connector, blue, on dash panel insert
T32a	32-pin connector, green, on dash panel insert
T32b	32-pin connector, grey, on dash panel insert
A27	Connection (speed signal), in dash panel wiring harness
A76	Connection (diagnosis wire K), in dash panel wiring harness
A178	Connection (infotainment CAN bus, high), in dash panel wiring harness
A179	Connection (infotainment CAN bus, low), in dash panel wiring harness

ws	=	white
sw	=	black
ro	=	red
br	=	brown
gn	=	green
bl	=	blue
gr	=	grey
li	=	purple
ge	=	yellow
or	=	orange
rs	=	pink

Function selection switch II, control unit with display in dash panel insert

E1	Lighting switch
E272	Function selection switch II
J285	Control unit with display in dash panel insert
T32	32-pin connector, blue, on dash panel insert
T32b	32-pin connector, grey, on dash panel insert
269	Earth connection (sender earth) -1-, in dash panel wiring harness
B145	Positive (+) connection (58b), in interior wiring harness

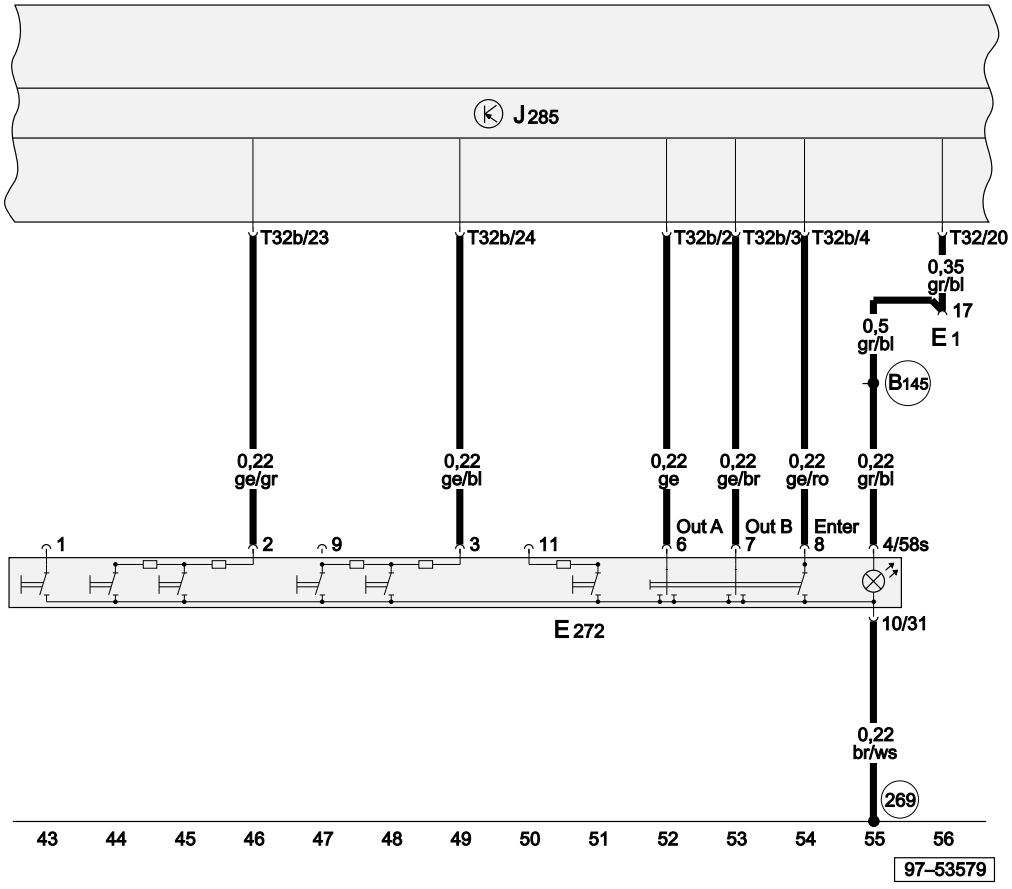

ws = white
sw = black
ro = red
br = brown
gn = green
bl = blue
gr = grey
li = purple
ge = yellow
or = orange
rs = pink

Protected by copyright. Copying for private or commercial purposes, in part or in whole, is not permitted unless authorised by AUDI AG. AUDI AG does not guarantee or accept any liability with respect to the correctness of information in this document. Copyright by AUDI AG.

Radio sound systems (radio generation II)

- Chorus
- Concert
- Symphony

From model year 2002

Main fuse

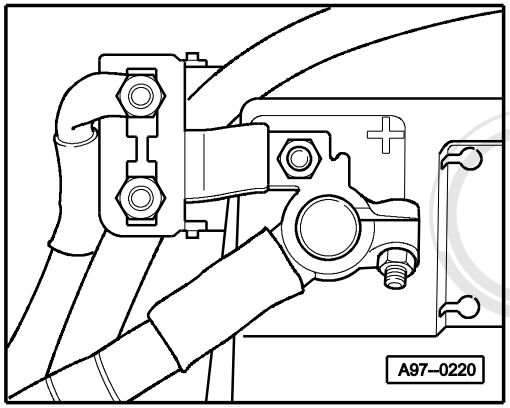

9-point relay carrier (in dash panel)

Fuse box

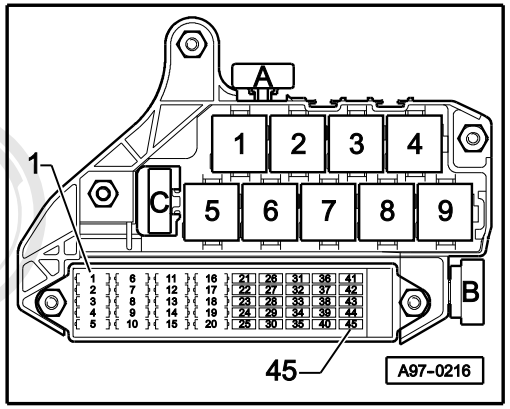

Fuse colours

30 A - green
25 A - white
20 A - yellow
15 A - blue
10 A - red
7.5 A - orange
5 A - beige

3-point relay carrier (in footwell)

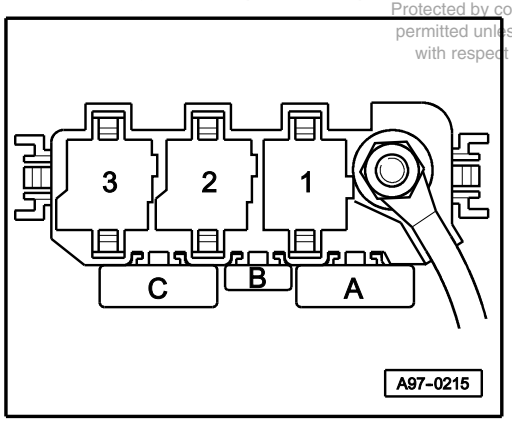

Protected by copyright. Copying for private or commercial purposes, in part or in whole, is not permitted unless authorised by AUDI AG. AUDI AG does not guarantee or accept any liability with respect to the correctness of information in this document. Copyright by AUDI AG.

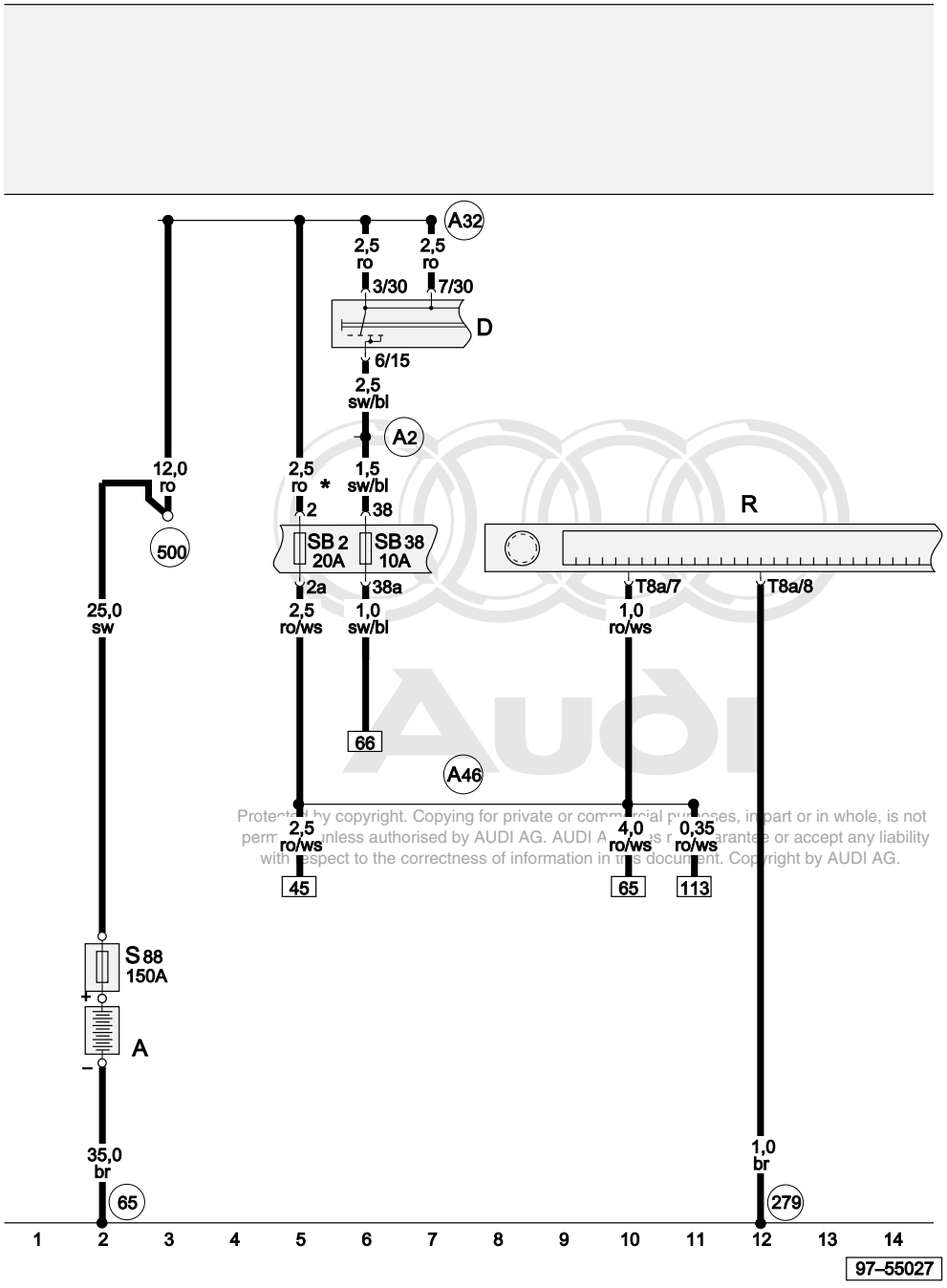

Protected by copyright. Copying for private or commercial purposes, in part or in whole, is not permitted unless authorised by AUDI AG. AUDI AG does not guarantee or accept any liability with respect to the correctness of information in this document. Copyright by AUDI AG.

ws = white
sw = black
ro = red
br = brown
gn = green
bl = blue
gr = grey
li = purple
ge = yellow
or = orange
rs = pink

Voltage supply

A	Battery
D	Ignition/starter switch
R	Radio
S88	Strip fuse
SB2	Fuse on fuse box
SB38	Fuse on fuse box
T8a	8-pin connector, black, radio connector III
65	Earth point, left longitudinal member, rear
279	Earth connection -5-, in interior wiring harness
500	Screw connection -1- (30), on relay plate
A2	Positive (+) connection (15), in dash panel wiring harness
A32	Positive (+) connection (30), in dash panel wiring harness
A46	Positive (+) connection (30 - from radio), in dash panel wiring harness
*	Models with 1.2 litre engine, see Current Flow Diagram No. 28 (Basic equipment for 1.2 litre TDI engine)

Front loudspeakers

R	Radio
R21	Bass loudspeaker, front left
R23	Bass loudspeaker, front right
R26	Middle-high tone loudspeaker, front left
R27	Middle-high tone loudspeaker, front right
T8	8-pin connector, brown, radio connector II
T20a	20-pin connector, black, at A pillar, left
T20b	20-pin connector, black, at A pillar, right

Protected by copyright. Copying for private or commercial purposes, in part or in whole, is not permitted unless authorised by AUDI AG. AUDI AG does not guarantee or accept any liability with respect to the correctness of information in this document. Copyright by AUDI AG.

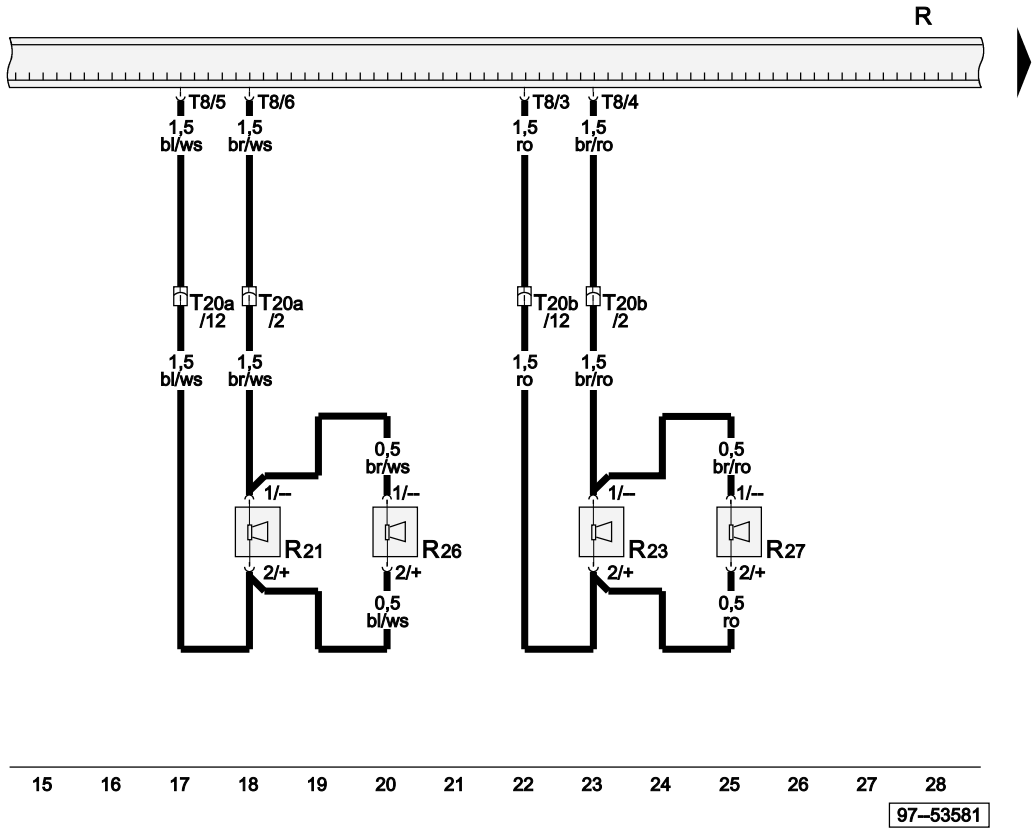

ws	=	white
sw	=	black
ro	=	red
br	=	brown
gn	=	green
bl	=	blue
gr	=	grey
li	=	purple
ge	=	yellow
or	=	orange
rs	=	pink

Rear loudspeakers

R	Radio
R15	Bass loudspeaker, rear left
R17	Bass loudspeaker, rear right
R34	Middle-treble tone loudspeaker, rear left
R35	Middle-treble tone loudspeaker, rear right
T8	8-pin connector, brown, radio connector II
T20c	20-pin connector, black, at B pillar, left
T20d	20-pin connector, black, at B pillar, right

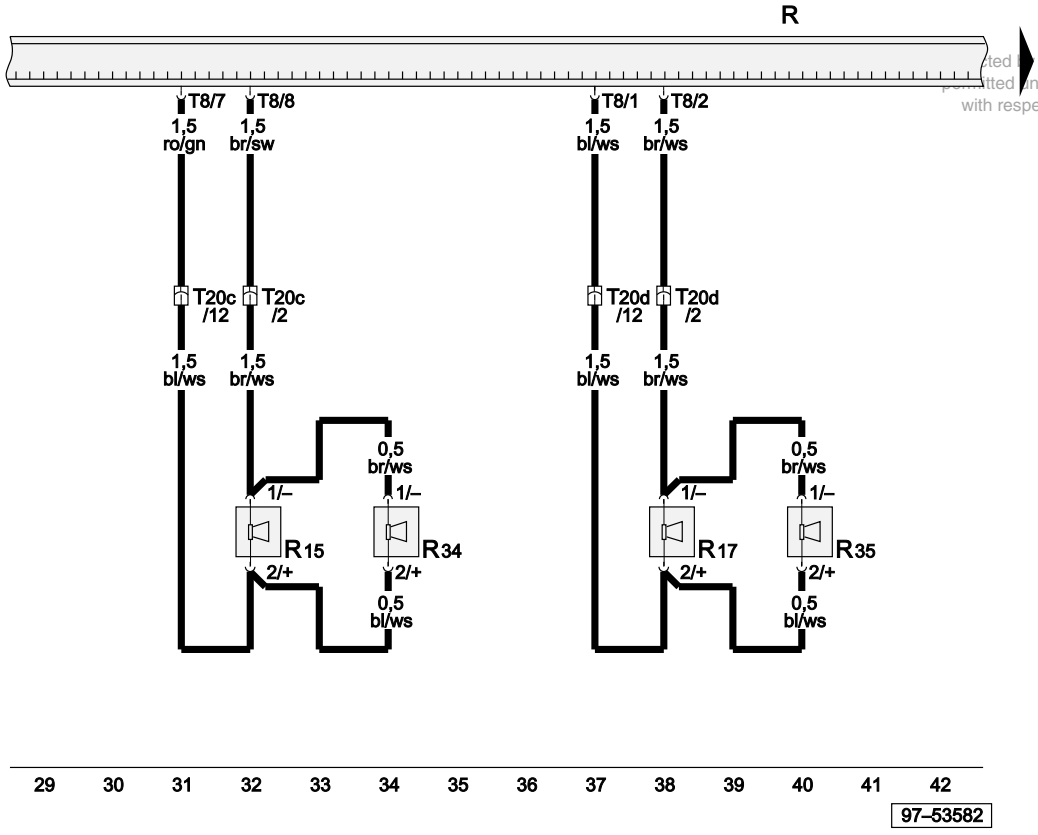

ws = white
sw = black
ro = red
br = brown
gn = green
bl = blue
gr = grey
li = purple
ge = yellow
or = orange
rs = pink

ted by copyright. Copying for private or commercial purposes, in part or in whole, is not permitted unless authorised by AUDI AG. AUDI AG does not guarantee or accept any liability with respect to the correctness of information in this document. Copyright by AUDI AG.

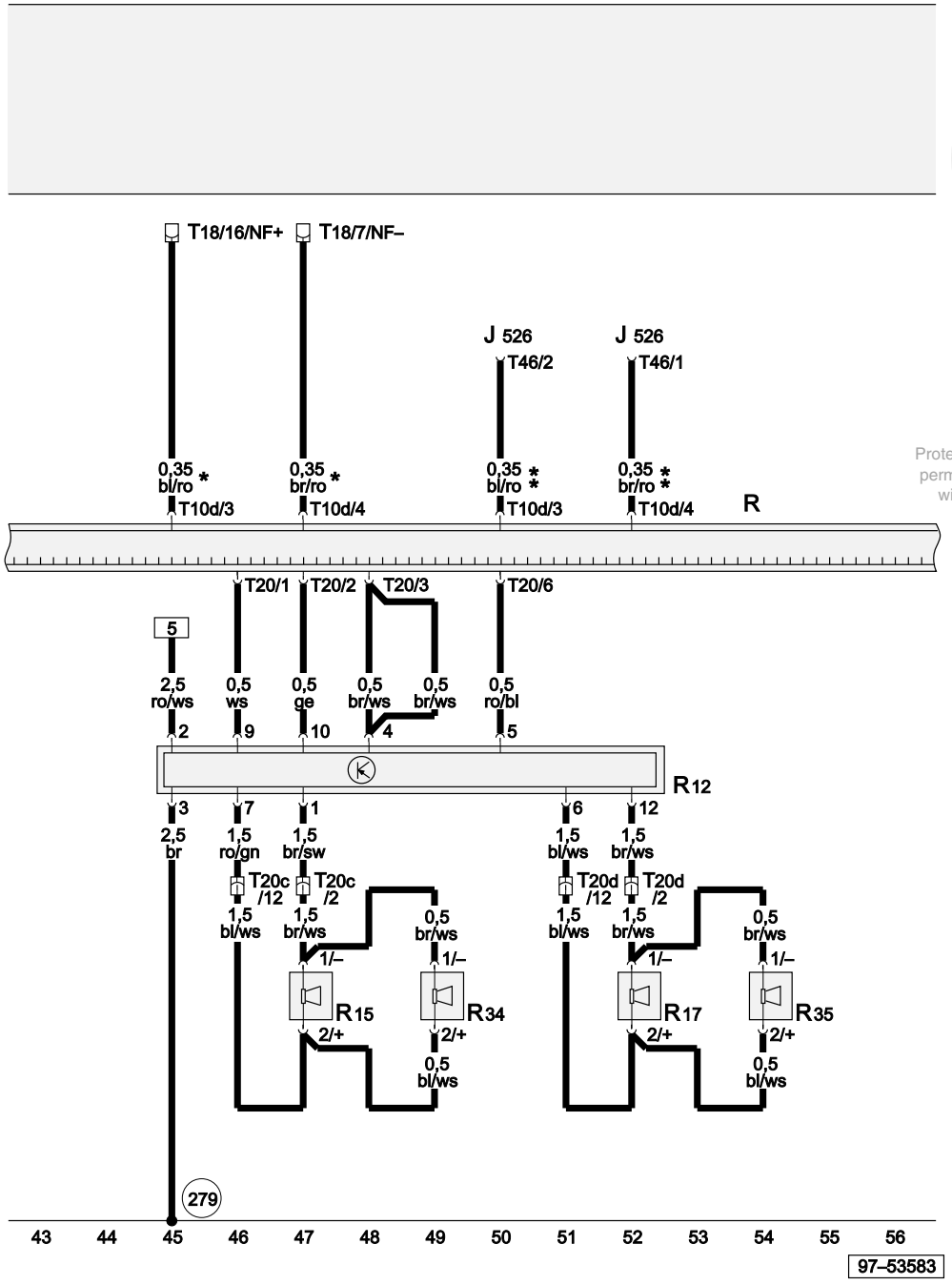

Active loudspeakers, rear

J526	Telephone/telematics control unit
R	Radio
R12	Amplifier
R15	Bass loudspeaker, rear left
R17	Bass loudspeaker, rear right
R34	Middle-treble tone loudspeaker, rear left
R35	Middle-treble tone loudspeaker, rear right
T10d	10-pin connector, red, radio connector IV
T18	18-pin connector, black, mobile phone interface, in front passenger's footwell
T20	20-pin connector, black, radio connector I
T20c	20-pin connector, black, at B pillar, left
T20d	20-pin connector, black, at B pillar, right
T46	46-pin connector, black, on telephone/telematics control unit
(279)	Earth connection -5-, in interior wiring harness
*	Only models with provision for mobile phone
*	Only models with telematics

Protected by copyright. Copying for private or commercial purposes, in part or in whole, is not permitted unless authorised by AUDI AG. AUDI AG does not guarantee or accept any liability with respect to the correctness of information in this document. Copyright by AUDI AG.

ws	=	white
sw	=	black
ro	=	red
br	=	brown
gn	=	green
bl	=	blue
gr	=	grey
li	=	purple
ge	=	yellow
or	=	orange
rs	=	pink

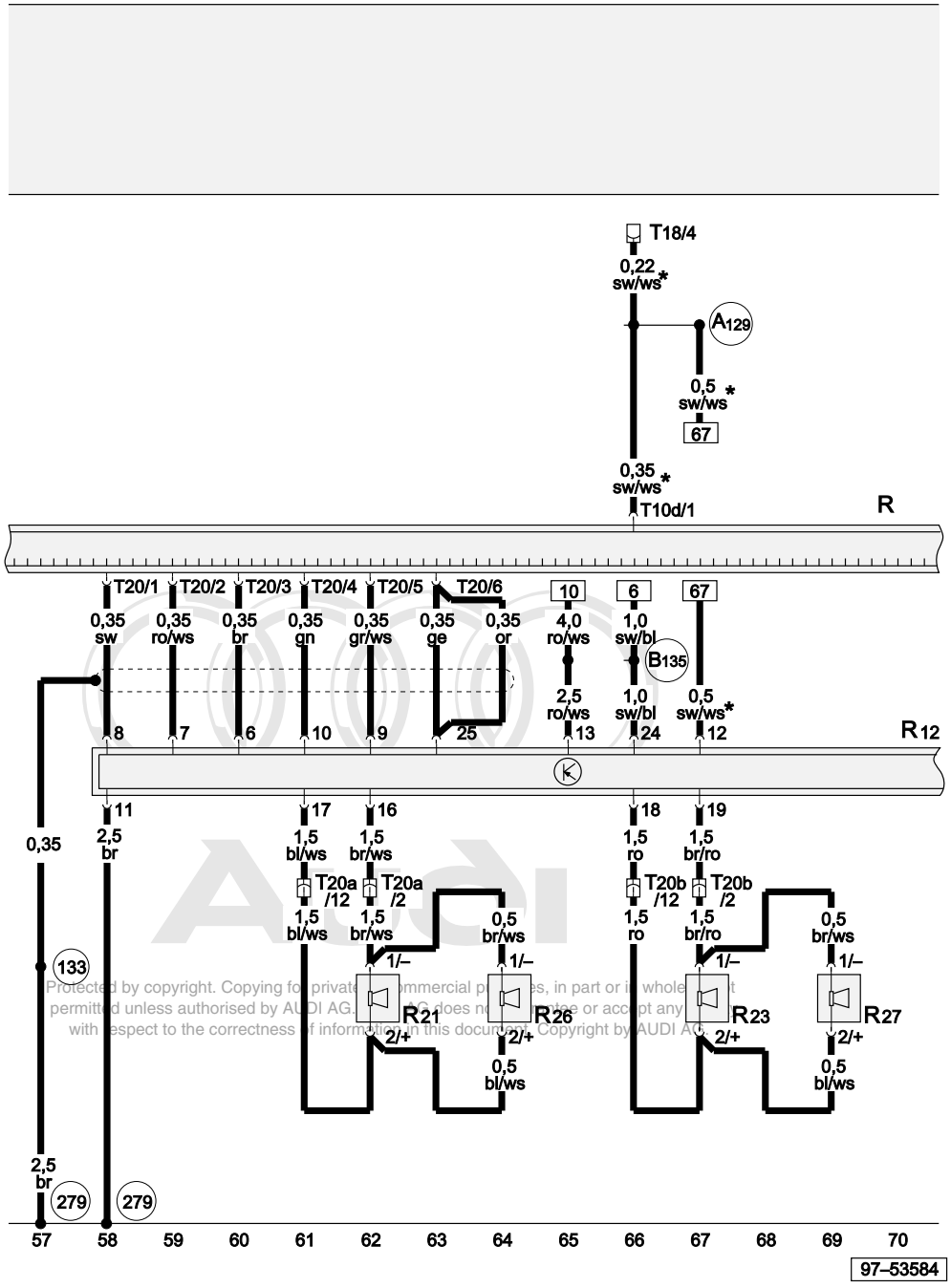

Protected by copyright. Copying for private or commercial purposes, in part or in whole, is not permitted unless authorised by AUDI AG. AUDI AG does not guarantee or accept any liability with respect to the correctness of information in this document. Copyright by AUDI AG.

ws = white
sw = black
ro = red
br = brown
gn = green
bl = blue
gr = grey
li = purple
ge = yellow
or = orange
rs = pink

Bose loudspeakers, front

R	Radio
R12	Amplifier
R21	Bass loudspeaker, front left
R23	Bass loudspeaker, front right
R26	Middle-high tone loudspeaker, front left
R27	Middle-high tone loudspeaker, front right
T10d	10-pin connector, red, radio connector IV
T18	18-pin connector, black, mobile phone interface, in front passenger's footwell
T20	20-pin connector, black, radio connector I
T20a	20-pin connector, black, at A pillar, left
T20b	20-pin connector, black, at A pillar, right
133	Earth connection, in loudspeaker wiring harness
279	Earth connection -5-, in interior wiring harness
A129	Connection (muting), in dash panel wiring harness
B135	Connection -1- (15a), in interior wiring harness
*	Only models with provision for mobile phone

Bose loudspeakers, rear

R	Radio
R12	Amplifier
R15	Bass loudspeaker, rear left
R17	Bass loudspeaker, rear right
R34	Middle-treble tone loudspeaker, rear left
R35	Middle-treble tone loudspeaker, rear right
R100	Bass loudspeaker (subwoofer), in luggage compartment, in intermediate floor panel
T20c	20-pin connector, black, at B pillar, left
T20d	20-pin connector, black, at B pillar, right

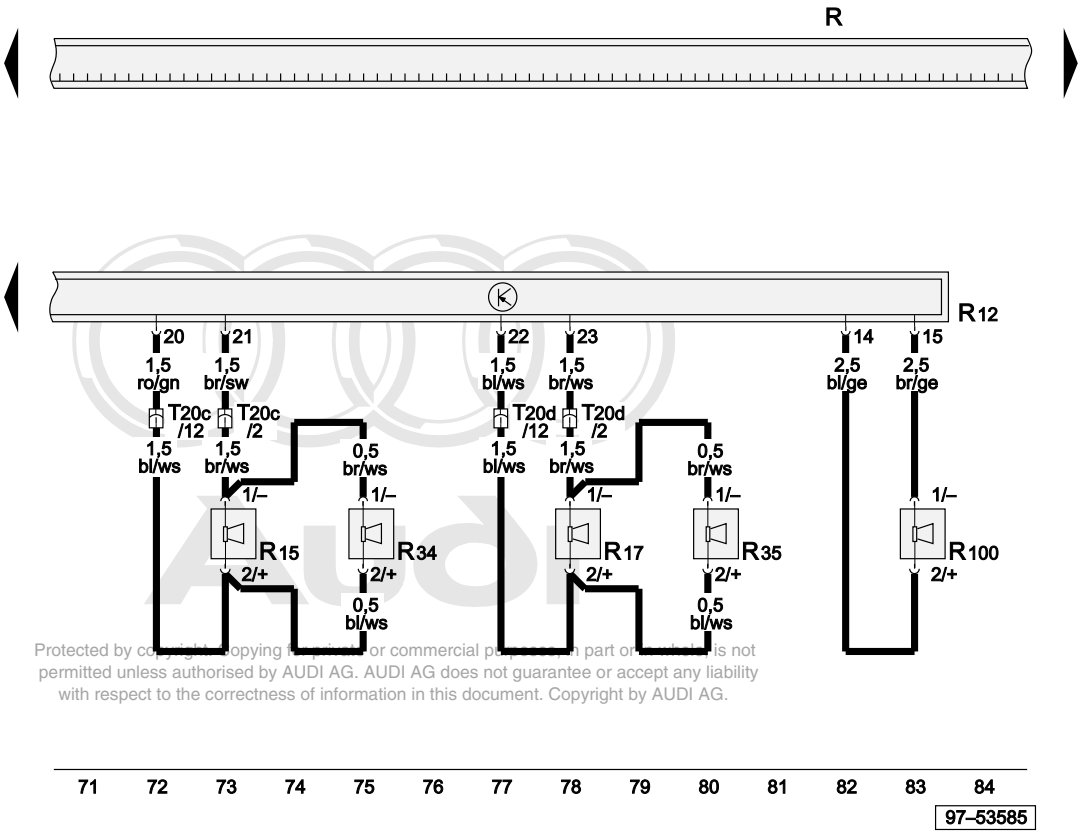

Protected by copyright. Copying for private or commercial purposes, in part or in whole, is not permitted unless authorised by AUDI AG. AUDI AG does not guarantee or accept any liability with respect to the correctness of information in this document. Copyright by AUDI AG.

ws	=	white
sw	=	black
ro	=	red
br	=	brown
gn	=	green
bl	=	blue
gr	=	grey
li	=	purple
ge	=	yellow
or	=	orange
rs	=	pink

Protected by copyright. Copying for private or commercial purposes, in part or in whole, is not permitted unless authorised by AUDI AG. AUDI AG does not guarantee or accept any liability with respect to the correctness of information in this document. Copyright by AUDI AG.

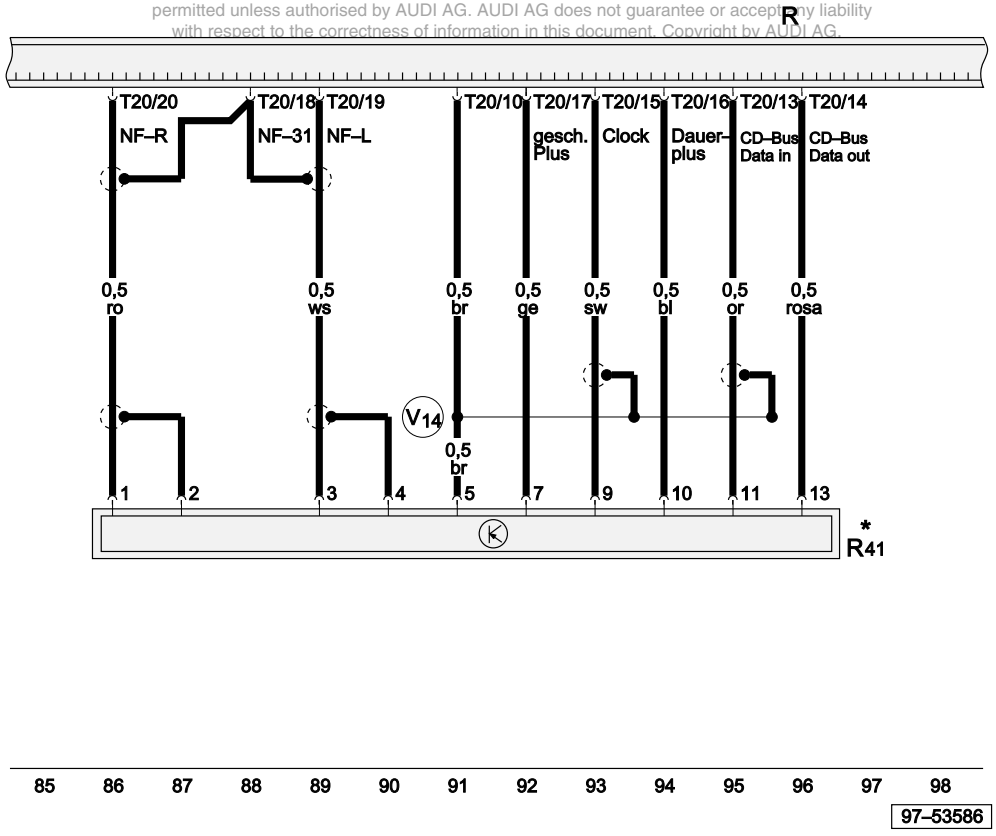

CD changer

R	Radio
R41	CD changer
T20	20-pin connector, black, radio connector I
V14	Connection (screening), in CD changer wiring harness
*	Does not apply to radio Chorus

ws	=	white
sw	=	black
ro	=	red
br	=	brown
gn	=	green
bl	=	blue
gr	=	grey
li	=	purple
ge	=	yellow
or	=	orange
rs	=	pink

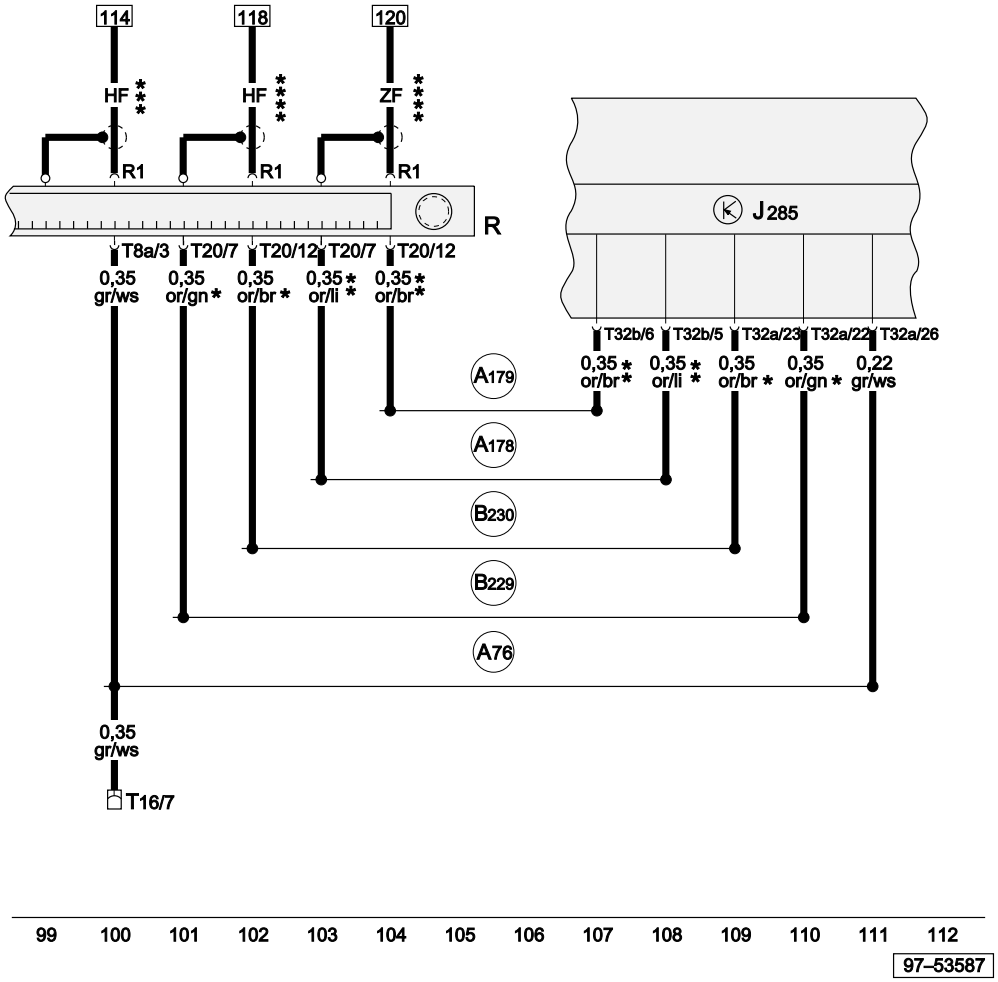

Control unit with display in dash panel insert

J285	Control unit with display in dash panel insert
R	Radio
T8a	8-pin connector, black, radio connector III
T16	16-pin connector, black, diagnostic connector
T20	20-pin connector, black, radio connector I
T32a	32-pin connector, green, on dash panel insert
T32b	32-pin connector, grey, on dash panel insert
A76	Connection (diagnosis wire K), in dash panel wiring harness
A178	Connection (infotainment CAN bus, high), in dash panel wiring harness
A179	Connection (infotainment CAN bus, low), in dash panel wiring harness
B229	Connection (high bus), in interior wiring harness
B230	Connection (low bus), in interior wiring harness
*	Models without driver information system
**	Models with driver information system
***	Applies to radio Chorus
****	Applies to radio Concert/Symphony

Protected by copyright. Copying for private or commercial purposes, in part or in whole, is not permitted unless authorised by AUDI AG. AUDI AG does not guarantee or accept any liability with respect to the correctness of information in this document. Copyright by AUDI AG.

ws	=	white
sw	=	black
ro	=	red
br	=	brown
gn	=	green
bl	=	blue
gr	=	grey
li	=	purple
ge	=	yellow
or	=	orange
rs	=	pink

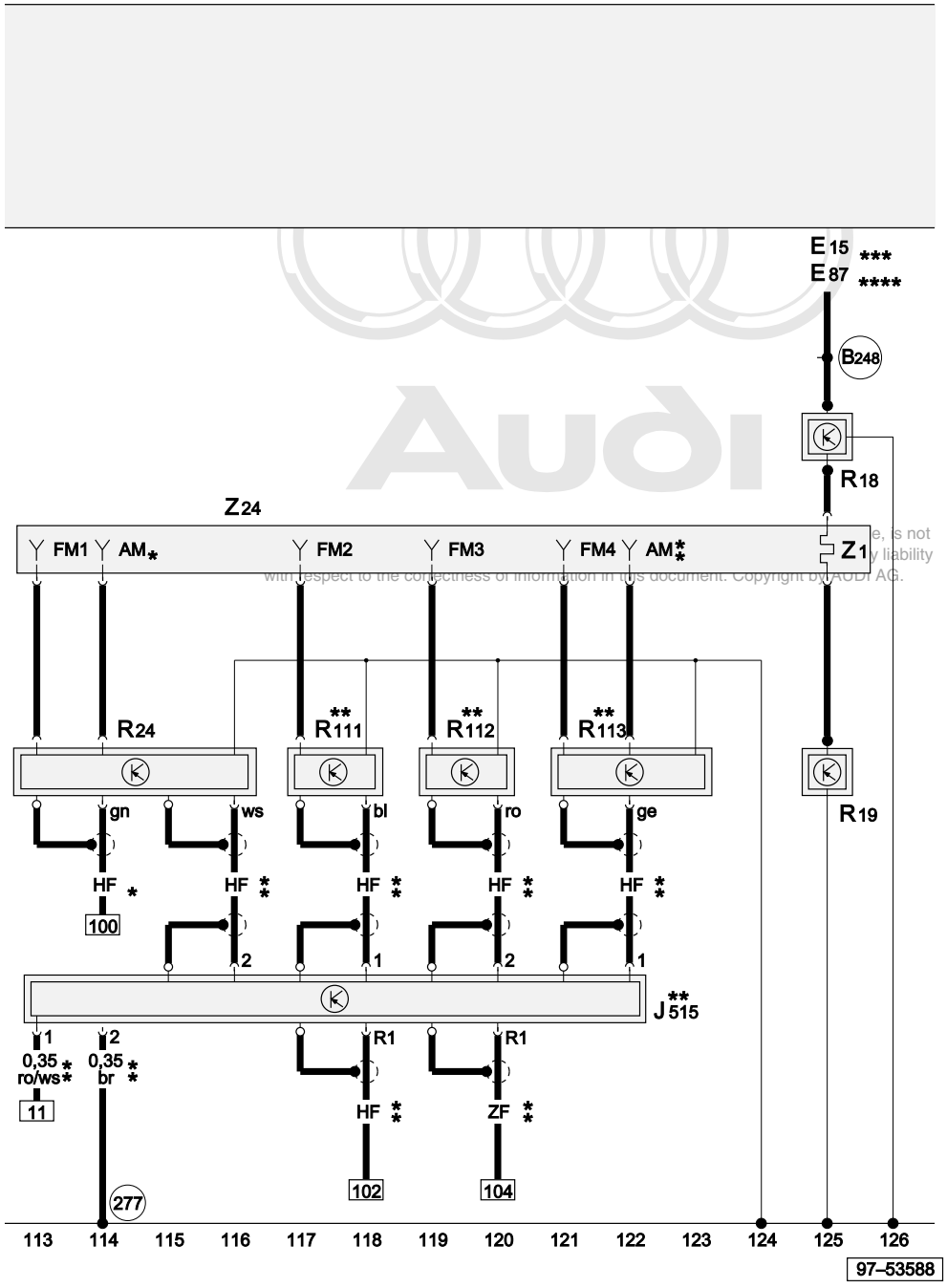

Audi
e, is not
y liability
with respect to the correctness of information in this document. Copyright by AUDI AG.

ws = white
sw = black
ro = red
br = brown
gn = green
bl = blue
gr = grey
li = purple
ge = yellow
or = orange
rs = pink

Aerial

E15	Heated rear window switch
E87	Control and display unit for air conditioner/Climatronic
J515	Aerial selection control unit
R18	Frequency switch, left
R19	Frequency switch, right
R24	Aerial amplifier
R111	Aerial amplifier -2-
R112	Aerial amplifier -3-
R113	Aerial amplifier -4-
Z1	Heated rear window
Z24	Heated rear window with window aerial
277	Earth connection -3-, in interior wiring harness
B248	Connection -2- (heated rear window), in interior wiring harness
*	Applies to radio Chorus
**	Applies to radio Concert/Symphony
***	Does not apply to models with air conditioner
****	Only models with air conditioner

Radio navigation system (RNS-D)

From model year 2002

Main fuse

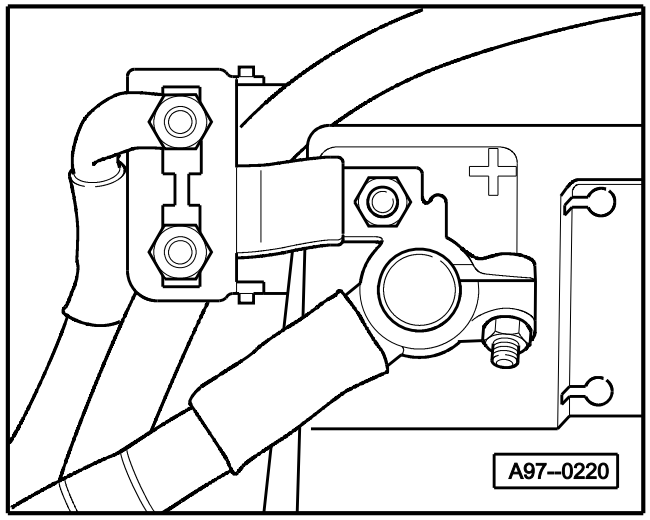

- On battery

9-point relay carrier, fuse box

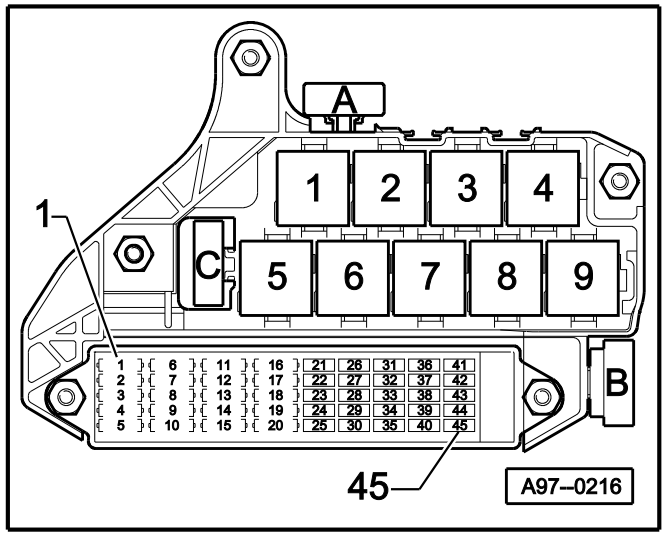

Protected by copyright. Copying for private or commercial purposes, in part or in whole, is not permitted unless authorised by AUDI AG. AUDI AG does not guarantee or accept any liability with respect to the correctness of information in this document. Copyright by AUDI AG.

- In dash panel

Fuse colours

5 A - beige
7.5 A - brown
10 A - red
15 A - blue
20 A - yellow
25 A - white
30 A - green

Protected by copyright. Copying for private or commercial purposes, in part or in whole, is not permitted unless authorised by AUDI AG. AUDI AG does not guarantee or accept any liability with respect to the correctness of information in this document. Copyright by AUDI AG.

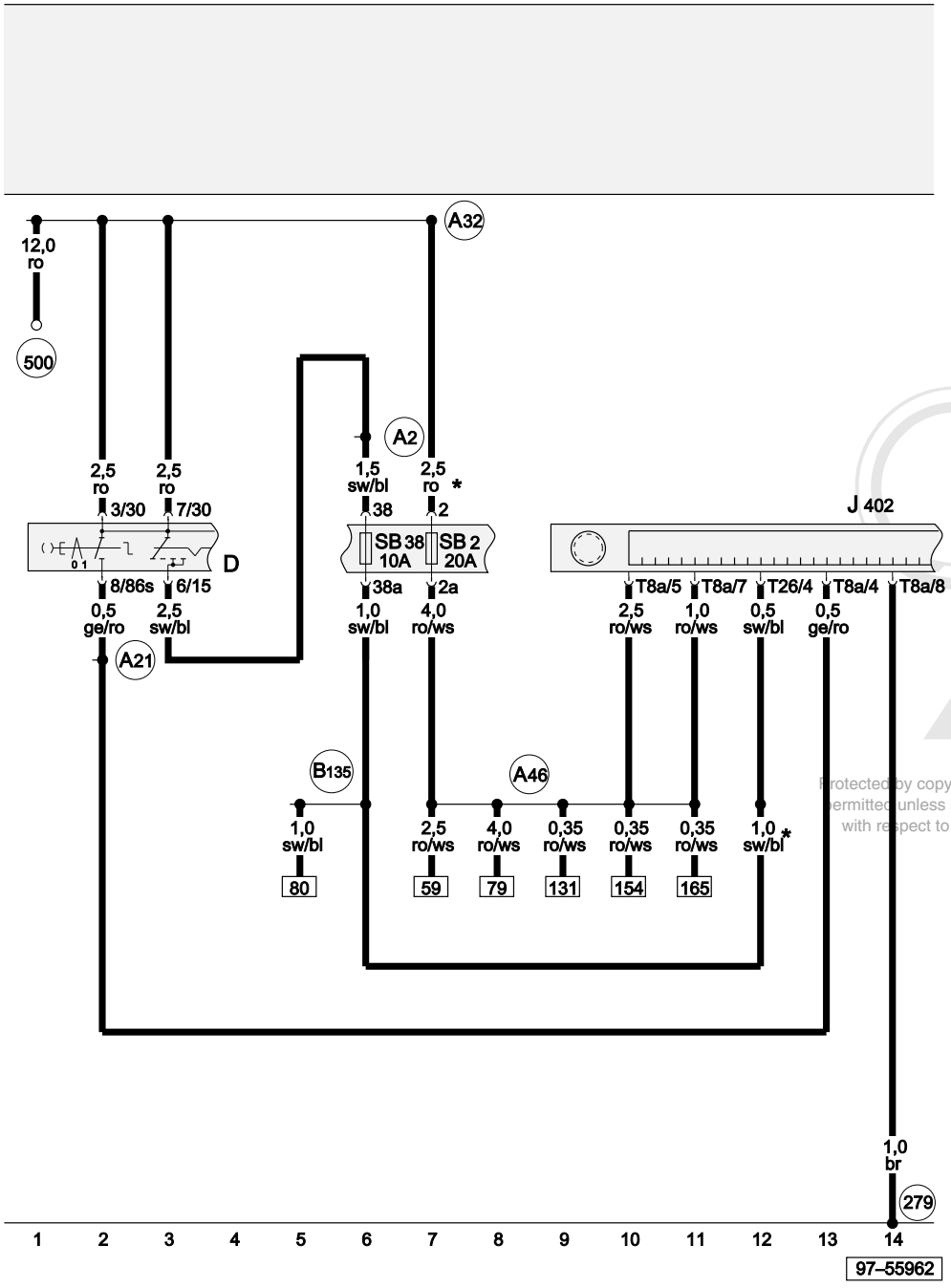

Voltage supply

D	Ignition/starter switch
J402	Operating electronics control unit, navigation
SB2	Fuse on fuse box
SB38	Fuse on fuse box
T8a	8-pin connector, black, radio connector III
T26	26-pin connector, black, on operating electronics control unit, navigation
279	Earth connection -5-, in interior wiring harness
500	Screw connection -1- (30), on relay plate
A2	Positive (+) connection (15), in dash panel wiring harness
A21	Connection (86s), in dash panel wiring harness
A32	Positive (+) connection (30), in dash panel wiring harness
A46	Positive (+) connection (30 - from radio), in dash panel wiring harness
B135	Connection -1- (15a), in interior wiring harness
*	Applies to models with 1.2 litre TDI engine, see Basic equipment for 1.2 litre TDI engine

Protected by copyright. Copying for private or commercial purposes, in part or in whole, is not permitted unless authorised by AUDI AG. AUDI AG does not guarantee or accept any liability with respect to the correctness of information in this document. Copyright by AUDI AG.

ws	=	white
sw	=	black
ro	=	red
br	=	brown
gn	=	green
bl	=	blue
gr	=	grey
li	=	purple
ge	=	yellow
or	=	orange
rs	=	pink

Reversing light switch, ABS with EDL control unit, telephone/ telematics control unit

F4	Reversing light switch
J104	ABS with EDL control unit
J402	Operating electronics control unit, navigation
J412	Operating electronics control unit, mobile phone
J526	Telephone/telematics control unit
T8a	8-pin connector, black, radio connector III
T10t	10-pin connector, black, on telephone/telematics control unit
T17g	17-pin connector, red, connector point, A pillar, left
T17e	17-pin connector, blue, in footwell, front left
T18	18-pin connector, black, mobile phone interface, in front passenger's footwell
T20	20-pin connector, black, radio connector I
T26	26-pin connector, black, on operating electronics control unit, navigation
T46	46-pin connector, black, on telephone/telematics control unit
A87	Connection (RF (reversing light)), in dash panel wiring harness
A129	Connection (muting), in dash panel wiring harness
*	Only applies to models with provision for mobile phone
**	Only applies to models with telematics
***	Applicable for models up to May 2002

Protected by copyright. Copying for private or commercial purposes, in part or in whole, is not permitted unless authorised by AUDI AG. AUDI AG does not guarantee or accept any liability with respect to the correctness of information in this document. Copyright by AUDI AG.

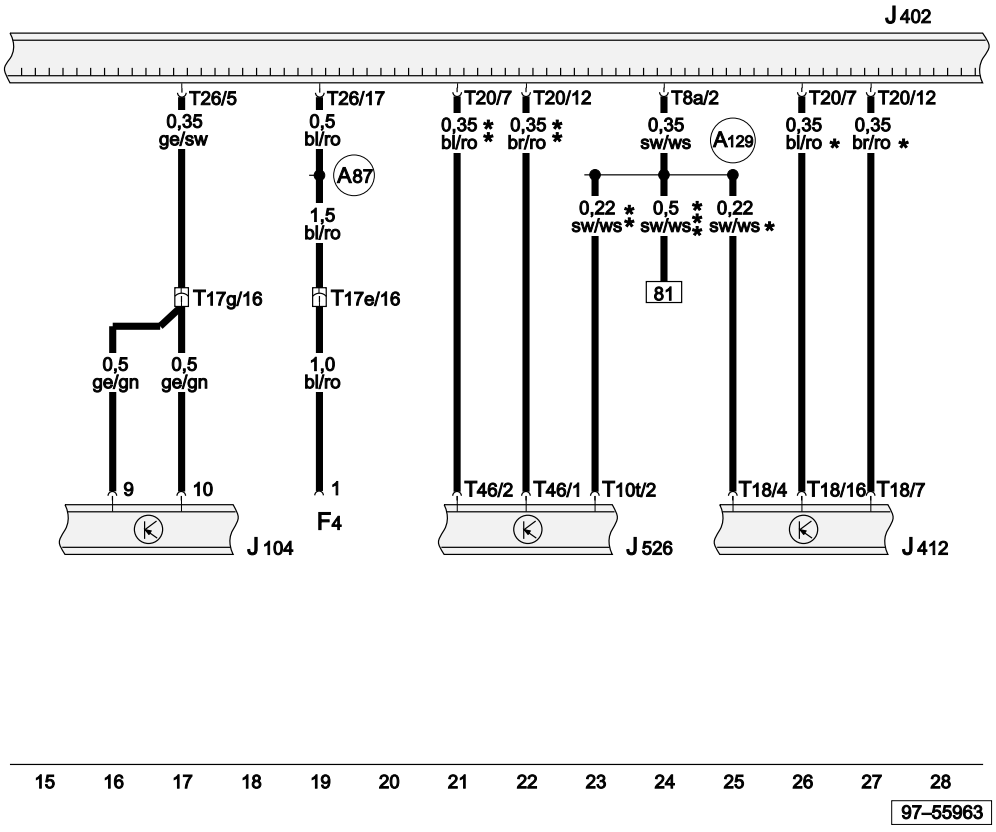

ws	=	white
sw	=	black
ro	=	red
br	=	brown
gn	=	green
bl	=	blue
gr	=	grey
li	=	purple
ge	=	yellow
or	=	orange
rs	=	pink

Front loudspeakers

R21	Bass loudspeaker, front left
R23	Bass loudspeaker, front right
R26	Middle-high tone loudspeaker, front left
R27	Middle-high tone loudspeaker, front right
J402	Operating electronics control unit, navigation
T8	8-pin connector, brown, radio connector II
T20a	20-pin connector, black, at A pillar, left
T20b	20-pin connector, black, at A pillar, right

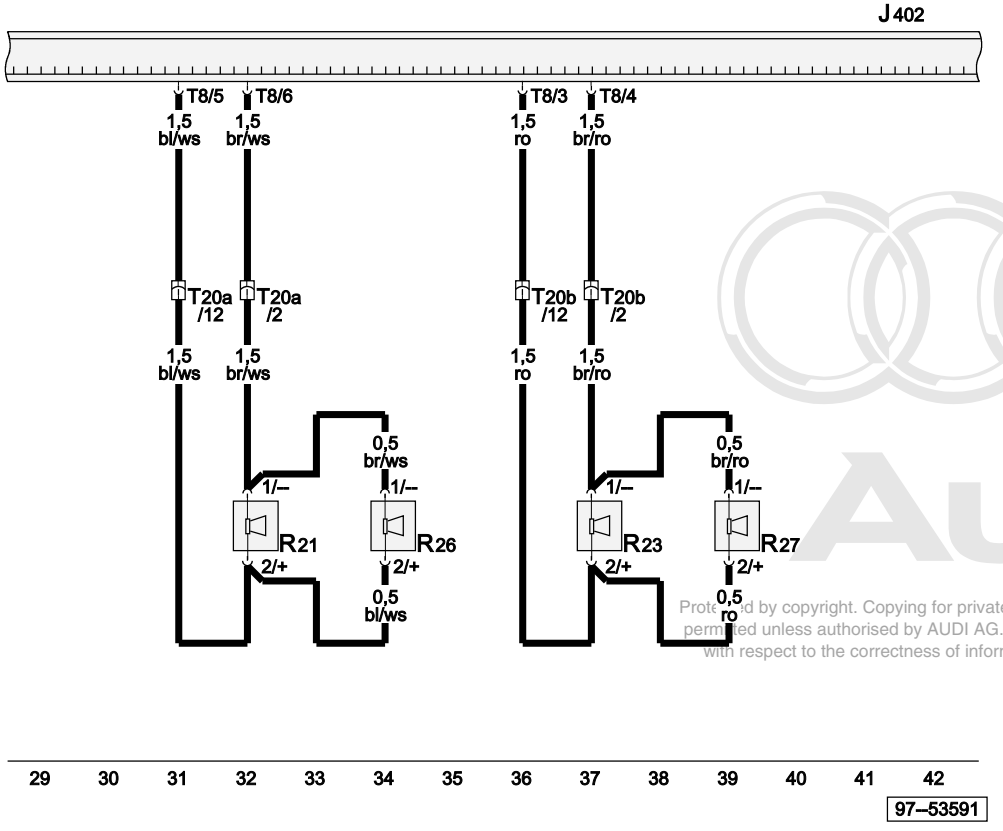

ws = white
sw = black
ro = red
br = brown
gn = green
bl = blue
gr = grey
li = purple
ge = yellow
or = orange
rs = pink

Protected by copyright. Copying for private or commercial purposes, in part or in whole, is not permitted unless authorised by AUDI AG. AUDI AG does not guarantee or accept any liability with respect to the correctness of information in this document. Copyright by AUDI AG.

Passive loudspeakers, rear

R	Radio
R15	Bass loudspeaker, rear left
R17	Bass loudspeaker, rear right
R34	Middle-treble tone loudspeaker, rear left
R35	Middle-treble tone loudspeaker, rear right
T8	8-pin connector, brown, radio connector II
T20c	20-pin connector, black, at B pillar, left
T20d	20-pin connector, black, at B pillar, right

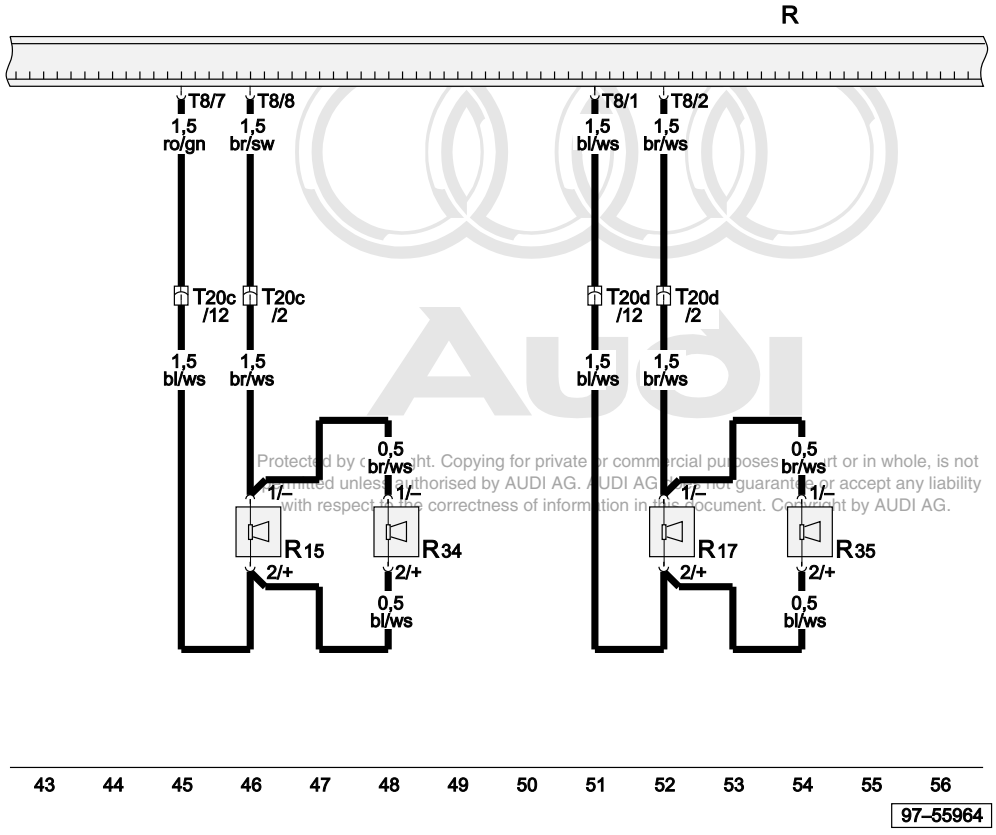

Protected by copyright. Copying for private or commercial purposes, in part or in whole, is not permitted unless authorised by AUDI AG. AUDI AG does not guarantee or accept any liability with respect to the correctness of information in this document. Copyright by AUDI AG.

ws	=	white
sw	=	black
ro	=	red
br	=	brown
gn	=	green
bl	=	blue
gr	=	grey
li	=	purple
ge	=	yellow
or	=	orange
rs	=	pink

Active loudspeakers, rear

R12	Amplifier
R15	Bass loudspeaker, rear left
R17	Bass loudspeaker, rear right
R34	Middle-treble tone loudspeaker, rear left
R35	Middle-treble tone loudspeaker, rear right
J402	Operating electronics control unit, navigation
T20	20-pin connector, black, radio connector I
T20c	20-pin connector, black, at B pillar, left
T20d	20-pin connector, black, at B pillar, right
(279)	Earth connection -5-, in interior wiring harness

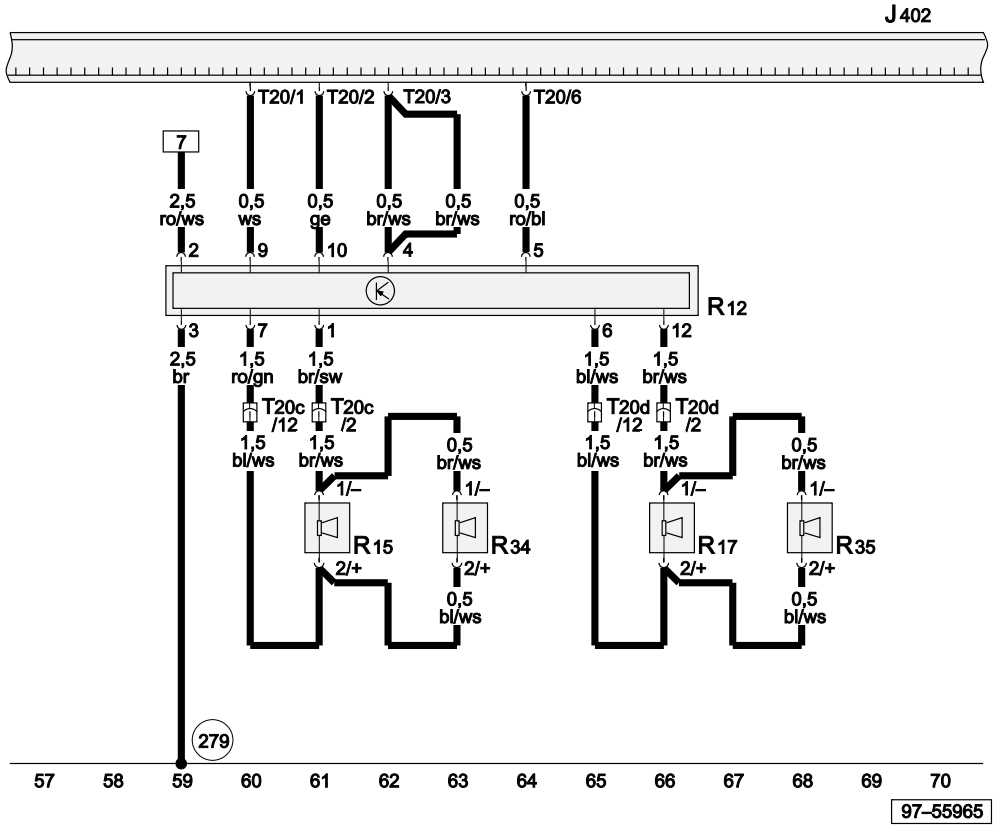

ws	=	white
sw	=	black
ro	=	red
br	=	brown
gn	=	green
bl	=	blue
gr	=	grey
li	=	purple
ge	=	yellow
or	=	orange
rs	=	pink

Protected by copyright. Copying for private or commercial purposes, in part or in whole, is not permitted unless authorised by AUDI AG. AUDI AG does not guarantee or accept any liability with respect to the correctness of information in this document. Copyright by AUDI AG.

Bose loudspeakers, front

R12	Amplifier
R21	Bass loudspeaker, front left
R23	Bass loudspeaker, front right
R26	Middle-high tone loudspeaker, front left
R27	Middle-high tone loudspeaker, front right
J402	Operating electronics control unit, navigation
T20	20-pin connector, black, radio connector I
T20a	20-pin connector, black, at A pillar, left
T20b	20-pin connector, black, at A pillar, right
(133)	Earth connection, in loudspeaker wiring harness
(279)	Earth connection -5-, in interior wiring harness
*	Applicable for models up to May 2002

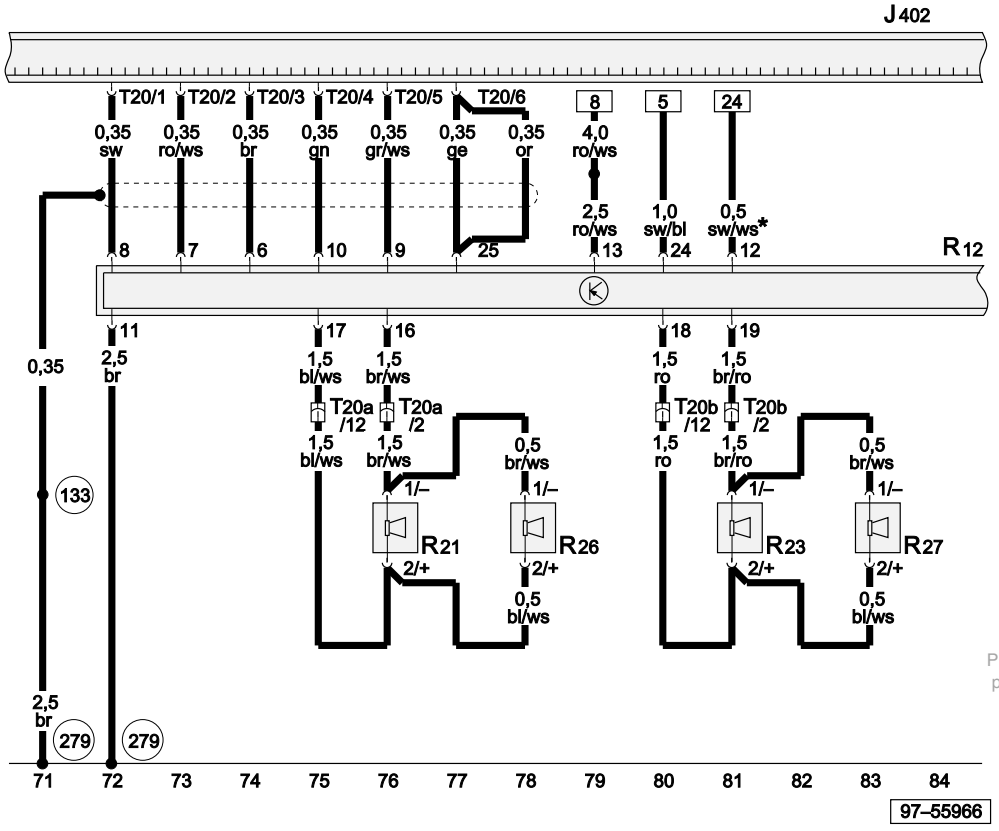

ws = white
sw = black
ro = red
br = brown
gn = green
bl = blue
gr = grey
li = purple
ge = yellow
or = orange
rs = pink

Protected by copyright. Copying for private or commercial purposes, in part or in whole, is not permitted unless authorised by AUDI AG. AUDI AG does not guarantee or accept any liability with respect to the correctness of information in this document. Copyright by AUDI AG.

Bose loudspeakers, rear

R12	Amplifier
R15	Bass loudspeaker, rear left
R17	Bass loudspeaker, rear right
R34	Middle-treble tone loudspeaker, rear left
R35	Middle-treble tone loudspeaker, rear right
R100	Bass loudspeaker (subwoofer), in luggage compartment, in intermediate floor panel
J402	Operating electronics control unit, navigation
T20c	20-pin connector, black, at B pillar, left
T20d	20-pin connector, black, at B pillar, right

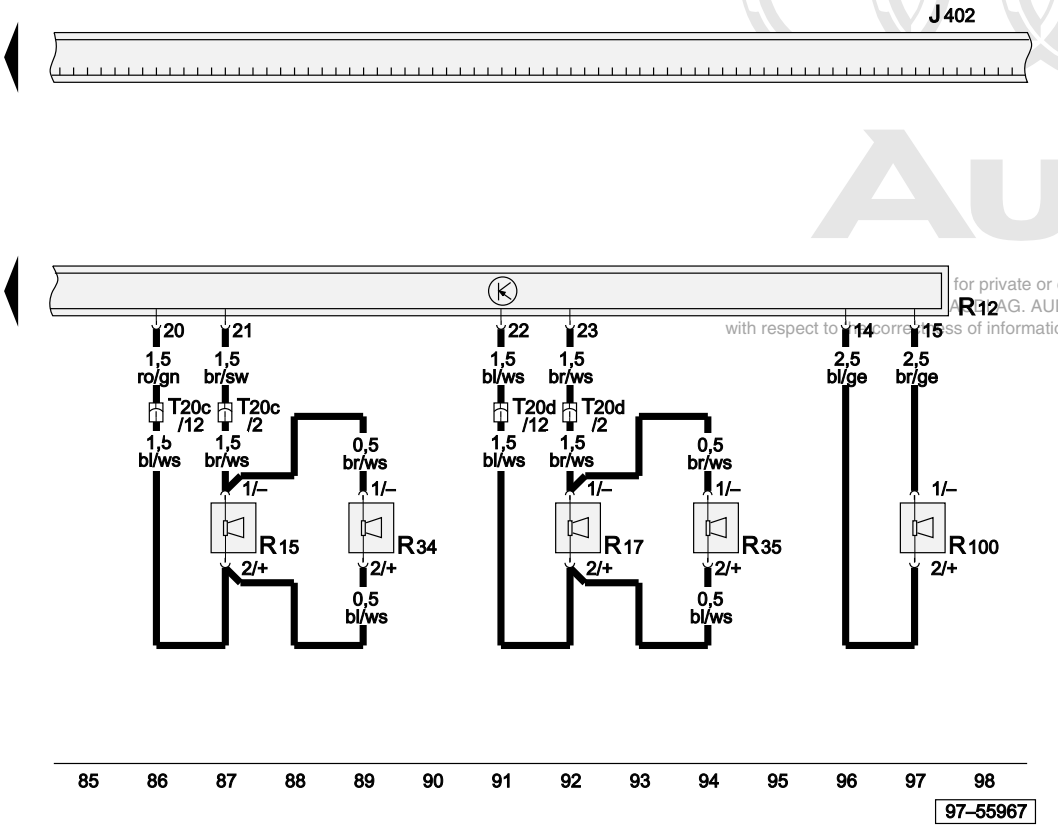

for private or commercial purposes, in part or in whole, is not AUDI AG. AUDI AG does not guarantee or accept any liability with respect to the correctness of information in this document. Copyright by AUDI AG.

ws	=	white
sw	=	black
ro	=	red
br	=	brown
gn	=	green
bl	=	blue
gr	=	grey
li	=	purple
ge	=	yellow
or	=	orange
rs	=	pink

CD changer

R41	CD changer
J402	Operating electronics control unit, navigation
T20	20-pin connector, black, radio connector I
279	Earth connection -5-, in interior wiring harness
V14	Connection (screening), in CD changer wiring harness
*	Applicable for models from May 2002 onwards
**	Applicable for models up to May 2002

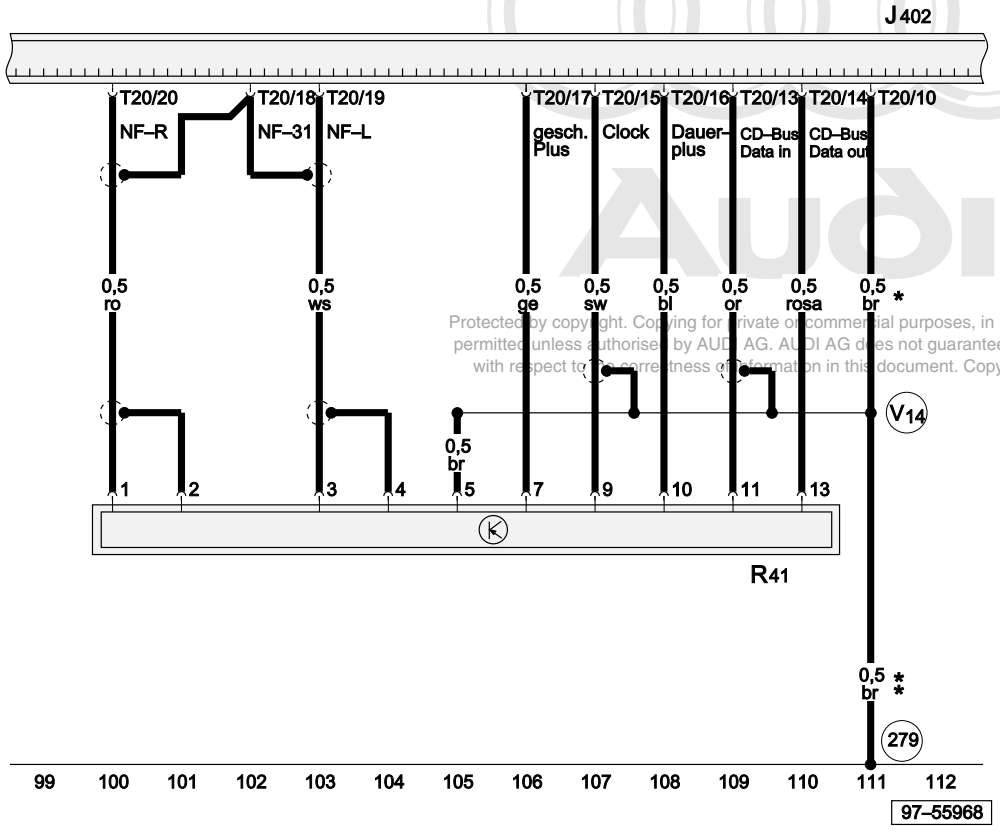

Protected by copyright. Copying for private or commercial purposes, in part or in whole, is not permitted unless authorised by AUDI AG. AUDI AG does not guarantee or accept any liability with respect to the correctness of information in this document. Copyright by AUDI AG.

ws	=	white
sw	=	black
ro	=	red
br	=	brown
gn	=	green
bl	=	blue
gr	=	grey
li	=	purple
ge	=	yellow
or	=	orange
rs	=	pink

Navigation/TV tuner

J402	Operating electronics control unit, navigation
J415	Navigation/TV tuner
T11	11-pin connector, on navigation/TV tuner
T54	54-pin connector, black, on navigation/TV tuner

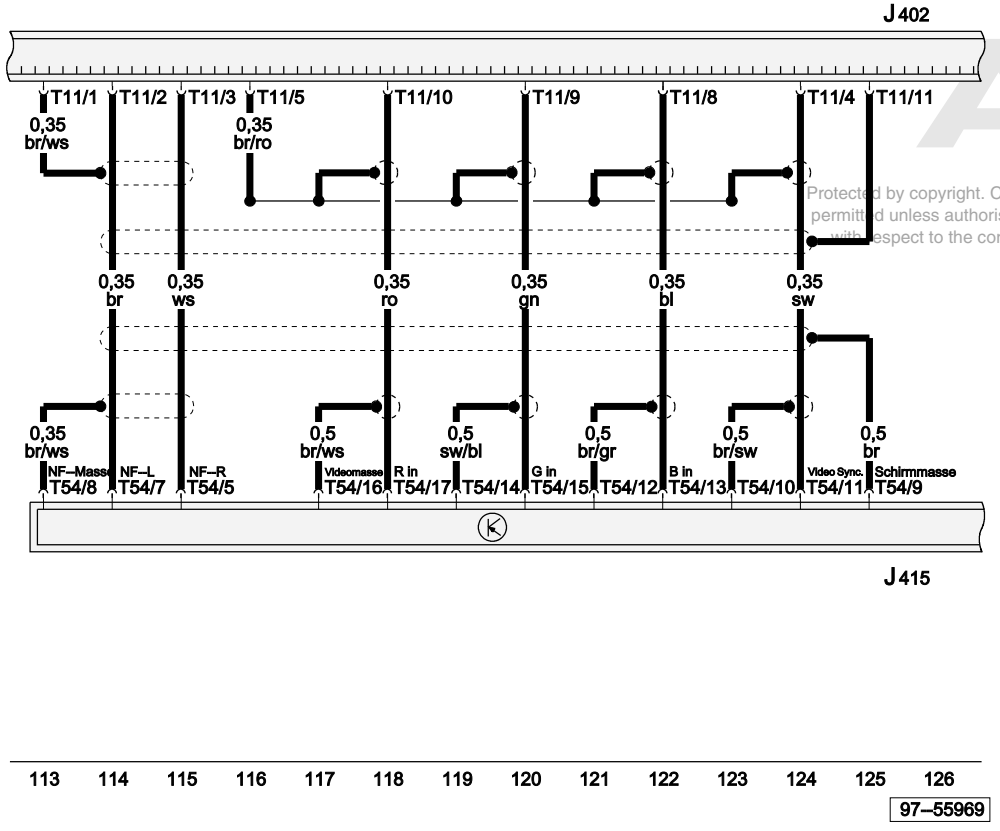

Protected by copyright. Copying for private or commercial purposes, in part or in whole, is not permitted unless authorised by AUDI AG. AUDI AG does not guarantee or accept any liability with respect to the correctness of information in this document. Copyright by AUDI AG.

ws	=	white
sw	=	black
ro	=	red
br	=	brown
gn	=	green
bl	=	blue
gr	=	grey
li	=	purple
ge	=	yellow
or	=	orange
rs	=	pink

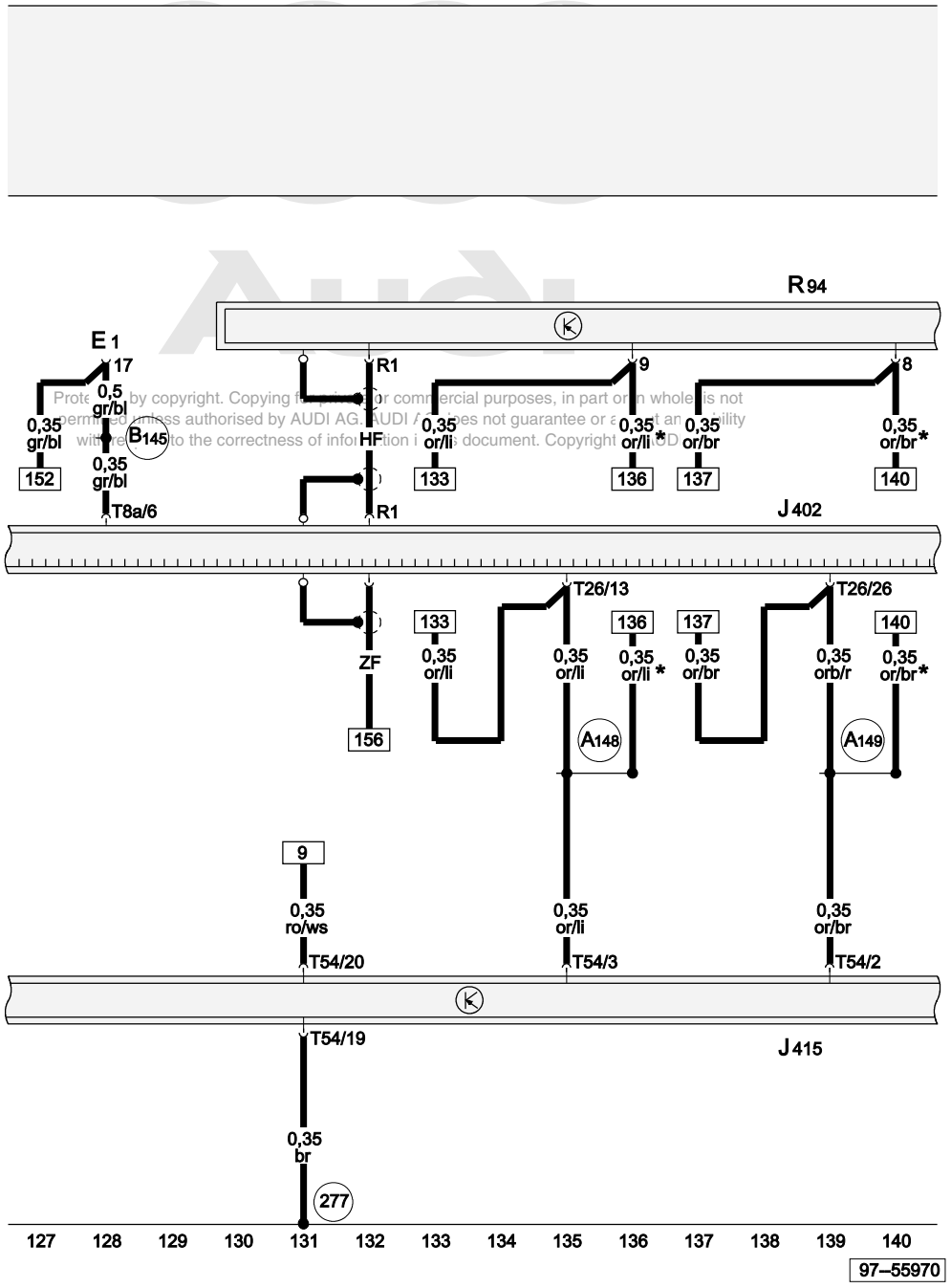

Protected by copyright. Copying for private or commercial purposes, in part or in whole, is not permitted unless authorised by AUDI AG. AUDI AG does not guarantee or accept any liability with respect to the correctness of information in this document. Copyright by AUDI AG.

ws = white
sw = black
ro = red
br = brown
gn = green
bl = blue
gr = grey
li = purple
ge = yellow
or = orange
rs = pink

Lighting switch, navigation/TV tuner, navigation interface

E1	Lighting switch
J402	Operating electronics control unit, navigation
J415	Navigation/TV tuner
R1	Aerial connection
R94	Navigation interface
T8a	8-pin connector, black, radio connector III
T26	26-pin connector, black, on operating electronics control unit, navigation
T54	54-pin connector, black, on navigation/TV tuner
277	Earth connection -3-, in interior wiring harness
A148	Connection (navigation CAN bus, high), in dash panel wiring harness
A149	Connection (navigation CAN bus, low), in dash panel wiring harness
B145	Positive (+) connection (58b), in interior wiring harness
*	Only applies to models with radio navigation system (RNS-D), with TV receiver

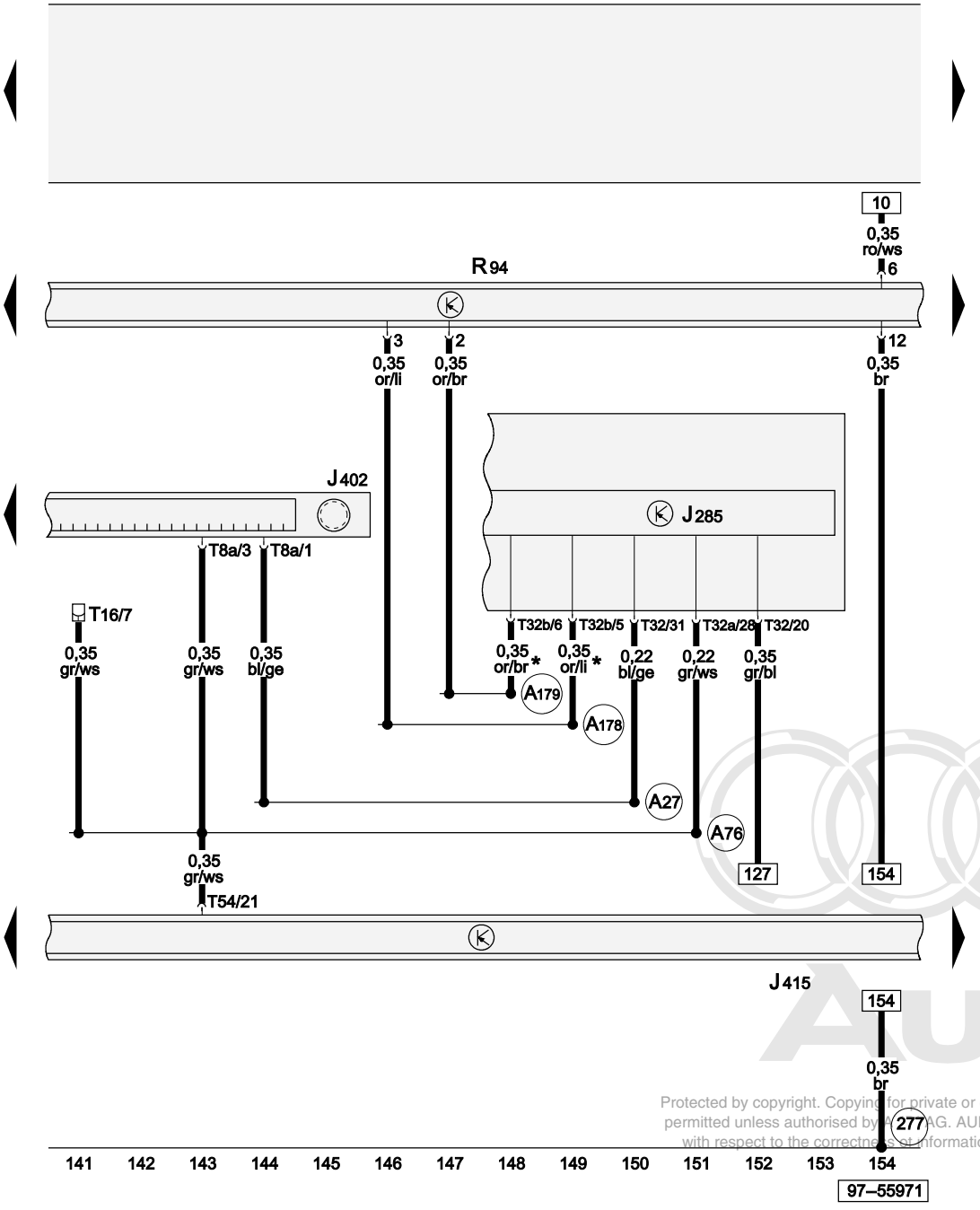

Control unit with display in dash panel insert

J285	Control unit with display in dash panel insert
J402	Operating electronics control unit, navigation
J415	Navigation/TV tuner
R94	Navigation interface
T8a	8-pin connector, black, radio connector III
T16	16-pin connector, black, diagnostic connector
T32	32-pin connector, blue, on dash panel insert
T32a	32-pin connector, green, on dash panel insert
T32b	32-pin connector, grey, on dash panel insert
T54	54-pin connector, black, on navigation/TV tuner
277	Earth connection -3-, in interior wiring harness
A27	Connection (speed signal), in dash panel wiring harness
A76	Connection (diagnosis wire K), in dash panel wiring harness
A178	Connection (infotainment CAN bus, high), in dash panel wiring harness
A179	Connection (infotainment CAN bus, low), in dash panel wiring harness
*	Only applies to models with driver information system

ws	=	white
sw	=	black
ro	=	red
br	=	brown
gn	=	green
bl	=	blue
gr	=	grey
li	=	purple
ge	=	yellow
or	=	orange
rs	=	pink

Protected by copyright. Copying for private or commercial purposes, in part or in whole, is not permitted unless authorised by AUDI AG. AUDI AG does not guarantee or accept any liability with respect to the correctness of information in this document. Copyright by AUDI AG.

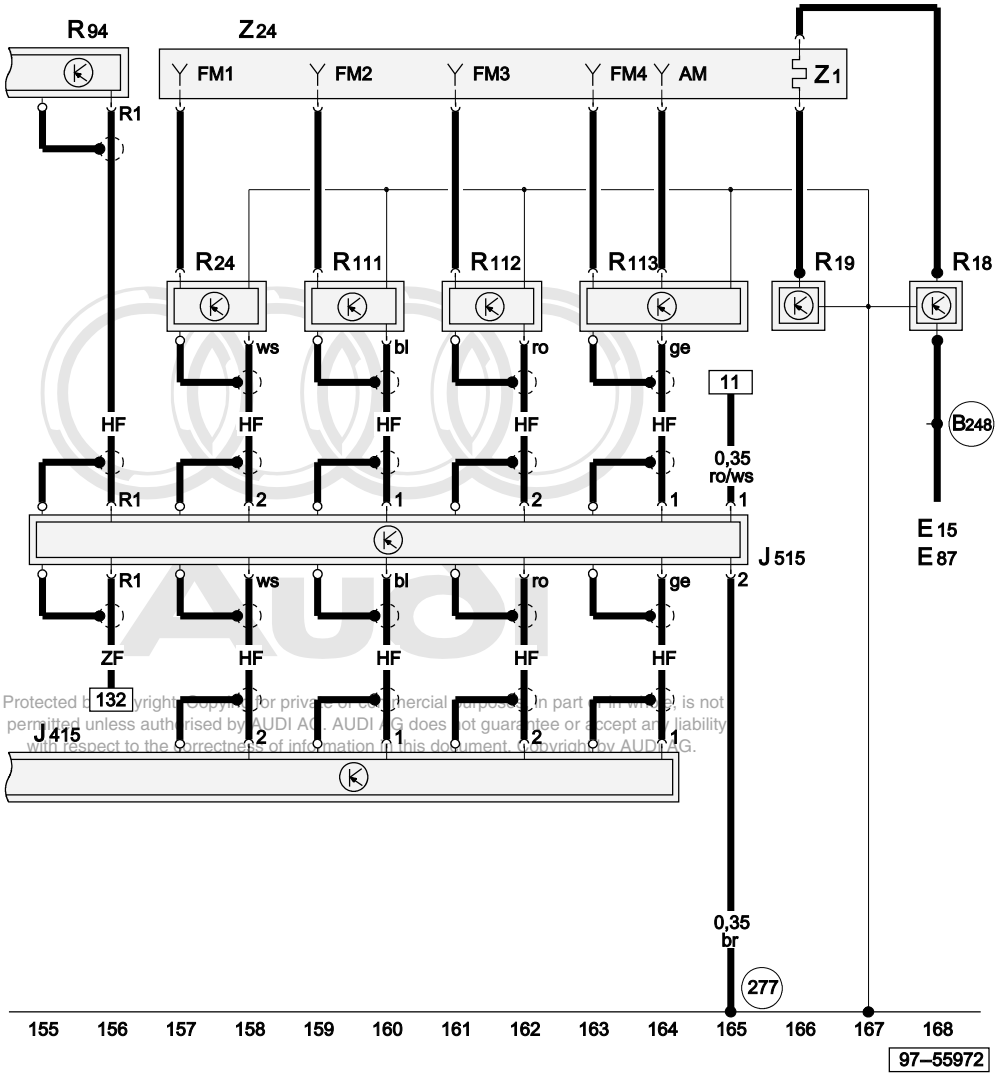

Protected by copyright. Copying for private or commercial purposes, in part or in whole, is not permitted unless authorised by AUDI AG. AUDI AG does not guarantee or accept any liability with respect to the correctness of information in this document. Copyright by AUDI AG.

ws = white
sw = black
ro = red
br = brown
gn = green
bl = blue
gr = grey
li = purple
ge = yellow
or = orange
rs = pink

Aerial

E15	Heated rear window switch
E87	Control and display unit for air conditioner/Climatronic
J415	Navigation/TV tuner
J515	Aerial selection control unit
R1	Aerial connection
R18	Frequency switch, left
R19	Frequency switch, right
R24	Aerial amplifier
R94	Navigation interface
R111	Aerial amplifier -2-
R112	Aerial amplifier -3-
R113	Aerial amplifier -4-
Z1	Heated rear window
Z24	Heated rear window with window aerial
277	Earth connection -3-, in interior wiring harness
B248	Connection -2- (heated rear window), in interior wiring harness

Headlight washer system

From model year 2002

3-point relay carrier (in footwell)

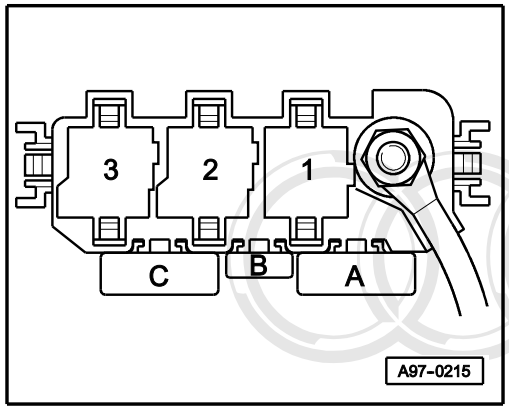

6+6-point relay carrier (in footwell)

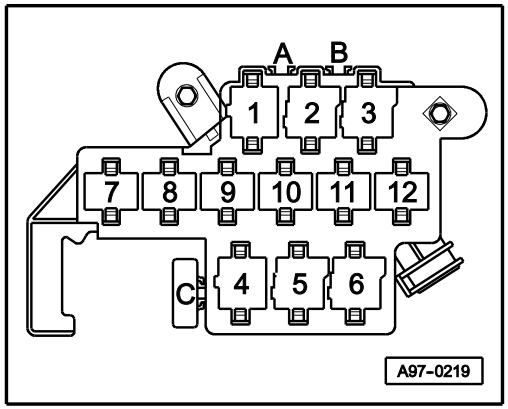

Position of relays:

2 – Automatic intermittent wash/wipe relay (J31)

3

9-point relay carrier (in dash panel)

Fuse box

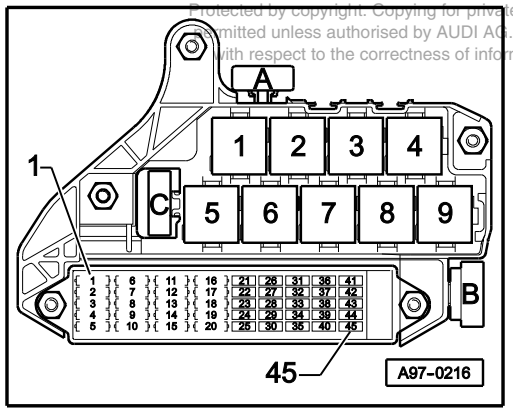

Protected by copyright. Copying for private or commercial purposes, in part or in whole, is not permitted unless authorised by AUDI AG. AUDI AG does not guarantee or accept any liability with respect to the correctness of information in this document. Copyright by AUDI AG.

Fuse colours

30 A – green
25 A – white
20 A – yellow
15 A – blue
10 A – red
7.5A – orange
5 A – beige

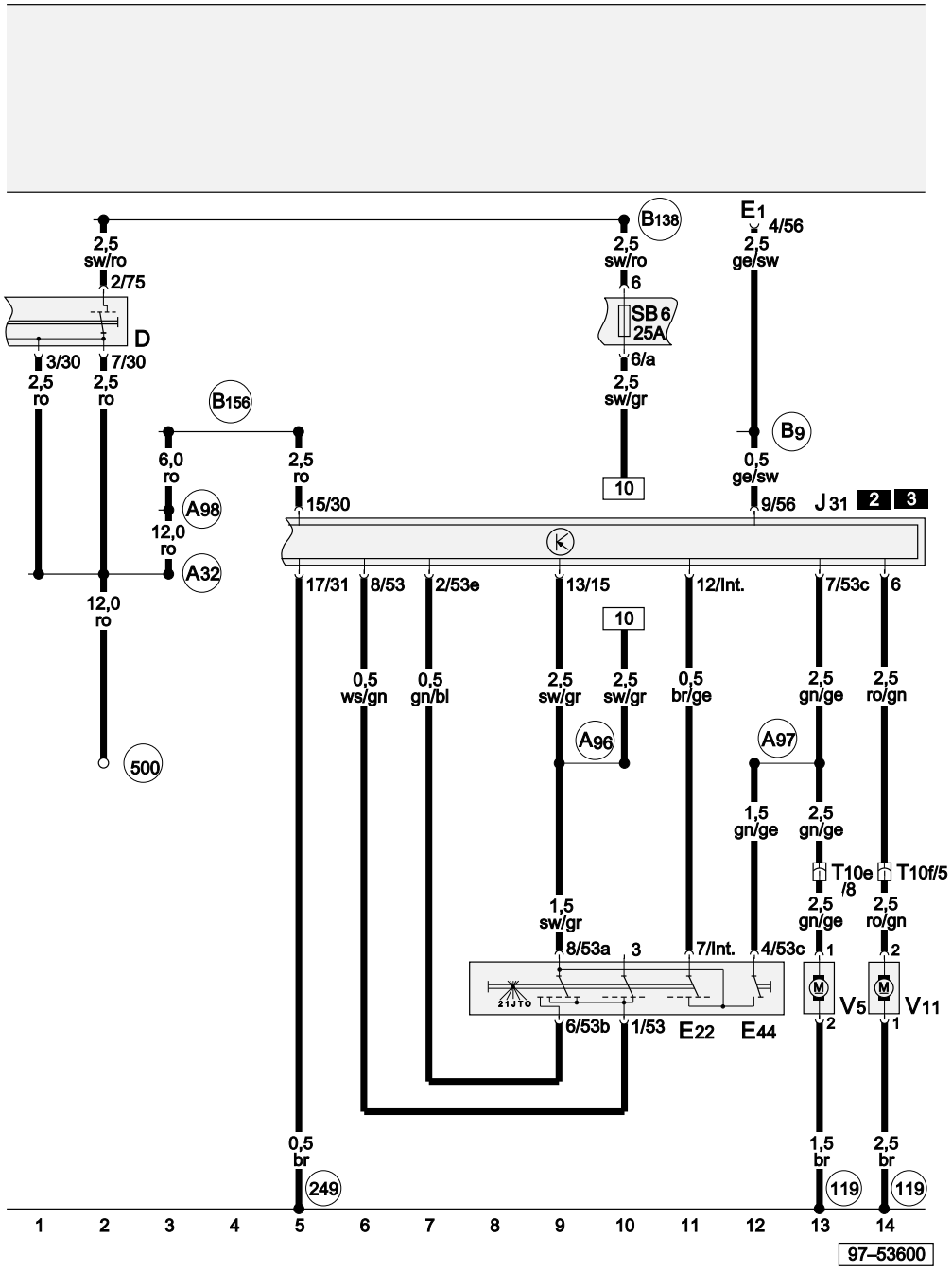

ws = white
sw = black
ro = red
br = brown
gn = green
bl = blue
gr = grey
li = purple
ge = yellow
or = orange
rs = pink

Automatic intermittent wash/wipe relay, windscreen washer pump switch (automatic wash/wipe and headlight washer system), headlight washer system pump

D	Ignition/starter switch
E1	Lighting switch
E22	Intermittent wiper switch
E44	Windscreen washer pump switch
J31	Automatic intermittent wash/wipe relay
SB6	Fuse -6- on fuse box
T10e	10-pin connector, red, connector point, A pillar, left
T10f	10-pin connector, blue, connector point, A pillar, left
V5	Windscreen washer pump
V11	Headlight washer system pump
119	Earth connection -1-, in headlight wiring harness
249	Earth connection -2-, in interior wiring harness
500	Screw connection -1- (30), on relay plate
A32	Positive (+) connection (30), in dash panel wiring harness
A96	Connection (53a), in dash panel wiring harness
A97	Connection (53), in dash panel wiring harness
A98	Positive (+) connection -4- (30), in dash panel wiring harness
B9	Connection (56), in steering column switch wiring harness
B138	Positive (+) connection (X), in interior wiring harness
B156	Positive (+) connection (30a), in interior wiring harness

Protected by copyright. Copying for private or commercial purposes, in part or in whole, is not permitted unless authorised by AUDI AG. AUDI AG does not guarantee or accept any liability with respect to the correctne... formation in this document. Copyright by AUDI AG.

Seat heating

From model year 2002

Main fuse

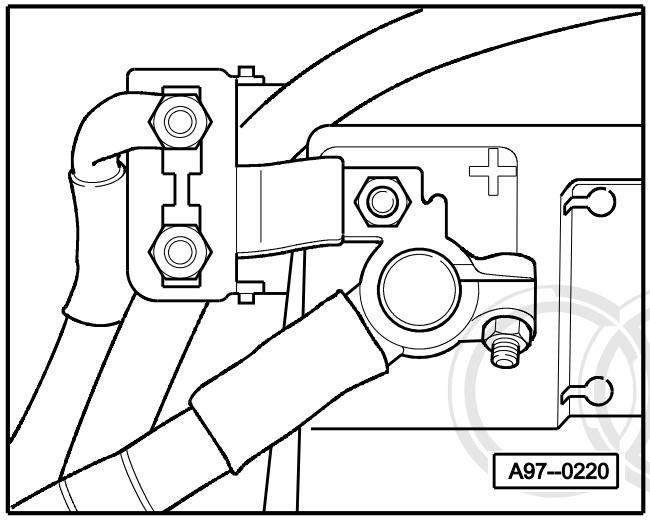

- On battery

9-point relay carrier, fuse box

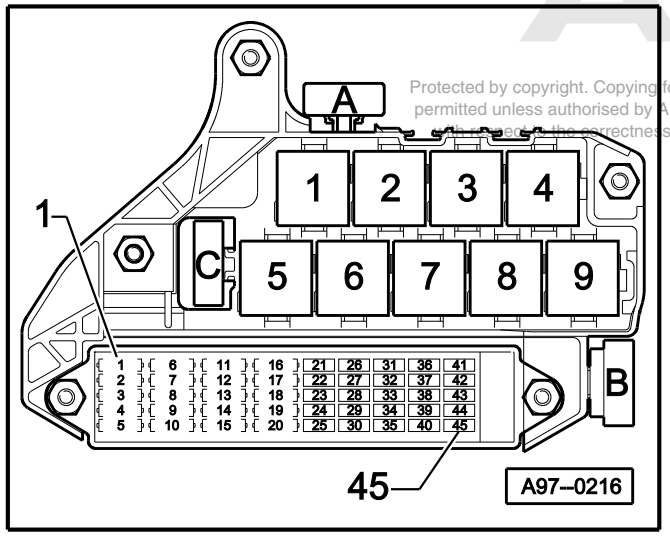

Protected by copyright. Copying for private or commercial purposes, in part or in whole, is not permitted unless authorised by AUDI AG. AUDI AG does not guarantee or accept any liability with respect to the correctness of information in this document. Copyright by AUDI AG.

- In dash panel

Fuse colours

5 A - beige
7.5 A - brown
10 A - red
15 A - blue
20 A - yellow
25 A - white
30 A - green

Protected by copyright. Copying for private or commercial purposes, in part or in whole, is not permitted unless authorised by AUDI AG. AUDI AG does not guarantee or accept any liability with respect to the correctness of information in this document. Copyright by AUDI AG.

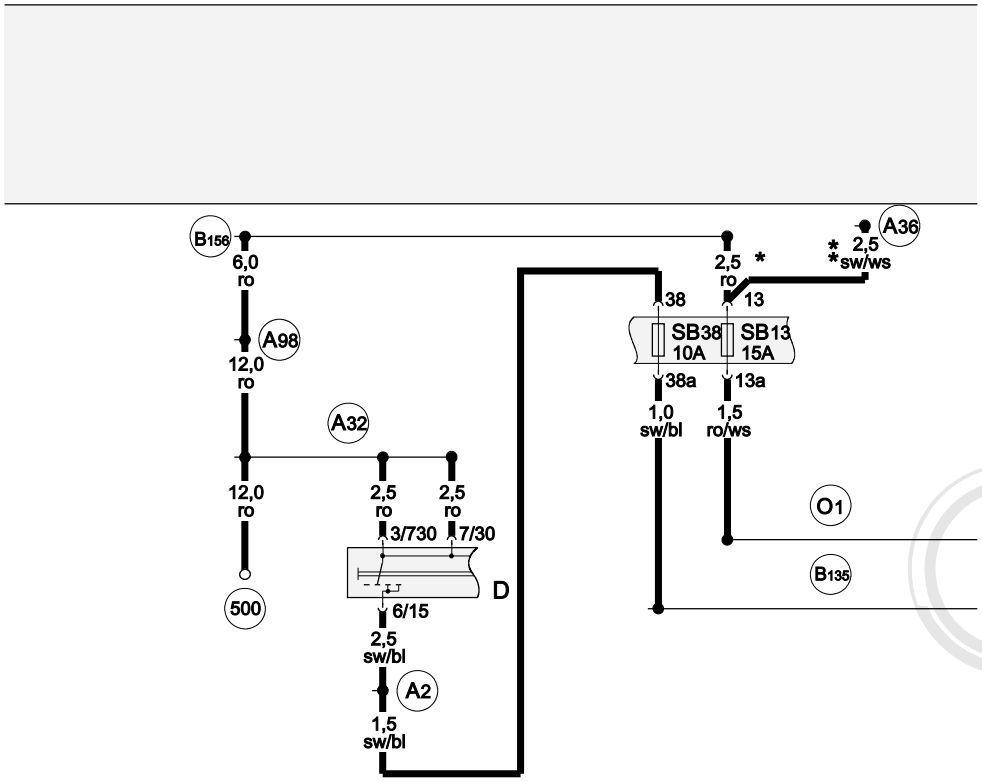

Ignition/starter switch, fuses

D	Ignition/starter switch
SB13	Fuse -13- on fuse box
SB38	Fuse -38- on fuse box
96	Earth connection -1-, in seat heating wiring harness
284	Earth connection -6-, in interior wiring harness
500	Screw connection -1- (30), on relay plate
A2	Positive (+) connection (15), in dash panel wiring harness
A32	Positive (+) connection (30), in dash panel wiring harness
A36	Connection (75a), in dash panel wiring harness
A98	Positive (+) connection -4- (30), in dash panel wiring harness
B135	Connection -1- (15a), in interior wiring harness
B156	Positive (+) connection (30a), in interior wiring harness
O1	Positive (+) connection (30), in heated seats wiring harness
*	Only applies to models without 1.2 litre TDI engine
**	Only applies to models with 1.2 litre TDI engine

Protected by copyright. Copying for private or commercial purposes, in part or in whole, is not permitted unless authorised by AUDI AG. AUDI AG does not guarantee or accept any liability with respect to the correctness of information in this document. Copyright by AUDI AG.

ws	=	white
sw	=	black
ro	=	red
br	=	brown
gn	=	green
bl	=	blue
gr	=	grey
li	=	purple
ge	=	yellow
or	=	orange
rs	=	pink

Heated driver's seat regulator, driver's seat temperature sensor, heated driver's seat cushion, heated driver's seat backrest, driver's seat cushion lateral support heater

E94	Heated driver's seat regulator
G59	Driver's seat temperature sensor
T2h	2-pin connector, in driver's seat
T6c	6-pin connector, green, under driver's seat
Z6	Heated driver's seat cushion
Z7	Heated driver's seat backrest
Z31	Driver's seat cushion lateral support heater
96	Earth connection -1-, in seat heating wiring harness
277	Earth connection -3-, in interior wiring harness
B135	Connection -1- (15a), in interior wiring harness
O1	Positive (+) connection (30), in heated seats wiring harness

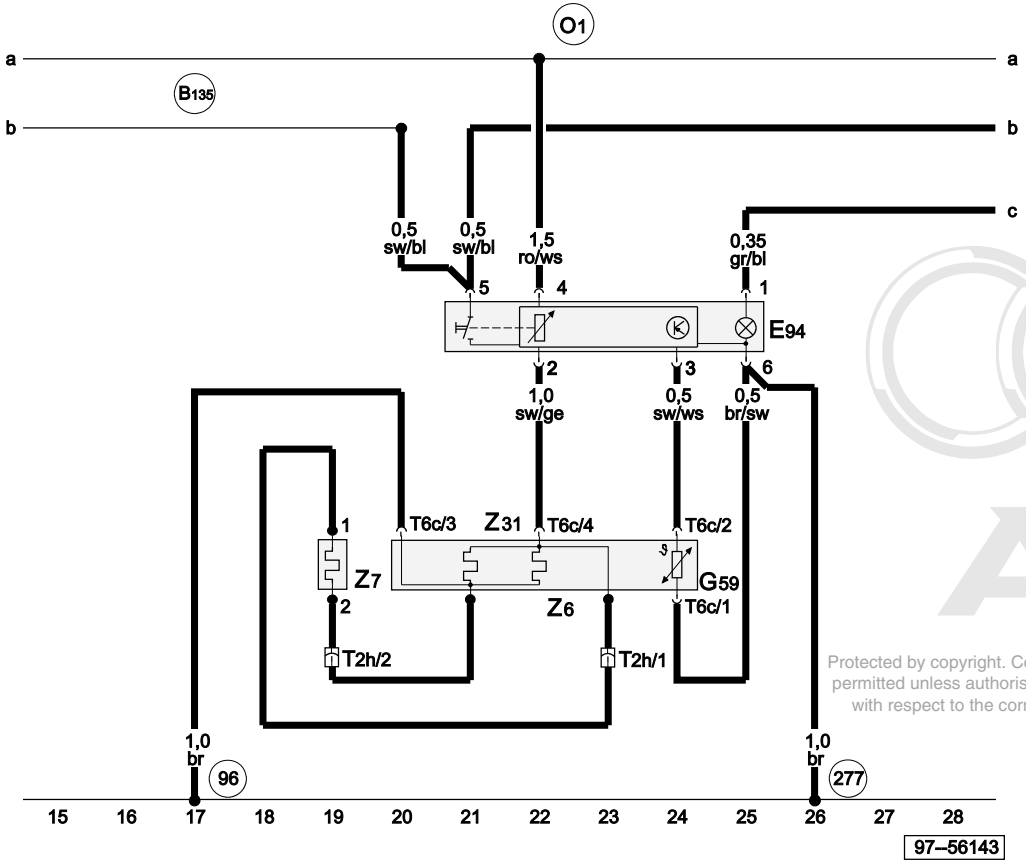

ws	=	white
sw	=	black
ro	=	red
br	=	brown
gn	=	green
bl	=	blue
gr	=	grey
li	=	purple
ge	=	yellow
or	=	orange
rs	=	pink

Protected by copyright. Copying for private or commercial purposes, in part or in whole, is not permitted unless authorised by AUDI AG. Audi AG does not guarantee or accept any liability with respect to the correctness of information in this document. Copyright by AUDI AG.

Heated front passenger's seat regulator, front passenger's seat temperature sensor, heated front passenger's seat cushion, heated front passenger's seat backrest, front passenger's seat cushion lateral support heater

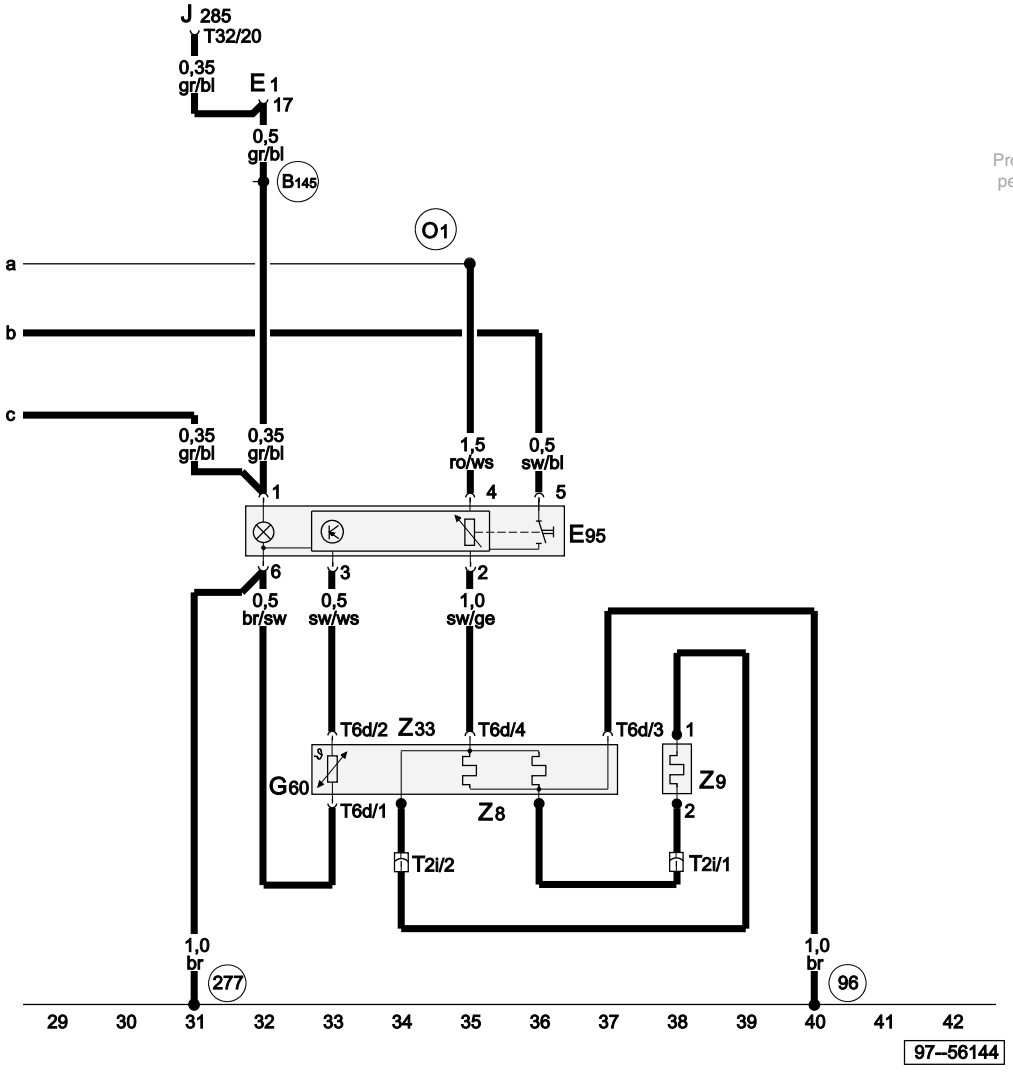

ws = white
sw = black
ro = red
br = brown
gn = green
bl = blue
gr = grey
li = purple
ge = yellow
or = orange
rs = pink

E1	Lighting switch
E95	Heated front passenger's seat regulator
G60	Front passenger's seat temperature sensor
J285	Control unit with display in dash panel insert
T2i	2-pin connector, in front passenger's seat
T6d	6-pin connector, green, under front passenger's seat
T32	32-pin connector, blue, on dash panel insert
Z8	Heated front passenger's seat cushion
Z9	Heated front passenger's seat backrest
Z33	Front passenger's seat cushion lateral support heater
96	Earth connection -1-, in seat heating wiring harness
277	Earth connection -3-, in interior wiring harness
B145	Positive (+) connection (58b), in interior wiring harness
O1	Positive (+) connection (30), in heated seats wiring harness

Protected by copyright. Copying for private or commercial purposes, in part or in whole, is not permitted unless authorised by AUDI AG. AUDI AG does not guarantee or accept any liability with respect to the correctness of information in this document. Copyright by AUDI AG.

Daytime driving lights with fog lights

From model year 2002

Protected by copyright. Copying for private or commercial purposes, in part or in whole, is not permitted unless authorised by AUDI AG. AUDI AG does not guarantee or accept any liability with respect to the correctness of information in this document. Copyright by AUDI AG

Main fuse

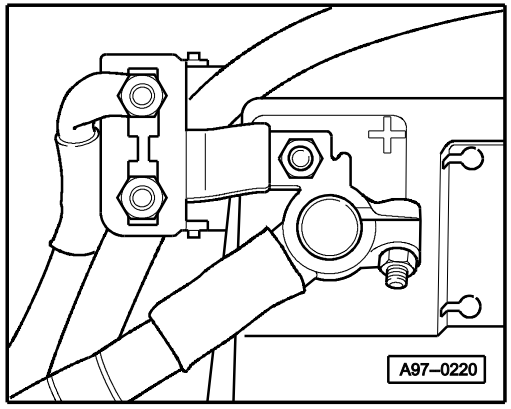

3-point relay carrier (in driver's footwell)

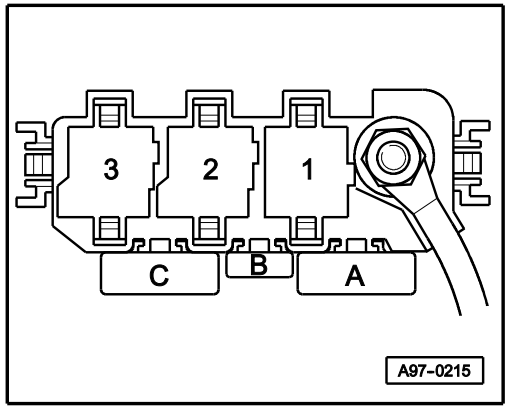

9-point relay carrier (in dash panel)

Fuse box

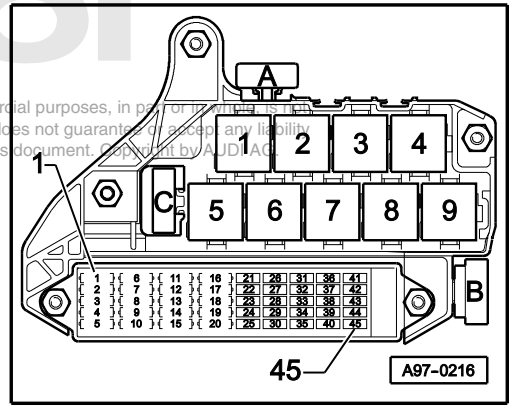

Fuse colours

30 A – green
25 A – white
20 A – yellow
15 A – blue
10 A – red
7.5A – orange
5 A – beige

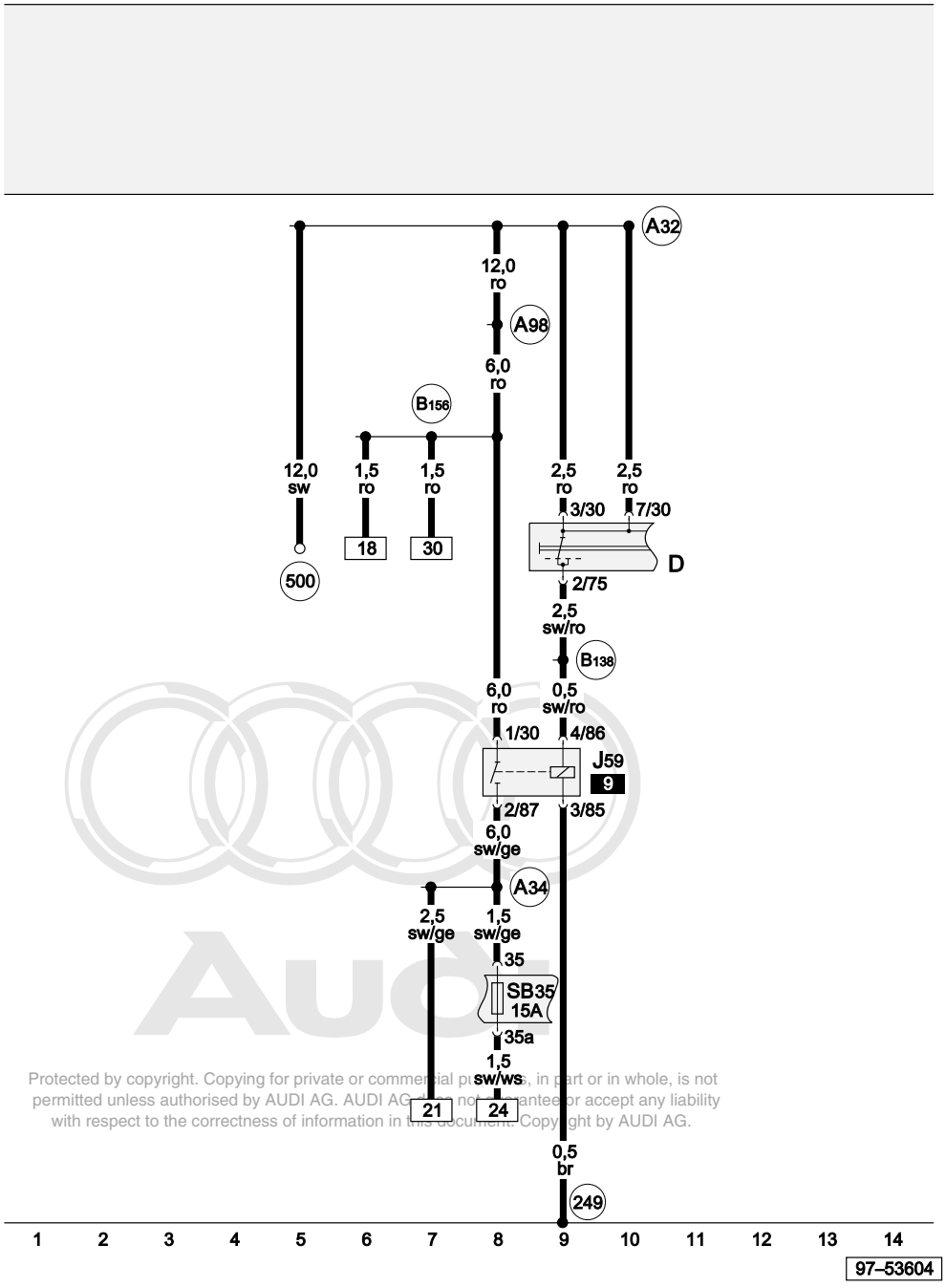

Protected by copyright. Copying for private or commercial purposes, in part or in whole, is not permitted unless authorised by AUDI AG. AUDI AG does not guarantee or accept any liability with respect to the correctness of information in this document. Copyright by AUDI AG.

Ignition/starter switch, X contact relief relay, fuse

D	Ignition/starter switch
J59	X contact relief relay
SB35	Fuse -35- on fuse box
249	Earth connection -2-, in interior wiring harness
500	Screw connection -1- (30), on relay plate
A32	Positive (+) connection (30), in dash panel wiring harness
A34	Connection (75x), in dash panel wiring harness
A98	Positive (+) connection -4- (30), in dash panel wiring harness
B138	Connection -1- (15a), in interior wiring harness
B156	Positive (+) connection (30a), in interior wiring harness

ws	=	white
sw	=	black
ro	=	red
br	=	brown
gn	=	green
bl	=	blue
gr	=	grey
li	=	purple
ge	=	yellow
or	=	orange
rs	=	pink

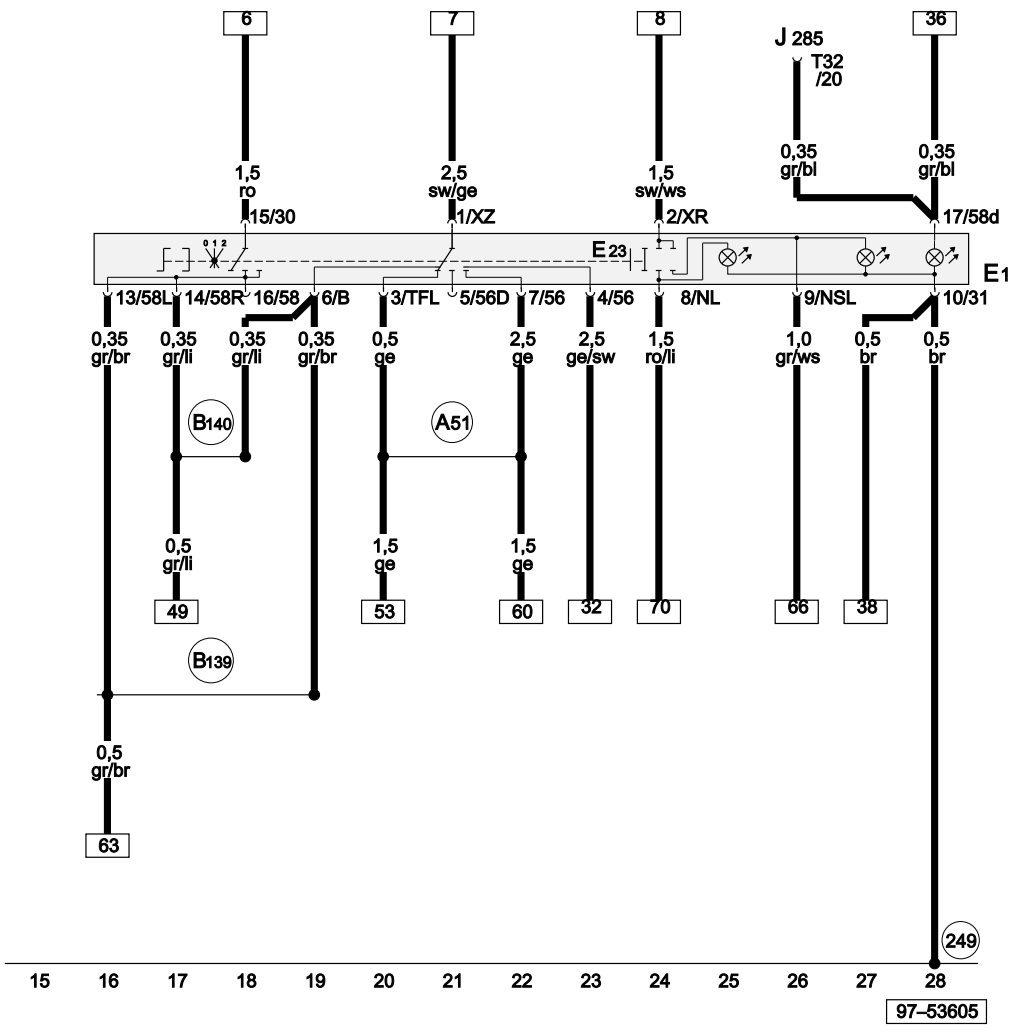

Lighting switch

E1	Lighting switch
E23	Front and rear fog light switch
J285	Control unit with display in dash panel insert
T32	32-pin connector, blue, on dash panel insert
249	Earth connection -2-, in interior wiring harness
A51	Connection (56), in dash panel wiring harness
B139	Connection (PLL), in interior wiring harness
B140	Connection (PLR), in interior wiring harness

ws	=	white
sw	=	black
ro	=	red
br	=	brown
gn	=	green
bl	=	blue
gr	=	grey
li	=	purple
ge	=	yellow
or	=	orange
rs	=	pink

Protected by copyright. Copying for private or commercial purposes, in part or in whole, is not permitted unless authorised by AUDI AG. AUDI AG does not guarantee or accept any liability with respect to the correctness of information in this document. Copyright by AUDI AG.

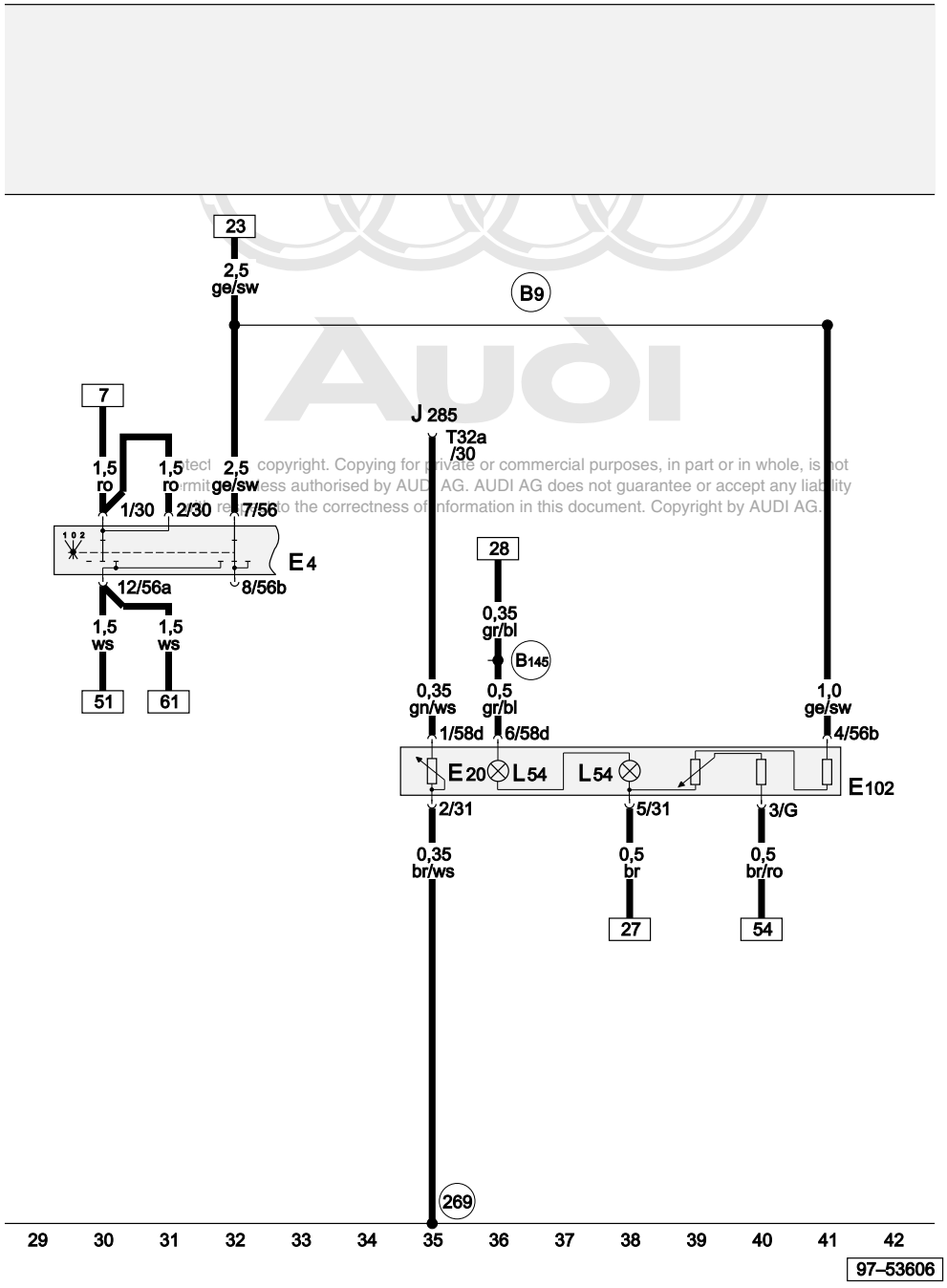

Audi
protect copyright. Copying for private or commercial purposes, in part or in whole, is not permitted unless authorised by AUDI AG. AUDI AG does not guarantee or accept any liability with respect to the correctness of information in this document. Copyright by AUDI AG.

Headlight dipper/flasher switch, headlight range control adjuster

E4	Headlight dipper/flasher switch
E20	Switches and instruments, lighting control
E102	Headlight range control adjuster
J285	Control unit with display in dash panel insert
L54	Headlight range control adjuster light bulb
T32a	32-pin connector, green, on dash panel insert
269	Earth connection (sender earth) -1-, in dash panel wiring harness
B9	Connection (56), in steering column switch wiring harness
B145	Positive (+) connection (58b), in interior wiring harness

ws	=	white
sw	=	black
ro	=	red
br	=	brown
gn	=	green
bl	=	blue
gr	=	grey
li	=	purple
ge	=	yellow
or	=	orange
rs	=	pink

Right headlight, right fog light, fuses

L2	Twin filament bulb/sealed beam insert, right
L23	Fog light bulb, right
M2	Tail light bulb, right
M3	Side light bulb, right
SB21	Fuse -21- on fuse box
SB23	Fuse -23- on fuse box
SB26	Fuse -26- on fuse box
T10i	10-pin connector, black, connector point, A pillar, right
T10l	10-pin connector, black, headlight, right
V49	Headlight range control motor, right
119	Earth connection -1-, in headlight wiring harness
176	Earth connection, in right headlight wiring harness
238	Earth connection -1-, in interior wiring harness
A95	Connection -1- (56a), in dash panel wiring harness

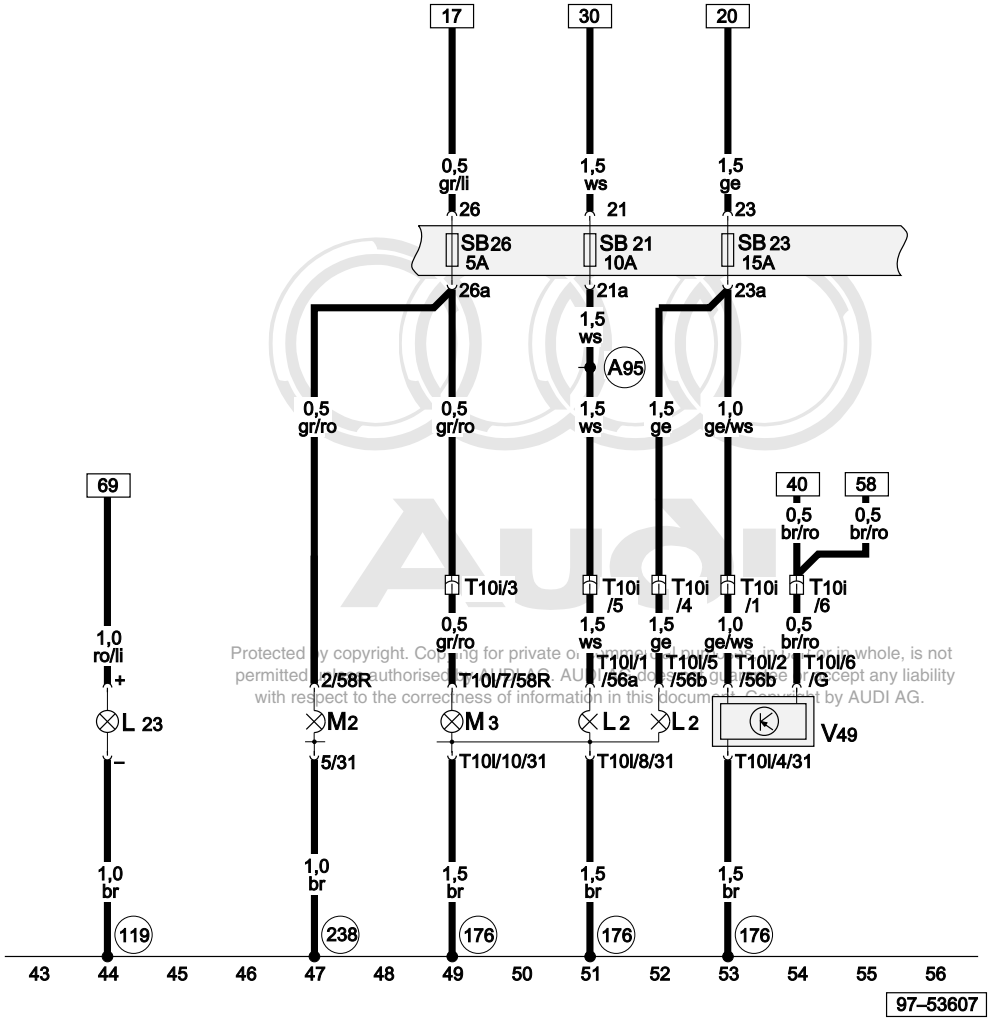

Protected by copyright. Copying for private or commercial purposes, in part or in whole, is not permitted unless authorised by AUDI AG. AUDI AG does not guarantee or accept any liability with respect to the correctness of information in this document. Copyright by AUDI AG.

ws	=	white
sw	=	black
ro	=	red
br	=	brown
gn	=	green
bl	=	blue
gr	=	grey
li	=	purple
ge	=	yellow
or	=	orange
rs	=	pink

Left headlight, left fog light, rear fog light, fuses

L1	Twin filament bulb/sealed beam insert, left
L22	Fog light bulb, left
L46	Rear fog light bulb, left
M1	Side light bulb, left
M4	Tail light bulb, left
SB22	Fuse -22- on fuse box
SB24	Fuse -24- on fuse box
SB27	Fuse -27- on fuse box
T10e	10-pin connector, red, connector point, A pillar, left
T10g	10-pin connector, grey, connector point, A pillar, left
T10k	10-pin connector, black, headlight, left
V48	Headlight range control motor, left
119	Earth connection -1-, in headlight wiring harness
179	Earth connection, in left headlight wiring harness
238	Earth connection -1-, in interior wiring harness
A84	Connection (58L), in dash panel wiring harness

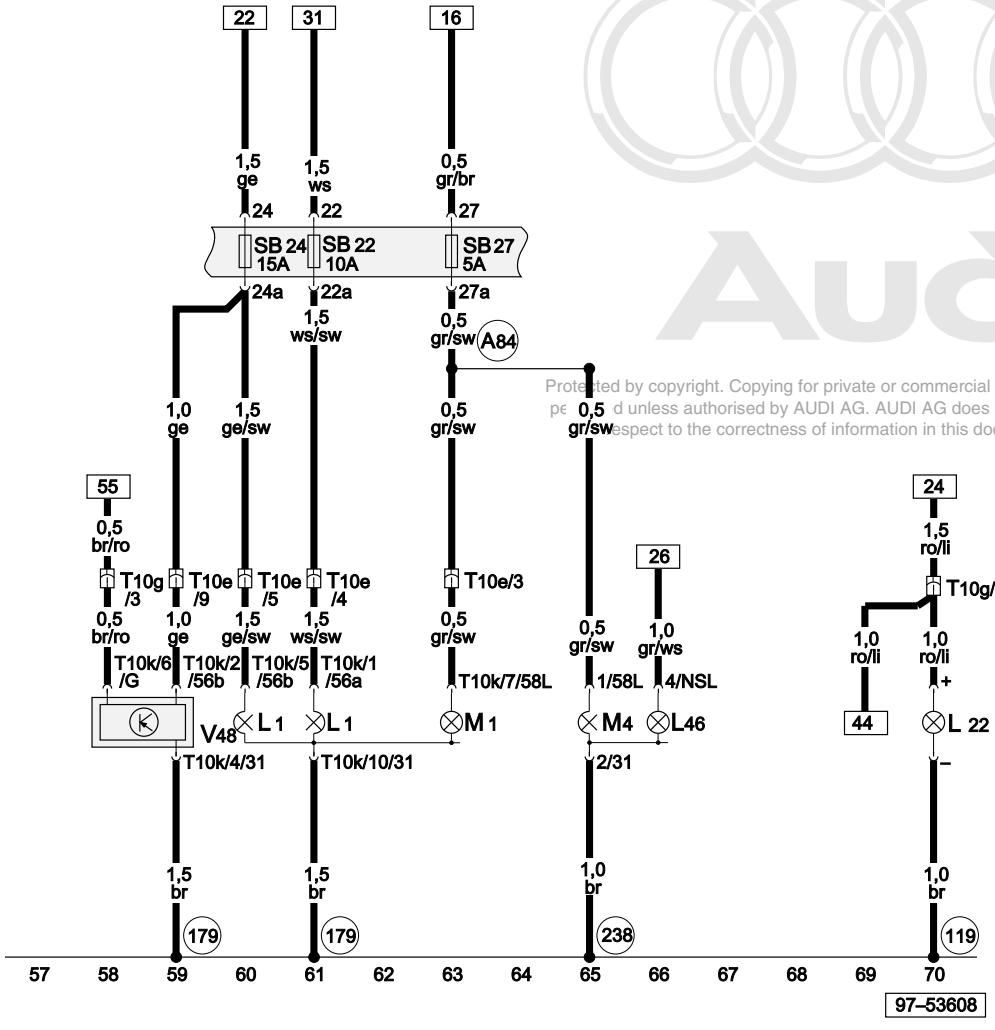

ws = white
sw = black
ro = red
br = brown
gn = green
bl = blue
gr = grey
li = purple
ge = yellow
or = orange
rs = pink

Protected by copyright. Copying for private or commercial purposes, in part or in whole, is not permitted unless authorised by AUDI AG. AUDI AG does not guarantee or accept any liability with respect to the correctness of information in this document. Copyright by AUDI AG.

CAN bus wires

From model year 2002

Main fuse

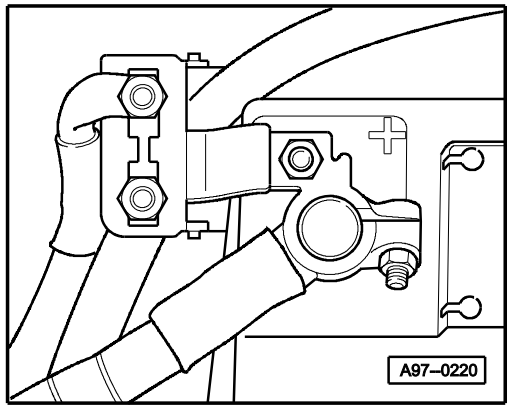

9-point relay carrier (in dash panel)

Fuse box

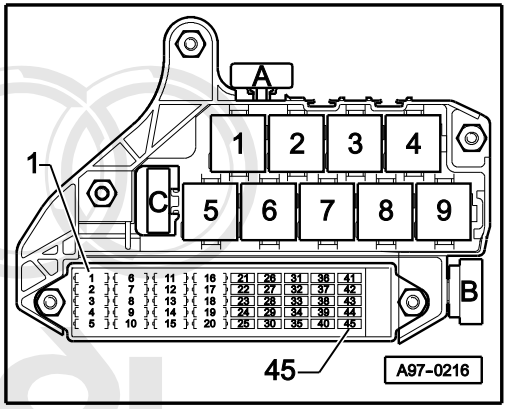

Fuse colours

30 A – green
25 A – white
20 A – yellow
15 A – blue
10 A – red
7.5A – orange
5A – beige

3-point relay carrier (in driver's footwell)

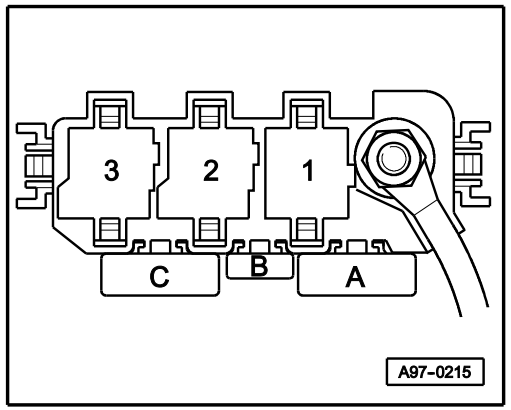

Protected by copyright. Copying for private or commercial purposes, in part or in whole, is not permitted unless authorised by AUDI AG. AUDI AG does not guarantee or accept any liability with respect to the correctness of information in this document. Copyright by AUDI AG.

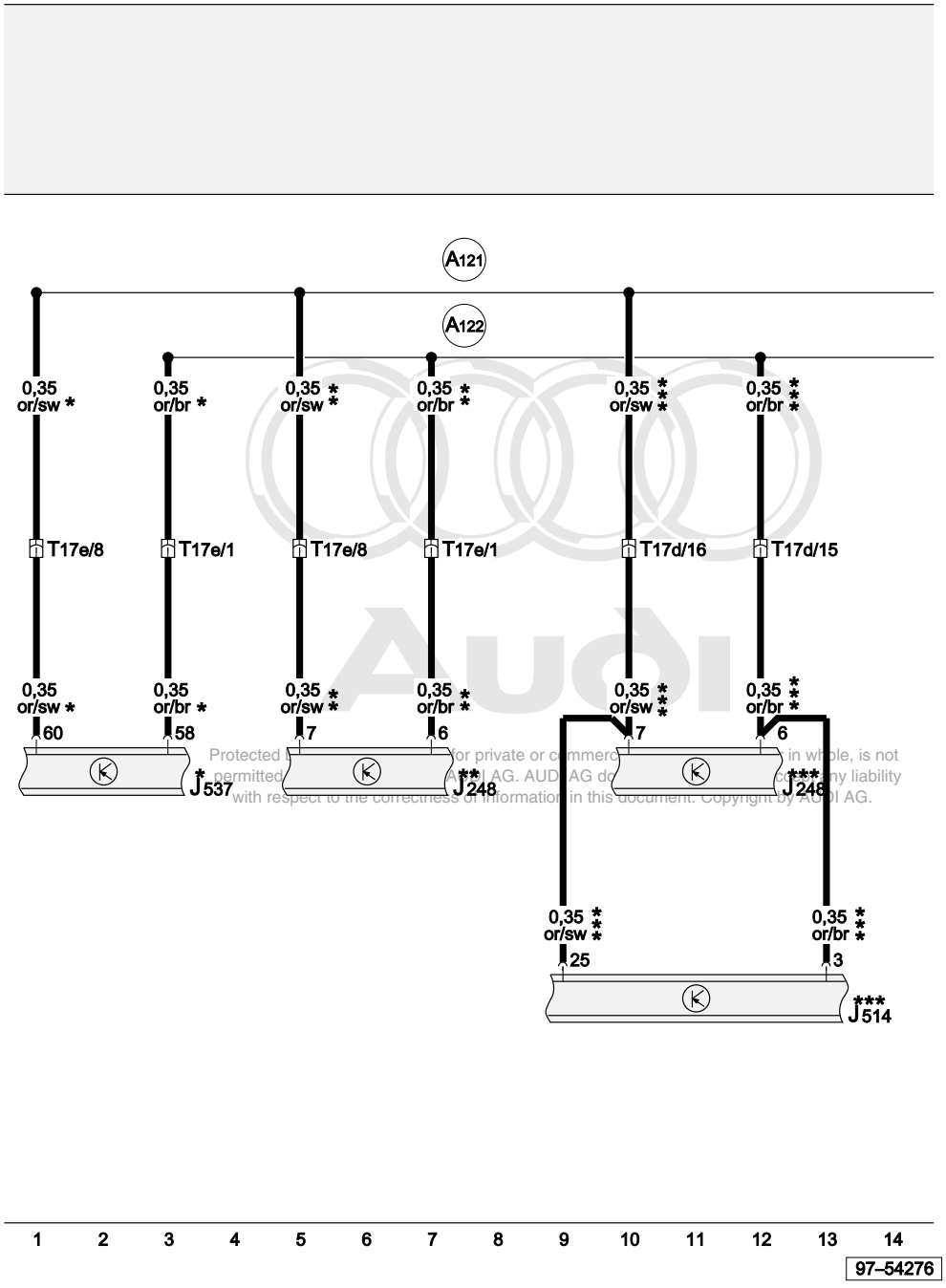

Protected by copyright. Copying for private or commercial purposes, in whole, is not permitted unless authorised by AUDI AG. AUDI AG does not guarantee or accept any liability with respect to the correctness of information in this document. Copyright by AUDI AG.

ws = white
sw = black
ro = red
br = brown
gn = green
bl = blue
gr = grey
li = purple
ge = yellow
or = orange
rs = pink

CAN bus wires (drive train)

J248 Diesel direct injection system control unit
J514 Electronic manual gearbox control unit
J537 4LV (injection system) control unit
T17d 17-pin connector, green, in footwell, front left
T17e 17-pin connector, blue, in footwell, front left

A121 Connection (high bus), in dash panel wiring harness

A122 Connection (low bus), in dash panel wiring harness

* Applies to 1.4 litre petrol engines only
** Applies to 1.4 litre diesel engines only
*** Applies to 1.2 litre diesel engines only

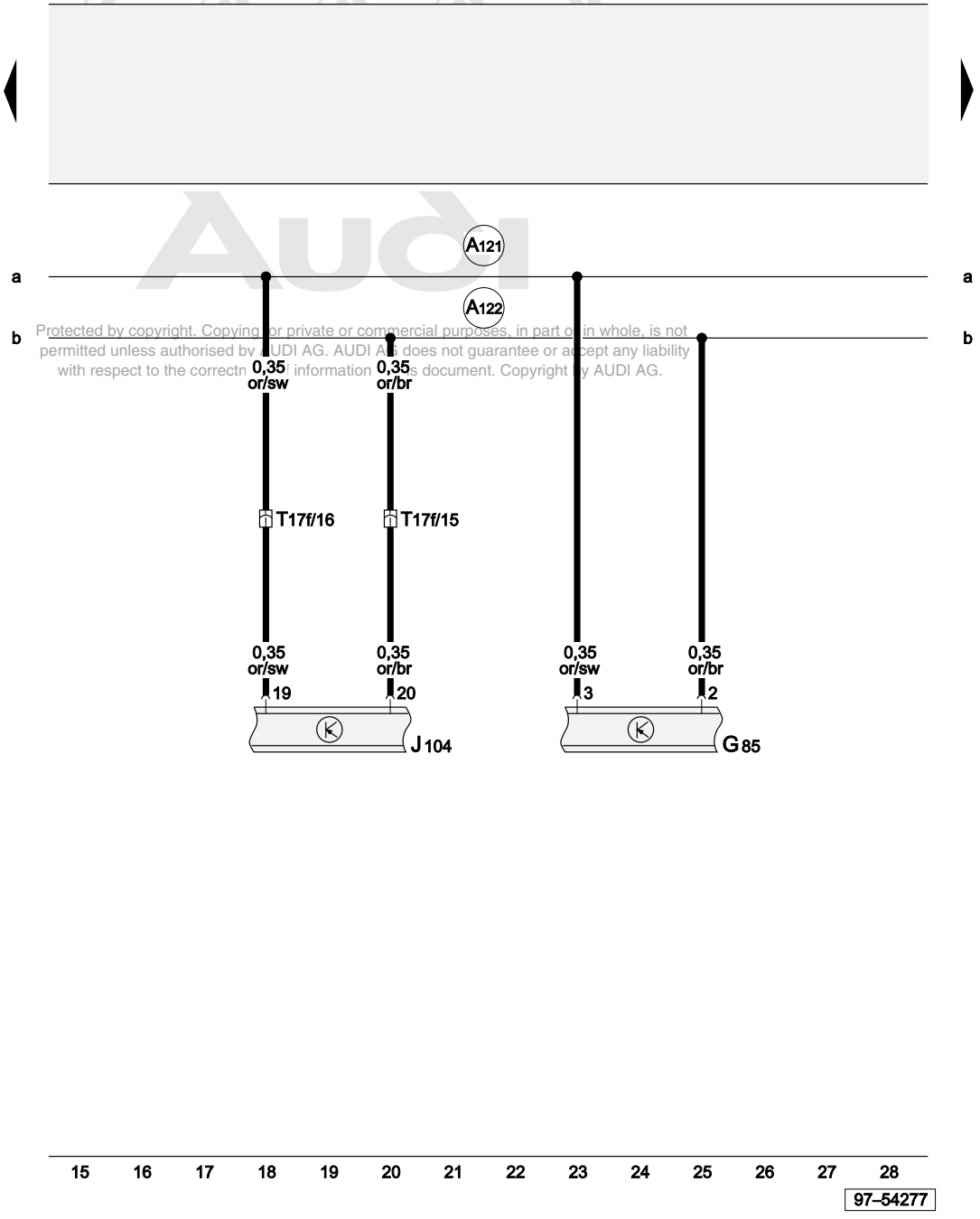

Protected by copyright. Copying for private or commercial purposes, in part or in whole, is not permitted unless authorised by AUDI AG. AUDI AG does not guarantee or accept any liability with respect to the correctness of information in this document. Copyright by AUDI AG.

CAN bus wires, anti-lock brake system

G85	Steering angle sender
J104	ABS with EDL control unit
T17f	17-pin connector, white, connector point, A pillar, left
A121	Connection (high bus), in dash panel wiring harness
A122	Connection (low bus), in dash panel wiring harness

ws	=	white
sw	=	black
ro	=	red
br	=	brown
gn	=	green
bl	=	blue
gr	=	grey
li	=	purple
ge	=	yellow
or	=	orange
rs	=	pink

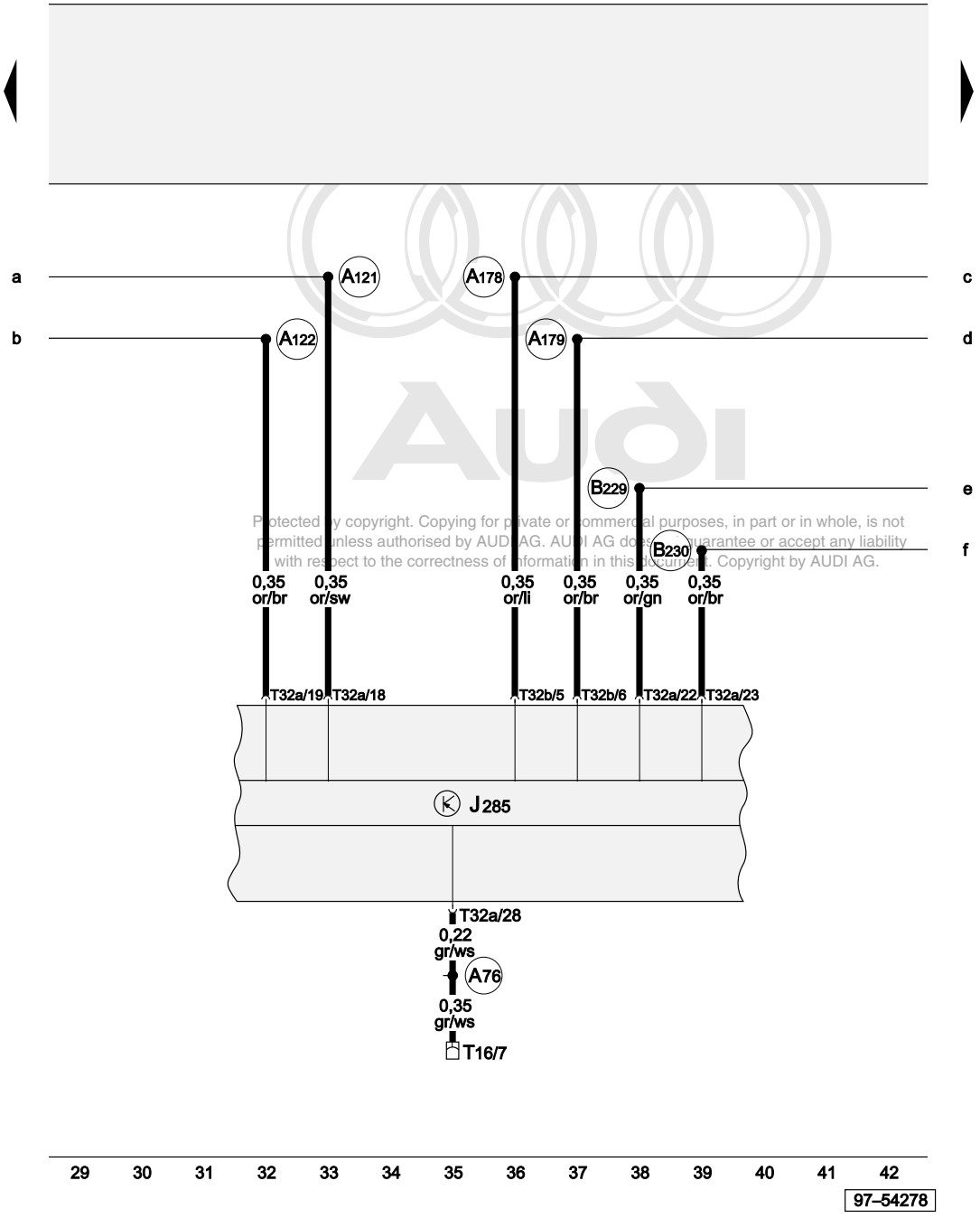

Protected by copyright. Copying for private or commercial purposes, in part or in whole, is not permitted unless authorised by AUDI AG. AUDI AG does not guarantee or accept any liability with respect to the correctness of information in this document. Copyright by AUDI AG.

CAN bus wires, control unit with display in dash panel insert

J285	Control unit with display in dash panel insert
T16	16-pin connector, diagnostic connector, black, near fuse box
T32a	32-pin connector, green, on dash panel insert
T32b	32-pin connector, grey, on dash panel insert
A76	Connection (diagnosis wire K), in dash panel wiring harness
A121	Connection (high bus), in dash panel wiring harness
A122	Connection (low bus), in dash panel wiring harness
A178	Connection (infotainment CAN bus, high), in dash panel wiring harness
A179	Connection (infotainment CAN bus, low), in dash panel wiring harness
B229	Connection (high bus), in interior wiring harness
B230	Connection (low bus), in interior wiring harness

ws	=	white
sw	=	black
ro	=	red
br	=	brown
gn	=	green
bl	=	blue
gr	=	grey
li	=	purple
ge	=	yellow
or	=	orange
rs	=	pink

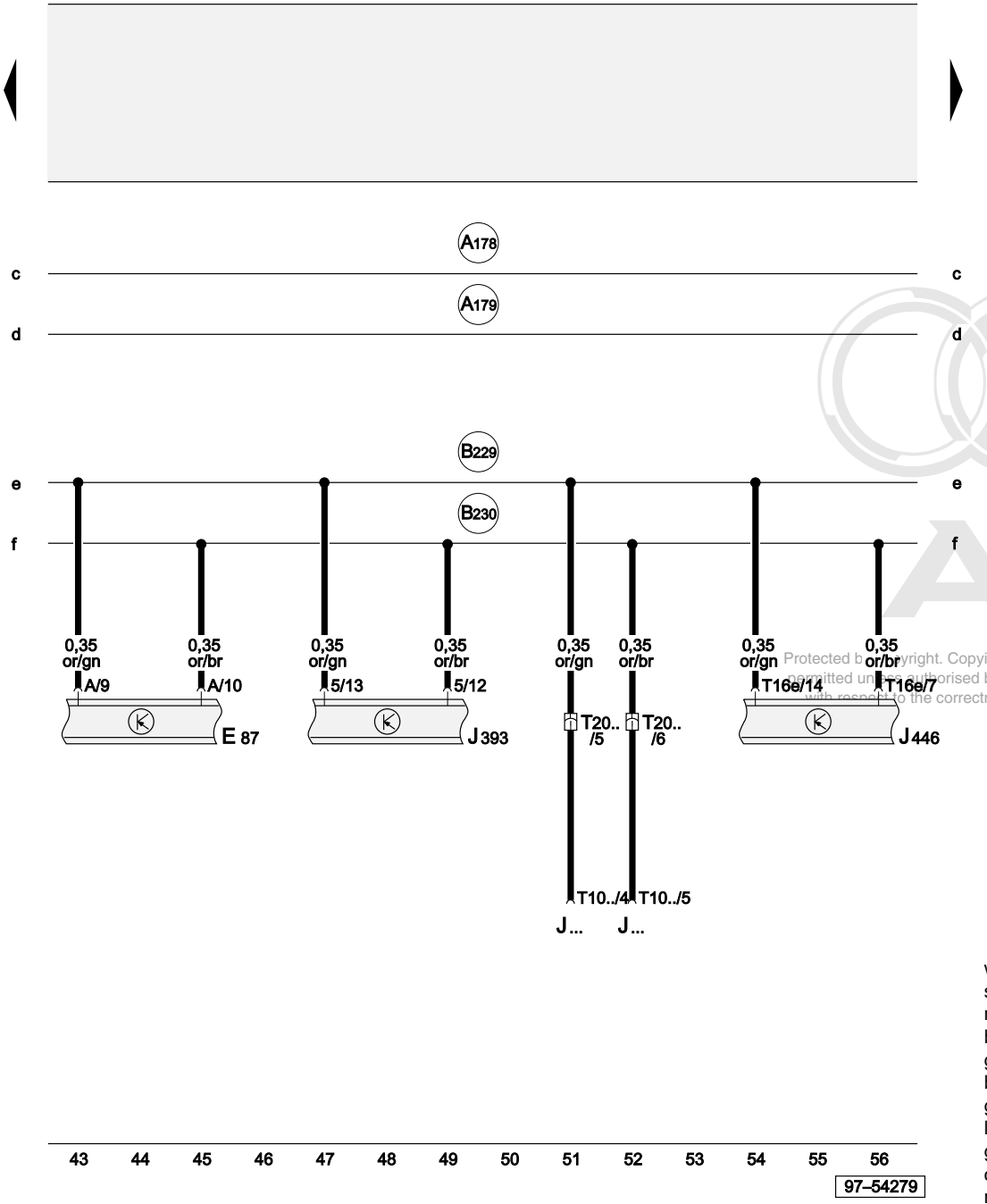

CAN bus wires, air conditioner, convenience electrics

E87	Control and display unit for air conditioner/Climatronic
J...	Door control units
J393	Convenience system central control unit
J446	Parking aid control unit
T10	10-pin connector, black, door control unit
T16e	16-pin connector, black, in luggage compartment, right
T20	20-pin connectors, black, at A, B, C, D pillar
A178	Connection (infotainment CAN bus, high), in dash panel wiring harness
A179	Connection (infotainment CAN bus, low), in dash panel wiring harness
B229	Connection (high bus), in interior wiring harness
B230	Connection (low bus), in interior wiring harness

Protected by copyright. Copying for private or commercial purposes, in part or in whole, is not permitted unless authorised by AUDI AG. AUDI AG does not guarantee or accept any liability with respect to the correctness of information in this document. Copyright by AUDI AG.

ws	=	white
sw	=	black
ro	=	red
br	=	brown
gn	=	green
bl	=	blue
gr	=	grey
li	=	purple
ge	=	yellow
or	=	orange
rs	=	pink

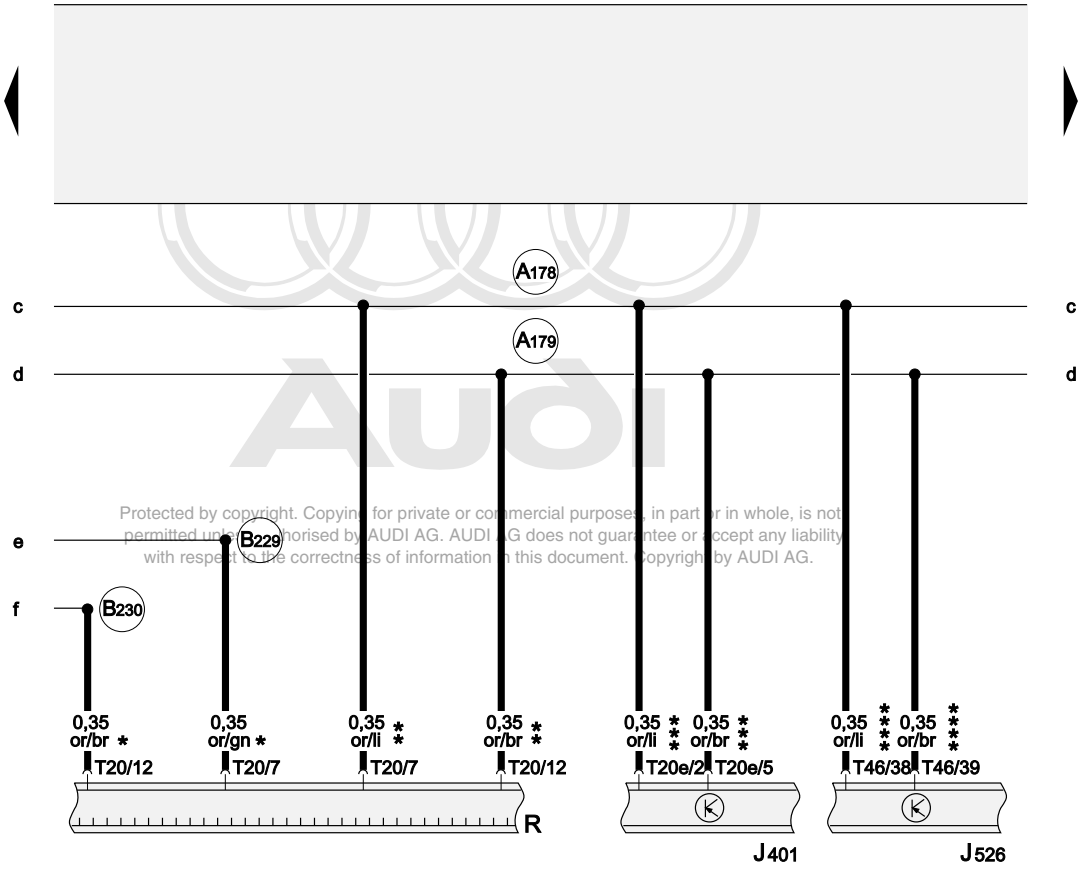

Protected by copyright. Copying for private or commercial purposes, in part or in whole, is not permitted unless authorised by AUDI AG. AUDI AG does not guarantee or accept any liability with respect to the correctness of information in this document. Copyright by AUDI AG.

57 58 59 60 61 62 63 64 65 66 67 68 69 70

97–55008

CAN bus wires (infotainment)

J401	Navigation system with CD drive control unit
J526	Telephone/telematics control unit
R	Radio
T20	20-pin connector, black, radio connector I
T20e	20-pin connector, black, navigation system with CD drive control unit
T46	46-pin connector, black, on telephone/telematics control unit
A178	Connection (infotainment CAN bus, high), in dash panel wiring harness
A179	Connection (infotainment CAN bus, low), in dash panel wiring harness
B229	Connection (high bus), in interior wiring harness
B230	Connection (low bus), in interior wiring harness
*	Models without driver information system
**	Models with driver information system
***	Models with navigation system 'NS Low'
****	Models with telematics

ws	=	white
sw	=	black
ro	=	red
br	=	brown
gn	=	green
bl	=	blue
gr	=	grey
li	=	purple
ge	=	yellow
or	=	orange
rs	=	pink

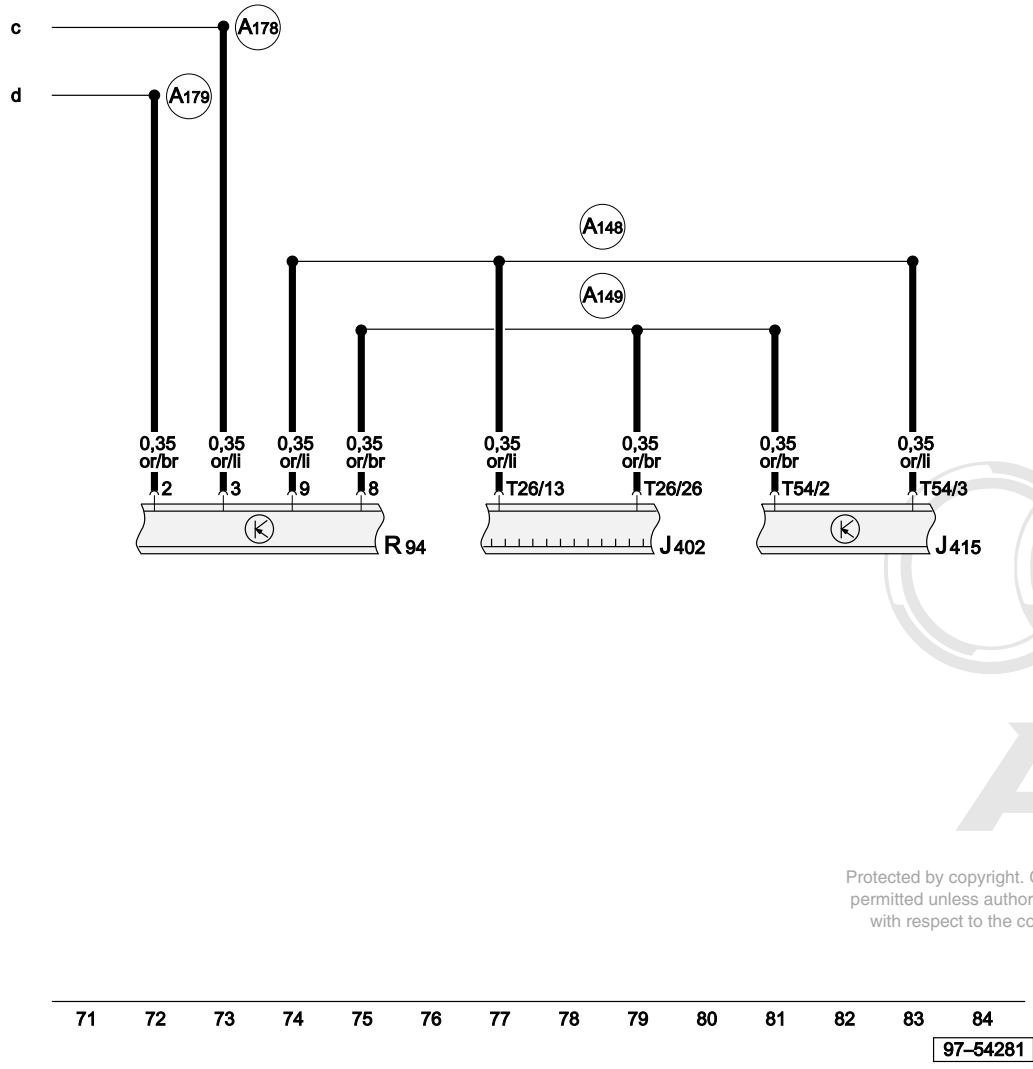

CAN bus wires (infotainment)

J402	Operating electronics control unit, navigation
J415	Navigation/TV tuner
R94	Navigation interface
T26	26-pin connector, black, radio connector
T54	54-pin connector, black, on navigation/TV tuner
A148	Connection (navigation CAN bus, high), in dash panel wiring harness
A149	Connection (navigation CAN bus, low), in dash panel wiring harness
A178	Connection (infotainment CAN bus, high), in dash panel wiring harness
A179	Connection (infotainment CAN bus, low), in dash panel wiring harness

ws	=	white
sw	=	black
ro	=	red
br	=	brown
gn	=	green
bl	=	blue
gr	=	grey
li	=	purple
ge	=	yellow
or	=	orange
rs	=	pink

Protected by copyright. Copying for private or commercial purposes, in part or in whole, is not permitted unless authorised by AUDI AG. AUDI AG does not guarantee or accept any liability with respect to the correctness of information in this document. Copyright by AUDI AG.

Telematics

From model year 2002

Main fuse

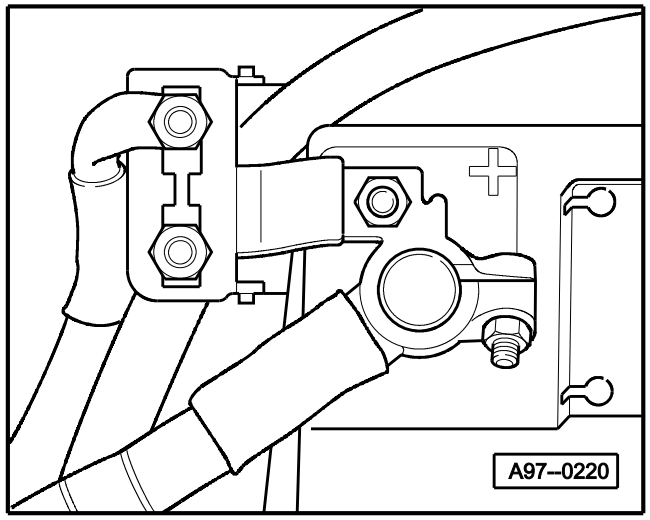

- On battery

9-point relay carrier, fuse box

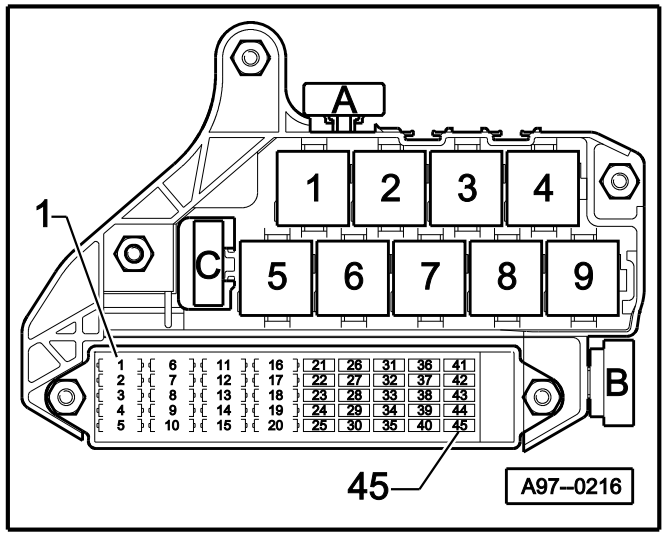

Protected by copyright. Copying for private or commercial purposes, in part or in whole, is not permitted unless authorised by AUDI AG. AUDI AG does not guarantee or accept any liability with respect to the correctness of information in this document. Copyright by AUDI AG.

- In dash panel

Fuse colours

5 A - beige
7.5 A - brown
10 A - red
15 A - blue
20 A - yellow
25 A - white
30 A - green

Protected by copyright. Copying for private or commercial purposes, in part or in whole, is not permitted unless authorised by AUDI AG. AUDI AG does not guarantee or accept any liability with respect to the correctness of information in this document. Copyright by AUDI AG.

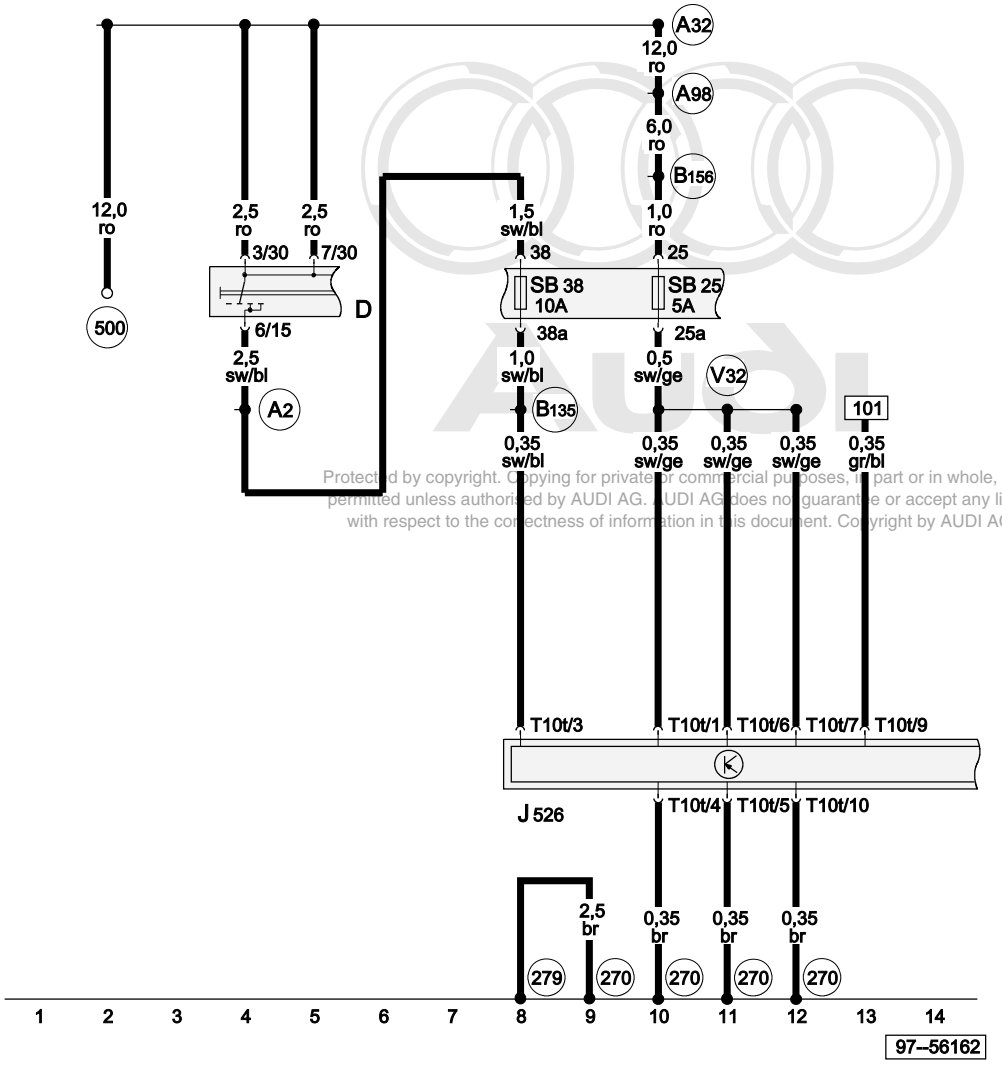

Protected by copyright. Copying for private or commercial purposes, in part or in whole, is not permitted unless authorised by AUDI AG. AUDI AG does not guarantee or accept any liability with respect to the correctness of information in this document. Copyright by AUDI AG.

Telephone/telematics control unit, fuses

D	Ignition/starter switch
J526	Telephone/telematics control unit
SB25	Fuse -25- on fuse box
SB38	Fuse -38- on fuse box
T10t	10-pin connector, black, on telephone/telematics control unit
270	Earth connection, in telephone wiring harness
279	Earth connection -5-, in interior wiring harness
500	Screw connection -1- (30), on relay plate
A2	Positive (+) connection (15), in dash panel wiring harness
A32	Positive (+) connection (30), in dash panel wiring harness
A98	Positive (+) connection -4- (30), in dash panel wiring harness
B135	Connection -1- (15a), in interior wiring harness
B156	Positive (+) connection (30a), in interior wiring harness
V32	Positive (+) connection (30), in telephone wiring harness

ws	=	white
sw	=	black
ro	=	red
br	=	brown
gn	=	green
bl	=	blue
gr	=	grey
li	=	purple
ge	=	yellow
or	=	orange
rs	=	pink

Telephone/telematics control unit, aerials

J526	Telephone/telematics control unit
R1	Aerial connection
R50	Navigation aerial (GPS)
R65	Telephone aerial
R90	Additional aerial for telematics

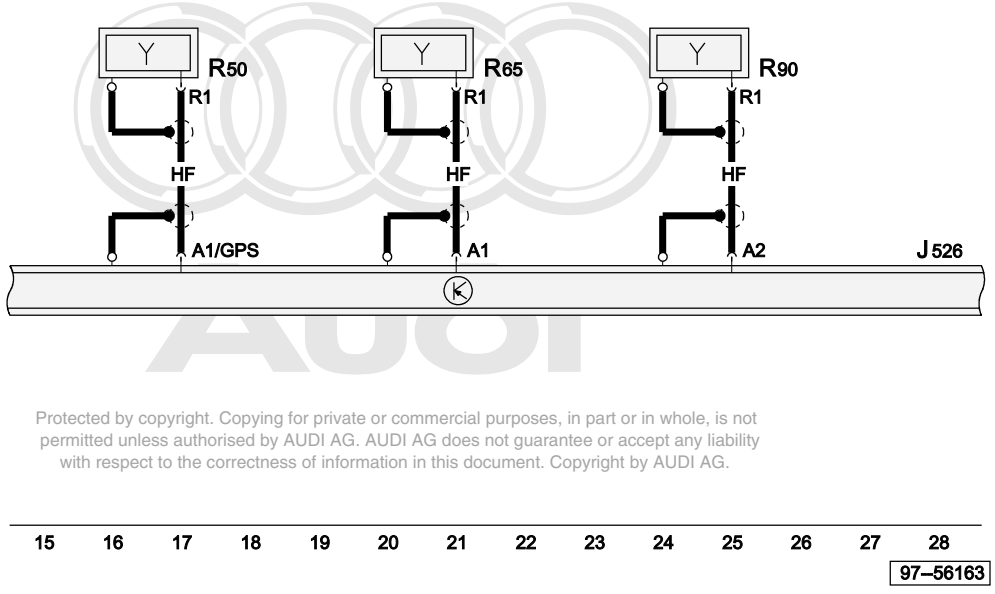

Protected by copyright. Copying for private or commercial purposes, in part or in whole, is not permitted unless authorised by AUDI AG. AUDI AG does not guarantee or accept any liability with respect to the correctness of information in this document. Copyright by AUDI AG.

ws	=	white
sw	=	black
ro	=	red
br	=	brown
gn	=	green
bl	=	blue
gr	=	grey
li	=	purple
ge	=	yellow
or	=	orange
rs	=	pink

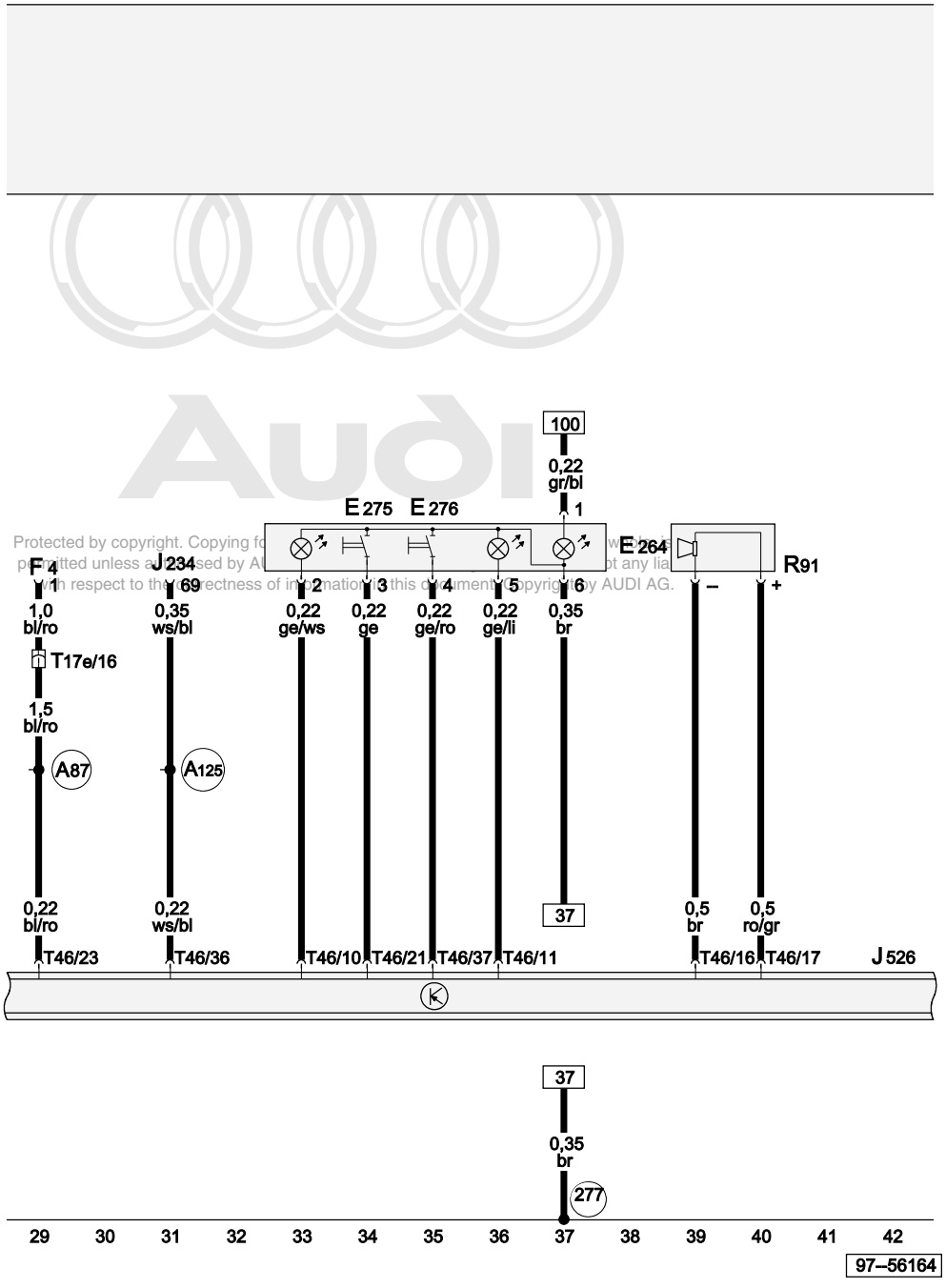

Telematics operating unit, telephone/telematics control unit, additional loudspeaker for telematics

E264	Telematics operating unit
E275	Breakdown help button
E276	Emergency call button
F4	Reversing light switch
J234	Airbag control unit
J526	Telephone/telematics control unit
R91	Additional loudspeaker for telematics
T17e	17-pin connector, blue, in footwell, front left
T46	46-pin connector, black, on telephone/telematics control unit
277	Earth connection -3-, in interior wiring harness
A87	Connection (RF (reversing light)), in dash panel wiring harness
A125	Connection (crash signal), in dash panel wiring harness

ws	=	white
sw	=	black
ro	=	red
br	=	brown
gn	=	green
bl	=	blue
gr	=	grey
li	=	purple
ge	=	yellow
or	=	orange
rs	=	pink

Telephone handset, telephone/telematics control unit

J526 Telephone/telematics control unit
R37 Telephone handset
T46 46-pin connector, black, on telephone/telematics control unit

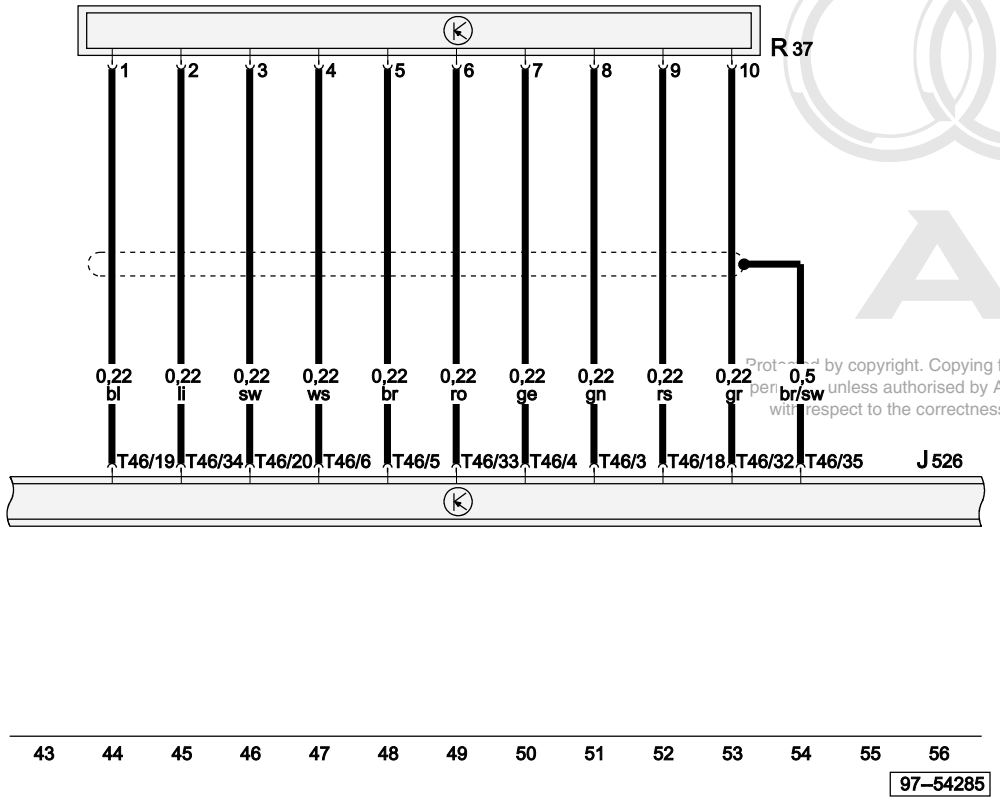

Protected by copyright. Copying for private or commercial purposes, in part or in whole, is not permitted unless authorised by AUDI AG. AUDI AG does not guarantee or accept any liability with respect to the correctness of information in this document. Copyright by AUDI AG.

ws = white
sw = black
ro = red
br = brown
gn = green
bl = blue
gr = grey
li = purple
ge = yellow
or = orange
rs = pink

Telephone/telematics control unit, fax unit

J526 Telephone/telematics control unit
R73 Fax unit
T46 46-pin connector, black, on telephone/telematics control unit
* Optional equipment

Protected by copyright. Copying for private or commercial purposes, in part or in whole, is not permitted unless authorised by AUDI AG. AUDI AG does not guarantee or accept any liability with respect to the correctness of information in this document. Copyright by AUDI AG.

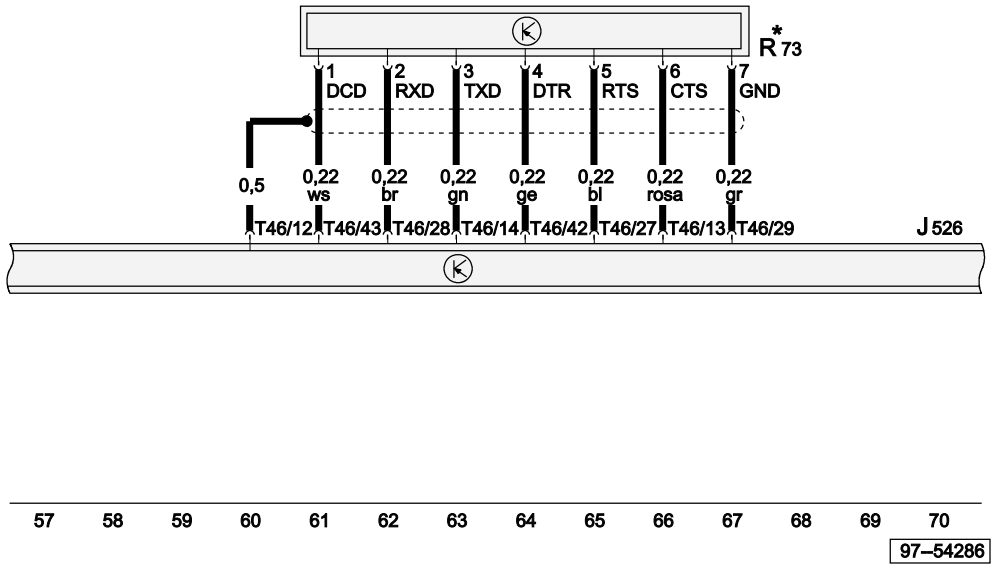

ws = white
sw = black
ro = red
br = brown
gn = green
bl = blue
gr = grey
li = purple
ge = yellow
or = orange
rs = pink

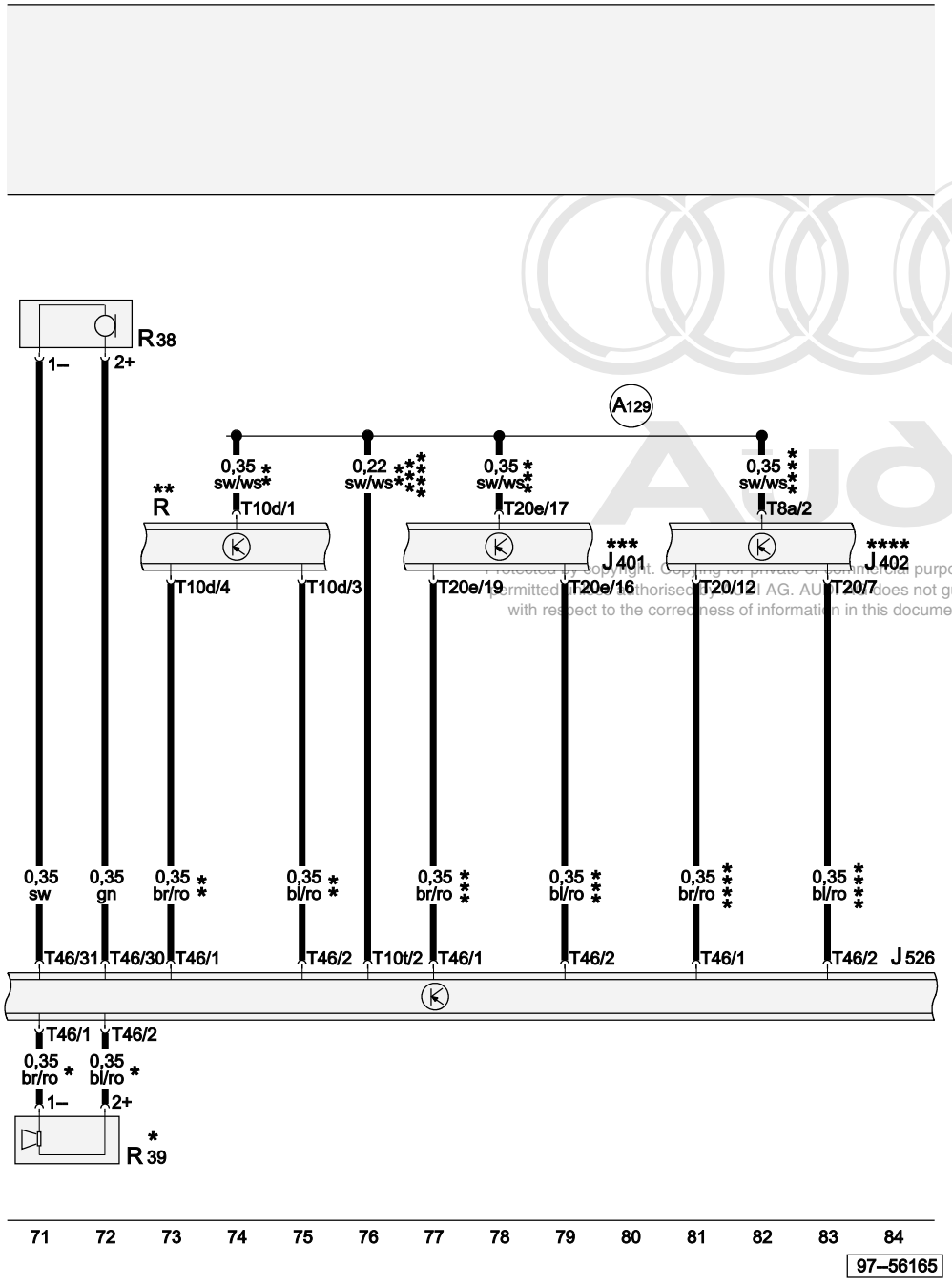

ws = white
sw = black
ro = red
br = brown
gn = green
bl = blue
gr = grey
li = purple
ge = yellow
or = orange
rs = pink

Telephone/telematics control unit, telephone microphone

J401	Navigation system with CD drive control unit
J402	Operating electronics control unit, navigation
J526	Telephone/telematics control unit
R	Radio
R38	Telephone microphone
R39	Telephone/navigation systems loudspeaker
T8a	8-pin connector, black, radio connector III
T10d	10-pin connector, red, radio connector IV
T10t	10-pin connector, black, on telephone/telematics control unit
T20e	20-pin connector, black, navigation system with CD drive control unit
T46	46-pin connector, black, on telephone/telematics control unit
A129	Connection (muting), in dash panel wiring harness
*	Only applies to models without radio
**	Only applies to models with radio
***	Only applies to models with navigation system 'NS Low'
****	Only applies to models with radio navigation system (RNS-D)

Protected by copyright. Copying for private or commercial purposes, in part or in whole, is not permitted unless authorised by AUDI AG. AUDI AG does not guarantee or accept any liability with respect to the correctness of information in this document. Copyright by AUDI AG.

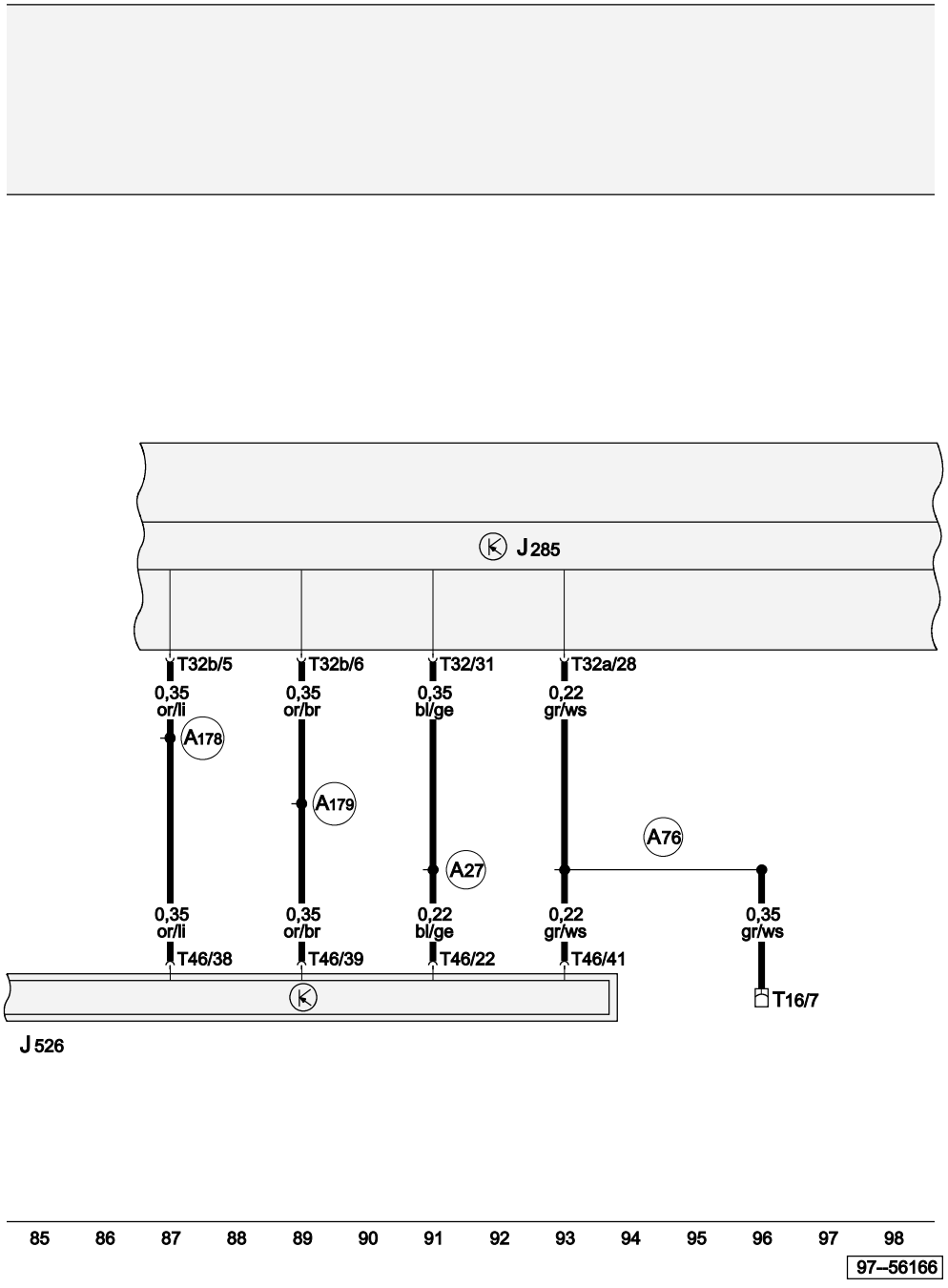

Telephone/telematics control unit, CAN bus

J285	Control unit with display in dash panel insert
J526	Telephone/telematics control unit
T16	16-pin connector, black, diagnostic connector
T32	32-pin connector, blue, on dash panel insert
T32a	32-pin connector, green, on dash panel insert
T32b	32-pin connector, grey, on dash panel insert
T46	46-pin connector, black, on telephone/telematics control unit
A27	Connection (speed signal), in dash panel wiring harness
A76	Connection (diagnosis wire K), in dash panel wiring harness
A178	Connection (infotainment CAN bus, high), in dash panel wiring harness
A179	Connection (infotainment CAN bus, low), in dash panel wiring harness

Protected by copyright. Copying for private or commercial purposes, in part or in whole, is not permitted unless authorised by AUDI AG. AUDI AG does not guarantee or accept any liability with respect to the correctness of information in this document. Copyright by AUDI AG.

ws	=	white
sw	=	black
ro	=	red
br	=	brown
gn	=	green
bl	=	blue
gr	=	grey
li	=	purple
ge	=	yellow
or	=	orange
rs	=	pink

Function selection switch II

E1	Lighting switch
E272	Function selection switch II
J285	Control unit with display in dash panel insert
T32	32-pin connector, blue, on dash panel insert
T32b	32-pin connector, grey, on dash panel insert
269	Earth connection (sender earth) -1-, in dash panel wiring harness
B145	Positive (+) connection (58b), in interior wiring harness
*	Only applies to models with navigation system 'NS Low'

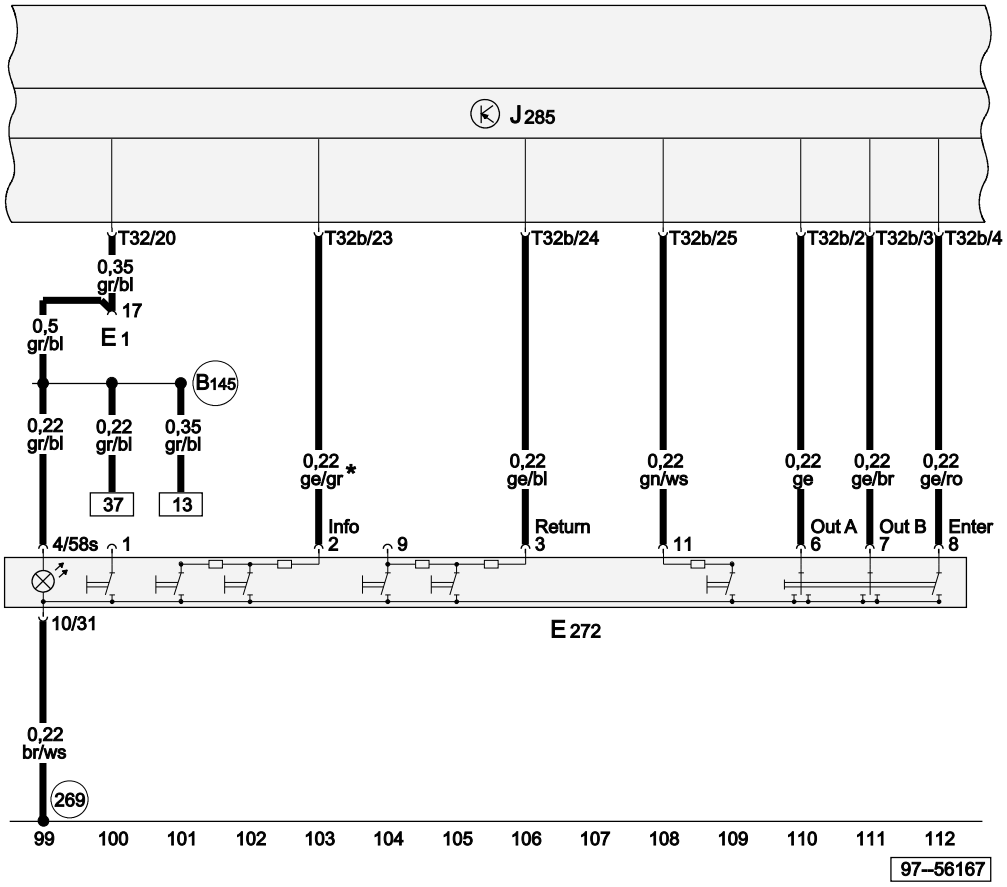

Protected by copyright. Copying for private or commercial purposes, in part or in whole, is not permitted unless authorised by AUDI AG. AUDI AG does not guarantee or accept any liability with respect to the correctness of information in this document. Copyright by AUDI AG.

ws	=	white
sw	=	black
ro	=	red
br	=	brown
gn	=	green
bl	=	blue
gr	=	grey
li	=	purple
ge	=	yellow
or	=	orange
rs	=	pink

Anti-lock brake system (ABS) MK60 with electronic stability program (ESP)

From model year 2002

Main fuse

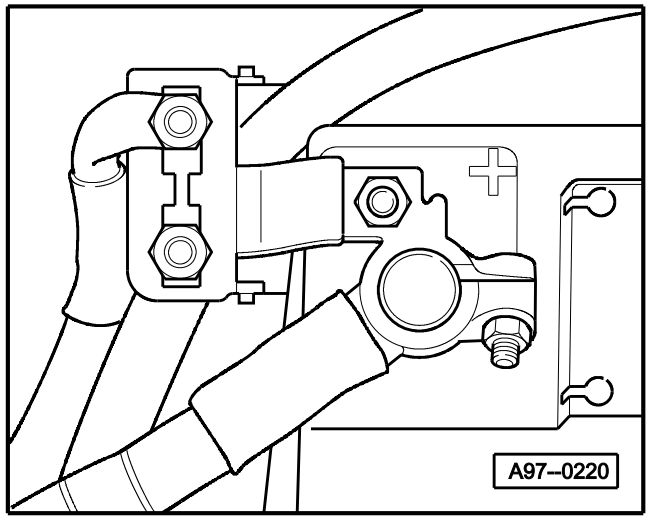

- On battery

9-point relay carrier, fuse box

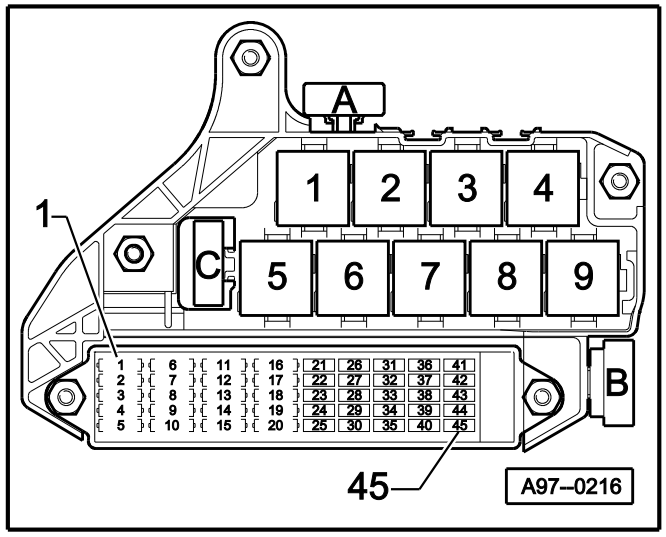

Protected by copyright. Copying for private or commercial purposes, in part or in whole, is not permitted unless authorised by AUDI AG. AUDI AG does not guarantee or accept any liability with respect to the correctness of information in this document. Copyright by AUDI AG.

♦ In dash panel

Fuse colours

5 A - beige
7.5 A - brown
10 A - red
15 A - blue
20 A - yellow
25 A - white
30 A - green

6+6-point relay carrier

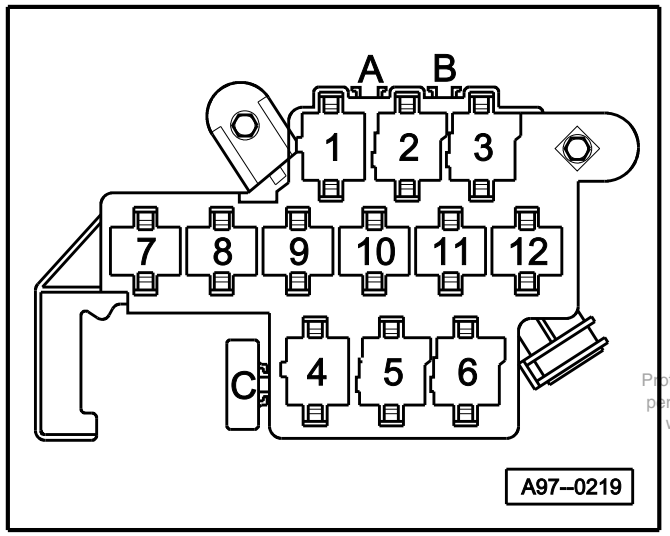

Protected by copyright. Copying for private or commercial purposes, in part or in whole, is not permitted unless authorised by AUDI AG. AUDI AG does not guarantee or accept any liability with respect to the correctness of information in this document. Copyright by AUDI AG.

♦ Footwell, left

C - ABS control unit fuse 1 (S123)

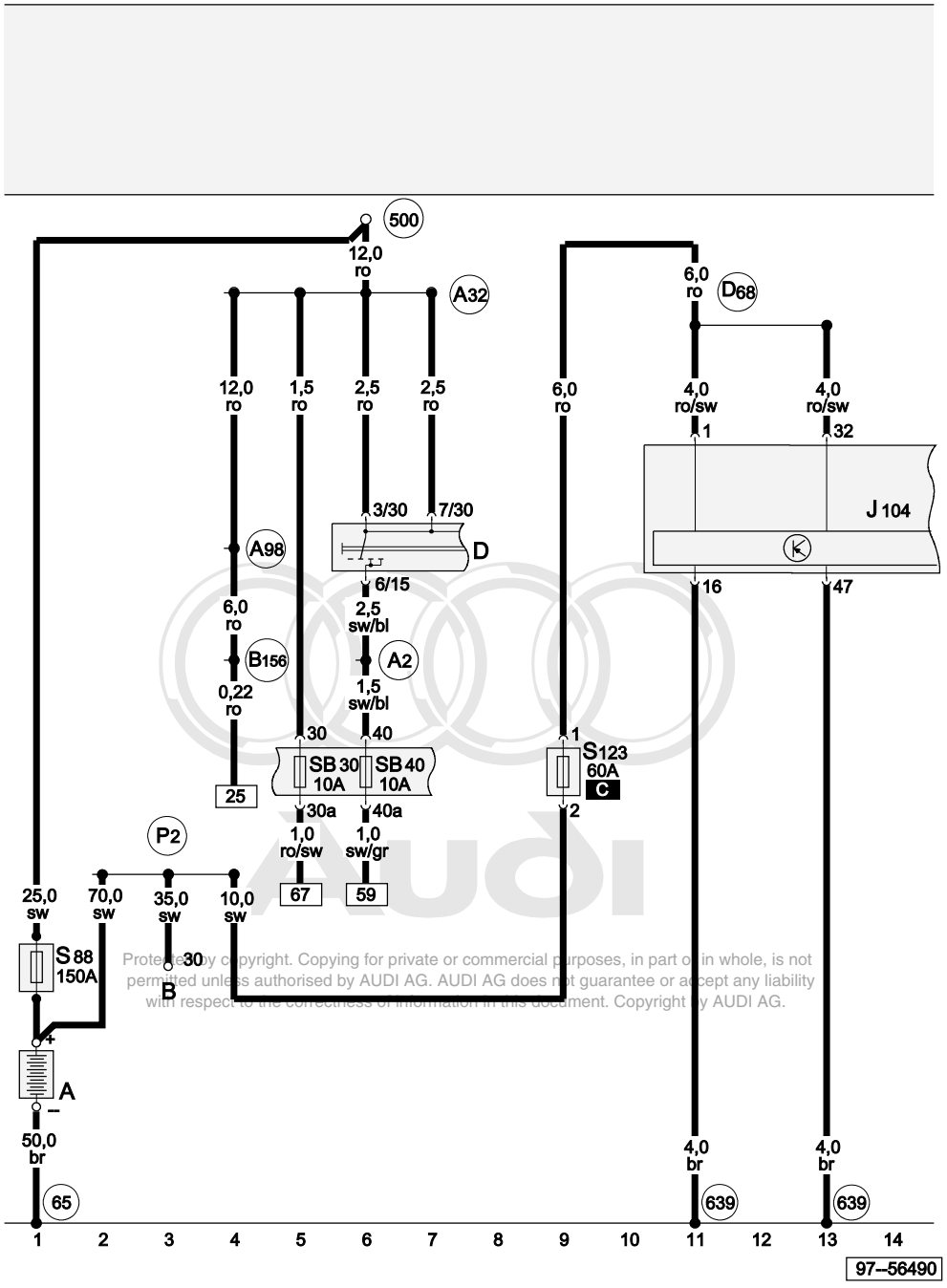

Protected by copyright. Copying for private or commercial purposes, in part or in whole, is not permitted unless authorised by AUDI AG. AUDI AG does not guarantee or accept any liability with respect to the correctness of information in this document. Copyright by AUDI AG.

ws = white
sw = black
ro = red
br = brown
gn = green
bl = blue
gr = grey
li = purple
ge = yellow
or = orange
rs = pink

Fuses, ABS with EDL control unit

A	Battery
B	Starter
D	Ignition/starter switch
J104	ABS with EDL control unit
S88	Strip fuse
S123	ABS control unit fuse 1
SB30	Fuse -30- on fuse box
SB40	Fuse -40- on fuse box
65	Earth point, left longitudinal member, rear
500	Screw connection -1- (30), on relay plate
639	Earth point, left A pillar
A2	Positive (+) connection (15), in dash panel wiring harness
A32	Positive (+) connection (30), in dash panel wiring harness
A98	Positive (+) connection -4- (30), in dash panel wiring harness
B156	Positive (+) connection (30a), in interior wiring harness
D68	Positive (+) connection (30 - for ABS), in engine compartment wiring harness
P2	Positive (+) connection (30), in battery wiring harness

Speed sensors, steering angle sender, ABS with EDL control unit

E91	Function selection switch
G44	Rear right speed sensor
G45	Front right speed sensor
G46	Rear left speed sensor
G47	Front left speed sensor
G85	Steering angle sender
J104	ABS with EDL control unit
T10i	10-pin connector, black, connector point, A pillar, right
T17f	17-pin connector, white, connector point, A pillar, left
T17g	17-pin connector, red, connector point, A pillar, left
249	Earth connection -2-, in interior wiring harness
A121	Connection (high bus), in dash panel wiring harness
A122	Connection (low bus), in dash panel wiring harness

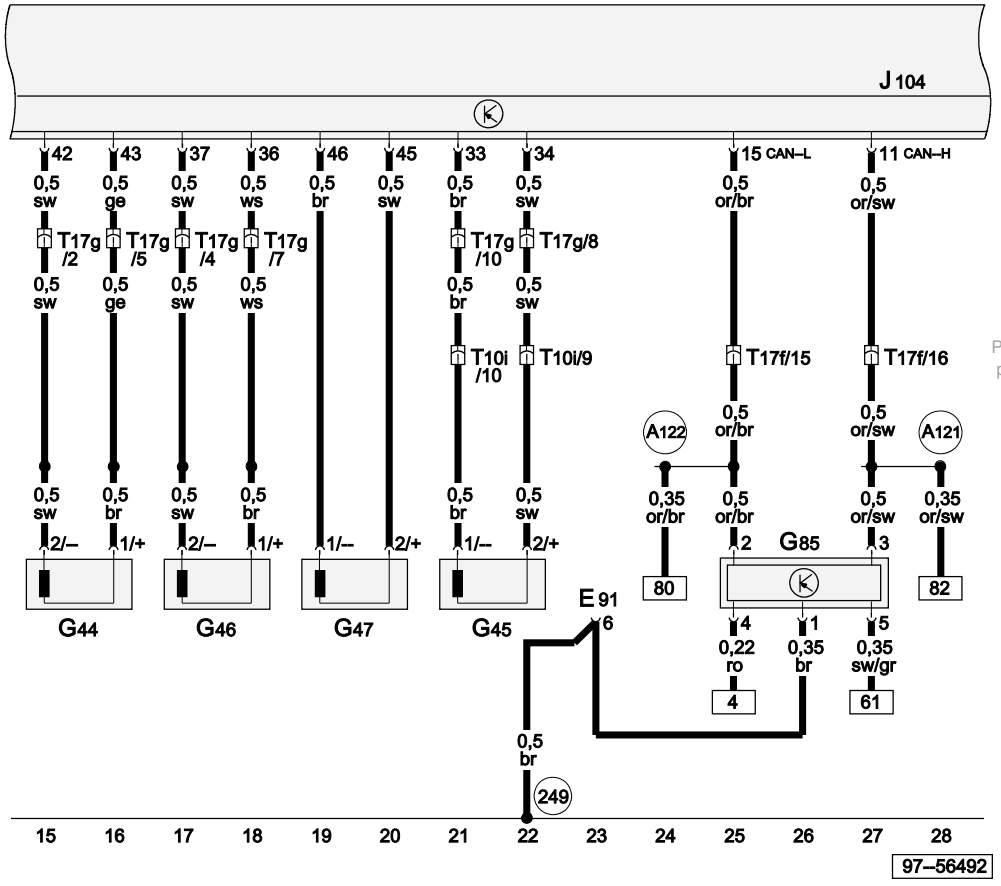

ws	=	white
sw	=	black
ro	=	red
br	=	brown
gn	=	green
bl	=	blue
gr	=	grey
li	=	purple
ge	=	yellow
or	=	orange
rs	=	pink

Protected by copyright. Copying for private or commercial purposes, in part or in whole, is not permitted unless authorised by AUDI AG. AUDI AG does not guarantee or accept any liability with respect to the correctness of information in this document. Copyright by AUDI AG.

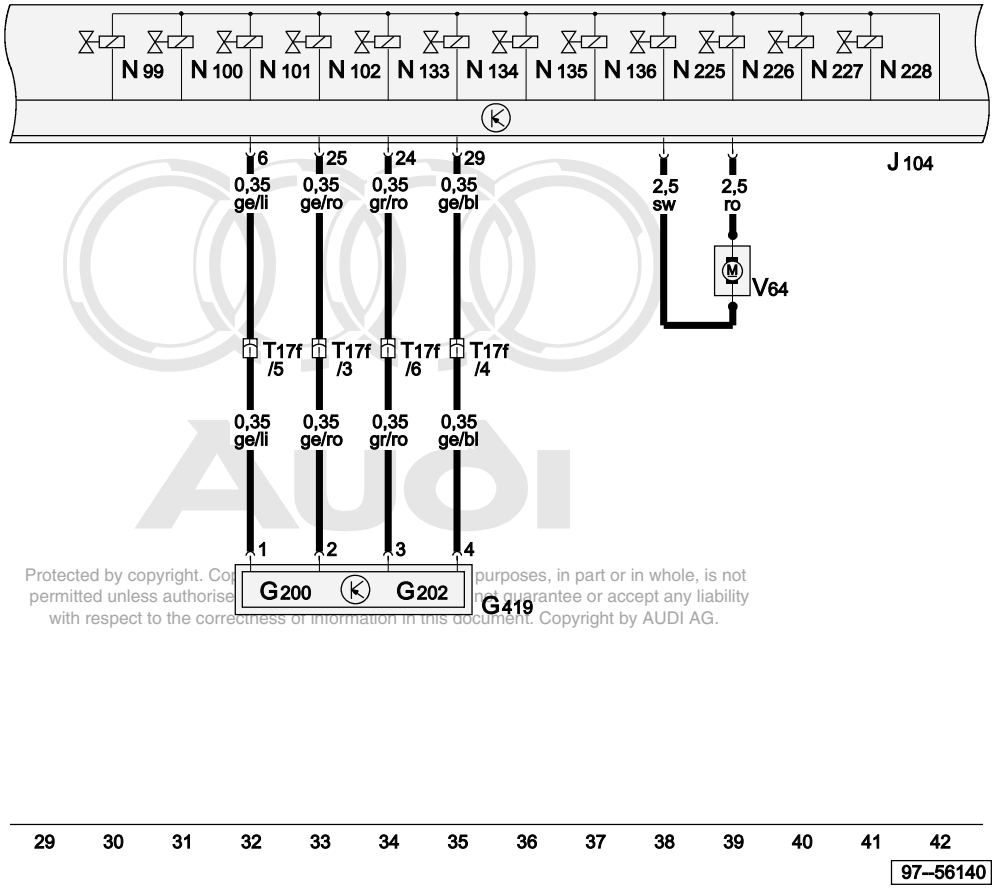

Protected by copyright. Co purposes, in part or in whole, is not permitted unless authorise not guarantee or accept any liability with respect to the correctness of information in this document. Copyright by AUDI AG.

Lateral acceleration sender, yaw rate sender, ABS with EDL control unit, ABS valves, ABS hydraulic pump

G200	Lateral acceleration sender
G202	Yaw rate sender
G419	ESP sensor unit
J104	ABS with EDL control unit
N99	ABS inlet valve, front right
N100	ABS outlet valve, front right
N101	ABS inlet valve, front left
N102	ABS outlet valve, front left
N133	ABS inlet valve, rear right
N134	ABS inlet valve, rear left
N135	ABS outlet valve, rear right
N136	ABS outlet valve, rear left
N225	Electronic stability program switch valve -1-
N226	Electronic stability program switch valve -2-
N227	Electronic stability program high pressure valve -1-
N228	Electronic stability program high pressure valve -2-
T17f	17-pin connector, white, connector point, A pillar, left
V64	ABS hydraulic pump

ws	=	white
sw	=	black
ro	=	red
br	=	brown
gn	=	green
bl	=	blue
gr	=	grey
li	=	purple
ge	=	yellow
or	=	orange
rs	=	pink

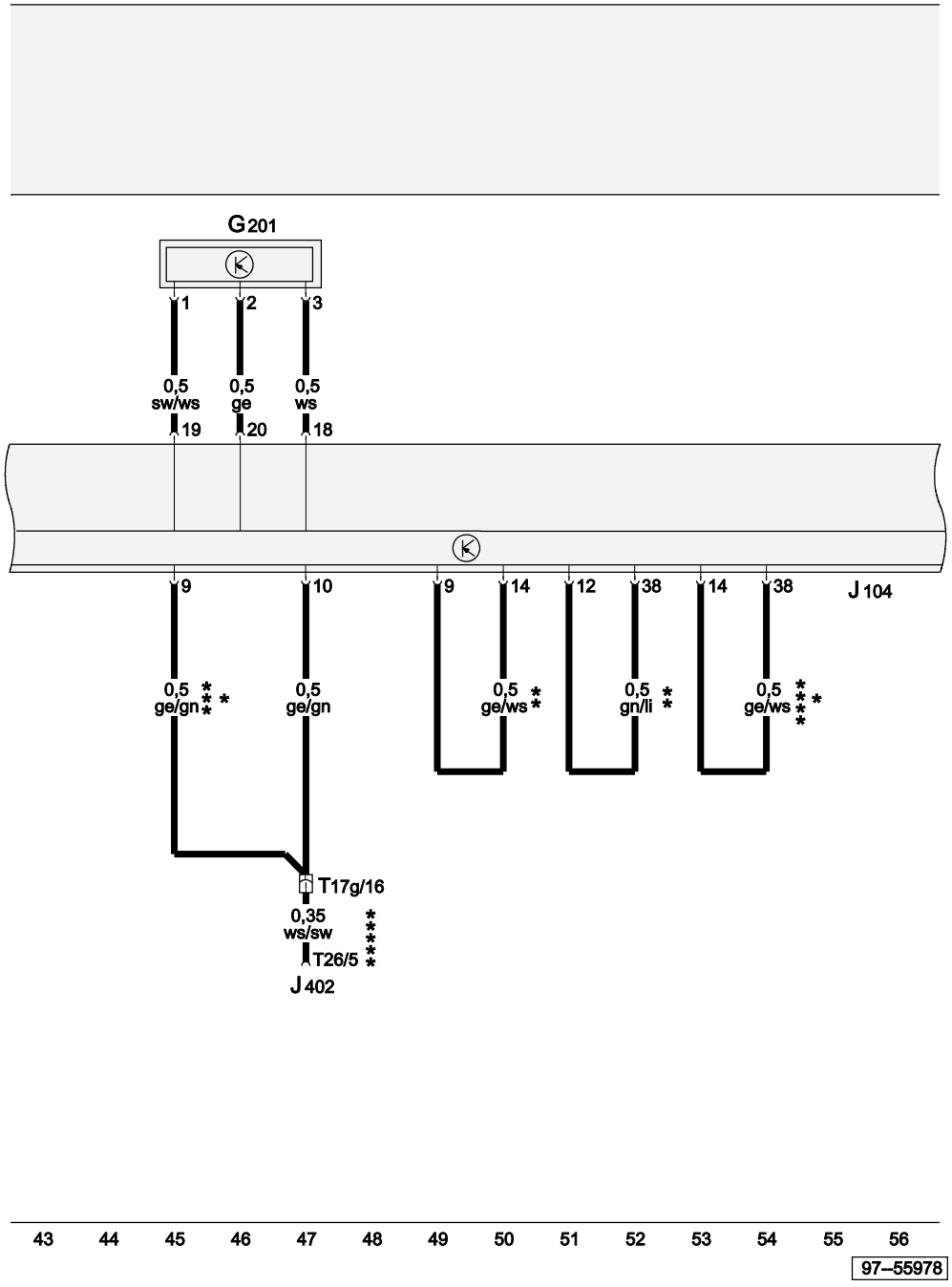

Brake pressure sender, ABS with EDL control unit

G201	Brake pressure sender -1-
J104	ABS with EDL control unit
J402	Operating electronics control unit, navigation
T17g	17-pin connector, red, connector point, A pillar, left
T26	26-pin connector, black, radio connector
*	Only applies to models with 1.2 litre TDI engine without power steering
**	Only applies to models with 1.2 litre TDI engine with power steering
***	Only applies to models with 1.4 litre TDI engine, 1.4 litre MPI engine
****	Only applies to models with 1.6 litre FSI engine
*****	Only applies to models with radio navigation system (RNS-D)

Protected by copyright. Copying for private or commercial purposes, in part or in whole, is not permitted unless authorised by AUDI AG. AUDI AG does not guarantee or accept any liability with respect to the correctness of information in this document. Copyright by AUDI AG.

ws	=	white
sw	=	black
ro	=	red
br	=	brown
gn	=	green
bl	=	blue
gr	=	grey
li	=	purple
ge	=	yellow
or	=	orange
rs	=	pink

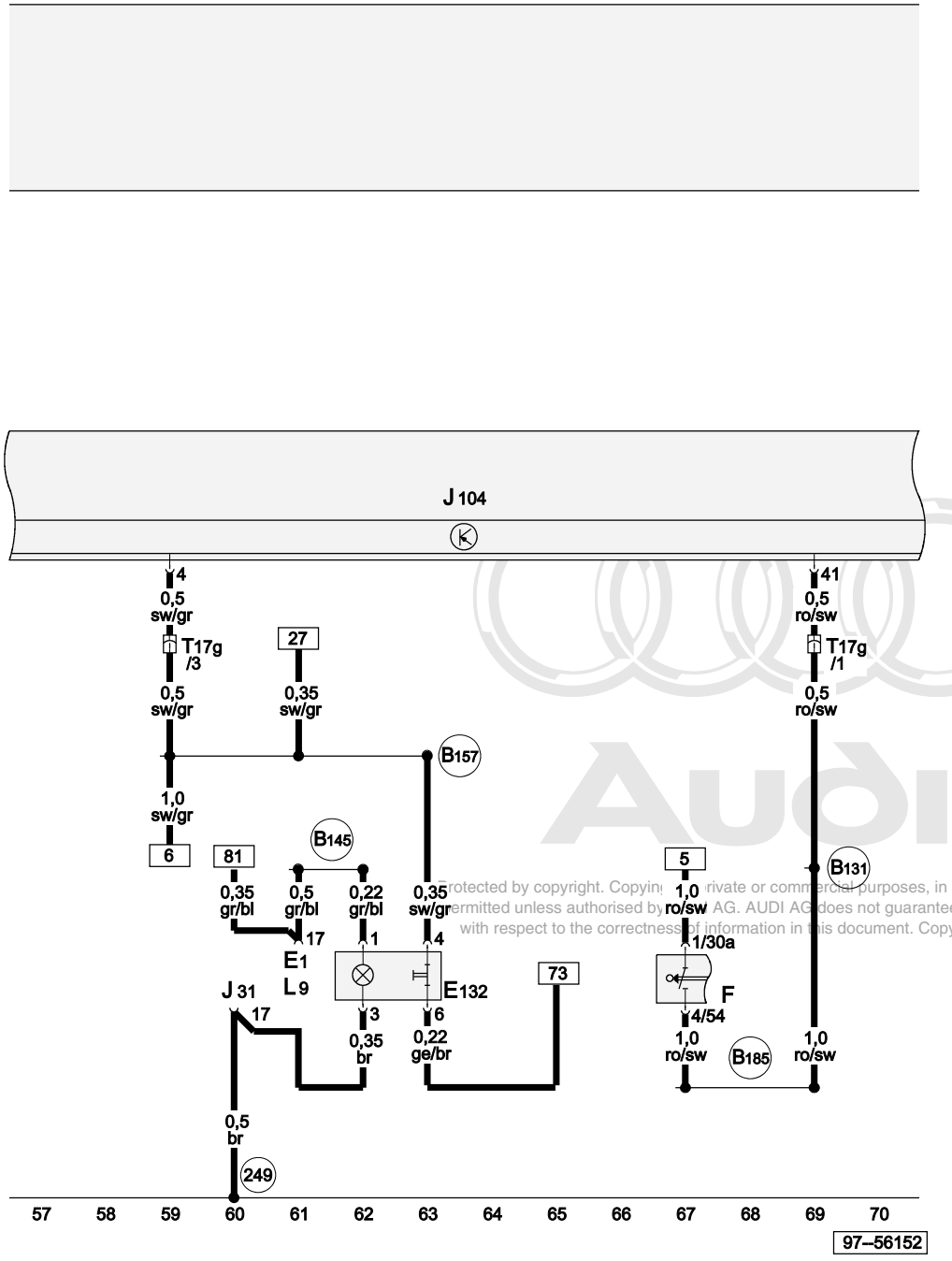

Protected by copyright. Copying for private or commercial purposes, in part or in whole, is not permitted unless authorised by AUDI AG. AUDI AG does not guarantee or accept any liability with respect to the correctness of information in this document. Copyright by AUDI AG.

ws = white
sw = black
ro = red
br = brown
gn = green
bl = blue
gr = grey
li = purple
ge = yellow
or = orange
rs = pink

Traction control system switch, brake light switch, ABS with EDL control unit

E1	Lighting switch
E132	Traction control system switch
F	Brake light switch
J31	Automatic intermittent wash/wipe relay
J104	ABS with EDL control unit
L9	Lighting switch light bulb
T17g	17-pin connector, red, connector point, A pillar, left
249	Earth connection -2-, in interior wiring harness
B145	Positive (+) connection (58b), in interior wiring harness
B157	Positive (+) connection -3- (15a), in interior wiring harness
B131	Connection (54), in interior wiring harness
B185	Connection -2- (54), in interior wiring harness

ABS with EDL control unit, control unit with display in dash panel insert, traction control system warning lamp

J104	ABS with EDL control unit
J285	Control unit with display in dash panel insert
K86	Traction control system warning lamp
T16	Diagnostic connector, black, near fuse box
T17f	17-pin connector, white, connector point, A pillar, left
T17g	17-pin connector, red, connector point, A pillar, left
T32	32-pin connector, blue, on dash panel insert
T32a	32-pin connector, green, on dash panel insert
249	Earth connection -2-, in interior wiring harness
A76	Connection (diagnosis wire K), in dash panel wiring harness
A132	Connection (TCS/ESP), in dash panel wiring harness
*	Does not apply to models with 1.2 litre TDI engine

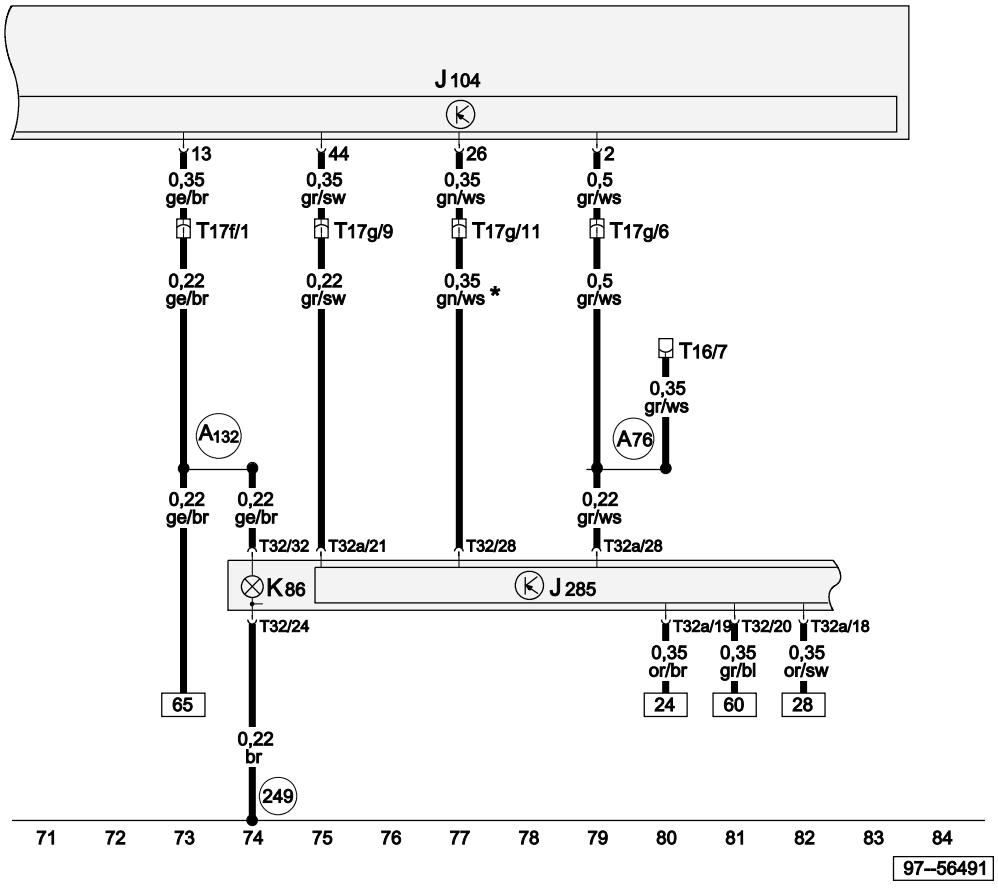

ws = white
sw = black
ro = red
br = brown
gn = green
bl = blue
gr = grey
li = purple
ge = yellow
or = orange
rs = pink

Protected by copyright. Copying for private or commercial purposes, in part or in whole, is not permitted unless authorised by AUDI AG. AUDI AG does not guarantee or accept any liability with respect to the correctness of information in this document. Copyright by AUDI AG.

Multi-function steering wheel

From model year 2002

Main fuse

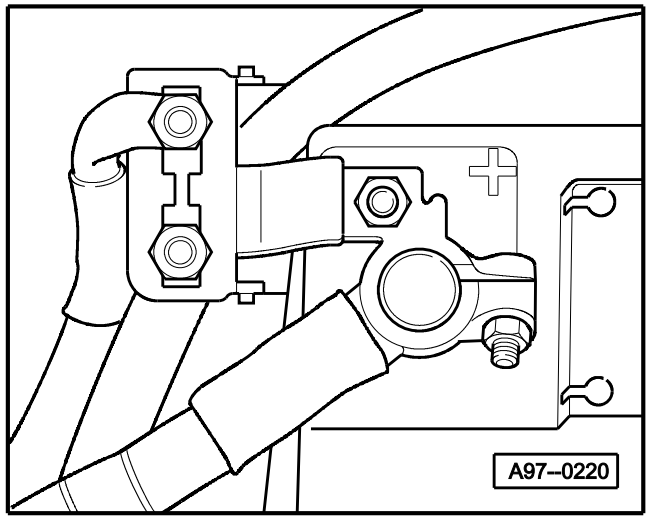

- On battery

9-point relay carrier, fuse box

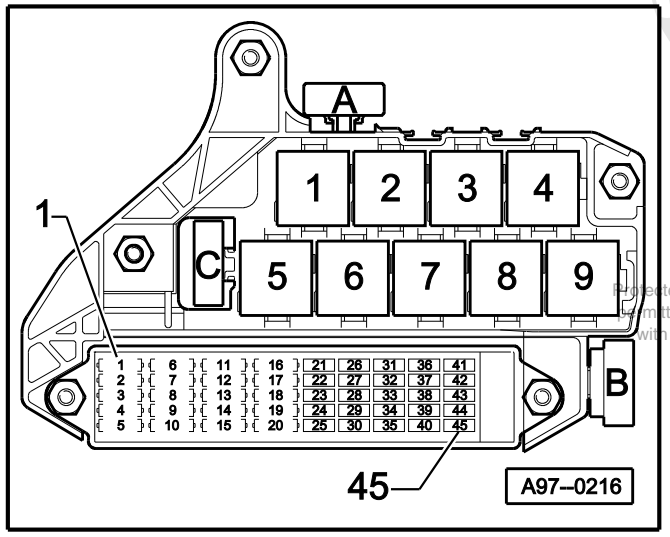

Protected by copyright. Copying for private or commercial purposes, in part or in whole, is not permitted unless authorised by AUDI AG. AUDI AG does not guarantee or accept any liability with respect to the correctness of information in this document. Copyright by AUDI AG.

♦ In dash panel

5 - Dual tone horn relay (J4)
A - Multi-function steering wheel fuse (S326)

Fuse colours

5 A - beige
7.5 A - brown
10 A - red
15 A - blue
20 A - yellow
25 A - white
30 A - green

Protected by copyright. Copying for private or commercial purposes, in part or in whole, is not permitted unless authorised by AUDI AG. AUDI AG does not guarantee or accept any liability with respect to the correctness of information in this document. Copyright by AUDI AG.

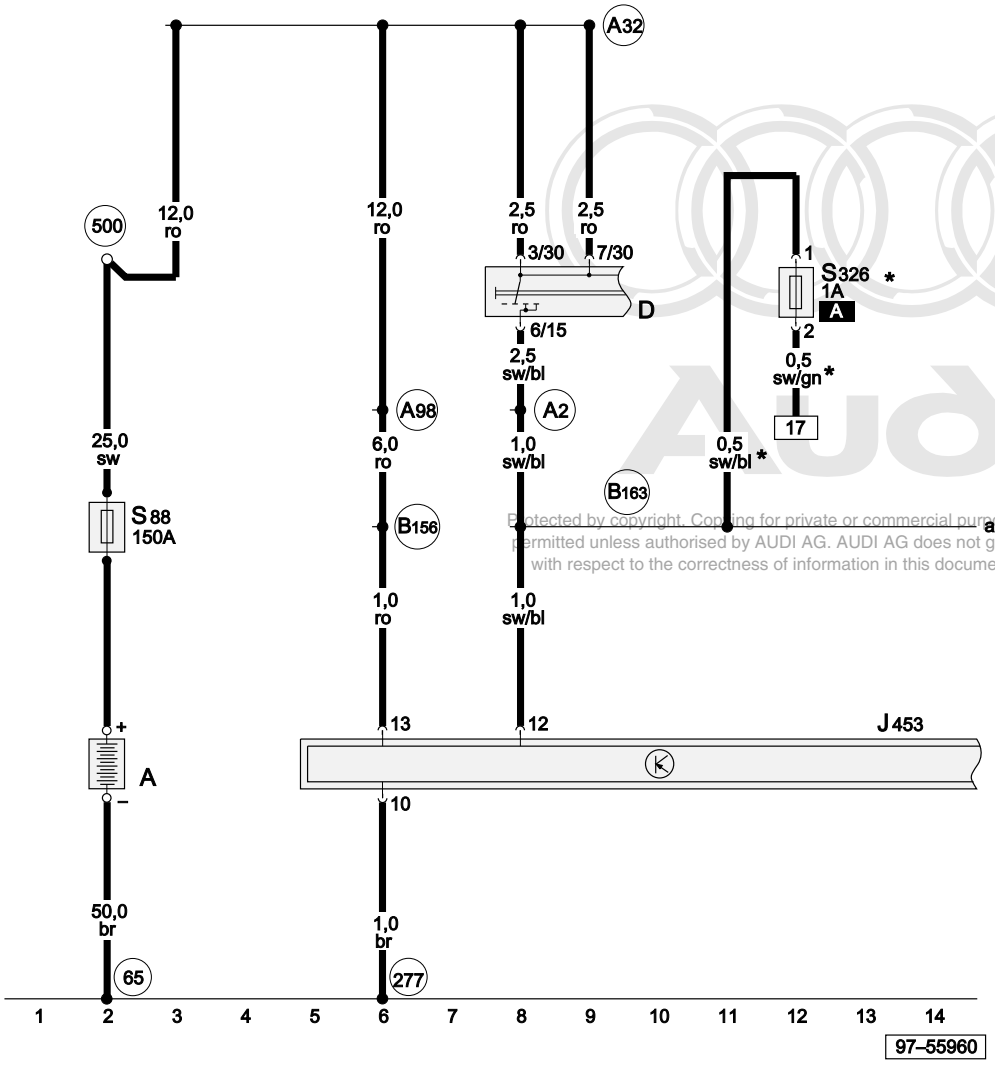

Protected by copyright. Copying for private or commercial purposes, in part or in whole, is not permitted unless authorised by AUDI AG. AUDI AG does not guarantee or accept any liability with respect to the correctness of information in this document. Copyright by AUDI AG.

ws = white
sw = black
ro = red
br = brown
gn = green
bl = blue
gr = grey
li = purple
ge = yellow
or = orange
rs = pink

Current supply, ignition/starter switch, multi-function steering wheel control unit, fuse

A	Battery
D	Ignition/starter switch
J453	Multi-function steering wheel control unit
S88	Strip fuse
S326	Multi-function steering wheel fuse
65	Earth point, left longitudinal member, rear
277	Earth connection -3-, in interior wiring harness
500	Screw connection -1- (30), on relay plate
A2	Positive (+) connection (15), in dash panel wiring harness
A32	Positive (+) connection (30), in dash panel wiring harness
A98	Positive (+) connection -4- (30), in dash panel wiring harness
B156	Positive (+) connection (30a), in interior wiring harness
B163	Positive (+) connection -1- (15), in interior wiring harness
*	Applicable from July 2002 onwards

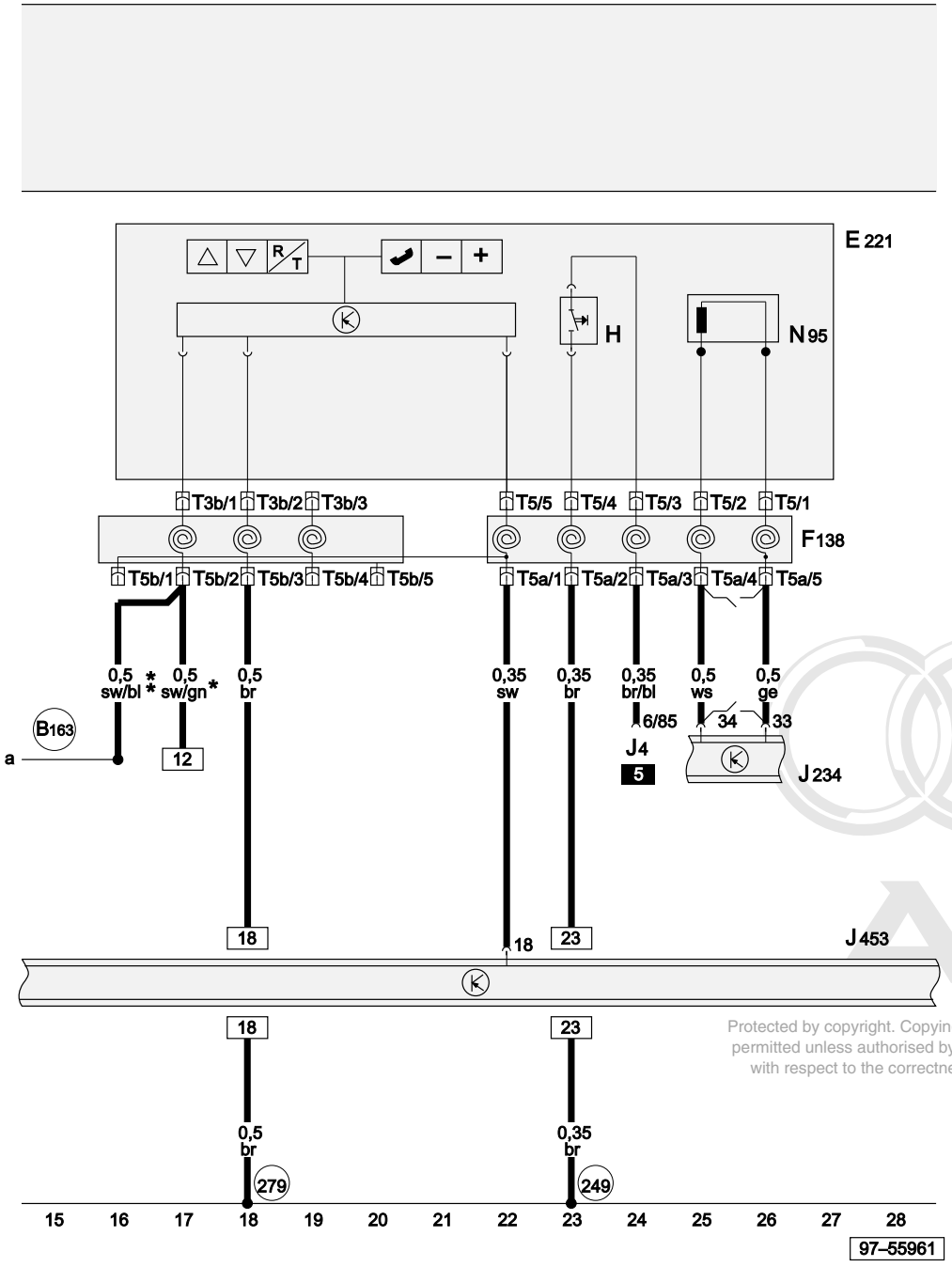

Operating unit in steering wheel, airbag coil connector, return spring with slip ring, horn plate, airbag control unit, multi-function steering wheel control unit

E221	Operating unit in steering wheel
F138	Airbag coil connector, return spring with slip ring
H	Horn plate
J4	Dual tone horn relay
J234	Airbag control unit
J453	Multi-function steering wheel control unit
N95	Airbag igniter, driver's side
T3b	3-pin connector, in steering wheel
T5	5-pin connector, yellow, in steering wheel
T5a	5-pin connector, yellow, behind steering column switch trim
T5b	5-pin connector, black, behind steering column switch trim
249	Earth connection -2-, in interior wiring harness
279	Earth connection -5-, in interior wiring harness
B163	Positive (+) connection -1- (15), in interior wiring harness
<fo:external-graphic src="/../PDOC/samba/tools/png-convert/out//slp/ft_icons/kurzbr_l.png" content-width="20pt" scaling="uniform"/>	Short circuit bridge becomes effective when connector is unplugged.

ws	=	white
sw	=	black
ro	=	red
br	=	brown
gn	=	green
bl	=	blue
gr	=	grey
li	=	purple
ge	=	yellow
or	=	orange
rs	=	pink

* Applicable from July 2002 onwards
** Applicable up to July 2002

Protected by copyright. Copying for private or commercial purposes, in part or in whole, is not permitted unless authorised by AUDI AG. AUDI AG does not guarantee or accept any liability with respect to the correctness of information in this document. Copyright by AUDI AG.

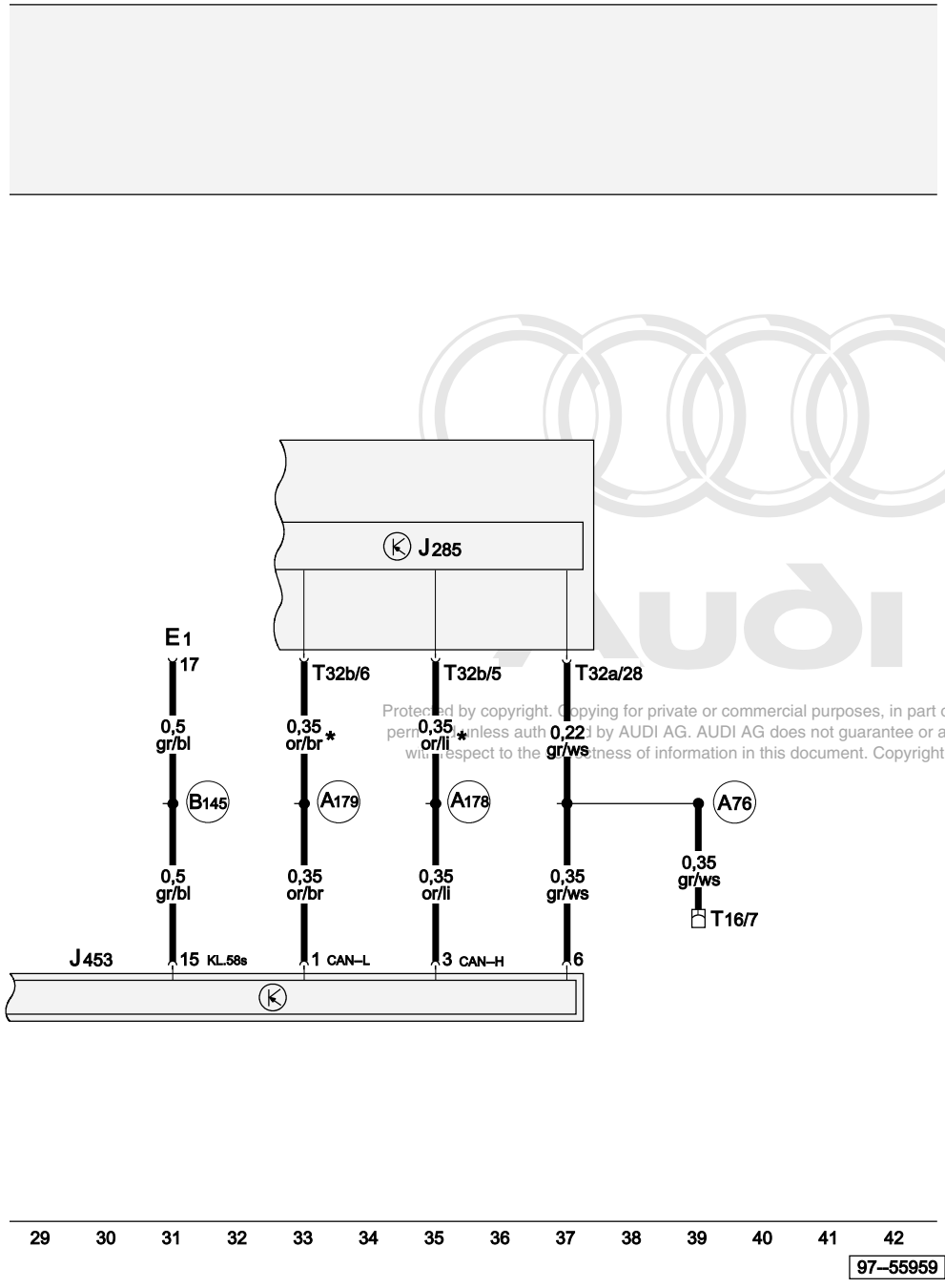

Protected by copyright. Copying for private or commercial purposes, in part or in whole, is not permitted unless authorised by AUDI AG. AUDI AG does not guarantee or accept any liability with respect to the correctness of information in this document. Copyright by AUDI AG.

ws = white
sw = black
ro = red
br = brown
gn = green
bl = blue
gr = grey
li = purple
ge = yellow
or = orange
rs = pink

Control unit with display in dash panel insert, multi-function steering wheel control unit

E1	Lighting switch
J285	Control unit with display in dash panel insert
J453	Multi-function steering wheel control unit
T16	16-pin connector, black, diagnostic connector
T32a	32-pin connector, green, on dash panel insert
T32b	32-pin connector, grey, on dash panel insert
A76	Connection (diagnosis wire K), in dash panel wiring harness
A178	Connection (infotainment CAN bus, high), in dash panel wiring harness
A179	Connection (infotainment CAN bus, low), in dash panel wiring harness
B145	Positive (+) connection (58b), in interior wiring harness
*	Only applies to models with driver information system

Connector points, relay carriers, fuse carrier

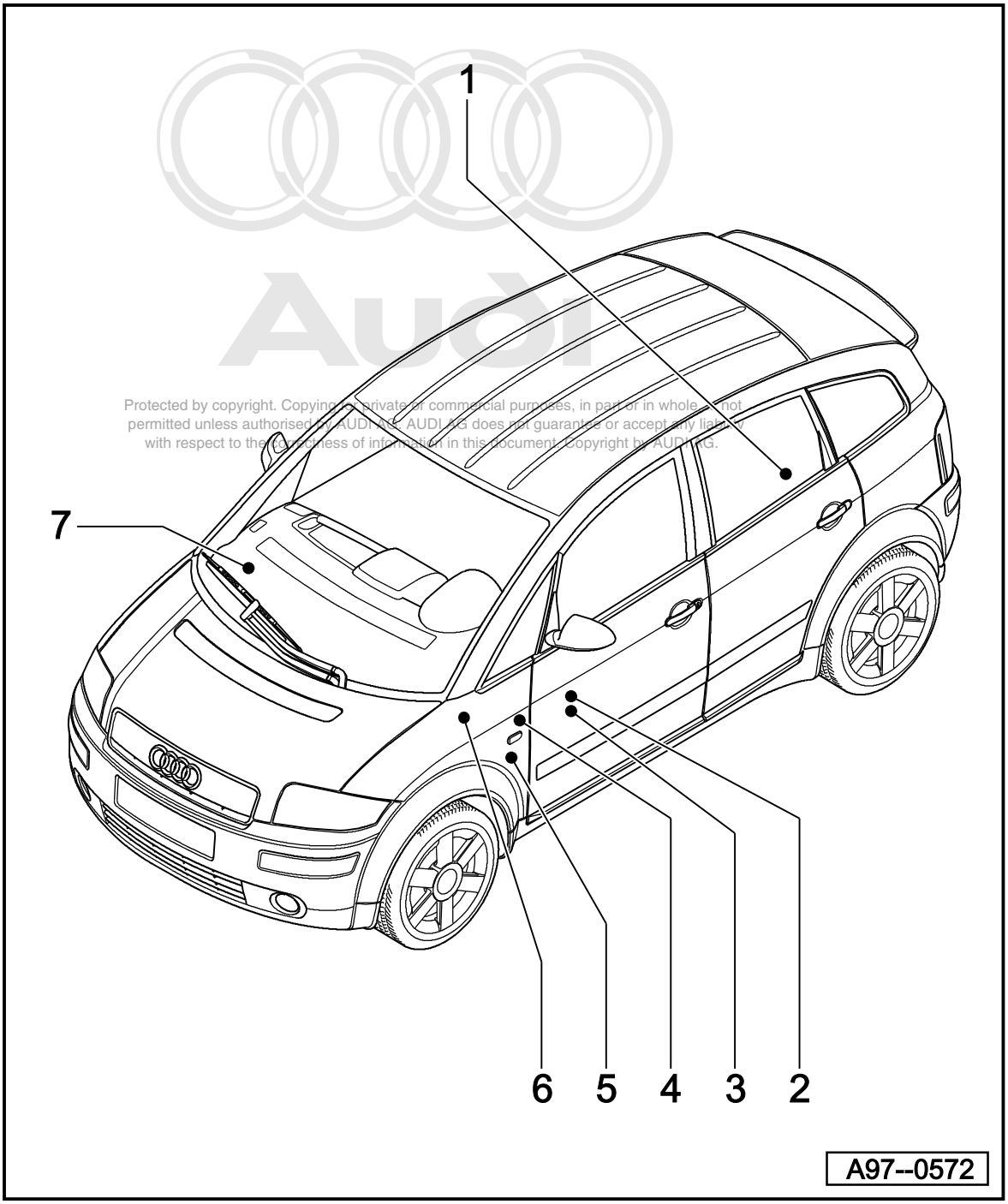

Protected by copyright. Copying for private or commercial purposes, in part or in whole, is not permitted unless authorised by AUDI AG. AUDI AG does not guarantee or accept any liability with respect to the correctness of information in this document. Copyright by AUDI AG.

Fitting locations overview

1 - Main fuse 150 A
- ♦ On battery
- ♦ ⇒ Fig. 1, page 1/3

2 - Relay carrier (9-point)
- ♦ ⇒ Fig. 2, page 1/4

3 - Fuse box
- ♦ ⇒ Fig. 3, page 1/5

4 - Relay carrier (6+6-point)
- ♦ In footwell, left
- ♦ ⇒ Fig. 4, page 1/12

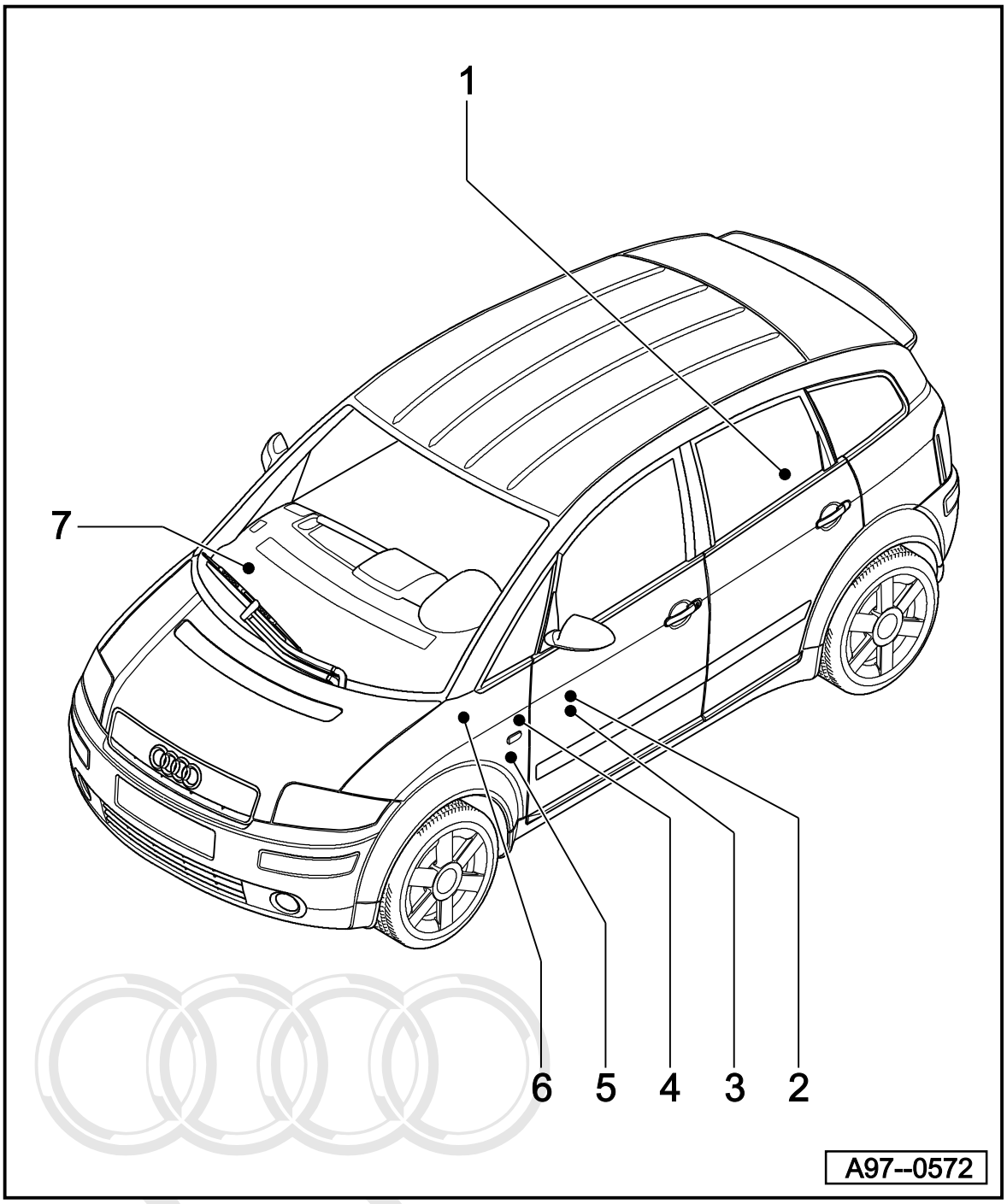

5 - Relay carrier (3-point)
♦ ⇒ Fig. 5, page 1/13

6 - Connector point, A pillar, left
♦ ⇒ Fig. 6, page 1/14

7 - Connector point, A pillar, right
♦ ⇒ Fig. 7,page 1/15

Protected by copyright. Copying for private or commercial purposes, in part or in whole, is not permitted unless authorised by AUDI AG. AUDI AG does not guarantee or accept any liability with respect to the correctness of information in this document. Copyright by AUDI AG.

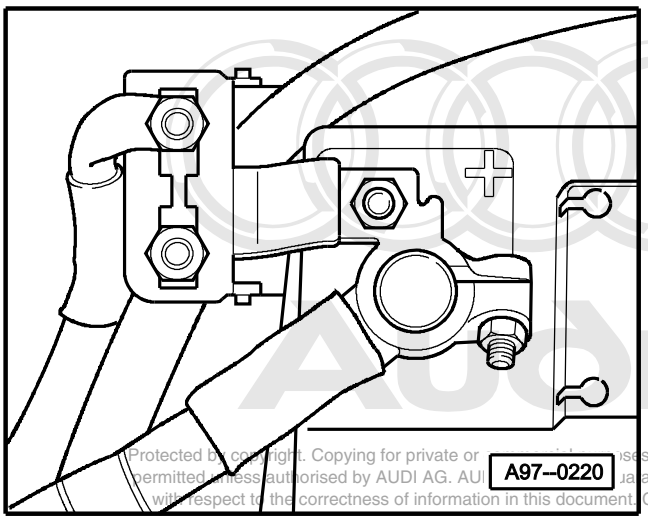

Protected by copyright. Copying for private or commercial purposes, in part or in whole, is not permitted unless authorised by AUDI AG. AUDI AG does not guarantee or accept any liability with respect to the correctness of information in this document. Copyright by AUDI AG.

Fig. 1 Main fuse

♦ On battery

S88 - Strip fuse - 150 A

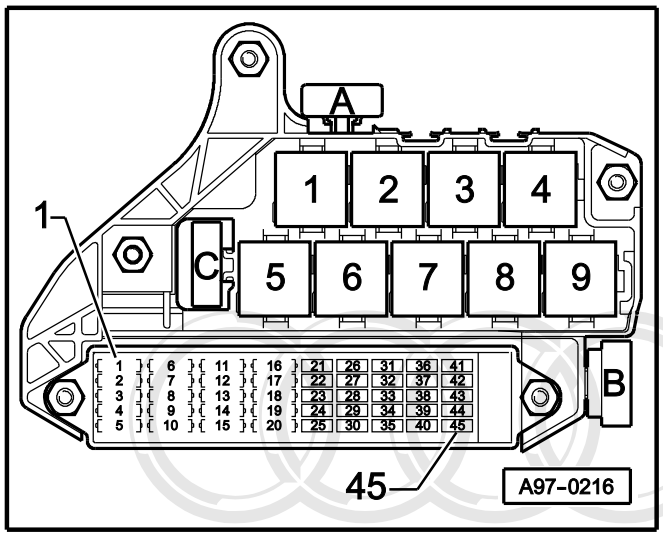

Fig. 2 Relay carrier (9-point)

♦ Dash panel, left

Fuse colours

1 A - black

40 A - orange

60 A - light blue

Note:

The remaining items in the relay carrier are not used.

Position of relays:

Protected by copyright. Copying for private or commercial purposes, in part or in whole, is not permitted unless authorised by AUDI AG. AUDI AG does not guarantee or accept any liability with respect to the correctness of information in this document. Copyright by AUDI AG.

Item	Socket colour	Designation
1	black	Consumer switch-off relay (J511)
3*	black	Brake light suppression relay (J508)
4	black	High heat output relay (J360)
5	black	Dual tone horn relay (J4)
6	black	Bulb check warning unit (K41)
7	black	Bulb check warning unit (K41)
8	black	Low heat output relay (J359)
9	black	X contact relief relay (J59)

∗ - With the introduction of MK 60 no longer fitted, phased-in modification

Fuses:

Item	Socket colour	Designation	Fuse rating
A	black	Multi-function steering wheel fuse (S326)	1 A
B	black	Additional heater fuse (S126)	60 A
C	black	Radiator fan control unit fuse (S142)	40 A

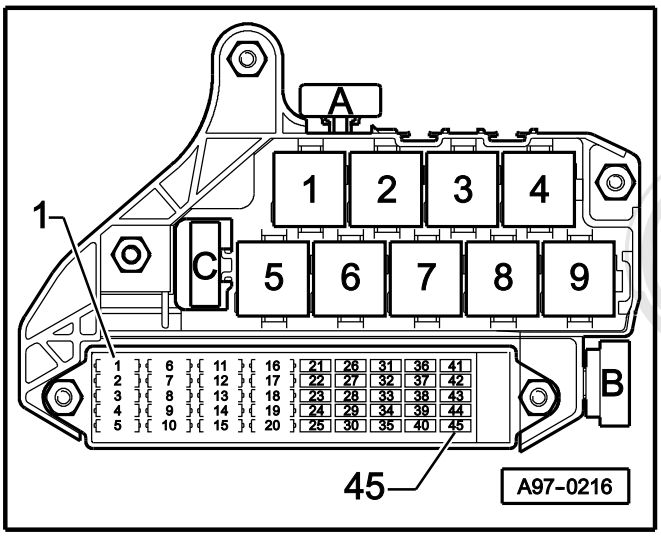

Fig. 3 Fuse box

♦ Dash panel, left

Fuse colours

5 A - beige
7.5 A - brown
10 A - red
15 A - blue
20 A - yellow
25 A - white
30 A - green

Protected by copyright. Copying for private or commercial purposes, in part or in whole, is not permitted unless authorised by AUDI AG. AUDI AG does not guarantee or accept any liability with respect to the correctness of information in this document. Copyright by AUDI AG.

Fuses:

1	-	Control unit with display in dash panel insert	10 A
2	-	Voltage stabiliser Radio Amplifier Aerial selection control unit Operating electronics control unit, navigation Navigation/TV tuner Navigation interface	20 A
3	-	Voltage stabiliser	20 A
4	-	Radiator fan thermo-switch Radiator fan	20 A
6	-	Windscreen washer pump switch Automatic intermittent wash/wipe relay Intermittent wiper switch	25 A
7	-	Hazard warning light relay	15 A
8	-	Dual tone horn relay Sliding sunroof adjustment control unit Sliding sunroof motor	25 A
11	-	Socket	20 A

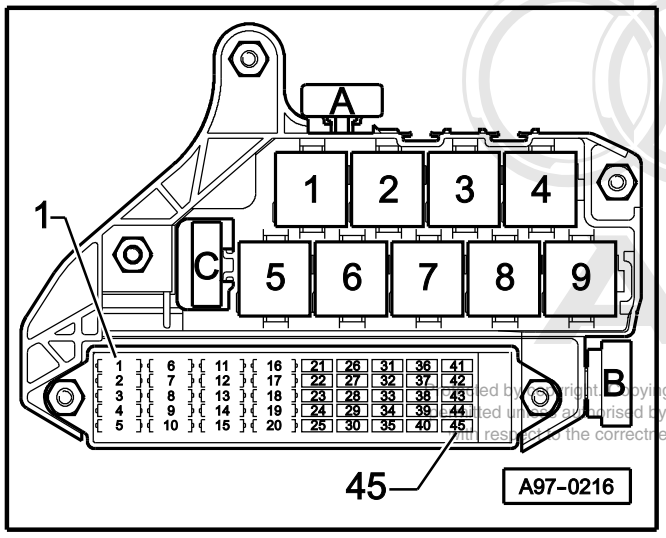

Fig. 3 Fuse box

◆ Dash panel, left

Fuse colours

5 A - beige
7.5 A - brown
10 A - red
15 A - blue
20 A - yellow
25 A - white
30 A - green

Protected by copyright. Copying for private or commercial purposes, in part or in whole, is not permitted unless authorised by AUDI AG. AUDI AG does not guarantee or accept any liability with respect to the correctness of information in this document. Copyright by AUDI AG.

Fuses:

12	-	Cigarette lighter	15 A
13	-	Heated driver's seat regulator Heated front passenger's seat regulator	15 A
14	-	Coolant heating elements Low heat output relay	30 A
14	-	Additional heating heater element	20 A
15	-	Heated rear window relay Control and display unit for air conditioner/Climatronic	30 A
16	-	Fresh air blower switch Fresh air blower control unit	30 A
18	-	Fuel pump (pre-supply pump)	20 A
19	-	Activated charcoal filter system solenoid valve 1 Lambda probe heater Lambda probe 1 heater, downstream of catalytic converter	20 A
20	-	4LV (injection system) control unit Ignition coil 2 Output stage	20 A
21	-	Twin filament bulb for headlight, right Main beam warning lamp	10 A

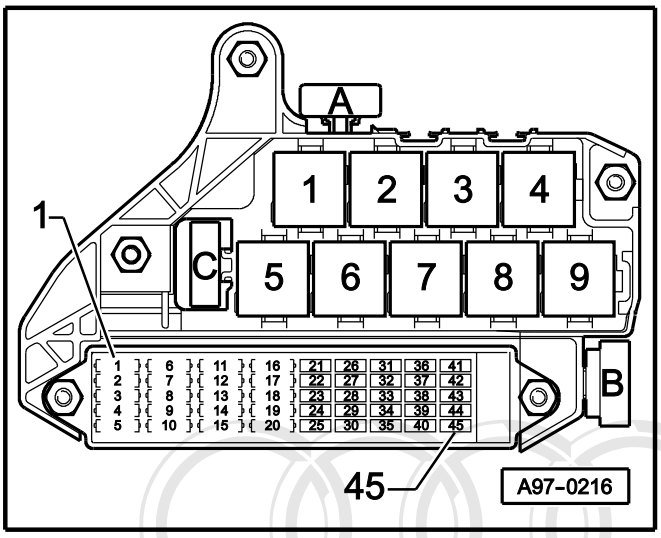

Fig. 3 Fuse box

♦ Dash panel, left

Fuse colours

5 A - beige
7.5 A - brown
10 A - red
15 A - blue
20 A - yellow
25 A - white
30 A - green

Fuses:

22	-	Twin filament bulb for headlight, left	10 A
23	-	Bulb monitoring device Twin filament bulb for headlight, right Headlight range control motor, right	15 A
24	-	Bulb monitoring device Twin filament bulb for headlight, left Headlight range control motor, left	15 A
25	-	Telephone/telematics control unit 18-pin connector, black, mobile phone interface, in front passenger's footwell	5 A
26	-	Bulb monitoring device Tail light bulb, right Side light bulb, right	5 A
27	-	Bulb monitoring device Tail light bulb, left Side light bulb, left	5 A
28	-	Diagnostic connector	10 A

Protected by copyright. Copying for private or commercial purposes, in part or in whole, is not permitted unless authorised by AUDI AG. AUDI AG does not guarantee or accept any liability with respect to the correctness of information in this document. Copyright by AUDI AG.

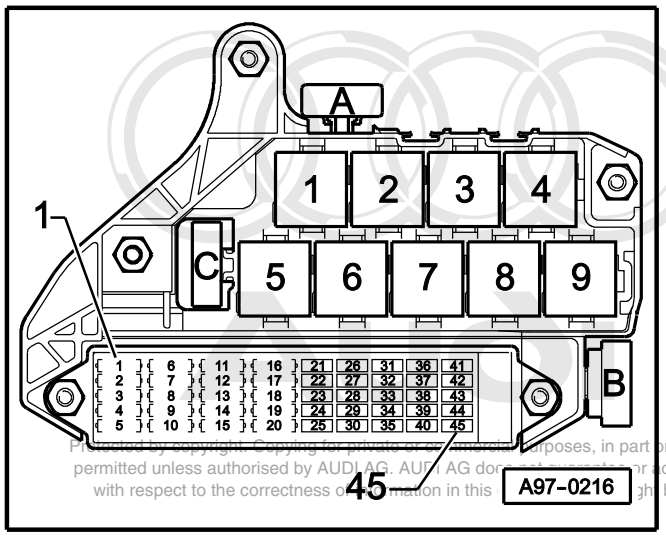

Protected by copyright. Copying for private or commercial purposes, in part or in whole, is not permitted unless authorised by AUDI AG. AUDI AG does not guarantee or accept any liability with respect to the correctness of information in this document. Copyright by AUDI AG.

Fig. 3 Fuse box

◆ Dash panel, left

Fuse colours

5 A - beige
7.5 A - brown
10 A - red
15 A - blue
20 A - yellow
25 A - white
30 A - green

Fuses:

29	-	Reversing light switch Diagnostic connector Automatic anti-dazzle interior mirror Navigation system with CD drive control unit Parking aid control unit	15 A
30	-	Bulb monitoring device Brake light switch	10 A
31	-	Cruise control system switch Brake light switch Clutch pedal switch Heater element (crankcase breather) Exhaust gas recirculation valve Low heat output relay	10 A
32	-	Glove box light Number plate light	10 A
33	-	Heater element, left washer jet Heater element, right washer jet	5 A

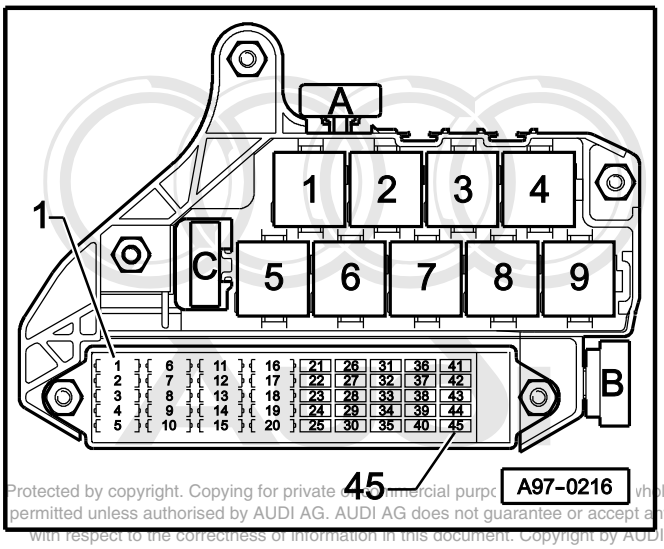

Protected by copyright. Copying for private or commercial purpo whole, is not permitted unless authorised by AUDI AG. AUDI AG does not guarantee or accept any liability with respect to the correctness of information in this document. Copyright by AUDI AG.

Fig. 3 Fuse box

♦ Dash panel, left

Fuse colours

5 A - beige
7.5 A - brown
10 A - red
15 A - blue
20 A - yellow
25 A - white
30 A - green

Fuses:

34	-	Hazard warning light relay	10 A
35	-	Front and rear fog light switch Lighting switch	15 A
36	-	Heated rear window relay Convenience system central control unit Control and display unit for air conditioner/Climatronic Tank filler flap remote release switch Additional heating button (ECON)	10 A
37	-	Navigation system with CD drive control unit Parking aid control unit	10 A
38	-	High pressure sender Control and display unit for air conditioner/Climatronic Compressor regulating valve, air conditioning system Navigation system with CD drive control unit Operating electronics control unit, navigation	10 A

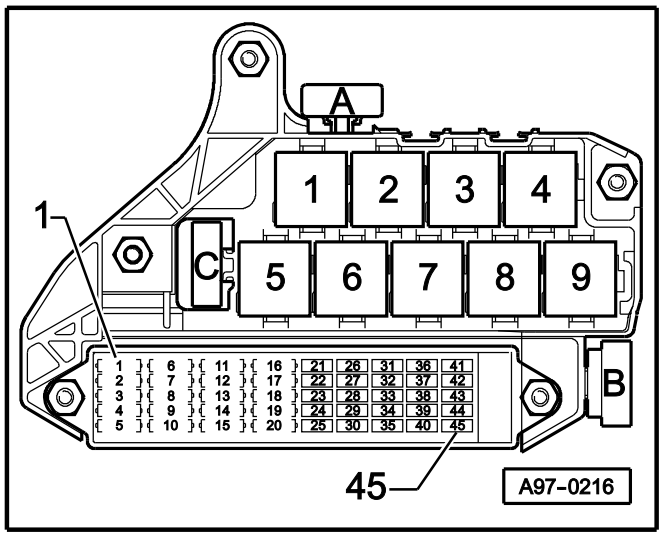

Fig. 3 Fuse box

♦ Dash panel, left

Fuse colours

5 A - beige
7.5 A - brown
10 A - red
15 A - blue
20 A - yellow
25 A - white
30 A - green

Fuses:

38	-	Radio Amplifier Hazard warning light switch Speedometer sender (Hall sender, on gearbox) Oil level/oil temperature sender Power steering control unit Telephone/telematics control unit Heated rear window relay Ignition key withdrawal lock control unit Parking aid control unit Automatic anti-dazzle interior mirror Heated driver's seat regulator Heated front passenger's seat regulator 18-pin connector, black, mobile phone interface, in front passenger's footwell Electronic manual gearbox control unit Ignition key withdrawal lock control unit Selector lever lock solenoid	10 A
39	-	Door control unit, front passenger's side Door control unit, rear right	10 A
40	-	Traction control system switch ABS with EDL control unit Steering angle sender	10 A

Protected by copyright. Copying for private or commercial purposes, in part or in whole, is not permitted unless authorised by AUDI AG. AUDI AG does not guarantee or accept any liability with respect to the correctness of information in this document. Copyright by AUDI AG.

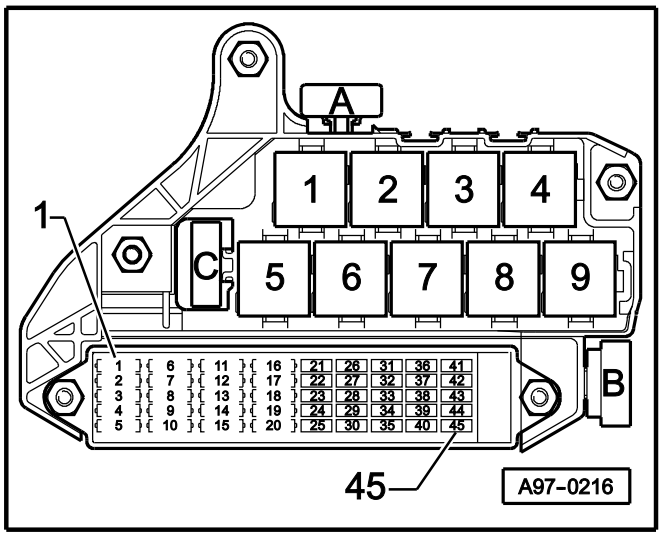

Fig. 3 Fuse box

♦ Dash panel, left

Fuse colours

5 A - beige
7.5 A - brown
10 A - red
15 A - blue
20 A - yellow
25 A - white
30 A - green

Fuses:

41	-	Door control unit, driver's side Door control unit, rear left	10 A
42	-	Convenience system central control unit Anti-theft alarm ultra-sonic sensor	10 A
43	-	Electronic manual gearbox control unit	10 A
44	-	Ignition key withdrawal lock control unit Ignition key withdrawal lock solenoid valve Electronic manual gearbox control unit Handbrake warning lamp control unit	10 A
45	-	Injectors for cylinders 1 - 4	15 A

Protected by copyright. Copying for private or commercial purposes, in part or in whole, is not permitted unless authorised by AUDI AG. AUDI AG does not guarantee or accept any liability with respect to the correctness of information in this document. Copyright by AUDI AG.

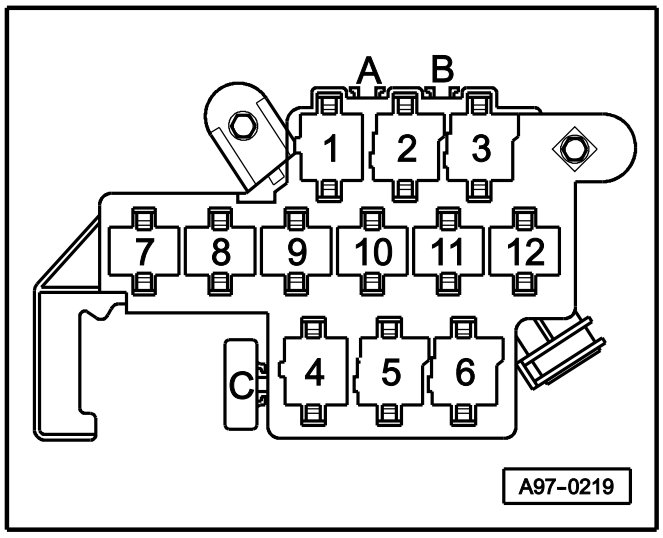

Fig. 4 Relay carrier (6+6-point)

♦ Footwell, left

Fuse colours

20 A - yellow

60 A - light blue

Note:

The remaining items in the relay carrier are not used.

Position of relays:

Item	Socket colour	Designation
1	black	Starter inhibitor and reversing light relay (J226)
2	black	Automatic intermittent wash/wipe relay (J31)
3	black	Automatic intermittent wash/wipe relay (J31)
4	black	Gearbox hydraulic pump relay (J510)
5*	black	Fuel pump relay (J17)
5	black	Ignition key withdrawal lock control unit (J557)
6	brown	Ignition key withdrawal lock control unit (J557)

∗ - Only applies to models with petrol engine

Fuses:

Item	Socket colour	Designation	Fuse rating
A	red	Hydraulic pump relay fuse (S279)	20 A
C	white	ABS control unit fuse 1 (S123)	60 A

Protected by copyright. Copying for private or commercial purposes, in part or in whole, is not permitted unless authorised by AUDI AG. AUDI AG does not guarantee or accept any liability with respect to the correctness of information in this document. Copyright by AUDI AG.

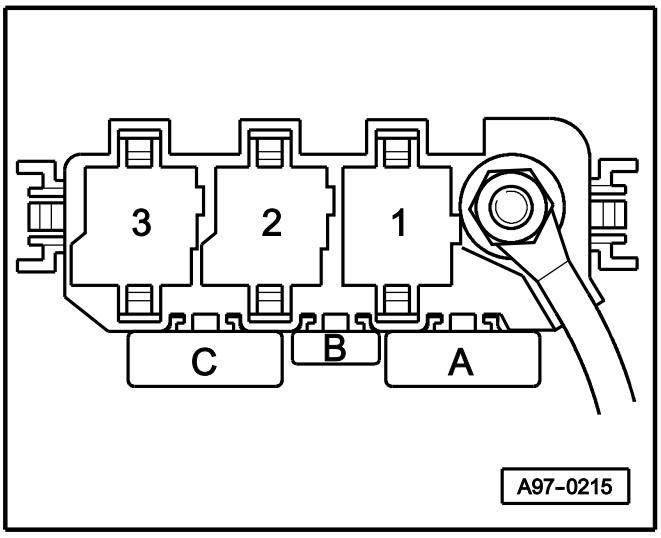

Fig. 5 Relay carrier (3-point)

- With screw connection
- Footwell, left

Fuse colours

5 A - beige
10 A - red
30 A - green
60 A - light blue
80 A - yellow

Note:
Item 3 in relay carrier is not used.

Position of relays:

Item	Socket colour	Designation
1	black	Relay for glow plugs (J52)
2	black	Terminal 30 voltage supply relay (J317)

Fuses:

Item	Socket colour	Designation	Fuse rating
A	black	Strip fuse for glow plugs (engine) (S39)	60 A
A	black	Engine control unit fuse (FSI engine) (S102)	30 A
B	black	Engine control unit fuse (diesel engine) (S102)	10 A
B	red	Air mass meter fuse (FSI engine) (S74)	5 A
C	white	Fuse for power steering (S204)	80 A

Protected by copyright. Copying for private or commercial purposes, in part or in whole, is not permitted unless authorised by AUDI AG. AUDI AG does not guarantee or accept any liability with respect to the correctness of information in this document. Copyright by AUDI AG.

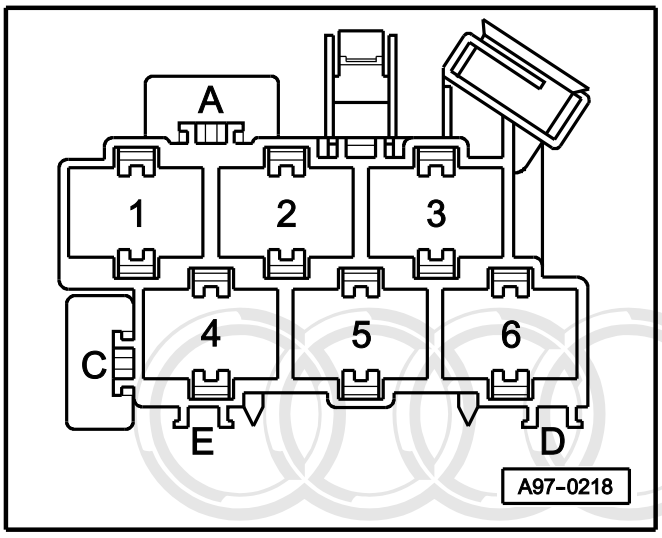

Fig. 6 Connector point, A pillar, left

♦ On A pillar, behind trim

Fuse colours

10 A - red

30 A - green

Note:

The remaining items in the connector point are not used.

Protected by copyright. Copying for private or commercial purposes, in part or in whole, is not permitted unless authorised by AUDI AG. AUDI AG does not guarantee or accept any liability with respect to the correctness of information in this document. Copyright by AUDI AG.

Connectors:

Item	Designation	Component
1	10-pin connector, brown (T10e)	
2	10-pin connector, blue (T10f)	
3	17-pin connector, red (T17g)	
4	17-pin connector, white (T17f)	
5	10-pin connector, grey (T10f)	

Fuses:

Item	Socket colour	Designation	Fuse rating
A	red	Electric window single fuse, front (S37)	30 A
A	black	Seat adjustment fuse (lumbar support) (S45)	10 A

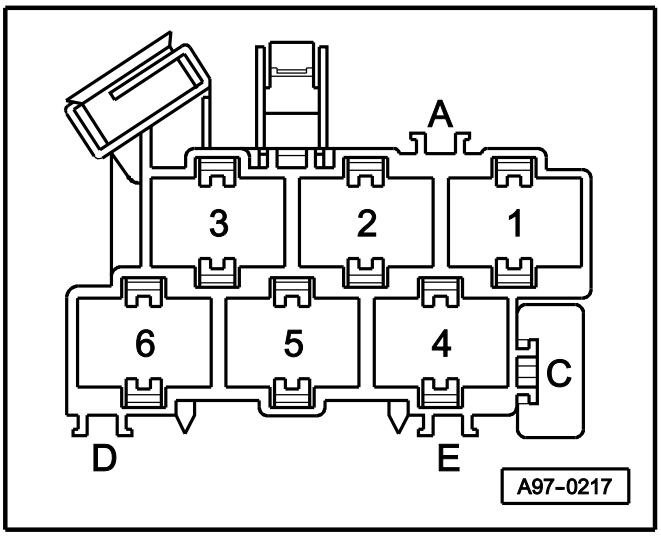

Fig. 7 Connector point, A pillar, right

♦ On A pillar, behind trim

Fuse colours

30 A - green

Note:

The remaining items in the connector point are not used.

Connectors:

Item	Designation	Component
1	10-pin connector, black (T10i)	
4	17-pin connector, green (T17h)	

Fuses:

Item	Socket colour	Designation	Fuse rating
C	brown	Electric window single fuse 2, rear (S280)	30 A

Protected by copyright. Copying for private or commercial purposes, in part or in whole, is not permitted unless authorised by AUDI AG. AUDI AG does not guarantee or accept any liability with respect to the correctness of information in this document. Copyright by AUDI AG.

List of earth points

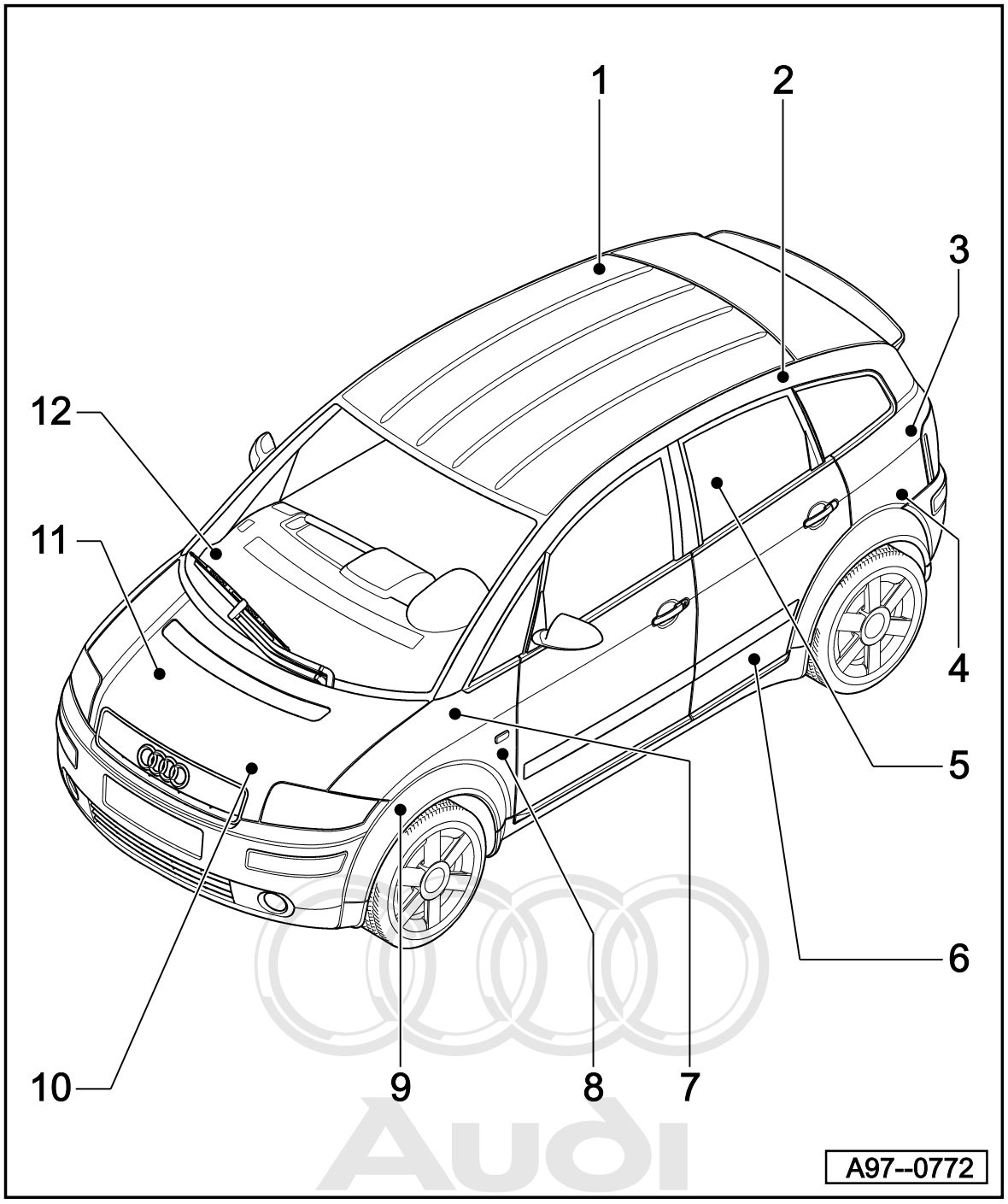

Protected by copyright. Copying for private or commercial purposes, in part or in whole, is not permitted unless authorised by AUDI AG. AUDI AG does not guarantee or accept any liability with respect to the correctness of information in this document. Copyright by AUDI AG.

1 - Earth point, C pillar, right

2 - Earth point, C pillar, left

3 - Earth point, in tailgate, left

4 - Earth point, luggage compartment, left

* - From chassis number 20000 onwards no longer fitted

5 - Earth point, in battery box

6 - Earth point, left longitudinal member, rear

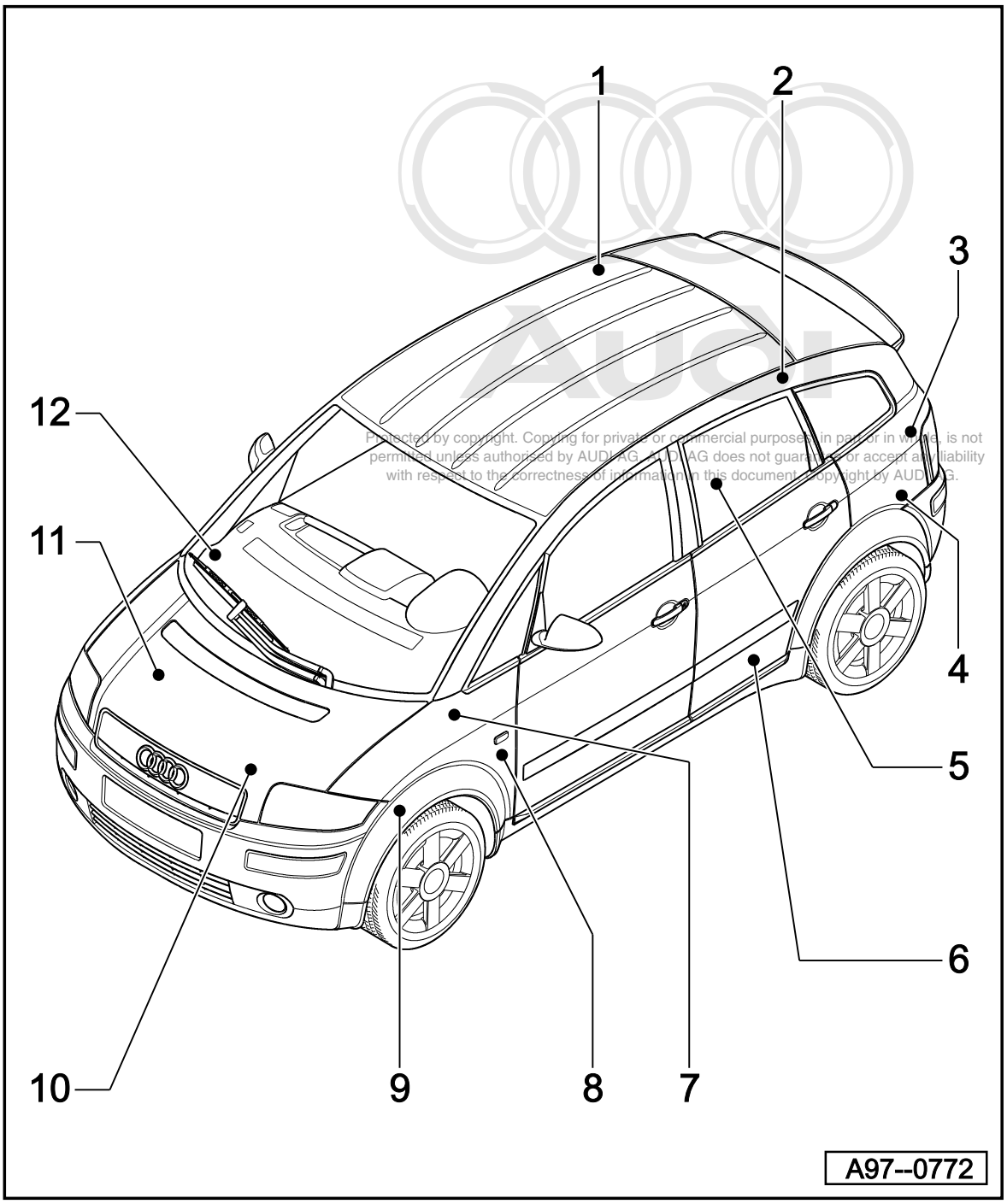

Protected by copyright. Copying for private or commercial purposes, in part or in whole, is not permitted unless authorised by AUDI AG. AUDI AG does not guarantee or accept any liability with respect to the correctness of information in this document. Copyright by AUDI AG.

7 - Earth point, A pillar, left

8 - Earth point, lower part of left A pillar

9 - Earth point, in engine compartment, left

10 - Earth point, engine/gearbox earth

11 - Earth point, near ignition coil

12 - Earth point, lower part of right A pillar

Fitting locations of individual control units

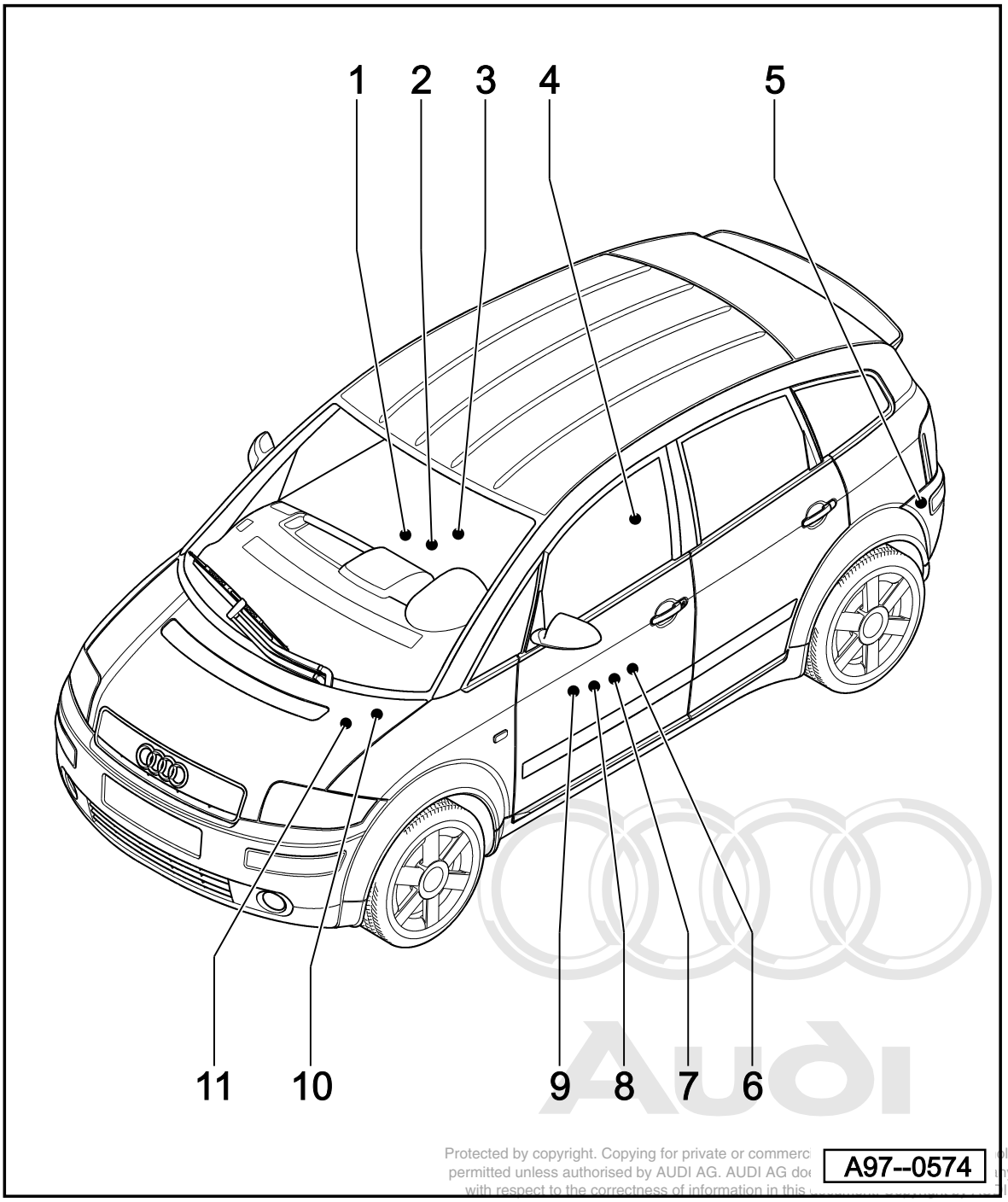

Protected by copyright. Copying for private or commerc ole, is not permitted unless authorised by AUDI AG. AUDI AG do uty liability with respect to the correctness of information in this I AG.

Fitting locations overview

1 - Handbrake warning lamp control unit - J534
◆ ⇒ Fig. 1, page 3/3

2 - Control and display unit for air conditioner/Climatronic - E87
◆ ⇒ Fig. 2, page 3/3

3 - Airbag control unit - J234
◆ ⇒ Fig. 3, page 3/3

4 - Voltage stabilisers - J532, J570
◆ ⇒ Fig. 4, page 3/4

5 - Parking aid control unit - J446
◆ ⇒ Fig. 5, page 3/4

6 - Convenience system central control unit - J393
◆ ⇒ Fig. 6, page 3/4

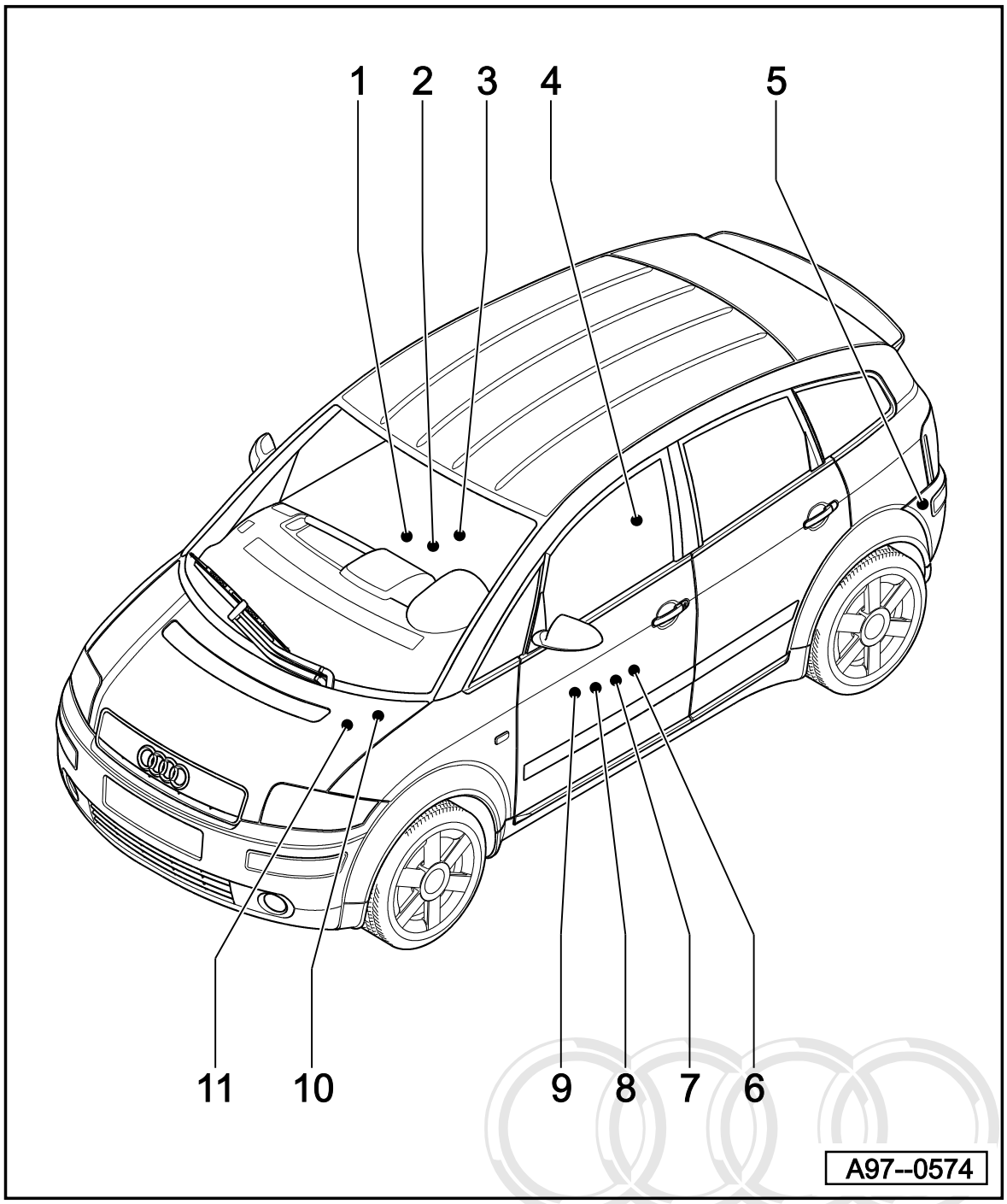

7 - Engine control unit - J248, J537
♦ ⇒ Fig. 7, page 3/5

8 - Electronic manual gearbox control unit - J514
♦ ⇒ Fig. 8, page 3/5

9 - NOx sensor control unit - J583
♦ ⇒ Fig. 9, page 3/5

10 - Power steering control unit - J500
♦ ⇒ Fig. 10, page 3/6

11 - ABS with EDL control unit - J104
♦ ⇒ Fig. 11, page 3/6

Protected by copyright. Copying for private or commercial purposes, in part or in whole, is not permitted unless authorised by AUDI AG. AUDI AG does not guarantee or accept any liability with respect to the correctness of information in this document. Copyright by AUDI AG.

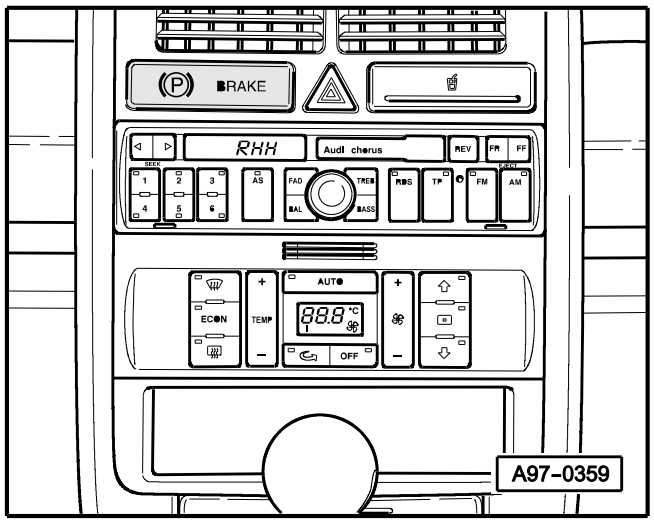

Fig. 1 Handbrake warning lamp control unit - J534

♦ In centre console

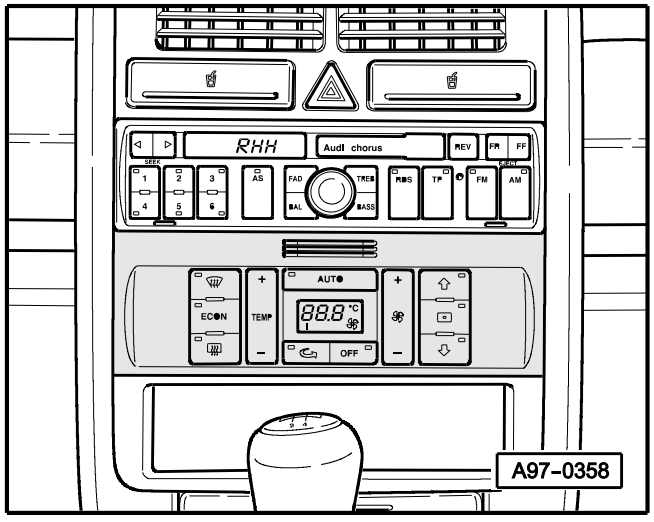

Fig. 2 Control and display unit for air conditioner/Climatronic - E87

♦ In centre console

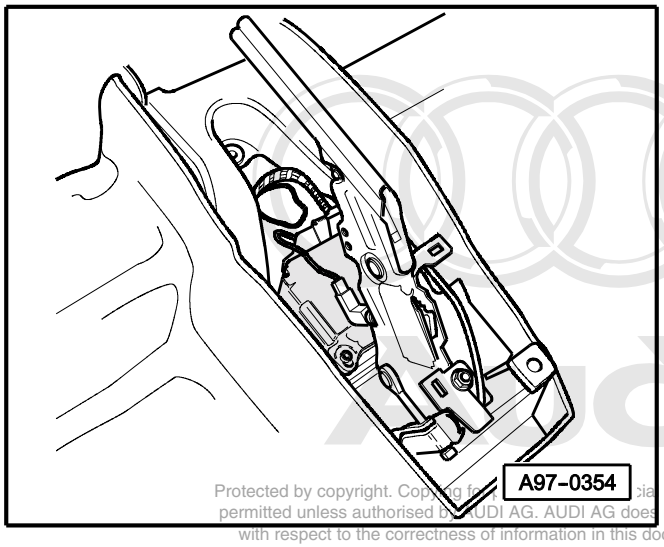

Fig. 3 Airbag control unit - J234

♦ In centre console

Protected by copyright. Copying for commercial purposes, in part or in whole, is not permitted unless authorised by AUDI AG. AUDI AG does not guarantee or accept any liability with respect to the correctness of information in this document. Copyright by AUDI AG.

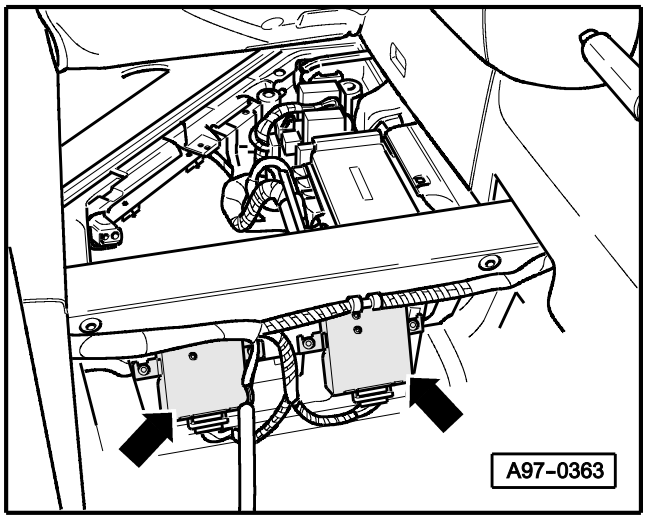

Fig. 4 Voltage stabilisers - J532, J570

♦ Under driver's seat

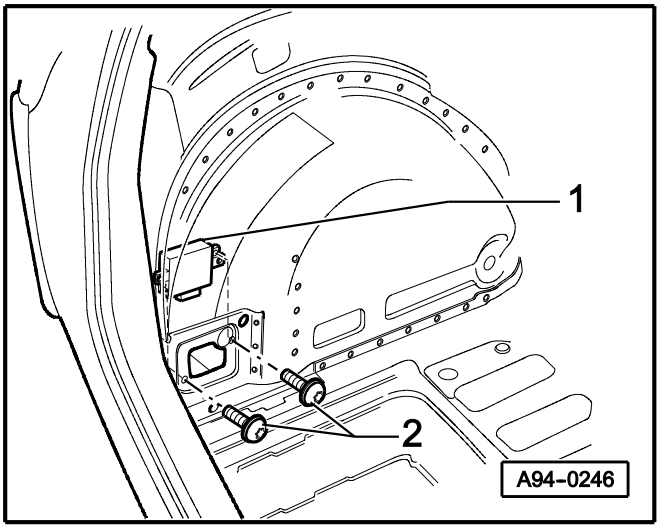

Fig. 5 Parking aid control unit - J446

♦ Behind left luggage compartment trim

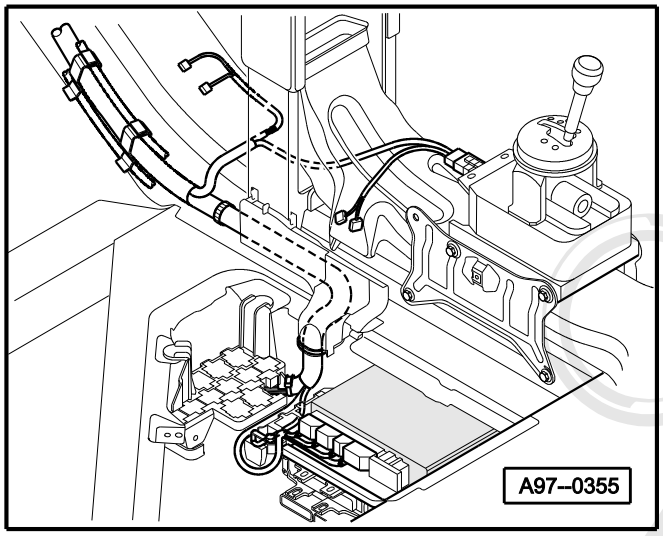

Fig. 6 Convenience system central control unit - J393

♦ In intermediate floor panel, under driver's seat

Protected by copyright. Copying for private or commercial purposes, in part or in whole, is not permitted unless authorised by AUDI AG. AUDI AG does not guarantee or accept any liability with respect to the correctness of information in this document. Copyright by AUDI AG.

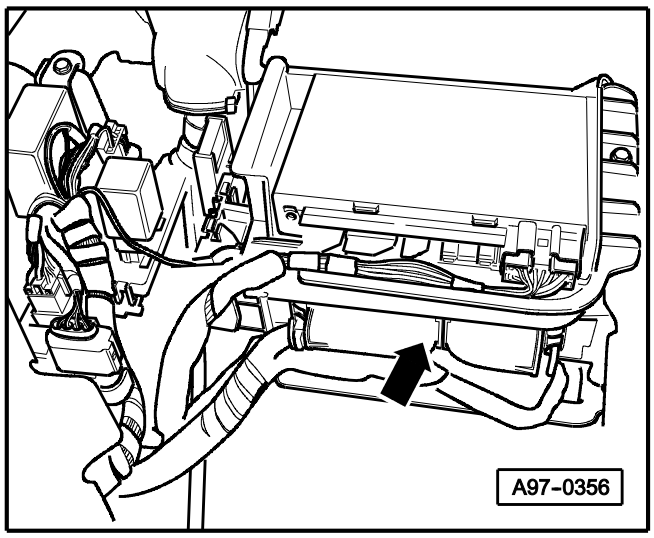

Fig. 7 Engine control unit - J248, J537

♦ In intermediate floor panel, under driver's seat

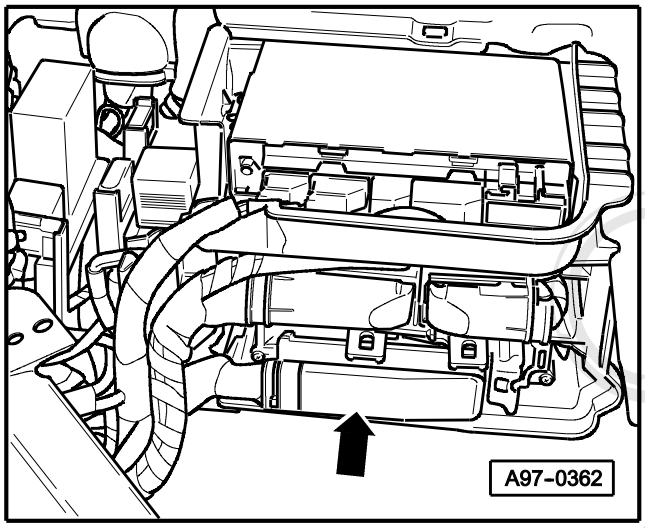

Fig. 8 Electronic manual gearbox control unit - J514

♦ In intermediate floor panel, under driver's seat

Protected by copyright. Copying for private or commercial purposes, in part or in whole, is not permitted unless authorised by AUDI AG. AUDI AG does not guarantee or accept any liability with respect to the correctness of information in this document. Copyright by AUDI AG.

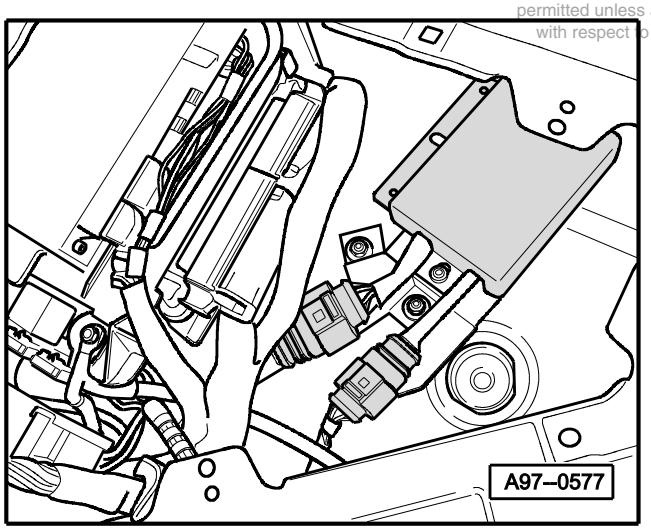

Fig. 9 NOx sensor control unit - J583

♦ In intermediate floor panel, under driver's seat

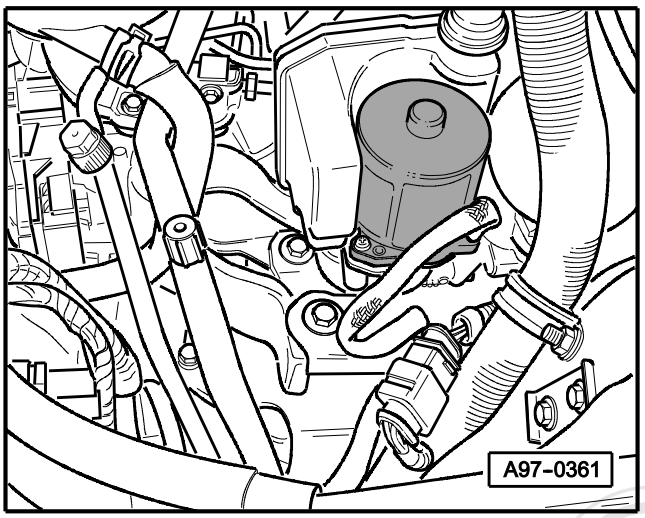

Fig. 10 Power steering control unit - J500

- In engine compartment, integrated in pump

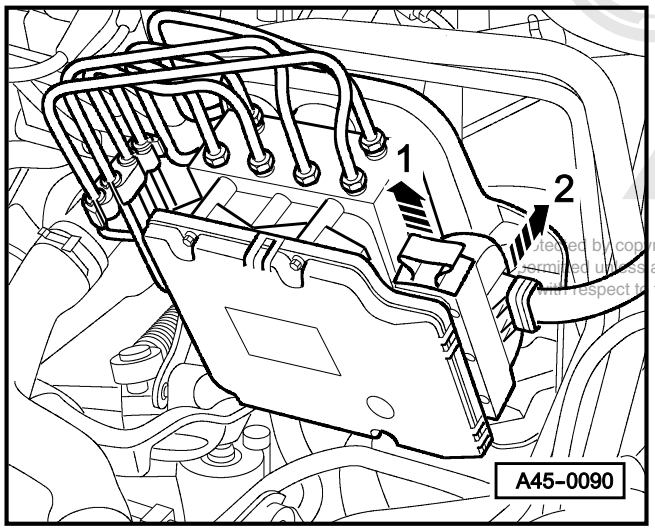

Fig. 11 ABS with EDL control unit - J104

- On ABS hydraulic unit, in engine compartment

Protected by copyright. Copying for private or commercial purposes, in part or in whole, is not permitted unless authorised by AUDI AG. AUDI AG does not guarantee or accept any liability with respect to the correctness of information in this document. Copyright by AUDI AG.

Components for radio sound system Chorus

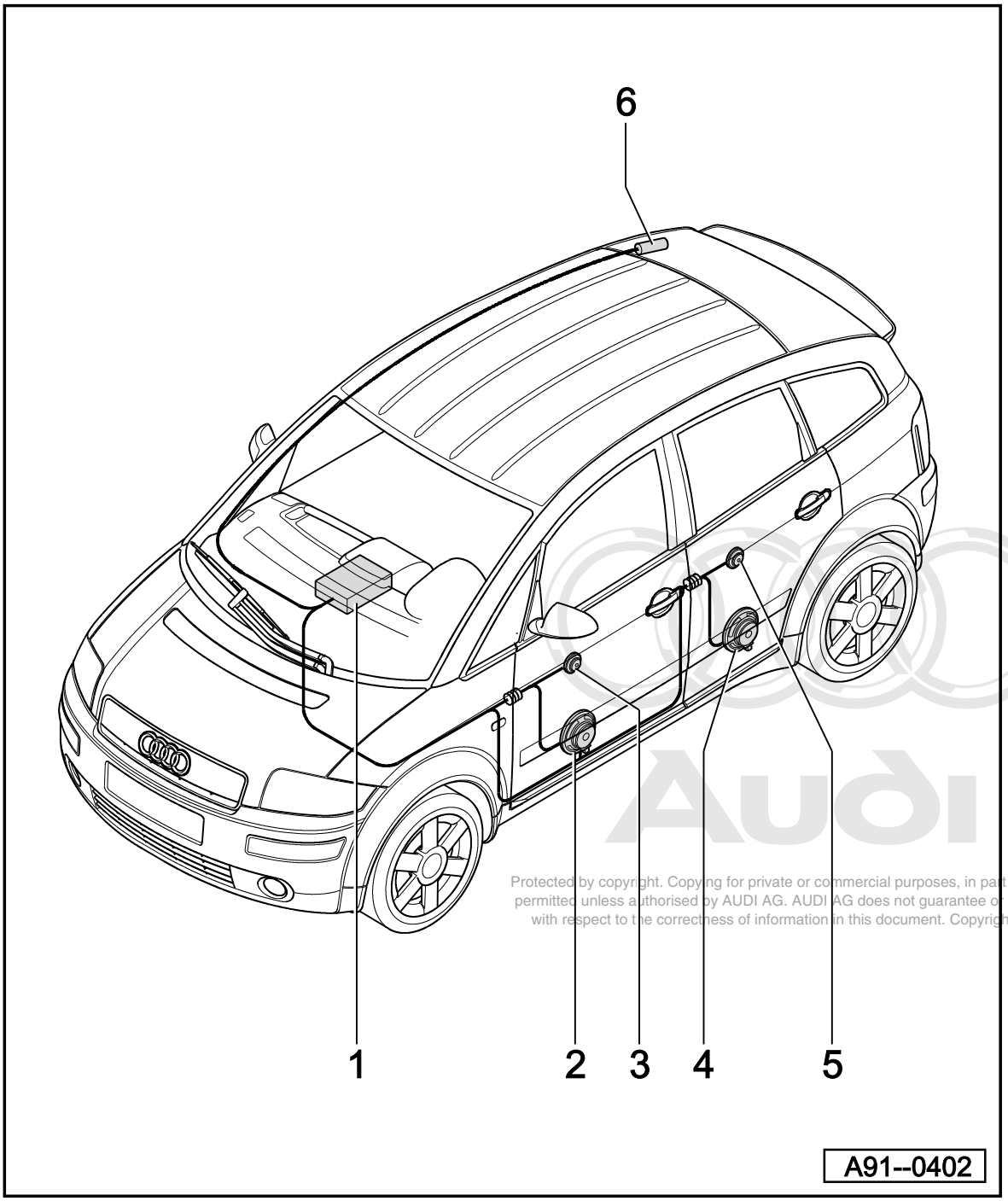

Protected by copyright. Copying for private or commercial purposes, in part or in whole, is not permitted unless authorised by AUDI AG. AUDI AG does not guarantee or accept any liability with respect to the correctness of information in this document. Copyright by AUDI AG.

Fitting locations overview

1 - Radio - R
♦ ⇒ Fig. 1, page 4/2

2 - Bass loudspeaker - R21, R23
♦ ⇒ Fig. 2, page 4/2

3 - Middle-high tone loudspeaker
♦ ⇒ Fig. 3, page 4/2

4 - Bass loudspeaker - R15, R17
♦ ⇒ Fig. 4, page 4/3

5 - Middle-treble tone loudspeaker - R34, R35
♦ ⇒ Fig. 5, page 4/3

6 - Aerial amplifier - R24
♦ ⇒ Fig. 6, page 4/3

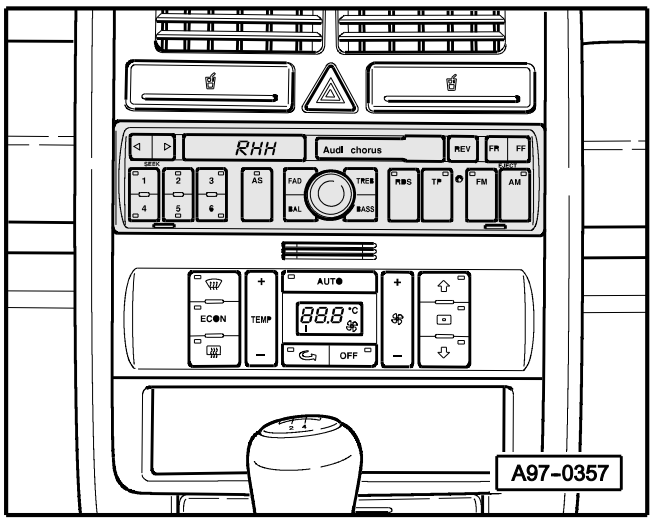

Fig. 1 Radio - R

♦ In centre console

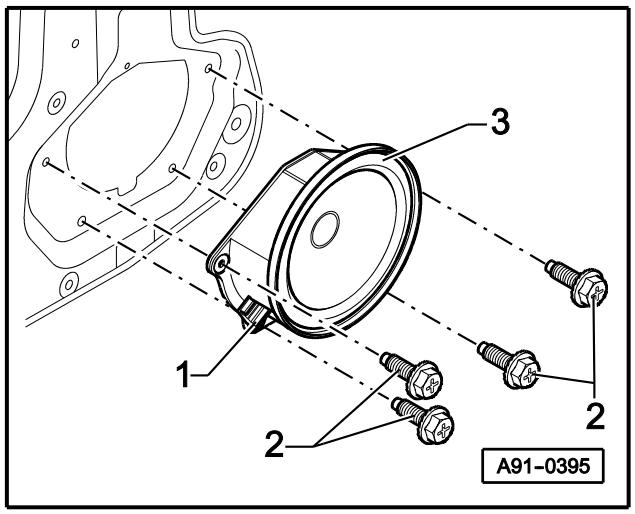

Fig. 2 Bass loudspeaker - R21, R23

♦ Behind front door trim, bottom

Protected by copyright. Copying for private or commercial purposes, in part or in whole, is not permitted unless authorised by AUDI AG. AUDI AG does not guarantee or accept any liability with respect to the correctness of information in this document. Copyright by AUDI AG.

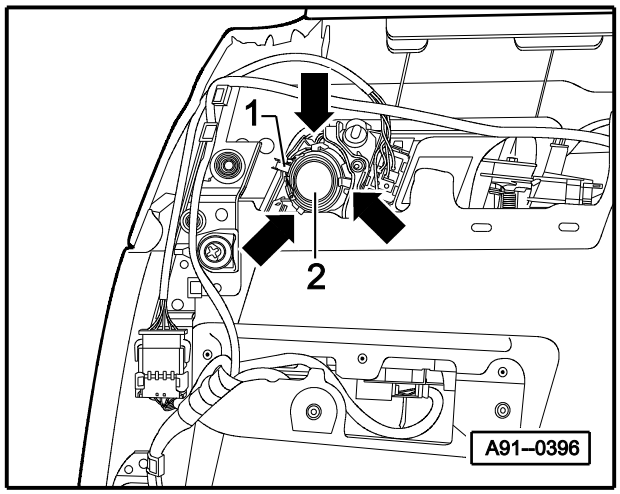

Fig. 3 Middle-high tone loudspeaker - R26, R27

♦ In front door trim, top

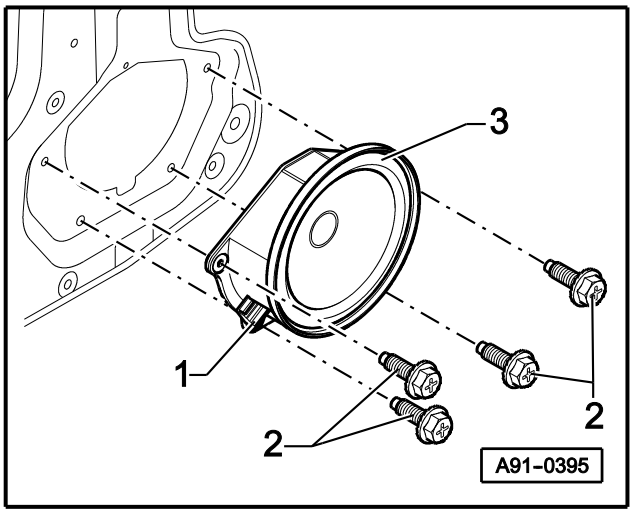

Fig. 4 Bass loudspeaker - R15, R17

♦ Behind rear door trim, bottom

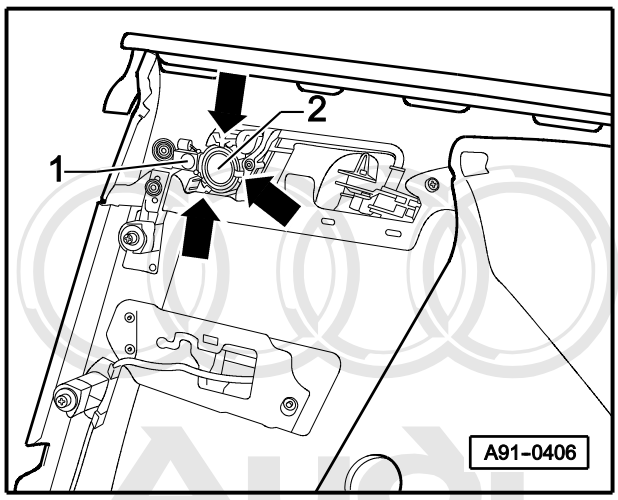

Fig. 5 Middle-treble tone loudspeaker - R34, R35

♦ In rear door trim, top

Protected by copyright. Copying for private or commercial purposes, in part or in whole, is not permitted unless authorised by AUDI AG. AUDI AG does not guarantee or accept any liability with respect to the correctness of information in this document. Copyright by AUDI AG.

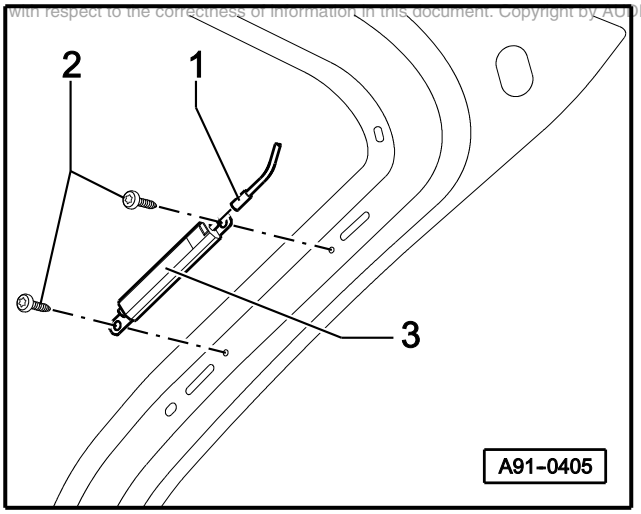

Fig. 6 Aerial amplifier - R24

♦ Behind tailgate trim on right-hand side, top

Components for radio sound system Concert

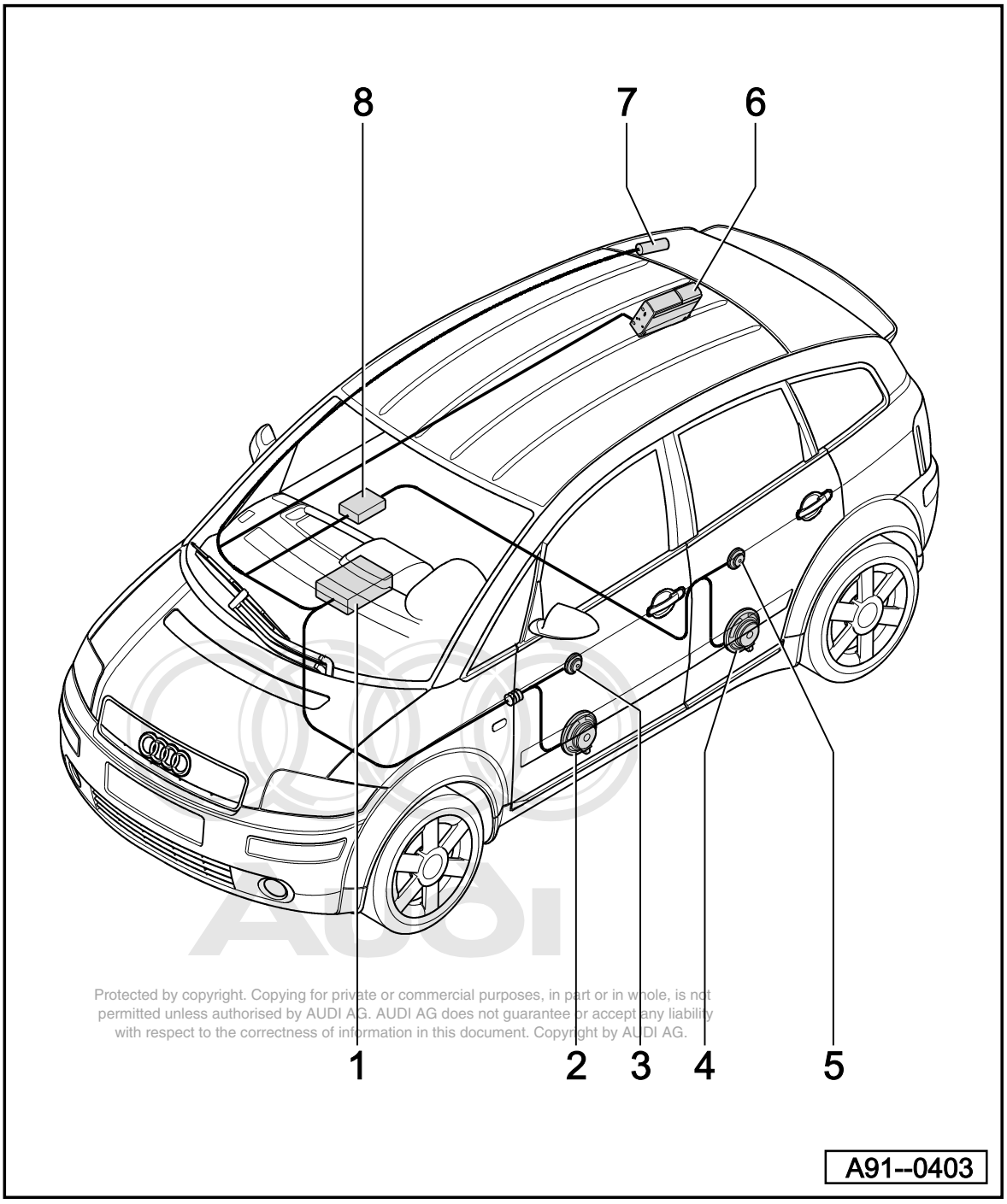

Protected by copyright. Copying for private or commercial purposes, in part or in whole, is not permitted unless authorised by AUDI AG. AUDI AG does not guarantee or accept any liability with respect to the correctness of information in this document. Copyright by AUDI AG.

Fitting locations overview

1 - Radio - R
♦ ⇒ Fig. 1, page 5/3

2 - Bass loudspeaker - R21, R23
♦ ⇒ Fig. 2, page 5/3

3 - Middle-high tone loudspeaker - R26, R27
♦ ⇒ Fig. 3, page 5/3

4 - Bass loudspeaker - R15, R17
♦ ⇒ Fig. 4, page 5/4

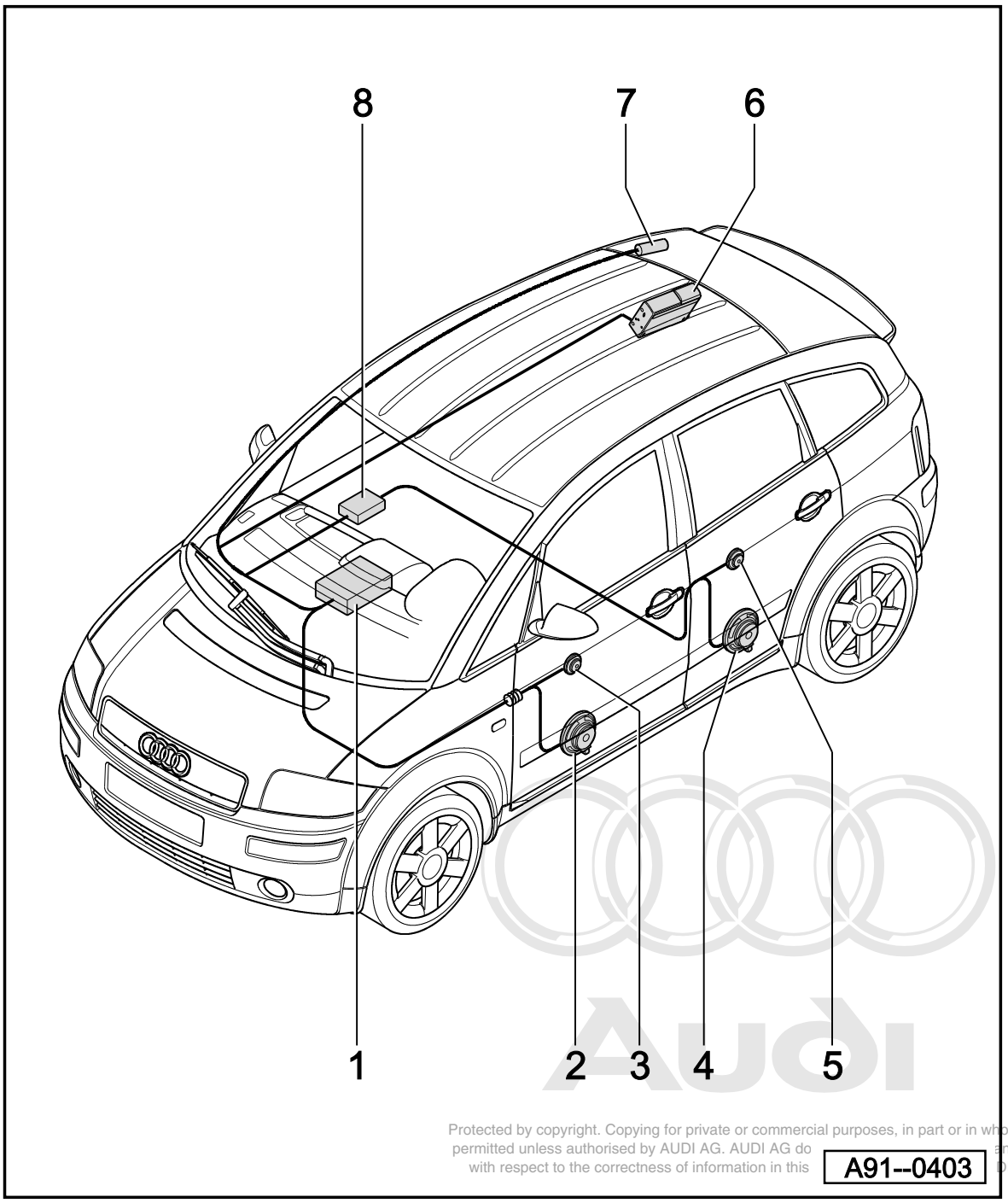

Protected by copyright. Copying for private or commercial purposes, in part or in whole, is not permitted unless authorised by AUDI AG. AUDI AG do ... any liability with respect to the correctness of information in this ... DI AG.

5 - Middle-treble tone loudspeaker - R34, R35
♦ ⇒ Fig. 5, page 5/4

6 - CD changer - R41
♦ ⇒ Fig. 6, page 5/4

7 - Aerial amplifier - R24
♦ ⇒ Fig. 7, page 5/5

8 - Amplifier - R12
♦ ⇒ Fig. 8, page 5/5

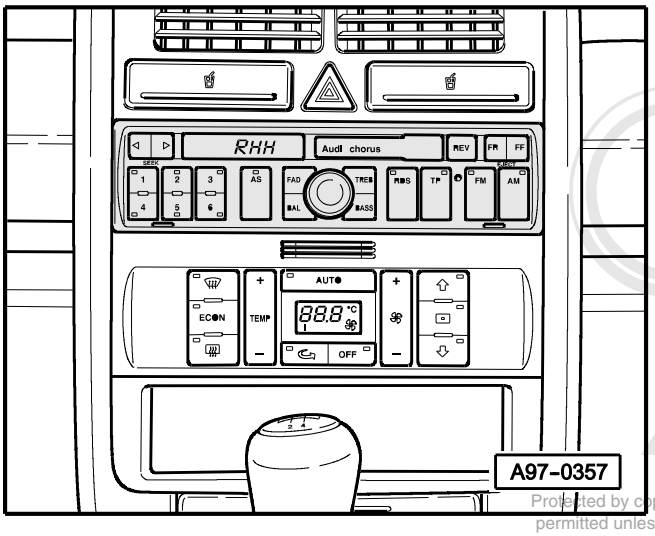

Fig. 1 Radio - R

♦ In centre console

Protected by copyright. Copying for private or commercial purposes, in part or in whole, is not permitted unless authorised by AUDI AG. AUDI AG does not guarantee or accept any liability with respect to the correctness of information in this document. Copyright by AUDI AG.

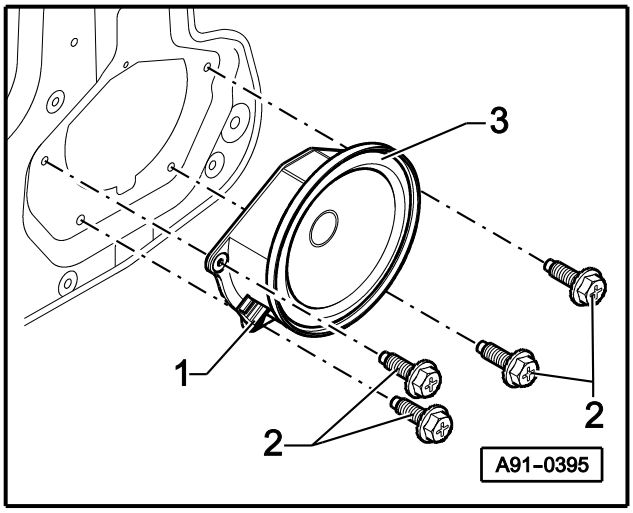

Fig. 2 Bass loudspeaker - R21, R23

♦ Behind front door trim, bottom

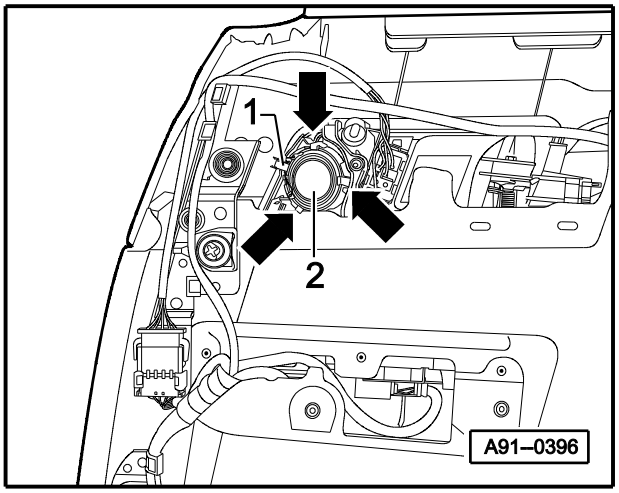

Fig. 3 Middle-high tone loudspeaker - R26, R27

♦ In front door trim, top

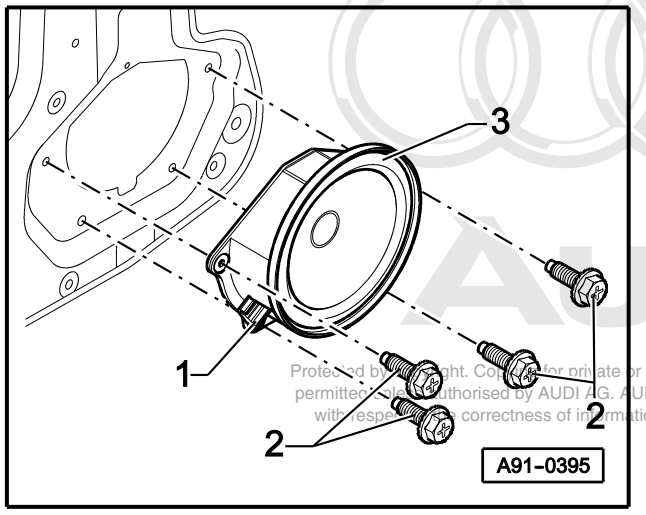

Protected by copyright. Copying for private or commercial purposes, in part or in whole, is not permitted unless authorised by AUDI AG. AUDI AG does not guarantee or accept any liability with respect to the correctness of information in this document. Copyright by AUDI AG.

Fig. 4 Bass loudspeaker - R15, R17

♦ Behind rear door trim, bottom

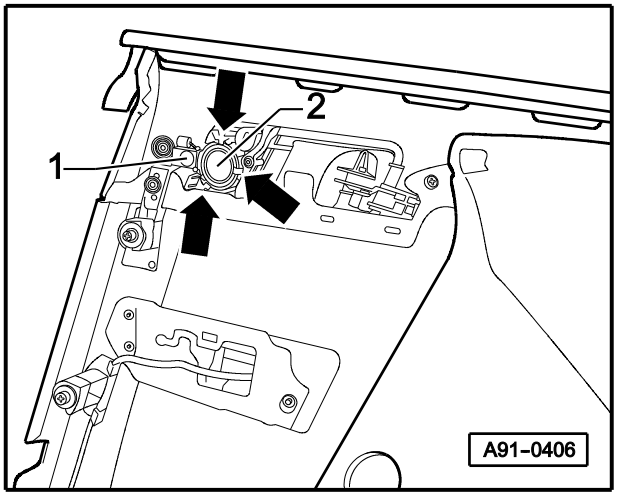

Fig. 5 Middle-treble tone loudspeaker - R34, R35

♦ In rear door trim, top

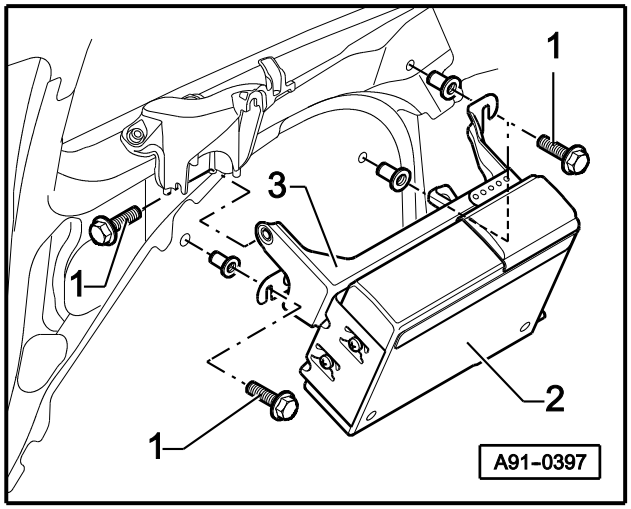

Fig. 6 CD changer - R41

♦ In luggage compartment, right

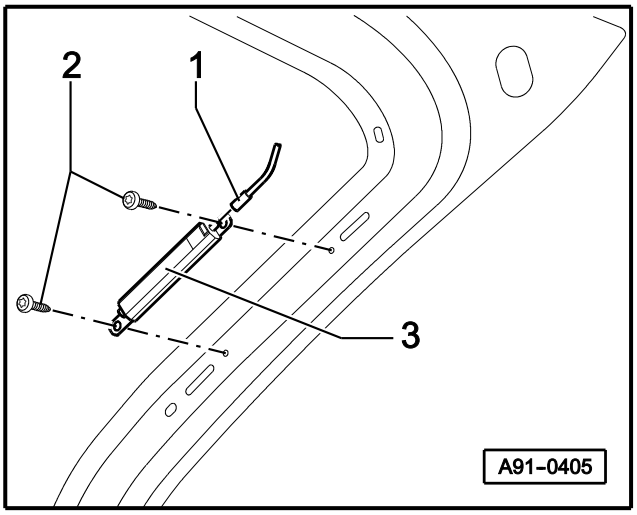

Fig. 7 Aerial amplifier - R24

- Behind tailgate trim on right-hand side, top

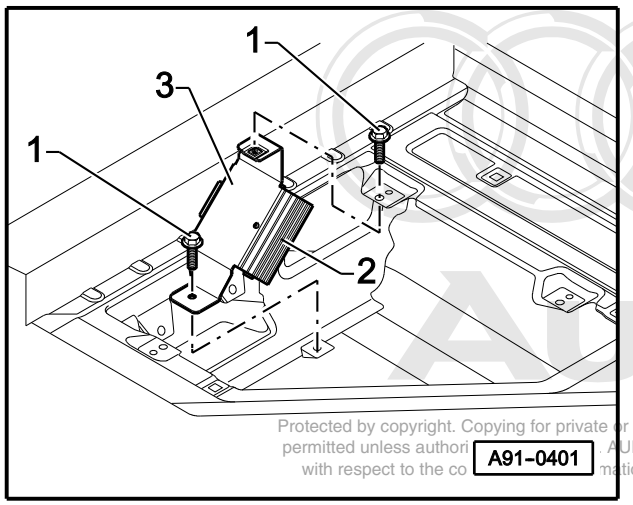

Fig. 8 Amplifier - R12

- In intermediate floor panel, under front passenger's footwell

Protected by copyright. Copying for private or commercial purposes, in part or in whole, is not permitted unless authori AUDI AG does not guarantee or accept any liability with respect to the co mation in this document. Copyright by AUDI AG.

Components for radio sound system Concert with Bose sound system

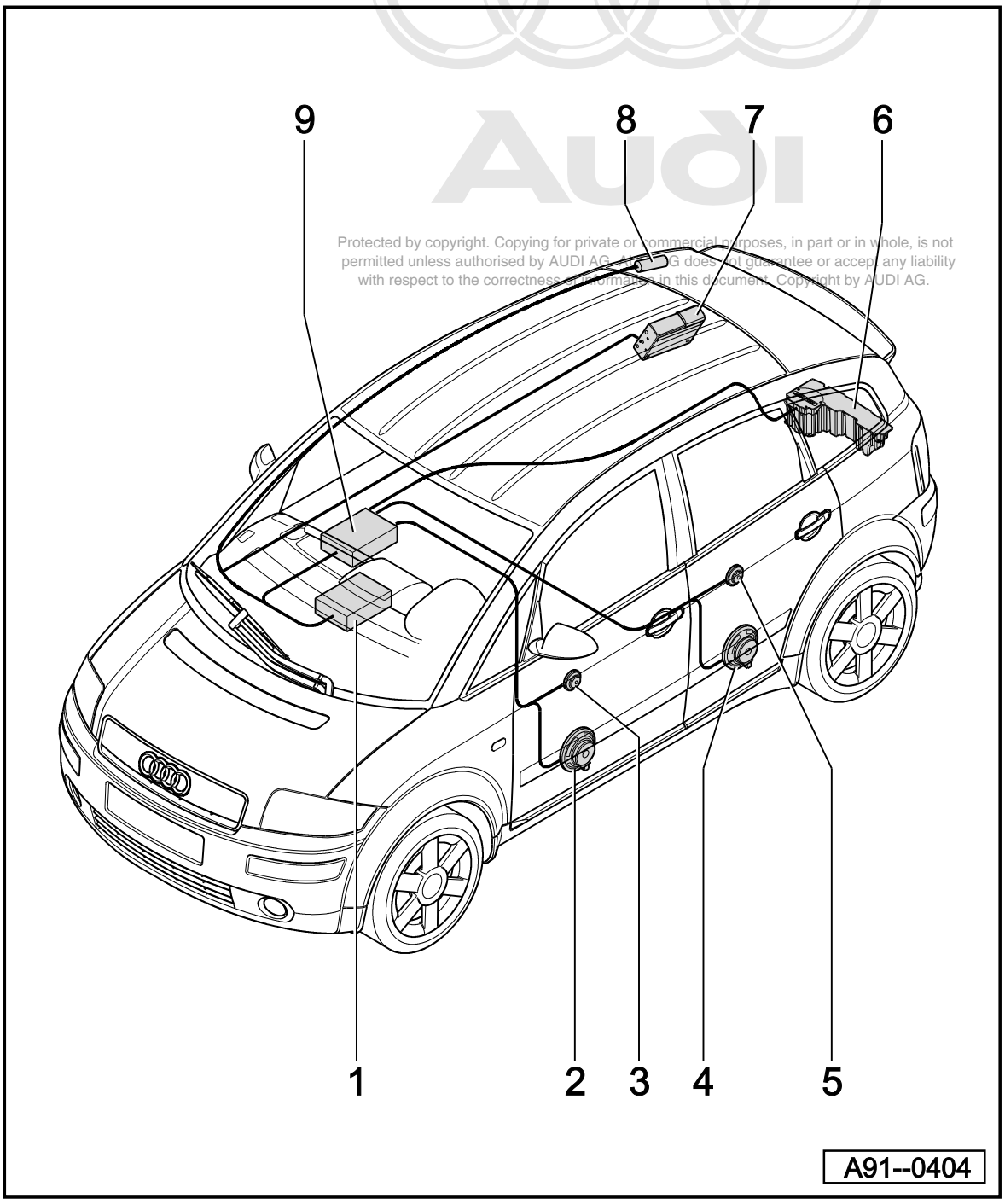

Protected by copyright. Copying for private or commercial purposes, in part or in whole, is not permitted unless authorised by AUDI AG. AUDI AG does not guarantee or accept any liability with respect to the correctness of information in this document. Copyright by AUDI AG.

Fitting locations overview

1 - Radio - R
♦ ⇒ Fig. 1, page 6/3

2 - Bass loudspeaker - R21, R23
♦ ⇒ Fig. 2, page 6/3

3 - Middle-high tone loudspeaker - R26, R27
♦ ⇒ Fig. 3, page 6/3

4 - Bass loudspeaker - R15, R17
♦ ⇒ Fig. 4, page 6/4

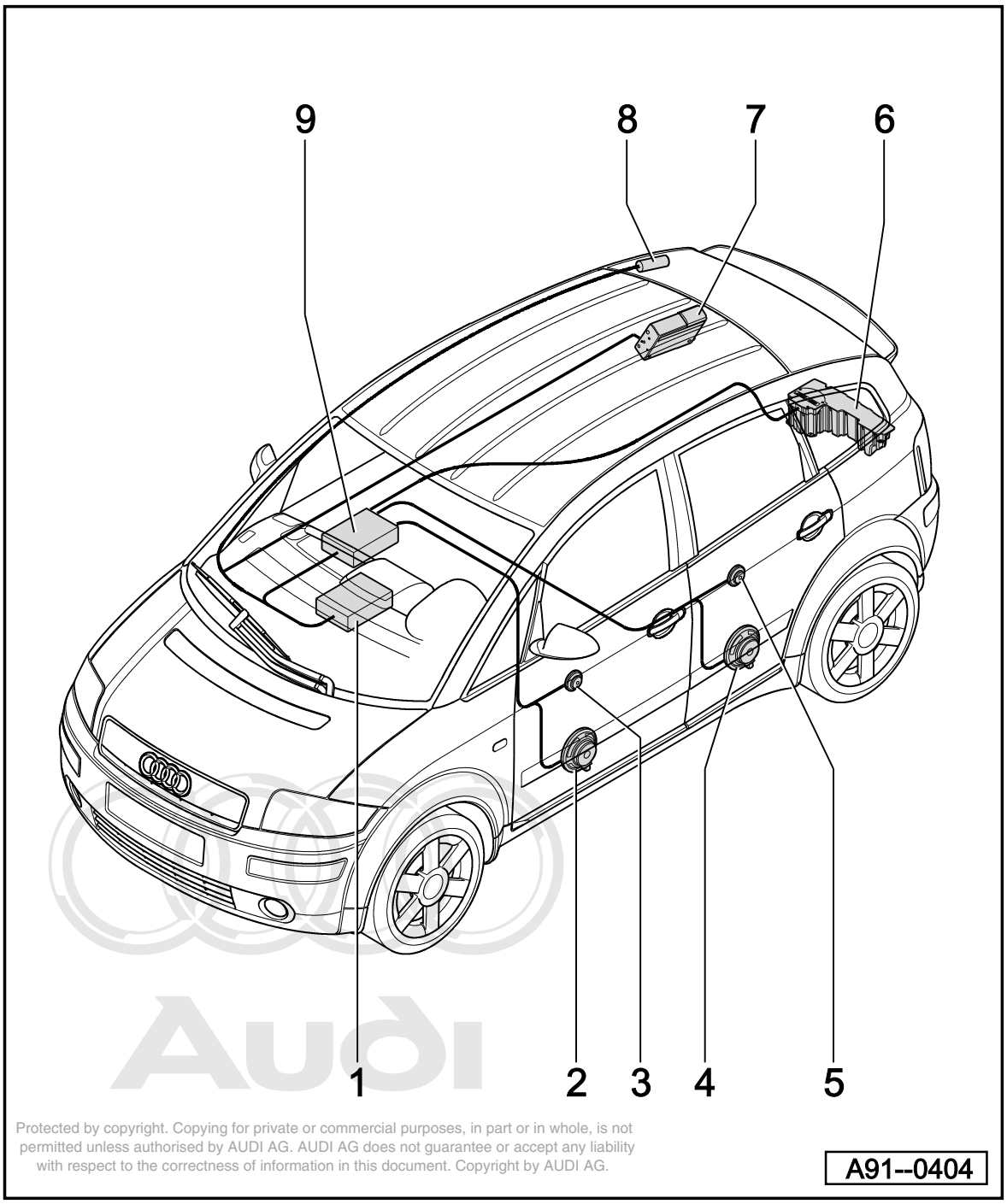

Protected by copyright. Copying for private or commercial purposes, in part or in whole, is not permitted unless authorised by AUDI AG. AUDI AG does not guarantee or accept any liability with respect to the correctness of information in this document. Copyright by AUDI AG.

5 - Middle-treble tone loudspeaker - R34, R35
♦ ⇒ Fig. 5, page 6/4

6 - Bass loudspeaker (subwoofer) - R100
♦ ⇒ Fig. 6, page 6/4

7 - CD changer - R41
♦ ⇒ Fig. 7, page 6/5

8 - Aerial amplifier - R24
♦ ⇒ Fig. 8, page 6/5

9 - Amplifier - R12
♦ ⇒ Fig. 9, page 6/5

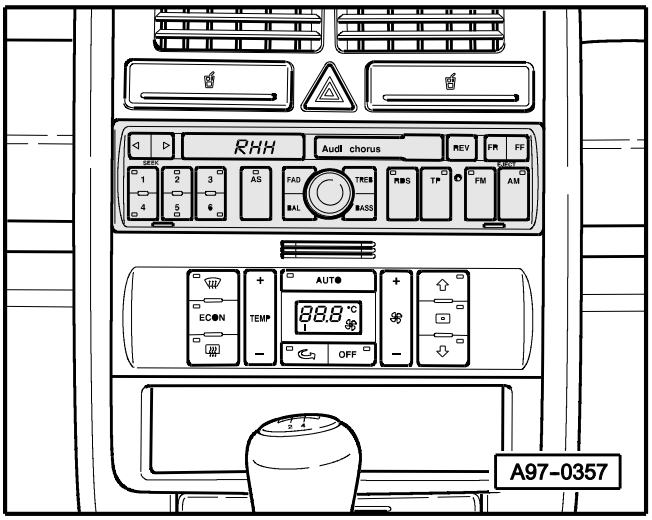

Fig. 1 Radio - R

♦ In centre console

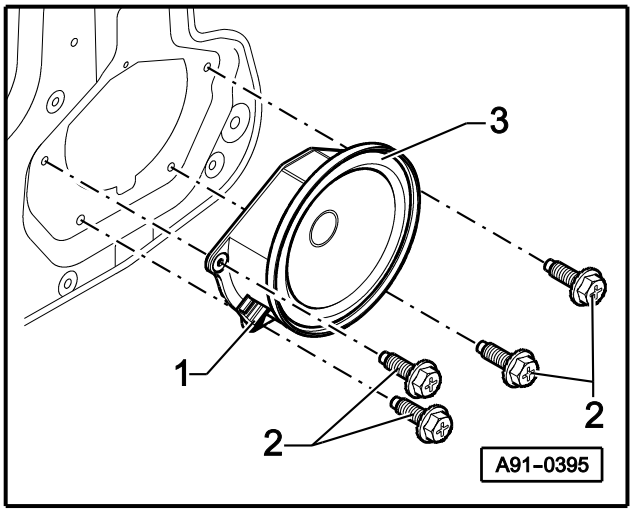

Fig. 2 Bass loudspeaker - R21, R23

♦ Behind front door trim, bottom

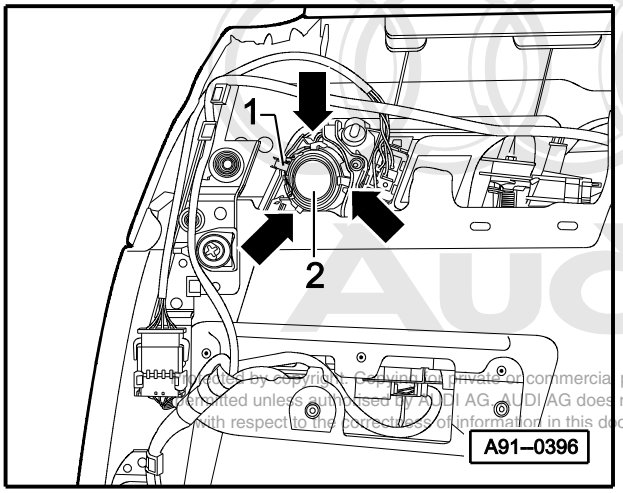

Fig. 3 Middle-high tone loudspeaker - R26, R27

♦ In front door trim, top

Protected by copyright. Copying for private or commercial purposes, in part or in whole, is not permitted unless authorised by AUDI AG. AUDI AG does not guarantee or accept any liability with respect to the correctness of information in this document. Copyright by AUDI AG.

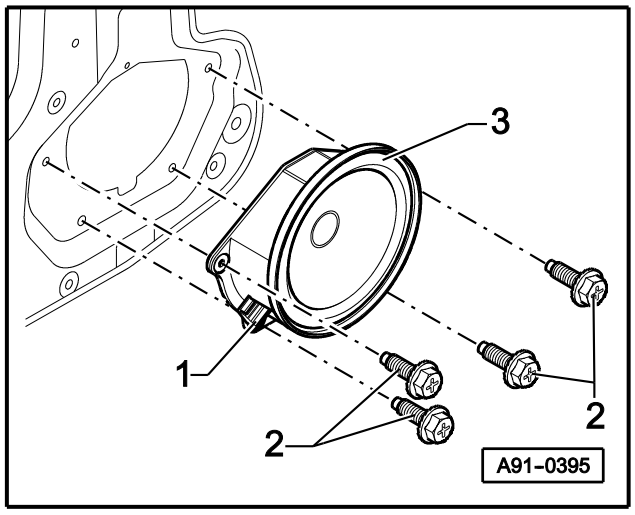

Fig. 4 Bass loudspeaker - R15, R17

♦ Behind rear door trim, bottom

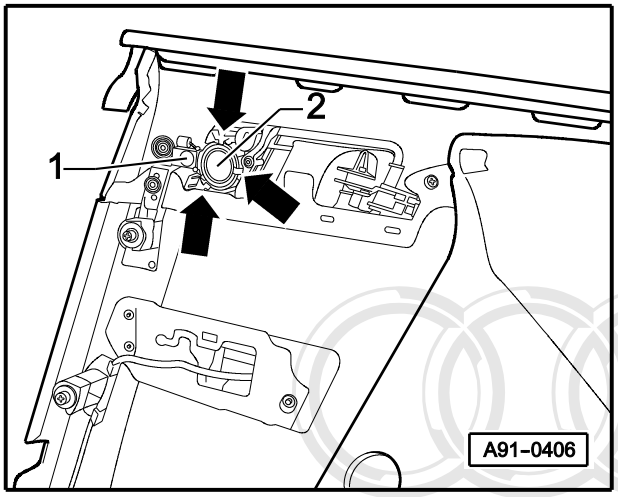

Fig. 5 Middle-treble tone loudspeaker - R34, R35

♦ In rear door trim, top

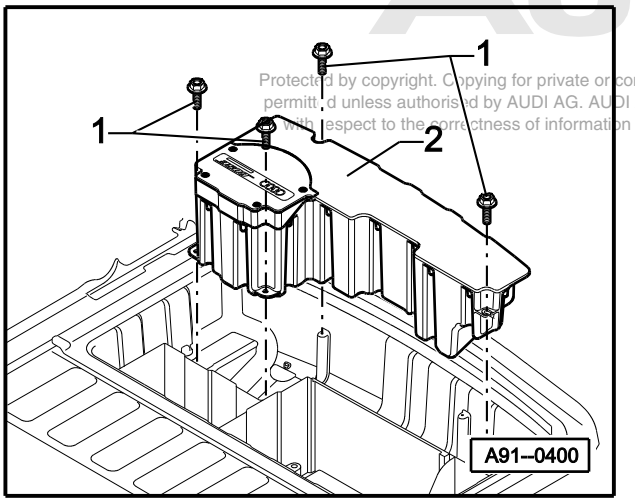

Fig. 6 Bass loudspeaker (subwoofer) - R100

♦ In luggage compartment, in intermediate floor panel

Protected by copyright. Copying for private or commercial purposes, in part or in whole, is not permitted unless authorised by AUDI AG. AUDI AG does not guarantee or accept any liability with respect to the correctness of information in this document. Copyright by AUDI AG.

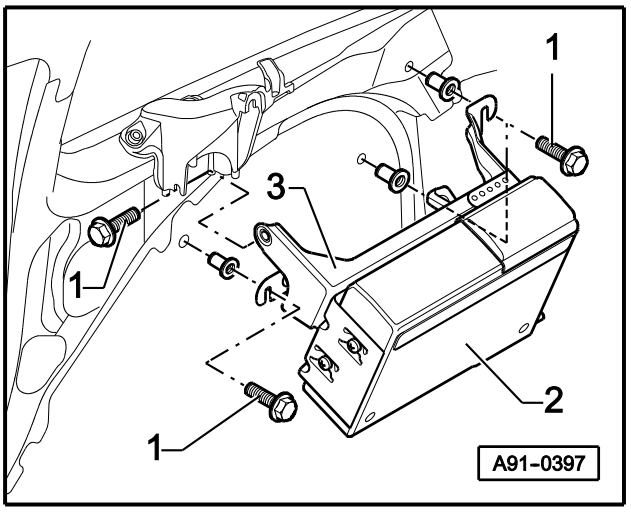

Fig. 7 CD changer - R41

- In luggage compartment, right

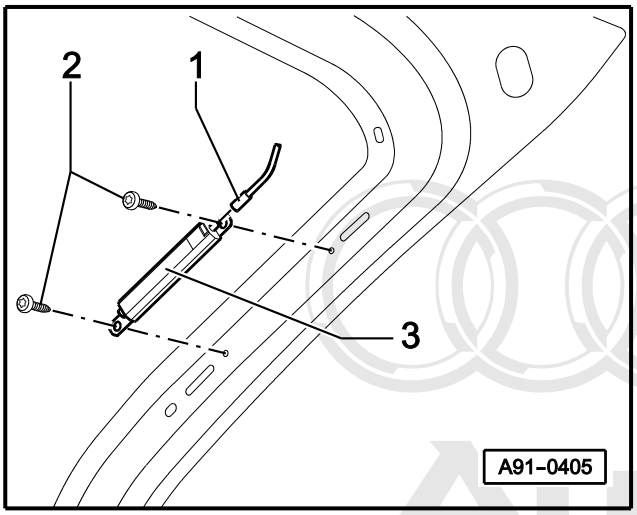

Fig. 8 Aerial amplifier - R24

- Behind tailgate trim on right-hand side, top

Protected by copyright. Copying for private or commercial purposes, in part or in whole, is not permitted unless authorised by AUDI AG. AUDI AG does not guarantee or accept any liability with respect to the correctness of information in this document. Copyright by AUDI AG.

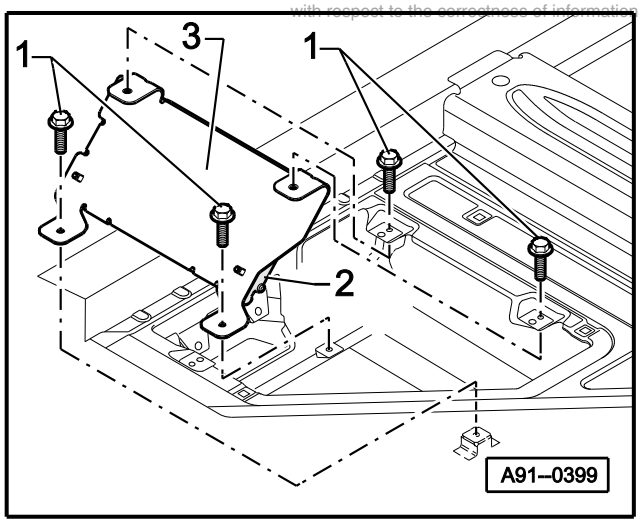

Fig. 9 Amplifier - R12

- In intermediate floor panel, under front passenger's seat

Components for navigation system ”NS Low” (7Q9)

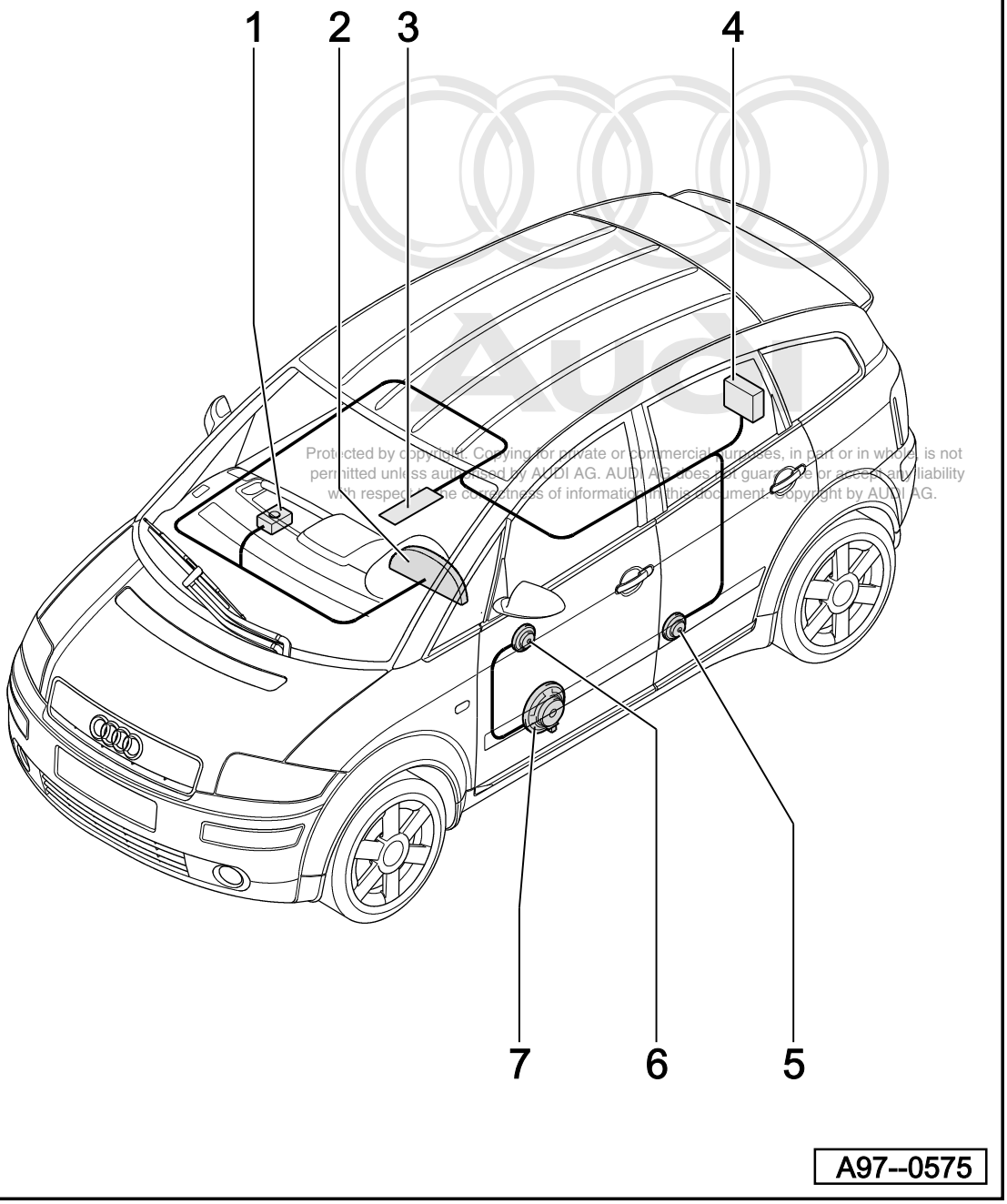

Protected by copyright. Copying for private or commercial purposes, in part or in whole, is not permitted unless authorised by AUDI AG. AUDI AG does not guarantee or accept any liability with respect to the correctness of information in this document. Copyright by AUDI AG.

Fitting locations overview

1 - Navigation aerial (GPS) - R50
♦ ⇒ Fig. 1, page 7/3

2 - Control unit with display in dash panel insert - J285
♦ ⇒ Fig. 2, page 7/3

3 - Function selection switch II - E272
♦ ⇒ Fig. 3, page 7/3

4 - Navigation system with CD drive control unit - J401
♦ ⇒ Fig. 4, page 7/4

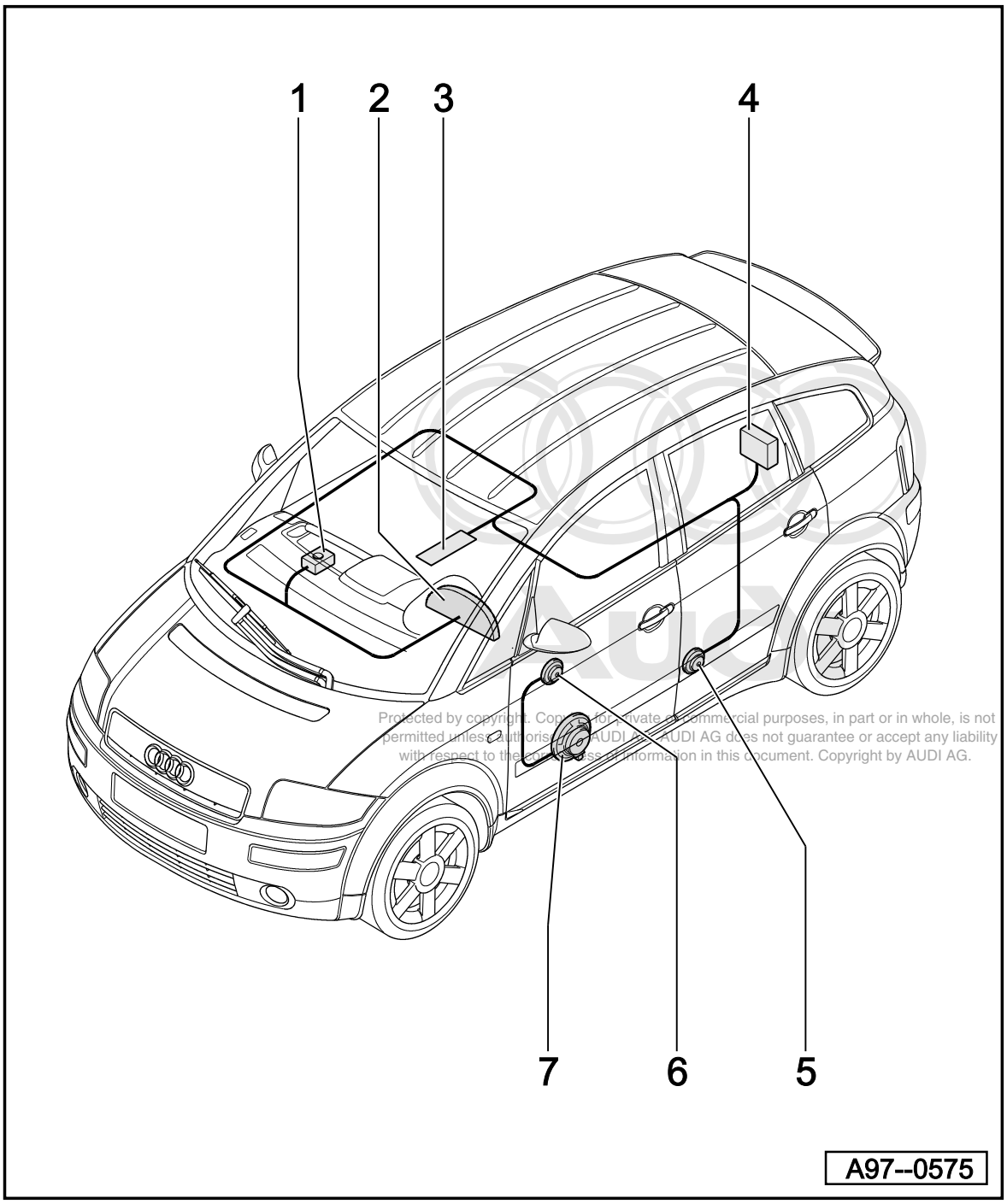

Protected by copyright. Copying for private or commercial purposes, in part or in whole, is not permitted unless authorised by AUDI AG. AUDI AG does not guarantee or accept any liability with respect to the correctness of information in this document. Copyright by AUDI AG.

5 - Telephone/navigation systems loudspeaker - R39
♦ ⇒ Fig. 5, page 7/4

6 - Middle-high tone loudspeaker - R26, R27
♦ ⇒ Fig. 6, page 7/4

7 - Bass loudspeaker - R15, R17
♦ ⇒ Fig. 7, page 7/5

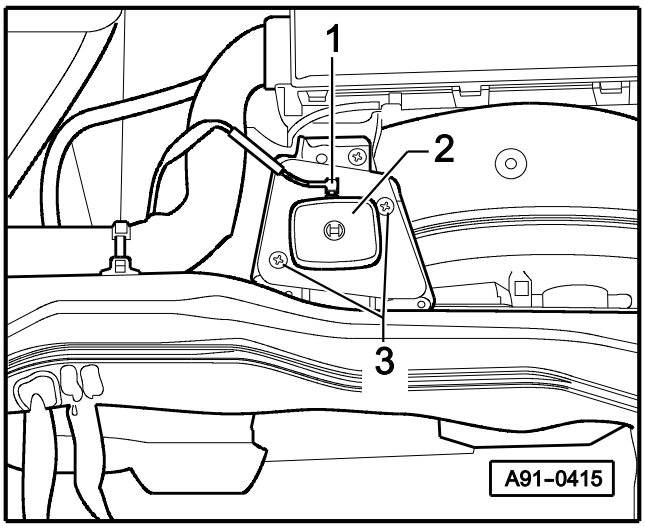

Fig. 1 Navigation aerial (GPS) - R50

♦ Under dash panel, right

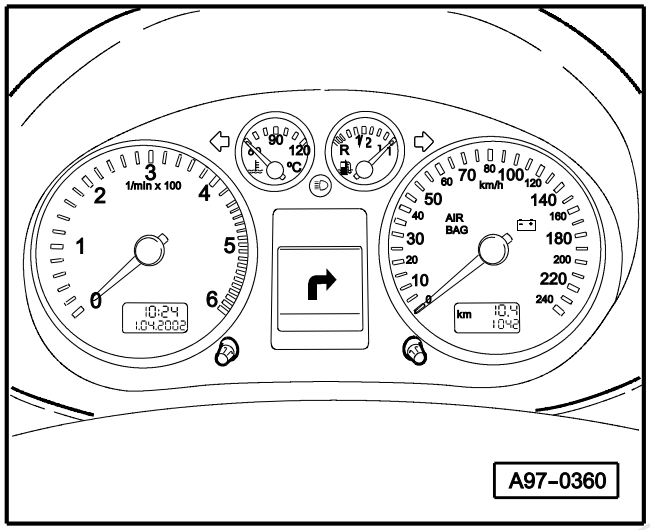

Fig. 2 Control unit with display in dash panel insert - J285

♦ In dash panel

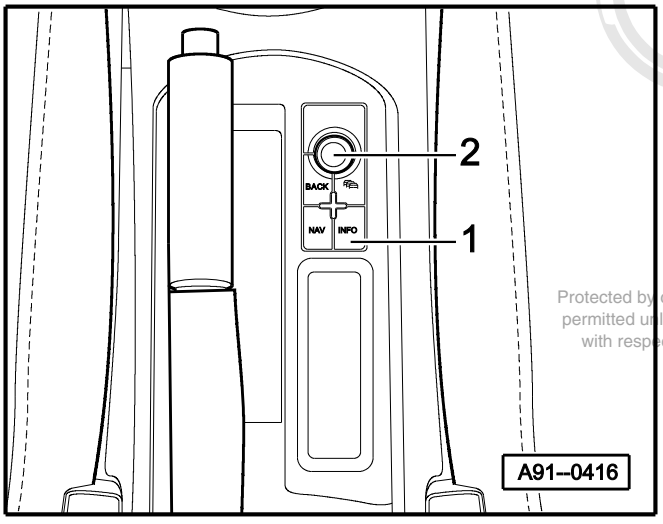

Fig. 3 Function selection switch II - E272

♦ In centre console, next to handbrake lever

Protected by copyright. Copying for private or commercial purposes, in part or in whole, is not permitted unless authorised by AUDI AG. AUDI AG does not guarantee or accept any liability with respect to the correctness of information in this document. Copyright by AUDI AG.

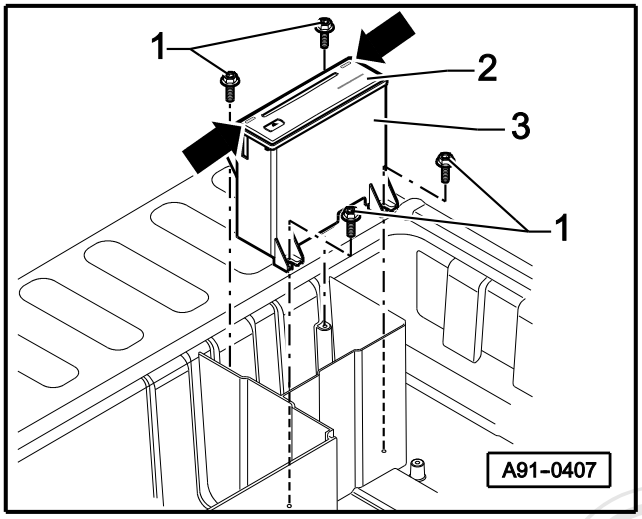

Fig. 4 Navigation system with CD drive control unit - J401

♦ In luggage compartment recess

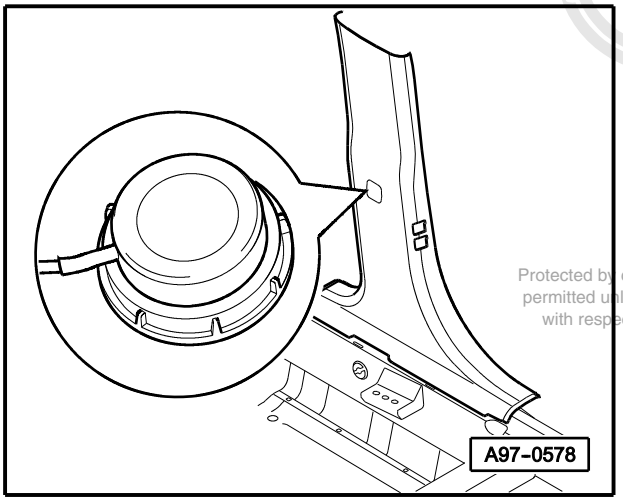

Fig. 5 Telephone/navigation systems loudspeaker - R39

♦ In B pillar trim

Protected by copyright. Copying for private or commercial purposes, in part or in whole, is not permitted unless authorised by AUDI AG. AUDI AG does not guarantee or accept any liability with respect to the correctness of information in this document. Copyright by AUDI AG.

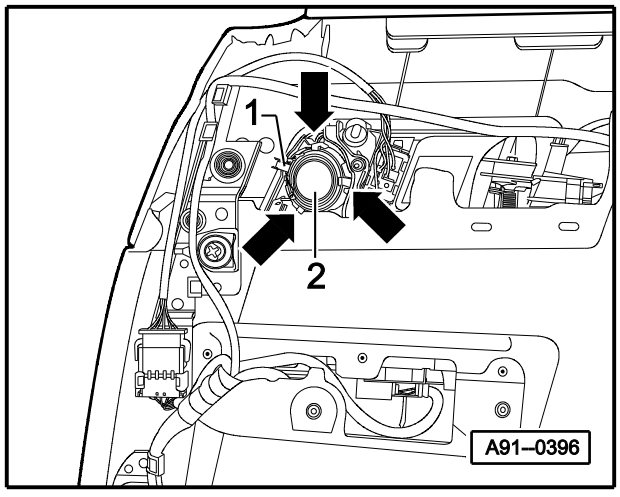

Fig. 6 Middle-high tone loudspeaker - R26, R27

♦ In front door trim, top

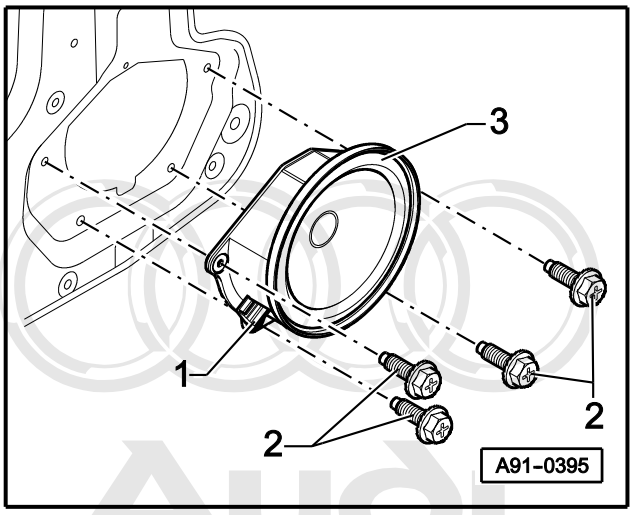

Fig. 7 Bass loudspeaker - R15, R17

♦ Behind front door trim, bottom

Protected by copyright. Copying for private or commercial purposes, in part or in whole, is not permitted unless authorised by AUDI AG. AUDI AG does not guarantee or accept any liability with respect to the correctness of information in this document. Copyright by AUDI AG.

Components for telephone/mobile phone

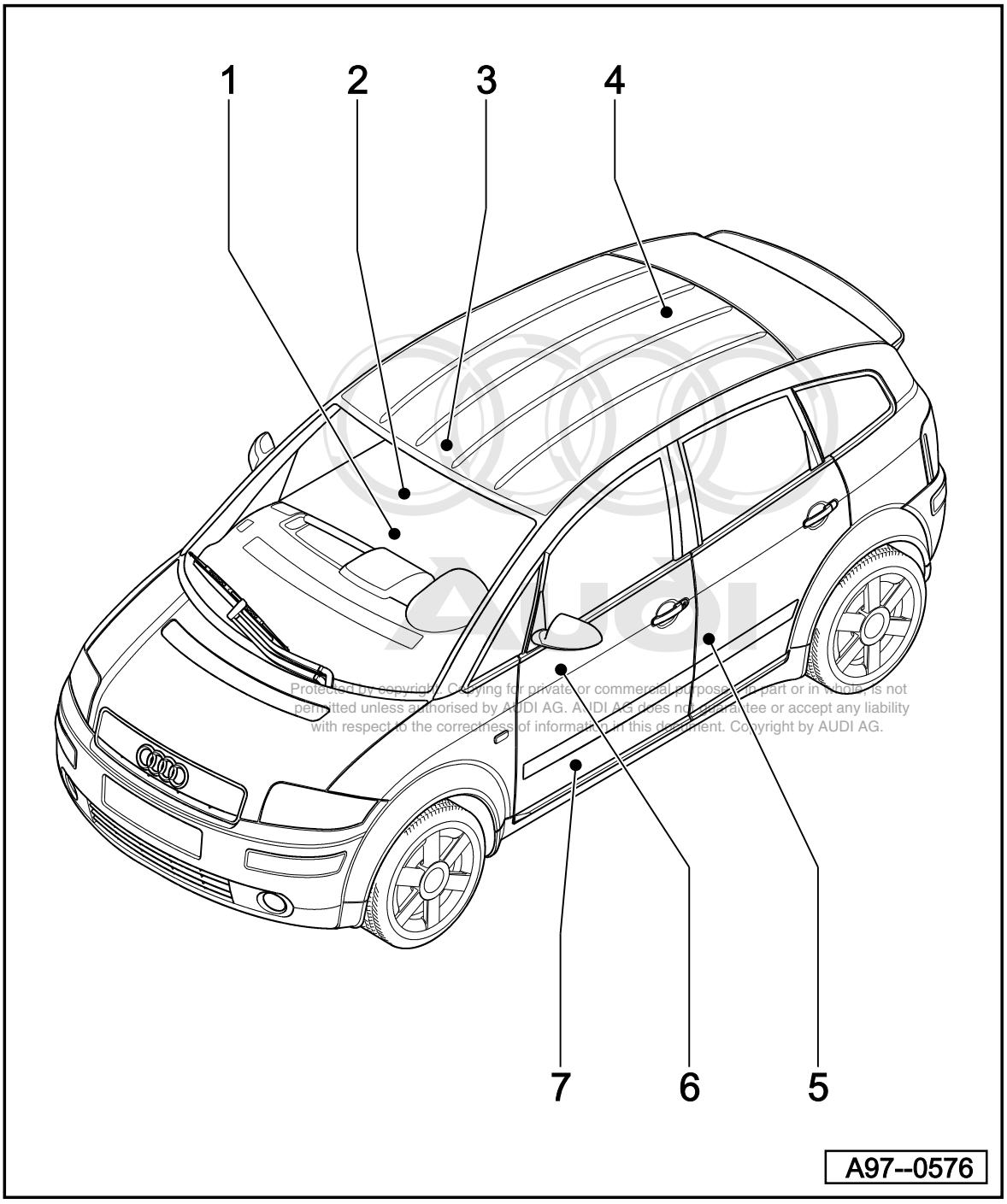

Protected by copyright. Copying for private or commercial purposes, in part or in whole, is not permitted unless authorised by AUDI AG. AUDI AG does not guarantee or accept any liability with respect to the correctness of information in this document. Copyright by AUDI AG.

Fitting locations overview

1 - Mobile phone mounting
♦ ⇒ Fig. 1, page 8/3

2 - Operating electronics control unit, telephone (interface) - J412
♦ ⇒ Fig. 2, page 8/3

3 - Hands-free microphone
♦ ⇒ Fig. 3, page 8/3

4 - Telephone aerial - R65
♦ ⇒ Fig. 4, page 8/4

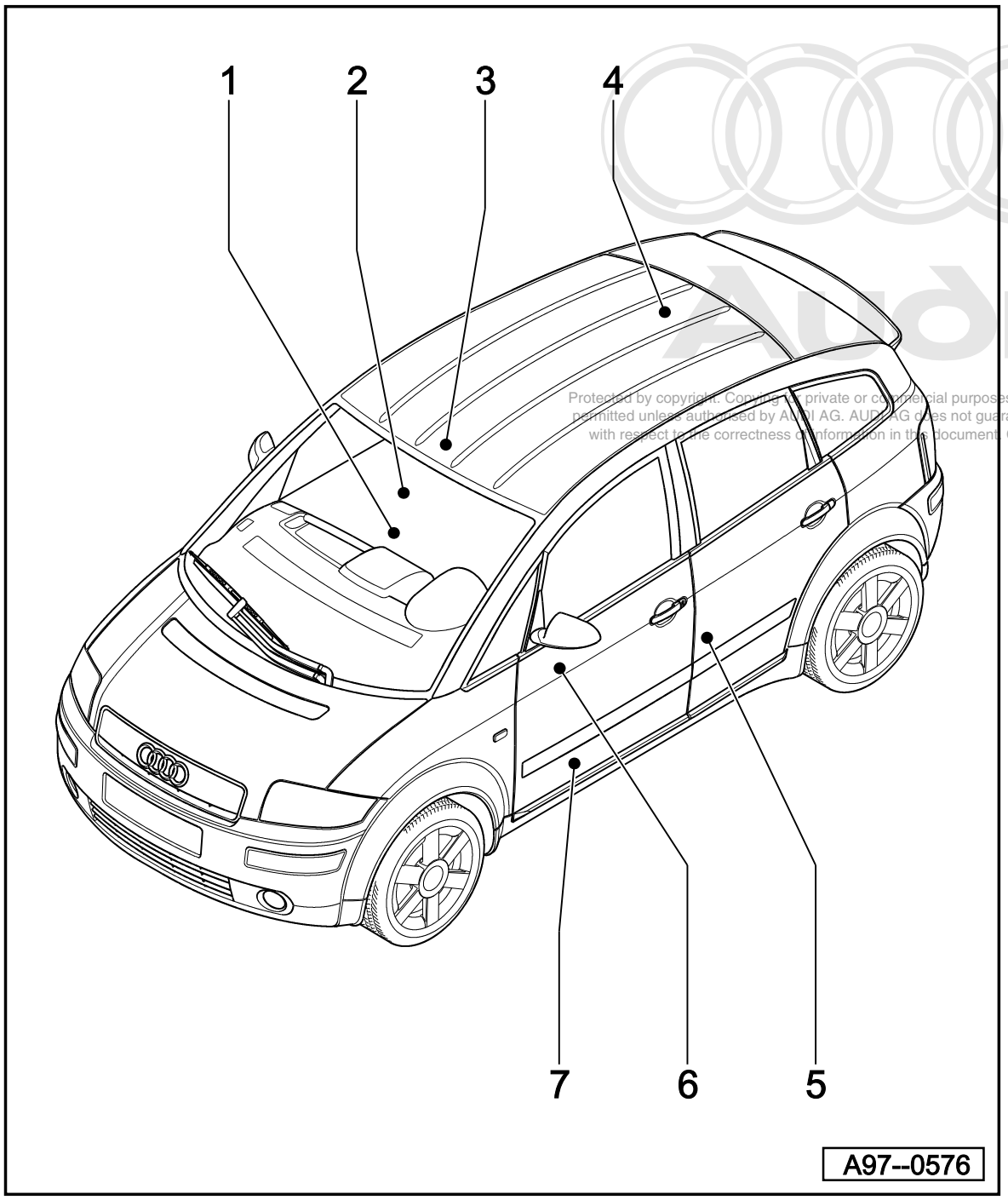

Protected by copyright. Copying for private or commercial purposes, in part or in whole, is not permitted unless authorised by AUDI AG. AUDI AG does not guarantee or accept any liability with respect to the correctness of information in this document. Copyright by AUDI AG.

5 - Telephone/navigation systems loudspeaker - R39
♦ ⇒ Fig. 5, page 8/4

6 - Middle-high tone loudspeaker - R26, R27
♦ ⇒ Fig. 6, page 8/4

7 - Bass loudspeaker - R15, R17
♦ ⇒ Fig. 7, page 8/5

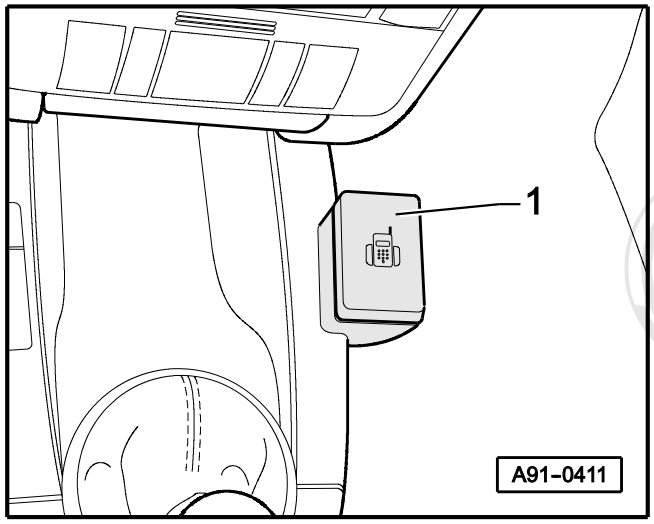

Fig. 1 Mobile phone mounting

♦ At centre console

Protected by copyright. Copying for private or commercial purposes, in part or in whole, is not permitted unless authorised by AUDI AG. AUDI AG does not guarantee or accept any liability with respect to the correctness of information in this document. Copyright by AUDI AG.

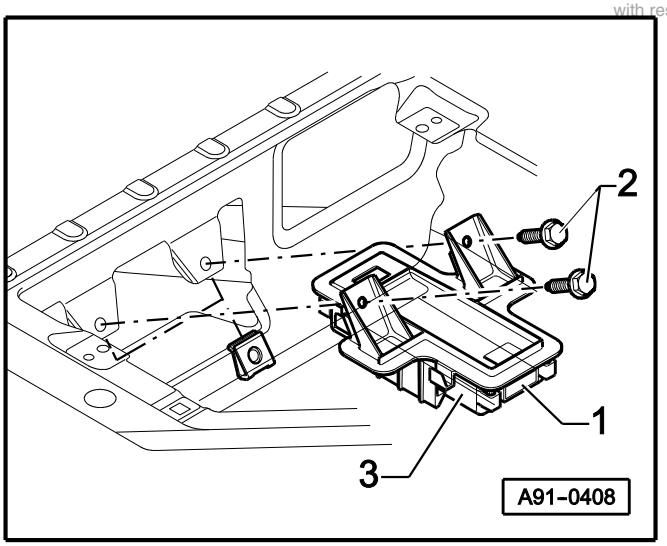

Fig. 2 Operating electronics control unit, telephone (interface) - J412

♦ In intermediate floor panel, under front passenger's footwell

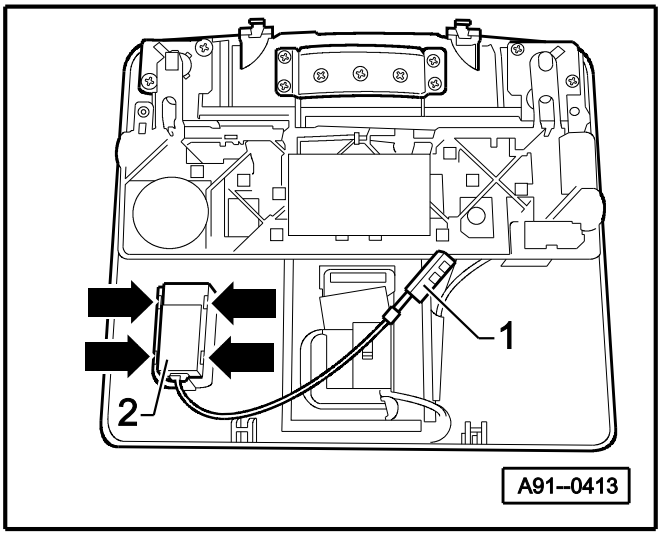

Fig. 3 Hands-free microphone

♦ In reading lamp cover

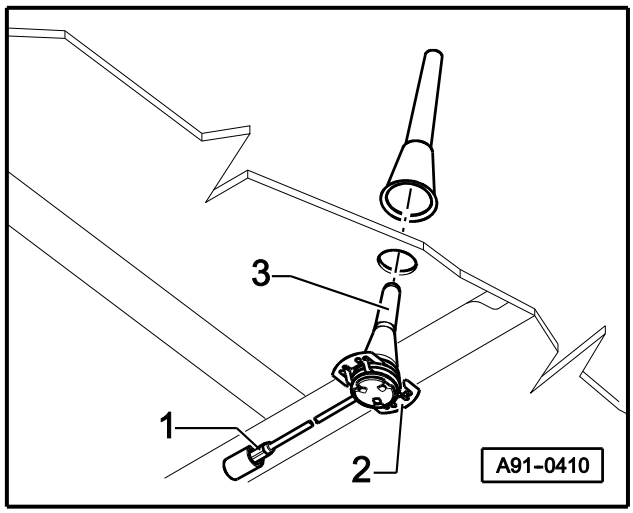

Fig. 4 Telephone aerial - R65

♦ In vehicle roof, at rear

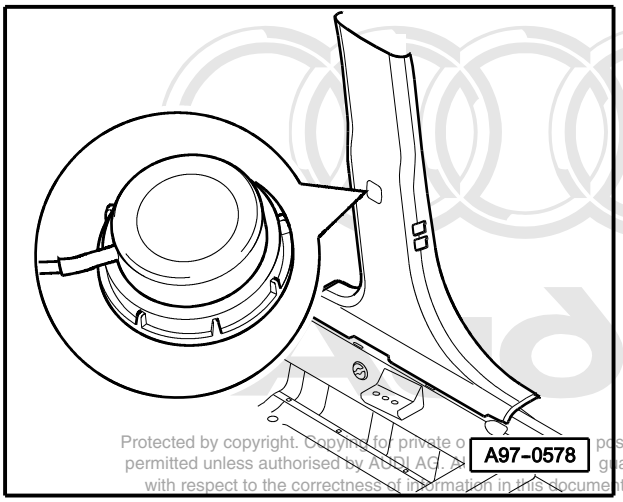

Protected by copyright. Copying for private o poses, in part or in whole, is not permitted unless authorised by AUDI AG. A guarantee or accept any liability with respect to the correctness of information in this document. Copyright by AUDI AG.

Fig. 5 Telephone/navigation systems loudspeaker - R39

♦ In B pillar trim

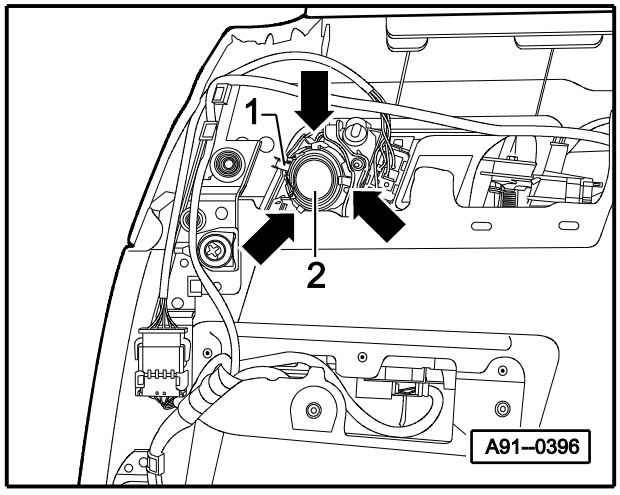

Fig. 6 Middle-high tone loudspeaker - R26, R27

♦ In front door trim, top

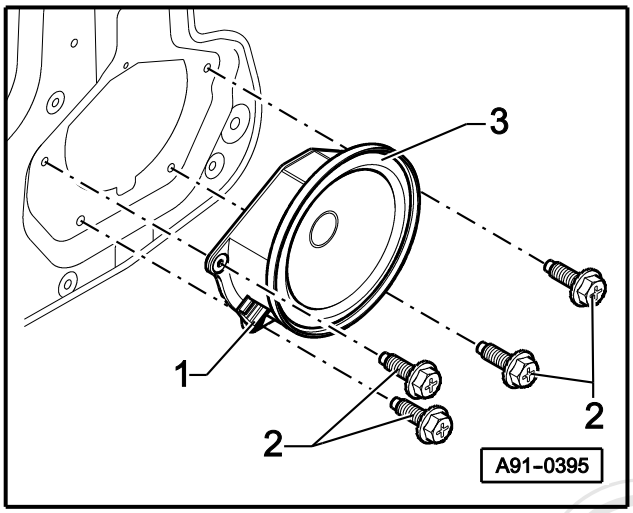

Fig. 7 Bass loudspeaker - R15, R17

♦ Behind front door trim, bottom

Protected by copyright. Copying for private or commercial purposes, in part or in whole, is not permitted unless authorised by AUDI AG. AUDI AG does not guarantee or accept any liability with respect to the correctness of information in this document. Copyright by AUDI AG.