2007 ACCESSORIES & EQUIPMENT

Fixed and Moveable Windows - Avalanche, Escalade, Suburban, Tahoe & Yukon

SPECIFICATIONS

FASTENER TIGHTENING SPECIFICATIONS

Fastener Tightening Specifications

Application	Specification	
	Metric	English
Front Side Door Window Bolts	9 N.m	80 lb in
Front Side Door Window Channel Nuts	9 N.m	80 lb in
Front Side Door Window Channel Upper Screw	1.3 N.m	12 lb in
Front Side Door Window Regulator Bolts	4.6 N.m	41 lb in
Front Side Door Window Regulator Clamp Bolts	9 N.m	80 lb in
Front Side Door Window Regulator Motor Bolts	9 N.m	80 lb in
Front Side Door Window Run Channel Bolt	9 N.m	80 lb in
Front Side Door Window Run Channel Front Lower Bolt	11 N.m	97 lb in
Front Side Door Window Run Channel Rear Bolt	10 N.m	89 lb in
Front Side Door Window Run Channel Rear Lower Bolt	11 N.m	97 lb in
Rear Side Door Window Bolts	7 N.m	61 lb in
Rear Side Door Window Channel Lower Nuts	9 N.m	80 lb in
Rear Side Door Window Regulator Bolts	9 N.m	80 lb in
Rear Side Door Window Regulator Motor Bolts	9 N.m	80 lb in
Rear Side Door Window Regulator Nuts	9 N.m	80 lb in
Windshield Side Reveal Molding	2 N.m	18 lb in

SCHEMATIC AND ROUTING DIAGRAMS

MOVEABLE WINDOW SCHEMATICS

cardiagn.com

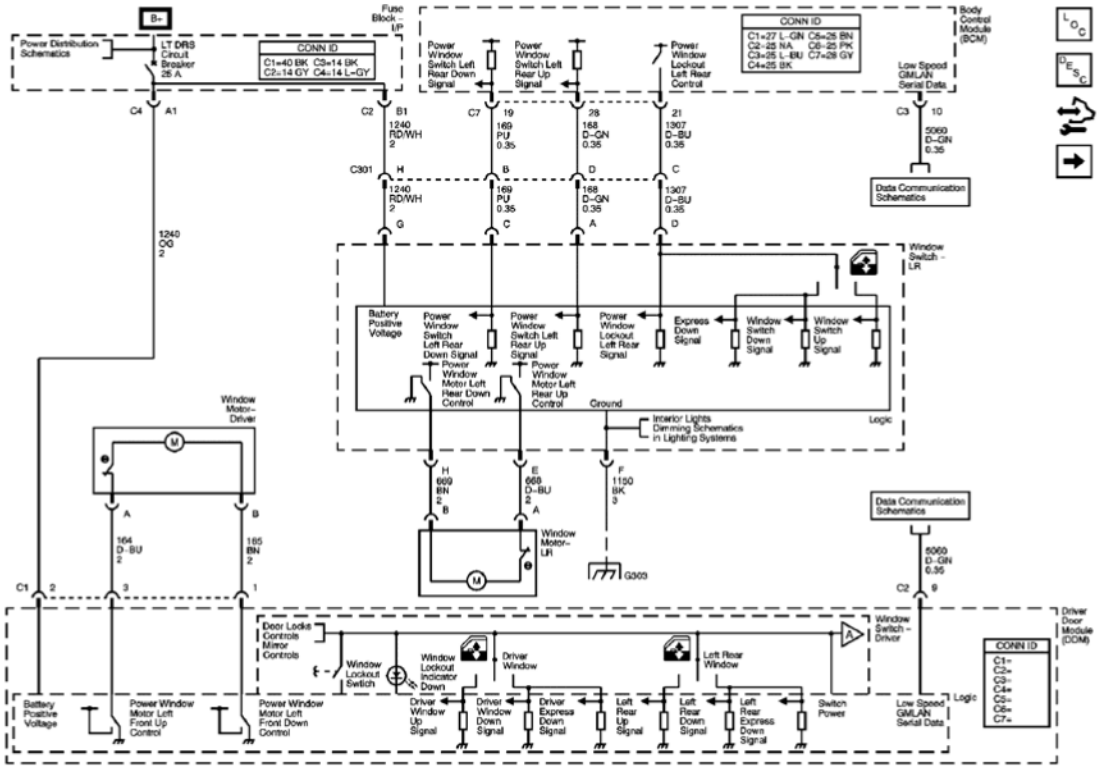

Fig. 1: Left Moveable Window Schematic
Courtesy of GENERAL MOTORS CORP.

cardiagn.com

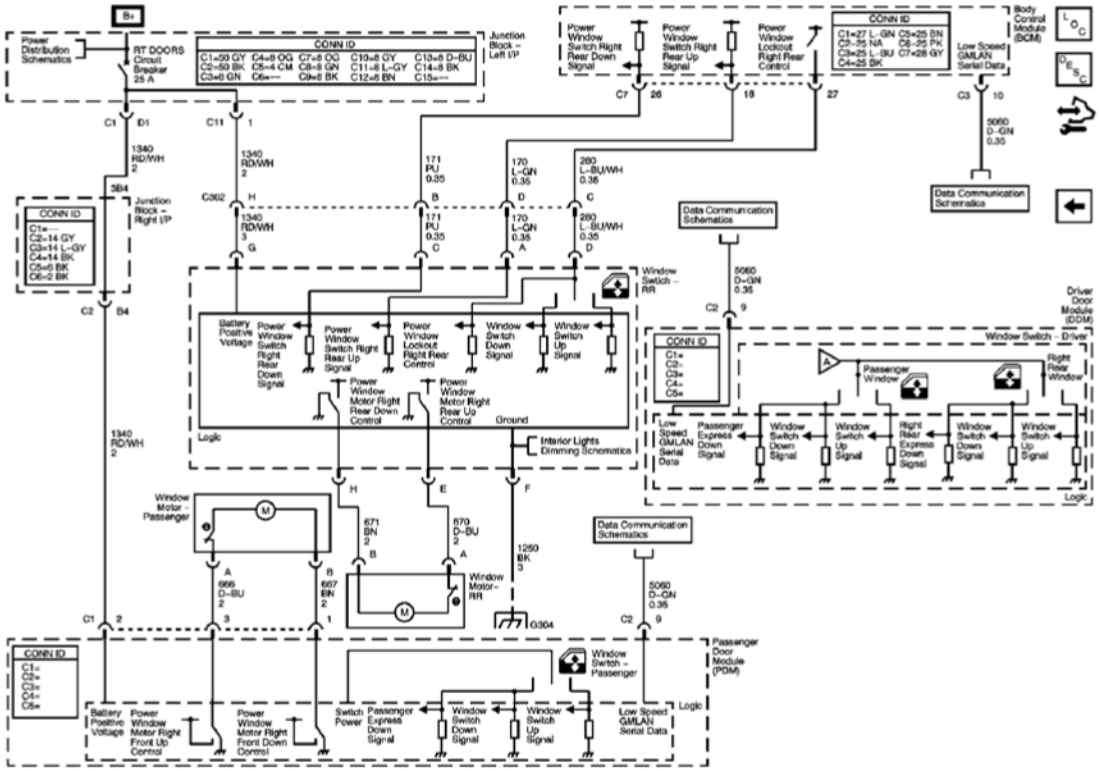

Fig. 2: Right Moveable Window Schematic
Courtesy of GENERAL MOTORS CORP.

DEFOGGER SCHEMATICS

cardiagn.com

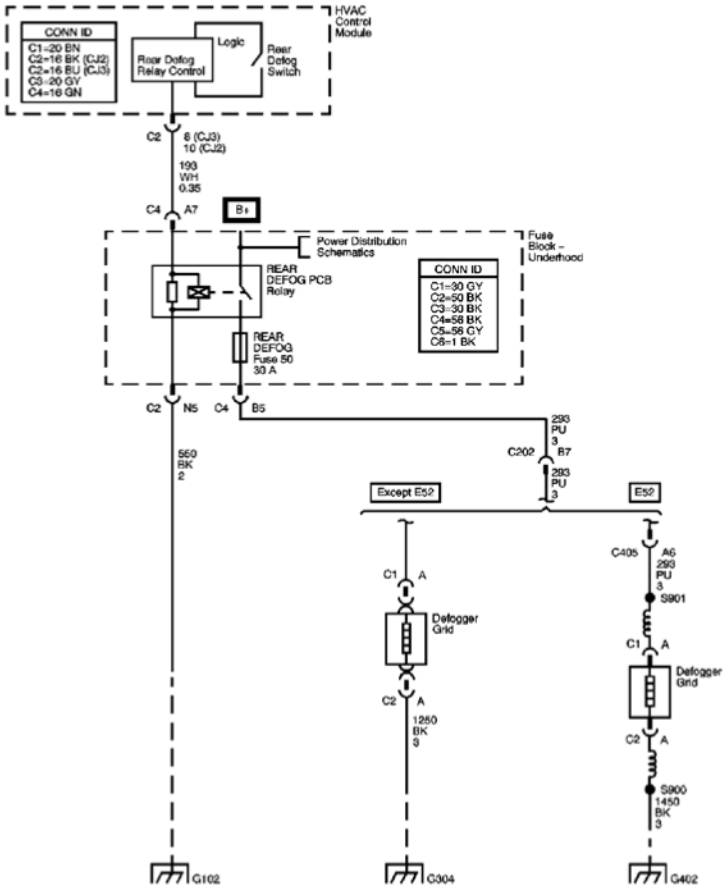

Fig. 3: Defogger Schematic
Courtesy of GENERAL MOTORS CORP.

COMPONENT LOCATOR

WINDOW SYSTEMS COMPONENT VIEWS

cardiagn.com

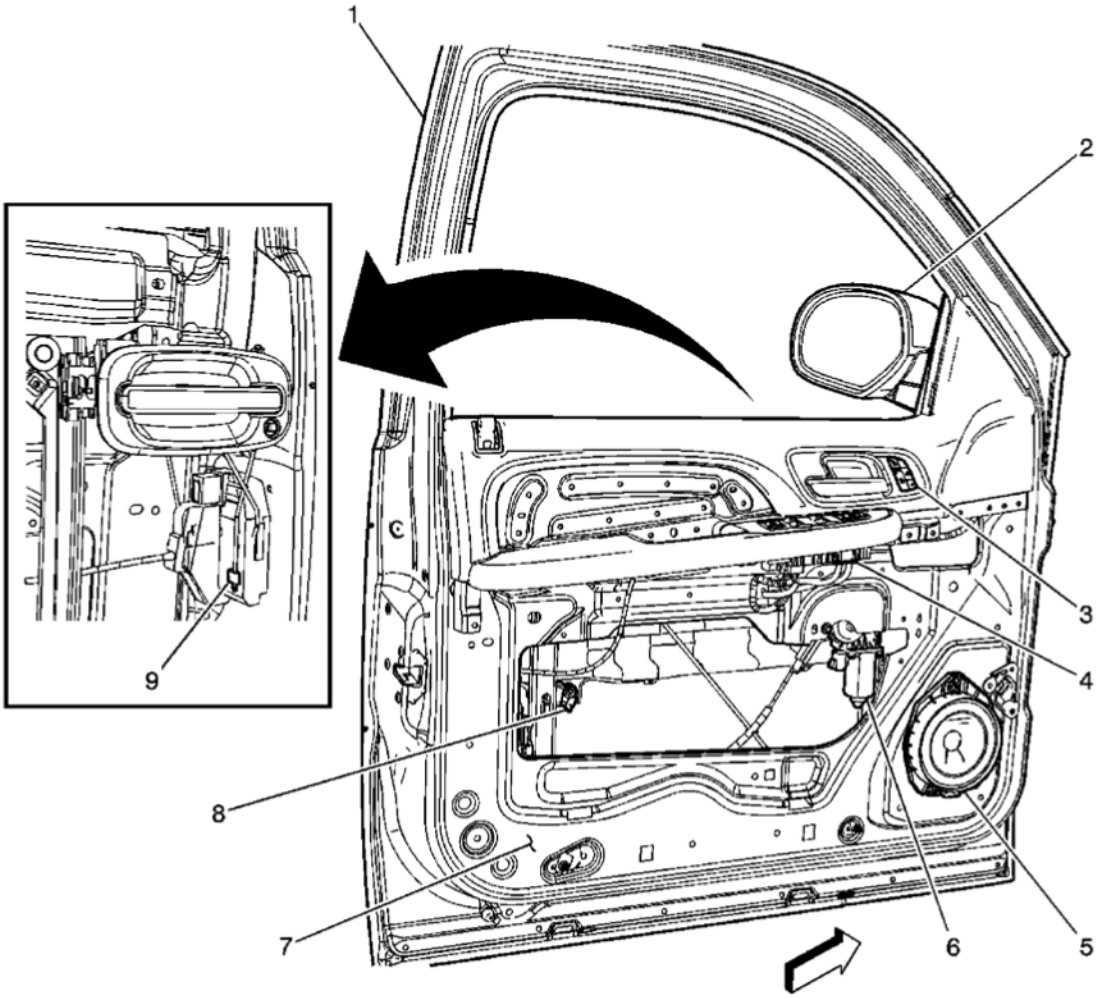

Fig. 4: Driver Door
Courtesy of GENERAL MOTORS CORP.

Callouts For Fig. 4

Callout	Component Name
1	Door Frame
2	Outside Rearview Mirror - Driver
3	Memory/Heated Seat Switch (AN3 Except KB6) / Memory Seat Switch (KB6)
4	Driver Door Switch (DDS)
5	Speaker - LF Door
6	Window Motor - Driver
7	Inflatable Restraint Side Impact Sensor (SIS) - LF (ASF)
8	Door Latch Assembly - Driver

cardiagn.com

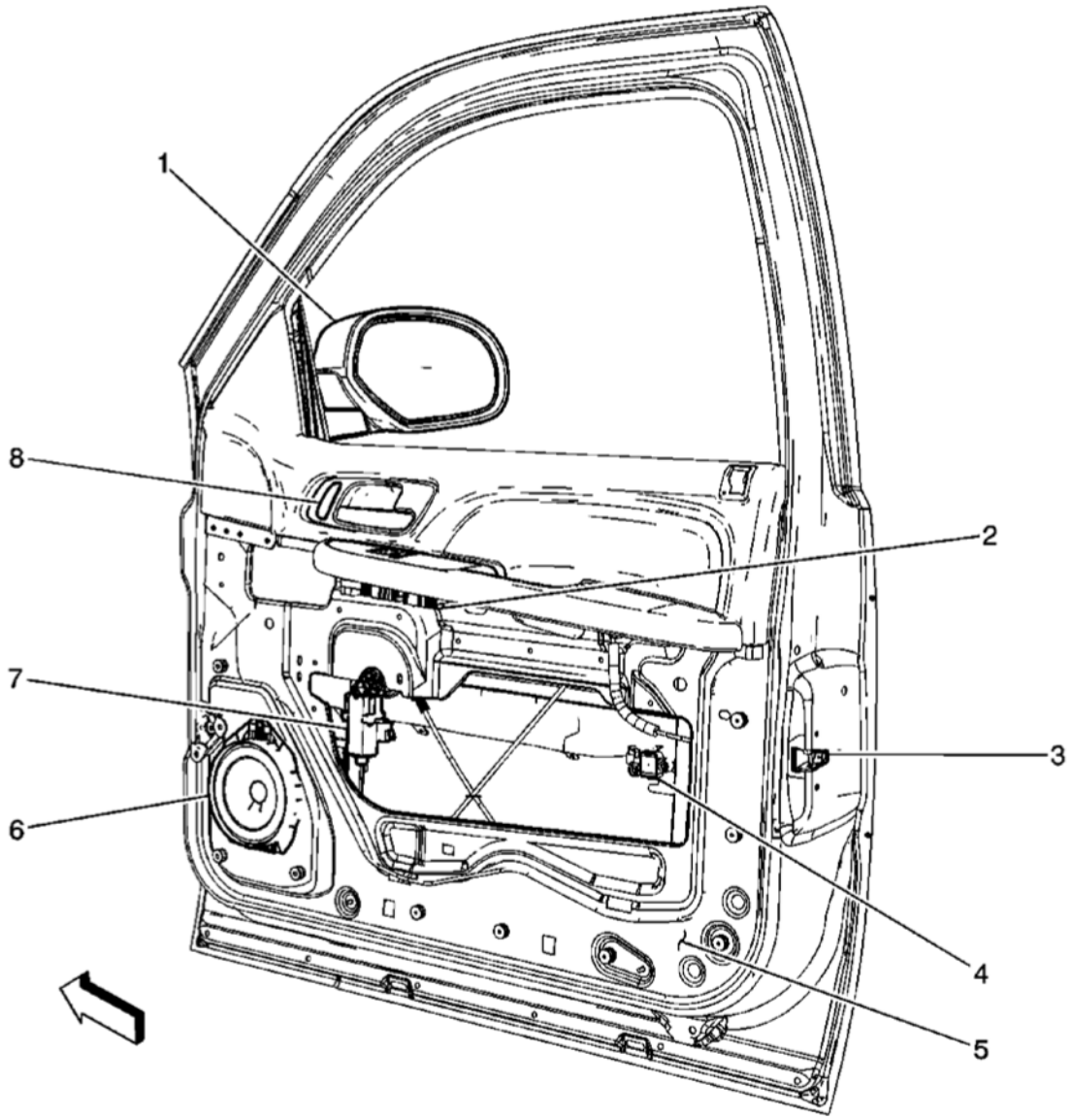

Fig. 5: Passenger Door
Courtesy of GENERAL MOTORS CORP.

Callouts For Fig. 5

Callout	Component Name
1	Outside Rearview Mirror - Passenger
2	Passenger Door Switch (PDS)
3	Door Latch Assembly - Passenger
4	Inflatable Restraint Side Impact Sensor (SIS) - RF (ASF)
5	Speaker - RF Door
6	Window Motor - Passenger

cardiagn.com

7	Heated Seat Switch (KA6)

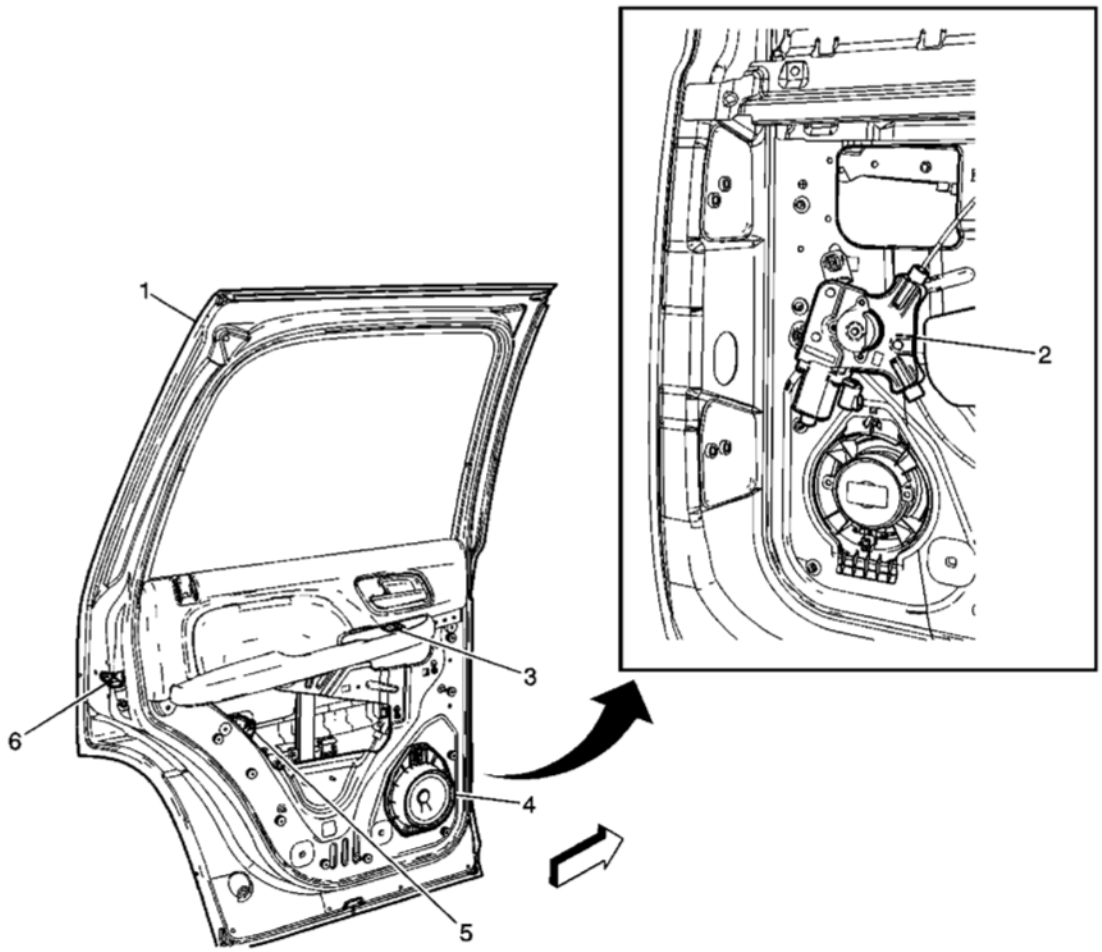

Fig. 6: LR Door
Courtesy of GENERAL MOTORS CORP.

Callouts For Fig. 6

Callout	Component Name
1	Door Frame
2	Window Motor - LR
3	Window Switch - LR
4	Speaker - LR Door
5	Inflatable Restraint Side Impact Sensor (SIS) - LR (ASF)
6	Door Latch Assembly - LR

cardiagn.com

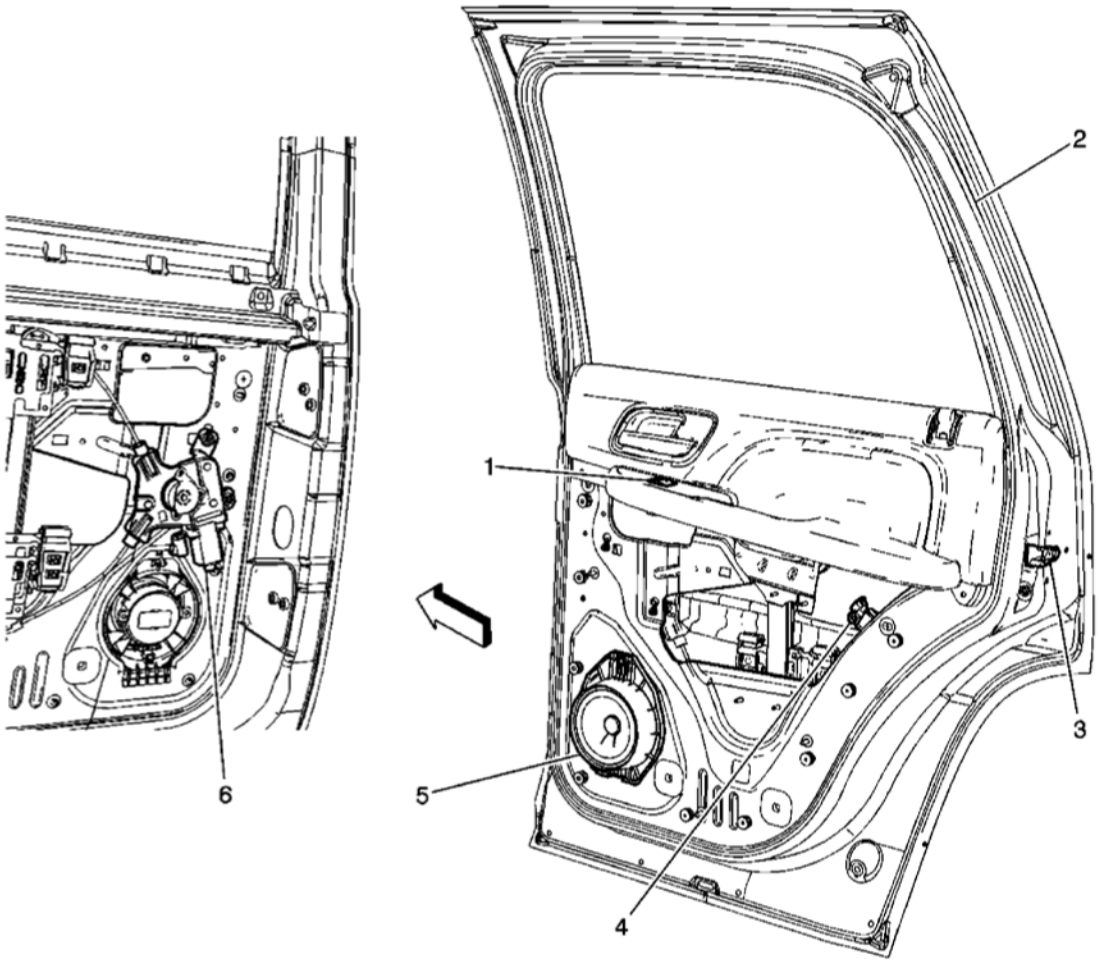

Fig. 7: RR Door
Courtesy of GENERAL MOTORS CORP.

Callouts For Fig. 7

Callout	Component Name
1	Window Switch - RR
2	Door Frame
3	Inflatable Restraint Side Impact Sensor (SIS) - RR (ASF)
4	Speaker - RR Door
5	Window Motor - RR

cardiagn.com

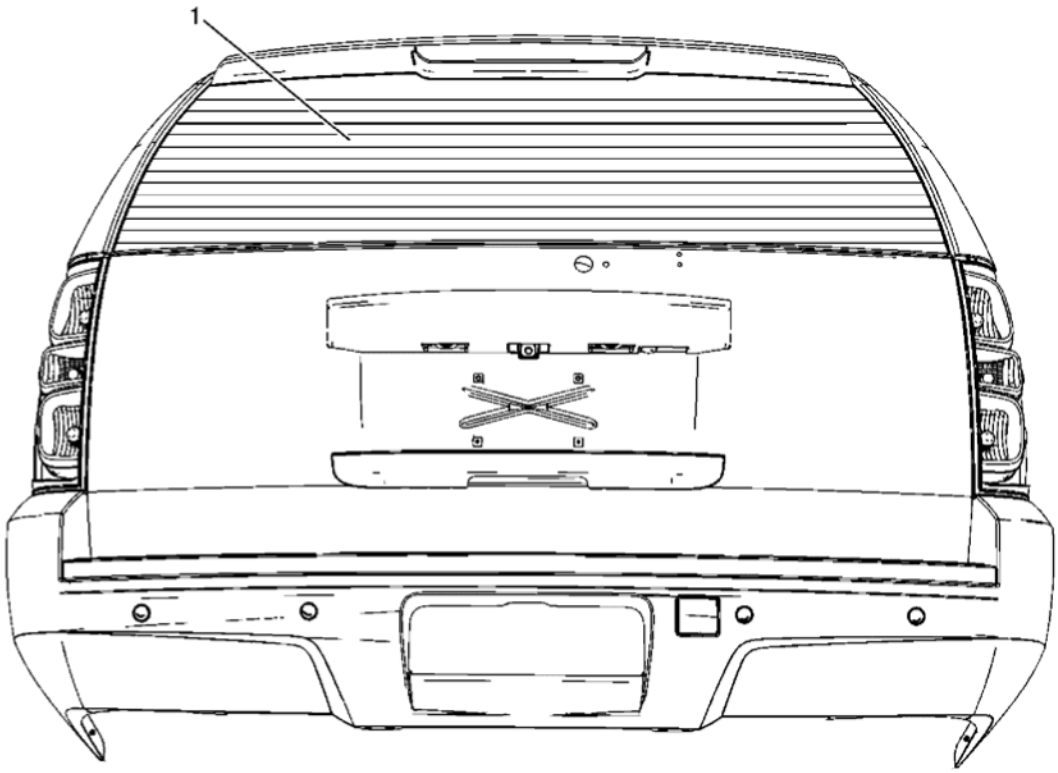

Fig. 8: Defogger Grid (E52)
Courtesy of GENERAL MOTORS CORP.

Callouts For Fig. 8

Callout	Component Name
1	Defogger Grid

cardiagn.com

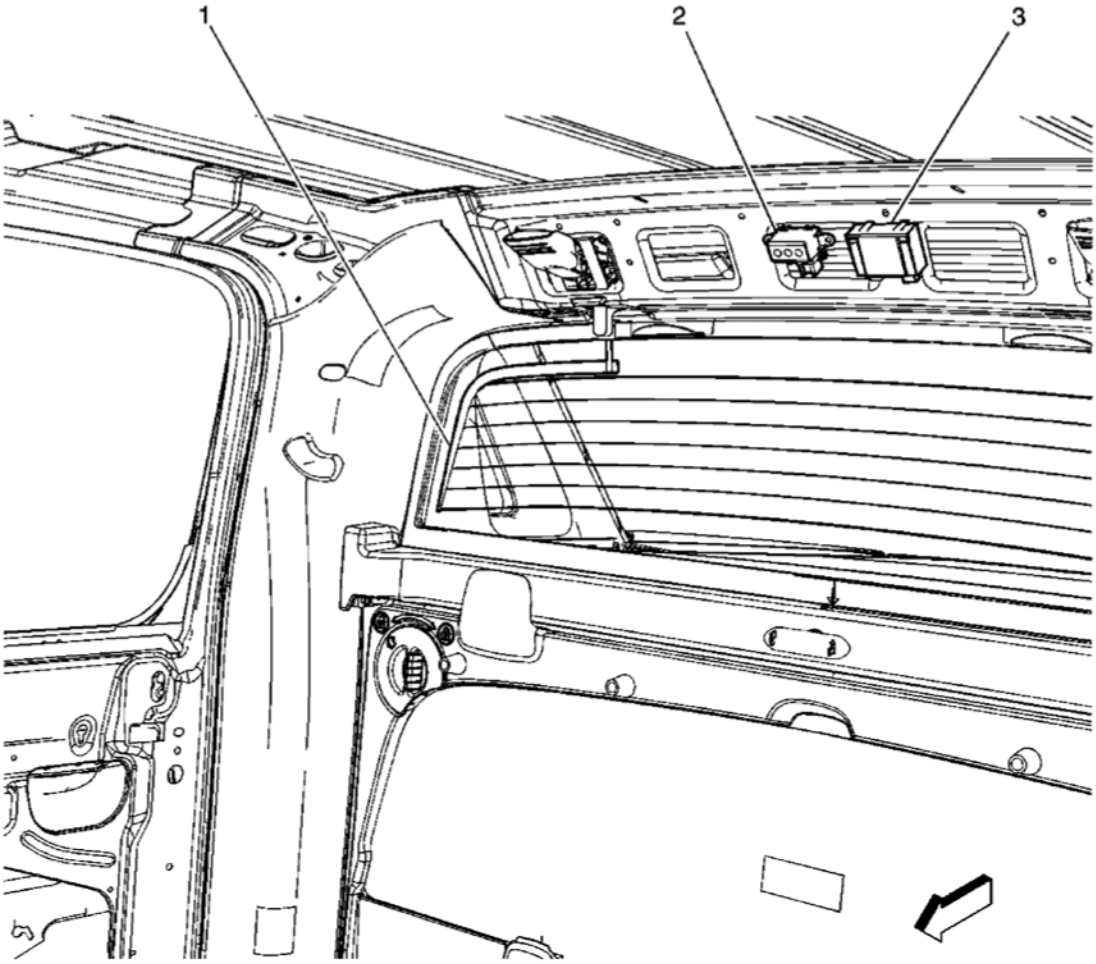

Fig. 9: Above the Rear Window (Except E52)
Courtesy of GENERAL MOTORS CORP.

Callouts For Fig. 9

Callout	Component Name
1	Defogger Grid
2	Information Center Telltale Assembly (UD7)
3	Remote Control Door Lock Receiver (RCDLR) (AP3/AP8)

VISUAL IDENTIFICATION

WINDOW SYSTEMS CONNECTOR END VIEWS

Rear Window Defogger Grid C1 (Except E52)

cardiagn.com

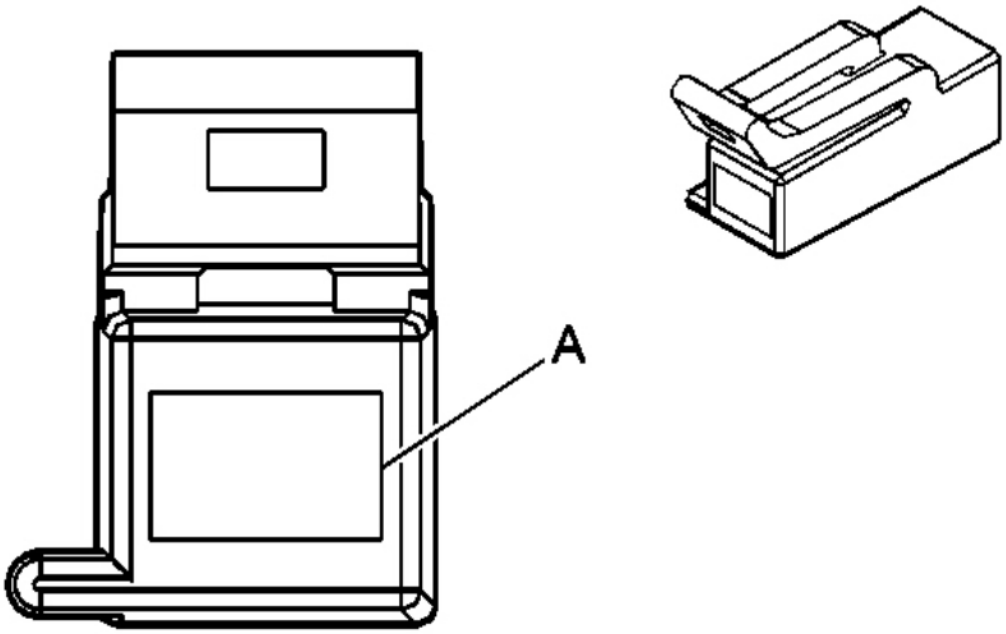

Fig. 10: Rear Window Defogger Grid C1 (Except E52) Connector End View
Courtesy of GENERAL MOTORS CORP.

Rear Window Defogger Grid C1 (Except E52) Connector Parts Information

Connector Part Information

- OEM: 12059884
- Service: 12102750
- Description: 1-Way F Metri-Pack 150 Series (BK)

Terminal Part Information

- Terminal/Tray: 12084595/2
- Core/Insulation Crimp: F/G
- Release Tool/Test Probe: 12094430/J-35616-40 (BU)

Rear Window Defogger Grid C1 (Except E52) Connector Terminal Identification

Pin	Wire Color	Circuit No.	Function
A	PU	293	Rear Defog Element Supply Voltage

Rear Window Defogger Grid C2 (Except E52)

cardiagn.com

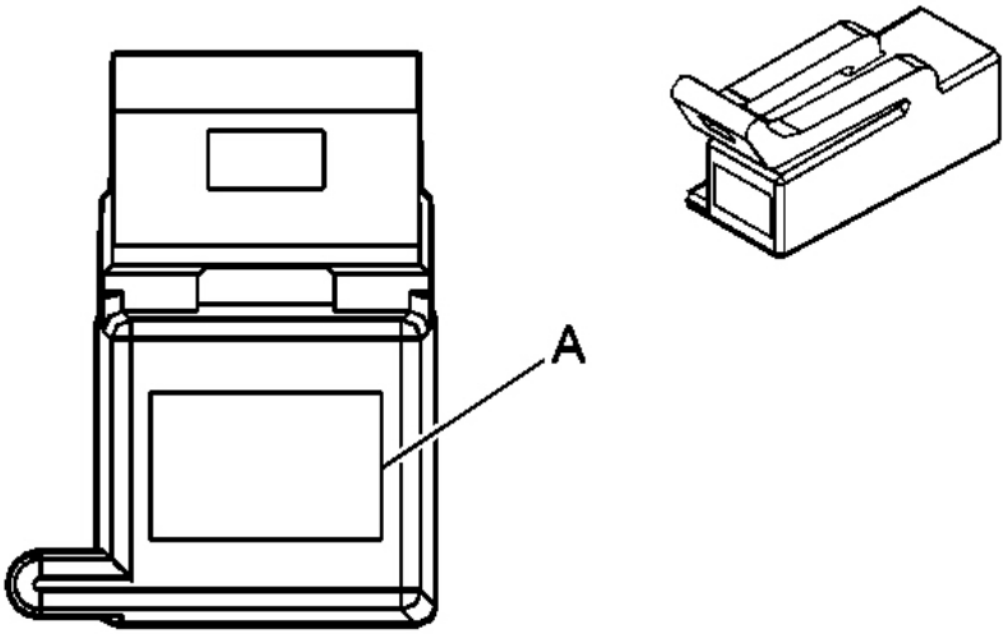

Fig. 11: Rear Window Defogger Grid C2 (Except E52) Connector End View
Courtesy of GENERAL MOTORS CORP.

Rear Window Defogger Grid C2 (Except E52) Connector Parts Information

Connector Part Information

- OEM: 12059884
- Service: 12102750
- Description: 1-Way F Metri-Pack 150 Series (BK)

Terminal Part Information

- Terminal/Tray: 12084595/2
- Core/Insulation Crimp: F/G
- Release Tool/Test Probe: 12094430/J-35616-40 (BU)

Rear Window Defogger Grid C2 (Except E52) Connector Terminal Identification

Pin	Wire Color	Circuit No.	Function
A	BK	1250	Ground

Rear Window Defogger Grid C1 (E52)

cardiagn.com

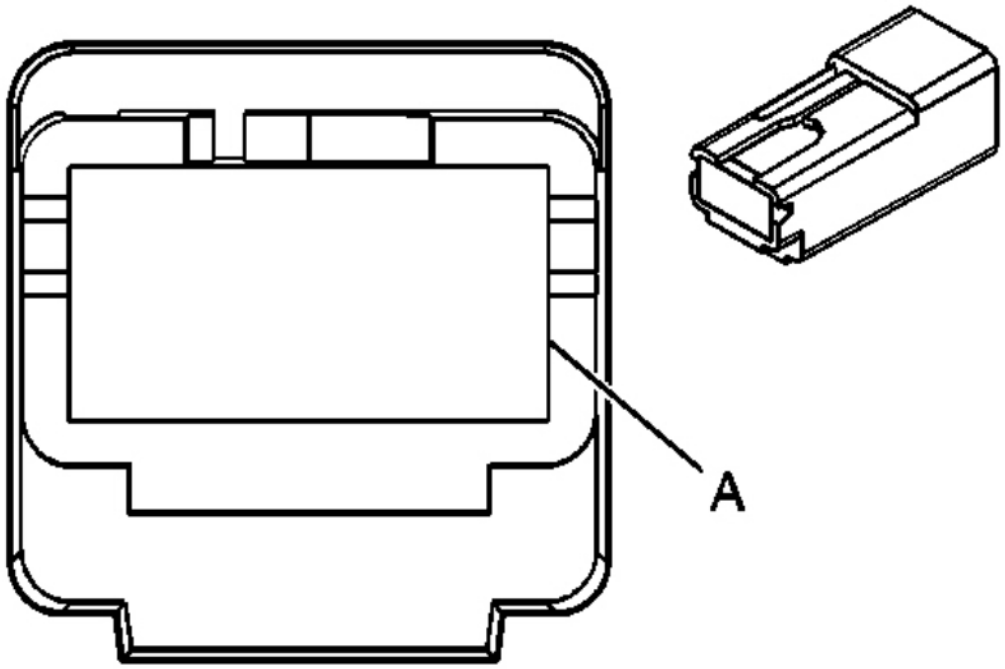

Fig. 12: Rear Window Defogger Grid C1 (E52) Connector End View
Courtesy of GENERAL MOTORS CORP.

Rear Window Defogger Grid C1 (E52) Connector Parts Information

Connector Part Information

- OEM: 12092133
- Service: 12167133
- Description: 1-Way F Metri-Pack 630 Series Self Lock (BK)

Terminal Part Information

- Terminal/Tray: 12103325/3
- Core/Insulation Crimp: A/B
- Release Tool/Test Probe: 12094430/J-35616-42 (RD)

Rear Window Defogger Grid C1 (E52) Connector Terminal Identification

Pin	Wire Color	Circuit No.	Function
A	BK	293	Rear Defog Element Supply Voltage

cardiagn.com

Rear Window Defogger Grid C2 (E52)

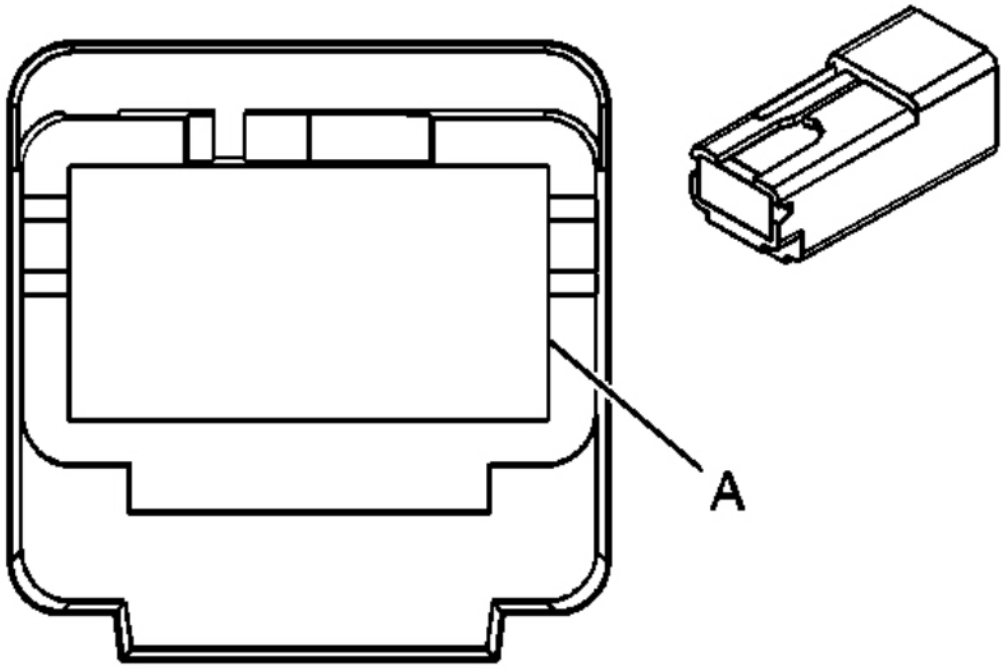

Fig. 13: Rear Window Defogger Grid C2 (E52) Connector End View
Courtesy of GENERAL MOTORS CORP.

Rear Window Defogger Grid C2 (E52) Connector Parts Information

Connector Part Information

- OEM: 12092133
- Service: 12167133
- Description: 1-Way F Metri-Pack 630 Series Self Lock (BK)

Terminal Part Information

- Terminal/Tray: 12103325/3
- Core/Insulation Crimp: A/B
- Release Tool/Test Probe: 12094430/J-35616-42 (RD)

Rear Window Defogger Grid C2 (E52) Connector Terminal Identification

Pin	Wire Color	Circuit No.	Function

cardiagn.com

A	BK	1450	Ground

Window Motor - Driver

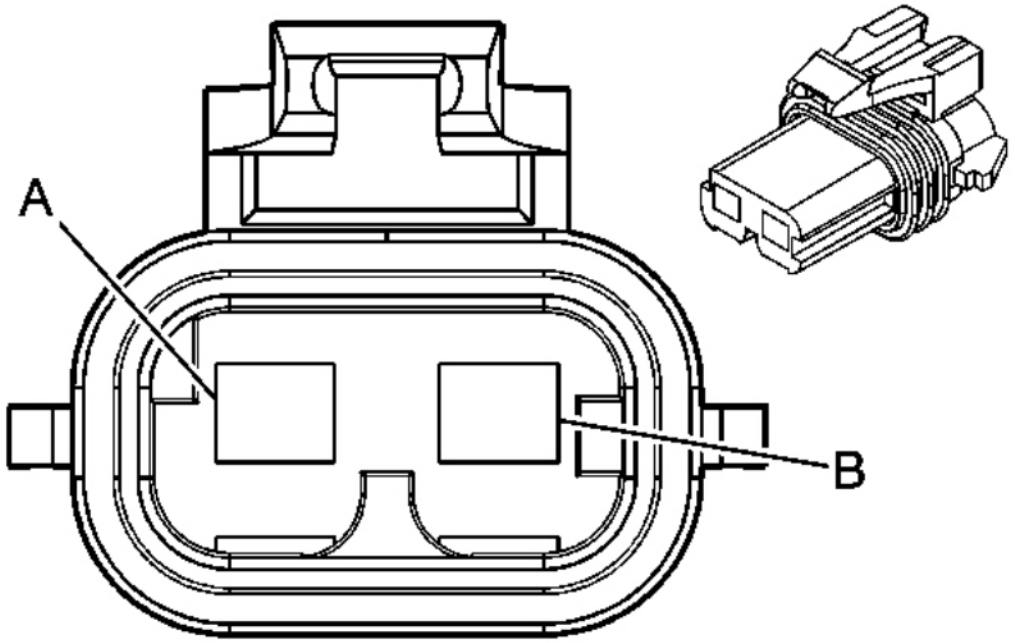

Fig. 14: Window Motor - Driver Connector End View
Courtesy of GENERAL MOTORS CORP.

Window Motor - Driver Connector Parts Information

Connector Part Information

- OEM: 12129487
- Service: 88988609
- Description: 2-Way F Metri-Pack 280 Series, Flexlock, Sealed (GY)

Terminal Part Information

- Terminal/Tray: 12110845/4
- Core/Insulation Crimp: A/5
- Release Tool/Test Probe: 15315247/J-35616-4A (PU)

Window Motor - Driver Connector Terminal Identification

cardiagn.com

Pin	Wire Color	Circuit No.	Function
A	D-BU	164	Power Window Motor Left Front Up Control
B	BN	165	Power Window Motor Left Front Down Control

Window Motor - LR

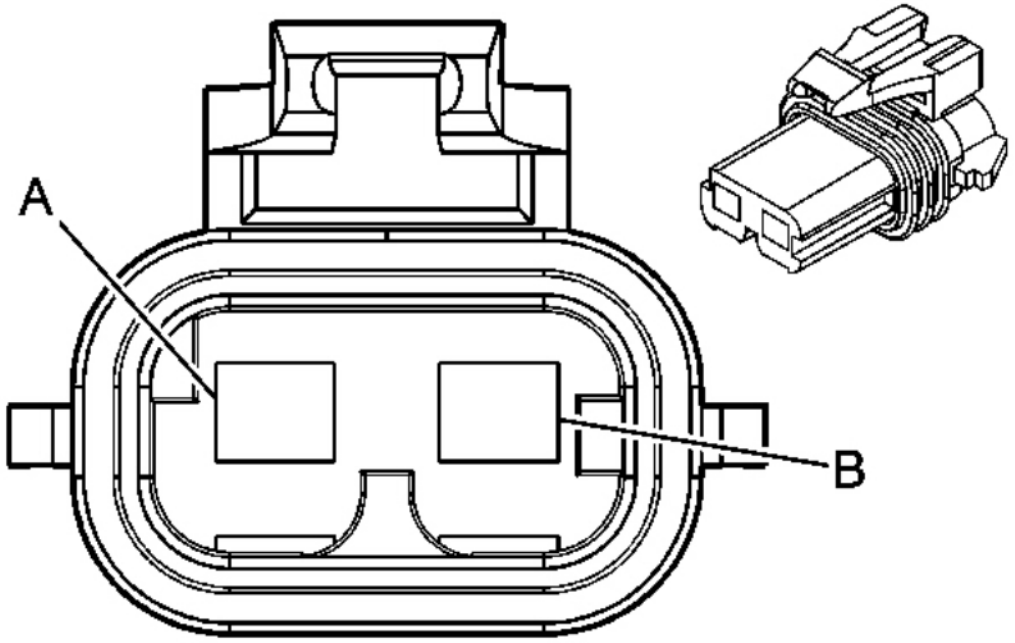

Fig. 15: Window Motor - LR Connector End View
Courtesy of GENERAL MOTORS CORP.

Window Motor - LR Connector Parts Information

Connector Part Information

- OEM: 12129487
- Service: 88988609
- Description: 2-Way F Metri-Pack 280 Series, Flexlock, Sealed (GY)

Terminal Part Information

- Terminal/Tray: 12110845/4
- Core/Insulation Crimp: A/5

cardiagn.com

- Release Tool/Test Probe: 15315247/J-35616-4A (PU)

Window Motor - LR Connector Terminal Identification

Pin	Wire Color	Circuit No.	Function
A	D-BU	668	Power Window Motor Left Rear Up Control
B	BN	669	Power Window Motor Left Rear Down Control

Window Motor - Passenger

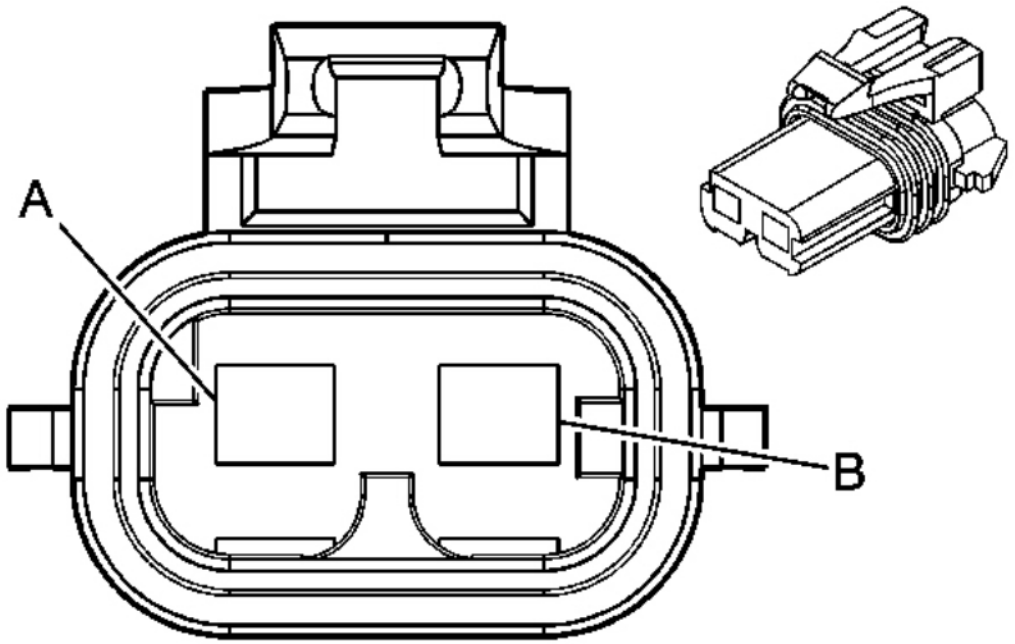

Fig. 16: Window Motor - Passenger Connector End View
Courtesy of GENERAL MOTORS CORP.

Window Motor - Passenger Connector Parts Information

Connector Part Information

- OEM: 12129487
- Service: 88988609
- Description: 2-Way F Metri-Pack 280 Series, Flexlock, Sealed (GY)

Terminal Part Information

cardiagn.com

- Terminal/Tray: 12110845/4
- Core/Insulation Crimp: A/5
- Release Tool/Test Probe: 15315247/J-35616-4A (PU)

Window Motor - Passenger Connector Terminal Identification

Pin	Wire Color	Circuit No.	Function
A	D-BU	666	Power Window Motor Right Front Up Control
B	BN	667	Power Window Motor Right Front Down Control

Window Motor - RR

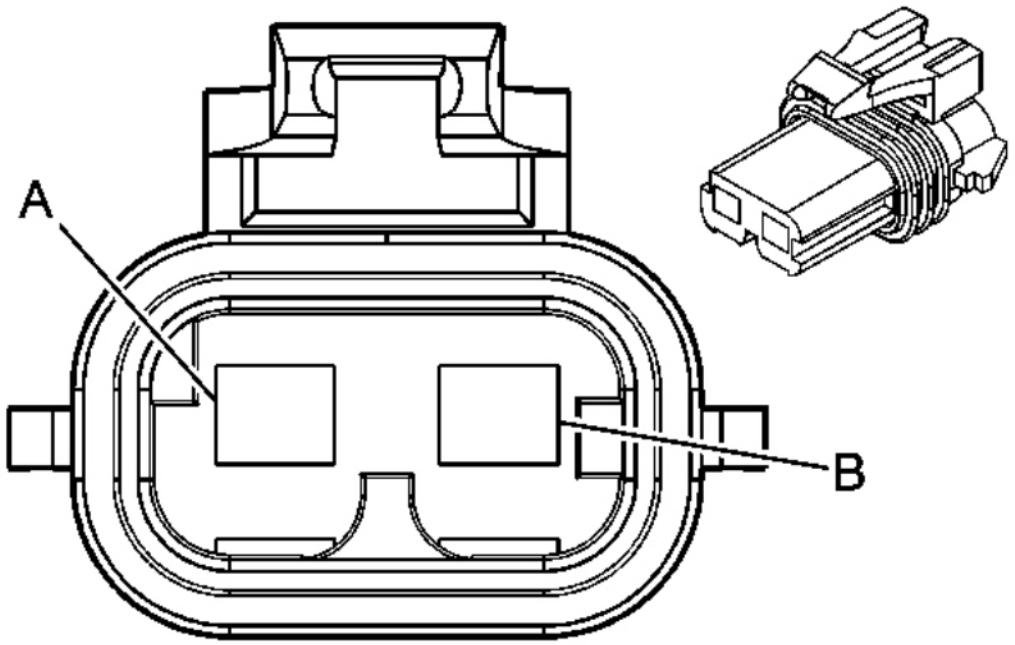

Fig. 17: Window Motor - RR Connector End View
Courtesy of GENERAL MOTORS CORP.

Window Motor - RR Connector Parts Information

Connector Part Information

- OEM: 12129487

cardiagn.com

- Service: 88988609
- Description: 2-Way F Metri-Pack 280 Series, Flexlock, Sealed (GY)

Terminal Part Information

- Terminal/Tray: 12110845/4
- Core/Insulation Crimp: A/5
- Release Tool/Test Probe: 15315247/J-35616-4A (PU)

Window Motor - RR Connector Terminal Identification

Pin	Wire Color	Circuit No.	Function
A	D-BU	670	Power Window Motor Right Rear Up Control
B	BN	671	Power Window Motor Right Rear Down Control

Window Switch - LR

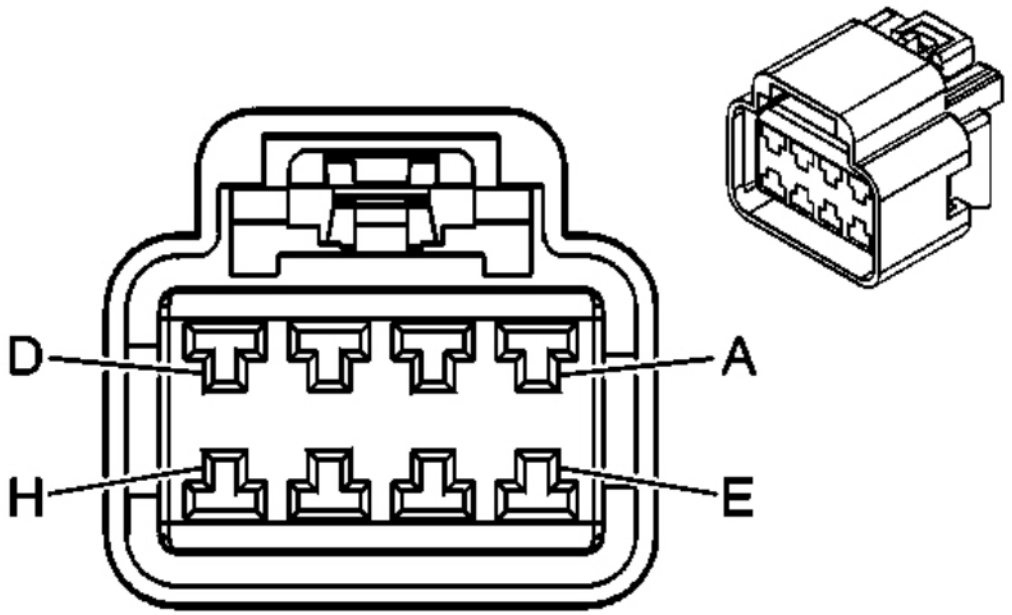

Fig. 18: Window Switch - LR Connector End View
Courtesy of GENERAL MOTORS CORP.

cardiagn.com

Window Switch - LR Connector Parts Information

Connector Part Information

- OEM: 15326924
- Service: 15306174
- Description: 8-Way F GT 280 Series (BK)

Terminal Part Information

- Pins: A-D
- Terminal/Tray: 15304711/8
- Core/Insulation Crimp: E/A
- Release Tool/Test Probe: 15315247/J-35616-4A (PU)

- Pins: E-H
- Terminal/Tray: 15304713/19
- Core/Insulation Crimp: Pins E, H - 4/4
- Core/Insulation Crimp: Pins F, G - F/D
- Release Tool/Test Probe: 15315247/J-35616-4A (PU)

Window Switch - LR Connector Terminal Identification

Pin	Wire Color	Circuit No.	Function
A	D-GN	168	Power Window Master Switch Left Rear Up Signal
B	BN/WH	230	Instrument Panel Lamp Dimming Control
C	PU	169	Power Window Master Switch Left Rear Down Signal
D	D-BU	1307	Power Window Master Switch Lockout Signal
E	D-BU	668	Power Window Motor Left Rear Up Control
F	BK	1150	Ground
G	RD/WH	1240	Battery Positive Voltage
H	BN	669	Power Window Motor Left Rear Down Control

Window Switch - RR

cardiagn.com

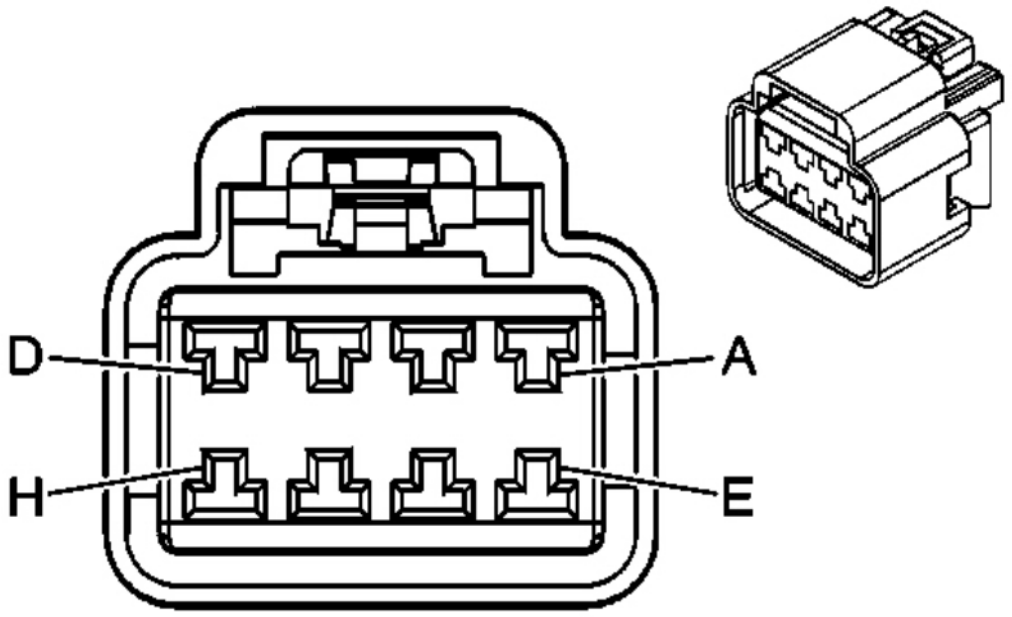

Fig. 19: Window Switch - RR Connector End View
Courtesy of GENERAL MOTORS CORP.

Window Switch - RR Connector Parts Information

Connector Part Information

- OEM: 15326924
- Service: 15306174
- Description: 8-Way F GT 280 Series (BK)

Terminal Part Information

- Pins: A-D
- Terminal/Tray: 15304711/8
- Core/Insulation Crimp: E/A
- Release Tool/Test Probe: 15315247/J-35616-4A (PU)

- Pins: E-H
- Terminal/Tray: 15304713/19
- Core/Insulation Crimp: Pins E, H - 4/4
- Core/Insulation Crimp: Pins F, G - F/D

cardiagn.com

- Release Tool/Test Probe: 15315247/J-35616-4A (PU)

Window Switch - RR Connector Terminal Identification

Pin	Wire Color	Circuit No.	Function
A	L-GN	170	Power Window Master Switch Right Rear Up Signal
B	BN/WH	230	Instrument Panel Lamp Dimming Control
C	PU	171	Power Window Master Switch Right Rear Down Signal
D	L-BU/WH	280	Power Window Master Switch Lockout Right Rear Signal
E	D-BU	670	Power Window Motor Right Rear Up Control
F	BK	1250	Ground
G	RD/WH	1340	Battery Positive Voltage
H	BN	671	Power Window Motor Right Rear Down Control

DIAGNOSTIC INFORMATION AND PROCEDURES

DIAGNOSTIC CODE INDEX

DIAGNOSTIC CODE INDEX

DTC	Description
DTC B0283	Electric Rear Defrost Circuit Short to Ground or Open
DTC B3205	Window Motor Circuit
DTC B3819	Left Rear Window Up Control Circuit
DTC B3820	Left Rear Window Down Control Circuit
DTC B3821	Left Rear Window Relay Power Circuit
DTC B3822	Right Rear Window Up Control Circuit
DTC B3823	Right Rear Window Down Control Circuit
DTC B3824	Right Rear Window Relay Power Circuit

DIAGNOSTIC STARTING POINT - FIXED AND MOVEABLE WINDOWS

Begin the system diagnosis with the **Diagnostic System Check - Vehicle** . The Diagnostic System Check will provide the following information:

- The identification of the control modules which command the system.
- The ability of the control modules to communicate through the serial data circuit.
- The identification of any stored diagnostic trouble codes (DTCs) and their status.

cardiagn.com

The use of the Diagnostic System Check will identify the correct procedure for diagnosing the system and where the procedure is located.

SCAN TOOL DATA LIST

Driver Door Switch/Passenger Door Switch

Scan Tool Parameter	Data List	Units Displayed	Typical Data Value
Operating Conditions: Ignition ON/Engine OFF/Vehicle in PARK/All Doors Closed			
Base Model Part Number	Module ID Information	Numeric	-
Battery Voltage Signal	Data	Volts	12.8 V
Calibration Part Number	Module ID Information	Numeric	-
Component Serial Number	Module ID Information	Numeric	-
Door Key Cyl. Unlock Switch	Inputs	Idle/Unlock	Idle
Door Lock Actuator Cmd.	Outputs	Off/Lock/Unlock	Off
Door Switch Backlight Command	Outputs	%	-
Driver Door Ajar Sw.	Inputs	Active/Inactive	Inactive
Driver Door Open Sw.	Inputs	Active/Inactive	Inactive
Driver LF Window Switch	Inputs	Off/Up/Down/Express Up/Express Down	Off
Driver LR Window Switch	Inputs	Off/Up/Down/Express Up/Express Down	Off
Driver RF Window Switch	Inputs	Off/Up/Down/Express Up/Express Down	Off
Driver RR Window Switch	Inputs	Off/Up/Down/Express Up/Express Down	Off
End Model Part Number	Module ID Information	Numeric	-
Ext. Driver Door Handle Switch	Inputs	Active/Inactive	Inactive
Front Window Motor Fault Status	Data	No Fault/Motor Fault/Hall Fault/Memory Fault/LIN Fault/Anti-Trap Fault/Therno-Active/Not Normalized	No Fault
Front Window Motor Status	Data	Off/Up/Down/Reverse/Vent/Open/Short/Closed	Off
Heat Indicator High	Outputs	Percent	0%
Heat Indicator Medium	Outputs	Percent	0%
Heat Indicator Low	Outputs	Percent	0%

cardiagn.com

Julian Date of Build	Module ID Information	Numeric	-
Lock Indicator Command	Outputs	Off/Lock/Unlock	Off
Memory Switch 12V Ref.	Data	Volts	12.8 V
Memory Switch Backlight	Outputs	Percent	0%
Mirror 5 volt Reference	Data	Volts	5.0 V
Mirror Fold Switch	Inputs	Idle/Extend/Retract	Idle
Mirror Horizontal Position	Data	Volts	0.5-4.5 V
Mirror Motor	Inputs	Invalid/Idle/Left/Right/Up/Down	Idle
Mirror Motor Current	Data	Amps	0
Mirror Select Switch	Inputs	Idle/Left/Right/Up/Down	Idle
Mirror Vertical Position	Data	Volts	0.5-4.5 V
Puddle Lamp Output	Outputs	Active/Inactive	Inactive
Rear Window Motor Fault Status	Data	No Fault/Motor Fault/Hall Fault/Memory Fault/LIN Fault/Anti-Trap Fault/Therno-Active/Not Normalized	No Fault
Rear Window Motor Status	Data	Off/Up/Down/Reverse/Vent/Open/Short/Closed	Off
Rear Window Sw. 12V Ref.	Data	Volts	12.8 V
Seat Back Heat Mode Ind. Cmd.	Outputs	On/Off	Off
Seat Back Heat Mode Ind. Cmd.	Outputs	Percent	0%
Seat Back Heat Mode Sw.	Inputs	Active/Inactive	Inactive
Seat Cool Mode Ind. Cmd.	Outputs	On/Off	Off
Seat Cool Mode Ind. Cmd.	Outputs	Percent	0%
Seat Cool Mode Switch	Inputs	On/Off	Off
Seat Heat Mode Cmd.	Outputs	On/Off	Off
Seat Heat Mode Cmd.	Outputs	Percent	0%
Seat Heat High Ind. Cmd.	Outputs	On/Off	Off
Seat Heat Medium Ind. Cmd.	Outputs	On/Off	Off
Seat Heat Low Ind. Cmd.	Outputs	On/Off	Off
Seat Heat Mode Sw.	Inputs	Active/Inactive	Inactive

cardiagn.com

Software Part Number	Module ID Information	Numeric	-
VIN Learned	Data	Alpha-Numeric	-
Window Lockout Switch	Inputs	On/Off	Off
Window Switch Backlight	Outputs	Percent	0%
Year Module Built	Module ID Information	Decimal	-

Body Control Module

Scan Tool Parameter	Data List	Units Displayed	Typical Data Value
Operating Conditions: Ignition ON/Engine OFF/Vehicle in PARK/All doors closed			
All Door Lock Cmd.	Doors	On/Off	Off
All Door Unlk. Cmd.	Doors	On/Off	Off
Door Lock Requestor	Doors	Auto Locks/Power LockDoor Key Cyl./Rear Closure/Emergency/Keyless Entry/Passive Keyless/Remote/Delayed Lock/Relocking/Anti-Lockout/Exterior Sw.	Inactive
Drvr. Door Unlock Cmd.	Doors	On/Off	Off
Left Rear Door Ajar Sw.	Doors	Door Ajar/Door Closed	Door Closed
Left Rear Door Open Sw.	Doors	Open/Closed	Closed
LR Window Down Cmd.	Doors	Active/Inactive	Inactive
LR Window Enable Cmd.	Doors	Inactive/Active	Inactive
LR Window Up Cmd.	Doors	Inactive/Active	Inactive
Right Rear Door Open Sw.	Doors	Open/Closed	Closed
Right Rear Door Ajar Sw.	Doors	Door Ajar/Door Closed	Door Closed
RR Window Down Cmd.	Doors	Inactive/Active	Inactive
RR Window Enable Cmd.	Doors	Inactive/Active	Inactive
RR Window Up Cmd.	Doors	Inactive/Active	Inactive

SCAN TOOL OUTPUT CONTROLS

Body Control Module

Scan Tool Output Control	Additional Menu Selection(s)	Description
Doors	Rear Door Lock/Unlock	The BCM actuates the door lock relay and liftgate lock when you select Lock. Rear doors and liftgate should lock. The BCM actuates the door unlock relay when you select Unlock. Rear doors and liftgate should unlock.

cardiagn.com

Doors	Left Rear Window	The BCM will control the left window up when you select Up. The BCM will control the left window down when you select Down.
Doors	Right Rear Window	The BCM will control the right window up when you select Up. The BCM will control the right window down when you select Down.

Driver Door Switch and Passenger Door Switch

Scan Tool Output Control	Additional Menu Selection(s)	Description
Output Control	Window Up/Down	The DDS or PDS will command the window up and down
Output Control	Door Lock/Unlock Test	The DDS or PDS will command the door lock actuator to lock or unlock
Output Control	Mirror Left/Right	The DDS or PDS will command the mirror left and right
Output Control	Mirror Up/Down	The DDS or PDS will command the mirror up and down
Output Control	Mirror Heat	The DDS or PDS will command the mirror heater on and off
Output Control	Passenger Window Lockout Indicator	The DDS will command the window lockout indicator on when you select ON and turn it off when you select OFF

DTC B0283

DTC Descriptor

DTC B0283 06

Electric Rear Defrost Circuit Short to Ground or Open

Diagnostic Fault Information

Perform the **Diagnostic System Check - Vehicle** prior to using this diagnostic procedure.

Circuit/System Description

The HVAC control module controls the rear window defroster through the REAR DEFOG relay located in the underhood fuse block. When the rear defroster is activated the HVAC control module supplies battery voltage through the defroster relay control circuit to energize the relay coil.

Conditions for Running the DTC

- Battery voltage is within 8.7-16.5 volts.
- The ignition is ON.

Conditions for Clearing the DTC

- The DTC will become history if the HVAC control module no longer detects a fault

cardiagn.com

- The history DTC will clear after 100 fault-free ignition cycles.
- The DTC can be cleared with a scan tool.

Reference Information

Schematic Reference

Defogger Schematics

Connector End View Reference

Window Systems Connector End Views

Electrical Information Reference

- **Circuit Testing**
- **Connector Repairs**
- **Testing for Intermittent Conditions and Poor Connections**
- **Wiring Repairs**

Scan Tool Reference

Scan Tool Data List

Circuit/System Testing

1. Ignition OFF, remove the REAR DEFOG relay in the underhood fuse block.
2. Test for less than 1 ohm of resistance between the ground circuit terminal 85 and ground.
   - If greater than the specified range, test the ground circuit for an open/high resistance.
3. Connect a test lamp between the control circuit terminal 86 and the ground circuit terminal 85.
4. Ignition ON, operate the rear window defroster ON and OFF. The test lamp should turn ON and OFF when changing between the commanded states.
   - If the test lamp is always ON, test the control circuit for a short to voltage. If the circuit tests normal, replace the HVAC control module.
   - If the test lamp is always OFF, test the control circuit for a short to ground or an open/high resistance. If the circuit tests normal, replace the HVAC control module.
5. If all circuits test normal, test or replace the REAR DEFOG relay.

Repair Procedures

Perform the **Diagnostic Repair Verification** after completing the diagnostic procedure.

Control Module References for HVAC control module replacement, programming, and setup

cardiagn.com

DTC B3205

DTC Descriptors

DTC B3205 00

Window Motor Circuit

DTC B3205 0B

Window Motor Circuit Current Above Threshold

Diagnostic Fault Information

Perform the **Diagnostic System Check - Vehicle** prior to using this diagnostic procedure.

DTC B3205

Circuit	Short to Ground	Open/High Resistance	Short to Voltage	Signal Performance
Window Motor Down Control	B3205 00 B3205 0B	1	B3205 00	-
Window Motor Up Control	B3205 00 B3205 0B	1	B3205 00	-
1. Power Window Inoperative				

Circuit/System Description

The driver door switch (DDS) and passenger door switch (PDS) control the power window functions through the power window motor up and down control circuits. The door switches monitor the control circuits for fault conditions when up or down operation is requested prior to activating the function and during operation.

Conditions for Running the DTC

- Battery voltage must be between 9-16 volts.
- The ignition switch is in the ON position.

Conditions for Setting the DTC

DTC B3205 00

The DDS or PDS detects a short to ground or short to voltage on a window motor control circuit.

DTC B3205 0B

During 5 occurrences of power window motor operation in an ignition cycle, the door switch has detected excessive current flow on a window motor control circuit.

cardiagn.com

Action Taken When the DTC Sets

DTC B3205 00

The power window motor operation will not be attempted whenever this condition is present.

DTC B3205 0B

Power window motor operation will be disabled for the current ignition cycle.

Conditions for Clearing the DTC

DTC B3205 00

When the fault is no longer present, the door switch changes the current DTC to a history DTC.

DTC B3205 0B

The DTC will be current for the entire ignition cycle. The DTC will be a history DTC the following ignition cycles until the conditions for setting the DTC have been met.

The door switch will clear the history DTC after 50 fault free ignition cycles, or in response to a scan tool command.

Diagnostic Aids

The DTC can be set due to excessive physical resistance in the window regulator assembly. Ensure proper mechanical operation of the regulator assembly prior to replacing electrical components.

Reference Information

Schematic Reference

Moveable Window Schematics

Connector End View Reference

Vehicle Access Connector End Views

Electrical Information Reference

- **Circuit Testing**
- **Connector Repairs**
- **Testing for Intermittent Conditions and Poor Connections**
- **Wiring Repairs**

Scan Tool Reference

cardiagn.com

Scan Tool Data List

Circuit/System Testing

1. Disconnect the door switch connector C1.
2. Ignition ON, verify that a test lamp connected to ground does not illuminate when connected to either of the motor control circuit terminals in the harness connector.
   - If the test lamp illuminates repair the affected control circuit for a short to voltage.
3. Verify that a test lamp connected to battery voltage does not illuminate when connected to either of the motor control circuit terminals in the harness connector.
   - If the test lamp illuminates repair the affected control circuit for a short to ground.
4. Using a DMM verify that the resistance between the control circuit terminals in the harness connector is greater than 5 ohms.
   - If the resistance is less than 5 ohms replace the affected power window motor.
5. If all the circuits test normal replace the affected door switch.

Repair Procedures

Perform the **Diagnostic Repair Verification** after completing the diagnostic procedure.

- **Front Side Door Window Regulator Motor Replacement**
- **Control Module References** for driver or passenger door lock and side window switch replacement

DTC B3819

DTC Descriptor

DTC B3819 00

Left Rear Window Up Control Circuit

Diagnostic Fault Information

Perform the **Diagnostic System Check - Vehicle** prior to using this diagnostic procedure.

Circuit/System Description

The body control module (BCM) energizes the control side of the left rear power window up relay upon receiving a GMLAN message from the driver door switch (DDS).

Conditions for Running the DTC

- Battery voltage is between 9-16 volts.
- The ignition switch is in the ON position.
- The BCM has attempted to energize the left rear power window up relay control circuit.

cardiagn.com

Conditions for Setting the DTC

The left rear window up circuit is shorted to ground.

Action Taken When the DTC Sets

The BCM will not attempt left rear window up operation.

Conditions for Clearing the DTC

- When the output request is not active the DTC will be a history status code.
- The history code will clear after 50 fault free ignition cycles or by using the scan tool clear DTCs feature.

Reference Information

Schematic Reference

Moveable Window Schematics

Connector End View Reference

- **Vehicle Access Connector End Views**
- **Data Communication Connector End Views**

Electrical Information Reference

- **Circuit Testing**
- **Connector Repairs**
- **Testing for Intermittent Conditions and Poor Connections**
- **Wiring Repairs**

Scan Tool Reference

- **Scan Tool Data List**
- **Scan Tool Output Controls**

Circuit/System Testing

1. Disconnect the left rear window switch connector and connect a test lamp from the up signal circuit to ground.
2. Ignition ON, verify that the test lamp illuminates when the left rear up switch on the DDS is activated.
    - If the test lamp does not illuminate test the left rear window up signal circuit for a short to ground. If the circuit tests normal replace the BCM.
3. If the circuits test normal replace the left rear window switch.

cardiagn.com

Repair Procedures

Perform the **Diagnostic Repair Verification** after completing the diagnostic procedure.

- **Rear Side Door Window Switch Replacement**
- **Control Module References** for BCM replacement, programming, and setup.

DTC B3820

DTC Descriptor

DTC B3820 00

Left Rear Window Down Control Circuit

Diagnostic Fault Information

Perform the **Diagnostic System Check - Vehicle** prior to using this diagnostic procedure.

Circuit/System Description

The body control module (BCM) energizes the control side of the left rear power window down relay upon receiving a GMLAN message from the driver door switch (DDS).

Conditions for Running the DTC

- Battery voltage is between 9-16 volts.
- The ignition switch is in the ON position.
- The BCM has attempted to energize the left rear power window down relay control circuit.

Conditions for Setting the DTC

The left rear window down circuit is shorted to ground.

Action Taken When the DTC Sets

The BCM will not attempt left rear window down operation.

Conditions for Clearing the DTC

- When the output request is not active the DTC will be a history status code.
- The history code will clear after 50 fault free ignition cycles or by using the scan tool clear DTCs feature.

Reference Information

Schematic Reference

cardiagn.com

Moveable Window Schematics

Connector End View Reference

- Vehicle Access Connector End Views
- Data Communication Connector End Views

Electrical Information Reference

- Circuit Testing
- Connector Repairs
- Testing for Intermittent Conditions and Poor Connections
- Wiring Repairs

Scan Tool Reference

- Scan Tool Data List
- Scan Tool Output Controls

Circuit/System Testing

1. Disconnect the left rear window switch connector and connect a test lamp from the down signal circuit to ground.
2. Ignition ON, verify that the test lamp illuminates when the left rear down switch on the DDS is activated.
    - If the test lamp does not illuminate test the left rear window down signal circuit for a short to ground. If the circuit tests normal replace the BCM.
3. If the circuits test normal replace the left rear window switch.

Repair Procedures

Perform the Diagnostic Repair Verification after completing the diagnostic procedure.

- Rear Side Door Window Switch Replacement
- Control Module References for BCM replacement, programming, and setup.

DTC B3821

DTC Descriptor

DTC B3821 00

Left Rear Window Relay Power Circuit

Diagnostic Fault Information

cardiagn.com

Perform the **Diagnostic System Check - Vehicle** prior to using this diagnostic procedure.

Circuit/System Description

Accessory/RAP voltage is supplied to the left rear power window switch through the window lockout signal circuit. If the window lockout function is disabled, the body control module (BCM) supplies voltage to the rear window switches allowing for normal window operation from the rear switches. If the window lockout function is enabled, the BCM will not supply voltage to the rear window switches and the rear windows will only operate from the driver power window switch through the BCM up and down signal circuits.

Conditions for Running the DTC

- Battery voltage is between 9-16 volts.
- The ignition switch is in the ON position.
- The window lockout function is disabled

Conditions for Setting the DTC

The left rear window lockout circuit is shorted to ground.

Action Taken When the DTC Sets

The left rear power window will be inoperative.

Conditions for Clearing the DTC

- When the fault is no longer present the DTC will be a history status code.
- The history code will clear after 50 fault free ignition cycles or by using the scan tool clear DTCs feature.

Reference Information

Schematic Reference

Moveable Window Schematics

Connector End View Reference

- **Vehicle Access Connector End Views**
- **Data Communication Connector End Views**

Electrical Information Reference

- **Circuit Testing**
- **Connector Repairs**
- **Testing for Intermittent Conditions and Poor Connections**
- **Wiring Repairs**

cardiagn.com

Scan Tool Reference

- **Scan Tool Data List**
- **Scan Tool Output Controls**

Circuit/System Testing

1. Disconnect the left rear window switch connector and connect a test lamp from the lockout signal circuit to ground.
2. Ignition ON, verify that the test lamp illuminates while the rear window lockout function is inactive.
   - If the test lamp does not illuminate test the left rear window lockout signal circuit for a short to ground. If the circuit tests normal replace the BCM.
3. If the circuits test normal replace the left rear window switch.

Repair Procedures

Perform the **Diagnostic Repair Verification** after completing the diagnostic procedure.

- **Rear Side Door Window Switch Replacement**
- **Control Module References** for BCM replacement, programming, and setup.

DTC B3822

DTC Descriptor

DTC B3822 00

Right Rear Window Up Control Circuit

Diagnostic Fault Information

Perform the **Diagnostic System Check - Vehicle** prior to using this diagnostic procedure.

Circuit/System Description

The body control module (BCM) energizes the control side of the right rear power window up relay upon receiving a GMLAN message from the driver door switch (DDS).

Conditions for Running the DTC

- Battery voltage is between 9-16 volts.
- The ignition switch is in the ON position.
- The BCM has attempted to energize the right rear power window up relay control circuit.

Conditions for Setting the DTC

cardiagn.com

The right rear window up circuit is shorted to ground.

Action Taken When the DTC Sets

The BCM will not attempt right rear window up operation.

Conditions for Clearing the DTC

- When the output request is not active the DTC will be a history status code.
- The history code will clear after 50 fault free ignition cycles or by using the scan tool clear DTCs feature.

Reference Information

Schematic Reference

Moveable Window Schematics

Connector End View Reference

- **Vehicle Access Connector End Views**
- **Data Communication Connector End Views**

Electrical Information Reference

- **Circuit Testing**
- **Connector Repairs**
- **Testing for Intermittent Conditions and Poor Connections**
- **Wiring Repairs**

Scan Tool Reference

- **Scan Tool Data List**
- **Scan Tool Output Controls**

Circuit/System Testing

1. Disconnect the right rear window switch connector and connect a test lamp from the up signal circuit to ground.
2. Ignition ON, verify that the test lamp illuminates when the right rear up switch on the DDS is activated.
    - If the test lamp does not illuminate test the right rear window up signal circuit for a short to ground. If the circuit tests normal replace the BCM.
3. If the circuits test normal replace the right rear window switch.

Repair Procedures

cardiagn.com

Perform the **Diagnostic Repair Verification** after completing the diagnostic procedure.

- **Rear Side Door Window Switch Replacement**
- **Control Module References** for BCM replacement, programming, and setup.

DTC B3823

DTC Descriptor

DTC B3823 00

Right Rear Window Down Control Circuit

Diagnostic Fault Information

Perform the **Diagnostic System Check - Vehicle** prior to using this diagnostic procedure.

Circuit/System Description

The body control module (BCM) energizes the control side of the right rear power window down relay upon receiving a GMLAN message from the driver door switch (DDS).

Conditions for Running the DTC

- Battery voltage is between 9-16 volts.
- The ignition switch is in the ON position.
- The BCM has attempted to energize the right rear power window down relay control circuit.

Conditions for Setting the DTC

The right rear window down circuit is shorted to ground.

Action Taken When the DTC Sets

The BCM will not attempt right rear window down operation.

Conditions for Clearing the DTC

- When the output request is not active the DTC will be a history status code.
- The history code will clear after 50 fault free ignition cycles or by using the scan tool clear DTCs feature.

Reference Information

Schematic Reference

Moveable Window Schematics

cardiagn.com

Connector End View Reference

- **Vehicle Access Connector End Views**
- **Data Communication Connector End Views**

Electrical Information Reference

- **Circuit Testing**
- **Connector Repairs**
- **Testing for Intermittent Conditions and Poor Connections**
- **Wiring Repairs**

Scan Tool Reference

- **Scan Tool Data List**
- **Scan Tool Output Controls**

Circuit/System Testing

1. Disconnect the right rear window switch connector and connect a test lamp from the down signal circuit to ground.
2. Ignition ON, verify that the test lamp illuminates when the right rear down switch on the DDS is activated.
    - If the test lamp does not illuminate test the right rear window down signal circuit for a short to ground. If the circuit tests normal replace the BCM.
3. If the circuits test normal replace the right rear window switch.

Repair Procedures

Perform the **Diagnostic Repair Verification** after completing the diagnostic procedure.

- **Rear Side Door Window Switch Replacement**
- **Control Module References** for BCM replacement, programming, and setup.

DTC B3824

DTC Descriptor

DTC B3824 00

Right Rear Window Relay Power Circuit

Diagnostic Fault Information

Perform the **Diagnostic System Check - Vehicle** prior to using this diagnostic procedure.

cardiagn.com

Circuit/System Description

Accessory/RAP voltage is supplied to the right rear power window switch through the window lockout signal circuit. If the window lockout function is disabled, the body control module (BCM) supplies voltage to the rear window switches allowing for normal window operation from the rear switches. If the window lockout function is enabled, the BCM will not supply voltage to the rear window switches and the rear windows will only operate from the driver power window switch through the BCM up and down signal circuits.

Conditions for Running the DTC

- Battery voltage is between 9-16 volts.
- The ignition switch is in the ON position.
- The window lockout function is disabled

Conditions for Setting the DTC

The right rear window lockout circuit is shorted to ground.

Action Taken When the DTC Sets

The right rear power window will be inoperative.

Conditions for Clearing the DTC

- When the fault is no longer present the DTC will be a history status code.
- The history code will clear after 50 fault free ignition cycles or by using the scan tool clear DTCs feature.

Reference Information

Schematic Reference

Moveable Window Schematics

Connector End View Reference

- **Vehicle Access Connector End Views**
- **Data Communication Connector End Views**

Electrical Information Reference

- **Circuit Testing**
- **Connector Repairs**
- **Testing for Intermittent Conditions and Poor Connections**
- **Wiring Repairs**

Scan Tool Reference

cardiagn.com

- **Scan Tool Data List**
- **Scan Tool Output Controls**

Circuit/System Testing

1. Disconnect the right rear window switch connector and connect a test lamp from the lockout signal circuit to ground.
2. Ignition ON, verify that the test lamp illuminates while the rear window lockout function is inactive.
   - If the test lamp does not illuminate test the right rear window lockout signal circuit for a short to ground. If the circuit tests normal replace the BCM.
3. If the circuits test normal replace the right rear window switch.

Repair Procedures

Perform the **Diagnostic Repair Verification** after completing the diagnostic procedure.

- **Rear Side Door Window Switch Replacement**
- **Control Module References** for BCM replacement, programming, and setup.

SYMPTOMS - FIXED AND MOVEABLE WINDOWS

IMPORTANT: The following steps must be completed before using the symptom tables.

1. Perform the **Diagnostic System Check - Vehicle** before using the Symptom Tables in order to verify that all of the following are true:
   - There are no DTCs set.
   - The control modules can communicate via the serial data link.
2. Review the system operation in order to familiarize yourself with the system functions. Refer to the following system descriptions:
   - **Power Windows Description and Operation**
   - **Rear Window Defogger Description and Operation**

Visual/Physical Inspection

- Inspect for aftermarket devices which could affect the operation of the system. Refer to **Checking Aftermarket Accessories** .
- Inspect the easily accessible or visible system components for obvious damage or conditions which could cause the symptom.

Intermittent

Faulty electrical connections or wiring may be the cause of intermittent conditions. Refer to **Testing for Intermittent Conditions and Poor Connections** .

cardiagn.com

Symptom List

Refer to a symptom diagnostic procedure from the following list in order to diagnose the symptom:

- **Defogger Grid Lines Diagnosis**
- **Defogger Inoperative - Rear Window**
- **Power Window Inoperative - Driver Door**
- **Power Window Inoperative - Passenger Door (Front)** or **Power Window Inoperative - Passenger Door (Rear)**
- **Power Window Lockout Function Inoperative**
- **Rear Window Release Inoperative**

DEFOGGER GRID LINES DIAGNOSIS

This test is for reference only. A grid line fault requires the rear window replacement. Refer to **Rear Side Door Window Replacement**.

1. Start the engine.
2. Activate the rear window defogger system.
3. Connect a test lamp to a good ground.

cardiagn.com

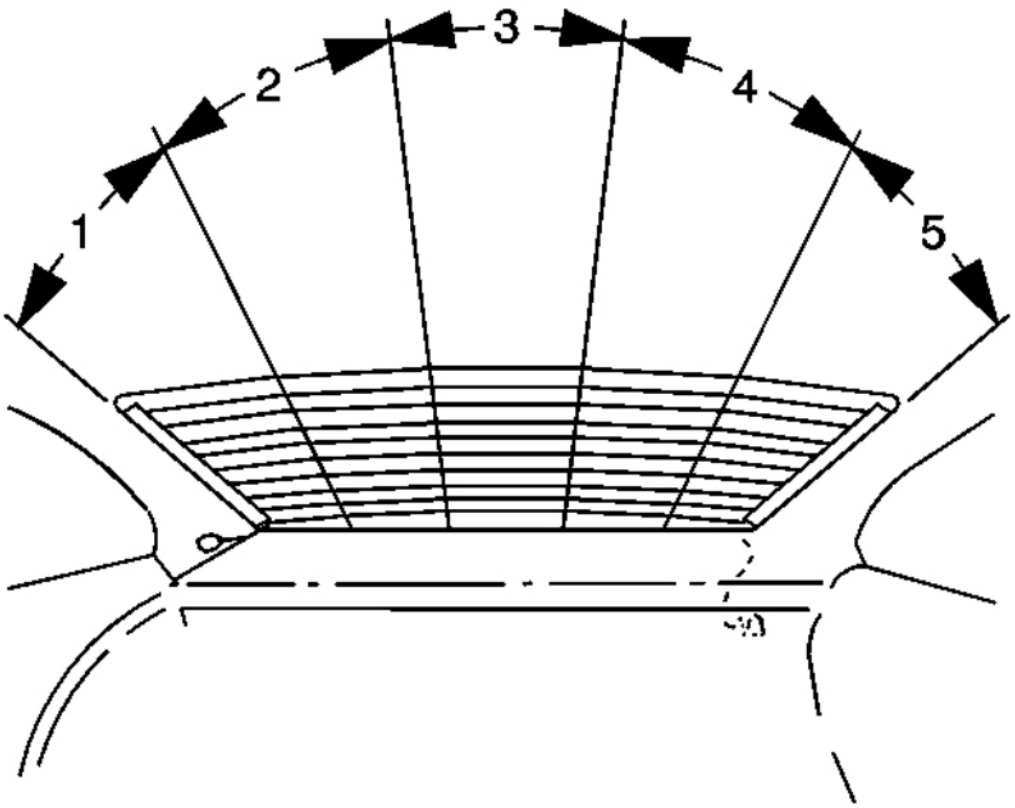

Fig. 20: Identifying Defogger Grid Line Zones
Courtesy of GENERAL MOTORS CORP.

IMPORTANT: The test lamp brilliance will decrease proportionately to the increased resistance in the grid line as the probe is moved from the battery positive bus wire to the ground bus wire. The test lamp brilliance may vary from one window to another.

4. Move the test lamp probe from zone 5 to zone 1 along each grid line.
   - If the test lamp shows full brilliance at both ends of the grid lines, inspect for an open or poor connection in the ground circuit of the rear window defogger grid. Refer to **Testing for Intermittent Conditions and Poor Connections** and **Connector Repairs** .

cardiagn.com

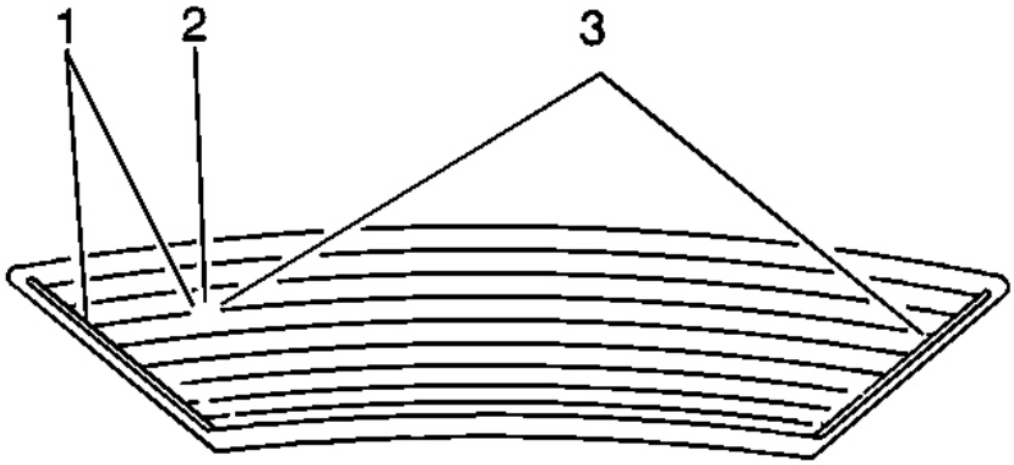

Fig. 21: Identifying Grid Line Test Locations
Courtesy of GENERAL MOTORS CORP.

- If the test lamp goes out, test the grid line in at least 2 places (1, 3) to eliminate the possibility of bridging the open (2) in the grid line.

DEFOGGER INOPERATIVE - REAR WINDOW

Defogger Inoperative - Rear Window

Step	Action	Yes	No
Schematic Reference: Defogger Schematics **Connector End View Reference: Window Systems Connector End Views**			
1	Did you perform the Diagnostic System Check - Vehicle?	Go to **Step 2**	Go to **Diagnostic System Check - Vehicle**
2	1. Start the engine. 2. Depress the rear window defogger switch. 3. Observe the rear window defogger indicator on the HVAC control module. Does the rear window defogger indicator illuminate?	Go to **Step 3**	Go to **Step 8**
3	Connect a test lamp between the rear window defogger grid and a good ground. Does the test lamp illuminate?	Go to **Step 4**	Go to **Step 5**
	Connect a test lamp between the left side of the rear	Go to **Testing for**	

cardiagn.com

4	window defogger grid and the right side of the rear window defogger grid. Does the test lamp illuminate?	**Intermittent Conditions and Poor Connections**	Go to **Step 10**
5	1. Turn OFF the ignition. 2. Disconnect the RR DEFOG relay. 3. Turn ON the ignition, with the engine OFF. 4. Connect a test lamp between the battery positive voltage circuit of the RR DEFOG relay switched input and a good ground. Does the test lamp illuminate?	Go to **Step 6**	Go to **Step 7**
6	1. Connect a 40-amp fused jumper between the battery positive voltage circuit of the RR DEFOG relay switched input and the relay switched output to the supply voltage circuit of the rear window defogger. 2. Connect a test lamp between the rear window defogger grid and a good ground. Does the test lamp illuminate?	Go to **Step 9**	Go to **Step 12**
7	Test the battery positive voltage circuit of the RR DEFOG relay switched input for an open or high resistance. Refer to **Circuit Testing** and **Wiring Repairs** . Did you find and correct the condition?	Go to **Step 15**	Go to **Step 11**
8	Inspect for poor connection at the harness connector of the HVAC control module. Refer to **Testing for Intermittent Conditions and Poor Connections** and **Connector Repairs** . Did you find and correct the condition?	Go to **Step 15**	Go to **Step 13**
9	Inspect for poor connection at the RR DEFOG relay. Refer to **Testing for Intermittent Conditions and Poor Connections** and **Connector Repairs** . Did you find and correct the condition?	Go to **Step 15**	Go to **Step 14**
10	Repair an open or high resistance in the ground circuit of the rear window defogger. Refer to **Wiring Repairs** . Did you complete the repair?	Go to **Step 15**	-
11	Repair a short to ground in the supply voltage circuit of the rear window defogger. Refer to **Wiring Repairs** . Did you complete the repair?	Go to **Step 15**	-
12	Repair an open or high resistance in the supply circuit of the rear window defogger. Refer to **Wiring**		

cardiagn.com

	Repairs . Did you complete the repair?	Go to **Step 15**	-
13	Replace the HVAC control module. Refer to **Control Module References** for replacement, setup, and programming. Did you complete the replacement?	Go to **Step 15**	-
14	Replace the RR DEFOG relay. Did you complete the replacement?	Go to **Step 15**	-
15	Operate the system in order to verify the repair. Did you correct the condition?	System OK	Go to **Step 2**

POWER WINDOW INOPERATIVE - DRIVER DOOR

Diagnostic Fault Information

Perform the **Diagnostic System Check - Vehicle** prior to using this diagnostic procedure.

Power Window Inoperative - Driver Door

Circuit	Short to Ground	Open/High Resistance	Short to Voltage	Signal Performance
Window Motor Down Control	B3205 00 B3205 0B	1	B3205 00	-
Window Motor Up Control	B3205 00 B3205 0B	1	B3205 00	-
1. Driver Power Window Inoperative				

Circuit/System Description

The driver and passenger door lock and side window switches are integrated control module switch assemblies. When a power window switch is activated in the up or down positions the Driver Door Switch (DDS) supplies power and ground to the window motor control circuits to drive the window motor in the required direction. Prior to activating a power window motor the DDS will supply the control circuit with a low current bias voltage in order to determine that a short to ground condition does not exist and during window motor operation the DDS continues to monitor the motor current to verify proper window motor operation.

Reference Information

Schematic Reference

Moveable Window Schematics

Connector End View Reference

Window Systems Connector End Views

Electrical Information Reference

cardiagn.com

- **Circuit Testing**
- **Connector Repairs**
- **Testing for Intermittent Conditions and Poor Connections**
- **Wiring Repairs**

Scan Tool Reference

- **Scan Tool Data List**
- **Scan Tool Output Controls**

Circuit/System Testing

1. Install a scan tool and display the Driver Door Switch Inputs data list.
2. Activate the driver window switch in the up, down, and express down positions and verify that the Driver LF Window Switch displays the correct parameter in relation to the actual switch position.
   - If the switch parameter is incorrect, replace the DDS.
3. Disconnect the power window motor connector and connect a test lamp between the control circuit terminals in the harness connector.
4. Verify that the test lamp illuminates when the switch is activated in both directions.
   - If the test lamp does not illuminate, test the window motor control circuits for a open/high resistance. If the circuits test normal replace the DDS.
5. If the circuits test normal replace the driver window motor.

Repair Procedures

Perform the **Diagnostic Repair Verification** after completing the diagnostic procedure.

- **Front Side Door Window Regulator Motor Replacement**
- **Control Module References** for DDS replacement, programming, and setup.

POWER WINDOW INOPERATIVE - PASSENGER DOOR (FRONT)

Diagnostic Fault Information

Perform the **Diagnostic System Check - Vehicle** prior to using this diagnostic procedure.

Power Window Inoperative - Passenger Door (Front)

Circuit	Short to Ground	Open/High Resistance	Short to Voltage	Signal Performance
Window Motor Down Control	B3205 00 B3205 0B	1	B3205 00	-
Window Motor Up Control	B3205 00 B3205 0B	1	B3205 00	-

cardiagn.com

1. Passenger Power Window Inoperative

Circuit/System Description

The driver and passenger door lock and side window switches are integrated control module switch assemblies. The Driver Door Switch controls the passenger window through a GMLAN message to the Passenger Door Switch (PDS). When a power window switch is activated in the up or down positions the PDS supplies power and ground to the window motor control circuits to drive the window motor in the required direction. Prior to activating a power window motor the PDS will supply the control circuit with a low current bias voltage in order to determine that a short to ground condition does not exist, and during window motor operation the PDS continues to monitor the motor current to verify proper window motor operation.

Reference Information

Schematic Reference

Moveable Window Schematics

Connector End View Reference

Window Systems Connector End Views

Electrical Information Reference

- **Circuit Testing**
- **Connector Repairs**
- **Testing for Intermittent Conditions and Poor Connections**
- **Wiring Repairs**

Scan Tool Reference

- **Scan Tool Data List**
- **Scan Tool Output Controls**

Circuit/System Testing

Passenger Power Window Inoperative from Driver Switch

1. Install a scan tool and display the Driver Door Switch Inputs data list.
2. Activate the passenger window switch in the up, down, and express down positions and verify that the Passenger LF Window Switch displays the correct parameter in relation to the actual switch position.
   - If the switch parameter is incorrect, replace the DDS.
3. Display the Passenger Door Switch Inputs data list.
4. Activate the passenger window switch in the up, down, and express down positions and verify that the Passenger Window Switch displays the correct parameter in relation to the actual switch position.

cardiagn.com

- If the switch parameter is incorrect, replace the PDS.

5. Disconnect the power window motor connector and connect a test lamp between the control circuit terminals in the harness connector.
6. Verify that the test lamp illuminates when the switch is activated in both directions.
   - If the test lamp does not illuminate, test the window motor control circuits for a open/high resistance. If the circuits test normal replace the PDS.
7. If the circuits test normal replace the passenger window motor.

Repair Procedures

Perform the **Diagnostic Repair Verification** after completing the diagnostic procedure.

- **Front Side Door Window Regulator Motor Replacement**
- **Control Module References** for DDS or PDS replacement, programming, and setup.

POWER WINDOW INOPERATIVE - PASSENGER DOOR (REAR)

Diagnostic Fault Information

Perform the **Diagnostic System Check - Vehicle** prior to using this diagnostic procedure.

Circuit/System Description

The rear passenger power window switches are supplied battery voltage through 25A circuit breakers in the IP fuse panel. The rear door window switch up and down relays control power and ground to the window motors through the motor control circuits. The rear window switch relays can be energized by the integrated rocker switch or by the BCM through the up and down signal circuits. While a rear window switch is in an inactive state both of the window motor control circuits are grounded through the up and down relays. When an up or down relay is energized the battery supply circuit is closed to the corresponding motor control circuit while the other control circuit remains grounded through the de-energized relay. The BCM supplies the rocker switches with accessory/RAP voltage through the lockout control circuit while the lockout function is inactive. The supply side of all the window up and down relays receive voltage through the battery voltage supply circuit and the LT DOOR or RT DOOR circuit breakers respectively. The rear passenger power windows can also be operated from the DDS through a GMLAN message to the BCM. The rear passenger window switches on the DDS have 2 positions UP and Down their position is a direct input into the DDS. When the BCM receives a command to operate a rear window up or down the appropriate signal circuit is used to energize the up or down relay in the rear door window switch.

Reference Information

Schematic Reference

Moveable Window Schematics

Connector End View Reference

cardiagn.com

Window Systems Connector End Views

Electrical Information Reference

- Circuit Testing
- Connector Repairs
- Testing for Intermittent Conditions and Poor Connections
- Wiring Repairs

Scan Tool Reference

- Scan Tool Data List
- Scan Tool Output Controls

Circuit/System Testing

Rear Power Window Inoperative

1. Disconnect the rear power window switch.
2. Verify that a test lamp illuminates when connected from battery voltage to the ground circuit terminal in the switch connector.
   - If the test lamp does not illuminate repair the ground circuit for an open/high resistance.
3. Ignition on and the rear window lockout function off, verify that a test lamp illuminates when connected from the lockout signal circuit to ground.
   - If the test lamp does not illuminate test the lockout signal circuit for an open/high resistance. If the circuit tests normal replace the BCM.
4. Verify that a test lamp illuminates when connected from the switch supply circuit to ground.
   - If the test lamp does not illuminate repair the supply circuit for an open/high resistance or short to ground.
5. Disconnect the power window motor connector and connect the power window switch connector.
6. Verify that a test lamp illuminates when connected across the window motor control circuit terminals while the switch is operated in both directions.
   - If the test lamp does not illuminate test the motor control circuits circuit for an open/high resistance or short to ground. If the circuits test normal replace the power window switch.
7. If the circuits test normal replace the power window motor.

Rear Power Window Inoperative from Driver Door Switch

1. Install a scan tool and display the Driver Door Switch Inputs data list.
2. Activate the rear window switches in both directions and verify that the rear window switch parameters display the correct parameter in relation to the actual switch position.
   - If the switch parameter is incorrect, replace the DDS.
3. Activate the rear window lockout function on and off and verify that the scan tool parameter displays on

cardiagn.com

and off.
  - If the rear window lockout parameter is incorrect, replace the DDS.
4. Display the BCM Doors data list.
5. Activate the rear window switches in both directions and verify that the rear window switch parameters display the correct parameter in relation to the actual switch position.
  - If the switch parameter is incorrect, replace the BCM.
6. Disconnect the inoperative rear power window switch connector.
7. Verify that a test lamp illuminates when connected from the up and down signal circuits to ground while the DDS rear window switch is operated up and down.
  - If the test lamp does not illuminate test the appropriate signal circuit for an open/high resistance. If the circuit tests normal replace the BCM.
8. If the circuits test normal replace the rear door power window switch.

Repair Procedures

Perform the **Diagnostic Repair Verification** after completing the diagnostic procedure.

- **Rear Side Door Window Regulator Motor Replacement (Power)**
- **Rear Side Door Window Switch Replacement**
- **Control Module References** for DDS or BCM replacement, programming, and setup.

POWER WINDOW LOCKOUT FUNCTION INOPERATIVE

Diagnostic Fault Information

Perform the **Diagnostic System Check - Vehicle** prior to using this diagnostic procedure.

Power Window Lockout Function Inoperative

Circuit	Short to Ground	Open/High Resistance	Short to Voltage	Signal Performance
Left Rear Power Window Lockout Signal	B3821 00	1	1	-
Left Rear Power Window Lockout Signal	B3824 00	1	1	-
1. Power Window Lockout Function Inoperative				

Circuit/System Description

Accessory/RAP voltage is supplied to the left rear power window switch through the window lockout signal circuit. If the window lockout function is disabled, the body control module (BCM) supplies voltage to the rear window switches allowing for normal window operation from the rear switches. If the window lockout function is enabled, the BCM will not supply voltage to the rear window switches and the rear windows will only operate from the driver power window switch through the BCM up and down signal circuits.

cardiagn.com

Reference Information

Schematic Reference

Moveable Window Schematics

Connector End View Reference

Window Systems Connector End Views

Electrical Information Reference

- **Circuit Testing**
- **Connector Repairs**
- **Testing for Intermittent Conditions and Poor Connections**
- **Wiring Repairs**

Scan Tool Reference

- **Scan Tool Data List**
- **Scan Tool Output Controls**

Circuit/System Testing

Power Window Lockout Function Inoperative

1. Install a scan tool and display the Driver Door Switch Inputs data list.
2. Ignition on, verify that the window lockout switch parameter displays On only while the lockout switch is pressed.
   - If the switch parameter is incorrect, replace the DDS.
3. Display the Body Control Module Doors data list.
4. Verify that the LR and RR Window Enable Command parameters change form On to Off when the lockout function is activated.
   - If the enable command parameters are incorrect, replace the BCM.
5. Disconnect the affected rear door power window switch connector, and activate the rear window lockout function.
6. Verify that a test lamp does not illuminate when connected from the lockout signal circuit terminal to ground.
   - If the test lamp illuminates, test the lockout signal circuit for a short to voltage. If the circuit tests normal replace the BCM.
7. If the circuits test normal replace the affected rear door power window switch.

Repair Procedures

cardiagn.com

Perform the **Diagnostic Repair Verification** after completing the diagnostic procedure.

- **Rear Side Door Window Switch Replacement**
- **Control Module References** for DDS or BCM replacement, programming, and setup.

REAR WINDOW RELEASE INOPERATIVE

Diagnostic Fault Information

Perform the **Diagnostic System Check - Vehicle** prior to using this diagnostic procedure.

Rear Window Release Inoperative

Circuit	Short to Ground	Open/High Resistance	Short to Voltage	Signal Performance
Liftglass Release Switch Signal	1	1	1	-
Liftglass Latch Release Signal	B3265	1	1	-
Liftglass Release Actuator Control	1	1	1	-
Liftglass Release Switch Ground	-	1	-	-
Liftglass Release Actuator Ground	-	1	-	-
1. Liftglass Latch Release Inoperative				

Circuit/System Description

The liftglass release switch is an input to the body control module (BCM). The BCM supplies battery voltage to the signal circuit and when the release switch is activated the signal circuit voltage goes low. The BCM controls the liftglass release actuator through the rear wiper motor control module. When the release switch signal is activated the BCM applies battery voltage to the liftglass latch release signal circuit. The rear wiper motor control module supplies voltage to the release actuator through the liftglass release actuator control circuit.

Reference Information

Schematic Reference

Lift Gate Schematics

Connector End View Reference

Vehicle Access Connector End Views

Electrical Information Reference

- **Circuit Testing**
- **Connector Repairs**
- **Testing for Intermittent Conditions and Poor Connections**
- **Wiring Repairs**

cardiagn.com

Scan Tool Reference

- **Scan Tool Output Controls**
- **Scan Tool Data List**

Circuit/System Verification

1. Install a scan tool and display Liftglass Release Switch parameter in the BCM Inputs data list.
2. Ignition ON, the parameter should be active only when the release switch is activated.
   - If the scan tool parameter does not display the actual switch state perform the Liftglass Release Switch Circuit Test.
3. Attempt to activate the Liftglass Release Actuator form the scan tool BCM output controls.
   - If the liftglass release actuator can not be activated using the scan tool output controls function perform the Liftglass Release Output Circuit Test.
   - If the release switch input and the actuator output both function properly, another BCM input may be preventing the liftglass release action from being performed.

Circuit/System Testing

Liftglass Release Switch Circuit Test

1. Disconnect the BCM connector C6.
2. Connect a test lamp from battery voltage to the liftglass release switch circuit terminal in the harness connector.
3. Verify the test lamp is not illuminated while the release switch is inactive.
   - If the test lamp remains illuminated the signal circuit is shorted to ground or the switch contacts are shorted closed.
4. Verify the test lamp is illuminated while the release switch is active.
   - If the test lamp does not illuminate an open is present in the signal circuit, switch or ground.
5. If the release switch circuits test normal replace the BCM.

Liftglass Release Output Circuit Test

1. Disconnect the rear wiper motor connector.
2. Ignition ON, verify that battery voltage is present on the liftglass latch release signal circuit while the liftglass release switch is activated.
   - If battery voltage is not present, test the liftglass latch release signal circuit for an open or high resistance. If the circuit tests normal replace the BCM.
3. Connect the rear wiper motor connector.
4. Disconnect the liftglass latch actuator connector. Connect a test lamp from the latch actuator control circuit terminal to the ground circuit terminal in the harness connector.
5. Verify that the test lamp illuminates when the liftglass release switch is activated.

cardiagn.com

- If the test lamp does not illuminate test the control and ground circuits for an open or short to ground. If the circuits test normal replace the rear wiper motor module.

6. If the liftglass release output circuits test normal replace the liftglass latch release actuator.

Repair Procedures

Perform the **Diagnostic Repair Verification** after completing the diagnostic procedure.

REPAIR INSTRUCTIONS

WINDSHIELD REPLACEMENT

Tools Required

- **J 24402-A** Glass Sealant Cold Knife Remover. See **Special Tools**.
- **J 39032** Stationary Window Removal Tool. See **Special Tools**.
- Urethane Adhesive Kit GM P/N 12346392 or Equivalent
- Isopropyl Alcohol or Equivalent
- Cartridge-type Caulking Gun
- Commercial-type Utility Knife
- Razor Blade Scraper
- Suction Cups
- Plastic Paddle

Removal Procedure

CAUTION: Refer to Glass and Sheet Metal Handling Caution .

IMPORTANT: Before cutting out a stationary window, apply a double layer of masking tape around the perimeter of the painted surfaces and the interior trim.

1. Remove the fixed antenna mast if equipped. Refer to **Fixed Antenna Replacement (Avalanche/Escalade EXT)** .
2. Open the hood.
3. Remove the window wiper arms. Refer to **Wiper Arm Replacement** .
4. Remove the air inlet grille panel. Refer to **Air Inlet Grille Panel Replacement** .
5. Remove the outside moisture sensor. Refer to **Windshield Outside Moisture Sensor Replacement** .
6. Remove the inside rearview mirror. Refer to **Rearview Mirror Replacement** .

cardiagn.com

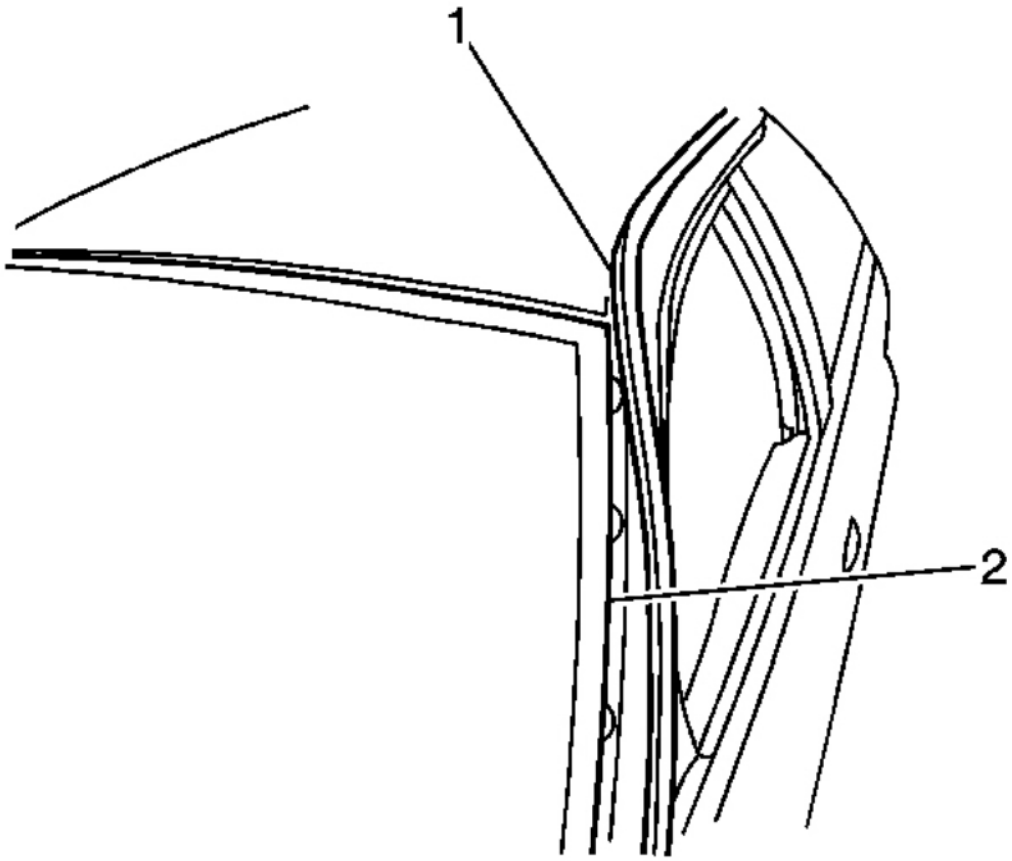

Fig. 22: View Of Front Door Sealing Weatherstrips & Side Reveal Molding Screws
Courtesy of GENERAL MOTORS CORP.

7. Reposition the front door sealing weatherstrips (1) in order to access the side reveal molding screws. You do not have to remove the front door sealing weatherstrip completely from the vehicle.

cardiagn.com

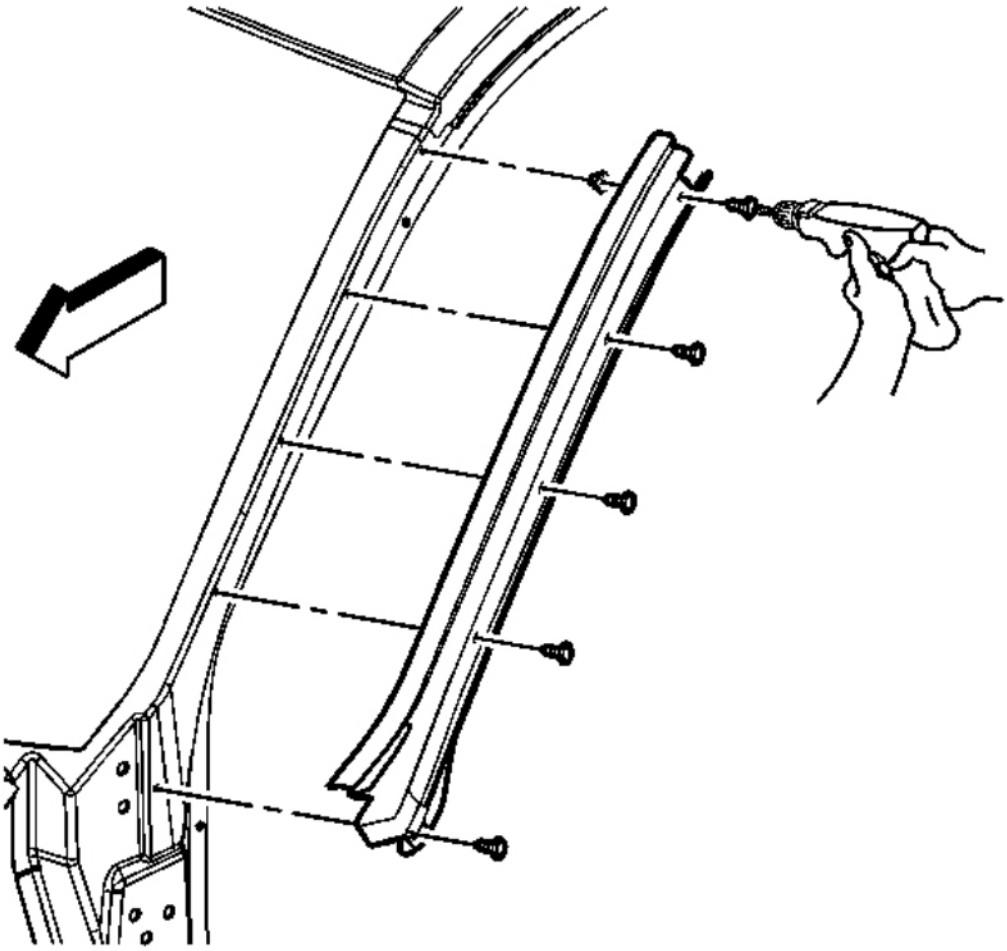

Fig. 23: Removing Screws From Window Side Reveal Moldings
Courtesy of GENERAL MOTORS CORP.

CAUTION: Refer to Cracked Window Caution .

8. Remove the screws from the left and the right sides of window side reveal moldings.

cardiagn.com

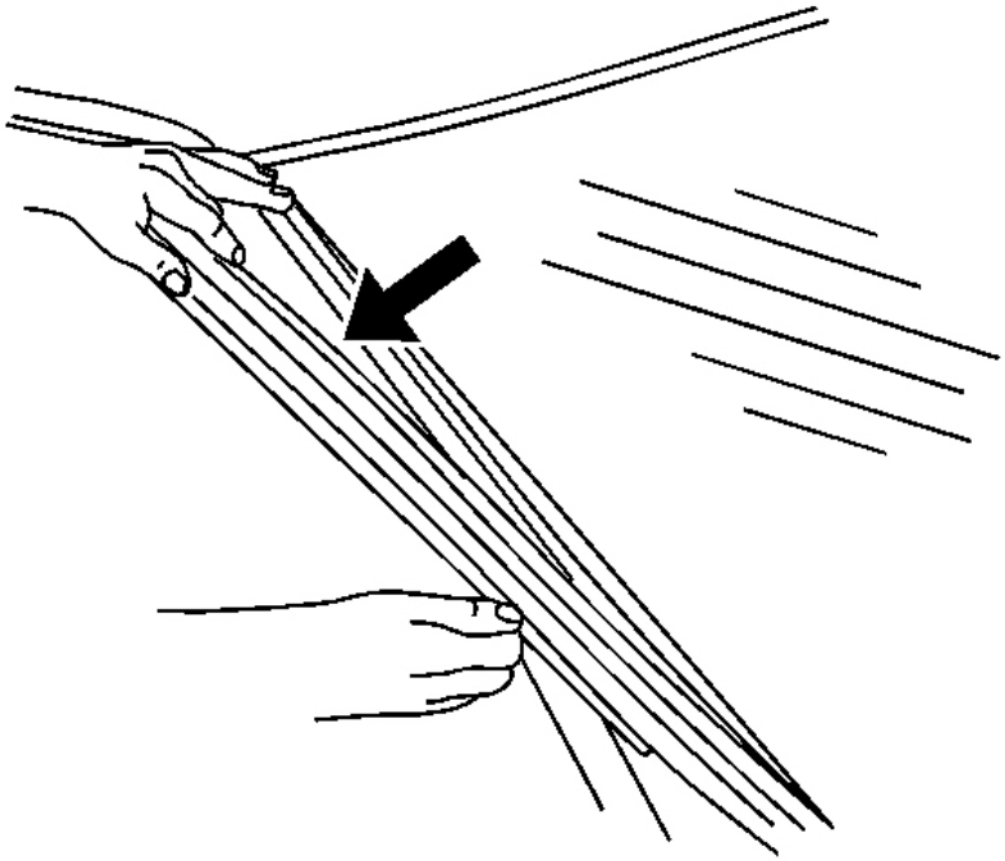

Fig. 24: View Of Reveal Molding
Courtesy of GENERAL MOTORS CORP.

9. Remove the reveal moldings from the vehicle.

CAUTION: If broken glass falls into the defroster outlets, it can be blown into the passenger compartment and cause personal injury.

10. Cover the following parts to protect from broken glass:
    1. The upper dash pad
    2. The defroster outlets and A/C outlets
    3. The seats and the carpeting

cardiagn.com

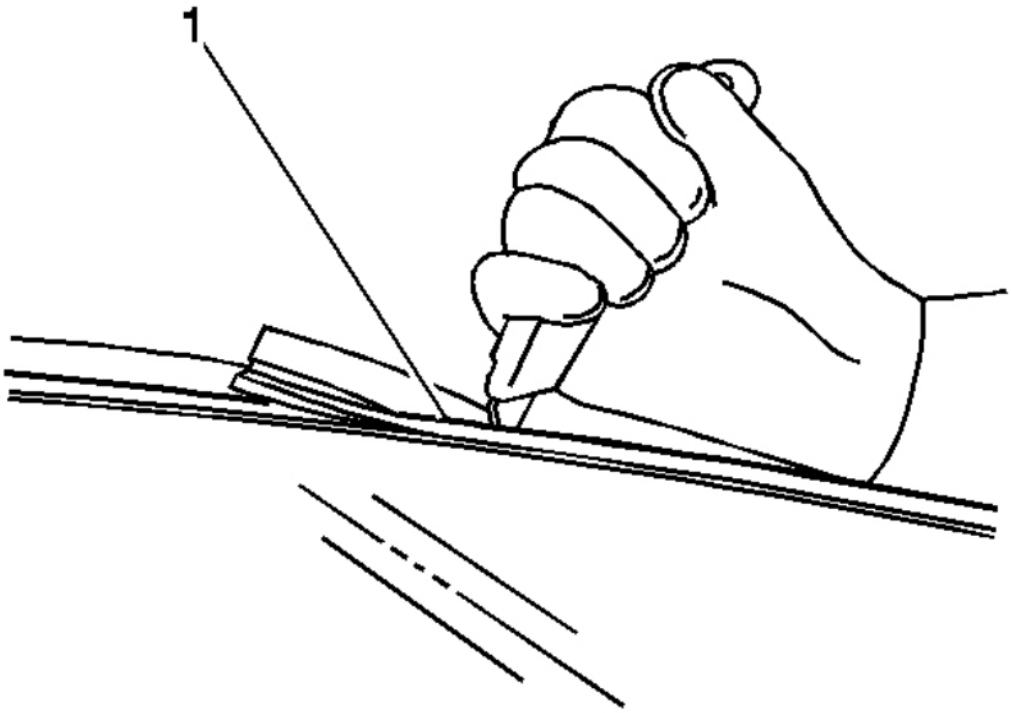

Fig. 25: Using Utility Knife To Remove Reveal Molding
Courtesy of GENERAL MOTORS CORP.

IMPORTANT: The upper window reveal molding fills the cavities between the body and window. If the reveal molding is stretched or damaged, replace the molding.

11. Remove the upper window reveal molding (1).

cardiagn.com

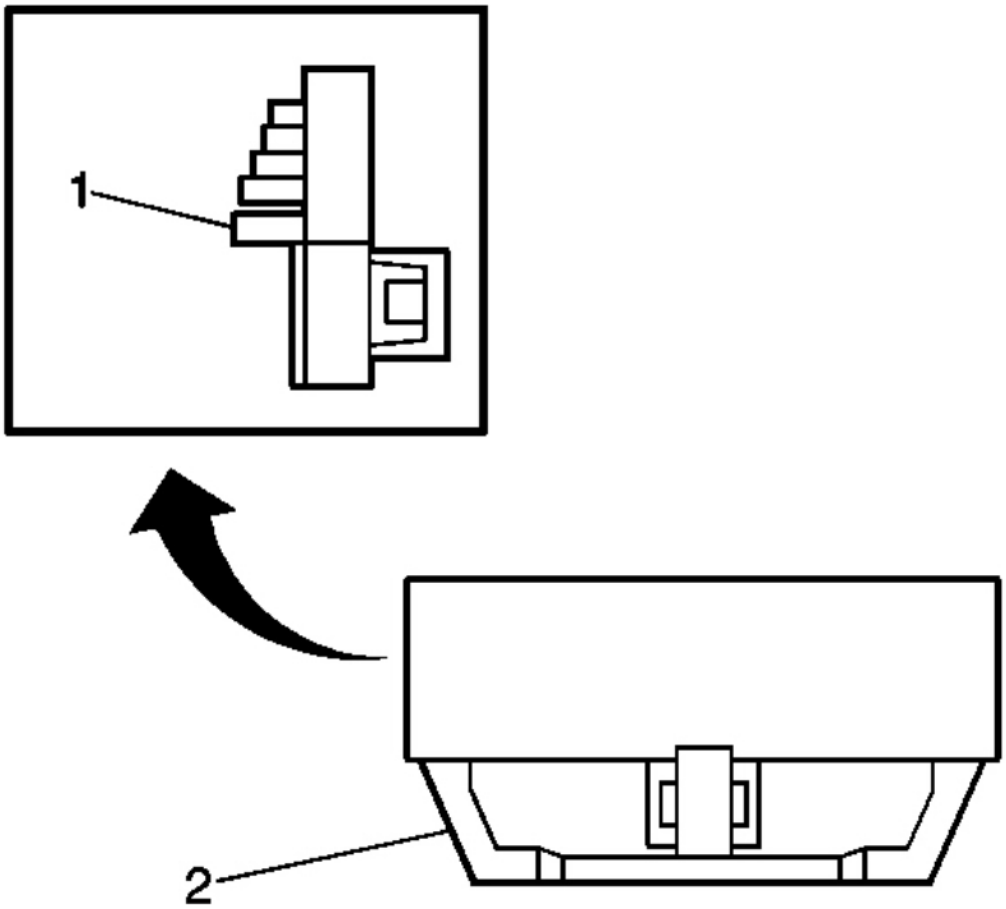

Fig. 26: Window Lower Supports
Courtesy of GENERAL MOTORS CORP.

IMPORTANT: The window lower supports have molded locks with an urethane adhesive strip on the back side. Once the window lower stops have been removed, the stops must be replaced.

12. Remove the window lower supports (1) by using a flat-bladed tool, lightly prying upward in the middle until the support releases.

cardiagn.com

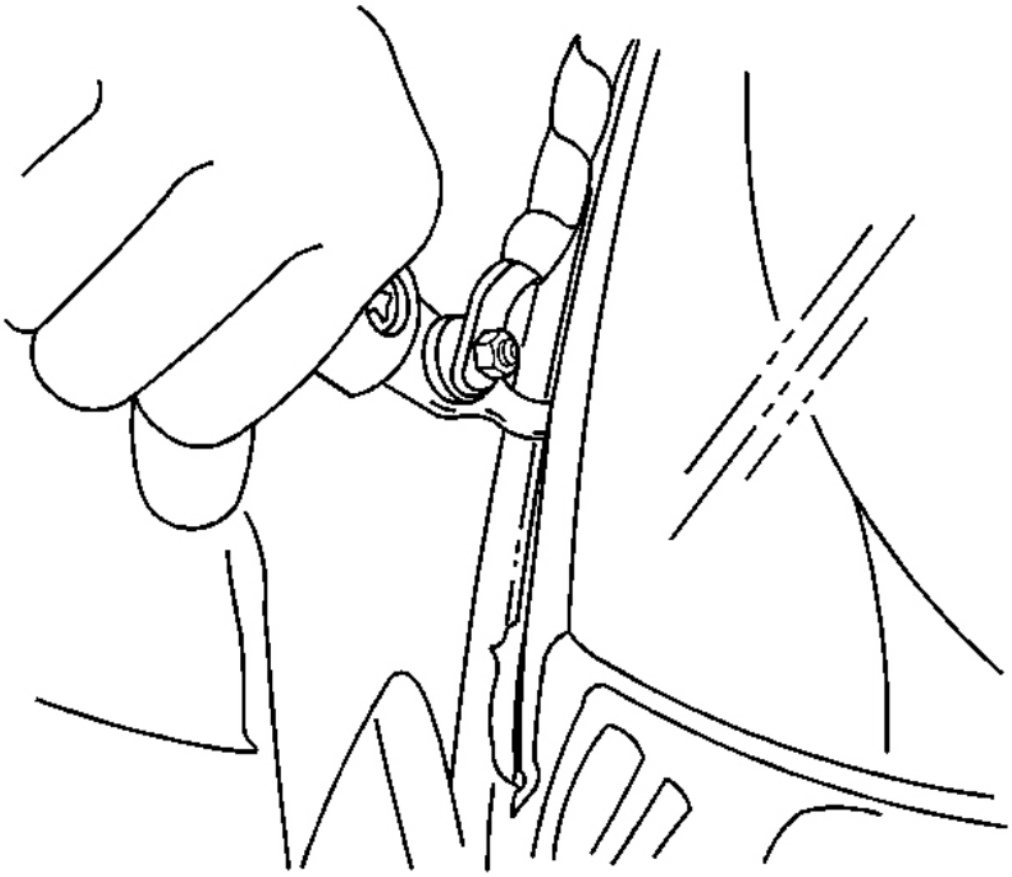

Fig. 27: Separating Urethane Adhesive From Window
Courtesy of GENERAL MOTORS CORP.

IMPORTANT: Keep the cutting edge of the tool against the window in order to properly separate the urethane adhesive from the window.

13. Use **J 24402-A** , **J 39032** , or equivalent in order to remove the window. See **Special Tools**.
    - Leave a base of urethane on the pinchweld flange.
    - The only suitable lubrication is clear water.

cardiagn.com

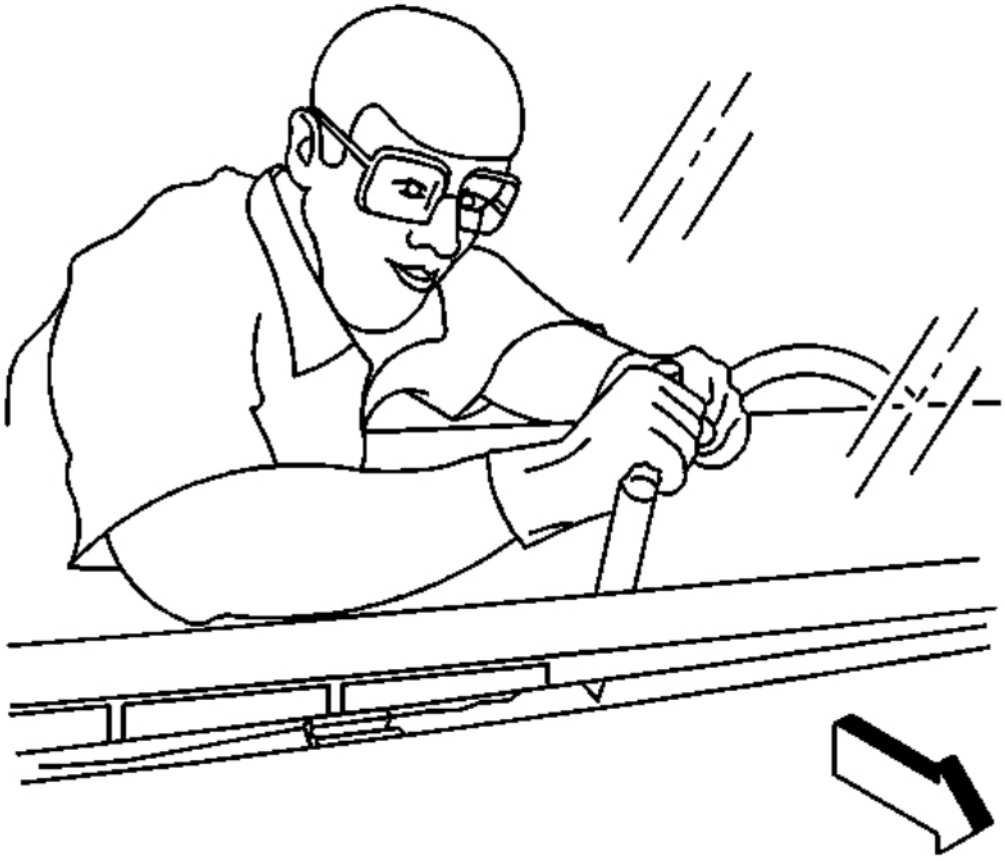

Fig. 28: Separating Bottom Of Window
Courtesy of GENERAL MOTORS CORP.

14. Remove the bottom of the window from the urethane adhesive using a long utility knife or similar tool.

cardiagn.com

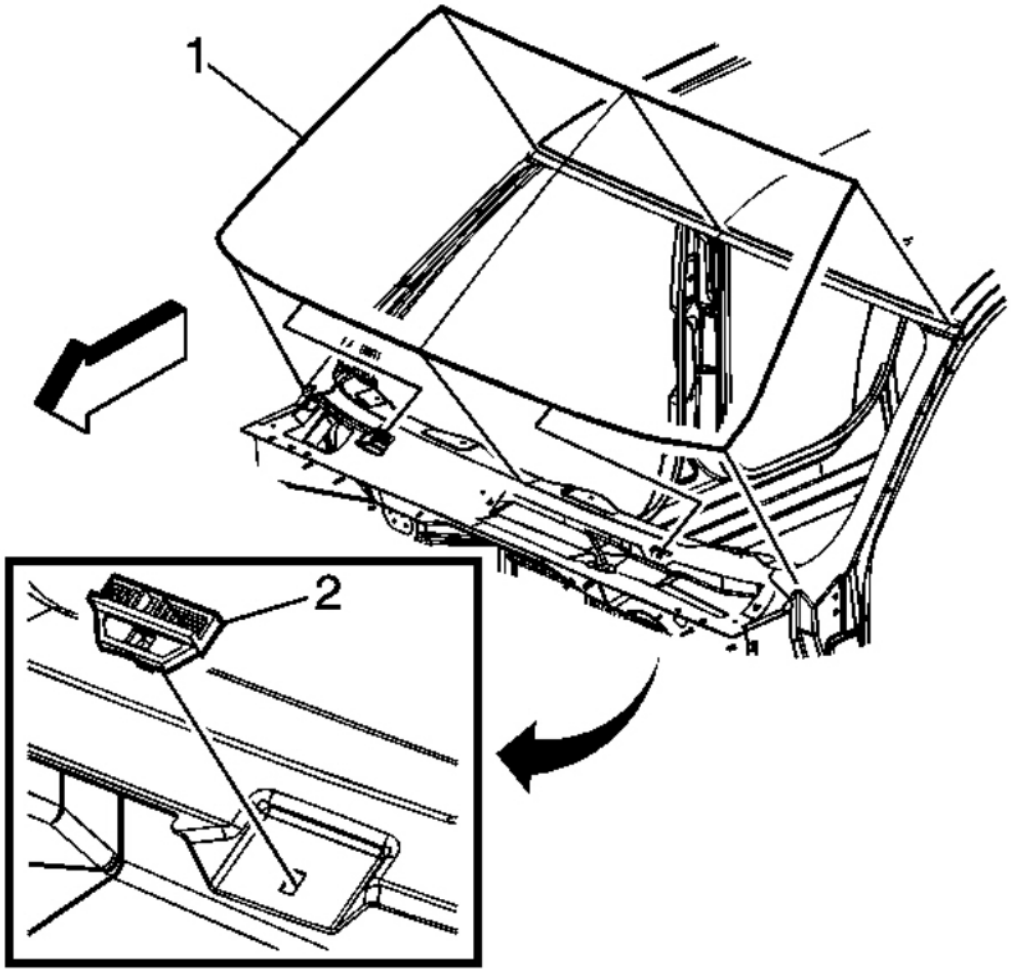

Fig. 29: View Of Removed Window
Courtesy of GENERAL MOTORS CORP.

15. With the aid of an assistant remove the window (1) from the vehicle.

Installation Procedure

1. Install a stationary window into the opening. Refer to **Urethane Adhesive Installation of Stationary Windows (Quarter Window)** or **Urethane Adhesive Installation of Stationary Windows (Windshield)**.

cardiagn.com

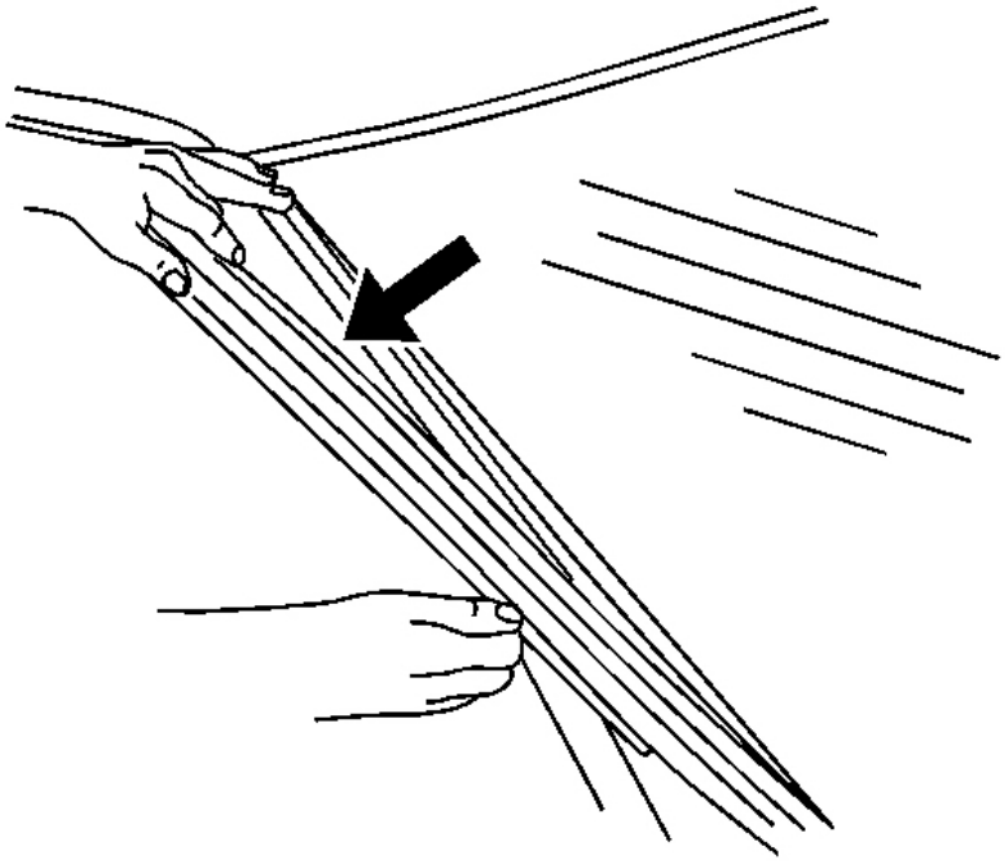

Fig. 30: View Of Reveal Molding
Courtesy of GENERAL MOTORS CORP.

2. Install the window side reveal moldings to the vehicle.

cardiagn.com

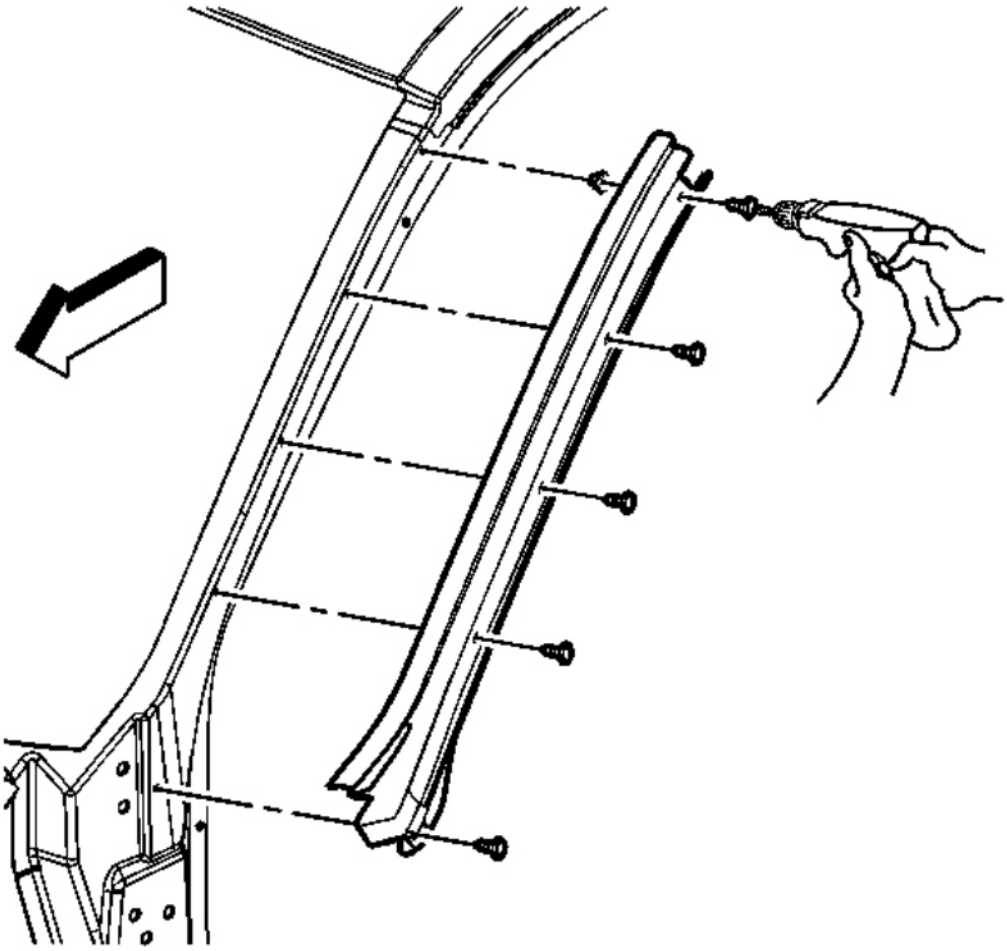

Fig. 31: Installing Screws Into Window Side Reveal Moldings
Courtesy of GENERAL MOTORS CORP.

NOTE: **Refer to Fastener Notice .**

3. Install the screws to the left and the right sides of the window side reveal moldings.

   Tighten: Tighten the screws to 2 N.m (18 lb in).

cardiagn.com

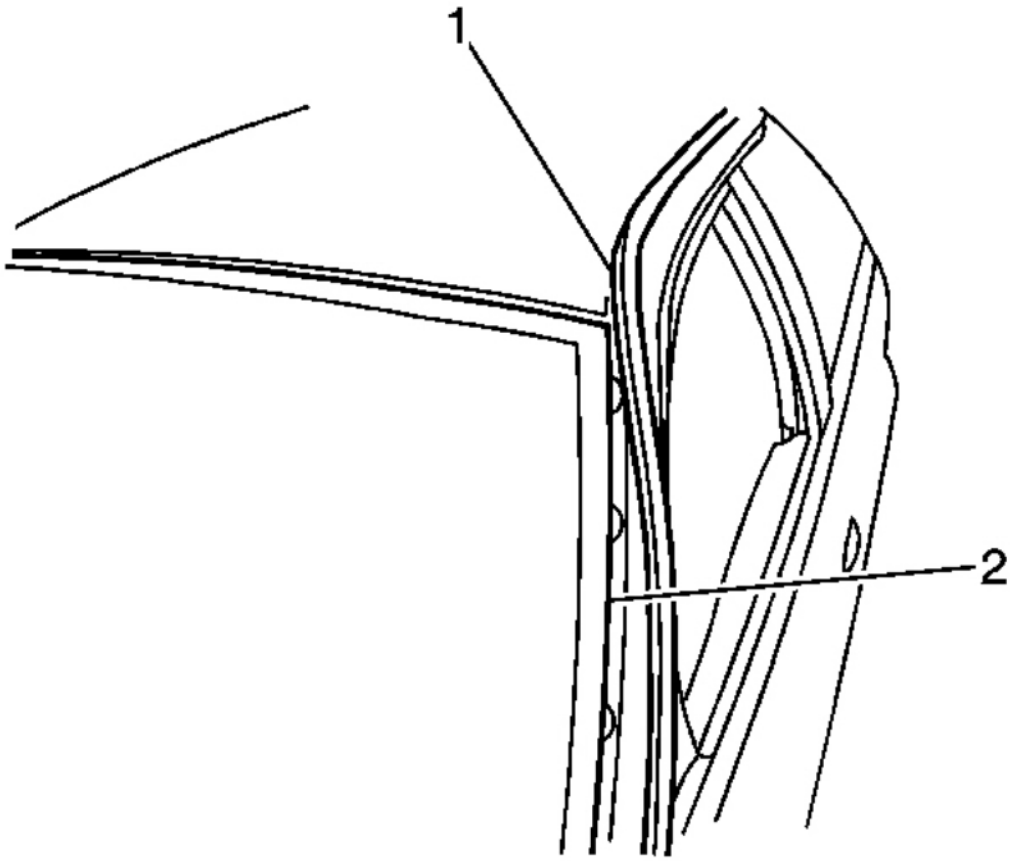

Fig. 32: View Of Front Door Sealing Weatherstrips & Side Reveal Molding Screws
Courtesy of GENERAL MOTORS CORP.

4. Install the front door sealing weatherstrips (1) to the retainer (2).
5. Install the cowl air inlet grille panel. Refer to **Air Inlet Grille Panel Replacement** .
6. Install the window wiper arms. Refer to **Wiper Arm Replacement** .
7. Install the antenna mast, if equipped. Refer to **Fixed Antenna Replacement (Avalanche/Escalade EXT)** .
8. Install the outside moisture sensor. Refer to **Windshield Outside Moisture Sensor Replacement** .
9. Install the inside rearview mirror. Refer to **Rearview Mirror Replacement** .
10. Close the hood.
11. Remove the double layer of masking tape around the perimeter of the painted surfaces and the interior trim.

cardiagn.com

WINDSHIELD UPPER REVEAL MOLDING REPLACEMENT

Removal Procedure

IMPORTANT: The windshield upper reveal molding requires removal of the windshield for proper installation.

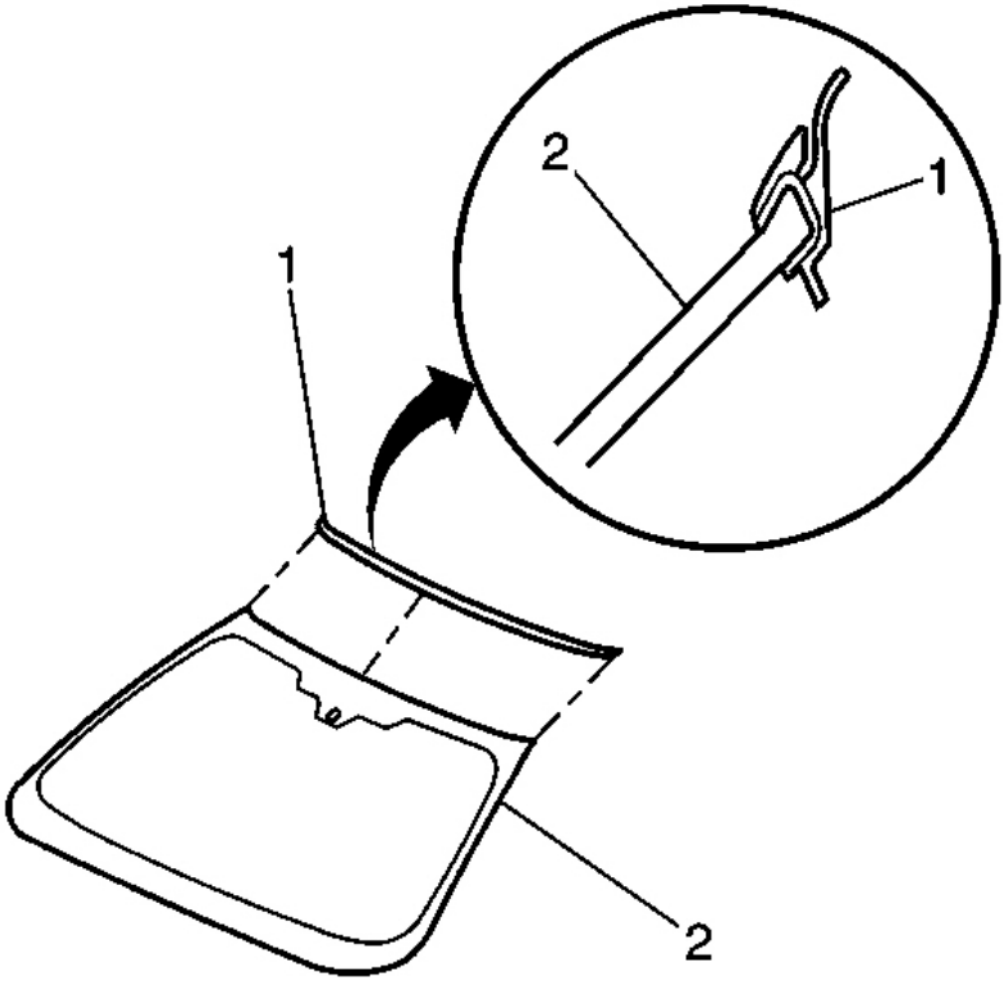

Fig. 33: Identifying Upper Reveal Molding from Windshield
Courtesy of GENERAL MOTORS CORP.

1. Remove the windshield. Refer to **Windshield Replacement**.

cardiagn.com

Remove the upper reveal molding (1) from the windshield (2) starting at the center and working outboard to both ends.

2. Remove the upper reveal molding from the windshield.

Installation Procedure

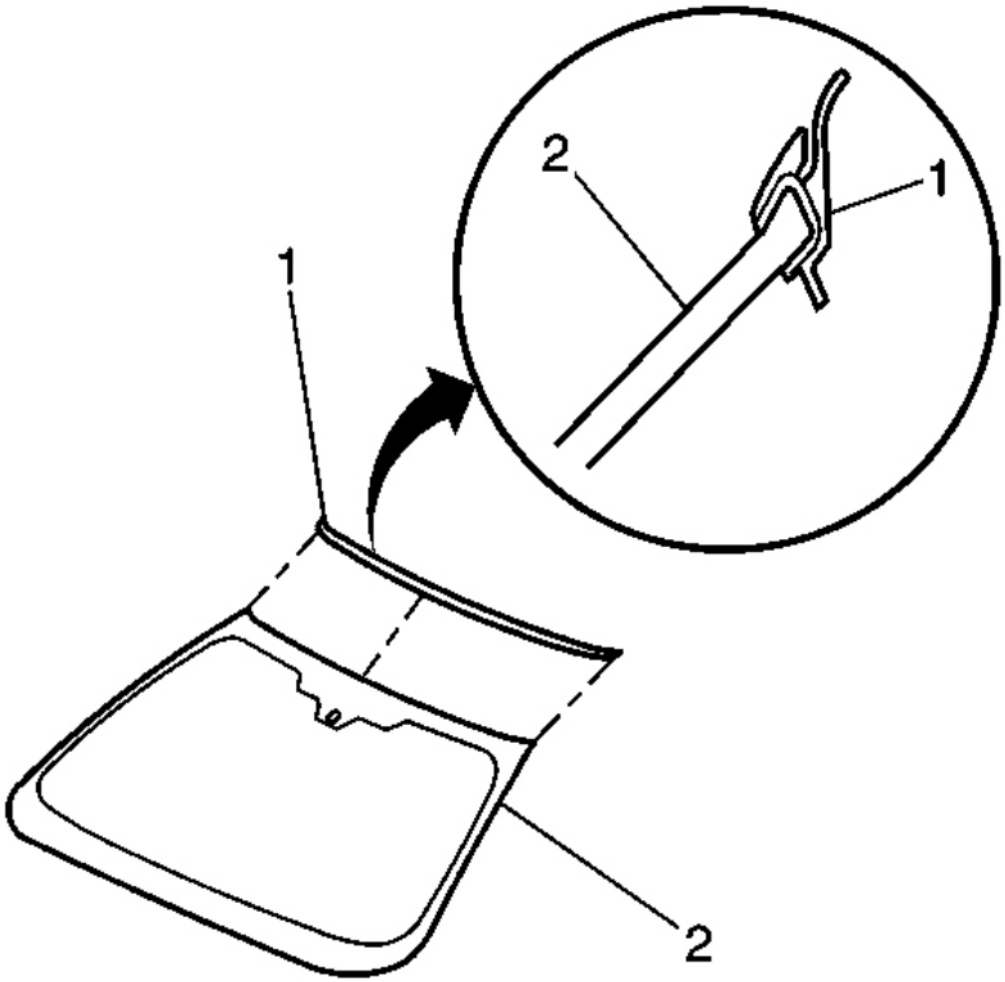

Fig. 34: Identifying Upper Reveal Molding from Windshield
Courtesy of GENERAL MOTORS CORP.

1. Install the upper reveal molding (1) to the windshield (2).
2. Align the notch in the molding to the center mark on the upper paint band on the windshield.

cardiagn.com

3. Press the upper reveal molding on to the windshield starting at the center and working outboard to both sides.
4. Install the windshield. Refer to **Windshield Replacement**.

WINDSHIELD SIDE REVEAL MOLDING REPLACEMENT

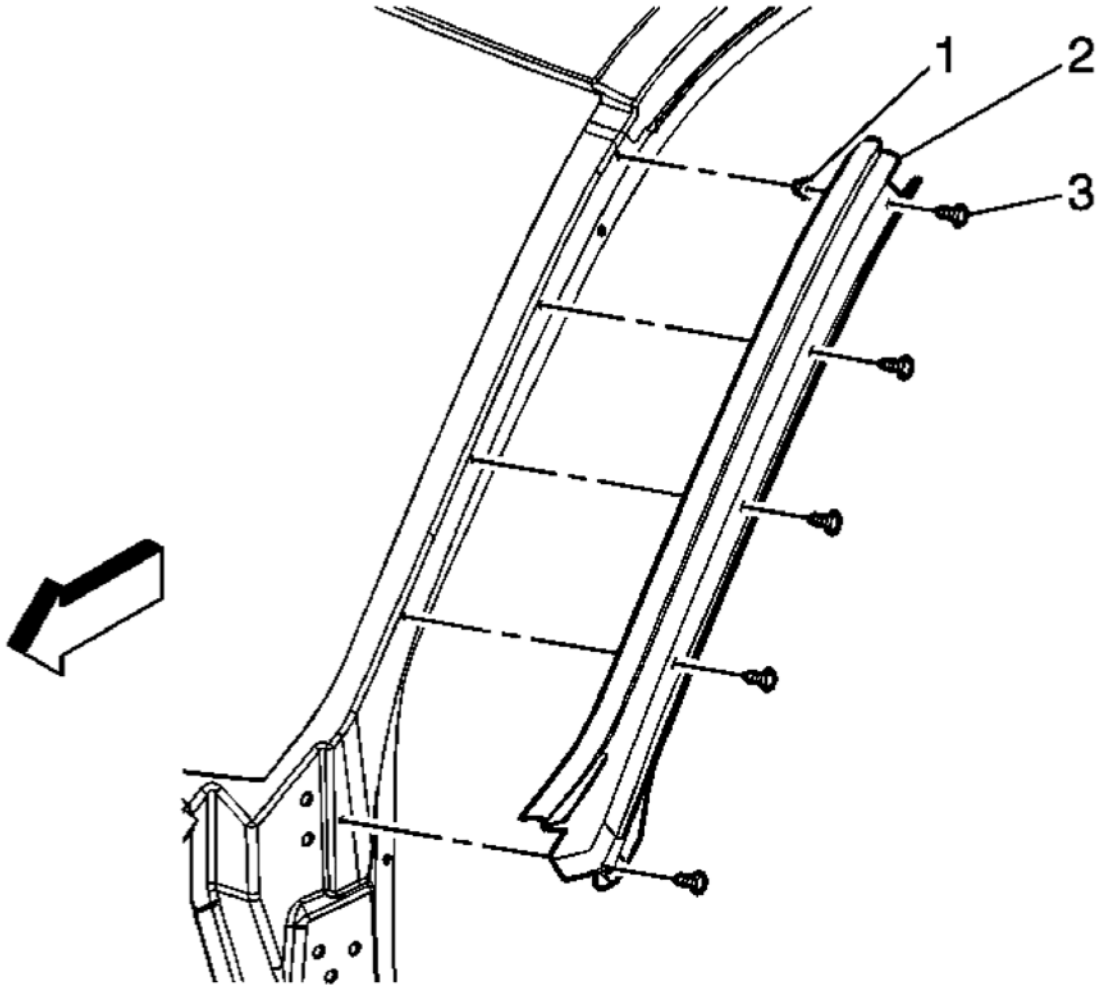

Fig. 35: View Of Window Side Reveal Molding, Screws & Nuts
Courtesy of GENERAL MOTORS CORP.

Windshield Side Reveal Molding Replacement

Callout	Component Name
Preliminary Procedures 1. Open the front door on the side the reveal molding is being serviced. 2. Pull the door auxiliary weatherstrip up to the roof header. 3. Remove the air inlet grille panel end cap.	

cardiagn.com

1	Reveal Molding Nuts
2	Windshield Side Reveal Molding **Tip:** Upon installation, tuck the bottom edge of the reveal molding under the end cap of the air inlet grille panel prior to the screw installation.
3	Windshield Side Reveal Molding Screws (Qty: 5) **NOTE:** **Refer to Fastener Notice .** **Tighten:** 2 N.m (18 lb in)

FRONT SIDE DOOR WINDOW REPLACEMENT

cardiagn.com

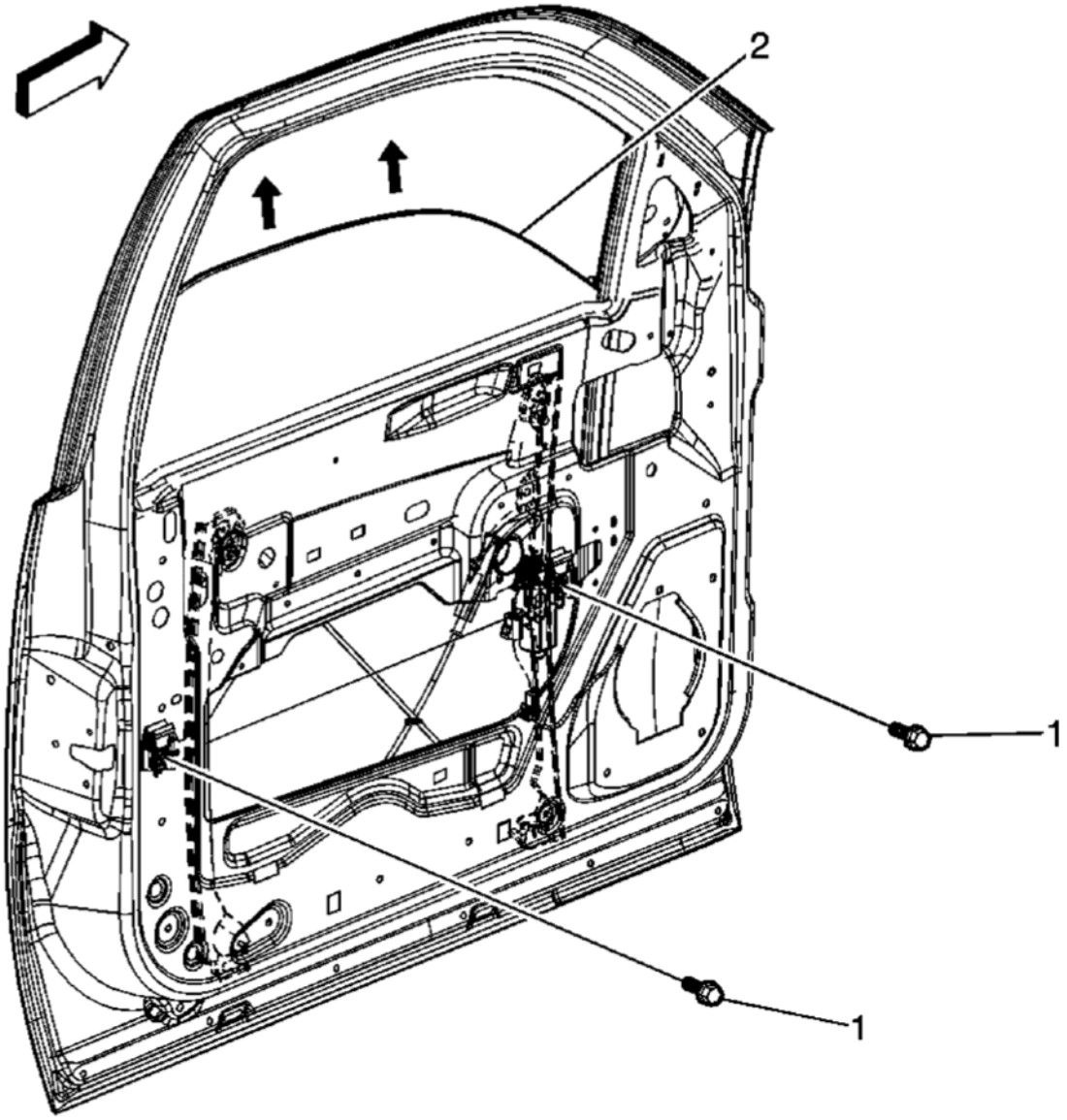

Fig. 36: View Of Front Door Window & Bolts
Courtesy of GENERAL MOTORS CORP.

Front Side Door Window Replacement

Callout	Component Name

CAUTION:
Refer to SIR Caution .

Preliminary Procedures

1. Disable the supplemental inflatable restraint (SIR) system. Refer to **SIR Disabling and Enabling** .
2. Position the front side door window approximately half way down in the door.

cardiagn.com

3. Remove the front door trim panel. Refer to **Front Side Door Trim Panel Replacement** . 4. Remove the front door water deflector. Refer to **Front Side Door Water Deflector Replacement** . 5. Remove the front side door inner belt sealing strip. Refer to **Sealing Strip Replacement - Front Door Window Belt Inner**.	
1	Front Door Window Bolts (Qty: 2) **NOTE:** **Refer to Fastener Notice .** **Tighten:** 10 N.m (89 lb in) **Tip:** Loosen the 2 bolts that attach the window to the window regulator.
2	Front Door Window

REAR SIDE DOOR WINDOW REPLACEMENT

cardiagn.com

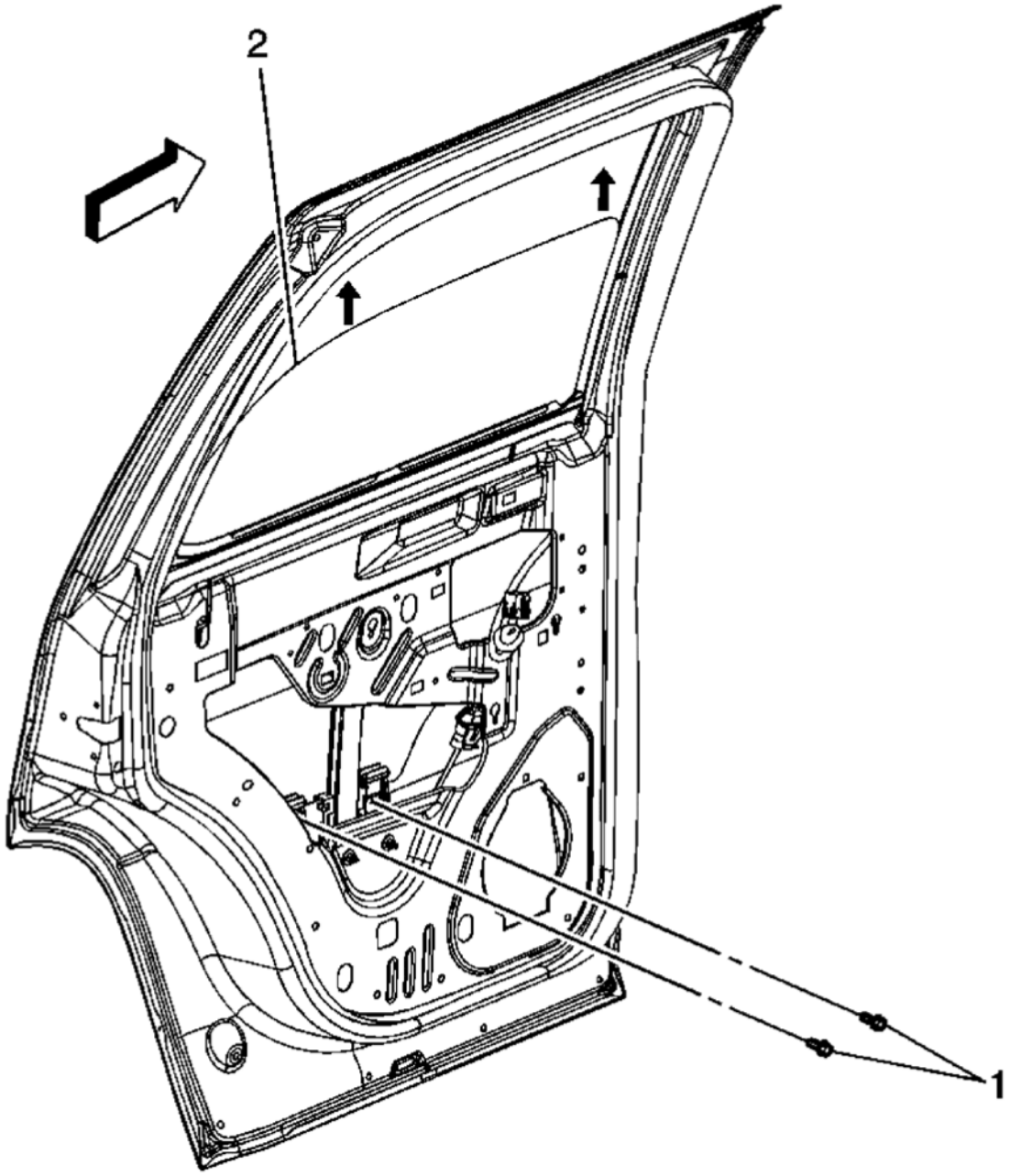

Fig. 37: View Of Rear Door Window & Bolts
Courtesy of GENERAL MOTORS CORP.

Rear Side Door Window Replacement

Callout	Component Name
CAUTION: **Refer to SIR Caution .**	

cardiagn.com

Preliminary Procedures

1. Disable the supplemental inflatable restraint (SIR) system. Refer to **SIR Disabling and Enabling** .
2. Position the rear door window approximately half way down in the door.
3. Remove the rear door trim panel. Refer to **Rear Side Door Trim Panel Replacement (Suburban/Yukon XL/Escalade ESV)** or **Rear Side Door Trim Panel Replacement (Tahoe/Yukon/Escalade)** .
4. Remove the rear door water deflector. Refer to **Rear Side Door Water Deflector Replacement** .
5. Remove the rear door window channel. Refer to **Rear Side Door Window Channel Replacement**.

1	Rear Door Window Bolts (Qty: 2) **NOTE:** **Refer to Fastener Notice .** **Tighten:** 7 N.m (61 lb in) **Tip:** Loosen the 2 bolts that attach the window to the window regulator.
2	Rear Door Window

QUARTER WINDOW REPLACEMENT

Tools Required

- **J 24402-A** Glass Sealant Cold Knife Remover. See **Special Tools**.
- **J 39032** Stationary Glass Removal Tool. See **Special Tools**.
- Urethane Adhesive Kit GM P/N 12346392 or equivalent
- Isopropyl Alcohol or Equivalent
- Cartridge-type Caulking Gun
- Commercial-type Utility Knife
- Razor Blade Scraper
- Suction Cups
- Plastic Paddle

Removal Procedure

CAUTION: Refer to Glass and Sheet Metal Handling Caution .

CAUTION: Refer to Cracked Window Caution .

cardiagn.com

IMPORTANT: Before cutting out a stationary window, apply a double layer of masking tape around the perimeter of the painted surfaces and the interior trim.

1. Open the liftgate.

CAUTION: If broken glass falls into the defroster outlets, it can be blown into the passenger compartment and cause personal injury.

2. Cover the following parts to protect from broken glass:
    1. The upper dash pad
    2. The defroster outlets and A/C outlets
    3. The seats and the carpeting
3. Remove the right or left side applique.
4. Disconnect the electrical connector from the quarter window.
5. If the antenna on the quarter is damaged, replace the quarter window.

cardiagn.com

Fig. 38: Separating Urethane Adhesive From Window
Courtesy of GENERAL MOTORS CORP.

IMPORTANT: Keep the cutting edge of the tool against the quarter window from inside the vehicle. This will allow the urethane adhesive to be separated from the window.

6. Use **J 24402-A** , **J 39032** , or equivalent in order to remove the quarter window. See **Special Tools**.
   - Leave a base of urethane on the pinchweld flange.
   - The only suitable lubrication is clear water.

cardiagn.com

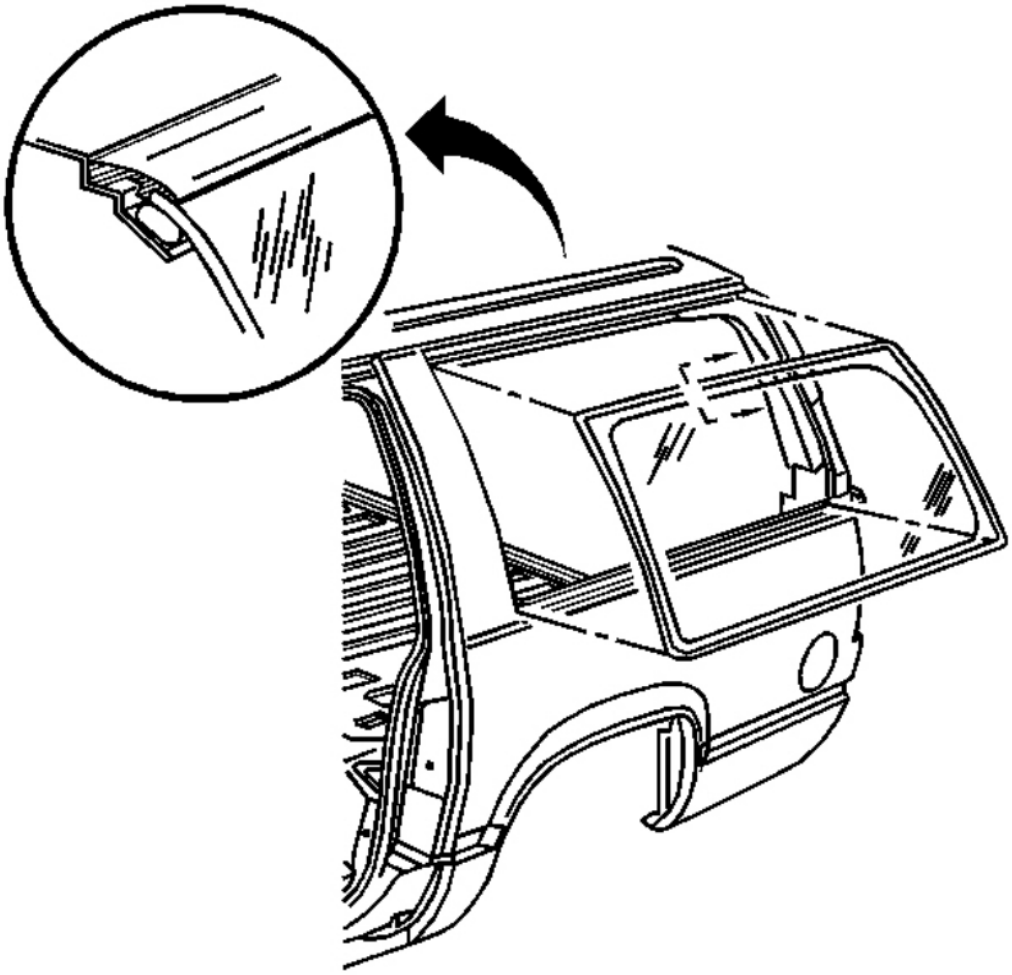

Fig. 39: View Of Quarter Window
Courtesy of GENERAL MOTORS CORP.

7. With the aid of an assistant, use the suction cups to remove the window from the opening.

Installation Procedure

cardiagn.com

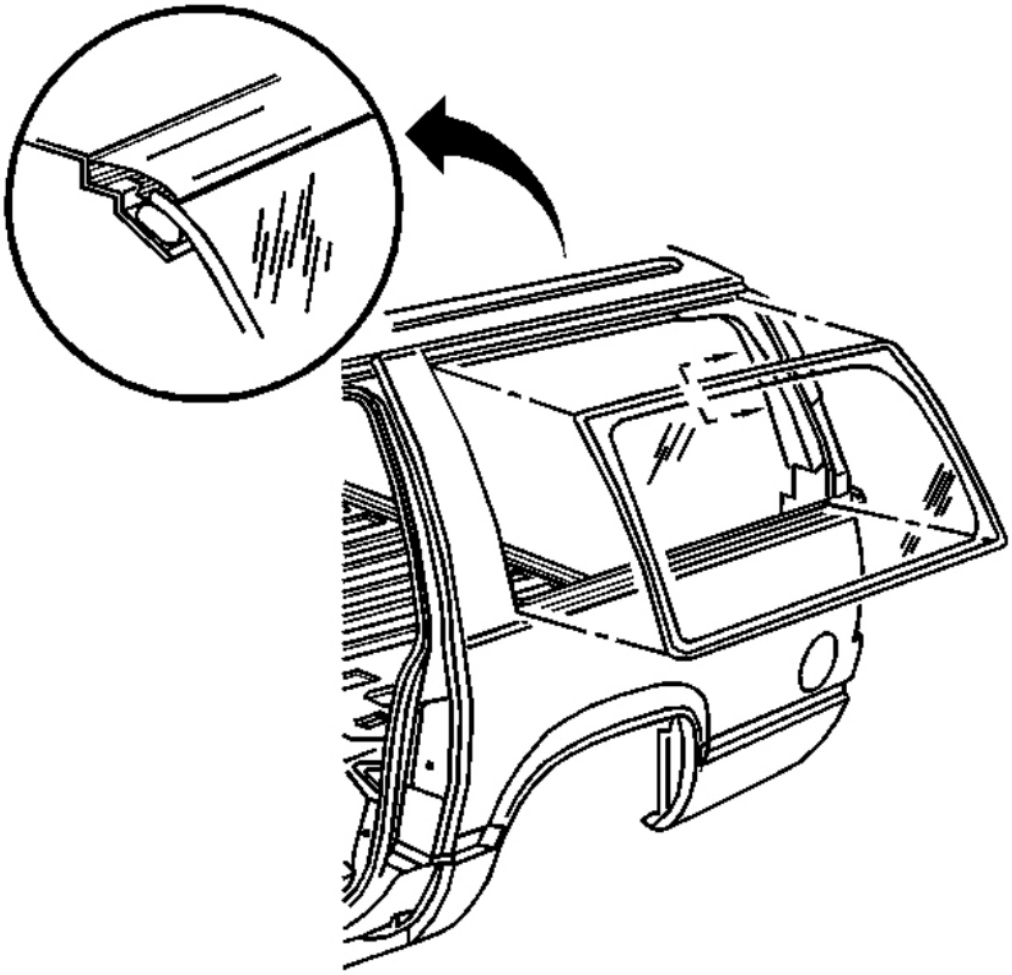

Fig. 40: View Of Quarter Window
Courtesy of GENERAL MOTORS CORP.

1. Install the quarter window. Refer to **Urethane Adhesive Installation of Stationary Windows (Quarter Window)** or **Urethane Adhesive Installation of Stationary Windows (Windshield)**.
2. Install the right of left side applique.
3. Connect the electrical connector to the quarter window.
4. Ensure that the radio has reception.
5. Remove the double layer of masking tape around the perimeter of the painted surfaces and the interior trim.
6. Close the liftgate window.

cardiagn.com

LIFT GATE WINDOW REPLACEMENT

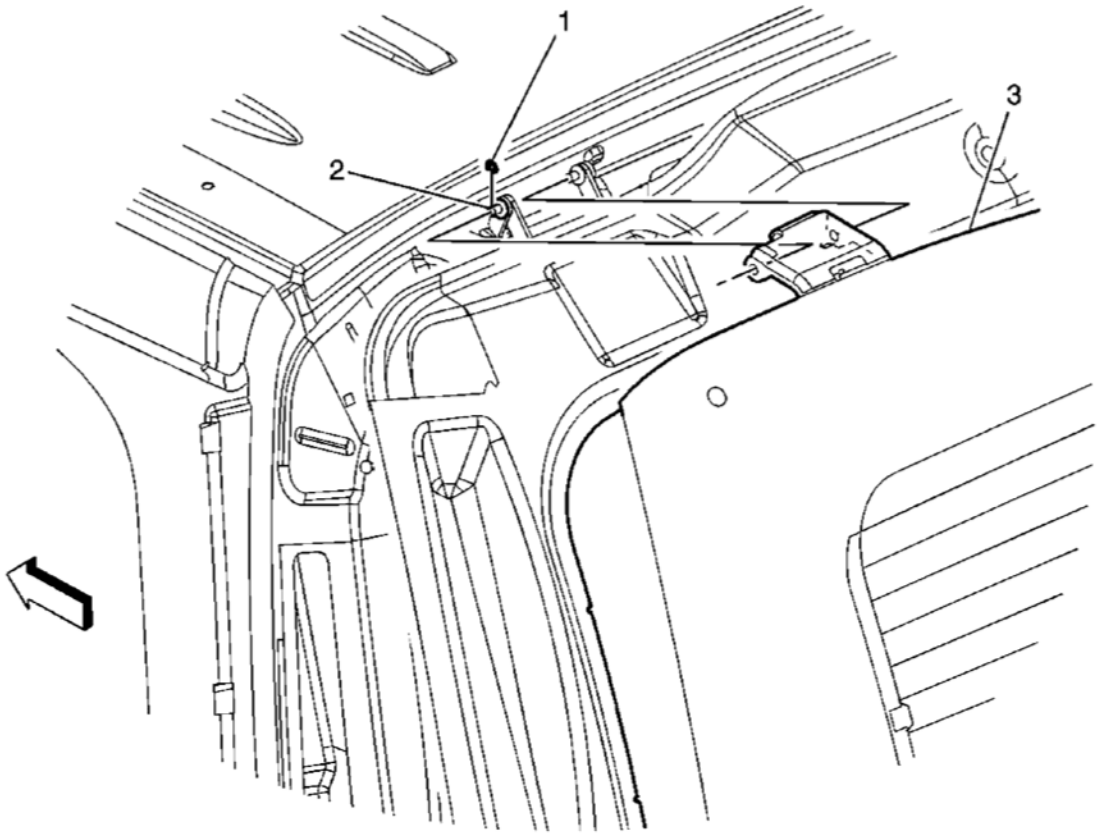

Fig. 41: View Of Liftgate Window & Components
Courtesy of GENERAL MOTORS CORP.

Lift Gate Window Replacement

Callout	Component Name
CAUTION: **When a lift gate hold open device is being removed or installed, provide alternate support to avoid the possibility of damage to the vehicle or personal injury.** **Preliminary Procedure** 1. Disconnect the liftgate window support struts. Refer to **Lift Gate Strut Replacement** . 2. Remove the center high mounted stop lamp applique. Refer to **Back Body Opening Upper Applique Replacement** . 3. Remove the liftgate garnish molding. Refer to **Liftgate Garnish Molding Replacement** .	
1	Liftgate Window Hinge E-Ring (Qty: 2)
2	Liftgate Window Hinge Bushing (Qty: 4)
	Liftgate Window

cardiagn.com

3	**Tip:** Disconnect the rear defogger electrical connector.

LIFTGATE WINDOW STRUT REPLACEMENT

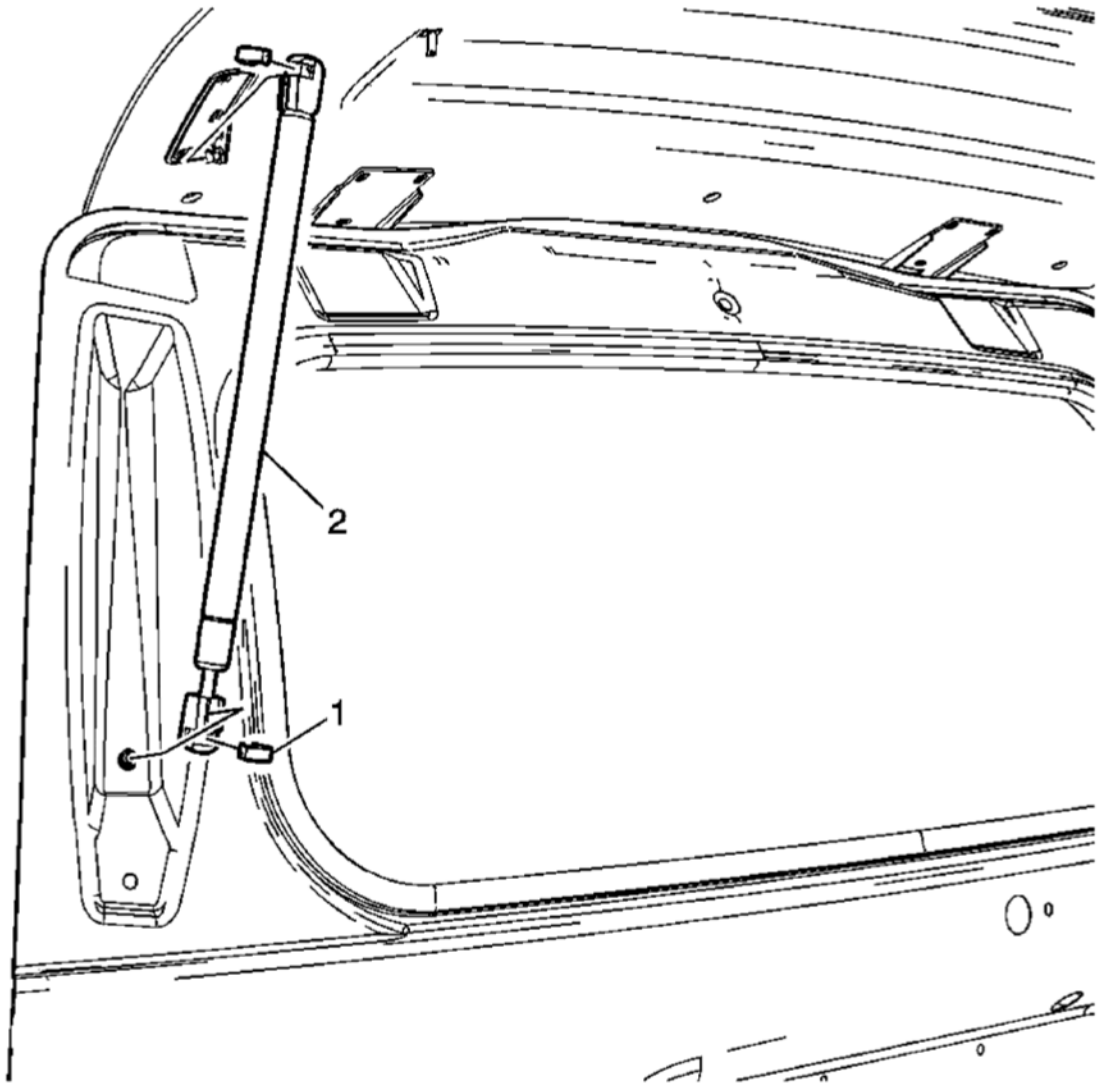

Fig. 42: Liftgate Window Strut & Clip Retainer
Courtesy of GENERAL MOTORS CORP.

Liftgate Window Strut Replacement

Callout	Component Name
CAUTION: **When a lift gate hold open device is being removed or installed, provide alternate support to avoid the possibility of damage to the vehicle or personal injury.**	
1	Liftgate Window Strut Clip Retainer

cardiagn.com

	Tip: Release the lock tabs on the strut.
2	Liftgate Window Strut

LIFTGATE WINDOW LATCH REPLACEMENT

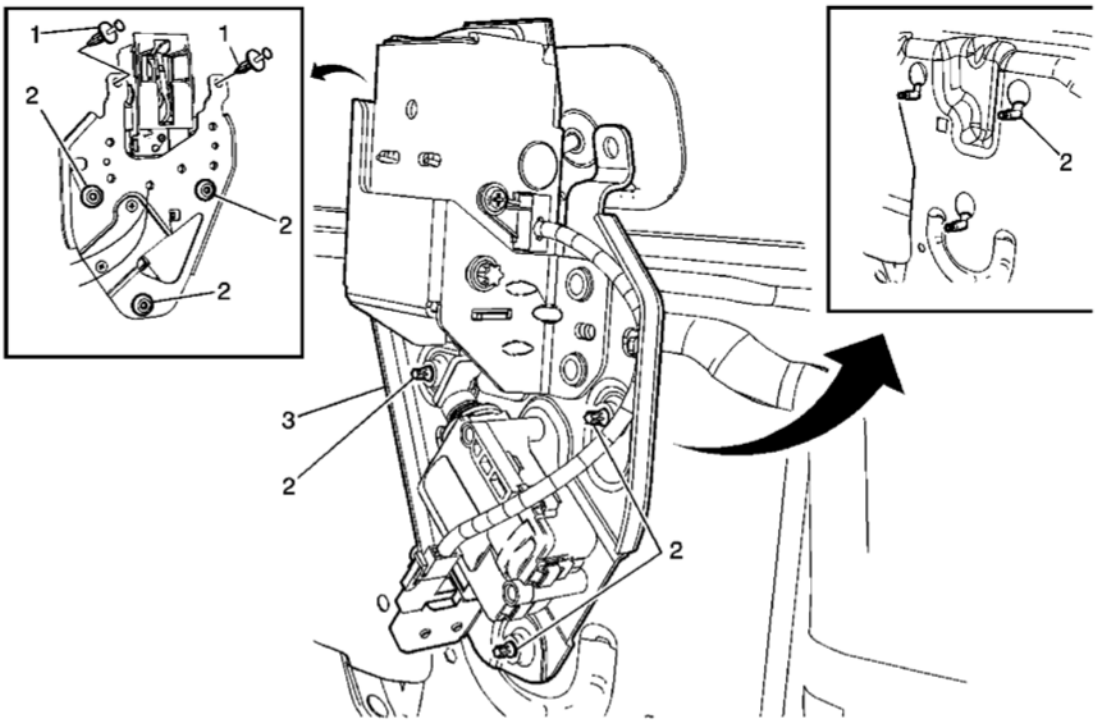

Fig. 43: View Of Liftgate Window Latch Assembly & Screws
Courtesy of GENERAL MOTORS CORP.

Liftgate Window Latch Replacement

Callout	Component Name
Preliminary Procedure: Remove the liftgate trim panel. Refer to **Liftgate Trim Panel Replacement** .	
1	Liftgate Window Latch Screws (Qty: 3) **NOTE:** **Refer to Fastener Notice .** **Tighten:** 9 N.m (80 lb in) **Tip:** Reach inside of the liftgate and loosen the screws, removing the latch using the key holes in the liftgate panel.
2	Liftgate Window Latch Assembly

cardiagn.com

	Tip: Disconnect the electrical connector.

FRONT SIDE DOOR WINDOW CHANNEL REPLACEMENT

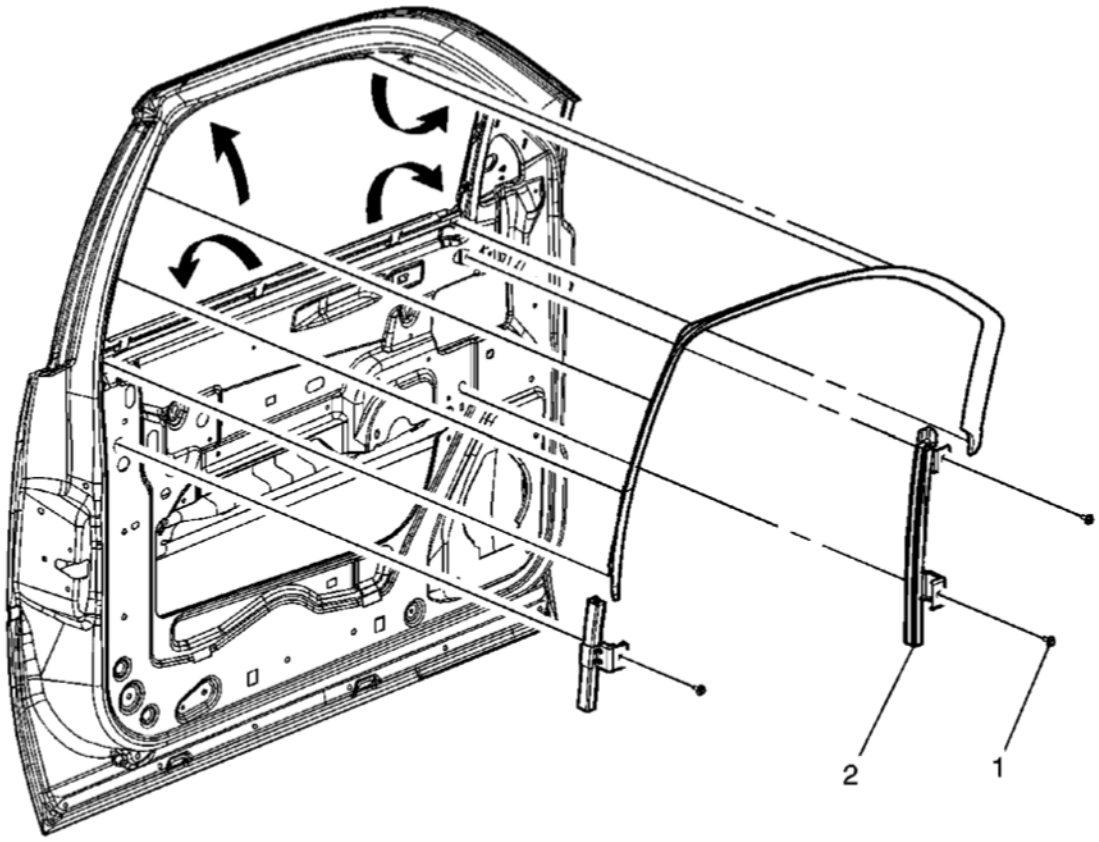

Fig. 44: View Of Front Door Window Run Channel & Bolts
Courtesy of GENERAL MOTORS CORP.

Front Side Door Window Channel Replacement

Callout	Component Name
Preliminary Procedures: Remove the front door window regulator. Refer to **Front Side Door Window Regulator Replacement (Power)**.	
1	Front Door Window Run Channel Bolts **NOTE:** **Refer to Fastener Notice .** **Tighten:** 9 N.m (80 lb in)
2	Front Door Window Run Channel **Tip:** Apply tape to the molding to prevent scratches.

cardiagn.com

REAR SIDE DOOR WINDOW CHANNEL REPLACEMENT

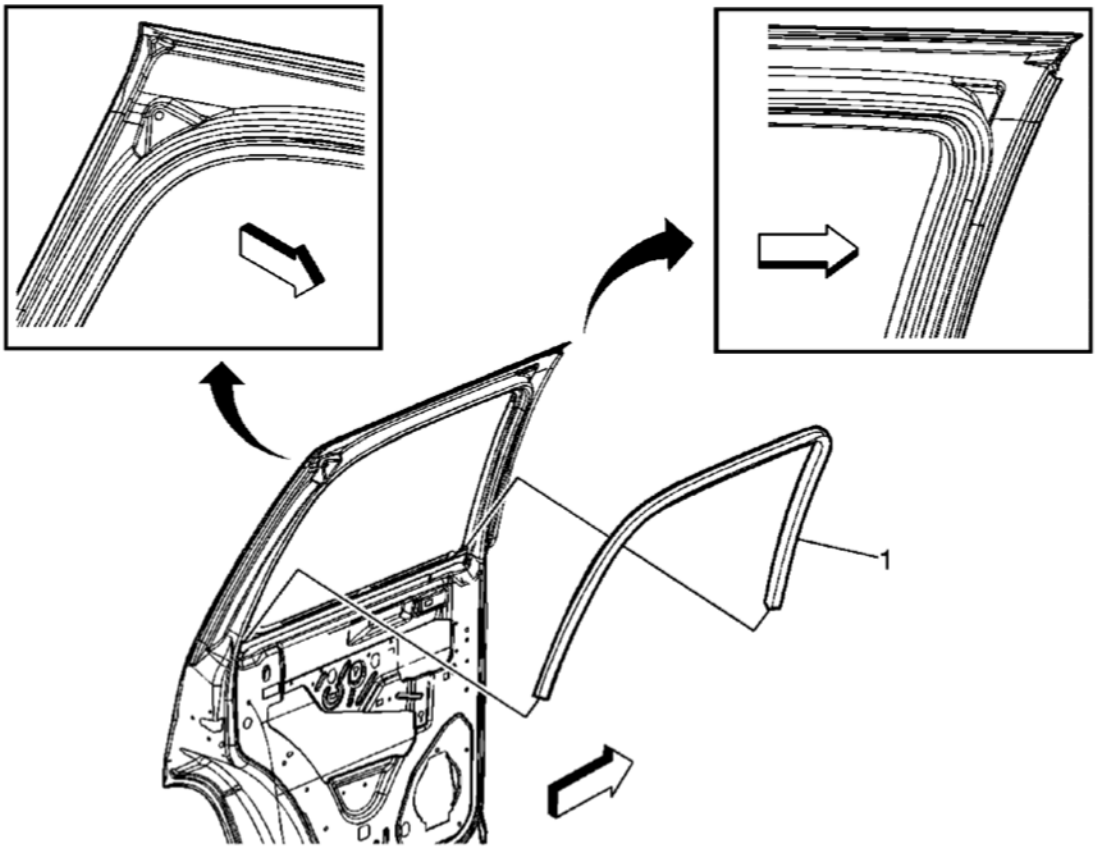

Fig. 45: View Of Rear Door Window Run Channel
Courtesy of GENERAL MOTORS CORP.

Rear Side Door Window Channel Replacement

Callout	Component Name
CAUTION: **Refer to SIR Caution .** **Preliminary Procedures** 1. Disable the supplemental inflatable restraint (SIR) system. Refer to **SIR Disabling and Enabling** . 2. Place the rear door window in the full down position. 3. Remove the rear door trim panel. Refer to **Front Side Door Trim Panel Replacement** . 4. Remove the rear door inner sealing strip. Refer to **Sealing Strip Replacement - Rear Door Window Belt Inner**.	
	Rear Door Window Run Channel **Tip:**

cardiagn.com

1	1. Use a plastic flat-bladed tool to assist in releasing the window run channel from the door frame. 2. Carefully pull the window run channel from the door flange.

STATIONARY WINDOW REVEAL MOLDING REPAIR

Removal Procedure

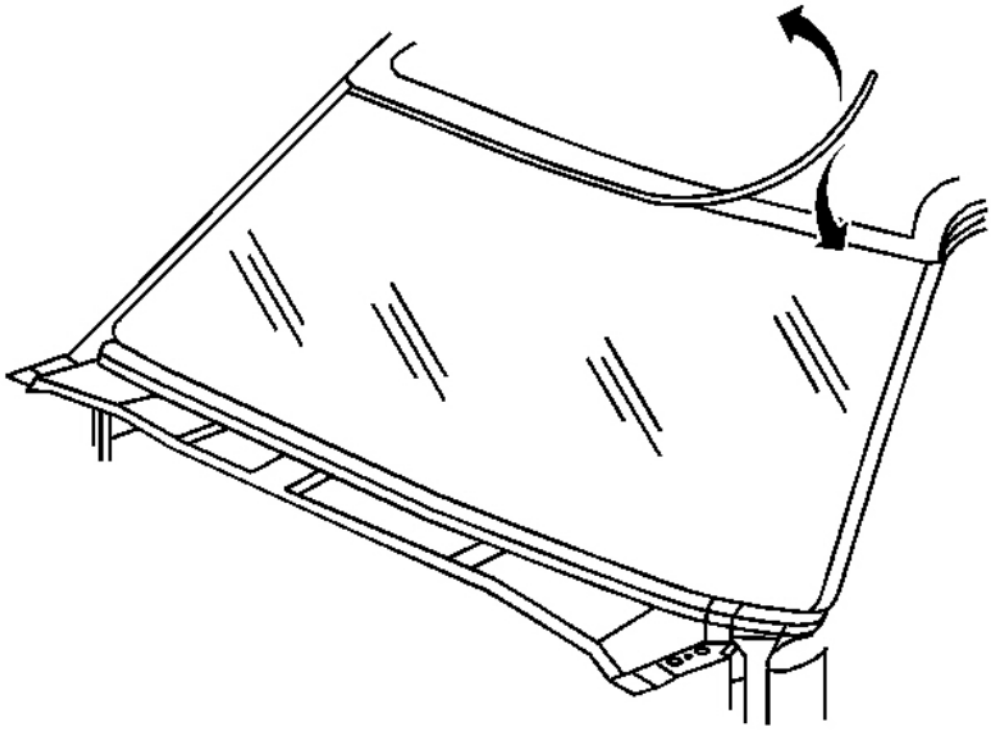

Fig. 46: Stationary Window Reveal Molding
Courtesy of GENERAL MOTORS CORP.

CAUTION: Refer to Glass and Sheet Metal Handling Caution .

cardiagn.com

IMPORTANT: The window reveal molding fills the cavity between the body and window. If the reveal molding is stretched or damaged, it cannot be reused and it must be replaced.

1. Lift up on the loose area of the reveal molding.
2. Clean the top edge of the window surface and the reveal molding with a 50/50 mixture of isopropyl alcohol and water by volume on a dampened lint-free cloth.

Installation Procedure

CAUTION: Refer to Window Retention Caution .

1. Verify all primers and urethane adhesive are within expiration dates.

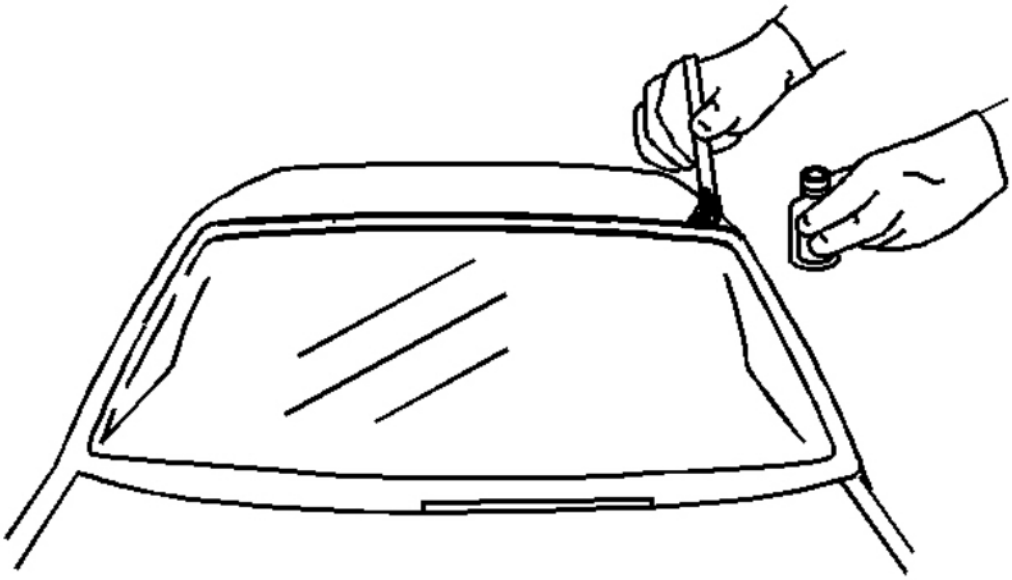

Fig. 47: Applying Glass Prep
Courtesy of GENERAL MOTORS CORP.

IMPORTANT: Use care when applying the prep, clear #1, to the window. This primer dries almost instantly, and may stain the viewing area of the window if not applied evenly.

cardiagn.com

2. Use a new dauber in order to apply glass prep, clear #1, to the channel area approximately 13 mm (1/2 in) to the upper edge of the window.
3. Wipe the glass primed area immediately with a clean lint-free cloth.
4. Shake the glass primer, black #2, for at least 1 minute.
5. Use a new dauber in order to apply glass primer, black #2, to the top edge of the window.

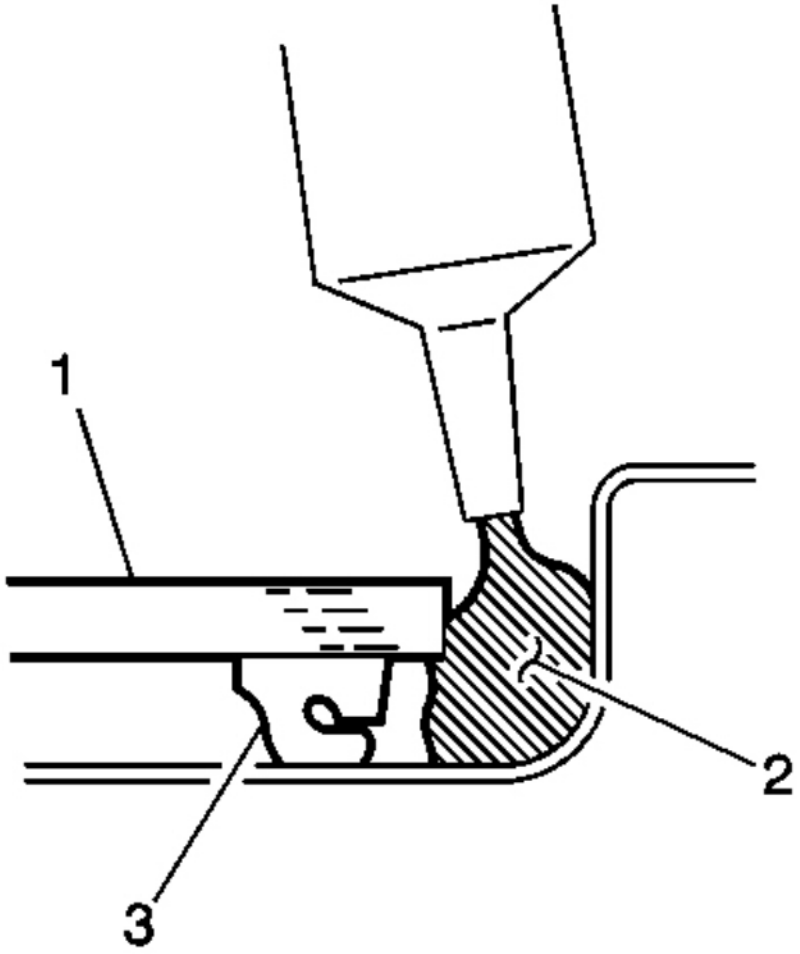

Fig. 48: Applying Urethane Adhesive Between Window & Pinch-Weld
Courtesy of GENERAL MOTORS CORP.

6. Apply a small bead of urethane adhesive (2) between the window (1) and the pinch-weld.

cardiagn.com

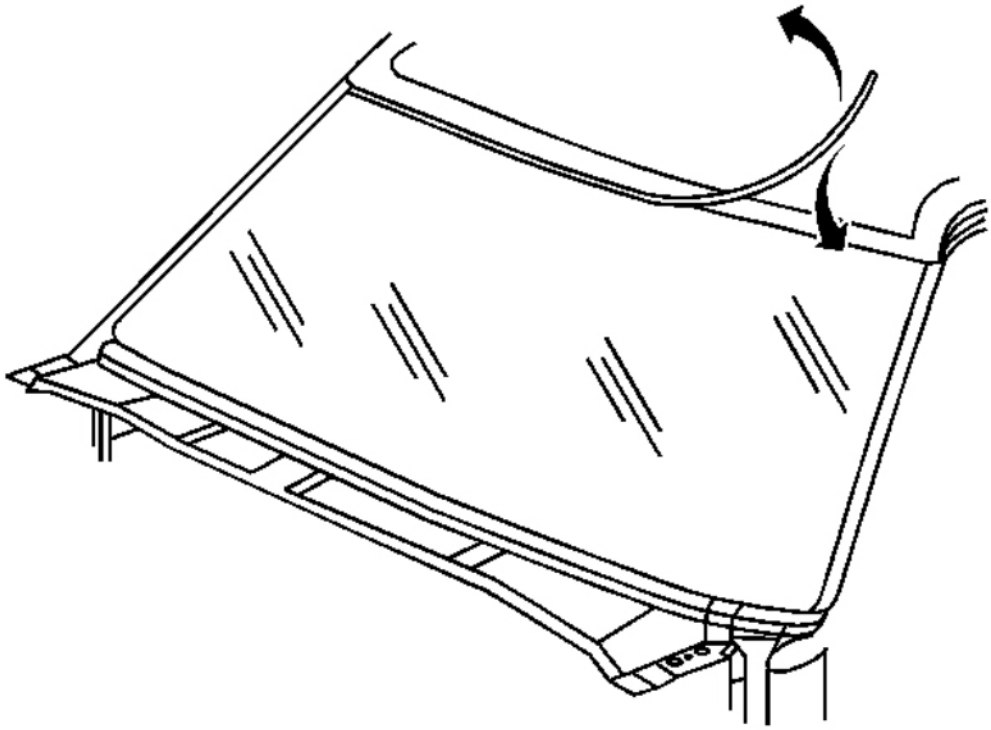

Fig. 49: Stationary Window Reveal Molding
Courtesy of GENERAL MOTORS CORP.

7. Reinstall the window reveal molding.
    1. Start from the loose area and hand-press the reveal molding into place over the edge of the window.
    2. Run warm water over the reveal molding in order to speed the setup time of the urethane adhesive.
    3. Tape should be applied in order to retain the reveal molding to the window. This will maintain a flush fit with the body.
    4. The tape is to be removed after 6 hours.

FRONT SIDE DOOR WINDOW REVEAL MOLDING REPLACEMENT (ESCALADE)

cardiagn.com

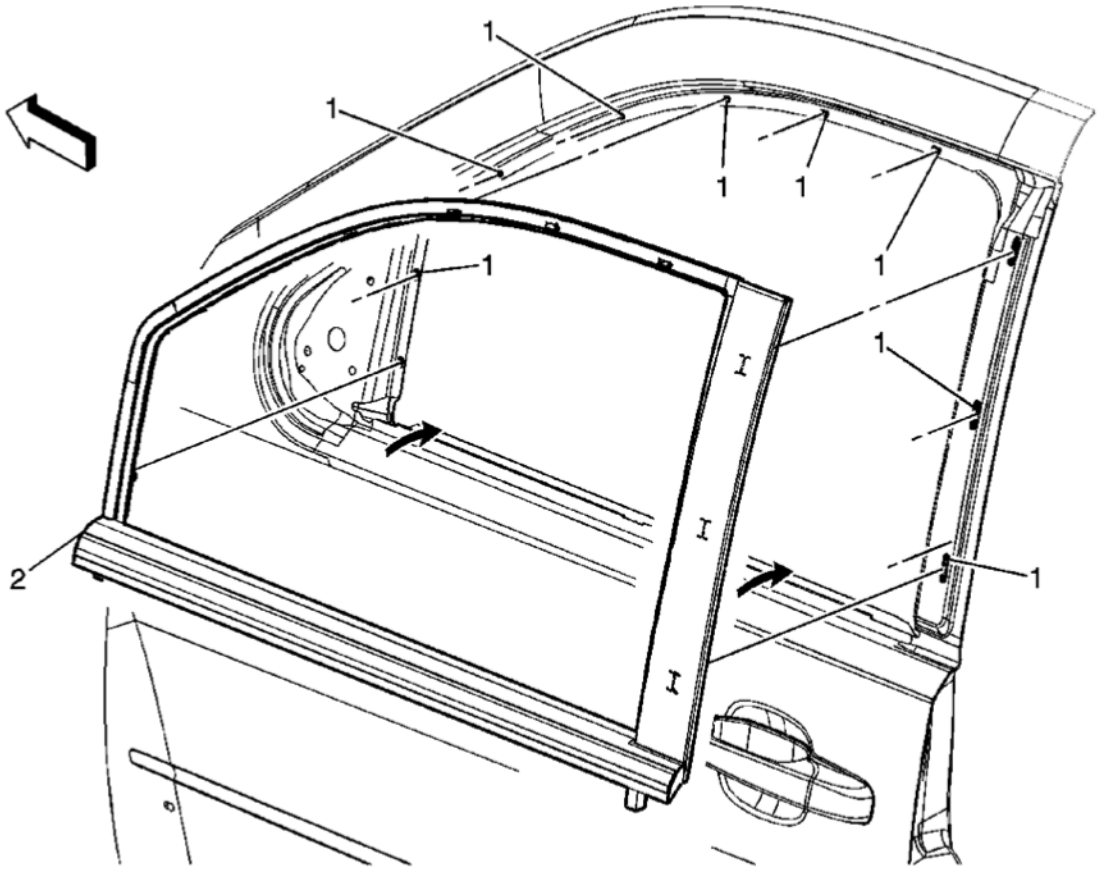

Fig. 50: Front Side Door Window Reveal Molding & Retainers
Courtesy of GENERAL MOTORS CORP.

Front Side Door Window Reveal Molding Replacement (Escalade)

Callout	Component Name
Preliminary Procedures 1. Remove the front door trim panel. Refer to **Front Side Door Trim Panel Replacement** . 2. Remove the outside mirror. Refer to **Mirror Replacement - Power** .	
1	Front Side Door Window Reveal Molding Retainer (Qty: 13)
2	Front Side Door Window Reveal Molding **Tip:** 1. Install the reveal molding into the window opening by inserting the bottom edges of the molding through the belt opening of the door. Allow the integral fasteners and clips to clear the door frame. 2. Fully seat the molding onto the belt flange between the corners. 3. Install the remaining 7 clips around the window flange.

cardiagn.com

REAR SIDE DOOR WINDOW REVEAL MOLDING REPLACEMENT (ESCALADE)

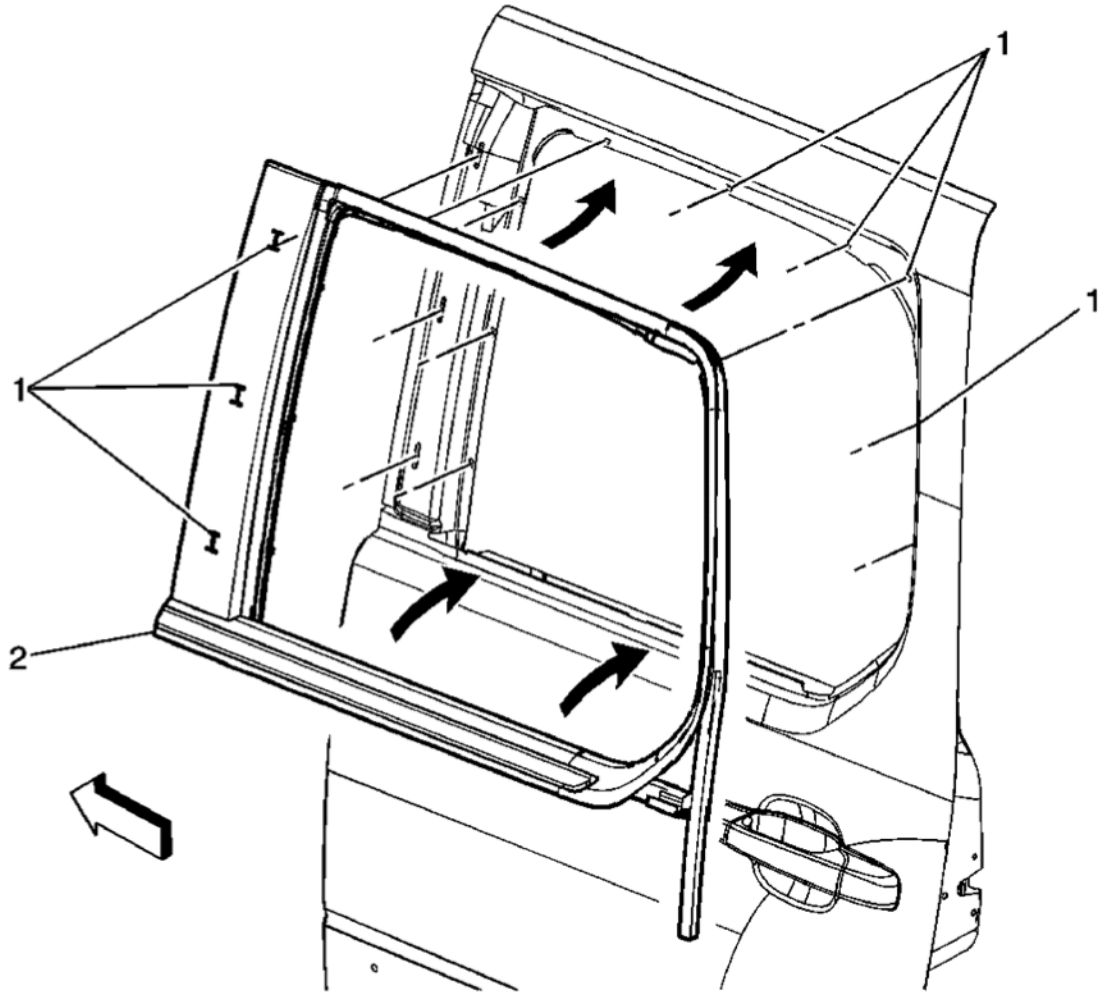

Fig. 51: Rear Side Door Window Reveal Molding & Retainers
Courtesy of GENERAL MOTORS CORP.

Rear Side Door Window Reveal Molding Replacement (Escalade)

Callout	Component Name
Preliminary Procedures: Remove the rear door trim panel. Refer to **Rear Side Door Trim Panel Replacement (Suburban/Yukon XL/Escalade ESV)** or **Rear Side Door Trim Panel Replacement (Tahoe/Yukon/Escalade)** .	
1	Rear Side Door Window Reveal Molding Retainer (Qty: 12)
	Rear Side Door Window Reveal Molding **Tip:** 1. Install the reveal molding into the window opening by inserting the bottom edges of

cardiagn.com

2	the molding through the belt opening of the door. Allow the integral fasteners and clips to clear the door frame. 2. Fully seat the molding to the window opening frame by pressing the 3 clips into the corners. 3. Install the remaining 6 clips around the window flange.

REAR SIDE DOOR WINDOW SWITCH REPLACEMENT

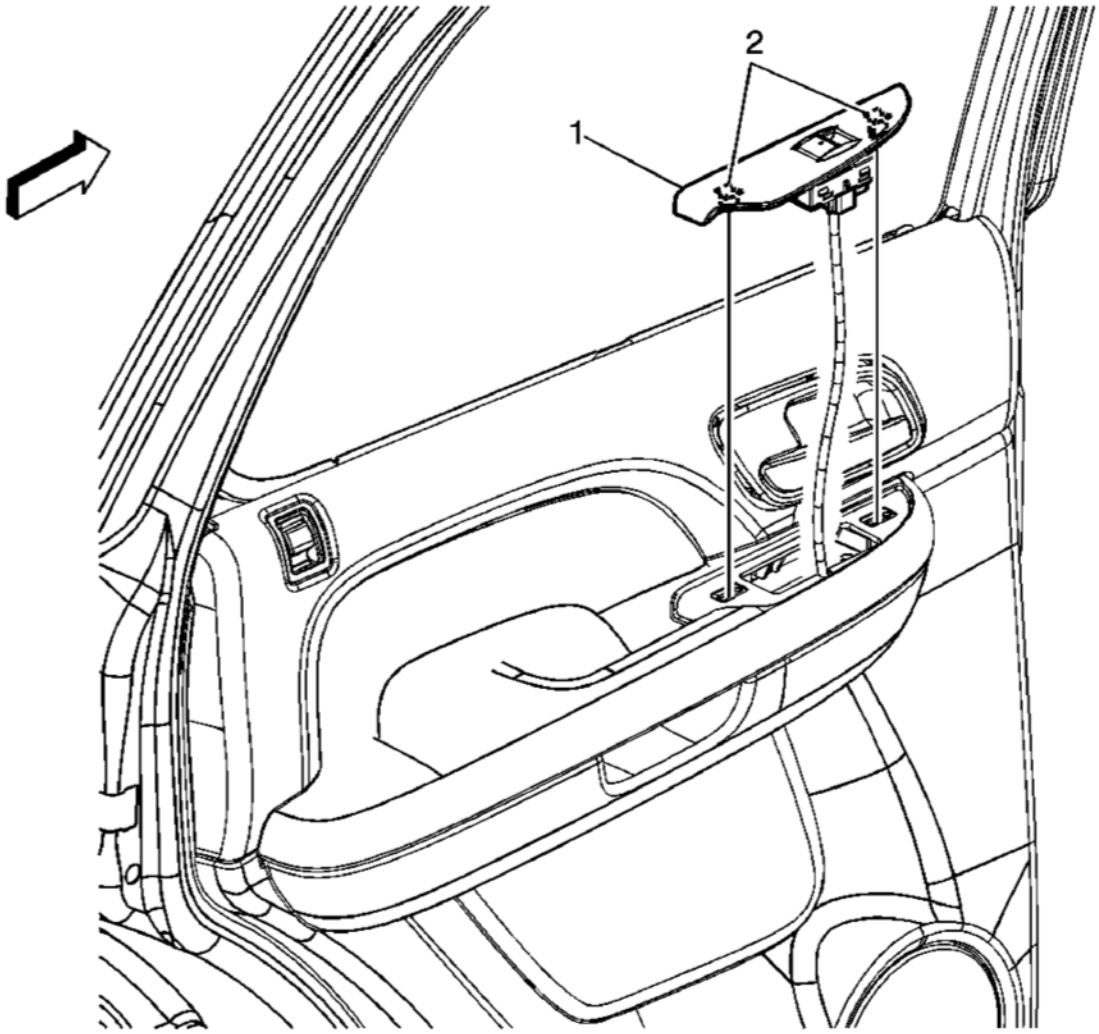

Fig. 52: View Of Rear Side Door Window Switch Assembly & Clips
Courtesy of GENERAL MOTORS CORP.

Rear Side Door Window Switch Replacement

Callout	Component Name
Fastener Tightening Specifications: Refer to **Fastener Tightening Specifications**.	
	Rear Side Door Window Switch Assembly

cardiagn.com

1	**Tip:** Disconnect electrical connectors.
2	Rear Side Door Window Switch Integral Clips (Qty: 2)

FRONT SIDE DOOR WINDOW REGULATOR REPLACEMENT (POWER)

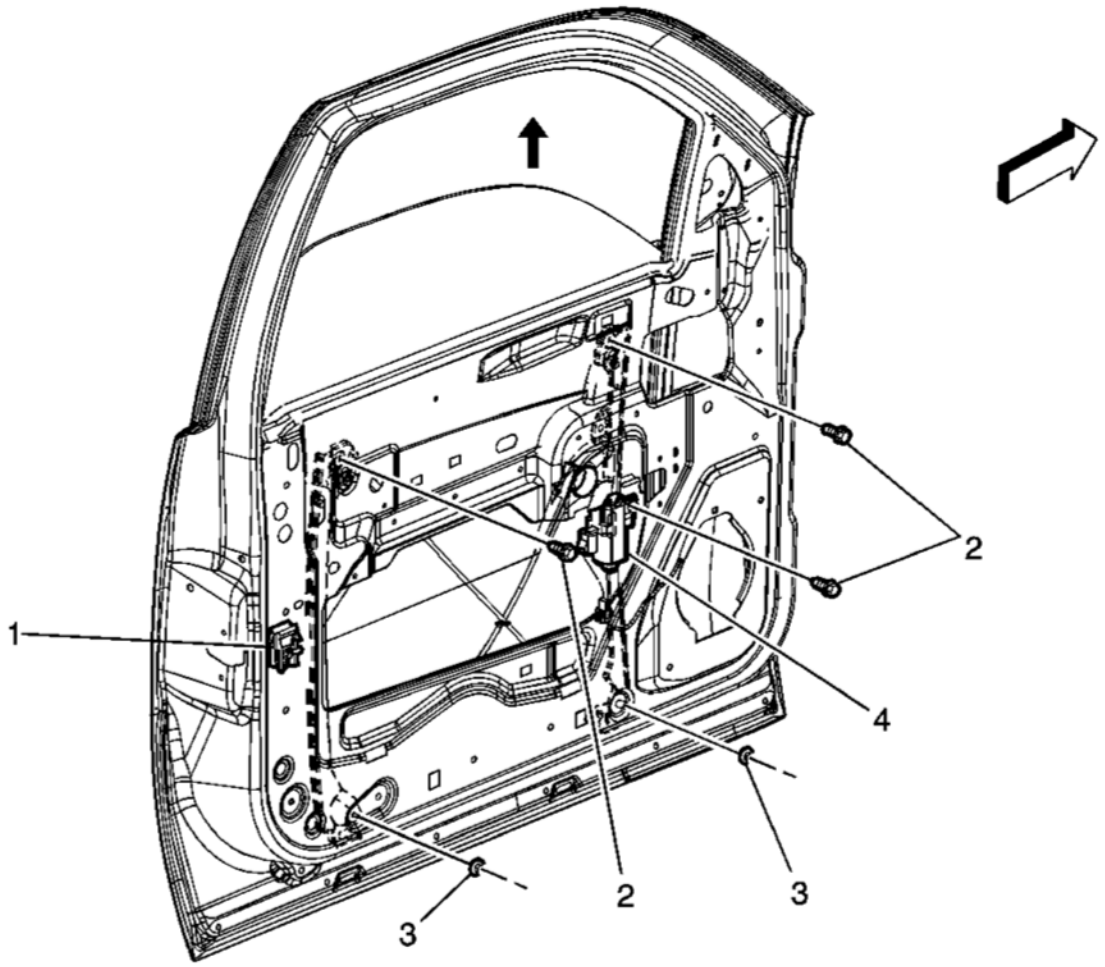

Fig. 53: View Of Front Side Door Window Regulator & Components
Courtesy of GENERAL MOTORS CORP.

Front Side Door Window Regulator Replacement (Power)

Callout	Component Name
Preliminary Procedures 1. Position the front side door window approximately half way down in the door. 2. Remove the front door trim panel. Refer to **Front Side Door Trim Panel Replacement** . 3. Remove the front door water deflector. Refer to **Front Side Door Water Deflector Replacement** .	
	Front Side Door Window Bolts (Qty: 2)

cardiagn.com

1	**NOTE:** **Refer to Fastener Notice .** **Tighten:** 9 N.m (80 lb in) **Tip:** 1. Tape the window to the door frame to prevent it from moving. 2. Loosen the 2 bolts that attach the window to the window regulator.
2	Front Side Door Window Regulator Bolts (Qty: 3) **Tighten:** 9 N.m (80 lb in)
3	Front Side Door Window Regulator Nuts (Qty: 2) **Tighten:** 9 N.m (80 lb in)
4	Front Side Door Window Regulator **Tip:** 1. Disconnect the electrical connector. 2. Transfer the power window motor to the new regulator. Refer to **Front Side Door Window Regulator Motor Replacement**.

FRONT SIDE DOOR WINDOW REGULATOR MOTOR REPLACEMENT

cardiagn.com

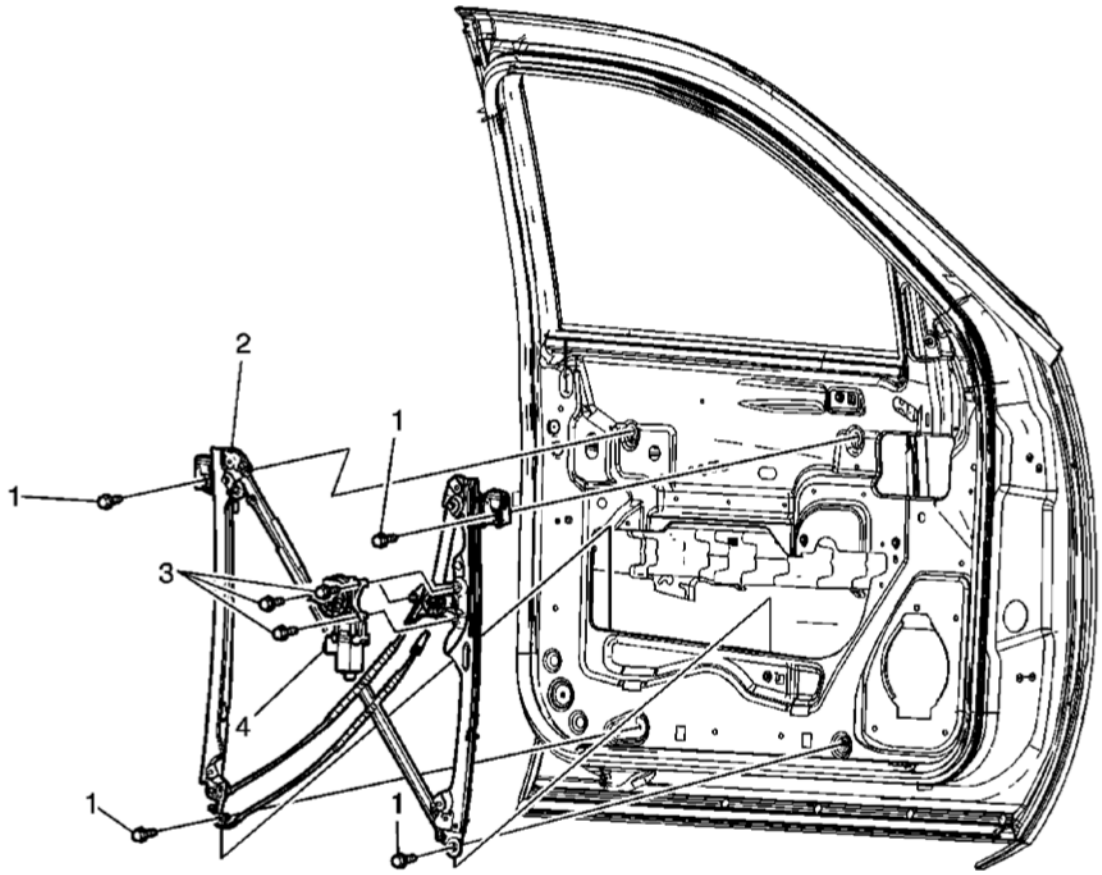

Fig. 54: View Of Front Side Door Window Regulator, Motor & Bolts
Courtesy of GENERAL MOTORS CORP.

Front Side Door Window Regulator Motor Replacement

Callout	Component Name
Preliminary Procedures: Remove the window regulator. Refer to **Front Side Door Window Regulator Replacement (Power)**.	
1	Front Side Door Window Regulator Bolts (Qty: 4) **NOTE:** **Refer to Fastener Notice .** **Tighten:** 4.6 N.m (41 lb in) **Tip:** Disconnect the electrical connector.
2	Front Side Door Window Regulator **Tip:** Disconnect the electrical connector.
	Front Side Door Window Regulator Motor Bolts (Qty: 3)

cardiagn.com

3	**Tighten:** 9 N.m (80 lb in)
4	Front Side Door Window Regulator Motor

REAR SIDE DOOR WINDOW REGULATOR REPLACEMENT (MANUAL)

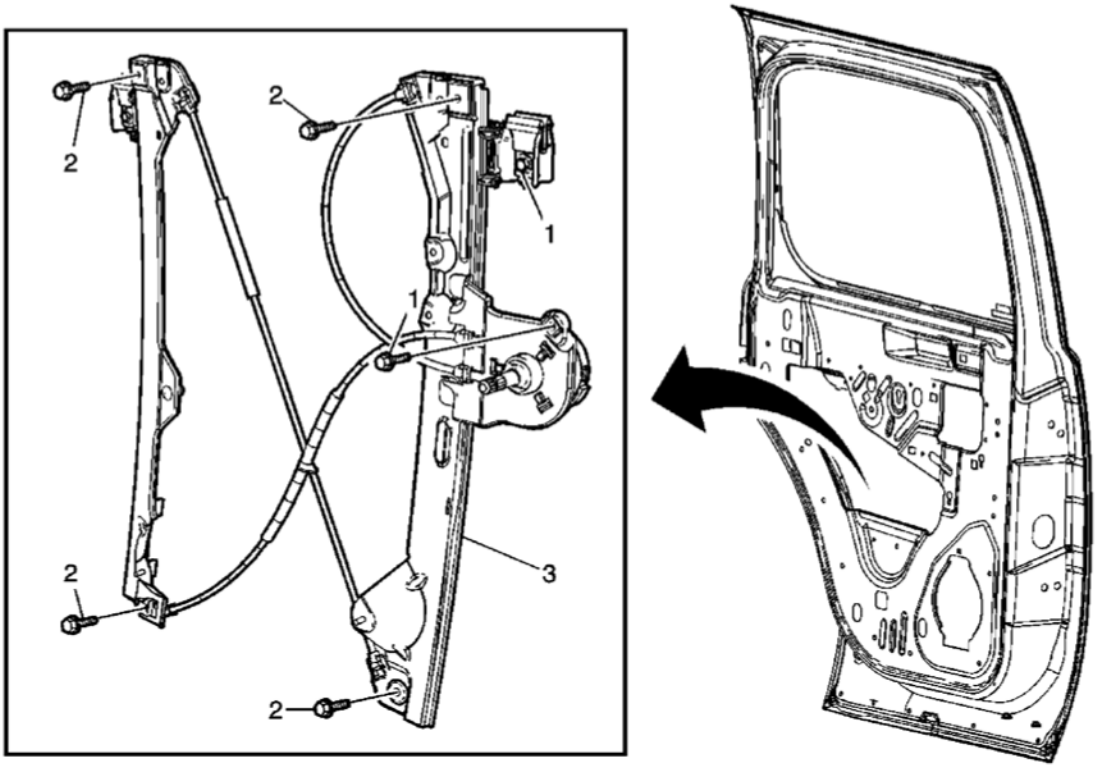

Fig. 55: View Of Rear Side Door Window Regulator & Components
Courtesy of GENERAL MOTORS CORP.

Rear Side Door Window Regulator Replacement (Manual)

Callout	Component Name
CAUTION: **Refer to SIR Caution .** **Preliminary Procedures** 1. Disable the supplemental inflatable restraint (SIR) system. Refer to **SIR Disabling and Enabling** . 2. Position the rear side door window approximately half way down in the door. 3. Remove the rear door trim panel. Refer to **Rear Side Door Trim Panel Replacement (Suburban/Yukon XL/Escalade ESV)** or **Rear Side Door Trim Panel Replacement (Tahoe/Yukon/Escalade)** . 4. Remove the rear door water deflector. Refer to **Rear Side Door Water Deflector Replacement** .	

cardiagn.com

1	Rear Side Door Window Bolts (Qty: 2) **NOTE:** **Refer to Fastener Notice .** **Tighten:** 9 N.m (80 lb in) **Tip:** 1. Tape the window to the door frame to prevent it from moving. 2. Loosen the 2 bolts that attach the window to the window regulator.
2	Rear Side Door Window Regulator Bolts (Qty: 4) **Tighten:** 9 N.m (80 lb in)
3	Rear Side Door Window Regulator

REAR SIDE DOOR WINDOW REGULATOR REPLACEMENT (POWER)

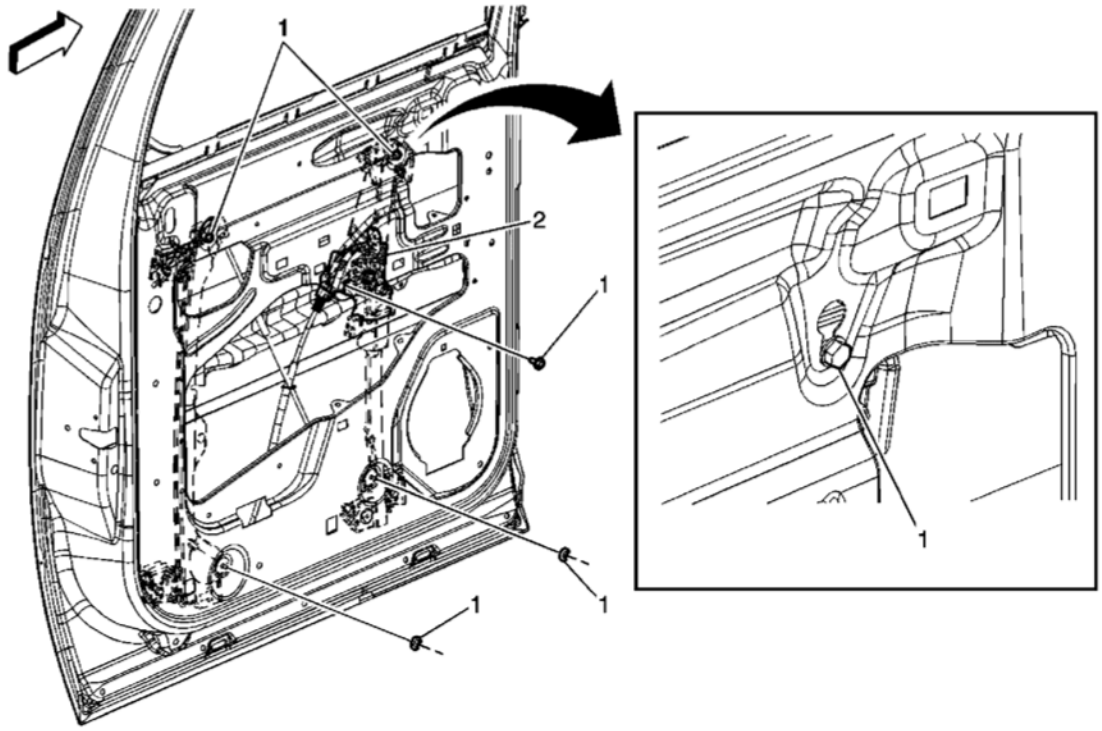

Fig. 56: View Of Rear Side Door Window Regulator & Bolts
Courtesy of GENERAL MOTORS CORP.

Rear Side Door Window Regulator Replacement (Power)

cardiagn.com

Callout	Component Name
CAUTION: **Refer to SIR Caution .** **Preliminary Procedures** 1. Disable the supplemental inflatable restraint (SIR) system. Refer to **SIR Disabling and Enabling** . 2. Position the rear door window approximately half way down in the door. 3. Remove the rear door trim panel. Refer to **Rear Side Door Trim Panel Replacement (Suburban/Yukon XL/Escalade ESV)** or **Rear Side Door Trim Panel Replacement (Tahoe/Yukon/Escalade)** . 4. Remove the rear door water deflector. Refer to **Rear Side Door Water Deflector Replacement** .	
1	Rear Side Door Window Regulator Bolts (Qty: 5) **NOTE:** **Refer to Fastener Notice .** **Tighten:** 9 N.m (80 lb in) **Tip:** 1. Tape the window to the door frame to prevent it from moving. 2. Loosen the 2 bolts that attach the window to the window regulator.
2	Rear Side Door Window Regulator **Tip:** 1. Disconnect the electrical connector. 2. Transfer the power window motor to the new regulator. Refer to **Rear Side Door Window Regulator Motor Replacement (Power)**.

REAR SIDE DOOR WINDOW REGULATOR MOTOR REPLACEMENT (POWER)

cardiagn.com

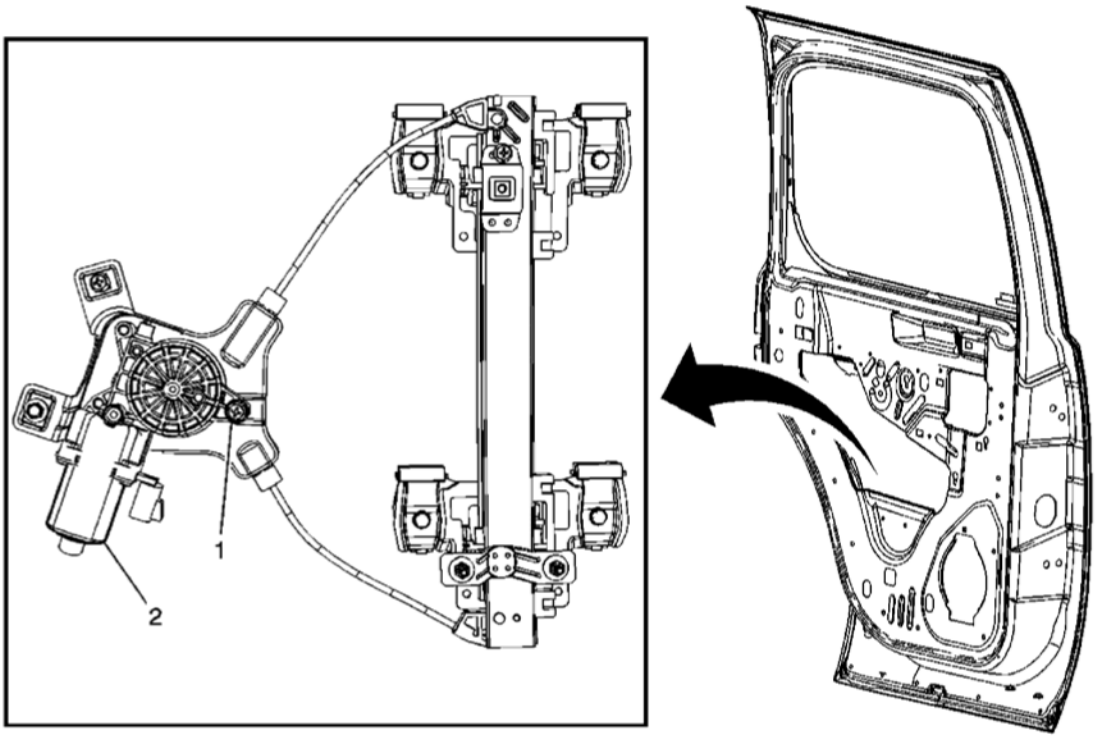

Fig. 57: View Of Rear Side Door Window Regulator Motor & Bolt
Courtesy of GENERAL MOTORS CORP.

Rear Side Door Window Regulator Motor Replacement (Power)

Callout	Component Name
CAUTION: **Refer to SIR Caution .** **Preliminary Procedures** 1. Disable the supplemental inflatable restraint (SIR) system. Refer to **SIR Disabling and Enabling** . 2. Position the rear door window approximately half way down in the door. 3. Remove the rear door window regulator. Refer to **Rear Side Door Window Regulator Replacement (Manual)** or **Rear Side Door Window Regulator Replacement (Power)**.	
1	Rear Side Door Window Regulator Motor Bolt (Qty: 1) **NOTE:** **Refer to Fastener Notice .** **Tighten:** 9 N.m (80 lb in)

cardiagn.com

	Tip: Disconnect the electrical connector.
2	Rear Side Door Window Regulator Motor

FRONT SIDE DOOR WINDOW OUTER SEALING STRIP REPLACEMENT (TAHOE)

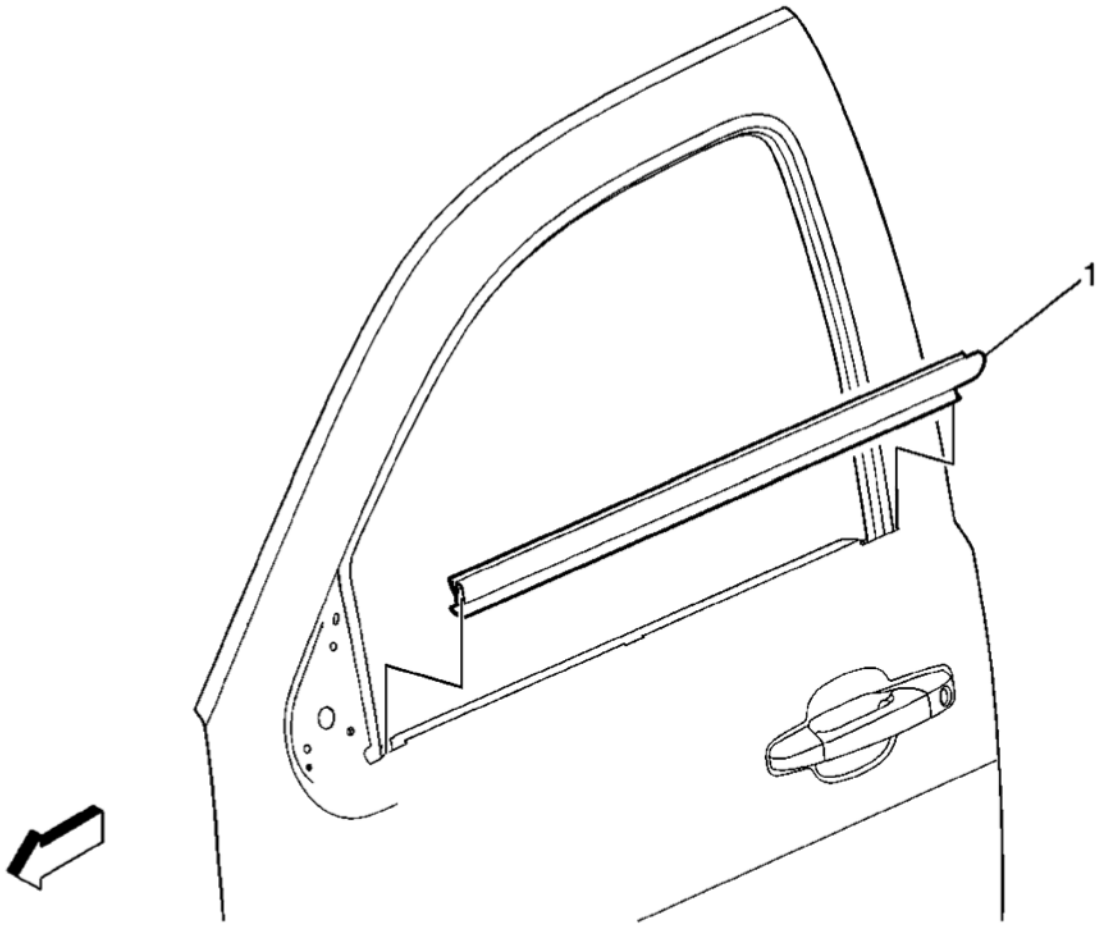

Fig. 58: View Of Front Side Door Outer Belt Sealing Strip
Courtesy of GENERAL MOTORS CORP.

Front Side Door Window Outer Sealing Strip Replacement (Tahoe)

Callout	Component Name
Preliminary Procedure 1. Lower the front side door window to the fully down position. 2. Tape off the lower window frame to prevent damage to the door.	
1	Front Side Door Outer Belt Sealing Strip **Tip:** 1. Lifting upward on the sealing strip end in order to unhook it from the door flange.

cardiagn.com

	2. Install the sealing strip to the flange of the door and push downward until fully seated.

FRONT SIDE DOOR WINDOW OUTER SEALING STRIP REPLACEMENT (ESCALADE)

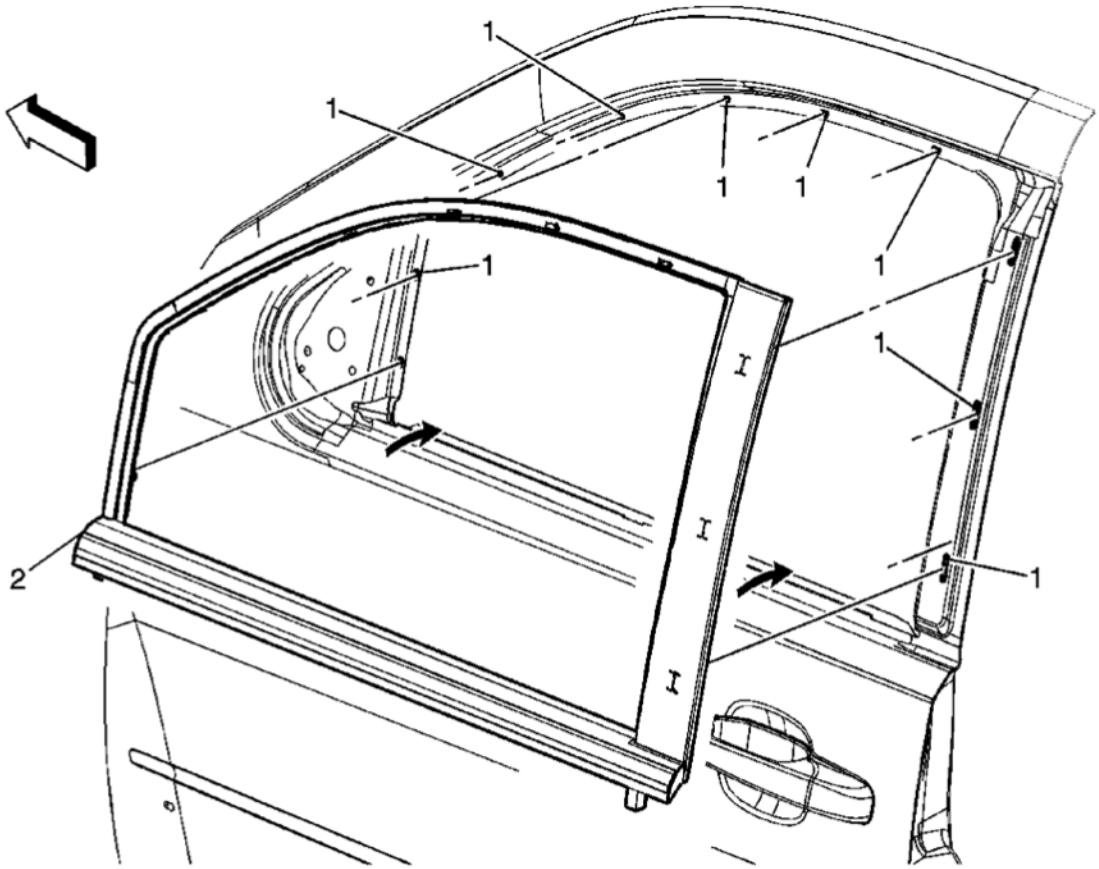

Fig. 59: View Of Front Side Door Outer Sealing Strip, Clips & Fasteners
Courtesy of GENERAL MOTORS CORP.

Front Side Door Window Outer Sealing Strip Replacement (Escalade)

Callout	Component Name
Preliminary Procedure 1. Lower the front side door window to the fully down position. 2. Tape off the lower window frame to prevent damage to the door. 3. Remove the outside rearview power mirror. Refer to **Mirror Replacement - Power** .	
1	Front Side Door Fasteners (Qty: 3) **Tip:** Using a suitable tool, work the tool around the upper door frame to assist in loosening the sealing strip from the door flange.
	Front Side Door Clips (Qty: 10)

cardiagn.com

2	**Tip:** Using a suitable tool, work the tool down the side of the door frame to loosening the sealing strip from the door flange.
3	Front Side Door Outer Belt Sealing Strip **Tip:** 1. Install the molding into the window opening by inserting the bottom legs of the molding to the door. 2. Fully seat the molding to the belt flange between the corner of the door frame. 3. Fully seat the molding to the upper and lower door frame and insert the fasteners and clips around the flange.

SEALING STRIP REPLACEMENT - FRONT DOOR WINDOW BELT INNER

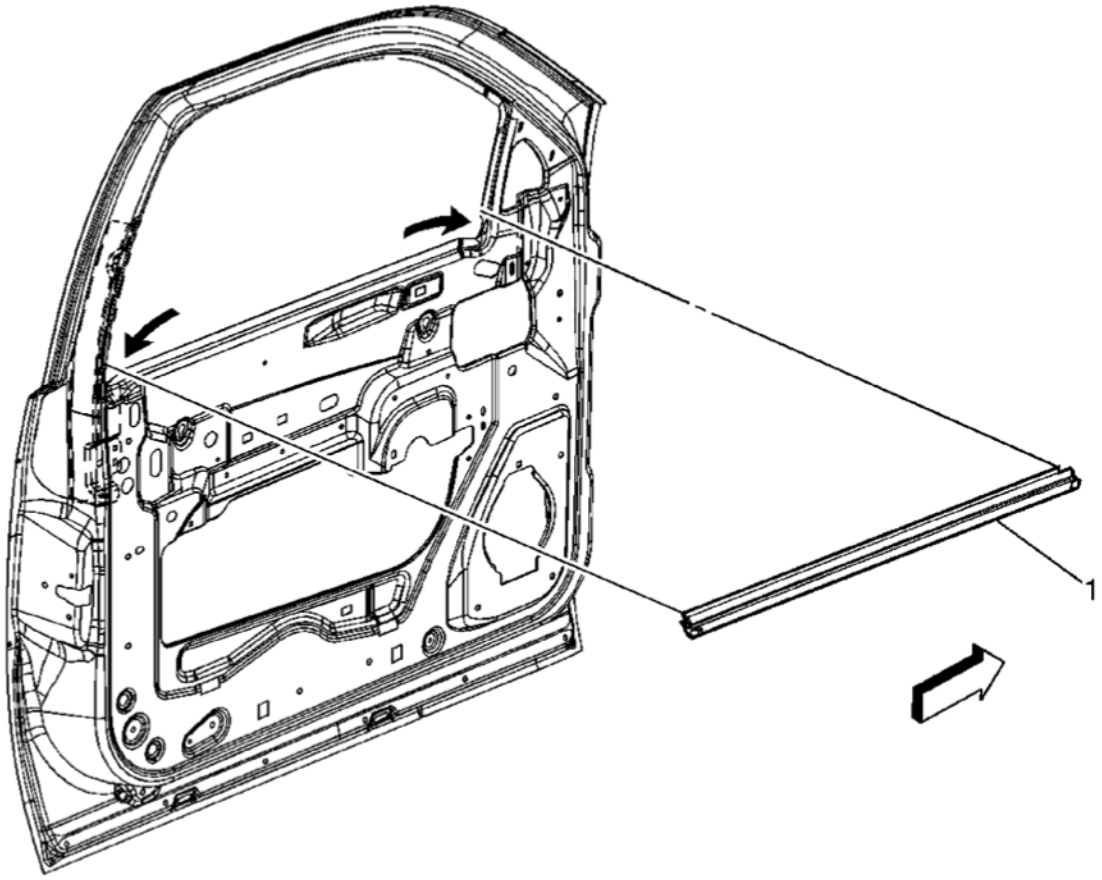

Fig. 60: Front Side Door Inner Belt Sealing Strip
Courtesy of GENERAL MOTORS CORP.

Sealing Strip Replacement - Front Door Window Belt Inner

Callout	Component Name
Preliminary Procedure:	

cardiagn.com

Remove the interior trim panel. Refer to **Front Side Door Trim Panel Replacement** .	
1	Front Side Door Inner Belt Sealing Strip **Tip:** Pull upward on the sealing strip to release it from the door flange.

SEALING STRIP REPLACEMENT - REAR DOOR WINDOW BELT INNER

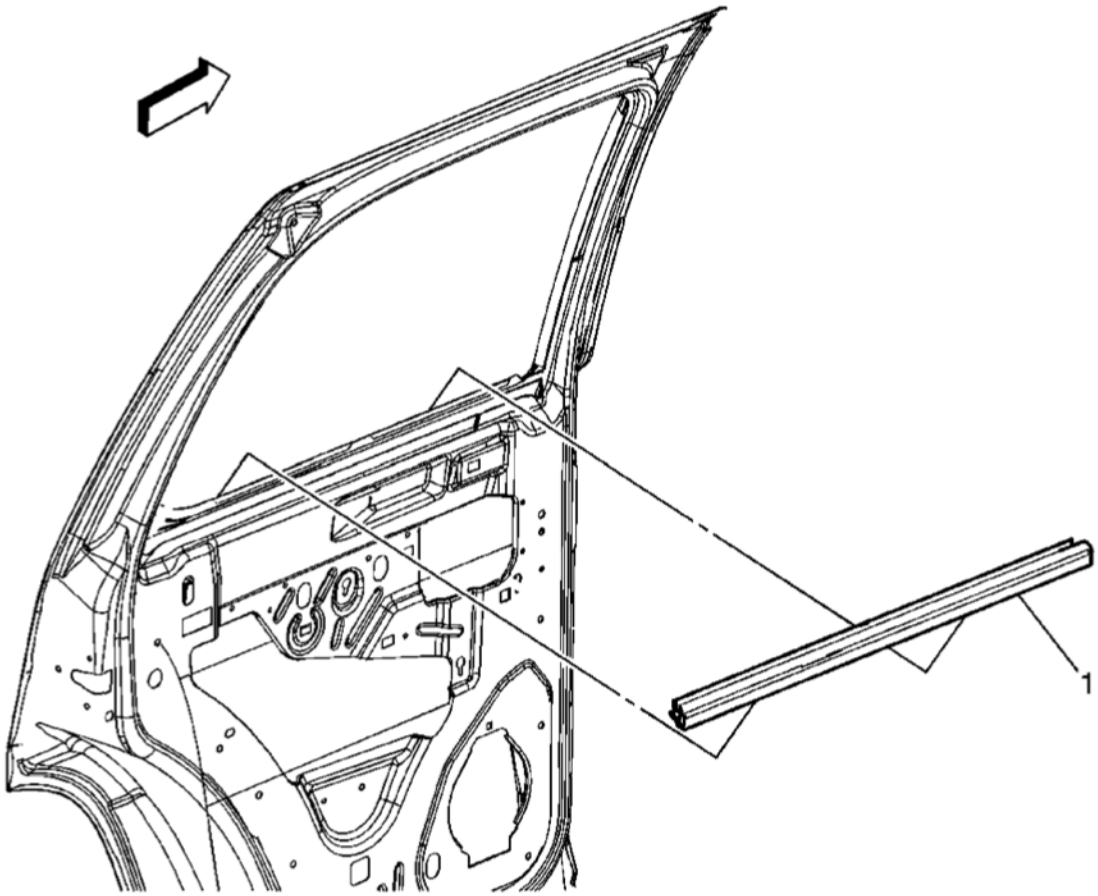

Fig. 61: Rear Side Door Inner Belt Sealing Strip
Courtesy of GENERAL MOTORS CORP.

Sealing Strip Replacement - Rear Door Window Belt Inner

Callout	Component Name
Preliminary Procedures: Remove the interior trim panel. Refer to **Rear Side Door Trim Panel Replacement (Suburban/Yukon XL/Escalade ESV)** or **Rear Side Door Trim Panel Replacement (Tahoe/Yukon/Escalade)** .	
1	Rear Side Door Inner Belt Sealing Strip **Tip:** Pull upward on the sealing strip to release it from the door flange.

SEALING STRIP REPLACEMENT - REAR DOOR WINDOW BELT OUTER (TAHOE)

cardiagn.com

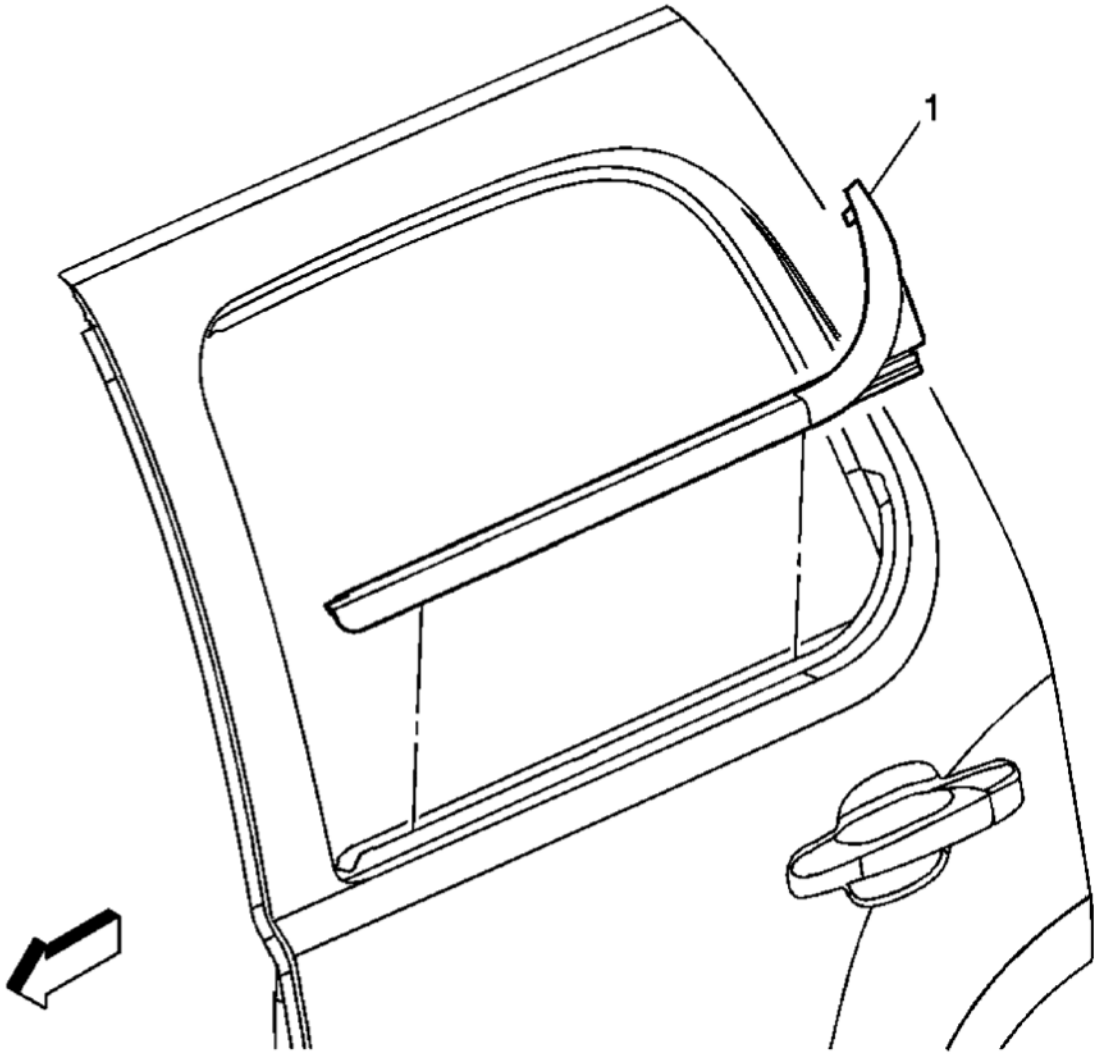

Fig. 62: View Of Rear Door Outer Belt Sealing Strip
Courtesy of GENERAL MOTORS CORP.

Sealing Strip Replacement - Rear Door Window Belt Outer (Tahoe)

Callout	Component Name
1	Rear Door Outer Belt Sealing Strip 1. Lifting upward on the sealing strip end in order to unhook it from the door flange. 2. Install the sealing strip to the flange of the door and push downward until fully seated.

SEALING STRIP REPLACEMENT - REAR DOOR WINDOW BELT OUTER (ESCALADE)

cardiagn.com

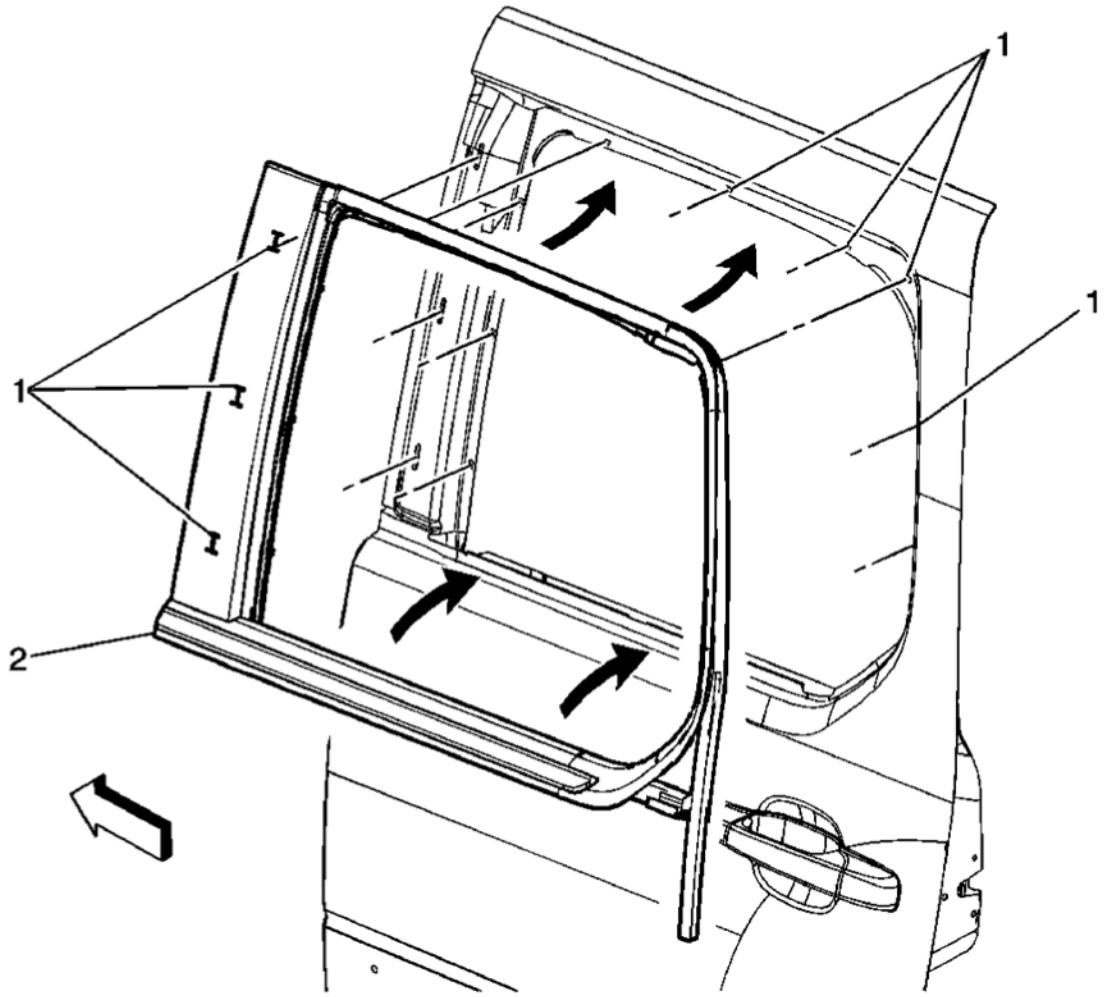

Fig. 63: View Of Rear Side Door Outer Belt Sealing Strip
Courtesy of GENERAL MOTORS CORP.

Sealing Strip Replacement - Rear Door Window Belt Outer (Escalade)

Callout	Component Name
Preliminary Procedure 1. Lower the rear side door window to the fully down position. 2. Tape off the lower window frame to prevent damage to the door.	
1	Rear Side Door Fasteners (Qty: 3) **Tip:** Using a suitable tool, work the tool around the upper door frame to assist in loosening the sealing strip from the door flange.
2	Rear Side Door Clips (Qty: 9) **Tip:** Using a suitable tool, work the tool down the front edge of the door frame to loosening the sealing strip from the door flange.
	Rear Side Door Outer Belt Sealing Strip

cardiagn.com

3	**Tip:** 1. Pull upward to release the sealing strip from the door frame. 2. Install the molding into the window opening by inserting the bottom legs of the molding to the door. 3. Fully seat the molding to the belt flange between the corner of the door frame. 4. Fully seat the molding to the upper and lower door frame and insert the fasteners and clips around the flange.

LIFTGATE WINDOW WEATHERSTRIP REPLACEMENT

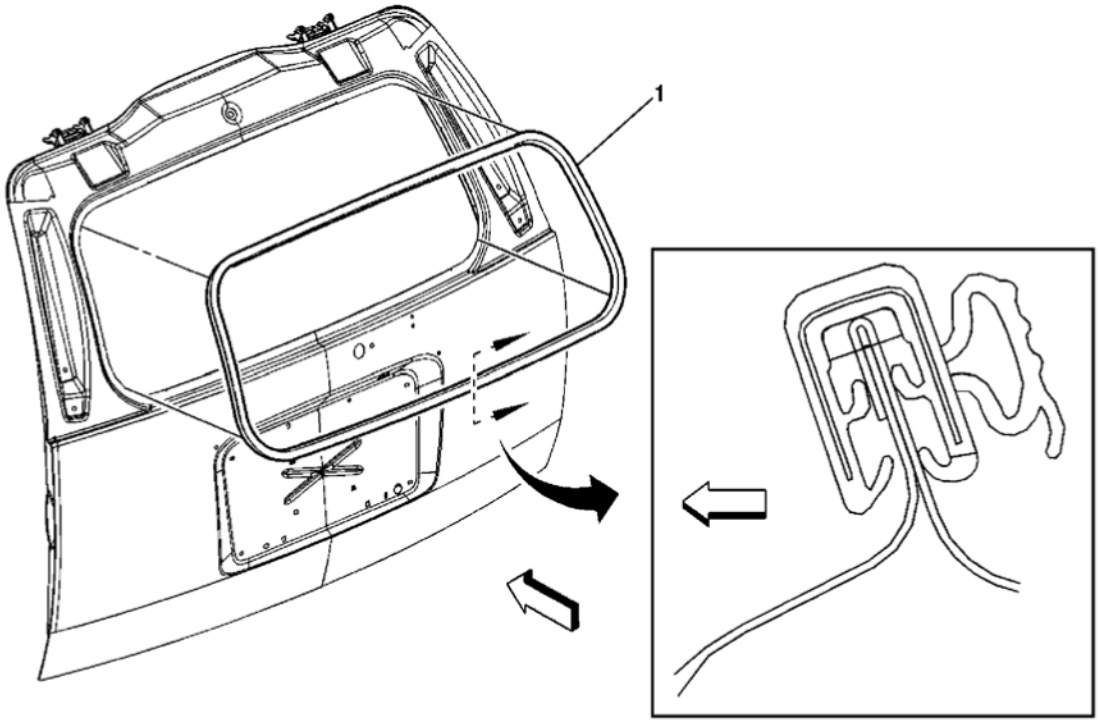

Fig. 64: View Of Liftgate Weatherstrip
Courtesy of GENERAL MOTORS CORP.

Liftgate Window Weatherstrip Replacement

Callout	Component Name
Preliminary Procedure: Open the liftgate window.	
1	Liftgate Weatherstrip **Tip:** Disconnect the electrical from the rear window defogger.

URETHANE ADHESIVE INSTALLATION OF STATIONARY WINDOWS (QUARTER WINDOW)

cardiagn.com

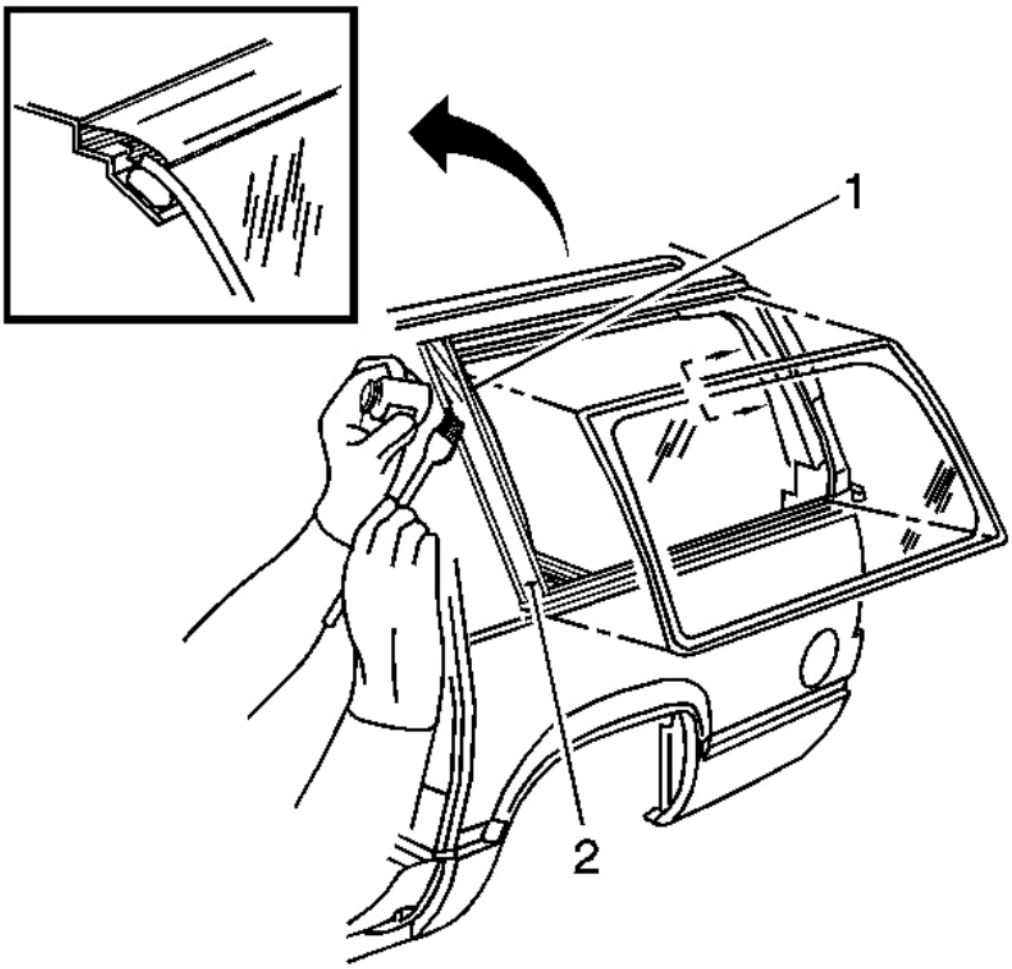

Fig. 65: Applying Urethane Adhesive
Courtesy of GENERAL MOTORS CORP.

CAUTION: Refer to Glass and Sheet Metal Handling Caution .

IMPORTANT: Remove all but approximately 2 mm (3/64 in) of the existing bead of urethane adhesive from the pinch-weld flange.

1. Remove all mounds or loose pieces of urethane adhesive from the pinch-weld area.
2. If the original window is being reused, remove all but a thin film of the existing urethane adhesive from the window surface by using a clean utility knife or razor blade scraper.

cardiagn.com

3. Inspect the following components for the causes of a broken window:
   - The flange of the window opening
   - The window reveal molding
4. Inspect for any of the following problems in order to help prevent future breakage of the window:
   - High weld
   - Solder spots on the pinchweld
   - Hardened sealer
   - Any other obstruction or irregularity in the pinch-weld flange

IMPORTANT: If corrosion of the pinch-weld flange is present or if sheet metal repairs or replacements are required, the pinch-weld flange must be refinished in order to restore the bonding area strength. If paint repairs are required, mask the flange bonding area prior to applying the color coat in order to provide a clean primer only surface. Materials such as BASF DE15®, DuPont 2610®, Sherwin-Williams PSE 4600 and NP70® and Martin-Semour 5120 and 5130® PPG DP90LF SPIES/ HECKER 3688/8590 - 3688/5150 - 4070/5090 STANDOX 11158/13320 - 14653/14980 products are approved for this application.

5. After repairing the opening as indicated, perform the following steps:
   1. Remove all traces of broken glass from the outer cowl panel, seats, floor and defroster ducts.
   2. Clean around the edge of the inside surface of the window with a 50/50 mixture of isopropyl alcohol and water by volume on a dampened lint free cloth.

CAUTION: Refer to Window Retention Caution .

6. Verify all primers and urethane adhesive are within expiration dates.

CAUTION: Failure to prep the area prior to the application of primer may cause insufficient bonding of urethane adhesive. Insufficient bonding of urethane adhesive may allow unrestrained occupants to be ejected from the vehicle resulting in personal injury.

IMPORTANT: Do not apply the black #3 primer to the existing bead (1) of the urethane adhesive on the pinch-weld flange. Apply the primer only to nicks, scratches or the primed surfaces.

7. Shake the pinch-weld primer black #3 for at least 1 minute.
8. Use a new dauber in order to apply the primer to the surface of the pinch-weld flange (1).
9. Allow the pinch-weld primer to dry for approximately 10 minutes.

cardiagn.com

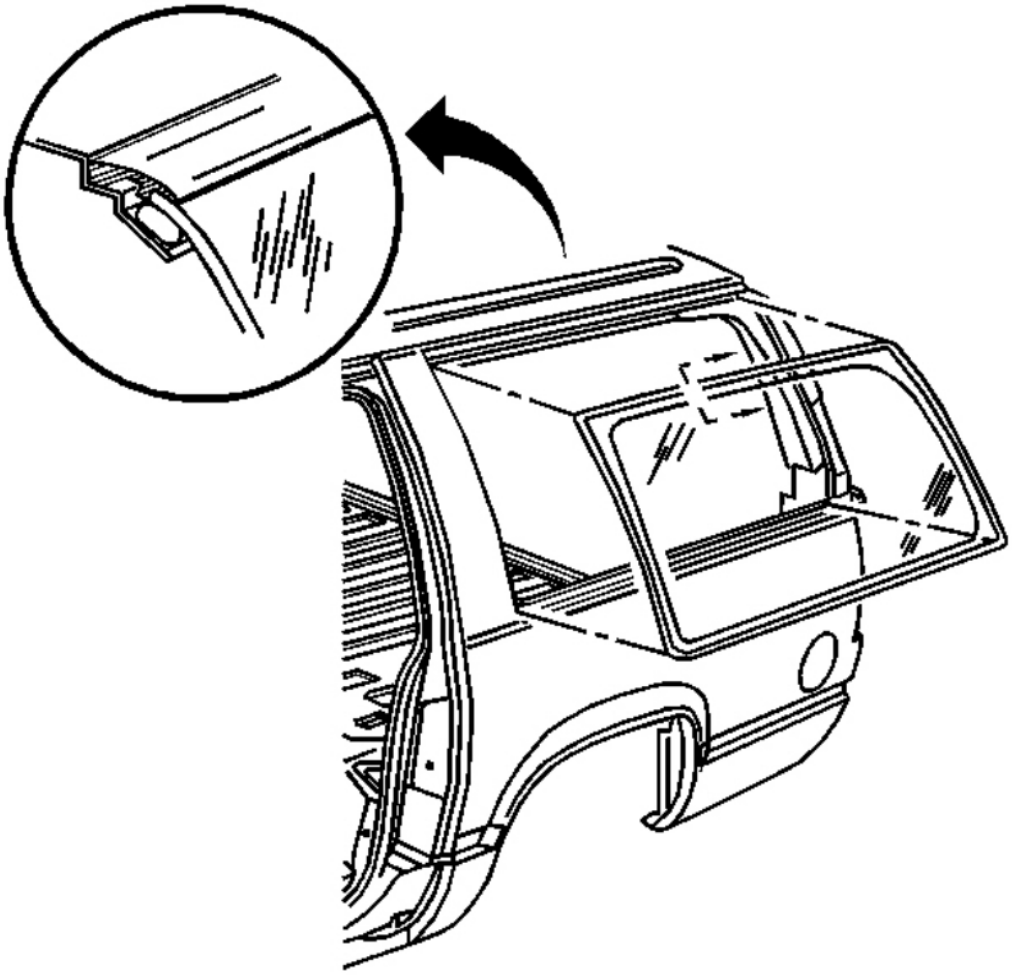

Fig. 66: View Of Quarter Window
Courtesy of GENERAL MOTORS CORP.

10. With the aid of an assistant, dry fit the window to the opening in order to determine the correct position.

cardiagn.com

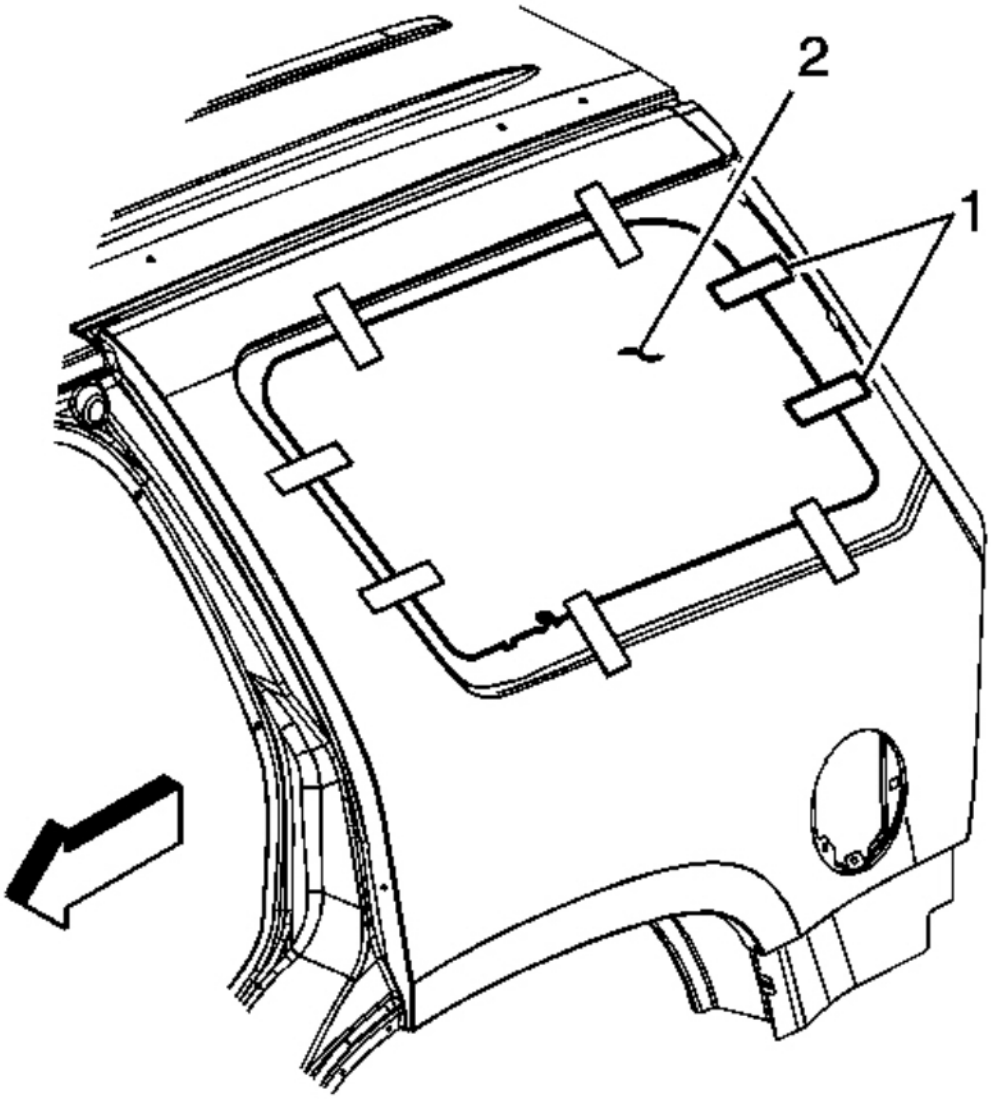

Fig. 67: View Of Marked Locations On Window
Courtesy of GENERAL MOTORS CORP.

11. Use masking tape in order to mark the locations (1) of the window (2) in the opening.

12. Cut the masking tape in the center and remove the window from the opening.

cardiagn.com

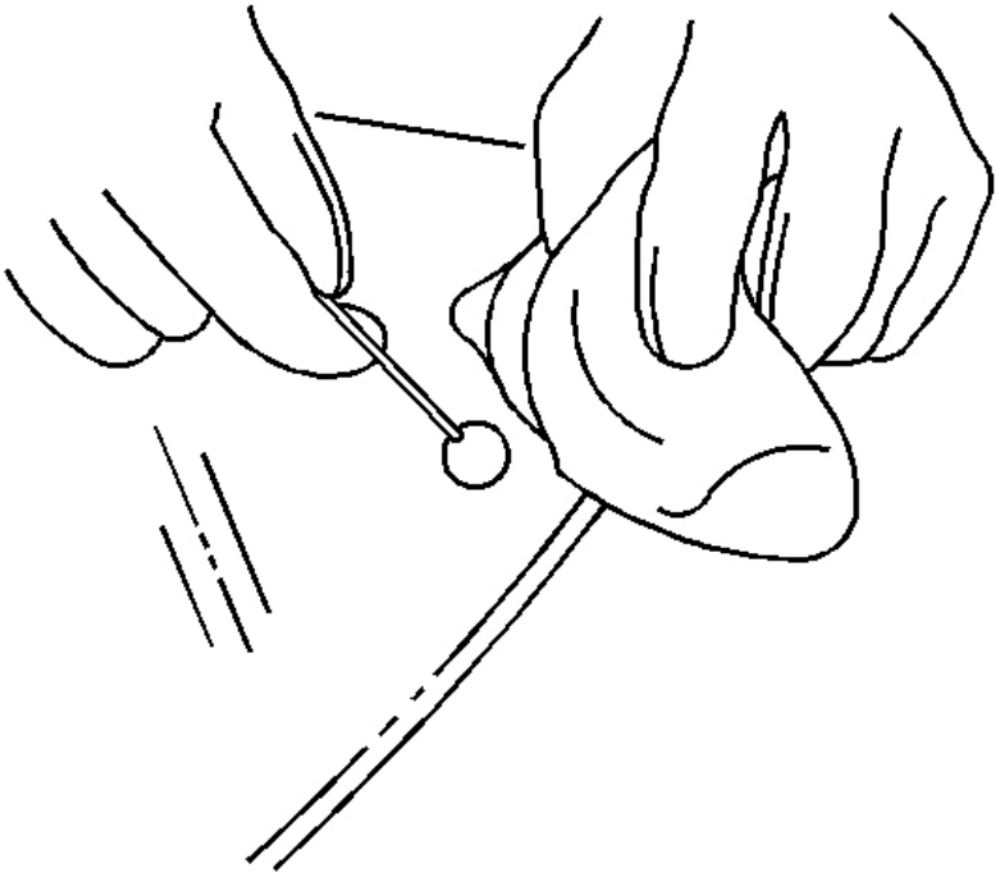

Fig. 68: Applying Glass Prep
Courtesy of GENERAL MOTORS CORP.

IMPORTANT: Use care when applying glass prep clear #1 on the window. This primer dries almost instantly, and may stain the viewing area of the window if not applied evenly.

13. Use a new dauber in order to apply glass prep clear #1 to the area approximately 10-16 mm (3/8-5/8 in) around the entire perimeter of the window inner surface.

    Immediately wipe the glass primed area using a clean, lint-free cloth.

cardiagn.com

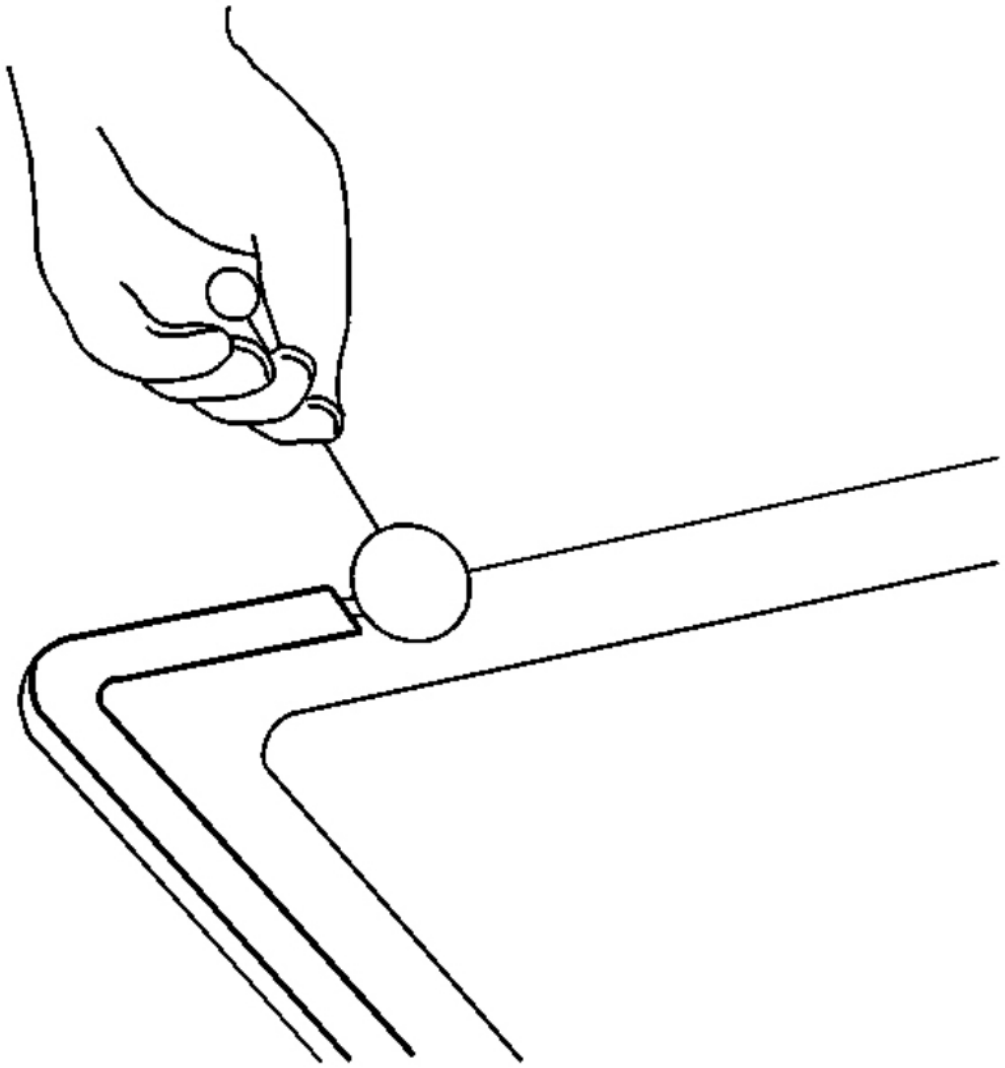

Fig. 69: Applying Glass Prep
Courtesy of GENERAL MOTORS CORP.

14. Apply a second coat of the glass prep clear #1 to the same area of the glass.

cardiagn.com

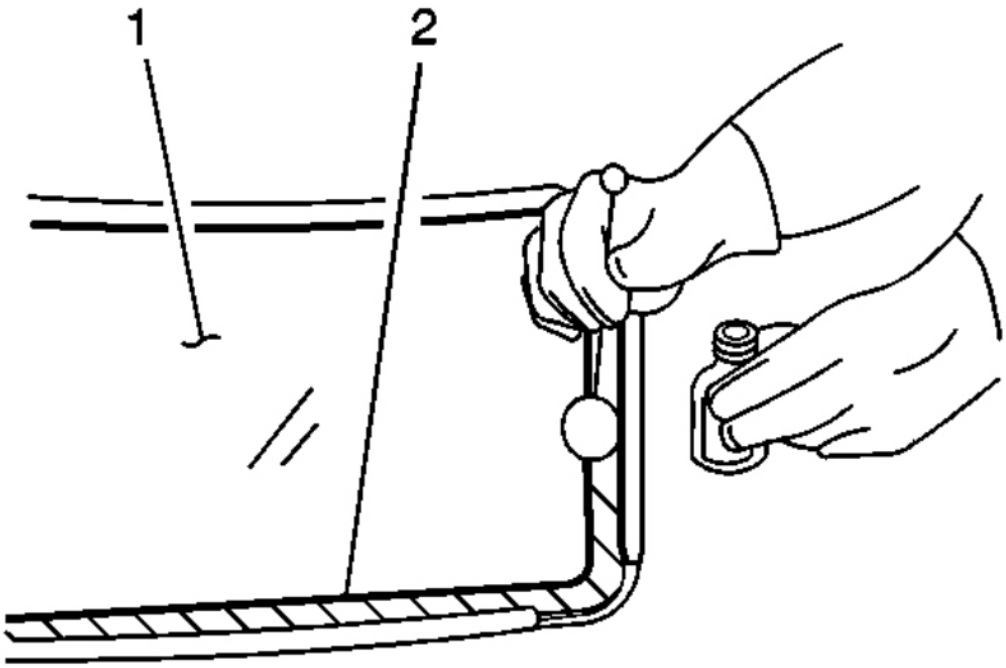

Fig. 70: Applying Glass Primer
Courtesy of GENERAL MOTORS CORP.

IMPORTANT: The glass primer black #2 is effective up to 8 hours after applying it to the glass. The primed surface of the glass must be kept clean.

15. Shake the glass primer black #2 for at least 1 minute.
16. Use a new dauber in order to apply the glass primer black #2 to the same areas (2) that glass prep clear #1 was applied.
17. Allow the glass primer to dry for approximately 10 minutes.

cardiagn.com

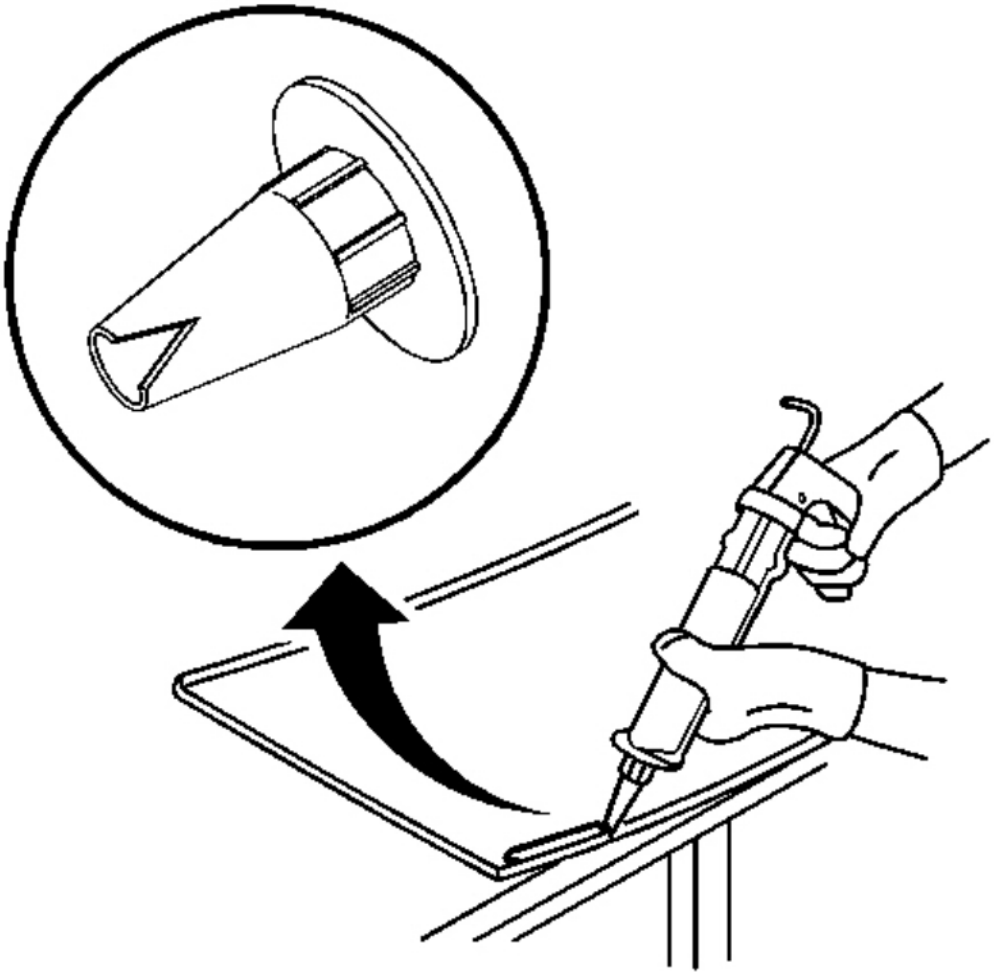

Fig. 71: View Of Modified Applicator Nozzle
Courtesy of GENERAL MOTORS CORP.

18. Cut the applicator nozzle in order to provide a bead of 8 mm (0.316 in) wide and 12.7 mm (1/2 in) high.

cardiagn.com

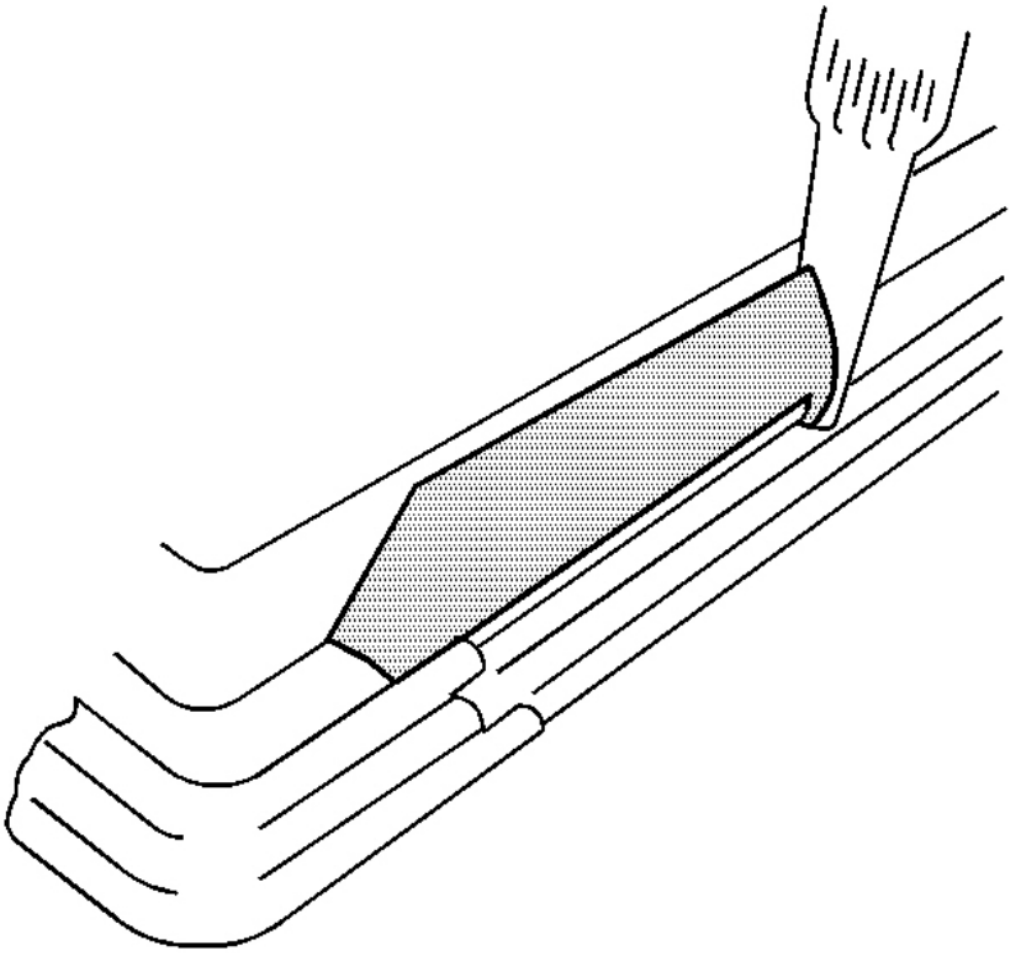

Fig. 72: Applying Bead Of Urethane Adhesive
Courtesy of GENERAL MOTORS CORP.

19. Use a cartridge-type caulking gun in order to apply a smooth, continuous bead of urethane adhesive.

cardiagn.com

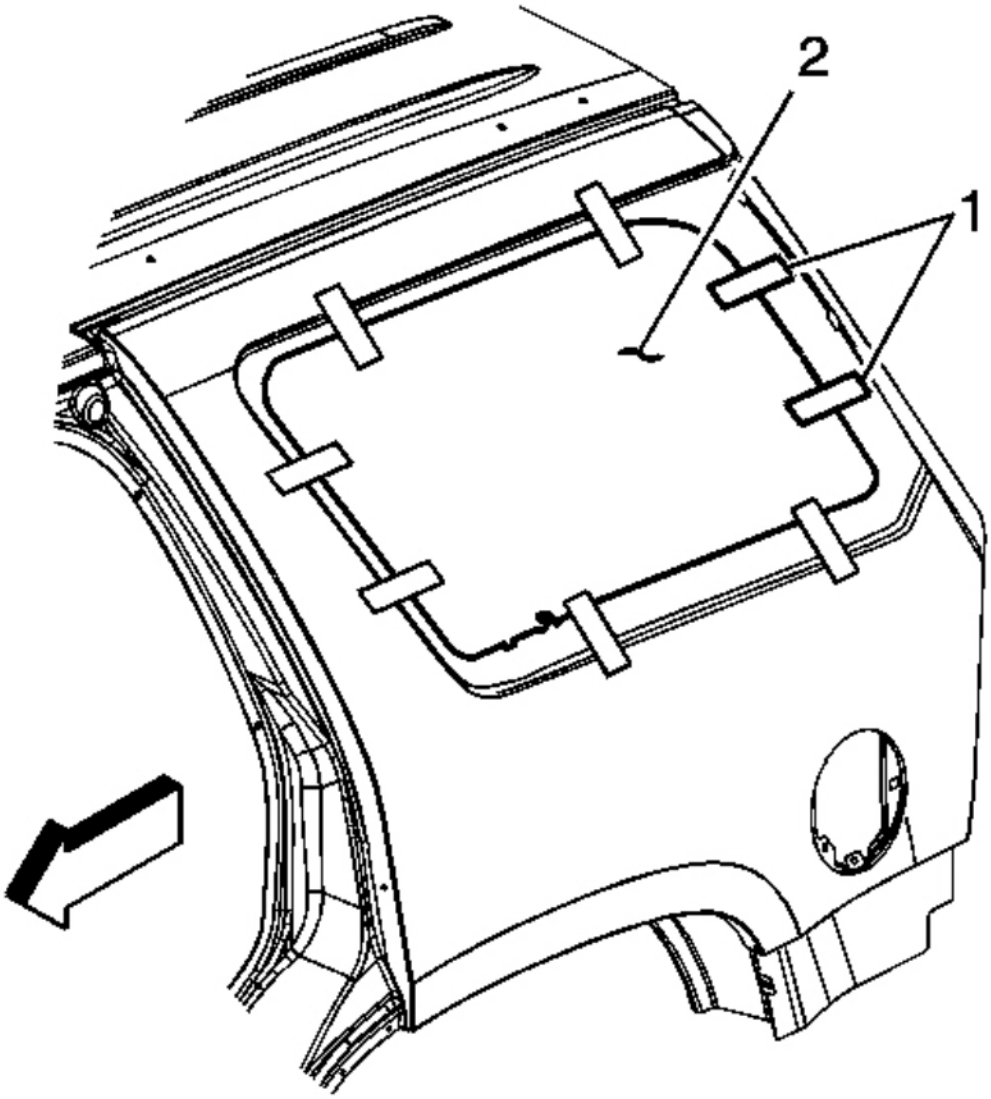

Fig. 73: View Of Marked Locations On Window
Courtesy of GENERAL MOTORS CORP.

20. Align the masking tape (1) lines on the window (2) and the body.

cardiagn.com

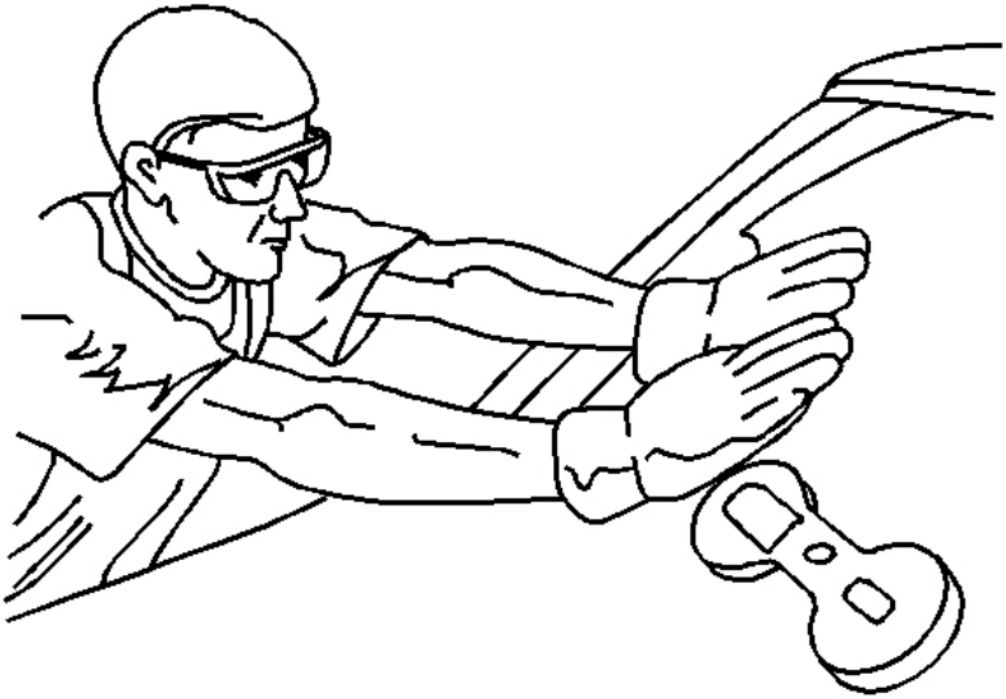

Fig. 74: Pressing Window Into Place
Courtesy of GENERAL MOTORS CORP.

21. Press the window firmly into place.
22. Tape the window to the body in order to minimize movement until the urethane adhesive cures.

cardiagn.com

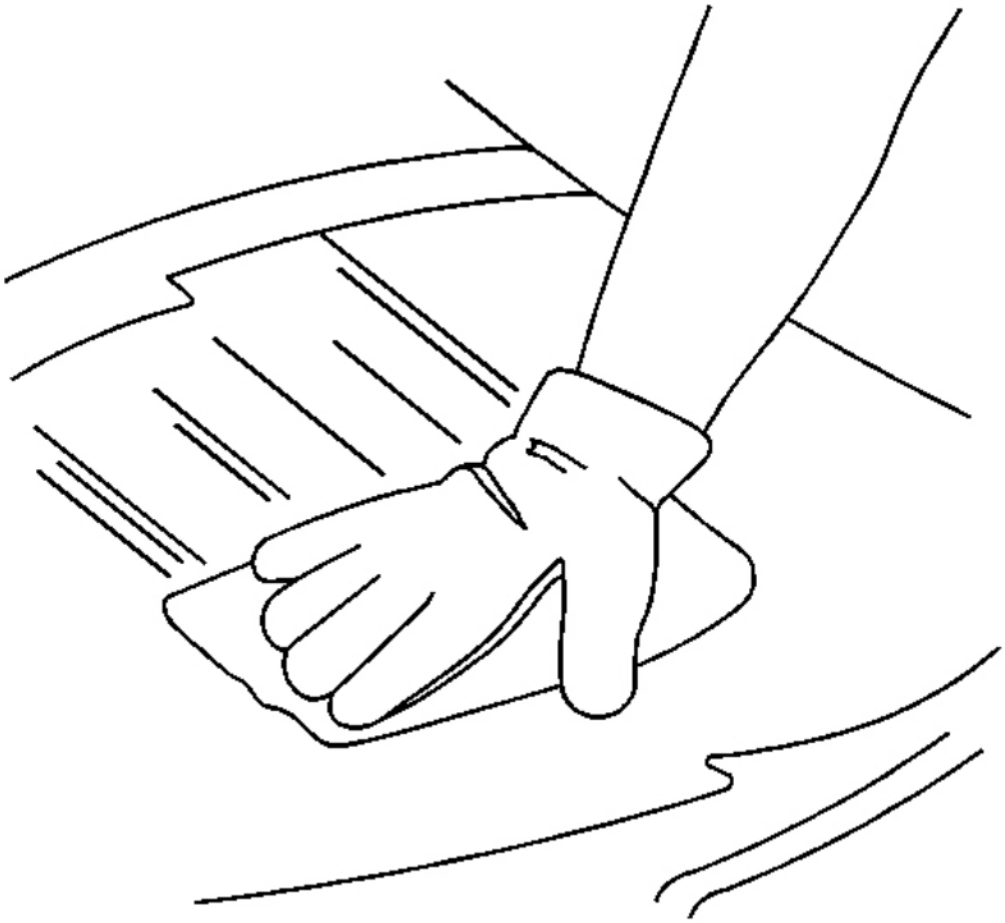

Fig. 75: Cleaning Window
Courtesy of GENERAL MOTORS CORP.

23. Clean any excess urethane adhesive from the body.

cardiagn.com

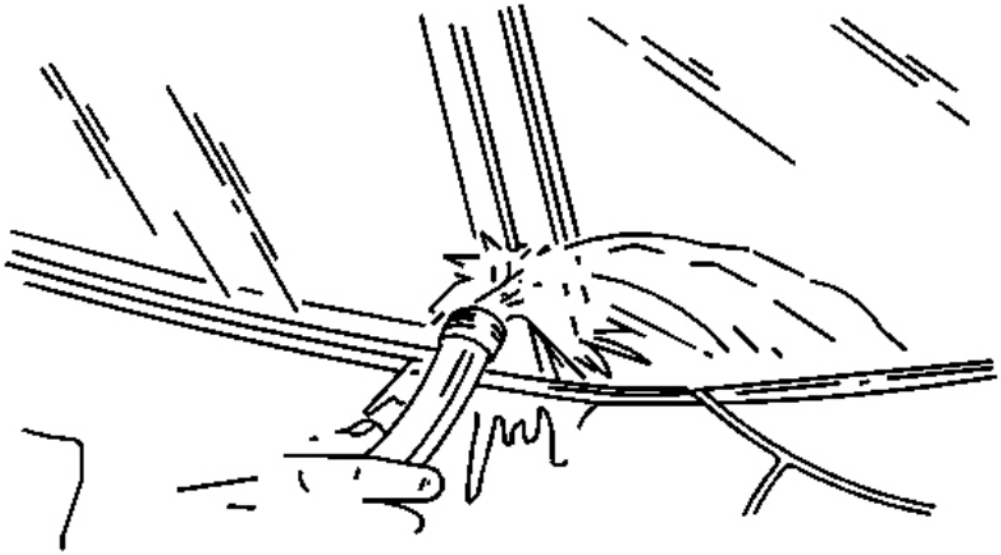

Fig. 76: Performing Water Hose Test
Courtesy of GENERAL MOTORS CORP.

IMPORTANT: Do not direct a hard stream of high pressure water to the freshly applied urethane adhesive.

24. Use a soft spray of warm water in order to immediately water test the window.
25. Inspect the window for leaks.
26. If any leaks are found, use a plastic paddle in order to apply extra urethane adhesive at the leak point.
27. Retest the window for leaks.

CAUTION: Insufficient curing of urethane adhesive may allow unrestrained occupants to be ejected from the vehicle resulting in personal injury.

- **For the moisture-curing type of urethane adhesive, allow a minimum of 6 hours at 21°C (70°F) or greater and with at least 30 percent relative humidity. Allow at least 24 hours for the complete curing of the urethane adhesive.**
- **For the chemical-curing type of urethane adhesive, allow a minimum of 1 hour.**

cardiagn.com

Do NOT physically disturb the repair area until after these minimum times have elapsed.

28. Maintain the following conditions in order to properly cure the urethane adhesive:
    - Partially lower a door window in order to prevent pressure buildups when closing doors before the urethane adhesive cures.
    - Do not drive the vehicle until the urethane adhesive is cured. Refer to the above curing times.
    - Do not use compressed air in order to dry the urethane adhesive.
29. Complete the window installation.

URETHANE ADHESIVE INSTALLATION OF STATIONARY WINDOWS (WINDSHIELD)

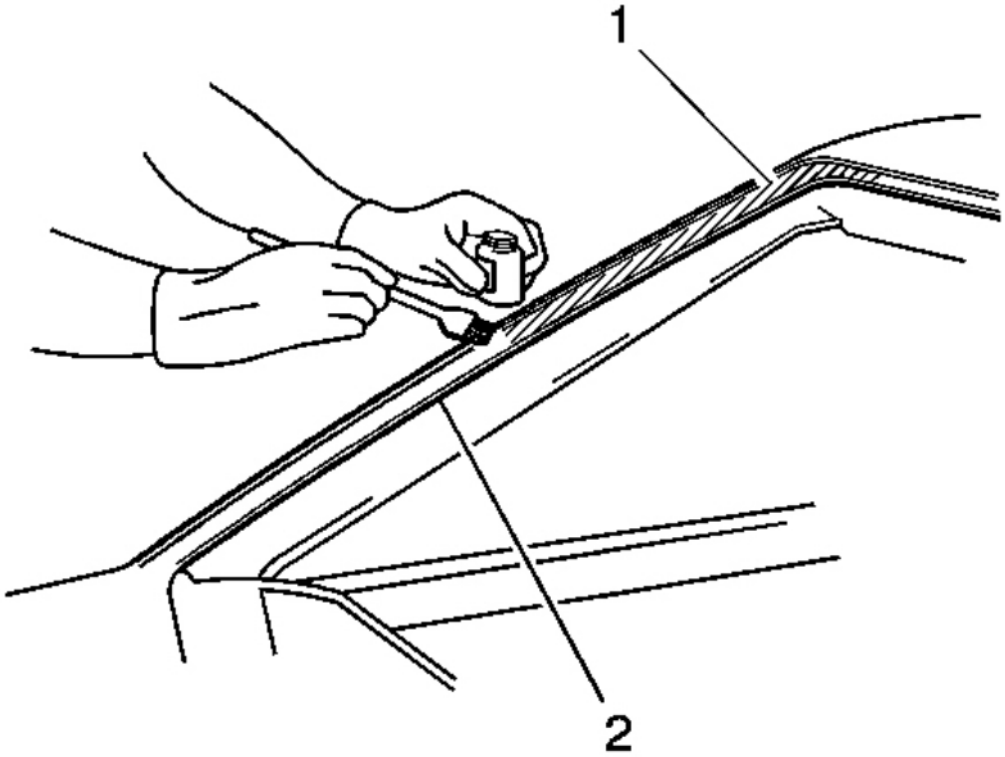

Fig. 77: Applying Pinch-Weld Primer
Courtesy of GENERAL MOTORS CORP.

CAUTION: Refer to Glass and Sheet Metal Handling Caution .

cardiagn.com

IMPORTANT: Remove all but approximately 2 mm (3/64 in) of the existing bead of urethane adhesive from the pinch-weld flange.

1. Remove all mounds or loose pieces of urethane adhesive from the pinch-weld area.
2. If the original window is being reused, remove all but a thin film of the existing urethane adhesive from the window surface by using a clean utility knife or razor blade scraper.
3. Inspect the following components for the causes of a broken window:
   - The flange of the window opening
   - The window reveal molding
4. Inspect for any of the following problems in order to help prevent future breakage of the window:
   - High weld
   - Solder spots on the pinchweld
   - Hardened sealer
   - Any other obstruction or irregularity in the pinch-weld flange

IMPORTANT: If corrosion of the pinch-weld flange is present or if sheet metal repairs or replacements are required, the pinch-weld flange must be refinished in order to restore the bonding area strength. If paint repairs are required, mask the flange bonding area prior to applying the color coat in order to provide a clean primer only surface. Materials such as BASF DE15®, DuPont 2610®, Sherwin-Williams PSE 4600 and NP70® and Martin-Semour 5120 and 5130® PPG DP90LF SPIES/ HECKER 3688/8590 - 3688/5150 - 4070/5090 STANDOX 11158/13320 - 14653/14980 products are approved for this application.

5. After repairing the opening as indicated, perform the following steps:
   1. Remove all traces of broken glass from the outer cowl panel, seats, floor and defroster ducts.
   2. Clean around the edge of the inside surface of the window with a 50/50 mixture of isopropyl alcohol and water by volume on a dampened lint free cloth.

CAUTION: Refer to <u>Window Retention Caution</u> .

6. Verify all primers and urethane adhesive are within expiration dates.

CAUTION: Failure to prep the area prior to the application of primer may cause insufficient bonding of urethane adhesive. Insufficient bonding of urethane adhesive may allow unrestrained occupants to be ejected from the vehicle resulting in personal injury.

IMPORTANT: Do not apply the black #3 primer to the existing bead (1) of the urethane

cardiagn.com

adhesive on the pinch-weld flange. Apply the primer only to nicks, scratches or the primed surfaces.

7. Shake the pinch-weld primer black #3 for at least 1 minute.
8. Use a new dauber in order to apply the primer to the surface of the pinch-weld flange (1).
9. Allow the pinch-weld primer to dry for approximately 10 minutes.

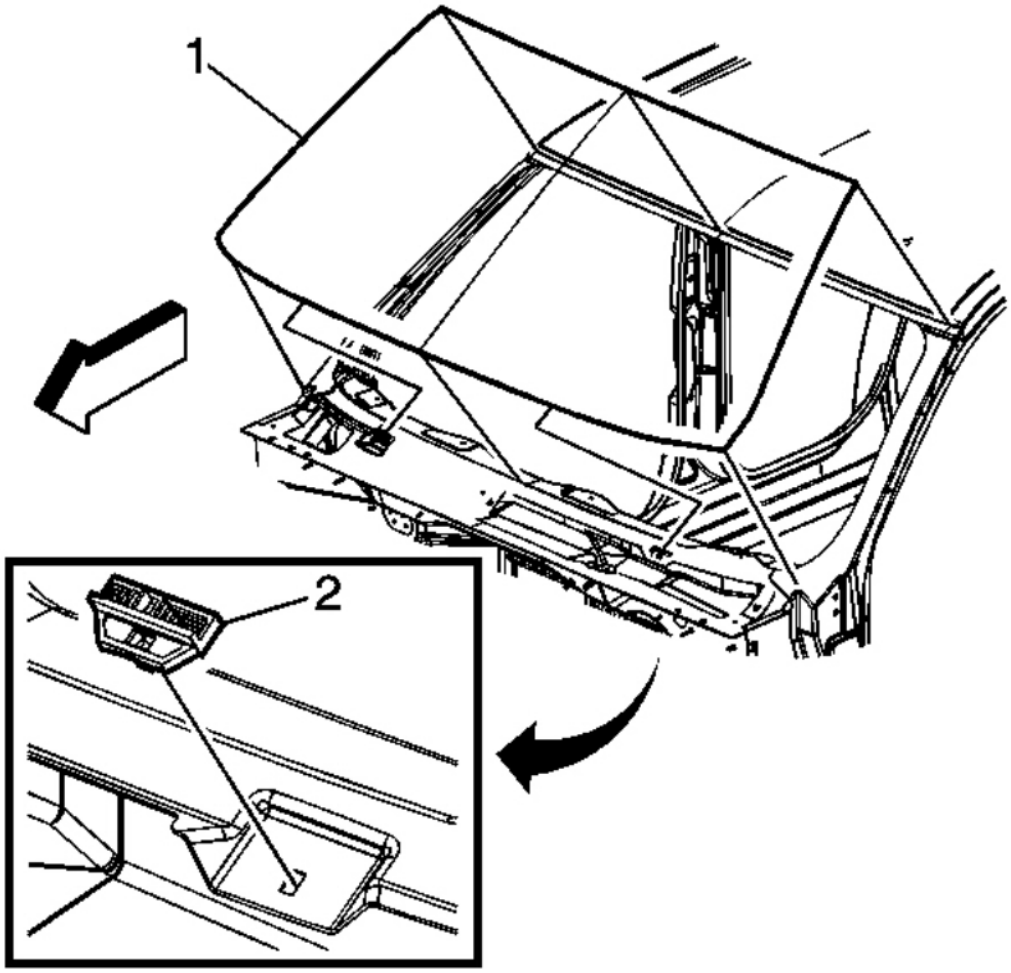

Fig. 78: Dry Fitting The Window
Courtesy of GENERAL MOTORS CORP.

10. With the aid of an assistant, dry fit the window (1) to the opening in order to determine the correct position.

cardiagn.com

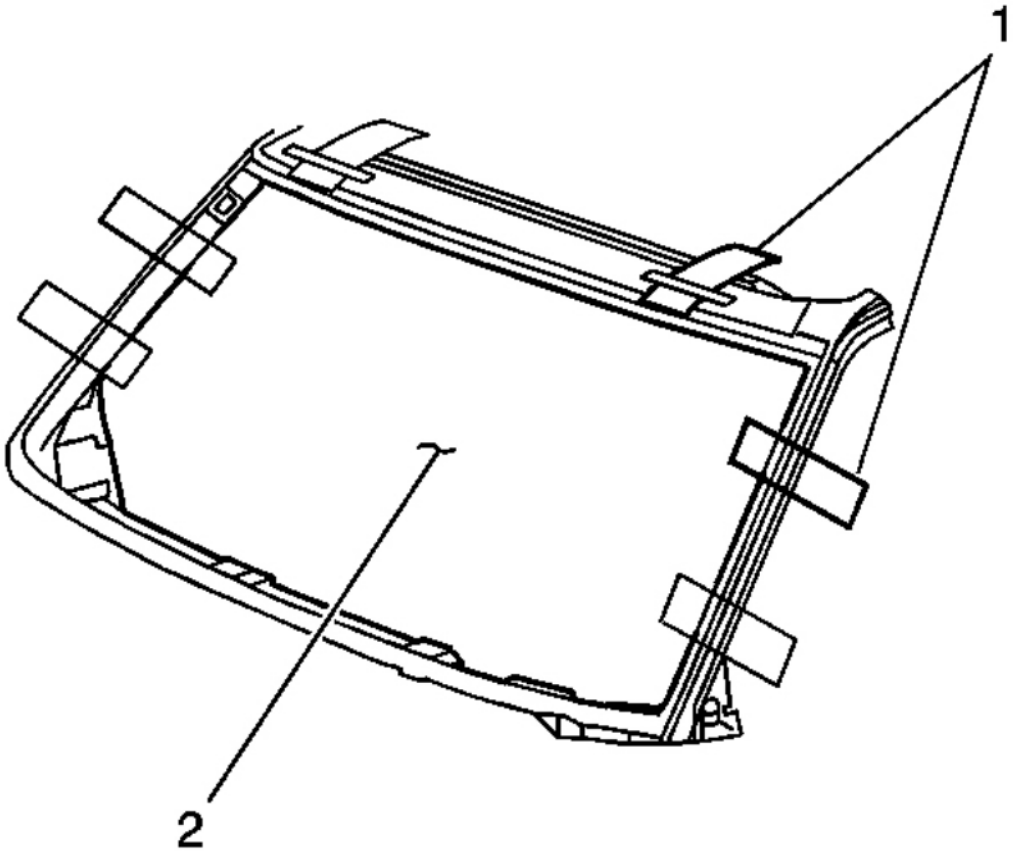

Fig. 79: Aligning Tape Lines On Window To Body
Courtesy of GENERAL MOTORS CORP.

11. Use masking tape in order to mark the locations (1) of the window (2) in the opening.
12. Cut the masking tape in the center and remove the window from the opening.

cardiagn.com

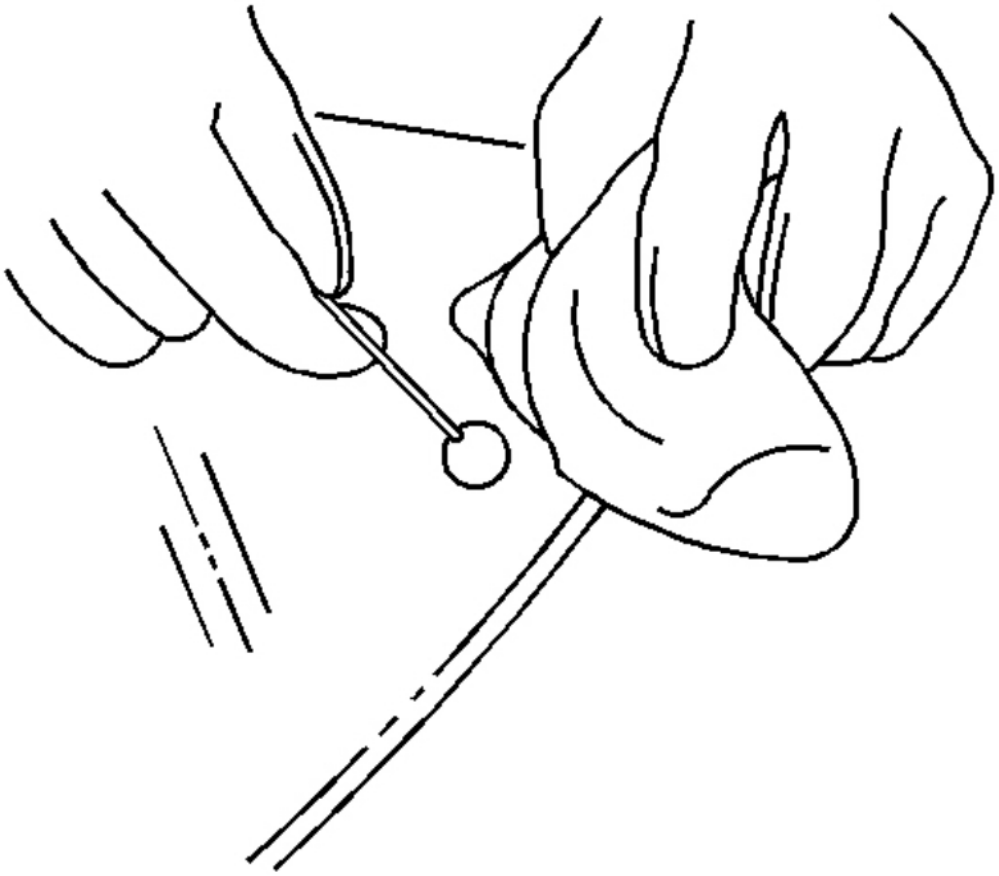

Fig. 80: Applying Glass Prep
Courtesy of GENERAL MOTORS CORP.

IMPORTANT: Use care when applying glass prep clear #1 on the window. This primer dries almost instantly, and may stain the viewing area of the window if not applied evenly.

13. Use a new dauber in order to apply glass prep clear #1 to the area approximately 10-16 mm (3/8-5/8 in) around the entire perimeter of the window inner surface.

    Immediately wipe the glass primed area using a clean, lint-free cloth.

cardiagn.com

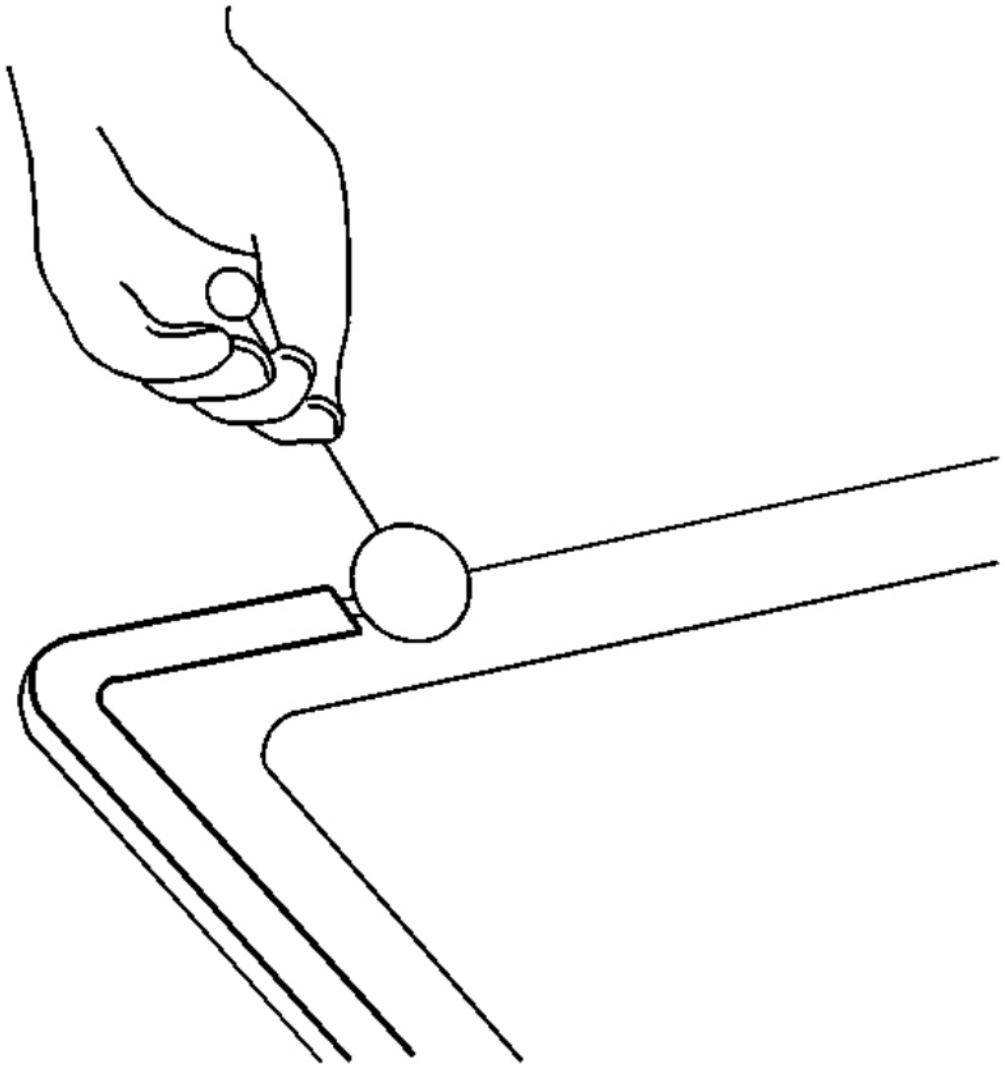

Fig. 81: Applying Glass Prep
Courtesy of GENERAL MOTORS CORP.

14. Apply a second coat of the glass prep clear #1 to the same area of the glass.

cardiagn.com

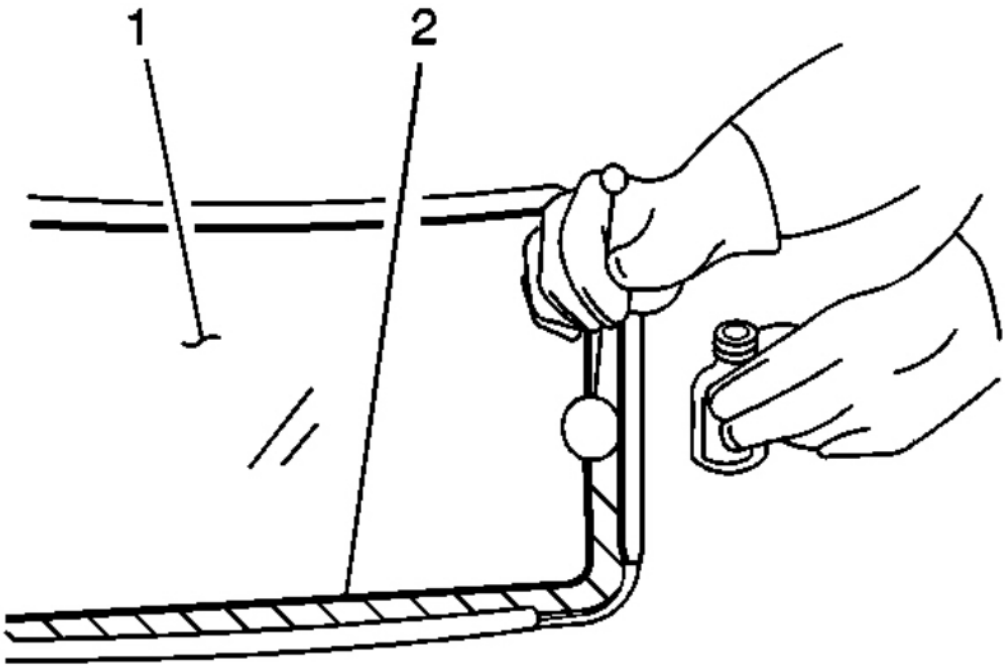

Fig. 82: Applying Glass Primer
Courtesy of GENERAL MOTORS CORP.

IMPORTANT: The glass primer black #2 is effective up to 8 hours after applying it to the glass. The primed surface of the glass must be kept clean.

15. Shake the glass primer black #2 for at least 1 minute.
16. Use a new dauber in order to apply the glass primer black #2 to the same areas (2) that glass prep clear #1 was applied.
17. Allow the glass primer to dry for approximately 10 minutes.

cardiagn.com

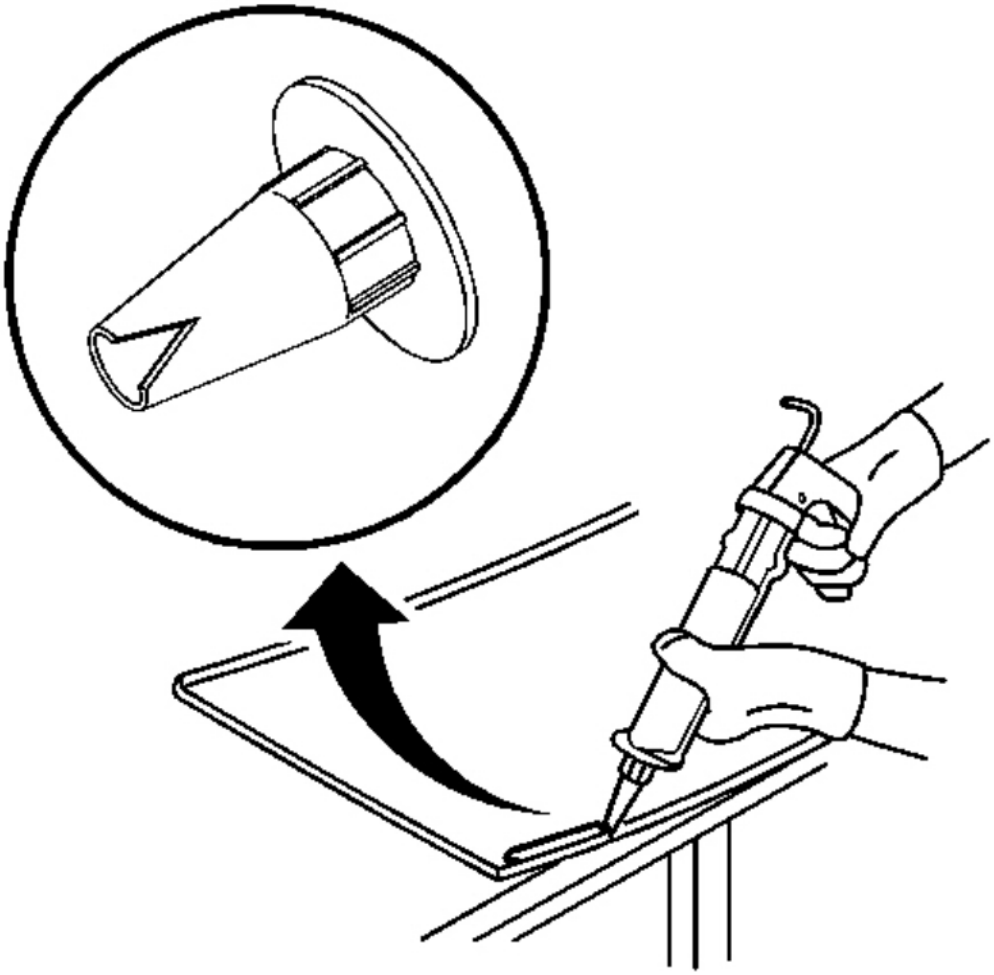

Fig. 83: View Of Modified Applicator Nozzle
Courtesy of GENERAL MOTORS CORP.

18. Cut the applicator nozzle in order to provide a bead of 8 mm (0.316 in) wide and 12.7 mm (1/2 in) high.

cardiagn.com

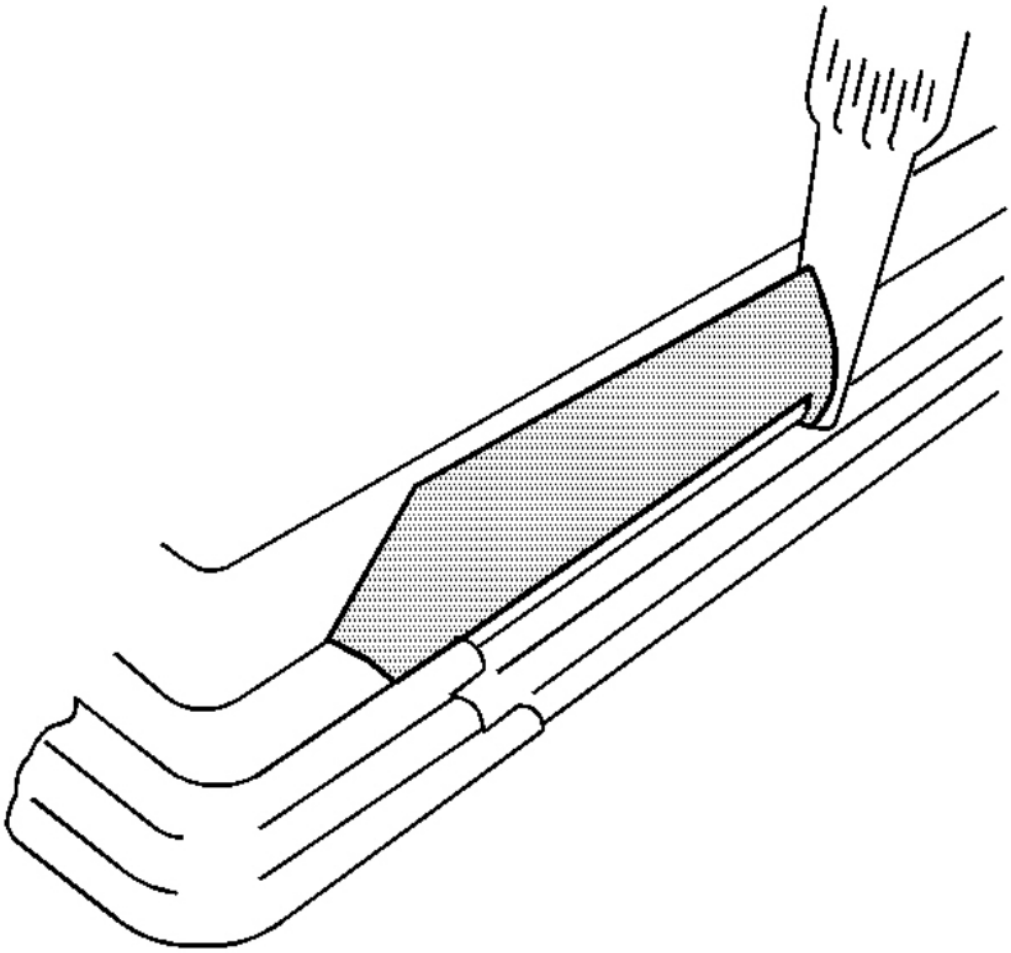

Fig. 84: Applying Bead Of Urethane Adhesive
Courtesy of GENERAL MOTORS CORP.

19. Use a cartridge-type caulking gun in order to apply a smooth, continuous bead of urethane adhesive.

cardiagn.com

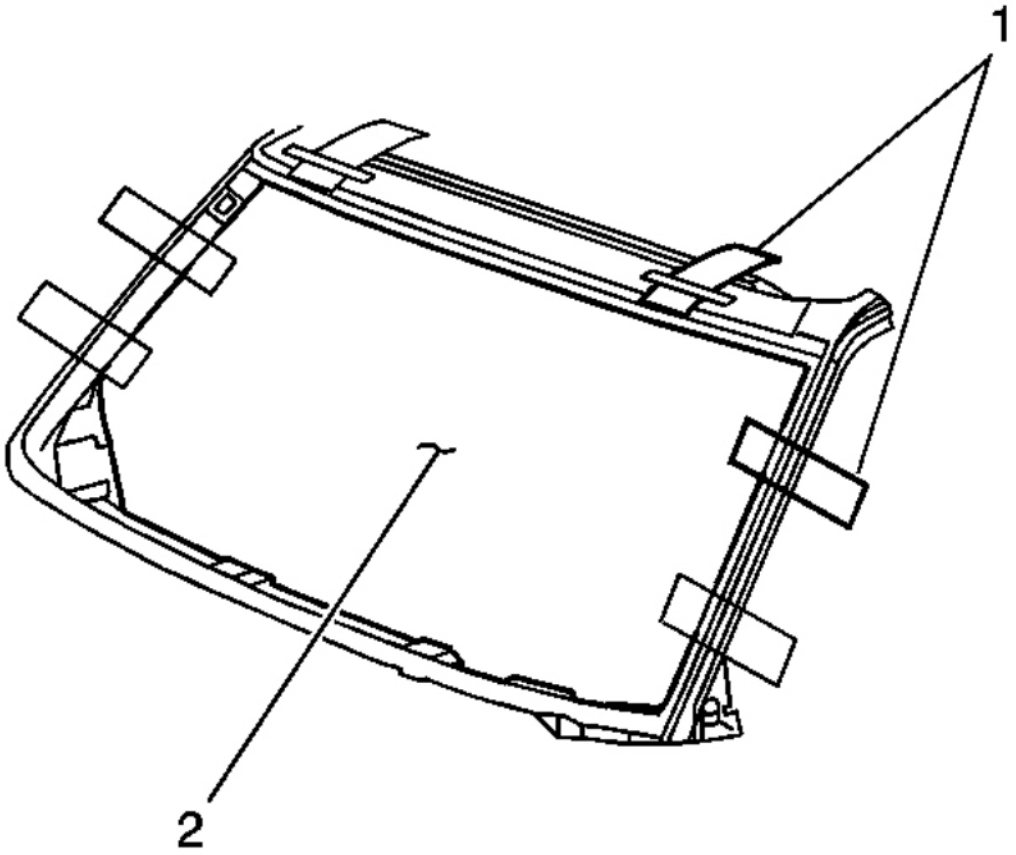

Fig. 85: Aligning Tape Lines On Window To Body
Courtesy of GENERAL MOTORS CORP.

20. Align the masking tape (1) lines on the window (2) and the body.

cardiagn.com

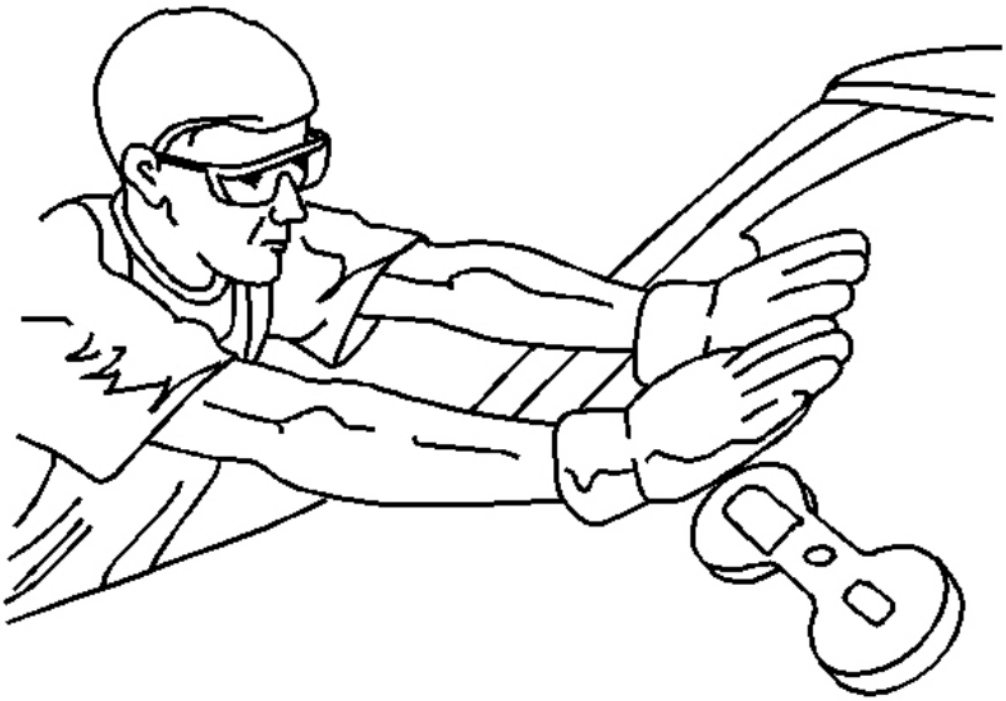

Fig. 86: Pressing Window Into Place
Courtesy of GENERAL MOTORS CORP.

21. Press the window firmly into place.
22. Tape the window to the body in order to minimize movement until the urethane adhesive cures.

cardiagn.com

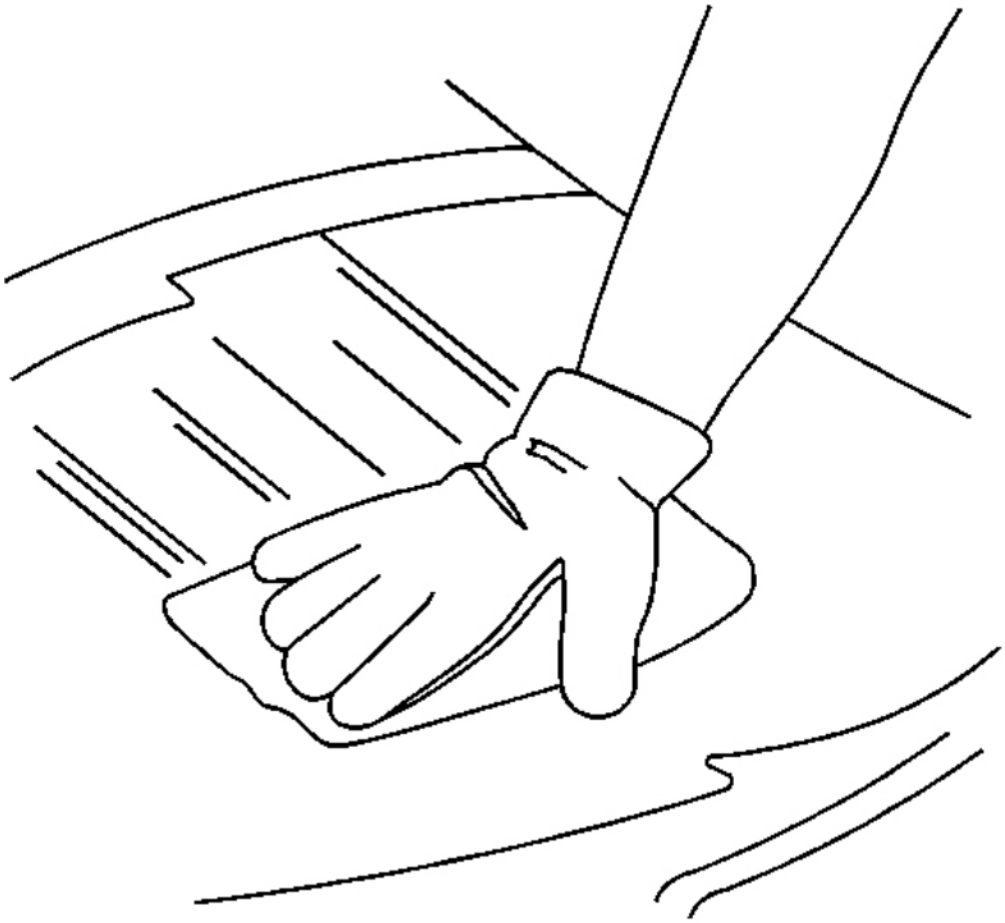

Fig. 87: Cleaning Window
Courtesy of GENERAL MOTORS CORP.

23. Clean any excess urethane adhesive from the body.

cardiagn.com

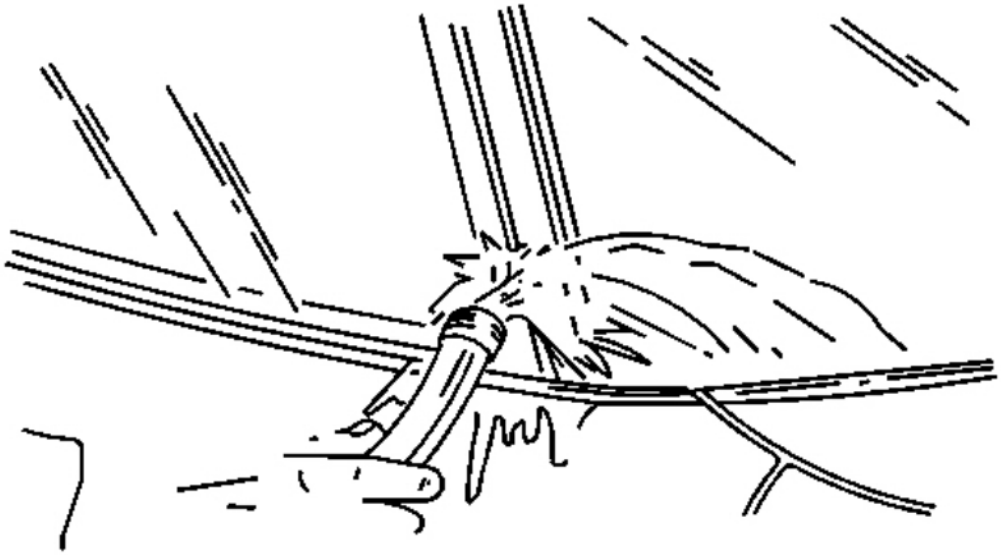

Fig. 88: Performing Water Hose Test
Courtesy of GENERAL MOTORS CORP.

IMPORTANT: Do not direct a hard stream of high pressure water to the freshly applied urethane adhesive.

24. Use a soft spray of warm water in order to immediately water test the window.
25. Inspect the window for leaks.
26. If any leaks are found, use a plastic paddle in order to apply extra urethane adhesive at the leak point.
27. Retest the window for leaks.

CAUTION: Insufficient curing of urethane adhesive may allow unrestrained occupants to be ejected from the vehicle resulting in personal injury.

- **For the moisture-curing type of urethane adhesive, allow a minimum of 6 hours at 21°C (70°F) or greater and with at least 30 percent relative humidity. Allow at least 24 hours for the complete curing of the urethane adhesive.**
- **For the chemical-curing type of urethane adhesive, allow a minimum of 1 hour.**

cardiagn.com

Do NOT physically disturb the repair area until after these minimum times have elapsed.

28. Maintain the following conditions in order to properly cure the urethane adhesive:
    - Partially lower a door window in order to prevent pressure buildups when closing doors before the urethane adhesive cures.
    - Do not drive the vehicle until the urethane adhesive is cured. Refer to the above curing times.
    - Do not use compressed air in order to dry the urethane adhesive.
29. Complete the window installation.

FRONT SIDE DOOR WINDOW FRONT CHANNEL AND REAR CHANNEL REPLACEMENT

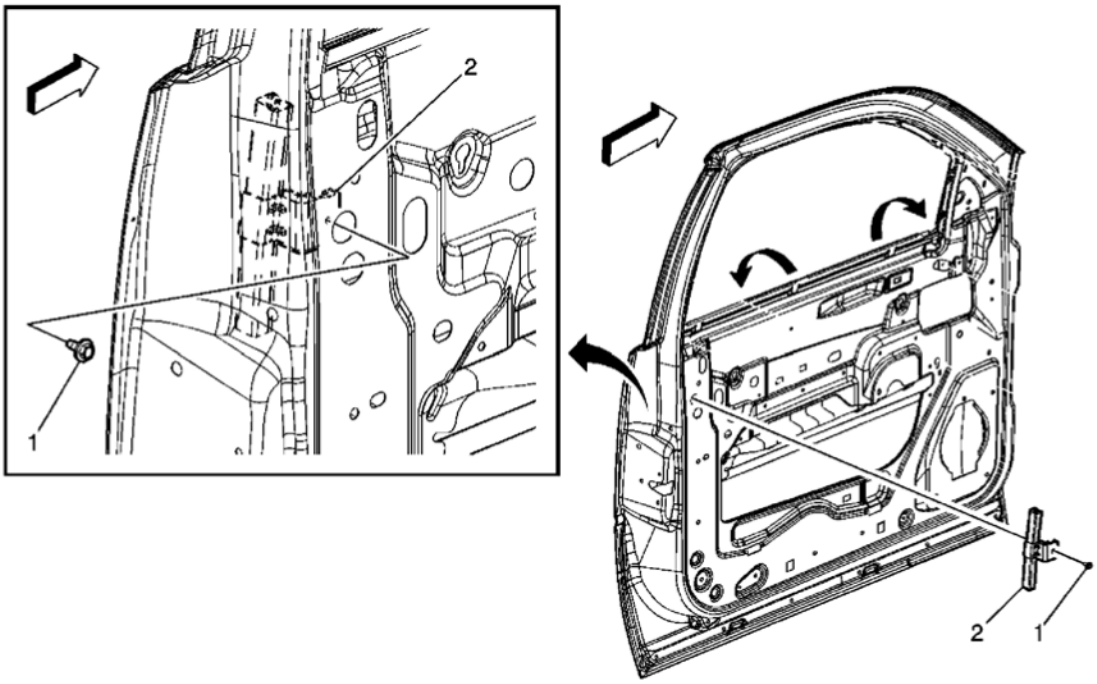

Fig. 89: View Of Front Side Door Window Channels & Components
Courtesy of GENERAL MOTORS CORP.

Front Side Door Window Front Channel and Rear Channel Replacement

Callout	Component Name
Preliminary Procedures	
1.	Place the front door window in the full down position.
2.	Remove the front door trim panel. Refer to **Front Side Door Trim Panel Replacement** .
3.	Remove the water deflector. Refer to **Front Side Door Water Deflector Replacement** .
4.	Remove the front door inner sealing strip. Refer to **Sealing Strip Replacement - Front Door**

cardiagn.com

	Window Belt Inner.
1	Front Door Window Run Channel Rear Lower Bolt **NOTE:** **Refer to Fastener Notice .** **Tighten:** 11 N.m (97 lb in)
2	Front Door Window Run Channel Rear Lower
3	Front Door Window Run Channel Front Lower Bolt **Tighten:** 11 N.m (97 lb in)
4	Front Door Window Run Channel Front Lower

FRONT SIDE DOOR WINDOW REAR CHANNEL REPLACEMENT

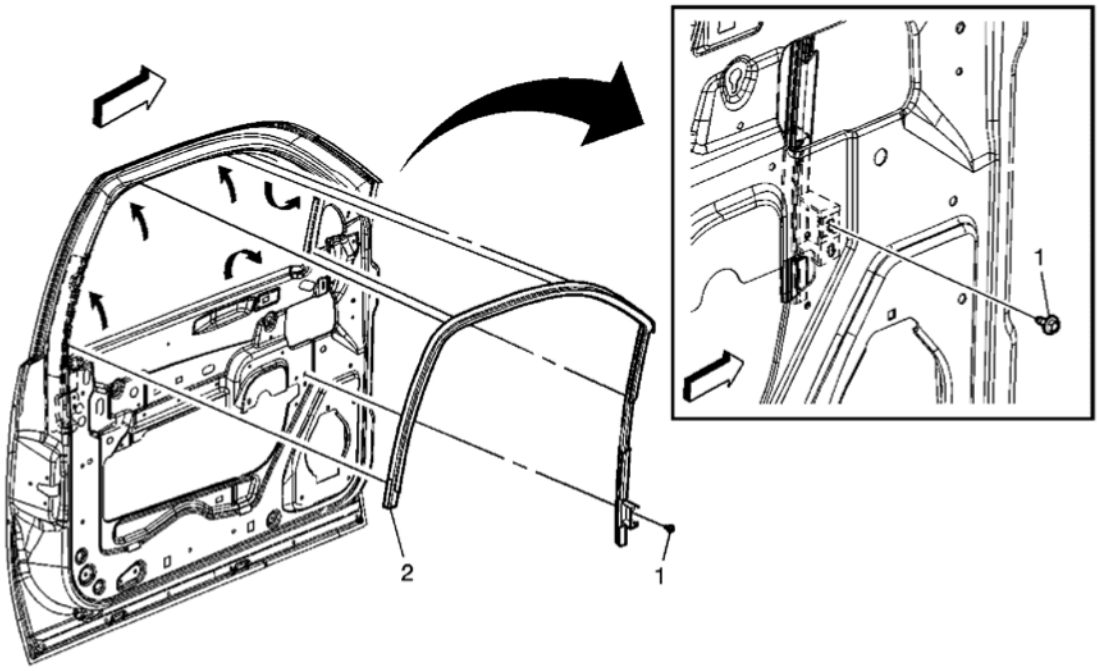

Fig. 90: View Of Front Door Window Channel & Bolt
Courtesy of GENERAL MOTORS CORP.

Front Side Door Window Rear Channel Replacement

Callout	Component Name
Preliminary Procedures 1. Remove the front door trim panel. Refer to **Front Side Door Trim Panel Replacement** . 2. Remove the water deflector. Refer to **Front Side Door Water Deflector Replacement** .	

cardiagn.com

1	Front Door Window Run Channel Rear Bolt **NOTE:** **Refer to Fastener Notice .** **Tighten:** 10 N.m (89 lb in)
2	Front Door Window Run Channel Rear

DESCRIPTION AND OPERATION

FULL-CUT METHOD DESCRIPTION

Use only the full cut method, also known in the field as full strip method, when installing windows.

This method includes the following:

- The replacement of a majority of the urethane adhesive bead. Remove all but approximately 2 mm (3/64 in) of the existing bead of urethane adhesive from the pinch-weld flange.
- Apply pinch-weld primer to any exposed painted areas on the pinch-weld flange.

No mounds or loose pieces of urethane adhesive should remain on the pinch-weld flange. Do not remove all traces of urethane adhesive.

IMPORTANT:

- **If corrosion of the pinch-weld flange is present, or if sheet metal repairs or replacements are required, refinish the pinch-weld flange in order to present a clean, primer-only surface.**
- **If paint repairs are required, mask the flange bonding area, prior to applying the color coat, in order to provide a clean, primer-only surface.**
- **Appropriate materials for these primer applications are typically 2 component catalyzed products. Use materials such as BASF DE15®, DuPont 2610®, Sherwin-Williams PSE 4600 and NP70® and Martin-Semour 5120,5130®, PPG DP90LF SPIES/HECKER 3688/8590 - 3688/5150 - 4070/5090 STANDOX 11158/13320 - 14653/14980 products are approved for this application. Follow the manufacturer's directions for the mix, the application, and the drying times.**
- **After repairing the opening as indicated, shake the pinch-weld primer black #3 well. Using a new dauber, apply the primer to the primed surface of the flange in the bonding area. Allow the primer to dry for 10 minutes.**

ADHESIVE SERVICE KIT DESCRIPTION

The GM of Canada Adhesive Caulking Kit, P/N 10952983, contains the following items:

- Four different primers

cardiagn.com

- A tube of urethane adhesive with a nozzle
- Four daubers
- Instructions with warnings

Use the urethane adhesive caulking kit for replacement of any urethane adhesive-installed window using the full cut method.

In the United States or Canada, you may use any of the following equivalent urethane adhesive systems which meet GM Specification GM 3651G:

- Dow Automotive - Essex 400HV. One part and requires associated primers.
- Dow Automotive - Essex U216. Two part and requires associated primers.

  Call Dow Automotive at 1-800-453-3779 for more information.

- 3M™ "Fast Cure" Auto Glass Urethane. One part and requires associated primers.

  Call 3M™ at 1-877-666-2277 for more information.

Use these materials based on specific manufacturer. Do NOT intermix primers or adhesives from one manufacturer to another.

Always follow the system manufacturer's instructions for application, handling, and curing.

STATIONARY WINDOW DESCRIPTION

Most stationary windows, specifically windshields, are retained to the body with urethane adhesive which adheres the window to the body, increasing structural integrity. The reinstallation of the windows with urethane adhesive requires complete replacement of the urethane adhesive bead, and is known as the full cut method.

POWER WINDOWS DESCRIPTION AND OPERATION

Power Window System Components

The power window system consists of the following components:

- Driver Door Switch (DDS)
- Passenger Door Switch (PDS)
- Body Control Module (BCM)
- Rear door power window switches
- Power window motors in each of the doors (circuit breaker protected)

Power Window System Controls

The power window system will operate anytime the Retained Accessory Power (RAP) system is active or when

cardiagn.com

the ignition switch is in the ACCY or ON position.

The driver and passenger door lock and side window switches are integrated control module switch assemblies. The DDS driver and front passenger window switches are normally open, 3 position rocker type switches, with detents for up, down, and express down. The DDS rear passenger window switches are normally open, 2 position rocker type switches, with detents for up and down. The DDS rear window lockout switch is a push button type switch that provides an active signal to the DDS whenever pressed. Whenever the rear window lockout switch is pressed the DDS will activate or deactivate the rear window lockout function depending on the current state, and illuminate the switch indicator whenever the function is active.

The passenger door switch (PDS) contains a single power window switch that is an integral component. Closing of this normally open, rocker switch provides the PDS with a request for the front passenger power window operation. The switch for the front passenger window has 3 positions UP, Down and Express Down. Each of these switch positions is a direct input to the PDS.

The rear passenger door power window switches are normally open, 2 position rocker type switches, with detents for up and down. Each switch incorporates up and down window motor relays that can be energized by the rocker switch or through BCM control circuits.

Driver Power Window Operation

The switch for the driver power window has 3 positions UP, Down and Express Down and its position is a direct input into the driver door switch (DDS). Upon receiving a request for power window operation (switch activation), the DDS supplies voltage to the power window motor left front up or down circuit and grounds the opposite and the power window motor runs to move the window up or down.

Front Passenger Power Window Operation

The switch for the front passenger power window has 3 positions UP, Down and Express Down, and its position is a direct input into the passenger door switch (PDS). Upon receiving a request for power window operation (switch activation), the PDS supplies voltage to the power window motor right front up or down circuit and grounds the opposite and the power window motor runs to drive the window up or down.

The front passenger power window can also be operated from the DDS. The front passenger window switch on the DDS has 3 positions UP, Down and Express Down and its position is a direct input into the DDS. Upon receiving a request for front passenger power window operation, the DDS transmits a GMLAN message indicating the changed switch position. When the PDS receives this message, the PDS supplies voltage to the power window motor right front up or down circuit and grounds the opposite and the power window motor runs to move the window up or down.

Rear Passenger Power Window Operation

The rear passenger power window switches are supplied battery voltage through 25A circuit breakers in the IP fuse panel. The rear door window switch up and down relays control power and ground to the window motors through the motor control circuits. The rear window switch relays can be energized by the integrated rocker switch or by the BCM through the up and down signal circuits. While a rear window switch is in an inactive state both of the window motor control circuits are grounded through the up and down relays. When an up or down relay is energized the battery supply circuit is closed to the corresponding motor control circuit while the

cardiagn.com

other control circuit remains grounded through the de-energized relay. The BCM supplies the rocker switches with accessory/RAP voltage through the lockout control circuit while the lockout function is inactive. The supply side of all the window up and down relays receive voltage through the battery voltage supply circuit and the LT DOOR or RT DOOR circuit breakers respectively.

The rear passenger power windows can also be operated from the DDS through a GMLAN message to the BCM. The rear passenger window switches on the DDS have 2 positions UP and Down their position is a direct input into the DDS. When the BCM receives a command to operate a rear window up or down the appropriate signal circuit is used to energize the up or down relay in the rear door window switch.

Rear Power Window Lockout Operation

The rear window lockout function is operated from the DDS through a GMLAN message to the BCM. When the BCM receives an active lockout command, the rear door power window switches are disabled. The lockout control circuit from the BCM supplies the accessory/RAP voltage to the rear window switches while the lockout function is inactive and removes the supply voltage to activate the function. Once activated, the lockout feature will remain in effect until the ignition switch is cycled or the DDS receives another power window lockout switch activation.

REAR WINDOW DEFOGGER DESCRIPTION AND OPERATION

Rear Window Defogger System Components

The rear window defogger system consist of the following components:

- Heating Ventilation Air Conditioning control module
- Body control module (BCM)
- DEFOG relay
- Rear window that has a number of grid lines

Rear Window Defogger Operation

When you depress the rear defogger switch, voltage is supplied to the DEFOG relay coil and the HVAC control module also illuminates the rear window defogger indicator. Battery positive voltage is supplied at all times to the DEFOG relay switched input and the DEFOG relay coil is always grounded. This allows battery positive voltage from the relay switched input through the switch contacts and out the relay switched output to the rear window defogger. The HVAC module also sends a message to the driver door module (DDM) and passenger door module (PDM) on the GMLAN serial communication circuit to activate the heated mirrors, if equipped.

When you turn ON the ignition and press the rear window defogger switch for the first time, the defogger cycle lasts 10 minutes. Further operation results in 5 minute defogger cycles.

SPECIAL TOOLS AND EQUIPMENT

SPECIAL TOOLS

cardiagn.com

Special Tools

Illustration	Tool Number/ Description
	J-9886-01 Door Handle Clip Remover
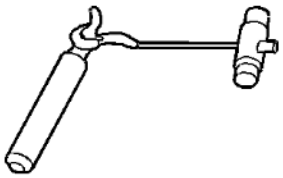	J-24402-A Glass Sealant Cold Knife Remover
	J-33431-C Signal Generator and Instrument Panel Tester
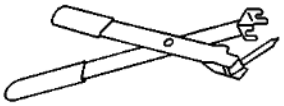	J-34946 Window Pin Remover
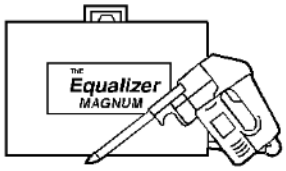	J-39032 Stationary Glass Removal Tool

cardiagn.com

	J-39040 Quarter Window Remover

cardiagn.com