2000-01 STEERING

Power Rack & Pinion - Cars - Except Prizm & Saturn

MODEL IDENTIFICATION

BODY CODE IDENTIFICATION

Body Code	Model
"C"	Park Avenue
"E"	Eldorado
"F"	Camaro & Firebird
"G"	Aurora
"H"	Bonneville & LeSabre
"J"	Cavalier & Sunfire
"K"	DeVille & Seville
"N"	Alero, Grand Am & Malibu
"W"	Century, Grand Prix, Impala, Intrigue, Lumina, Monte Carlo & Regal
"Y"	Corvette

DESCRIPTION & OPERATION

NOTE: Some vehicles are equipped with Variable Effort Steering (VES) system, identified by a solenoid on the power steering pump at the pressure line outlet. See appropriate ELECTRONIC article.

RACK & PINION ASSEMBLY

Pump pressurizes fluid and sends it through the pump's flow control valve to the pinion and valve on the rack and pinion assembly. See **Fig. 1** . Pinion and valve direct fluid to either side of the piston and rack, depending on turning direction of steering wheel. Piston and rack converts hydraulic pressure into linear force, reducing turning effort.

POWER STEERING PUMP

Two types of power steering pumps are used, CB series or TC series. These pumps are constant displacement vane-type pumps. See **Fig. 6** and **Fig. 7** . When pressure exceeds set limits, a flow control pressure relief valve opens, allowing fluid to return to the inlet side of the pump. Some pump applications have remote fluid reservoirs or reservoir attached to pump assembly, to enable

different pump mounting locations. Some models have a reverse rotation pump, depending upon location and belt routing.

LUBRICATION

FLUID TYPE

Use GM Power Steering Fluid (1050017). Failure to use proper fluid will cause hose and seal damage, resulting in fluid leaks and damage to pump and/or rack and pinion assembly.

CAPACITY

POWER STEERING FLUID CAPACITY

Application	Pump Capacity	System Capacity
All Models	1.0 Pt. (0.5L)	1.5 Pts. (0.75L)

FLUID LEVEL CHECK

Fluid level is indicated by marks on reservoir or dipstick. Ensure fluid level is at FULL COLD mark when fluid temperature is about 70°F (21°C). Ensure fluid level is at FULL HOT mark when fluid is at operating temperature of about 170°F (77°C).

HYDRAULIC SYSTEM BLEEDING

NOTE: If air is introduced into hydraulic system during servicing, bleed system. Aerated fluid, which appears Light Tan in color, results in poor steering performance and may cause pump damage.

1. Turn ignition off. Raise and support vehicle with wheels off ground. Turn wheels fully to left. Add power steering fluid to FULL COLD mark on dipstick. Leave cap off. Turn wheels from side to side several times, but DO NOT touch steering stops. Add fluid, if necessary, to maintain level at FULL COLD mark.
2. Start engine. With engine idling, recheck fluid level. Add fluid, if necessary, to bring level to FULL COLD mark. Install cap. Return wheels to center position. Lower vehicle. Continue to run engine for 2-3 minutes. Road test vehicle. Check for leaks. Ensure fluid level is at FULL HOT mark when fluid stabilizes at operating temperature.

ADJUSTMENTS

POWER STEERING PUMP BELT (SERPENTINE BELT)

1. On most applications, serpentine belt tension is maintained by automatic tensioner and no adjustment is necessary. Ensure tensioner indicator mark, on movable portion of tensioner, is within limits of slotted area on stationary portion of tensioner. Any reading outside these limits indicates a worn belt or defective tensioner.
2. If installing NEW belt, ensure tensioner indicator is within limit marks. If installing original belt, ensure belt operating length and/or tensioner operating range marks are not out of limits. Replace belt or tensioner as necessary. See appropriate SERVICE & ADJUSTMENT SPECIFICATIONS article in ENGINE PERFORMANCE.

RACK BEARING PRELOAD

1. Raise and support vehicle. Turn front wheels to straight-ahead position. Loosen adjuster plug lock nut. See **Fig. 1** . Turn adjuster plug clockwise until it bottoms in housing. Back off adjuster plug 50-70 degrees (about one flat).
2. While holding adjuster plug stationary, tighten adjuster plug lock nut to specification. See **TORQUE SPECIFICATIONS** . Test drive vehicle, ensuring steering wheel returns to center after turning.

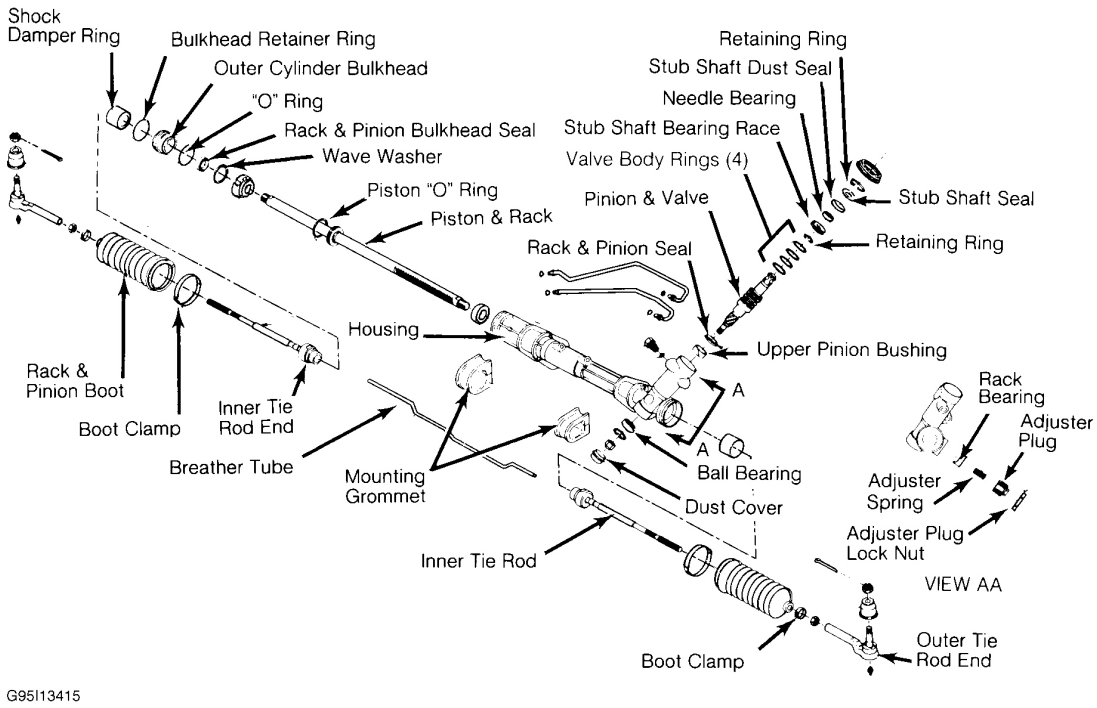

Fig. 1: Exploded View Of Power Rack & Pinion Steering Assembly (Typical)
Courtesy of GENERAL MOTORS CORP.

SYSTEM TESTS

NOTE: Incorrect idle speed, fluid level, belt tension, as well as a damaged pump pulley, can affect test results. If any of these conditions exist, repair as necessary before testing power steering system.

PRESSURE TEST

1. Disconnect high pressure line from power steering pump. Connect power steering pressure tester gauge between high pressure line and power steering pump using appropriate adapters. Completely open tester valve.
2. Run engine until fluid reaches operating temperature. Stop engine. Check fluid level. Add fluid if necessary. Start engine. Pressure should be less than 230 psi (16.8 kg/cm^2). If pressure exceeds 230 psi (16.8 kg/cm^2), stop engine and check for restriction in hose(s).

CAUTION: To prevent pump damage, Do not hold gauge valve closed for more than 5 seconds.

3. While observing pressure gauge, fully close valve for less than 5 seconds and then open it. Repeat process 2 more times, and record highest pressure displayed each time valve is closed. If readings are as specified and within 50 psi (4 kg/cm^2) of each other, go to step 6 . See **PRESSURE SPECIFICATIONS** table. If readings are as specified but not within 50 psi (4 kg/cm^2) of each other, go to next step. If readings are not as specified but within 50 psi (4 kg/cm^2) of each other, go to step 5 .

PRESSURE RELIEF SPECIFICATIONS

Application	psi (kg/cm^2)
"C" & "H" Bodies	More Than 1350 (95)
"E" Body	More Than 1500 (105)
"F" Body	More Than 1200 (84)
"G" & "K" Bodies	More Than 1700 (120)
"J" Body	
2.2 L	More Than 1200 (84)
2.4 L	More Than 1300 (91)

"N" Body	More Than 1400 (98)
"W" Body	More Than 1300 (91)
"Y" Body	More Than 1250 (89)

4. Check for sticking flow control valve. Remove valve, but DO NOT disassemble. Clean valve using crocus cloth or fine hone. Flush system, if dirty. Install valve and retest system. If readings are now as specified, go to step 6 . If reading are not as specified, go to next step.
5. Replace flow control valve and retest system. If pressure readings are still low, check pump rotor and vanes for wear. Replace complete pump assembly if worn and flush power steering system. If pressure readings are as specified, go to step 7 .
6. With valve open, turn steering wheel from stop to stop. Record highest pressure with wheels at both stops. If highest pressure is not equal to highest pressure recorded in step 3 , rack and pinion assembly is leaking internally. Repair or replace assembly. If pressures are equal, no problem exists. Go to next step.
7. Turn engine off. Remove tester. Reconnect high pressure hose to pump. Check fluid level. Bleed hydraulic system. See **HYDRAULIC SYSTEM BLEEDING** under LUBRICATION.

FLOW RATE TEST

1. Connect Power Steering Analyzer (J-44721) into system. Fully open analyzer valve. Run engine until fluid reaches normal operating temperature. Check fluid level. Add fluid if necessary. Record pressure and flow rate.
2. Close valve partially until pressure is 700 psi (49 kg/cm^2), and then record flow rate. Subtract flow rate from that measured in step 1 . If flow rate drops more than one gallon (3.8L) per minute, replace ring, rotor and vanes in pump. If flow rate does not drop one gallon (3.8L) per minute, go to next step.
3. Increase engine speed to 1500 RPM, and record flow rate. Subtract flow rate from that measured in step 1 . If difference between flow rates is more than one gallon (3.8L) per minute, remove and clean flow control valve. If not, go to next step.
4. Turn steering wheel from stop to stop. Flow rate should be less than one gallon (3.8L) per minute at each stop. If flow rate is not as specified, check rack and pinion assembly for leakage.
5. Turn engine off. Remove tester. Reconnect high pressure hose to pump. Check fluid level. Bleed hydraulic system. See **HYDRAULIC SYSTEM BLEEDING** under LUBRICATION.

REMOVAL & INSTALLATION

CAUTION: When battery is disconnected, vehicle computer and memory systems may lose memory data. Driveability problems may exist until computer systems have completed a relearn cycle. See COMPUTER RELEARN PROCEDURES article in GENERAL INFORMATION before disconnecting battery.

OUTER TIE ROD

Removal

Raise and support vehicle. Remove cotter pin and castle nut from outer tie rod end. Loosen outer-to-inner tie rod lock nut. Using Steering Linkage Puller (J-24319-01), separate outer tie rod end from steering knuckle. Remove outer tie rod end from inner tie rod, noting number of turns required to remove.

Installation

Install outer tie rod end with same number of turns as when removed. Tighten outer-to-inner tie rod lock nut to specification. See **TORQUE SPECIFICATIONS** . To complete installation, reverse removal procedure. Tighten tie rod end castle nut to specification. Install NEW cotter pin at castle nut. DO NOT back off nut to install cotter pin. Adjust toe-in as necessary.

POWER STEERING COOLER PIPE/HOSE

Removal

1. Place a drain under vehicle. Raise vehicle. Remove power steering return hose from power steering cooler pipe. Remove power steering return line from power steering gear. See **Fig. 2** .
2. Remove clamp holding power steering return line to power steering gear. Remove power steering cooler pipe retaining bolts from frame. Remove power steering cooler pipe from frame. See **Fig. 3** .

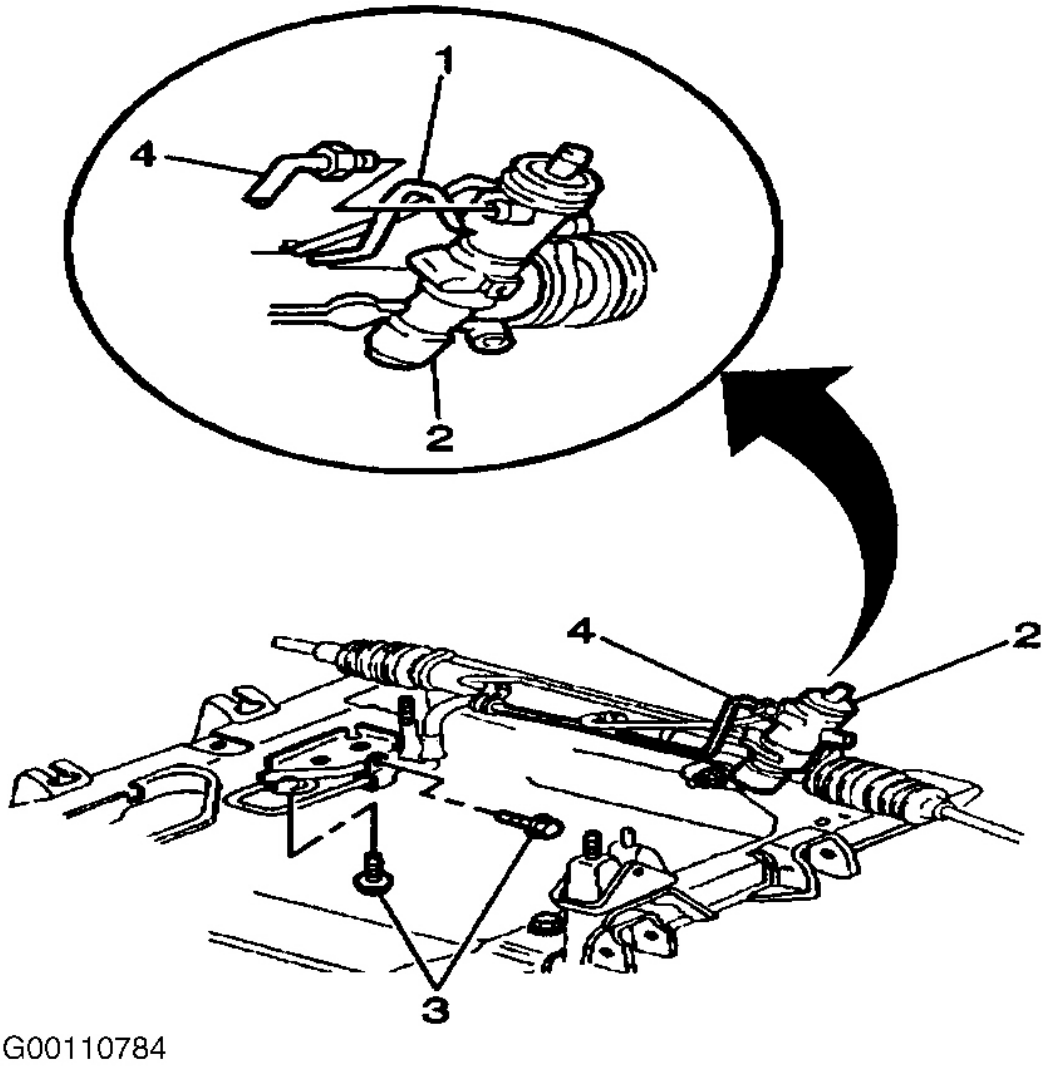

Fig. 2: Removing Power Steering Return Line From Power Steering Gear
Courtesy of GENERAL MOTORS CORP.

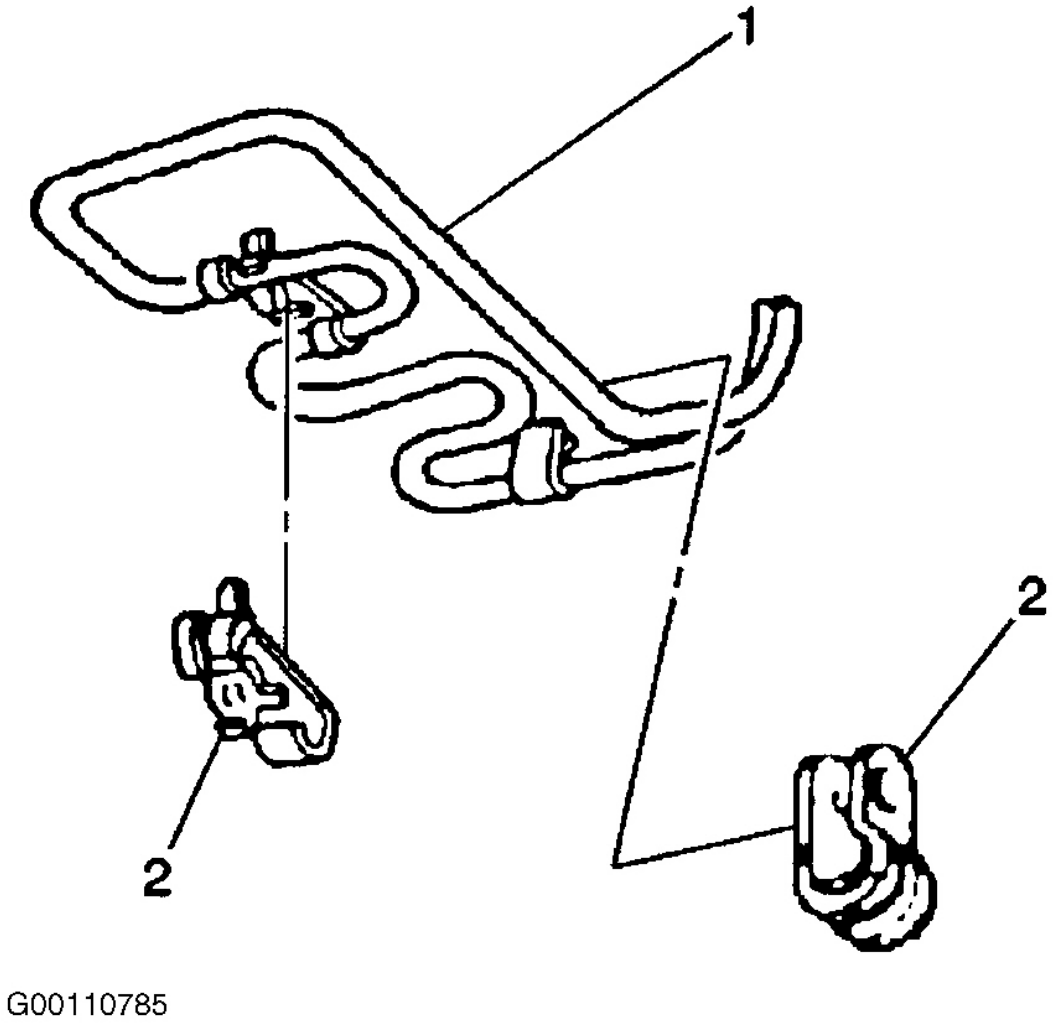

Fig. 3: Removing Power Steering Cooler Pipe
Courtesy of GENERAL MOTORS CORP.

Installation

CAUTION: Use correct fastener in correct location. Replacement fasteners must be correct part number for that application. Fasteners requiring replacement or fasteners requiring the use of thread locking compound or sealant are identified in the service procedure. DO NOT use paints, lubricants, or corrosion inhibitors on fasteners or fastener joint surfaces unless specified. These coatings affect fastener torque and

joint clamping force and may damage fastener. Use correct tightening sequence and specifications when installing fasteners in order to avoid damage to parts and systems.

1. Install power steering cooler pipe to frame. Install power steering cooler pipe retaining bolts to frame and tighten to 86 INCH Lbs. (9.5 N.m). Install clamp to power steering gear to hold power steering lines to power steering gear. Install power steering return line to power steering gear. Tighten power steering return line fitting to 20 ft. lbs. (27 N.m).
2. Install power steering return hose to power steering cooler pipe. Remove drain pan from under vehicle. Fill power steering system. Bleed power steering system. Check power steering system for leaks.

POWER STEERING PUMP PULLEY

Removal

It may be necessary to remove or reposition power steering pump to remove pulley. If necessary, see **POWER STEERING PUMP** . Install Pulley Remover (J-25034), on pulley hub at pump shaft. While holding remover body with wrench, turn center bolt clockwise to draw/pull pulley off pump shaft.

Installation

NOTE: Do not use arbor press to install pulley.

Using Pulley Installer (J-25033), install pulley onto shaft until internal stop is contacted or face of pulley hub is even with end of shaft. To complete installation, reverse removal procedure. Fill and bleed hydraulic system. See **HYDRAULIC SYSTEM BLEEDING** under LUBRICATION.

POWER STEERING PUMP

NOTE: When replacing power steering pump, ensure proper replacement pump is installed.

Removal & Installation (Except "F" Body 5.7L)

1. Disconnect negative battery cable. Remove serpentine belt. Place a drain pan under vehicle. Remove or reposition, as necessary, coolant reservoir and power steering pump pulley. See **POWER STEERING PUMP PULLEY** .
2. Remove air cleaner housing, (if necessary). Remove pressure and return hoses from pump. On "W" and "G" bodies, remove fuel injector site shield. Remove ABS wiring harness and

bracket (if equipped). On "C" body remove right outer tie rod using Tie Rod Remover (J-24319-01). See **OUTER TIE ROD** . Remove pump mounting bolts. Remove pump.

3. To install, reverse removal procedure. Fill and bleed hydraulic system. See **HYDRAULIC SYSTEM BLEEDING** under LUBRICATION.

Removal & Installation ("F" Body 5.7L)

1. Remove pump pulley (if necessary). See **POWER STEERING PUMP PULLEY** . Remove pressure and return hoses from pump.
2. Remove pump mounting bolts. Remove front bracket. Remove pump assembly from rear bracket.
3. To install, reverse removal procedure. Fill and bleed hydraulic system. See **HYDRAULIC SYSTEM BLEEDING** under LUBRICATION. Fill and bleed engine cooling system. See appropriate article in ENGINE COOLING.

PUMP FLOW CONTROL VALVE ASSEMBLY

Removal & Installation

Remove power steering pump (if necessary to access rear of pump). See **POWER STEERING PUMP** . Remove pressure line fitting (or VES actuator) from pump. See **Fig. 4** . Remove "O" ring, flow control valve assembly and flow control spring. To install, reverse removal procedure. Tighten pressure line fitting to specification. See **TORQUE SPECIFICATIONS** .

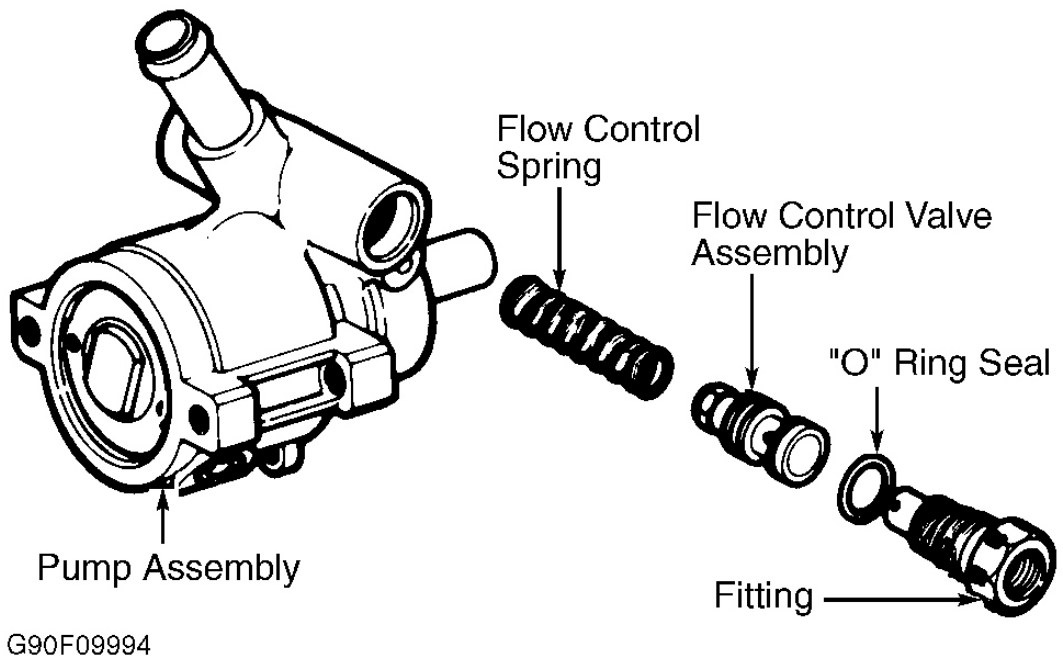

Fig. 4: Exploded View Of Flow Control Valve Assembly (Typical)
Courtesy of GENERAL MOTORS CORP.

PUMP SHAFT SEAL

Removal (CB Series Pump)

Remove power steering pump (if necessary to allow clearance for pulley removal). See **POWER STEERING PUMP** . Remove pump pulley. See **POWER STEERING PUMP PULLEY** . Protect pump shaft with shim stock. Use care not to damage pump shaft surface. Cut seal metal housing with small chisel to ease seal removal. Use screwdriver to pry seal out of body. Remove and discard seal. Remove shim stock from shaft.

Installation

Lubricate new seal with power steering fluid. Using Shaft Seal Installer (J-7728) or a suitable size deep socket, drive seal into housing until it bottoms. Install pulley onto pump. See **POWER STEERING PUMP PULLEY** . Install pump onto bracket (if removed).

Removal (TC Series Pump)

Remove power steering pump (if necessary to allow clearance for pulley removal). See **POWER**

STEERING PUMP . Remove pump pulley. See **POWER STEERING PUMP PULLEY** . Remove bearing retaining ring. Removal drive shaft and bearing assembly. Use screwdriver to pry seal out of body. Remove and discard seal. If replacing bearing, measure clearance (if any) between drive shaft shoulder and bearing inner race. See **Fig. 8** .

Installation

Lubricate new seal with power steering fluid. Using suitable size deep socket, drive seal into housing until it bottoms. Press bearing onto shaft to clearance measured before removal. Install shaft and bearing into housing, rotating assembly to engage rotor. Install bearing retaining ring with beveled side down, indicated by position of large lug on ring. See **Fig. 9** . Install pulley onto pump. Install pump onto bracket (if removed).

RACK & PINION ASSEMBLY

CAUTION: To prevent damage to Supplemental Inflatable Restraint (SIR) system, place front wheels in a straight-ahead position and turn ignition switch to LOCK position.

Follow these precautions (if applicable), when removing rack and pinion from vehicle:

- Before disconnecting battery, see COMPUTER RELEARN PROCEDURES in GENERAL INFORMATION.
- Disconnect steering column coupler before lowering engine frame.
- DO NOT allow rear of engine frame to hang, always support frame.
- DO NOT allow steering column to rotate when rack and pinion is removed, damage to SIR system.
- DO NOT start engine with power steering hoses removed. Serious pump damage may result.

Removal (Except "E", "F" & "Y" Bodies)

1. Install Steering Column Lock Pin (J-42640) into steering column, (if equipped). Disconnect battery. Raise and support vehicle. Remove front wheels. Separate outer tie rod ends. See **OUTER TIE ROD** . Remove steering column-to-rack coupler pinch bolt.
2. If exhaust system interferes with removal, remove front portion of exhaust system. Remove any heat shields. Disconnect any electrical connectors or components as necessary. Disconnect sway bar if needed. On Eldorado, remove road sensing suspension links.
3. Loosen front engine frame-to-body mounting bolts about one turn, but DO NOT remove. Install jack under rear portion of engine frame, and remove rear engine frame-to-body mounting bolts. Ensure rear of engine frame can be lowered without damaging other

components. Separate steering coupler from rack and pinion. On Eldorado, remove transaxle mount. Using jack, lower rear end of engine frame.

4. Place a drain pan under rack and pinion. Remove power steering pressure and return lines from rack and pinion assembly. Remove rack and pinion mounting bolts and bushings. Remove rack and pinion from vehicle through left wheel opening on most models.

Installation

To install, reverse removal procedures. Tighten nuts and bolts to specifications. Apply Loctite to threads and tighten in sequence. See **Fig. 5** . See **TORQUE SPECIFICATIONS** . Fill and bleed hydraulic system. See **HYDRAULIC SYSTEM BLEEDING** under LUBRICATION. Adjust toe-in as necessary. See appropriate SPECIFICATIONS & PROCEDURES article in WHEEL ALIGNMENT.

Removal ("E" Body)

1. Disconnect battery. Raise and support vehicle. Remove front wheels. Remove power steering pressure hoses from rack and pinion. Separate outer tie rod ends. See **OUTER TIE ROD** . Remove steering column-to-rack coupler pinch bolt.
2. Support front suspension crossmember with a suitable jack. Remove brake pipes from the retainers on the front suspension support. Remove front suspension crossmember mounting bolts. Lower front suspension crossmember in order to remove rack and pinion. Remove rack and pinion mounting bolts. Remove rack and pinion from front suspension crossmember.

Installation

To install, reverse removal procedures. Tighten nuts and bolts to specifications. Apply Loctite to threads and tighten in sequence. See **TORQUE SPECIFICATIONS** . Fill and bleed hydraulic system. See **HYDRAULIC SYSTEM BLEEDING** under LUBRICATION. Adjust toe-in as necessary. See appropriate SPECIFICATIONS & PROCEDURES article in WHEEL ALIGNMENT.

Removal ("F" Body)

1. Disconnect negative battery cable. Remove serpentine belt, (if needed). On (V8), remove air intake resonator. On all models, place drain pan under vehicle and drain power steering fluid. Raise and support vehicle. Remove front wheels. Support engine with suitable jack. Disconnect power steering pressure and return hoses from rack and pinion assembly.
2. Remove steering coupler pinch bolts and remove coupler from rack and pinion. Disconnect and separate front tie rod ends. See **OUTER TIE ROD** . On (V8), remove generator. On

(V8), remove left-side engine mount through-bolt. On all models, remove rack and pinion mounting bolts and nuts. Remove rack and pinion.

Installation

To install, reverse removal procedures. Tighten nuts and bolts to specification. See **TORQUE SPECIFICATIONS** . Fill and bleed hydraulic system. See **HYDRAULIC SYSTEM BLEEDING** under lubrication. Adjust toe-in as necessary. See appropriate SPECIFICATIONS & PROCEDURES article in WHEEL ALIGNMENT.

Removal ("Y" Body)

1. Disconnect negative battery cable. Remove brake pressure modulator valve (BPMV) bracket. Place drain pan under vehicle and drain P/S fluid. Remove intermediate shaft shield. Disconnect power steering pressure and return hoses from rack and pinion assembly. Disconnect power steering cooler and remove from vehicle. Remove steering coupler pinch bolts and remove coupler from rack and pinion.
2. Raise and support vehicle. Remove front wheels. Disconnect and separate front tie rod ends. See **OUTER TIE ROD** . Disconnect electrical connectors. Remove stabilizer bar from crossmember. Disconnect brake pipe from crossmember fastener clips. Remove rack and pinion mounting bolts and nuts. Using hand tools only, LOOSEN, DO NOT remove, four crossmember mounting nuts. Remove power rack and pinion through left wheelwell opening by rotating.

Installation

To install, reverse removal procedure. Tighten nuts and bolts to specification. See **TORQUE SPECIFICATIONS** . Fill and bleed hydraulic system. See **HYDRAULIC SYSTEM BLEEDING** under lubrication. Adjust toe-in as necessary. See appropriate SPECIFICATIONS & PROCEDURES article in WHEEL ALIGNMENT.

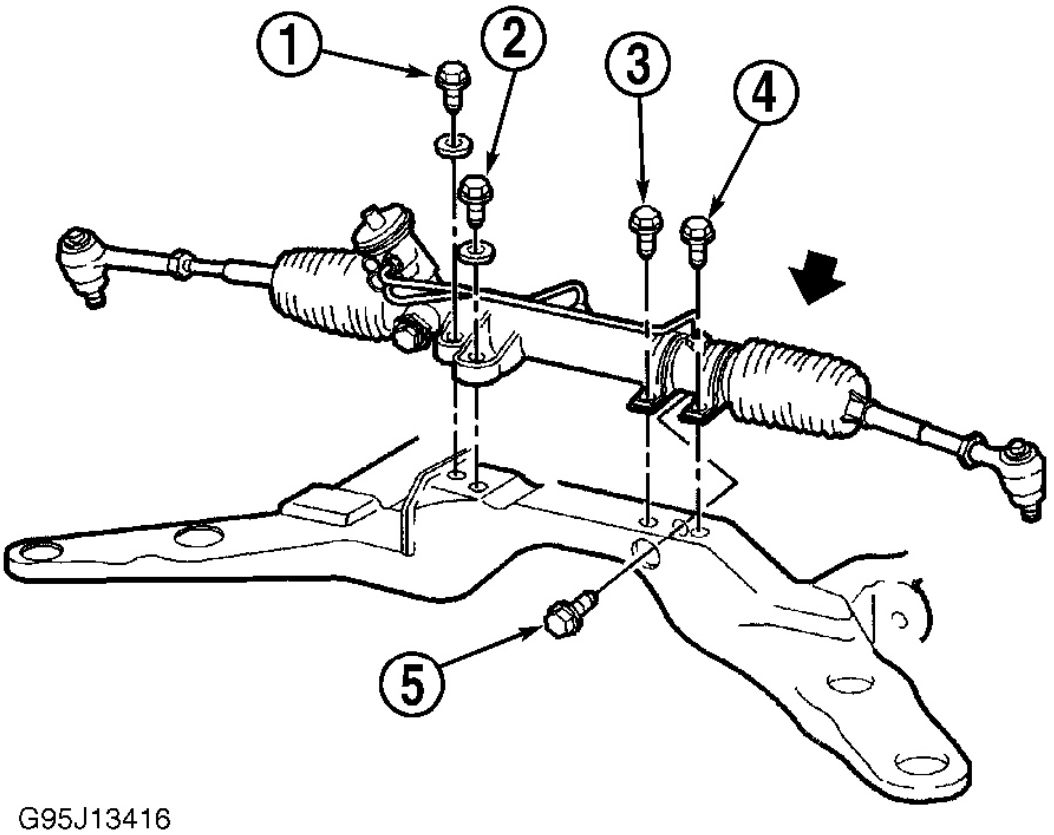

Fig. 5: Mounting Bolt Tightening Sequence
Courtesy of GENERAL MOTORS CORP.

RACK & PINION BOOTS

Removal

Remove outer tie rod. See **OUTER TIE ROD** . Remove outer-to-inner tie rod lock nut. Remove outer boot clamp. Cut off and discard inner boot clamp. When replacing both rack boots, mark location of breather tube to rack (if equipped), for installation reference. Remove breather tube. DO NOT remove breather tube if only replacing one boot. Slide boot from inner tie rod.

Installation

1. Place NEW inner clamp onto boot. Install breather tube (if removed), aligning tube as marked during removal. Install boot. If necessary, apply thin coat of grease onto inner tie rod shaft (except threads) and boot clamping area onto housing to aid in installation. Ensure

boot is not twisted or out of shape. Ensure breather tube is in proper notch position in boot.

2. Crimp inner clamp using Banding Tool (J-22610). Install outer clamp. Install outer tie rod end. Tighten outer-to-inner tie rod lock nut to specification. See **TORQUE SPECIFICATIONS** . To complete installation, reverse removal procedure. Adjust toe-in as necessary.

OVERHAUL

POWER STEERING PUMP (CB SERIES)

Disassembly

NOTE: Pump is not serviceable on Seville.

1. Remove hydraulic union fitting (or VES actuator) from pump. See **Fig. 6** . Remove "O" ring, flow control valve assembly and flow control spring. Insert punch in access hole, and remove end cover retaining ring. Press gently on pulley end of shaft to remove end cover, "O" ring, pressure plate spring and pressure plate.
2. Remove shaft subassembly consisting of remaining components. Disassemble subassembly, noting component location for reassembly reference. Cut shaft seal with a small chisel. Remove and discard shaft seal.

Inspection

Inspect pump ring, rotor, vanes, thrust plate, pressure plate and shaft for scoring, pitting or chatter marks. Replace worn or damaged parts.

Reassembly

1. Lubricate new shaft seal, "O" rings and all other components with power steering fluid. Drive new seal into housing with suitable socket. Assemble shaft subassembly with components in original locations. Ensure counterbore in center of pump rotor faces pump pulley.
2. Install shaft subassembly. Install remaining components. Press end cover in far enough to snap retaining ring into place. Install flow control valve assembly and related components. Tighten hydraulic union to specification. See **TORQUE SPECIFICATIONS** .

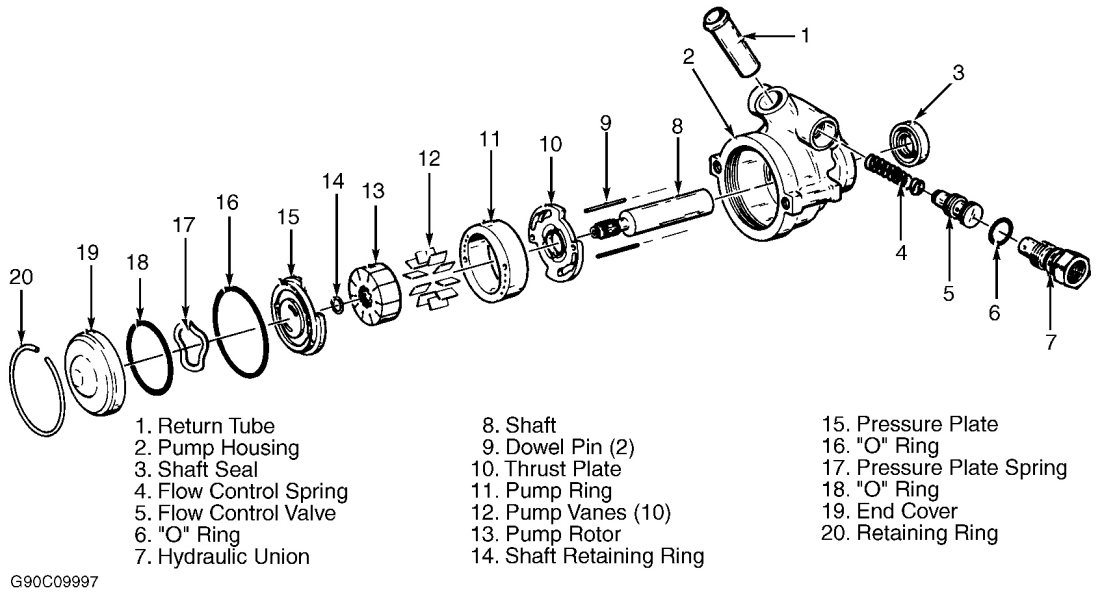

Fig. 6: Exploded View Of Power Steering Pump (CB Series)
Courtesy of GENERAL MOTORS CORP.

POWER STEERING PUMP (TC SERIES)

NOTE: Pump is not serviceable on Seville.

Disassembly

1. Remove pump pulley. See **POWER STEERING PUMP PULLEY** under REMOVAL & INSTALLATION. Remove shaft bearing retaining ring. See **Fig. 7** . Pull shaft and bearing assembly out of pump. If removing bearing from shaft, measure and record clearance (if any) between shaft shoulder and bearing inner race. See **Fig. 8** . Pry shaft seal from housing.
2. Remove flow control fitting from pump. See **Fig. 7** . Remove "O" ring, flow control valve assembly and flow control spring.
3. Insert small punch in access hole, and remove thrust plate retaining ring. Using a press and 5/8" piece of bar stock, press against pressure plate hub until thrust plate is removed. Remove "O" ring, pump ring, pump rotor, vanes and 2 dowel pins.
4. Remove pressure plate using press (if necessary). Remove "O" ring from pressure plate. Remove dowel pin from housing. Remove "O" ring from sleeve. Working from pulley side of housing, drive out sleeve with a punch.

Inspection

Clean all parts in power steering fluid. Inspect pressure plate, vanes, pump ring, drive shaft and bearing for scoring, pitting or chatter marks. Replace worn or damaged parts.

Reassembly

1. Press new sleeve assembly into housing. Install new, lubricated "O" ring into groove in sleeve. Install dowel pin into housing. Install pressure plate spring. Install new, lubricated "O" ring into groove in pressure plate.
2. Mark spot on top of pressure plate directly over dowel pin hole in plate to help align hole with dowel pin. Install pressure plate into housing, ensuring pin engages hole in pressure plate. Install 2 pump ring dowel pins.
3. Install pump rotor with counterbore (larger diameter of center bore) facing pulley end of housing. Insert pump vanes into rotor slots. With identification marks on pump ring facing upward, install pump ring over dowel pins. Install new, lubricated "O" ring into housing groove.
4. Install thrust plate, ensuring dimples in thrust plate align with mounting holes in housing, and thrust plate holes engage pump ring dowel pins. Press thrust plate into housing far enough to install retaining ring. Install retaining ring with opening centered on mounting boss nearest access hole.
5. Press shaft bearing onto shaft until clearance between inner race and shoulder is same as clearance recorded during removal. See **Fig. 9** . Slide shaft and bearing assembly into housing, rotating assembly to align splines of shaft and rotor. Install bearing retaining ring with beveled side down, indicated by position of large lug on ring. Install pulley on pump.

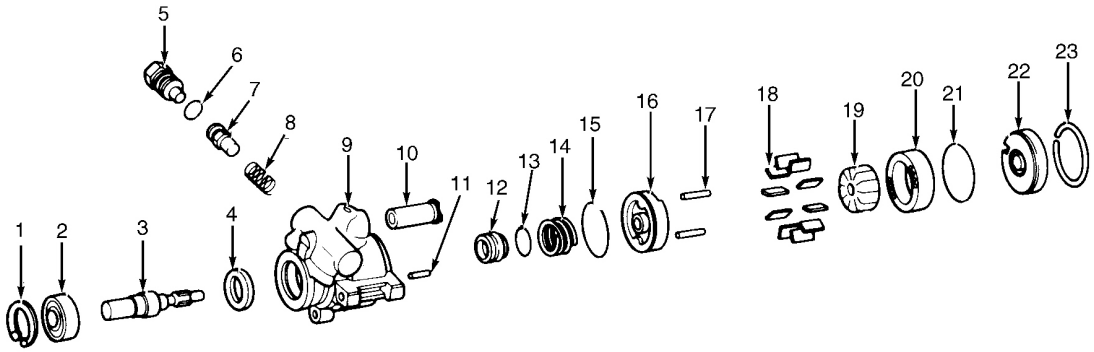

1. Retaining Ring
2. Shaft Bearing
3. Shaft
4. Shaft Seal
5. Flow Control Fitting
6. "O" Ring
7. Flow Control Valve
8. Flow Control Spring
9. Pump Housing
10. Return Tube
11. Dowel Pin
12. Sleeve
13. "O" Ring
14. Pressure Plate Spring
15. "O" Ring
16. Pressure Plate
17. Dowel Pins
18. Pump Vanes (10)
19. Pump Rotor
20. Cam Ring (Pump Ring)
21. "O" Ring
22. Thrust Plate
23. Retaining Ring

G90D09993

Fig. 7: Exploded View Of Power Steering Pump (TC Series)
Courtesy of GENERAL MOTORS CORP.

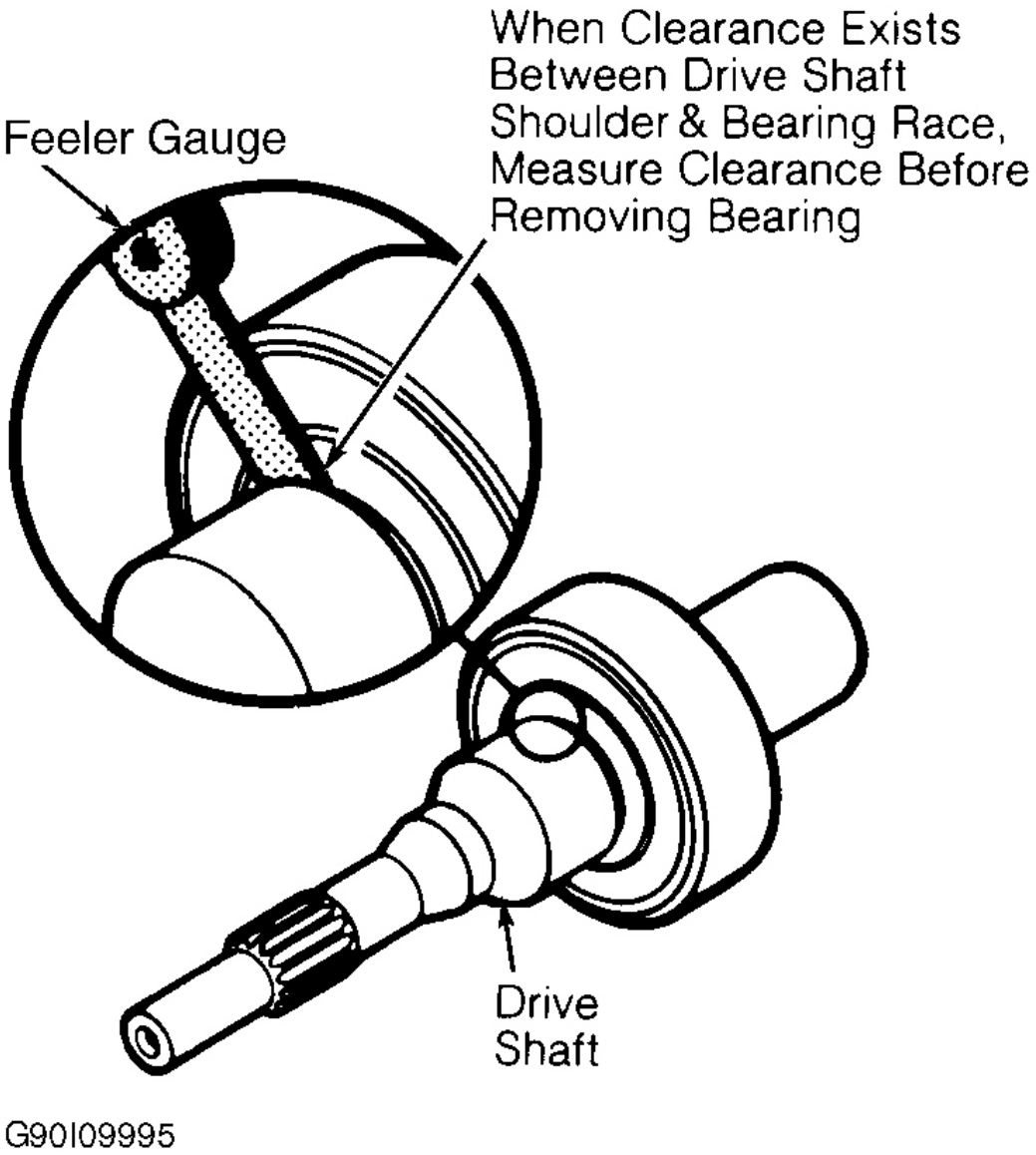

Fig. 8: Measuring Shaft Bearing Clearance (TC Series)
Courtesy of GENERAL MOTORS CORP.

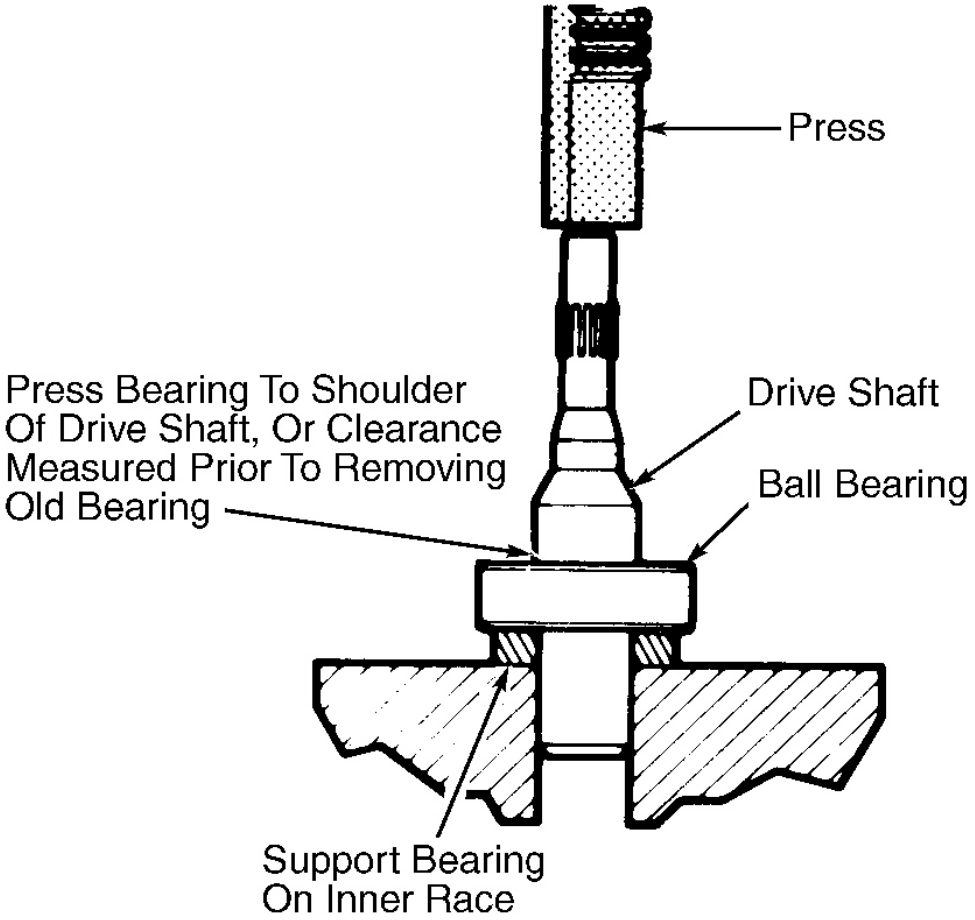

INSTALLING BEARING

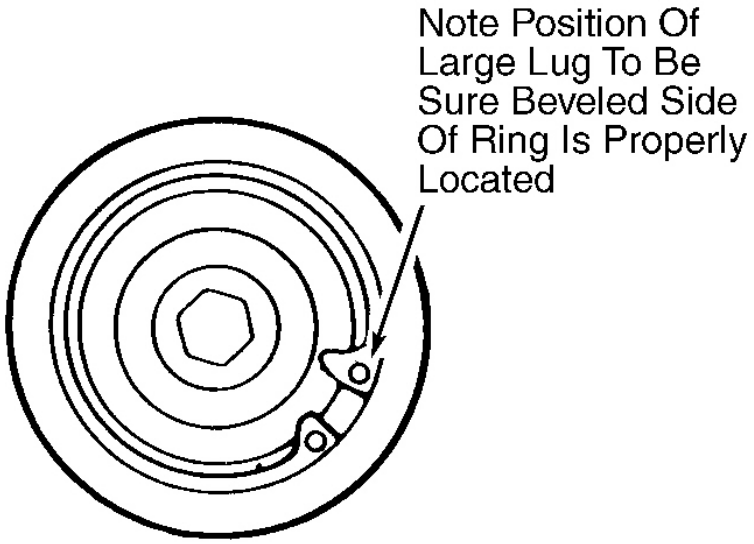

INSTALLING RETAINING RING

Fig. 9: Installing Bearing & Retaining Ring (TC Series)
Courtesy of GENERAL MOTORS CORP.

RACK & PINION

NOTE: Perform overhaul procedures with rack and pinion assembly removed from vehicle. See RACK & PINION ASSEMBLY under REMOVAL & INSTALLATION.

Disassembly (Pinion & Valve Assembly)

CAUTION: Do not hammer end of stub shaft, as drive pin on pinion and valve assembly will loosen or break.

1. Remove adjuster plug lock nut, adjuster plug, adjuster spring and rack bearing. See **Fig. 1** . Remove retaining ring from stub shaft. Remove dust cover from bottom of pinion and valve assembly housing. While holding stub shaft stationary with 14-mm wrench, remove lock nut from bottom of shaft.
2. Center rack in housing. For reassembly reference, mark location of stub shaft notch on housing, and measure distance between ends of tie rod boot. See **Fig. 10** .
3. Using an arbor press, press threaded end of pinion and valve assembly until assembly is loosened, but DO NOT remove. Mark second location of stub shaft notch on housing for reassembly reference.
4. Remove stub shaft dust seal, stub shaft seal and stub shaft bearing annulus (race) assembly. Remove pinion and valve assembly with retaining ring and valve body rings attached. Carefully remove valve body rings from pinion and valve assembly.

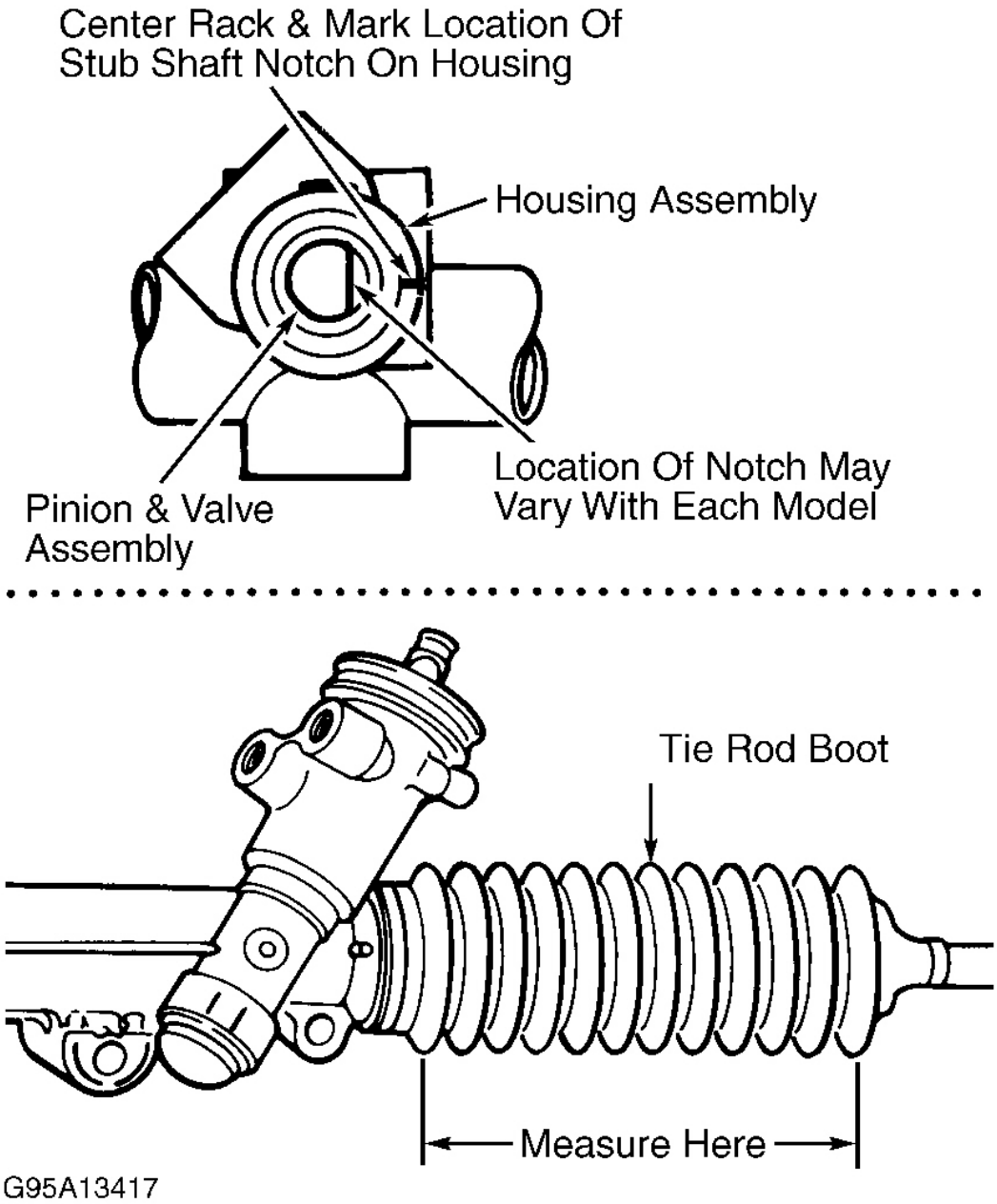

Fig. 10: Marking Housing & Measuring Tie Rod Boot For Reassembly Reference
Courtesy of GENERAL MOTORS CORP.

Inspection

Clean valve body ring grooves. Check pinion and valve assembly drive pin. If pin is broken,

replace rack and pinion assembly.

Reassembly

1. Apply grease to ring grooves. See **Fig. 11** . Install new valve body rings on pinion and valve assembly, ensuring split tabs are engaged and staggered. Use care not to cut rings during installation. Apply grease to valve body rings.
2. Install pinion and valve assembly into Ring Protector (J-37090). See **Fig. 12** . Position valve assembly in ring protector so valve body is even with bottom of protector. Allow rings to rest inside ring protector for about 3 minutes so valve rings will size properly.
3. Using measurement taken during disassembly as a guide, center rack in housing. Clean and apply grease to housing bore. Ensure stub shaft bearing annulus (race) is not damaged and bearing is even with annulus.
4. Align notch on valve stub shaft with second mark made during disassembly. Using ring protector and Pinion Seal Installer (J-29822), push pinion and valve assembly into housing bore. DO NOT hammer or use excessive force. If assembly does not fully seat in housing, ensure valve body rings are not binding in bore.
5. After assembly is seated in bore, ensure notch in stub shaft and first mark on housing are aligned. While holding stub shaft to prevent damage to pinion teeth, install adjuster plug lock nut and tighten to specification. See **TORQUE SPECIFICATIONS** .
6. Install dust cover. Install stub shaft bearing annulus assembly onto pinion and valve stub shaft. Install Seal Protector (J-29810) onto valve stub shaft. Apply a small amount of grease between stub shaft seal and stub shaft dust seal. Install seals over protector and into housing. Install retaining ring into groove in housing.
7. Lubricate stub shaft and dust seal area with grease. Coat rack bearing, adjuster spring and adjuster plug with grease and install into housing. With rack centered in housing, turn adjuster plug clockwise until it bottoms in housing, then back off 50-70 degrees (about one flat). Using an INCH-lb. torque wrench, check pinion torque. Maximum pinion preload torque is 16 INCH lbs. (1.8 N.m).
8. Install adjuster plug lock nut onto adjuster plug. While holding adjuster plug, tighten lock nut to specification. Install rack and pinion assembly. Fill and bleed system. See **HYDRAULIC SYSTEM BLEEDING** under LUBRICATION.

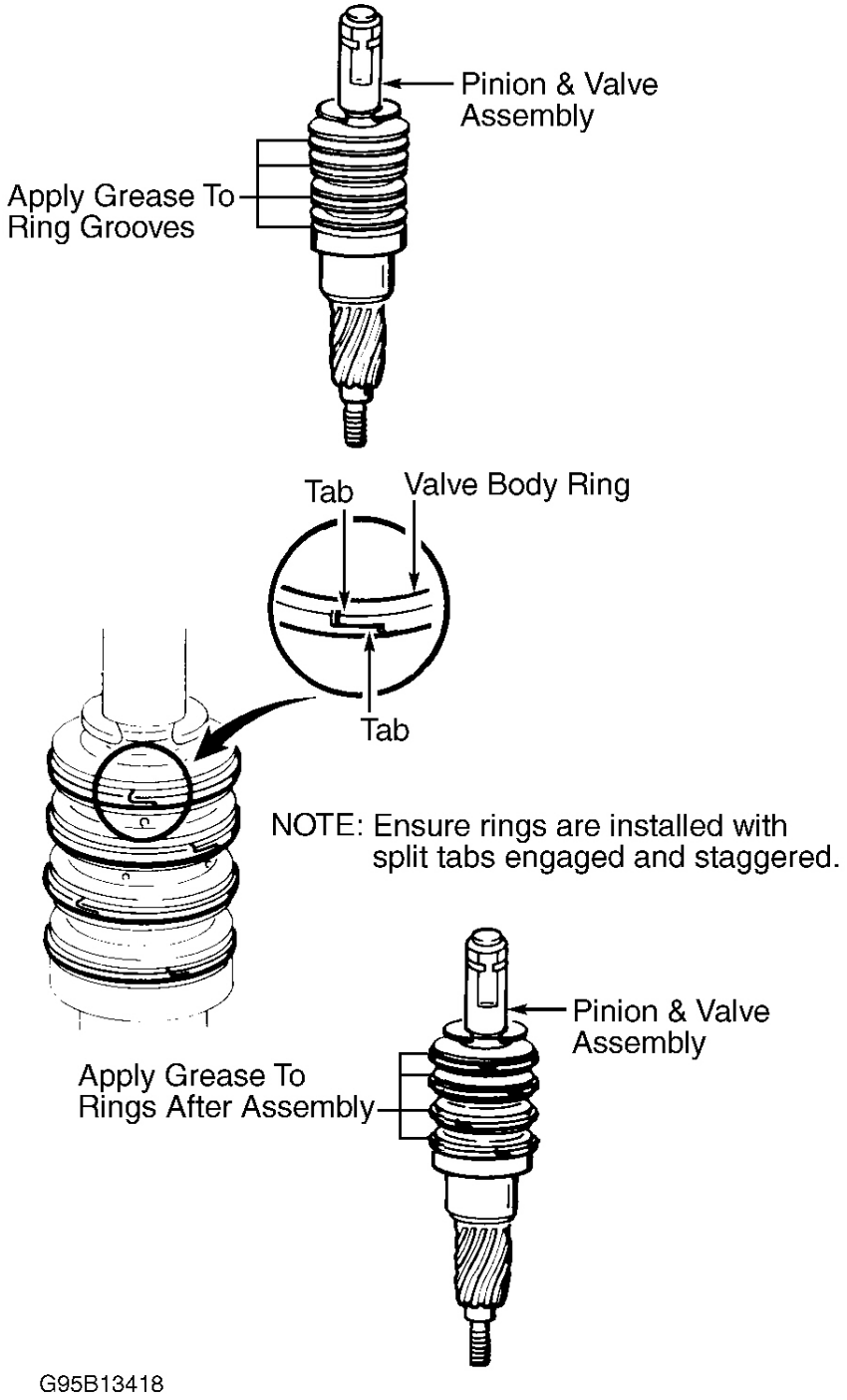

Fig. 11: Installing Valve Body Rings
Courtesy of GENERAL MOTORS CORP.

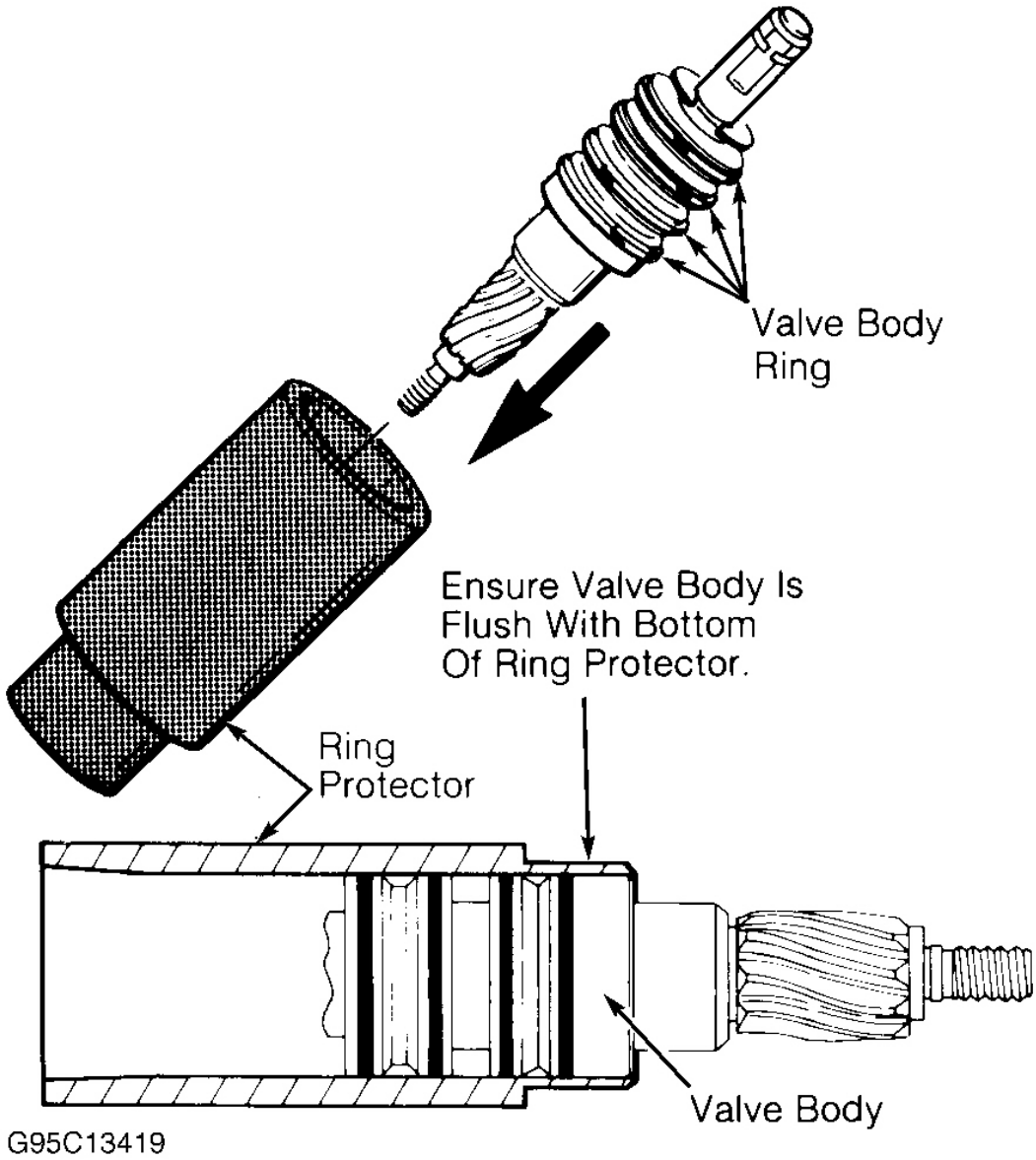

Fig. 12: Setting Valve Body Rings
Courtesy of GENERAL MOTORS CORP.

INNER TIE ROD

Disassembly

1. Remove outer tie rod end from inner tie rod, noting number of turns required for removal. Remove hex jam nut from inner tie rod. Remove adjusting nut from inner tie rod. Remove

outer boot clamp. Cut off and discard inner boot clamp. Mark location of breather tube (if equipped) for reassembly reference. Slide boot from inner tie rod.

2. Slide shock damper ring on inner tie rod assembly back toward rack. Place a wrench on flat side of rack to prevent turning. Place another wrench on flats of inner tie rod. Rotate inner tie rod counterclockwise until it separates from piston and rack. On "C", "F", "N" and "Y" bodies, clean old Loctite from threads of rack and inner tie rod. Remove shock damper ring.

Reassembly

1. Install shock damper ring. To prevent internal damage, hold rack with a backup wrench during tie rod installation. Apply Loctite No. 262 to inner tie rod threads. Install inner tie rod onto rack. Tighten inner tie rod to specification. See **TORQUE SPECIFICATIONS** . Stake tie rod fittings as shown in illustration. See **Fig. 13** .
2. Ensure inner tie rod pivots freely in all directions, and then stake both sides of inner tie rod to flats on rack. See **Fig. 13** . Ensure both stakes are okay by inserting a .010" (.25 mm) feeler gauge between rack and tie rod housing. Feeler gauge must not pass between rack and housing stakes.
3. To complete reassembly, reverse disassembly procedure. Apply grease to inner tie rod and housing before installing boots. Install outer tie rod end with same number of turns as when removed. Install new cotter pin at castle nut. DO NOT back off castle nut to install cotter pin. Adjust toe-in as necessary. See appropriate SPECIFICATIONS & PROCEDURES article in WHEEL ALIGNMENT. Fill and bleed hydraulic system. See **HYDRAULIC SYSTEM BLEEDING** under LUBRICATION.

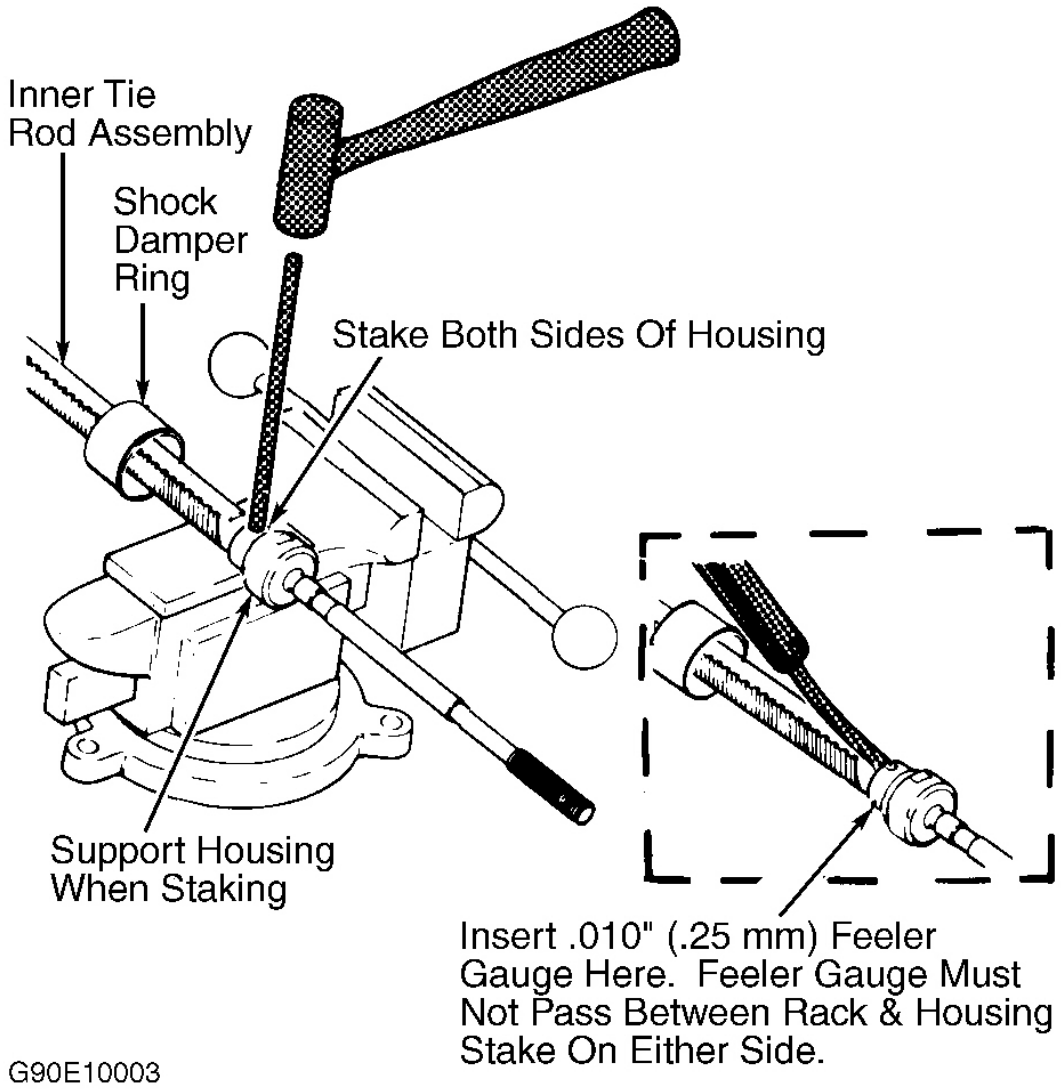

Fig. 13: Staking & Inspecting Inner Tie Rod
Courtesy of GENERAL MOTORS CORP.

TORQUE SPECIFICATIONS

TORQUE SPECIFICATIONS

Application	Ft. Lbs. (N.m)
Adjuster Plug Lock Nut	
Magnasteer	50 (68)
Quiet Valve	55 (75)

Crossmember Bolts	
"J" & "Y" Bodies	81 (110)
Engine Frame-To-Body Bolts	
"C", "E", "H", & "K" Bodies	(2) 141 (191)
"W" Body	(1) 133 (180)
Engine Mount Bolt ("F" Body)	37 (50)
Inner Tie Rod-To-Rack	(2) 74 (100)
Pinion & Valve Assembly Lock Nut	26 (35)
Pressure Line Fitting (Hydraulic Union)	20 (27)
Pump Mounting Bolts	
"C" & "H" Bodies	20 (27)
"E" Body	35 (47)
"F" Body	23 (31)
"G", "N" & "W" Bodies	25 (34)
"H" Body	20 (27)
"J" Body	
2.2 L	22 (30)
2.4 L	19 (26)
"K" Body	
2000	24 (33)
2001	37 (50)
"Y" Body	18 (25)
Rack & Pinion Mounting Bolt/Nuts	
"C" Body	(2) 48 (65)
"E" Body	(2) 50 (68)
"F" Body	(2) 63 (85)
"G", "H" & "K" Bodies	(2) 70 (95)
"J" Body	(2) 89 (120)
"N" Body	(2) 81 (110)
"W" Body	(2) 59 (80)
"Y" Body	(2) 74 (100)
Steering Return Line Fitting	20 (27)

Steering Shaft Lower Coupling Pinch Bolt	
"H" & "K" Bodies	33 (45)
"J" Body	30 (40)
"N" Body	15 (20)
All Others	35 (47)
Tie Rod Adjusting Hex Lock Nut	
"C", "G", & "J" Bodies	55 (75)
"Y" Body	44 (60)
All Others	50 (68)
Tie Rod End Castle Nut	(3) (4) (5)
Transmission Mounting Nut ("F" Body)	37 (50)
Wheel Lug Nuts	100 (136)
	INCH Lbs. (N.m)
Cooler Pipe Retaining Bolts	86 (9.5)

(1) Install NEW bolts whenever bolts are loosened or removed.

(2) Apply Loctite (GM 1052624) to bolt threads. Tighten bolts in sequence. See **Fig. 5** .

(3) To align cotter pin holes, tighten nut a minimum of 35 ft. lbs. (47 N.m) and a maximum of 52 ft. lbs. (71 N.m). DO NOT back off nut to align cotter pin holes.

(4) On "W" body, tighten to 22 ft. lbs. (30 N.m), then an additional 115 degrees.

(5) On "N" body, tighten to 15 ft. lbs. (20 N.m), then an additional 180 degrees.