Back To Article

SPECIFICATIONS

FASTENER SPECIFICATIONS

Single Use Non-Threaded Fasteners/Components

NOTE:
All fasteners/components listed in this table MUST BE DISCARDED and replaced with NEW after removal.

Application
O-Ring
Retaining Ring
Wheel Drive Shaft Washer @ CV Joint
Wheel Drive Shaft Washer @ Differential Flange

Single Use Threaded Fastener/Component Tightening Specifications

NOTE:
All fasteners/components listed in this table MUST BE DISCARDED and replaced with NEW after removal.

Application	Specification
	Metric (English)
Wheel Drive Shaft Nut	
• First Pass:	150 N.m (111 lb ft)
• Second Pass:	Loosen 45 degrees
• Final Pass:	270 N.m (199 lb ft)

Reusable Threaded Fastener Tightening Specifications

NOTE:
All fasteners listed in this table can be reused after removal.

Application	Specification
	Metric (English)
Wheel Drive Shaft Bolt	58 N.m (43 lb ft)

ADHESIVES, FLUIDS, LUBRICANTS AND SEALERS

Application	Type of Material	GM Part Number	
		United States	Canada
Intermediate Wheel Drive Shaft Splines	Grease	01051344	993037
Rear Wheel Drive Shaft Bolts	Threadlocker	89021297	10953488

cardiagn.com

DIAGNOSTIC INFORMATION AND PROCEDURES

SYMPTOMS - WHEEL DRIVE SHAFTS

Before beginning diagnosis, review the system description and operation in order to familiarize yourself with the system function. Refer to **Wheel Drive Shafts Description and Operation**.

Classifying the Symptom

Wheel Drive Shaft symptoms can usually be classified into the following categories:

- Noises
- Vibrations

Noise related concerns are diagnosed within the Wheel Drive Shafts section. For vibration related symptoms, refer to **Vibration Diagnosis, Starting Point and Correction** for diagnosis.

Visual/Physical Inspection

- Inspect the system for aftermarket devices which could affect the operation of the wheel drive shafts.
- Inspect the easily accessible or visible system components for obvious damage or conditions which could cause the symptom.

Symptom List

Refer to a symptom diagnostic procedure from the following list in order to diagnose the symptom:

- **Click Noise In Turns**
- **Clunk When Accelerating from Coast**
- **Clunk Noise When Accelerating During Turns**

CLICK NOISE IN TURNS

A click noise occurring during turns may be caused by a worn or damaged wheel drive shaft outer joint. This may be more apparent while simultaneously turning and accelerating. This click is caused by wear and/or damage to the constant velocity joint bearings and/or races. Commonly, this damage or wear is caused by the loss of lubricating grease from the constant velocity joint and the entry of foreign material or contaminates.

Carefully inspect the wheel drive shaft seals for cuts, tears or other damage which may allow the lubricating grease to escape. The loss of this grease will cause damage to the wheel drive shaft constant velocity joint in a very short period of time.

If inspection reveals no visual evidence of wear or damage, it may be necessary to remove the wheel drive shaft from the vehicle and manipulate the outer joint manually. Any binding or impeded movement of the joint may indicate damage which could contribute to the concern.

CLUNK WHEN ACCELERATING FROM COAST

A clunk noise occurring when accelerating from coast or a standing start may be caused by a worn or damaged wheel drive shaft inner joint. The common cause of wheel drive shaft inner joint damage is the loss of lubricating grease and/or the presence of foreign material and contaminates in the joint. This usually occurs as a result of a torn or damaged inner joint seal.

Carefully inspect the wheel drive shaft seal for cuts, tears or other damage that may allow the loss of the lubricating grease and/or the entry of contaminates.

If inspection reveals no visual evidence of wear or damage, it may be necessary to remove the wheel drive shaft from the vehicle and manipulate the inner joint manually. Do not allow the joint to separate from the wheel drive shaft bar. Any binding or impeded movement of the joint may indicate damage which could contribute to the concern.

cardiagn.com

CLUNK NOISE WHEN ACCELERATING DURING TURNS

A clunk noise that occurs while accelerating during turns may be caused by wear and/or damage to the inboard and the outboard joints in combination. The loss of lubricant and/or the presence of contaminates can cause damage to the internal components of the joints.

Carefully inspect the joint seals for cuts, tears or other damage. Joint seals that are damaged may allow lubricant leakage and the entry of contaminates.

If inspection reveals no visual evidence of wear or damage, it may be necessary to remove the wheel drive shaft from the vehicle and manipulate the joints manually. Do not allow the joints to separate from the wheel drive shaft bar. Any binding or impeded movement of the joints may indicate damage which could contribute to the concern.

SHUDDER OR VIBRATION DURING ACCELERATION

In order to diagnose a shudder or vibration during acceleration, refer to **Symptoms - Vibration Diagnosis and Correction** .

REPAIR INSTRUCTIONS

FRONT WHEEL DRIVE SHAFT REPLACEMENT - LEFT SIDE

Special Tools

J-45859 Hub Spindle Remover

Equivalent regional tools:**Special Tools**

Removal Procedure

1. Remove the left front tire and wheel assembly. Refer to **Tire and Wheel Removal and Installation**
2. With the aid of an assistant holding the brake pedal down, use a breaker bar and the proper size socket to loosen the wheel drive shaft nut.

CAUTION: **DO NOT use air tools to remove the wheel drive shaft nut. Damage to the wheel drive shaft threads could occur. Use hand tools only.**

3. Wheel Drive Shaft Nut (1)Â» Remove and DISCARD

Fig. 1: Wheel Drive Shaft Nut
Courtesy of GENERAL MOTORS COMPANY

WARNING: **To prevent personal injury and/or component damage, do not allow the weight of the vehicle to load the front wheels or attempt to**

cardiagn.com

operate the vehicle, when the wheel drive shaft(s) or wheel drive shaft nut(s) are removed. To do so may cause the inner bearing race to separate, resulting in damage to brake and suspension components and loss of vehicle control.

4. Front Shock Absorber and Spring AssemblyÂ» Remove - **Shock Absorber and Spring Removal and Installation (RWD Without F55)** **Shock Absorber and Spring Removal and Installation (AWD Without F55)** **Shock Absorber and Spring Removal and Installation (RWD With F55)** **Shock Absorber and Spring Removal and Installation (AWD With F55)**
5. Steering Linkage Outer Tie Rod @ Steering KnuckleÂ» Separate - **Steering Linkage Outer Tie Rod Replacement**
6. Front Lower Control Front Link @ Steering KnuckleÂ» Separate - **Front Lower Control Front Link Replacement (RWD)** **Front Lower Control Front Link Replacement (AWD)**
7. Front Lower Control Rear Link @ Steering KnuckleÂ» Separate - **Front Lower Control Rear Link Replacement (RWD)** **Front Lower Control Rear Link Replacement (AWD)**
8. Attach the **J-45859** remover (1) to the wheel hub using the wheel lug nuts (2).

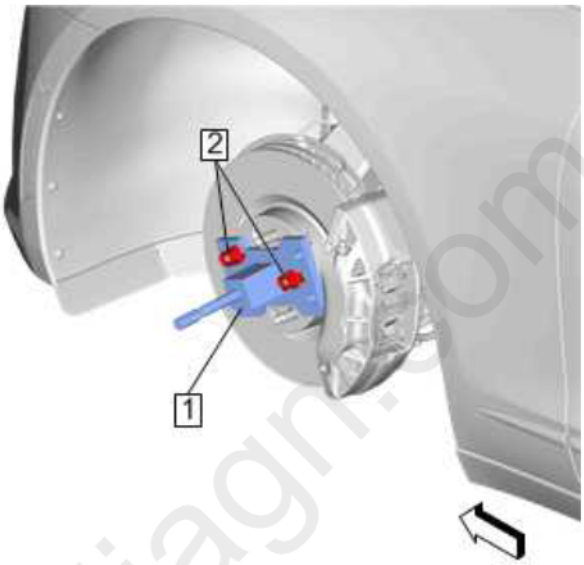

Fig. 2: J-45859 Remover And Wheel Lug Nuts
Courtesy of GENERAL MOTORS COMPANY

9. Using the **J-45859** remover (1), separate the wheel drive shaft from the wheel bearing/hub.
10. Use a suitable flat bladed tool to dislodge the wheel drive shaft (1) from the front wheel drive intermediate housing (2).

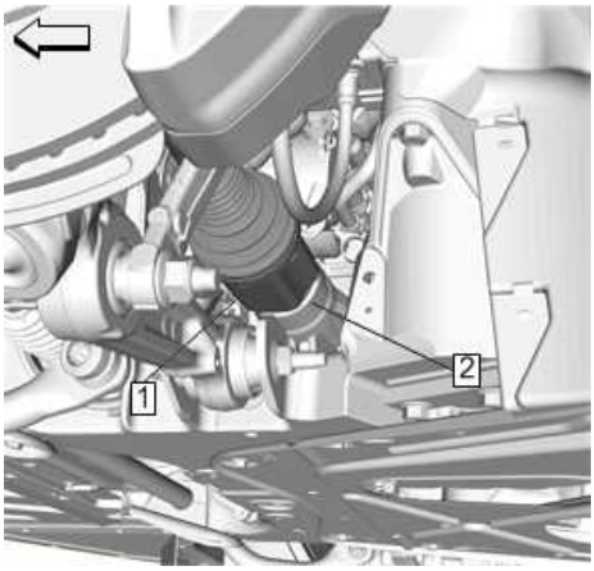

Fig. 3: Wheel Drive Shaft
Courtesy of GENERAL MOTORS COMPANY

CAUTION: **Wheel drive shaft boots, seals and clamps should be protected from**

sharp objects any time service is performed on or near the wheel drive shaft(s). Damage to the boot(s), the seal(s) or the clamp(s) may cause lubricant to leak from the joint and lead to increased noise and possible failure of the wheel drive shaft.

11. Wheel Drive Shaft (1)Â» Remove

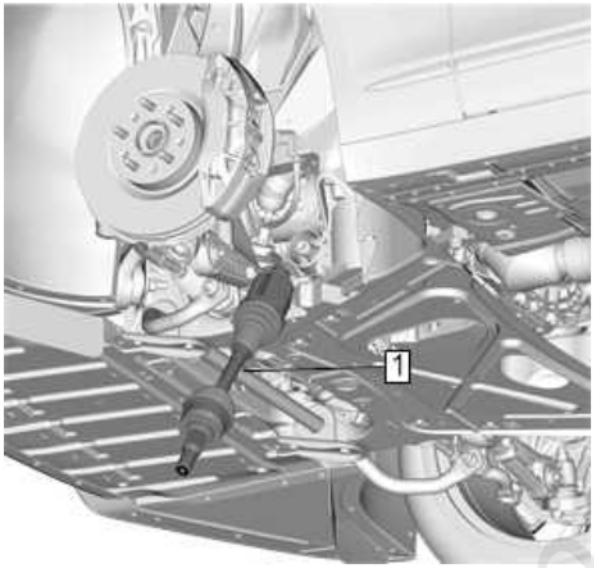

Fig. 4: Wheel Drive Shaft
Courtesy of GENERAL MOTORS COMPANY

12. Retaining Ring (1)Â» Remove and DISCARD

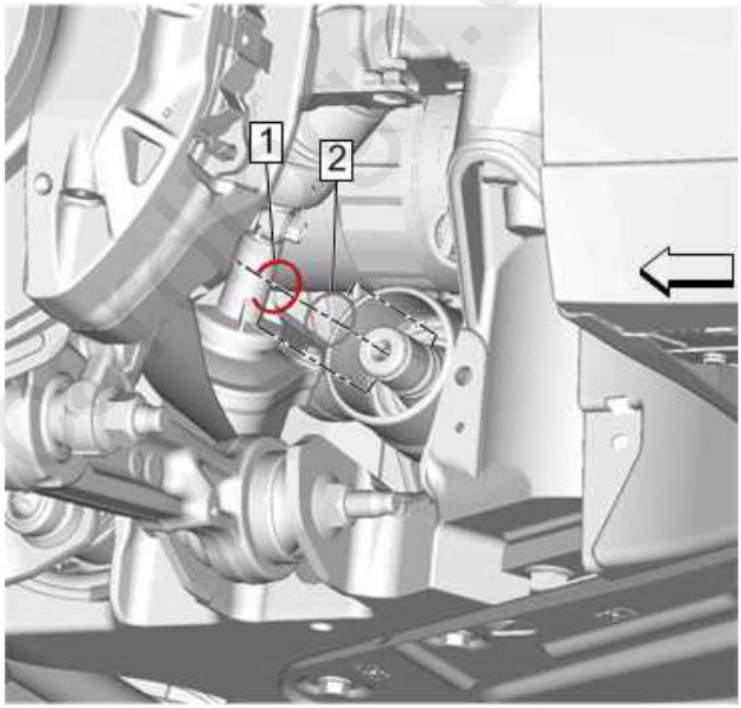

Fig. 5: Retaining Ring
Courtesy of GENERAL MOTORS COMPANY

13. O-Ring (2)Â» Remove and DISCARD

Installation Procedure

1. O-Ring (2)Â» Install a NEW O-ring seal.

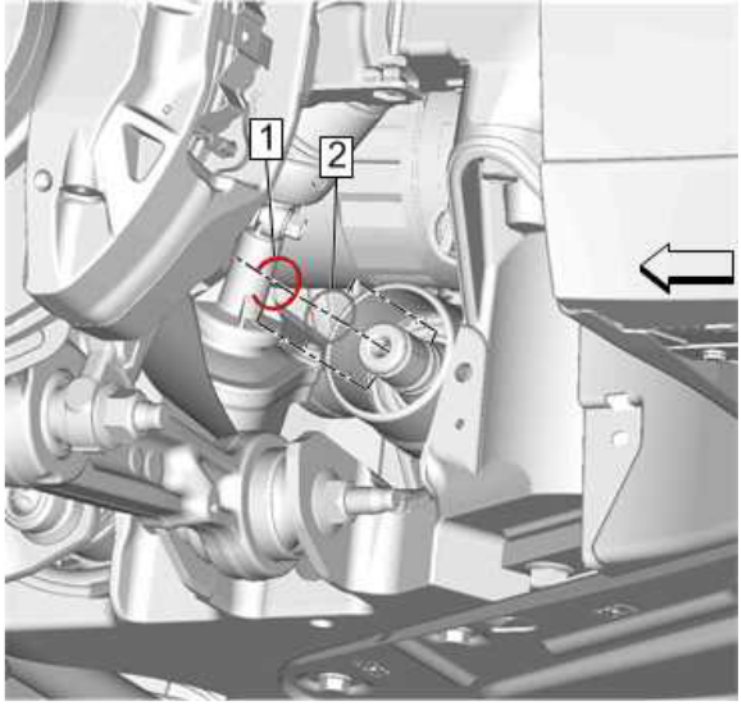

Fig. 6: Retaining Ring
Courtesy of GENERAL MOTORS COMPANY

2. Retaining Ring (1)Â» Install a NEW retaining ring.
3. Position the wheel drive shaft (1) into the vehicle.

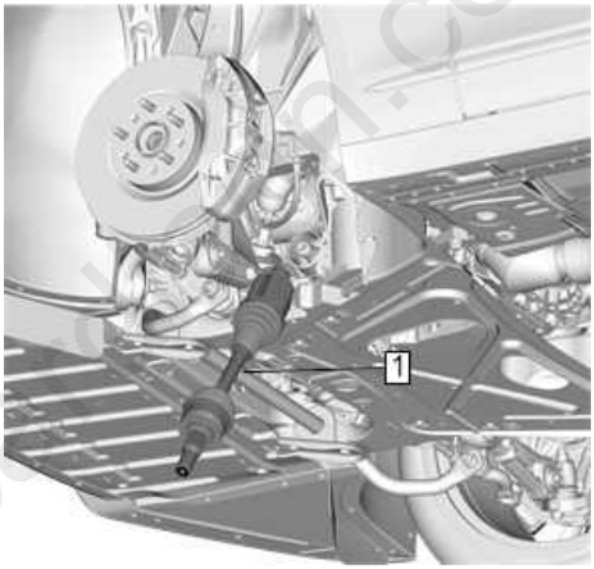

Fig. 7: Wheel Drive Shaft
Courtesy of GENERAL MOTORS COMPANY

4. Install the wheel drive shaft (1) into the front wheel drive intermediate housing (2).

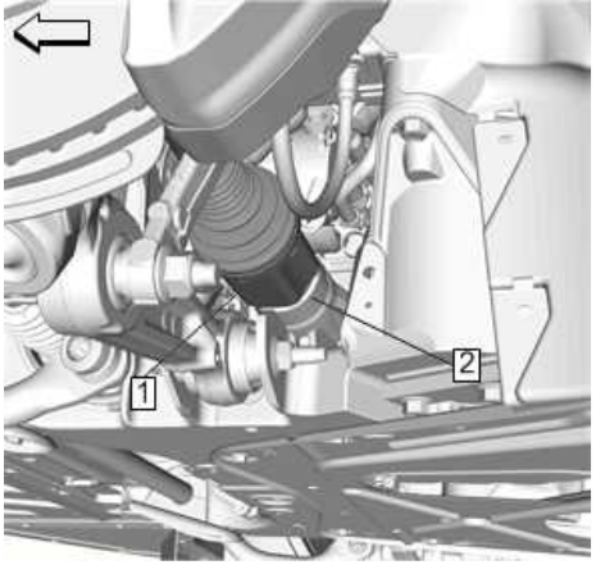

Fig. 8: Wheel Drive Shaft
Courtesy of GENERAL MOTORS COMPANY

NOTE: **Ensure that the wheel drive shaft is fully seated in the housing.**

5. Install the front wheel drive shaft into the front wheel bearing/hub.
6. Front Lower Control Rear Link @ Steering KnuckleÂ» Install - **Front Lower Control Rear Link Replacement (RWD)** **Front Lower Control Rear Link Replacement (AWD)**
7. Front Lower Control Front Link @ Steering KnuckleÂ» Install - **Front Lower Control Front Link Replacement (RWD)** **Front Lower Control Front Link Replacement (AWD)**
8. Steering Linkage Outer Tie Rod @ Steering KnuckleÂ» Install - **Steering Linkage Outer Tie Rod Replacement**
9. Front Shock Absorber and Spring AssemblyÂ» Install - **Shock Absorber and Spring Removal and Installation (RWD Without F55)** **Shock Absorber and Spring Removal and Installation (AWD Without F55)** **Shock Absorber and Spring Removal and Installation (RWD With F55)** **Shock Absorber and Spring Removal and Installation (AWD With F55)**
10. Wheel Drive Shaft Nut (1)Â» Install a NEW nut.

Fig. 9: Wheel Drive Shaft Nut
Courtesy of GENERAL MOTORS COMPANY

CAUTION: **Refer to Fastener Caution .**

Tighten

1. First Pass: 150 N.m (111 lb ft)
2. Second Pass: **Loosen 45 degrees**

3. Final Pass: 270 N.m (199 lb ft)

11. Install the left front tire and wheel assembly. Refer to **Tire and Wheel Removal and Installation**

FRONT WHEEL DRIVE SHAFT REPLACEMENT - RIGHT SIDE

Special Tools

- **DT-51504** Seal Protector
- **J-45859** Hub Spindle Remover

Equivalent regional tools: **Special Tools**

Removal Procedure

1. Remove the right front tire and wheel assembly. Refer to **Tire and Wheel Removal and Installation**
2. With the aid of an assistant holding the brake pedal down, use a breaker bar and the proper size socket to loosen the wheel drive shaft nut.

CAUTION: **DO NOT use air tools to remove the wheel drive shaft nut. Damage to the wheel drive shaft threads could occur. Use hand tools only.**

3. Wheel Drive Shaft Nut (1)Â» Remove and DISCARD

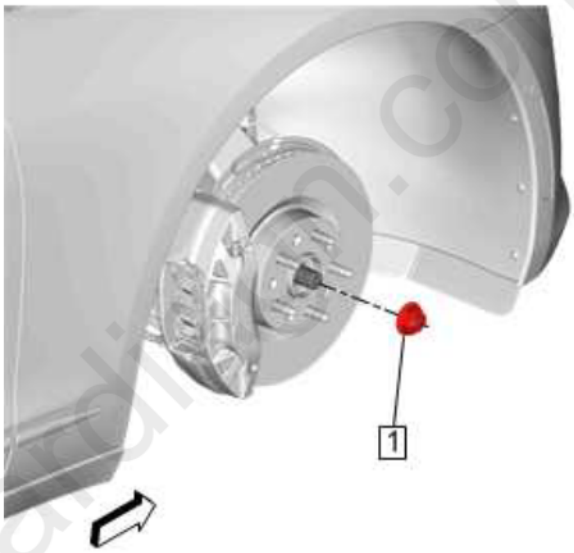

Fig. 10: Wheel Drive Shaft Nut
Courtesy of GENERAL MOTORS COMPANY

4. Front Shock Absorber and Spring AssemblyÂ» Remove - **Shock Absorber and Spring Removal and Installation (RWD Without F55)** **Shock Absorber and Spring Removal and Installation (AWD Without F55)** **Shock Absorber and Spring Removal and Installation (RWD With F55)** **Shock Absorber and Spring Removal and Installation (AWD With F55)**

WARNING: **To prevent personal injury and/or component damage, do not allow the weight of the vehicle to load the front wheels or attempt to operate the vehicle, when the wheel drive shaft(s) or wheel drive shaft nut(s) are removed. To do so may cause the inner bearing race to separate, resulting in damage to brake and suspension components and loss of vehicle control.**

5. Steering Linkage Outer Tie Rod @ Steering KnuckleÂ» Separate - **Steering Linkage Outer Tie Rod Replacement**
6. Front Lower Control Front Link @ Steering KnuckleÂ» Separate - **Front Lower Control Front Link Replacement (RWD)** **Front Lower Control Front Link Replacement (AWD)**
7. Front Lower Control Rear Link @ Steering KnuckleÂ» Separate - **Front Lower Control Rear Link Replacement (RWD)** **Front Lower Control Rear Link Replacement (AWD)**

8. Attach the **J-45859** remover (1) to the wheel hub using the wheel lug nuts (2).

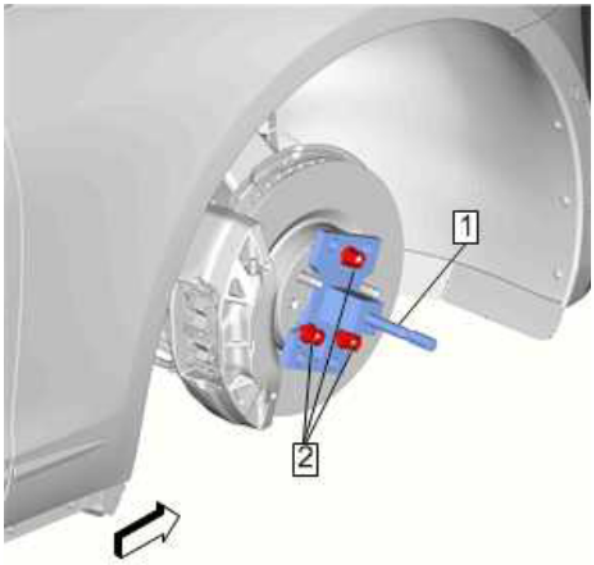

Fig. 11: J-45859 Remover And Wheel Lug Nuts
Courtesy of GENERAL MOTORS COMPANY

9. Using the **J-45859** remover (1), separate the wheel drive shaft from the wheel bearing/hub.
10. Use a suitable flat bladed tool to dislodge the wheel drive shaft (1) from the front differential carrier (2).

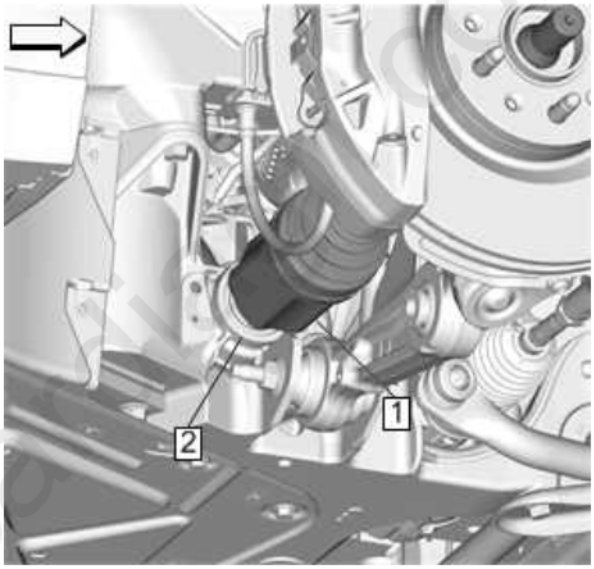

Fig. 12: Wheel Drive Shaft
Courtesy of GENERAL MOTORS COMPANY

CAUTION: **Wheel drive shaft boots, seals and clamps should be protected from sharp objects any time service is performed on or near the wheel drive shaft(s). Damage to the boot(s), the seal(s) or the clamp(s) may cause lubricant to leak from the joint and lead to increased noise and possible failure of the wheel drive shaft.**

11. Carefully install the **DT-51504** protector (1) over the wheel drive shaft and slide into the front differential carrier.

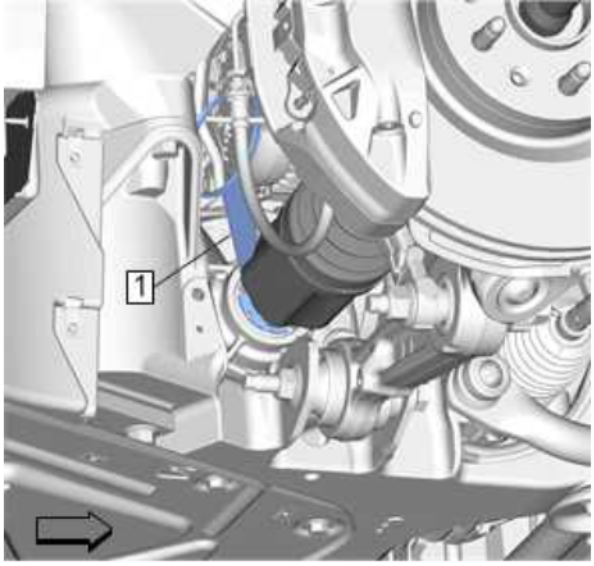

Fig. 13: DT-51504 Protector
Courtesy of GENERAL MOTORS COMPANY

CAUTION: **DT-51504 must be installed into the differential output shaft seal prior to removing and installing the wheel drive shaft. Failure to install the DT-51504 as indicated may cause the splines of the wheel drive shaft to damage the differential output seal**

12. Wheel Drive Shaft (1)Â» Remove

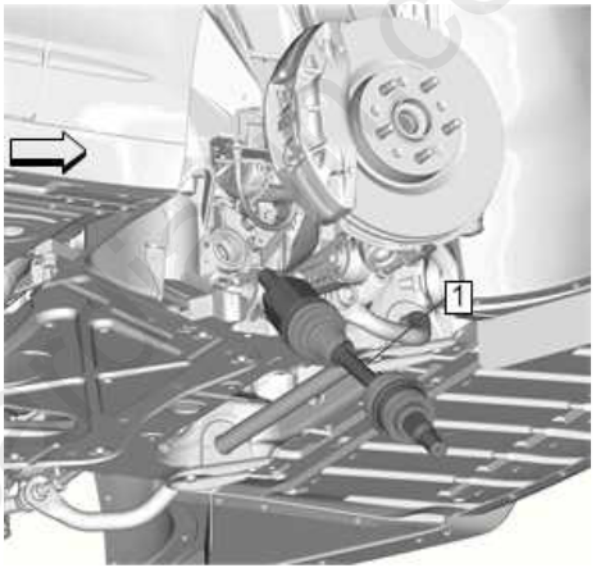

Fig. 14: Wheel Drive Shaft
Courtesy of GENERAL MOTORS COMPANY

13. Remove and DISCARD the retaining ring (1) from the inboard CV joint (2).

Fig. 15: Retaining Ring And Inboard CV Joint
Courtesy of GENERAL MOTORS COMPANY

Installation Procedure

1. Retaining Ring (1)Â» Install a NEW retaining ring.

Fig. 16: Retaining Ring And Inboard CV Joint
Courtesy of GENERAL MOTORS COMPANY

2. Position the wheel drive shaft (1) into the vehicle.

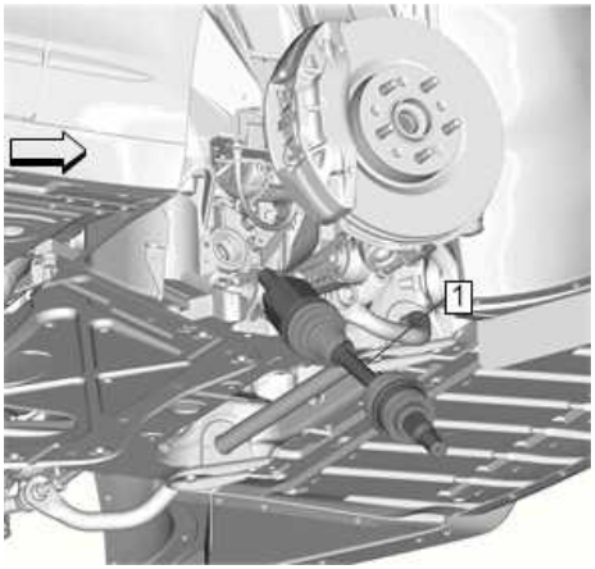

cardiagn.com

Fig. 17: Wheel Drive Shaft
Courtesy of GENERAL MOTORS COMPANY

3. Carefully install the wheel drive shaft into the front differential carrier until the splines are past the **DT-51504** protector (1).

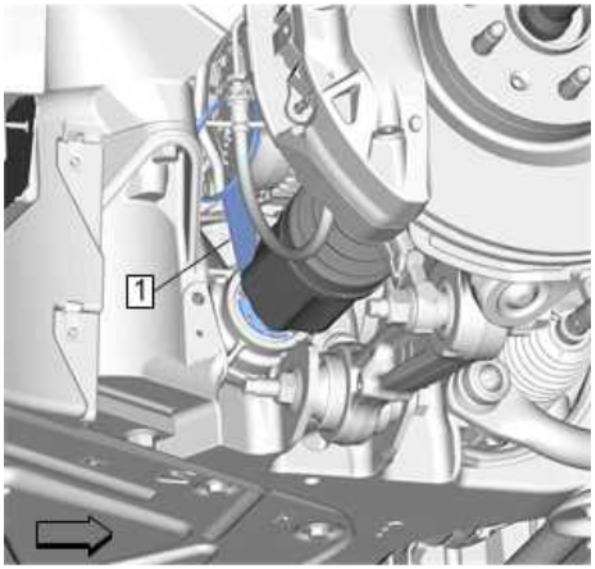

Fig. 18: DT-51504 Protector
Courtesy of GENERAL MOTORS COMPANY

CAUTION: **DT-51504 must be installed into the differential output shaft seal prior to removing and installing the wheel drive shaft. Failure to install the DT-51504 as indicated may cause the splines of the wheel drive shaft to damage the differential output seal**

4. Remove the **DT-51504** protector from the differential output shaft seal.

NOTE: **Ensure that the wheel drive shaft is fully seated in the differential.**

5. Install the front wheel drive shaft into the front wheel bearing/hub.
6. Front Lower Control Rear Link @ Steering KnuckleÂ» Install - **Front Lower Control Rear Link Replacement (RWD)** **Front Lower Control Rear Link Replacement (AWD)**
7. Front Lower Control Front Link @ Steering KnuckleÂ» Install - **Front Lower Control Front Link Replacement (RWD)** **Front Lower Control Front Link Replacement (AWD)**
8. Steering Linkage Outer Tie Rod @ Steering KnuckleÂ» Install - **Steering Linkage Outer Tie Rod Replacement**
9. Front Shock Absorber and Spring AssemblyÂ» Install - **Shock Absorber and Spring Removal and Installation (RWD Without F55)** **Shock Absorber and Spring Removal and Installation (AWD Without F55)** **Shock Absorber and Spring Removal and Installation (RWD With F55)** **Shock Absorber and Spring Removal and Installation (AWD With F55)**
10. Wheel Drive Shaft Nut (1)Â» Install a NEW nut.

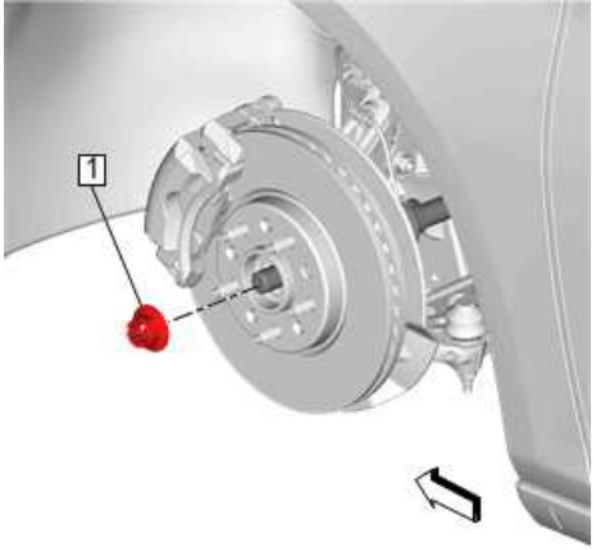

Fig. 19: Wheel Drive Shaft Nut
Courtesy of GENERAL MOTORS COMPANY

CAUTION: Refer to Fastener Caution .

Tighten

1. First Pass: 150 N.m (111 lb ft)
2. Second Pass: **Loosen (45 degrees)**
3. Final Pass: 270 N.m (199 lb ft)

11. Install the right front tire and wheel assembly. Refer to **Tire and Wheel Removal and Installation**
12. Inspect the front differential carrier fluid level. Refer to **Front Differential Carrier Lubricant Level Inspection**

REAR WHEEL DRIVE SHAFT REPLACEMENT - LEFT SIDE (LTG)

Special Tools

DT-45859 Hub Puller

Equivalent regional tools: **Special Tools**

Removal Procedure

1. Remove the left rear tire and wheel assembly. Refer to **Tire and Wheel Removal and Installation**
2. Rear Suspension Lateral Link @ KnuckleÂ» Separate - **Rear Suspension Lateral Link Replacement**
3. Rear Suspension Lower Trailing Link @ KnuckleÂ» Separate - **Rear Suspension Lower Trailing Link Replacement**
4. Rear Suspension Adjust Link @ KnuckleÂ» Separate - **Adjust Link Replacement (Without NYS)** **Adjust Link Replacement (With NYS)**
5. Rear Suspension Upper Trailing Link @ KnuckleÂ» Loosen - **Rear Suspension Upper Trailing Link Replacement**
6. Rear Suspension Upper Lateral Link @ KnuckleÂ» Loosen - **Rear Suspension Upper Lateral Link Replacement**
7. With the aid of an assistant holding the brake pedal down, use a breaker bar and the proper size socket to loosen the wheel drive shaft nut.

NOTE: **Do NOT use air tools to remove the wheel drive shaft nut. Use hand tools ONLY.**

cardiagn.com

8. Wheel Drive Shaft Nut (1)Â» Remove

   DISCARD the nut.

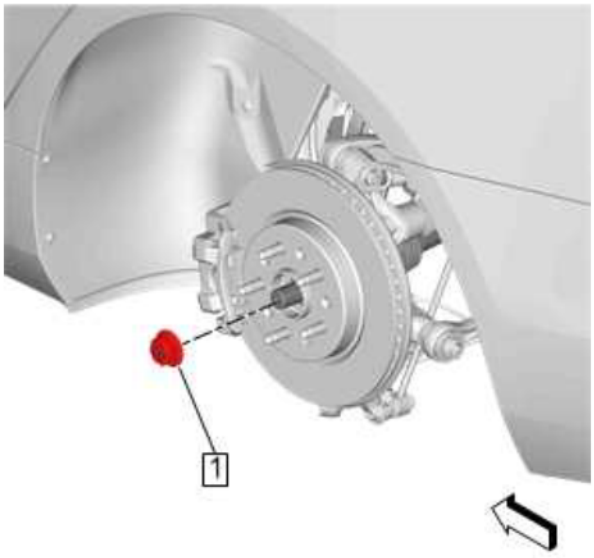

Fig. 20: Wheel Drive Shaft Nut
Courtesy of GENERAL MOTORS COMPANY

9. Using the **DT-45859** hub puller (1), separate the wheel drive shaft from the wheel bearing/hub assembly.

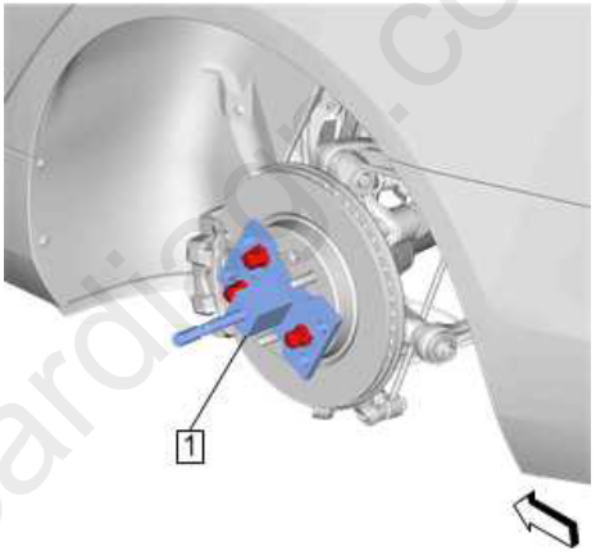

Fig. 21: DT 45859 Hub Puller
Courtesy of GENERAL MOTORS COMPANY

10. Mark the relationship (1) of the wheel drive shaft (2) to the differential output shaft flange (3).

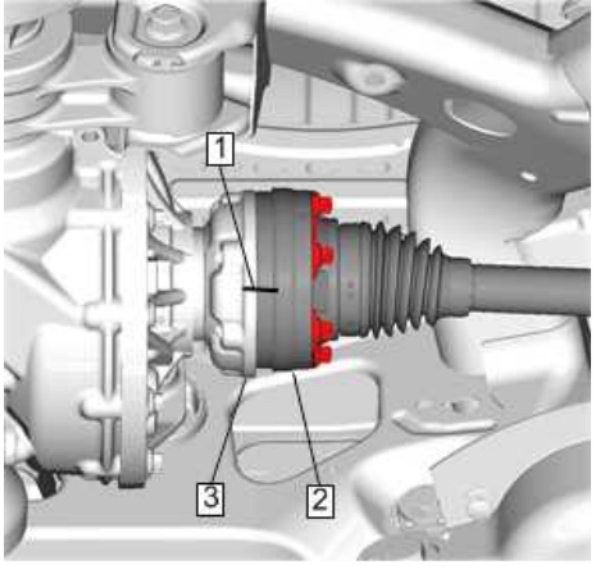

Fig. 22: Wheel Drive Shaft And Output Shaft Flange
Courtesy of GENERAL MOTORS COMPANY

11. Wheel Drive Shaft Bolt (1)Â» Remove [6x]

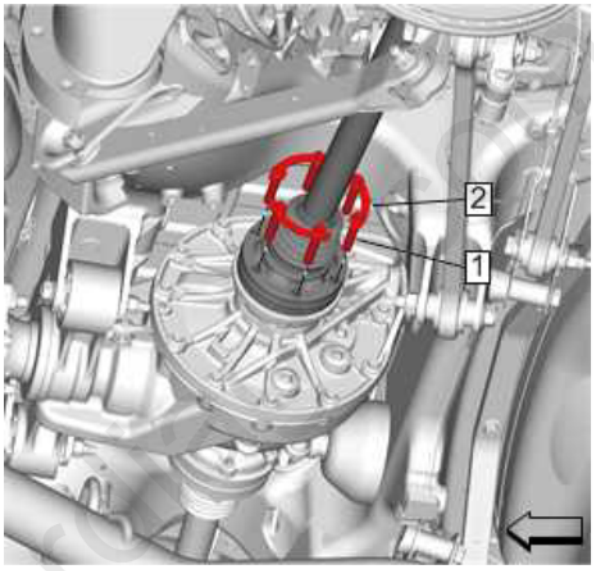

Fig. 23: Wheel Drive Shaft Bolt And Washer
Courtesy of GENERAL MOTORS COMPANY

NOTE: **The bolts may be reused but the washers are a one time use item and must be discarded each time the bolts are removed.**

12. Wheel Drive Shaft Washer (2)Â» Remove and DISCARD [3x]
13. Wheel Drive Shaft (1)Â» Remove

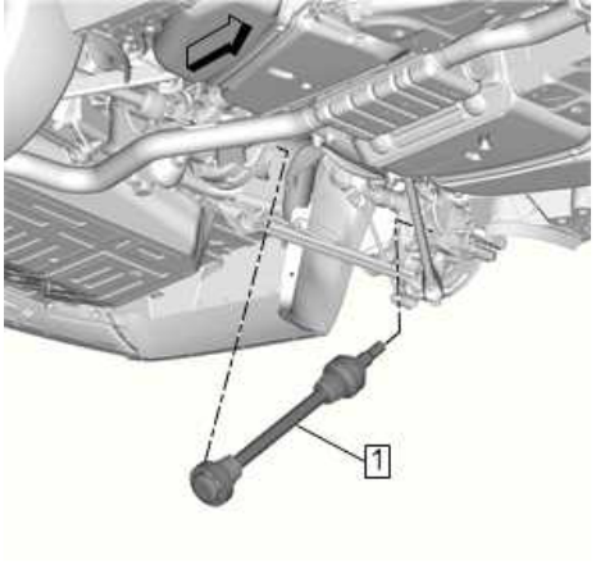

Fig. 24: Wheel Drive Shaft
Courtesy of GENERAL MOTORS COMPANY

NOTE: **Reposition the knuckle to allow the inner joint to pass the rear differential flange. It may be necessary to use a flat bladed tool to separate the wheel drive shaft from the differential flange.**

14. Remove and DISCARD the washer (1) from the wheel drive shaft (2).

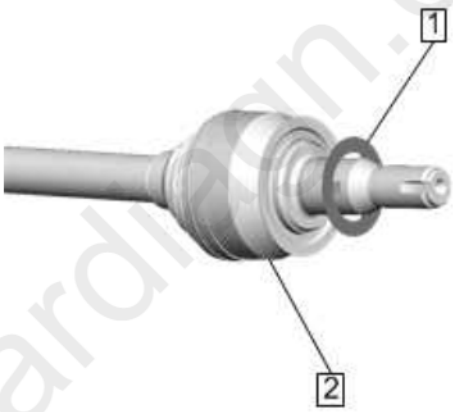

Fig. 25: Wheel Drive Shaft And Washer
Courtesy of GENERAL MOTORS COMPANY

NOTE: **Do NOT reuse wheel drive shaft washer. DISCARD and replace with NEW only.**

Installation Procedure

1. Install the NEW washer (1) on the wheel drive shaft (2).

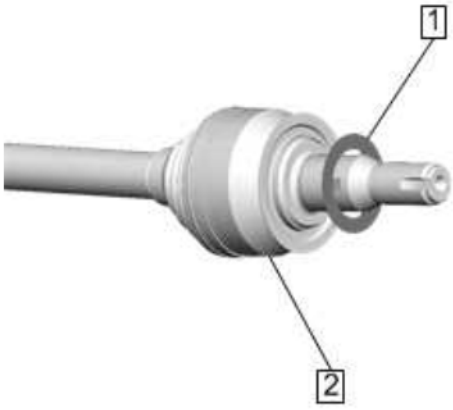

Fig. 26: Wheel Drive Shaft And Washer
Courtesy of GENERAL MOTORS COMPANY

2. Wheel Drive Shaft (1)Â» Install

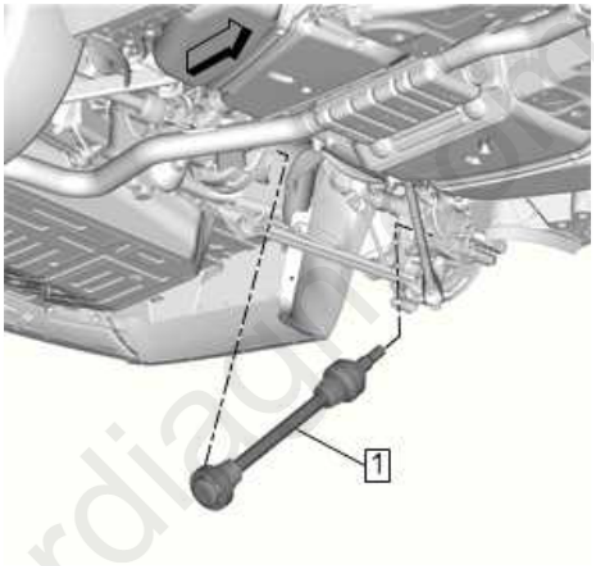

Fig. 27: Wheel Drive Shaft
Courtesy of GENERAL MOTORS COMPANY

3. Align the reference mark (1) on the wheel drive shaft (2) and the differential output shaft flange (3).

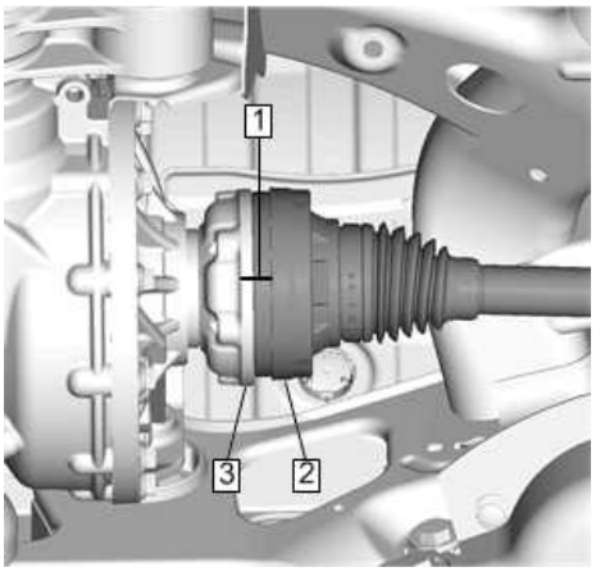

Fig. 28: Wheel Drive Shaft And Output Shaft Flange
Courtesy of GENERAL MOTORS COMPANY

4. Wheel Drive Shaft Washer (2)Â» Install NEW washers. Do NOT reuse old washers. [3x]

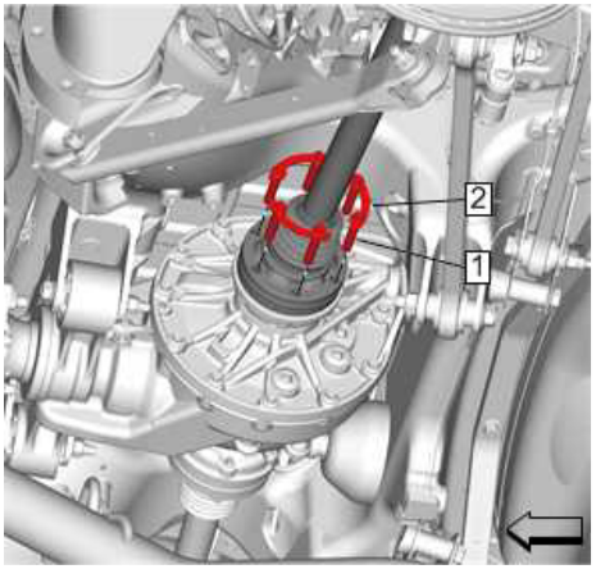

Fig. 29: Wheel Drive Shaft Bolt And Washer
Courtesy of GENERAL MOTORS COMPANY

CAUTION: **Fastener Caution**

5. Wheel Drive Shaft Bolt (1)Â» Install and tighten [6x] 58 N.m (43 lb ft)
6. Wheel Drive Shaft Nut (1)Â» Install a NEW nut.

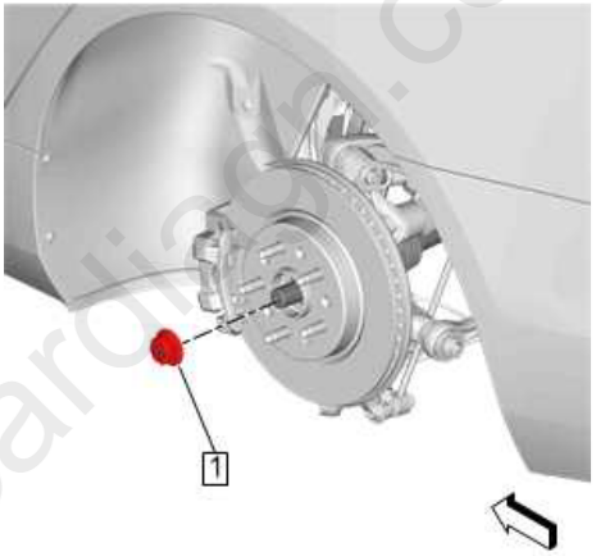

Fig. 30: Wheel Drive Shaft Nut
Courtesy of GENERAL MOTORS COMPANY

Tighten

1. First Pass: 150 N.m (111 lb ft)
2. Second Pass: Loosen (45 degrees)
3. Final Pass: 270 N.m (199 lb ft)

7. Rear Suspension Upper Lateral Link @ KnuckleÂ» Tighten - **Rear Suspension Upper Lateral Link Replacement**
8. Rear Suspension Upper Trailing Link @ KnuckleÂ» Tighten - **Rear Suspension Upper Trailing Link Replacement**
9. Rear Suspension Adjust Link @ KnuckleÂ» Install - **Adjust Link Replacement (Without NYS)** **Adjust Link Replacement (With NYS)**
10. Rear Suspension Lower Trailing Link @ KnuckleÂ» Install - **Rear Suspension Lower Trailing Link Replacement**

11. Rear Suspension Lateral Link @ KnuckleÂ» Install - **Rear Suspension Lateral Link Replacement**
12. Install the left rear tire and wheel assembly. Refer to **Tire and Wheel Removal and Installation**

REAR WHEEL DRIVE SHAFT REPLACEMENT - LEFT SIDE (LGX, LGW)

Special Tools

DT-45859 Hub Puller

Equivalent regional tools: **Special Tools**

Removal Procedure

1. Remove the left rear tire and wheel assembly. Refer to **Tire and Wheel Removal and Installation**
2. Exhaust MufflerÂ» Remove - **Exhaust Muffler Replacement (LGW, LGX)**
3. Rear Suspension Lateral Link @ KnuckleÂ» Separate - **Rear Suspension Lateral Link Replacement**
4. Rear Suspension Lower Trailing Link @ KnuckleÂ» Separate - **Rear Suspension Lower Trailing Link Replacement**
5. Rear Suspension Adjust Link @ KnuckleÂ» Separate - **Adjust Link Replacement (Without NYS)** **Adjust Link Replacement (With NYS)**
6. Rear Suspension Upper Trailing Link @ KnuckleÂ» Loosen - **Rear Suspension Upper Trailing Link Replacement**
7. Rear Suspension Upper Lateral Link @ KnuckleÂ» Loosen - **Rear Suspension Upper Lateral Link Replacement**
8. With the aid of an assistant holding the brake pedal down, use a breaker bar and the proper size socket to loosen the wheel drive shaft nut.

   NOTE: **Do NOT use air tools to remove the wheel drive shaft nut. Use hand tools ONLY.**

9. Wheel Drive Shaft Nut (1)Â» Remove and DISCARD

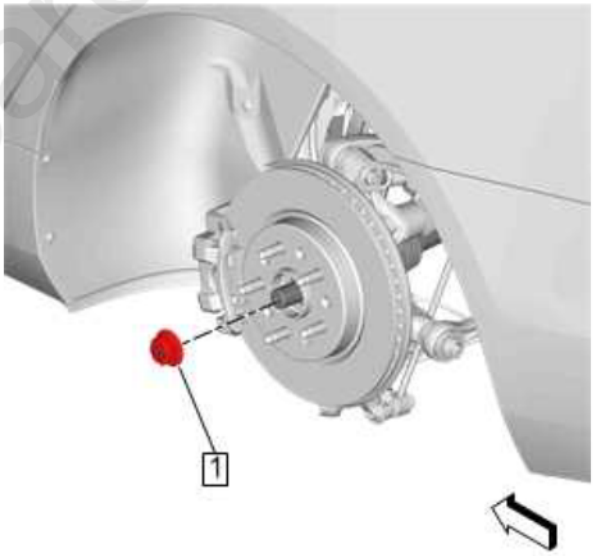

Fig. 31: Wheel Drive Shaft Nut
Courtesy of GENERAL MOTORS COMPANY

10. Using the **DT-45859** hub puller (1), separate the wheel drive shaft from the wheel bearing/hub assembly.

cardiagn.com

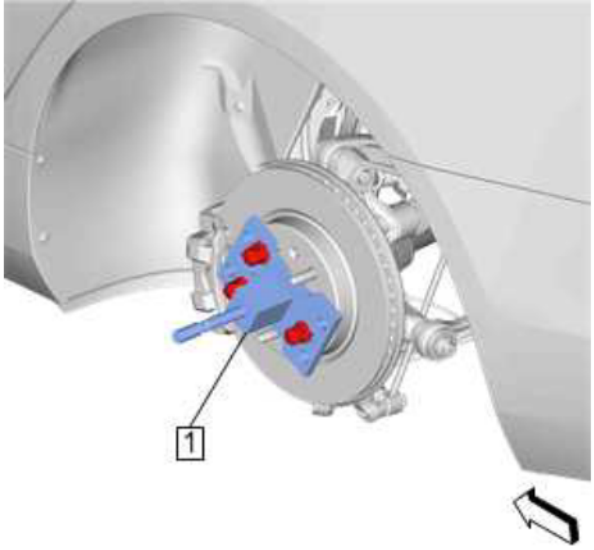

Fig. 32: DT 45859 Hub Puller
Courtesy of GENERAL MOTORS COMPANY

11. Mark the relationship (1) of the wheel drive shaft (2) to the output shaft flange (3).

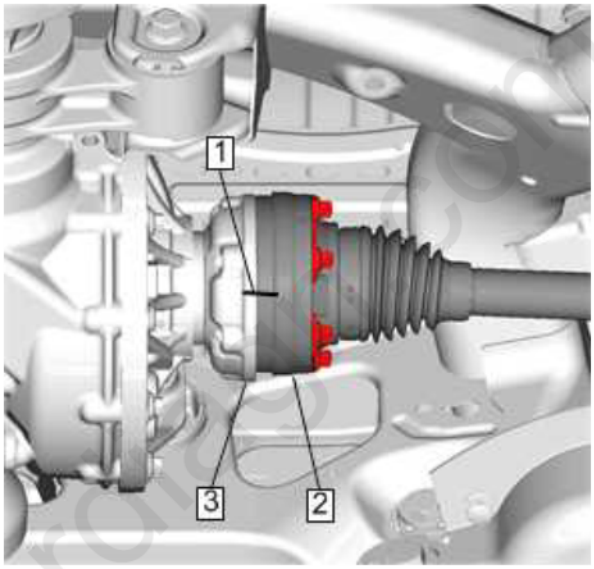

Fig. 33: Wheel Drive Shaft And Output Shaft Flange
Courtesy of GENERAL MOTORS COMPANY

12. Wheel Drive Shaft Bolt (1)Â» Remove [6x]

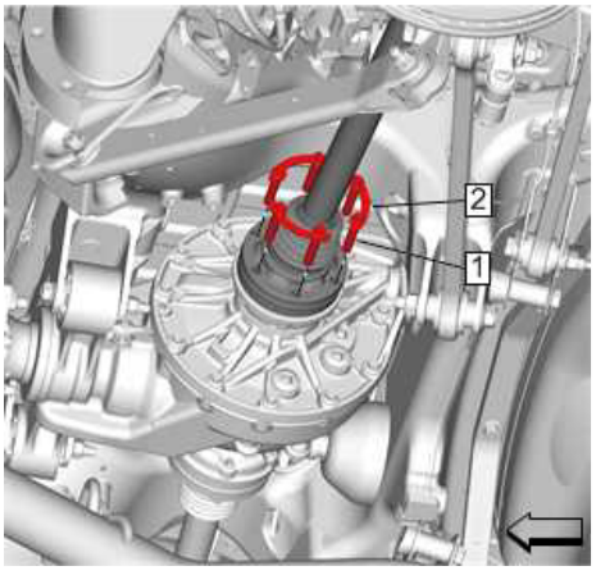

Fig. 34: Wheel Drive Shaft Bolt And Washer
Courtesy of GENERAL MOTORS COMPANY

NOTE: **The bolts may be reused but the washers are a one time use item and must be discarded each time the bolts are removed.**

13. Wheel Drive Shaft Washer (2)Â» Remove and DISCARD [3x]
14. Wheel Drive Shaft (1)Â» Remove

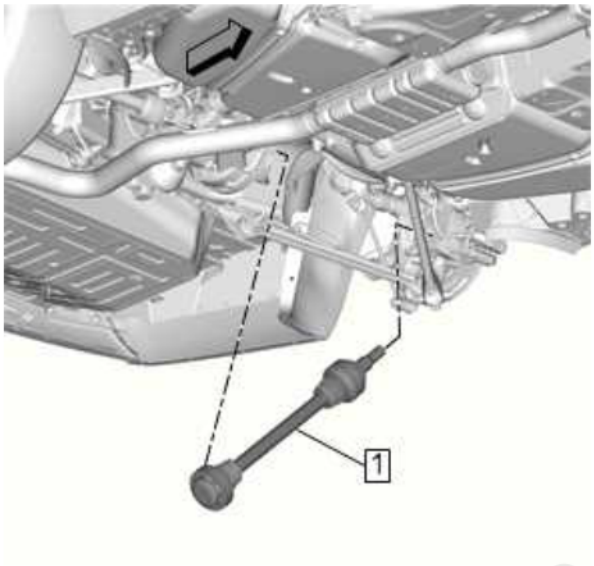

Fig. 35: Wheel Drive Shaft
Courtesy of GENERAL MOTORS COMPANY

NOTE: **Reposition the knuckle to allow the inner joint to pass the rear differential flange. It may be necessary to use a flat bladed tool to separate the wheel drive shaft from the differential flange.**

15. Remove and DISCARD the washer (1) from the wheel drive shaft (2).

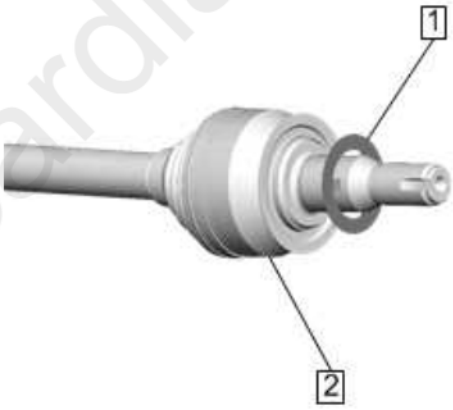

Fig. 36: Wheel Drive Shaft And Washer
Courtesy of GENERAL MOTORS COMPANY

NOTE: **Do NOT reuse wheel drive shaft washer. DISCARD and replace with NEW only.**

Installation Procedure

1. Install the NEW washer (1) on the wheel drive shaft (2).

cardiagn.com

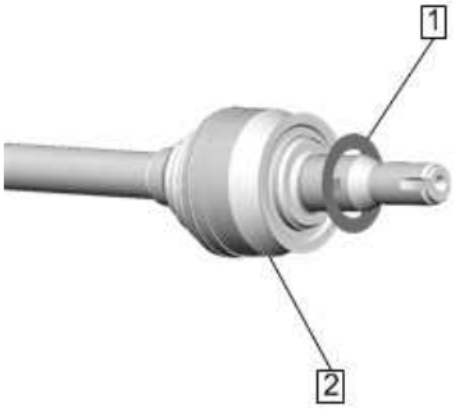

Fig. 37: Wheel Drive Shaft And Washer
Courtesy of GENERAL MOTORS COMPANY

2. Wheel Drive Shaft (1)Â» Install

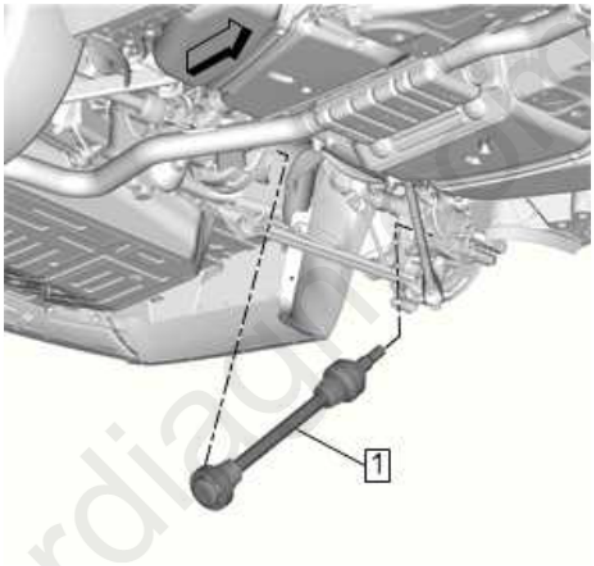

Fig. 38: Wheel Drive Shaft
Courtesy of GENERAL MOTORS COMPANY

3. Align the reference mark (1) on the wheel drive shaft (2) and the output shaft flange (3).

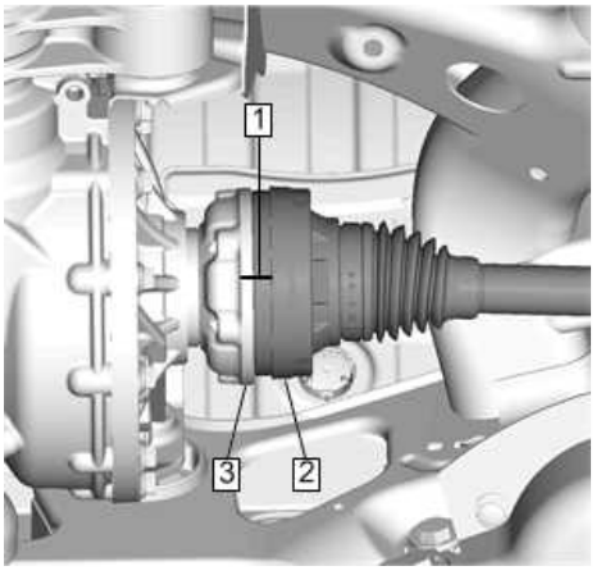

Fig. 39: Wheel Drive Shaft And Output Shaft Flange
Courtesy of GENERAL MOTORS COMPANY

4. Wheel Drive Shaft Washer (2)Â» Install NEW washers. Do NOT reuse old washers. [3x]

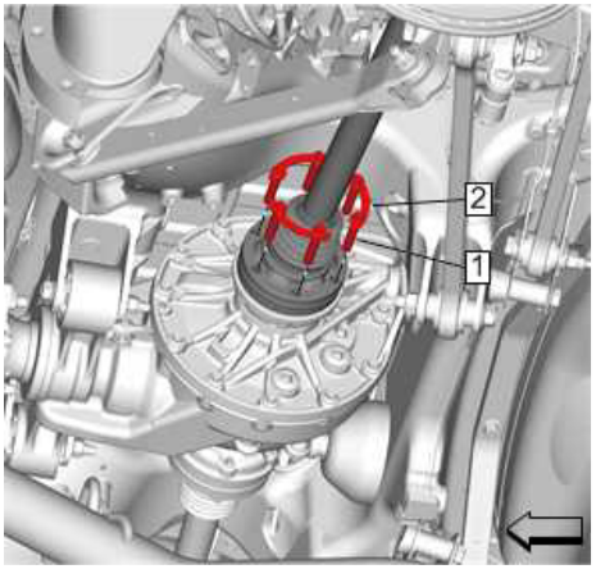

Fig. 40: Wheel Drive Shaft Bolt And Washer
Courtesy of GENERAL MOTORS COMPANY

CAUTION: **Fastener Caution**

5. Wheel Drive Shaft Bolt (1)Â» Install and tighten [6x] 58 N.m (43 lb ft)
6. Wheel Drive Shaft Nut (1)Â» Install a NEW nut.

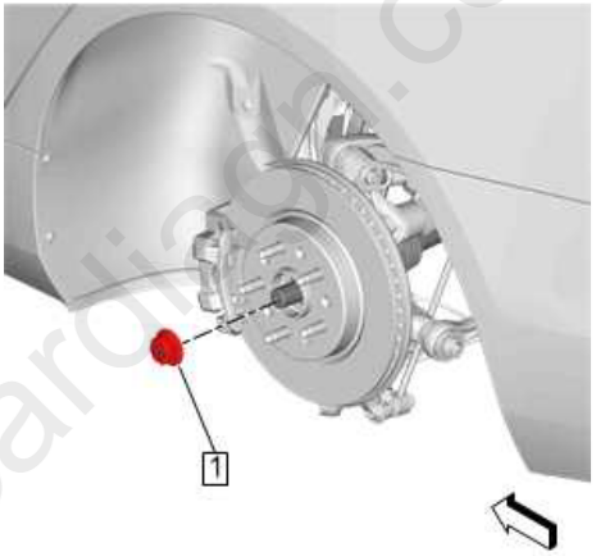

Fig. 41: Wheel Drive Shaft Nut
Courtesy of GENERAL MOTORS COMPANY

Tighten

1. First Pass: 150 N.m (111 lb ft)
2. Second Pass: Loosen (45 degrees)
3. Final Pass: 270 N.m (199 lb ft)

7. Rear Suspension Upper Lateral Link @ KnuckleÂ» Tighten - **Rear Suspension Upper Lateral Link Replacement**
8. Rear Suspension Upper Trailing Link @ KnuckleÂ» Tighten - **Rear Suspension Upper Trailing Link Replacement**
9. Rear Suspension Adjust Link @ KnuckleÂ» Install - **Adjust Link Replacement (Without NYS)** **Adjust Link Replacement (With NYS)**
10. Rear Suspension Lower Trailing Link @ KnuckleÂ» Install - **Rear Suspension Lower Trailing Link Replacement**

11. Rear Suspension Lateral Link @ KnuckleÂ» Install - **Rear Suspension Lateral Link Replacement**
12. Exhaust MufflerÂ» Install - **Exhaust Muffler Replacement (LGW, LGX)**
13. Install the left rear tire and wheel assembly. Refer to **Tire and Wheel Removal and Installation**

REAR WHEEL DRIVE SHAFT REPLACEMENT - RIGHT SIDE

Special Tools

DT-45859 Hub Puller

Equivalent regional tools: **Special Tools**

Removal Procedure

1. Remove the right rear tire and wheel assembly. Refer to **Tire and Wheel Removal and Installation**
2. Exhaust MufflerÂ» Remove - **Exhaust Muffler Replacement (LTG without HP9)** **Exhaust Muffler Replacement (LGW, LGX)** **Exhaust Muffler Replacement (LTG with HP9)**
3. Rear Suspension Lateral Link @ KnuckleÂ» Separate - **Rear Suspension Lateral Link Replacement**
4. Rear Suspension Lower Trailing Link @ KnuckleÂ» Separate - **Rear Suspension Lower Trailing Link Replacement**
5. Rear Suspension Adjust Link @ KnuckleÂ» Separate - **Adjust Link Replacement (Without NYS)** **Adjust Link Replacement (With NYS)**
6. Rear Suspension Upper Trailing Link @ KnuckleÂ» Loosen - **Rear Suspension Upper Trailing Link Replacement**
7. Rear Suspension Upper Lateral Link @ KnuckleÂ» Loosen - **Rear Suspension Upper Lateral Link Replacement**
8. With the aid of an assistant holding the brake pedal down, use a breaker bar and the proper size socket to loosen the wheel drive shaft nut.

   NOTE: **Do NOT use air tools to remove the wheel drive shaft nut. Use hand tools ONLY.**

9. Wheel Drive Shaft Nut (1)Â» Remove and DISCARD

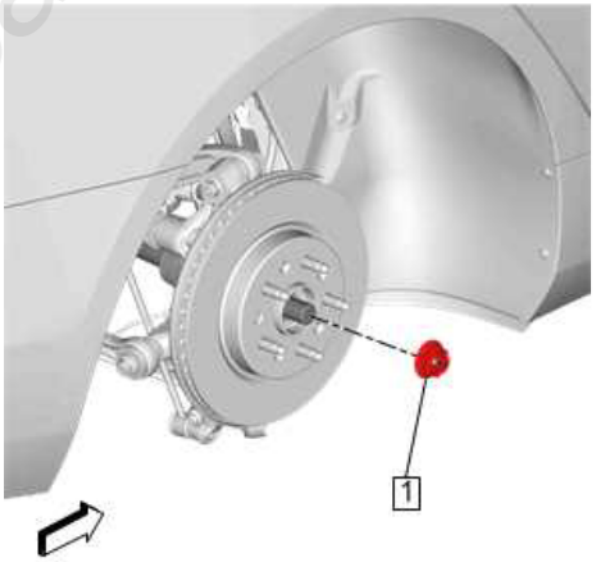

Fig. 42: Wheel Drive Shaft Nut
Courtesy of GENERAL MOTORS COMPANY

10. Using the **DT-45859** hub puller (1), separate the wheel drive shaft from the wheel bearing/hub assembly.

cardiagn.com

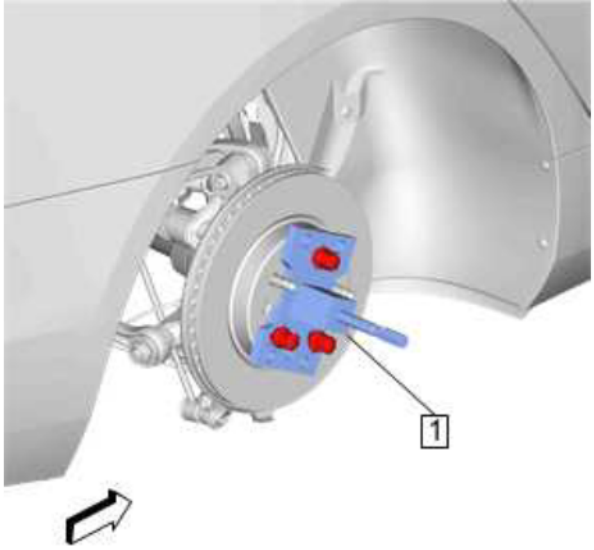

Fig. 43: DT--45859 Hub Puller
Courtesy of GENERAL MOTORS COMPANY

11. Mark the relationship (1) of the wheel drive shaft (2) to the output shaft flange (3).

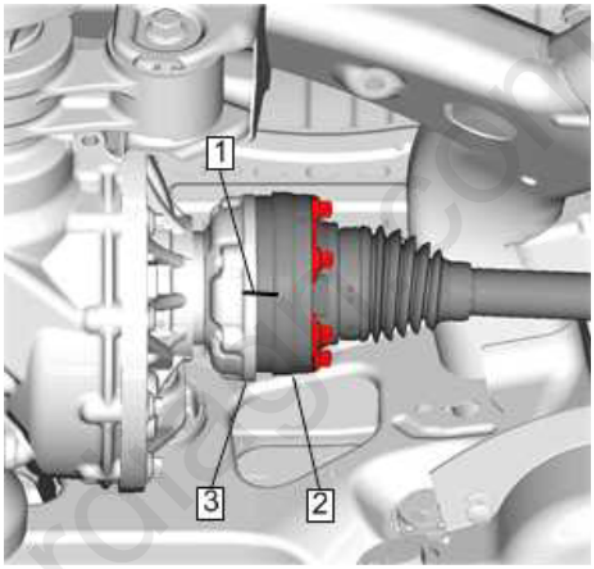

Fig. 44: Wheel Drive Shaft And Output Shaft Flange
Courtesy of GENERAL MOTORS COMPANY

12. Wheel Drive Shaft Bolt (1)Â» Remove [6x]

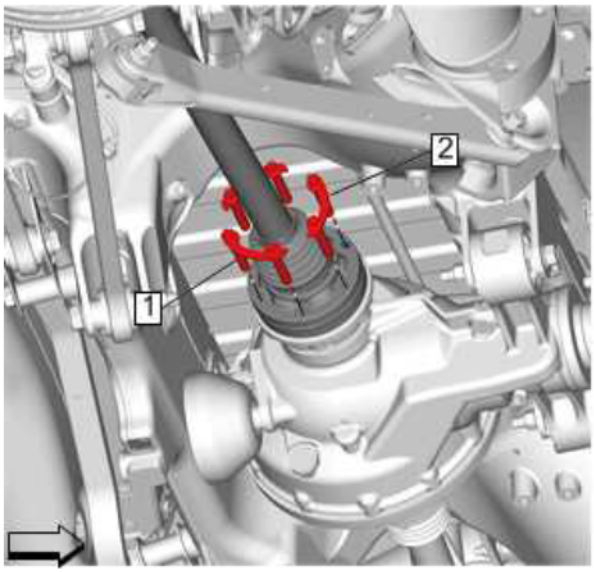

Fig. 45: Wheel Drive Shaft Bolt
Courtesy of GENERAL MOTORS COMPANY

NOTE: **The bolts may be reused but the washers are a one time use item and must be discarded each time the bolts are removed.**

13. Wheel Drive Shaft Washer (2)Â» Remove and DISCARD [3x]
14. Wheel Drive Shaft (1)Â» Remove

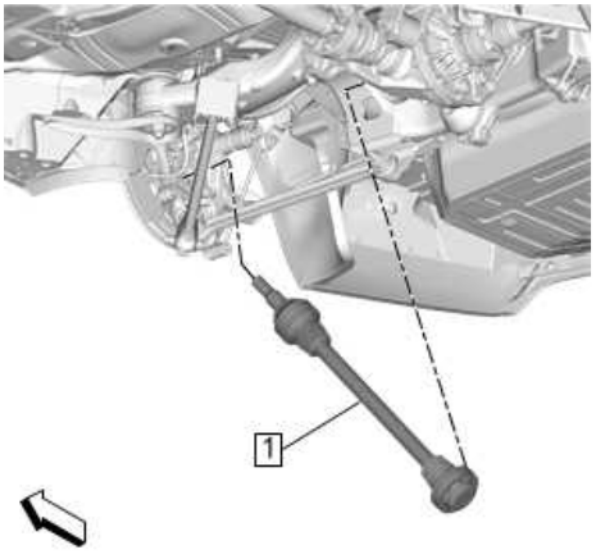

Fig. 46: Wheel Drive Shaft
Courtesy of GENERAL MOTORS COMPANY

NOTE: **Reposition the knuckle to allow the inner joint to pass the rear differential flange. It may be necessary to use a flat bladed tool to separate the wheel drive shaft from the differential flange.**

15. Remove and DISCARD the washer (1) from the wheel drive shaft (2).

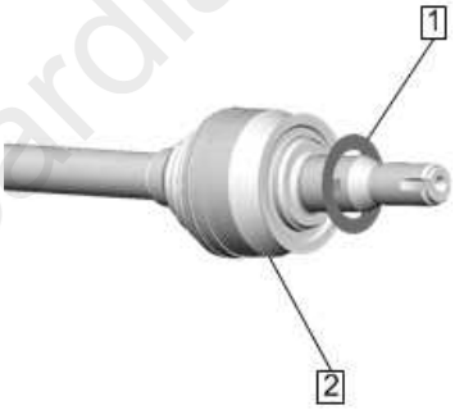

Fig. 47: Wheel Drive Shaft And Washer
Courtesy of GENERAL MOTORS COMPANY

NOTE: **Do NOT reuse wheel drive shaft washer. DISCARD and replace with NEW only.**

Installation Procedure

1. Install the NEW washer (1) on the wheel drive shaft (2).

cardiagn.com

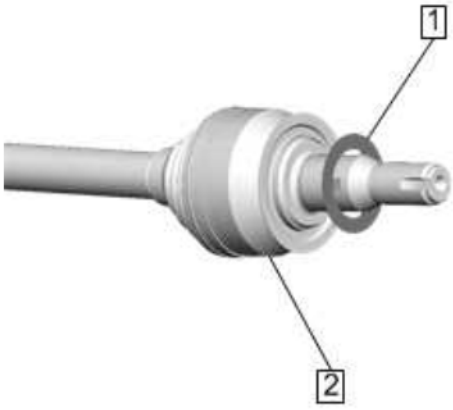

Fig. 48: Wheel Drive Shaft And Washer
Courtesy of GENERAL MOTORS COMPANY

2. Wheel Drive Shaft (1)Â» Install

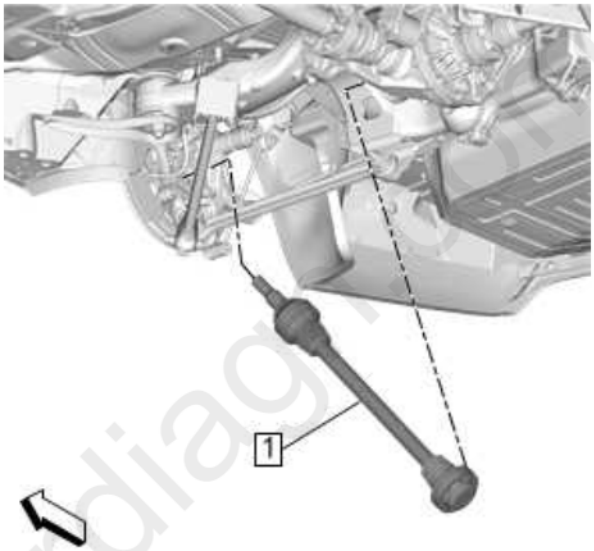

Fig. 49: Wheel Drive Shaft
Courtesy of GENERAL MOTORS COMPANY

3. Align the reference mark (1) on the wheel drive shaft (2) and the output shaft flange (3).

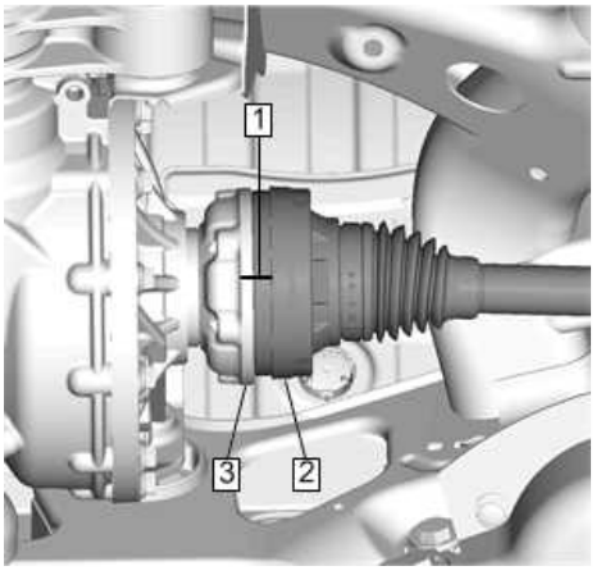

Fig. 50: Wheel Drive Shaft And Output Shaft Flange
Courtesy of GENERAL MOTORS COMPANY

4. Wheel Drive Shaft Washer (2)Â» Install NEW washers. Do NOT reuse old washers. [3x]

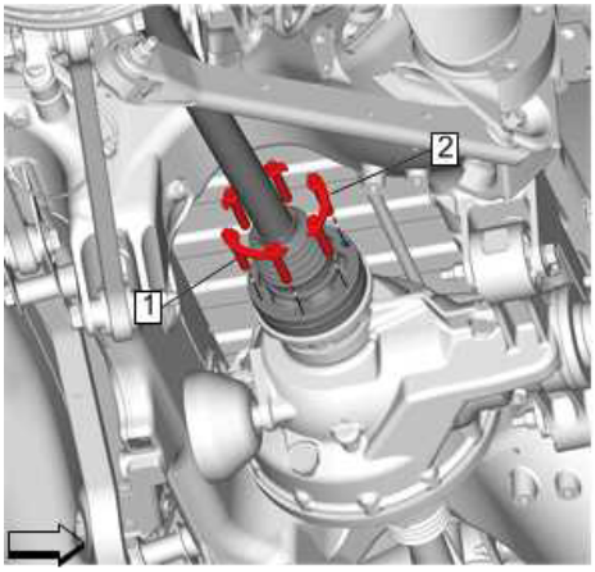

Fig. 51: Wheel Drive Shaft Bolt
Courtesy of GENERAL MOTORS COMPANY

CAUTION: **Fastener Caution**

5. Wheel Drive Shaft Bolt (1)Â» Install and tighten [6x] 58 N.m (43 lb ft)
6. Wheel Drive Shaft Nut (1)Â» Install a NEW nut.

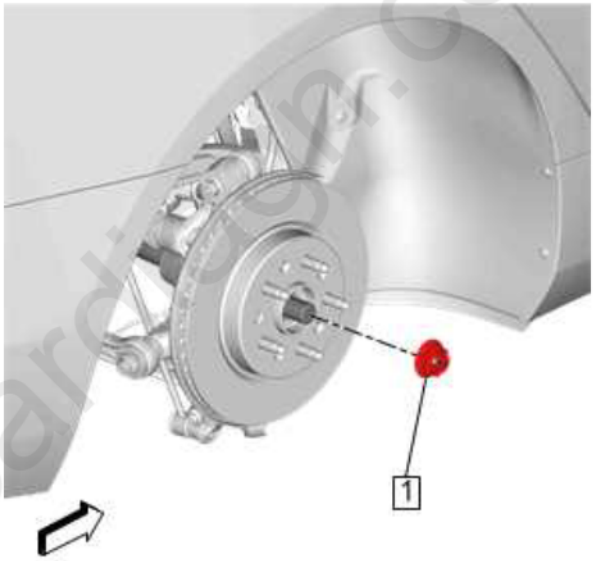

Fig. 52: Wheel Drive Shaft Nut
Courtesy of GENERAL MOTORS COMPANY

Tighten

1. First Pass: 150 N.m (111 lb ft)
2. Second Pass: Loosen 45 degrees
3. Final Pass: 270 N.m (199 lb ft)

7. Rear Suspension Upper Lateral Link @ KnuckleÂ» Tighten - **Rear Suspension Upper Lateral Link Replacement**
8. Rear Suspension Upper Trailing Link @ KnuckleÂ» Tighten - **Rear Suspension Upper Trailing Link Replacement**
9. Rear Suspension Adjust Link @ KnuckleÂ» Install - **Adjust Link Replacement (Without NYS)** **Adjust Link Replacement (With NYS)**
10. Rear Suspension Lower Trailing Link @ KnuckleÂ» Install - **Rear Suspension Lower Trailing Link Replacement**

11. Rear Suspension Lateral Link @ KnuckleÂ» Install - **Rear Suspension Lateral Link Replacement**
12. Exhaust MufflerÂ» Install - **Exhaust Muffler Replacement (LTG without HP9)** **Exhaust Muffler Replacement (LGW, LGX)** **Exhaust Muffler Replacement (LTG with HP9)**
13. Install the right rear tire and wheel assembly. Refer to **Tire and Wheel Removal and Installation**

DESCRIPTION AND OPERATION

WHEEL DRIVE SHAFTS DESCRIPTION AND OPERATION

Wheel drive shaft assemblies are flexible assemblies consisting of an inner and outer constant velocity joint connected by an axle shaft. The inner joint is completely flexible and can move in and out. The outer joint is also flexible, but cannot move in and out.

Boot and Clamp

Rear wheel drive shaft assemblies use inboard and outboard joint boots made of thermoplastic material and clamps made of stainless steel. The thermoplastic material performs well against normal handling and operational wear and conditions. However, it is not strong enough to withstand abusive handling or damage due to objects such as sharp tools or the sharp edge of any other surrounding component in the vehicle.

IMPORTANT: The boots should be protected from sharp tools and from the sharp edges of surrounding components. Any damage to the boots or clamps will result in leakage. Leakage will allow grease to leak out of the inboard and outboard joints. Leakage will allow water to leak into the inboard and outboard joints. This leads to noisy wheel drive shaft operation and eventually, failure of the internal components.

The functions of the boot are as follows:

- To protect the internal parts of the inboard and outboard joint by protecting the grease from surrounding detrimental atmospheric conditions such as extreme temperatures, ozone gas, etc.
- To protect the internal parts of the inboard and outboard joint by protecting the grease from foreign materials such as stones, dirt, water, salt, etc.
- Facilitate angular and axial movement of the inboard joint.
- Facilitate angular movement of the outboard joint.

The function of the clamps is to provide a leak proof connection at the housing and the axle shaft for the inboard and outboard joints.

Inner Joint

The inner joints use the cross-groove joint design with an adapter for the inboard seal. The wheel drive shafts incorporate a male spline and interlock with the differential gears using barrel type snap rings.

Outer Joint

The outer joints use the constant velocity (CV) joint design. The shaft end mating with the knuckle/hub, incorporates a helical spline to assure a tight, press type fit. The design provides a no end play condition between the hub bearing and the wheel drive shaft.

SPECIAL TOOLS AND EQUIPMENT

SPECIAL TOOLS

Illustration	Tool Number/Description

cardiagn.com

Illustration	Tool Number/Description
	CH 49400 DT 45859 DT 50188 J 45859 Wheel Hub Remover
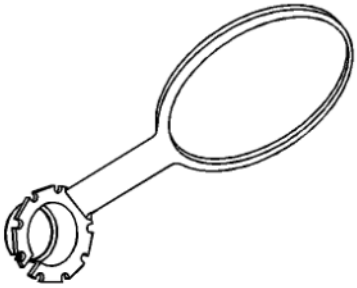	DT-51504 Seal Protector

cardiagn.com