DATSUN 280Z

SERVICE MANUAL

MODEL S30 SERIES

NISSAN

NISSAN MOTOR CO., LTD.
TOKYO, JAPAN

QUICK REFERENCE INDEX

GENERAL INFORMATION ..... GI
ENGINE TUNE-UP ..... ET
ENGINE MECHANICAL ..... EM
ENGINE LUBRICATION SYSTEM ..... EL
COOLING SYSTEM ..... CO
ENGINE FUEL ..... EF
EMISSION CONTROL SYSTEM ..... EC
ENGINE ELECTRICAL SYSTEM ..... EE
ENGINE REMOVAL & INSTALLATION ..... ER
CLUTCH CL
MANUAL TRANSMISSION ..... MT
AUTOMATIC TRANSMISSION ..... AT
PROPELLER SHAFT & DIFFERENTIAL CARRIER ..... PD
FRONT AXLE & FRONT SUSPENSION ..... FA
REAR AXLE & REAR SUSPENSION ..... RA
BRAKE SYSTEM ..... BR
WHEEL AND TIRE ..... WT
STEERING SYSTEM ..... ST
ENGINE CONTROL, FUEL & EXHAUST SYSTEMS ..... FE
BODY ..... BF
BODY ELECTRICAL SYSTEM ..... BE
AIR CONDITIONING ..... AC
SERVICE EQUIPMENT ..... SE

Downloaded from www.Manualslib.com manuals search engine

FOREWORD

This service manual has been prepared for the purpose of assisting service personnel of authorized NISSAN/DATSUN dealers in providing effective service and maintenance of the 1977 Datsun 280Z.

Since proper maintenance and service are absolutely essential in satisfying the Datsun owners, this manual should be kept in a handy place for ready reference and should be carefully studied.

This manual includes procedures for maintenance adjustments, minor service operations, removal and installation, and for disassembly and assembly of components.

Some of these service operations require the use of Special Tools especially designed for effective performance of service operations.

The special tools are presented in the "SE" section.

As you read through the maintenance procedures in this service manual, you will occasionally come across paragraphs headed NOTE or CAUTION. A NOTE is supplemental information that is important to a particular procedure. CAUTION warns of steps that must be followed to prevent personal injury and/or damage to some part of your DATSUN.

The Quick Reference Index on the first page enables the user to quickly locate the desired section. At the beginning of each individual section is a table of contents, which gives the page number on which each major subject begins. An index is placed at the beginning of each major subject within the section.

All information, illustrations and specifications contained in this manual are based on the latest product information available at the time of publication approval.

Rights for alteration at any time of specifications and methods are reserved.

Liability for any personal injury or property damage occasioned by the use of this service manual in effecting maintenance or repair of your Datsun is in no way assumed by Nissan Motor Co., Ltd.

Accordingly, anyone using a service procedure or tool which is not specifically recommended by Nissan must first completely satisfy himself that neither his safety nor the car's safety will be jeopardized by the service method selected.

NISSAN MOTOR CO., LTD.
TOKYO, JAPAN

© 1976 NISSAN MOTOR CO., LTD. Printed in Japan

Downloaded from www.Manualslib.com manuals search engine

DATSUN 280Z
MODEL S30 SERIES

SECTION GI

GI

GENERAL INFORMATION

MODEL VARIATION ..... GI- 2
IDENTIFICATION NUMBERS ..... GI- 3
APPROXIMATE REFILL CAPACITIES ..... GI- 4
RECOMMENDED PETROL (FUEL) ..... GI- 4
RECOMMENDED LUBRICANTS ..... GI- 5
LIFTING POINTS AND TOWING ..... GI- 6

NISSAN

NISSAN MOTOR CO., LTD.
TOKYO, JAPAN

Downloaded from www.Manualslib.com manuals search engine

MODEL VARIATION

Destination		Class	Model		Engine	Transmission	Differential carrier (model and gear ratio)
For U.S.A.	California and high altitude areas except for California	2-seater	California models	HLS30UV	L28	F4W71B	R200 3.545
				HLS30FUV		FS5W71B	
				HLS30AUV		3N71B	R180 3.545
		2 + 2-seater		GHLS30UV		F4W71B	R200 3.545
				GHLS30FUV		FS5W71B	
				GHLS30AUV		3N71B	R180 3.545
	*All low altitude areas except for California	2-seater	Non-California models	HLS30U		F4W71B	R200 3.545
				HLS30FU		FS5W71B	
				HLS30AU		3N71B	R180 3.545
		2 + 2-seater		GHLS30U		F4W71B	R200 3.545
				GHLS30FU		FS5W71B	
				GHLS30AU		3N71B	R180 3.545
For Canada		2-seater		HLS30UN		F4W71B	R200 3.545
				HLS30FUN		FS5W71B	
				HLS30AUN		3N71B	R180 3.545
		2 + 2-seater		GHLS30UN		F4W71B	R200 3.545
				GHLS30FUN		FS5W71B	
				GHLS30AUN		3N71B	R180 3.545

*; Low altitude means nominally low altitude.

G H L S30 F A U N V C

- C — Air conditioner
- V — California model
- N — For Canada
- U — For U.S.A. and Canada
- A — Automatic transmission model
- F — Manual 5-speed transmission model
- L — Left hand drive
- H — L28 engine
- G — 2 + 2 seater model

Downloaded from www.Manualslib.com manuals search engine

IDENTIFICATION NUMBERS

The unit and car numbers are stamped and registered at the factory.

The engine and car identification numbers are used on legal documents.

These numbers are used for factory communication such as Technical Report, Warranty Claim, Service Journal and other information.

CAR IDENTIFICATION PLATE

The car identification plate is located on the left hoodledge panel at the back of strut housing.

The plate contains the car type, engine capacity, maximum horsepower, wheelbase and engine and car serial numbers.

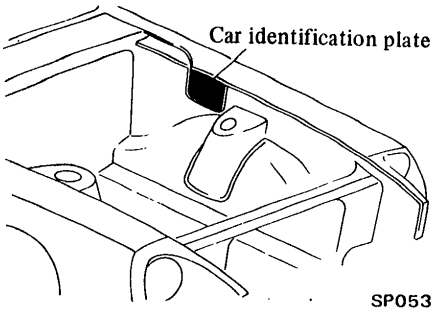

Fig. GI-1 Car identification plate location

CAR SERIAL NUMBER

The car serial number is stamped on the upper face of the left dash panel and is broken down as shown in the following figure.

HLS30-XXXXXX

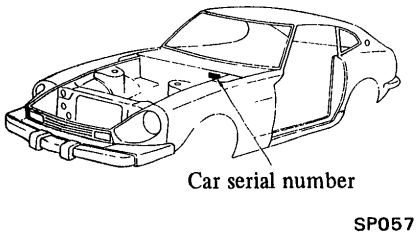

Fig. GI-2 Car serial number location

IDENTIFICATION NUMBER PLATE

The identification number plate is located on the upper surface of the instrument panel and can be seen from outside through the windshield glass. The identification number consists of the car model and the serial number.

(HLS30-XXXXXX)

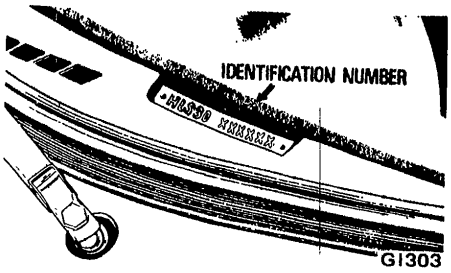

Fig. GI-3 Identification number plate location

ENGINE SERIAL NUMBER

The engine serial number is stamped on the right side of the cylinder block.

The number is broken down as shown in the following Figure GI-4.

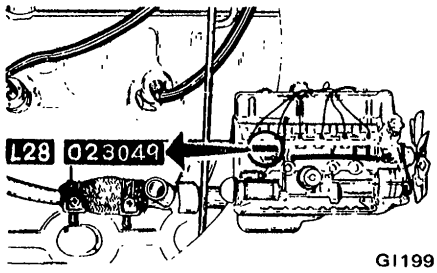

Fig. GI-4 Engine serial number location

COLOR CODE NUMBER LABEL

The body color code number label is attached to the top face of the radiator core support.

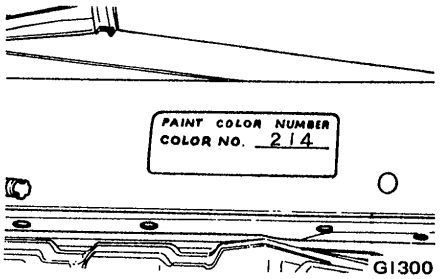

Fig. GI-5 Body color code number label location

M.V. S.S. CERTIFICATION LABEL

The M.V.S.S. certification label is affixed to the upper portion of the left lock pillar.

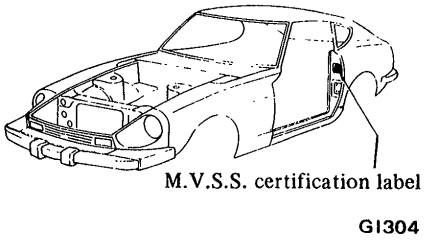

Fig. GI-6 M.V.S.S. certification label location

EMISSION CONTROL INFORMATION LABEL

The emission control information label is stuck on the inside panel of the hood.

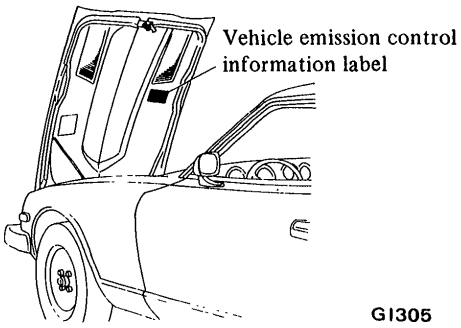

Fig. GI-7 Emission control information label location

MANUAL TRANSMISSION NUMBER

The transmission serial number is stamped on the front upper face of the transmission case.

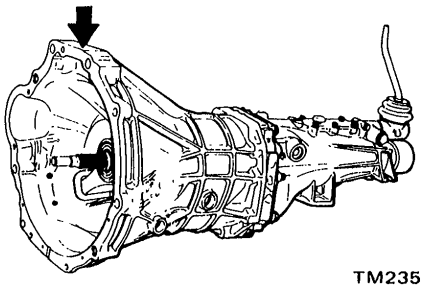

Fig. GI-8 Manual transmission number location

Downloaded from www.Manualslib.com manuals search engine

AUTOMATIC TRANSMISSION NUMBER

The transmission serial number is stamped on the right-hand side of the transmission case.

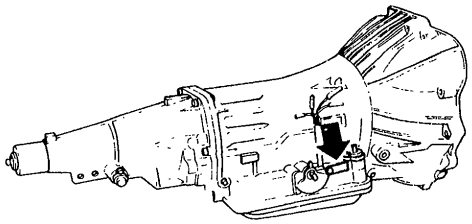

AT344

Fig. GI-9 Automatic transmission number location

APPROXIMATE REFILL CAPACITIES

			Liters	US measure	Imper. measure
Fuel tank			65	17⅛ gal	14⅜ gal
Engine cooling system *1	Manual transmission model		10.3	10⅞ qt	9⅛ qt
	Automatic transmission model		10.1	10⅝ qt	8⅞ qt
Engine crankcase	*2		4.7	5 qt	4⅛ qt
Transmission case	Manual	4-speed	1.7	3⅝ pt	3 pt
		5-speed	2.0	4¼ pt	3½ pt
	Automatic		5.5	5⅞ qt.	4⅞ qt
Differential case	R200		1.3	2¾ pt	2¼ pt
	R180		1.0	2⅛ pt	1¾ pt

*1: Includes 0.8 liter (⅞ US qt, ¾ Imp qt) for heater and 0.62 liter (⅝ qt, ½ qt) for reservair tank.

*2: Includes 0.7 liter (¾ US qt, ⅝ Imp qt) for oil filter.

RECOMMENDED PETROL (Fuel)

Use an unleaded or low-lead gasoline with a minimum octane rating of 91 RON (Research Octane Number).

On California models, use only unleaded gasoline to protect the catalytic converter from contamination.

Downloaded from www.Manualslib.com manuals search engine

RECOMMENDED LUBRICANTS

RECOMMENDED SAE VISCOSITY NUMBER

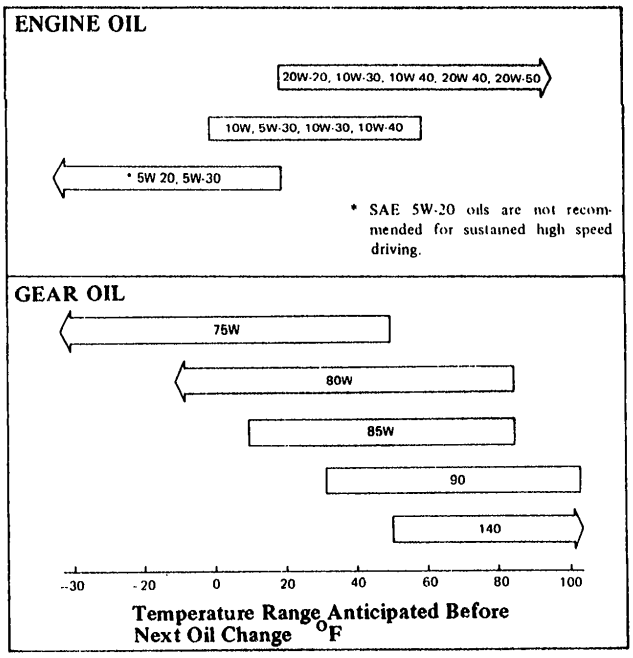

LUBRICANT SPECIFICATIONS

Item		Specifications	Remarks
Gasoline engine oil		SAE Classification SD or SE	Furthermore refer to SAE recommended viscosity table.
Gear oil	Transmission and steering	API GL-4	———
	Differential	API GL-5	———
Automatic T/M fluid		Type DEXRON	———
Multipurpose grease		NLGI 2	Lithium soap base
Brake and clutch fluid		DOT 3	———
Antifreeze		———	Permanent anti-freeze (Ethylene glycol base)

Downloaded from www.Manualslib.com manuals search engine

LIFTING POINTS AND TOWING

JACK UP

PANTOGRAPH JACK

Place a jack under the position where sill flange is cut for identification. Do not jack up other positions.

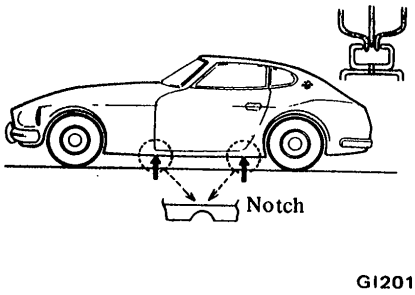

Fig. GI-10 Jacking point

Notes:

a. Never get under the car while it is supported only by the jack. Always use safety stands to support frame when you have to get under the car.

b. Block the wheels diagonally by wheel chocks.

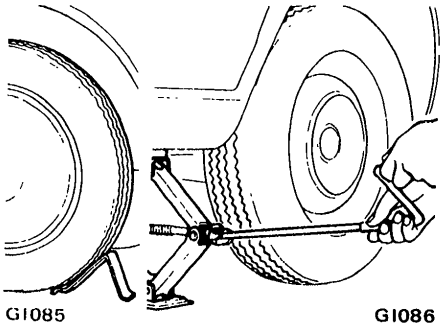

Fig. GI-11 Wheel chocks and jack

GARAGE JACK

Notes:

a. When jacking up the front of the car, place the chocks behind the rear wheels to hold them.

b. When jacking up the rear of the car, place the chocks at the front side of the front wheels to hold them.

c. When carrying out operations with the garage jack, be sure to support the car with safety stands.

The front jacking point is center of front suspension member and rear is differential gear carrier.

Do not place a jack on the center portion of front suspension transverse link.

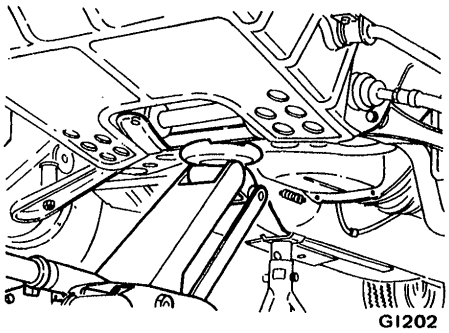

Fig. GI-12 Front jacking point

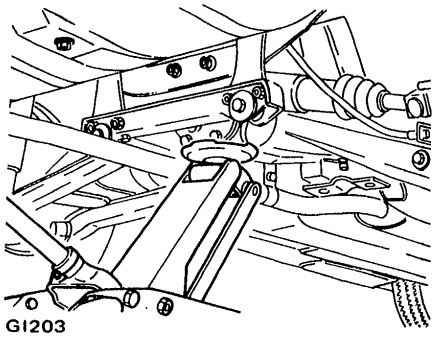

Fig. GI-13 Rear jacking point

SUPPORTABLE POINT

Front supportable points for stand are both front side members. Rear supportable points are on both sides of front differential mounting cross-member.

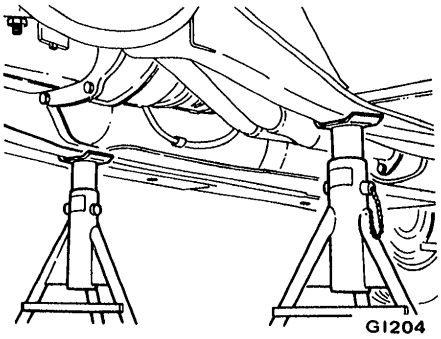

Fig. GI-14 Front supportable points

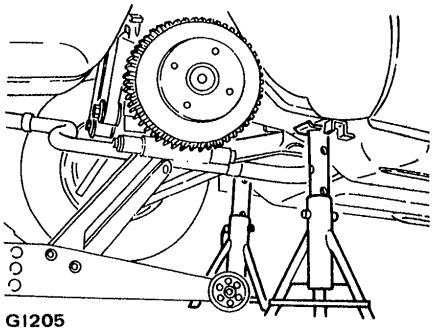

Fig. GI-15 Rear supportable points

TOWING

Cautions:

a. It is necessary to use proper towing equipment, to avoid possible damage to the car during a towing operation.
Towing is in accordance with Towing Procedure Manual at dealer side.

b. All applicable State or Provincial (in Canada) laws and local laws regarding the towing operation must be obeyed.

c. Only front hooks may be used for towing purposes. When front hooks are used for towing, remove front apron and front fender front to prevent possible interference with towing rope.

Note: Be sure to remove rear hooks before delivery of car.

If the transmission and rear axle are in good working order, the car may be towed with all the wheels on the road. If the transmission and/or rear axle are inoperative, the car must be towed from the rear with the rear wheels raised.

When car is to be towed forward, connect a rope securely to hook attached to front side member. See Figure GI-16.

Before towing, make sure parking brake is released and transmission is in Neutral.

Downloaded from www.Manualslib.com manuals search engine

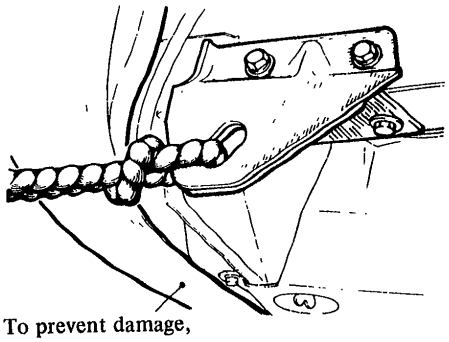

Fig. GI-16 Front towing point

Cautions:

a. **The ignition key must be turned to the OFF position and remain in the ignition. Do not remove the key during the towing operation, as this will lock the steering column and damage the lock mechanism.**
b. **The car is equipped with a front towing hook as illustrated. However, this hook should be used only in an emergency situation, e.g., to pull the car out of a ditch, a snowbank or mud.**
c. **When towing, do not take up slack in the rope too quickly.**
d. **Always pull the rope in a straight direction with respect to the hook. Do not apply force to the hook in side direction.**
e. **It is illegal to tow a car on the highways with a rope.**

MANUAL TRANSMISSION MODEL

Before towing, make sure transmission is in neutral gear. If rear axle or transmission is inoperative, car should be towed with its rear wheels off the ground, or propeller shaft must be removed.

AUTOMATIC TRANSMISSION MODEL

Car may be towed safely on its rear wheels on the ground with select lever in "N" (Neutral) position at speeds of less than 30 km/h (20 MPH). However, propeller shaft must be disconnected or car must be towed on its front wheels on the ground under the following conditions:

1. Towing speed of more than 30 km/h (20 MPH).
2. Car must be towed for a long distance (over 6 miles or 10 km).
3. Transmission is not operating proerly.

Caution: If car is towed on its front wheels on the ground, steering wheel should be secured to maintain a straight ahead position.

TIE-DOWN HOOK

There are four tie-down hooks. Two of them are located on front side members, and the other two on rear panel.

Front tie-down hook attached to either side member is also used as a towing hook.

Note: When fastening chains to rear transverse link, wrap them around link to avoid interfering with any adjacent parts.

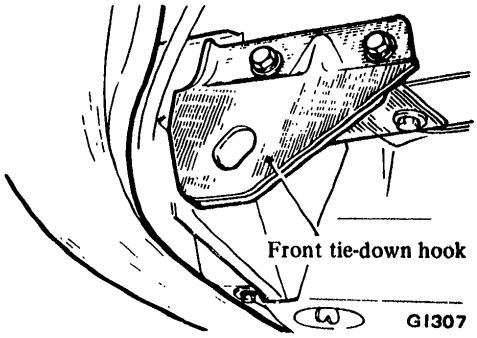

Fig. GI-17 Front tie-down hook

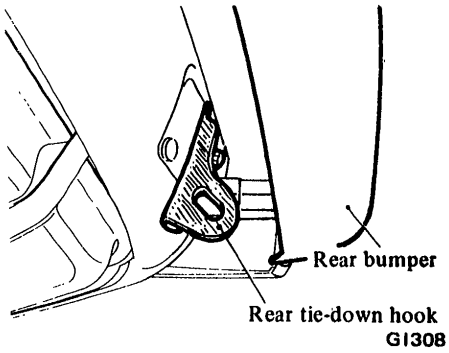

Fig. GI-18 Rear tie-down hook

Downloaded from www.Manualslib.com manuals search engine

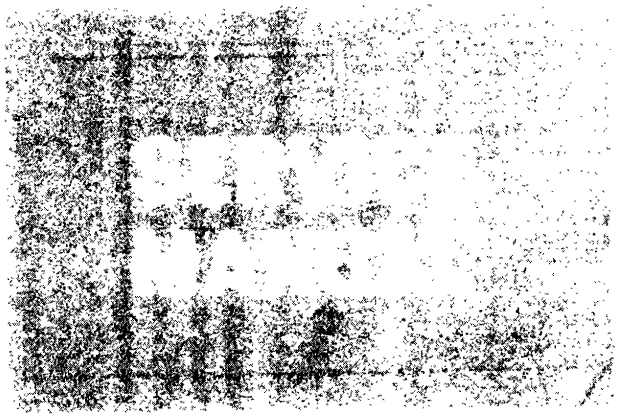

DATSUN 280Z
MODEL S30 SERIES

SECTION ET

ET

ENGINE TUNE-UP

BASIC MECHANICAL SYSTEM ..... ET- 3

IGNITION AND FUEL SYSTEM ..... ET- 5

EMISSION CONTROL SYSTEM ET-10

SERVICE DATA AND SPECIFICATIONS ET-13

TROUBLE DIAGNOSES AND CORRECTIONS ET-14

NISSAN

NISSAN MOTOR CO., LTD.
TOKYO, JAPAN

Downloaded from www.Manualslib.com manuals search engine

1 Purge control valve
2 Carbon canister
3 Vapor vent line
4 Canister purge line
5 Carbon canister to 3-way connector vacuum hose
6 Fuel filter
7 Fuel feed rubber hose
8 Fuel return rubber hose
9 Thermal transmitter
10 Thermotime switch
11 Water temperature sensor
12 3-way connector to distributor vacuum hose
13 Anti-stall dash pot (Manual Transmission only)
14 3-way connector throttle chamber vacuum hose
15 Throttle chamber
16 Idle speed adjusting screw
17 Throttle chamber to air regulator rubber hose
18 Throttle valve switch
19 Throttle chamber to 3-way connector rubber hose
20 Cold start valve
21 Cold start valve to fuel pipe D rubber hose
22 Throttle chamber to thermal vacuum valve vacuum hose
23 Air regulator
24 Heater housing to water pipe rubber hose
25 Fuel pipe D
26 Thermal vacuum valve
27 Air regulator to 3-way connector rubber hose
28 3-way connector
29 Fuel pipe D to fuel pipe A rubber hose
*30 Thermal vacuum valve to vacuum delay valve vacuum hose
31 Pressure regulator to intake manifold vacuum hose
32 3-way connector to rocker cover rubber hose
*33 Vacuum delay valve
*34 Vacuum delay valve to B.P.T. valve vacuum hose
35 B.P.T. valve
36 B.P.T. valve to E.G.R. control valve vacuum hose
37 E.G.R. control valve
**38 Thermal vacuum valve to B.P.T. valve
39 Injector holder
40 Injector

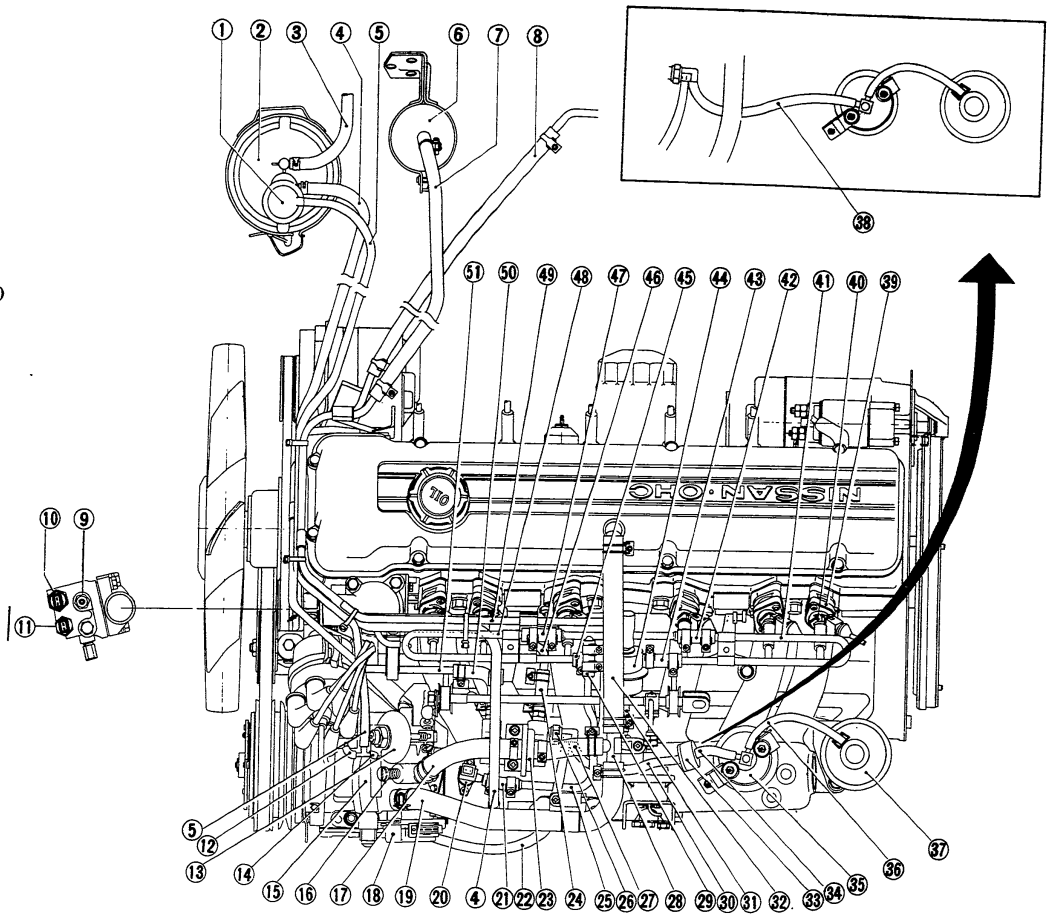

41 Fuel pipe C
42 Fuel pipe A to fuel pipe C rubber hose
43 Pressure regulator to fuel pipe C rubber hose
44 Pressure regulator
45 Pressure regulator to fuel pipe B rubber hose
46 Rubber hose to water pipe
47 Fuel pipe A to fuel pipe B rubber hose
48 Fuel pipe B
49 Fuel pipe A
50 Heater housing to water pipe rubber hose
51 Rubber hose to cylinder head water pipe

* California models only
**Non-California models only

ET361

Fig. ET-1 L28 engine system piping

Downloaded from www.Manualslib.com manuals search engine

BASIC MECHANICAL SYSTEM

CONTENTS

ADJUSTING INTAKE AND EXHAUST VALVE CLEARANCE ET-3
VALVE CLEARANCE ET-3
CHECKING AND ADJUSTING DRIVE BELTS ET-3
FAN BELT ET-3
COOLER COMPRESSOR BELT ET-3
RETIGHTENING CYLINDER HEAD BOLTS, MANIFOLD NUTS AND THROTTLE CHAMBER SECURING BOLTS ET-4
CHANGING ENGINE OIL ET-4
REPLACING OIL FILTER ET-4
CHANGING ENGINE COOLANT ET-4
PERMANENT ANTI-FREEZE COOLANT ET-4
CHECKING COOLING SYSTEM HOSES AND CONNECTIONS ET-4
INSPECTION OF RADIATOR CAP ET-5
COOLING SYSTEM PRESSURE TEST ET-5
CHECKING VACUUM FITTINGS, HOSES, AND CONNECTIONS ET-5
CHECKING ENGINE COMPRESSION ET-5
TESTING RESULT ET-5

ADJUSTING INTAKE AND EXHAUST VALVE CLEARANCE

Valve clearance adjustment cannot be made when the engine is in operation:

1. Loosen pivot locking nut and turn pivot screw until the specified clearance is obtained while engine is cold.

After adjustment, tighten pivot nut securely with special tool, and recheck the clearance.

2. Warm-up engine for at least several minutes and then stop. Measure valve clearance while engine is hot. If clearance is not within specifications, adjust.

VALVE CLEARANCE

Unit: mm (in)

Cold	Intake	0.20 (0.008)
	Exhaust	0.25 (0.010)
Hot	Intake	0.25 (0.010)
	Exhaust	0.30 (0.012)

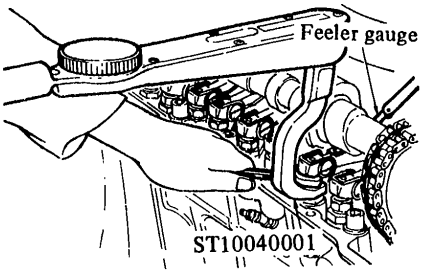

EM338

Fig. ET-2 Adjusting valve clearance

CHECKING AND ADJUSTING DRIVE BELTS

FAN BELT

1. Check for cracks or damage. Replace if necessary.
2. Adjust fan belt tension. It is correct if deflection is 8 to 12 mm (0.315 to 0.472 in) when thumb pressure [10 kg (22 lb)] is applied midway between fan pulley and alternator pulley.

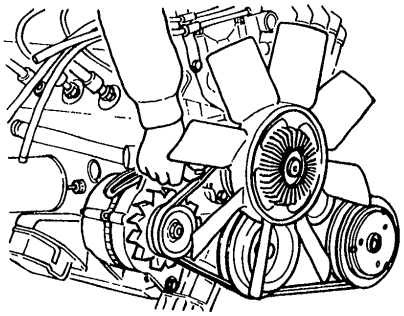

EM612

Fig. ET-3 Fan belt tension

COOLER COMPRESSOR BELT

1. Check cooler compressor belt for crack or damage. Replace if necessary.
2. Adjust cooler compressor belt tension by turning idler pulley bolt in or out.

It is correct if deflection is 8 to 12 mm (0.315 to 0.472 in) when thumb pressure [10 kg (22 lb)] is applied midway between crank pulley and cooler compressor pulley.

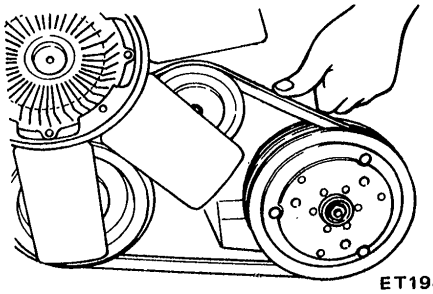

ET194

Fig. ET-4 Cooler compressor belt tension

Downloaded from www.Manualslib.com manuals search engine

RETIGHTENING CYLINDER HEAD BOLTS, MANIFOLD NUTS AND THROTTLE CHAMBER SECURING BOLTS

Tightening torque:
- Cylinder head bolts
  - 1st turn:
  - 4.0 kg-m (29 ft-lb)
  - 2nd turn:
  - 6.0 kg-m (43 ft-lb)
  - 3rd turn:
  - 7.0 to 8.5 kg-m
  - (51 to 61 ft-lb)
- Manifold nuts
  - 8 mm (0.315 in) dia. bolt
  - 1.4 to 1.8 kg-m
  - (10.1 to 13.0 ft-lb)
  - 10 mm (0.394 in) dia. bolt
  - 3.5 to 5.0 kg-m
  - (25 to 36 ft-lb)
- Throttle chamber securing bolts
  - 1.5 to 2.0 kg-m
  - (11 to 14 ft-lb)

Note: There are two types of 10M intake manifold securing bolts as shown in Figure ET-5. When installing, do not confuse them.

"L" dimensions; Long bolt ( ): 40 mm (1.575 in)
Short bolt ( ): 32 mm (1.260 in)

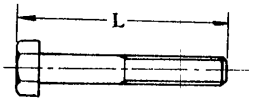

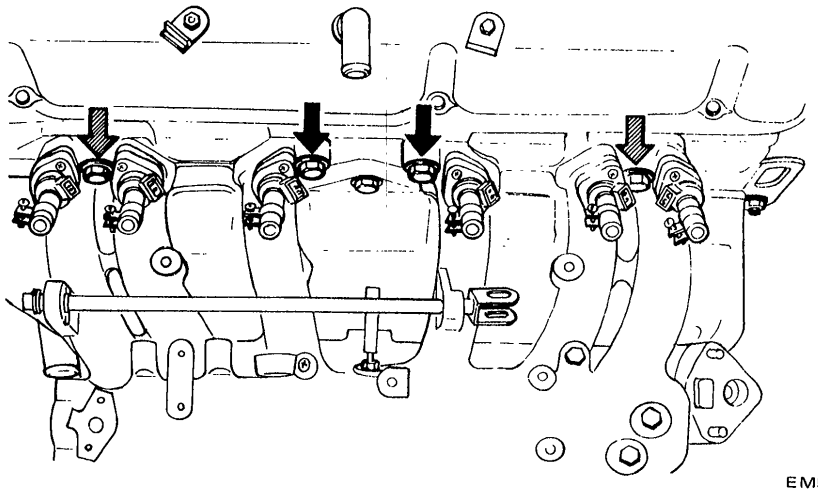

Fig. ET-5 Intake manifold securing bolt

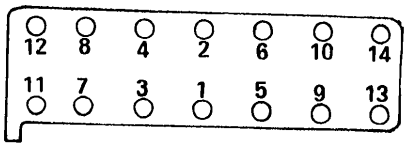

Fig. ET-6 Tightening sequence of cylinder head bolts

CHANGING ENGINE OIL

1. Check if oil is diluted with water or gasoline. Drain and refill oil if necessary.

Notes:

a. **A milky oil indicates the presence of cooling water. Isolate the cause and take corrective measure.**

b. **An oil with extremely low viscosity indicates dilution with gasoline.**

2. Check oil level. If below the specified level, raise it up to the H level.

Engine oil capacity
(including oil filter):
- Maximum (H level)
  - 4.7 ℓ (5 US qt, 4 1/8 Imp qt)
- Minimum (L level)
  - 3.7 ℓ (3 7/8 US qt, 3 1/4 Imp qt)

REPLACING OIL FILTER

Oil filter is of a cartridge type, and can be removed with Oil Filter Wrench ST19320000.

1. Check for oil leaks past gasketed flange. If any leakage is found, retighten just enough to stop leakage. If retightening is no longer effective, replace filter as an assembly.
2. When installing oil filter, tighten by hand.

Note: Do not overtighten oil filter, lest leakage should occur.

CHANGING ENGINE COOLANT

PERMANENT ANTI-FREEZE COOLANT

The permanent anti-freeze coolant is an ethylene glycol base product containing chemical inhibitors to protect the cooling system from rusting and corrosion. The anti-freeze does not contain any glycerine or ethyl alcohol. It will not evaporate or boil away and can be used with either high or low temperature thermostats. It flows freely, transfers heat efficiently, and will not clog the passages in the cooling system. The anti-freeze must not be mixed with other product. This coolant can be used throughout the seasons of the year.

Whenever coolant is changed, the cooling system must be flushed and refilled with a new coolant. Check the coolant level.

See instructions attached to the anti-freeze container for mixing ratio of anti-freeze to water.

CHECKING COOLING SYSTEM HOSES AND CONNECTIONS

Check hoses and fittings for loose connections or deterioration. Retighten or replace if necessary.

INSPECTION OF RADIATOR CAP

Apply reference pressure [0.9 kg/cm^2 (13 psi)] to radiator cap by means of a cap tester to see if it is

Downloaded from www.Manualslib.com manuals search engine

satisfactory. Replace cap assembly if necessary.

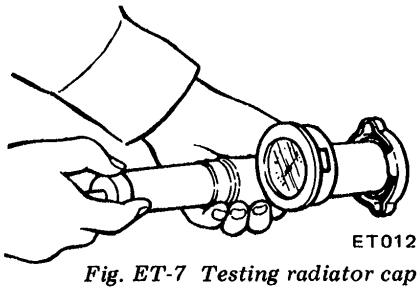

Fig. ET-7 Testing radiator cap

COOLING SYSTEM PRESSURE TEST

With radiator cap removed, apply reference pressure [1.6 kg/cm^2 (23 psi)] to the cooling system by means of a tester to detect any leakage.

Water capacity (including heater and reservoir tank):

Manual transmission model:
10.3 liter (10⅞ U.S. qt, 9⅛ Imp. qt)

Automatic transmission model:
10.1 liter (10⅝ U.S. qt, 8⅞ Imp. qt)

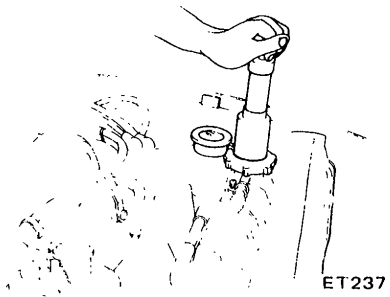

Fig. ET-8 Cooling system pressure test

CHECKING VACUUM FITTINGS, HOSES, AND CONNECTIONS

Check fittings and hoses for loose connections or damage. Retighten loose parts or replace parts that are not suitable for further use.

CHECKING ENGINE COMPRESSION

To check cylinder compression, it is essential to remove all spark plugs. The purpose of this test is to determine whether there is excessive leakage past piston rings, head gasket, etc. To test, engine should be heated to the operating temperature and throttle valve opened.

Cylinder compression in cylinders should not be less than 80% of the highest reading. Different compression in two or more cylinder usually indicates an improperly seated valve or broken piston ring.

Low compression in cylinders can result from worn piston rings. This trouble may usually be accompanied by excessive fuel consumption.

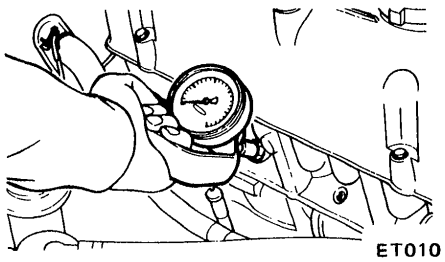

Fig. ET-9 Testing compression pressure

TESTING RESULT

If cylinder compression in one or more cylinders is low, pour a small quantity of engine oil into cylinders through the spark plug holes and retest compression.

1. If adding oil helps the compression pressure, the chances are that piston rings are worn or damaged.
2. If pressure stays low, the likelihood is that valve is sticking or seating improperly.
3. If cylinder compression in any two adjacent cylinders is low, and if adding oil does not help the compression, there is leakage past the gasketed surface.

Oil and water in combustion chambers can result from this trouble.

Compression pressure kg/cm^2 (psi)/at rpm:
11.5 to 12.5 (164 to 178)/ 300 to 400

IGNITION AND FUEL SYSTEM

CONTENTS

CHECKING BATTERY ET-6
CHECKING AND ADJUSTING IGNITION TIMING ET-6
CHECKING AND REPLACING SPARK PLUGS ET-6
CHECKING OPERATING PARTS OF DISTRIBUTOR AND IGNITION WIRING ET-7
AIR GAP ET-7
DISTRIBUTOR ET-7
HIGH TENSION CABLE ET-7
CHECKING DISTRIBUTOR CAP ROTOR ET-7
CHECKING ENGINE IDLE RPM AND MIXTURE RATIO ET-7
DASH POT ADJUSTMENT (Manual transmission models only) ET-9
CHECKING FUEL LINES (HOSES, PIPING CONNECTIONS, ETC.) ET-9
REPLACING FUEL FILTER ET-9
CHECKING AIR REGULATOR HOSES ET-9
REPLACING AIR CLEANER ELEMENT ET-9
CHECKING CABLE HARNESS AND CONNECTORS ET-9

Downloaded from www.Manualslib.com manuals search engine

CHECKING BATTERY

1. Remove six vent plugs and check electrolyte level in each battery cell. If necessary, pour distilled water.

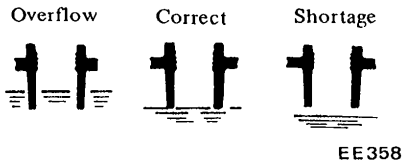

Fig. ET-10 Checking electrolyte level

2. Measure the specific gravity of battery electrolyte.

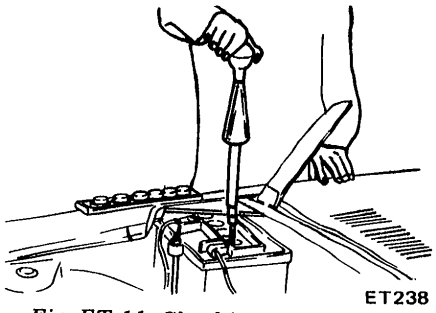

Fig. ET-11 Checking specific gravity of battery electrolyte

	Permissible value	Full charge value [at 20°C (68°F)]
Frigid climates	Over 1.22	1.28
Tropical climates	Over 1.18	1.23
Other climates	Over 1.20	1.26

Clean top of battery and terminals with a solution of baking soda and water. Rinse off and dry with compressed air. Top of battery must be clean to prevent current leakage between terminals and from positive terminal to hold-down clamp.

In addition to current leakage, prolonged accumulation of acid and dirt on top of battery may cause blistering of the material covering connector straps and corrosion of straps. After tightening terminals, coat them with petrolatum (vaseline) to protect them from corrosion.

Cautions:

a. If it becomes necessary to start the engine with a booster battery and jumper cables, the booster battery voltage must not exceed 12 volts, or the control unit of the fuel injection system and other electric components will be damaged.

b. If the battery cables are disconnected, they should be tightly clamped to the battery terminals to secure a good contact.

CHECKING AND ADJUSTING IGNITION TIMING

1. Check spark plugs for condition.

2. Thoroughly remove dirt and dust from crank pulley at timing mark location and front cover at timing indicator.

3. Warm up engine sufficiently.

4. Connect engine tachometer and timing light in their proper positions.

5. Adjust idling speed to 800 rpm by turning idle speed adjusting screw on manual transmission models.

On automatic transmission models, adjust it to about 700 rpm with selector lever in "D" position.

Caution: When selector lever is shifted to "D" position, apply parking brake and block both front and rear wheels with chocks.

6. Check ignition timing with a timing light to ensure that it is adjusted to specifications indicated in the chart below.

	Ignition timing
Manual transmission	10° B.T.D.C./800 rpm
Automatic transmission (in "D" position)	10° B.T.D.C./700 rpm

If necessary, adjust it as follows.

(1) Loosen set screw until distributor can be moved by hand.

(2) Adjust ignition timing to specifications.

(3) Lock distributor set screw, and make sure that timing is correct.

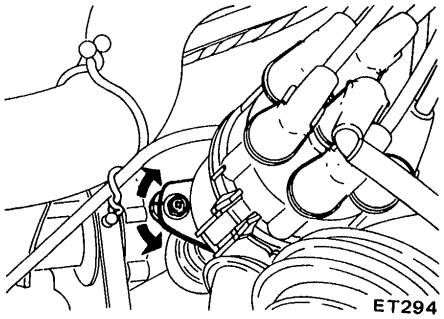

Fig. ET-12 Adjusting ignition timing

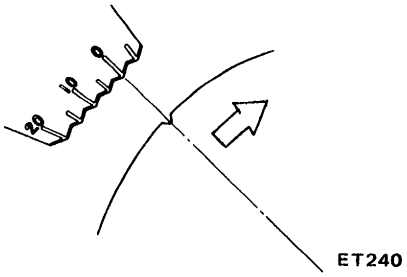

Fig. ET-13 Ignition timing indicator

CHECKING AND REPLACING SPARK PLUGS

1. Remove and clean plugs in a sand blast cleaner. Inspect each spark plug. Make sure that they are of the specified heat range.

2. Inspect insulator for cracks or chips. Check both center and ground electrodes.

3. If they are excessively worn, replace with new spark plugs.

Downloaded from www.Manualslib.com manuals search engine

4. Spark plug gap:
   For U.S.A.
   1.0 to 1.1 mm
   (0.039 to 0.043 in)
   For Canada
   0.7 to 0.8 mm
   (0.028 to 0.031 in)
   Tightening torque:
   1.5 to 2.0 kg-m
   (11 to 14 ft-lb)

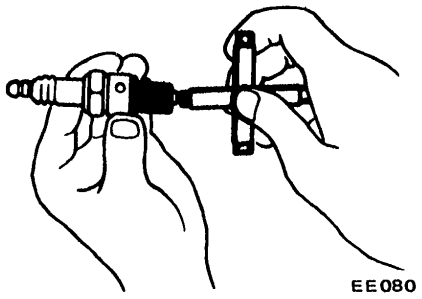

Fig. ET-14 Checking spark plug gap

CHECKING OPERATING PARTS OF DISTRIBUTOR AND IGNITION WIRING

AIR GAP

Standard air gap is 0.2 to 0.4 mm (0.008 to 0.016 in).

If the gap is off the standard, adjustment should be made by loosening pick-up coil screws. Gap gauge is required for adjustment.

Air gap:
0.2 to 0.4 mm
(0.008 to 0.016 in)

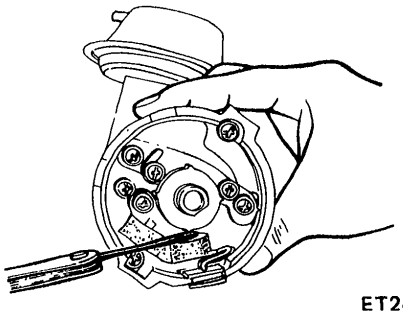

Fig. ET-15 Measuring air gap

Remove rubber cap from tip end of rotor shaft. Check grease and, if necessary, add. To remove pick-up coil, remove two pick-up coil assembly securing screws and core screws clamping primary lead wire. Install new pick-up coil assembly in reverse sequence of removal.

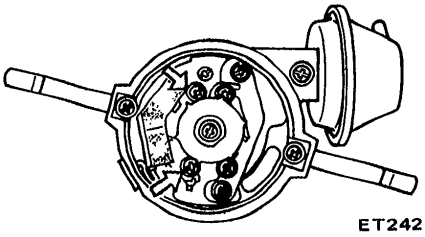

Fig. ET-16 Removing pick-up coil

DISTRIBUTOR

Check the centrifugal mechanical parts for loose connection, sticking of spring, or excessive or local wear.

If found to be in good condition, then check advance characteristics using a distributor tester. For test procedure and reference data, refer to Distributor in Section EE.

If vacuum advance unit fails to operate properly, check the following items and correct as necessary:

1. Check vacuum inlet for leakage at connection. If necessary, retighten or replace.
2. Check vacuum diaphragm for air leak.

If leak is found, replace diaphragm.

3. Inspect breaker plate for smooth operation.

If plate does not move smoothly, this may be caused by sticky steel balls or pivot. Apply grease to steel balls or, if necessary, replace breaker plate as an assembly. Refer to Section EE, Distributor, as regards vacuum advance characteristics.

HIGH TENSION CABLE

Use an ohmmeter to check resistance on high tension cables. Disconnect cables from spark plugs and remove distributor together with high tension cables. Do not remove cables from cap. Connect the ohmmeter between cable terminal on the spark plug side and the corresponding electrode inside cap.

If the resistance is more than 30,000 ohms, remove cable from cap and check the cable resistance only. If resistance is still more than 30,000 ohms, replace cable assembly.

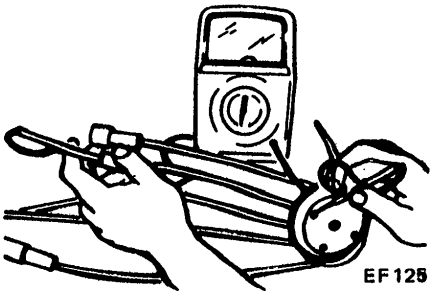

Fig. ET-17 Checking high tension cable

CHECKING DISTRIBUTOR CAP ROTOR

Note: This operation is to be performed while checking distributor points. Inspect distributor cap for cracks and flash over.

External surfaces of all parts of secondary system must be cleaned to reduce possibility of voltage loss. All wires should be removed from distributor cap and coil so that terminals can be inspected and cleaned. Burned or corroded terminals indicate that wires are not fully seated, which causes arcing between end of wire and terminal. When replacing wires at terminal, be sure they are fully seated before pushing rubber nipple down over tower. Check distributor rotor for damage, and distributor cap for cracks.

Apply grease through the top of distributor shaft.

CHECKING ENGINE IDLE RPM AND MIXTURE RATIO

Cautions:

a. **On automatic transmission models, checks should be performed with the lever shifted to the "D" position. Be sure to engage parking brake and to lock both front and rear wheels with wheel chocks.**
b. **Depress brake pedal while accelerating the engine to prevent forward surge of car.**
c. **After idle adjustment has been made, shift the lever to the "N" or "P" position and remove wheel chocks.**

Downloaded from www.Manualslib.com manuals search engine

Idle mixture inspection requires the use of a CO-meter. Before attempting to check idle mixture ratio, it is essential to have the meter thoroughly warmed up and calibrated.

1. Warm-up engine until water temperature gauge registers operating temperature.
2. Race engine (1,500 to 2,000 rpm) two or three times under no load, then idle engine for one minute.
3. Check idle speed. If necessary, adjust it to specifications.

Engine speed:
Manual transmission:
800 rpm
Automatic transmission
(in "D" position):
700 rpm

4. Check ignition timing. If necessary, adjust it to specifications.

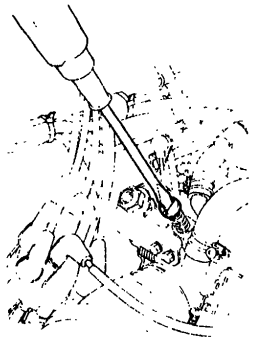

ET295

Fig. ET-18 Adjusting idling speed

	Ignition timing
Manual transmission	10° B.T.D.C./800 rpm
Automatic transmission (in "D" position)	10° B.T.D.C./700 rpm

5. Check CO percentage with CO meter. Specified CO percentage is as follows:

Idle mixture ratio (CO percentage)
California models:
CO = 0.5% max.
Non-California models:
CO = 1.0% max.

Note: When checking idle mixture ratio (CO percentage), make sure that the following parts are in good order.

- **Battery**
- **Ignition system**
- **Engine oil and coolant levels**
- **Fuses**
- **E.F.I. unit**
- **E.F.I. harness connectors**
- **Hoses**
- **Oil filler cap and oil level gauge**
- **Valve clearance, engine compression**

If specified idle CO percentage is not obtained, adjust as follows:

6. Idle Mixture Setting Procedure (Idle mixture ratio adjustment)

Note: The idle mixture ratio of electronic fuel injection car is set so lean that it is not appropriate to use CO% as an indicator of mixture ratio. Therefore, in order to adjust idle mixture ratio with conventional CO analyzer, a certain amount of enrichment must be temporarily given to idle mixture setting to make it richer.
To enrich the idle mixture, the full load enrichment is forced to function by making a short circuit in that enrichment circuit. The actual procedure to be followed is illustrated below.

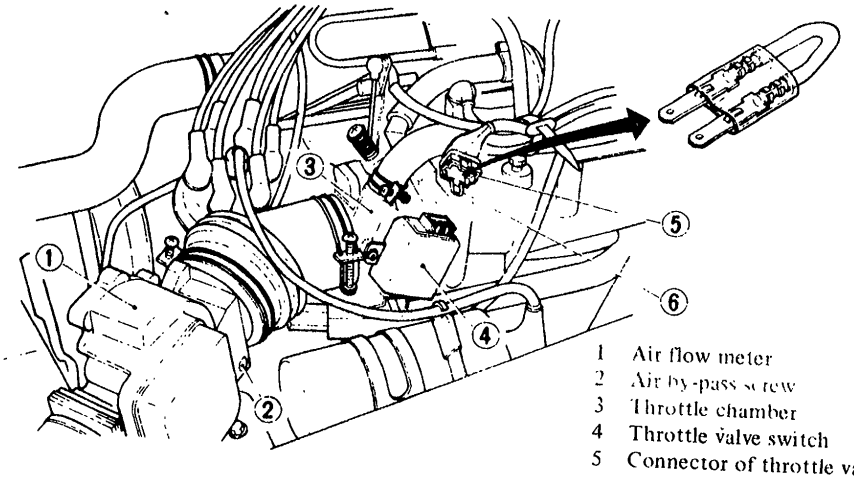

1 Air flow meter
2 Air by-pass screw
3 Throttle chamber
4 Throttle valve switch
5 Connector of throttle valve switch harness
6 Leading wire

ET362

Fig. ET-19 Idle mixture ratio adjustment

(1) Remove connector of throttle valve switch harness.
(2) Insert a leading wire to the terminal of connectors ③ and ⑱

Note: When adjusting idle CO percentage at altitudes 750 m (2,500 ft) or more for California models, be sure to disconnect altitude switch connector. Refer to pages EF-15 and EF-64.

(3) Adjust idle CO to the altitude specifications by turning air by-pass screw.

Notes:

a. **Remove plastic blind plug from air by-pass screw of air flow meter.**
b. **Turn air by-pass screw clockwise to obtain rich mixture; turn it counterclockwise to obtain lean mixture.**

Downloaded from www.Manualslib.com manuals search engine

Idle CO specifications: (full enrichment)

Altitude	Idle CO % (full enrichment)
0 to 600 m (0 to 2,000 ft)	3.3%
600 to 1,200 m (2,000 to 4,000 ft)	4.7%
1,200 to 1,800 m (4,000 to 6,000 ft)	5.7%
Above 1,800 m (6,000 ft)	6.7%

(4) Remove the leading wire and connect the harness back to the throttle valve switch.

Note: After adjusting idle CO percentage for California models, replace altitude switch connector in its original position.

(5) Install a new rubber plug (furnished as a service part) on air flow meter.

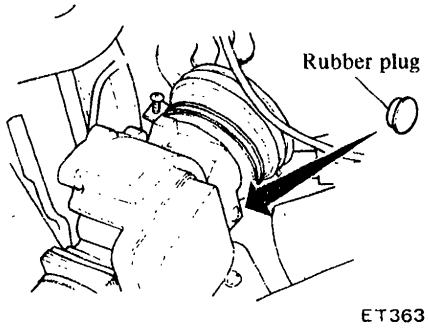

Fig. ET-20 Rubber plug

(6) Check CO percentage if it is within specifications.

Idle mixture ratio (CO percentage):
California models:
CO = 0.5% max.
Non-California models:
CO = 1.0% max.

DASHPOT ADJUSTMENT (Manual transmission models only)

Make sure that the clearance between idle setscrew (preset at the factory) and throttle lever is 1.9 mm (0.0748 in). Use shim(s) or suitable gauge to measure the clearance. A clearance of 1.9 mm (0.0748 in) between these two points corresponds to 2,000 engine rpm under no load.

Check that the dashpot rod end closely touches throttle lever when dashpot rod is fully extended (or when no back pressure is present at diaphragm). If necessary, loosen nut (shown by an arrow) and turn dashpot assembly until correct adjustment is made.

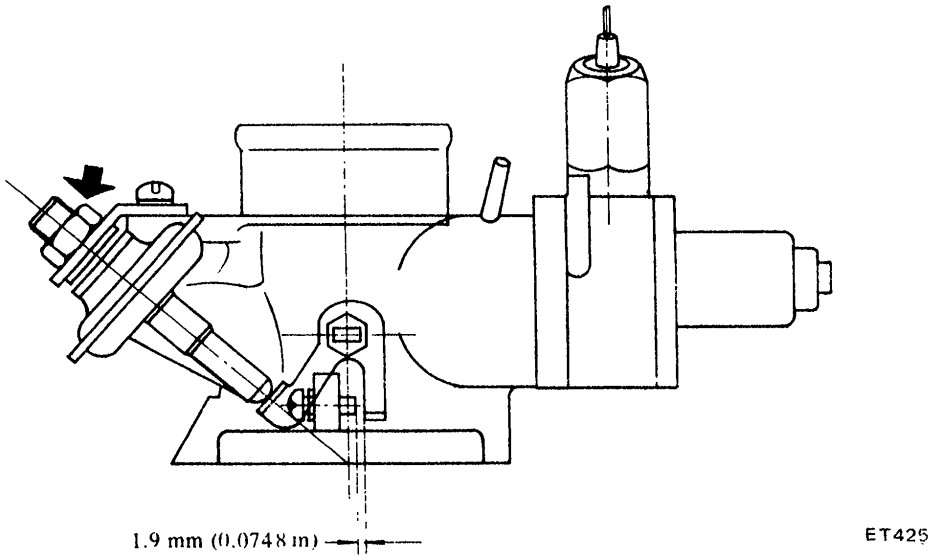

Fig. ET-21 Dashpot adjustment

CHECKING FUEL LINES (HOSES, PIPING CONNECTIONS, ETC.)

Check fuel hoses for leakage, loose connections, cracks or deterioration.

Retighten loose connections and replace any damaged or deformed parts. Replace any rubber fuel hose whose inner surface is deformed, scratched or chafed.

REPLACING FUEL FILTER

The fuel filter is designed especially for use with the electronic fuel injection system. It should be replaced as an assembly every 40,000 km (25,000 miles).

For removal and installation procedures, refer to section "Engine Fuel".

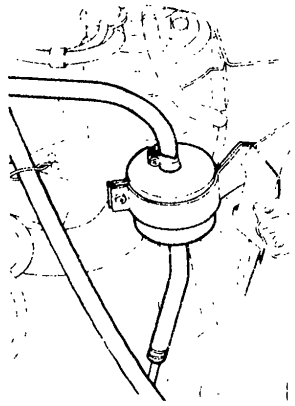

Fig. ET-22 Fuel filter

CHECKING AIR REGULATOR HOSES

Check air regulator hoses for leakage, cracks and deterioration.

Retighten loose connections and replace any parts if they are damaged or deformed.

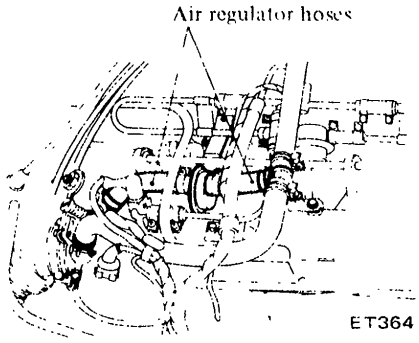

Fig. ET-23 Air regulator hoses

Downloaded from www.Manualslib.com manuals search engine

REPLACING AIR CLEANER ELEMENT

The viscous paper type air cleaner element does not require any cleaning operation between renewals.

Brushing or blasting operation can cause a clogged element. This in turn reduces air intake efficiency, resulting in poor engine performance.

For replacement intervals of air cleaner element, refer to "Maintenance Schedule".

CHECKING CABLE HARNESS AND CONNECTORS

Check harness connectors for correct insertion and harness connector terminals for deformation or rust.

Replace faulty parts.

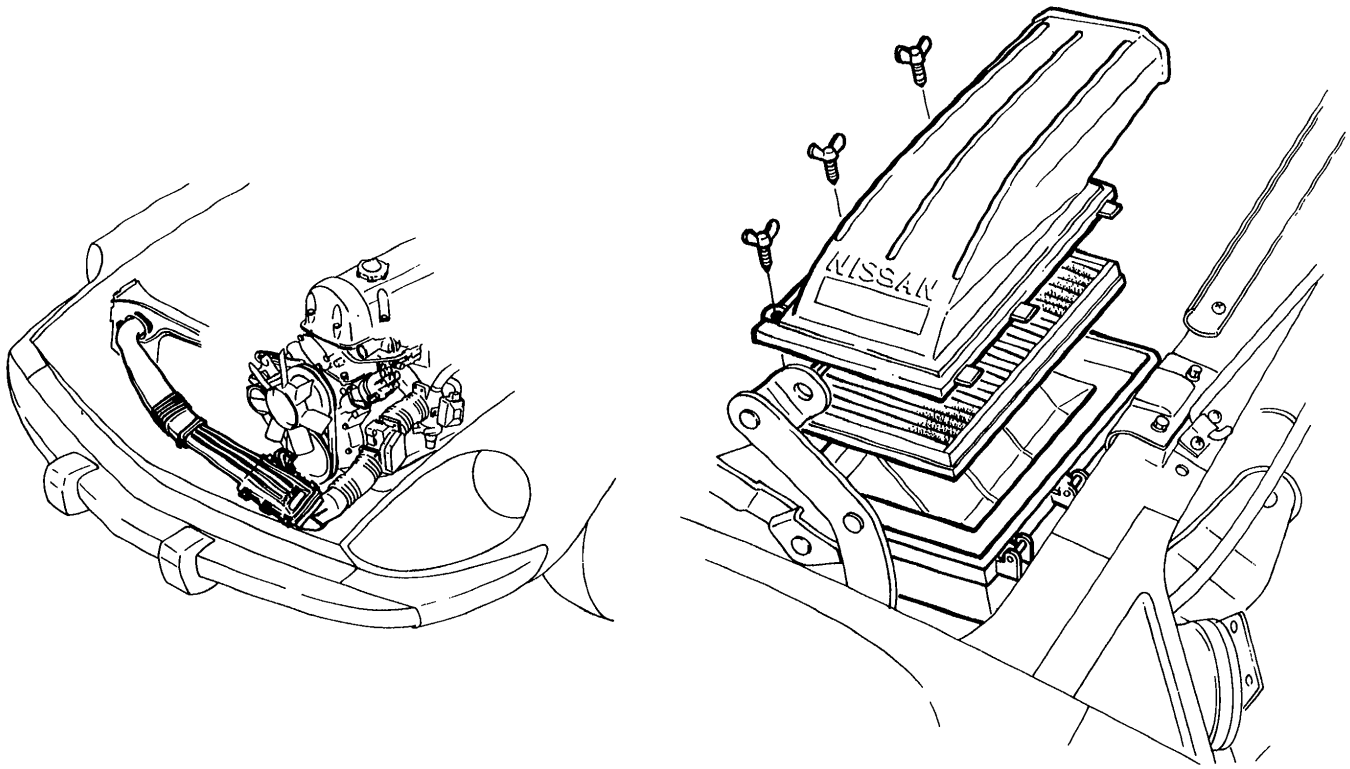

EF647

Fig. ET-24 Air cleaner element

EMISSION CONTROL SYSTEM

CONTENTS

CHECKING CRANKCASE EMISSION CONTROL SYSTEM. ET-11
P.C.V. VALVE. ET-11
VENTILATION HOSE. ET-11
CHECKING EVAPORATIVE EMISSION CONTROL SYSTEM. ET-11
FUEL TANK, VAPOR LIQUID SEPARATOR AND VAPOR VENT LINE. . . . ET-11
CARBON CANISTER PURGE CONTROL VALVE ET-12
CARBON CANISTER FILTER. ET-12
FUEL TANK VACUUM RELIEF VALVE . . . ET-12

Downloaded from www.Manualslib.com manuals search engine

CHECKING CRANKCASE EMISSION CONTROL SYSTEM

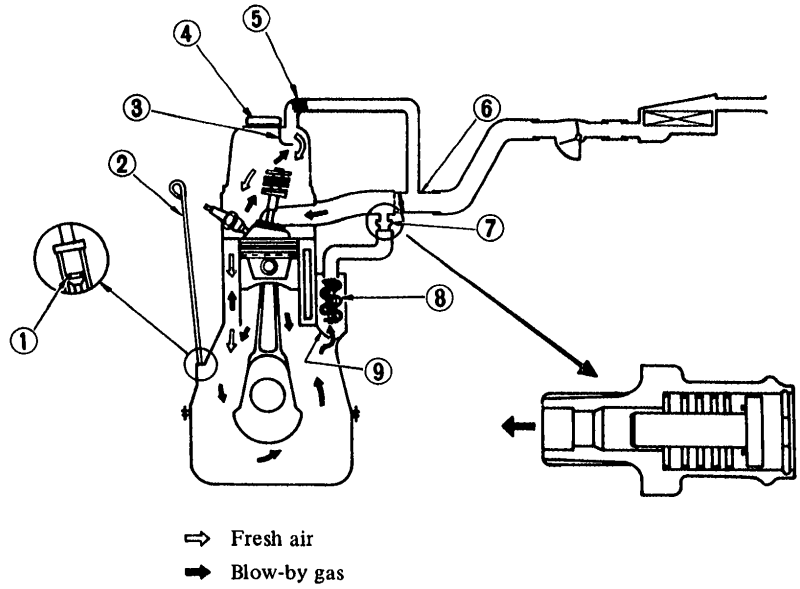

Fig. ET-25 Crankcase emission control system

P.C.V. VALVE

Check P.C.V. valve in accordance with the following method.

With engine running at idle, remove the ventilator hose from P.C.V. valve. If the valve is working, a hissing noise will be heard as air passes through the valve and a strong vacuum should be felt immediately when a finger is placed over valve inlet.

Replace P.C.V. valve in accordance with the maintenance schedule.

VENTILATION HOSE

1. Check hoses and hose connections for leaks.
2. Disconnect all hoses and clean with compressed air.

If any hose cannot be free of obstructions, replace.

Ensure that flame arrester is surely inserted in hose between throttle chamber and rocker cover.

CHECKING EVAPORATIVE EMISSION CONTROL SYSTEM

FUEL TANK, VAPOR LIQUID SEPARATOR AND VAPOR VENT LINE

1. Check all hoses and fuel tank filler cap.
2. Disconnect the vapor vent line connecting carbon canister to vapor-liquid separator.
3. Connect a 3-way connector, a manometer and a cock (or an equivalent 3-way charge cock) to the end of the vent line.
4. Supply fresh air into the vapor vent line through the cock little by little until pressure becomes 368 mmH2O (14.5 inH2O).
5. Shut the cock completely and leave it unattended.
6. After 2.5 minutes, measure the height of the liquid in the manometer.
7. Variation of height should remain with 25 mmH2O (0.98 inH2O).
8. When filler cap does not close completely, the height should drop to zero in a short time.
9. If the height does not drop to zero in a short time when filler cap is removed, it is the cause of a stuffy hose.

Note: In case the vent line is stuffy, the breathing in fuel tank is not thoroughly made, thus causing insufficient delivery of fuel to engine or vapor lock. It must, therefore, be repaired or replaced.

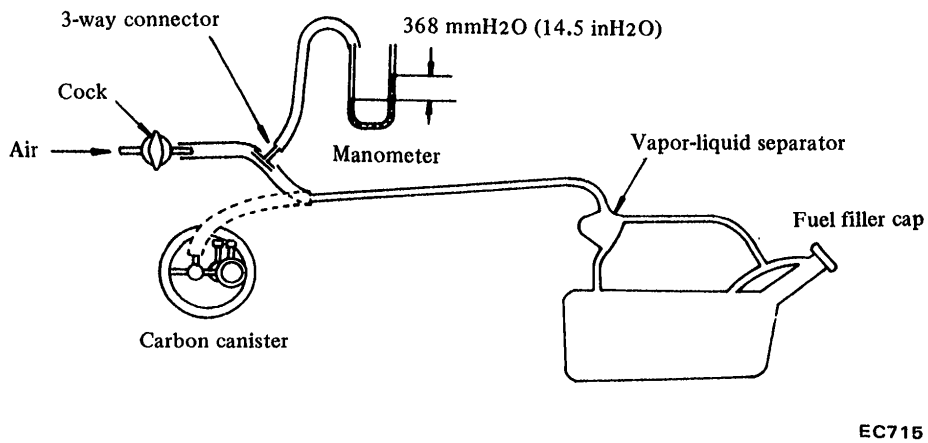

Fig. ET-26 Checking evaporative emission control system

Downloaded from www.Manualslib.com manuals search engine

CARBON CANISTER PURGE CONTROL VALVE

Check for fuel vapor leakage, in the distributor vacuum line, at diaphragm of carbon canister purge control valve.

To check for leakage, proceed as follows:

1. Disconnect rubber hose, in the line, between T-connector and carbon canister at T-connector.
2. Inhale air into the opening of rubber hose running to vacuum hole in carbon canister and ensure that there is no leak.

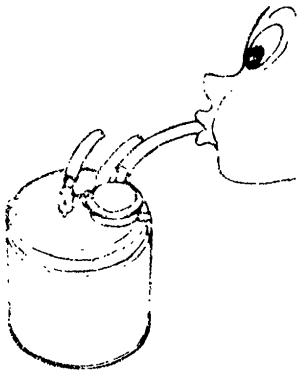

Fig. ET-27 Checking carbon canister purge control valve

3. If there is a leak, remove top cover from purge control valve and check for dislocated or cracked diaphragm. If necessary, replace diaphragm kit (which is made up of a retainer, diaphragm and spring).

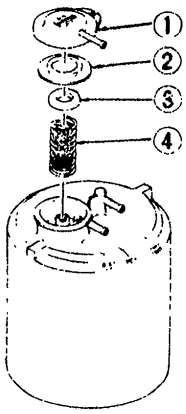

1 Cover
2 Diaphragm
3 Retainer
4 Diaphragm spring

Fig. ET-28 Carbon canister purge control valve

CARBON CANISTER FILTER

Check for a contaminated element. Element can be removed at the bottom of canister installed on car body.

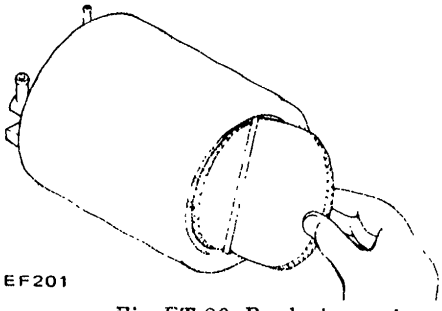

Fig. ET-29 Replacing carbon canister filter

FUEL TANK VACUUM RELIEF VALVE

Remove fuel filler cap and see that it functions properly.

1. Wipe valve housing clean and place it in your mouth.
2. Inhale air. A slight resistance accompanied by valve indicates that valve is in good mechanical condition. Note also that, by further inhaling air the resistance should disappear with valve clicks.
3. If valve is clogged, or if no resistance is felt, replace cap as an assembly.

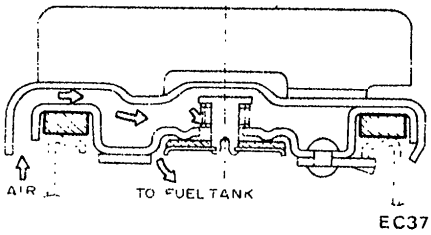

Fig. ET-30 Fuel filler cap

Downloaded from www.Manualslib.com manuals search engine

SERVICE DATA AND SPECIFICATIONS

Ignition timing and idling speed		
Manual transmission	degree/rpm	10° B.T.D.C./800
Automatic transmission (in "D" position)	degree/rpm	10° B.T.D.C./700
Valve clearance		
Cold — Intake	mm (in)	0.20 (0.008)
Cold — Exhaust	mm (in)	0.25 (0.010)
Hot — Intake	mm (in)	0.25 (0.010)
Hot — Exhaust	mm (in)	0.30 (0.012)
Belt tension		
Fan and alternator	mm (in)	8 to 12 (0.315 to 0.472)
Air con compressor	mm (in)	8 to 12 (0.315 to 0.472)
Pressure	kg (lb)	10 (22) is applied
Compression pressure at 300 to 400 rpm		
Standard	kg/cm^2 (psi)	12.5 (178)
Minimum	kg/cm^2 (psi)	11.5 (164)
Radiator cap relief pressure	kg/cm^2 (psi)	0.9 (13)
Cooling system		
Leakage testing pressure	kg/cm^2 (psi)	1.6 (23)
Battery specific gravity at 20°C (68°F)		1.26
Distributor		
Air gap	mm (in)	0.2 to 0.4 (0.008 to 0.016)
Spark plug		
Gap	mm (in)	For U.S.A. 1.0 to 1.1 (0.039 to 0.043) For Canada 0.7 to 0.8 (0.028 to 0.031)
Checking "CO" percentage at idling speed		
California models	%	0.5 max.
Non-California models	%	1.0 max.
Dash pot		
Setting engine speed	rpm	2,000
Tightening torque		
Cylinder head bolts		
1st turn	kg-m (ft-lb)	4.0 (29)
2nd turn	kg-m (ft-lb)	6.0 (43)
3rd turn	kg-m (ft-lb)	7.0 to 8.5 (51 to 61)
Manifold nuts	kg-m (ft-lb)	8 mm (0.315 in) dia. bolt; 1.4 to 1.8 (10.1 to 13.0) 10 mm (0.394 in) dia. bolt; 3.5 to 5.0 (25 to 36)
Throttle chamber securing bolts	kg-m (ft-lb)	1.5 to 2.0 (11 to 14)
Spark plugs	kg-m (ft-lb)	1.5 to 2.0 (11 to 14)

Downloaded from www.Manualslib.com manuals search engine

TROUBLE DIAGNOSES AND CORRECTIONS

Condition	Probable cause	Corrective action
CANNOT CRANK ENGINE OR SLOW CRANKING	Improper grade oil.	Replace with proper grade oil.
	Partially discharged battery.	Charge battery.
	Malfunctioning battery.	Replace.
	Loose fan belt.	Adjust.
	Trouble in charge system.	Inspect.
	Wiring connection trouble in starting circuit.	Correct.
	Malfunctioning ignition switch.	Repair or replace.
	Malfunctioning starter motor.	Repair or replace.

(Trouble-shooting procedure on starting circuit)

Switch on the starting motor with head lights "ON".

When head lights go off or dim considerably,

a. Check battery.
b. Check connection and cable.
c. Check starter motor.

When head lights stay bright,

a. Check wiring connection between battery and starter motor.
b Check ignition switch.
c. Check starter motor.

ENGINE WILL CRANK NORMALLY BUT WILL NOT START

In this case, the following trouble causes may exist, but in many cases ignition system or fuel system is in trouble.

Ignition system in trouble
Fuel system in trouble
Valve mechanism does not work properly
Low compression

(Trouble-shooting procedure)

Check spark plug firstly by following procedure.
Disconnect high tension cable from one spark plug and hold it about 10 mm (0.39 in) from the engine metal part and crank the engine.

Good spark occurs.

a. Check spark plug.
b. Check ignition timing.
c. Check fuel system.
d. Check revolution trigger signal.
e. Check cylinder compression.

No spark occurs. Very high current. Check the current flow in primary circuit.

Inspect primary circuit for short.
Check distributor pick-up coil operation.
Check transistor ignition system.

Downloaded from www.Manualslib.com manuals search engine

Condition	Probable cause	Corrective action
	Low or no current.	Check for loose terminal or disconnection in primary circuit. Check for burned points.
Ignition system in trouble	Malfunctioning distributor pick-up coil.	
	Improper air gap.	Adjust.
	Leak at rotor cap and rotor.	Clean or replace.
	Malfunctioning spark plug.	Clean, adjust plug gap or replace.
	Improper ignition timing.	Adjust.
	Malfunctioning ignition coil.	Replace.
	Disconnection of high tension cable.	Replace.
	Loose connection or disconnection in primary circuit.	Repair or replace.
	Irregular revolution trigger pulse.	Replace transistor ignition control unit.
	Malfunctioning full transistor ignition unit.	Replace.
ENGINE CRANKS NORMALLY BUT WILL NOT START		
Fuel system malfunction	Lack of fuel.	Supply.
	Damaged electronic fuel injection harness or relay.	Replace. } For inspection procedures for electronic fuel injection system components, refer to engine fuel section.
	Malfunctioning fuel pump (Listen to operating sound).	Replace.
	Damaged control unit.	Replace.
	Seized injector (Listen to operating sound).	Replace.
	Seized cold start valve.	Replace.
	Malfunctioning air flow meter.	Replace.
	Damaged water temp. sensor.	Replace.
	Malfunctioning pressure regulator.	Replace.
	Dirty fuel strainer.	Replace.
	Dirty or clogged fuel pipe.	Clean.
	Clogged fuel tank breather pipe.	Repair and clean.
Low compression	Incorrect spark plug tightening or damaged gasket.	Tighten to normal torque or replace gasket.
	Improper grade engine oil or low viscosity.	Replace with proper grade oil.
	Incorrect valve clearance.	Adjust.
	Compression leak from valve seat.	Remove cylinder head and lap valves.
	Sticky valve stem.	Correct or replace valve and valve guide.
	Weak or damaged valve springs.	Replace valve springs.
	Compression leak at cylinder head gasket.	Replace gasket.

Downloaded from www.Manualslib.com manuals search engine

Condition	Probable cause	Corrective action
Low compression	Sticking or defective piston ring.	Replace piston rings.
	Worn piston ring or cylinder.	Overhaul engine.
(Trouble shooting procedure)		
Pour the engine oil from plug hole, and then measure cylinder compression.		
Compression increases.		Trouble in cylinder or piston ring.
Compression does not change.		Compression leaks from valve, cylinder head or head gasket.
UNSTABLE ENGINE IDLING		
Ignition system	Incorrect idle adjustment	Adjust.
	Malfunctioning ignition system (spark plug, high tension cable, air gap, full transistor ignition unit, ignition coil, etc.)	Replace.
	Incorrect basic ignition timing.	Adjust.
Engine mechanical system in trouble	Loose manifold and cylinder head bolts.	Retighten bolts.
	Incorrect valve clearance.	Adjust.
Fuel system malfunction	Clogged air cleaner filter.	Replace element.
	Damaged manifold gaskets.	Replace gasket.
	Intake air leakage at following points: Dipstick Oil filler cap Blow-by hoses Intake air duct–air flow meter to throttle chamber.	Repair or replace.
	Damaged electronic fuel injection harness.	Replace. (For inspection procedures for electronic fuel injection system components, refer to Engine Fuel Section.)
	Seized injector (Listen to operating sound).	Replace.
	Malfunctioning air regulator (During warm-up driving only)	Replace.
	Damaged control unit.	Replace.
	Damaged water and air temp. sensor.	Replace.
	Malfunctioning throttle valve switch.	Repair or replace.
	Damaged altitude switch.	Replace.
	Irregular fuel pressure.	Replace pressure regulator.
Others	Malfunctioning E.G.R. control valve.	Clean or replace.
HIGH ENGINE IDLE SPEED	Dragged accelerator linkage.	Check and correct accelerator linkage.
	Malfunctioning B.C.D.D. system.	If engine idling speed rises above 1,800 to 2,000 rpm, the cause may be a malfunctioning B.C.D.D. system. Check B.C.D.D. system. Repair or replace if necessary.
	Malfunctioning air regulator.	Replace. For inspection procedures for air regulator, refer to engine fuel section.

Downloaded from www.Manualslib.com manuals search engine

Condition	Probable cause	Corrective action
HIGH ENGINE IDLE SPEED	Incorrect adjustment of idle speed adjusting screw.	Correct. For inspection procedures, refer to throttle chamber section.
ENGINE POWER NOT UP TO NORMAL		
Low compression		Previously mentioned.
Ignition system in trouble	Incorrect ignition timing.	Adjust.
	Malfunctioning spark plugs.	Clean, adjust or replace plugs.
	Malfunctioning distributor pick-up coil.	Dress, or replace points. Also check condenser.
ENGINE POWER BELOW NORMAL		
Fuel system malfunction	Throttle valve does not open fully.	Adjust. (For inspection procedures for electronic fuel injection system components, refer to Engine Fuel Section.)
	Damaged electronic fuel injection harness.	Replace.
	Seized injector (Listen to operating sound).	Replace.
	Malfunctioning air flow meter.	Replace.
	Malfunctioning throttle valve switch.	Repair or replace.
	Irregular fuel pressure.	Replace pressure regulator if necessary.
	Clogged fuel pipe.	Replace if necessary.
	Dirty or clogged fuel strainer.	Replace.
	Fuel pump will not work properly.	Replace.
Air intake system malfunction	Clogged air cleaner.	Replace element.
	Air leaking from manifold gasket.	Replace gasket.
	Intake air leakage at following points: Dipstick Oil filler cap Blow-by hoses Intake air duct–air flow meter to throttle chamber etc.	Repair or replace.
Overheating	Insufficient coolant.	Replenish.
	Loose fan belt.	Adjust fan belt.
	Worn or damaged fan belt.	Replace.
	Malfunctioning thermostat.	Replace.
	Malfunctioning water pump.	Replace.
	Clogged or leaky radiator.	Flush, repair or replace.
	Malfunctioning radiator filler cap.	Replace.
	Air in cooling system.	Retighten each part of cooling system.
	Improper engine oil grade.	Replace with proper grade oil.
	Incorrect ignition timing.	Adjust.

Downloaded from www.Manualslib.com manuals search engine

Condition	Probable cause	Corrective action
Overcooling	Malfunctioning thermostat.	Replace.
Others	Improper octane fuel.	Replace with specified octane fuel.
	Improper tire pressure.	Inflate to specified pressure.
	Dragging brake.	Adjust.
	Clutch slipping.	Adjust.
NOISY ENGINE		
Car knocking	Overloaded engine.	Use right gear in driving.
	Carbon knocking.	Disassemble cylinder head and remove carbon.
	Timing knocking.	Adjust ignition timing.
	Fuel knocking.	Use specified octane fuel.
	Preignition (misusing of spark plug).	Use specified spark plug.
Mechanical knocking		
Crankshaft bearing knocking.	This strong dull noise increases when engine is accelerated. To locate the place, cause a misfire on each cylinder. If the noise stops by the misfire, this cylinder generates the noise.	This is caused by worn or damaged bearings, or unevenly worn crankshaft. Renew bearings and adjust or change crankshaft. Check lubrication system.
Connecting rod bearing knocking.	This is a little higher-pitched noise than the crankshaft knocking, and also increases when engine is accelerated. Cause a misfire on each cylinder and if the noise diminishes almost completely, this crankshaft bearing generates the noise.	Same as the case of crankshaft bearings.
Piston and cylinder noise.	When you hear an overlapping metallic noise which increases its magnitude with the revolution of engine and which decreases as engine is warmed up, this noise is caused by piston and cylinder. To locate the place, cause a misfire on each cylinder.	This may cause an abnormal wearing of cylinder and lower compression which in turn will cause a lower out-put power and excessive consumption of oil. Overhaul engine.
Piston pin noise.	This noise is heared at each highest and lowest dead end of piston. To locate the place, cause a misfire on each cylinder.	This may cause a wear on piston pin, or piston pin hole. Renew piston and piston pin assembly.
Water pump noise.	This noise may be caused by worn or damaged bearings, or by the uneven surface of sliding parts.	Replace water pump with a new one.
Others.	An improper adjustment of valve clearance.	Adjust.
	Noise of timing chain.	Adjust the tension of chain.
	An excessive end-play on crankshaft.	Disassemble engine and renew main bearing.

Downloaded from www.Manualslib.com manuals search engine

Condition	Probable cause	Corrective action
Others.	**Note: This noise will be heared when clutch is disengaged.**	
	Wear on clutch pilot bushing.	Renew bushing and adjust drive shaft.
	Note: This noise will be heared when clutch is disengaged.	
ABNORMAL COMBUSTION (backfire, after fire run-on etc.)		
Improper ignition timing	Improper ignition timing.	Adjust ignition timing.
	Improper heat range of spark plugs.	Use specified spark plugs.
Fuel stem malfunction	Intake air leakage at following points: Dipstick Oil filler cap Blow-by hoses Intake air duct—air flow meter to throttle chamber etc.	Repair or replace.
	Damaged electronic fuel injection harness.	Replace. } For inspection procedures for electronic fuel injection system components, refer to Engine Fuel Section.
	Damaged control unit.	Replace.
	Malfunctioning air flow meter.	Replace.
	Damaged water temp. sensor.	Replace.
	Damaged altitude switch.	Replace.
Defective cylinder head, etc.	Improperly adjusted valve clearance.	Adjust.
	Excess carbon in combustion chamber.	Remove head and get rid of carbon.
	Damaged valve spring (backfire, after fire).	Replace it with a new one.
Others		Check for loose vacuum hoses. Replace if necessary.
	Malfunctioning E.G.R. control valve.	Replace.
EXCESSIVE OIL CONSUMPTION		
Oil leakage	Loose oil drain plug.	Tighten it.
	Loose or damaged oil pan gasket.	Renew gasket or tighten it.
	Loose or damaged chain cover gasket.	Renew gasket or tighten it.
	Damaged oil seal in front and rear of crankshaft.	Renew oil seal.
	Loose or damaged locker cover gasket.	Renew gasket or tighten it (but not too much).
	Improper tightening of oil filter.	Renew gasket and tighten it with the proper torque.
	Loose or damaged oil pressure switch.	Renew oil pressure switch or tighten it.

Downloaded from www.Manualslib.com manuals search engine

Condition	Probable cause	Corrective action
Excessive oil consumption	Cylinder and piston wear.	Overhaul cylinder and renew piston.
	Improper location of piston ring or reversely assembled piston ring.	Remount piston rings.
	Damaged piston rings.	Renew rings.
	Worn piston ring groove and ring.	Repair or renew piston and cylinder.
	Fatigue of valve oil seal lip.	Renew piston and piston ring.
	Worn valve stem.	Replace seal lip with a new one.
		Renew valve or guide.
Others	Inadequate quality of engine oil.	Use the designated oil.
	Engine overheat.	Previously mentioned.
POOR FUEL ECONOMY		
Ignition system		
See the explanation of the power decrease		
Others	Exceeding idling revolution.	Adjust it to the designated rpm.
		Repair or tighten the connection of fuel pipes.
Emission control system	Malfunctioning E.G.R. system.	Replace.
Fuel system malfunction	Fuel leakage.	Repair or replace.
	Damaged electronic fuel injection harness.	Replace. (For inspection procedures for electronic fuel injection system components, refer to Engine Fuel Section.)
	Damaged control unit.	Replace.
	Malfunctioning air flow meter.	Replace.
	Damaged air temperature sensor.	Replace.
	Malfunctioning throttle valve switch.	Replace.
	Fuel leakage at injector or cold start valve.	Replace damaged part.
	Fuel leakage at rubber fuel hose.	Repair or replace.
	Irregular fuel pressure.	Replace pressure regulator if necessary.
TROUBLE IN OTHER FUNCTIONS		
Decreased oil pressure	Inadequate oil quality.	Use the designated oil.
	Overheat.	Previously mentioned.
	Malfunctioning oil pump regulator valve.	Disassemble oil pump and repair or renew it.
	Functional deterioration of oil pump.	Repair or replace it with a new one.
	Blocked oil filter.	Renew it.

Downloaded from www.Manualslib.com manuals search engine

Condition	Probable cause	Corrective action
Decreased oil pressure	Increased clearance in various sliding parts.	Disassemble and replace the worn parts with new ones.
	Blocked oil strainer.	Clean it.
	Malfunctioning oil gauge pressure switch.	Replace it with a new one.
Excessive wear on the sliding parts	Oil pressure decreases.	Previously mentioned.
	Damaged quality or contamination of oil.	Exchange the oil with proper one and change element.
	Air leakage from air intake duct.	Repair or replace.
	Damaged air cleaner.	Change element.
	Overheat or overcool.	Previously mentioned.
	Improper fuel mixture.	Check the fuel system.
Scuffing of sliding parts	Decrease of oil pressure.	Previously mentioned.
	Insufficient clearances.	Readjust to the designated clearances.
	Overheat.	Previously mentioned.
	Improper fuel mixture.	Check the fuel system.

Downloaded from www.Manualslib.com manuals search engine

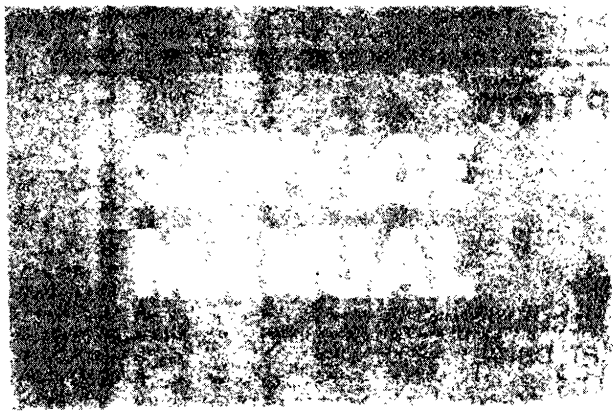

DATSUN 280Z
MODEL S30 SERIES

SECTION EM

EM

ENGINE MECHANICAL

GENERAL DESCRIPTION ..... EM- 2
ENGINE DISASSEMBLY ..... EM- 3
INSPECTION AND REPAIR ..... EM- 7
ENGINE ASSEMBLY EM-21
SERVICE DATA AND SPECIFICATIONS EM-27
TROUBLE DIAGNOSES AND CORRECTIONS EM-33
SPECIAL SERVICE TOOLS EM-35

NISSAN

NISSAN MOTOR CO., LTD.
TOKYO, JAPAN

Downloaded from www.ManualsLib.com manuals search engine

GENERAL DESCRIPTION

CONTENTS

L28 ENGINE EM-2
CYLINDER BLOCK EM-2
CRANKSHAFT EM-2
PISTONS AND CONNECTING RODS EM-2
CYLINDER HEAD EM-2
CAMSHAFT EM-2
VALVE MECHANISM EM-3
CAMSHAFT DRIVE EM-3
MANIFOLDS EM-3

L28 ENGINE

The L28 engine is a 2,753 cc (168.0 cu in) in-line, overhead camshaft, six-cylinder engine. It has an 86 mm (3.39 in) bore and 79 mm (3.11 in) stroke with a compression ratio of 8.3 : 1. The engine features a wedge-shaped combustion chamber, aluminum head, and a fully balanced 7-bearing crankshaft to turn out smooth, dependable power.

The cylinder block is cast in a single unit, and features deep skirting.

CYLINDER BLOCK

The cylinder block, a monoblock specially cast structure, employs the seven bearing-support system for quietness and higher durability. Of a highly rigid deep-skirt design, it requires no complicated tappet chamber because of the OHC engine system, and is thus light-weight.

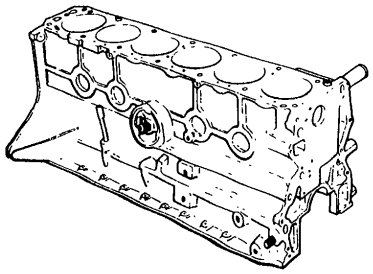

EM271

Fig. EM-1 Cylinder block

CRANKSHAFT

The crankshaft is made of a special forged steel. Provided with a high capacity balance weight, it is characterized by quietness and high durability at high speed operation. Main bearings are lubricated from oil holes which intersect the main oil gallery which runs parallel to the cylinder bores.

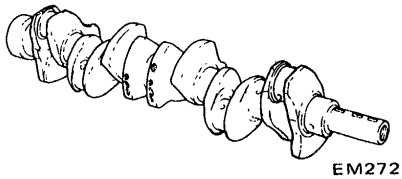

EM272

Fig. EM-2 Crankshaft

PISTONS AND CONNECTING RODS

New-design light-weight pistons are cast aluminum slipper-skirt type with invar-strut. The piston pin, a special hollow steel type is connected to the piston in a full floating fit, and is press-fitted onto the connecting rod.

Connecting rods are made of forged steel. Full pressure lubrication is directed to the connecting rods by drilled oil passages from the adjacent main bearing journal. Oil holes at the connecting rod journals are located so that oil is supplied to give maximum lubrication at full bearing load.

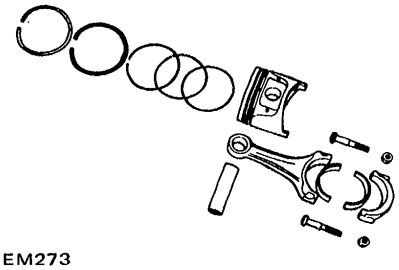

EM273

Fig. EM-3 Piston and connecting rod

CYLINDER HEAD

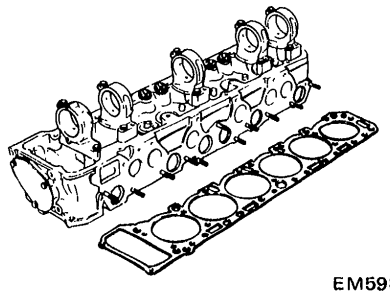

EM598

Fig. EM-4 Cylinder head

The cylinder head is made of a light, strong aluminum alloy with good cooling efficiency. A brass cast valve seat is used on the intake valve, while a heat resistant steel valve seat is installed on the exhaust valve.

These parts are all hot press-fitted.

CAMSHAFT

The camshaft is made of specially cast iron and is located inside the rocker cover. In this engine five aluminum alloy brackets support the camshaft.

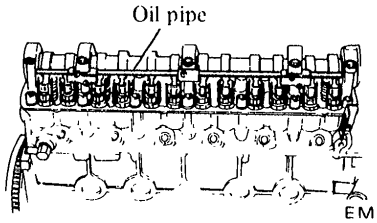

EM427

Fig. EM-5 Camshaft

Camshaft bearings are lubricated from oil holes which intersect the main oil gallery of the cylinder head.

There is no oil gallery in the camshaft and to lubricate the cam pad surface of the rocker arm an oil pipe with many oil holes is provided along the camshaft. This oil pipe is

Downloaded from www.Manualslib.com manuals search engine

supported by No. 2, 3 and 4 camshaft brackets; lubrication is supplied to the pipe from No. 2 and 4 brackets.

VALVE MECHANISM

The valve system has a pivot type rocker arm that is activated directly by the cam mechanism; this has made its moving parts considerably lighter and provides ideal high-speed performance.

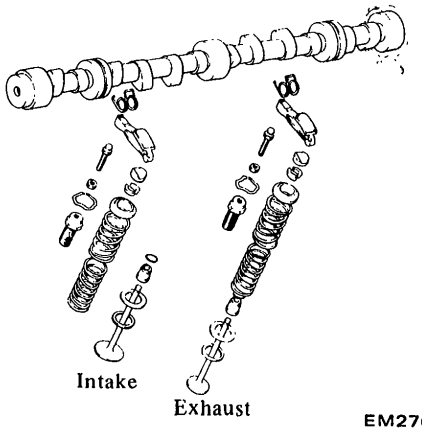

Fig. EM-6 Valve mechanism

CAMSHAFT DRIVE

The camshaft is driven by a double row roller chain driven by crankshaft. The tension of the chain is controlled by a chain tensioner which is operated by spring and oil pressure.

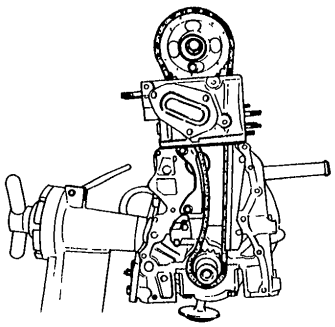

Fig. EM-7 Camshaft driving chain

MANIFOLDS

The intake manifold is cast aluminum.

The exhaust manifold is a dual exhaust system designed to prevent a decline in output due to exhaust interference and to increase output through inertia scavenging action. It is connected to exhaust pipes by flanges, which completely eliminate possibility of exhaust leaks.

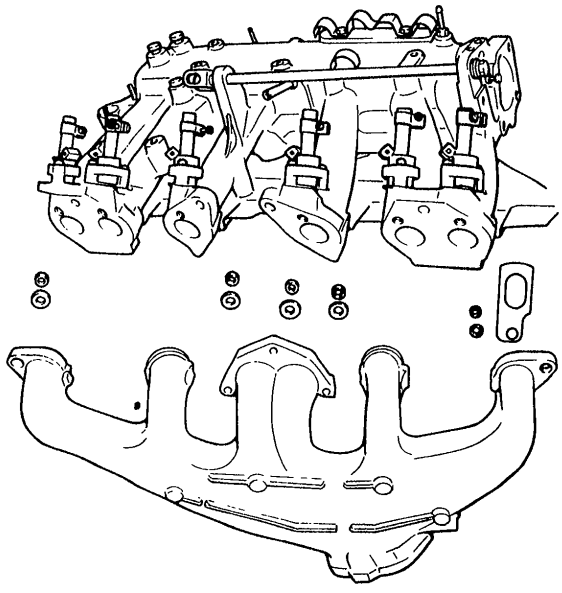

Fig. EM-8 Exhaust and intake manifold

ENGINE DISASSEMBLY

CONTENTS

PRELIMINARY CLEANING AND INSPECTING EM-3
DISASSEMBLY EM-4
PISTON AND CONNECTING ROD EM-6
CYLINDER HEAD EM-6

PRELIMINARY CLEANING AND INSPECTING

Before disassembling engine, note the following:

1. Fuel, oil or water may leak past cylinder head and block. Prior to disassembling, check cylinder head, front chain cover, oil pan and oil filter gaskets and crankshaft and water pump seals for signs of leakage past their gasketed surfaces.
2. Check fuel hoses for deterioration, cracks or leakage of fuel past their jointed or connected surfaces.
3. Remove alternator, distributor and starter, and plug up distributor hole to prevent entry of foreign matter.
4. Wipe dust and mud off engine.
5. Inspect block, rocker cover, front chain cover, oil pan and all other outer parts for visual damage and broken or missing parts such as bolts and nuts.
6. Test all pipings and electrical circuits for discontinuity or broken or damaged insulation.

Downloaded from www.Manualslib.com manuals search engine

DISASSEMBLY

To remove engine from car, refer to related topic under "Engine Removal and Installation" in Chassis and Body Service Manual, Section ER.

1. Remove transmission from engine.
2. Thoroughly drain engine oil and coolant by removing drain plugs.
3. Place engine assembly on engine stand.
(1) Remove fan and fan pulley.
(2) Remove engine mounting R.H.
(3) Remove oil filter using Oil Filter Wrench ST19320000.
(4) Remove oil pressure switch.
(5) Install engine attachment to cylinder block using bolt holes securing alternator bracket and engine mounting.
(6) Set engine on stand.

Engine Attachment ST05340001
Engine Stand ST0501S000

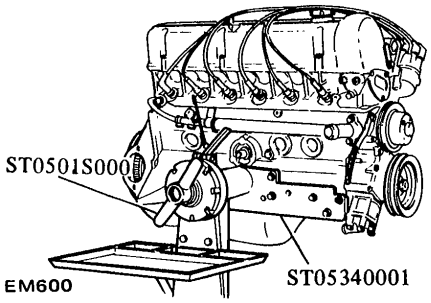

Fig. EM-9 Engine on engine stand

4. Remove oil level gauge.
5. Remove clutch assembly.
6. Remove high tension wires.
7. Remove spark plugs.
8. Remove distributor.
9. Remove air regulator ①, 3-way connector-to-rocker cover hose ②, throttle chamber-to-3-way connector hose ③, air regulator-to-connector hose ④ and 3-way connector-to-air regulator hose ⑤ as an assembly.

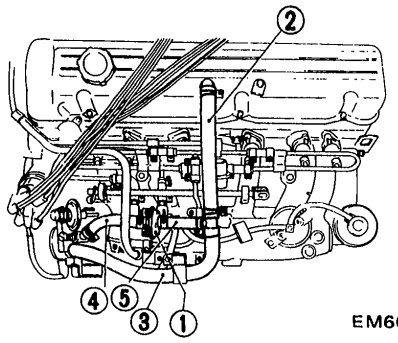

Fig. EM-10 Removing air regulator

10. Remove cold start valve ① and fuel pipe ② as an assembly.

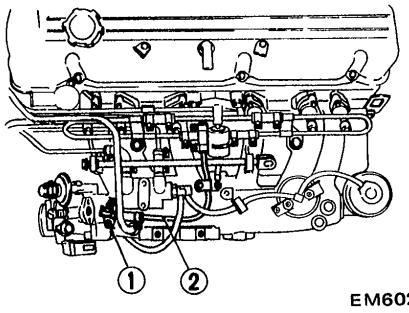

Fig. EM-11 Removing cold start valve

11. Remove B.P.T. valve control tube ① from intake manifold. Remove E.G.R. heat shield plate ②, E.G.R. control valve ③ and B.P.T. valve ④ and hoses.

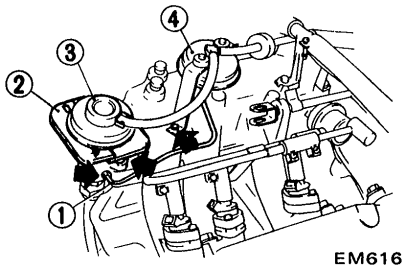

Fig. EM-12 Removing E.G.R. control valve and B.P.T. valve

12. Remove throttle chamber together with dash pot and B.C.D.D.

Note: Remove throttle chamber with hexagon wrench.

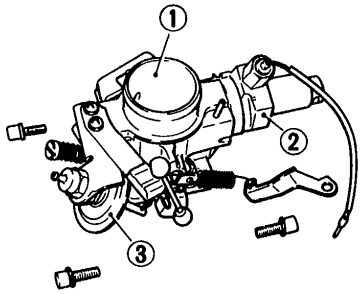

1 Throttle chamber
2 B.C.D.D.
3 Dash pot

EM551

Fig. EM-13 Removing throttle chamber

13. Remove fuel return hose, fuel feed hose, vacuum signal hose, canister purge hose, pressure regulator and front engine slinger.

Notes:
a. Unfasten clip securing fuel inlet hose to injector.
b. Do not twist, bend or pull fuel inlet hose when removing.

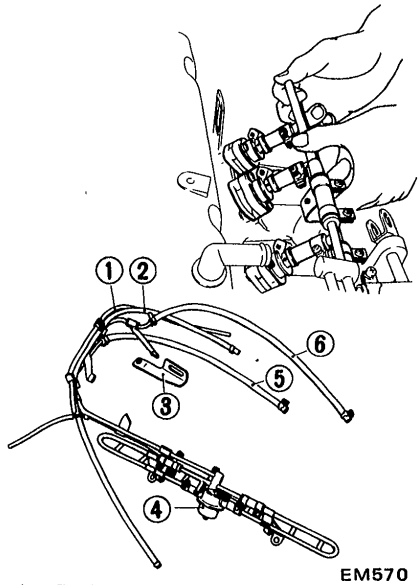

1 Canister control vacuum tube
2 Canister purge hose
3 Front engine slinger
4 Pressure regulator
5 Fuel feed hose
6 Fuel return hose

Fig. EM-14 Removing fuel hose

14. Remove water hose.
15. Remove thermostat housing, thermotime switch, thermal transmitter, and water temperature sensor as an assembly.

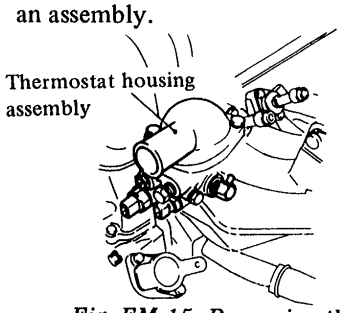

Fig. EM-15 Removing thermostat housing

16. Remove P.C.V. valve hose, sub heat shield plate and E.G.R. tube.

1 P.C.V. valve to connector hose
2 Sub heat shield plate
3 E.G.R. tube

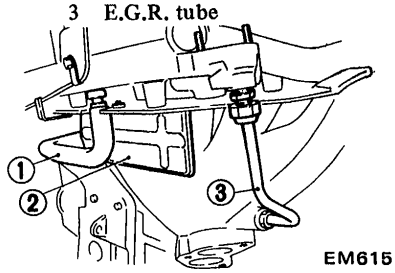

Fig. EM-16 Removing hose and sub heat shield plate

Downloaded from www.Manualslib.com manuals search engine

17. Remove intake manifold and heat shield plate as an assembly.
18. Remove exhaust manifold and rear engine slinger.
19. Loosen tension adjust bolt of idler pulley and remove compressor drive belt.
20. Remove two bolts fastening air conditioning compressor on lower side.

Then remove two bolts fastening compressor on upper side. While doing this, hold compressor by hand to prevent it from falling.

21. Remove idler pulley and air conditioning compressor mounting bracket.

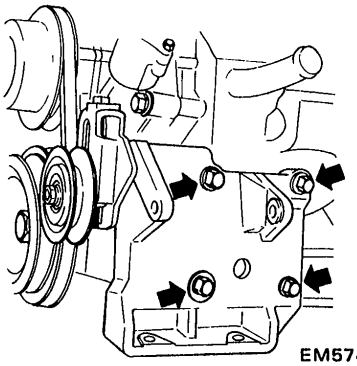

Fig. EM-17 Removing idler pulley and compressor mounting bracket

22. Remove crank pulley using Puller Crank Pulley ST16540000.

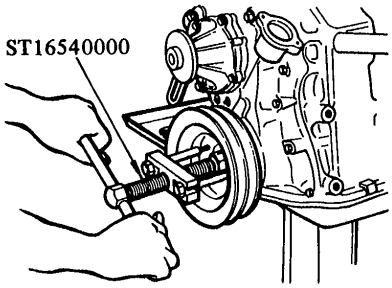

Fig. EM-18 Removing crank pulley

23. Remove water pump.
24. Remove camshaft sprocket using Chain Stopper ST17420001.

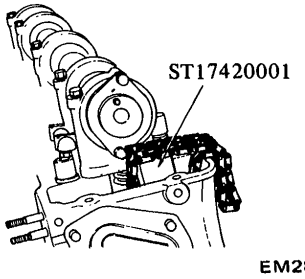

Fig. EM-19 Removing camshaft sprocket

25. Remove oil pipe.
26. Remove cylinder head assembly.

Use Cylinder Head Bolt Wrench ST10120000 to remove cylinder head bolts. Loosen bolts from ① to ⑭ as shown in Figure EM-20.

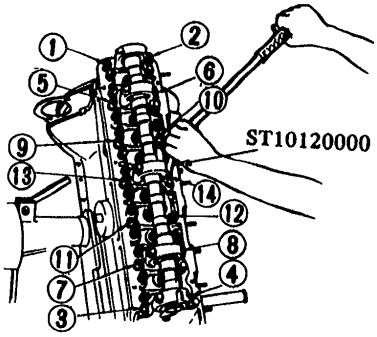

Fig. EM-20 Cylinder head bolt loosening sequence

Note: For convenience in replacing cylinder head, Chain Stopper ST17420001 is provided to support timing chain during the service operation. If this tool is used, timing marks on crankshaft sprocket and timing chain will remain aligned, thus eliminating the problem of re-aligning timing marks.

27. Invert engine.
28. Remove oil pan and oil strainer.
29. Remove oil pump and its drive spindle.
30. Remove front cover.

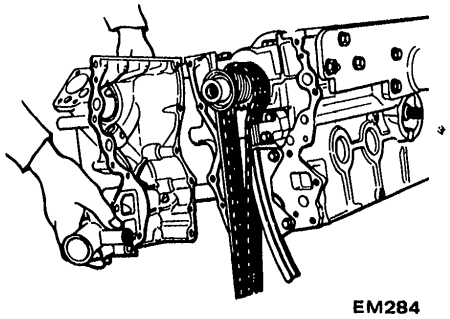

Fig. EM-21 Removing front cover

31. Remove chain tensioner and chain guides.

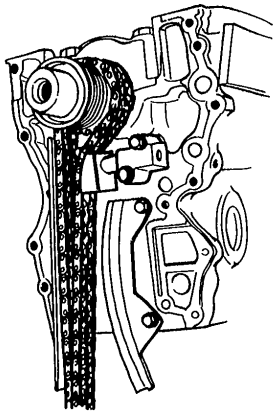

Fig. EM-22 Removing chain tensioner and timing chain

32. Remove timing chain.
33. Remove oil thrower, crankshaft worm gear and chain drive sprocket.

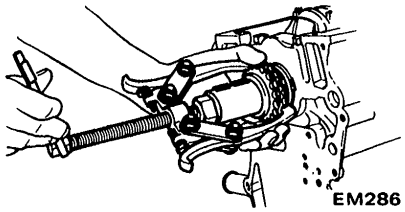

Fig. EM-23 Removing chain drive sprocket

34. Remove piston and connecting rod assembly. Extract connecting rod bearings and keep them in order.

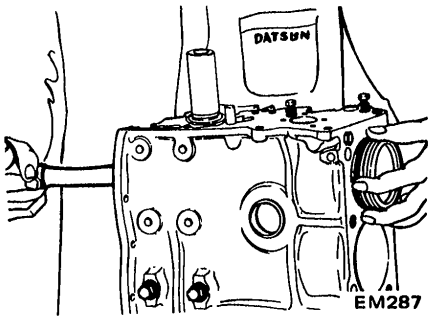

Fig. EM-24 Removing piston and connecting rod assembly

35. Remove flywheel and end plate. Be careful not to drop it.

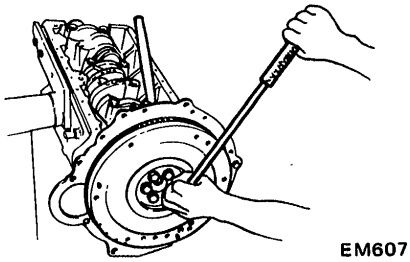

Fig. EM-25 Removing flywheel

Downloaded from www.Manualslib.com manuals search engine

36. Remove main bearing caps.

Use Crankshaft Main Bearing Cap Puller KV101041S0 to remove center and rear main bearing caps. Keep them in order.

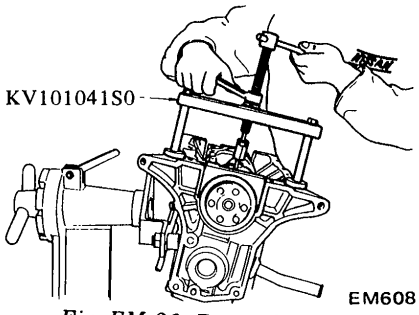

Fig. EM-26 Removing rear main bearing cap

37. Remove rear oil seal.

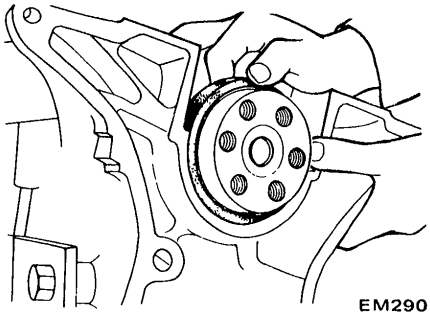

Fig. EM-27 Removing rear oil seal

38. Remove crankshaft.

39. Remove baffle plate and cylinder block net.

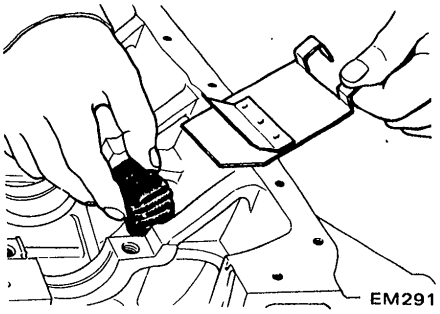

Fig. EM-28 Removing baffle plate and net

PISTON AND CONNECTING ROD

1. Remove piston rings with a ring remover.

Note: Avoid damaging piston rings by spreading excessively; excessive spreading makes them unfit for further service as a result of breakage or weakened tension.

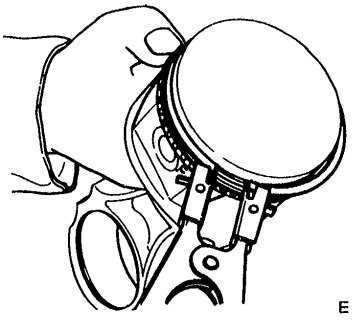

Fig. EM-29 Removing piston ring

2. Press out piston pin with Piston Pin Press Stand ST13030001.

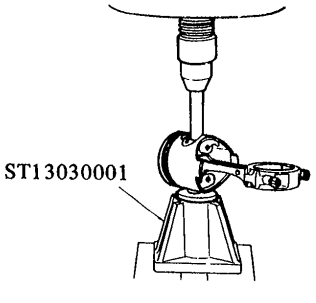

Fig. EM-30 Removing piston pin

3. Keep disassembled parts in order.

CYLINDER HEAD

1. Loosen valve rocker pivot lock nut and remove rocker arm by pressing valve spring down.

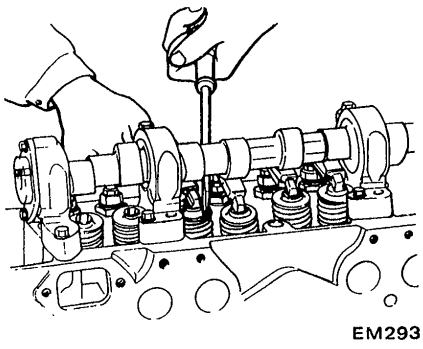

Fig. EM-31 Removing rocker arm

Note: Take care not to lose valve rocker guide.

2. Remove camshaft.

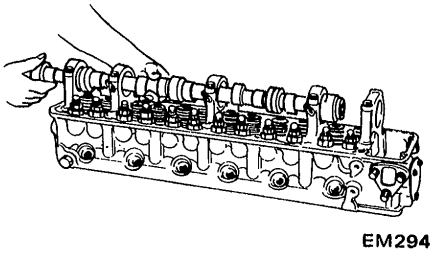

Fig. EM-32 Removing camshaft

Note: Be careful not to damage camshaft bearings and cam lobes.

3. Remove valves using Valve Lifter ST12070000.

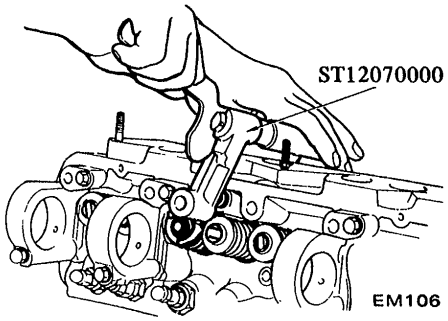

Fig. EM-33 Removing valve

4. Take care not to lose valve spring seat, oil seal, valve collet, and valve rocker guide.

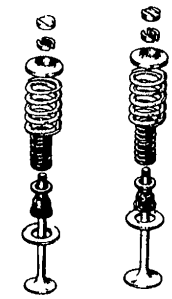

Fig. EM-34 Valve components

Note: Be sure to leave camshaft bearing intact, or else bearing center is liable to come out of alignment.

Downloaded from www.Manualslib.com manuals search engine

INSPECTION AND REPAIR

CONTENTS

PREPARATION FOR INSPECTION ..... EM- 7
CYLINDER HEAD AND VALVE ..... EM- 7
CHECKING CYLINDER HEAD MATING FACE ..... EM- 7
VALVE ASSEMBLY ..... EM- 7
VALVE SPRING ..... EM- 8
ROCKER ARM AND VALVE ROCKER PIVOT ..... EM- 9
VALVE GUIDE ..... EM- 9
VALVE SEAT EM-10
CAMSHAFT AND CAMSHAFT BEARING EM-11
CAMSHAFT BEARING CLEARANCE EM-11
VALVE TIMING EM-11
CAMSHAFT ALIGNMENT EM-12
CYLINDER BLOCK EM-12
HOW TO MEASURE CYLINDER BORE EM-13
CYLINDER BORING EM-13
PISTONS, PISTON PINS AND PISTON RINGS EM-15
CONNECTING ROD EM-16
CRANKSHAFT EM-16
BUSHING AND BEARING EM-17
MEASUREMENT OF MAIN BEARING CLEARANCE EM-17
MEASUREMENT OF CONNECTING ROD BEARING CLEARANCE EM-17
FITTING BEARINGS EM-18
MISCELLANEOUS COMPONENTS EM-19
CRANKSHAFT SPROCKET, CAMSHAFT SPROCKET EM-19
CHAIN TENSIONER AND CHAIN GUIDE EM-20
FLYWHEEL EM-20
FRONT COVER AND REAR OIL SEAL ... EM-20

PREPARATION FOR INSPECTION

1. Before cleaning, check for signs of water or oil leaks in cylinder block and head.
2. Clean oil and carbon deposits from all parts. They should be free of gaskets or sealant.
3. Clean all oil holes with solvent and dry with compressed air. Make sure that they are not restricted.

CYLINDER HEAD AND VALVE

CHECKING CYLINDER HEAD MATING FACE

Note: Never remove camshaft bearings unless you have a suitable machine for boring camshaft bearing in line. If you once remove camshaft bearings, bearing centers will come out of alignment; reconditioning is very difficult without center borings.

1. Make a visual check for cracks and flaws.
2. Measure the surface of cylinder head (on cylinder block side) for warpage. If it is found to be beyond the limit designated below, regrind the affected surface with a surface grinder.

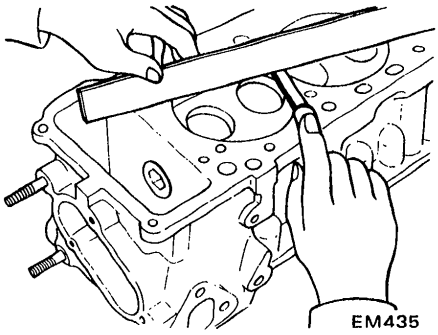

Fig. EM-35 Checking cylinder head surface

Head surface flatness

Standard	Maximum
less than 0.05 mm (0.0020 in)	0.1 mm (0.0039 in)

Surface grinding limit

The grinding limit of cylinder head can be determined from the cylinder block grinding.

Depth of cylinder head grinding is "A".

Depth of cylinder block grinding is "B".

The limit is as follows:

A + B = 0.2 mm (0.0079 in)

VALVE ASSEMBLY

1. Check each intake and exhaust valve for worn, damaged or deformed valve caps or stems. Correct or replace any valve that is faulty.
2. Valve face or valve stem end surface should be refaced with a valve grinder.

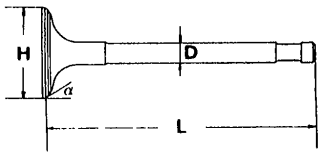

Fig. EM-36 Intake and exhaust valve dimensions

Downloaded from www.Manualslib.com manuals search engine

H	Valve head diameter mm (in)	In.	44.0 to 44.2 (1.732 to 1.740)
		Ex.	35.0 to 35.2 (1.378 to 1.386)
L	Valve length mm (in)	In.	114.9 to 115.2 (4.524 to 4.535)
		Ex.	115.7 to 116.0 (4.555 to 4.567)
D	Valve stem diameter mm (in)	In.	7.965 to 7.980 (0.3136 to 0.3142)
		Ex.	7.945 to 7.960 (0.3128 to 0.3134)
a	Valve seat angle In. & Ex.		45°30′

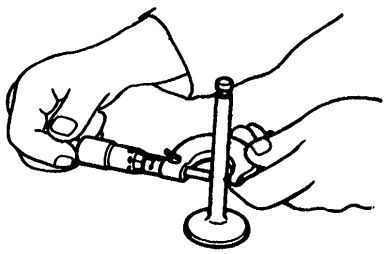

Fig. EM-37 Checking valve stem diameter

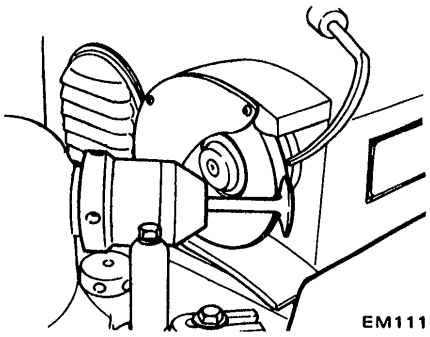

Fig. EM-38 Regrinding valve face

Note: When valve head has been worn down to 0.5 mm (0.0197 in) in thickness, replace the valve.
Grinding allowance for valve stem end surface is 0.5 mm (0.0197 in) or less.

VALVE SPRING

1. Check valve spring for squareness using a steel square and surface plate. If spring is out of square ("S" in Figure EM-39) beyond specified limit, replace.
2. Measure the free length and tension of each spring. If the measured value exceeds specified limit, replace spring.

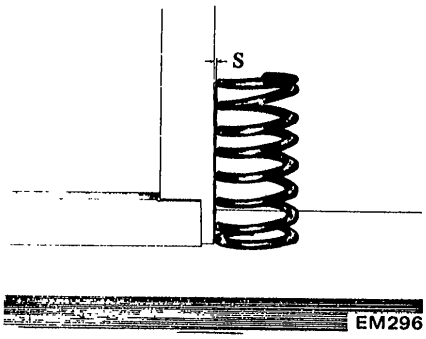

Fig. EM-39 Measuring spring squareness

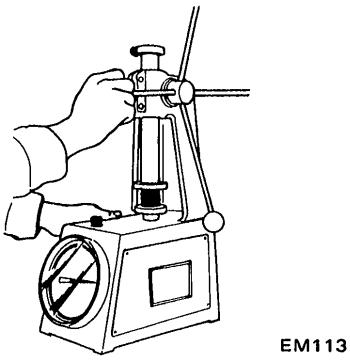

Fig. EM-40 Measuring spring tension

Valve spring specifications

Valve spring free length	mm (in)	
Outer		49.98 (1.968)
Inner		44.85 (1.766)
Valve spring pressured length (valve open)	mm/kg (in/lb)	
Intake Outer		29.5/49.0 (1.161/108)
Intake Inner		24.5/25.5 (0.965/56.2)
Exhaust Outer		29.5/49.0 (1.161/108)
Exhaust Inner		24.5/25.5 (0.965/56.2)
Valve spring assembled height (valve close)	mm/kg (in/lb)	
Outer		40.0/21.3 (1.575/47.0)
Inner		35.0/12.3 (1.378/27.1)
Out of square ("S")	mm (in)	
Outer		2.2 (0.087)
Inner		1.2 (0.047)

Downloaded from www.Manualslib.com manuals search engine

ROCKER ARM AND VALVE ROCKER PIVOT

Check pivot head and cam contact and pivot contact surfaces of rocker arm for damage or wear. If damage is found, replace them. A faulty pivot must be replaced together with its corresponding rocker arm.

VALVE GUIDE

Measure clearance between valve guide and valve stem. If clearance exceeds designated limit, replace worn parts or both valve and valve guide. In this case, it is essential to determine if such a clearance has been caused by a worn or bent valve stem or by a worn valve guide.

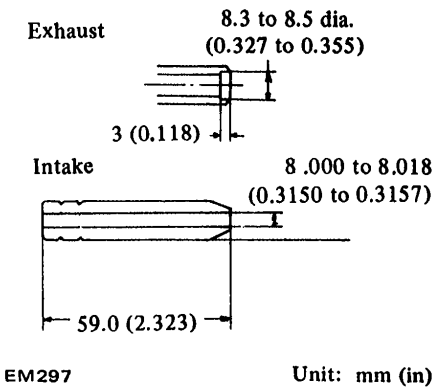

Fig. EM-41 Valve guide dimensions

Determining clearance

Precise measurement of clearance between valve stem and valve guide requires the aid of a micrometer and a telescope hole gauge. Using these gauges, check the diameter of valve stem in three places; top, center and bottom. Insert telescope hole gauge in valve guide bore, measuring at center. Subtract the highest reading of valve stem diameter from valve guide bore to obtain the stem-to-guide clearance.

Valve guide specifications

	Intake valve	Exhaust valve	Wear limit
Valve guide inner diameter mm (in)	8.000 to 8.018 (0.3150 to 0.3157)		———
Valve stem diameter mm (in)	7.965 to 7.980 (0.3136 to 0.3142)	7.945 to 7.960 (0.3128 to 0.3134)	———
Guide to stem clearance mm (in)	0.020 to 0.053 (0.0008 to 0.0021)	0.040 to 0.073 (0.0016 to 0.0029)	0.1

As an emergency expedient, a valve can be pushed into valve guide and moved to the left and right. If its tip deflects about 0.2 mm (0.0079 in) or more, it indicates that the clearance between stem and guide exceeds the maximum limit of 0.1 mm (0.0039 in).

Note: Valve should be moved in parallel with rocker arm. (Generally, a large amount of wear occurs in this direction.)

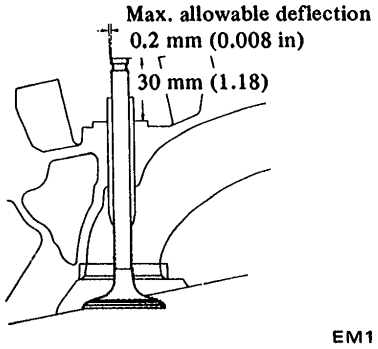

Fig. EM-42 Measuring clearance between valve stem and valve guide

Replacement of valve guide

Valve guide of 0.2 mm (0.0079 in) oversize diameter is available.

1. To remove old guides, use a drift and a press (under a 2-ton pressure) or a hammer.

Drive them out from combustion chamber side toward rocker cover. Heated cylinder head will facilitate the operation.

2. Ream cylinder head side guide hole at room temperature.

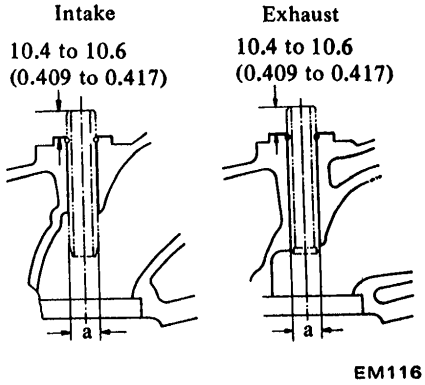

Fig. EM-43 Valve guide hole for service

Service valve guide outer diameter mm (in)	12.223 to 12.234 (0.4812 to 0.4817)
Service valve guide hole inner diameter (a) mm (in)	12.185 to 12.196 (0.4797 to 0.4802)
Interference fit of valve guide hole mm (in)	0.027 to 0.049 (0.0011 to 0.0019)

3. Carefully press new valve guide into head so that it will fit smoothly after heating cylinder head to 150 to 200°C (302 to 392°F).

Downloaded from www.Manualslib.com manuals search engine

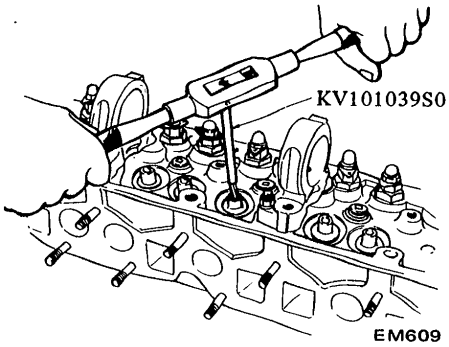

Fig. EM-44 Reaming valve guide

4. Ream bore with valve guide pressed in, using Valve Guide Reamer Set KV101039S0.

Reaming bore:
8.000 to 8.018 mm
(0.3150 to 0.3157 in)

5. Correct valve seat surface with new valve guide as the axis.

Unit: mm (in)

	L28
Intake	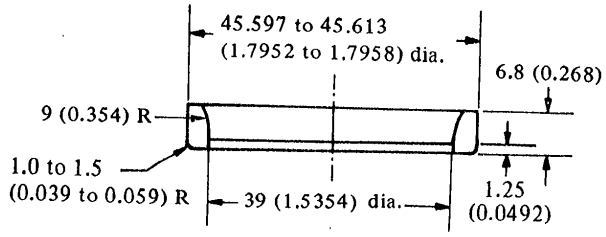
Exhaust	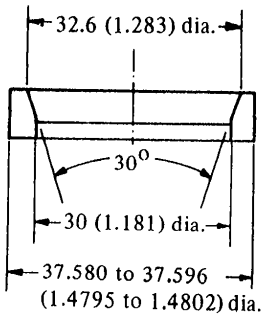

EM300

Fig. EM-46 Service valve seat dimensions

VALVE SEAT

Check valve seat inserts for any evidence of pitting at valve contact surface, and reseat or replace if worn excessively.

Valve seat insert of 0.5 mm (0.020 in) oversize is available for service in this engine.

Refacing valve seat

When width of valve seat is wide or narrow beyond specifications, valve seat should be refaced with cutter or grinding stone.

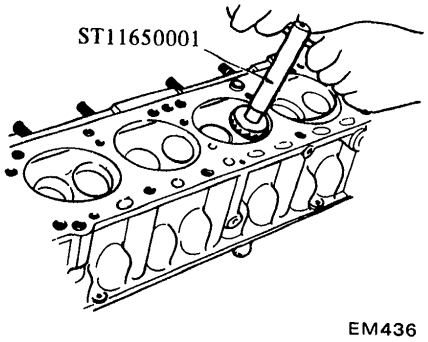

Fig. EM-45 Correcting valve seat

Cylinder head recess diameter

Intake	For standard insert	45.000 to 45.016 (1.7717 to 1.7723)
	For service insert	45.500 to 45.516 (1.7913 to 1.7920)
Exhaust	For standard insert	37.000 to 37.016 (1.4567 to 1.4573)
	For service insert	37.500 to 37.516 (1.4764 to 1.4770)

Interference fit mm (in)	Intake	0.081 to 0.113 (0.0032 to 0.0044)
	Exhaust	0.064 to 0.096 (0.0025 to 0.0038)

Replacing valve seat insert

1. Old insert can be removed by boring it out until it collapses. The machine depth stop should be set so that boring cannot continue beyond the bottom face of the insert recess in cylinder head.
2. Select a suitable valve seat insert and check its outside diameter.

Downloaded from www.Manualslib.com manuals search engine

3. Machine cylinder head recess to the concentric circles in valve guide center so that insert will have the correct fit.
4. Ream the cylinder head recess at room temperature.
5. Heat cylinder head to a temperature of 150 to 200°C (302 to 392°F).
6. Fit insert ensuring that it beds on the bottom face of its recess, and caulk more than 4 points.
7. Valve seats newly fitted should be cut or ground using Cutter Set Valve Seat ST11650001 at the specified dimensions as shown in Figure EM-47.
8. Apply small amount of fine grinding compound to valve contacting face and put valve into guide. Lap valve against its seat until proper valve seating is obtained. Remove valve and then clean valve and valve seat.

Unit: mm (in)

L28			
Intake	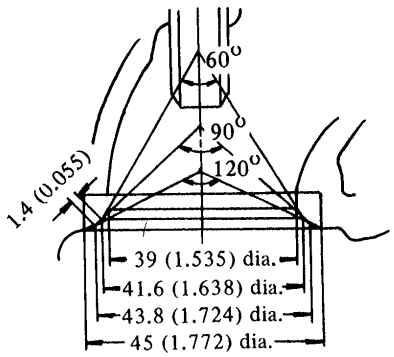	Exhaust	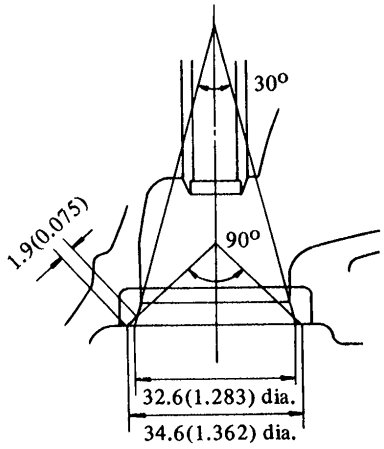

Fig. EM-47 Standard valve seat dimensions

CAMSHAFT AND CAMSHAFT BEARING

CAMSHAFT BEARING CLEARANCE

1. Measure the inside diameter of camshaft bearing with an inside dial gauge and the outside diameter of camshaft journal with a micrometer. If wear is found inside bracket, replace cylinder head assembly.

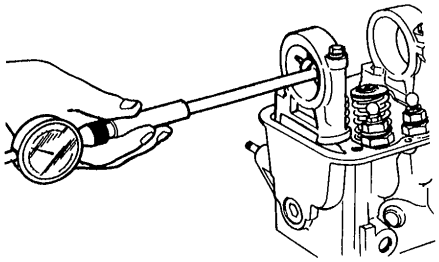

EM119

Fig. EM-48 Checking camshaft bearing

Camshaft journal to bearing clearance

L28	Standard	Wear limit
Oil clearance mm (in)	0.038 to 0.067 (0.0015 to 0.0026)	0.1 (0.0039)
Inner diameter of cam shaft bearing mm (in)	48.000 to 48.016 (1.8898 to 1.8904)	———

VALVE TIMING

This diagram will apply to all cylinders. If any valve is found out of specifications, one possibility is that cam lobe is worn or damaged. This calls for replacement of camshaft.

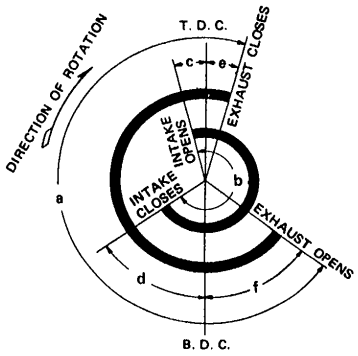

EM120

Fig. EM-49 Valve timing diagram

Downloaded from www.Manualslib.com manuals search engine

Unit: degree

a	b	c	d	e	f
248	248	16	52	14	54

L28	Standard	Bend limit
Camshaft bend mm (in)	0.02 (0.0008)	0.05 (0.0020)

CAMSHAFT ALIGNMENT

1. Check camshaft, camshaft journal and cam surface for bend, wear or damage. If damage is beyond limits, replace affected parts.
2. A bend valve is one-half of the reading obtained when camshaft is turned one full revolution with a dial gauge applied to the center journal.

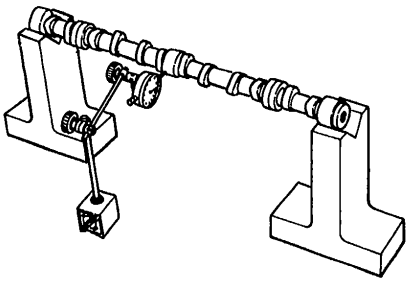

Fig. EM-50 Checking camshaft bend

Camshaft specifications

Standard height of cam mm (in)	
Intake	40.30 to 40.35 (1.5866 to 1.5886)
Exhaust	40.30 to 40.35 (1.5866 to 1.5886)
Wear limit of cam height mm (in)	0.25 (0.0098)
Allowable difference in diameter between max. worn and min. worn parts of camshaft journal mm (in)	0.05 (0.0020)
Maximum tolerance in journal diameter mm (in)	0.1 (0.0039)
Camshaft end play mm (in)	0.08 to 0.38 (0.0031 to 0.0150)

CYLINDER BLOCK

1. Visually check cylinder block for cracks or flaws.
2. Measure top of cylinder block (cylinder head mating face) for warpage. If warpage exceeds limits, correct it.

L28	Standard	Maximum tolerance
Surface flatness mm (in)	less than 0.05 (0.0020)	0.10 (0.0039)

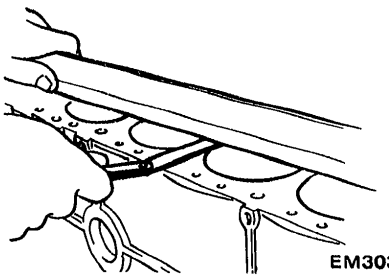

Fig. EM-51 Checking cylinder block surface

Downloaded from www.Manualslib.com manuals search engine

Surface grinding limit;

The grinding limit of cylinder block can be determined by the cylinder head grinding in an engine.

Depth of cylinder head grinding is "A".

Depth of cylinder block grinding is "B".

The limit is as follows:

A + B = 0.20 mm (0.0079 in)

3. Using a bore gauge, measure cylinder bore for out-of-round or taper. If out-of-round or taper is excessive, rebore cylinder walls with a boring machine. Measurement should be taken along bores for taper and around bores for out-of-round. See Figure EM-53.

Out-of-round	X–Y
Taper	A–B

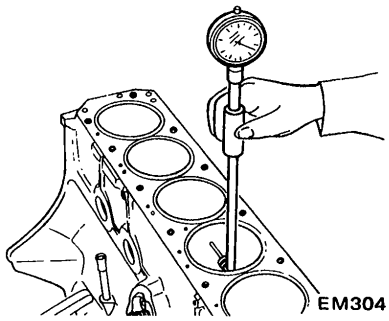

Fig. EM-52 Measuring cylinder bore diameter

4. When wear, taper or out-of-round is minor and within limits, remove step at topmost portion of cylinder using a ridge reamer or other similar tool.

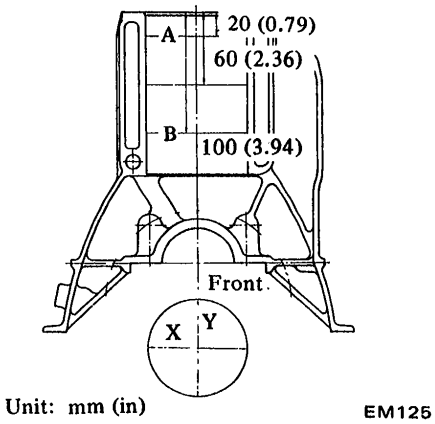

Fig. EM-53 Cylinder bore measuring positions

		Standard	Wear limit
Cylinder bore mm (in)	Inner diameter	86.000 to 86.050 (3.3858 to 3.3878)	0.20 (0.0079)
	Out-of-round	0.015(0.0006)	
	Taper	0.015 (0.0006)	
Difference cylinder bore	mm (in)	0.05 (0.0020)	0.20 (0.0079)

Oversize pistons (with pin) specifications

Piston diameter	mm (in)	
Standard		85.985 to 86.035 (3.3852 to 3.3872)
0.50 (0.0197)	Oversize	86.465 to 86.515 (3.4041 to 3.4061)
1.00 (0.0394)	Oversize	86.965 to 87.015 (3.4238 to 3.4258)

HOW TO MEASURE CYLINDER BORE

A bore gauge is used. Measure cylinder bore at top, middle and bottom positions toward A and B directions as shown in Figure EM-53 and record the measured values.

CYLINDER BORING

1. When any cylinder needs boring, all other cylinders must also be bored at the same time.
2. Determine piston oversize according to amount of wear of cylinder.
3. The size to which cylinders must be honed is determined by adding piston-to-cylinder clearance to the largest piston diameter (at piston skirt in thrust direction).

Downloaded from www.Manualslib.com manuals search engine

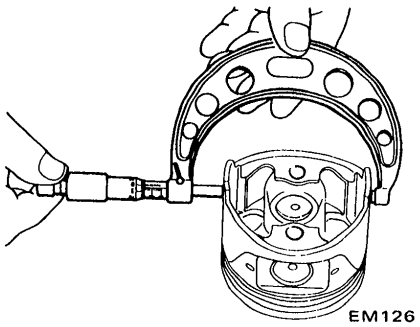

Fig. EM-54 Measuring piston diameter

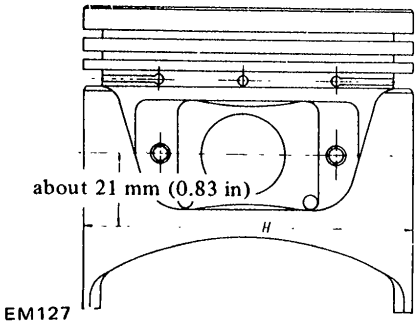

Fig. EM-55 Measuring piston skirt diameter

Rebored size calculation

D = A + B – C = A + [0.005 to 0.025 mm (0.0002 to 0.0010 in)]

where,

D: Honed diameter
A: Skirt diameter as measured
B: Piston-to-wall clearance
C: Machine allowance [0.02 mm (0.0008 in)]

Note: To prevent strain due to cutting heat, bore cylinders in this order: 1-5-3-6-2-4.

4. Do not cut too much out of cylinder bore at a time. Cut only 0.05 mm (0.0020 in) or so at a time.
5. Measurement of just machined cylinder bore requires utmost care since it is expanded by cutting heat.

6. As a final step, cylinders should be honed to size.
7. Measure the finished cylinder bore for out-of-round or tapered part.

8. Measure piston-to-cylinder clearance.

This clearance can be checked easily by using a feeler gauge and a spring balance hooked on feeler gauge, measuring the amount of force required to pull gauge out from between piston and cylinder.

Notes:

a. When measuring clearance, slowly pull feeler gauge straight upward.
b. It is recommended that piston and cylinder be heated to 20°C (68°F).

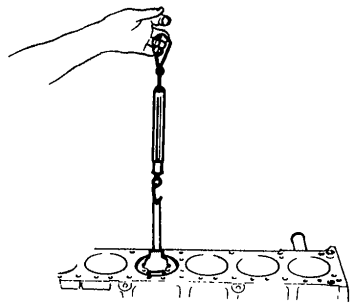

Fig. EM-56 Measuring piston fit in cylinder

		L28
Standard clearance	mm (in)	0.025 to 0.045 (0.0010 to 0.0018)
Feeler gauge	mm (in)	0.04 (0.0016)
Extracting force	kg (lb)	0.2 to 1.5 (0.44 to 3.31)

Note: If cylinder bore is worn beyond limits, use-cylinder liner.
Undersize cylinder liners are available for service.
Interference fit of cylinder liner in cylinder block should be 0.08 to 0.09 mm (0.0031 to 0.0035 in).

Cylinder liner for service

Unit: mm (in)

	L28	
	Outside diameter	Inner diameter
4.0 (0.1575) Undersize	90.00 to 90.05 (3.5433 to 3.5453)	85.50 to 85.60 (3.3661 to 3.3701)
4.5 (0.1772) Undersize	90.50 to 90.55 (3.5630 to 3.5650)	
5.0 (0.1969) Undersize	91.00 to 91.05 (3.5827 to 3.5846)	

Downloaded from www.Manualslib.com manuals search engine

PISTONS, PISTON PINS AND PISTON RINGS

1. Remove carbon from piston and ring grooves with a carbon scraper and a curved steel wire. Clean out oil slots in bottom land of oil ring groove.
2. Check for damage, scratches and wear. Replace if necessary.
3. Measure side clearance of rings in ring grooves as each ring is installed. Clearance with new pistons and rings should be as follows.

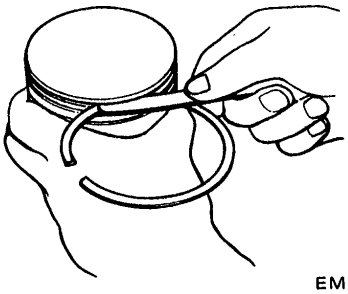

Fig. EM-57 Measuring piston ring side clearance

Side clearance Unit: mm (in)

L28	Standard	Wear limit
Top ring	0.040 to 0.073 (0.0016 to 0.0029)	0.1 (0.0039)
Second ring	0.030 to 0.070 (0.0012 to 0.0028)	

Ring gap Unit: mm (in)

L28	Standard	Wear limit
Top ring	0.25 to 0.40 (0.0098 to 0.0157)	1.0 (0.0394)
Second ring	0.30 to 0.50 (0.0118 to 0.0197)	
Oil ring	0.30 to 0.90 (0.0118 to 0.0354)	

4. Push ring into cylinder with a piston so as to place it squarely in cylinder; measure ring gap with a feeler gauge.

Ring should be placed to diameter at upper or lower limit of ring travel.

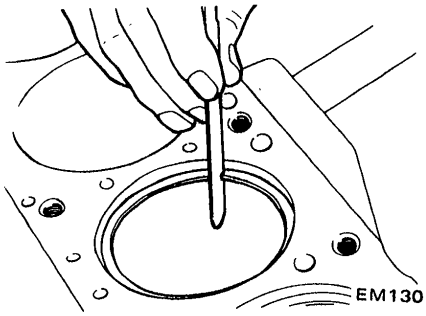

Fig. EM-58 Measuring ring gap

Notes:

a. **When piston ring only is to be replaced, without cylinder bore being corrected, measure gap at bottom of cylinder where wear is minor.**

b. **Oversize piston rings are available for service. [0.5 mm (0.020 in), 1.0 mm (0.039 in) oversize]**

5. Measure piston pin hole in relation to outer diameter of pin. If wear exceeds limit, replace each piston pin together with piston on which it is installed.
6. Determine the fitting of piston pin into piston pin hole to such an extent that it can be finger pressed at room temperature. This piston pin must be a tight press fit into connecting rod.

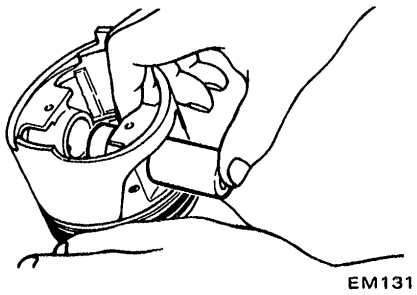

Fig. EM-59 Piston pin fitting

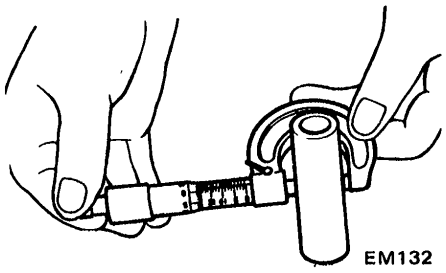

Fig. EM-60 Measuring piston pin diameter

Unit: mm (in)

	L28
Piston pin outside diameter	20.993 to 20.998 (0.8265 to 0.8267)
Piston pin hole diameter	21.001 to 21.008 (0.8268 to 0.8271)
Piston pin to piston clearance	0.006 to 0.013 (0.0002 to 0.00051)
Interference fit of piston pin to connecting rod	0.015 to 0.033 (0.00059 to 0.00130)

Downloaded from www.Manualslib.com manuals search engine

	Standard	Maximum
Connecting rod bend or torsion (per 100 mm or 3.94 in length) mm (in)	0.03 (0.0012)	0.05 (0.0020)

L28	Standard	Maximum
Big end play mm (in)	0.2 to 0.3 (0.008 to 0.012)	0.6 (0.024)

CONNECTING ROD

1. If a connecting rod has any flaw on either side of the thrust face or the large end, correct or replace it.

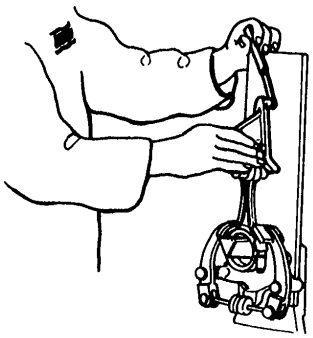

Fig. EM-61 Checking rod alignment

2. Check connecting rod for bend or torsion using a connecting rod aligner. If bend or torsion exceeds the limit, correct or replace.
3. When replacing connecting rod, select rod so that weight difference between new and old ones is within 7 gr (0.247 oz).
4. Install connecting rods with bearings on to corresponding crank pins and measure thrust clearance. If measured value exceeds the limit, replace.

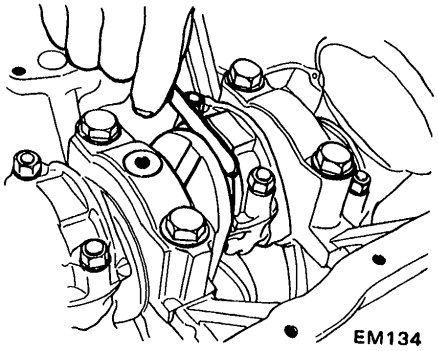

Fig. EM-62 Checking big end play

CRANKSHAFT

1. Whenever crankshaft is removed from engine, it should be cleaned thoroughly in a suitable solvent. After cleaning, check crankshaft journal and crank pin for score, bias wear or cracks. Repair or replace as required. If damage is minor, dress with fine crocus cloth.
2. Check journals and crank pins for taper and out-of-round with a micrometer. Measurement should be taken along journals for taper and around journals for out-of-round. See Figure EM-63 for detailed information.

Out-of-round X–Y
Taper A–B

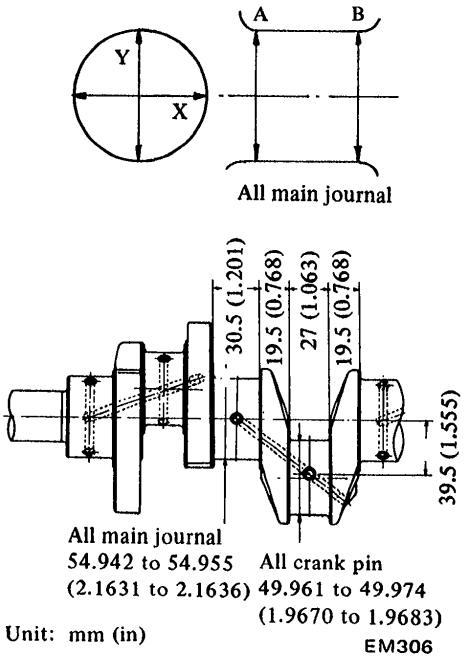

Fig. EM-63 Crankshaft and journal dimensions

If journals or crank pins are tapered or out-of-round beyond limits, replace with a new shaft.
3. Crankshaft bend can be checked by placing it on V-blocks and using a dial gauge with its indicating finger resting on center journal.

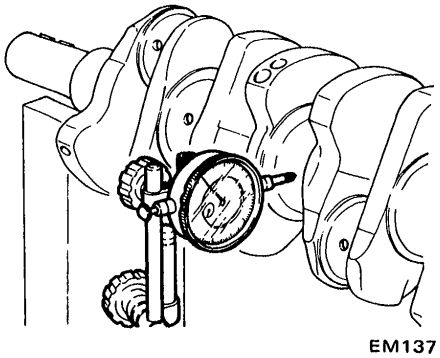

Fig. EM-64 Checking crankshaft bend

L28	Standard	Maximum
Taper and out-of-round of journal and crank pin mm (in)	less than 0.01 (0.0004)	0.03 (0.0012)

Downloaded from www.Manualslib.com manuals search engine

L28	Standard	Maximum
Crankshaft bend mm (in)	less than 0.05 (0.0020)	0.10 (0.0039)

Note: When measuring bend, use a dial gauge. Bend value is half of the reading obtained when crankshaft is turned one full revolution with a dial gauge attached to its center journal.

4. After regrinding crankshaft, finish it to the necessary size indicated on pages EM-18 and 19 by using an adequate undersize bearing according to the extent of required repair.
5. Install crankshaft in cylinder block and measure crankshaft free end play.

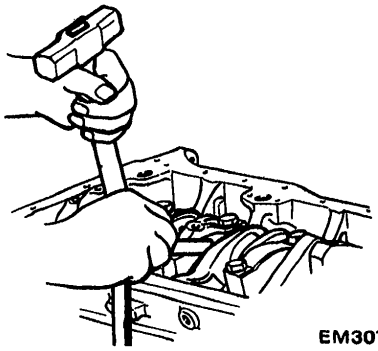

Fig. EM-65 Checking crankshaft end play

L28	Standard	Wear limit
Crankshaft free end play mm (in)	0.05 to 0.18 (0.0020 to 0.0071)	0.3 (0.0118)

6. At the rear end of crankshaft, check crankshaft pilot bushing for wear or damage. Replace it if damage is detected.

To replace crankshaft rear pilot bushing proceed as follows:

(1) Pull out bushing using Pilot Bushing Puller ST16610001.

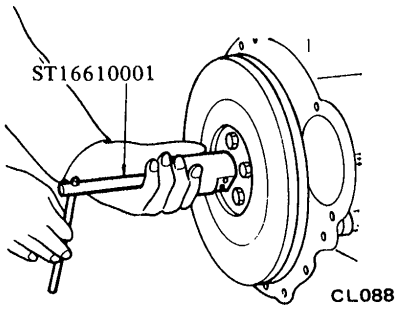

Fig. EM-66 Pulling out pilot bushing

(2) Before installing a new bushing, thoroughly clean bushing hole. Press fit bushing so its height above flange end is 6.5 to 7.0 mm (0.256 to 0.276 in). Do not oil bushing.

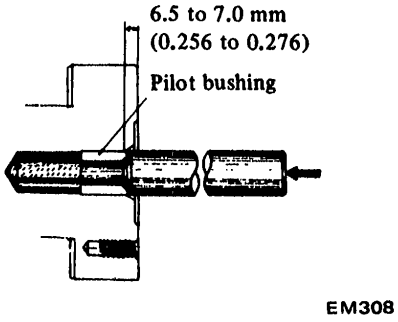

Fig. EM-67 Press-fitting new pilot bushing

BUSHING AND BEARING

MEASUREMENT OF MAIN BEARING CLEARANCE

1. Thoroughly clean all bearings, check for scratches, melting, score or wear.

Replace bearings if any damage is detected.

2. Crankshaft journals and bearings should be clean and free from dust and dirt before oil clearance is measured.

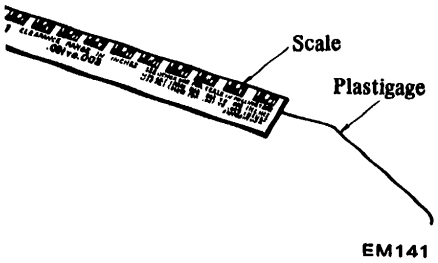

Fig. EM-68 Plastigage

3. Set main bearing on cap block.
4. Cut a plastigage to width of bearing and place it in parallel with crank pin, getting clear of the oil hole. Install cap on the assembly and tighten them together to the specified torque.

Tightening torque:
4.5 to 5.5 kg-m (33 to 40 ft-lb)

Note: Do not turn crankshaft while plastigage is being inserted.

5. Remove cap, and compare width of the plastigage at its widest part with the scale printed in plastigage envelope.

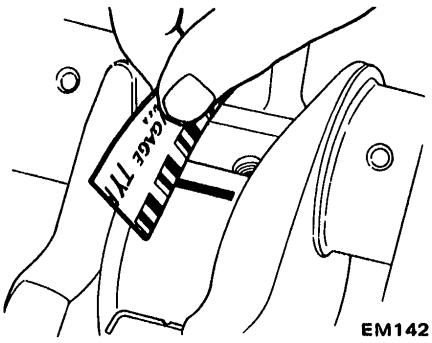

Fig. EM-69 Measuring bearing clearance

MEASUREMENT OF CONNECTING ROD BEARING CLEARANCE

1. Measure connecting rod bearing clearance in the same manner as above.

Tightening torque:
4.5 to 5.5 kg-m
(33 to 40 ft-lb)

Downloaded from www.Manualslib.com manuals search engine

Bearing oil clearance

L28	Standard	Wear limit
Main bearing clearance mm (in)	0.020 to 0.072 (0.0008 to 0.0028)	0.12 (0.0047)
Connecting rod bearing clearance mm (in)	0.025 to 0.055 (0.0010 to 0.0022)	0.12 (0.0047)

2. If clearance exceeds specified valve, replace bearing with an undersize bearing and grind crankshaft journal adequately.

FITTING BEARINGS

Bearings are manufactured with crush to make bearing snug down into its bore. To measure this, proceed as follows:

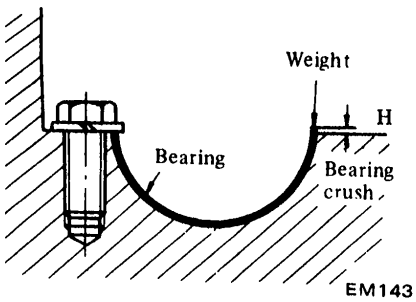

Fig. EM-70 Checking bearing crush

1. Set main bearing in main bearing cap recess or cylinder block bearing recess correctly.
2. Lock one side end of bearing and press other side until bearing back surface touches the recess.
3. Then, measure bearing crush "H" with a feeler gauge. See Figure EM-70. The standard bearing crush value is listed below.
4. Handle connecting rod bearing in the same manner as above.

Bearing crush

	L28
All main bearing mm (in)	0 to 0.03 (0 to 0.0012)
All connecting rod bearing mm (in)	0.015 to 0.045 (0.0006 to 0.0018)

Main bearing undersize

Unit: mm (in)

L28	Bearing top thickness	Crank journal diameter
STD	1.822 to 1.835 (0.0717 to 0.0722)	54.942 to 54.955 (2.1631 to 2.1636)
0.25 (0.0098) Undersize	1.947 to 1.960 (0.0767 to 0.0772)	54.692 to 54.705 (2.1532 to 2.1537)
0.50 (0.0197) Undersize	2.072 to 2.085 (0.0816 to 0.0821)	54.442 to 54.455 (2.1434 to 2.1439)
0.75 (0.0295) Undersize	2.197 to 2.210 (0.0865 to 0.0870)	54.192 to 54.205 (2.1335 to 2.1341)
1.00 (0.0394) Undersize	2.322 to 2.335 (0.0914 to 0.0919)	53.942 to 53.955 (2.1237 to 2.1242)

Downloaded from www.Manualslib.com manuals search engine

Connecting rod bearing undersize Unit: mm (in)

L28	Bearing top thickness	Crank pin diameter
STD	1.493 to 1.506 (0.0588 to 0.0593)	49.961 to 49.974 (1.9670 to 1.9675)
0.06 (0.0024) Undersize	1.523 to 1.536 (0.0600 to 0.0605)	49.901 to 49.914 (1.9646 to 1.9651)
0.12 (0.0047) Undersize	1.553 to 1.566 (0.0611 to 0.0617)	49.841 to 49.854 (1.9622 to 1.9628)
0.25 (0.0098) Undersize	1.618 to 1.631 (0.0637 to 0.0642)	49.711 to 49.724 (1.9571 to 1.9576)
0.50 (0.0197) Undersize	1.743 to 1.756 (0.0686 to 0.0691)	49.461 to 49.474 (1.9473 to 1.9478)
0.75 (0.0295) Unsersize	1.868 to 1.881 (0.0735 to 0.0741)	49.211 to 49.224 (1.9374 to 1.9379)
1.00 (0.0394) Undersize	1.993 to 2.006 (0.0785 to 0.0790)	48.961 to 48.974 (1.9276 to 1.9281)

MISCELLANEOUS COMPONENTS

CRANKSHAFT SPROCKET, CAMSHAFT SPROCKET

1. Check tooth surface for flaws or wear. Replace sprocket if damage is found.
2. Install camshaft sprocket in position and check for runout. If it exceeds 0.1 mm (0.004 in) total indicator reading, replace camshaft sprocket. Also check for end play.

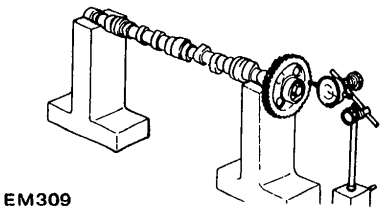

Fig. EM-71 Checking camshaft sprocket runout

Camshaft end play:
0.08 to 0.38 mm
(0.0031 to 0.0150 in)

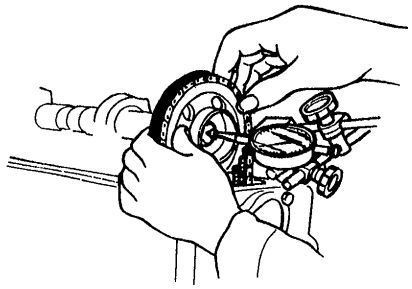

Fig. EM-72 Checking camshaft end play

3. Check chain for damage, excessive wear or stretch at roller links. Replace if faulty.
4. When chain stretches excessively, the valve timing goes out of order. Two location (camshaft set) holes are provided in camshaft sprocket to correct valve timing.

Adjust camshaft sprocket location. If the stretch of chain roller links is excessive, adjust camshaft sprocket location by transferring the camshaft set position of camshaft sprocket to No. 2 or No. 3 holes.

(1) Turn engine until No. 1 piston is at T.D.C. on its compression stroke. Determine whether camshaft sprocket location notch comes off the left end of the oblong groove on camshaft locator plate. (If the location notch is off the left end of the oblong groove, chain stretch is beyond limits.)

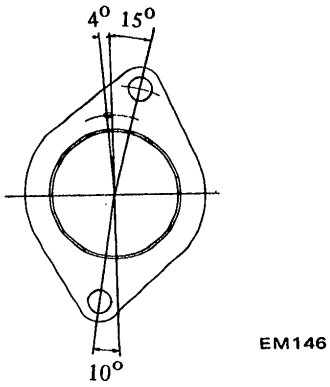

Fig. EM-73 Camshaft locate plate

Downloaded from www.Manualslib.com manuals search engine

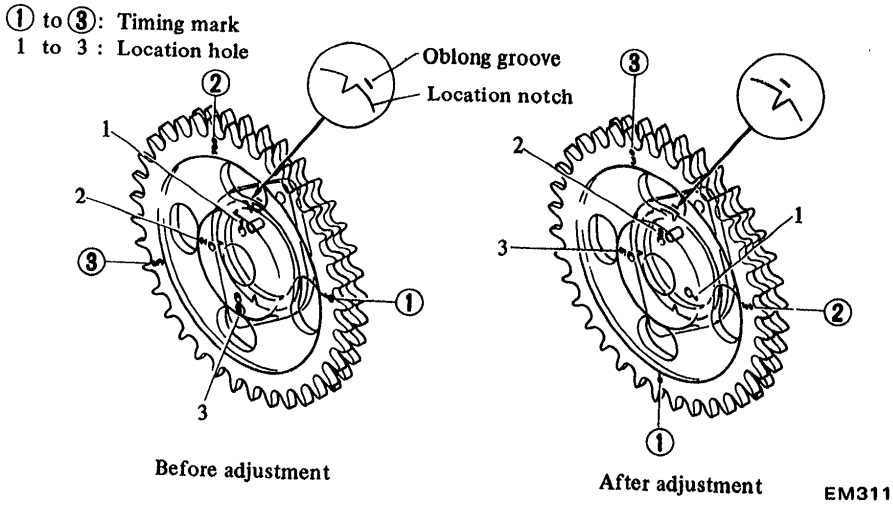

Fig. EM-74 Adjusting camshaft sprocket location

(2) Turn engine until No. 1 piston is at T.D.C. on its compression stroke, setting camshaft on No. 2 location hole in camshaft sprocket. This No. 2 notch should then be on the right end of the oblong groove. When No. 2 hole is used, No. 2 timing mark must also be used. The amount of the modification is a 4° rotation of crankshaft.

(3) If the valve timing cannot be corrected by using No. 2 hole, use No. 3 hole in the same procedure as above. The amount of modification by using No. 3 hole is an 8° rotation of crankshaft.

(4) When modification becomes impossible even by transferring camshaft location hole, replace chain assembly.

CHAIN TENSIONER AND CHAIN GUIDE

Check for wear and breakage. Replace if necessary.

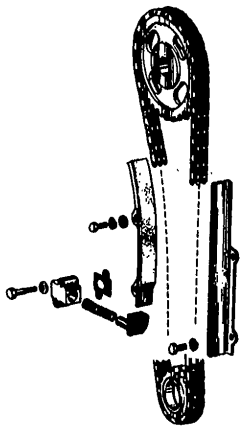

Fig. EM-75 Camshaft drive mechanism

FLYWHEEL

1. Check clutch disc contact surface with flywheel for damage or wear. Repair or replace if necessary.
2. Measure runout of clutch disc contact surface with a dial gauge. If it exceeds 0.15 mm (0.0059 in) total indicator reading, replace it.

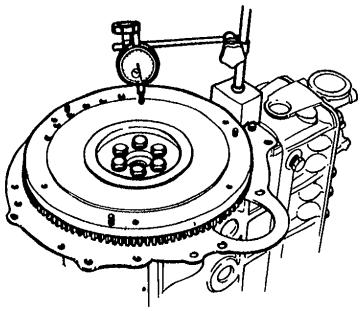

Fig. EM-76 Checking flywheel deviation

3. Check tooth surfaces of ring gear for flaws or wear.
   Replace if necessary.

Note: Replace ring gear at about 180 to 220°C (356 to 428°F).

FRONT COVER AND REAR OIL SEAL

First check front cover and rear oil seal for worn or folded over sealing lip or oil leakage. If necessary, install a new seal. When installing a new seal, pay attention to mounting direction.

Note: It is good practice to renew oil seal whenever engine is overhauled.

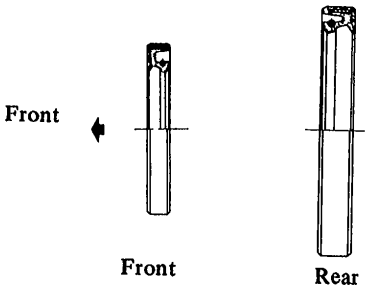

Fig. EM-77 Oil seal of crankshaft

Downloaded from www.Manualslib.com manuals search engine

ENGINE ASSEMBLY

CONTENTS

PRECAUTIONS EM-21
CYLINDER HEAD EM-21
PISTON AND CONNECTING ROD EM-22
ENGINE ASSEMBLY EM-22

PRECAUTIONS

1. Use thoroughly cleaned parts. Especially, make sure that oil holes are clear of foreign matter.
2. When installing sliding parts such as bearings, be sure to apply engine oil to them.
3. Use new packings and oil seals.
4. Do not reuse lock washers.
5. Keep tools and work benches clean.
6. Keep necessary parts and tools near at hand.
7. Be sure to follow specified tightenig torque and order.
8. Applying sealant

Use sealant to eliminate water and oil leaks. Parts requiring sealant are:

(1) Front cover and corners of cylinder block: See Figure EM-78.

(2) Main bearing cap and cylinder block: Each side of rear main bearing cap and each corner of cylinder block. See Figure EM-79.

(3) Cylinder block: Step portions at four mating surfaces (cylinder block to rear main bearing cap). See Figure EM-80.

Note: Do not apply too much sealant.

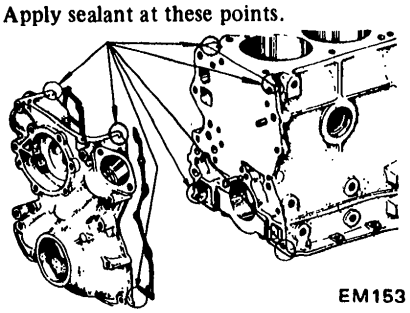

Fig. EM-78 Applying sealant (Front over and gasket)

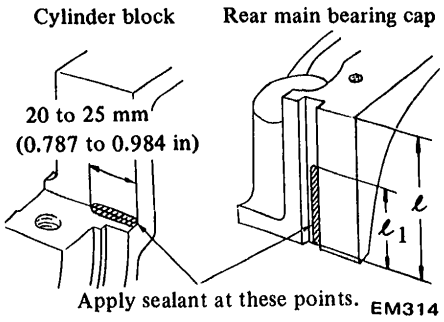

Fig. EM-79 Applying sealant (Main bearing cap and cylinder block)

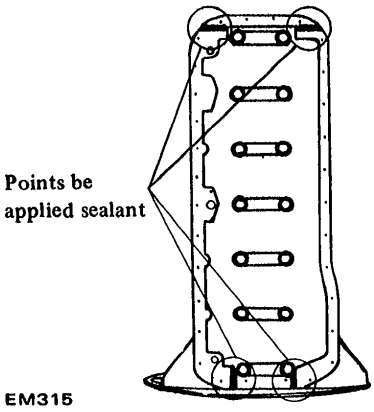

Fig. EM-80 Applying sealant (Cylinder block)

CYLINDER HEAD

1. Valve assembly and valve spring

Using Valve Lifter ST12070000, set valve spring seat in position, and fit valve guide with oil seal.

Assemble valve in the order: valve, inner and outer valve springs, spring retainer, valve collet and valve rocker guide.

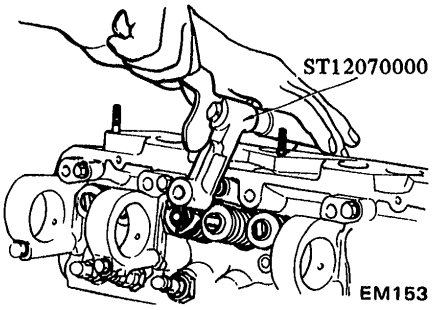

Fig. EM-81 Installing valve

Notes:

a. Ensure that valve face is free from foreign matter.

b. Outer valve spring is of an uneven pitch type. Install spring facing painted side to cylinder head surface.

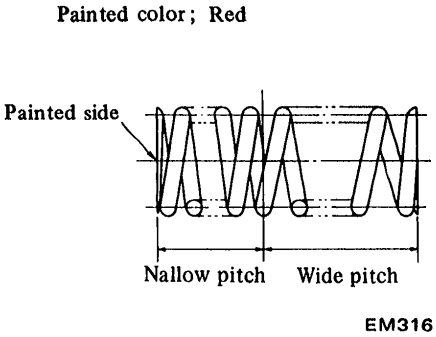

Fig. EM-82 Installing valve spring

2. Valve rocker pivot assembly

Screw valve rocker pivots joined with lock nuts into pivot bushing.

3. Camshaft assembly

Set locating plate and carefully install camshaft in cylinder head. Do not damage the bearing inside. Oblong groove of locating plate must be directed toward front side of engine.

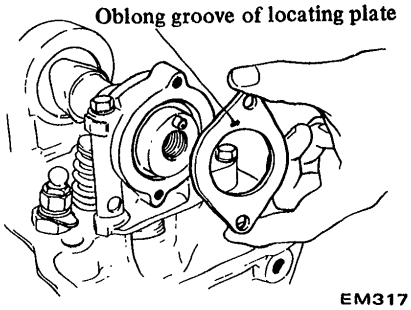

Fig. EM-83 Installing camshaft locating plate

Downloaded from www.Manualslib.com manuals search engine

4. Install camshaft sprocket on camshaft and tighten it to specified torque.

Tightening torque:
13 to 15 kg-m
(94 to 108 ft-lb)

At this time, check camshaft end play.

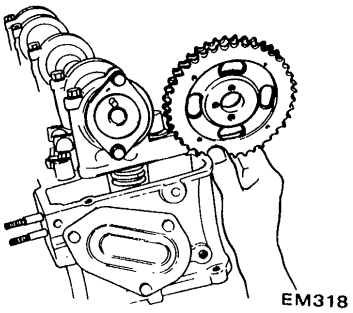

Fig. EM-84 Installing camshaft sprocket

5. Install rocker arms by pressing valve springs down with a screwdriver.

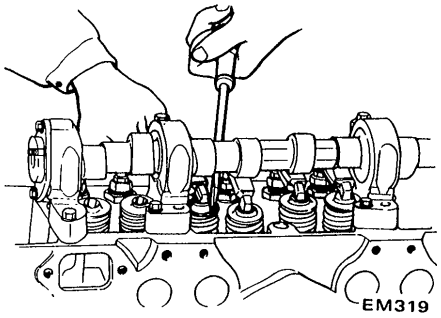

Fig. EM-85 Installing rocker arm

6. Install valve rocker springs.
7. After assembling cylinder head, turn camshaft until No. 1 piston is at T.D.C. on its compression stroke.

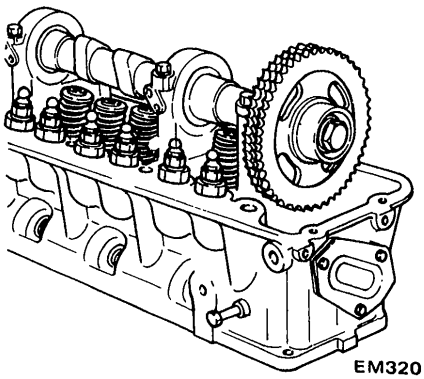

Fig. EM-86 Assembling cylinder head

PISTON AND CONNECTING ROD

1. Assemble pistons, piston pins and connecting rods on the designated cylinder.

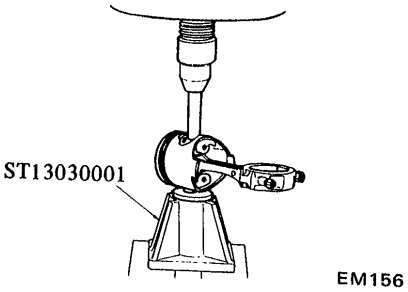

Fig. EM-87 Installing piston pin

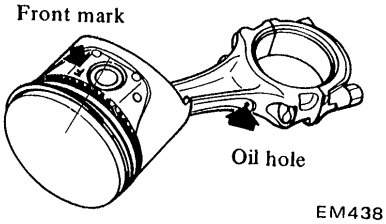

Fig. EM-88 Assembling piston and connecting rod

Notes:

a. **Piston is pressed into connecting rod with fitting force of from 0.5 to 1.5 tons; aid of Pin Press Stand ST13030001 is necessary.**
When pressing piston pin into connecting rod, apply engine oil to pin and small end of connecting rod.
b. **Arrange so that oil jet of connecting rod big end is directed toward right side of cylinder block.**
c. **Be sure to install piston in cylinders with notch mark of piston head toward front of engine.**

2. Install piston rings
Install top and second rings in right position, with marked side up.

Notes:

a. **Top ring is chromium-plated on liner contacting face.**
b. **Second ring has larger taper surface than top ring.**
c. **In the combined oil ring, upper rail is same as lower one.**

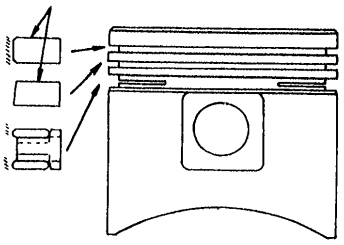

Fig. EM-89 Installing piston ring

3. Fix bearings on connecting rod and connecting rod cap.

Note: Clean back side of bearing carefully.

ENGINE ASSEMBLY

1. The first step in engine assembly is to bolt Engine Attachment ST05340001 to right hand side of cylinder block. Next, install block on Engine Stand ST0501S000 with engine bottom up.
2. Set main bearings at the proper portion of cylinder block.

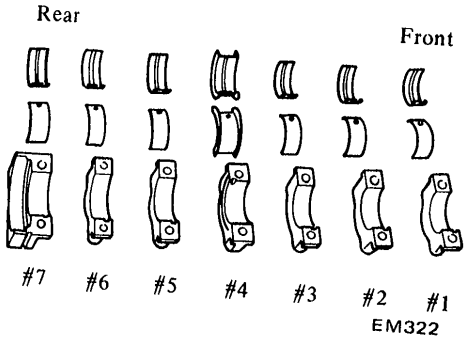

Fig. EM-90 Main bearings

3. Install baffle plate including cylinder block net.

Notes:

a. **Only center bearing (No. 4) is a flanged type.**
b. **All inter-bearings are the same type.**
c. **Front bearing (No. 1) is also the same type as rear bearing (No. 7).**
d. **All upper and lower bearings are not interchangeable.**

4. Apply engine oil to main bearing surfaces on both sides of cylinder block and cap.
Install crankshaft.

Downloaded from www.Manualslib.com manuals search engine

5. Install main bearing cap and tighten bolts to specified torque.

Tightening torque:
4.5 to 5.5 kg-m
(33 to 40 ft-lb)

Notes:

a. **Apply sealant to each side of rear main bearing cap and each corner of cylinder block as shown in Figure EM-79.**
b. **Arrange parts so arrow mark on bearing cap faces toward front of engine.**
c. **Prior to tightening bearing cap bolts, place bearing cap in proper position by shifting crankshaft in the axial direction.**
d. **Tighten bearing cap bolts gradually in two to three stages outwardly from center bearing in the sequence as shown in Figure EM-91.**
e. **After securing bearing cap bolts, ascertain that crankshaft turns smoothly.**

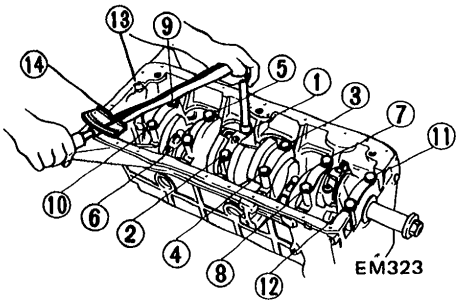

Fig. EM-91 Torque sequence of cap bolts

6. Make sure crankshaft has proper end play.

Crankshaft end play:
0.05 to 0.18 mm
(0.0020 to 0.0071 in)

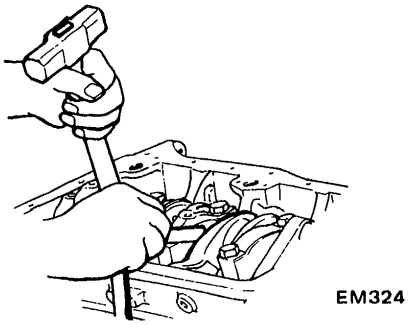

Fig. EM-92 Checking crankshaft end play

7. Install side oil seals in rear main bearing cap. Prior to installing, apply sealant to seals.

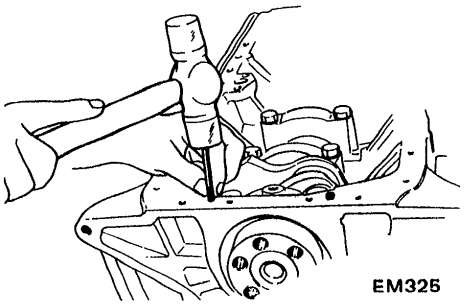

Fig. EM-93 Driving side oil seal

8. Install rear oil seal using Crankshaft Rear Oil Seal Drift ST15310000. Apply lithium grease to sealing lip of oil seal.

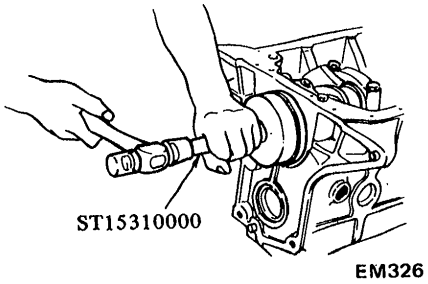

Fig. EM-94 Installing rear oil seal

9. Install rear end plate.
10. Install flywheel securely, and tighten bolts to specified torque.

Tightening torque:
13 to 15 kg-m (94 to 108 ft-lb)

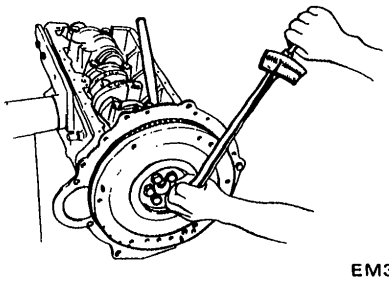

Fig. EM-95 Installing flywheel

11. Insert pistons in corresponding cylinder using Piston Ring Compressor EM03470000.

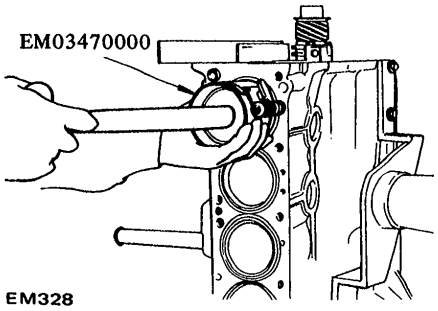

Fig. EM-96 Installing piston-rod assembly

Notes:

a. **Apply engine oil to sliding parts.**
b. **Arrange so that notch mark on piston head faces to front of engine.**
c. **Install piston rings at 180° to each other, avoiding their fit in the thrust and piston pin directions.**

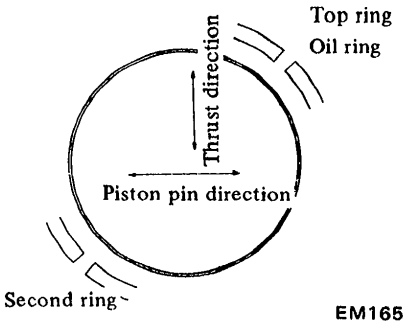

Fig. EM-97 Piston ring direction

12. Install connecting rod caps.

Tightening torque:
4.5 to 5.5 kg-m (33 to 40 ft-lb)

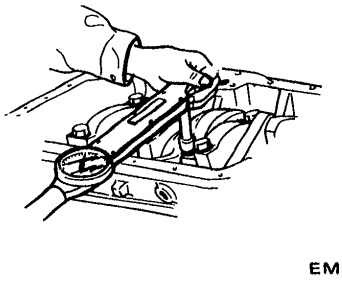

Fig. EM-98 Installing connecting rod cap

Note: **Arrange connecting rods and connecting rod caps so that the cylinder numbers face in the same direction.**

13. Make sure that connecting rod big end has proper end play.

Downloaded from www.Manualslib.com manuals search engine

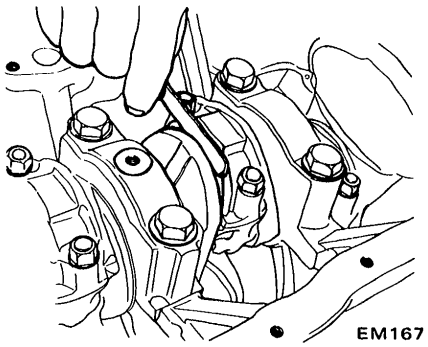

Fig. EM-99 Checking big end play

Big end play:
0.2 to 0.3 mm
(0.008 to 0.012 in)

14. Install cylinder head assembly.

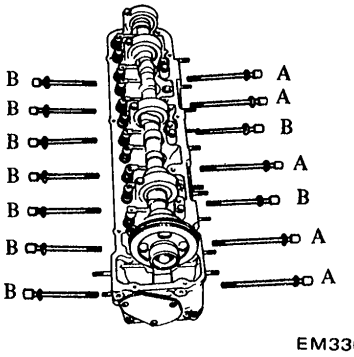

Fig. EM-100 Cylinder head bolts

(1) Thoroughly clean cylinder block and head surface.

Do not apply sealant to any other part of cylinder block and head surface.

(2) Turn crankshaft until No. 1 piston is at T.D.C. on its compression stroke.

(3) Make sure that camshaft sprocket location notch and plate oblong groove are aligned at their correct positions.

(4) When installing cylinder head, make sure that all valves are apart from head of pistons.

(5) Do not rotate crankshaft and camshaft separately, or valves will hit head of pistons.

(6) Temporarily tighten two bolts ①, ② shown in Figure EM-106.

Tightening torque:
2 kg-m (14 ft-lb)

15. Install crankshaft sprocket and distributor drive gear and fit oil thrower.

Note: Make sure that mating marks of crankshaft sprocket face to front.

16. Install timing chain.

Notes:

a. Make sure that crankshaft and camshaft keys point upwards.

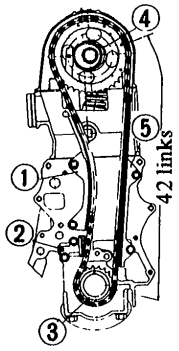

1 Chain guide
2 Chain tensioner
3 Crank sprocket
4 Cam sprocket
5 Chain guide

Fig. EM-101 Installing timing chain

b. Set timing chain by aligning its mating marks with those of crankshaft sprocket and camshaft sprocket the right hand side. There are forty-two chain links between two mating marks of timing chain.

c. No. 1 hole is factory adjusted. When chain stretches excessively, adjust camshaft sprocket at No. 2 or No. 3 hole.

d. Use a set of timing marks and location hole numbers.

17. Install chain guide to cylinder block.

18. Install chain tensioner.

Note: Adjust protrusion of chain tensioner spindle to 0 mm (0 in).

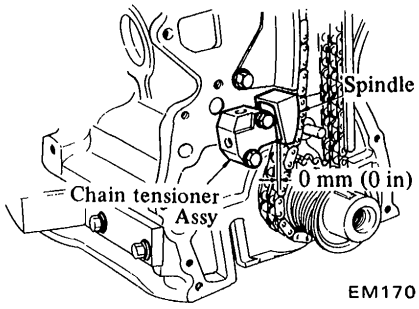

Fig. EM-102 Installing chain tensioner

19. Press new oil seal in front cover. (front cover oil seal should be replaced when front cover is disassembled).

20. Install front cover with gasket in place.

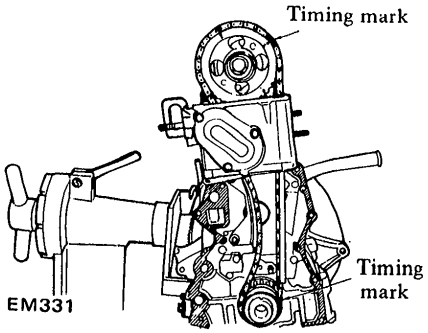

Fig. EM-103 Installing front cover

Notes:

a. Apply sealant to front cover and corners of upper section of cylinder block as shown in Figure EM-78.

b. Install front cover with head gasket in place.

c. Check the height difference between cylinder block upper face and front cover upper face. Difference must be less than 0.15 mm (0.0059 in).

d. Note that different types of bolts are used.

e. Apply lithium grease to sealing lip of oil seal.

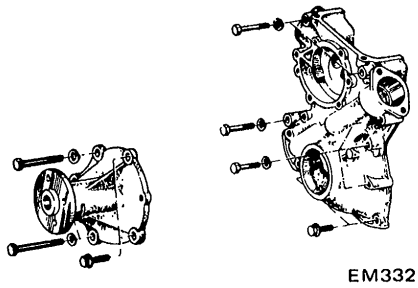

Fig. EM-104 Front cover bolts

Tightening torque:
Size M8 (0.315 in)
1.0 to 1.6 kg-m
(7.2 to 11.6 ft-lb)
Size M6 (0.236 in)
0.4 to 0.8 kg-m
(2.9 to 5.8 ft-lb)

21. Install crankshaft pulley and water pump, then set No. 1 piston at T.D.C. on its compression stroke.

Crankshaft pulley nut tightening torque:
12 to 16 kg-m
(87 to 116 ft-lb)

Downloaded from www.Manualslib.com manuals search engine

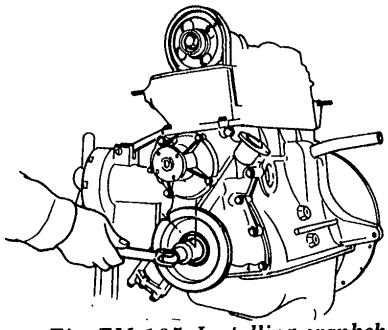

Fig. EM-105 Installing crankshaft pulley

22. Finally tighten head bolts to the specified torque in three steps according to the tightening sequence shown in Figure EM-106.

Note that two types of bolts are used.

Special tool Cylinder Head Bolt Wrench ST10120000

Tightening torque:
1st turn
4.0 kg-m (29 ft-lb)
2nd turn
6.0 kg-m (43 ft-lb)
3rd turn
7.0 to 8.5 kg-m
(51 to 61 ft-lb)

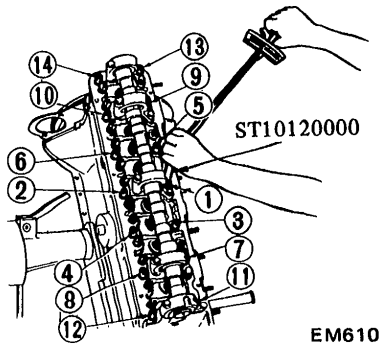

Fig. EM-106 Tightening sequence

Notes:
a. **Be sure to tighten two small bolts.**
b. **After engine has been operated for several minutes retighten if necessary.**

23. Install oil pump and distributor driving spindle in front cover.

Tightening torque:
1.1 to 1.5 kg-m
8.0 to 10.8 ft-lb)

Notes:
a. **Assemble oil pump and drive spindle, aligning driving spindle mark face with oil pump hole, and then move by one notch as shown in Figure EM-107.**
b. **Install oil pump together with drive spindle so that the projection on its top is located at the 11 : 25 a.m. position, at this point, the smaller bow-shape will be faced toward the front.**
c. **Do not forget to install gasket.**

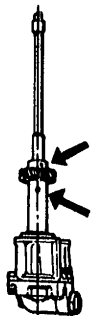

Fig. EM-107 Setting distributor driving spindle

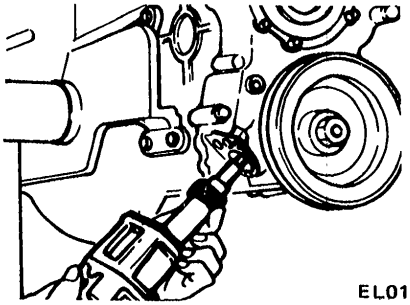

Fig. EM-108 Installing oil pump

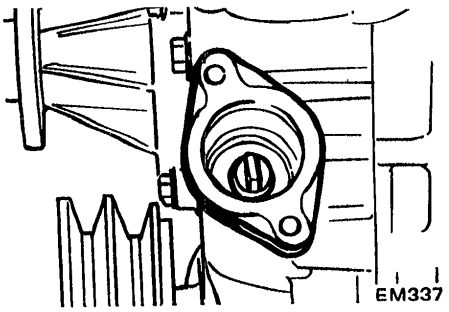

Fig. EM-109 Setting distributor drive spindle

24. Install water inlet elbow in its position.

25. Install oil strainer, oil pan gasket and oil pan.

Notes:
a. **Apply sealant to the step portions at four mating surfaces as shown in Figure EM-80.**
b. **Oil pan should tightened in criss-cross pattern to a final torque of 0.6 to 1.0 kg-m (4.3 to 7.2 ft-lb).**

26. Adjust valve clearance to the specified dimensions.

Special tool Pivot Adjuster ST10640001

Tightening torque:
5.0 to 6.0 kg-m
(36 to 43 ft-lb)

Notes:
a. **First set clearance to the cold specifications.**

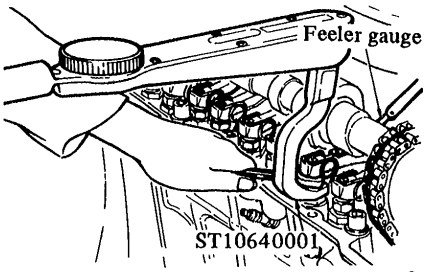

Fig. EM-110 Adjusting valve clearance

b. **After engine has been assembled, run it for at least several minutes, and finally adjust clearance to the warm specifications.**
For details, refer to "Adjusting intake and exhaust valve clearance" in ET section.

27. Install rocker cover.

28. Install rear engine slinger, exhaust manifold and intake manifold with heat shield plate, and E.G.R. tube.

Intake, exhaust manifold nut tightening torque:
Size 8M
1.4 to 1.8 kg-m
(10 to 13 ft-lb)
Size 10M
3.5 to 5.0 kg-m
(25 to 36 ft-lb)

Downloaded from www.Manualslib.com manuals search engine

There are two types of 10M bolts as shown in Figure EM-111. When installing, do not confuse them.

"L" dimensions; Long bolt (): 40 mm (1.575 in)
Short bolt (): 32 mm (1.260 in)

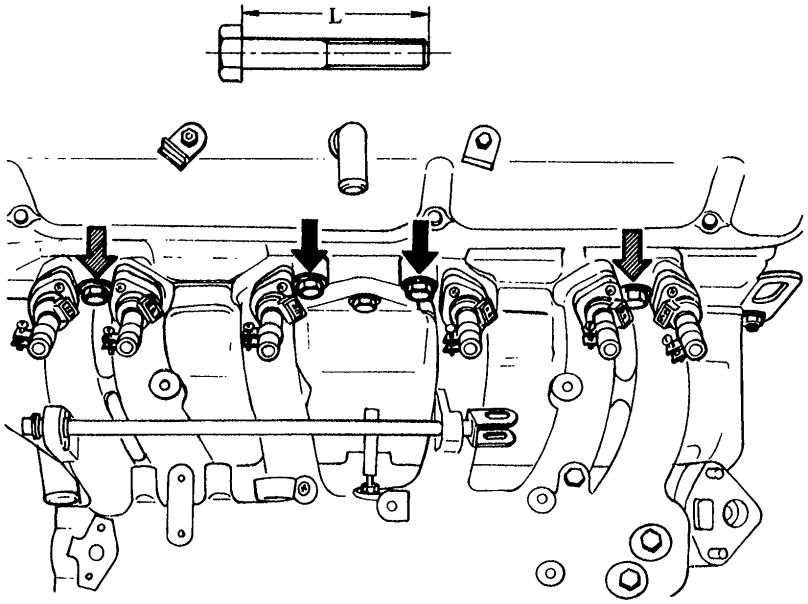

Fig. EM-111 Location of intake manifold securing bolts

			L28
Valve clearance mm (in)	Cold	Intake	0.20 (0.008)
		Exhaust	0.25 (0.010)
	Hot	Intake	0.25 (0.010)
		Exhaust	0.30 (0.012)

29. Install P.C.V. valve hose and sub heat shield plate.
30. Install thermostat housing, thermotime switch, thermal transmitter and water temperature sensor as an assembly.
31. Install water hose.
32. Install fuel return hose, fuel feed hose, vacuum signal hose, canister purge hose and front engine slinger.

Notes:
a. Do not reuse hose clamps after removal. Always install new ones.
b. Replace hoses which are deformed, scratched or chafed.

Hose clamp tightening torque:
0.10 to 0.15 kg-m
(0.7 to 1.1 ft-lb)

33. Install throttle chamber together with dash pot and B.C.D.D.

Throttle chamber tightening torque:
1.5 to 2.0 kg-m
(11 to 14 ft-lb)

34. Install E.G.R. control valve, B.P.T. valve and hoses. Install B.P.T. valve control tube to intake manifold.

35. Install cold start valve and fuel pipe to cold start valve hose as an assembly.
36. Install air regulator, 3-way connector to rocker cover hose, throttle chamber to 3-way connector hose, air regulator to connector hose and 3-way connector to air regulator hose, as an assembly.
37. Install distributor.
38. Install spark plug.

Tightening torque:
1.5 to 2.0 kg-m
(11 to 14 ft-lb)

39. Connect distributor to high tension cables.

Note: All pipes and hoses should be clamped securely, being careful not to allow them to interfere with adjacent or surrounding parts.

40. Install the left engine mount bracket.

41. Install clutch assembly.

Special tool Clutch Aligning Bar ST20660000

Tightening torque:
1.2 to 2.2 kg-m
(8.7 to 15.9 ft-lb)

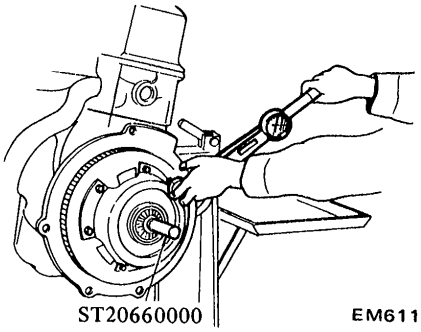

Fig. EM-112 Installing clutch assembly

42. Using an overhead hoist and lifting cable, hoist engine up away from engine stand and then down onto engine carrier.

Install air conditioner compressor bracket, idler pulley, compressor and compressor drive belt in that order.

Then, adjust air conditioner compressor belt tension by turning idler pulley bolt in or out. It is correct if deflection is 8 to 12 mm (0.315 to 0.472 in) thumb pressure [10 kg (22.0 lb)] is applied midway between idler pulley and air conditioner compressor pulley.

Downloaded from www.Manualslib.com manuals search engine

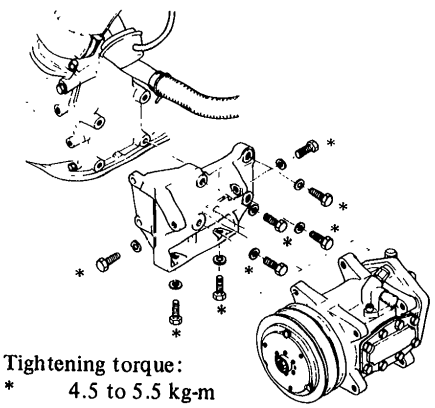

Fig. EM-113 Installing compressor

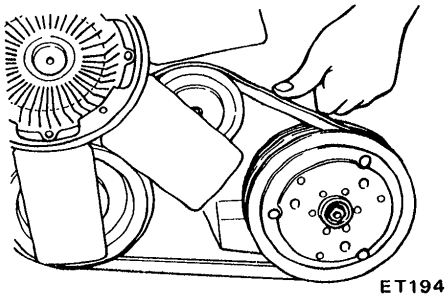

Fig. EM-114 Air conditioning compressor belt tension

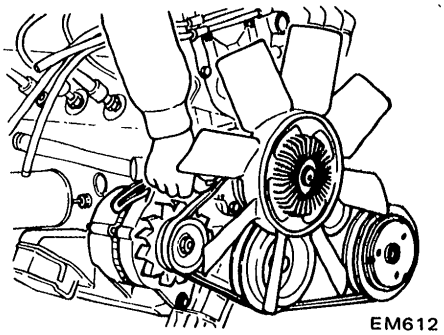

Fig. EM-115 Fan belt tension

43. Install alternator bracket, adjusting bar, alternator, fan pulley, fan and fan belt in that order. Then, check to be sure that deflection of fan belt is held within 8 to 12 mm (0.315 to 0.472 in) when thumb pressure is applied midway between pulleys [A pressed force is about 10 kg (22.0 lb).].

44. Install engine mount bracket (right hand), oil filter, oil pressure switch, oil level gauge and water drain plug. When installing oil filter, fasten it to cylinder block by hand.

Note: Do not overtighten filter, or oil leakage may occur.

45. Fill engine oil up to specified level.

SERVICE DATA AND SPECIFICATIONS

GENERAL SPECIFICATION

Engine model		L28
Cylinder arrangement		6, in-line
Displacement	cc (cu in)	2,753 (168.0)
Bore x Stroke	mm (in)	86 x 79 (3.39 x 3.11)
Valve arrangement		O.H.C.
Firing order		1-5-3-6-2-4
Engine idle	rpm	
Manual transmission		800
Automatic transmission (in "D" position)		700
Compression ratio		8.3 : 1
Oil pressure (Warm at 2,000 rpm)	kg/cm² (psi)	3.5 to 4.2 (50 to 60)

Downloaded from www.Manualslib.com manuals search engine

TIGHTENING TORQUE

Model		L28
Cylinder head bolts	kg-m (ft-lb)	
1st turn		4.0 (29)
2nd turn		6.0 (43)
3rd turn		7.0 to 8.5 (51 to 61)
Connecting rod big end nuts	kg-m (ft-lb)	4.5 to 5.5 (33 to 40)
Flywheel fixing bolts	kg-m (ft-lb)	13 to 15 (94 to 108)
Main bearing cap bolts	kg-m (ft-lb)	4.5 to 5.5 (33 to 40)
Camshaft sprocket bolt	kg-m (ft-lb)	13 to 15 (94 to 108)
Oil pan bolts	kg-m (ft-lb)	0.6 to 1.0 (4.3 to 7.2)
Oil pump bolts	kg-m (ft-lb)	1.1 to 1.5 (8.0 to 10.8)
Oil pan drain plug	kg-m (ft-lb)	2.0 to 3.0 (14 to 22)
Rocker pivot lock nuts	kg-m (ft-lb)	5.0 to 6.0 (36 to 43)
Camshaft locating plate bolts	kg-m (ft-lb)	0.5 to 0.8 (3.6 to 5.8)
Manifold bolts or nuts	kg-m (ft-lb)	Size 8M 1.4 to 1.8 (10 to 13)
	kg-m (ft-lb)	Size 10M 3.5 to 5.0 (25 to 36)
Throttle chamber securing bolts	kg-m (ft-lb)	1.5 to 2.0 (11 to 14)
Crank pulley bolts	kg-m (ft-lb)	12 to 16 (87 to 116)
Front cover bolts	kg-m (ft-lb)	
6M		0.4 to 0.8 (2.9 to 5.8)
8M		1.0 to 1.6 (7.2 to 11.6)
Oil strainer	kg-m (ft-lb)	0.8 to 1.1 (5.8 to 8.0)

Downloaded from www.Manualslib.com manuals search engine

SPECIFICATIONS

Model	L28

a) Valve mechanism

Valve clearance (Hot)	mm (in)	
Intake		0.25 (0.010)
Exhaust		0.30 (0.012)
Valve clearance (Cold)	mm (in)	
Intake		0.20 (0.008)
Exhaust		0.25 (0.010)
Valve head diameter	mm (in)	
Intake		44 (1.73)
Exhaust		35 (1.38)
Valve stem diameter	mm (in)	
Intake		7.965 to 7.980 (0.3136 to 0.3142)
Exhaust		7.945 to 7.960 (0.3128 to 0.3134)
Valve length	mm (in)	
Intake		114.9 to 115.2 (4.524 to 4.535)
Exhaust		115.7 to 116.0 (4.555 to 4.567)
Valve lift	mm (in)	
Intake		10.5 (0.413)
Exhaust		10.5 (0.413)
Valve spring free length	mm (in)	
Outer		49.98 (1.968)
Inner		44.85 (1.766)
Valve spring pressured length (valve open)	mm/kg (in/lb)	
Intake	Outer	29.5/49.0 (1.161/108.0)
	Inner	24.5/25.5 (0.965/56.2)
Exhaust	Outer	29.5/49.0 (1.161/108.0)
	Inner	24.5/25.5 (0.965/56.2)
Valve spring assembled height (valve close)	mm/kg (in/lb)	
Outer		40.0/21.3 (1.575/47.0)
Inner		35/12.3 (1.378/27.1)
Valve guide length	mm (in)	
Intake		59.0 (2.323)
Exhaust		59.0 (2.323)

Downloaded from www.Manualslib.com manuals search engine

Valve guide height from head surface	mm (in)	10.4 to 10.6 (0.409 to 0.417)
Valve guide inner diameter	mm (in)	
Intake		8.000 to 8.018 (0.3150 to 0.3157)
Exhaust		8.000 to 8.018 (0.3150 to 0.3157)
Valve guide outer diameter (standard)	mm (in)	
Intake		12.023 to 12.034 (0.4733 to 0.4738)
Exhaust		12.023 to 12.034 (0.4733 to 0.4738)
Valve guide to stem clearance	mm (in)	
Intake		0.020 to 0.053 (0.0008 to 0.0021)
Exhaust		0.040 to 0.073 (0.0016 to 0.0029)
Valve seat width	mm (in)	
Intake		1.4 to 1.6 (0.055 to 0.063)
Exhaust		1.8 to 2.2 (0.071 to 0.087)
Valve seat angle		
Intake		45°
Exhaust		45°
Valve seat interference fit	mm (in)	
Intake		0.081 to 0.113 (0.0032 to 0.0044)
Exhaust		0.064 to 0.096 (0.0025 to 0.0038)
Valve guide interference fit	mm (in)	0.027 to 0.049 (0.0011 to 0.0019)

b) Camshaft and timing chain

Camshaft end play	mm (in)	0.08 to 0.38 (0.0031 to 0.0150)
Camshaft lobe lift	mm (in)	
Intake		7.00 (0.2756)
Exhaust		7.00 (0.2756)
Camshaft journal diameter	mm (in)	
1st		47.949 to 47.962 (1.8878 to 1.8883)
2nd		47.949 to 47.962 (1.8878 to 1.8883)
3rd		47.949 to 47.962 (1.8878 to 1.8883)
4th		47.949 to 47.962 (1.8878 to 1.8883)
5th		47.949 to 47.962 (1.8878 to 1.8883)
Camshaft bend	mm (in)	0.02 (0.0008)
Camshaft journal to bearing clearance	mm (in)	0.038 to 0.067 (0.0015 to 0.0026)
Camshaft bearing inner diameter	mm (in)	
1st		48.000 to 48.016 (1.8898 to 1.8904)
2nd		48.000 to 48.016 (1.8898 to 1.8904)
3rd		48.000 to 48.016 (1.8898 to 1.8904)
4th		48.000 to 48.016 (1.8898 to 1.8904)

Downloaded from www.Manualslib.com manuals search engine

c) Connecting rod

Center distance	mm (in)	130.35 (5.1319)
Bearing thickness (S.T.D.)	mm (in)	1.493 to 1.506 (0.0588 to 0.0593)
Big end play	mm (in)	0.20 to 0.30 (0.0079 to 0.0118)
Connecting rod bearing clearance	mm (in)	0.025 to 0.055 (0.0010 to 0.0022)
Connecting rod bend or torsion (per 100 mm or 2.937 in)	mm (in)	less than 0.03 (0.0012)

d) Crankshaft and main bearing

Journal diameter	mm (in)	54.942 to 54.955 (2.1631 to 2.1636)
Journal taper & out-of-round	mm (in)	less than 0.01 (0.0004)
Crankshaft free end play	mm (in)	0.05 to 0.18 (0.0020 to 0.0071)
Wear limit of dittoed play	mm (in)	0.3 (0.0118)
Crank pin diameter	mm (in)	49.961 to 49.974 (1.9670 to 1.9675)
Crank pin taper & out-of round	mm (in)	less than 0.01 (0.0004)
Main bearing thickness (S.T.D.)		1.822 to 1.835 (0.0717 to 0.0722)
Main bearing clearance	mm (in)	0.020 to 0.072 (0.0008 to 0.0028)
Wear limit of dittoed clearance	mm (in)	0.12 (0.0047)
Crankshaft bend	mm (in)	0.05 (0.0020)

e) Piston

Piston diameter (S.T.D.)	mm (in)	85.985 to 86.035 (3.3852 to 3.3872)
0.50 (0.0197) Oversize	mm (in)	86.465 to 86.515 (3.4041 to 3.4061)
1.00 (0.0394) Oversize	mm (in)	86.965 to 87.015 (3.4238 to 3.4258)
Ellipse difference	mm (in)	0.32 to 0.35 (0.0126 to 0.0138)
Ring groove width	mm (in)	
Top		2.0 (0.079)
Second		2.0 (0.079)
Oil		4.0 (0.157)
Piston to bore clearance	mm (in)	0.025 to 0.045 (0.0010 to 0.0018)
Piston pin hole off-set	mm (in)	0.95 to 1.05 (0.0374 to 0.0413)
Piston pin hole diameter	mm (in)	21.001 to 21.008 (0.8268 to 0.8271)

Downloaded from www.Manualslib.com manuals search engine

f) Piston pin

Pin diameter	mm (in)	20.993 to 20.998 (0.8265 to 0.8267)
Pin length	mm (in)	72.00 to 72.25 (2.8346 to 2.8445)
Piston pin to piston clearance	mm (in)	0.006 to 0.013 (0.0002 to 0.0005)
Interference fit of piston pin to connecting rod bushing	mm (in)	0.015 to 0.033 (0.0006 to 0.0013)

g) Piston ring

Ring height	mm (in)	
Top		1.977 (0.0778)
Second		1.977 (0.0778)
Side clearance	mm (in)	
Top		0.040 to 0.073 (0.0016 to 0.0029)
Second		0.030 to 0.070 (0.0012 to 0.0028)
Ring gap	mm (in)	
Top		0.25 to 0.40 (0.0098 to 0.0157)
Second		0.30 to 0.50 (0.0118 to 0.0197)
Oil		0.30 to 0.90 (0.0118 to 0.0354)

h) Cylinder block

Bore		
Inner diameter	mm (in)	86.000 to 86.050 (3.3858 to 3.3878)
Wear limit	mm (in)	0.20 (0.0079)
Out-of-round	mm (in)	0.015 (0.0006)
Taper	mm (in)	0.015 (0.0006)
Difference between cylinders	mm (in)	0.05 (0.0020)
Surface flatness	mm (in)	less than 0.05 (0.0020)

i) Cylinder head

Flatness	mm (in)	less than 0.05 (0.0020)

Downloaded from www.Manualslib.com manuals search engine

TROUBLE DIAGNOSES AND CORRECTIONS

Condition	Probable cause	Corrective action
I. Noisy engine		
Knocking of crankshaft and bearing.	Loose main bearing.	Replace.
	Seized bearing.	Replace.
	Bent crankshaft.	Repair or replace.
	Uneven wear of journal.	Correct.
	Excessive crankshaft end play.	Replace center bearing.
Piston and connecting rod knocking.	Loose bearing.	Replace.
	Seized bearing.	Replace.
	Loose piston pin.	Replace pin or bushing.
	Loose piston in cylinder.	Recondition cylinder.
	Broken piston ring.	Replace.
	Improper connecting rod alignment.	Realign.
Camshaft knocking.	Loose bearing.	Replace.
	Excessive axial play.	Replace bearing thrust plate.
	Rough gear teeth.	Repair.
	Broken cam gear.	Replace.
Timing chain noise.	Improper chain tension.	Adjust.
	Worn and/or damaged chain.	Replace.
	Worn sprocket.	Replace.
	Worn and/or broken tension adjusting mechanism.	Replace.
	Excessive camshaft and bearing clearance.	Replace.
Camshaft and valve mechanism knocking.	Improper valve clearance.	Adjust.
	Worn adjusting screw.	Replace.
	Worn rocker face.	Replace.
	Loose valve stem in guide.	Replace guide.
	Weakened valve spring.	Replace.
	Seized valve.	Repair or replace.
Water pump knocking.	Improper shaft end play.	Replace.
	Broken impeller.	Replace.
II. Other mechanical troubles		
Stuck valve.	Improper valve clearance.	Adjust.
	Insufficient clearance between valve stem and guide.	Clean stem or ream guide.
	Weakned or broken valve spring.	Replace.
	Seized or damage of valve stem.	Replace or clean.
	Poor quality fuel.	Use good fuel.

Downloaded from www.Manualslib.com manuals search engine

Condition	Probable cause	Corrective action
Seized valve seat.	Improper valve clearance.	Adjust.
	Weakened valve spring.	Replace.
	Thin valve head edge.	Replace valve.
	Narrow valve seat.	Reface.
	Overheating.	Repair or replace.
	Over speeding.	Drive at proper speed.
	Stuck valve guide.	Repair.
Excessively worn cylinder and piston.	Shortage of engine oil.	Add or replace oil.
	Dirty engine oil.	Clean crankcase, replace oil and oil filter element.
	Poor quality of oil.	Use proper oil.
	Overheating	Repair or replace.
	Wrong assembly of piston with connecting rod.	Repair or replace.
	Improper piston ring clearance.	Adjust.
	Broken piston ring.	Replace.
	Dirty air cleaner.	Clean.
	Mixture too rich.	Adjust.
	Engine over run.	Drive at proper speeds.
	Stuck choke valve.	Clean and adjust.
	Overchoking.	Start correct way.
Faulty connecting rod.	Shortage of engine oil.	Add oil.
	Low oil pressure.	Correct.
	Poor quality engine oil.	Use proper oil.
	Rough surface of crankshaft.	Grind and replace bearing.
	Clogged oil passage.	Clean.
	Bearing worn or eccentric.	Replace.
	Bearing improperly assembled.	Correct.
	Loose bearing.	Replace.
	Incorrect connecting rod alignment.	Repair or replace.
Faulty crankshaft bearing.	Shortage of engine oil.	Add or replace.
	Low oil pressure.	Correct.
	Poor quality engine oil.	Use specified oil.
	Crankshaft journal worn or out-of-round.	Repair.
	Clogged oil passage in crankshaft.	Clean.
	Bearing worn or eccentric.	Replace.
	Bearing improperly assembled.	Correct.
	Eccentric crankshaft or bearing.	Replace.

Downloaded from www.Manualslib.com manuals search engine

SPECIAL SERVICE TOOLS

No.	Tool number & tool name	Description Unit: mm (in)	For use on	Reference page or Figure No.
1.	ST19320000 Oil filter wrench	Used to take out oil filter. In tightening the filter, do not use this tool. To prevent excess tightening, always install by hand. 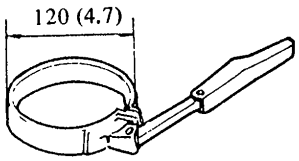 SE197	All models	Page EM-4
2.	ST05340001 Engine attachment	Attachment for setting the engine on the engine stand. 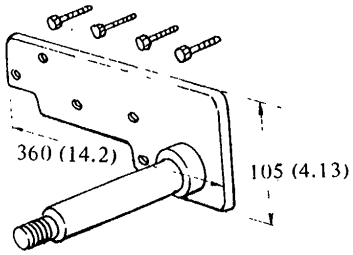 SE292	L28	Fig. EM-9 Page EM-22
3.	ST0501S000 Engine stand assembly - ST05011000 Engine stand - ST05012000 Base	Used for disassembling or assembling engine block or differential carrier throughout 360° in all directions. 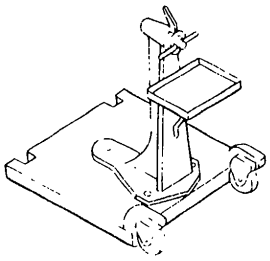 SE184	All models	Fig. EM-9 Page EM-22
4.	ST16540000 Puller crank pulley	For removing the crank pulley with damper. 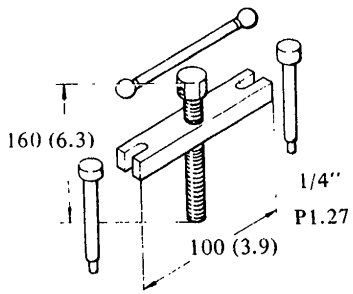 SE293	L28	Fig. EM-18

Downloaded from www.Manualslib.com manuals search engine

No.	Tool number & tool name	Description Unit: mm (in)	For use on	Reference page or Figure No.
5.	ST17420001 Chain stopper	Used to prevent chains from falling out of place in removing cylinder heads or cam gears and shafts. 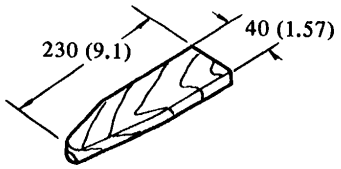 SE195	All L-series	Fig. EM-19 Page EM-5
6.	ST10120000 Cylinder head bolt wrench	Special hollow set bolts are used in tightening cylinder heads in L-series engines. This wrench is used to torque cylinder head bolts and its head can be inserted into the torque wrench. 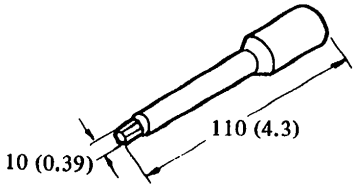 SE186	All L-series	Fig. EM-20 Fig. EM-106
7.	KV101041S0 Crankshaft main bearing cap puller -KV10104110 Crankshaft main bearing puller -ST16512001 Adapter (For L series) -ST16701001 Adapter	Used to remove the cap from main bearing. When using this tool, turn its adapter into the threaded hole in main bearing cap. 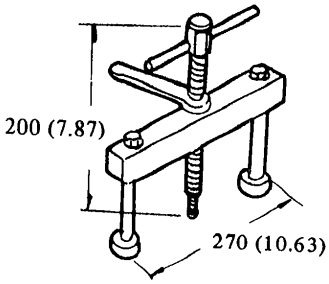 SE431	All L-series	Fig. EM-26
8.	ST13030001 Piston pin press stand	Used with a press to drive pin into, or out of, connecting rod. 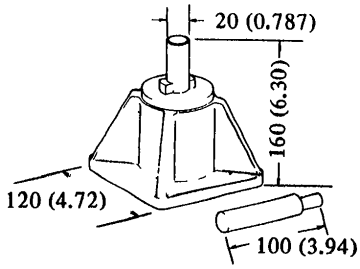 SE188	All L-series	Fig. EM-30 Fig. EM-87

Downloaded from www.Manualslib.com manuals search engine

No.	Tool number & tool name	Description Unit: mm (in)	For use on	Reference page or Figure No.
9.	ST12070000 Valve lifter	Used to compress valve spring by the combined action of its cam and lever, thereby facilitating the removal or installation of collect (for general use). 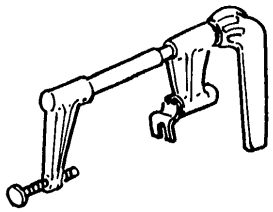 SE194	All models	Fig. EM-33 Fig. EM-81
10.	KV101039S0 Valve guide reamer set – ST11081000 Reamer (12.2 mm dia.) – ST11032000 Reamer (8.0 mm dia.) – ST11320000 Drift	This guide is used for: o Pressing used guide out of place. o Driving a new guide into place. o Finishing the bore of new guide. 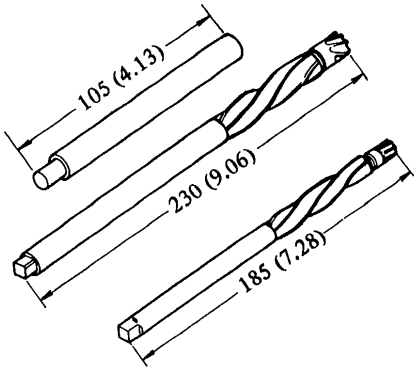 SE432	All models	Fig. EM-44
11.	ST11650001 Cutter set valve seat	For correcting the valve seat insert. 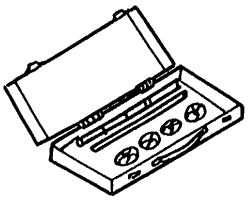 SE295	All L-series	Fig. EM-45 Page EM-11
12.	ST16610001 Pilot bushing puller	Used to push pilot bushing out of place. 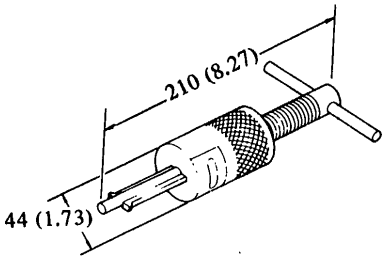 SE191	All L-Series	Fig. EM-66

Downloaded from www.Manualslib.com manuals search engine

No.	Tool number & tool name	Description Unit: mm (in)	For use on	Reference page or Figure No.
13.	ST15310000 Crankshaft rear oil seal drift	Used to push a lip type rear oil seal for L-series engine into place by giving hammer blows. 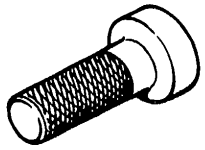 SE189	All L-series	Fig. EM-94
14.	EM03470000 Piston ring compressor	Used to compress piston rings while piston is being inserted into cylinder. 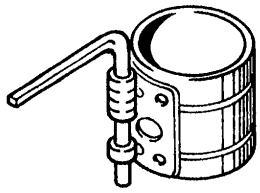 SE199	All models	Fig. EM-96
15.	ST10640001 Pivot adjuster	Used together with a torque wrench in tightening pivot lock nut for valve clearance adjustment. 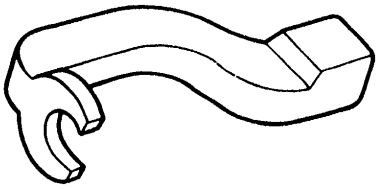 SE187	All L-series	Fig. EM-110
16.	ST20660000 Clutch aligning bar	For centering the clutch disc. 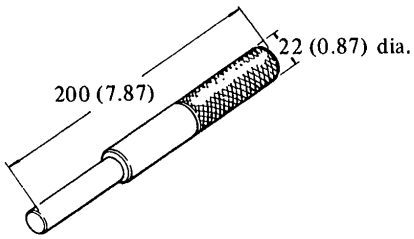 SE433	S30	Fig. EM-111

Downloaded from www.Manualslib.com manuals search engine

SERVICE MANUAL

DATSUN 280Z
MODEL S30 SERIES

NISSAN

NISSAN MOTOR CO., LTD.
TOKYO, JAPAN

SECTION EL

ENGINE LUBRICATION SYSTEM

EL

ENGINE LUBRICATION SYSTEM ..... EL- 2

SERVICE DATA AND SPECIFICATIONS ..... EL- 5

TROUBLE DIAGNOSES AND CORRECTIONS ..... EL- 5

SPECIAL SERVICE TOOL ..... EL- 6

Downloaded from www.Manualslib.com manuals search engine

ENGINE LUBRICATION SYSTEM

CONTENTS

LUBRICATION CIRCUIT EL-2
OIL PUMP EL-2
REMOVAL EL-2
INSTALLATION EL-2
DISASSEMBLY AND ASSEMBLY EL-3
INSPECTION EL-3
OIL PRESSURE REGULATOR VALVE EL-3
OIL FILTER EL-4
OIL PRESSURE RELIEF VALVE EL-4
OIL PRESSURE WARNING SWITCH EL-4

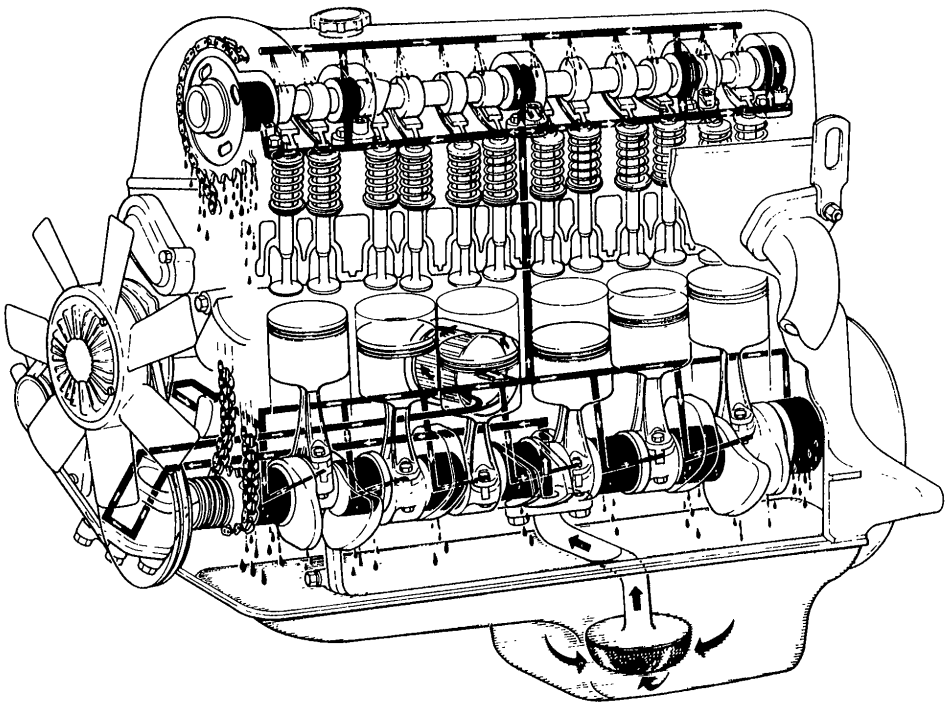

EL058

Fig. EL-1 Lubricating circuit

LUBRICATION CIRCUIT

The pressure lubrication of the engine is accomplished by a trochoid-type oil pump. This pump draws the oil through the oil strainer into the pump housing and then forces it through the full flow type oil filter into the main oil gallery. Part of the oil is supplied to all crankshaft bearings, the chain tensioner and the timing chain. Oil supplied to the crankshaft bearings is fed to the connecting rod bearings through the drilled passages in the crankshaft. Oil injected from jet holes on the connecting rods lubricates the cylinder walls and piston pins. The other part of the oil is brought to the oil gallery in the cylinder head to provide lubrication of the valve mechanism and timing chain as shown in Figure EL-2.

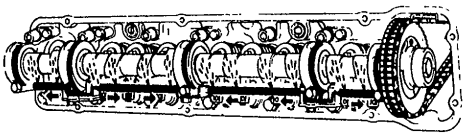

EL031

Fig. EL-2 Lubricating cylinder head

From this gallery, oil holes go directly to all camshaft bearings through cam brackets.

Oil supplied through the No. 2 and No. 4 camshaft bearings is then fed to the rocker arm, valve and cam lobe through the oil cam tube.

OIL PUMP

The oil pump is located in the bottom of the front cover attached by four bolts and driven by the oil pump drive spindle assembly which is driven by the helical gear on the crankshaft.

The oil pump assembly consists of an oil pressure regulator valve and outer and inner rotors.

The spring-loaded oil pressure regulator valve limits the oil pressure to a maximum of 5.6 kg/cm^2 (80 psi) at 3,000 rpm.

REMOVAL

1. Remove distributor.
2. Drain engine oil.
3. Remove oil pump body with drive spindle assembly.

INSTALLATION

1. Before installing oil pump in engine, turn crankshaft so that No. 1 piston is at T.D.C.
2. Fill pump housing with engine oil, then align punch mark of drive spindle with hole in oil pump as shown in Figure EL-3.

Downloaded from www.Manualslib.com manuals search engine

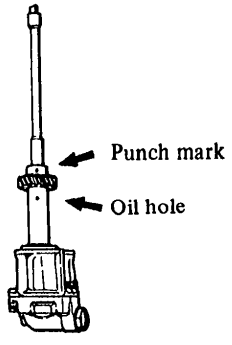

EL009

Fig. EL-3 Aligning punch mark and oil hole

3. Using a new gasket, install oil pump and drive spindle assembly so that the projection on its top is located in an 11 : 25 a.m. position. At this time, the smaller bow-shape will be placed toward the front as shown in Figure EL-4.

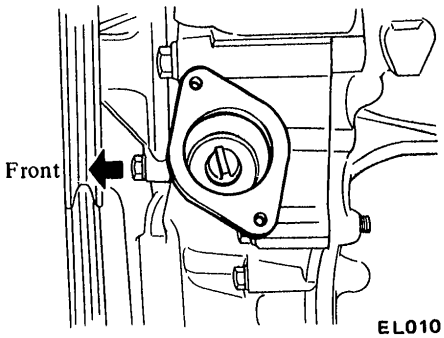

EL010

Fig. EL-4 Setting drive spindle

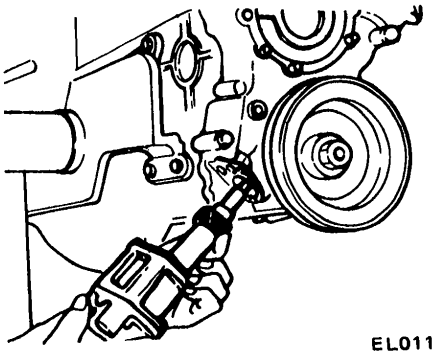

EL011

Fig. EL-5 Installing oil pump

Ascertain whether the engagement is in order or not by checking the top of spindle through distributor fitting hole.

4. Tighten bolts securing oil pump to front cover.

DISASSEMBLY AND ASSEMBLY

1. Remove pump cover attaching bolts, pump cover and oil pump gasket, and slide out pump rotors.

2. Remove regulator cap, regulator valve and spring.

3. Assemble oil pump in reverse order of disassembly.

Note: The mark dotted on outer and inner rotor should face to oil pump body.

1 Oil pump body
2 Outer rotor
3 Inner rotor and shaft
4 Gasket
5 Oil pump cover
6 Regulator valve
7 Regulator spring

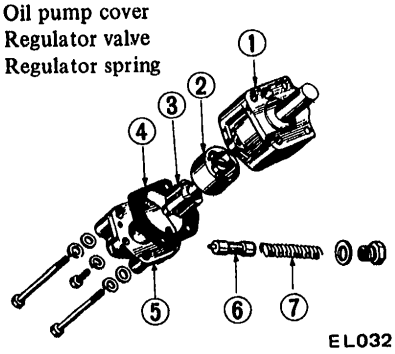

EL032

Fig. EL-6 Oil pump

INSPECTION

Wash all parts in cleaning solvent and dry with compressed air.

Use a brush to clean the inside of pump housing and pressure regulator valve chamber. Be sure all dirt and metal particles are removed.

1. Inspect pump body and cover for cracks or excessive wear.

2. Inspect pump rotors for damage or excessive wear.

3. Check inner rotor shaft for looseness in pump body.

4. Inspect regulator valve for wear or scoring.

5. Check regulator spring to see that it is not worn on its side or collapsed.

6. Using a feeler gauge, check tip clearance ② and outer rotor-to-body clearance ① shown in Figure EL-7.

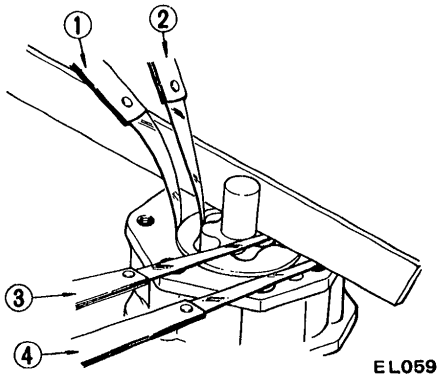

EL059

1 Outer rotor to body clearance
2 Tip clearance
3 Gap between rotor and straight edge
4 Gap between body and straight edge

Fig. EL-7 Checking rotor clearances

7. Place a straight edge across the face of pump and depress it slightly as shown in Figure EL-7. Check gap ④ between body and straight edge or gap ③ between rotor and straight edge.

The gap should be –0.03 to 0.06 mm (–0.0012 to 0.0024 in), then rotor side clearance (rotor to bottom cover clearance) with gasket should satisfy the specifications.

	Standard	Wear limit
Rotor side clearance (rotor to bottom cover) mm (in)	0.04 to 0.08 (0.0016 to 0.0032)	0.20 (0.0079)
Rotor tip clearance ② mm (in)	Less than 0.12 (0.0047)	0.20 (0.0079)
Outer rotor to body clearance ① mm (in)	0.15 to 0.21 (0.0059 to 0.0083)	0.5 (0.0197)

Note: Pump rotors and body are not serviced separately. If the oil pump body is damaged or worn, replace the entire oil pump assembly.

OIL PRESSURE REGULATOR VALVE

The oil pressure regulator valve is

Downloaded from www.Manualslib.com manuals search engine

not adjustable. At the released position, the valve permits the oil to by-pass through the passage in the pump cover to the inlet side of the pump. Check regulator valve spring to ensure that spring tension is correct.

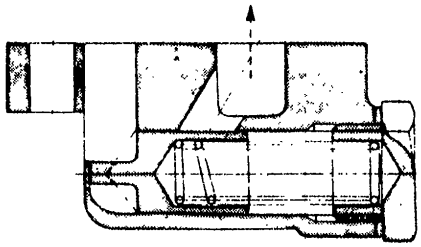

EL014

Fig. EL-8 Regulator valve

Specifications

Regulator valve spring		
Free length	mm (in)	52.5 (2.067)
Installed length/load	mm/kg (in/lb)	34.8/7.9 to 8.7 (1.370/17.4 to 19.2)

OIL FILTER

The oil filter is of a cartridge type. The oil filter element should be replaced periodically with the use of Oil Filter Wrench ST19320000. See Figure EL-9.

When removing an oil filter, loosen it after stopping engine about several minutes to drain out the oil from oil filter to oil pan.

When installing an oil filter, fasten it on cylinder block by hand.

Note: Do not overtighten filter, or oil leakage may occur.

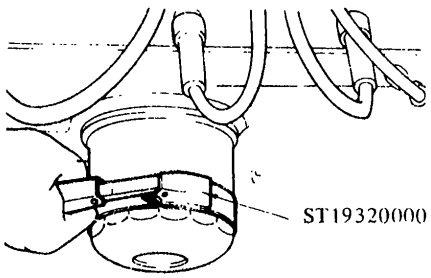

EL015

Fig. EL-9 Removing oil filter

OIL PRESSURE RELIEF VALVE

The relief valve located at the center portion securing oil filter in the cylinder block by-passes the oil into the main gallery when the oil filter element is excessively clogged.

With oil filter removed, check valve unit for operation. Inspect for a cracked or broken valve. If replacement is necessary, remove valve by prying it out with a screwdriver. Install a new valve in place by tapping it in.

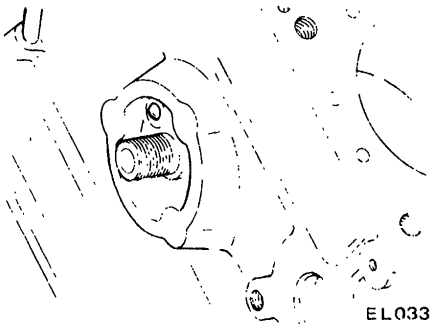

EL033

Fig. EL-10 Relief valve

OIL PRESSURE WARNING SWITCH

The oil warning switch is located on right hand center of cylinder block and wired to an indicator lamp in the instrument cluster.

The warning light glows whenever the oil pressure drops below 0.2 to 0.4 kg/cm^2 (2.8 to 5.7 psi).

Prior to installing a switch to cylinder block, be sure to apply a conductive sealer to threads of new switch.

Downloaded from www.Manualslib.com manuals search engine

SERVICE DATA AND SPECIFICATIONS

Oil pump

		Standard	Wear limit
Rotor side clearance (rotor to bottom cover)	mm (in)	0.04 to 0.08 (0.0016 to 0.0031)	0.20 (0.0079)
Rotor tip clearance	mm (in)	less than 0.12 (0.0047)	0.20 (0.0079)
Outer rotor to body clearance	mm (in)	0.15 to 0.21 (0.0059 to 0.0083)	0.5 (0.0197)

Oil pressure regulator valve

Regulator valve spring:		
Free length	mm (in)	52.5 (2.067)
Installed length/load	mm/kg (in/lb)	34.8/7.9 to 8.7 (1.370/17.4 to 19.2)

Tightening torque:

Oil pump mounting bolts	kg-m (ft-lb)	1.1 to 1.5 (8.0 to 10.8)
Oil pump cover bolts	kg-m (ft-lb)	0.7 to 1.0 (5.1 to 7.2)
Regulator valve cap nut	kg-m (ft-lb)	4 to 5 (29 to 36)

TROUBLE DIAGNOSES AND CORRECTIONS

Condition	Probable causes	Corrective actions
Oil leakage	Damaged or cracked body cover.	Replace.
	Oil leakage from gasket.	Replace.
	Oil leakage from regulator valve.	Tighten or replace.
	Oil leakage from blind plug.	Replace.
Decreased oil pressure	Leak of oil in engine oil pan.	Correct.
	Dirty oil strainer.	Clean or replace.
	Damaged or worn pump rotors.	Replace.
	Inoperative regulator.	Replace.
	Use of poor quality engine oil.	Replace.
Warning light remains "on" engine running	Decreased oil pressure.	Previously mentioned.
	Oil pressure switch unserviceable.	Replace.
	Electrical fault.	Check circuit.
Noise	Excessive backlash in pump rotors.	Replace.

Downloaded from www.Manualslib.com manuals search engine

SPECIAL SERVICE TOOL

No.	Tool number & tool name	Description Unit: mm (in)	For use on	Reference page or Figure No.
1.	ST19320000 Oil filter wrench	This tool is used to take oil filter out of place. In tightening the filter, do not use this tool to prevent excess tightening. 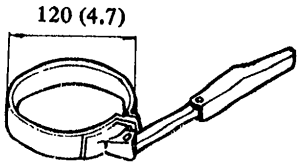 SE197	All models	Fig. EL-9

Downloaded from www.Manualslib.com manuals search engine

SERVICE MANUAL

DATSUN 280Z
MODEL S30 SERIES

NISSAN

NISSAN MOTOR CO., LTD.
TOKYO, JAPAN

SECTION CO

COOLING SYSTEM

CO

COOLING SYSTEM ..... CO- 2
SPECIFICATIONS ..... CO- 7
TROUBLE DIAGNOSES AND CORRECTIONS ..... CO- 8

Downloaded from www.Manualslib.com manuals search engine

COOLING SYSTEM

CONTENTS

DESCRIPTION CO-2
COOLANT LEVEL CO-3
DRAINING AND FLUSHING THE COOLING SYSTEM CO-3
WATER PUMP CO-3
REMOVAL AND INSTALLATION CO-3
DISASSEMBLY CO-3
INSPECTION AND ADJUSTMENT CO-3
TEM-COUPLING CO-4
INSPECTION CO-5
THERMOSTAT CO-5
REMOVAL AND INSTALLATION CO-5
INSPECTION CO-5
RADIATOR CO-5
REMOVAL AND INSTALLATION CO-6
INSPECTION CO-6
RADIATOR RESERVOIR TANK CO-6
OPERATION CO-6
INSPECTION CO-7
REMOVAL AND INSTALLATION CO-7

DESCRIPTION

The cooling system is of the conventional pressure type. A centrifugal pump built in the front cover of the engine serves to circulate the coolant. The pressure type radiator filler cap installed on the radiator operates the cooling system at higher than atmospheric pressure. The higher pressure raises the boiling point of the coolant and increases the cooling efficiency of the radiator. When the thermostat is closed, the coolant remains in the cylinder head and block for swift warming up of the engine. After it reaches the normal operating temperature, the coolant circulates through the radiator.

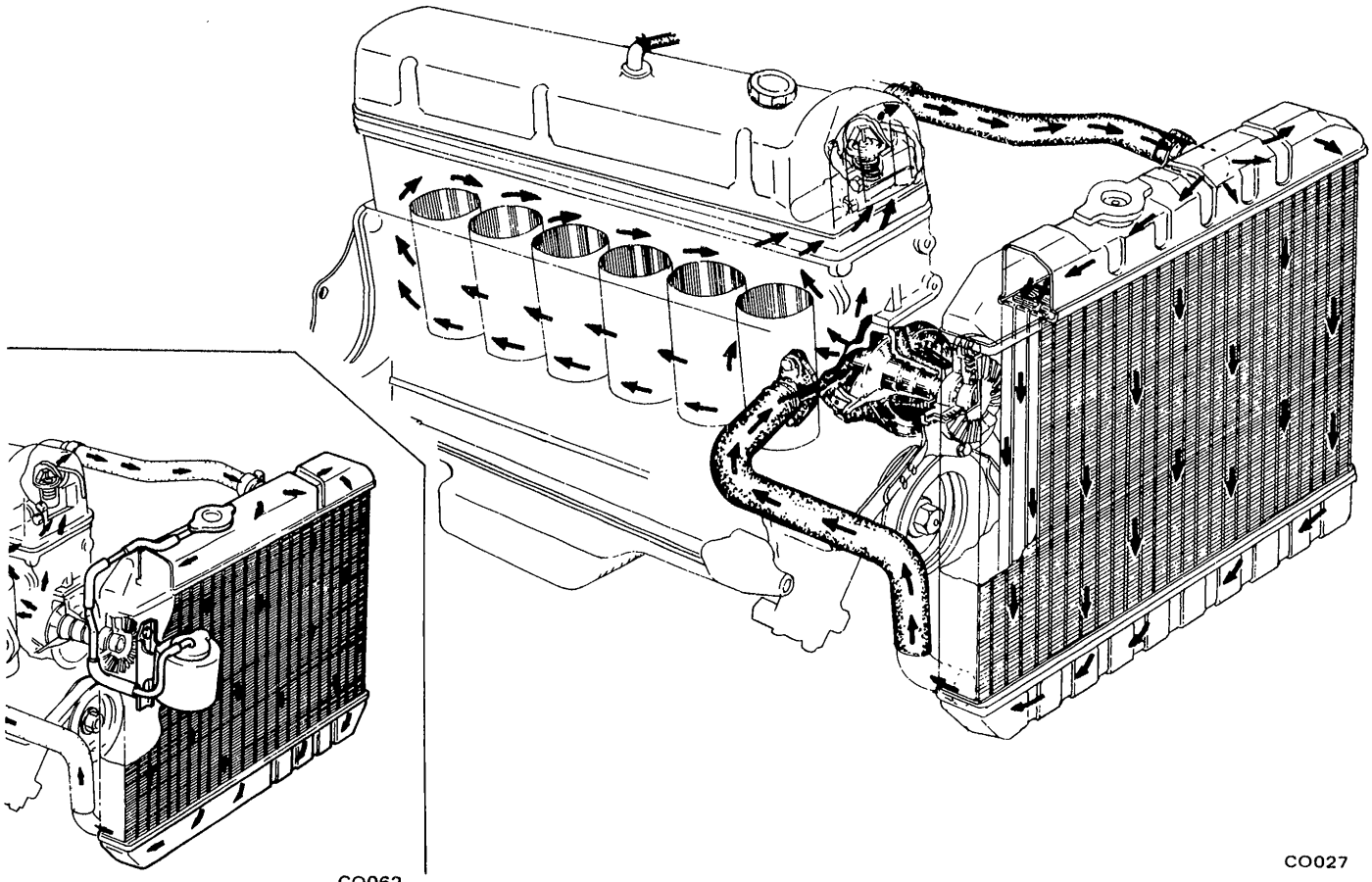

Models equipped with radiator reservoir tank

Fig. CO-1 Cooling system

Downloaded from www.Manualslib.com manuals search engine

COOLANT LEVEL

The coolant level should be checked and maintained as follows:

About 25 mm (1 in) below the bottom of filler neck.

For models equipped with reservoir tank, see page CO-7, "INSPECTION" of radiator reservoir tank.

CAUTION: **To avoid serious personal injury, never remove radiator cap quickly when engine is hot. Sudden release of cooling system pressure is very dangerous.**
If it is necessary to remove radiator cap when radiator is hot, turn cap slowly counterclockwise to the first stop. After all pressure in the cooling system is released, turn cap passing the stop and remove it.

DRAINING AND FLUSHING THE COOLING SYSTEM

To drain the cooling system remove radiator cap, release drain cock at the bottom of radiator and drain plug on the side of cylinder block. If heater system is installed, set heater temperature control valve to open position. After the coolant is drained completely, close drain cock and plug and refill the system with clean soft water.

WATER PUMP

The water pump is of a centrifugal type, which is mounted on the engine front cover. The fan and pulley are bolted at the pulley hub. The pump shaft is supported by a double row of ball bearings press fit in an aluminum die cast pump body. The bearings are permanently lubricated and sealed to prevent loss of lubricant and entry of dirt.

The pump contains an impeller that turns on a steel shaft which rotates in the ball bearings, and the volute chamber is built in the front cover assembly. The inlet of the pump is connected to the radiator's lower tank by a hose.

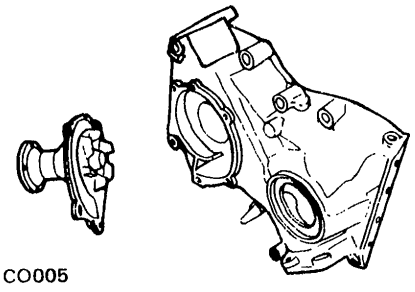

Fig. CO-2 Water pump and front cover

REMOVAL AND INSTALLATION

Removal

1. Drain coolant into a clean container.
2. Loosen bolts retaining fan shroud to radiator and remove shroud.
3. Loosen belt, then remove fan blade and pulley from hub.
4. Remove pump assembly and gasket from front cover.

Note: **Prior to removing water pump, clean the cooling system with suitable cleaner.**

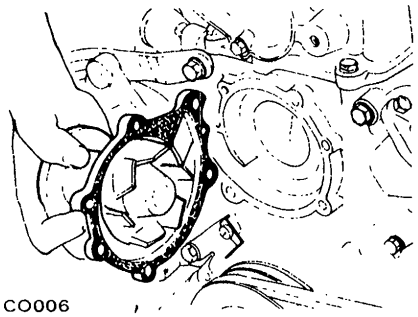

Fig. CO-3 Removing water pump

Installation

1. Be sure to clean the gasket surfaces in contact with pump and front cover. Always use new gaskets when installing pump assembly. Be sure to tighten bolts.
2. Fill cooling system and check for leaks at pump.
3. Install fan pulley and fan blade, and tighten fixing bolts securely. Install belt and adjust for proper tension.

DISASSEMBLY

Water pump is made of aluminum and its bearing outer race is of a press fit type. For this reason, water pump should not be disassembled.

INSPECTION AND ADJUSTMENT

Inspection

Inspect pump assembly for the following conditions and replace if necessary.
1. Badly rusted or corroded body assembly and vane.
2. Excessive end play or roughness of bearings in operation.

Note: **If excessive mechanical seal squeak occurs when engine is running, use suitable water pump seal lubricant to prevent squeak.**

Adjustment

Fan belt should be properly adjusted at all times. A tight belt causes wear of alternator and water pump bearings. A loose belt brings about improper cooling fan, water pump, and alternator operation.

Check the belt slack between alternator and fan pulley by force of 10 kg (22 lb).

Slackness of fan belt:
8 to 12 mm
(0.315 to 0.472 in)

If adjustment is necessary, loosen bolt retaining alternator adjusting bar to alternator. Move alternator toward or away from engine until the correct tension is obtained.

Downloaded from www.Manualslib.com manuals search engine

TEM-COUPLING

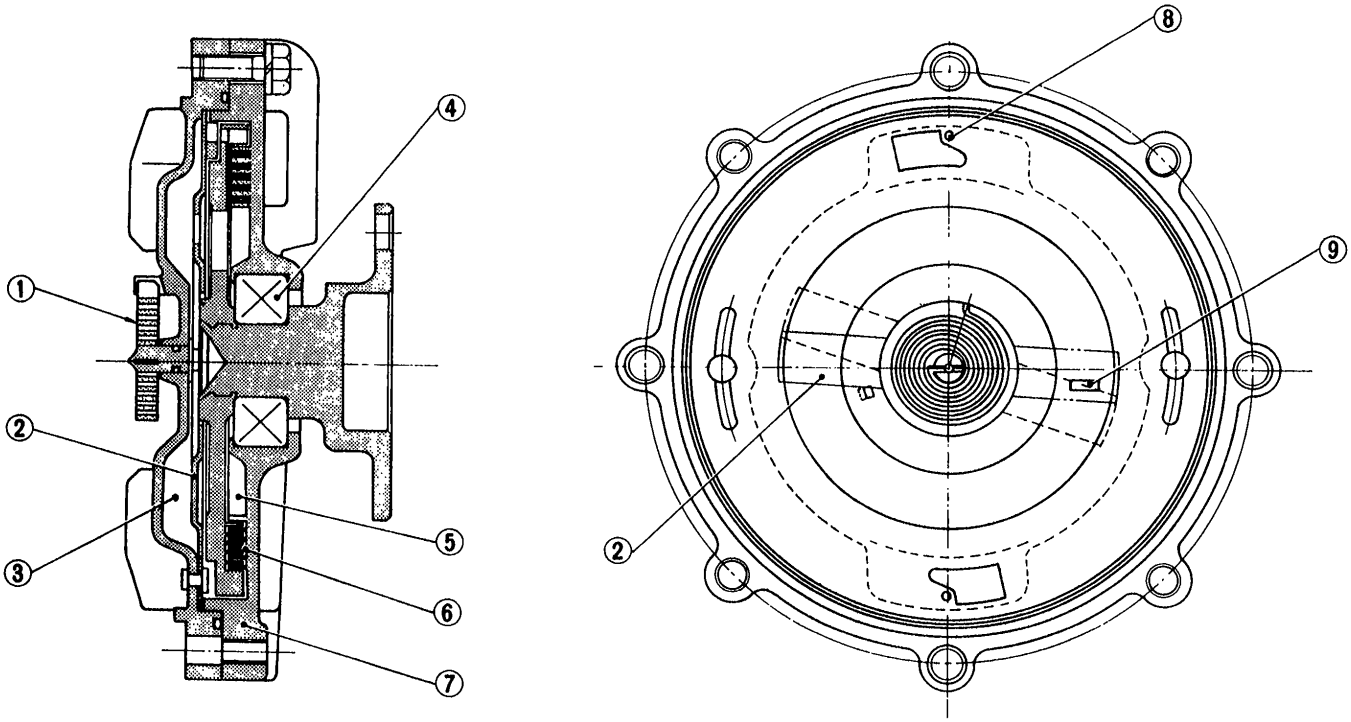

1 Bi-metal thermostat
2 Slide valve
3 Reserve chamber for "OFF"
4 Bearing
5 Driving chamber
6 Coupling part (labyrinth)
7 Driven part
8 Pump unit oil outlet
9 Oil inlet

CO078

Fig. CO-4 Cross-sectional view of Tem-coupling

Tem-coupling is a type of fan coupling which is provided with a temperature control system.

The conventional coupling always slips the fan at a high speed under a constant ratio regardless of the engine cooling requirement.

The slipping ratio of the Tem-coupling, however, is properly changed with the cooling requirement.

"ON" denotes that cooling is required and the fan operates up to about 2,450 rpm. When high cooling is not required (during cold season, with the engine warmed up, etc.), the operation is placed under "OFF" condition and the fan slips at about 1,600 rpm.

The coiled bimetal thermostat installed on the front center portion of the Tem-coupling detects temperature of air passing through the radiator (The air temperature is directly relative to the engine coolant temperature.) and the inside slide valve is opened or closed as required, and thus, the ON-OFF control is performed. When the air temperature rises, the bimetal is expanded, and the valve is opened, silicon oil is forwarded to the groove that transmits torque, and the system is placed under "ON" condition.

When the valve closes, silicon oil is not supplied to the groove, oil in the groove is accumulated on the Tem-coupling periphery due to the centrifugal force, and led into the reserve chamber. Now, oil is eliminated from the groove, and the system is placed under "OFF" condition.

With this system, when fan cooling is not required, the output loss is minimized and noise can be far reduced.

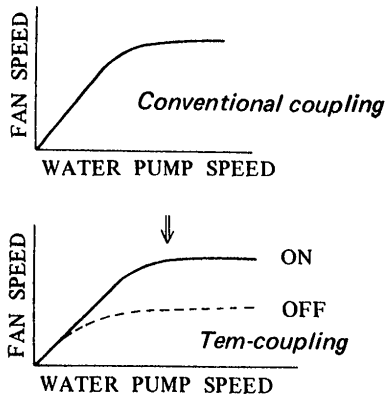

CO029

Fig. CO-5 Characteristic of Tem-coupling

Downloaded from www.Manualslib.com manuals search engine

INSPECTION

Check Tem-coupling for oil leakage or bend of bimetal.

If the above symptoms are found, replace it with a new one as an assembly.

THERMOSTAT

A wax pellet type thermostat is mounted in the thermostat housing at the cylinder head water outlet.

The founction of the thermostat is to control the flow of coolant, facilitating fast engine warm up and regulating coolant temperature. The thermostat is designed to open and close at predetermined temperatures and if not operating properly should be removed and tested as described below.

REMOVAL AND INSTALLATION

1. Drain coolant partially.
2. Disconnect upper radiator hose at water outlet.
3. Loosen two securing nuts and remove water outlet, gasket, and thermostat from thermostat housing.
4. After checking thermostat, reinstall, replacing with a new housing gasket.
5. Reinstall water outlet and tighten securing nuts.
6. Replenish coolant and check for leaks.

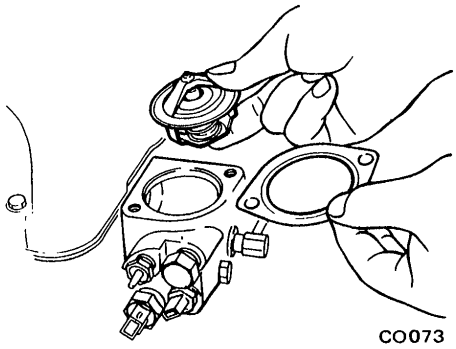

Fig. CO-6 Removing thermostat

INSPECTION

A sticking thermostat will prevent the cooling system from functioning properly. If the thermostat sticks in the open position, the engine warms up very slowly. If the thermostat sticks in the closed position, overheating will result. Therefore, the thermostat should be inspected to make sure that it is in good condition.

1. Submerge thermostat in hot water 5°C (9°F) above the temperature specified in the following table.
2. After preparing for the marked screwdriver at about 8 mm (0.315 in) from the tip, inspect the lift height of valve by inserting it.
3. Now, place thermostat in water 5°C (9°F) below the specified temperature.

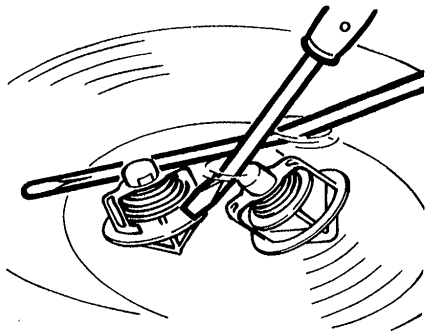

Fig. CO-7 Inspecting thermostat

If thermostat does not operate at the above specified temperature, it must be replaced because it cannot be repaired.

	Standard	For cold areas	For tropical areas
Valve opening temperature	82°C (180°F)	88°C (190°F)	76.5°C (170°F)
Max. valve lift	above 8 mm at 95°C (0.315 in at 203°F)	above 8 mm at 100°C (0.315 in at 212°F)	above 8 mm at 90°C (0.315 in at 194°F)

Note: It is necessary to check a new thermostat before installing it in the engine.

RADIATOR

The radiator is a conventional down flow type having top and bottom tanks to distribute the coolant flow uniformly through the vertical tube of radiator core. The radiator shroud improves fan performance (only for the model equipped with air conditioner).

The radiator filler cap is designed to maintain a pre-set pressure [0.9 kg/cm² 13 psi) above atmospheric pressure.

The relief valve consisting of a blow-off valve and a vacuum valve, helps to prevent the coolant from boiling by giving pressure to it. However, when the pressure is reduced below atmospheric pressure, the vacuum valve allows air to re-enter the radiator preventing the formation of a vacuum in the cooling system. The bottom tank on cars equipped with automatic transmission incorporates an oil cooler for the transmission fluid.

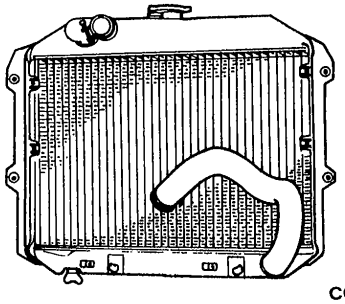

Fig. CO-8 Radiator for manual transmission

Downloaded from www.Manualslib.com manuals search engine

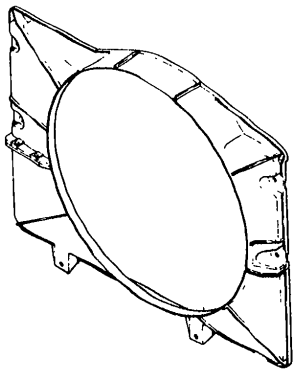

Fig. CO-9 Radiator shroud (for the model equipped with air conditioner)

REMOVAL AND INSTALLATION

1. Drain coolant into a clean container.
2. Disconnect radiator's upper and lower hoses.
3. Remove radiator lower shroud attaching bolts and then remove lower shroud downward (for the model equipped with air conditioner).
4. On a car with automatic transmission, disconnect cooler inlet and outlet lines from radiator.
5. Remove radiator retaining bolts and then remove radiator upward.

On a car with air conditioner, remove radiator along with upper shroud upward.

6. Install radiator in the reverse sequence of removal.

INSPECTION

Radiator cap should be checked for working pressure at regular tune up intervals. First, check rubber seal on cap for tears, cracks or deterioration after cleaning it. Then, install radiator cap on a tester. If cap does not hold or will not release at the specified pressure, replace cap.

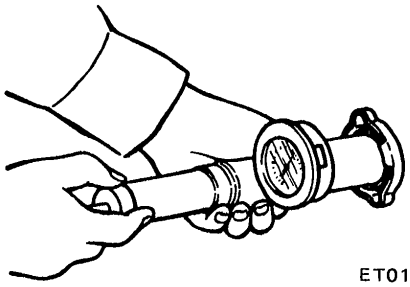

Fig. CO-10 Testing radiator cap

Also, inspect radiator for water leakage using cap tester and applying a pressure of 1.6 kg/cm^2 (22.8 psi).

If a defect is detected, repair or replace radiator.

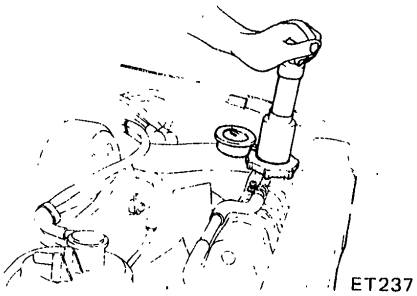

Fig. CO-11 Testing radiator pressure

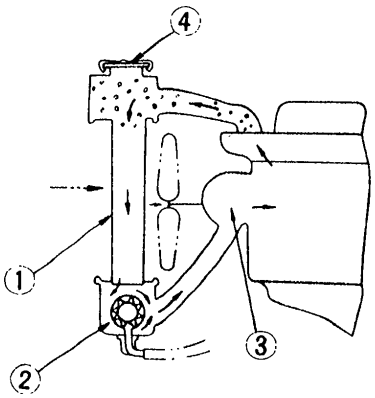

1 Radiator 3 Water pump
2 Oil cooler 4 Cap for water supply

CO038

Fig. CO-12 Structural view of cooling system

RADIATOR RESERVOIR TANK

OPERATION

The radiator reservoir tank is mounted to the right hand side core support through the bracket. When the coolant temperature in the radiator rises and pressure builds up to an extent, the pressure relief valve provided in the radiator cap opens to release excess coolant into the reservoir tank. When the coolant temperature lowers and pressure decreases in the radiator, the vacuum valve provided in the radiator cap opens to allow the coolant to re-enter the radiator.

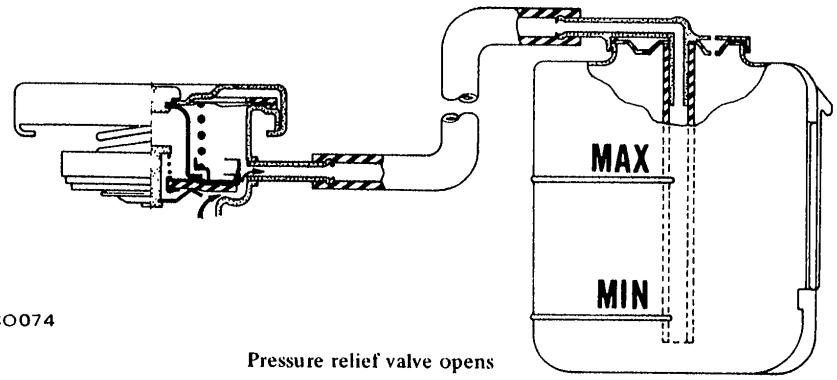

CO074

Pressure relief valve opens

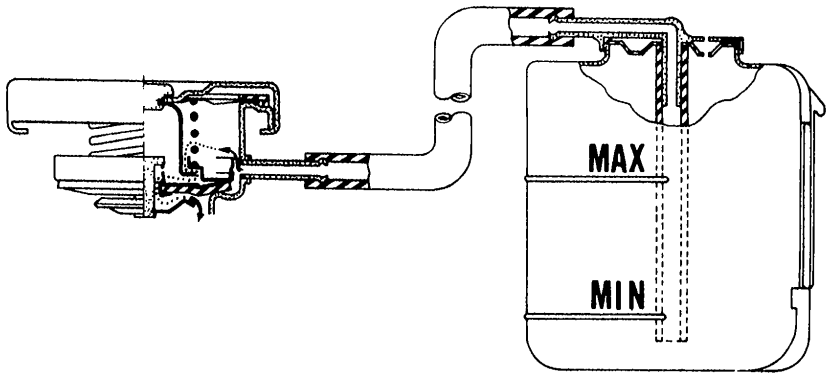

CO075

Vacuum valve opens

Fig. CO-13 Operation of reservoir tank

Downloaded from www.Manualslib.com manuals search engine

INSPECTION

Check the amount of coolant in the reservoir tank. If the coolant level is below the MIN. level, remove the reservoir tank filler cap and add enough coolant to reach MAX. level.

If the reservoir tank is empty, check the coolant level in the radiator. If the coolant in the radiator is insufficient, pour it into radiator up to the radiator cap and also pour it into the reservoir tank until MAX. level.

If the coolant in the reservoir tank decreases abnormally rapid, check for a leak in the cooling system.

REMOVAL AND INSTALLATION

Upper side of reservoir tank bracket is bolted to radiator core support together with radiator. Lower side is bolted to radiator core support with stud bolts.

Reservoir tank is only inserted to reservoir tank bracket and can be easily removed.

To install reservoir tank, reverse the order of removal.

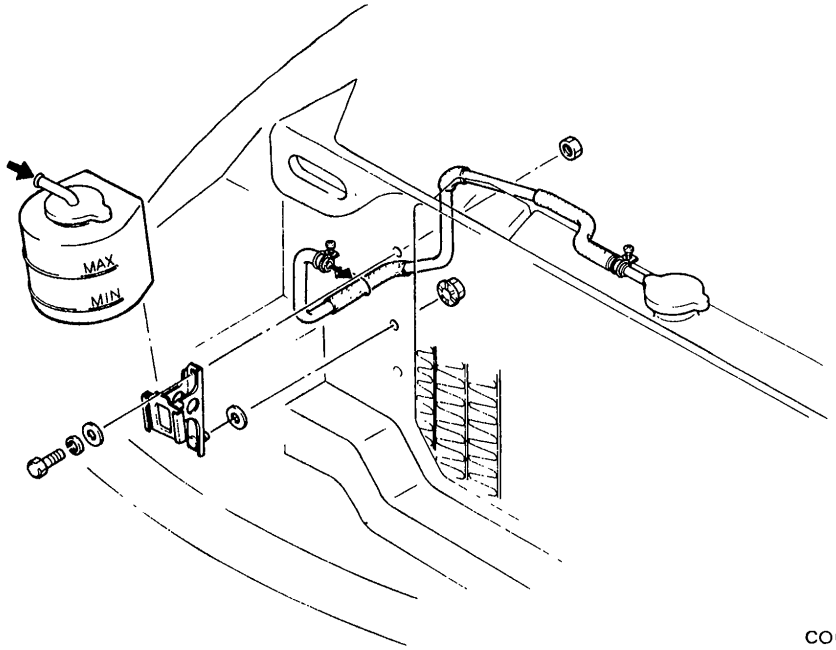

Fig. CO-14 Installing reservoir tank

SPECIFICATIONS

Engine		L28
Radiator		
Type		Corrugated fin and tube
Cap relief pressure	kg/cm^2 (psi)	0.9 (13)
Testing pressure	kg/cm^2 (psi)	1.6 (23)
Water capacity (including engine, heater and reservoir tank)	liter (U.S. qt, Imp. qt)	Manual transmission model: 10.3 (10 7/8, 9 1/8) Automatic transmission model: 10.1 (10 5/8, 8 7/8)
Fan		
Tem-patrol		Installed
No. of blades x outer diameter	mm (in)	8 x 410 (16.14)
Thermostat		

	Standard	For cold area	For tropical area
Valve opening temperature	82°C (180°F)	88°C (190°F)	76.5°C (170°F)
Max. valve lift	above 8 mm at 95°C (0.315 in at 203°F)	above 8 mm at 100°C (0.315 in at 212°F)	above 8 mm at 90°C (0.315 in at 194°F)

Downloaded from www.Manualslib.com manuals search engine

TROUBLE DIAGNOSES AND CORRECTIONS

Condition	Probable cause	Corrective action
Loss of water	Damaged radiator seams.	Repair.
	Leaks at heater connections or plugs.	Repair.
	Leak at water temperature gauge.	Tighten.
	Loose joints.	Tighten.
	Damaged cylinder head gasket.	Replace. Check engine oil for contamination and refill as necessary.
	Cracked cylinder block.	Replace. Check engine oil in crankcase for mixing with water by pulling oil level gauge.
	Cracked cylinder head.	Replace.
	Loose cylinder head bolts.	Tighten.
Poor circulation	Restriction in system.	Check hoses for crimps, and clear the system of rust and sludge by flushing radiator.
	Insufficient coolant.	Replenish.
	Inoperative water pump.	Replace.
	Loose fan belt.	Adjust.
	Inoperative thermostat.	Replace.
Corrosion	Excessive impurity in water.	Use soft, clean water. (rain water is satisfactory).
	Infrequent flushing and draining of system.	Cooling system should be drained and flushed thoroughly at least twice a year. Permanent antifreeze (Ethylene glycol base) can be used throughout the seasons of a year.
Overheating	Malfunctioning thermostat.	Replace.
	Radiator fin choked with mud, chaff, etc.	Clean out air passage thoroughly by using air pressure from engine side of radiator.
	Incorrect ignition and valve timing.	Adjust.
	Dirty oil and sludge in engine.	Refill.
	Inoperative water pump.	Replace.
	Loose fan belt.	Adjust.
	Restricted radiator.	Flush radiator.
	Inaccurate temperature gauge.	Replace.
	Impurity in water.	Use soft, clean water.
Overcooling	Malfunctioning thermostat.	Replace.
	Inaccurate temperature gauge.	Replace.

Downloaded from www.Manualslib.com manuals search engine

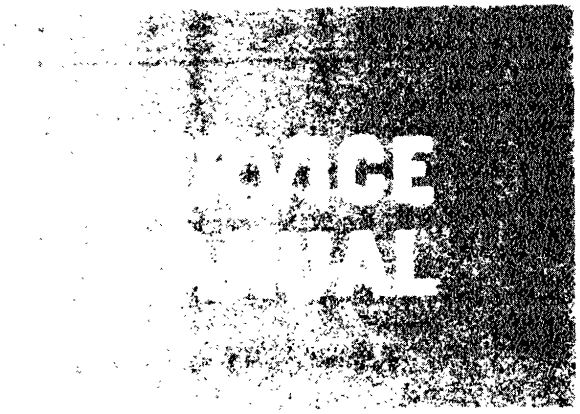

DATSUN 280Z
MODEL S30 SERIES

SECTION EF

ENGINE FUEL

EF

AIR CLEANER ..... EF- 2

ELECTRONIC FUEL INJECTION SYSTEM CONSTRUCTION AND FUNCTION ..... EF- 3

NISSAN

NISSAN MOTOR CO., LTD.
TOKYO, JAPAN

Downloaded from www.Manualslib.com manuals search engine

AIR CLEANER

The air cleaner, located between the front grille and the radiator, is secured to the radiator core support with four screws.

To prevent the water from the road into the air cleaner and to suck air from the engine compartment, an air duct is installed on the air cleaner.

The air cleaner element is a viscous paper type and requires no cleaning.

Note: Never attempt to clean the element with a brush or air blast.

REPLACEMENT

1. Unfasten air duct clamp and disengage air duct at air cleaner horn.
2. Remove three wing nuts on air cleaner.
3. Remove cover from air cleaner.

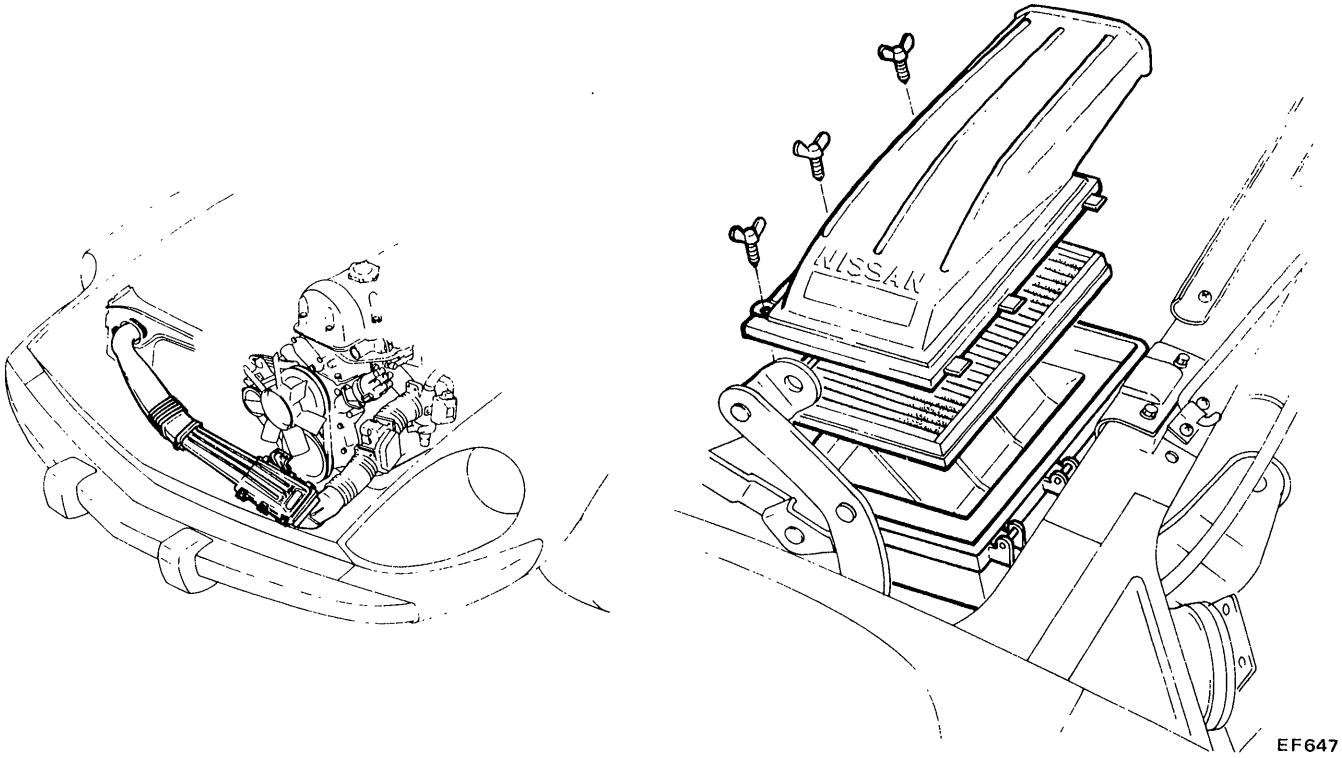

Fig. EF-1 Air cleaner element

4. Replace air cleaner element.
5. To install the air cleaner element, reverse the order of removal.

REMOVAL AND INSTALLATION

1. Remove air duct securing bolt from radiator core support reinforce.
2. Unfasten air duct clamp and disengage air duct at air cleaner horn.
3. Unfasten clamp securing air duct running between air flow meter and air cleaner, and disengage air duct at air cleaner.
4. Remove four screws (two on the upper and two on the lower sides) from radiator core support, and detach air cleaner assembly.
5. To install the air cleaner assembly, reverse the order of removal.

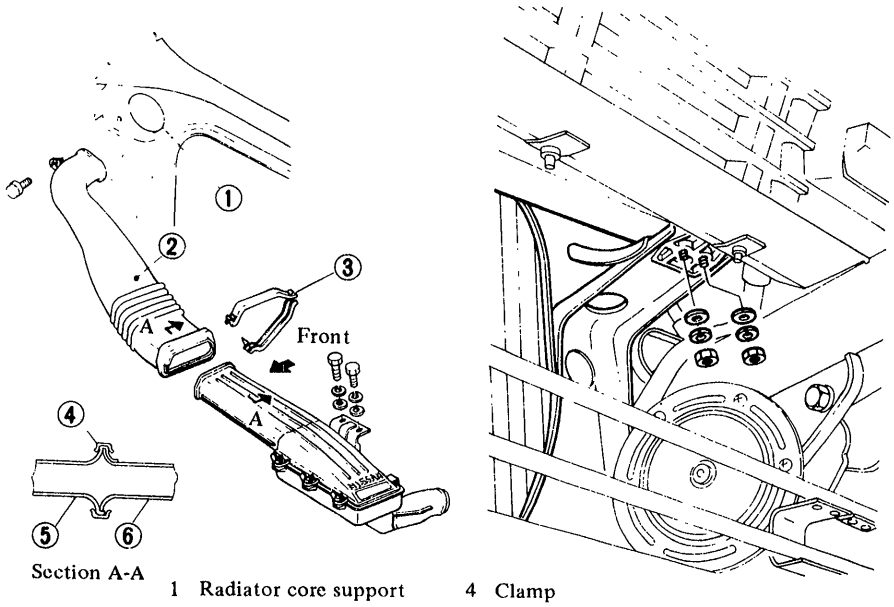

1 Radiator core support reinforce
2 Air duct
3 Air duct clamp
4 Clamp
5 Air duct
6 Air cleaner

Fig. EF-2 Air cleaner and air duct

Downloaded from www.Manualslib.com manuals search engine

ELECTRONIC FUEL INJECTION SYSTEM CONSTRUCTION AND FUNCTION

CONTENTS

I. FEATURES ..... EF- 3
II. ELECTRONIC FUEL INJECTION SYSTEM OPERATION ..... EF- 3
III. ELECTRONIC CONTROL SYSTEM ..... EF- 6
IV. FUEL INJECTION PULSE ..... EF- 8
V. ELECTRONIC FUEL INJECTION SYSTEM COMPARTMENT PARTS EF-12
TROUBLE DIAGNOSES EF-18
INSPECTION EF-20
DESCRIPTION EF-20
CONTINUITY CHECK EF-20
CHECKING FUNCTIONAL PARTS EF-52
REMOVAL AND INSTALLATION EF-61

I. FEATURES

The Electronic Fuel Injection System employs various types of sensors to convert the engine operating conditions into electronic signals. These signals are sent to the control unit where the optimum injector open-valve time period is computed according to the information stored in the memory for control of fuel injection quantity.

The electronic fuel injection system has the following features:

1. Improved exhaust emission

The electronic fuel injection system improves the transient response characteristics of the fuel system, permitting engine operation with lean mixture. This improves the exhaust emission performance of the engine.

2. Improved fuel economy

The electronic fuel injection system permits optimum mixture ratio combustion under all operating conditions; this results in improved fuel economy.

3. Driving performance

The electronic fuel injection system permits accurate mixture ratio control with respect to the cooling water temperature and intake air temperature, thereby improving the startability of the engine. With this electronic fuel injection system, the vehicle can be started immediately without any warming up even in cold weather.

- The electronic fuel injection system permits the supply of the optimum fuel quantity for each cylinder even at lower temperatures, thus greatly improving the startability of the engine.
- The electronic fuel injection system provides superior transient response characteristics for the engine without causing engine breathing or any other engine trouble.
- Since the fuel pressure is always maintained at a level of 2.55 kg/cm^2 (36.3 psi), no vapor lock occurs in this engine. This also gives the engine superior heat resistance.

The signal detector section of the electronic fuel injection system employs various types of sensors as indicated below.

(1) Air flow meter
(2) Ignition coil negative terminal revolution trigger signal
(3) Throttle valve switch
(4) Water temperature sensor
(5) Air temperature sensor
(6) Thermotime switch
(7) Starting switch
(8) Altitude switch (California models only)

The essential element of this electronic fuel injection system is the air flow meter which is mounted between the air cleaner and throttle chamber. It measures directly the quantity of intake air, and the injector open-valve time period is determined on the basis of the quantity of intake air required for one rotation of the engine.

Since this electronic fuel injection system directly measures the air flow rate, it is also called the "L-Jetronic system", the "L" being taken from the German "Luft" (air).

II. ELECTRONIC FUEL INJECTION SYSTEM OPERATION

The following Figure EF-3 is an outline of operation of each component of the electronic fuel injection system.

1. Fuel system

(1) Fuel flow

Fuel is sucked from the fuel tank into the fuel pump, from which it is discharged under pressure. As it flows through the mechanical fuel damper, pulsation in the fuel flow is damped. Then, the fuel is filtered in the fuel filter, goes through the fuel line, and is injected into the intake manifold cylinder branch from the injector.

Surplus fuel is led through the pressure regulator and is returned to the fuel tank. The pressure regulator controls the fuel pressure in such a manner that the pressure difference between the fuel pressure and the intake manifold vacuum is always 2.55 kg/cm^2 (36.3 psi). During starting operation of the engine when the cooling water temperature is below the specification, the cold start valve is actuated by the thermotime switch to increase the quantity of fuel.

Note: For the specified temperature of cooling water, see the "Thermotime Switch" on page EF-13.

(2) Fuel injection system

The fuel injection system provides simultaneous injection of fuel into the intake manifold for all cylinders. Injection of fuel occurs at each rotation of the engine, and the injected amount of fuel per injection is half the quantity required for one cycle operation of the engine. The ignition signal of the ignition coil is utilized for correct injection of fuel. In this case, the

Downloaded from www.Manualslib.com manuals search engine

signal from the ignition coil does not specify the timing for injection. It specifies the frequency of injections only, since the injection timing is always set to be constant.

2. Air flow system

Intake air from the air cleaner is metered at the air flow meter, flows through the throttle chamber and into the intake manifold, and then flows through each intake manifold branch into the cylinder. Air flow during driving is controlled by the throttle valve located in the throttle chamber. During idling operation, the throttle valve is in the almost closed position, and the air is led through the bypass port mounted to the throttle chamber. In this case, the quantity of suction air is adjusted by means of the idle speed adjusting screw. During warming-up operation, the air flow is bypassed through the air regulator to increase engine rpm.

Downloaded from www.Manualslib.com manuals search engine

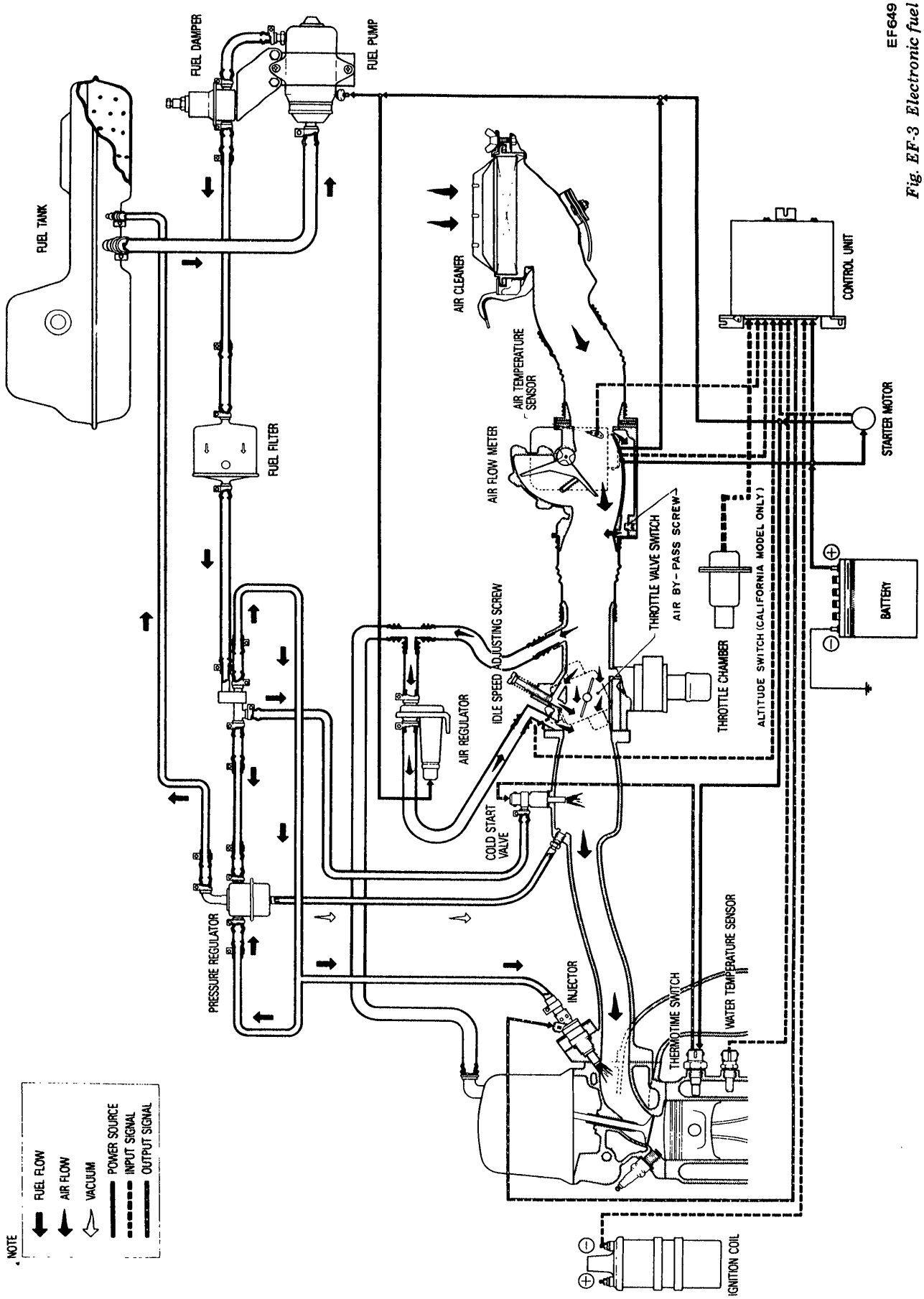

EF649

Fig. EF-3 Electronic fuel injection system

Downloaded from www.Manualslib.com manuals search engine

III. ELECTRONIC CONTROL SYSTEM

(1) Input signal of control unit

An electrical signal from each sensor is introduced into the control unit for computation. The open-valve time period of the injector is controlled by the duration of the pulse computed in the control unit.

Input signals to the control unit are as follows:

Input	Sensor	Item to be monitored
A	Air flow meter	Quantity of intake air
B	Ignition coil negative terminal	Engine rpm
C	Throttle valve switch	Opening of throttle valve (Correction of "idle" & "full" enrichment, "after idle" enrichment at low water temperature, and fuel cutting operation during coasting)
D	Water temperature sensor	Temperature of cooling water (Correction of "water temperature", "after start" and "after idle" enrichment)
E	Air temperature sensor	Temperature of intake air (Correction of "intake air temperature" enrichment)
F	Starting switch	Starting operation (Correction of "start" enrichment and "after start" enrichment)
G	Altitude switch (California models only)	Atmospheric pressure (Altitude compensation; Correction of air-fuel mixture ratio at high altitude)

Input signals to the control unit.

(2) Output signal

H: Output of control unit open-valve pulse signal from control unit to injector.

I: Signal from thermotime switch to cold start valve.

When the cooling water temperature is lower than the specification*, the bimetal contact in the thermotime switch remains in the ON position. At this switch position, if the ignition switch is turned to the START position, electric current is supplied from the battery for operation of the cold start valve. When the cooling water temperature is above the specification, the bimetal contact is in the OFF position. In this case, even if the ignition switch is turned to the START position, the cold start valve will not be actuated.

Asterisk(*): For the specified temperature of cooling water, see the "Thermotime Switch" on page EF-13.

(3) Battery voltage

Battery voltage is applied to the solid line in Figure EF-4.

Downloaded from www.Manualslib.com manuals search engine

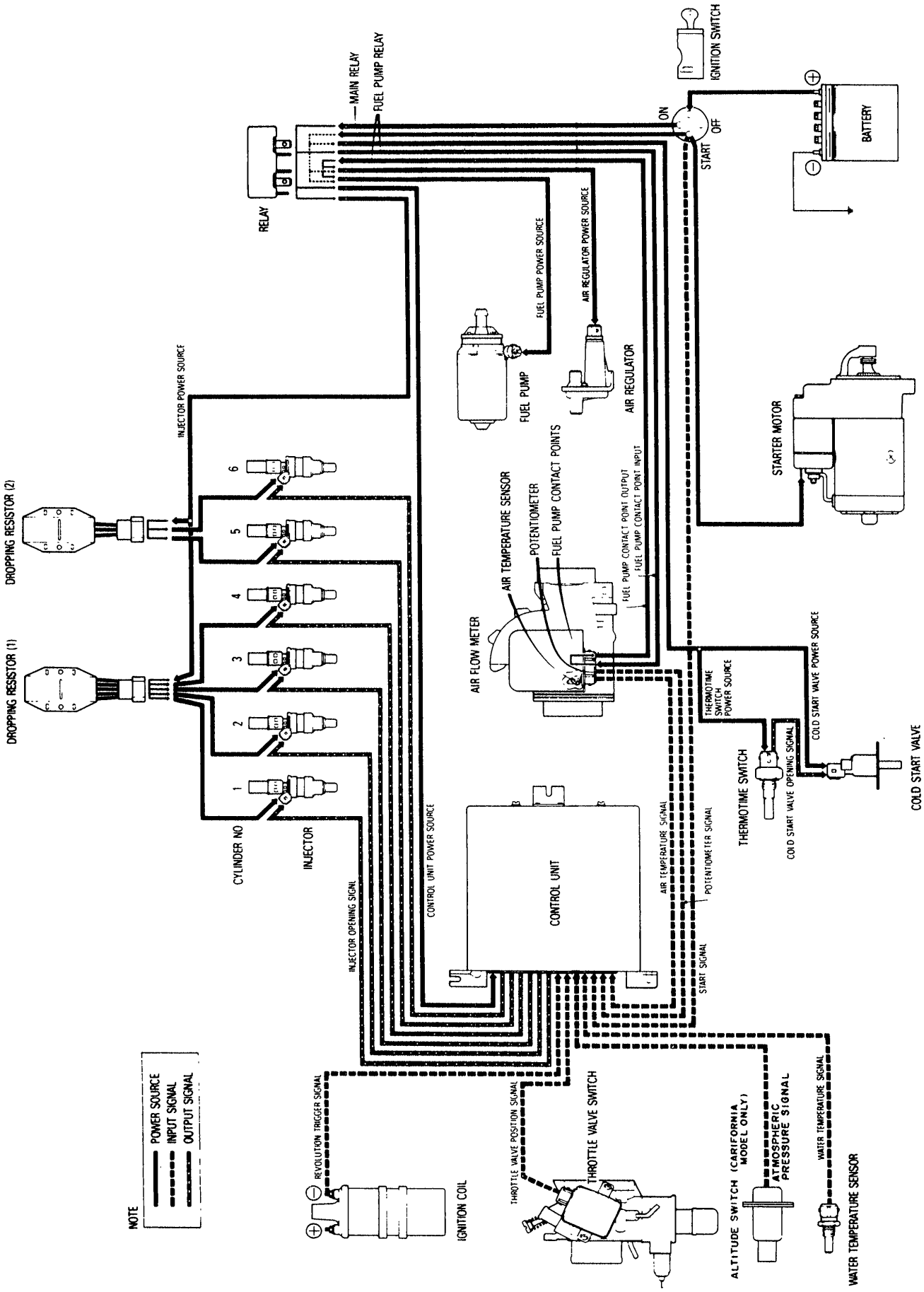

Fig. EF-4 Electronic control signal

Downloaded from www.Manualslib.com manuals search engine

IV. FUEL INJECTION PULSE

1. Generation of injection pulse in control unit

Figure EF-5 shows the control unit block diagram. The function of major elements in the control unit is described as follows:

(1) IC_1

Upon receiving revolution trigger signal ① from the ignition coil negative terminal, the IC_1 carries out wave form shaping ② and frequency conversion ③ operation and issues injection timing signal for each rotation of the engine.

(2) IC_2

Upon receiving the timing signal (engine rpm signal) from the IC_1 and the signal (intake air flow signal) from the air flow meter, the IC_2 computes the base pulse Tp utilizing the charge-discharge characteristics of condenser.

The IC_2 also corrects the "start" enrichment, using signal from the starter, and the air-fuel mixture ratio at "high altitude", using the signal from the altitude switch.

(3) IC_3

In the IC_3 enrichment are added to the base pulse Tp determined in the IC_2 depending on the signals sent from the sensors. The input for the multi-vibrator ⑤ includes the base pulse (Tp), water temperature signal, intake air temperature signal, throttle valve switch signal and starting switch signal, and the output is a corrected pulse (Tq) of the base pulse (Tp). The multi-vibrator ⑥ issues the voltage correction pulse (Ts) which corrects delay in the mechanical response of the injector. The voltage correction pulse (Ts) is determined by the battery voltage signal. In the logic circuit of the IC_3, the base pulse (Tp), correction pulse (Tq) and voltage correction pulse (Ts) are combined to form a summation pulse (Tg = Tp + Tq + Ts), which in turn is sent to the power amplifier in the next stage.

(4) Power amplifier

The power amplifier amplifies the summation pulse (Tg) generated in the IC_3, and sends it to the injector. The actual open-valve time period of the injector is "Tg – Ts = Tp + Tq", since the delay in mechanical response (Ts) is inherent in the injector operation. This actual open-valve time period is called the "effective injection pulse (Te = Tp + Tq)".

Downloaded from www.Manualslib.com manuals search engine

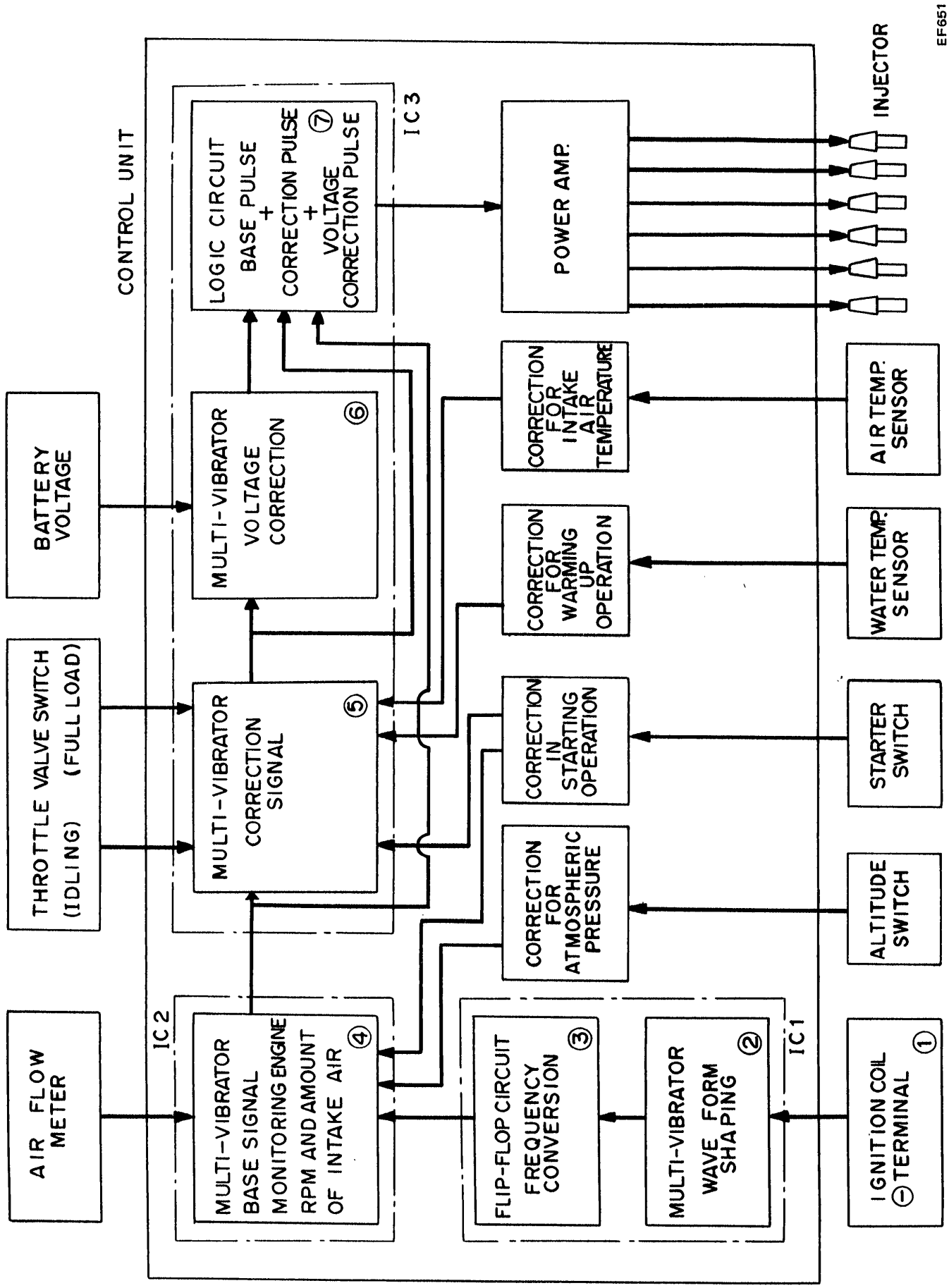

Fig. EF-5 Control unit block diagram

Downloaded from www.Manualslib.com manuals search engine

2. Correction of fuel enrichment

Figure EF-8 shows the model diagram of fuel enrichment correction.

(1) Enrichment in starting, idling and driving operations.

1) "Cold start valve" enrichment

The cold start valve operates when the starting switch and thermotime switch have been turned ON, and injects fuel into the intake manifold.

2) "Idle" enrichment

When the engine is idling, that is, when the accelerator pedal is not depressed, the idling switch directly coupled to the throttle valve is ON to provide additional fuel injection.

3) "Start" enrichment

When the starting switch is ON during cranking operation, a constant amount of fuel is increased irrespective of the cooling water temperature.

4) "After start" enrichment

When the starting switch is turned OFF after cranking operation, the "start" enrichment becomes zero. The "after start" enrichment is provided to compensate for this sudden decrease in fuel quantity. The "after start" enrichment decreases gradually as time passes, finally becoming zero.

5) "After idle" enrichment

The "after idle" enrichment provides smooth acceleration when the accelerator pedal is depressed to start the vehicle. This enrichment is effective only in cold weather and attenuated in a short period of time.

6) "Full" enrichment

The "full" enrichment provides smooth full throttle driving performance when the throttle valve opening is more than 34°. With this enrichment, about 27% of fuel is increased from the level determined by the base pulse.

(2) Correction by cooling water temperature.

Fuel is increased according to the cooling water temperature monitored by the cooling water temperature sensor. The increased amount of fuel is constant when the cooling water temperature is above 70°C (158°F).

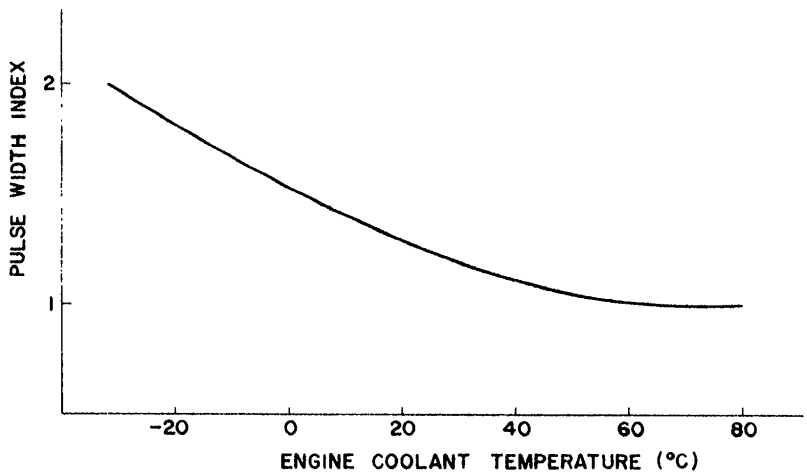

EF345

Fig. EF-6 Correction by cooling water temperature

(3) Correction by intake air temperature.

Fuel injection is increased according to the intake air temperature monitored by the intake air temperature sensor. The increased amount of fuel is constant when the intake air temperature is above 20°C (68°F).

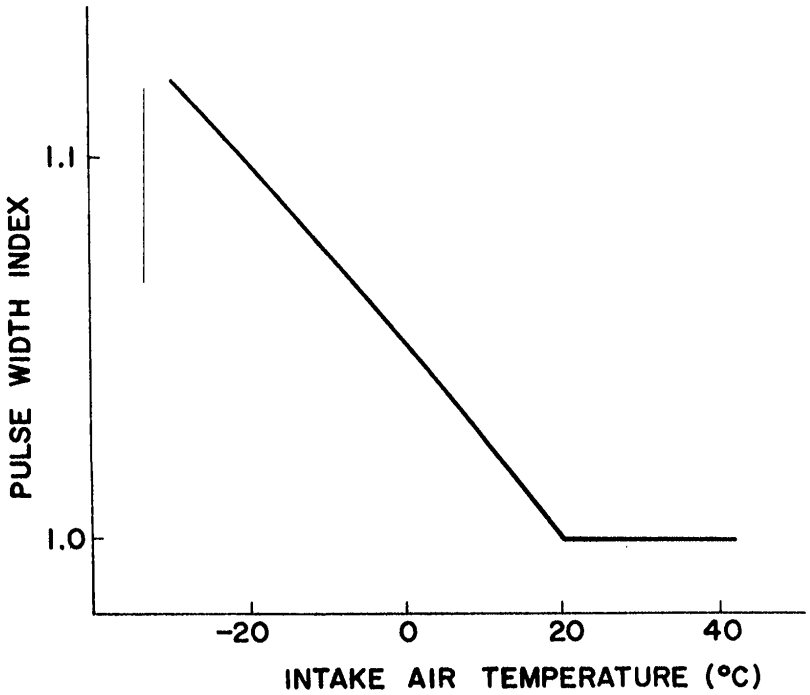

EF346

Fig. EF-7 Correction by intake air temperature

Downloaded from www.Manualslib.com manuals search engine

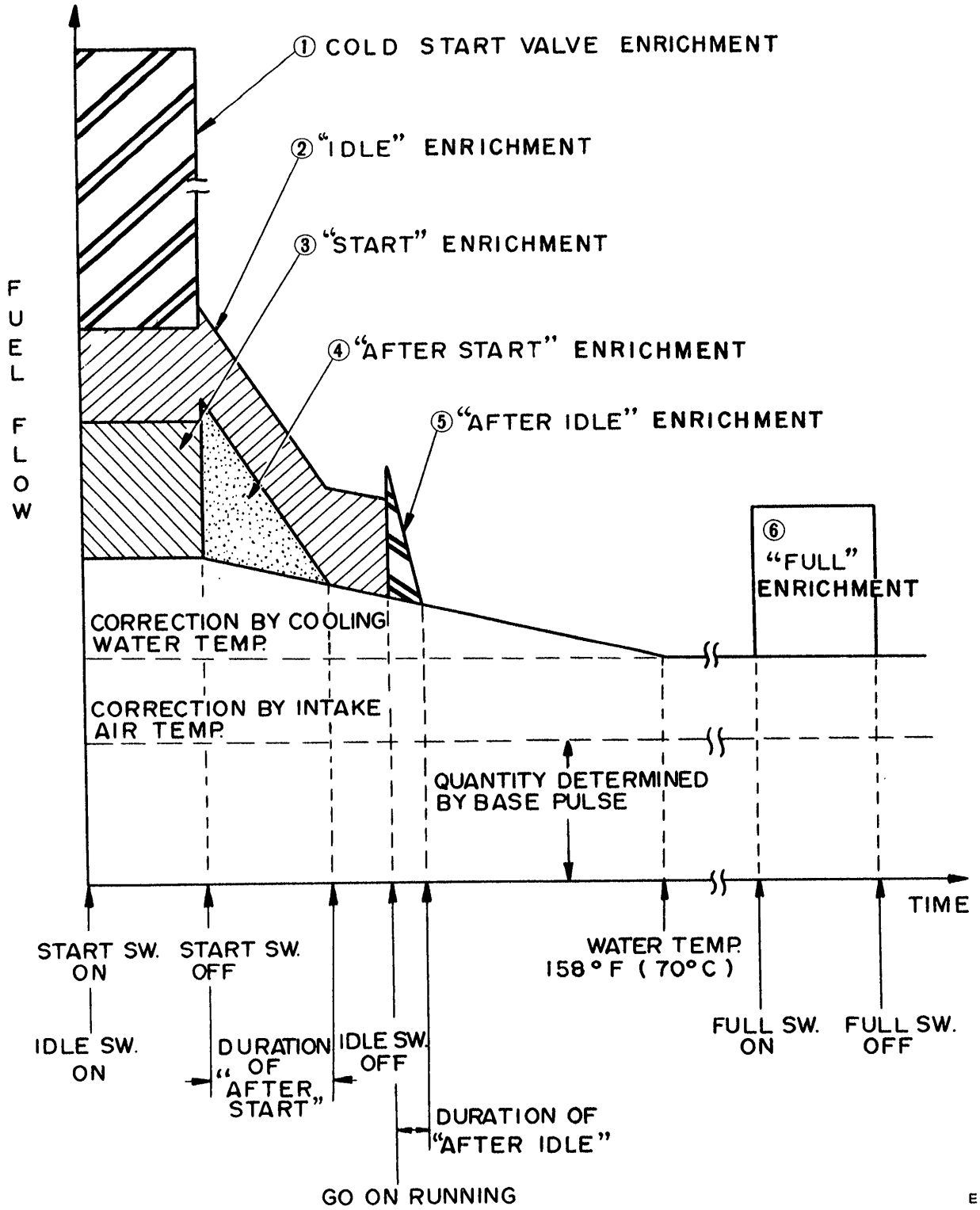

Fig. EF-8 Correction of fuel enrichment

3. Fuel cut

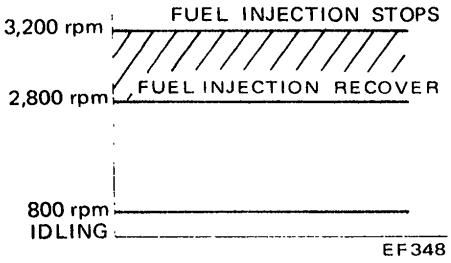

Fig. EF-9 Fuel cut

Fuel cut is accomplished during deceleration when the engine does not require fuel.

The above chart shows the relationship between engine rpm and fuel cut range.

When engine speed is above 3,200 rpm and throttle valve idle switch contacts are closed (that is, accelerator pedal is released), fuel injection does not take place; when engine speed drops below 2,800 rpm, fuel cut is released and fuel injection recommences.

The injection of fuel provides smooth engine idling without stopping the engine.

Downloaded from www.Manualslib.com manuals search engine

Fuel cut is not accomplished during deceleration when engine rpm is below 3,200 rpm.

4. Altitude compensation (California models only)

Altitude compensation prevents deterioration of exhaust emissions caused by an enriched air-fuel mixture.

$$\text{Enrichment Ratio (Altitude Compensation)} = \frac{\text{Amount of injected fuel with altitude enrichment}}{\text{Amount of injected fuel without altitude enrichment}}$$

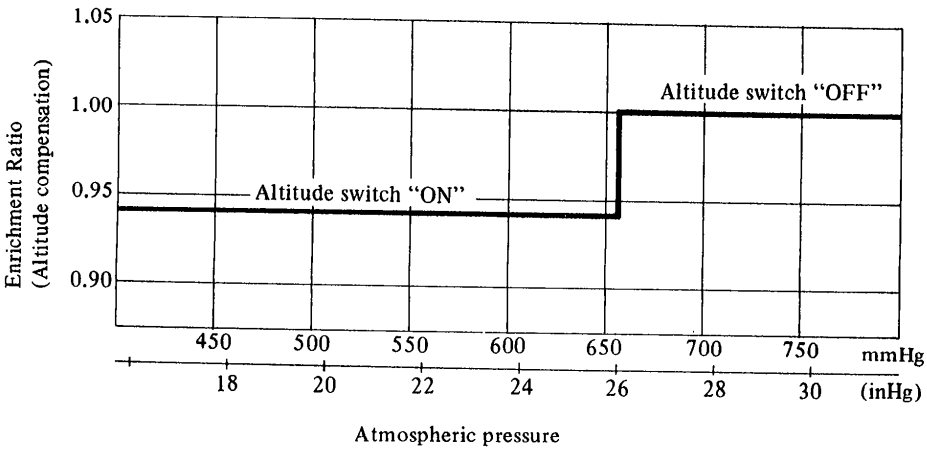

EF652

Fig. EF-10 Altitude compensation

Atmospheric pressure varies according to the altitude. The higher the altitude, the lower the atmospheric pressure. At an atmospheric pressure of 660 mmHg (26 inHg) or below [corresponding to an altitude of 1,120 m (3,675 ft) or higher], the altitude switch transmits an ON signal to the control unit, decreasing fuel by 6% and providing an appropriate air-fuel mixture ratio.

V. ELECTRONIC FUEL INJECTION SYSTEM COMPONENT PARTS

1. Control unit

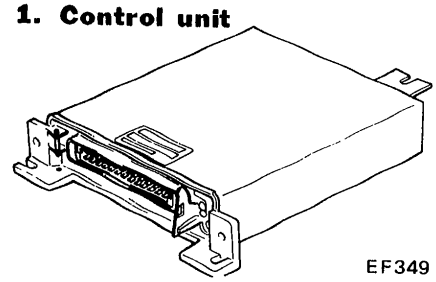

EF349

Fig. EF-11 Control unit

The control unit is mounted on a bracket on the driver seat side dash panel. It is connected to the electronic fuel injection harness by means of a multi-connector, and the electronic fuel injection harness is connected to other sensors.

The essential role of the control unit is to generate a pulse. Upon receiving an electrical signal from each sensor, the control unit generates a pulse whose duration (injector open-valve time period) is controlled to provide an optimum quantity of fuel according to the engine characteristics.

The control unit consists mainly of three integrated circuits formed on the printed circuit board. This construction provides superior control unit reliability.

2. Air flow meter

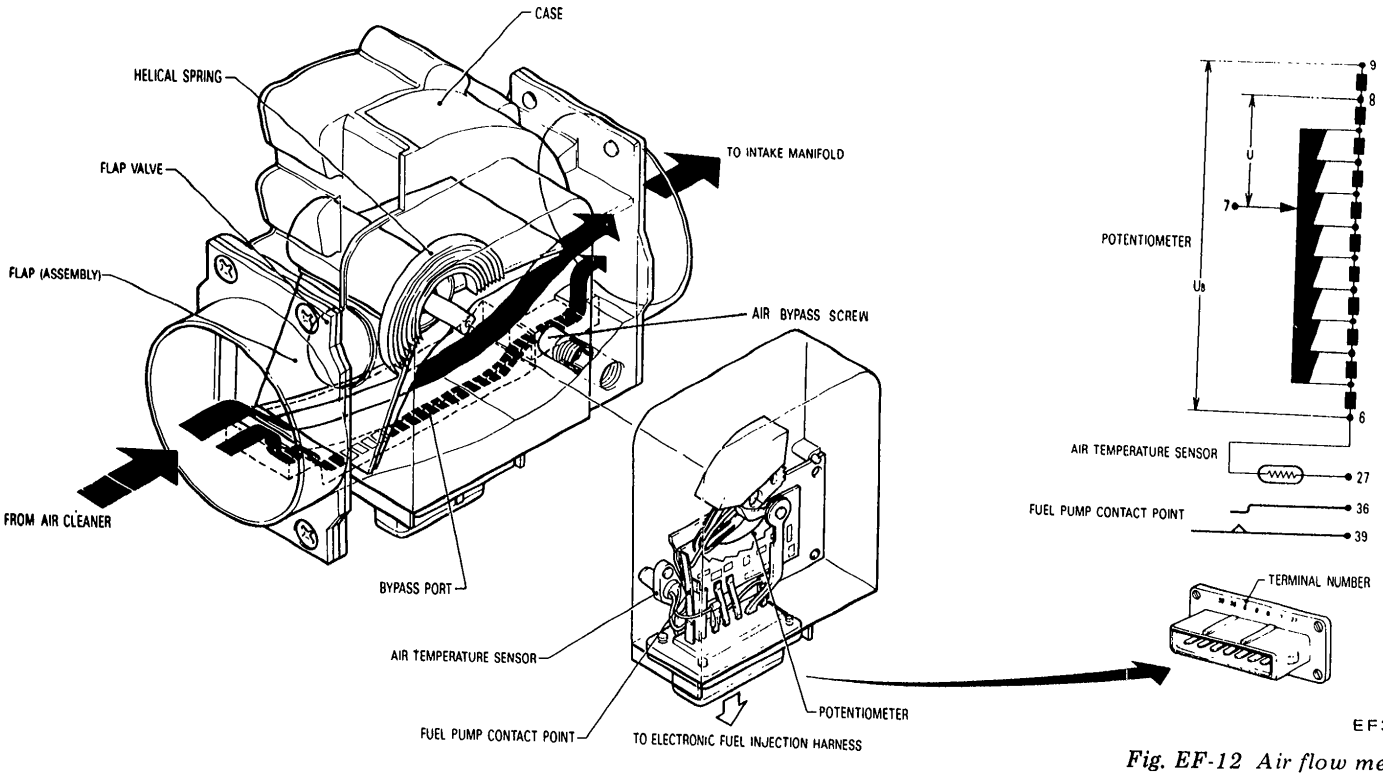

EF350

Fig. EF-12 Air flow meter

Downloaded from www.Manualslib.com manuals search engine

The air flow meter measures the quantity of intake air, and sends a signal to the control unit so that the base pulse width can be determined for correct fuel injection by the injector. The air flow meter is provided with a flap in the air passage. As the air flows through the passage, the flap rotates and its angle of rotation is electronically monitored to count the air flow rate.

More specifically, the angle of rotation of the flap is monitored by a potentiometer provided inside as a potential difference U. A circuit diagram of the potentiometer is shown in Figure EF-13. When the flap deflects along with a change in the intake air flow rate, the terminal ⑦ mounted to the flap shaft slides on the variable resistor R from R1 to R9, causing the voltage across terminals ⑦ and ⑧ to change.

A constant voltage U_B (battery voltage) is applied across terminals ⑥ and ⑨. Then the air flow rate is converted into the voltage ratio signal U/U_B, which in turn is sent to the control unit for computation.

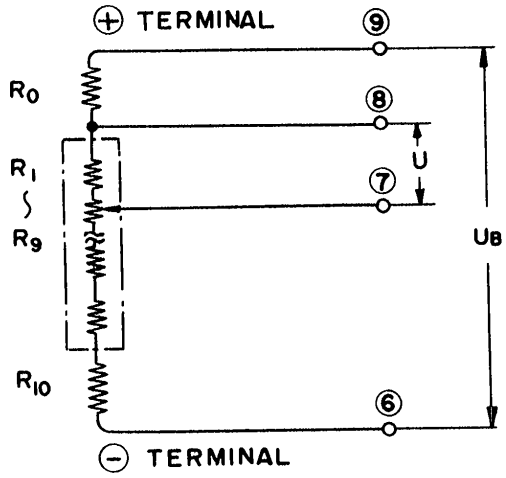

CONSTRUCTION OF AIR FLOW METER

EF351

Fig. EF-13 Air flow meter potentiometer

The flap is able to rotate to an angle where an equilibrium can be maintained between the air flow pressure and the return torque of the coil spring. The damper chamber and compensating plate are provided as a damper for the flap so that the flap will not be disturbed by pulsation in manifold vacuum during operation.

The compensating plate is interlinked with the flap, and as the flap rotates, the compensating plate rotates in the damper chamber keeping a very small clearance between the chamber wall.

During idling operation when the amount of intake air is extremely small, the air flows parallel with the flap through the bypass port so that the specified intake air flow can be provided correctly.

The bypass port has been factory adjusted. It can be adjusted further, if necessary, by turning the air bypass screw.

The fuel pump relay contact is provided in the potentiometer section of the air flow meter. This contact remains in the OFF position when the flap is not actuated. It turns ON when the flap turns 8°, and allows electric current to flow through the fuel pump relay for driving the fuel pump. This construction provides superior safety to the system, as the fuel pump will stop operation if accidental engine stalling should occur during driving.

3. Air temperature sensor

The air temperature sensor, built into the air flow meter, monitors change in the intake air temperature and transmits a signal to control fuel injection in response to the varying pulse duration.

The temperature sensing unit employs a thermister which is very sensitive in the low temperature range.

The electrical resistance of the thermister decreases in response to the air temperature rise.

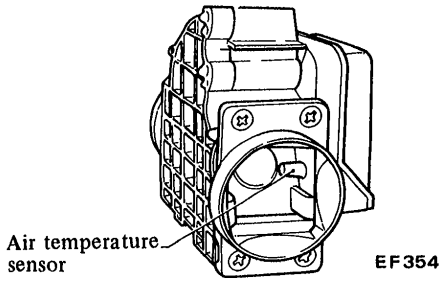

Fig. EF-14 Air temperature sensor

4. Water temperature sensor

The water temperature sensor, built into the thermostat housing, monitors change in cooling water temperature and transmits a signal for the fuel enrichment to change the pulse duration during the warm-up period.

The temperature sensing unit employs a thermister which is very sensitive in the low temperature range.

The electrical resistance of the thermister decreases in response to the water temperature rise.

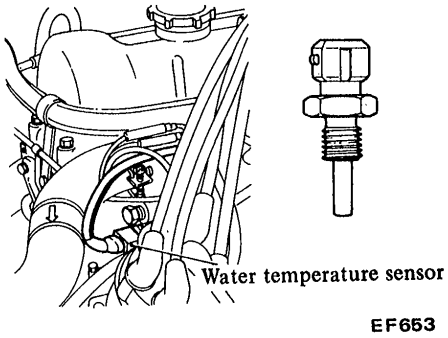

Fig. EF-15 Water temperature sensor

5. Thermotime switch

The thermotime switch is built into the thermostat housing.

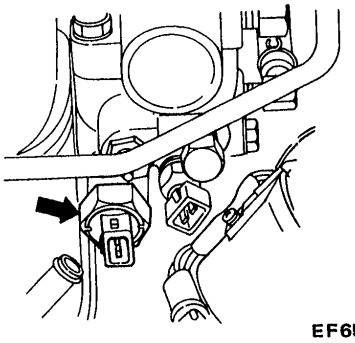

Fig. EF-16 Thermotime switch

Downloaded from www.Manualslib.com manuals search engine

The operating principle of the switch is as shown in the chart in Figure EF-17.

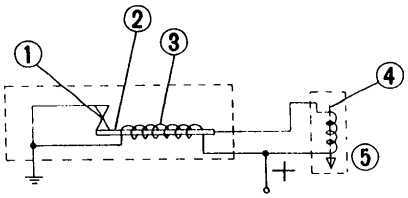

1 Contact points
2 Bimetal
3 Heater
4 Plunger
5 Cold start valve

EF312

Fig. EF-17 Operating principle of thermotime switch

A harness is connected to the cold start valve from the thermotime switch. The bimetal contact in the thermotime switch opens or closes depending on the cooling water temperature, and sends a signal to the cold start valve so that an additional amount of fuel can be injected for cranking operation of the engine when the cooling water temperature is below specification 14 to 22°C (57 to 71°F).

The thermotime switch is ON when the cooling water temperature is below specification. This implies, however, that repeated operation of the ignition switch may result in excessively thick mixture and consequent troubles in engine operation. To prevent this, the bimetal is equipped with a heater. Electric current flows through the heater while the ignition switch is in the start position, and warms up the bimetal. Through repeated operation of the ignition switch, then, the bimetal is sufficiently warmed up to open the thermotime switch, thus stopping excessive injection of fuel from the cold start valve.

The temperature at which the bimetal contact turns ON or OFF can be changed within the range of 14 to 22°C (57 to 72°F).

6. Cold start valve

The cold start valve operates on the electromagnetic principle. It causes fuel to be injected into the intake manifold independently of the injector operation so that the engine can be cranked smoothly during cold weather.

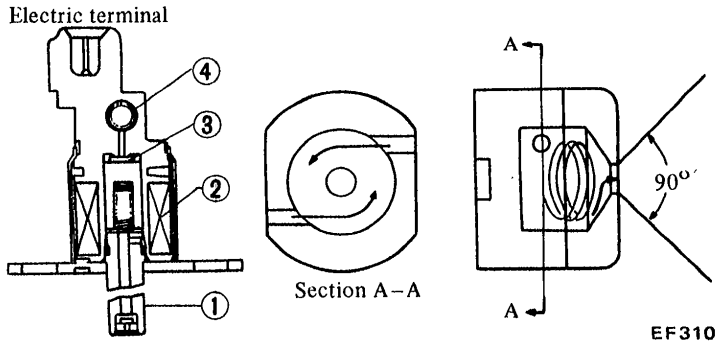

1 Swirl type nozzle
2 Magnet coil
3 Sheet valve
4 Fuel inlet

EF310

Fig. EF-18 Sectional view of cold start valve

To improve fuel-air mixing at lower temperatures, the cold start valve employs a swirl type nozzle which has a turn chamber at the end. With this construction, fuel is injected at an angle of 90° and better atomization of fuel can be obtained.

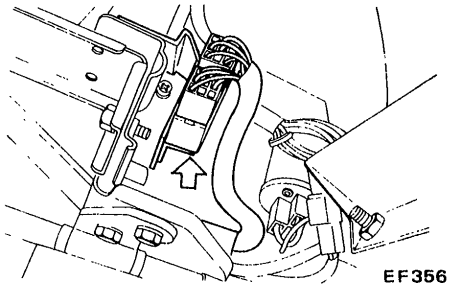

EF356

Fig. EF-19 Electronic fuel injection relay

7. Electronic fuel injection relay

The relay is located at the side dash on the driver's side. It is made up of two sections—the main relay section and the fuel pump relay section. The main relay section serves to actuate the electronic fuel injection system through the ignition switch, and the fuel pump relay section to actuate the fuel pump and air regulator. These two relays are incorporated into a compact case. (See Figure EF-19).

8. Throttle valve switch

The throttle valve switch is attached to the throttle chamber and actuates in response to accelerator pedal movement. This switch has two sets of contact points. One set monitors the idle position and the other set monitors full throttle position.

The idle contacts close when the throttle valve is positioned at idle and open when it is at any other position.

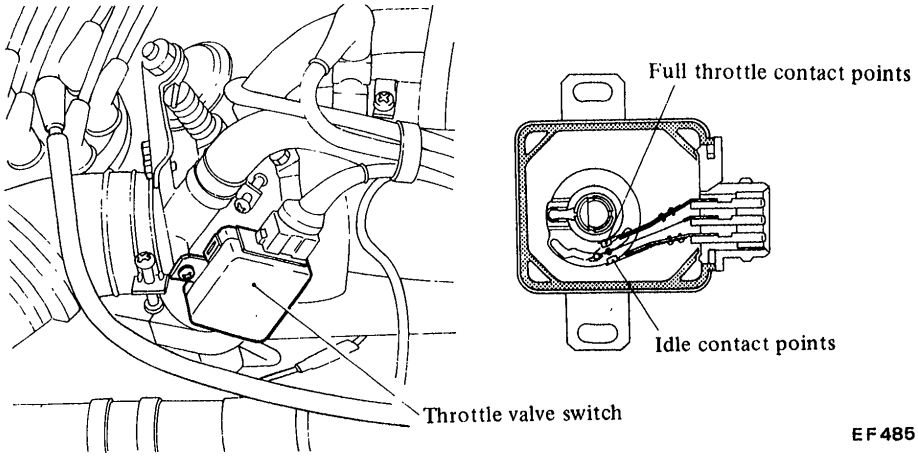

EF485

Fig. EF-20 Throttle valve switch

The full throttle contacts close only when the throttle valve is positioned at full throttle (or more than 34 degree opening of the throttle valve). The contacts are open while the throttle valve is at any other position.

The idle switch compensates for enrichment during idle and after idle, sends fuel cut signal. The full throttle switch compensates for enrichment in full throttle.

9. Dropping resistor

The dropping resistor is mounted near the washer tank. It can be seen by opening the L.H. inspection lid.

Downloaded from www.Manualslib.com manuals search engine

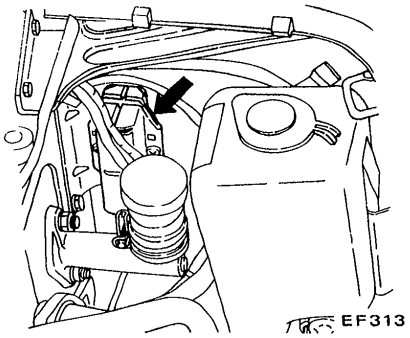

Fig. EF-21 Dropping resistor

The dropping resistor is provided to reduce electric current flowing through the injector and control unit.

10. Altitude switch (California models only)

This switch is attached to the stay on the left side of the instrument panel in the driver's compartment. Consisting of a bellows and a micro-switch, the switch transmits an ON or OFF signal to the control unit according to change in atmospheric pressure. When the atmospheric pressure drops below 660 mmHg (26 inHg), an ON signal is transmitted to decrease fuel by 6%.

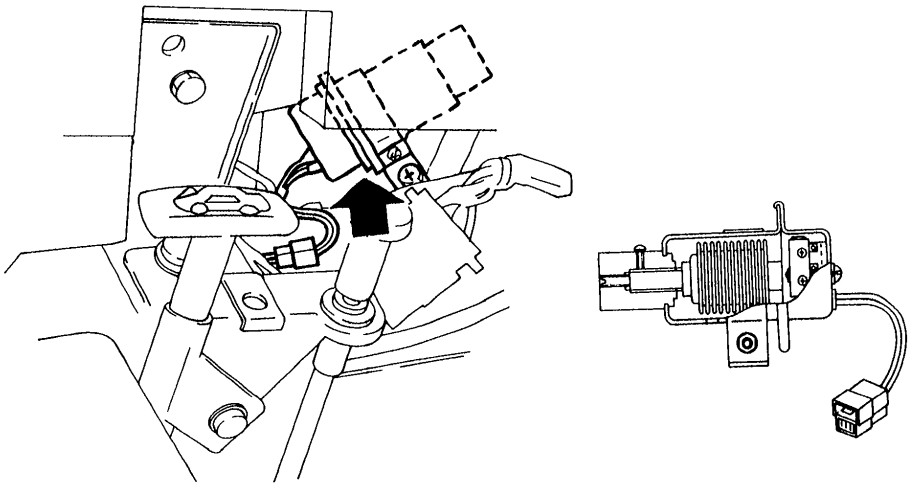

Fig. EF-22 Altitude switch

Classification	Atmospheric pressure	Altitude switch	Air-fuel mixture ratio
"Low" altitude [Approx. 1,120 m (3,675 ft) or lower]	Approx. 660 mmHg (26 inHg) or above	OFF	Standard
"High" altitude [Approx. 1,120 m (3,675 ft) or higher]	Approx. 660 mmHg (26 inHg) or below	ON	Compensated by 6% on lean side

11. Fuel pump

The fuel pump is mounted near the fuel tank and right rear wheel. The pump employs a wet type construction where a vane pump with roller is directly coupled to a motor filled with fuel. This construction provides superior coupling characteristics between the pump and motor, and greater safety in case of fire.

The relief valve in the pump is designed to open when the pressure in the fuel line rises over 3 to 4.5 kg/cm^2 (43 to 64 psi) due to trouble in the pressure system.

The check valve prevents abrupt drop of pressure in the fuel pipe when stopping the engine.

When the ignition switch is turned to the START position for cranking operation, the fuel pump is actuated irrespective of the position of the air flow meter contact point. After starting the engine (the ignition switch is ON), the air flow meter contact turns ON through rotation of the engine, thereby actuating the fuel pump. If engine stalls for some reason, the air flow meter contact is turned OFF, and the fuel pump is stopped, though the ignition switch remains in the ON position. In this manner, fuel supply is cut off for safety purposes when the engine accidentally stops during driving.

Fuel pump operation chart

IGN. SW. Position			A.F.M. Contact Points	Fuel Pump
OFF	ON	Start		
–	–	X	OFF	Actuated
–	X	–	ON	Actuated
–	X	–	OFF	Unactuated
X	–	–	ON	Unactuated
X	–	–	OFF	Unactuated

X: IGN. SW. positions

Downloaded from www.Manualslib.com manuals search engine

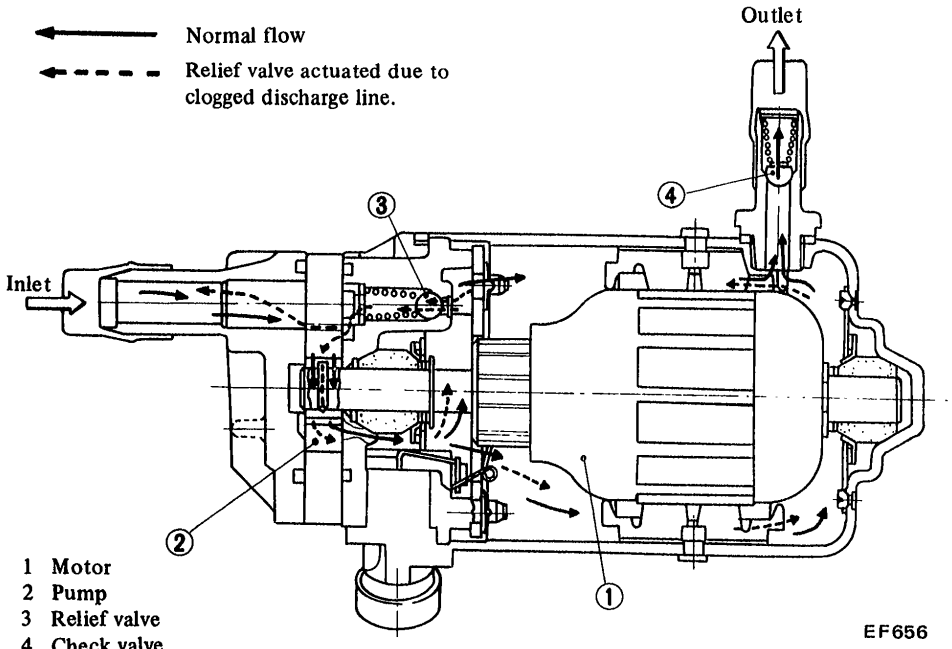

Fig. EF-23 Sectional view of fuel pump

12. Fuel damper

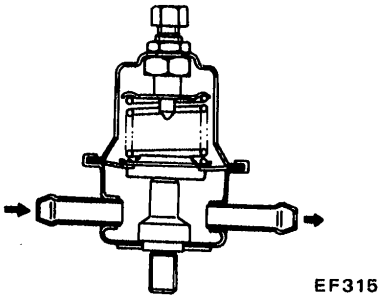

Fig. EF-24 Sectional view of fuel damper

The construction of the fuel damper is shown in Figure EF-24. The fuel damper is provided to suppress pulsation in fuel flow discharged from the fuel pump. No adjustment is allowed on this damper.

13. Pressure regulator

The pressure regulator controls the pressure of fuel so that a pressure difference of 2.55 kg/cm^2 (36.3 psi) can be maintained between the fuel pressure and intake vacuum. This constant differential pressure provides optimum fuel injection in every mode of engine operation.

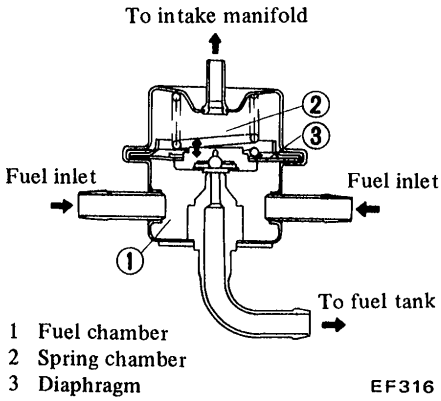

Fig. EF-25 Sectional view of pressure regulator

When the intake manifold vacuum becomes large enough to overcome the diaphragm spring force as combined with the fuel pressure at the pressure line, the diaphragm becomes empty on the intake-side. This opens the return-side port to allow fuel to flow to the tank for reducing fuel pressure.

If fuel pressure is higher than the intake manifold vacuum by 2.55 kg/cm^2 (36.3 psi), the diaphragm returns to its original position by means of spring force, and closes the return port.

In this manner, the pressure regulator maintains the fuel pressure in the fuel line 2.55 kg/cm^2 (36.3 psi) higher than the pressure in the intake manifold.

14. Fuel filter

The fuel filter is mounted on the right hand side of the engine compartment, near the canister.

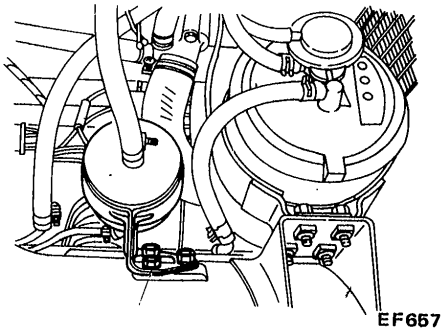

Fig. EF-26 Fuel filter

The filter paper type element must be replaced according to the periodic maintenance schedule, together with the filter body as an assembly.

15. Injector

The injector is mounted on the branch portion of the intake manifold. It receives the pulse signal from the control unit, and injects the fuel toward the intake valve in the cylinder head.

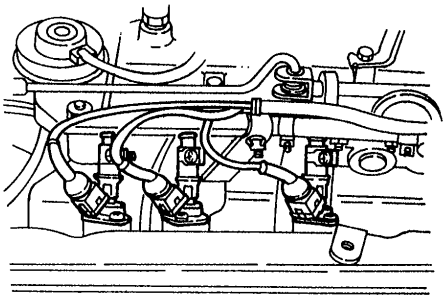

Fig. EF-27 Injector

The injector operates on the solenoid valve principle. When a driving pulse is applied to the coil built into the injector, the plunger is pulled into the solenoid, thereby opening the needle valve for fuel injection. The quantity of injected fuel is in proportion to the duration of the pulse applied from the control unit.

Downloaded from www.Manualslib.com manuals search engine

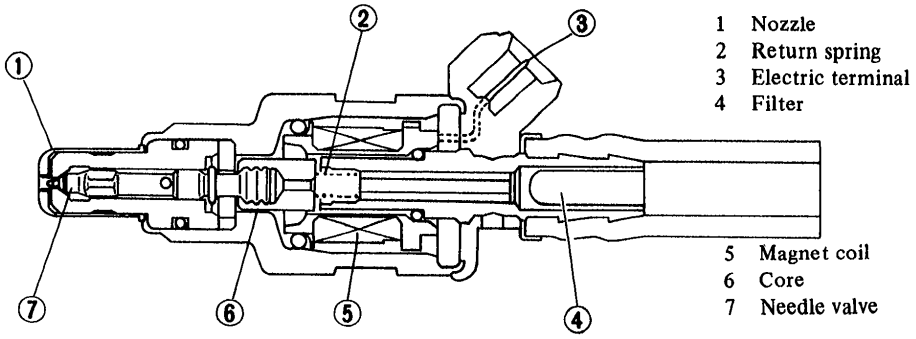

Fig. EF-28 Sectional view of injector

16. Air regulator

The air regulator bypasses the throttle valve to control the quantity of air for increasing the engine idling speed when starting the engine at an underhood temperature of below 80°C (176°F).

A bimetal and a heater are built into the air regulator. When the ignition switch is turned to the START position or engine running, electric current flows through the heater, and the bimetal, as it is heated by the heater, begins to move and closes the air passage in a few minutes. The air passage remains closed until the engine is stopped and the underhood air temperature drops to below 80°C (176°F).

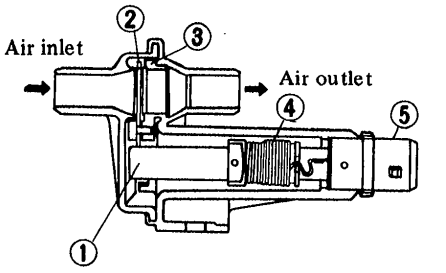

Fig. EF-29 Sectional view of air regulator

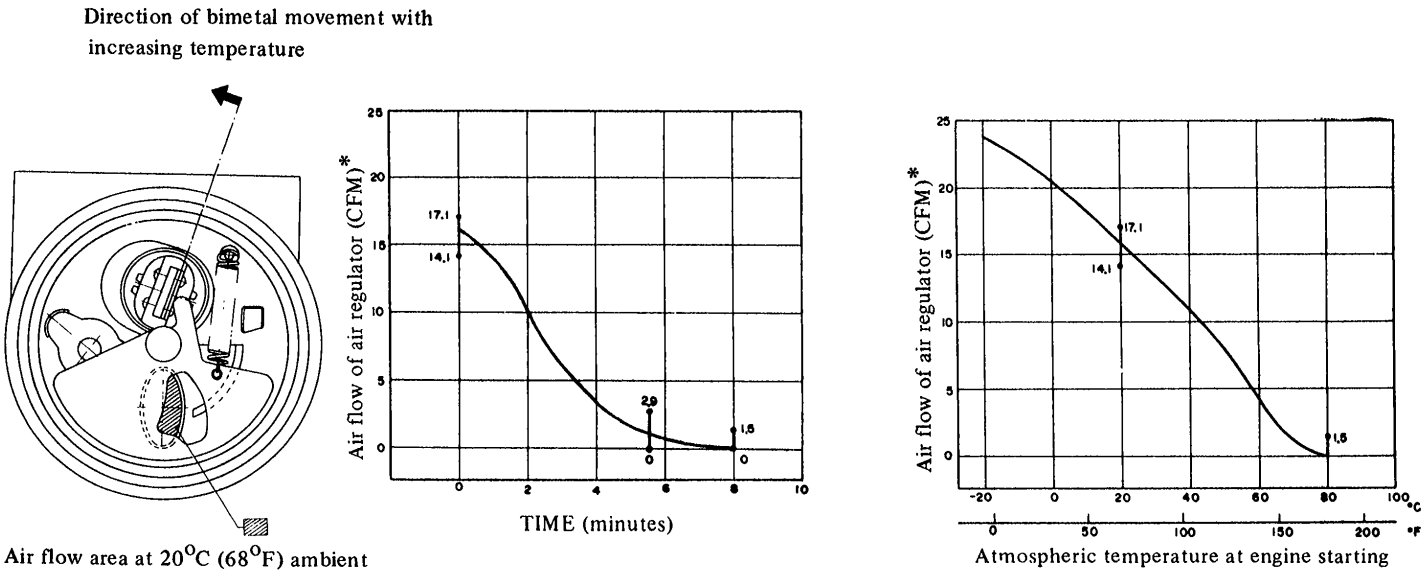

Fig. EF-30 Air regulator characteristic curve

17. Throttle chamber

The throttle chamber, located between the intake manifold and air flow meter, is equipped with a valve. This valve controls the intake air flow in response to accelerator pedal movement. The rotary shaft of this valve is connected to the throttle valve switch.

This valve remains closed during engine idling, and the air required for idling passes through the bypass port into the intake manifold. Idle adjustment is made by the idle speed adjusting screw located in the bypass port. There is another bypass line in this throttle chamber to pass sufficient air through the air regulator into the intake manifold when a cold engine is started.

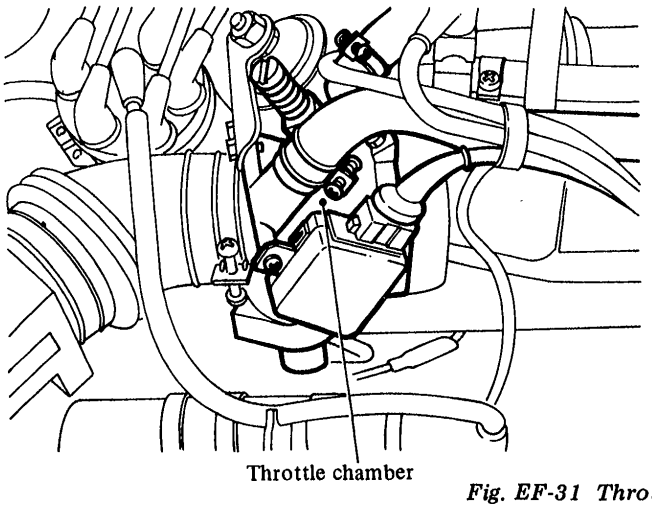

Fig. EF-31 Throttle chamber

Downloaded from www.Manualslib.com manuals search engine

18. Harness

One wiring harness is used to connect lines between the control unit and the related major units.

The harness from the 35-pin connector connected to the control unit is combined with the E.F.I. relay at the side dash on the driver's side and the altitude switch at the instrument stay on the driver's seat, and runs to the engine compartment where it is combined with the dropping resistor harness. From the engine compartment, the harness runs to various units; the air flow meter, air temperature sensor, throttle valve switch, air regulator, injector, cold start valve, etc.

Connectors are used only in the line between the 35-pin connector and water temperature sensor, and between the cold start valve and thermo-time switch.

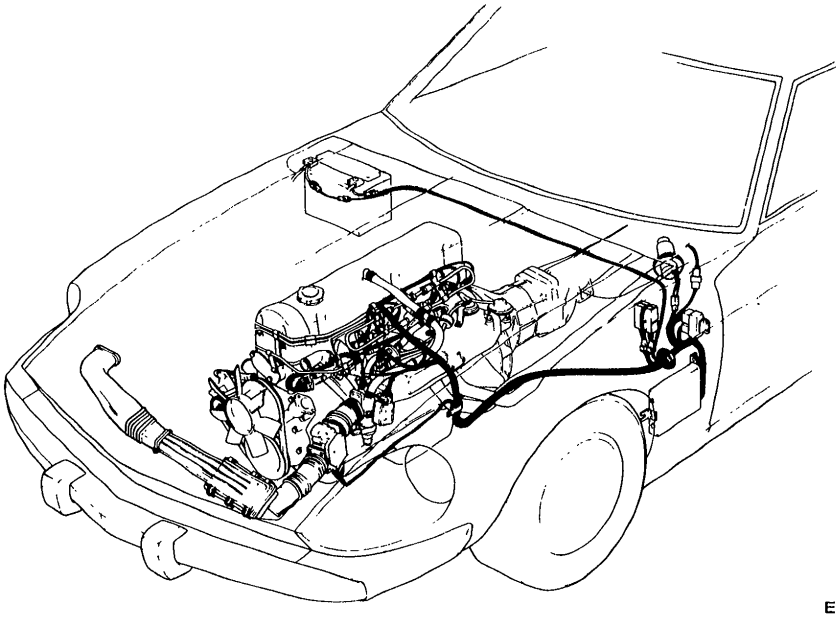

EF659

Fig. EF-32 Electronic fuel injection harness

TROUBLE DIAGNOSES

The electronic fuel injection system must be checked in accordance with the troubleshooting chart. **When using this chart, make sure that the ignition system, battery and transistor ignition system are all in good condition.**

In the troubleshooting chart, trouble phenomena are listed vertically while the inspection items are arranged horizontally. The items which must be checked are marked with an "o" for each trouble phenomenon. Proceed from left to right in the inspection item section.

Check the harness connector for correct insertion.

Then, check the harness together with the unit for continuity. A continuity test on the harness may be carried out on the 35-pole pin of the control unit and other necessary portions with a circuit tester.

Inspection procedure (Proceed from left to right)

Trouble phenomenon \ Inspection item		Harness continuity test (together with unit)	Fuel pump sound	Control unit operation at cranking	Injector sound	Cold start valve system condition	Air regulator system condition	Relay
Engine can not be started		O	O	O	O	O *1		O
Engine stalls		O	O	O	O		O *2	O
Lack of power		O			O			
Engine breather		O						
Unstable idling	During warming-up	O			O		O	
	After warming-up	O			O			
Higher idling speed		O					O	
Running-on or dieseling								
Back fire		O						
After fire		O						
Abnormal fuel consumption		O				O		

*1 Check this item when trouble occurs in cold weather only.

*2 Check this item when trouble occurs during warming-up.

Downloaded from www.Manualslib.com manuals search engine

If a continuity test on an affected harness does not slove the problem, proceed to check by following the inspection items listed in the chart from left to right.

If any abnormality is found in any inspection item, refer to the "INSPECTION" section and carry out further inspection following the procedures described therein. In some cases, the description of an inspection item overlaps that of the preceding item. In such case, the overlapping description of the present inspection item may be omitted.

Note that any component part of the electronic fuel injection system must be replaced as an assembly if it is found to be faulty, since no repairing is allowed.

Control unit replacement	Air flow meter		Water temp. sensor resistance measurement	Air temp. sensor resistance measurement	Throttle valve switch continuity test	Altitude switch (California models only)	Fuel system		
							Leakage		Fuel pressure test
	Flap operation	Resistance measurement					External appearance	Injector Cold start valve	
O	O	O	O					O	O
O	O	O	O					O	O
	O	O			O	O		O	O
O	O	O				O			O
			O	O	O			O	O
			O		O	O		O	O
								O	
O	O	O	O	O		O			O
O	O	O	O					O	O
O		O		O	O		O	O	O

Fig. EF-33 Trouble diagnoses chart

Downloaded from www.Manualslib.com manuals search engine

INSPECTION

DESCRIPTION

(1) Checks before inspection

Before attempting any test, check the following items to ensure that nothing has been overlooked.

- All harness connectors (especially the 35-pin coupler and air flow meter connector) are securely in place.
  Connector terminals are free from corrosion and deformation.
- Since the electronic fuel injection system accurately meters the intake air flow through an air flow meter, even a slight air leak will cause an improper air-fuel ratio, resulting in faulty engine operation due to excessive air.
  For this reason, a thorough inspection for leaks should be made at the oil filler cap, dipstick, blow-by hoses, air flow meter to throttle chamber air duct, etc.

(2) Inspection instructions

Before checking the electronic fuel injection system, be sure to observe the instructions below. Failure to do so could result in damage to the control unit or cause fuel line leakage.

(a) Before starting the engine, make sure that all electronic fuel injection harness connectors are firmly in place.

When connecting or disconnecting electronic fuel injection harness connector to or from any electronic fuel injection unit, ensure that the ignition switch is in the OFF position or that the negative battery terminal is disconnected. Removing and installing these connectors with the ignition switch left in the ON position will damage control unit.

(b) Replace hoses if they are deformed, scratched or chafed.

(c) Do not reuse hose clamps after removal.

(d) Do not allow unburned fuel to discharge from injectors and cold start valve while the engine is at rest. Doing so will cause a rich air-fuel mixture ratio, which in turn will deteriorate the catalytic converter when the engine is started.

(3) Idle adjustment

On engines equipped with the electronic fuel injection system, air-fuel mixture ratio adjustments can be made by turning air bypass screw and engine speed can be adjusted by turning idle speed adjusting screw.

When measuring CO percentage to check idling operation, make sure that CO percentage is below 1.0 percent for non-California models and 0.5 percent for California models. If CO percentage is over the specifications, adjust air-fuel mixture ratio. Refer to "Checking engine idle rpm and mixture ratio" on page ET-7.

When inspecting the catalytic converter for deterioration, HC and CO percentage must also be measured.

CONTINUITY CHECK

Circuit tester (Test equipment required)

Description

It is not necessary to conduct a harness continuity check on the entire electronic fuel injection system. Simply locate the pertinent trouble source on the left in the following table and conduct an inspection as denoted by the check item number shown on the opposite side.

To find what is denoted by the check item number, refer to the attached table and to the same check item number given in the service manual. Do not touch the circuit tester probe to any unnecessary pin on the 35-pin connector. Doing so could cause damage to the connector terminal.

Downloaded from www.Manualslib.com manuals search engine

Connector and harness continuity check

Condition		Check item number
Engine will not start		1 – (3), (5), (6), (7), (8), (9) 2 – (1), (2), (3) 3 – (1), (3)
Engine stalls		1 – (3), (5), (6), (7), (8), (9) 2 – (1), (2), (3)
Lack of power		1 – (1), (2), (3), (4), (6), (8), (10) 2 – (1), (2), (3)
Engine breathes		1 – (1), (2), (3), (4), (5), (6), (8), (9), (10) 2 – (1), (2), (3)
Idling unstable	During warm-up	1 – (1), (3), (4), (5), (6), (8), (9) 2 – (1), (2), (3) 3 – (2)
	After warm-up	1 – (1), (3), (4), (5), (6), (8), (9), (10) 2 – (1), (2), (3)
Higher idling speed		1 – (1), (2), (4), (6), (8) 3 – (2)
Running on or dieseling		———
Backfire		1 – (1), (2), (3), (4), (6), (10) 2 – (1), (2), (3)
Afterfire		1 – (1), (2), (3), (4), (6) 2 – (3) 3 – (1)
Abnormal fuel consumption		1 – (1), (2), (3), (4), (6), (8) 2 – (3) 3 – (2)

1. Continuity check using an ohmmeter

Notes:

a. Before disconnecting 35-pin connector of the control unit, disconnect ground cable from battery.

b. Set circuit tester in the OHM "R" range.

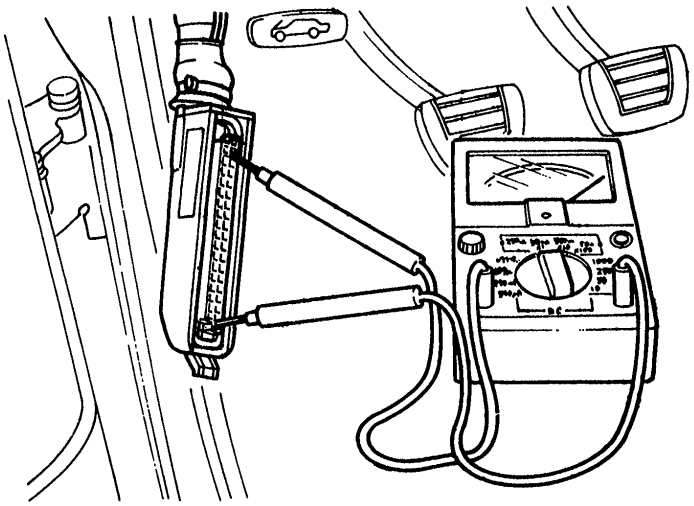

EF360

Fig. EF-34 Check at 35-pin connector ("R" range)

Downloaded from www.Manualslib.com manuals search engine

(1) Throttle valve switch: Idle switch

- Make sure that throttle valve switch connector is securely connected in place.
- Check continuity between terminals ② and ⑱.
  *Test results
- Continuity exists ..... OK
- Continuity does not exist ... N.G.
  *If test results are "N.G.", proceed as follows:
- Check the circuit indicated by large solid lines in Figure EF-37.

(2) Throttle valve switch: Full switch

- Make sure that throttle valve switch connector is securely connected in place.
- With accelerator pedal fully depressed, check continuity between terminals ③ and ⑱.
  *Test results
- Continuity exists ..... OK
- Continuity does not exist ... N.G.
  *If test results are "N.G.", proceed as follows:
- Check the circuit indicated by large solid lines in Figure EF-38.

(3) Air flow meter

- Make sure that air flow meter connector is securely connected in place.

3A) Continuity check between terminals ⑥ and ⑧

- Check continuity between terminals ⑥ and ⑧.
  *Test results
- Continuity exists ..... OK
- Continuity does not exist ... N.G.
  *If test results are "N.G.", proceed as follows:
- Check the circuit indicated by large solid lines in Figure EF-39.

3B) Continuity check between terminals ⑦ and ⑧.

Use the same procedure as in step 3A, and check continuity between terminals ⑦ and ⑧. Refer to Figure EF-40 for circuit details.

3C) Continuity check between terminals ⑧ and ⑨.

Use the same procedure as in step 3A, and check continuity between terminals ⑧ and ⑨. Refer to Figure EF-41 for circuit details.

(4) Air temperature sensor

- Make sure that air flow meter connector is securely connected in place
- Check continuity between terminals ⑥ and ㉗.
  *Test results
- Continuity exists ..... OK
- Continuity does not exist ... N.G.
  *If test results are "N.G.", proceed as follows:
- Check the circuit indicated by large solid lines in Figure EF-42.

(5) Fuel pump contact points

- Disconnect rubber hose in the line between air cleaner and air flow meter.
- Make sure that air flow meter connector is securely connected in place.
- Depress air flow meter flap, and check continuity between terminals ⑩ and ⑳.
  *Test results
- Continuity exists ..... OK
- Continuity does not exist ... N.G.
  *If test results are "N.G." proceed as follows:
- Check the circuit indicated by large solid lines in Figure EF-43.

(6) Water temperature sensor

- Make sure that water temperature sensor connector is securely connected in place.
- Make sure that ground lead wire is properly grounded.
- Check continuity between terminal ⑬ and body metal.
  *Test results
- Continuity exists ..... OK
- Continuity does not exist ... N.G.
  *If test results are "N.G.", proceed as follows:
- Check the circuit indicated by large solid lines in Figure EF-44.

(7) Electronic fuel injection relay: Fuel pump relay

- Make sure that relay connector is securely connected in place.
- Check continuity between terminal ⑳ and body metal.
  *Test results
- Continuity exists ..... OK
  Continuity does not exist ... N.G.
  *If test results are "N.G.", proceed as follows:
- Check the circuit indicated by large solid lines in Figure EF-45.

(8) Air regulator and fuel pump

- Make sure that air regulator and relay connectors are securely connected in place.
- Make sure that fuel pump harness is securely connected to fuel pump terminal.
- Check continuity between terminal ㉞ and body metal.
  *Test results
- Continuity exists ..... OK
- Continuity does not exist ... N.G.
  *If test results are "N.G.", proceed as follows:
- Check the circuit indicated by large solid lines in Figure EF-46.

(9) Ground circuit

- Make sure that ground connector is securely connected in place.
- Check all ground lines to ensure that they are properly grounded.

9A) Continuity check between terminal ⑤ and body metal

- Check continuity between terminal ⑤ and body metal.
  *Test results
- Continuity exists ..... OK
- Continuity does not exist ... N.G.
  *If test results are "N.G.", proceed as follows:
- Check the circuit indicated by large solid lines in Figure EF-47.

9B) Continuity check between terminal ⑯ and body metal

Use the same procedure as in step 9A, and check continuity between terminal ⑯ and body metal.

Refer to Figure EF-48 for circuit details.

9C) Continuity check between terminal ⑰ and body metal

Use the same procedure as in step 9A, and check continuity between terminal ⑰ and body metal.

Refer to Figure EF-49 for circuit details.

9D) Continuity check between terminal ㉟ and body metal

Downloaded from www.Manualslib.com manuals search engine

Use the same procedure as in step 9A, and check continuity between terminal ㉟ and body metal.

Refer to Figure EF-50 for circuit details.

(10) Altitude switch (California models only)

- Make sure that the altitude switch is securely connected.
- Check continuity between terminals ⑨ and ⑫.

*Test results

10A) If a check is made in the "low" altitude zone [approx. 1,120 m (3,675 ft) or lower, or approx. 660 mmHg (26 inHg) or higher] :

- Continuity does not exist .... OK
- Continuity exists ..... N.G.

10B) If a check is made in the "high" altitude zone [approx. 1,120 m (3,675 ft) or higher or approx. 660 mmHg (26 inHg) or lower] :

- Continuity exists ..... OK
- Continuity does not exist ... N.G.

If a test result is "N.G.", check the circuit indicated by the large solid lines in Figure EF-51.

2. Continuity check using a voltmeter (1)

Notes:

a. Set circuit tester in the DC VOLT (DC "V") range.

b. Connect negative terminal of voltmeter to body metal with a lead wire.

c. If tests check out "N.G.", be sure to turn off the ignition switch and to disconnect battery ground cable before tracing the circuit.

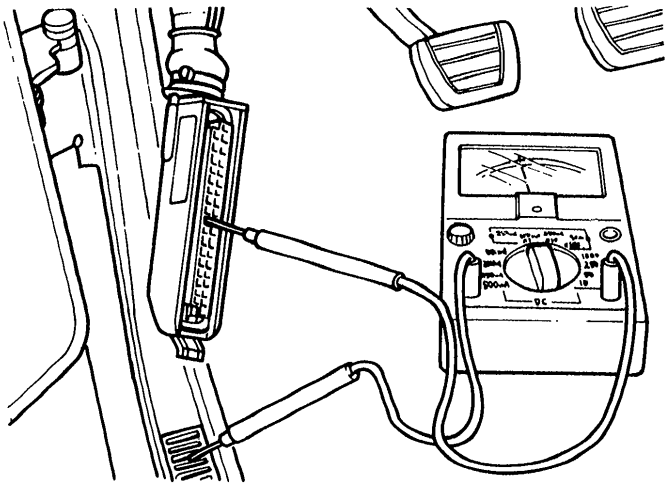

Fig. EF-35 Check at 35-pin connector ("V" range)

(1) Revolution trigger signal

- Make sure that ignition coil connector is securely connected in place.
- Turn ignition switch to the "ON" position.
- Contact terminal ① with positive lead wire of voltmeter.

*Test results

- Voltmeter reading indicates power line voltage ..... OK
- Voltmeter reading does not indicate power line voltage .. N.G.

*If test results are "N.G.", proceed as follows:

- Turn ignition switch to the "OFF" position.
- Check the circuit indicated by large solid lines in Figure EF-52.

(2) Power line circuit

- Make sure that relay connector and 6-pin connector are securely connected in place.
- Turn ignition switch to the "ON" position.
- Contact terminal ⑩ with positive lead of voltmeter.

*Test results

- Voltmeter reading indicates power line voltage ..... OK
- Voltmeter reading does not indicate power line voltage .. N.G.

*If test results are "N.G.", proceed as follows:

- Turn ignition switch to the "OFF" position.
- Check the circuit indicated by large solid and dotted lines in Figure EF-53.

(3) Injector and dropping resistor

- Make sure that injector, dropping resistor and relay, and 6-pin connector are securely connected in place.

3A) Terminal ⑭ (Cylinder "4")

- Turn ignition switch to the "ON" position.
- Contact terminal ⑭ with positive lead wire of voltmeter.

*Test results

- Voltmeter reading indicates power line voltage ..... OK
- Voltmeter reading does not indicate power line voltage .. N.G.

*If test results are "N.G.", proceed as follows:

- Turn ignition switch to the "OFF" position.
- Check the circuit indicated by large solid and dotted lines in Figure EF-54.

3B) Terminal ⑮ (Cylinder "1")

Use the same procedure as in step 3A, and take voltmeter reading between terminal ⑮ and ground.

Refer to Figure EF-55 for circuit details.

3C) Terminal ㉚ (Cylinder "5")

Use the same procedure as in step 3A, and take voltmeter reading between terminal ㉚ and ground.

Refer to Figure EF-56 for circuit details.

3D) Terminal ㉛ (Cylinder "6")

Use the same procedure as in step 3A, and take voltmeter reading between terminal ㉛ and ground.

Refer to Figure EF-57 for circuit details.

Downloaded from www.Manualslib.com manuals search engine

3E) Terminal ㉜ (Cylinder "3")

Use the same procedure as in step 3A, and take voltmeter reading between terminal ㉜ and ground.

Refer to Figure EF-58 for circuit details.

3F) Terminal ㉝ (Cylinder "2")

Use the same procedure as in step 3A, and take voltmeter reading between terminal ㉝ and ground.

Refer to Figure EF-59 for circuit details.

3. Continuity check using a voltmeter (2)

Notes:

a. Set circuit tester in the DC VOLT (DC "V") range.

b. Connect negative terminal of circuit tester to body metal with a lead wire.

c. If test results check out "N.G.", be sure to turn off the ignition switch and to disconnect battery ground cable before tracing the circuit.

d. Disconnect lead wire from terminal "S" of starter motor.

e. Disconnect cold start valve harness connector.

(1) Starter signal

- Make sure that relay connector and 6-pin connector are securely connected in place.
- Turn ignition switch to the "START" position.
- Contact terminal ④ with positive lead wire of voltmeter.
  *Test results
- Voltmeter reading indicates power line voltage ..... OK
- Voltmeter reading does not indicate power line voltage .. N.G.
  *If test results are "N.G.", proceed as follows:
- Turn ignition switch to the "OFF" position.
- Check the circuit indicated by large solid lines in Figure EF-60.

(2) Air regulator

- Make sure that air regulator, relay and 6-pin connector are securely connected in place.
- Turn ignition switch to the "START" position.
- Contact terminal ㉞ with positive lead wire of voltmeter.
  *Test results
- Voltmeter reading indicates power line voltage ..... OK
- Voltmeter reading does not indicate power line voltage .. N.G.
  *If test results are "N.G.", proceed as follows:
- Turn ignition switch to the "OFF" position.
- Check the circuit indicated by large solid and dotted lines in Figure EF-61.

(3) Cold start valve and thermotime switch

- Disconnect thermotime switch connector.
- Short circuit two pins of thermotime switch harness connector.

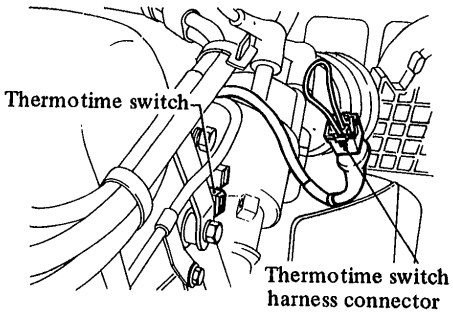

Fig. EF-36 Thermotime switch harness connector short circuit

- Make sure that relay connector is securely connected in place.
- Turn ignition switch to the "START" position.
- Contact terminal ㉑ with positive lead wire of voltmeter.
  *Test results
- Voltmeter reading indicates power line voltage ..... OK
- Voltmeter reading does not indicate power line voltage .. N.G.
  *If test results are "N.G.", proceed as follows:
- Turn ignition switch to the "OFF" position.
- Check the circuit indicated by large solid lines in Figure EF-62.

Downloaded from www.Manualslib.com manuals search engine

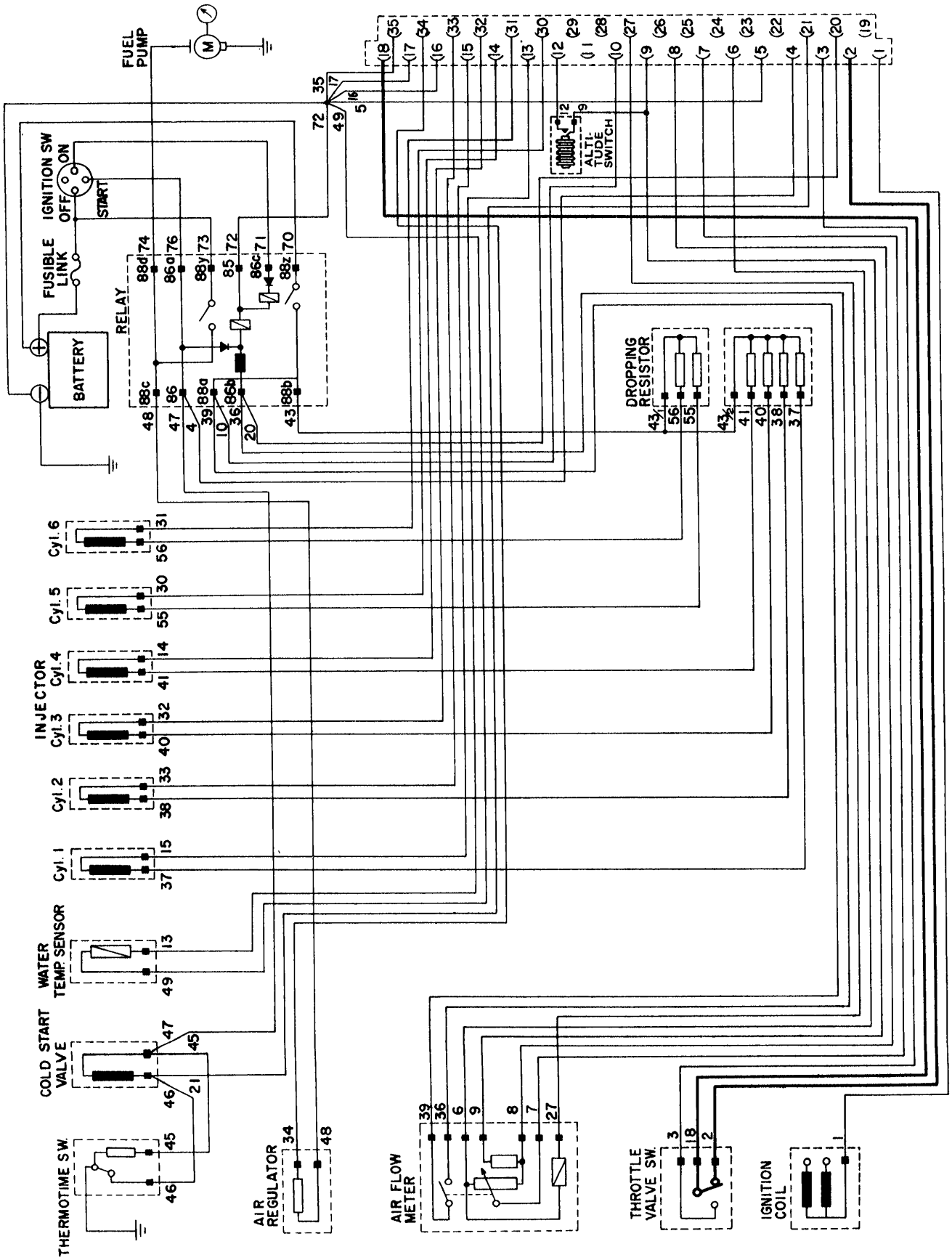

Fig. EF-37 Idle switch circuit

Downloaded from www.Manualslib.com manuals search engine

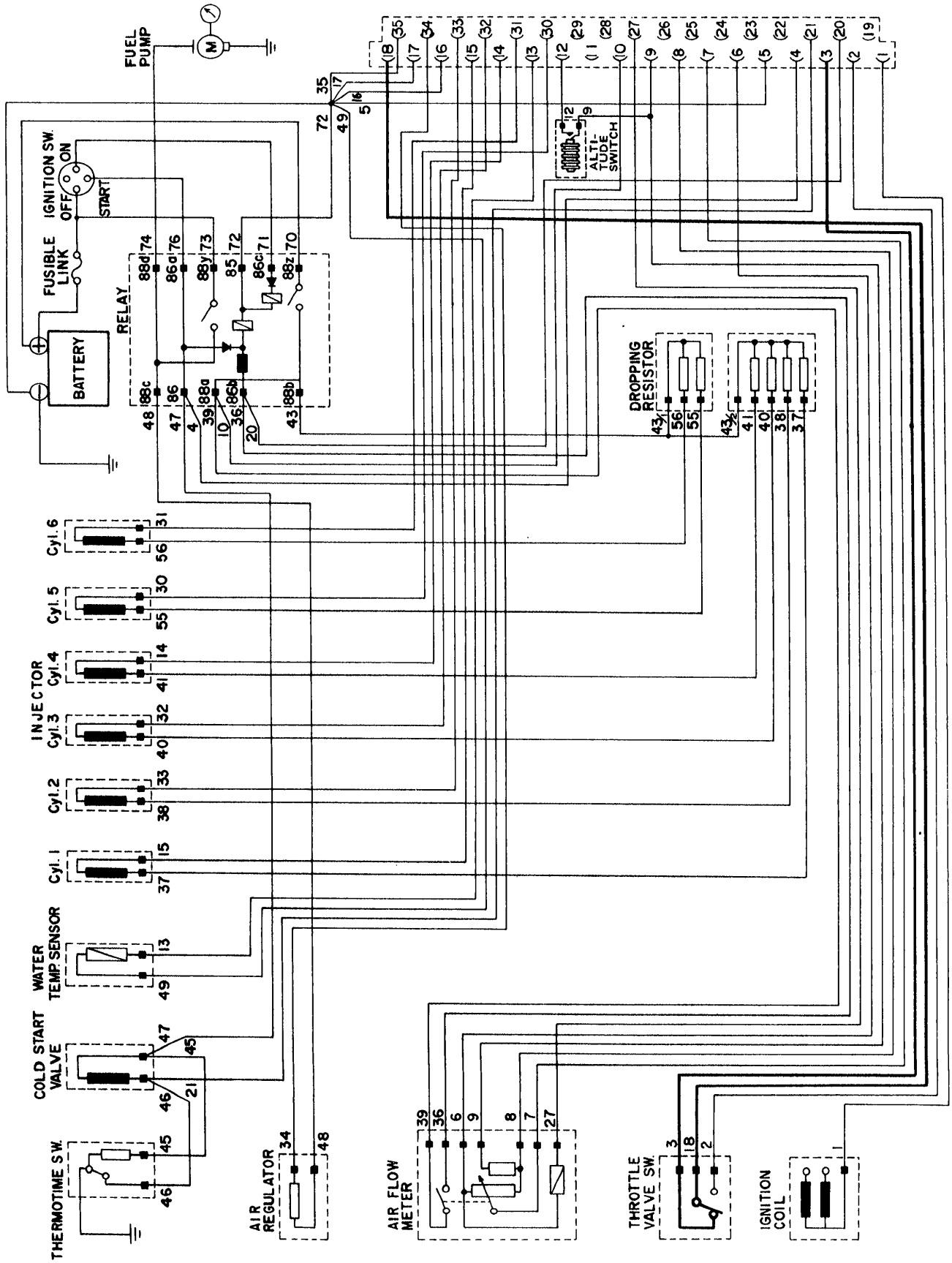

Fig. EF-38 Full switch circuit

Downloaded from www.Manualslib.com manuals search engine

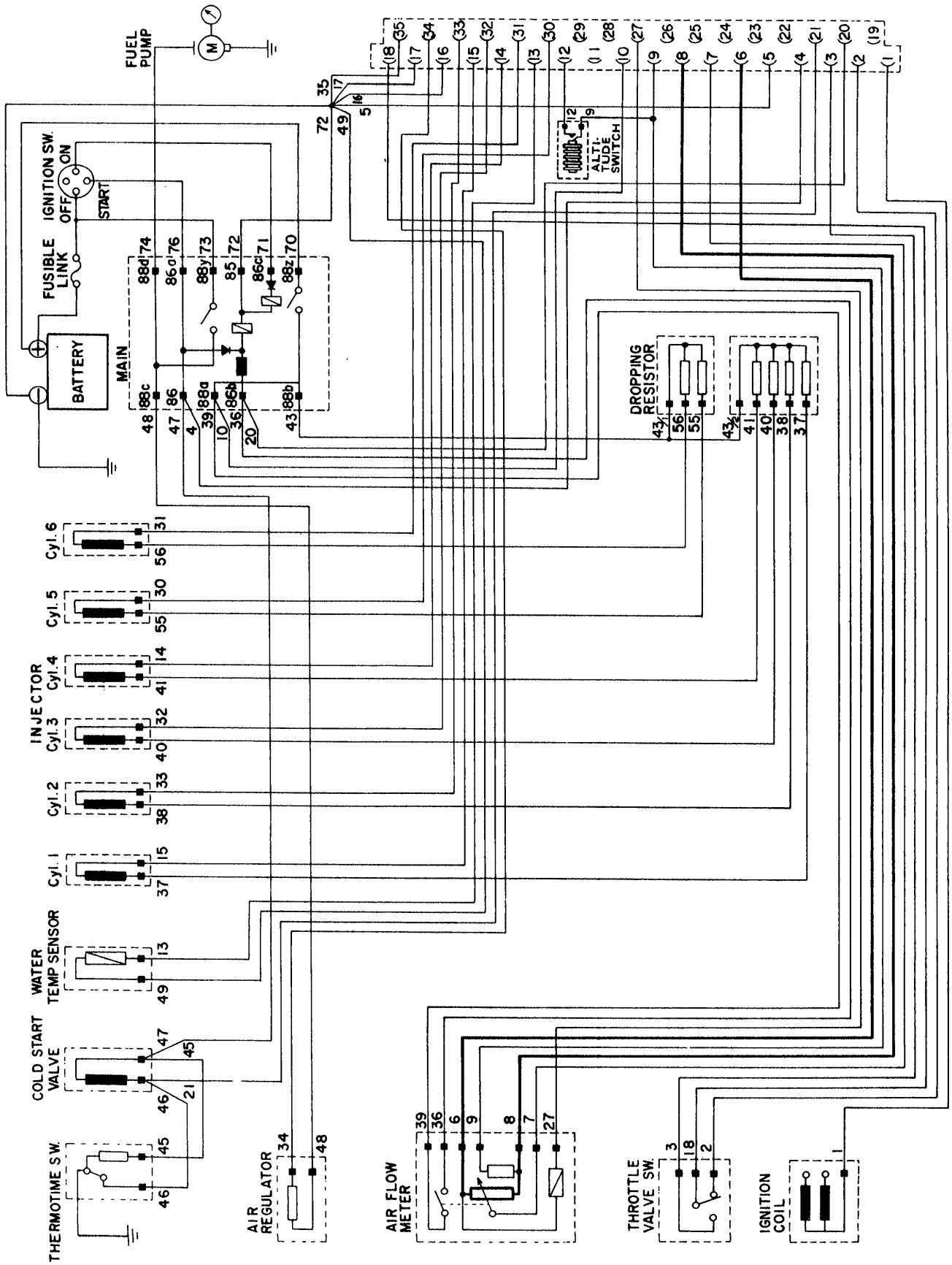

EF663

Fig. EF-39 Air flow meter between ⑥ and ⑧ circuit

Downloaded from www.Manualslib.com manuals search engine

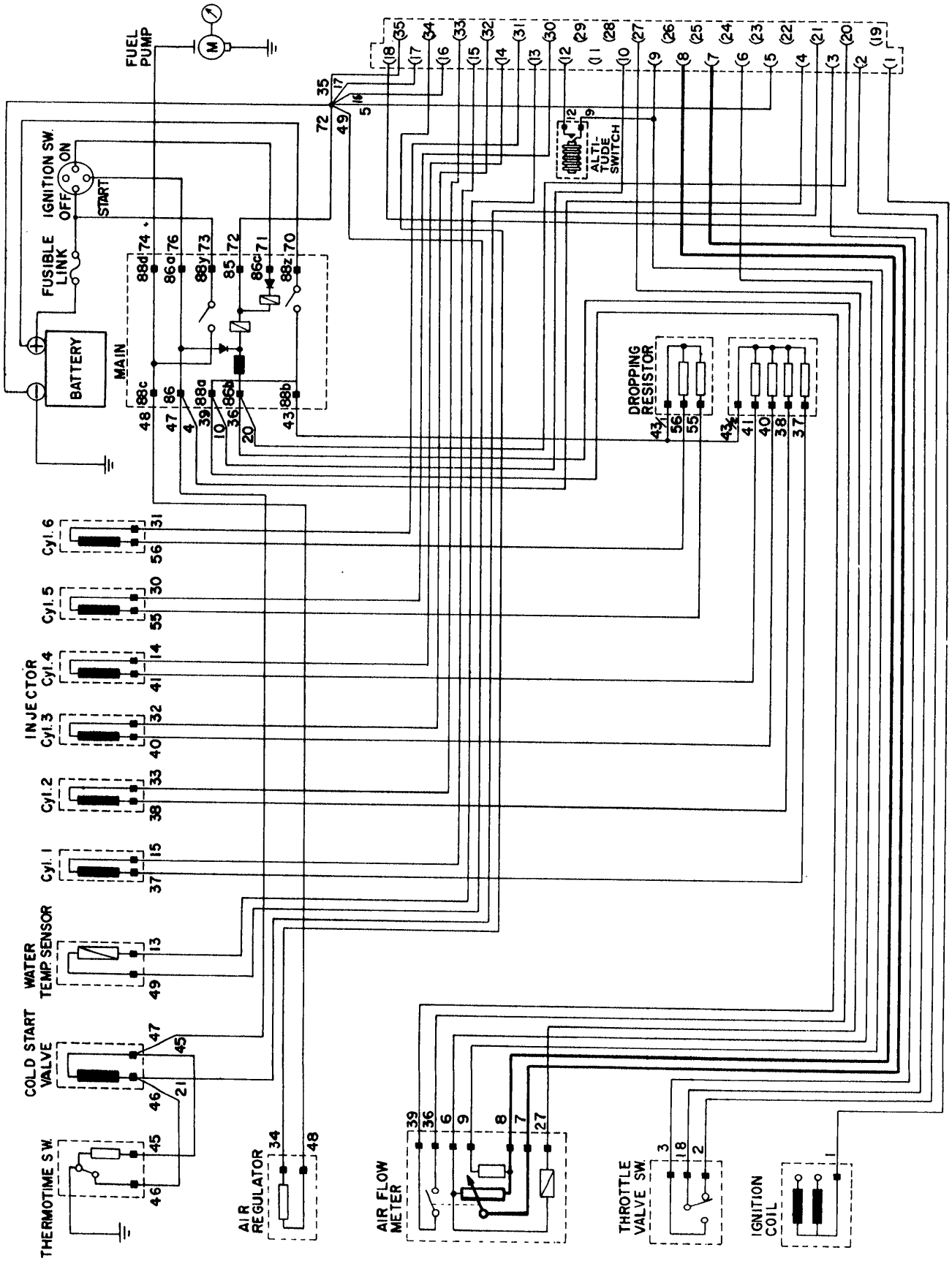

Fig. EF-40 Air flow meter between ⑦ and ⑧ circuit

Downloaded from www.Manualslib.com manuals search engine

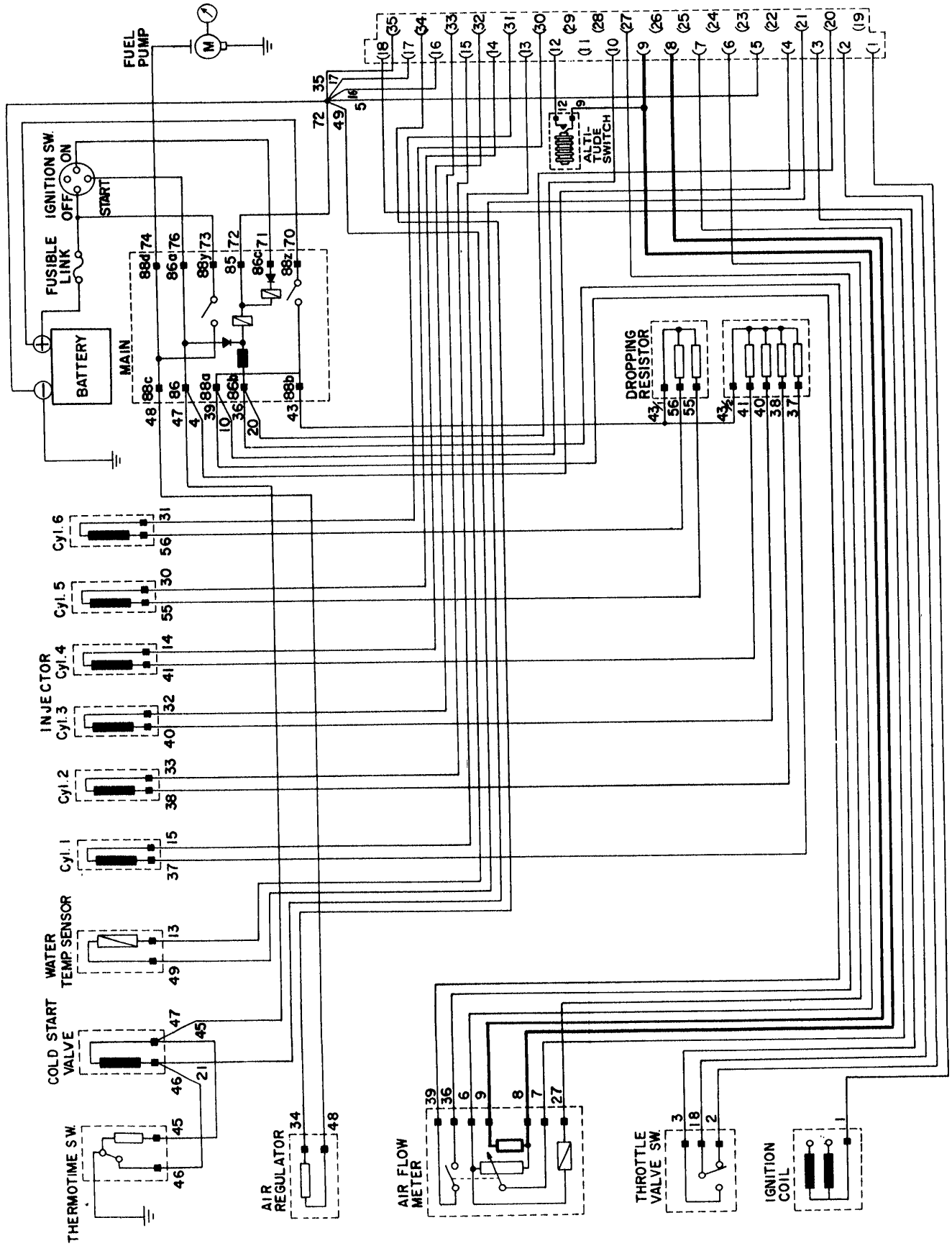

Fig. EF-41 Air flow meter between ⑧ and ⑨ circuit

Downloaded from www.Manualslib.com manuals search engine

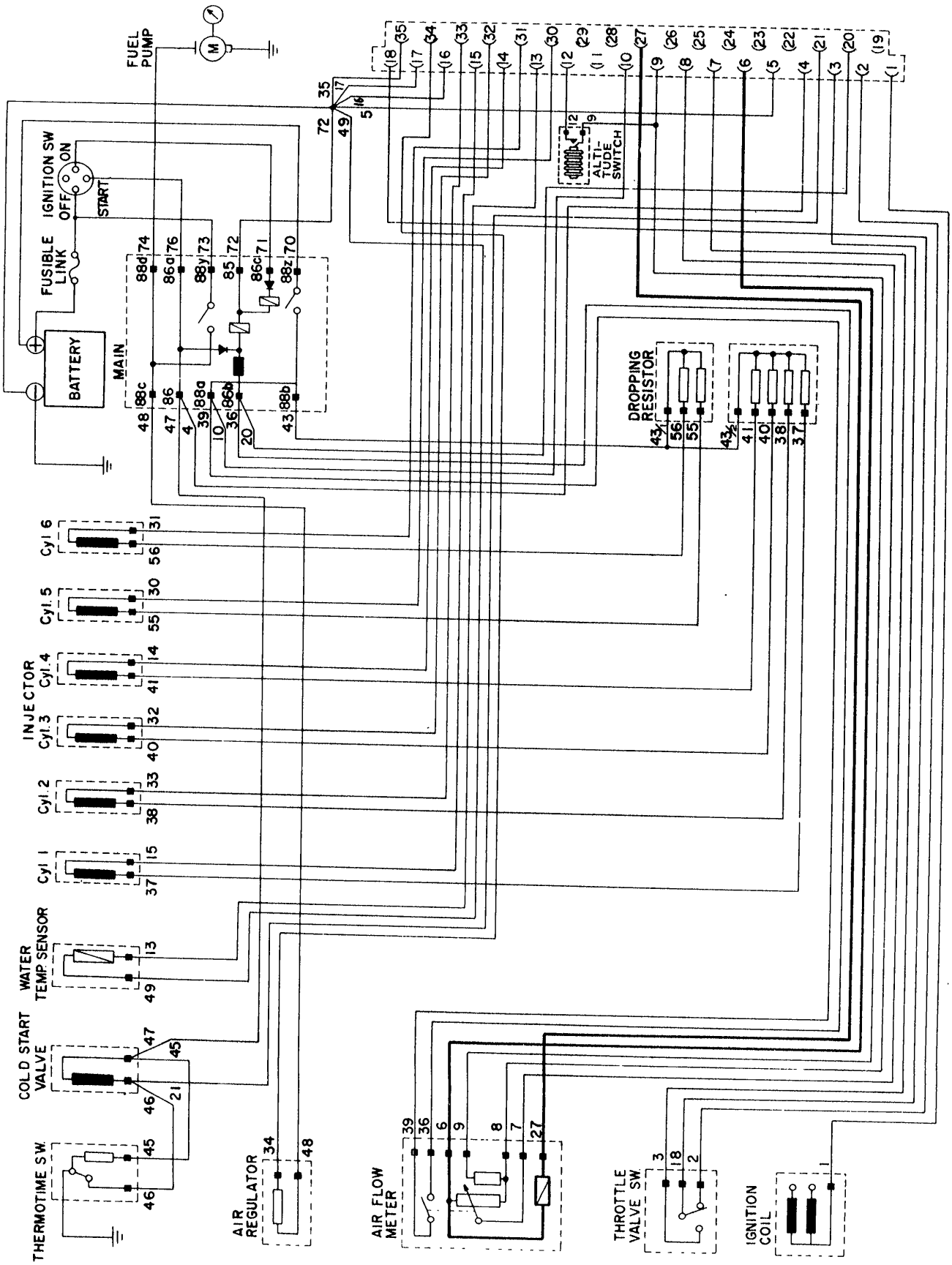

EF666

Fig. EF-42 Air temperature sensor circuit

Downloaded from www.Manualslib.com manuals search engine

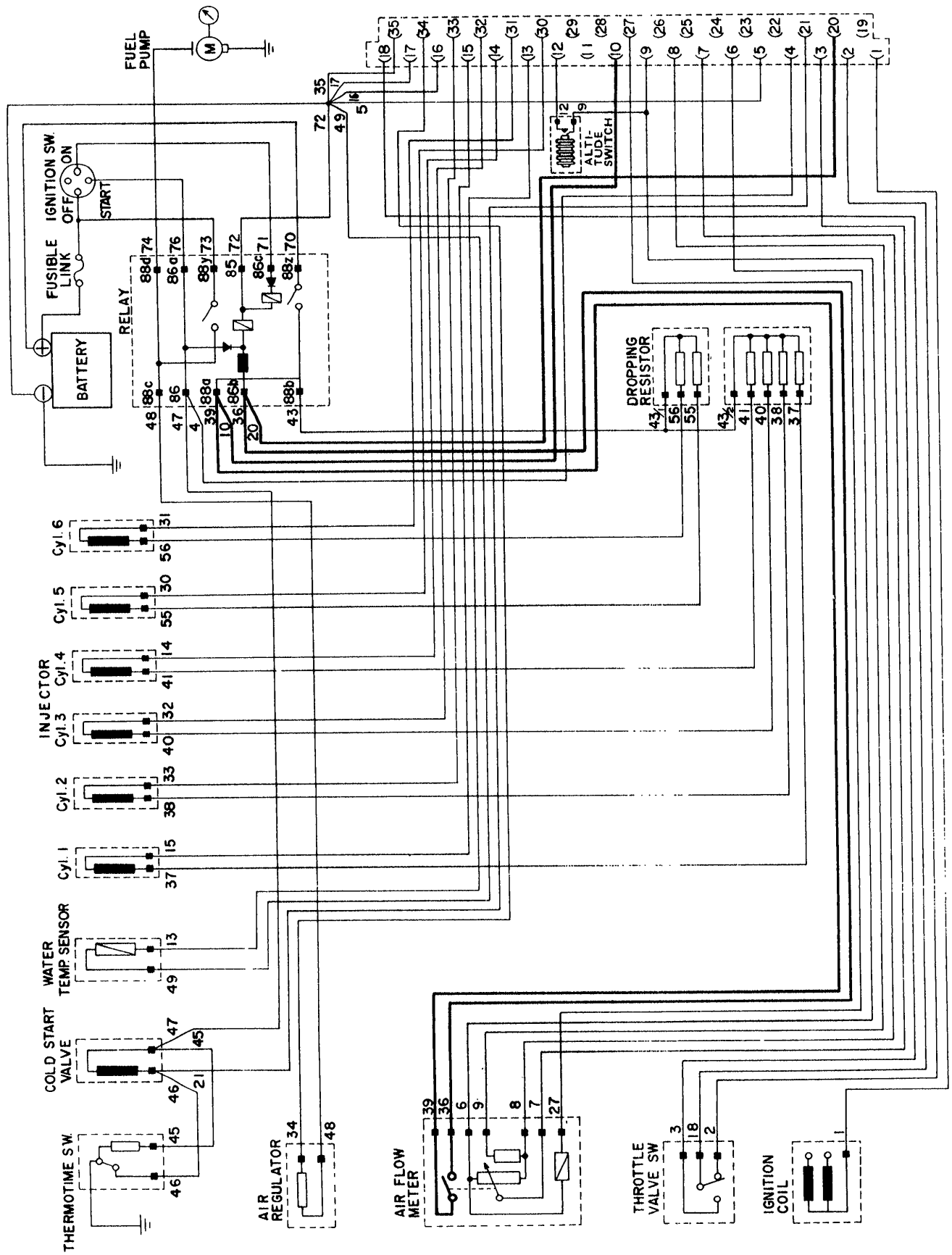

F667

Fig. FF-43 Fuel pump contact points circuit

Downloaded from www.Manualslib.com manuals search engine

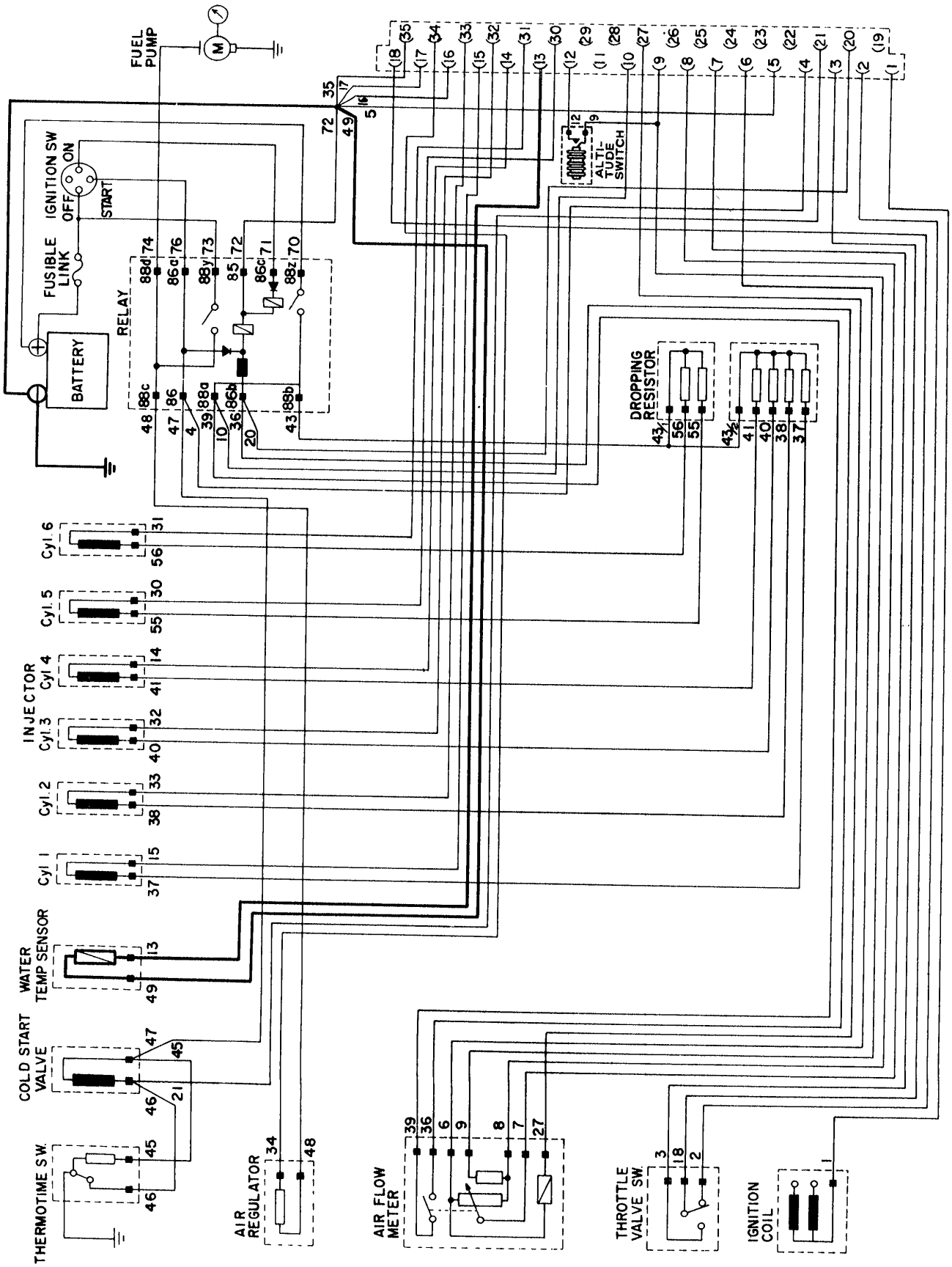

Fig. EF-44 Water temperature sensor circuit

Downloaded from www.Manualslib.com manuals search engine

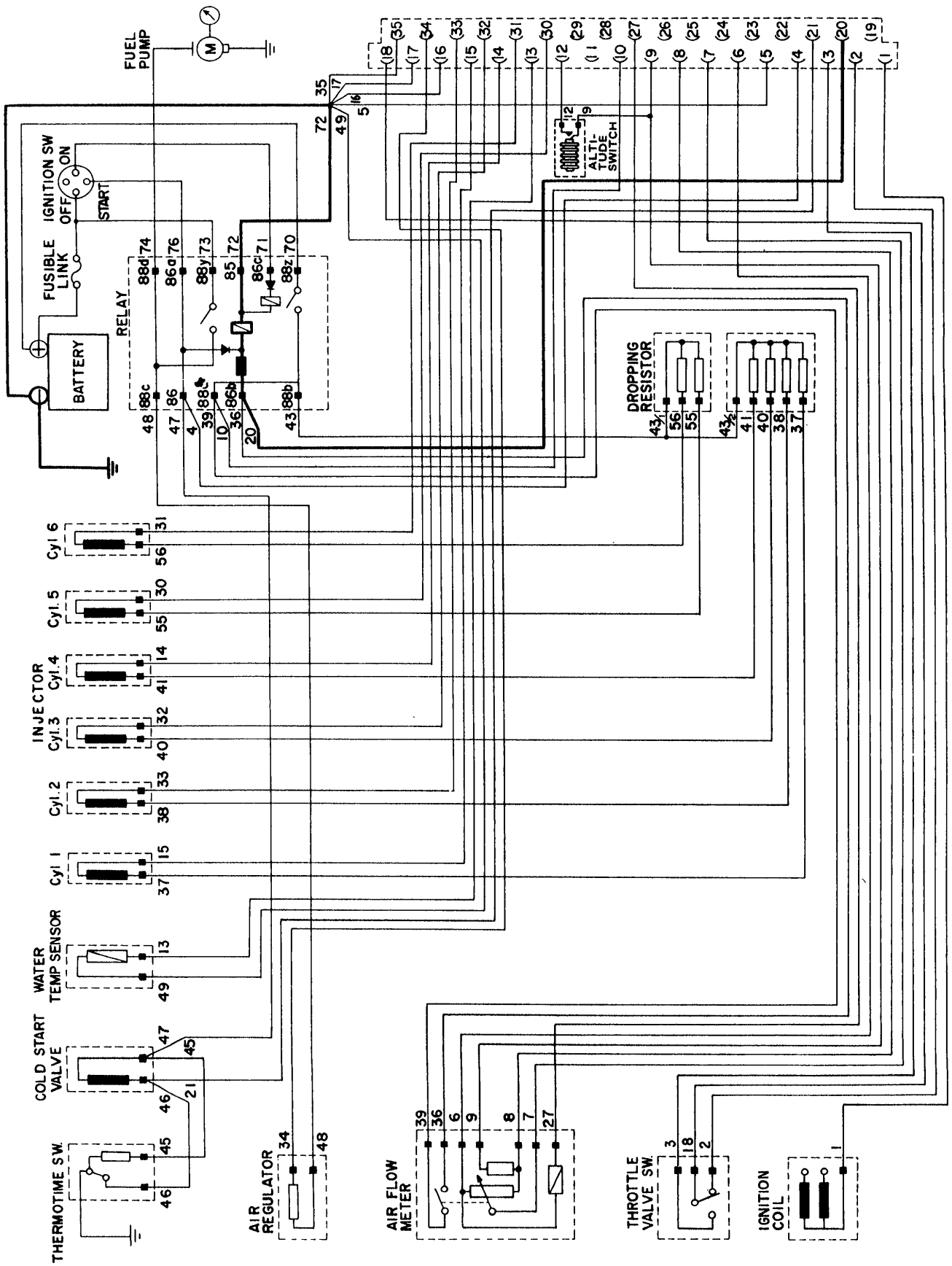

Fig. EF-45 Fuel pump relay circuit

Downloaded from www.Manualslib.com manuals search engine

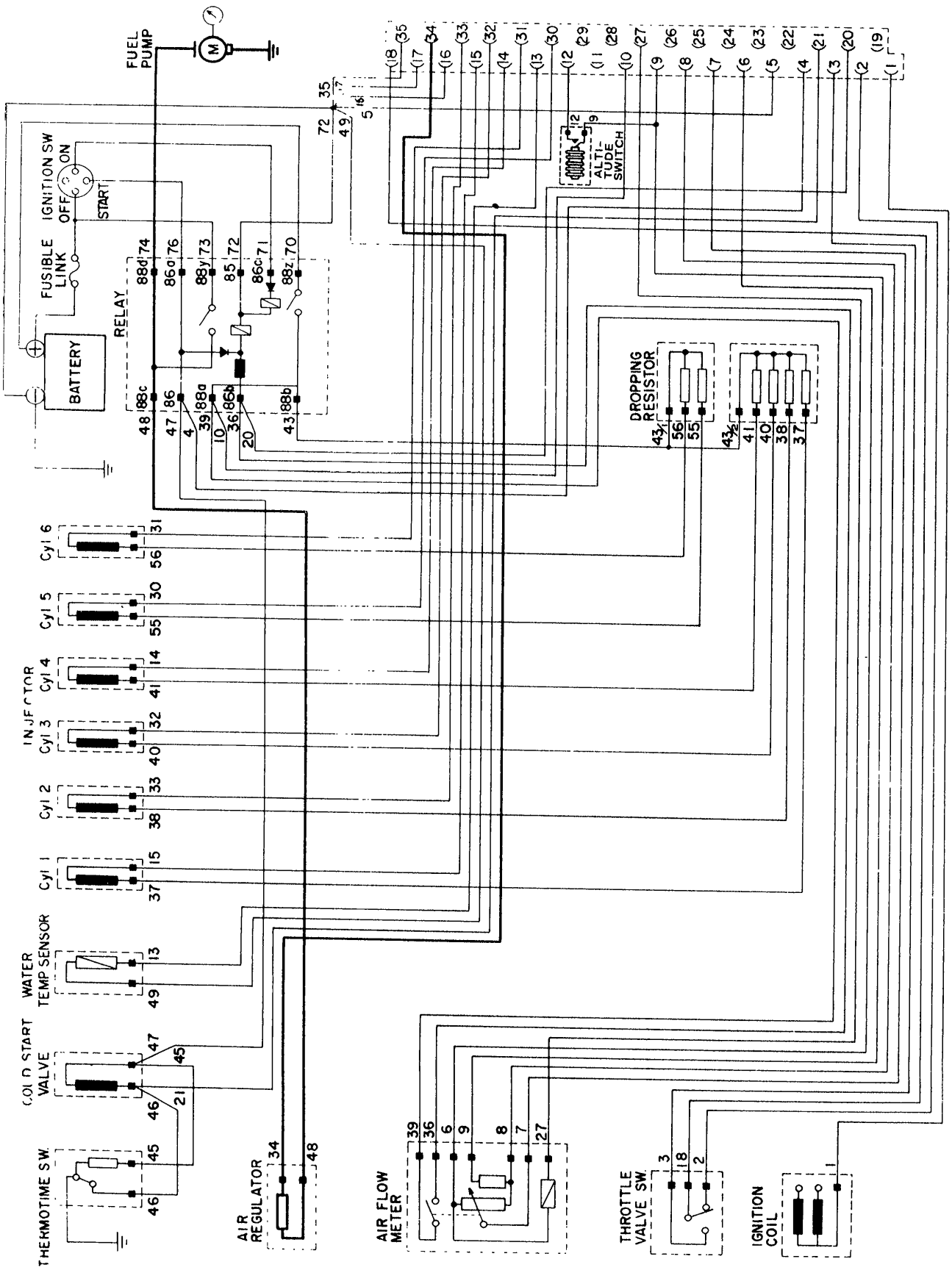

EF670

Fig. EF-46 Air regulator and fuel pump circuit

Downloaded from www.Manualslib.com manuals search engine

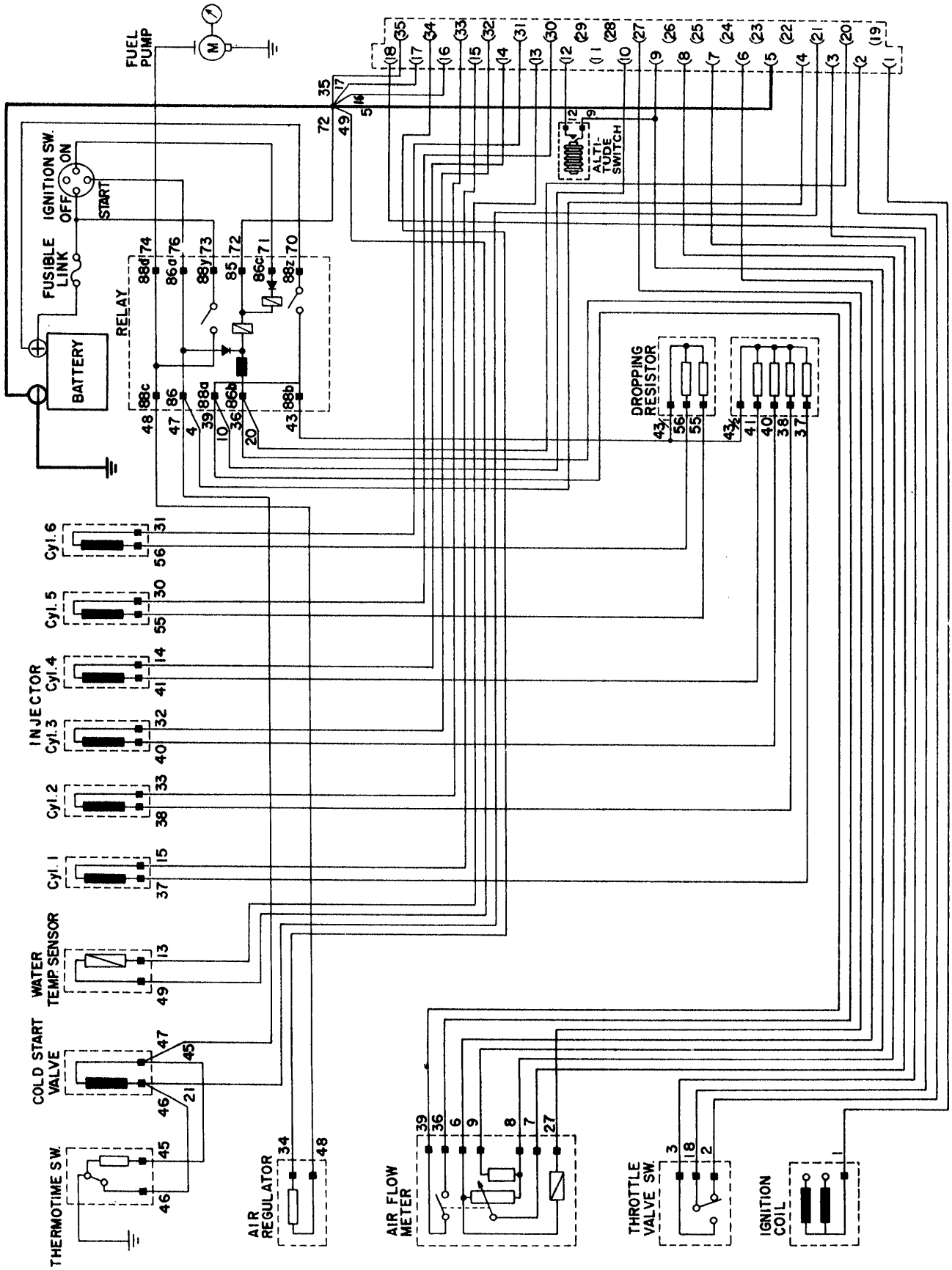

EF671

Fig. EF-47 Ground (between ⑤ and body metal) circuit

Downloaded from www.Manualslib.com manuals search engine

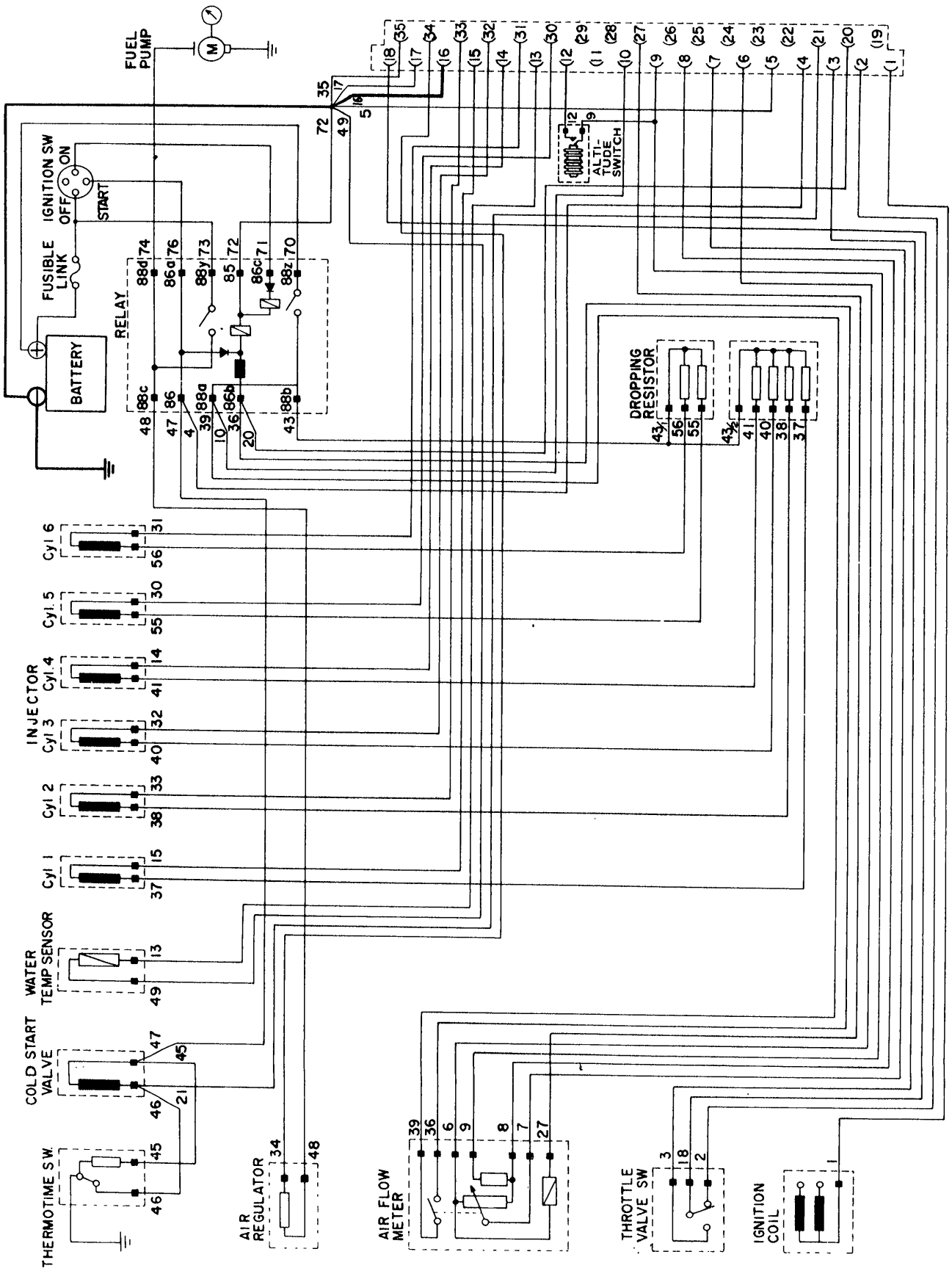

Fig. EF-48 Ground (between ⑥ and body metal) circuit

Downloaded from www.Manualslib.com manuals search engine

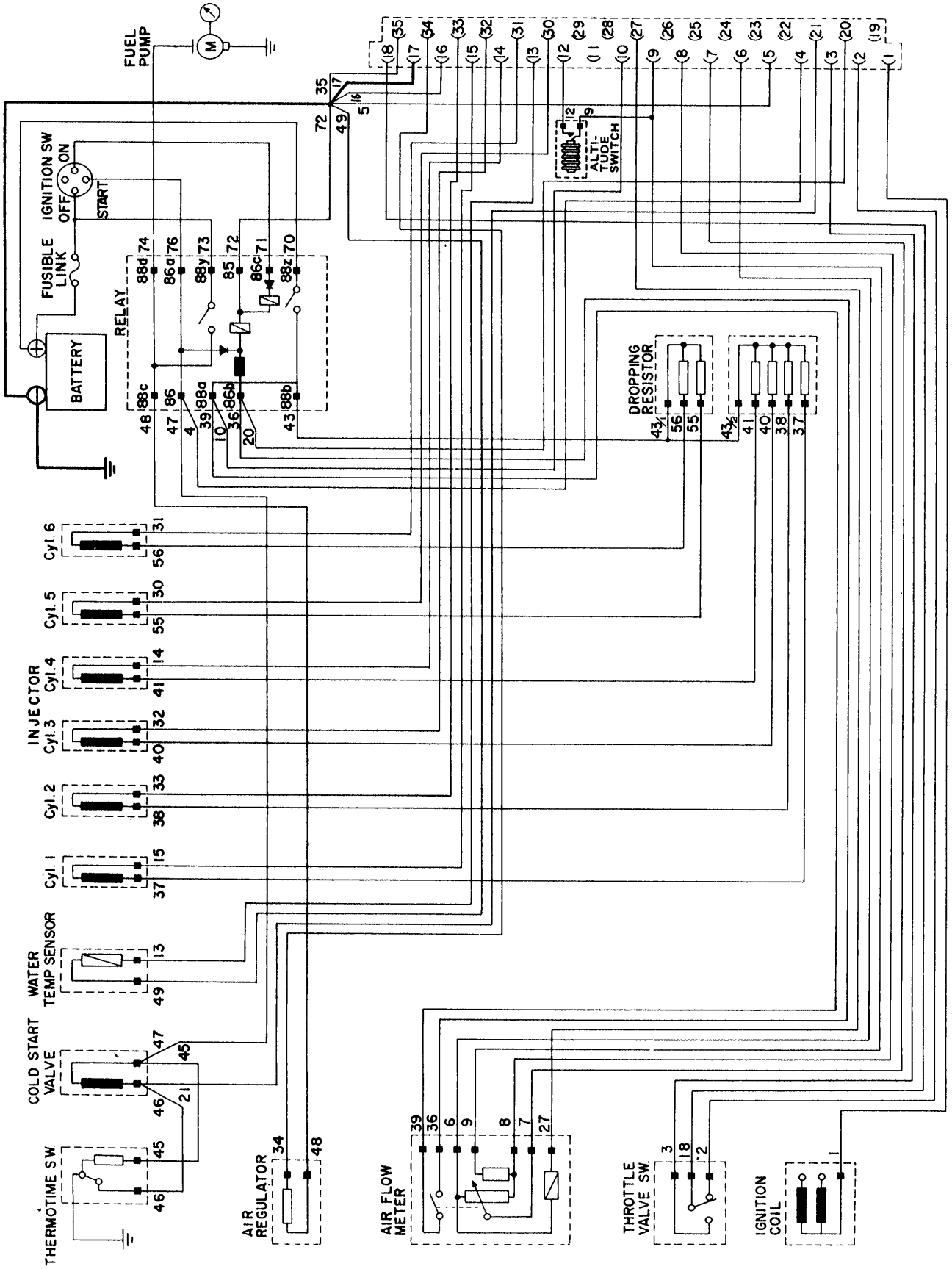

EF673

Fig. EF-49 Ground (between 17 and body metal) circuit

Downloaded from www.Manualslib.com manuals search engine

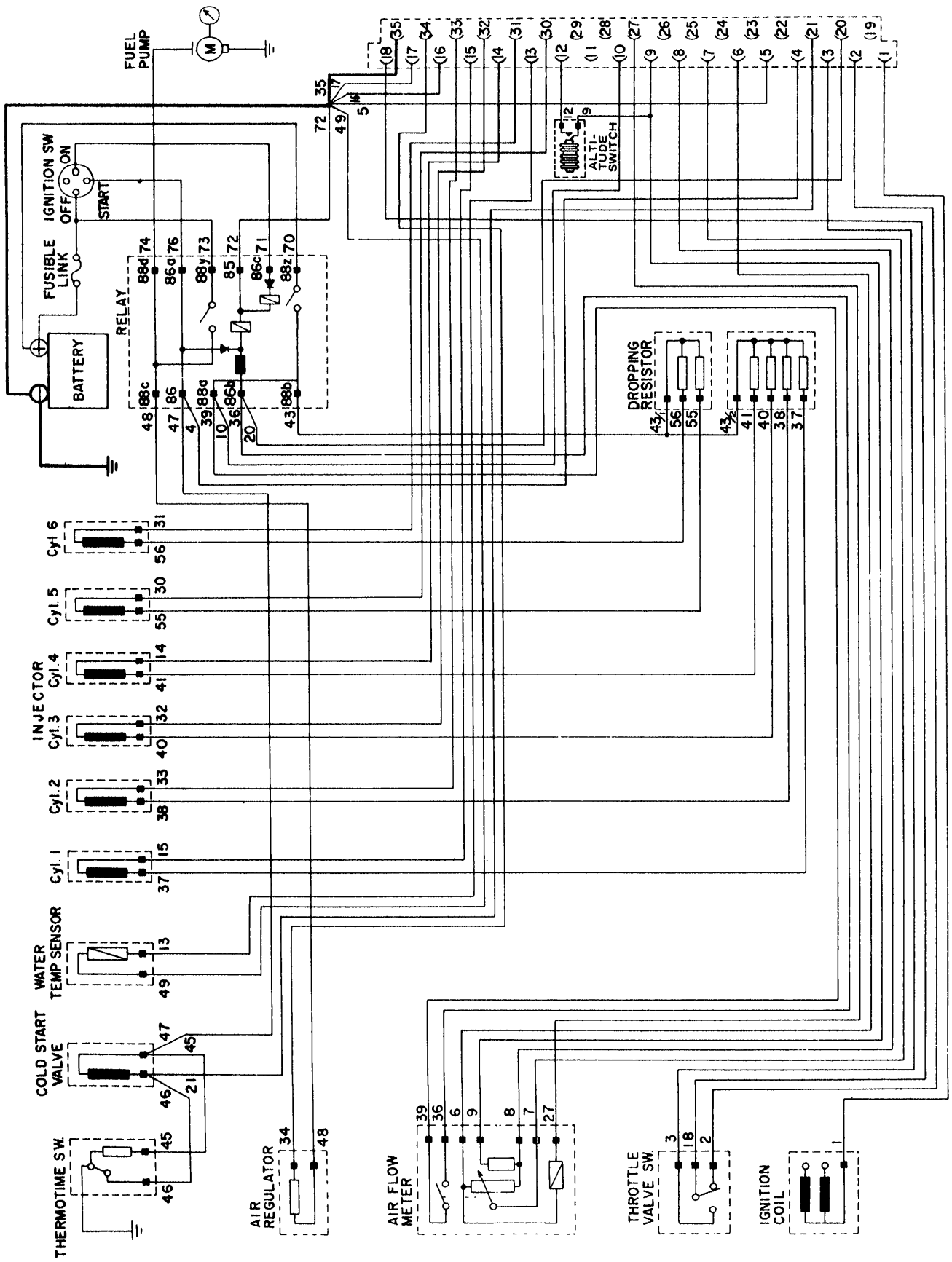

Fig. EF-50 Ground (between 35 and body metal) circuit

Downloaded from www.Manualslib.com manuals search engine

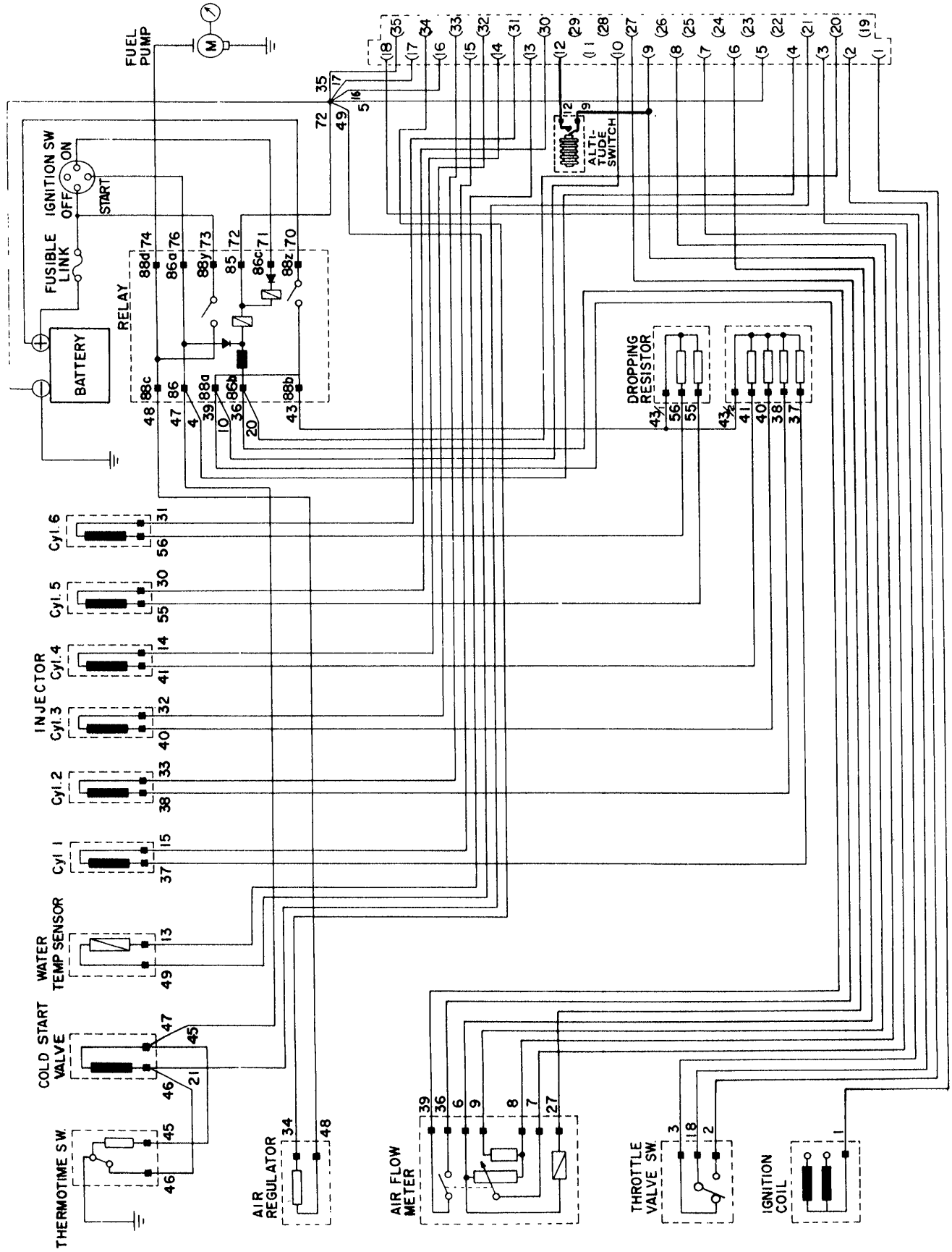

Fig. EF-51 Altitude switch circuit (California models)

Downloaded from www.Manualslib.com manuals search engine

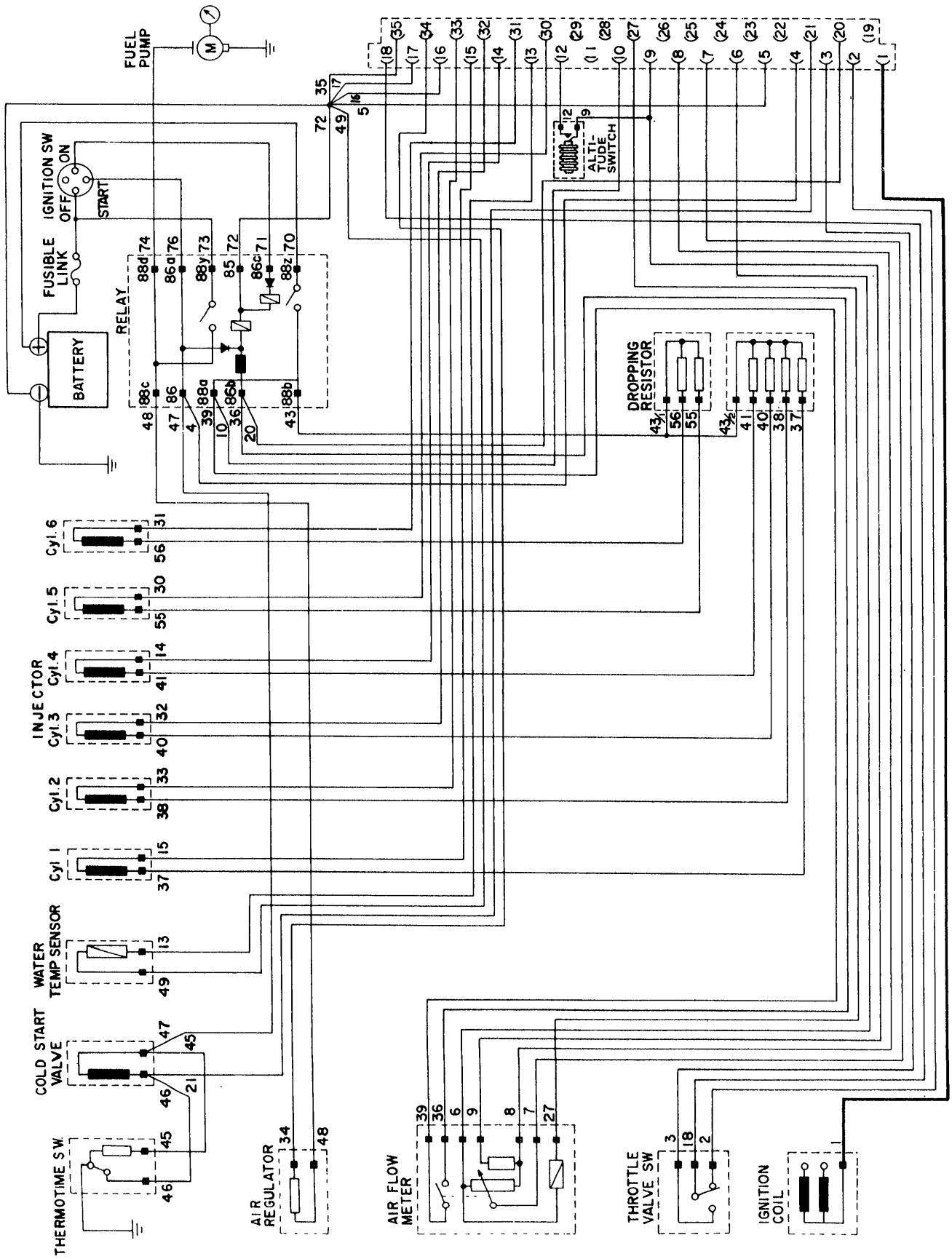

EF676

Fig. EF-52 Revolution trigger signal circuit

Downloaded from www.Manualslib.com manuals search engine

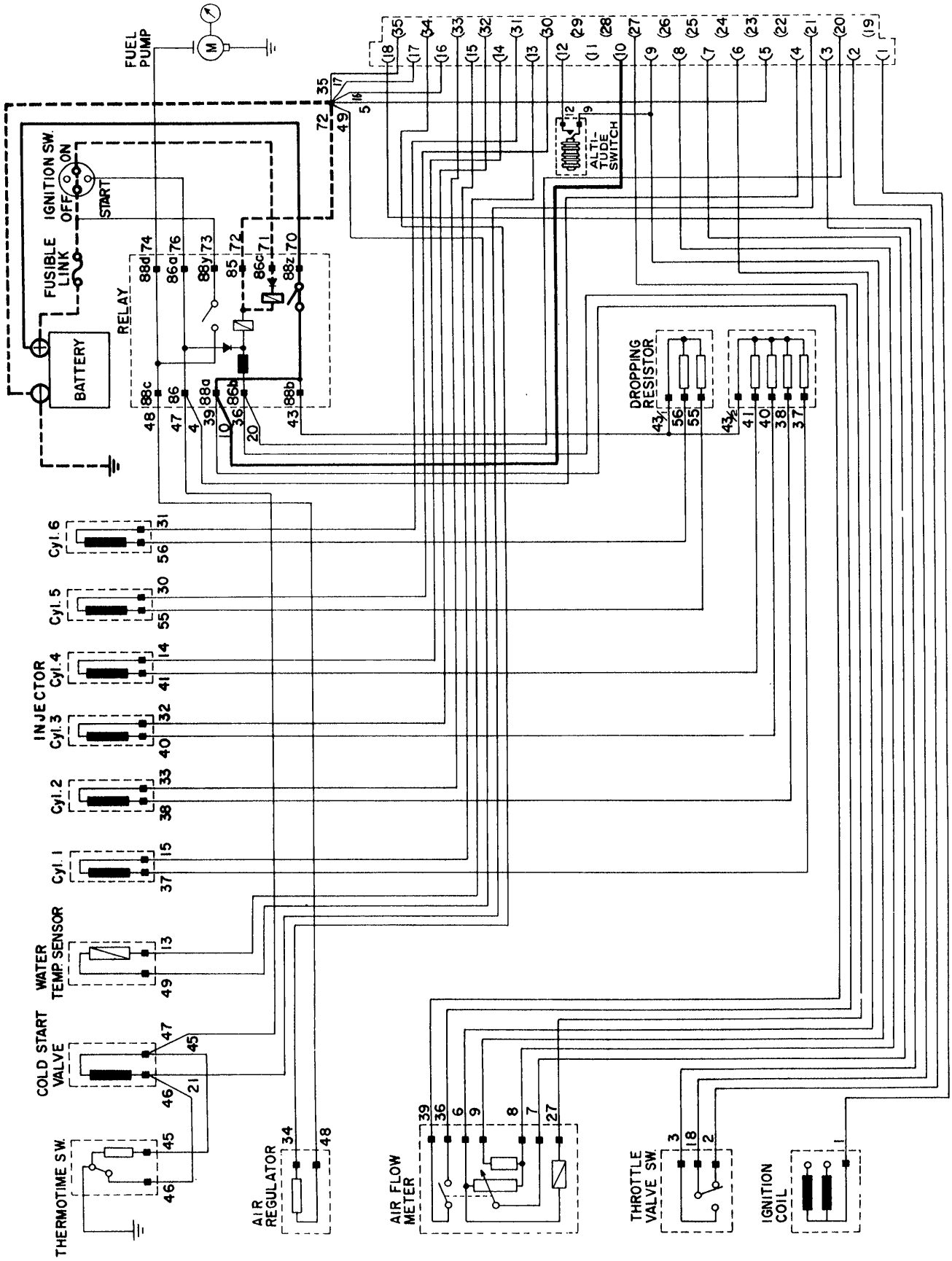

Fig. EF-53 Power line circuit

Downloaded from www.Manualslib.com manuals search engine

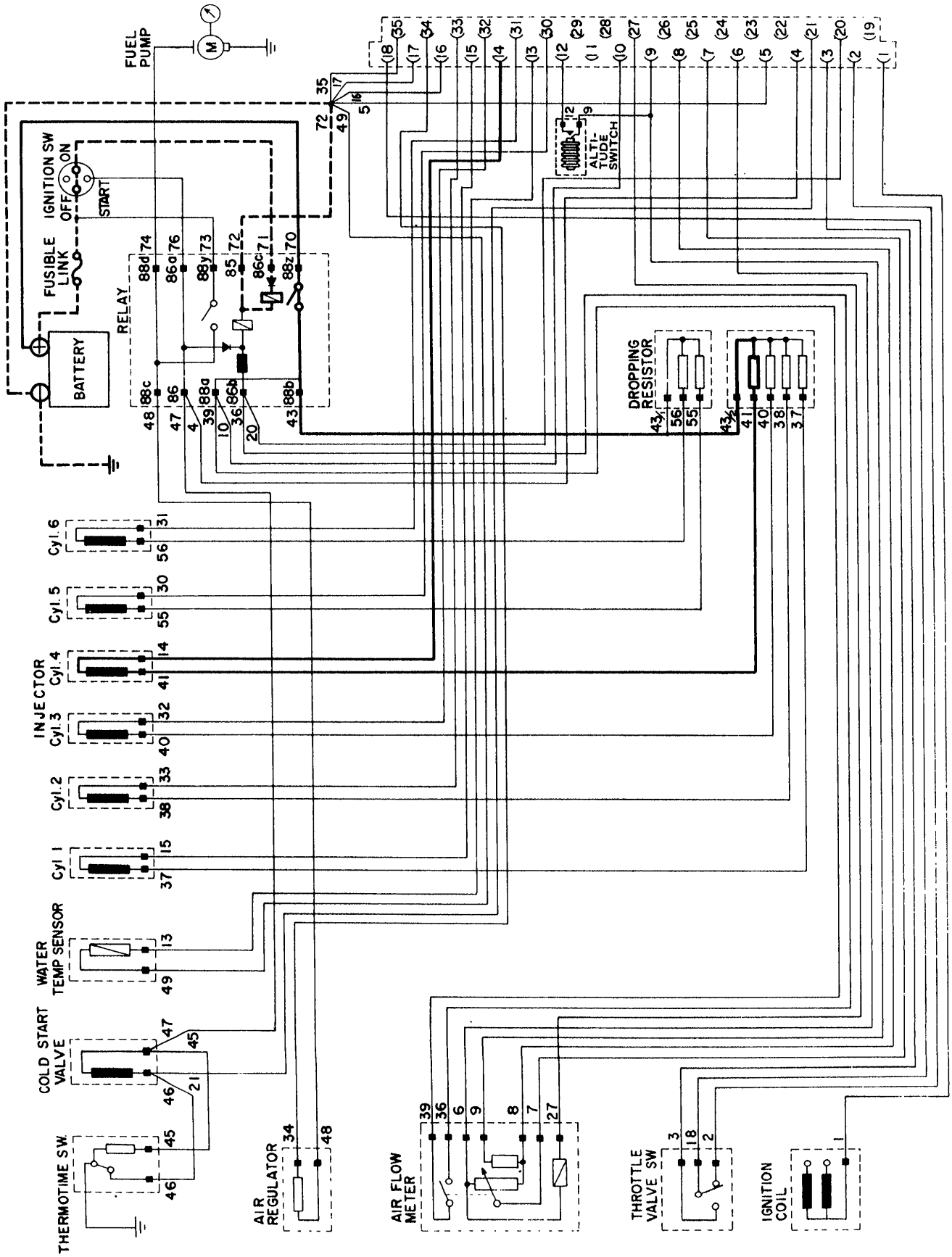

Fig. EF-54 Injector (cylinder "4") and dropping resistor circuit

Downloaded from www.Manualslib.com manuals search engine

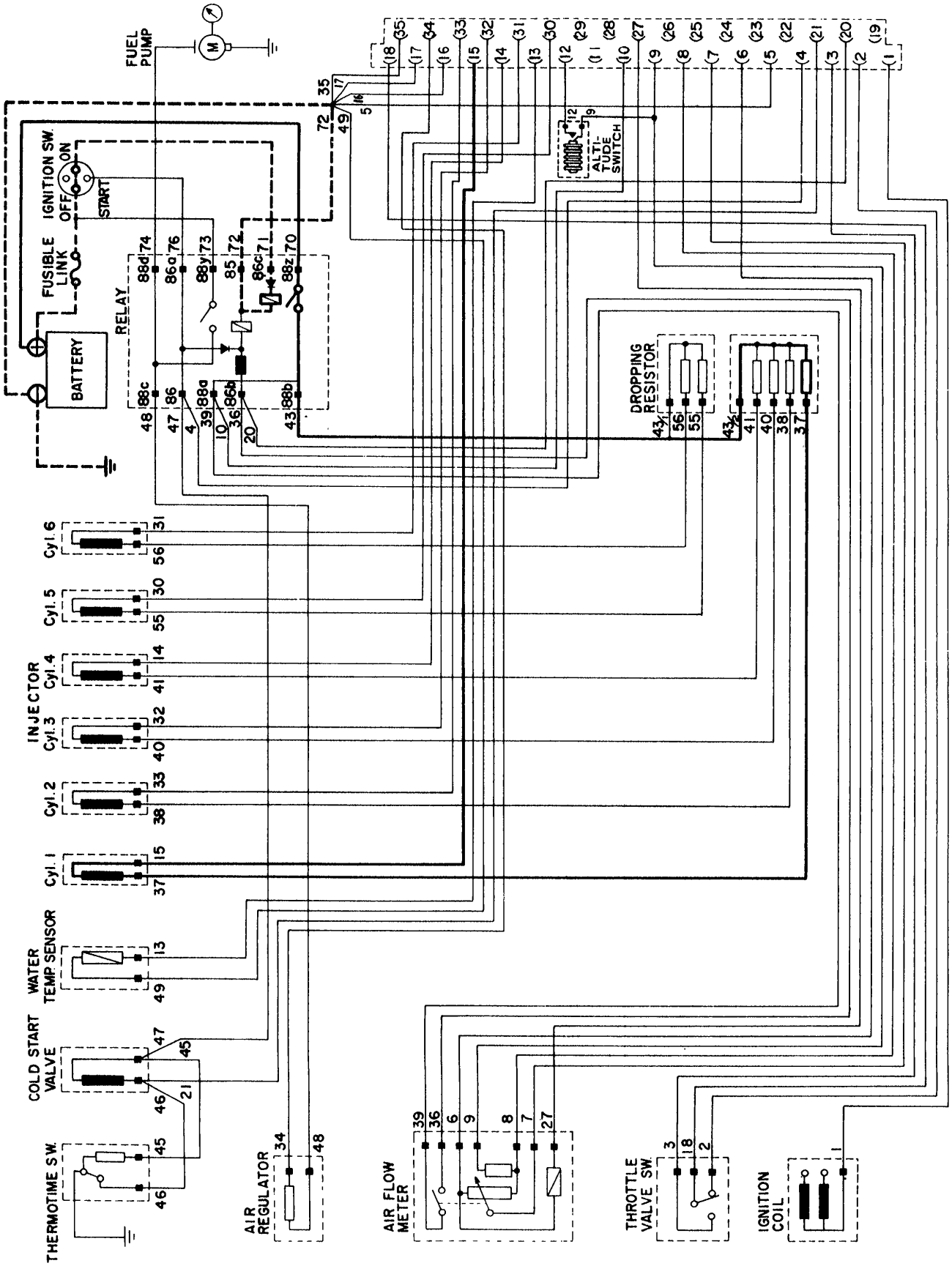

Fig. EF-55 Injector (cylinder "1") and dropping resistor circuit

Downloaded from www.Manualslib.com manuals search engine

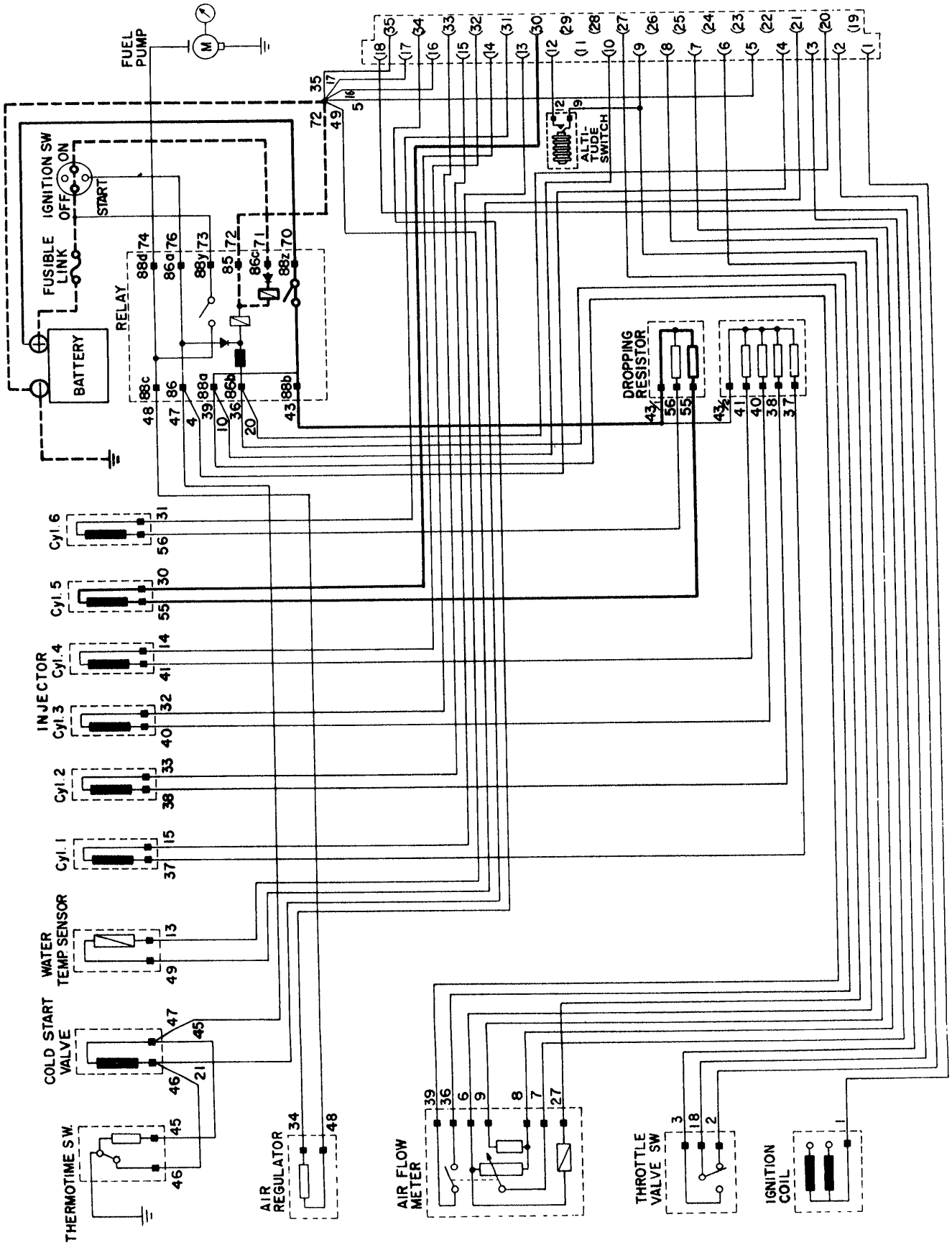

Fig. EF-56 Injector (cylinder "5") and dropping resistor circuit

Downloaded from www.Manualslib.com manuals search engine

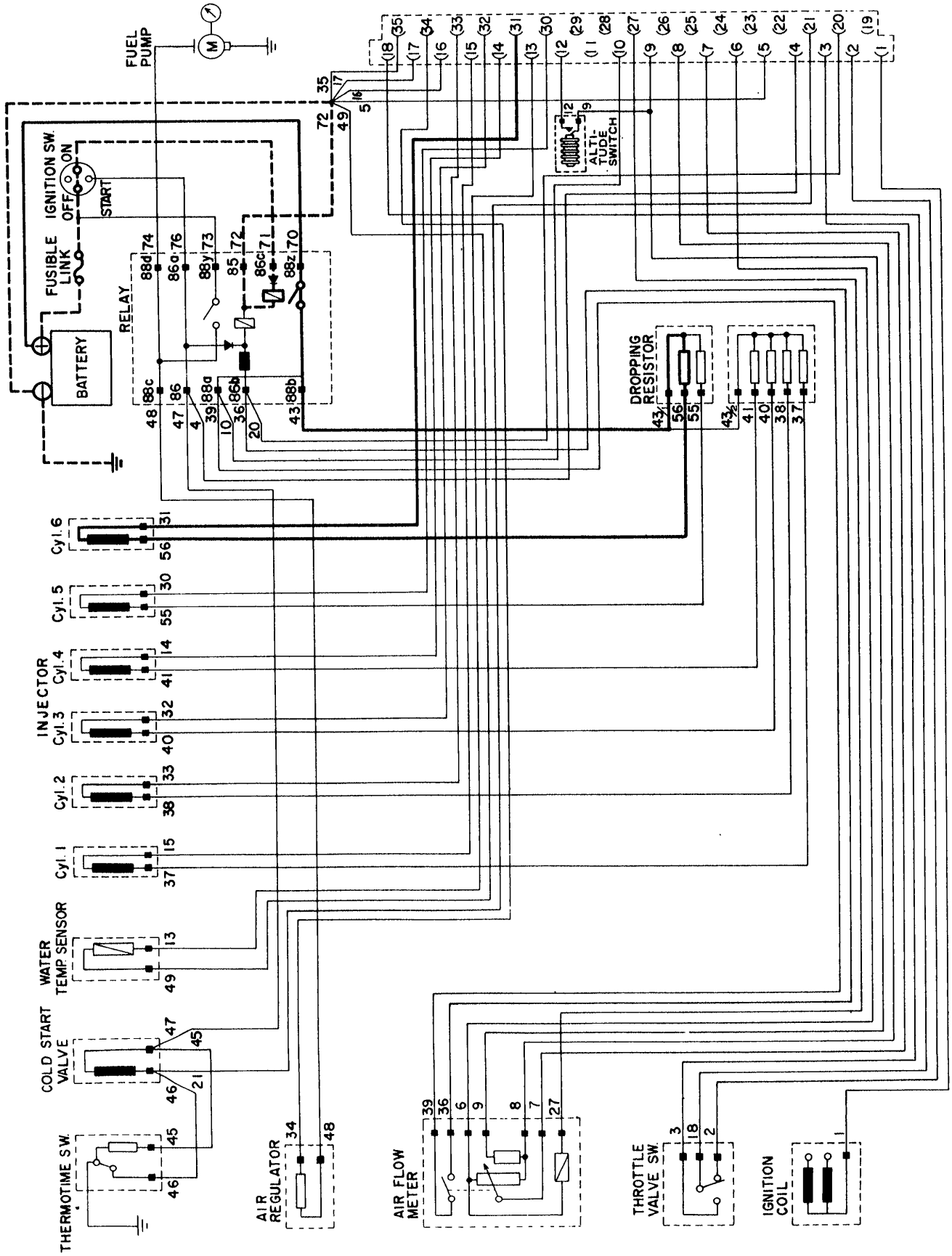

Fig. EF-57 Injector (cylinder "6") and dropping resistor circuit

Downloaded from www.Manualslib.com manuals search engine

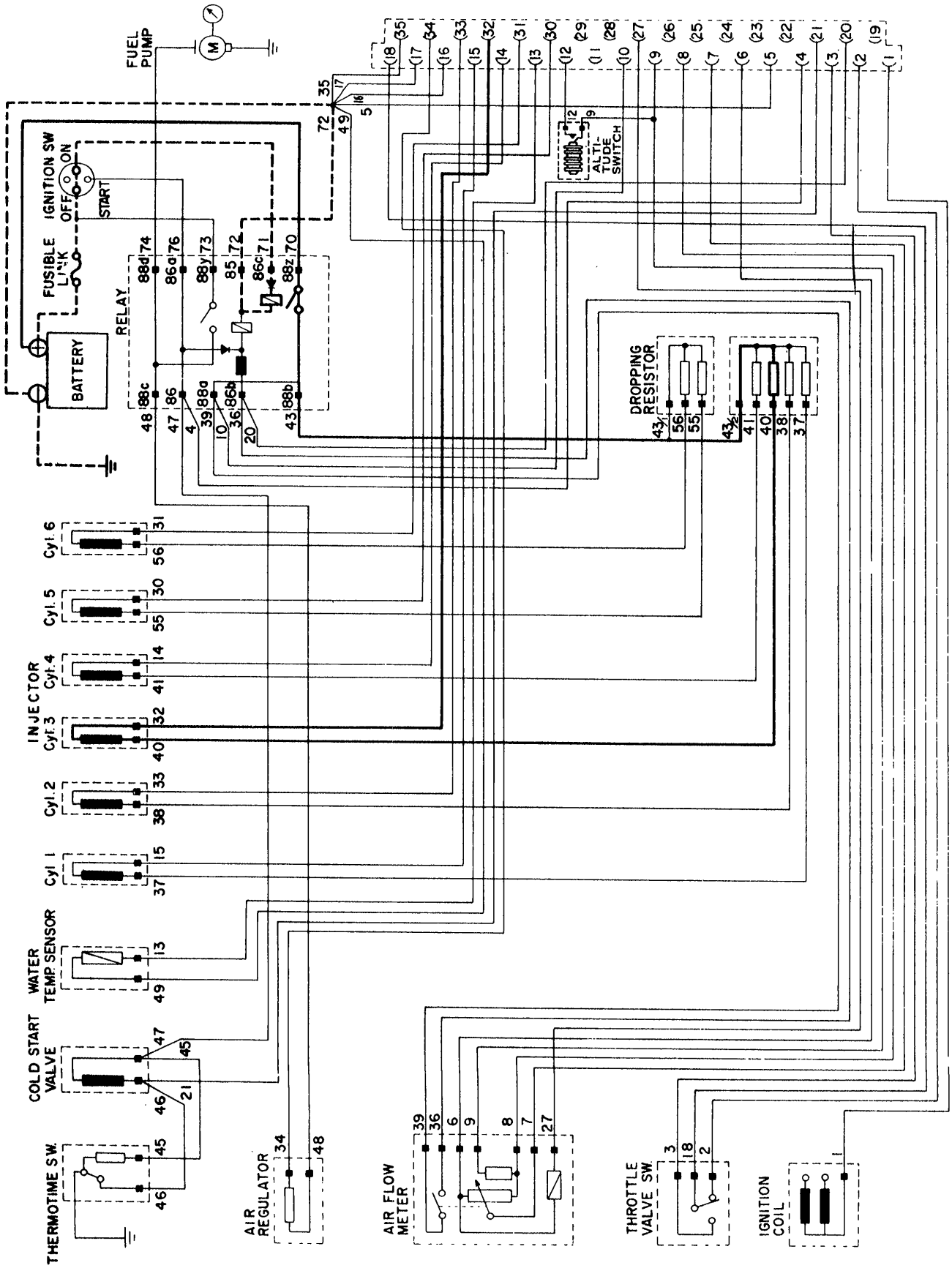

EF682

Fig. EF-58 Injector (cylinder "3") and dropping resistor circuit

Downloaded from www.Manualslib.com manuals search engine

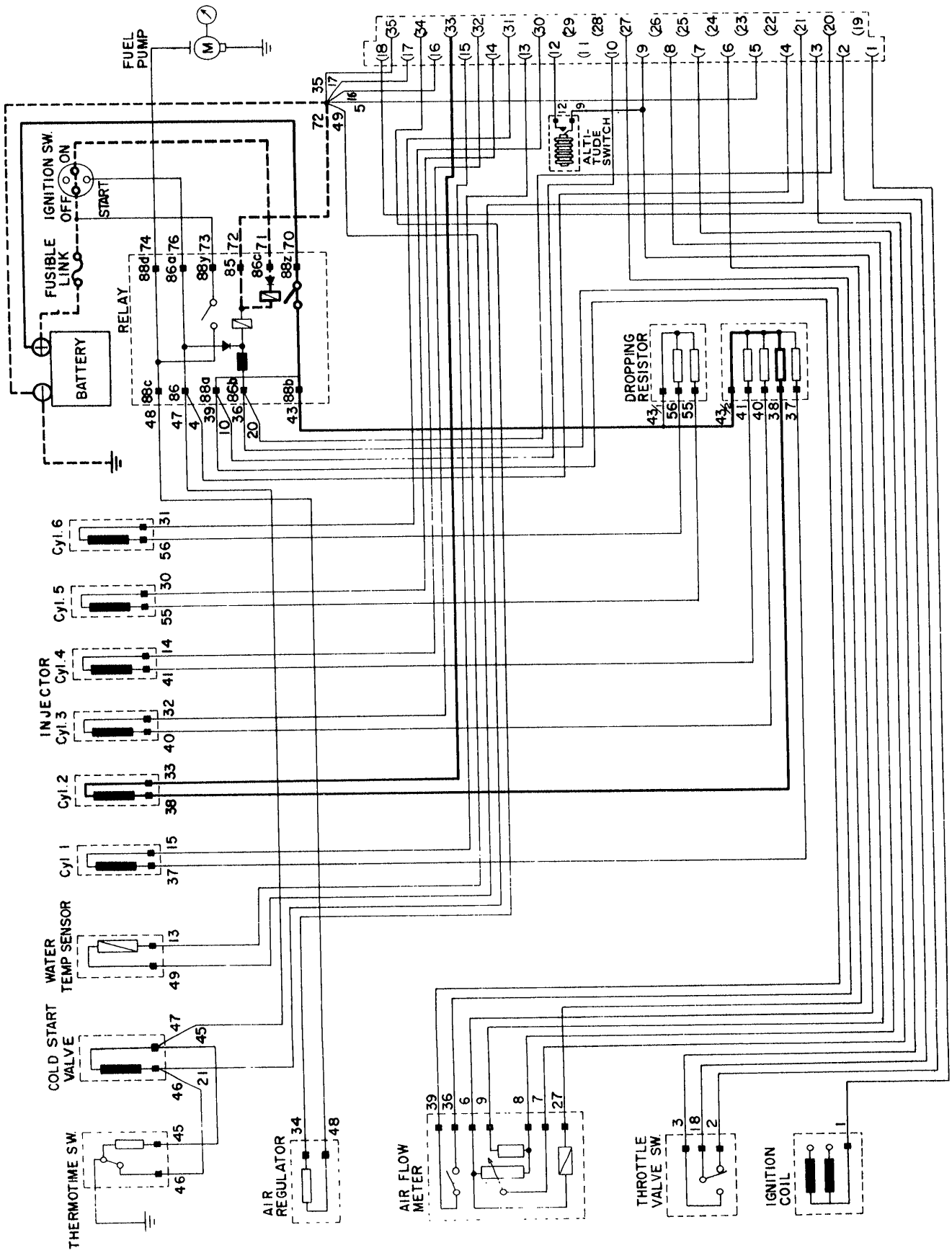

Fig. EF-59 Injector (cylinder "2") and dropping resistor circuit

Downloaded from www.Manualslib.com manuals search engine

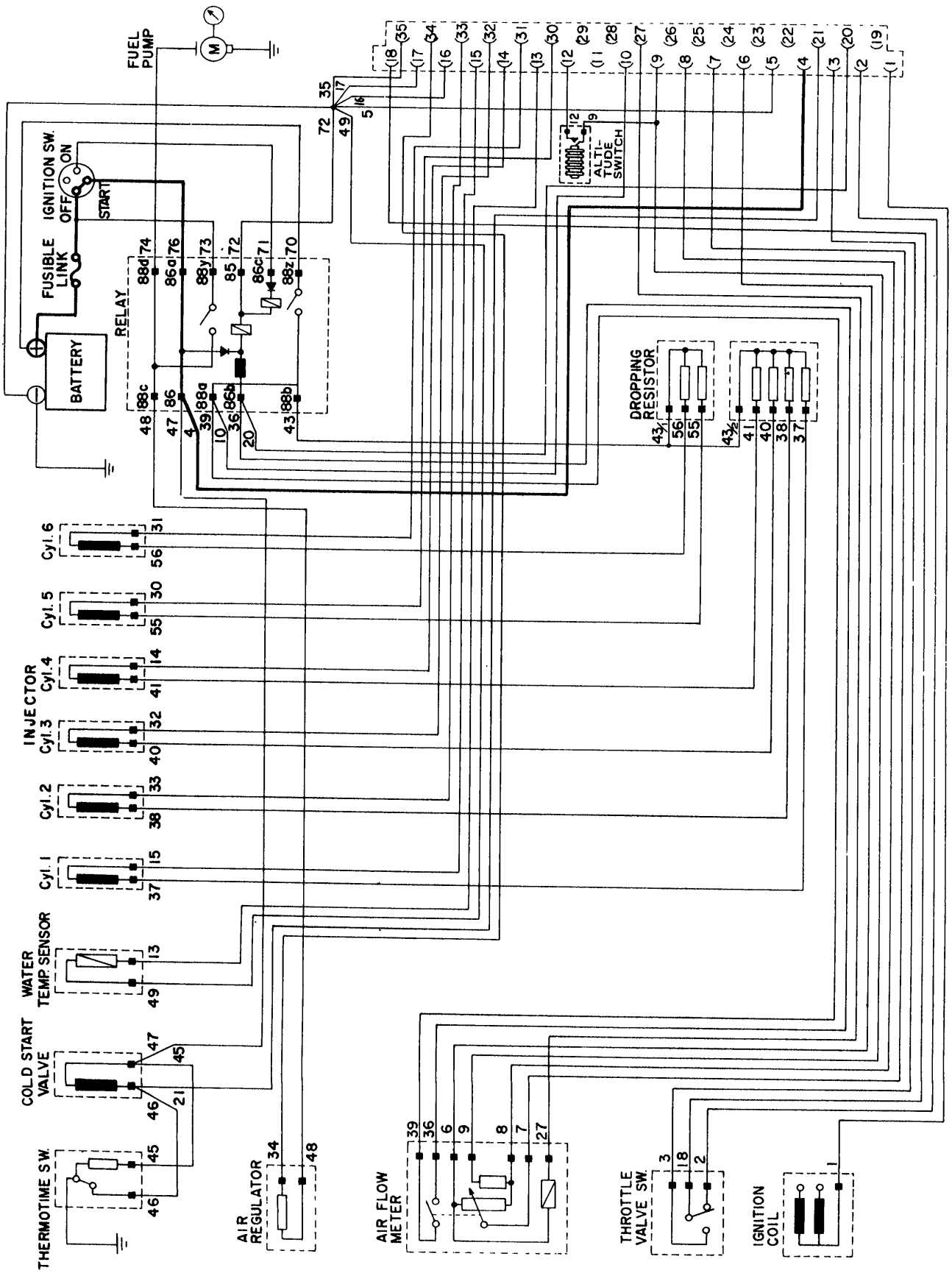

EF684

Fig. EF-60 Starter signal circuit

Downloaded from www.Manualslib.com manuals search engine

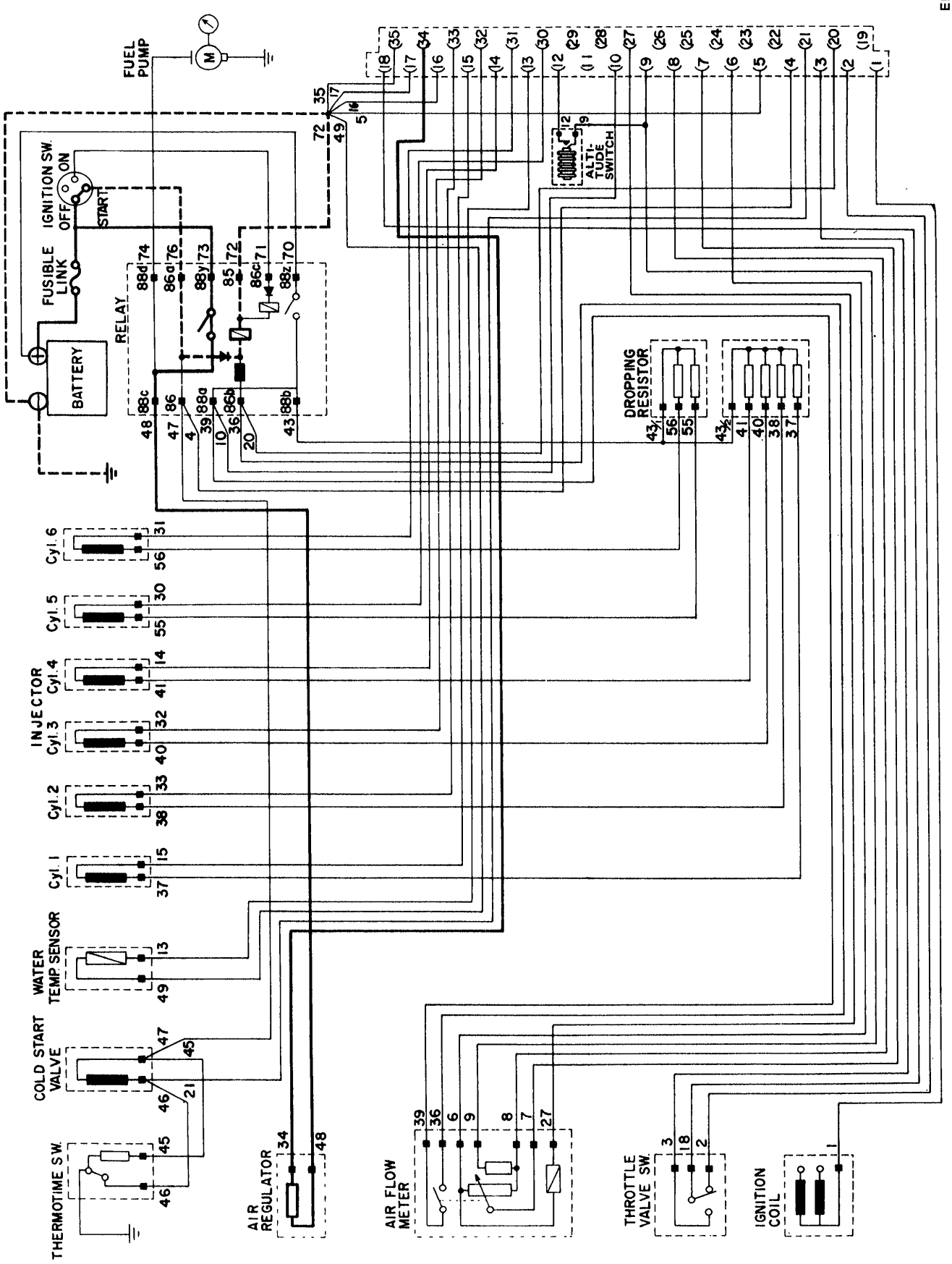

Fig. EF-61 Air regulator circuit

Downloaded from www.Manualslib.com manuals search engine

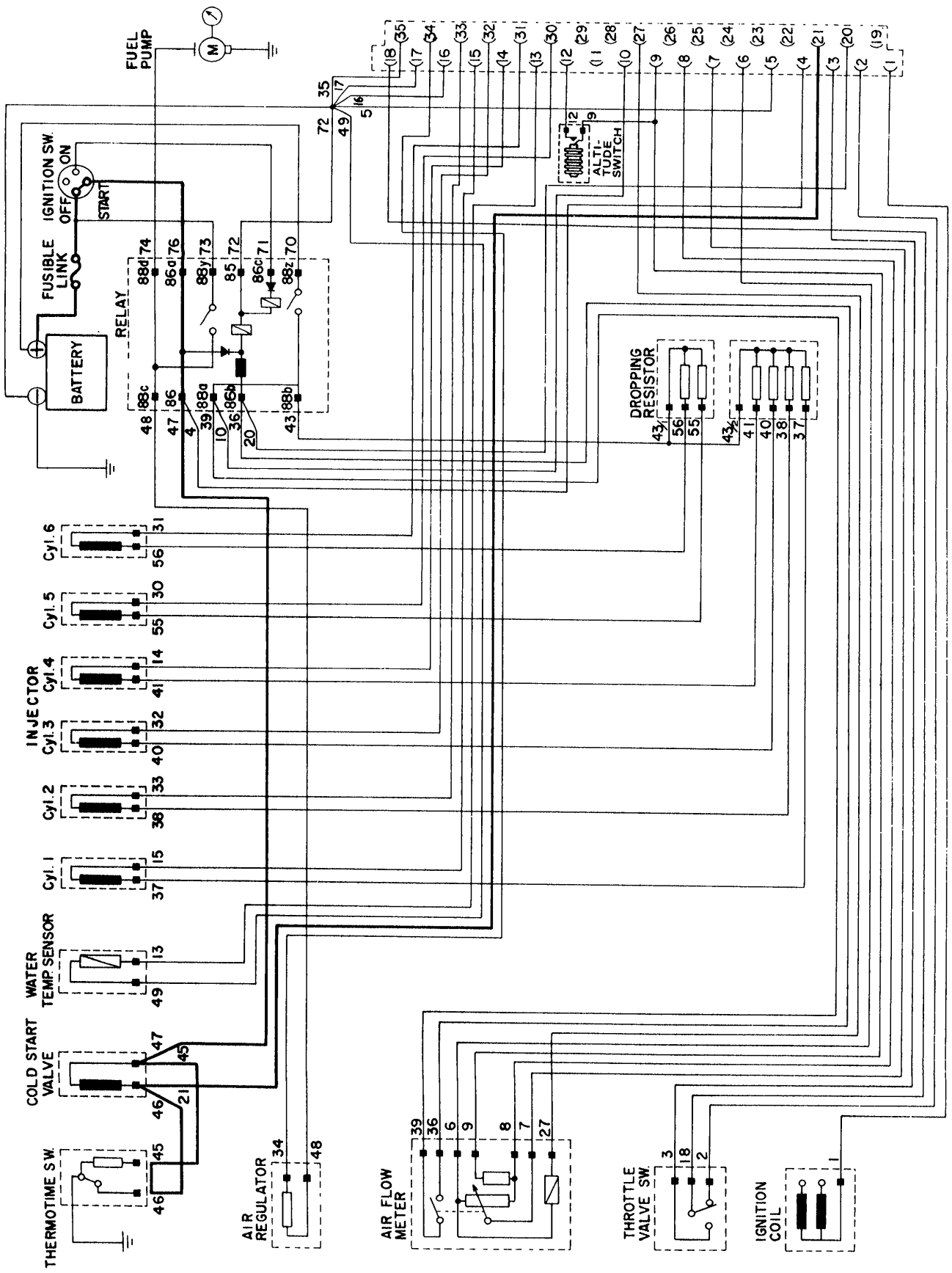

EF686

Fig. EF-62 Cold start valve and thermotime switch circuit

Downloaded from www.Manualslib.com manuals search engine

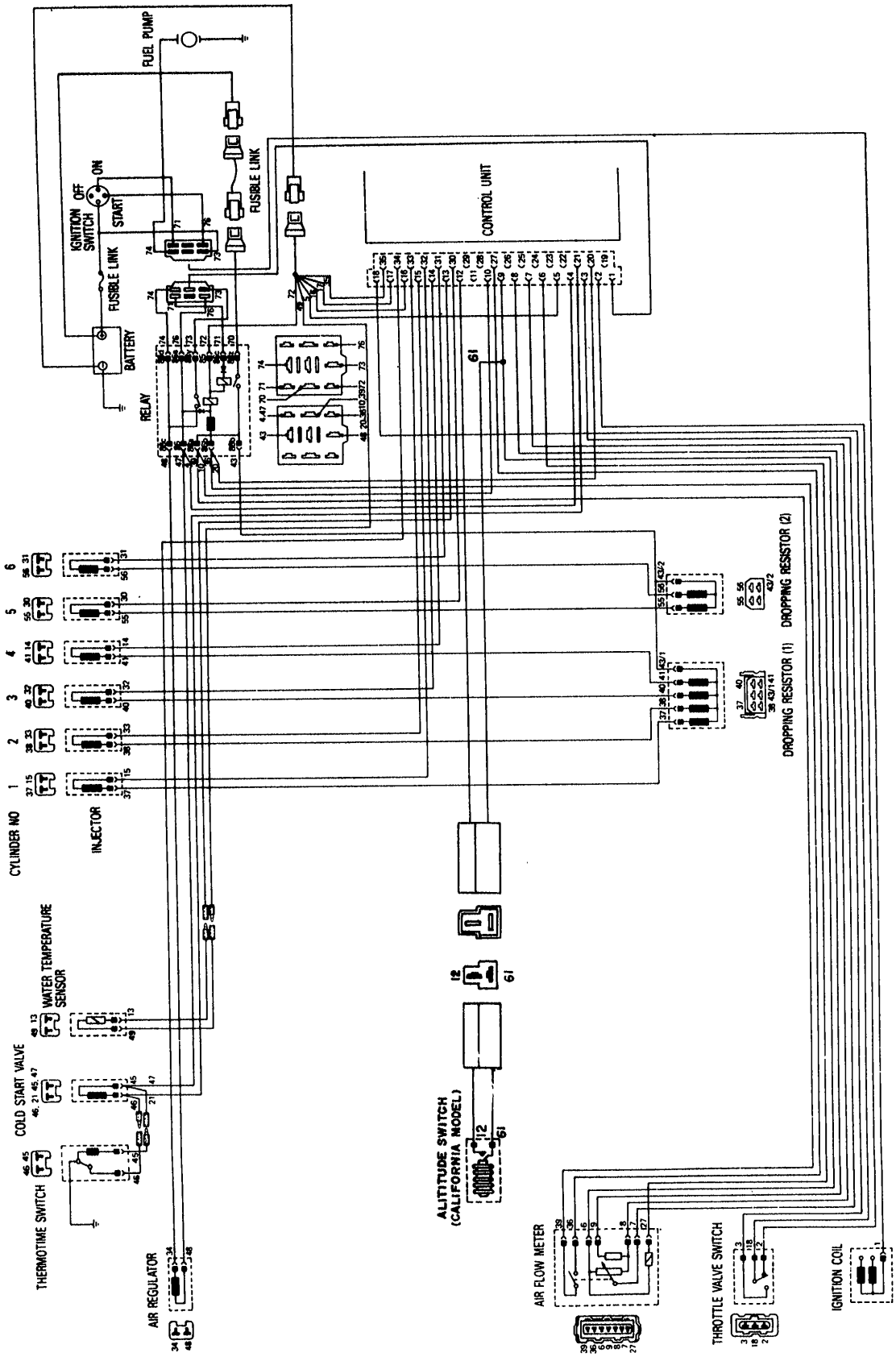

EF687

Fig. EF-63 Electronic fuel injection system wiring diagram

Downloaded from www.Manualslib.com manuals search engine

CHECKING FUNCTIONAL PARTS

1. Control unit

This inspection employs a miniature lamp to check whether or not the open-valve pulse for cranking the engine is applied to the injector when the engine fails to start. To check, connect a miniature lamp to the harness-side connector of the injector, and crank the engine. If the lamp flashes due to pulse voltage applied to the injector, the control unit is normal. Since two different power transistors are used (one is for No. 1, 2, and 3 cylinders, and the other is for No. 4, 5, and 6 cylinders), this inspection must be carried out on both the No. 1 and No. 4 cylinders.

For confirmation purposes, remove the harness connector of the cooling water temperature sensor. If the lamp flashes more brightly, then it is positive indication that the control unit is functioning normally. This inspection may be limited to the No. 1 or No. 4 cylinder only.

Requirements for inspection

1. The engine must be cranked at a speed of more than 80 rpm.
2. The control unit may fail to generate a correct pulse signal at an excessively low battery voltage. It is recommended, therefore, that a battery voltage of more than 9 volts be applied during the cranking operation.

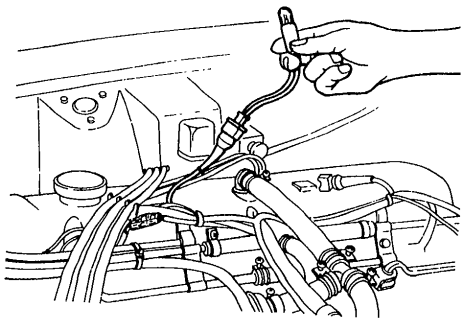

EF352

Fig. EF-64 Checking control unit

Inspection procedure

Checking No. 1 cylinder

Turn ignition switch to the "OFF" position.

1. Disconnect harness connector of injector.
2. Disconnect cold start valve harness connector.
3. Connect a miniature lamp to the injector harness connector of the No. 1 cylinder.

4. Turn ignition starter switch on to crank engine, and see whether the lamp flashes or not.
5. Disconnect cooling water temperature sensor harness connector, and see whether the lamp becomes brighter or not.

Checking No. 4 cylinder

1. Connect a miniature lamp to the injector harness connector of the No. 4 cylinder.
2. Turn ignition switch on to crank engine, and see whether the lamp flashes or not.

Note: Use a 3-volt miniature lamp with a special terminal connected to its end as shown.

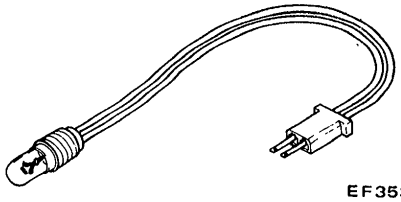

EF353

Fig. EF-65 Miniature lamp for inspection

Judging criteria

The miniature lamp should flash when the engine is cranked. In the No. 1 cylinder, if the lamp becomes brighter when the cooling water temperature sensor connector has been disconnected, it indicates that the control unit is normal. If the lamp does not flash, or if the lamp does not become brighter when the cooling water temperature sensor harness connector is removed, it indicates that the control unit is faulty. Replace the control unit, and carry out the inspection again as described above.

If the lamp flashes when the engine is cranked, but does not become brighter when the water temperature sensor connector is disconnected, it is an indication that the water temperature sensor is faulty. Check the water temperature sensor.

2. Air flow meter

Caution: Before checking air flow meter, remove battery ground cable.

2-1. Checking potentiometer

1. Remove air flow meter.
2. Measure the resistance between terminals ⑧ and ⑥. The standard resistance is approximately 180 ohms.

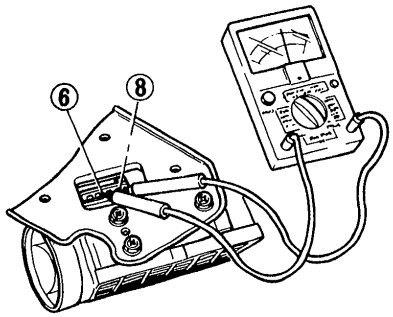

EF742

Fig. EF-66 Measuring the resistance between terminals ⑧ and ⑥

3. Measure the resistance between terminals ⑨ and ⑧. The standard resistance is approximately 100 ohms.

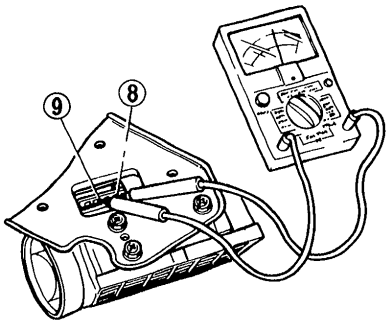

EF743

Fig. EF-67 Measuring the resistance between terminals ⑨ and ⑧

4. Connect a 12-volt dc across terminal ⑨ (positive) and terminal ⑥ (negative).
5. Connect the positive lead of a voltmeter to terminal ⑧ and negative lead to terminal ⑦.
6. Gradually open the flap by hand to ensure that the voltmeter indication decreases proportionately. If the indication varies abruptly, the problem may be in the potentiometer.

Downloaded from www.Manualslib.com manuals search engine

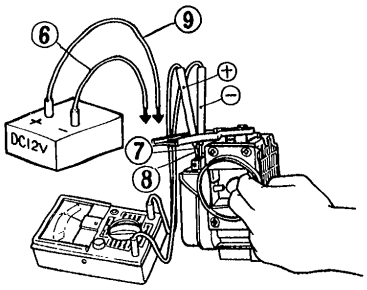

EF398

Fig. EF-68 Checking voltage variation between terminals ⑧ and ⑦

2-2. Checking insulation resistance of air flow meter

Check insulation resistance between the air flow meter body and any one of terminals ⑥, ⑦, ⑧ and ⑨. If continuity exists, the air flow meter is out of order.

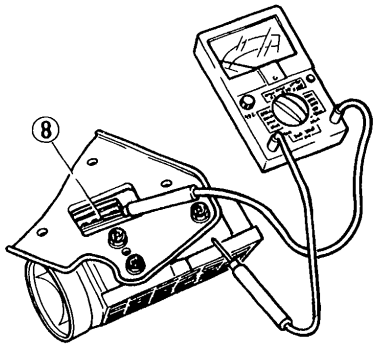

EF744

Fig. EF-69 Checking insulation resistance

2-3. Checking flap

Fully open the flap by hand to check that it opens smoothly without binding. If it doesn't, it is out of order.

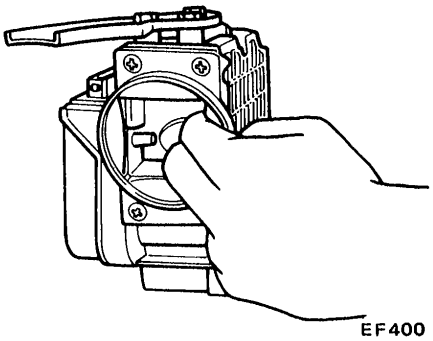

EF400

Fig. EF-70 Checking flap

2-4. Checking fuel pump contact points

Continuity should exist between terminals ㊱ and ㊴ of the air flow meter when the flap is opened approx. 8 degrees. Continuity should not exist when the flap is fully closed. If continuity does not exist when the flap is opened, or continuity occurs at a different position, replace air flow meter as an assembly.

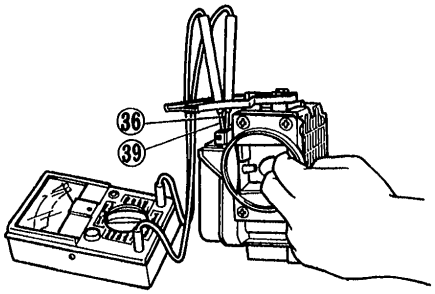

EF401

Fig. EF-71 Checking fuel pump contact points

3. Air temperature

3-1. Checking continuity

1. Disconnect battery ground cable.
2. Remove air flow meter.
3. Measure the outside air temperature.
4. Measure resistance between terminals ㉗ and ⑥ of the air flow meter connector.

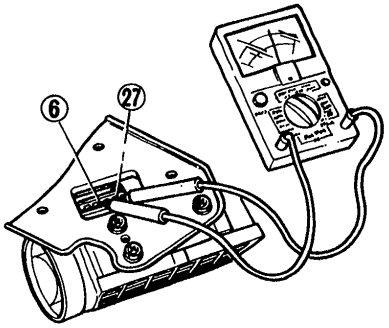

EF745

Fig. EF-72 Measuring the resistance of air temperature sensor

The relationship between the outside air temperature and resistance is shown in the following chart.

Air temperature °C (°F)	Resistance (kΩ)
−30 (−22)	20.3 to 33.0
−10 (−14)	7.6 to 10.8
10 (50)	3.25 to 4.15
20 (68)	2.25 to 2.75
50 (122)	0.74 to 0.94
80 (176)	0.29 to 0.36

If test results are far from the range indicated in the chart, the air temperature sensor is out of order. The air temperature sensor and air flow meter should be replaced as an assembly.

3-2 Checking insulation resistance

Check insulation resistance between terminal ㉗ and air flow meter body. If continuity exists, the air temperature sensor is out of order. The air temperature and air flow meter should be replaced as an assembly.

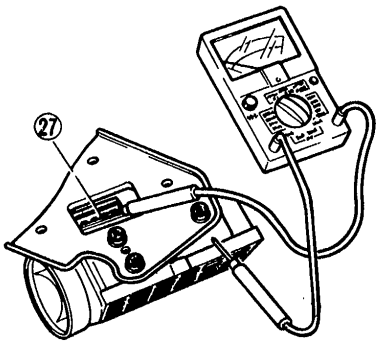

EF746

Fig. EF-73 Checking insulation resistance

4. Water temperature sensor

This check can be done with the sensor either on or off the vehicle.

Downloaded from www.Manualslib.com manuals search engine

4-1. Checking on engine

Check the resistance of the water temperature sensor before and after engine warm-up.

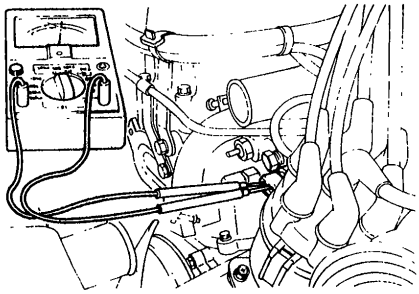

EF688

Fig. EF-74 Measuring the resistance of water temperature sensor (on the engine)

1. Disconnect battery ground cable.
2. Disconnect the water temperature sensor harness connector.
3. Place a thermometer in the radiator coolant when the engine is cold, and read the coolant temperature (which is used as a reference sensor temperature) and sensor resistance.

Note: When measuring cooling temperature, insert a rod type thermometer into the radiator.

4. Connect the water temperature sensor harness connector.
5. Connect battery ground cable.
6. Warm up the engine sufficiently.
7. Disconnect battery ground cable.
8. Disconnect the water temperature sensor harness connector.
9. Read the sensor resistance in the same manner as described in step (3) above.

Cooling water temperature °C (°F)	Resistance (kΩ)
−30 (−22)	20.3 to 33.0
−10 (−14)	7.6 to 10.8
10 (50)	3.25 to 4.15
20 (68)	2.25 to 2.75
50 (122)	0.74 to 0.94
80 (176)	0.29 to 0.36

If the resistance of the sensor with respect to the coolant temperature is not specified in the range shown in the chart, the water temperature sensor may be out of order.

4-2. Checking water temperature sensor off the engine

1. Dip the sensor into water maintained at a temperature of 20°C (68°F) and read its resistance.
2. Then, dip the sensor into water maintained at a temperature of 80°C (176°F), and read its resistance.

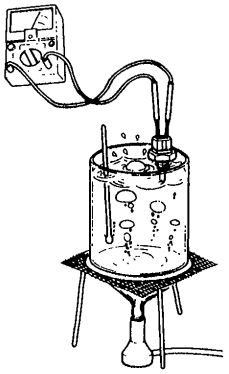

EF405

Fig. EF-75 Measuring the resistance of water temperature sensor (off the engine)

If the sensor resistance with respect to the coolant temperature is not held within the range specified in the chart, the water temperature sensor may be out of order.

4-3. Checking insulation resistance

This test is done on the engine.

1. Disconnect battery ground cable.
2. Disconnect the sensor harness connector.
3. Check continuity between the engine block and one of the terminals at sensor.

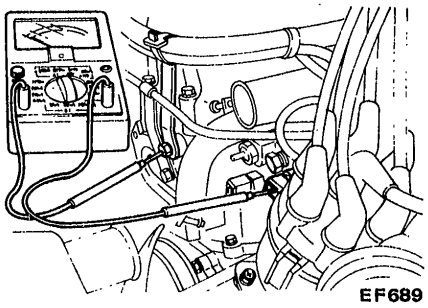

EF689

Fig. EF-76 Checking insulation resistance

If continuity exists, the sensor is out of order.

5. Thermotime switch

Static check

1. Disconnect ground cable from battery.
2. Disconnect electric connector of thermotime switch.
3. Measure the resistance between terminal No. 46 and switch body.

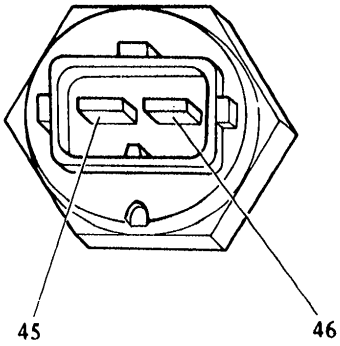

EF335

Fig. EF-77 Thermotime switch terminal number

- The resistance is zero when the cooling water temperature is less than 14°C (57°F).
- The resistance is zero or infinite when the cooling water temperature is between 14 to 22°C (57 to 72°F).

Downloaded from www.Manualslib.com manuals search engine

- The resistance is infinite when the cooling water temperature is more than 22°C (72°F).

4. Measure the resistance between terminal No. 45 and switch body.
   The ohmmeter reading is
   70 to 86 ohms ..... OK
   The ohmmeter reading is not
   70 to 86 ohms ..... Not OK

Dynamic check

1. Disconnect ground cable from battery.
2. Disconnect electric connector of thermotime switch.
3. Remove thermotime switch from thermostat housing.
4. Dip heat-sensing portion of thermotime switch into cooling water maintained at 10°C (50°F).
5. When the thermotime switch temperature is just about the same as the cooling water temperature, measure the resistance between terminal Nos. 45 and 46.
   - The resistance should be about 78Ω.
6. Increase cooling water temperature at a rate of 1°C (1.8°F) per second until it is more than 25°C (77°F), then check continuity between terminal Nos. 45 and 46.
   - If the ohmmeter reading increases from about 78Ω to infinite, circuit is OK.

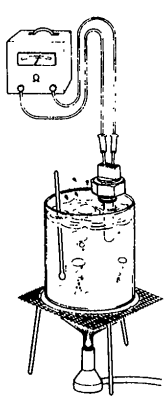

EF336

Fig. EF-78 Checking thermotime switch

6. Cold start valve

1. Disconnect lead wire from the S terminal of starter motor.
2. Turn ignition switch to the START position, and make sure that fuel pump is operating properly. Operating sound should be heard.
3. Disconnect ground cable from battery.
4. Remove two screws securing cold start valve to intake manifold, and remove cold start valve.
5. Disconnect electric connector of cold start valve.
6. Put cold start valve into a transparent glass container of min. 20 cc (1.22 cu in) capacity, plug the transparent glass container opening with a clean rag.

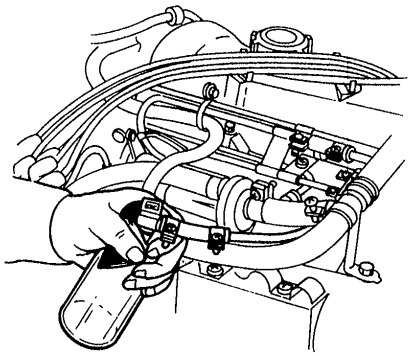

EF757

Fig. EF-79 Fuel injection from cold start valve

7. Connect ground cable to battery.
8. Turn ignition switch to the START position. Cold start valve should not inject fuel.
9. Turn ignition switch to the OFF position, and connect a jumper wire between cold start valve and battery terminals. Leave cold start valve as it is in step 6 above.
   - Cold start valve should inject fuel. If not, proceed to step 10 below.
10. With ignition switch in the START position and cold start valve set as outlined in step 9 above, check fuel injection.
   - The fuel injected ..... OK
   - The fuel is not injected .... N.G.

7. Electronic fuel injection relay

1. Disconnect ground cable from battery.
2. Remove relay from vehicle.

7-1. Main relay check

1. Connect 12-volt dc between positive terminal (86c) and negative terminal (85).
   "Clicks" should be heard and continuity should exist between terminals (88z) and (88a), and between (88z) and (88b).

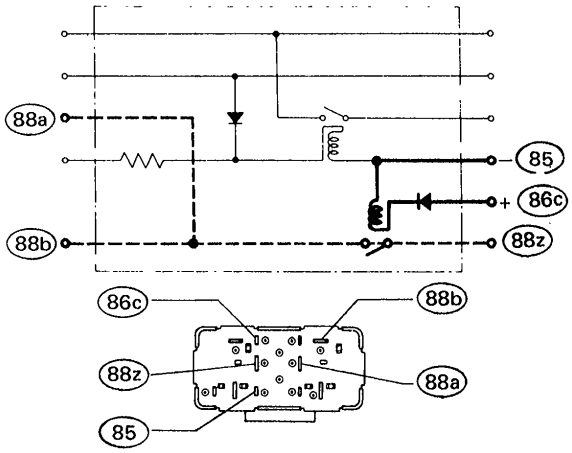

EF407

Fig. EF-80 Checking main relay (1)

Notes:

a. **Before applying test voltage to relay, connect a fuse in series with lead wire to prevent damage to the circuit.**
b. **If available, use a 7-volt dc in place of 12-volt to test relay operation.**

2. Connect 12-volt dc between positive terminal (85) and negative terminal (86c). No clicks should be heard.

Downloaded from www.Manualslib.com manuals search engine

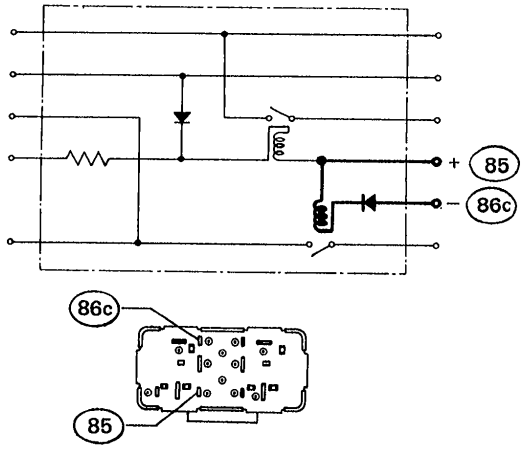

EF408

Fig. EF-81 Checking main relay (2)

3. If test results (steps 1 and 2 above) are not satisfactory, relay is faulty.

7-2. Fuel pump relay check

1. Make sure continuity exists between terminals 88d and 88c, and between 86a and 86.

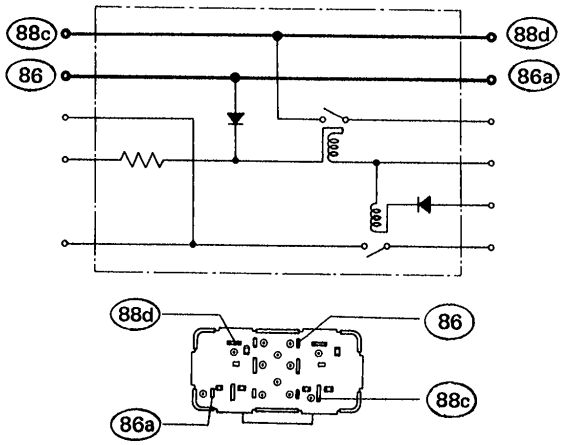

EF409

Fig. EF-82 Checking fuel pump relay (1)

2. Connect 12-volt dc to positive terminal 86a and negative terminal 85. "Clicks" should be heard and continuity should exist betwen terminals 88Y and 88d.

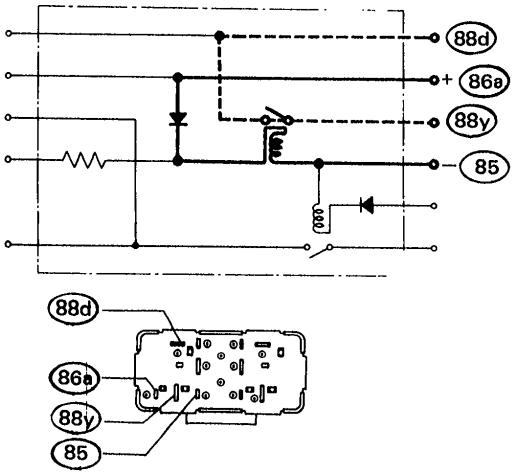

EF410

Fig. EF-83 Checking fuel pump relay (2)

Notes:

a. **Before applying test voltage to relay, connect a fuse in series with lead wire to prevent damage to the circuit.**

b. **If available, use a 7-volt dc in place of 12-volt to test relay operation.**

3. Connect 12-volt dc to positive terminal 85 and negative terminal 86a. No "clicks" should be heard.

Downloaded from www.Manualslib.com manuals search engine

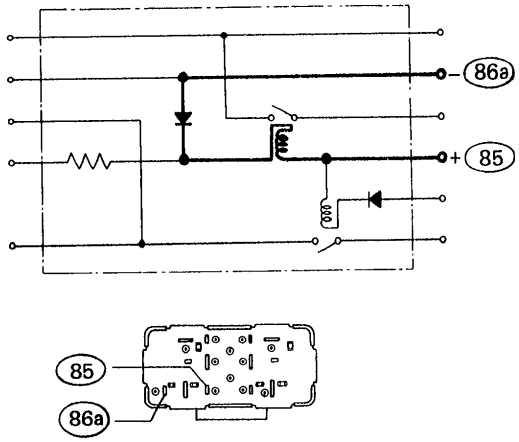

EF411

Fig. EF-84 Checking fuel pump relay (3)

4. If test results (steps 1 through 3) are not satisfactory, relay is faulty.

8. Throttle valve switch

1. Disconnect ground cable from battery.
2. Remove throttle valve switch connector.

8-1. Idle switch check

1. Connect ohmmeter between terminals ② and ⑱.

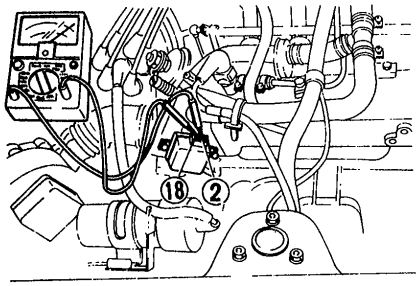

EF492

Fig. EF-85 Checking idle switch

2. If continuity exists when throttle valve is in the IDLE position, and does not exist when valve opens approximately 4°, idle switch is functioning properly.

8-2. Full switch check

1. Connect ohmmeter between terminals ③ and ⑱.

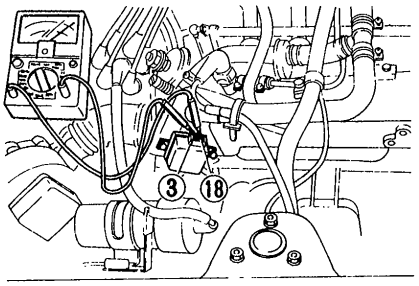

EF493

Fig. EF-86 Checking full switch

2. Gradually open throttle valve from fully-closed position. Observe ohmmeter reading when valve is opened approximately 34°. If ohmmeter reading at all other valve position is greater than that at 34°, full switch is functioning properly.

8-3. Throttle valve switch insulation check

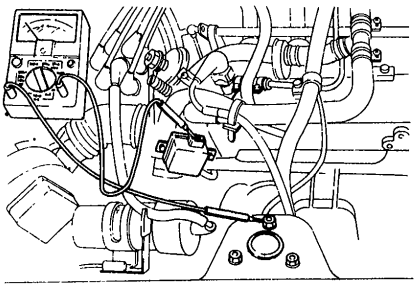

EF494

Fig. EF-87 Checking throttle valve switch insulation

Connect ohmmeter between body metal and terminals ②, ③ and ⑱. Ohmmeter reading should be infinite.

9. Dropping resistor

1. Disconnect ground cable from battery.
2. Disconnect 4-pin and 6-pin connectors of dropping resistors from electronic fuel injection harness connectors.
3. Conduct resistance checks on dropping resistor (6-pin connector side) between the following points.
- 43/1 and terminal No. 41 (Number four cylinder resistor)
- 43/1 and terminal No. 40 (Number three cylinder resistor)
- 43/1 and terminal No. 38 (Number two cylinder resistor)
- 43/1 and terminal No. 37 (Number one cylinder resistor)

The resistance should be approximately 6 ohms.

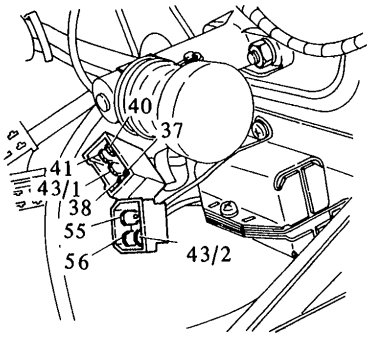

EF772

Fig. EF-88 Dropping resistor terminal number

4. Conduct resistance checks on dropping resistor (4-pin connector side) between the following points.
- 43/2 and terminal No. 56 (Number six cylinder resistor)
- 43/2 and terminal No. 55 (Number five cylinder resistor)

The resistance should be approximately 6 ohms. See Figure EF-88.

10. Altitude switch (California models only)

This switch contains a microswitch which performs the ON-OFF operation according to change in atmospheric pressure.

1. Disconnect ground cable from battery.
2. Remove altitude switch from car. Refer to "Removal and Installation" section on page EF-64.

Downloaded from www.Manualslib.com manuals search engine

3. With an ohmmeter connected as shown in Figure EF-89, orally blow through discharge port or suck back. Altitude switch is in good order if a "click" is heard and continuity exists on ohmmeter scale.

Note: This check can also be made by connecting rubber hose to vacuum pump.

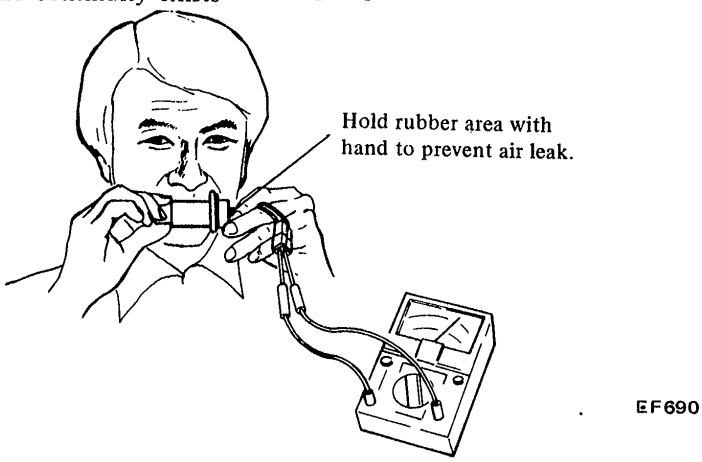

Fig. EF-89 Checking altitude switch

4. Altitude switch is pressure-set at factory and no further adjustment is necessary.
5. If switch is found inoperative, replace.

11. Fuel pump

Functional test

1. Disconnect lead wire from the S terminal of starter motor.
2. With ignition switch to the START position, ensure that fuel pump sounds while operating. If not, check all fuel pump circuits. If all circuits are checked out OK, replace fuel pump.

Discharge pressure check

1. Disconnect ground cable from battery.
2. Disconnect cold start valve harness connector.
3. Using two jumper wires shown in illustration, connect each terminal to battery positive and negative terminals.
4. Release pressure in fuel system by connecting other terminals of jumper wires to cold start valve connector for two or three seconds.

Note: Be careful to keep both terminals separate in order to avoid short circuit.

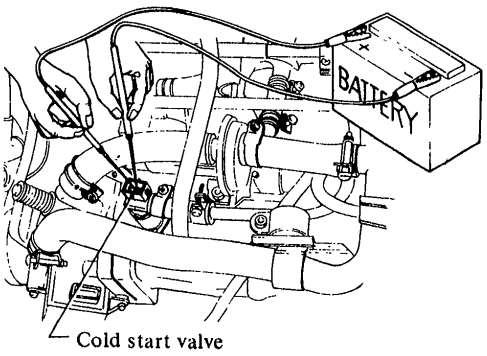

Fig. EF-90 Releasing pressure in fuel system

5. Connect a fuel pressure gauge between fuel tube and fuel hose of fuel filter.

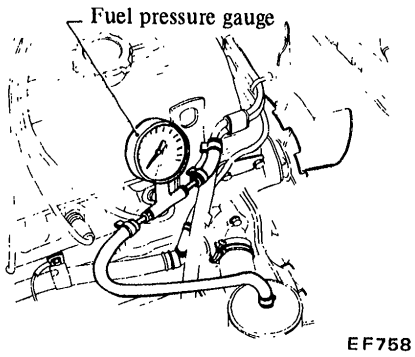

Fig. EF-91 Connect fuel pressure gauge

6. Disconnect lead wire from S terminal of starter motor.
7. Disconnect electric connector from cold start valve.
8. Connect ground cable to battery.
9. Turn ignition switch to the START position to operate fuel pump.

A fuel pressure of approximately 2.55 kg/cm^2 (36.3 psi) indicates a good fuel discharge pressure.

10. If fuel pressure is not as specified, replace fuel pressure regulator, and repeat pressure discharge tests.

If fuel pressure is 2.55 kg/cm^2 (36.3 psi), fuel pump is OK. If below the specified value, check for clogged or deformed fuel lines, and if necessary, replace fuel pump.

Fuel discharge check

1. Connect a fuel pressure gauge as outlined under Fuel Discharge Pressure Check.
2. Check fuel pressure, observing the full-load requirements described below.

Full-load requirements

1. Drive the car and conduct fuel discharge check in accordance with state laws or local regulations.
2. For the sake of safety, two hands are necessary to conduct tests. One is a driver and the other an observer.
3. Check fuel pressure with the engine at full throttle, starting with 20 km/h (13 mph) up to 60 km/h (38 mph). The shift gear should be in 2nd position.

If fuel pressure is approximately 2.55 kg/cm^2 (36.3 psi) over the specified car speed range, fuel discharge is normal. If below the specified value, replace fuel pump.

3. If fuel pressure does not increase when a new fuel pump is installed, check for clogged or deformed fuel lines, fuel filter and fuel damper. If necessary, replace.

12. Fuel damper

1. Connect a fuel pressure gauge as outlined under Fuel Discharge Pressure Check, and check fuel discharge pressure.

Downloaded from www.Manualslib.com manuals search engine

If fuel discharge pressure reading fluctuates excessively, replace fuel damper.

13. Pressure regulator

1. Connect a fuel pressure gauge as outlined under Fuel Discharge Pressure Check, and check fuel discharge pressure. If a fuel discharge of 2.55 kg/cm^2 (36.3 psi) is not obtained, replace pressure regulator.

14. Fuel filter

Replace fuel filter periodically in accordance with recommended Maintance Schedule.

15. Injector

Continuity check

1. Disconnect ground cable from battery.
2. Disconnect electric connectors from injectors.
3. Check continuity between the two terminals. Continuity should exist. If not, injector(s) are faulty.

Check injectors for sound as follows:

1. Engine can run

1-1. Start the engine and run it at idle. Attach the tip of a screwdriver to each injector to ensure that it sounds while operating.

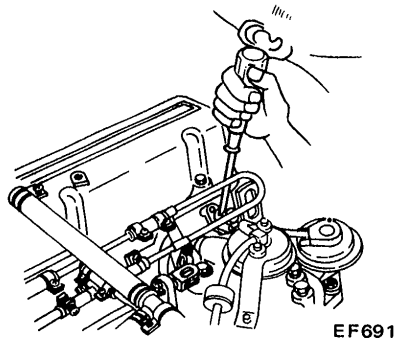

Fig. EF-92 Injection operating sound

1-2. If a low sound is produced from any particular injector, that injector is faulty.

2. Engine cannot run

2-1. If the engine fails to run, disconnect electric connector of cold start valve to protect catalytic converter.

2-2. Crank the engine and check that injectors produce sounds to indicate operation.

2-3. If a low sound is produced from any particular injector, that injector is faulty.

2-4. If no sound is heard from all injectors, check harnesses for discontinuity as outlined in Continuity Check.

2-5. If harnesses are normal, check operation of control unit.

2-6. If sounds are heard from either Nos. 1, 2 and 3 injectors or Nos. 4, 5 and 6, replace control unit.

2-7. When replacing injector, refer to page EF-65, "Injector".

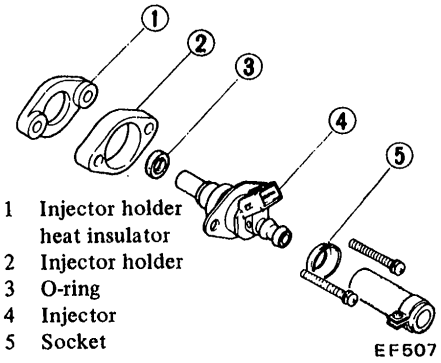

Fig. EF-93 Injector

16. Air regulator

1. Hold rubber hose in the line between throttle chamber and air regulator with fingers.

- Engine speed should be reduced.

If not, proceed as follows:

2. Disconnect air hoses from both end of air regulator, and visually check to see if air regulator valve opens.

The valve opening at a temperature of 20°C (68°F) is as shown in Figure EF-94.

3. Disconnect electric connector of air regulator, and check continuity. Continuity should exist. If not, air regulator is faulty.
4. Pry air regulator valve to open with a flat-bladed screwdriver, then close.

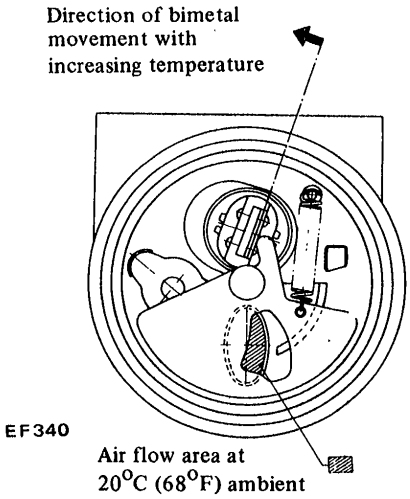

Fig. EF-94 Valve opening at a temperature of 20°C (68°F)

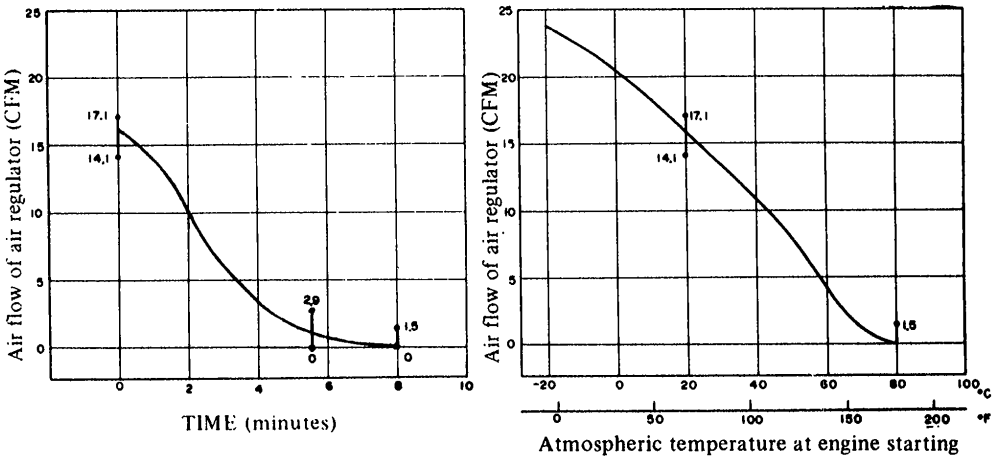

Fig. EF-95 Air flow characteristic curve

Downloaded from www.Manualslib.com manuals search engine

Test results

If valve opens and closes smoothly, it is operating properly. If not, replace.

17. Throttle chamber

1. Remove throttle chamber.

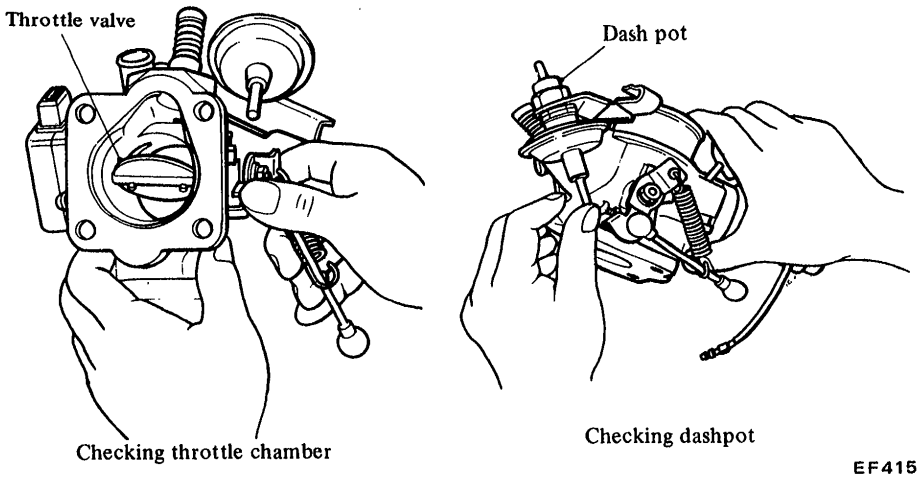

Fig. EF-96 Throttle chamber

2. Make sure that throttle valve moves smoothly when throttle lever is manipulated.
3. Make sure that bypass port is free from obstacles and is clean.
4. Make sure that idle adjust screw moves smoothly.
5. Adjust throttle valve for fully-close position.
6. Push dash pot rod with finger to ensure that it moves smoothly.
7. Check B.C.D.D. For details, refer to section EC.

E.G.R. Vacuum Port Screw

The E.G.R. vacuum port screw attached to the throttle chamber is designed to change the amount of exhaust gas recirculated.

This screw is properly preset at the factory and further adjustment should not be made.

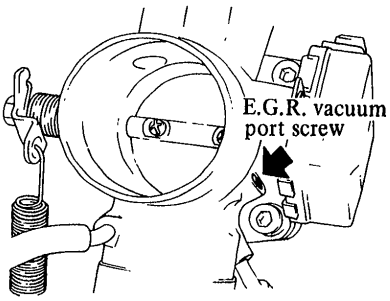

Fig. EF-97 E.G.R. vacuum port screw

18. Checking air leakage in air intake system

Since the air flow meter used in the electronic fuel injection system directly measures the quantity of intake air to permit the supply of the optimum fuel quantity for each cylinder, there should not occur even a slight air leak.

When inspecting the electronic fuel injection system, pay particular attention to hose connections, dipstick, oil filler cap, etc. for any indication of air leaks.

Downloaded from www.Manualslib.com manuals search engine

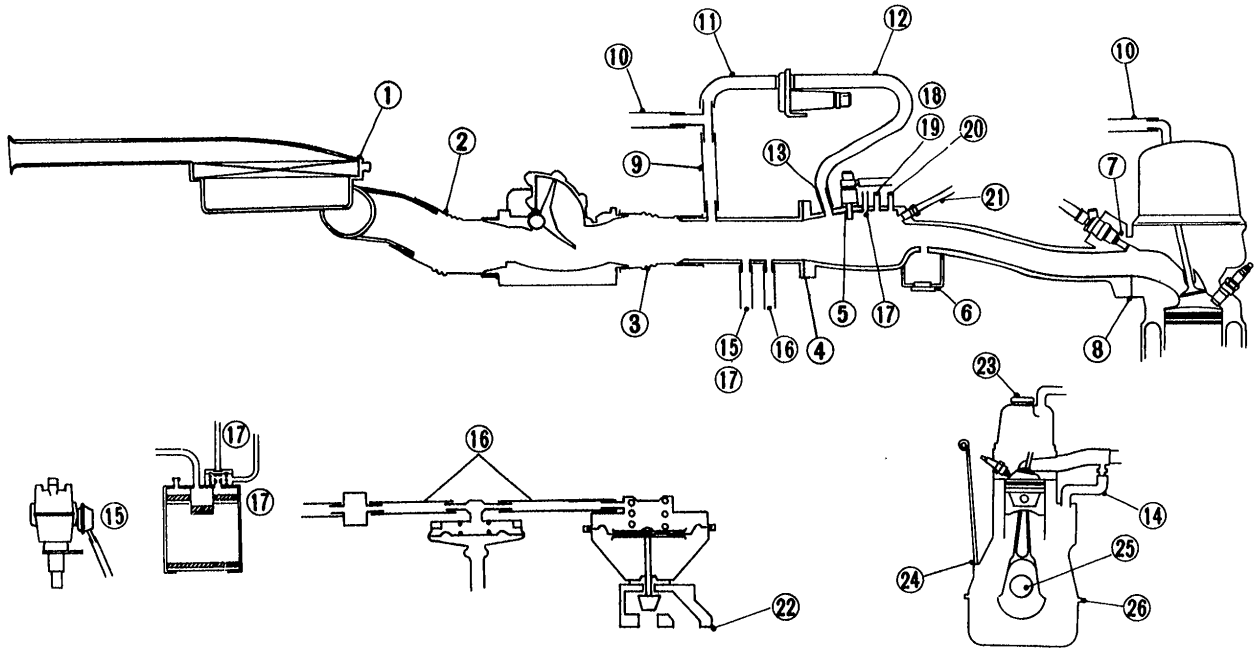

1 Air cleaner element
2 Air duct (air cleaner to AFM)
3 Air duct (AFM to throttle chamber)
4 Flange (throttle chamber to intake manifold)
5 Cold start valve mounting surface
6 Blind plug (E.G.R.),
7 Injector mounting surface in intake manifold
8 Cylinder head mounting surface in intake manifold
9 Hose (throttle chamber to 3-way connector), both sides
10 Hose (3-way connector to rocker cover), both sides
11 Hose (3-way connector to air regulator), both sides
12 Hose (air regulator to throttle chamber connector), both sides
13 Throttle chamber connector mounting surface
14 Hose (pipe connector to P.C.V. valve), both sides
15 Distributor vacuum line
16 E.G.R. vacuum line
17 Canister vacuum and purge line
18 Automatic transmission vacuum line } Same vacuum hole
19 Cooler vacuum line } Same vacuum hole
20 Master-Vac line
21 Pressure regulator vacuum line
22 E.G.R. valve mounting surface
23 Oil filler cap
24 Oil level gauge
25 Oil seal (on front and rear of crankshaft)
26 Oil pan gasket mounting surface.

Fig. EF-98 Checking air leakage in air intake system

19. Checking fuel hoses

Check fuel hoses for leakage, loose connections, cracks or deterioration.

Retighten loose connections and replace any damaged or deformed parts. Replace any rubber fuel hose whose inner surface is deformed, scratched or chafed.

For replacement of high pressure fuel rubber hose, refer to item 18 "Fuel Rubber Hose" under heading "Removal and Installation".

REMOVAL AND INSTALLATION

1. Control unit

1. Turn ignition switch to the OFF position.

Caution: Before disconnecting electronic fuel injection harness at 35-pin coupler, ensure that ignition switch is in the OFF position.

2. Remove three bolts securing resin control unit cover to the left dash side panel, and remove cover.

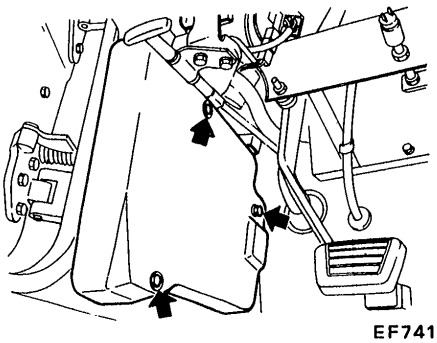

Fig. EF-99 Removing control unit cover

3. Remove three bolts securing control unit to dash side panel bracket, and remove control unit.

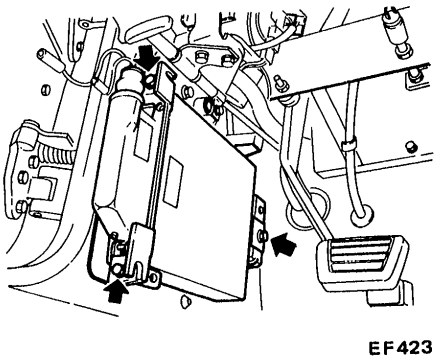

Fig. EF-100 Removing control unit

4. Disconnect 35-pin coupler from control unit.

Note: 35-pin coupler can be disconnected without removing control unit from dash side panel.

Downloaded from www.Manualslib.com manuals search engine

2. Air flow meter

1. Disconect battery ground cable.

Caution: Be sure to disconnect battery ground cable to prevent control unit from damaging.

2. Disconnect rubber hose from each side of air flow meter.
3. Remove three bolts securing air flow meter bracket.

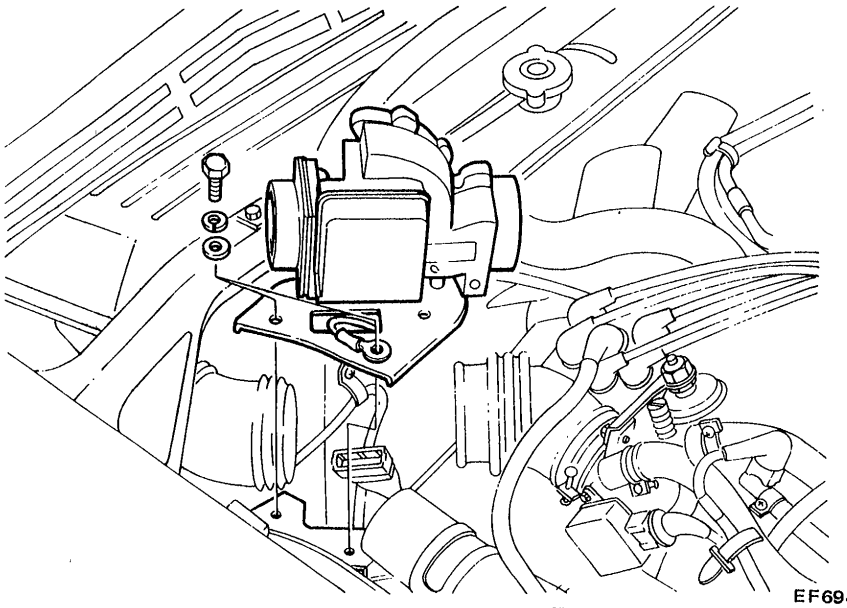

EF694
Fig. EF-101 Air flow meter

4. Move air flow meter upward, disconnect harness connector, and remove air flow meter.
5. To install air flow meter, reverse the order of removal.

3. Air temperature sensor

The air temperature sensor is built into the air flow meter and cannot be removed as a single unit. When replacement of air temperature sensor is necessary, the entire air flow meter assembly should be replaced.

4. Water temperature sensor

1. Disconnect battery ground cable.
2. Remove radiator cap.
3. Remove drain plug from radiator to drain coolant of approximately 1.5 liters (1⅝ US qt, 1⅜ Imp qt).
4. Disconnect radiator upper hose.
5. Disconnect water tempeature sensor harness connector.
6. Remove water temperature sensor.
7. To install water temperature sensor, reverse the order of removal.

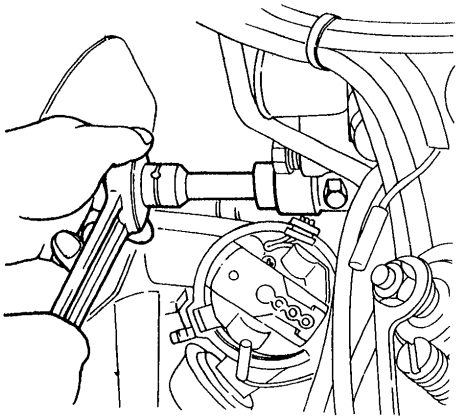

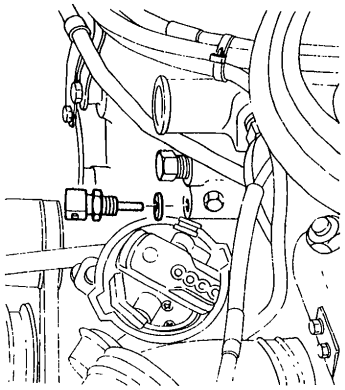

EF695
Fig. EF-102 Water temperature sensor

Caution: When connecting water temperature sensor harness, always keep it away from high tension wire.

Notes:

a. Be sure to install copper washer when installing water temperature sensor.

b. After installing water temperature sensor, add cooling water with a proper amount of anti-freeze.

5. Thermotime switch

1. Remove radiator filler cap. Drain cooling water by opening drain valve located on the lower side of radiator.

Note: If cooling water is hot, give it a chance to cool down.

2. Disconnect water hose at thermostat housing.
3. Disconnect ground cable from battery.
4. Disconnect lead wires from thermal transmitter, and remove thermal transmitter.
5. Disconnect electric connector from thermotime switch.
6. Remove thermotime switch by turning it counterclockwise.

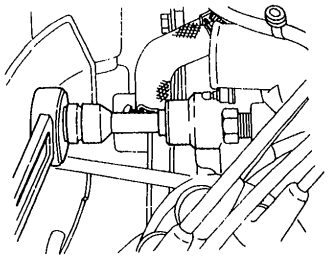

EF696
Fig. EF-103 Thermotime switch

7. To install thermotime switch, reverse the order of removal.

6. Cold start valve

1. Disconnect ground cable from battery.
2. Disconnect cold start valve harness connector.
3. Using two jumper wires shown in illustration, connect each terminal to battery positive and negative terminals.

Downloaded from www.Manualslib.com manuals search engine

4. Release pressure in fuel system by connecting other terminals of jumper wires to cold start valve connector for two or three seconds.

Note: Be careful to keep both terminals separate in order to avoid short circuit.

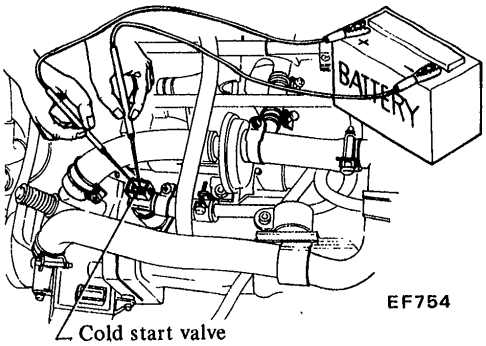

Fig. EF-104 Fuel injection from cold start valve

5. Remove two screws seuring cold start valve to intake manifold.
6. Unfasten clip and disengage cold start valve from fuel hose.

Note: Place a container to receive fuel left in fuel hose.

7. To install cold start valve, reverse the order of removal.
8. For installation of fuel rubber hose, refer to item 18 "Fuel Rubber Hose".

7. Relay

1. Disconnect battery ground cable.
2. Remove two screws securing relay to side dash.
3. Disconnect harness connector.
4. To install relay, reverse the order of removal.

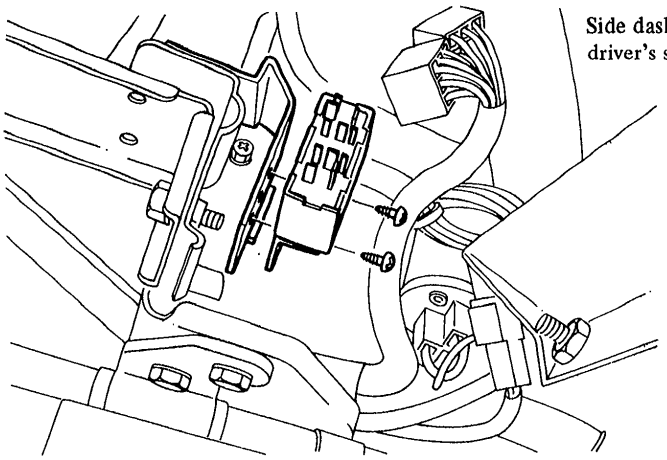

Fig. EF-105 Electronic fuel injection relay

8. Throttle valve switch

1. Disconnect battery ground cable.
2. Disconnect throttle valve switch harness connector.
3. Remove two screws securing throttle valve switch to throttle chamber.
4. Slowly pull throttle valve switch forward.
5. To install throttle valve switch, reverse the order of removal.
6. After installation, adjust the position of throttle valve switch so that idle switch may be changed from ON to OFF when throttle valve stopper screw-to-throttle valve shaft lever clearance is 1.3 mm (0.051 in).

Note: Use suitable shim to measure the specified clearance.

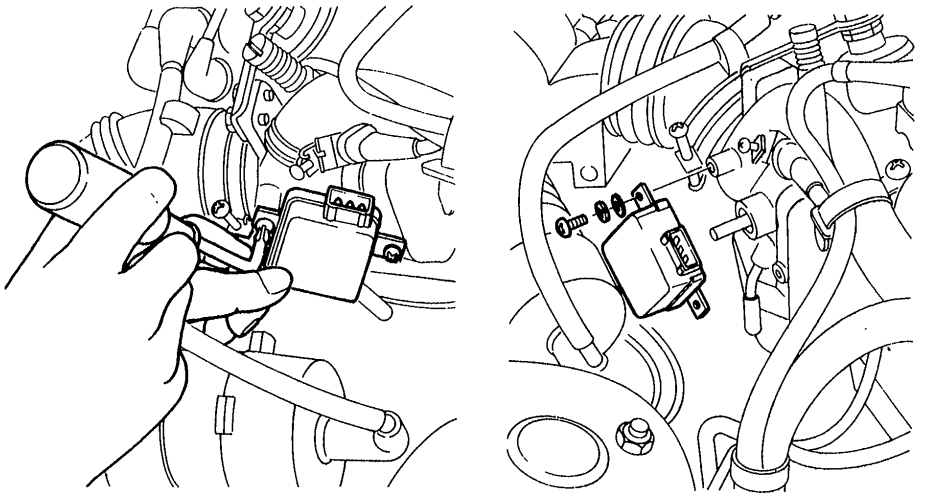

Fig. EF-106 Throttle valve switch

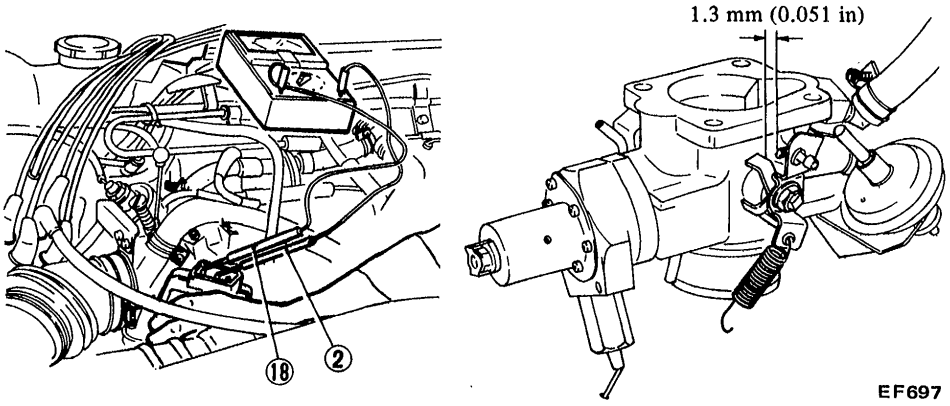

Fig. EF-107 Adjusting throttle valve switch position

Downloaded from www.Manualslib.com manuals search engine

9. Dropping resistors

1. Disconnect ground cable from battery.
2. Disconnect two electric connectors from dropping resistor.
3. Remove two screws securing dropping resistor to dashboard.
4. To install dropping resistor, reverse the order of removal.

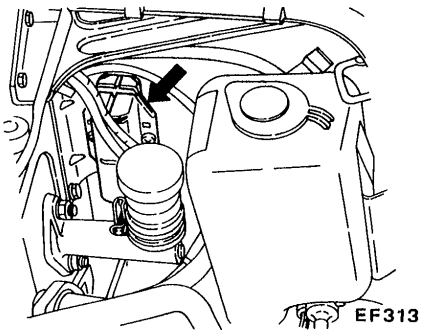

Fig. EF-108 Dropping resistor

10. Altitude switch (California models only)

1. Disconnect ground cable from battery.
2. Remove instrument lower cover on the driver's seat side.
3. Disconnect electric connector from altitude switch.
4. Remove two screws securing altitude switch bracket. The altitude switch can then be removed as bracket assembly.

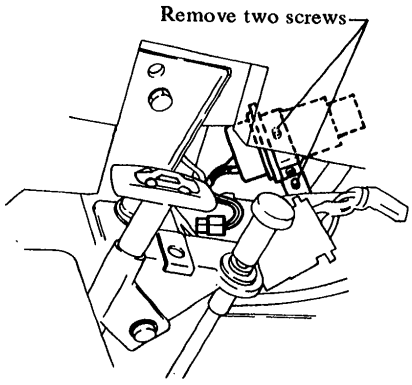

Fig. EF-109 Altitude switch

5. To install altitude switch, reverse the order of removal.

11. Fuel pump

1. Disconnect ground cable from battery.
2. Disconnect cold start valve harness connector.
3. Using two jumper wires shown in illustration, connect each terminal to battery positive and negative terminals.
4. Release pressure in fuel system by connecting other terminals of jumper wires to cold start valve connector for two or three seconds.

Note: Be careful to keep both terminals separate in order to avoid short circuit.

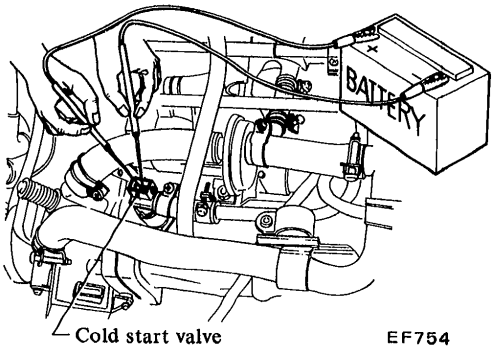

Fig. EF-110 Releasing pressure in fuel system

5. Raise the rear portion of vehicle with a jack, and block wheels. Refer to section "GI".
6. Temporarily clamp hose at a suitable location between fuel tank and fuel pump.

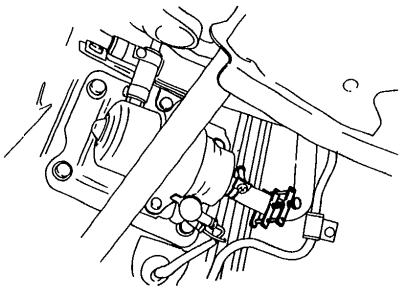

Fig. EF-111 Fuel hose clamp at fuel pump

Note: Be sure to receive fuel into a suitable container.

7. Unfasten clamps at the suction and outlet sides of fuel pump, and disengage fuel hoses.
8. Remove two screws securing fuel pump bracket, and remove bracket.

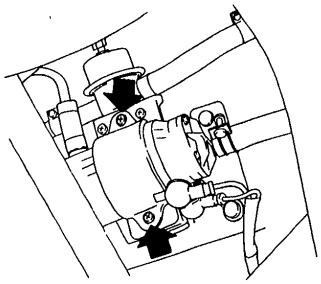

Fig. EF-112 Fuel pump removal

9. Disconnect fuel pump harness connector at passenger compartment side.

To disconnect harness connector, proceed as follows:

- S30 MODEL
  Roll carpet at rear of assistant seat. Take off harness protector, then disconnect harness connector.
- GS30 MODEL
  Remove rear seat and take off harness protector. Then disconnect harness connector.

10. Pull out harness through grommet hole in floor and remove fuel pump.
11. To install fuel pump, reverse the order of removal.
12. For installation of fuel rubber hose, refer to item 18 "Fuel Rubber Hose".

12. Fuel damper

1. Disconnect ground cable from battery.
2. Disconnect cold start valve harness connector.
3. Using two jumper wires shown in illustration, connect each terminal to battery positive and negative terminals.
4. Release pressure in fuel system by connecting other terminals of jumper wires to cold start valve connector for two or three seconds. Refer to Figure EF-110.

Note: Be careful to keep both terminals separate in order to avoid short circuit.

5. Raise the rear portion of vehicle with a jack, and block wheels. Refer to section "GI".

Downloaded from www.Manualslib.com manuals search engine

6. Temporarily clamp fuel hose at a suitable location between fuel tank and suction side of fuel pump. Refer to Figure EF-111.
7. Unfasten fuel hose clamps, and disengage fuel hoses at the inlet and outlet of fuel damper.

Note: Be sure to receive fuel into a suitable container.

8. Remove nuts securing fuel damper to bracket.

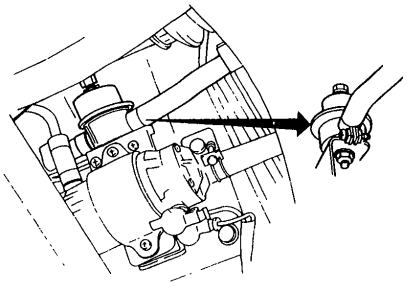

Fig. EF-113 Fuel damper removal

9. To install fuel damper, reverse the order of removal.
10. For installation of fuel rubber hose, refer to item 18 "Fuel Rubber Hose".

13. Pressure regulator

1. Disconnect ground cable from battery.
2. Disconnect cold start valve harness connector.
3. Using two jumper wires shown in illustration, connect each terminal to battery positive and negative terminals.
4. Release pressure in fuel system by connecting other terminals of jumper wires to cold start valve connector for two or three seconds. Refer to Figure EF-110.

Note: Be careful to keep both terminals separate in order to avoid short circuit.

5. Disengage vacuum tube connecting regulator to manifold from pressure regulator.
6. Place a rag under pressure regulator to prevent fuel splash. Unfasten three hose clamps, and disengage fuel hose from pressure regulator.

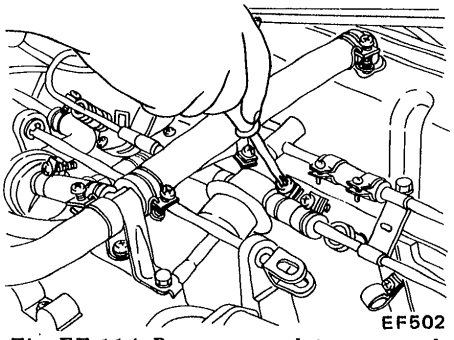

Fig. EF-114 Pressure regulator removal

7. To install pressure regulator, reverse the order of removal.
8. For installation of fuel rubber hose, refer to item 18 "Fuel Rubber Hose".

14. Fuel filter

1. Disconnect ground cable from battery.
2. Disconnect cold start valve harness connector.
3. Using two jumper wires shown in illustration, connect each terminal to battery positive and negative terminals.
4. Release pressure in fuel system by connecting other terminals of jumper wires to cold start valve connector for two or three seconds. Refer to Figure EF-110.

Note: Be careful to keep both terminals separate in order to avoid short circuit.

5. Unfasten clamps securing fuel hoses to the outlet and inlet sides of fuel filter, and disengage fuel hoses.

Note: Be careful not to spill fuel over engine compartment. Place a rag to absorb fuel.

6. Remove bolt securing fuel filter to bracket, and remove fuel filter.

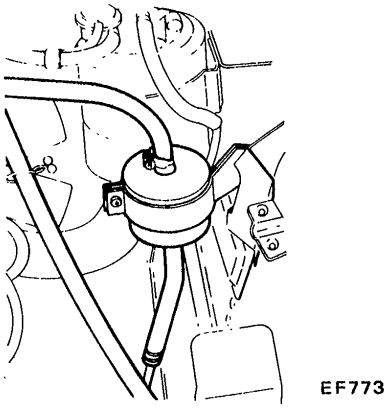

Fig. EF-115 Fuel filter removal

7. To install fuel filter, reverse the order of removal.
8. For installation of fuel rubber hose, refer to item 18 "Fuel Rubber Hose".

15. Injector

1. Disconnect ground cable from battery.
2. Disconnect cold start valve harness connector.
3. Using two jumper wires shown in illustration, connect each terminal to battery positive and negative terminals.
4. Release pressure in fuel system by connecting other terminals of jumper wires to cold start valve connector for two or three seconds. Refer to Figure EF-110.

Note: Be careful to keep both terminals separate in order to avoid short circuit.

5. Disconnect ground cable from battery.
6. Disconnect electric connector from injector.
7. Disengage harness from fuel pipe B wire clamp.
8. To remove the front three injectors, remove screws securing fuel pipe.

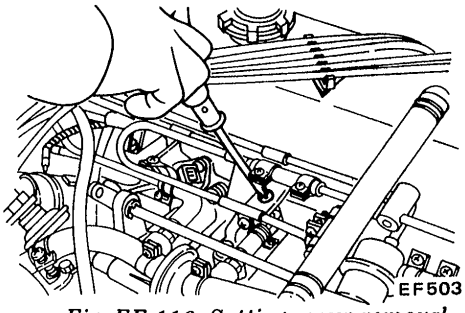

Fig. EF-116 Setting screw removal of front fuel pipe

9. To remove the rear three injectors, remove bolts securing fuel pipe C to intake manifold. These bolts are located on bracket.

Downloaded from www.Manualslib.com manuals search engine

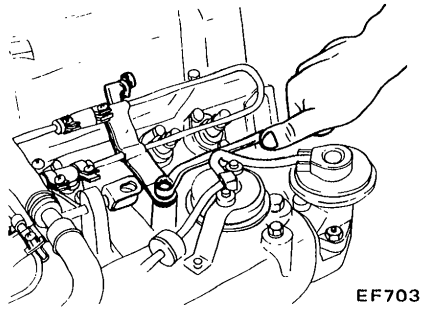

Fig. EF-117 Setting bolt removal of rear fuel pipe

10. When removing any of the front or rear injector, unfasten hose clamps on that side.

11. Pull fuel pipe forward, and disengage injector and fuel pipe.

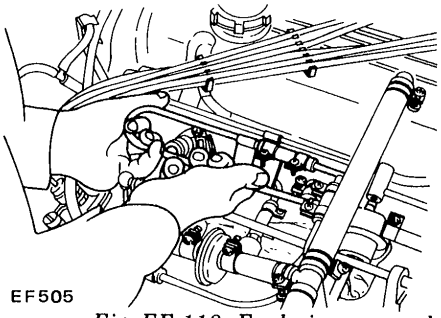

Fig. EF-118 Fuel pipe removal

Caution: Place a rag under injector when disconnecting fuel pipe to prevent fuel splash.

12. On injector rubber hose, measure off a point approx. 20 mm (0.787 in) from socket end. Heat soldering iron (150 watt) for 15 minutes. Cut hose into braided reinforcement from mark to socket end. Do not feed soldering iron until it touches injector tail piece.

Then pull rubber hose out with hand.

Cautions:

a. Be careful not to damage socket, plastic connector, etc. with soldering iron.

b. Never place injector in a vise when disconnecting rubber hose.

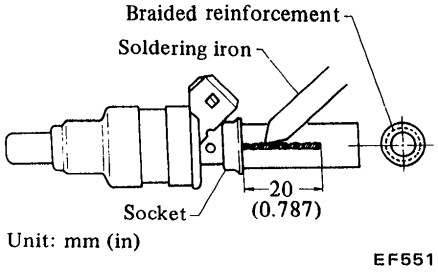

Fig. EF-119 Melting injector rubber hose

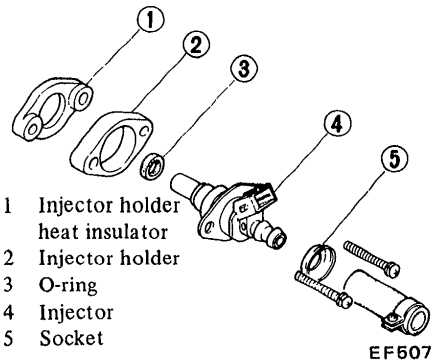

Fig. EF-120 Injector

13. Install injector fuel rubber hose as follows:

- Clean exterior of injector tail piece.
- Wet inside of new rubber hose with fuel.
- Push end of rubber hose with hose socket onto injector tail piece by hand as far as they will go.
- Clamp is not necessary at this connection.

16. Air regulator

1. Disconnect ground cable from battery.
2. Disconnect electric connector from regulator.
3. Unfasten clamp on each side of air hose, and disengage hose.
4. Remove two setscrews.

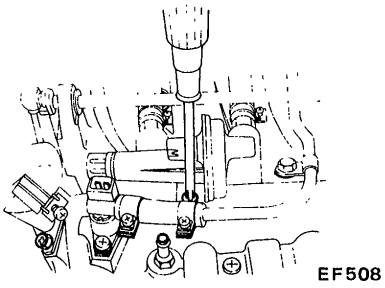

Fig. EF-121 Air regulator removal

5. To install air regulator, reverse the order of removal.

17. Throttle chamber

1. Disconnect battery ground cable.
2. Remove distributor cap.
3. Remove rubber hoses from throttle chamber.

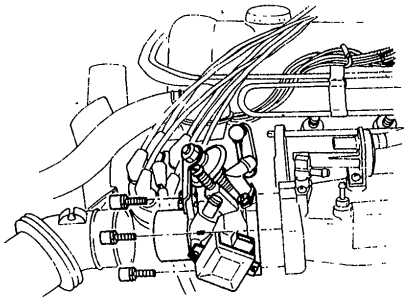

Fig. EF-122 Throttle chamber

4. Remove throttle valve switch.
5. Disconnect B.C.D.D. harness connector.
6. Disconnect rod connector at auxiliary throttle shaft.
7. Remove four screws securing throttle chamber to intake manifold. The throttle chamber can be removed together with B.C.D.D. and dash pot.
8. To install throttle chamber, reverse the order of removal.

Throttle chamber securing screw tightening torque:
1.5 to 2.0 kg-m
(11 to 14 ft-lb)

9. After installation, adjust the position of throttle valve switch so that idle switch may be changed from ON to OFF when throttle valve stopper screw-to-throttle valve shaft lever clearance is 1.3 mm (0.051 in).

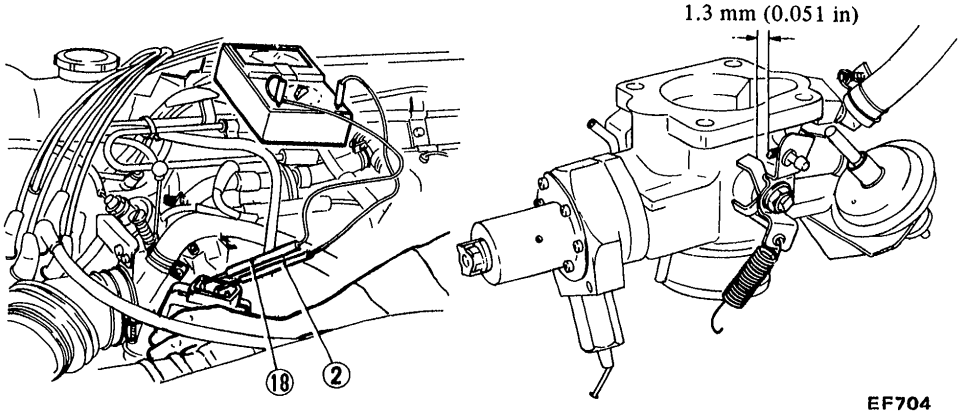

Fig. EF-123 Adjusting throttle valve switch position

Downloaded from www.Manualslib.com manuals search engine

Notes:

a. Use suitable shim to measure the specified clearance.

b. After throttle chamber has been installed, warm up engine sufficiently and adjust engine speed to specified idle rpm with idle speed adjusting screw. Specified idle rpm should be reached if idle speed adjusting screw is turned back about six rotations from the "fully closed" (throttle valve) position. If more than six rotations are required to obtain specified rpm, throttle valve is closed excessively at idle; if less than six rotations are required, throttle valve is opened excessively or working parts are faulty.

18. Fuel rubber hose

Make sure that all low pressure fuel rubber hoses are fully inserted and are free from undue strain before clamping.

When removing or installing high pressure fuel rubber hose, observe the following.

Cautions:

a. Do not reuse fuel hose clamps after loosening.

b. Clean dust and dirt from parts with compressed air when assembling.

c. Tighten high pressure rubber hose clamp so that clamp end is 1 mm (0.039 in) from hose end or screw position (wider than other portions of clamp) is flush with hose end. Tightening torque specifications are the same for all rubber hose clamps.

Tightening torque of fuel hose clamps:
0.10 to 0.15 kg-m
(0.72 to 1.1 ft-lb)

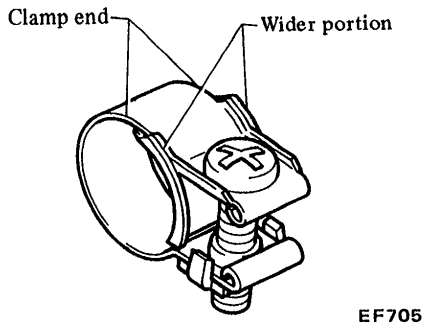

Fig. EF-124 Fuel hose clamp

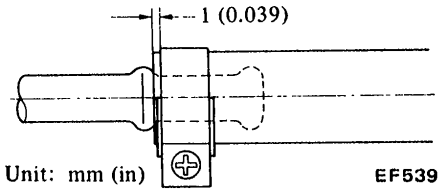

Fig. EF-125 Fuel hose clamp position

When tightening hose clamp, ensure that screw does not come into contact with adjacent parts.

b. Insertion length of high pressure fuel rubber hoses is not the same for conventional pipes and those for EFI unit. For details, refer to items (1) through (25) below. Items with an asterisk mark "*" indicate hoses whose ends should bottom or be pushed until they contact bulges, EFI unit, etc.

Rubber hoses between fuel pump and damper

① * Insert rubber hose until its end contacts pump.

② Push rubber hose onto pump to damper fuel pipe until its end is on black paint on pipe.

③ Push rubber hose onto pump to damper fuel pipe until its end is on black paint on pipe.

④ *Insert rubber hose until its end contacts damper unit.

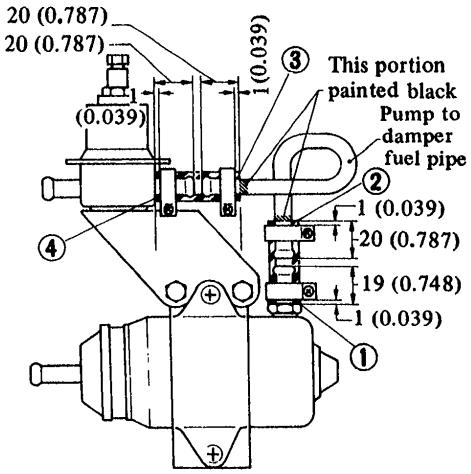

Fig. EF-126 Rubber hoses between pump and damper

Fuel damper to fuel feed pipe rubber hose

⑤* Insert rubber hose until its end contacts fuel damper unit.

⑥ *Push end of rubber hose onto fuel feed pipe until it contacts inner bulge.

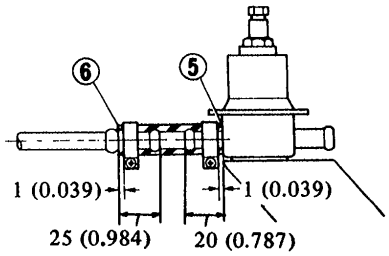

Fig. EF-127 Fuel damper to fuel feed pipe rubber hose

Fuel feed pipe to fuel filter inlet pipe rubber hose

⑦* Push end of rubber hose onto fuel feed pipe until it contacts inner bulge.

Downloaded from www.Manualslib.com manuals search engine

⑧* Push end of rubber hose onto fuel filter inlet pipe until it contacts fuel filter unit.

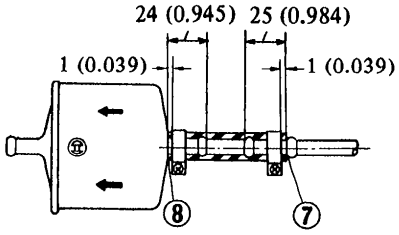

Unit: mm (in)

EF542

Fig. EF-128 Fuel feed pipe to fuel filter inlet pipe rubber hose

Fuel filter outlet to fuel pipe A rubber hose

⑨* Push end of rubber hose onto fuel filter outlet pipe until it contacts fuel filter unit.

⑩* Push end of rubber hose onto fuel pipe A until it contacts inner bulge.

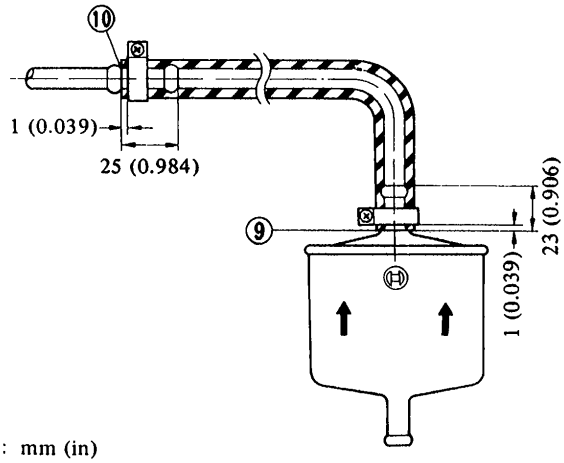

Unit: mm (in)

EF543

Fig. EF-129 Fuel filter outlet to fuel pipe A rubber hose

Fuel pipe A to fuel pipe B or C rubber hose

⑭* Push end of rubber hose onto fuel pipe (B) or (C) until it contacts pipe bracket.

⑮* Push end of rubber hose onto fuel pipe A until it touches inner bulge.

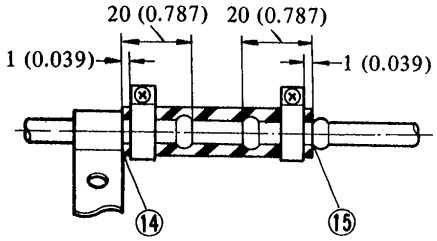

Unit: mm (in)

EF531

Fig. EF-131 Fuel pipe A to fuel pipe B or C rubber hose

Injector rubber hose

⑯* Push end of rubber hose with hose socket onto injector tail piece until hose socket contacts injector. Clamp is not necessary at this connection.

⑰ Push end of injector rubber hose onto fuel pipe B or C approx. 25 mm (0.984 in).
Insertion length will be automatically set by relative positions of fuel pipe B or C and injector.

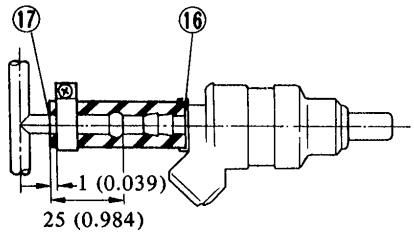

Unit: mm (in)

EF534

Fig. EF-132 Injector rubber hose

Cold start valve rubber hose

⑪* Push end of rubber hose onto fuel pipe A until it bottoms.

⑫* Push end of rubber hose onto fuel pipe D until it contacts inner bulge.

⑬ Push rubber hose onto cold start valve inlet pipe approx. 21 mm (0.827 in).
Insertion length of rubber hose will be automatically set by relative positions of fuel pipe A and cold start valve fuel pipe.

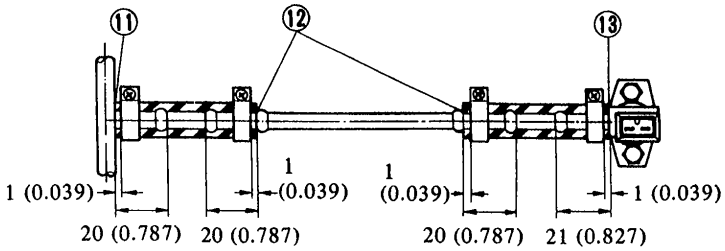

Unit: mm (in)

EF532

Fig. EF-130 Cold start valve rubber hose

Pressure regulator to fuel pipe B or C rubber hose

⑱* Push end of rubber hose onto fuel pipe B or C until it contacts pipe branch for injector.

⑲* Push end of rubber hose onto pressure regulator inlet pipe until it contacts pressure regulator

Downloaded from www.Manualslib.com manuals search engine

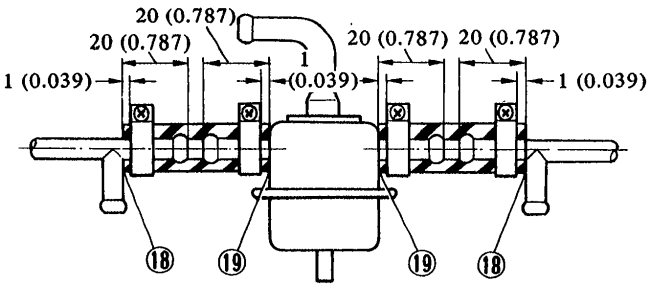

EF533

Unit: mm (in)

Fig. EF-133 Pressure regulator to fuel pipe B or C rubber hose

Pressure regulator to fuel return pipe A rubber hose

⑳ Insertion length of rubber hose for pressure regulator outlet pipe will automatically set after the other end of hose (for fuel return pipe A in item 19) has been inserted all the way.

㉑* Push end of rubber hose onto fuel return pipe A until it contacts inner bulge.

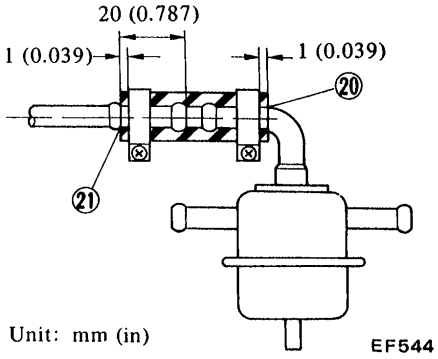

Unit: mm (in)

EF544

Fig. EF-134 Pressure regulator to fuel return pipe A rubber hose

Fuel return pipe A to fuel return pipe rubber hose

㉒* Push end of rubber hose onto fuel return pipe A until it contacts inner bulge.

㉓* Push end of rubber hose onto fuel return pipe until it contacts inner bulge.

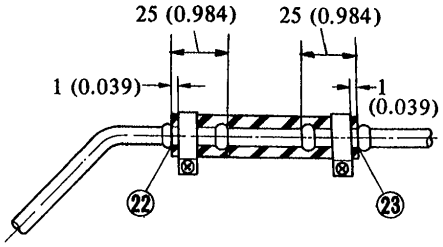

Unit: mm (in)

EF535

Fig. EF-135 Fuel return pipe A to fuel return pipe rubber hose

Fuel return pipe to fuel tank rubber hose

㉔ *Push end of rubber hose onto fuel return pipe until it contacts inner bulge.

㉕ Push end of rubber hose onto fuel tank inlet pipe connector until it is 30 mm (1.181 in) from end of pipe. Be careful not to insert rubber hose to bend portion of connector.

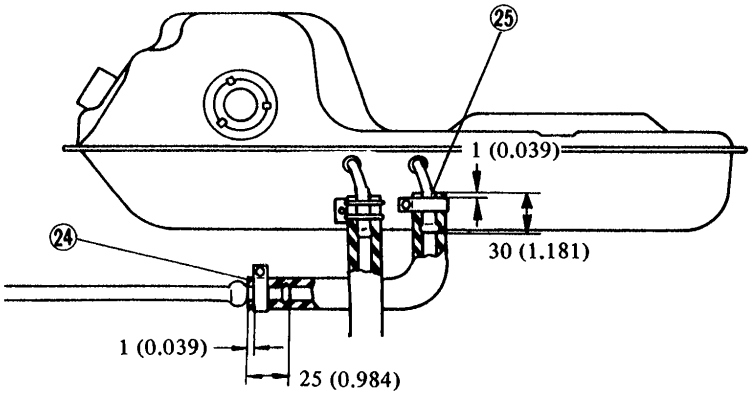

EF708

Unit: mm (in)

Fig. EF-136 Fuel return pipe to fuel tank rubber hose

Downloaded from www.Manualslib.com manuals search engine

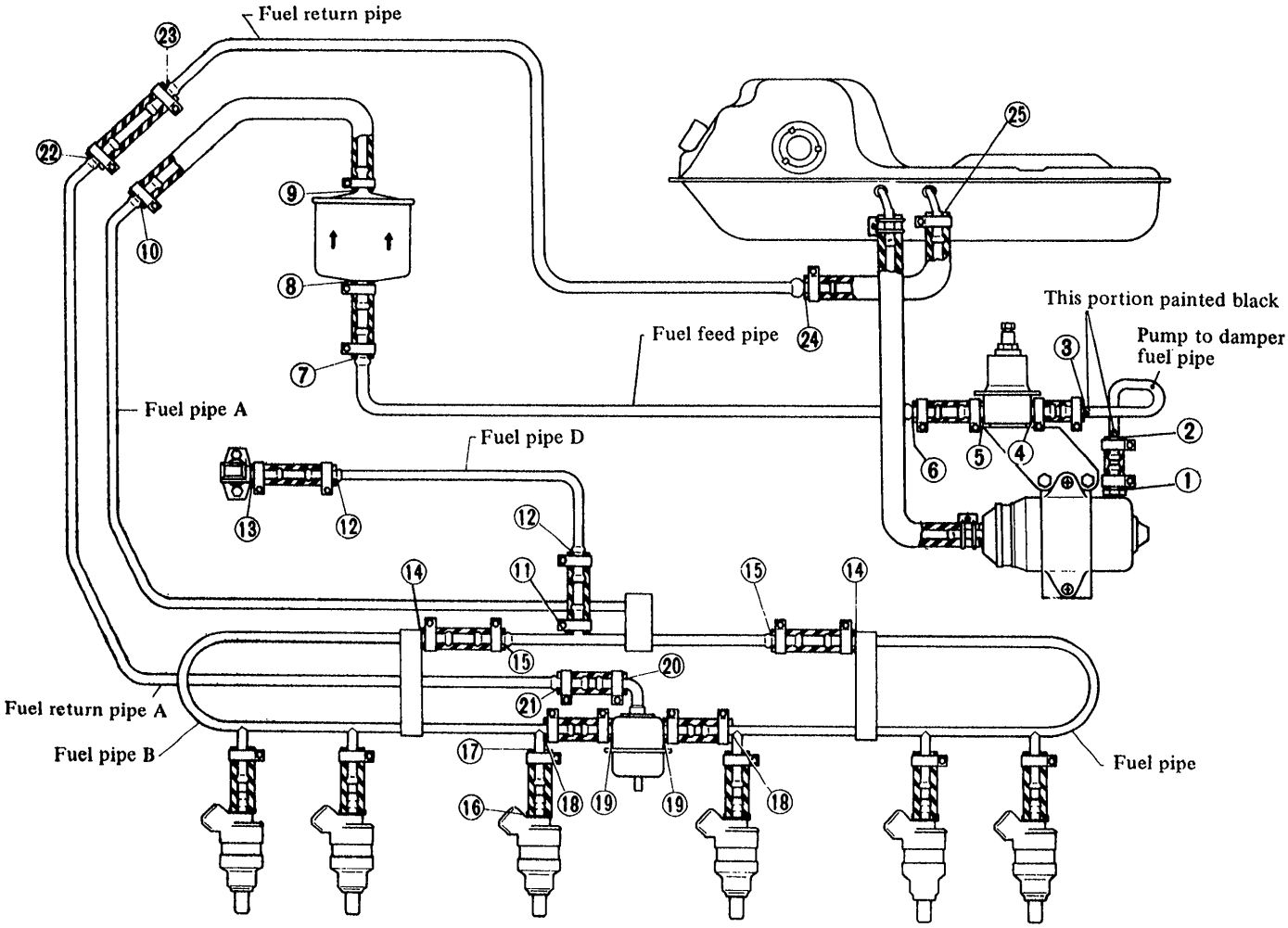

EF755

Fig. EF-137 Fuel rubber hoses

Downloaded from www.Manualslib.com manuals search engine

SERVICE MANUAL

DATSUN 280Z
MODEL S30 SERIES

NISSAN

NISSAN MOTOR CO., LTD.
TOKYO, JAPAN

SECTION EC

EMISSION CONTROL SYSTEM

EC

GENERAL DESCRIPTION ..... EC- 2

CRANKCASE EMISSION CONTROL SYSTEM ..... EC- 2

EXHAUST EMISSION CONTROL SYSTEM ..... EC- 3

EVAPORATIVE EMISSION CONTROL SYSTEM EC-22

Downloaded from www.Manualslib.com manuals search engine

GENERAL DESCRIPTION

There are three types of emission control system. These are:

1. Closed type crankcase emission control system.
2. Exhaust emission control system.
3. Evaporative emission control system.

Periodic inspection and required servicing of these systems should be carried out to reduce harmful emissions to a minimum.

CRANKCASE EMISSION CONTROL SYSTEM

DESCRIPTION

This system returns blow-by gas to both the intake manifold and throttle chamber.

The positive crankcase ventilation (P.C.V.) valve is provided to conduct crankcase blow-by gas to the intake manifold.

During partial throttle operation of the engine, the intake manifold sucks the blow-by gas through the P.C.V. valve.

Normally, the capacity of the valve is sufficient to handle any blow-by and a small amount of ventilating air.

The ventilating air is then drawn from throttle chamber, through the tube connecting throttle chamber to rocker cover, into the crankcase.

Under full-throttle condition, the manifold vacuum is insufficient to draw the blow-by flow through the valve, and its flow goes through the tube connection in the reverse direction.

On cars with an excessively high blow-by, some of the flow will go through the tube connection to throttle chamber under all conditions.

INSPECTION

P.C.V. VALVE

Check P.C.V. valve in accordance with the following method.

With engine running at idle, remove the ventilator hose from P.C.V. valve. If the valve is working, a hissing noise will be heard as air passes through the valve and a strong vacuum should be felt immediately when a finger is placed over valve inlet.

Replace P.C.V. valve in accordance with the maintenance schedule.

VENTILATION HOSE

1. Check hoses and hose connections for leaks.
2. Disconnect all hoses and clean with compressed air.

If any hose cannot be freed of obstructions, replace.

Ensure that flame arrester is surely inserted in hose between throttle chamber and rocker cover.

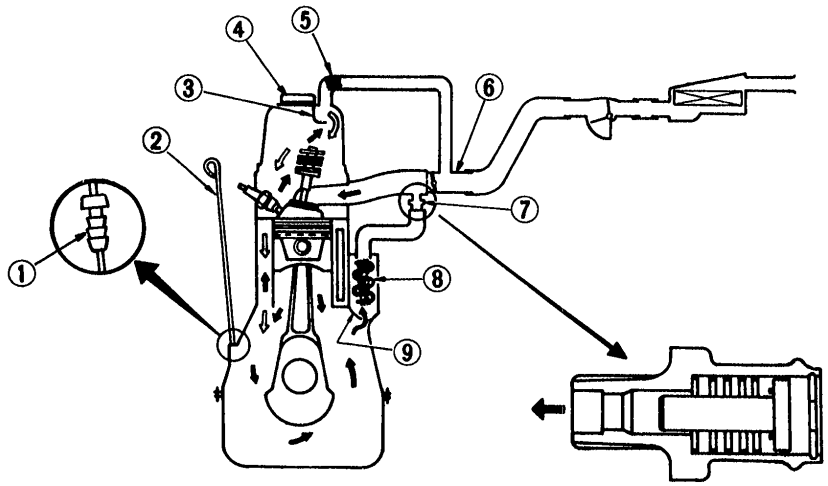

⇨ Fresh air
➡ Blow-by gas

1 Seal rubber
2 Oil level gauge
3 Baffle plate
4 Oil cap
5 Flame arrester
6 Throttle chamber
7 P.C.V. valve
8 Steel net
9 Baffle plate

EC805

Fig. EC-1 Crankcase emission control system

Downloaded from www.Manualslib.com manuals search engine

EXHAUST EMISSION CONTROL SYSTEM

CONTENTS

DESCRIPTION ..... EC- 3
BOOST CONTROLLED DECELERATION DEVICE (B.C.D.D.) ..... EC- 5
DESCRIPTION ..... EC- 5
OPERATION ..... EC- 5
REMOVAL ..... EC- 6
INSPECTION ..... EC- 6
EXHAUST GAS RECIRCULATION (E.G.R.) CONTROL SYSTEM ..... EC- 9
DESCRIPTION ..... EC- 9
STRUCTURE AND OPERATION EC-10
REMOVAL AND INSTALLATION EC-12
INSPECTION EC-13
CATALYTIC CONVERTER SYSTEM EC-15
DESCRIPTION EC-15
OPERATION EC-15
REMOVAL AND INSTALLATION EC-16
FLOOR TEMPERATURE WARNING SYSTEM EC-16
DESCRIPTION EC-16
OPERATION EC-17
REMOVAL AND INSTALLATION EC-18

DESCRIPTION

The exhaust emission control system is made up of the following:

1. Boost controlled deceleration device (B.C.D.D.).
2. Exhaust gas recirculation (E.G.R.) system.
3. Catalytic converter system (California models).
4. Floor temperature warning system (California models).

Downloaded from www.Manualslib.com manuals search engine

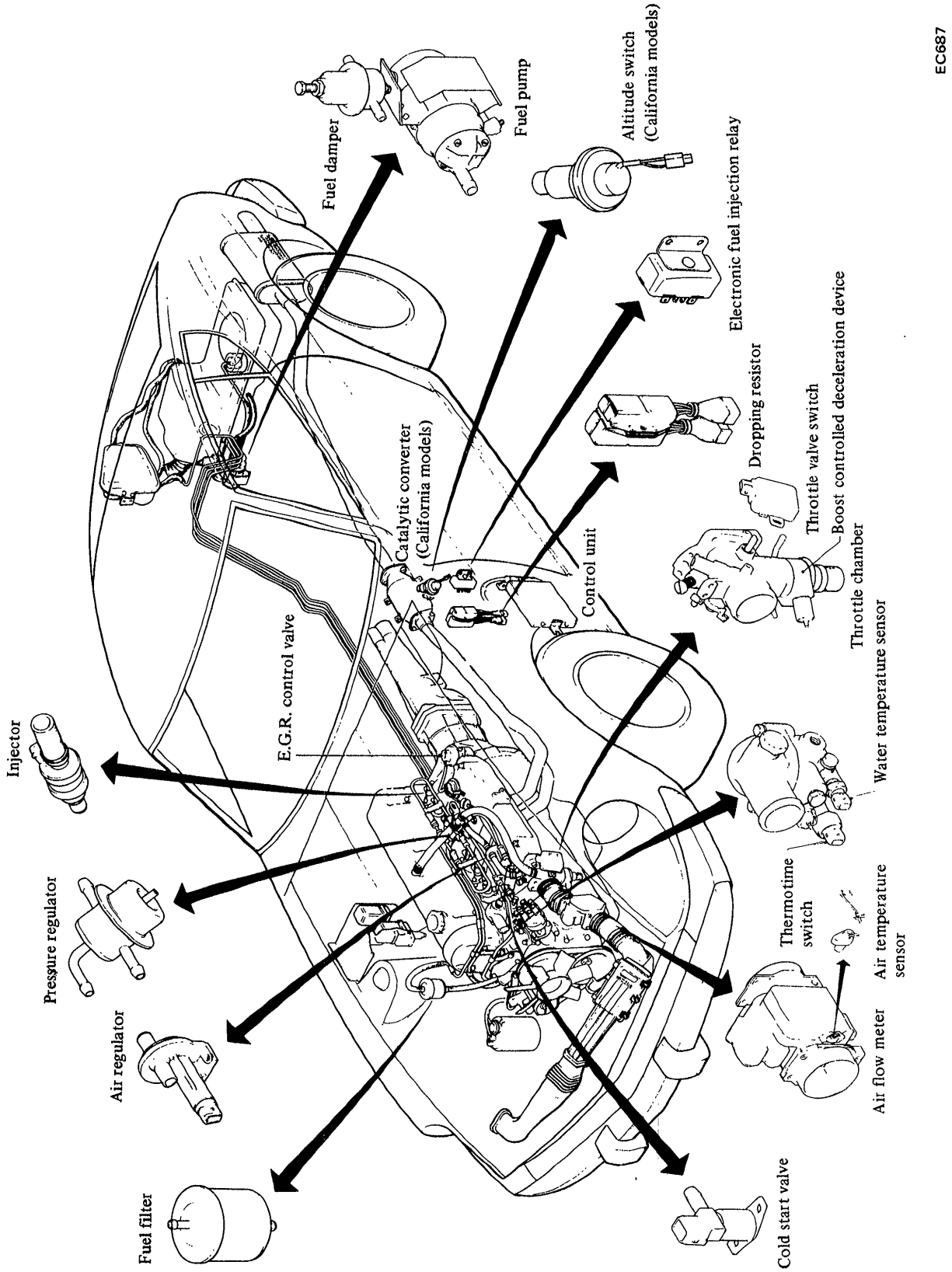

Fig. EC-2 Location of emission control system components

Downloaded from www.Manualslib.com manuals search engine

BOOST CONTROLLED DECELERATION DEVICE (B.C.D.D.)

DESCRIPTION

The Boost Controlled Deceleration Device (B.C.D.D.) is employed to reduce HC emissions emitted during coasting. The B.C.D.D., installed under the throttle chamber as a part of it, supplies additional air to the intake manifold during coasting to maintain the manifold vacuum at the proper operating pressure. [470 mmHg (18.5 inHg)]

There are two diaphragms in the device unit. Diaphragm I detects the manifold vacuum and makes the Vacuum Control Valve open when the vacuum exceeds the operating pressure. Diaphragm II operates the Air Control Valve according to the vacuum transmitted through the Vacuum Control Valve. The Air Control Valve regulates the amount of additional air so that the manifold vacuum can be kept at the proper operating pressure. The operating pressure changes depending on altitude; thus, diaphragm II and control valve operations are adjusted automatically in coincidence with the altitude at which the vehicle is driven. The graph shown in Figure indicates change in operating pressure for changes in atmospheric pressure and altitude. See Figure EC-13.

On manual transmission models, this system consists of B.C.D.D., vacuum control solenoid valve, speed-detecting switch and amplifier.

On automatic transmission models, it consists of B.C.D.D., vacuum control solenoid valve and inhibitor switch.

OPERATION

B.C.D.D.

Diaphragm I ⑩ monitors the manifold vacuum; when the vacuum exceeds a pre-determined value, it acts so as to open the vacuum control valve ⑨. This causes the manifold vacuum to be introduced into vacuum chamber II ⑱ and actuates diaphragm II ⑫.

When diaphragm II operates, the air control valve ⑬ opens the passage and introduces the additional air into the manifold.

The amount of air is controlled by the servo-action of the air control valve ⑬ and vacuum control valve ⑨ so that the manifold vacuum may be kept at the pre-determined value.

The B.C.D.D. operates when engine speed is in the range of 1,800 to 2,000 rpm.

Vacuum controlled solenoid valve

Manual transmission models:

The vacuum control solenoid valve is controlled by a speed detecting switch that is actuated by the speedometer needle.

As the car speed falls below 10 M.P.H., this switch is actuated, producing a signal. This signal actuates the amplifier to open the vacuum control solenoid valve.

Automatic transmission models:

When the shift lever is in the "N" or "P" position, the inhibitor switch mounted on the transmission turns on to open the vacuum control solenoid valve.

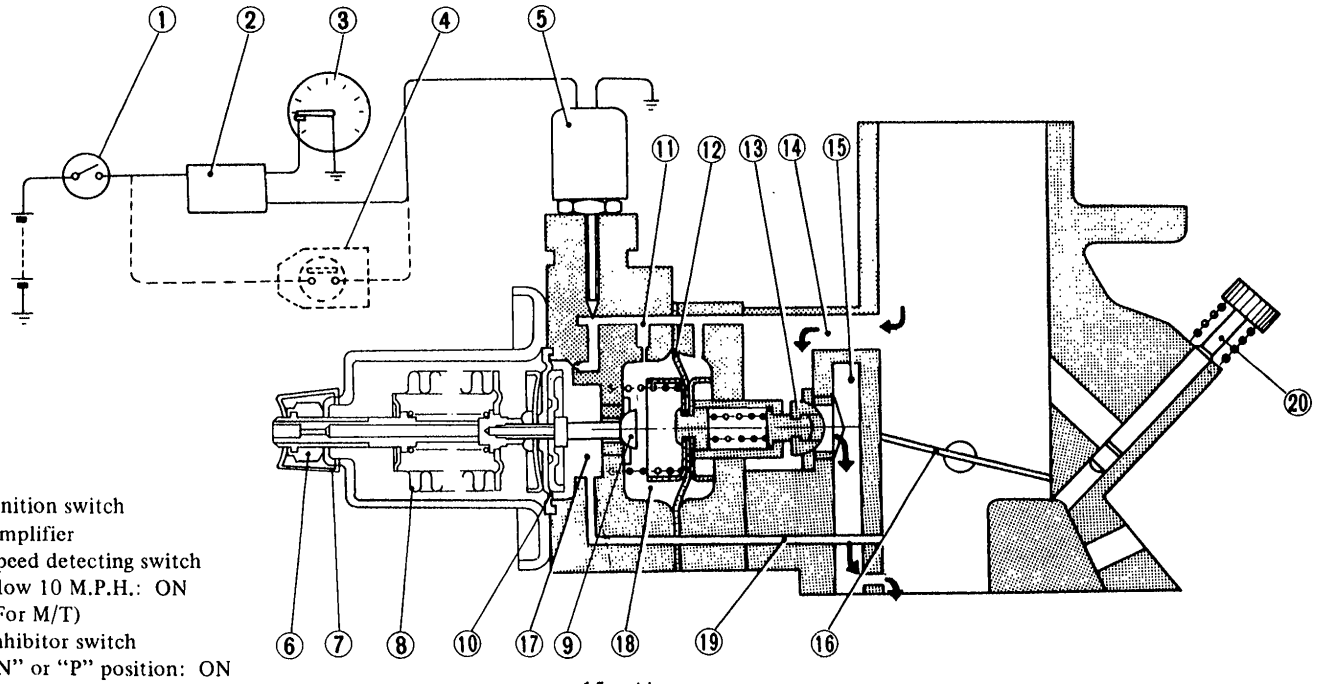

1 Ignition switch
2 Amplifier
3 Speed detecting switch Blow 10 M.P.H.: ON (For M/T)
4 Inhibitor switch "N" or "P" position: ON (For A/T)
5 Vacuum control solenoid valve
6 Adjusting nut
7 Lock spring
8 Altitude corrector
9 Vacuum control valve
10 Diaphragm I
11 Air passage
12 Diaphragm II
13 Air control valve
14 Air passage
15 Air passage
16 Throttle valve
17 Vacuum chamber I
18 Vacuum chamber II
19 Vacuum passage
20 Idle speed adjusting screw

EC688

Fig. EC-3 Schematic drawing of B.C.D.D.

Downloaded from www.Manualslib.com manuals search engine

REMOVAL

B.C.D.D.

Note: The B.C.D.D. cannot be disassembled. If it is found to be functioning unsatisfactorily, it must be replaced as an assembly.

1. Remove B.C.D.D. by unscrewing the three securing screw ①.

Do not unscrew the four B.C.D.D. assembly screws ②.

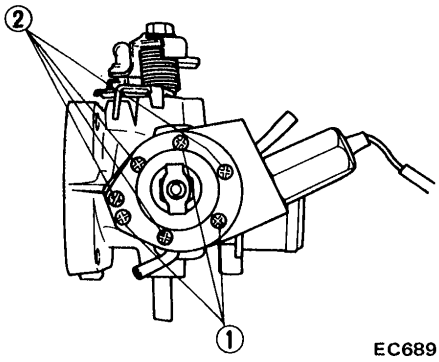

Fig. EC-4 Removing B.C.D.D.

2. To install, reverse the removal procedure.

Tightening torque:
20 to 40 kg-cm
(17 to 35 in-lb)

Vacuum controlled solenoid valve

1. Vacuum control solenoid valve can be easily removed with a wrench.
2. To install, reverse the removal procedure.

Tightening torque:
180 to 350 kg-cm
(156 to 304 in-lb)

INSPECTION

B.C.D.D. circuit with function test connector.

Caution: Do not attach test leads of a circuit tester to those other than designated. Refer to Figures EC-5 and EC-6.

Manual transmission models

1. Check for continuity between A and B when car is brought to a complete stop. Refer to Figure EC-5.

B.C.D.D. circuit is functioning properly if continuity exists and voltmeter reading is 0 volts (d-c) in step 2 below.

If continuity does not exist, check for disconnected connector and/or faulty amplifier, speed detecting switch or B.C.D.D. solenoid valve.

2. Check for presence of voltage across A and B [at a speed of more than 16 km/h* (10 MPH)]. Refer to Figure EC-5.

* Conduct this test by one of the following two methods.

1) Raising up rear axle housing with stand.
2) Chassis dynamometer test

- If voltmeter reading is 0 volt at a speed of more than 16 km/h (10 MPH), circuit is functioning properly.
- If voltmeter reading is not 0 volt, check for disconnected connector, burned fuse, faulty amplifier, B.C.D.D. solenoid valve or speed detecting switch.

3. If, by above checks, faulty part or unit is located, it should be removed and tested again. If necessary, replace.

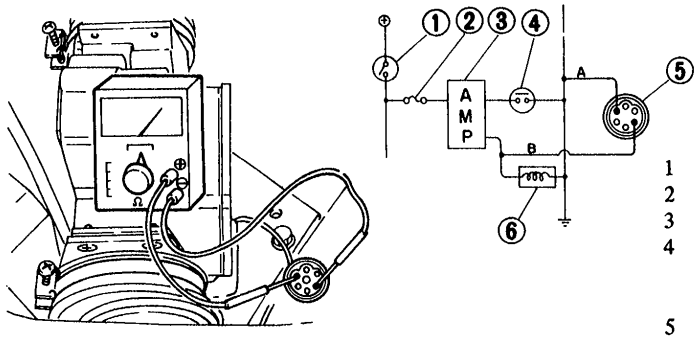

1 Ignition key
2 Fuse
3 Amplifier
4 Speed detecting switch
Above 10 mph: OFF
Below 10 mph: ON
5 Function test connector
6 Vacuum control solenoid valve

Fig. EC-5 Checking B.C.D.D. circuit with function test connector (for manual transmission)

Automatic transmission models

1. Turn ignition key to "ON" position.
2. With inhibitor switch "ON" ("N" or "P" position), check for presence of voltage across A and B. Refer to Figure EC-6.

- If voltmeter reading is 12 volts (d-c), B.C.D.D. circuit is functioning properly.
- If voltmeter reading is zero, check for disconnected connector, faulty solenoid valve or inhibitor switch.

3. With inhibitor switch "OFF" ("1", "2", "D" or "R" position), check for resistance between A and B. Refer to Figure EC-6.

- If ohmmeter reading is 15 to 28 ohms, circuit is functioning properly.
- If ohmmeter reading is not above, check for poor connection of connector, faulty B.C.D.D. solenoid valve or inhibitor switch.

4. If, by above checks, faulty part or unit is located, it should be removed and tested again. If necessary, replace.

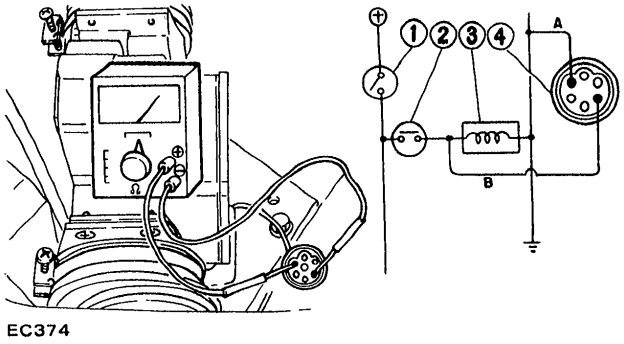

1 Ignition key
2 Inhibitor switch
N or P position: ON
1, 2, D or R position: OFF
3 Vacuum control solenoid valve
4 Function test connector

Fig. EC-6 Checking B.C.D.D. circuit with function test connector (for automatic transmission)

Downloaded from www.Manualslib.com manuals search engine

B.C.D.D. solenoid valve

1. Turn on engine key. (Do not start engine.)
2. Ensure that solenoid valve clicks when intermittently electrified as shown in Figure EC-7.

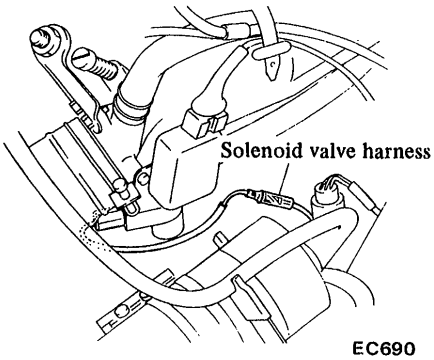

Fig. EC-7 Checking solenoid valve

3. If a click is heard, solenoid valve is normal.
4. If a click is not heard at all, check for continuity with a circuit tester. If discontinuity is detected, replace solenoid valve.

Amplifier (Manual transmission models)

The amplifier is installed at the rear of the speedometer. To check, proceed as follows:

1. Set circuit tester in D-C ampere range (1 A min, full scale), connect test probes of tester as shown in Figure EC-8.

Do not confuse positive line with negative line.

2. Turn ignition key to "ON" position.
3. Ensure that tester pointer deflects when ignition key is turned on.
4. If tester pointer does not deflect when solenoid valve and speed detecting switch circuits are functioning properly, amplifier is faulty.

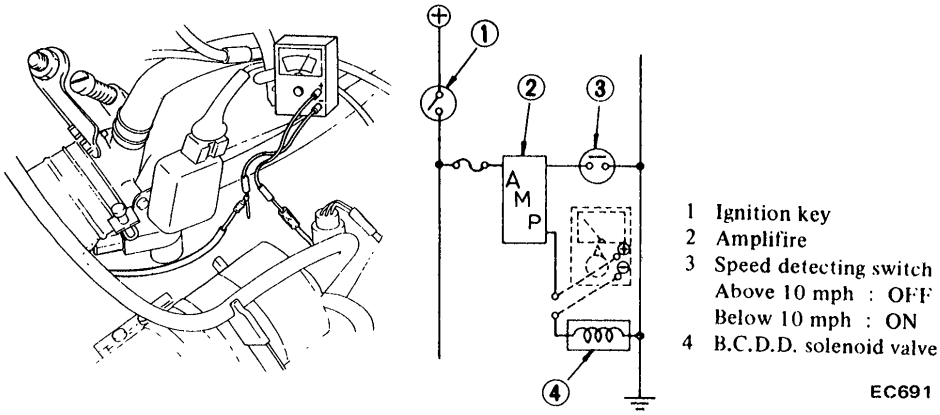

Fig. EC-8 Checking amplifier

Inhibitor switch (Automatic transmission models)

Refer to the AT section.

Set pressure of B.C.D.D.

Generally, it is unnecessary to adjust the B.C.D.D., however, if it should become necessary to adjust it, the procedure is as follows:

Prepare the following tools

1. Tachometer to measure the engine speed while idling, and a screwdriver.
2. A vacuum gauge and connecting pipe.

Note: A quick-response type boost gauge such as Bourdon's type is recommended; a mercury-type manometer should not be used.

To properly set the B.C.D.D. set pressure, proceed as follows:

1. Remove the harness of solenoid valve.

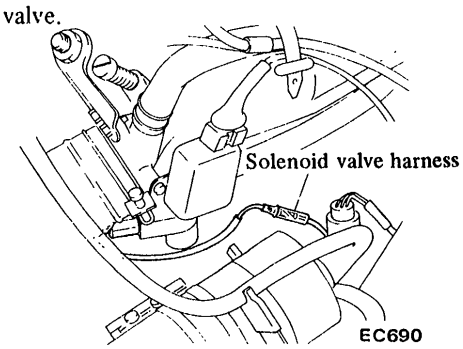

Fig. EC-9 Removing harness of solenoid valve

2. Connect rubber hose between vacuum gauge and intake manifold as shown.

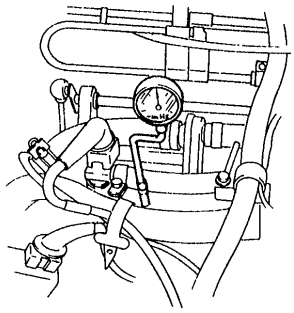

Fig. EC-10 Connecting vacuum gauge

3. Warm up the engine until it is heated to operating temperature.

Then adjust the engine at normal idling setting. (Refer to the item "Checking Engine Idle RPM and Mixture Ratio" in page ET-7.)

Idling engine speed
Manual transmission
800 rpm
Automatic transmission
(in "D" position)
700 rpm

4. Run the engine under no load. Increase engine speed to 3,000 to 3,500 rpm, then quickly close throttle valve.
5. At that time, the manifold vacuum pressure increases abruptly to −600 mmHg (−23.6 inHg) or above and then gradually decreases to the level set at idling.
6. Check that the B.C.D.D. set pressure is within the specified pressure.

Specified pressure (0 m, sea level and 760 mmHg (29.9 inHg), atmospheric pressure)
Manual transmission and
Automatic transmission:
−460 to −480 mmHg
(−18.1 to −18.9 inHg)

Notes:

a. When atmospheric pressure is known, operating pressure will be found by tracing the arrow line "A". See Figure EC-13. When altitude is known, operating pressure will be found by tracing the arrow line "B". See Figure EC-13.

Downloaded from www.Manualslib.com manuals search engine

b. When checking the set pressure of B.C.D.D., find the specified set pressure in Figure EC-13 from the atmospheric pressure and altitude of the given location.
For example, if the car is located at an altitude of 1,400 m (4,600 ft), the specified set pressure for B.C.D.D. is 375 mmHg (14.8 inHg).

7. If it is higher than the set level, turn the adjusting nut clockwise until correct adjustment is made.

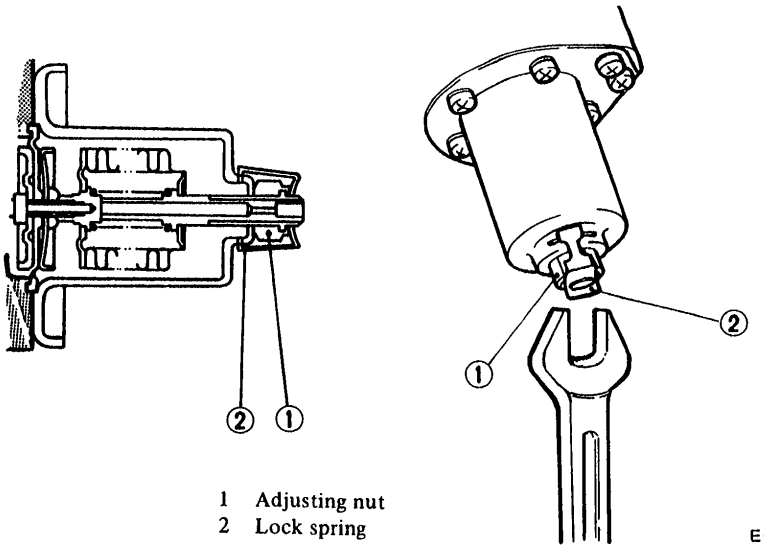

1 Adjusting nut
2 Lock spring

Fig. EC-11 Adjusting set pressure

Note: When adjusting B.C.D.D., turn adjusting nut in or out with lock spring in place.

Always set lock spring properly to prevent changes in set pressure.

8. Race the engine and check for adjustment.
9. If it is lower than the set level, turn the adjusting screw counterclockwise until correct adjustment is made.
10. Race the engine and check for adjustment.

If engine speed cannot be decreased to idling when checking B.C.D.D. set pressure, proceed as follows:

When the engine speed does not fall to idling speed, it is necessary to reduce the negative idling pressure of the manifold to lower than the set pressure of the B.C.D.D. (The engine speed will not drop to idling speed when the negative idling pressure is higher than the set pressure of the B.C.D.D.).

In this case, the engine must be labored by (1) road test or (2) chassis dynamometer or (3) by raising up rear suspension member on a stand, accelerating the car to 64 to 80 km/h (40 to 50 MPH) in top gear (manual transmission) or in "D" position (automatic transmission), and then releasing the accelerator pedal and letting the car decelerate. After doing this, check whether the B.C.D.D. set pressure is at the predetermined value or not.

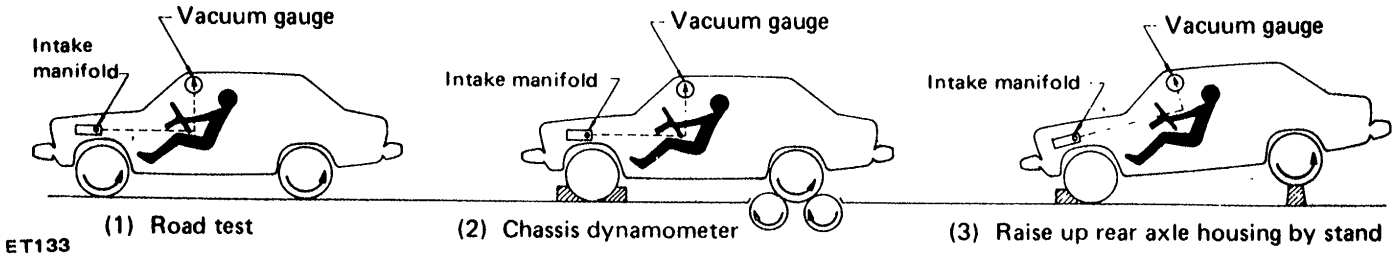

Fig. EC-12 Testing operating pressure of the B.C.D.D.

Downloaded from www.Manualslib.com manuals search engine

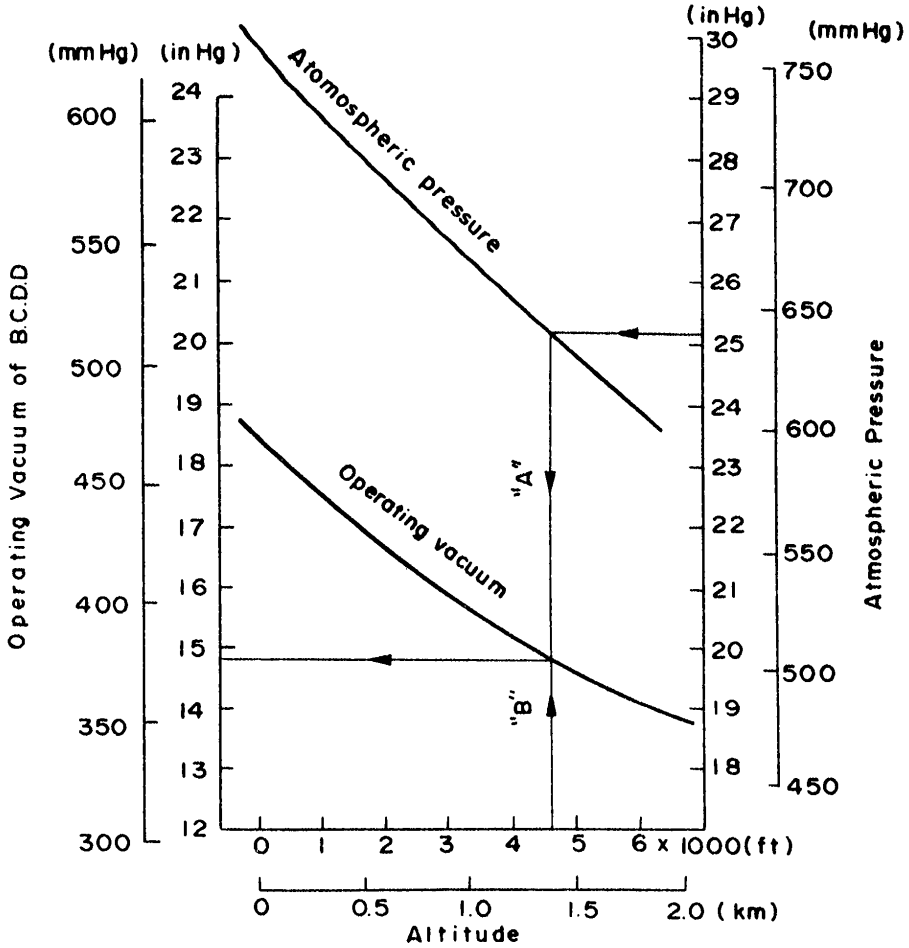

Fig. EC-13 Changes in operating pressure versus changes in atmospheric pressure and altitude

EXHAUST GAS RECIRCULATION (E.G.R.) CONTROL SYSTEM

DESCRIPTION

In the exhaust gas recirculation system, a part of the exhaust gas is returned to the combustion chamber to lower the spark flame temperature during combustion. This results in a reduction of the nitrogen oxide content in the exhaust gas.

The exhaust gas recirculation system consists of an intake manifold, an E.G.R. control valve, a thermal vacuum valve, a back pressure transducer (B.P.T.) valve, an E.G.R. tube, a B.P.T. valve control tube, a vacuum delay valve (California models only) and hoses.

The thermal vacuum valve, B.P.T. valve and vacuum delay valve (California models only) are located in the vacuum line between the throttle chamber and the E.G.R. control valve. The thermal vacuum valve and the B.P.T. valve are operated according to changes in water temperature and exhaust pressure, respectively.

Exhaust gases are recirculated in the intake manifold when intake manifold pressure is high enough [50 mmHg (2.0 inHg) min. inside the E.G.R. control vacuum chamber], the thermal vacuum valve is opened and the B.P.T. valve is closed.

Figure EC-14 shows a functional diagram of the E.G.R. control system.

Downloaded from www.Manualslib.com manuals search engine

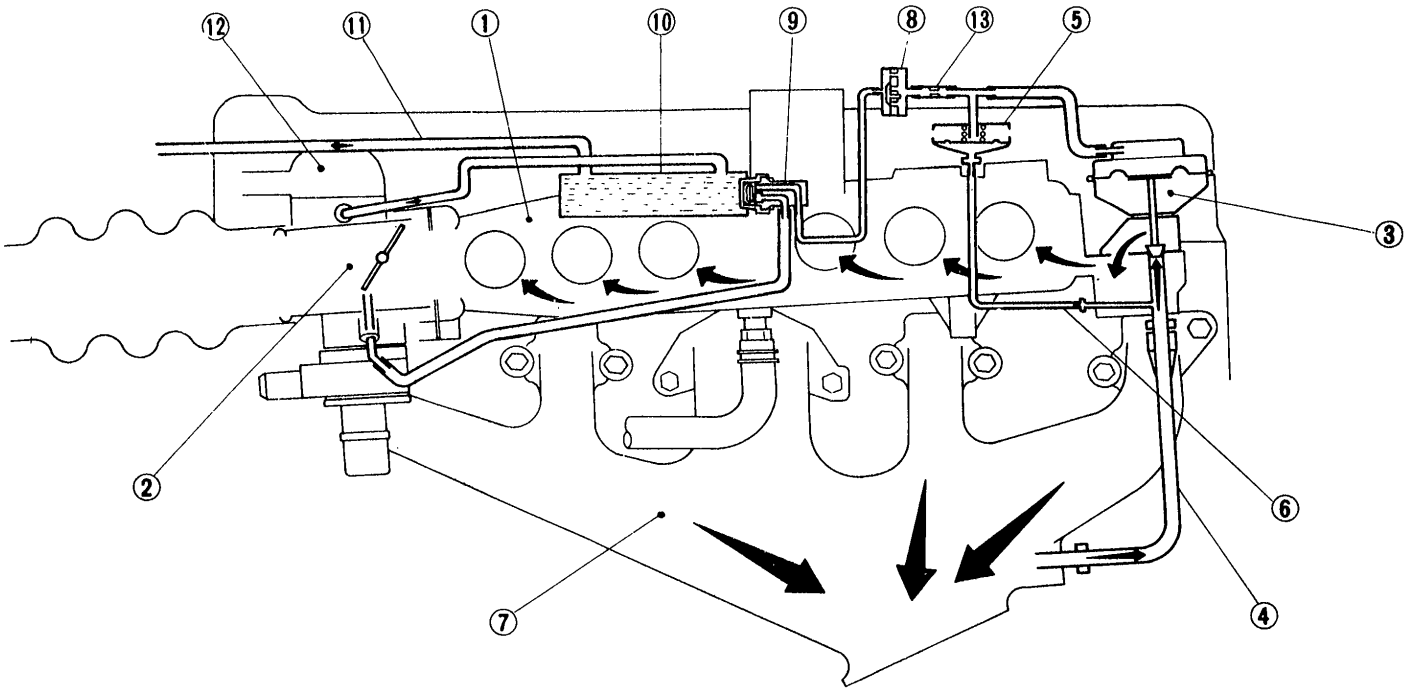

1 Intake manifold
2 Throttle chamber
3 E.G.R. control valve
4 E.G.R. tube
5 B.P.T. valve
6 B.P.T. valve control tube
7 Exhaust manifold
8 Vacuum delay valve (California model only)
9 Thermal vacuum valve
10 Heater housing
11 Water return tube
12 Thermostat housing
13 Vacuum orifice

EC693

Fig. EC-14 E.G.R. control system

STRUCTURE AND OPERATION

Operation of E.G.R. system is as shown below.

Water temperature °C (°F)	Thermal vacuum valve	B.P.T. valve mmH2O (inH2O)		E.G.R. control valve	E.G.R.
40 to 47 (104 to 117) max.	Close	Exhaust pressure 17 to 37 (0.65 to 1.47) max.	Open	Close	Not actuated
		17 to 37 (0.65 to 1.47) min.	Close	Close	Not actuated
47 to 53 (117 to 127) min.	Open	Exhaust pressure 17 to 37 (0.65 to 1.47) max.	Open	Close	Not actuated
		17 to 37 (0.65 to 1.47) min.	Close	Open	Actuated

Note: With the engine at idle or at full throttle, the E.G.R. control valve closes to deactivate the E.G.R. system regardless of water temperature (operation of the thermal vacuum valve) and B.P.T. valve.

Downloaded from www.Manualslib.com manuals search engine

E.G.R. "OFF" operation

The E.G.R. system does not operate when the engine is under any of the following operating conditions:

1) Idle or full throttle

Intake manifold vacuum pressure is not high enough to lift the E.G.R. control valve.

2) Thermal vacuum valve in "closed" state

This valve is closed when the water temperature is below 40 to 47°C (104 to 117°F), admitting no intake manifold vacuum to the E.G.R. control valve vacuum chamber.

3) Exhaust pressure below 17 to 37 mmH2O (0.65 to 1.47 inH2O) applied to B.P.T. valve.

Intake manifold vacuum pressure is not high enough to lift the E.G.R. control valve since the B.P.T. valve vacuum chamber is open to atmosphere.

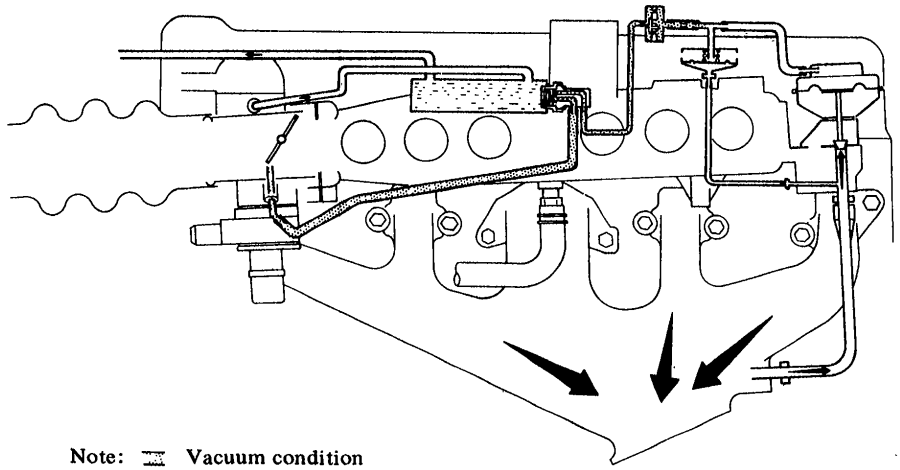

Note: Vacuum condition

EC694

Fig. EC-15 E.G.R. system in "OFF" operation

E.G.R. "ON" operation

The E.G.R. system operates when the engine is operating under the following three conditions:

1) Operating at other than idling or full throttle

2) Thermal vacuum valve in "open" state, that is water temperature above 47 to 53°C (117 to 127°F), and

3) Exhaust pressure applied to B.P.T. valve above 17 to 37 mmH2O (0.65 to 1.47 inH2O)

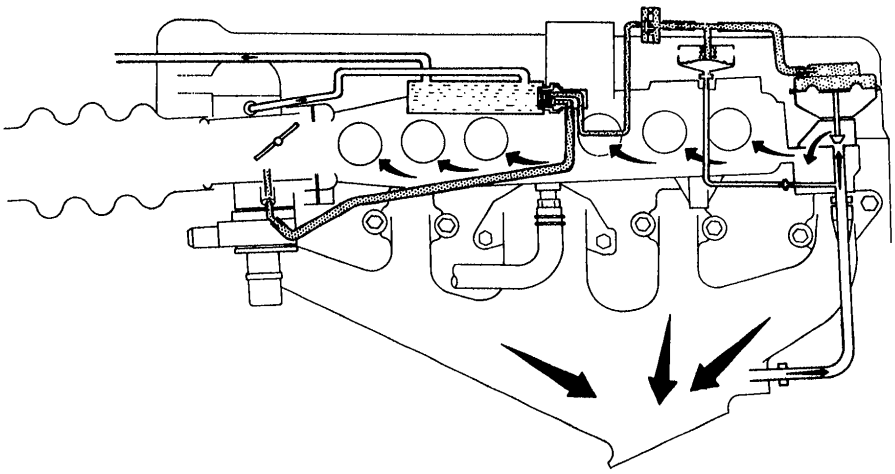

Note: Vacuum condition

EC695

Fig. EC-16 E.G.R. system in "ON" operation

E.G.R. Control valve

The E.G.R. control valve controls the quantity of exhaust gas to be led to the intake manifold through vertical movement of the taper valve connected to the diaphragm, to which vacuum is applied in response to the opening of the throttle valve. The E.G.R. control valve is installed on the intake manifold through a gasket.

The construction of the E.G.R. control valve is shown below. See Figure EC-17.

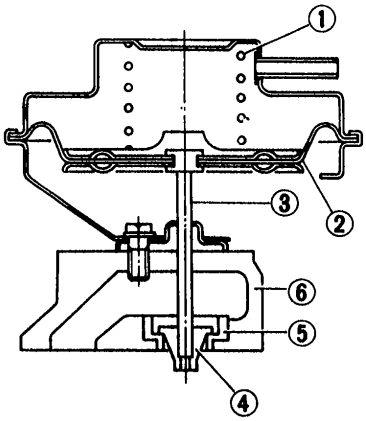

1 Diaphragm spring
2 Diaphragm
3 Valve shaft
4 Valve
5 Valve seat
6 Valve chamber

EC231

Fig. EC-17 E.G.R. control valve

Downloaded from www.Manualslib.com manuals search engine

Thermal vacuum valve

The thermal vacuum valve is mounted in the heater housing on the intake manifold. It detects engine coolant temperature by means of a built-in bi-metal, and opens or closes the vacuum passage in the thermal vacuum valve. When the vacuum passage is open, the throttle chamber suction vacuum is applied through the B.P.T. valve to the diaphragm of the E.G.R. control valve to actuate the taper valve connected to the diaphragm.

The construction of the thermal vacuum valve is shown below. See Figure EC-18.

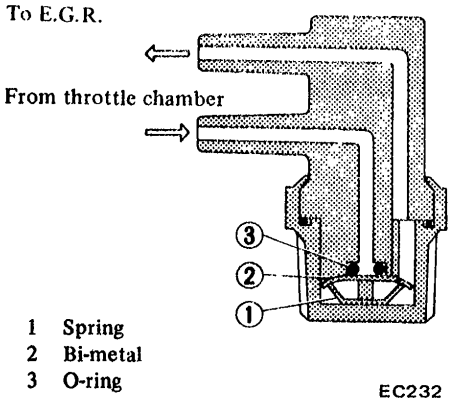

Fig. EC-18 Thermal vacuum valve

B.P.T. valve

The B.P.T. valve monitors exhaust pressure to activate the diaphragm, controlling intake manifold vacuum applied to the E.G.R. control valve. In other words, recirculated exhaust gas is controlled in response to positioning of the E.G.R. control valve or to engine operation.

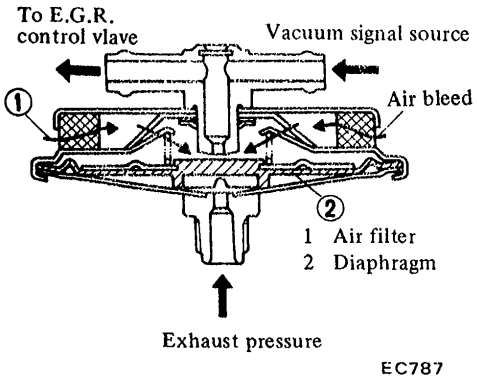

Fig. EC-19 B.P.T. valve

Vacuum delay valve (California models only)

During rapid acceleration the vacuum delay valve prevents an abrupt escape of vacuum from the line between the throttle chamber and the length of E.G.R. operation. The valve is designed for one-way operation and consists of a one-way umbrella valve and a sintered steel fluidic restrictor.

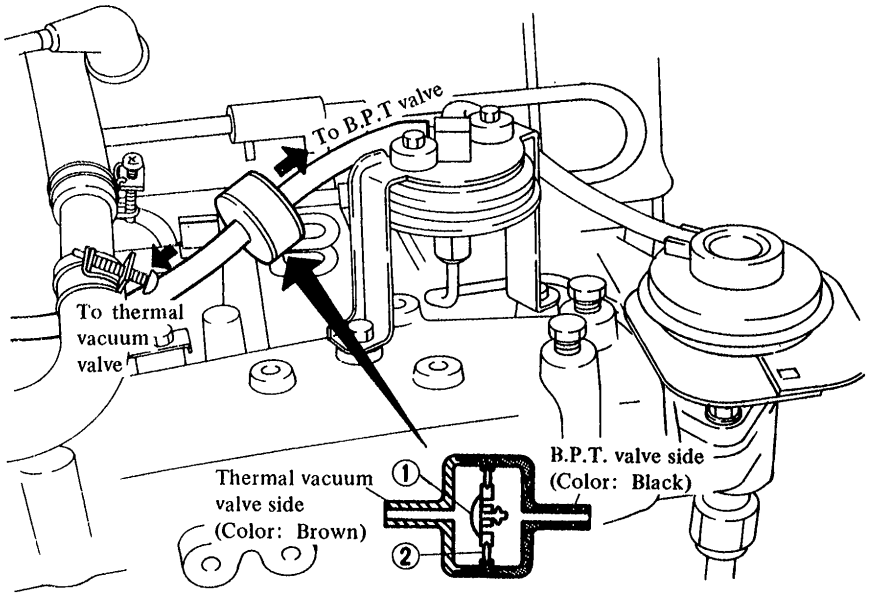

Fig. EC-20 Vacuum delay valve

When installing this valve, ensure that it properly oriented.

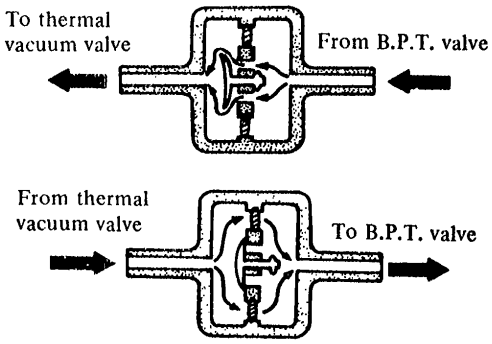

Fig. EC-21 Operation of vacuum delay valve

REMOVAL AND INSTALLATION

Removal

1. E.G.R. control valve

E.G.R.. control valve is installed on intake manifold through a gasket. To dismount E.G.R. control valve, remove the following parts:

- Vacuum hose connecting E.G.R. control valve to B.P.T. valve.
- Heat shield plate for E.G.R. control valve.
- Nuts attaching E.G.R. control valve to intake manifold.

Note: To remove vacuum hose, flatten clip connecting vacuum hose to E.G.R. control valve and remove hose with hand.

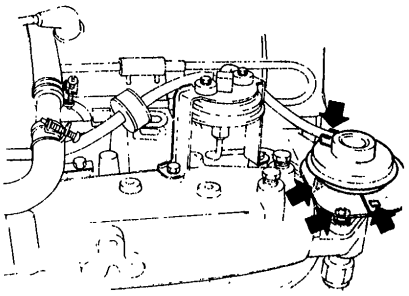

Fig. EC-22 Removing E.G.R. control valve

Downloaded from www.Manualslib.com manuals search engine

2. B.P.T. valve

The B.P.T. valve is attached to the intake manifold through the mounting bracket.

To dismount B.P.T. valve, remove following parts:

- Vacuum hose (E.G.R. valve to B.P.T. valve)
- Vacuum hose (Thermal vacuum valve to B.P.T. valve)
- B.P.T. valve control tube connector
- Bolts attaching B.P.T. valve to mounting bracket

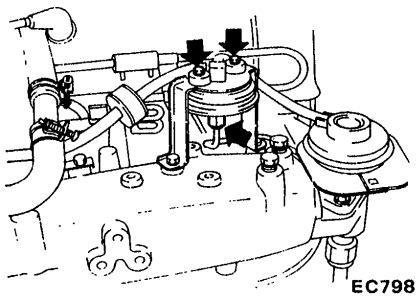

Fig. EC-23 Removing B.P.T. valve

3. Thermal vacuum valve

After removing following parts, thermal vacuum valve can be dismounted.

- Vacuum hose (throttle chamber to thermal vacuum valve)
- Vacuum hose (Thermal vacuum valve to B.P.T. valve)

Note: Drain engine coolant before dismounting thermal vacuum valve.

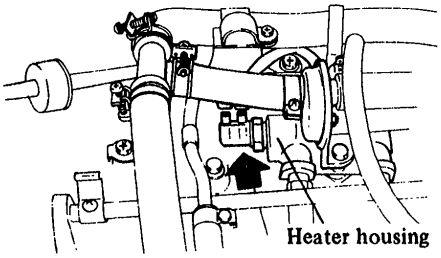

Fig. EC-24 Removing thermal vacuum valve

Note: When installing thermal vacuum valve, tighten to 2.2 kg-m (16 ft-lb) max. Make sure that valve is water-tight after installation.

Installation

To install E.G.R. control system components, reverse the order of removal.

INSPECTION

1. Make a thorough visual check of E.G.R. control system. It necessary, wipe away oil to facilitate inspection.

If any hoses are cracked or broken, replace.

2. With engine stopped, inspect E.G.R. control valve for any indication of binding or sticking by moving diaphragm of control valve upwards with finger.

3. With engine running, inspect thermal vacuum valve. When engine coolant temperature is below 40°C (104°F).

- Disconnect one end (B.P.T. valve side) of vacuum hose connecting thermal vacuum valve to B.P.T. valve.
- Increase engine speed from idling to 3,000 to 3,500 rpm.
- Make sure that thermal vacuum valve is close, and that throttle chamber vacuum does not exist at end of vacuum hose.

  If a vacuum is present, replace thermal vacuum valve.

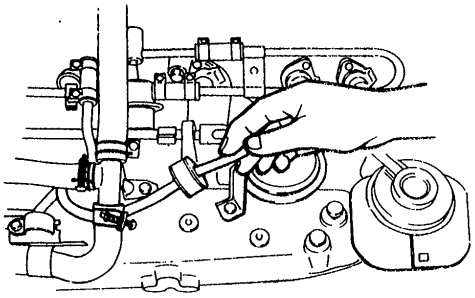

Fig. EC-25 Checking thermal vacuum valve

4. With engine running, inspect thermal vacuum valve, B.P.T. valve, and E.G.R. control valve. When engine coolant temperature is above 53°C (127°F).

(1) Thermal vacuum valve

- Disconnect one end (B.P.T. valve side) of vacuum hose connecting thermal vacuum valve to B.P.T. valve.
- Increase engine speed from idling to 3,000 to 3,500 rpm.
- Make sure that thermal vacuum valve is open, and that throttle chamber vacuum is present at end of vacuum hose.

  See Figure EC-25.

  If vacuum is weak or is not present at all, replace thermal vacuum valve.

(2) B.P.T. valve

- Disconnect one end (E.G.R. control valve side) of vacuum hose connecting B.P.T. valve to E.G.R. control valve.
- Increase engine speed from idling to 3,000 to 3,500 rpm.
- Make sure that B.P.T. valve is operating, and that throttle chamber vacuum is present at end of vacuum hose.

  If vacuum is not present at all, replace B.P.T. valve.

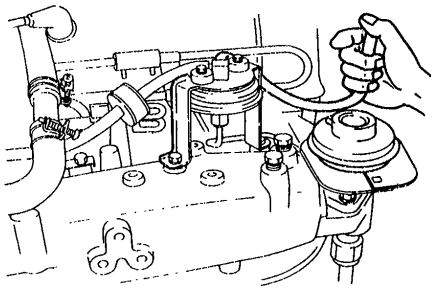

Fig. EC-26 Checking B.P.T. valve

(3) E.G.R. control valve

- Make sure that E.G.R. control valve is operated when engine speed is increased from idling to 3,000 to 3,500 rpm.

  Place a finger on diaphragm of E.G.R. control valve to check for valve movement. If diaphragm does not move, replace E.G.R. control valve.

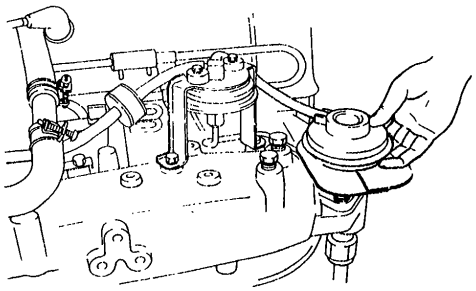

Fig. EC-27 Checking E.G.R. control valve

Downloaded from www.Manualslib.com manuals search engine

If any difficulty is encountered in judging the condition of any component during above inspection, check the questionable component independently as follows:

Thermal vacuum valve

Dismount thermal vacuum valve from heater housing.

Note: Before dismounting, drain engine coolant from engine.

Check to be sure that thermal vacuum valve opens or closes in response to engine coolant temperature as specified.

Thermal vacuum valve should open at a temperature of 47 to 53°C (117 to 127°F) completing the vacuum passage.

Note: Do not allow water to get inside the thermal vacuum valve.

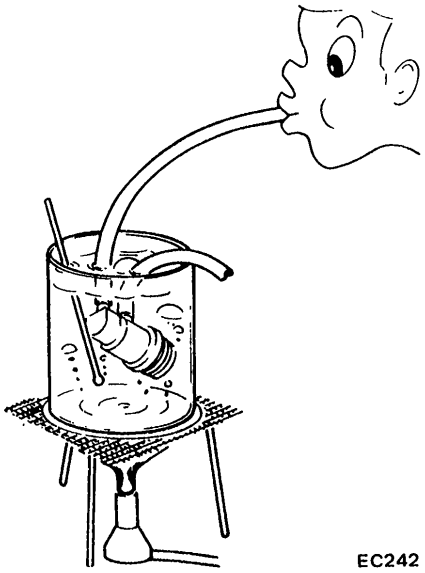

Fig. EC-28 Checking thermal vacuum valve

Vacuum delay valve (California models only)

1. Remove vacuum delay valve.
2. Blow air through port on B.P.T. valve side, then through the other port (on thermal vacuum valve side). Vacuum delay valve is in good condition if, when finger is placed over port on thermal vacuum valve side, air flow resistance is greater than that on the other side.

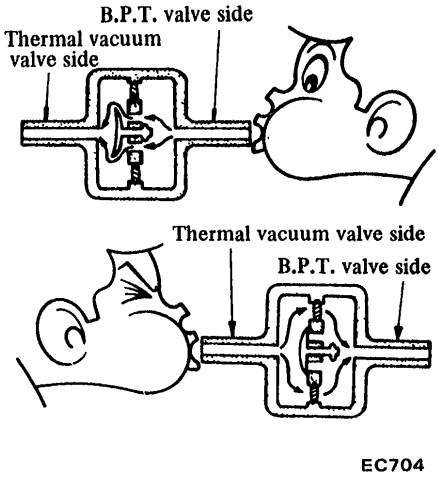

Fig. EC-29 Checking vacuum delay valve

3. If a considerable air flow resistance is felt at port on thermal vacuum valve side in step 2 above and if the condition of vacuum delay valve is questionable, dip port (on B.P.T. valve side) into a cup filled with water. Blow air through the other port. Small air bubbles should appear.

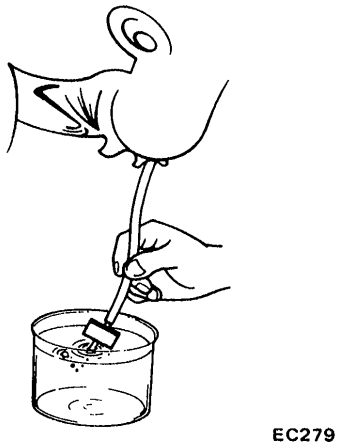

Fig. EC-30 Checking vacuum delay valve

Note: Be careful to avoid entry of oil or dirt into valve.

B.P.T. valve

Disconnect B.P.T. valve from engine.

1. Apply a pressure above 50 mm H_2O (2 inH_2O) to B.P.T. valve and orally suck port back, as shown in Figure EC-31, to check for leakage. If a leak is noted, replace valve.

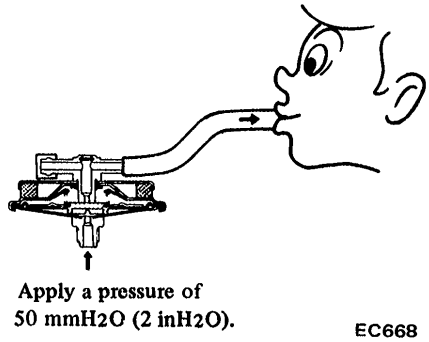

Fig. EC-31 Checking B.P.T. valve

E.G.R. control valve

Dismount E.G.R. control valve from engine.

1. Apply vacuum to E.G.R. control valve, referring to the following figure. If the valve moves to full position, it is normal.

E.G.R. control valve will remain open for more than 30 seconds after vacuum has cut off.

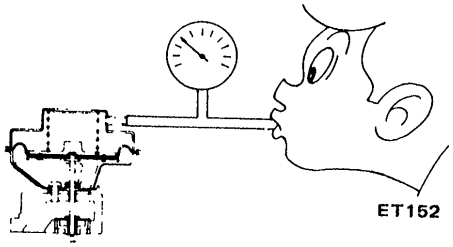

Fig. EC-32 Checking E.G.R. control valve

2. Visually check E.G.R. control valve for damage, wrinkle or deformation.
3. Clean the seating surface of E.G.R. control valve with a brush and compressed air, and remove foreign matter from around the valve and port.

Downloaded from www.Manualslib.com manuals search engine

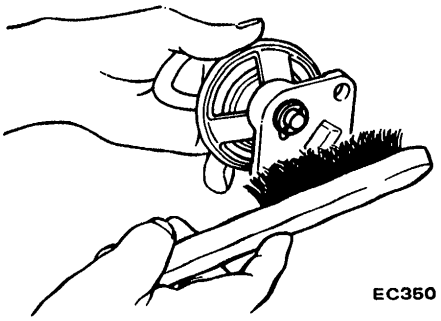

Fig. EC-33 Cleaning E.G.R. control valve

CATALYTIC CONVERTER SYSTEM

DESCRIPTION

The catalytic converter accelerates the chemical reaction of hydrocarbons (HC) and carbon monoxide (CO) in the exhaust gas, and changes them into harmless carbon dioxide (CO_2) and water (H_2O).

This chemical reaction process requires the proper amount of air.

By means of a chemical reaction process as it passes through the catalytic converter, the excess air in the air-fuel mixture (which has not been burned during the combustion process) is utilized to minimize HC and CO emissions.

This converter is installed on all California models. Refer to Figure EC-34 for the location of this unit.

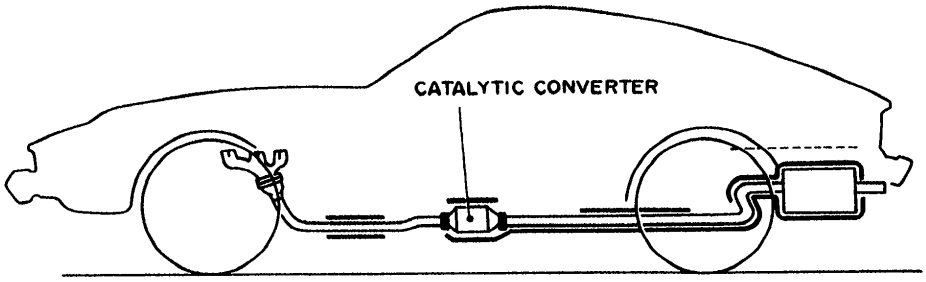

Fig. EC-34 Location of catalytic converter

OPERATION

Catalytic converter

The exhaust gas which is left unburned during combustion process is gradually oxidized with excess oxygen, and is converted into harmless carbon dioxide (CO_2) and water (H_2O). The catalytic converter, located in the exhaust line, further cleans exhaust gases through catalytic action, and changes residual hydrocarbons (HC) and carbon monoxide (CO) contained in the exhaust gas into carbon dioxide (CO_2) and water (H_2O) before the exhaust gas is discharged to the atmosphere.

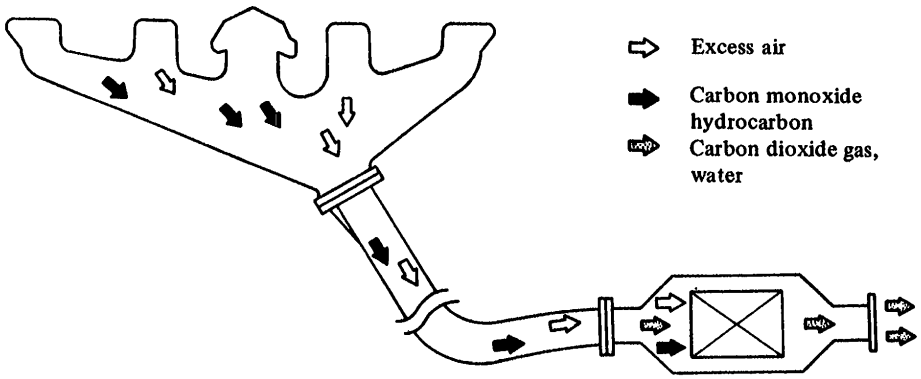

Fig. EC-35 Operation of catalytic converter

Downloaded from www.Manualslib.com manuals search engine

REMOVAL AND INSTALLATION

Removal and installation can be done as follows:

Removal

Catalytic converter

1. Apply parking brake.
2. Place wheel lock under each tire.
3. Jack up the car.
4. Remove lower shelter of catalytic converter.
5. Dismount catalytic converter.

Notes:

a. Be careful not to damage catalytic converter when handling.

b. Never wet catalyzer with water, oil, etc.

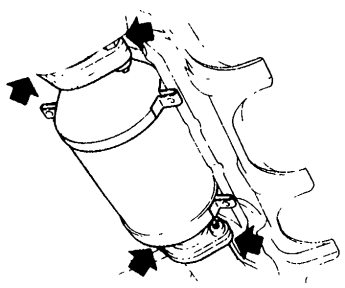

EC706

Fig. EC-36 Removing catalytic converter

Installation

Install catalytic converter to exhaust front and rear tubes. For installation procedures of catalytic converter, refer to Section "FE".

Tightening torque specifications chart

	Tightening torque
Catalytic converter to exhaust front and rear tubes	3.2 to 4.3 kg-m (23 to 31 ft-lb)

Inspection

Preliminary inspection

Visually check condition of ignition system, E.F.I. system and component parts including hoses, tubes, and wires, replace if necessary.

Catalytic converter

Whether catalytic converter is normal or not can be checked by observing variation in CO percentage. The checking procedure is as follows:

1. Apply parking brake. Shift gears into Neutral (for manual transmission) and Neutral or Park (for automatic transmission).

Place wheel chocks under each tire.

2. Visually check catalytic converter for damage or cracks.
3. Warm up engine thoroughly. [About 80°C (176°F)]
4. After engine has warmed up, run engine at 2,000 rpm for a few minutes under no load until catalytic converter reaches operating temperature.
5. Stop engine and turn ignition switch to "OFF" position.
6. Remove connector of water temperature sensor.
7. Connect **Emission adjuster** to harness connector of water temperature sensor. See Figure EC-37.
8. Insert CO meter probe through exhaust diffuser end until a minimum insertion length of 500 mm (19.7 in) is reached.
9. Run engine at 2,000 rpm and adjust CO percentage to 3 percent with emission adjuster.
10. Remove injector connector from number six cylinder.
11. Keep engine running at 2,000 rpm with no load.
12. If CO percentage is less than 1 percent, catalytic converter is functioning properly. (If CO percentage is more than 1 percent, catalytic converter must be replaced.)
13. Stop engine and turn ignition switch to "OFF" position.
14. Locate water temperature sensor connector and injector connector in place.

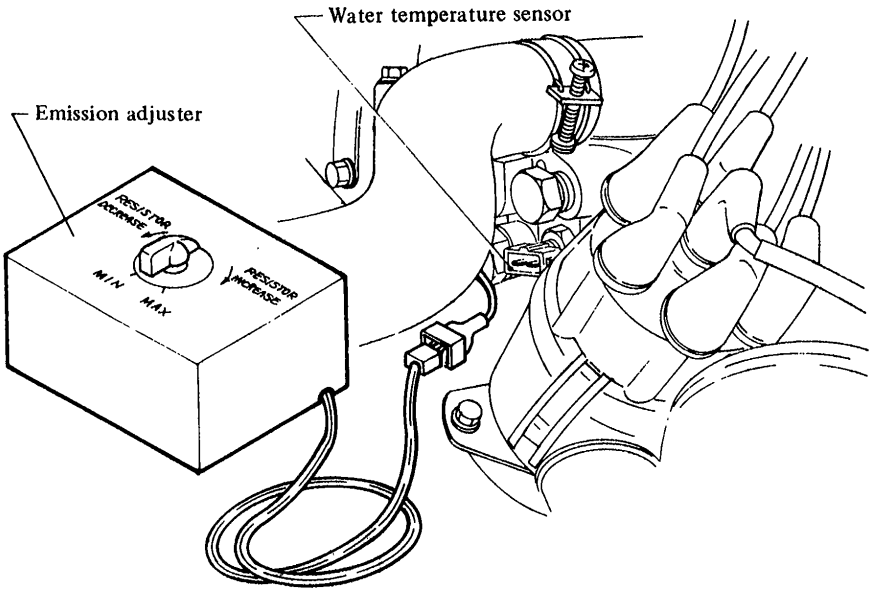

EC707

Fig. EC-37 Connecting emission adjuster

FLOOR TEMPERATURE WARNING SYSTEM

DESCRIPTION

The floor temperature warning system consists of a floor sensor installed on the car's floor, floor sensor relay installed on passenger seat bracket and a floor temperature warning lamp on the instrument panel and wires that connect these parts.

When the floor temperature rises to an abnormal level, the warning lamp will light to call the attention of the driver. The wiring diagram of this system, and location of the floor sensor are illustrated in Figures EC-38 and EC-39.

Downloaded from www.Manualslib.com manuals search engine

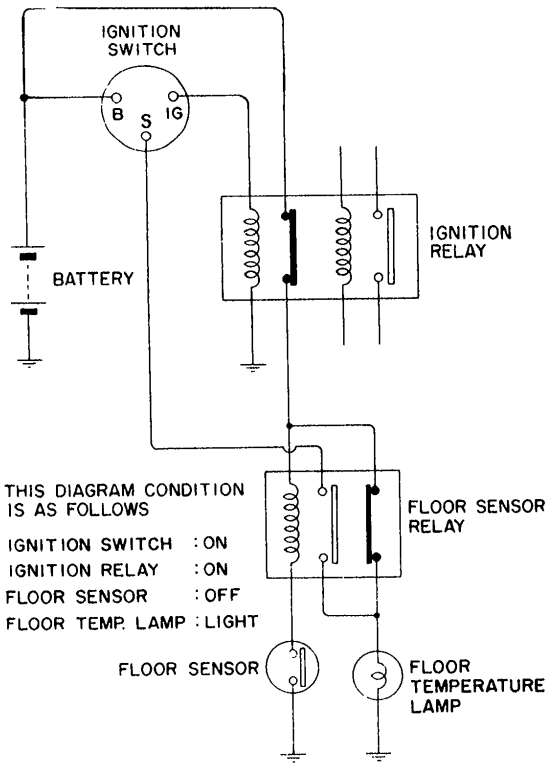

Floor sensor temperature high EC803

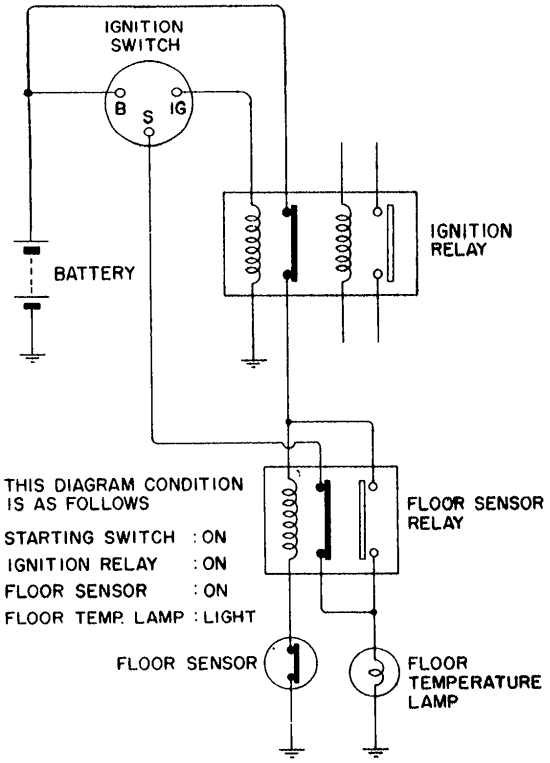

Ignition switch in START EC804

Fig. EC-38 Floor warning system circuit

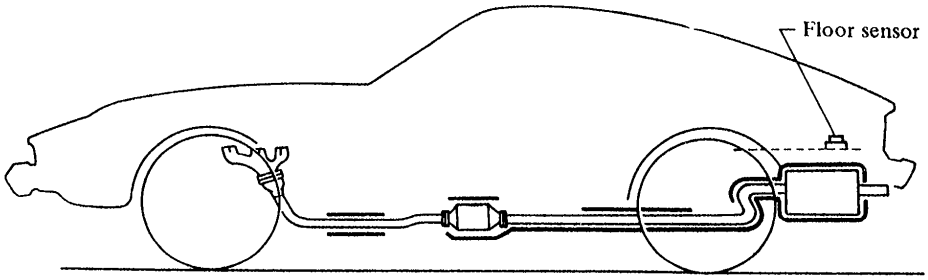

EC398

Fig. EC-39 Location of floor sensor

OPERATION

Floor temperature will exceed normal level when temperature rise in the exhaust system succeeding the catalytic converter is caused by either an engine problem or severe driving conditions. Under this condition the floor sensor turns off, causing the starting switch line of the floor sensor relay to turn off and the ignition switch line to turn on, as a result, the floor temperature warning lamp comes on.

When the floor temperature drops below the specified level, the floor sensor relay contacts close.

As the contacts close, the ignition line of the floor sensor relay turns off, while the starting switch side comes on. Thus, the floor temperature warning lamp goes out.

The lamp is functioning satisfactorily, if it remains on while the starting motor is in operation. The lamp goes out when the ignition switch is in "IG" position.

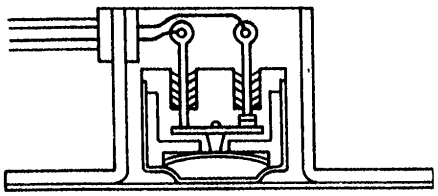

Contact close

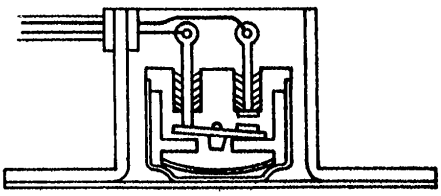

Contact open

Fig. EC-40 Operation of floor sensor

Downloaded from www.Manualslib.com manuals search engine

REMOVAL AND INSTALLATION

Removal

Floor sensor

Remove protector before removing floor sensor. Refer to Figure EC-41.

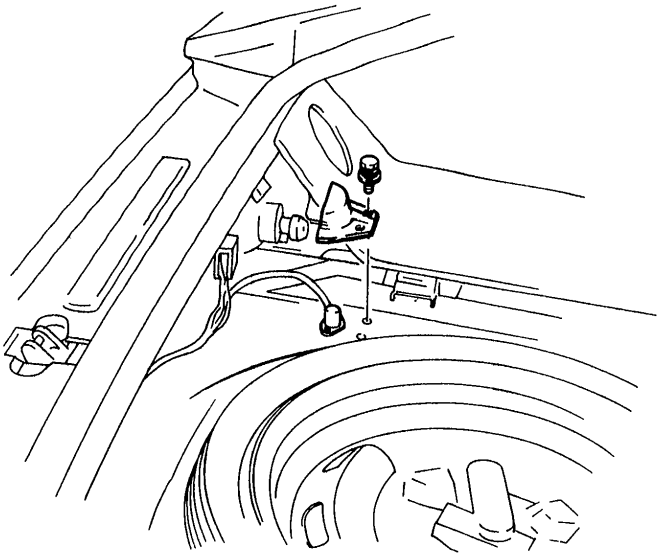

Fig. EC-41 Removing floor sensor

Floor sensor relay

Remove front passenger seat before removing floor sensor relay. Refer to Figure EC-42.

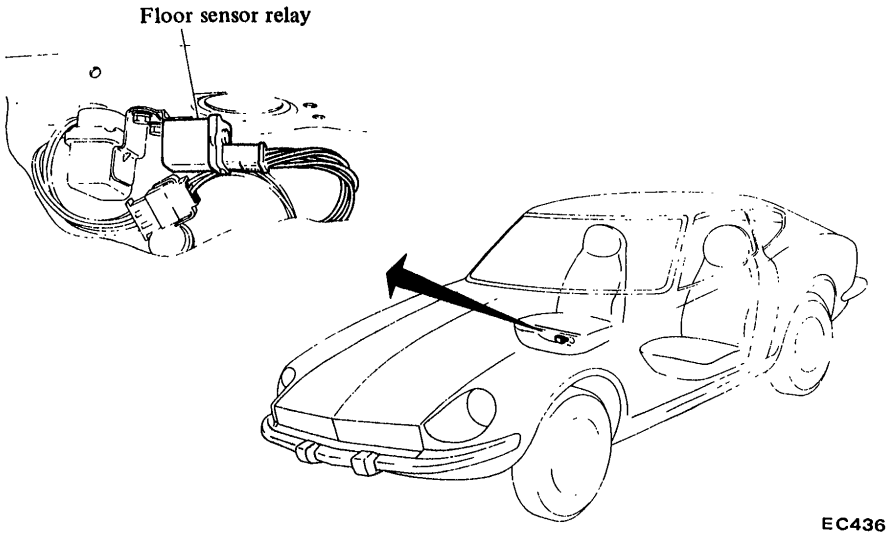

Fig. EC-42 Location of floor sensor relay

Floor temperature lamp

Remove instrument finisher before removing floor temperature warning lamp. Refer to Figure EC-43.

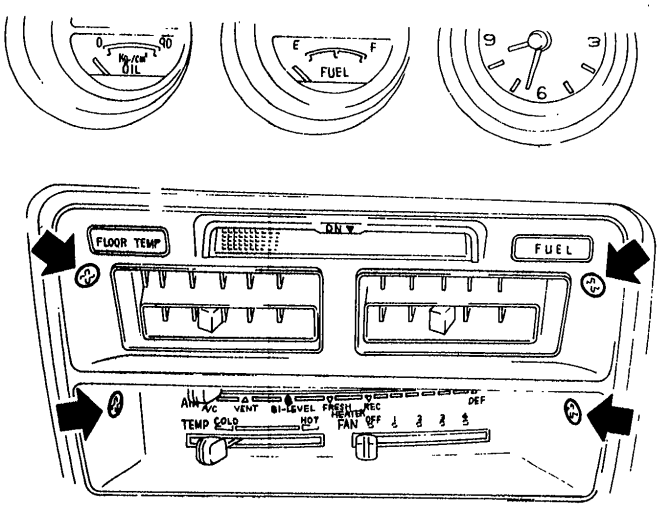

Fig. EC-43 Location of floor temperature lamp

Downloaded from www.Manualslib.com manuals search engine

Installation

To install, reverse the order of removal.

Inspection

Floor warning temperature system

Apply parking brake.

Shift gears into Neutral (for manual transmission) and Neutral or Park (for automatic transmission).

1. Ensure that floor temperature warning lamp lights when ignition switch is turned to the "S" position. If lamp does not light, check burned bulb. Replace burned out bulb. If bulb is not burned, trace wire(s) back to ignition switch.

Repair or replace if necessary.

2. Be sure that floor temperature is cool [below 80°C (176°F)] before carrying out the following:

(1) Turn ignition switch to the "IG" position.

(2) Ensure that floor temperature warning lamp goes out.

(3) Heat areas around floor sensor with a proper heater to ensure that floor temperature warning lamp comes on when floor is heated to specifications in the table below.

Floor sensor	Floor temperature warning lamp	Floor temperature
Contacts close	OFF	Below 115°C (239°F)
Contacts open	ON	Above 115°C (239°F)

Note: Avoid heating floor sensor directly.

If lamp does not come on, check floor sensor connector for continuity with a circuit tester.

If continuity exists after heating areas around floor sensor, replace floor sensor.

If continuity does not exist, trace the wiring back to relay or proceed to step 3. Repair or replace wire(s) if necessary.

Note: The floor sensor may be heated through the floor by a proper heater.

3. Turn ignition switch to the "IG" position, and disconnect floor sensor connector. The lamp should remain on. If not, check floor sensor relay for continuity with a circuit tester.

Conduct checks under the heading following "floor sensor relay", and if relay is found normal, trace wire(s) back to ignition switch. Repair faulty wiring if necessary. Refer to Figure EC-44.

Downloaded from www.Manualslib.com manuals search engine

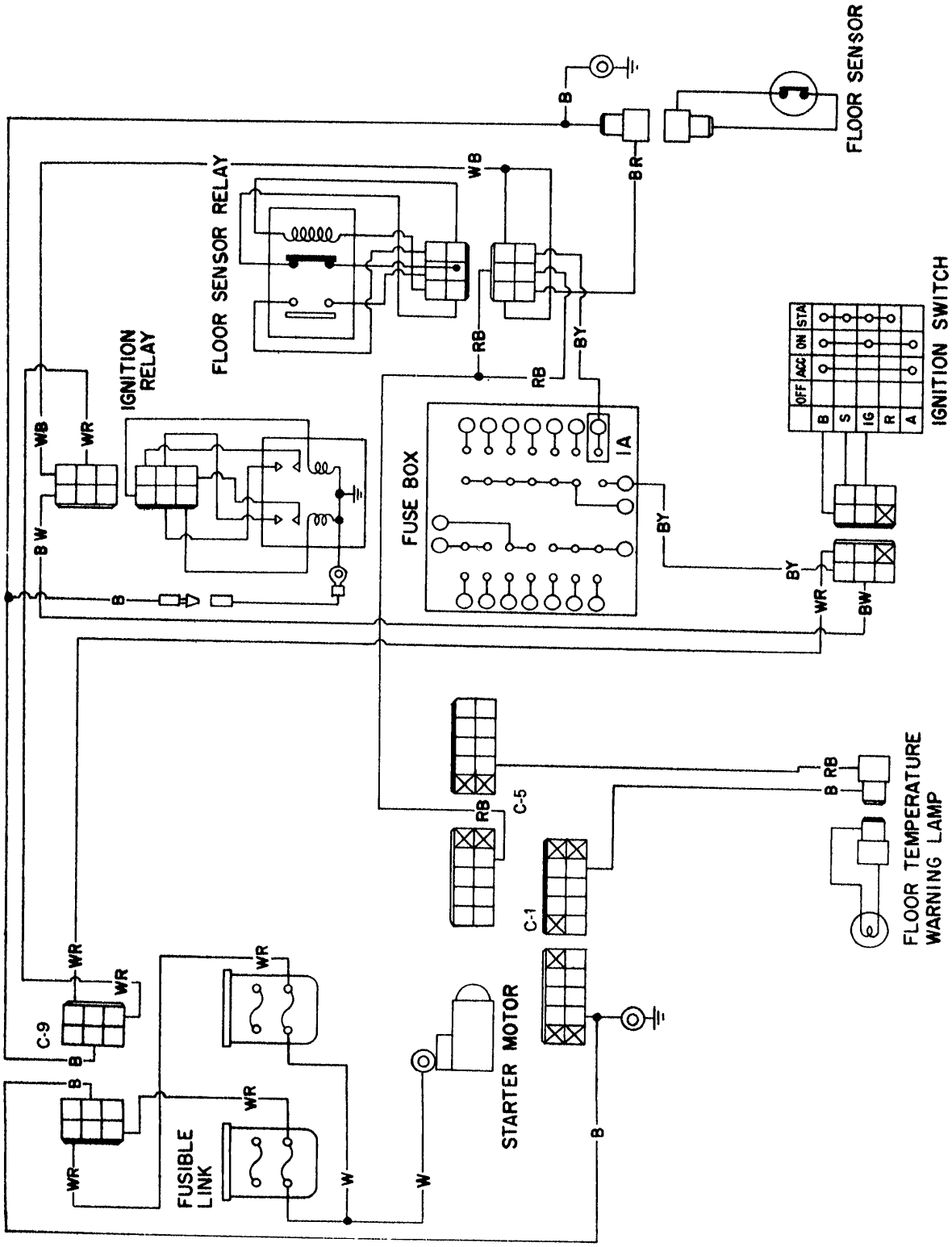

EC709

Fig. EC-44 Wiring diagram of floor warning system

Downloaded from www.Manualslib.com manuals search engine

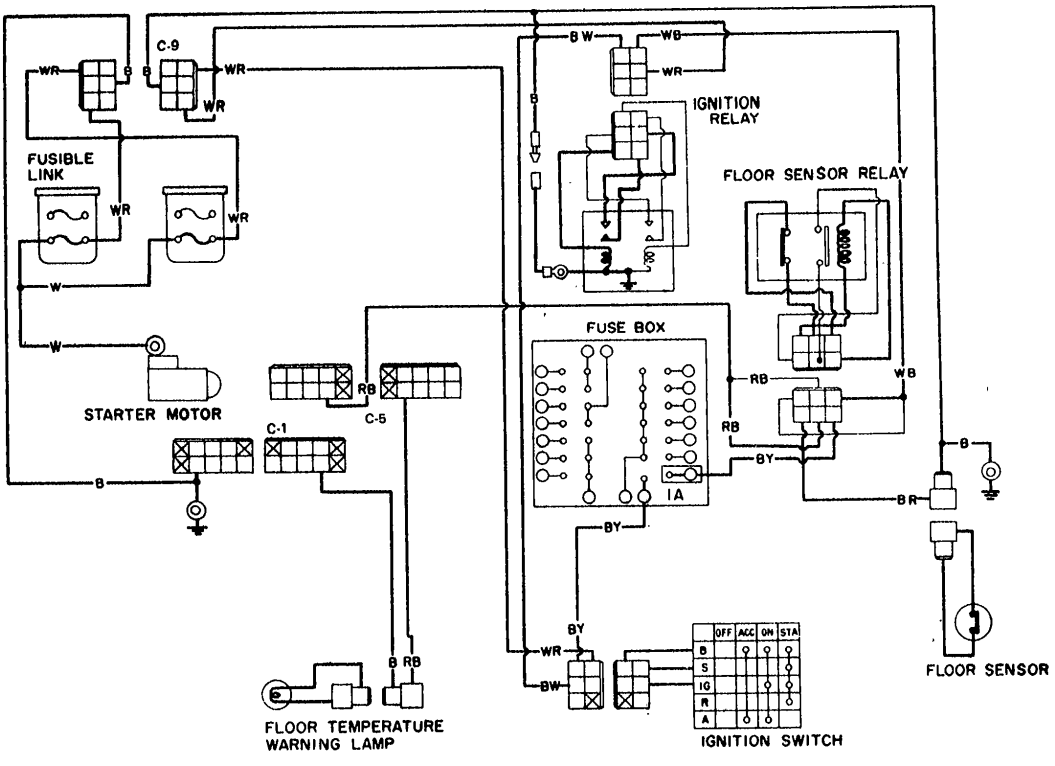

Fig. EC-45 Floor warning lamp ON with starter SW turned ON

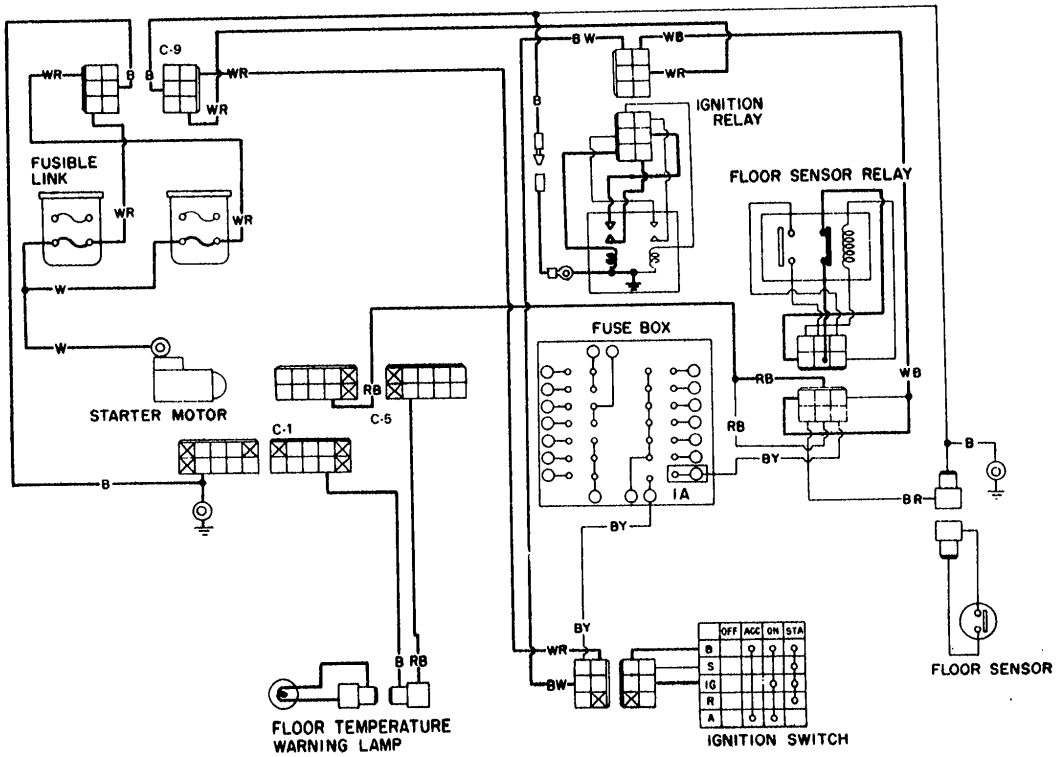

Fig. EC-46 Floor warning lamp ON with floor sensor turned OFF

Floor sensor relay

Refer to Figure EC-44.

When checking floor sensor relay unit, remove it, and conduct continuity and voltage tests as follows:

1. Terminals ⑤ and ⑥
   Continuity should exist.
   Terminals ② and ④
   Continuity should exist.
   Terminals ① and ③
   Continuity should not exist.
2. Terminals ⑤ and ⑥
   12 volt should be present.
   Terminals ① and ③
   Continuity should exist.
   Terminals ② and ④
   Continuity should not exist.

Downloaded from www.Manualslib.com manuals search engine

If test results are not as indicated above, replace faulty parts.

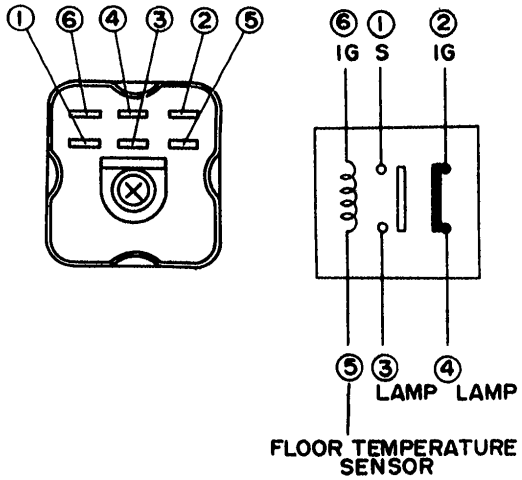

Fig. EC-47 Checking floor sensor relay

When floor temperature warning lamp lights

When warning lamp of this system is turned on frequently and further unusual power loss or abnormal engine vibration are noticed, following maintenance is to be performed.

1. Check for misactuation of warning lamp by short circuit of wiring harness.
2. Check ignition system for following items and correct if necessary. (Refer to Inspection of Ignition System.)
   (1) Ignition AMP (Transistor ignition unit)
   (2) Distributor
   (3) Ignition coil
   (4) High tension cable
   (5) Spark plug
3. Check E.F.I. System, B.C.D.D. and Air cleaner, and correct if necessary. (Refer to Inspection of E.F.I. System, B.C.D.D. and Air Cleaner.)

Note: Warning lamp will come on even if the engine is in good order if the car is being driven on a steep slope continuously in low gear at a high engine speed.

EVAPORATIVE EMISSION CONTROL SYSTEM

CONTENTS

DESCRIPTION EC-22
OPERATION EC-22
INSPECTION EC-24
FUEL TANK, VAPOR LIQUID SEPARATOR AND VAPOR VENT LINE EC-24
CARBON CANISTER PURGE CONTROL VALVE EC-25
CARBON CANISTER FILTER EC-25
FUEL TANK VACUUM RELIEF VALVE ... EC-25

DESCRIPTION

The evaporative emission control system is used to reduce hydrocarbons emitted to the atmosphere from the fuel system. This reduction of hydrocarbons is accomplished by activated charcoals in the carbon canister.

This system is made up of the following:

1. Fuel tank with positive sealing filler cap
2. Vapor-liquid separator
3. Check valve
4. Vapor vent line
5. Carbon canister
6. Vacuum signal line
7. Canister purge line

Downloaded from www.Manualslib.com manuals search engine

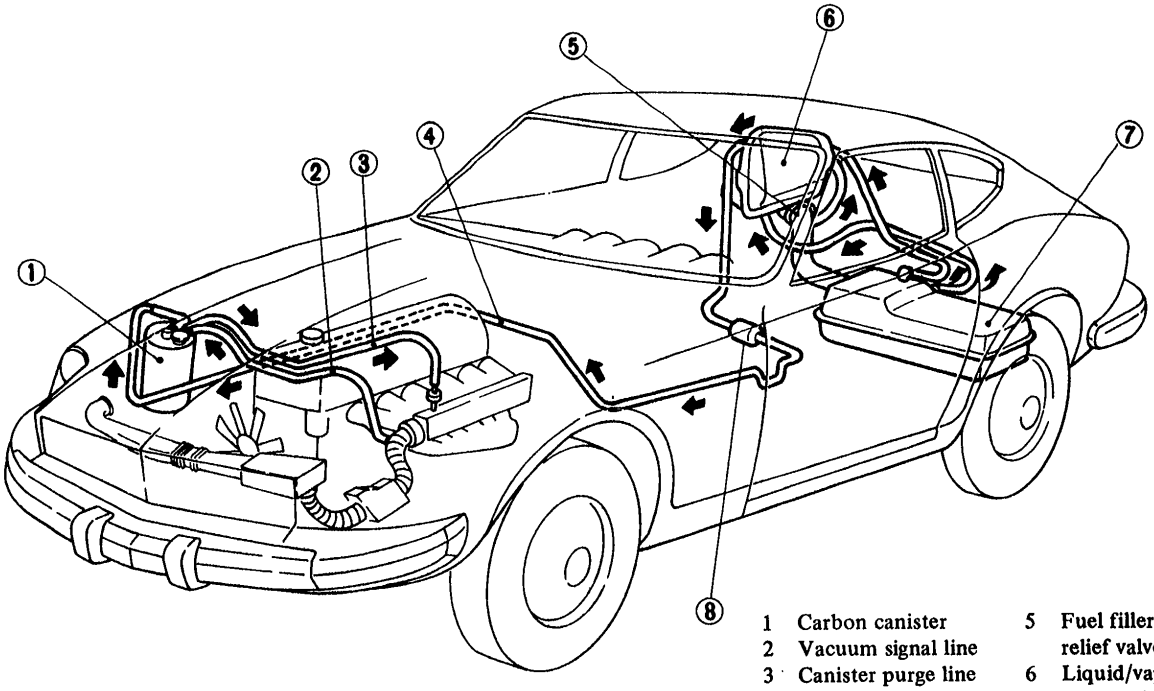

1 Carbon canister
2 Vacuum signal line
3 Canister purge line
4 Vapor vent line
5 Fuel filler cap with vacuum relief valve
6 Liquid/vapor separator
7 Fuel tank
8 Check valve

EC712

Fig. EC-48 Schematic drawing of transmission controlled vacuum advance system

OPERATION

Fuel vapors from the sealed fuel tank are led into the carbon canister. The canister is filled with activated charcoals to absorb the fuel vapors when the engine is at rest or at idling. See Figure EC-49.

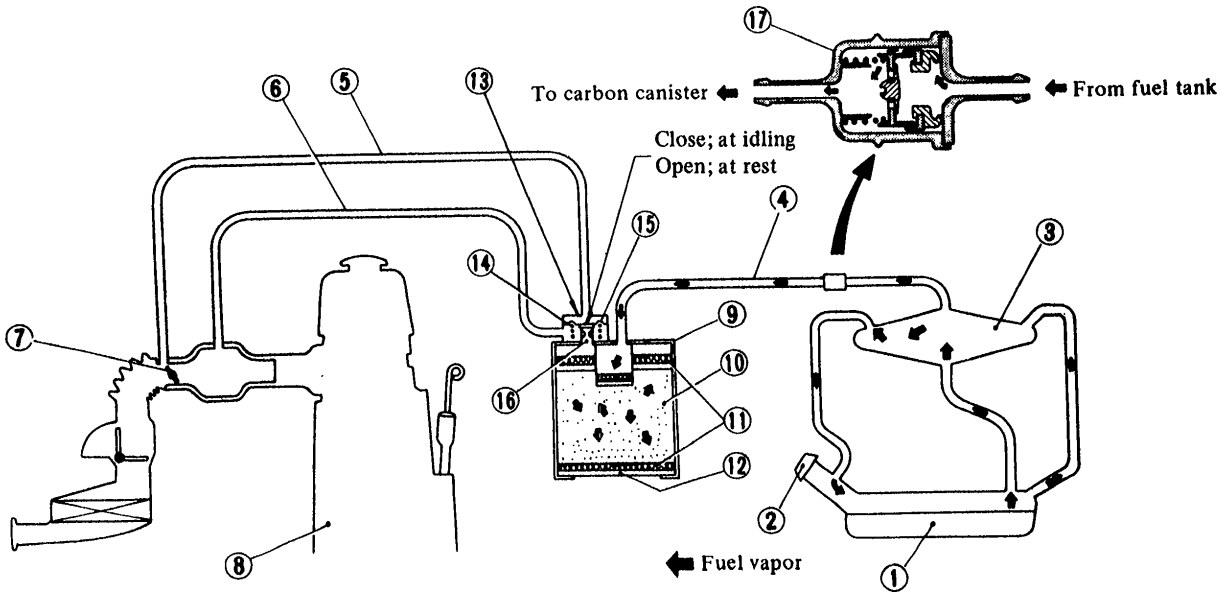

1 Fuel tank
2 Fuel filler cap with vacuum relief valve
3 Liquid/vapor separator
4 Vapor vent line
5 Vacuum signal line
6 Canister purge line
7 Throttle valve
8 Engine
9 Carbon canister
10 Activated carbon
11 Screen
12 Filter
13 Purge control valve
14 Diaphragm spring
15 Diaphragm
16 Fixed orifice
17 Check valve

EC713

Fig. EC-49 Evaporative emission control system (Fuel vapor flow when engine is at rest or at idling)

Downloaded from www.Manualslib.com manuals search engine

As the throttle valve opens and car speed increases, vacuum pressure in the vacuum signal line forces the purge control valve to open, and admits an orifice to intake manifold and fuel vapor is then drawn into the intake manifold through the canister purge line. See Figure EC-50.

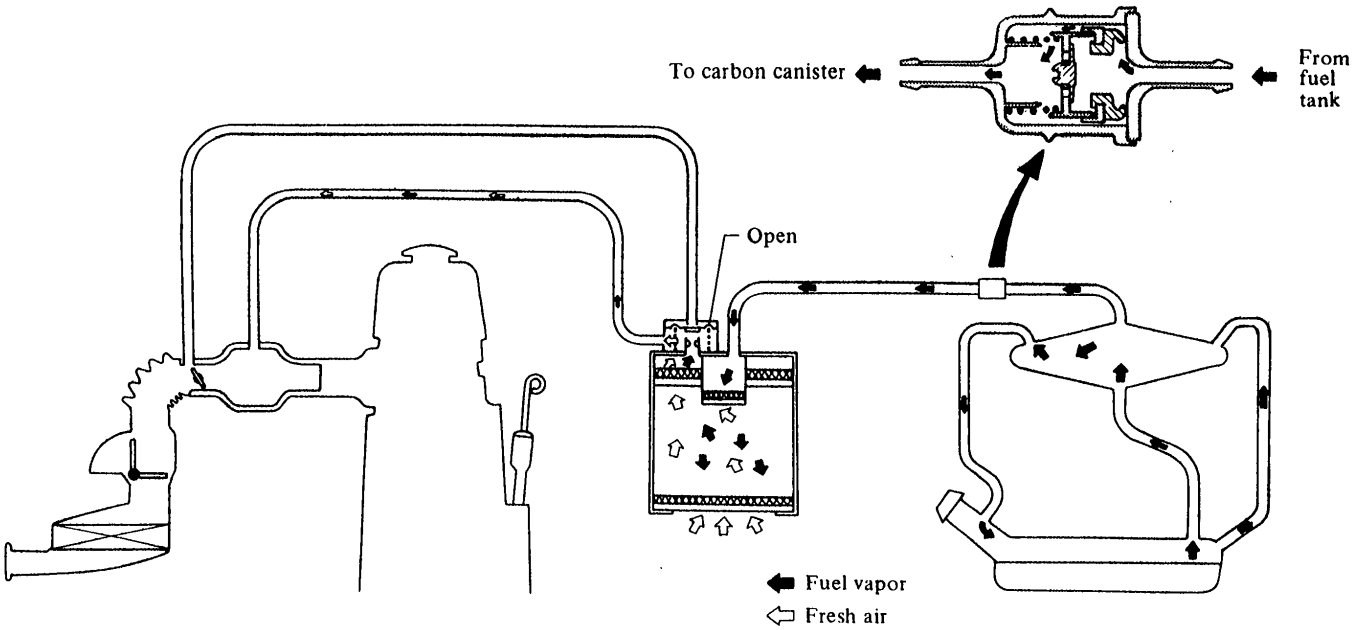

EC714

Fig. EC-50 Evaporative emission control system (Fuel vapor flow when engine is running)

INSPECTION

FUEL TANK, VAPOR LIQUID SEPARATOR AND VAPOR VENT LINE

1. Check all hoses and fuel tank filler cap.
2. Disconnect the vapor vent line connecting carbon canister to vapor liquid separator.
3. Connect a 3-way connector, a manometer and a cock (or an equivalent 3-way charge cock) to the end of the vent line.
4. Supply fresh air into the vapor vent line through the cock little by little until pressure becomes 368 mmH2O (14.5 inH2O).
5. Shut the cock completely and leave it unattended.
6. After 2.5 minutes, measure the height of the liquid in the manometer.
7. Variation of height should remain with 25 mmH2O (0.98 inH2O).
8. When filler cap does not close completely, the height should drop to zero in a short time.
9. If the height does not drop to zero in a short time when filler cap is removed, it is the cause of a stuffy hose.

Note: In case the vent line is stuffy, the breathing in fuel tank is not thoroughly made, thus causing insufficient delivery of fuel to engine or vapor lock. It must, therefore, be repaired or replaced.

Downloaded from www.Manualslib.com manuals search engine

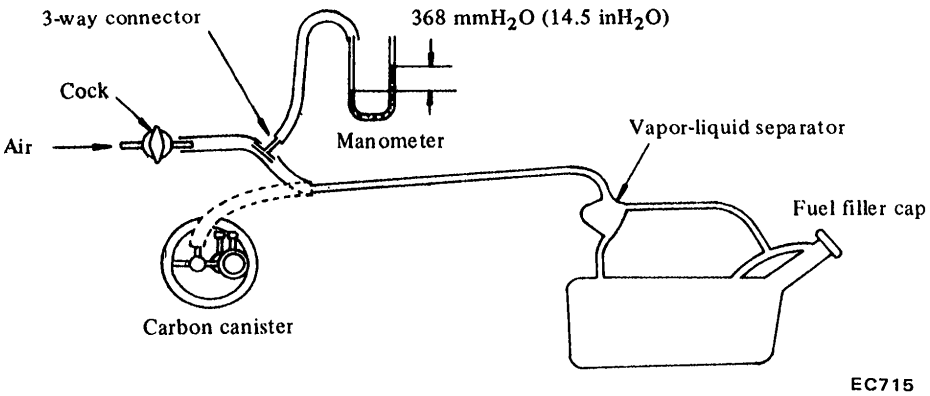

Fig. EC-51 Checking evaporative emission control system

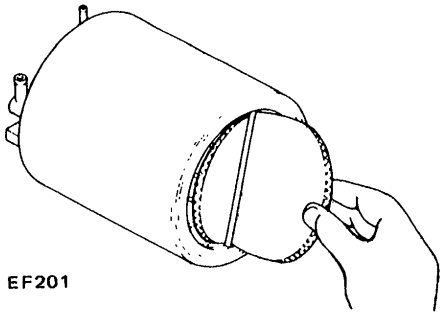

Fig. EC-54 Replacing carbon canister filter

CARBON CANISTER PURGE CONTROL VALVE

Check for fuel vapor leakage, in the distributor vacuum line, at diaphragm of carbon canister purge control valve.

To check for leakage, proceed as follows:

1. Disconnect rubber hose, in the line, between T-connector and carbon canister at T-connector.
2. Inhale air into the opening of rubber hose running to vacuum hole in carbon canister and ensure that there is no leak.

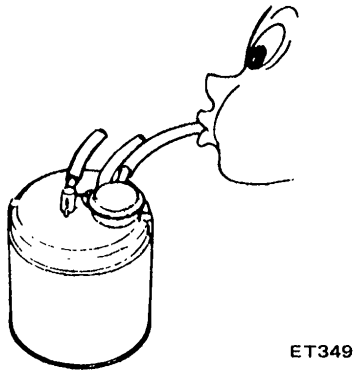

Fig. EC-52 Checking carbon canister purge control valve

3. If there is a leak, remove top cover from purge control valve and check for dislocated or cracked diaphragm. If necessary, replace diaphragm kit (which is made up of a retainer, diaphragm and spring).

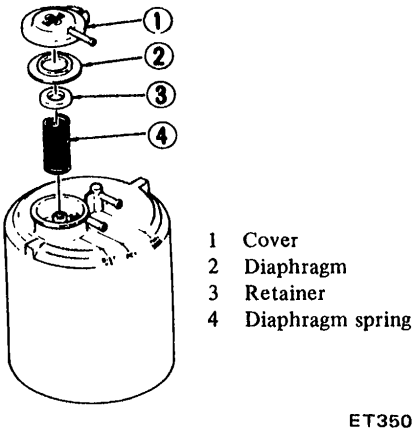

Fig. EC-53 Carbon canister purge control valve

CARBON CANISTER FILTER

Check for a contaminated element.

Element can be removed at the bottom of canister installed on car body.

FUEL TANK VACUUM RELIEF VALVE

Remove fuel filler cap and see that it functions properly.

1. Wipe valve housing clean and place it in your mouth.
2. Inhale air. A slight resistance accompanied by valve indicates that valve is in good mechanical condition. Note also that, by further inhaling air, the resistance should disappear with valve clicks.
3. If valve is clogged, or if no resistance is felt, replace cap as an assembly.

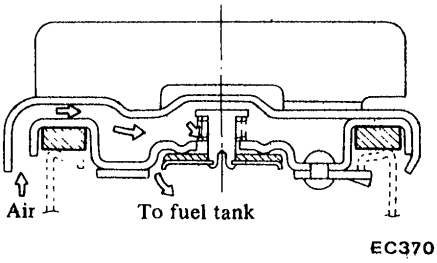

Fig. EC-55 Fuel filler cap

Downloaded from www.Manualslib.com manuals search engine

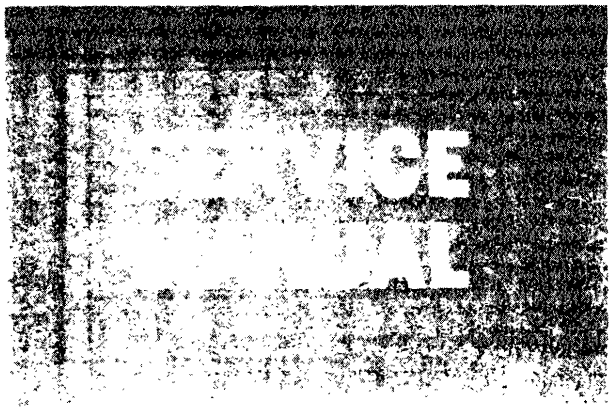

DATSUN 280Z
MODEL S30 SERIES

SECTION EE

ENGINE ELECTRICAL SYSTEM

EE

BATTERY ..... EE- 2
STARTING MOTOR ..... EE- 5
CHARGING CIRCUIT EE-11
ALTERNATOR EE-13
REGULATOR EE-18
IGNITION CIRCUIT EE-24
DISTRIBUTOR EE-25
TRANSISTOR IGNITION UNIT EE-29
IGNITION COIL EE-39
SPARK PLUG EE-40

NISSAN

NISSAN MOTOR CO., LTD.
TOKYO, JAPAN

Downloaded from www.Manualslib.com manuals search engine

BATTERY

CONTENTS

REMOVAL EE-2
CHECKING ELECTROLYTE LEVEL EE-2
CHECKING SPECIFIC GRAVITY EE-2
BATTERY FREEZING EE-3
CHARGING EE-3
INSTALLATION EE-3

REMOVAL

1. Disconnect negative and positive cables.
2. Remove nuts from battery clamps; take off clamps.
3. Remove battery.

CHECKING ELECTROLYTE LEVEL

Remove six vent plugs and check for electrolyte level in each cell.

If necessary, pour distilled water.

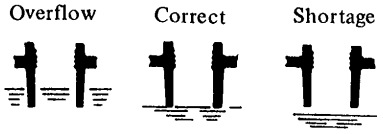

EE358

Fig. EE-1 Inspecting electrolyte level

CHECKING SPECIFIC GRAVITY

Specific gravity of battery electrolyte is tested by a hydrometer. If the state of charge of battery is 60% or specific gravity reading is below 1.20 [as corrected at 20°C (68°F)], battery must be recharged or battery-electrolyte concentration adjusted.

Add or subtract gravity points according to whether the electrolyte temperature is above or below 20°C (68°F) standard.

The gravity of electrolyte changes 0.0007 for every 1°C (1.8°F) temperature. A correction can then be made by using the following formula:

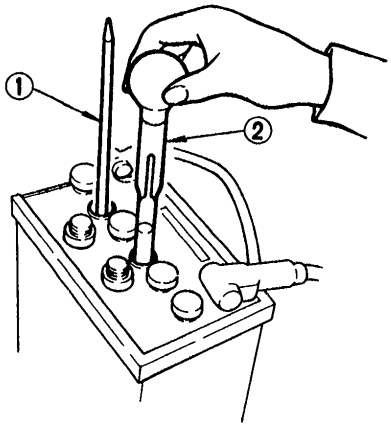

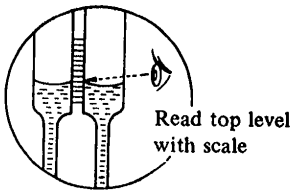

1 Thermal gauge
2 Hydrometer

EE001

Fig. EE-2 Checking specific gravity

$$S_{20} = St + 0.0007\ (t - 20)$$

Where,

St: Specific gravity of electrolyte at t°C

S_{20}: Specific gravity of electrolyte corrected at 20°C (68°F)

t: Electrolyte temperature

For example: A hydrometer reading of 1.260 at 30°C (86°F) would be 1.267 corrected to 20°C (68°F), indicating fully charged battery. On the other hand, a hydrometer reading of 1.220 at −10°C (14°F) would be 1.199 corrected to 20°C (68°F), indicating a partially charged battery.

The state of charge of battery can be determined by the following table if the specific gravity of electrolyte is known. Before checking, be sure that cells are filled to correct level.

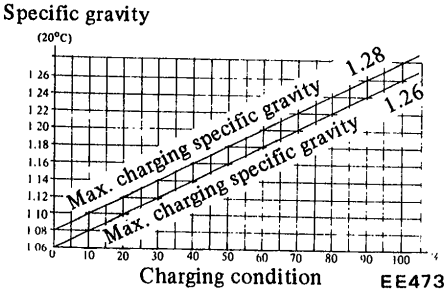

EE473

Fig. EE-3 Charging condition

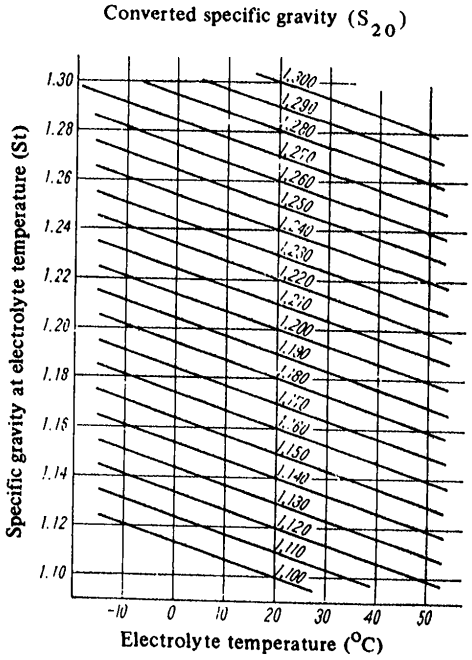

EE003

Fig. EE-4 Specific gravity at electrolyte temperature

Downloaded from www.Manualslib.com manuals search engine

BATTERY FREEZING

Battery electrolyte freezing point varies with acid concentration or its specific gravity. A battery with an insufficient charge will freeze at lower temperatures. If specific gravity of a battery falls below 1.1, this is an indication that battery is completely discharged and will freeze readily when temperatures fall below freezing.

Note: Use extreme caution to avoid freezing battery since freezing will generally ruin the battery.

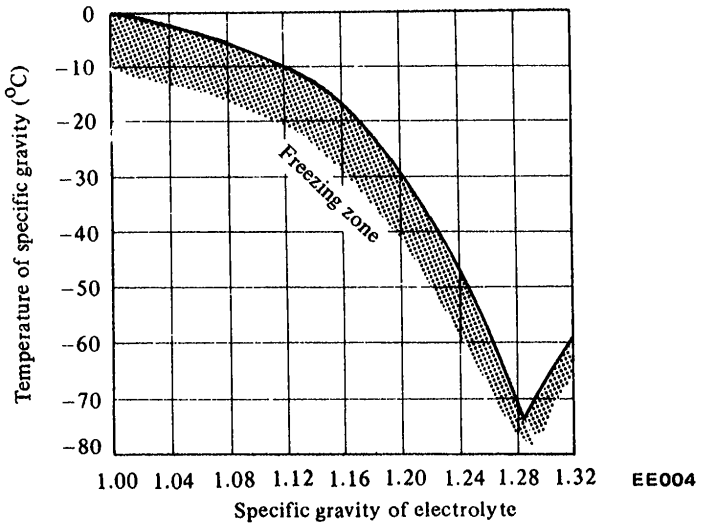

Fig. EE-5 Freezing point of electrolyte

CHARGING

If electrolyte level is satisfactory, battery must be recharged when electrolyte-gravity reading falls below 1.20. If battery on car is quick-charged to bring it up to full charge, the operation should be carried out with negative cable removed.

Prior to charging, corroded terminals should be cleaned with a brush and common baking-soda solution. In addition, the following items should be observed while battery is being charged.

1. Be sure that electrolyte level is above top of each plate.
2. Keep removed plugs in a safe place.
3. Do not allow electrolyte temperature to go over 45°C (113°F).
4. After recharging, check to be certain that specific gravity does not exceed 1.260 [at 20°C (68°F)]. Correction can be made by adding distilled water into cells as necessary.
5. Keep battery away from open flame while it is being recharged.
6. After all vent plugs have been tightened, clean all sprayed electrolyte off upper face of battery.

INSTALLATION

1. Install and tighten clamps securely.
2. After clamps have been tightened, clean battery cable terminals and apply grease to retard formation of corrosion.

Downloaded from www.Manualslib.com manuals search engine

TROUBLE DIAGNOSES AND CORRECTIONS

Battery is not charged correctly.

1. Correctly adjust belt tension of alternator.
2. Complete connections in charging system.
3. Connect battery terminals securely.

Lighting load test

1. Make sure that electrolyte level is correct.
2. Crank engine for three seconds (with ignition system open).
3. Turn on headlight (low beam) for one minute, and then measure specific gravity of each cell of battery.

Specific gravity of each cell is less than 1.200.

1. When specific gravity can not be raised above 1.200 by charging, the battery is faulty.

Specific gravity of some cells is above 1.200 but the others show lower specific gravity.

Unbalance is within 0.05.

1. Discharged battery. Charge it and repeat lighting load test.

Unbalance of specific gravity between cells exceeds 0.05.

1. Battery is faulty.

Specific gravity of each cell is above 1.200.

Unbalance is within 0.05.

1. Battery is satisfactory.

Unbalance of specific gravity between cells exceeds 0.05.

1. Battery is faulty.

Downloaded from www.Manualslib.com manuals search engine

STARTING MOTOR

CONTENTS

DESCRIPTION ..... EE- 5
OPERATION ..... EE- 5
CONSTRUCTION ..... EE- 6
REMOVAL ..... EE- 7
DISASSEMBLY ..... EE- 7
TYPE S114-122N ..... EE- 7
TYPE S114-182 ..... EE- 7
CLEANING AND INSPECTION ..... EE- 7
TERMINAL ..... EE- 7
FIELD COIL ..... EE- 7
BRUSHES AND BRUSH LEAD WIRE ..... EE- 7
BRUSH SPRING TENSION ..... EE- 7
ARMATURE ASSEMBLY ..... EE- 8
OVERRUNNING CLUTCH ASSEMBLY ..... EE- 8
BRUSH HOLDER TEST FOR GROUND ..... EE- 8
BEARING METAL ..... EE- 8
MAGNETIC SWITCH ASSEMBLY ..... EE- 8
ASSEMBLY ..... EE- 8
TEST ..... EE- 9
PERFORMANCE TEST ..... EE- 9
MAGNETIC SWITCH ASSEMBLY TEST ..... EE- 9
SERVICE DATA AND SPECIFICATIONS EE-10
TROUBLE DIAGNOSES AND CORRECTIONS EE-10

DESCRIPTION

Type	Transmission
S114-173B	Manual
S114-182B	Automatic

The function of the starting system which consists of the battery, ignition switch, starting motor and solenoid, is to crank the engine. The electrical energy is supplied from the battery, the solenoid completes the circuit to operate the starting motor, and then the motor carries out the actual cranking of the engine.

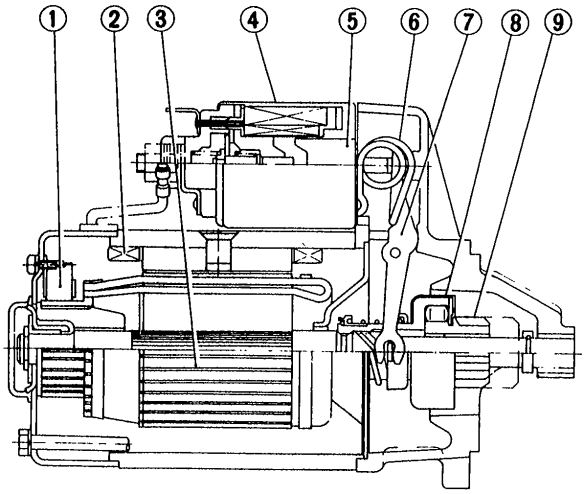

Type S114-173B, S114-182B

1 Brush
2 Field coil
3 Armature
4 Magnetic switch
5 Plunger
6 Torsion spring
7 Shift lever
8 Overrunning clutch
9 Pinion

EE511

Fig. EE-6 Sectional view of starting motor

OPERATION

When the ignition switch is turned fully clockwise to the START position, battery current flows through "series" and "shunt" coils of the solenoid, magnetizing the solenoid. The plunger is pulled into the solenoid so that it operates the shift lever to move the drive pinion into the flywheel ring gear. Then the solenoid switch contacts close after the drive pinion is partially engaged with the ring gear.

Closing of the solenoid switch contacts causes the motor to crank the engine and also cut out the "series"

Downloaded from www.Manualslib.com manuals search engine

coil of the solenoid, the magnetic pull of the "shunt" coil being sufficient to hold the pinion in mesh after the shifting has been performed.

After the engine starts running, the driver releases the ignition key and it automatically returns to the ON position.

The return (torsion) spring then actuates the shift lever to pull the pinion, which allows the solenoid switch contacts to open. Consequently, the starting motor stops.

More positive meshing and demeshing of the pinion and the ring gear teeth are secured by means of the overrunning clutch. The overrunning clutch employs a shift lever to slide the pinion along the armature shaft, into or out of mesh with the ring gear teeth. The overrunning clutch is designed to transmit driving torque from the motor armature to the ring gear, but prevent the armature from overrunning after the engine has started.

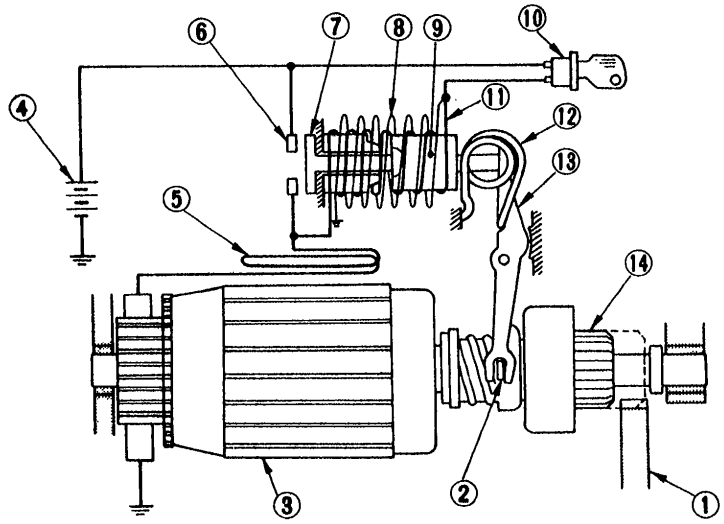

1 Ring gear
2 Shift lever guide
3 Armature
4 Battery
5 Field coil
6 Stationary contact
7 Movable contactor
8 Shunt coil
9 Plunger
10 Ignition switch
11 Series coil
12 Torsion spring
13 Shift lever
14 Pinion

EE274

Fig. EE-7 Starting motor circuit

CONSTRUCTION

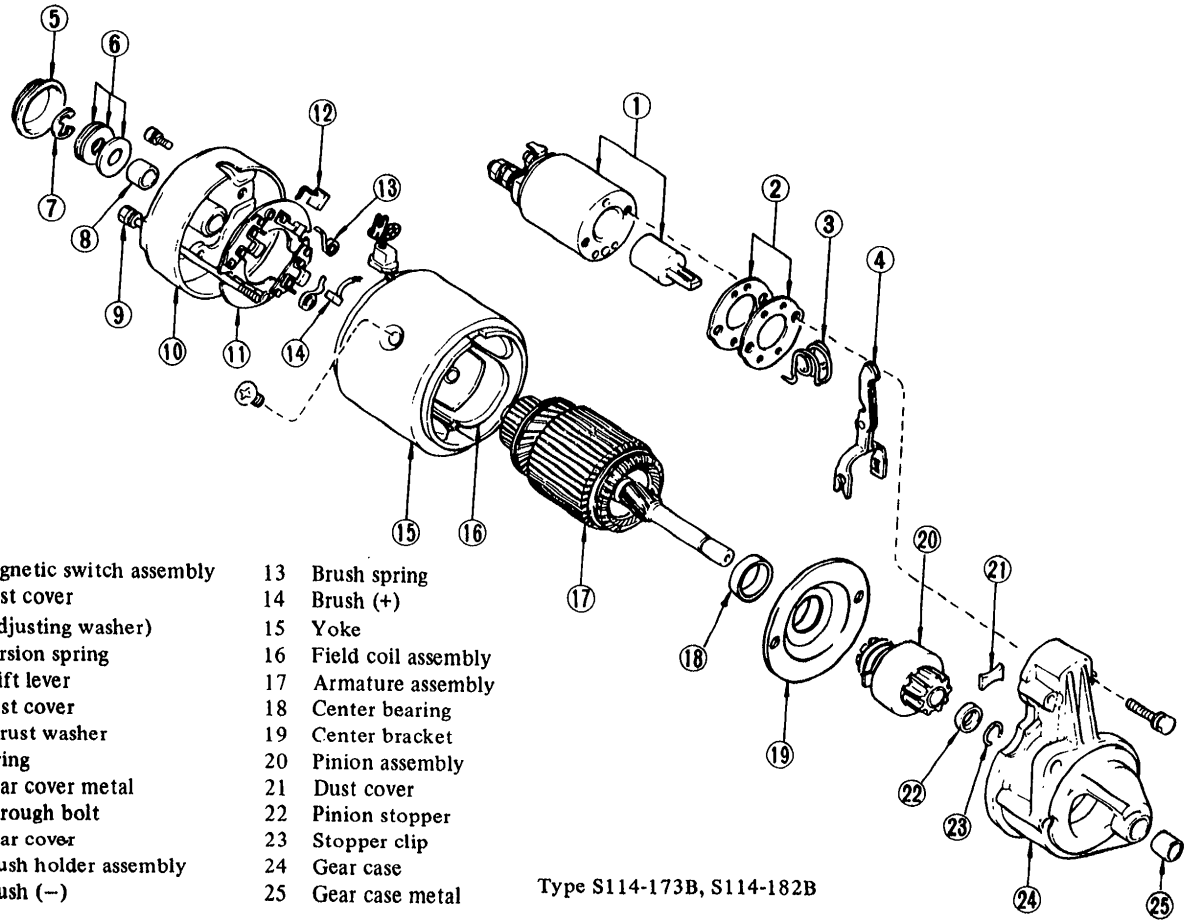

1 Magnetic switch assembly
2 Dust cover (Adjusting washer)
3 Torsion spring
4 Shift lever
5 Dust cover
6 Thrust washer
7 E-ring
8 Rear cover metal
9 Through bolt
10 Rear cover
11 Brush holder assembly
12 Brush (–)
13 Brush spring
14 Brush (+)
15 Yoke
16 Field coil assembly
17 Armature assembly
18 Center bearing
19 Center bracket
20 Pinion assembly
21 Dust cover
22 Pinion stopper
23 Stopper clip
24 Gear case
25 Gear case metal

Type S114-173B, S114-182B

EE512

Fig. EE-8 Exploded view of starting motor

Downloaded from www.Manualslib.com manuals search engine

REMOVAL

1. Disconnect battery ground cable.
Disconnect black wire with yellow stripe from magnetic switch terminal, and black battery cable from battery terminal of magnetic switch.
2. Remove two bolts securing starting motor to transmission case. Pull starter assembly forward and remove starting motor.

DISASSEMBLY

TYPE S114-173B, S114-182B

1. Disconnect connecting plate from "M" terminal of magnetic switch. Remove two screws securing magnetic switch and remove magnetic switch assembly.
2. Remove dust cover, E-ring and thrust washer(s).

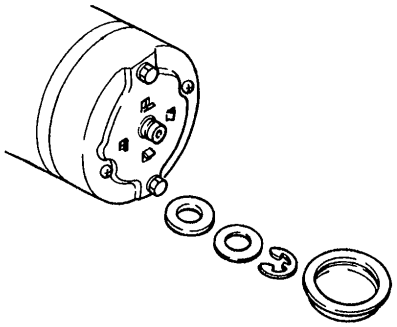

EE317

Fig. EE-9 Removing dust cover, E-ring and thrust washer(s)

3. Remove two screws securing brush holder assembly.

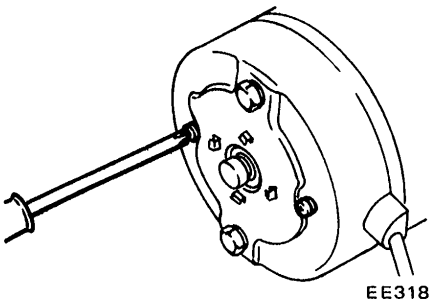

EE318

Fig. EE-10 Removing brush holder setscrews

4. Remove two through bolts and rear cover.

5. Remove brushes from their holder by moving each brush spring away from brush with a hook.
Remove brush holder.
6. Remove yoke assembly and withdraw armature assembly and shift lever.
7. Remove pinion stopper located at the end of armature shaft. To remove stopper, first move stopper toward pinion and after removing stopper clip, remove stopper with overrunning clutch assembly from armature shaft.

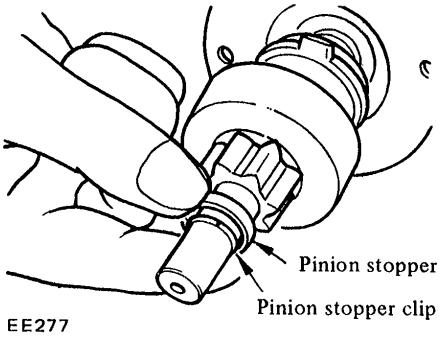

EE277

Fig. EE-11 Removing pinion stopper

CLEANING AND INSPECTION

Clean all disassembled parts, but do not use grease dissolving solvents for cleaning overrunning clutch, armature assembly, magnetic switch assembly and field coils since such a solvent would dissolve grease packed in clutch mechanism and would damage coils or other insulators.

Check them for excessive damage or wear, and replace if necessary.

TERMINAL

Check terminal for damage and wear, and replace magnetic switch assembly if necessary.

FIELD COIL

Check field coil for insulation. If the insulation of coil is damaged or worn it should be replaced.

Testing field coil for continuity:

Connect the probe of a circuit tester or an ohmmeter to field coil positive terminal and positive brush holder.

If tester shows no conduction field circuit or coil is open.

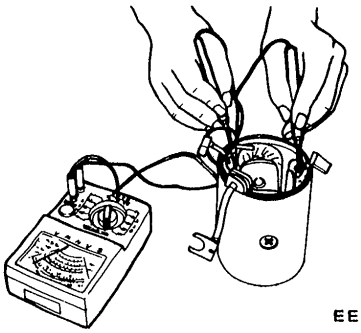

EE016

Fig. EE-12 Testing field coil for continuity

Testing field coil for ground:

Place one probe of circuit tester onto yoke and the other onto field coil lead (positive terminal).

If very little resistance is read, field coil is grounded.

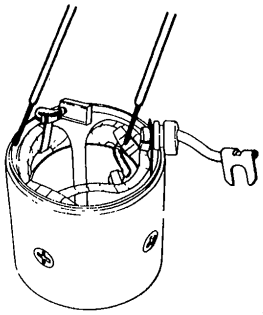

EE017

Fig. EE-13 Testing field coil for ground

BRUSHES AND BRUSH LEAD WIRE

Check the surface condition of brush contact and wear of brush. If a loose contact is found it should be replaced.

If brush is worn so that its length is less than 12 mm (0.472 in), replace.

Check the connection of lead clip and lead wire.

Check brush holders and spring clip to see if they are not deformed or bent, and will properly hold brushes against the commutator.

If brushes or brush holders are dirty, they should be cleaned.

BRUSH SPRING TENSION

Check brush spring tension by a spring scale as shown in Figure EE-14. The reading should be 1.6 kg (3.5 lb). Replace spring if tension is lower than 1.4 kg (3.1 lb).

Downloaded from www.Manualslib.com manuals search engine

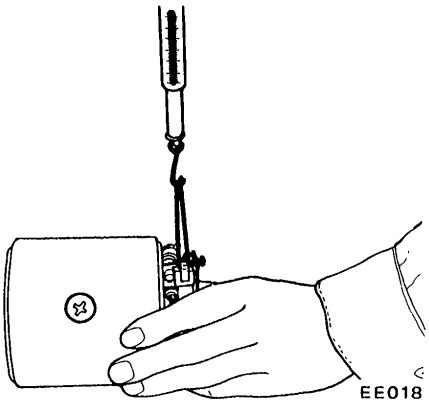

Fig. EE-14 Inspecting brush spring tension

ARMATURE ASSEMBLY

Check external appearance of armature and commutator.

1. Inspect commutator. If the surface of commutator is rough, it must be sanded lightly with a No. 500 emery cloth. If the depth of insulating mica is less than 0.2 mm (0.0079 in) from commutator surface, insulating mica should also be undercut so that its depth is 0.5 to 0.8 mm (0.0197 to 0.0315 in).

The wear limit of commutator diameter is 1 mm (0.0394 in). If the diameter of commutator is less than 39 mm (1.535 in), replace armature assembly.

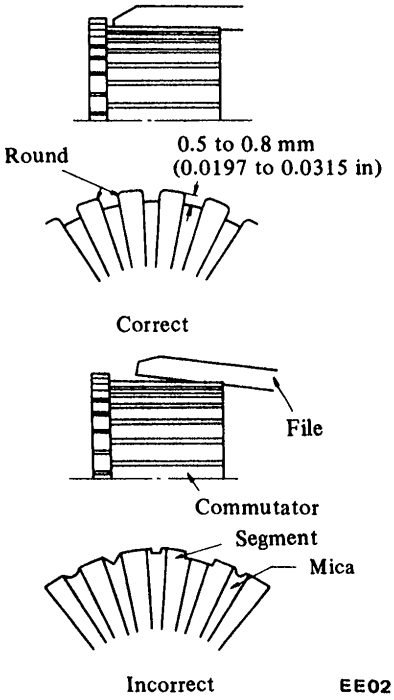

Fig. EE-15 Undercutting insulating mica

2. Inspect soldered connection of armature lead and commutator. If loose connection is found, solder it using resin flux.

3. Armature test for ground

Using a circuit tester, place one test probe onto armature shaft and other onto each commutator bar.

If tester shows continuity, armature is grounded and must be replaced.

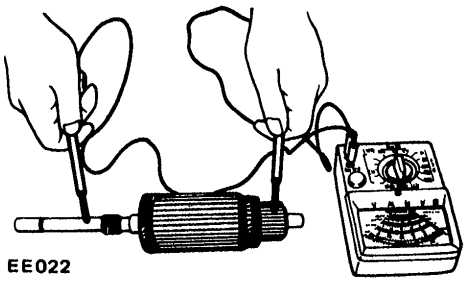

Fig. EE-16 Testing armature for ground

4. Check armature for short by placing it on armature tester (growler) with a piece of iron over armature core, rotating armature. If the plate vibrates, armature is shorted.

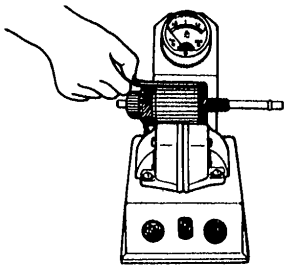

Fig. EE-17 Testing armature for short

5. Check armature for continuity by placing probes of tester on two segments side by side. If tester shows no continuity, the circuit is open.

OVERRUNNING CLUTCH ASSEMBLY

Inspect pinion assembly and screw sleeve. Screw sleeve must slide freely along armature shaft splines. If damage is found or resistance is felt when sliding, it must be repaired. Inspect pinion teeth. If excessive rubbing is found on teeth, replace. Flywheel ring gear also must be inspected.

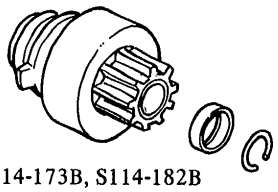

Fig. EE-18 Overrunning clutch assembly

BRUSH HOLDER TEST FOR GROUND

Using a circuit tester, place one test probe onto negative side of brush holder and another onto positive side. If tester shows conduction, brush holder is shorted to ground. Replace brush holder.

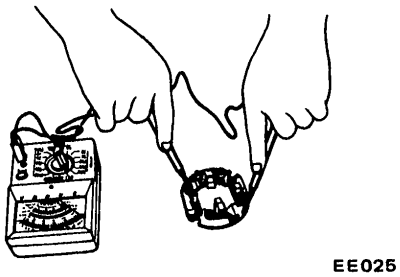

Fig. EE-19 Testing brush for ground

BEARING METAL

Inspect bearing metal for wear or side play. If the clearance between bearing metal and armature shaft is more than 0.2 mm (0.0079 in), replace metal.

MAGNETIC SWITCH ASSEMBLY

1. Using a circuit tester, check continuity between "S" terminal of magnetic switch and switch body metal. If continuity does not exist, shunt coil is opened.

Replace switch assembly.

2. In the same manner as above, check continuity between terminals "S" and "M". If continuity does not exist, series coil is opened.

Replace switch assembly.

ASSEMBLY

Reassemble starting motor in reverse sequence of disassembly.

When assembling, be sure to apply grease to gear case and rear cover bearing metal, and apply oil lightly to pinion.

Downloaded from www.Manualslib.com manuals search engine

TEST

PERFORMANCE TEST

Starter motor should be subjected to a "no-load" test whenever it has been overhauled to ensure that its performance will be satisfactory when installed to engine. Starter motor should also be subjected to the test when the cause of abnormal operation is to be determined. A brief outline of the test is given below.

No-load test

Connect starting motor in series with specified (12 volts) battery and an ammeter capable of indicating 1,000 amperes.

Specified current draw and revolution in these test are shown in "Specifications".

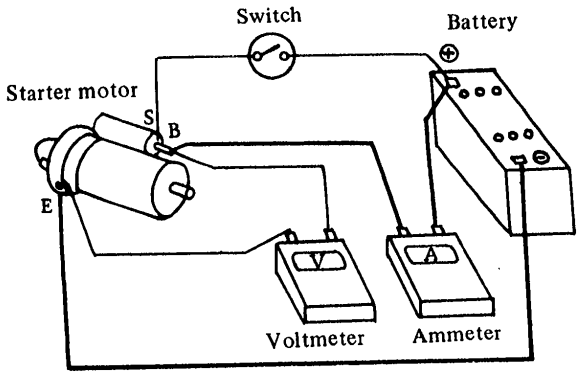

EE026

Fig. EE-20 No-load testing

Diagnoses of test

1. Low speed with no-load and high current draw may result from the following:
(1) Tight, dirty or worn bearings.
(2) Bent armature shaft or loosened field probe.
(3) Shorted armature;
Check armature further.
(4) A grounded armature or field;
a. Remove input terminal.
b. Raise two negative side brushes from commutator.
c. Using a circuit tester, place one probe onto input terminal and the other onto yoke.
d. If tester indicates continuity, raise the other two brushes and check field and armature separately to determine whether field or armature is grounded.

2. Failure to operate with high current draw may be caused by the following:
(1) A grounded or open field coil:
Inspect the connection and trace circuit by a circuit tester.
(2) Armature coil does not operate:
Inspect commutator for excessive burning. In this case, arc may occur on damaged commutator when motor is operated with no-load.
(3) Burned out commutator bar:
Weak brush spring tension, broken brush spring, rubber bush, thrust out of mica in commutator or a loose contact between brush and commutator would cause commutator bar to burn.

3. Low current draw and low no-load speed would cause high internal resistance due to loose connections, damaged leads, dirty commutator and causes listed on item 2-(3).

MAGNETIC SWITCH ASSEMBLY TEST

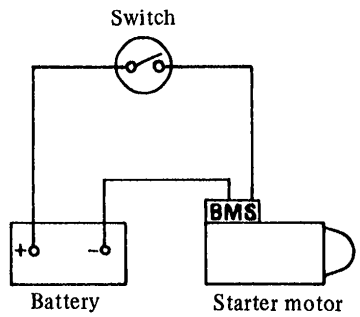

EE351

Fig. EE-21 Circuit of magnetic switch assembly test

If the starting motor check is "OK", check magnetic switch assembly. Connect cables between "negative" battery terminal and starting motor "M" terminal, "positive" battery terminal and starting motor "S" terminal connecting a switch in series as shown in Figure EE-21.

With the switch on, push pinion back to remove all slack and measure the clearance "ℓ" between pinion front edge and pinion stopper. The clearance should be held within 0.3 to 1.5 mm (0.012 to 0.059 in). If necessary, adjust it by changing or adding adjusting washer(s). Adjusting washers are available into two different sizes, 0.5 mm (0.020 in) and 0.8 mm (0.032 in).

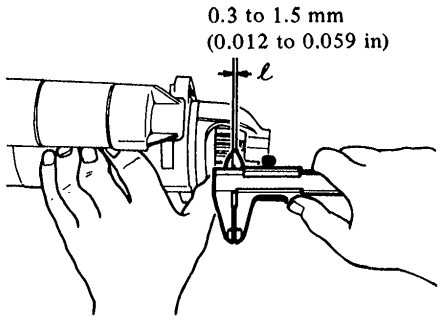

EE028

Fig. EE-22 Measuring gap "ℓ"

Downloaded from www.Manualslib.com manuals search engine

SERVICE DATA AND SPECIFICATIONS

		Manual transmission	Automatic transmission
Type		S114-173B	S114-182B
System voltage	V	12	
No load			
Terminal voltage	V	12	
Current	A	Less than 60	
Revolution	rpm	More than 5,000	More than 6,000
Outer diameter of commutator	mm (in)	More than 39 (1.54)	More than 39 (1.54)
Brush length	mm (in)	More than 12 (0.47)	More than 12 (0.47)
Brush spring tension	kg (lb)	1.4 to 1.8 (3.1 to 4.0)	
Clearance between bearing metal and armature shaft	mm (in)	Less than 0.2 (0.008)	
Clearance "ℓ" between pinion front edge and pinion stopper	mm (in)	0.3 to 1.5 (0.012 to 0.059)	

TROUBLE DIAGNOSES AND CORRECTIONS

Condition	Probable cause	Corrective action
Starting motor will not operate.	Discharged battery.	Charge or replace battery.
	Damaged solenoid switch.	Repair or replace solenoid switch.
	Loose connections of terminal.	Clean and tighten terminal.
	Damaged brushes.	Replace brushes.
	Starting motor inoperative.	Remove starting motor and make test.
Noisy starting motor.	Loose securing bolt.	Tighten.
	Worn pinion gear.	Replace.
	Poor lubrication.	Add oil.
	Worn commutator.	Replace.
	Worn brushes.	Replace.
Starting motor cranks slowly.	Discharged battery.	Charge.
	Loose connection of terminal.	Clean and tighten.
	Worn brushes.	Replace.
	Locked brushes.	Inspect brush spring tension or repair brush holder.

Downloaded from www.Manualslib.com manuals search engine

Condition	Probable cause	Corrective action
Starting motor cranks slowly.	Dirty or worn commutator. Armature rubs field coil. Damaged solenoid switch.	Clean and repair. Replace assembly. Repair or replace.
Starting motor operates but does not crank engine.	Worn pinion. Locked pinion guide. Worn ring gear.	Replace. Repair. Replace.
Starting motor will not disengage even if ignition switch is turned off.	Damaged solenoid switch. Damaged gear teeth.	Repair or replace. Replace damaged gear.

CHARGING CIRCUIT

The charging circuit consists of the battery, alternator, regulator and necessary wiring to connect these parts. The purpose of this system is to convert mechanical energy from the engine into electrical energy which is used to operate all electrically operated units and to keep the battery fully charged.

When the ignition switch is set to "ON", current flows from the battery to ground through the ignition switch, voltage regulator IG terminal, primary side contact point "P1", movable contact point "P2", voltage regulator "F" terminal, alternator "F" terminal, rotor (field) coil and alternator "E" terminal, as shown in Figure EE-23 by full line arrow marks. Then the rotor in the alternator is excited.

When the alternator begins to operate, three-phase alternating current is induced in the stator (armature) coil. This alternating current is rectified by the positive and negative silicon diodes. The rectified direct current output reaches the alternator "A" and "E" terminals.

When the alternator speed is increased or the voltage starts to rise excessively, the movable contact point "P2" is separated from the primary side contact "P1" by the magnetic force of coil "VC2". Therefore, registor "R1" is applied into the rotor circuit and output voltage is decreased. As the output voltage is decreased, the movable contact point "P2", and primary side contact "P1" comes into contact once again, and the alternator voltage increases. Thus, the rapid vibration of the movable contact point "P2", maintains an alternator output voltage constant.

When the alternator speed is further increased or the voltage starts to rise excessively, the movable contact point "P2" comes into contact with secondary side contact point "P3". Then, the rotor current is shut off and alternator output voltage is decreased immediately. This action causes movable contact "P2" to separate from secondary contact "P3". Thus, the rapid vibration of the movable contact point "P2", or breaking and completing the rotor circuit, maintains an alternator output voltage constant.

Downloaded from www.Manualslib.com manuals search engine

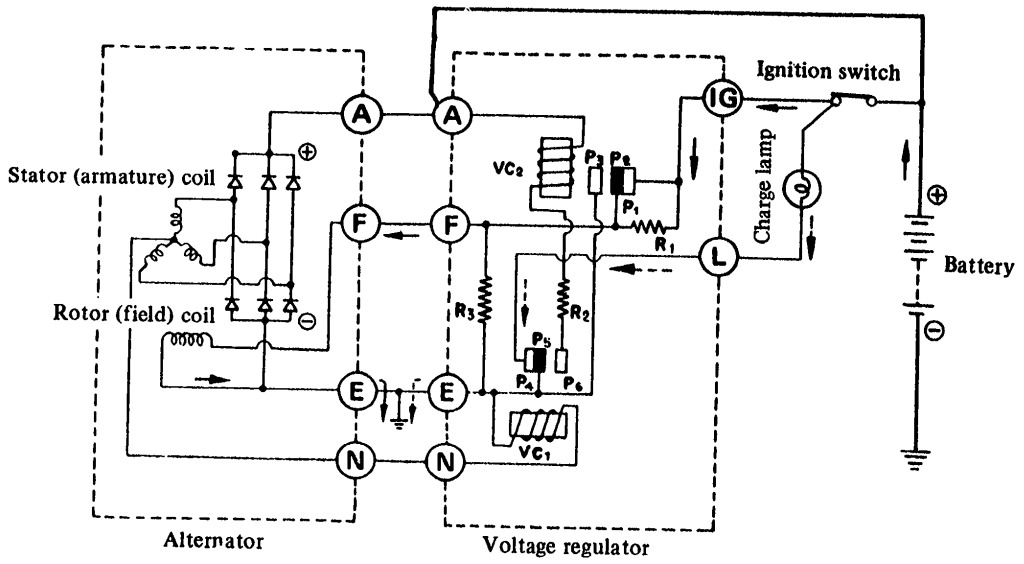

EE423

Fig. EE-23 ***Charging circuit (I)***

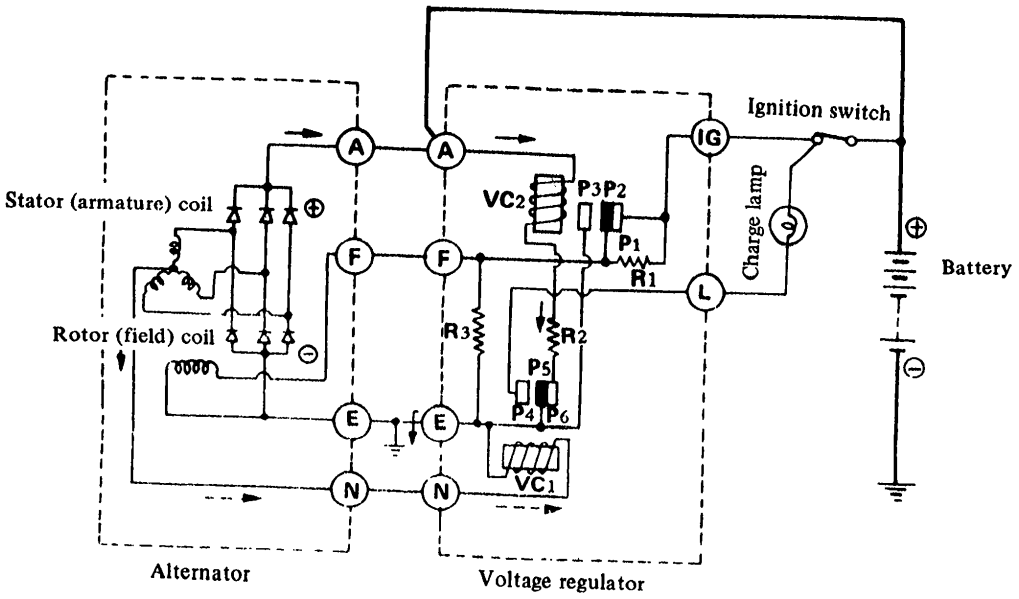

EE424

Fig. EE-24 ***Charging circuit (II)***

Downloaded from www.Manualslib.com manuals search engine

ALTERNATOR

CONTENTS

DESCRIPTION EE-13
REMOVAL EE-14
DISASSEMBLY EE-14
INSPECTION AND REPAIR EE-14
ROTOR INSPECTION EE-15
INSPECTION OF STATOR EE-15
INSPECTION OF DIODE EE-15
INSPECTION OF BRUSH EE-16
SPRING PRESSURE TEST EE-16
ASSEMBLY EE-16
ALTERNATOR TEST EE-17
SERVICE DATA AND SPECIFICATIONS EE-17

DESCRIPTION

In the alternator, a magnetic field is produced by the rotor which consists of an alternator shaft, a field coil, pole pieces, and slip rings. The slip rings pressed in the shaft conduct only a small field current. Output current is generated in the armature coils located in the stator. The stator has three windings and generates three-phase alternating current. Silicon diodes act like a one-way valve for electricity so that charging current passes easily but reverse current is shut out.

In this alternator, pack type silicon diodes are used.

Six diodes (three negative and three positive), are installed in positive and negative plates as an assembly.

These diodes are direct-soldered at their tips, and constructed with positive and negative conjunction.

They are mounted on the two plates which combine the function of heat-dissipating plate and positive/negative terminals and are light in weight and easy to service.

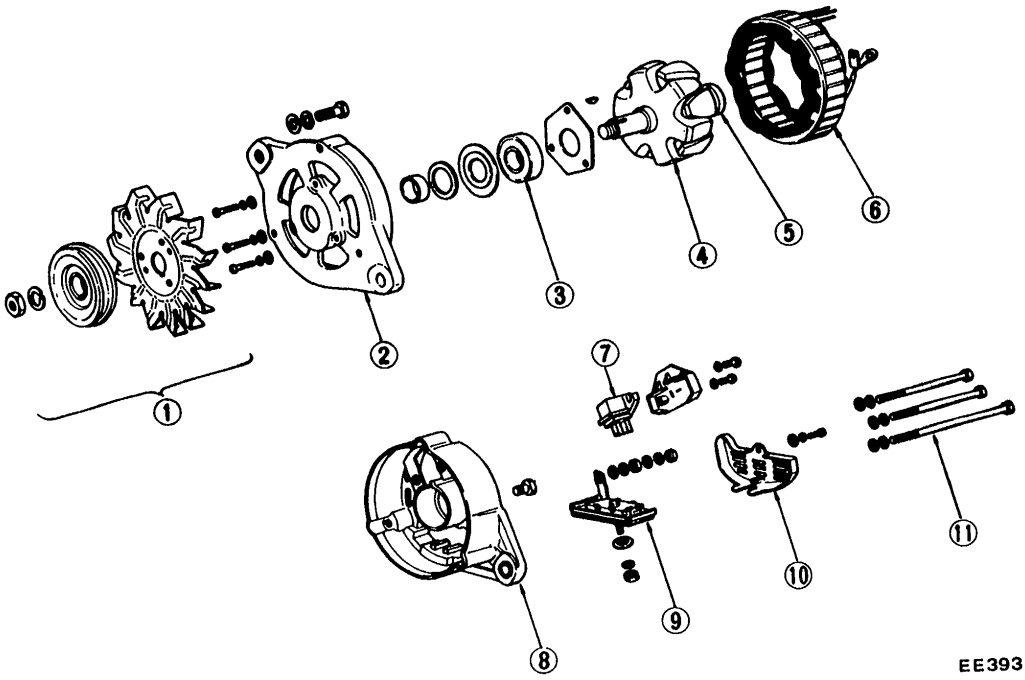

1 Pulley assembly
2 Front cover
3 Front bearing
4 Rotor
5 Rear bearing
6 Stator
7 Brush assembly
8 Rear cover
9 Diode (set plate) assembly
10 Diode cover
11 Through bolts

Fig. EE-25 Exploded view of alternator

Downloaded from www.Manualslib.com manuals search engine

REMOVAL

1. Disconnect battery negative cable.
2. Disconnect two lead wires and connector from alternator.
3. Loosen adjusting bolt.
4. Remove alternator drive belt.
5. Remove parts associated with alternator from engine.
6. Remove alternator from car.

DISASSEMBLY

1. Remove pulley nut and pulley assembly.

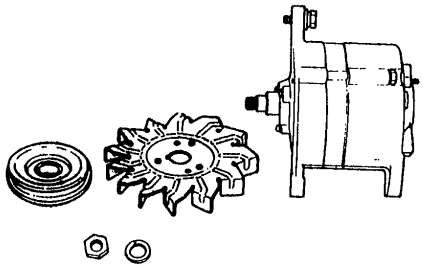

Fig. EE-26 Removing pulley and fan

2. Remove brush holder fixing screws, and remove brush holder cover. Pull brush holder forward, and remove brushes together with brush holder.

Note: Do not disconnect N terminal from stator coil lead wire.

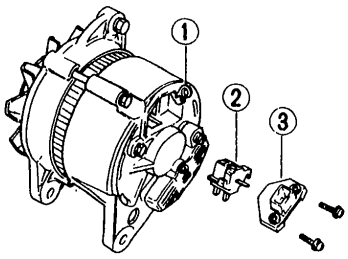

1 "N" terminal
2 Brush holder
3 Brush holder cover

Fig. EE-27 Removing brush

3. Remove through bolts. Separate front cover with rotor from rear cover with stator by lightly tapping front bracket with a wooden mallet.

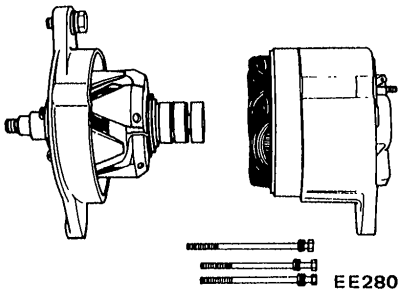

Fig. EE-28 Separating front cover with rotor from rear cover

4. Remove three set screws from bearing retainer, and separate rotor from front cover.

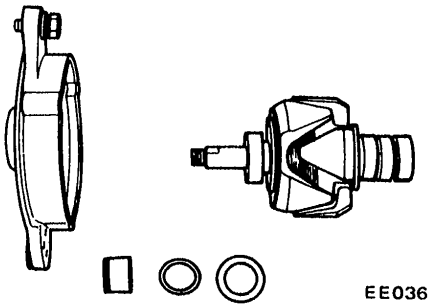

Fig. EE-29 Removing rotor

5. Pull rear bearing out from rotor assembly with a press or bearing puller.

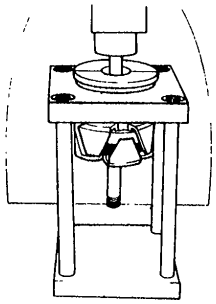

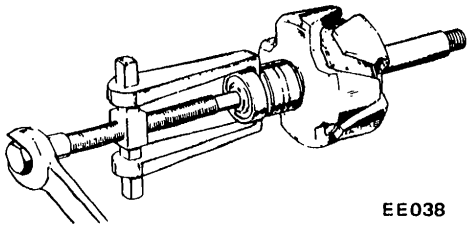

Fig. EE-30 Pulling out of rear bearing

6. Remove diode cover fixing screw, and remove diode cover. Disconnect three stator coil lead wires from diode terminal with a soldering iron.
7. Remove A terminal nut and diode installation nut, and remove diode assembly.

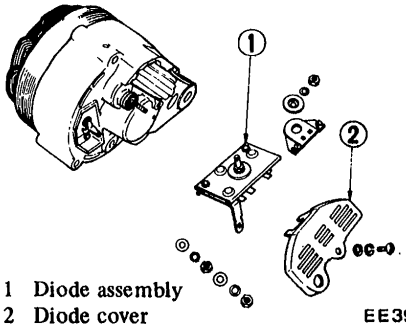

1 Diode assembly
2 Diode cover

Fig. EE-31 Removing diode assembly

Note: Use care in handling diode assembly to prevent an undue stress on it.

INSPECTION AND REPAIR

Remove alternator from car and connect a circuit tester between F terminal and E terminal.

When the resistance is approximately 5Ω, the condition of brush and field coil is satisfactory. When no continuity exists in brush or field coil, or when resistance differs significantly between those parts, disassemble and inspect.

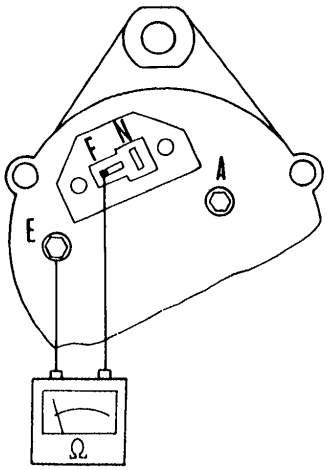

Fig. EE-32 Inspecting alternator

Downloaded from www.Manualslib.com manuals search engine

ROTOR INSPECTION

1. Continuity test of rotor coil

Apply tester between slip rings of rotor as shown in Figure EE-33. If there is no continuity field coil is open.

Replace rotor assembly.

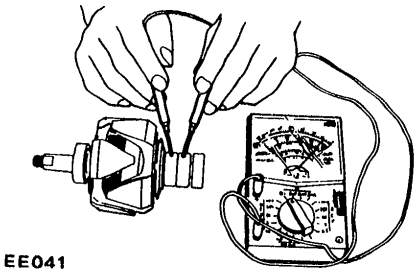

Fig. EE-33 Continuity test of rotor coil

2. Ground test of rotor coil

Check continuity between slip ring and rotor core. If continuity exists, replace rotor assembly, because rotor coil or slip ring may be grounded.

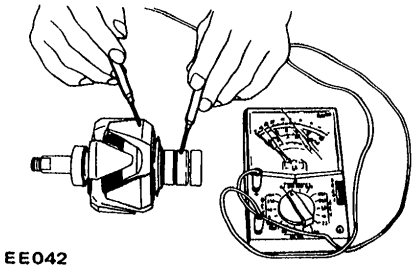

Fig. EE-34 Testing rotor coil for ground

INSPECTION OF STATOR

1. Continuity test

Stator is normal when there is continuity between individual stator coil terminals. When there is no continuity between individual terminals, cable is broken.

Replace stator assembly.

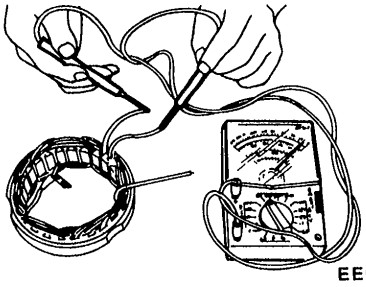

Fig. EE-35 Testing stator for continuity

2. Ground test

If each lead wire of stator coil (including neutral wire) is not conductive with stator core, condition is satisfactory. If there is continuity, stator coil is grounded.

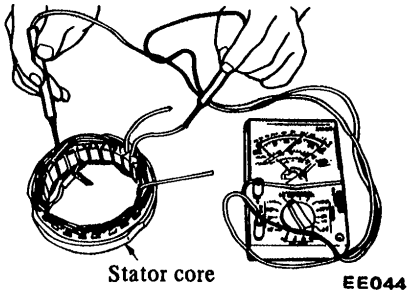

Fig. EE-36 Testing stator for ground

INSPECTION OF DIODE

Perform a continuity test on diodes in both directions, using an ohmmeter. A total of six diodes are used; three are mounted on the positive ⊕ plate, and other three are on the negative ⊖ plate. The continuity test should be performed on each diode, between the terminal and plate.

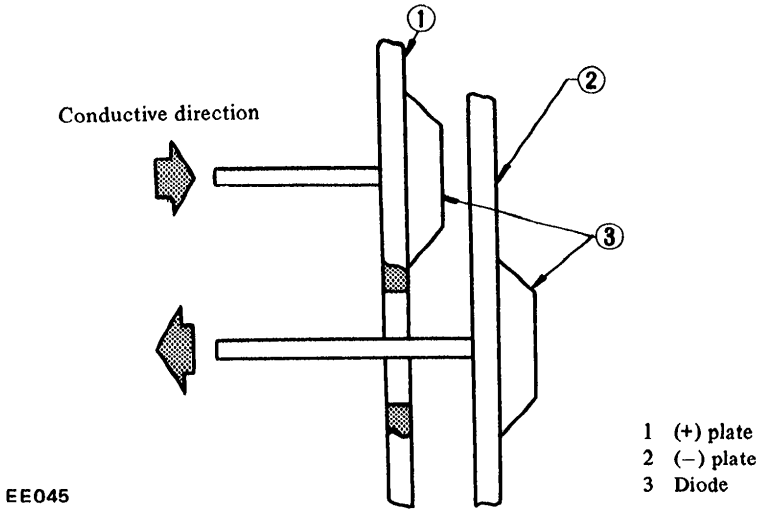

Fig. EE-37 Conductive direction of diode

Diode installed on ⊕ plate is a positive diode which allows current flowing from terminal to ⊕ plate only. In other words, current does not flow from ⊕ plate to terminal.

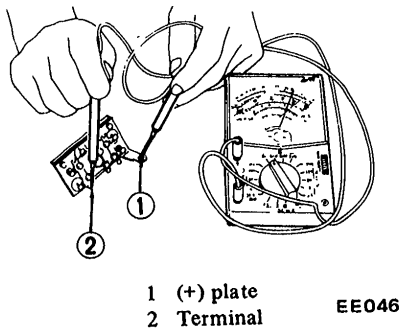

Fig. EE-38 Inspecting positive diode

Diode installed on ⊖ plate is a negative diode which allows current flowing from ⊖ plate to terminal only. In other words, current does not flow from terminal to ⊖ plate.

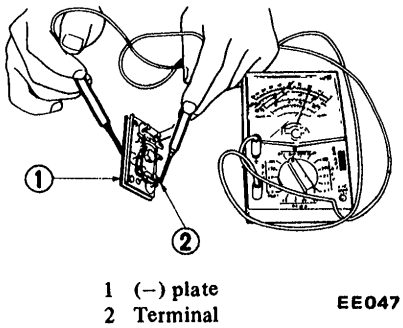

Fig. EE-39 Inspecting negative diode

Downloaded from www.Manualslib.com manuals search engine

If current flows in both positive and negative directions, diode is short-circuited. If current flows in one direction only, diode is in good condition.

If there is a faulty diode, replace all diodes (six diodes) as an assembly. (See table below.) These diodes are unserviceable.

Test probe of a circuit tester		Conduction
⊖	⊕	
terminal	⊕ plate	O
⊕ plate	terminal	–
terminal	⊖ plate	–
⊖ plate	terminal	O
⊖ plate	⊕ plate	O
⊕ plate	⊖ plate	–

INSPECTION OF BRUSH

Check movement of brush and if movement is not smooth, check brush holder and clean if necessary.

Check brush for wear. If it is worn down to less than the specified limit, replace brush assembly.

Check brush pig tail and, if damaged, replace.

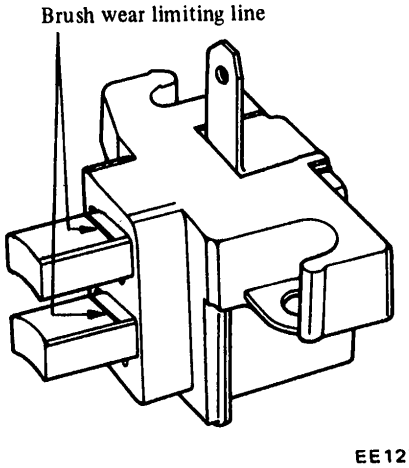

Fig. EE-40 Brush wear limit

SPRING PRESSURE TEST

With brush projected approximately 2 mm (0.079 in) from brush holder, measure brush spring pressure by the use of a spring balance. Normally, the rated pressure of a new brush spring is 255to 345 gr (9.0 to 12.2 oz).

Moreover, when brush is worn, pressure decreases approximately 20 g (0.7 oz) per 1 mm (0.0394 in) wear.

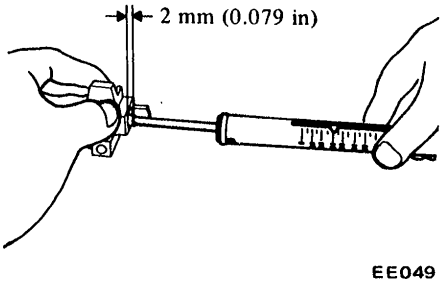

Fig. EE-41 Measuring spring pressure

ASSEMBLY

Assemble alternator in the reverse sequence of disassembly noting the following:

1. When soldering each stator coil lead wire to diode assembly terminal, carry out the operation as fast as possible.
2. When installing diode A terminal, install insulating bush correctly.

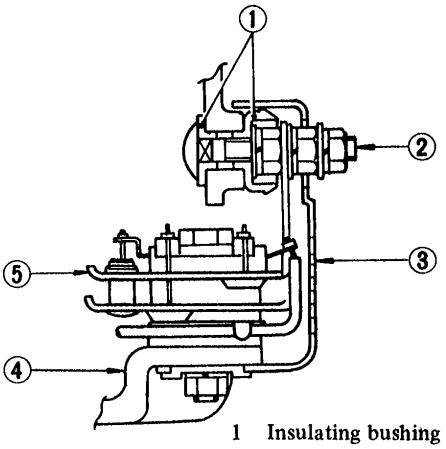

EE363

1 Insulating bushing
2 "A" terminal bolt
3 Diode cover
4 Rear cover
5 Diode assembly

Fig. EE-42 Sectional view of diode and A terminal

3. Tighten pulley nut with tightening torque of 3.5 to 4.0 kg-m (25.3 to 29.0 ft-lb). When pulley is tightened, make sure that deflection of V-groove is less than 0.3 mm (0.0118 in).

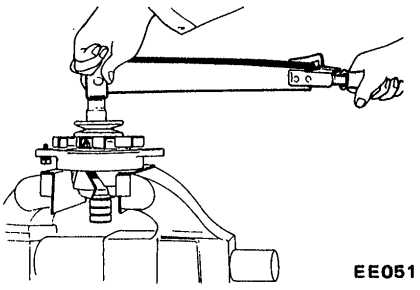

Fig. EE-43 Tightening pulley nut

Downloaded from www.Manualslib.com manuals search engine

ALTERNATOR TEST

Before conducting an alternator test, make sure that the battery is fully charged.

A 30-Volt voltmeter and suitable test probes are necessary for the test.

Set up a test circuit as shown in Figure EE-44 and test alternator in the manner indicated in the flow chart below:

1. Disconnect connectors at alternator.
2. Connect "A" terminal to "F" terminal.
3. Connect one test probe from voltmeter positive terminal to "A" terminal. Connect the other test probe to ground. Make sure that voltmeter registers battery voltage.
4. Turn on headlights and switch to High Beam.
5. Start engine.
6. Increase engine speed gradually until it is approximately 1,100 rpm, and take the voltmeter reading.

Measured value: Below 12.5 Volts
Alternator is in trouble. remove and check it for condition.

Measured value: Over 12.5 Volts
Alternator is in good condition.

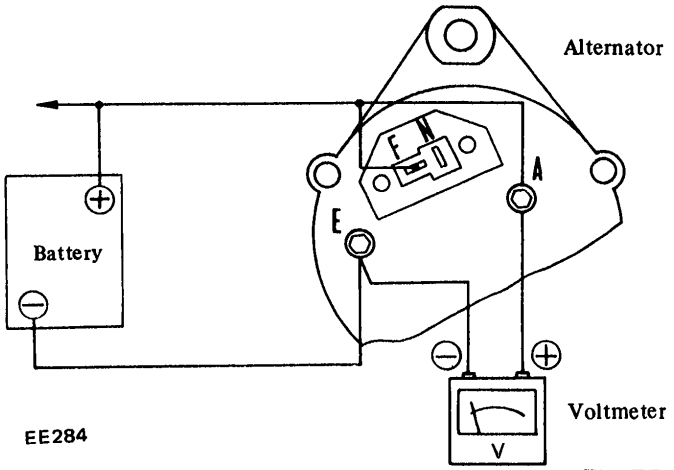

Fig. EE-44 Testing alternator

Notes:

a. Do not run engine at the speed of more than 1,100 rpm while test is being conducted on alternator.

b. Do not race engine.

SERVICE DATA AND SPECIFICATIONS

Type		LT160-23C
Nominal rating	V-A	12-60
Ground polarity		Negative
Minimum revolution under no load (When 14 volt is applied)	rpm	Less than 1,050
Hot output current	A/rpm	45/2,500 60/5,000
Pulley ratio		2.09
Brush		
Length	mm (in)	More than 7.5 (0.31)
Spring pressure	gr (oz)	255 to 345 (9.0 to 12.2)
Slip ring outer diameter	mm (in)	More than 30 (1.18)

Downloaded from www.Manualslib.com manuals search engine

REGULATOR

CONTENTS

DESCRIPTION EE-18
MEASUREMENT OF REGULATOR VOLTAGE EE-19
ADJUSTMENT EE-21
VOLTAGE REGULATOR EE-21
CHARGING RELAY EE-21
SERVICE DATA AND SPECIFICATIONS EE-22
TROUBLE DIAGNOSES AND CORRECTIONS (Including alternator) EE-23

DESCRIPTION

The regulator consists basically of a voltage regulator and a charge relay. The voltage regulator has two sets of contact points, a lower set and an upper set, to control alternator voltage. An armature plate placed between the two sets of contacts moves upward or downward or vibrates. The lower contacts, when closed, complete the field circuit direct to ground; and the upper contacts, when closed, complete the field circuit to ground through a resistance (field coil), and produce alternator output.

The charge relay is similar in construction to the voltage regulator.

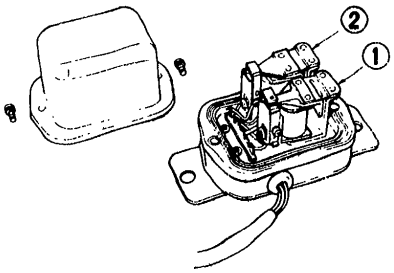

1 Charge relay
2 Voltage regulator

EE285

Fig. EE-45 ***View of removing cover***

As regards the construction, the voltage regulator is very similar to the charge relay as shown in Figure EE-46.

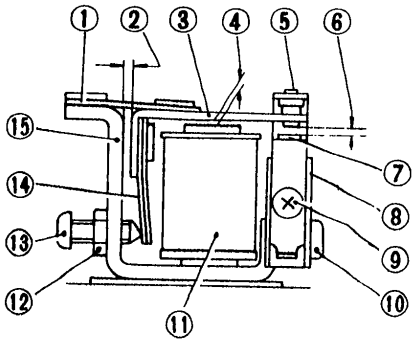

1 Connecting spring
2 Yoke gap
3 Armature
4 Core gap
5 Low speed contact
6 Point gap
7 High speed contact
8 Contact set
9 3mm (0.118 in) dia. screw
10 4mm (0.157 in) dia. screw
11 Coil
12 Lock nut
13 Adjusting screw
14 Adjusting spring
15 Yoke

(a) Construction of voltage regulator

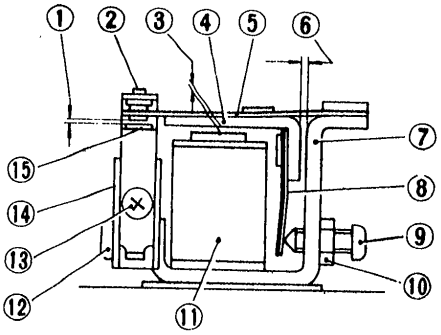

EE397

1 Point gap
2 Charge relay contact
3 Core gap
4 Armature
5 Connecting spring
6 Yoke gap
7 Yoke
8 Adjusting spring
9 Adjusting screw
10 Lock nut
11 Coil
12 4mm (0.157 in) dia. screw
13 3mm (0.118 in) dia. screw
14 Contact set
15 Voltage regulator contact

(b) Construction of charge relay

Fig. EE-46 ***Structural view***

Downloaded from www.Manualslib.com manuals search engine

MEASUREMENT OF REGULATOR VOLTAGE

Regulator voltage is measured with regulator assembled with alternator. When measuring voltage with regulator mounted on car, it is necessary to rotate engine at high speed.

Connect DC voltmeter (15-30V), DC ammeter (15-30A), battery and a 0.25Ω resistor (rated at 25W) with cables as shown.

1. Check to be sure that all electrical loads such as lamps, air conditioner, radio etc. are turned off.
2. Before starting engine, be sure to make short circuit with a cable between fuse side terminal of resistor (0.25Ω) and negative side terminal of ammeter. Failure to follow this precaution will cause needle of ammeter to swing violently, resulting in a damaged ammeter.

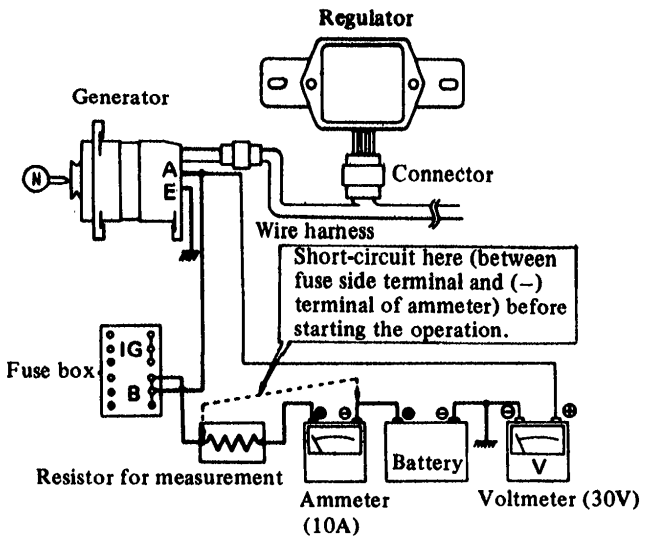

Fig. EE-47 Measuring regulator voltage with regulator on vehicle

3. Refer to the following chart to determine if regulator and relative parts are in good condition:

Downloaded from www.Manualslib.com manuals search engine

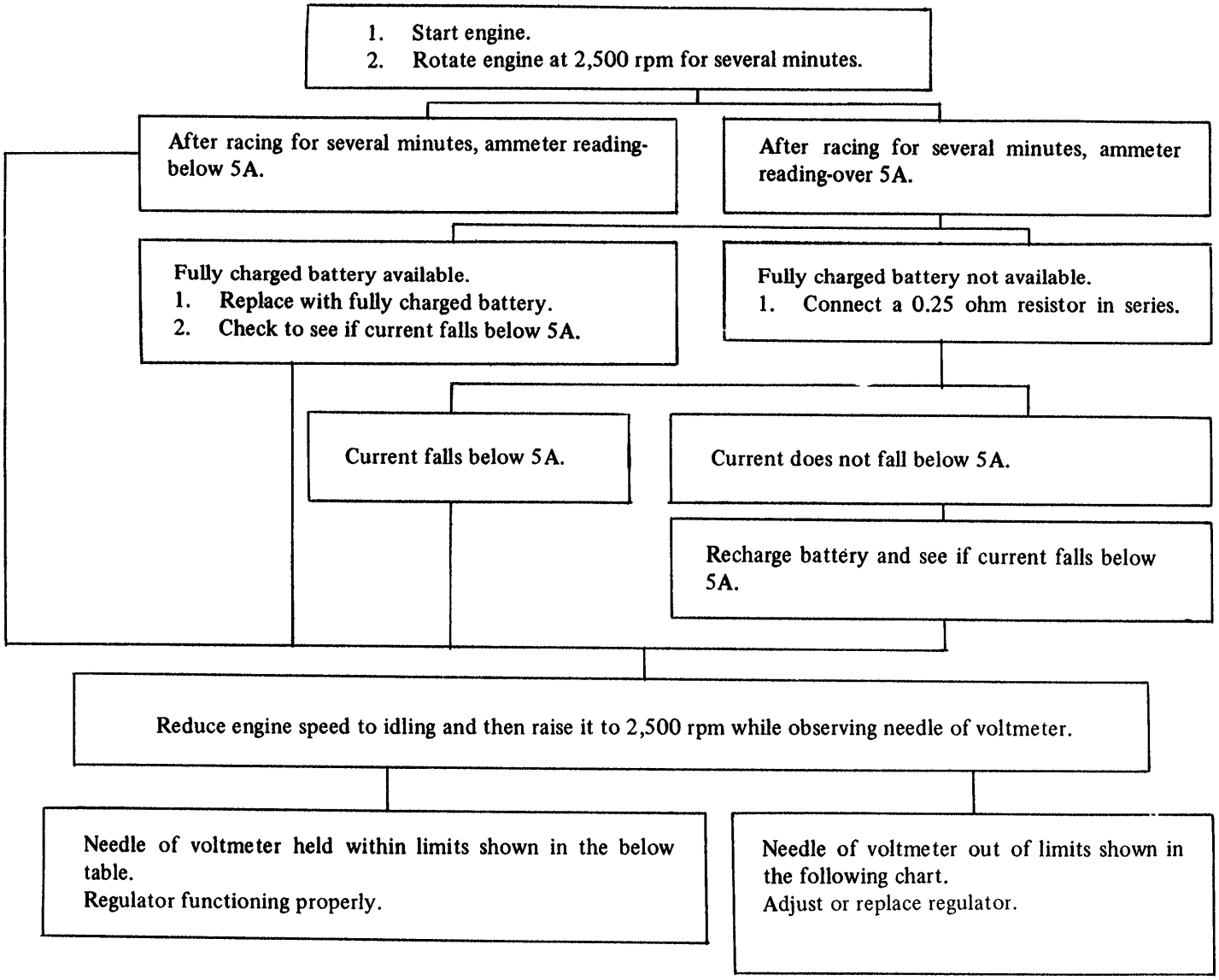

Regulator type TL1Z-85C

Temperature °C (°F)	Voltage V
−10 (14)	14.75 to 15.75
0 (32)	14.60 to 15.60
10 (50)	14.45 to 15.45
20 (68)	14.30 to 15.30
30 (86)	14.15 to 15.15
40 (104)	14.00 to 15.00

Notes:

a. Do not measure voltage immediately after driving. Do this while regulator is cold.

b. To measure voltage, raise engine speed gradually from idling to rated speed.

c. Voltage may be approximately 0.3 V higher than rated for two to three minutes after engine is started, or more specifically, when regulator becomes self-heated. Measurements should then be made within one minute after starting engine, or when regulator is cold.

d. The regulator is of a temperature-compensating type. Before measuring voltage, be sure to measure surrounding temperature and correct measurements according to the table at left.

Downloaded from www.Manualslib.com manuals search engine

ADJUSTMENT

VOLTAGE REGULATOR

When regulating voltage, as measured above, deviates from rated value, adjust regulator in accordance with the following instructions.

1. Inspect contact surface, and if rough, lightly polish with fine emery paper (#500 or 600).
2. Measure each gap, and adjust if necessary. Adjust core gap and point gap in that order. No adjustment is required for yoke gap.
3. Adjusting core gap.

Loosen screw [4 mm (0.157 in) diameter] which is used to secure contact set on yoke, and move contact upward or downward properly. (See Figure EE-48.)

Core gap:
0.6 to 1.0 mm
(0.024 to 0.039 in)

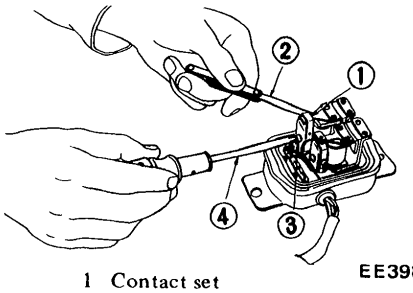

EE398

1 Contact set
2 Thickness gauge
3 4 mm (0.157 in) dia. screw
4 Crosshead screwdriver

Fig. EE-48 Adjusting core gap

4. Adjusting point gap

Loosen screw [3 mm (0.118 in) diameter] used to secure upper contact, and move upper contact upward or downward as necessary. (See Figure EE-49.)

Point gap:
0.35 to 0.45 mm
(0.014 to 0.018 in)

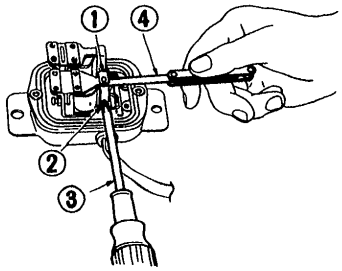

EE399

1 Thickness gauge
2 3 mm (0.118 in) dia. screw
3 Crosshead screwdriver
4 Upper contact

Fig. EE-49 Adjusting point gap

5. Adjusting voltage

Adjust regulating voltage as follows:

Loosen lock nut securing adjusting screw. Turn this screw clockwise to increase, or counterclockwise to decrease, regulating voltage. (See Figure EE-50.)

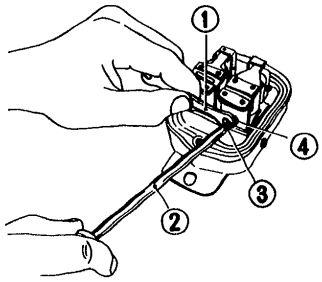

EE400

1 Wrench
2 Crosshead screwdriver
3 Adjusting screw
4 Lock nut

Fig. EE-50 Adjusting regulating voltage

CHARGING RELAY

Charging relay is used as an engine revolution sensor in starter interlock system.

Normal relay operating voltage is 8 to 10V as measured at alternator "A" terminal. Relay itself, however, operates at 4 to 5 V.

Use a DC voltmeter, and set up a circuit as shown in Figure EE-51.

Adjust charge relay in the same manner as that for voltage regulator.

1. Connect positive terminal of voltmeter to regulator lead connector "N" terminal with negative terminal grounded.
2. Start engine and keep it idle.
3. Take voltmeter reading.

0 Volt

1. Check for continuity between "N" terminals of regulator and alternator.
2. Alternator circuit inoperative if continuity exists.

Below 5.2 Volts

1. Check fan belt tension.
2. If correct, remove regulator and adjust as necessary.

Over 5.2 Volts

Charge relay coil or contact points out of order.
Replace regulator.

Over 5.2 Volts

Charge relay assembly is in good condition.

Downloaded from www.Manualslib.com manuals search engine

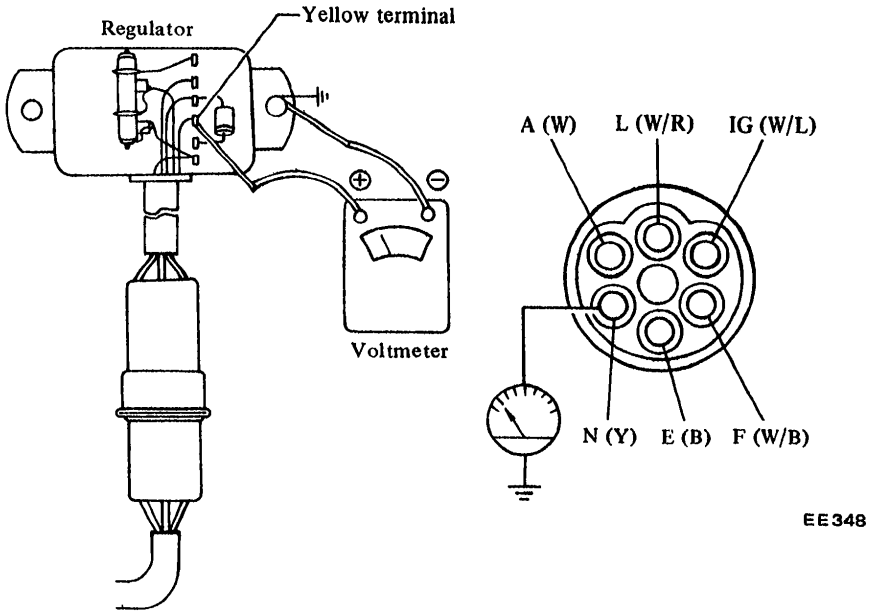

Fig. EE-51 Testing charging relay

SERVICE DATA AND SPECIFICATIONS

Voltage regulator

Type		TL1Z-85C
Regulating voltage (with fully charged battery)	V	*14.3 to 15.3 [at 20°C (68°F)]
Voltage coil resistance	Ω	10.5 [at 20°C (68°F)]
Rotor coil inserting resistance	Ω	10
Voltage coil series resistance	Ω	31
Smoothing resistance	Ω	40
Core gap	mm (in)	0.6 to 1.0 (0.024 to 0.039)
Point gap	mm (in)	0.35 to 0.45 (0.014 to 0.018)

Charge relay

Release voltage	V	4.2 to 5.2 at "N" terminal
Voltage coil resistance	Ω	37.8 [at 20°C (68°F)]
Core gap	mm (in)	0.8 to 1.0 (0.031 to 0.039)
Point gap	mm (in)	0.4 to 0.6 (0.016 to 0.024)

*Standard temperature gradient: –0.015V/°C

Downloaded from www.Manualslib.com manuals search engine

TROUBLE DIAGNOSES AND CORRECTIONS (Including alternator)

Condition	Probable cause	Corrective action
No output	Sticking brushes.	Correct or replace brushes and brush springs.
	Dirty brushes and slip rings.	Clean.
	Loose connections or broken leads.	Retighten or solder connections. Replace leads if necessary.
	Open stator winding.	Repair or replace stator.
	Open rotor winding.	Replace rotor.
	Open diodes.	Replace.
	Shorted rotor.	Replace rotor.
	Shorted stator.	Repair or replace.
	Grounded "A" terminal.	Replace insulator.
	Broken fan belt.	Replace.
Excessive output	Broken neutral wire (color of wire is yellow.)	Replace.
	Voltage regulator breakdown.	Check regulator operation and repair or replace as required.
	Poor grounding of alternator and voltage regulator "E" terminal.	Retighten terminal connection.
	Broken ground wire (color of wire is black.)	Replace.
Low output	Loose or worn fan belt.	Retighten or replace.
	Sticking brushes.	Correct or replace brushes and springs if necessary.
	Low brush spring tension.	Replace brush springs.
	Voltage regulator breakdown.	Check regulator operation and repair or replace as required.
	Dirty slip rings.	Clean.
	Partial short, ground, or open in stator winding.	Replace stator.
	Partially shorted or grounded rotor winding.	Replace rotor.
	Open or damaged diode.	Replace diode.
Noisy alternator	Loose mounting.	Retighten bolts.
	Loose drive pulley.	Retighten.
	Broken ball bearing.	Replace.
	Improperly seated brushes.	Seat correctly.

Downloaded from www.Manualslib.com manuals search engine

IGNITION CIRCUIT

The ignition circuit consists of an ignition switch, a transistor ignition unit, a distributor, wiring, spark plugs and a battery.

The distributor is of the contactless type and is equipped with a pick-up coil which electrically detects the ignition timing signal in place of the circuit breaker of the conventional distributor. The transistor ignition unit is a new addition, which generates the signal required for the make and break of the primary electric current for the ignition coil.

The circuit is equipped with a resistor. During cranking, electrical current bypasses the secondary resistor, thereby connecting the ignition coil through the primary resistor. This makes battery voltage available at efficiently and keeps ignition voltage as high as possible.

The primary resistor serves to protect transistor ignition circuit.

The low voltage current is supplied by the battery or alternator and flows through the primary circuit.

It consists of the ignition switch, resistor, primary winding of the ignition coil, transistor ignition unit and all connecting low tension wiring.

The high voltage current is produced by the ignition coil and flows through the secondary circuit, resulting in high voltage spark between the electrodes of the spark plugs in engine cylinders.

This circuit contains the secondary winding of the ignition coil, distributor high tension wires to coil and spark plugs, distributor rotor and cap.

When the ignition switch is turned on and the distributor reluctor rotates, the primary current flows through the primary winding of the coil and through transistor ignition unit to ground.

When the primary circuit is opened by circuit of transistor ignition unit, the magnetic field built up in the primary winding of the coil moves through the secondary winding of the coil, inducing high voltage. This high voltage is produced every time the primary circuit opens.

The high voltage current flows through the high tension wire to the distributor cap, then the rotor distributor cap, then the rotor distributes the current to one of the spark plug terminals in the distributor cap.

Then the spark occurs while the high voltage current jumps the gap between the insulated electrode and the ground side electrode of the spark plug. This process is repeated for each power stroke of the engine.

The spark plug should be inspected, cleaned and regapped at tune up. Spark plugs should also be replaced periodically as specified in the "Maintenance Schedule".

The remainder of the ignition component parts should be inspected for only their operation, air gap of distributor, tightness of electrical terminals, and wiring condition.

Apply grease (NLGI consistency No. 1 containing MoS_2 or equivalent) to distributor rotor shaft as required.

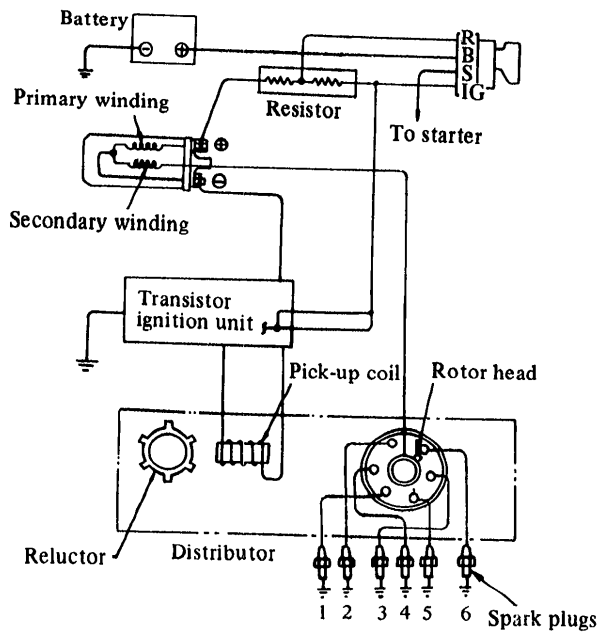

EE474

Fig. EE-52 Ignition system circuit diagram

Downloaded from www.Manualslib.com manuals search engine

DISTRIBUTOR

CONTENTS

CONSTRUCTION EE-25
CHECKING AND ADJUSTMENT EE-26
CAP AND ROTOR HEAD EE-26
AIR GAP EE-26
ADVANCE MECHANISMS EE-26
DISASSEMBLY EE-27
ASSEMBLY EE-27
SERVICE DATA AND SPECIFICATIONS EE-28

CONSTRUCTION

Distributor type	Applied model	Transmission	Remarks
D6F5-02 D6F6-06*	Non-California	Manual	1 pick-up type
D6F5-03 D6F6-07*		Automatic	
D6F4-03	California	Manual and Automatic	

*For Canada

In the conventional distributor the ignition point is detected by the cam and breaker arm, while in this transistor ignition unit it is detected by the reluctor on the shaft and the pick-up coil provided in place of the breaker. The pick-up coil consists of a magnet, coil, etc. The amount of magnetic flux passing through the pole piece in the coil is changed at the moment the pole piece faces the protrusion of the reluctor, and then the electrical signal is generated in the pick-up coil.

This electric signal is conducted into the transistor ignition unit, which in turn breaks the primary coil current running through the ignition coil and generates high voltage in the secondary winding. Also, this transistor ignition unit utilizes this electric signal to restore the primary coil to the original state after cutting off the primary current for a fixed time.

The centrifugal and vacuum advance mechanisms employ the conventional mechanical type. The contactor is used to eliminate vacuum and centrifugal advance hysteresis.

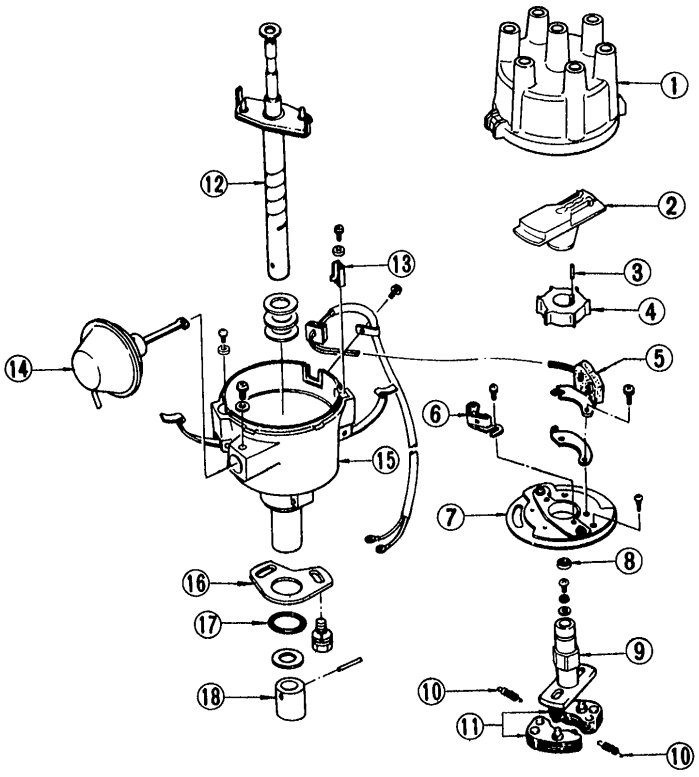

1 Cap assembly
2 Rotor head assembly
3 Roll pin
4 Reluctor
5 Pick-up coil
6 Contactor
7 Breaker plate assembly
8 Packing
9 Rotor shaft
10 Governor spring
11 Governor weight
12 Shaft assembly
13 Cap setter
14 Vacuum controller
15 Housing
16 Fixing plate
17 O-ring
18 Collar

EE475

Fig. EE-53 Exploded view of distributor

Downloaded from www.Manualslib.com manuals search engine

CHECKING AND ADJUSTMENT

CAP AND ROTOR HEAD

Cap and rotor head must be inspected periodically as specified in the "Maintenance Schedule". Remove cap and clean all dust and carbon deposits from cap and rotor from time to time. If cap is cracked or is leaking, replace with a new one.

AIR GAP

Standard air gap is 0.2 to 0.4 mm (0.008 to 0.016 in).

If the gap is off the standard, adjustment should be made by loosening pick-up coil screws.

Gap gauge is required for adjustment.

Air gap: 0.2 to 0.4 mm
(0.008 to 0.016 in)

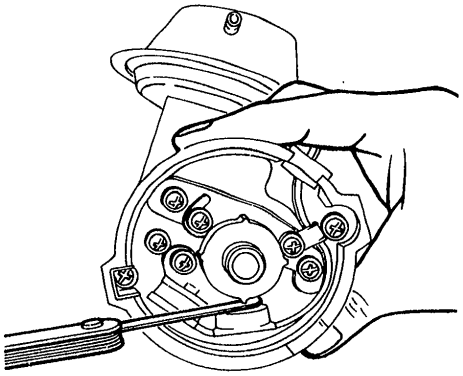

Measuring air gap

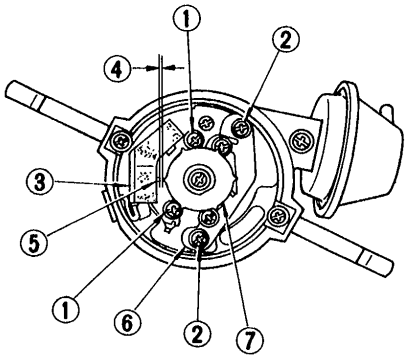

EE476

1 Pick-up coil set screws (air gap)
2 Adjuster plate set screws
3 Pick-up coil
4 Air gap
5 Pole piece
6 Adjuster plate
7 Reluctor

Fig. EE-54 Checking air gap

After air gap has been adjusted properly, check the clearance to ensure that it is approximately 0.3 mm (0.0118 in) and that contactor touches the highest point of cam. See Figure EE-55.

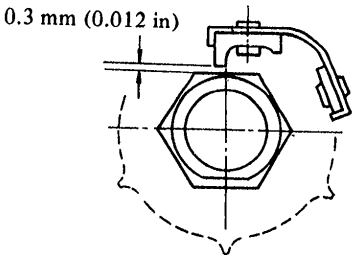

EE368

Fig. EE-55 Cam-to-contactor clearance

To replace pick-up coil, disconnect primary lead wires at terminal block and remove two pick-up coil setscrews.

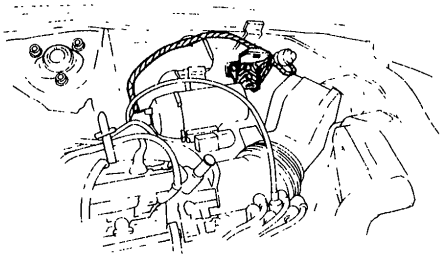

EE477

Fig. EE-56 Terminal block

ADVANCE MECHANISMS

≪ Specifications ≫

Item \ Type	D6F5-02 D6F6-06*	D6F5-03 D6F6-07*	D6F4-03
Applied model	Non-California		California
Transmission	Manual	Automatic	Manual and Automatic
Vacuum advance [Distributor degrees/distributor mmHg (inHg)]	0°/150 (5.9) 9°/295 (11.6)	0°/150 (5.9) 5°/250 (9.8)	0°/200 (7.9) 7.5°/350 (13.8)
Centrifugal advance [Distributor degrees/distributor rpm]	0°/600 8.5°/1,250		

*For Canada

Downloaded from www.Manualslib.com manuals search engine

≪ Vacuum advance mechanism mechanical parts ≫

If vacuum advance mechanism fails to operate properly, check for the following items and correct the problem as required.

1. Check vacuum inlet for signs of leakage at its connection. If necessary, retighten or replace with a new one.
2. Check vacuum diaphragm for air leak.

If leak is found, replace vacuum controller assembly.

3. Inspect breaker plate for smooth moving.

If plate does not move smoothly, this condition could be due to sticky steel balls or pivot. Apply grease to steel balls or, if necessary, replace distributor assembly.

≪ Centrifugal advance mechanical parts ≫

When cause of engine malfunction is traced to centrifugal advance mechanical parts, use distributor tester to check its characteristics. See to the specifications above.

If nothing is wrong with its characteristics, conceivable causes are faulty or abnormal wear of driving part or others. So do not disassemble it.

In the event of improper characteristics, check closely rotor shaft assembly, governor weight and shaft.

If any of above parts are malfunctioning, replace distributor assembly.

DISASSEMBLY

To disassemble, follow the procedure below.

1. Take off cap and remove rotor head.
2. Remove two screws shown in Figure EE-57 and detach vacuum controller.

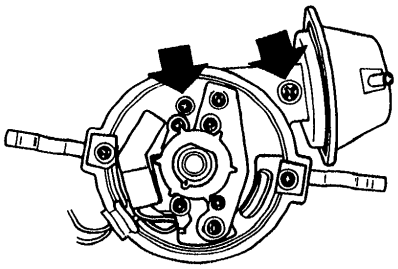

EE478

Fig. EE-57 Removing vacuum controller

3. Remove pick-up coil assembly.
4. Using two pry bars, pry reluctor from shaft. Be careful not to distort or damage the teeth of reluctor.

Remove roll pin.

5. Remove breaker plate setscrews and remove breaker plate assembly.

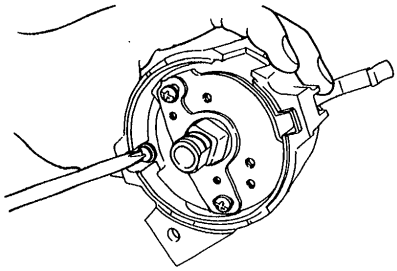

Fig. EE-58 Removing breaker plate setscrews

6. Pull roll pin out and remove collar.
7. Remove rotor shaft and drive shaft assembly.

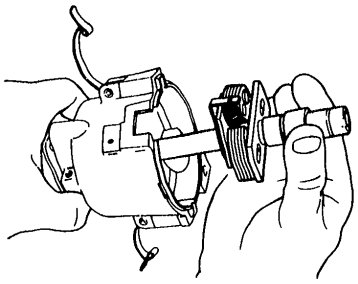

Fig. EE-59 Removing rotor shaft and drive shaft assembly

8. Mark rotor shaft and drive shaft.

Remove packing from the top of rotor shaft and unscrew rotor shaft setscrew.

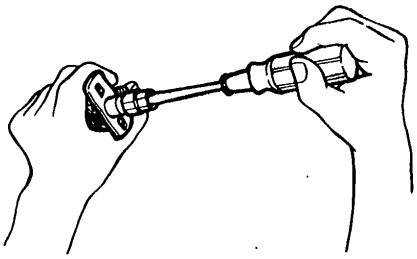

EE075

Fig. EE-60 Removing rotor shaft

9. Mark one of the governor springs and its bracket. Also mark one of the governor weights and its pivot pins.
10. Carefully unhook and remove governor springs.
11. Remove governor weights.

Apply grease to governor weights after disassembling.

ASSEMBLY

To assemble, reverse the order of disassembly. Carefully observe the following instructions.

1. Align match marks so that parts are assembled to their original positions.
2. If, for any reason, contactor is removed from breaker plate, adjust cam-to-contactor clearance to 0.3 mm (0.012 in) as shown in Figure EE-55 after installation.
3. Ensure that reluctor is properly oriented when installing on shaft.

Always drive in roll pin with its slit toward the outer end of shaft. See Figure EE-61. Be sure to use a new roll pin.

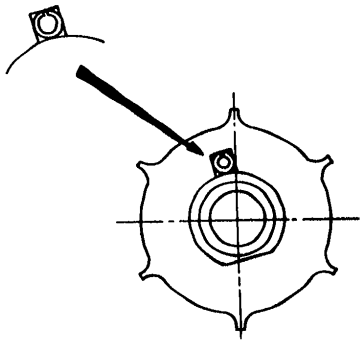

EE373

Fig. EE-61 Driving in roll pin

Downloaded from www.Manualslib.com manuals search engine

4. Apply grease to the top of rotor shaft as required.
5. Check the operation of governor before installing distributor on engine.
6. Adjust ignition timing after distributor is installed on engine.

SERVICE DATA AND SPECIFICATIONS

Applied model		Non-California		California
Transmission		M/T	A/T	M/T, A/T
Type		D6F5-02, D6F6-06*	D6F5-03, D6F6-07*	D6F4-03
Firing order		1-5-3-6-2-4		
Rotating direction		Counterclockwise		
Duty		70% (20 to 40% at idling)		
Air gap	mm (in)	0.2 to 0.4 (0.008 to 0.016)		
Cap insulation resistance	MΩ	More than 50		
Rotor head insulation resistance	MΩ	More than 50		
Cap carbon point length	mm (in)	10 (0.39)		
Ignition timing (B.T.D.C.) at idle speed	degree/rpm			
Manual transmission		10°/800	–	10°/800
Automatic transmission in "D" position		–	10°/700	10°/700

*For Canada

Downloaded from www.Manualslib.com manuals search engine

TRANSISTOR IGNITION UNIT

CONTENTS

DESCRIPTION EE-29
TRANSISTOR IGNITION UNIT EE-29
REMOVAL AND INSTALLATION EE-29
INSPECTION EE-29
1. POWER SUPPLY WIRING AND BATTERY CHECK EE-30
2. CONTINUITY CHECK OF PRIMARY CIRCUIT EE-30
3. PICK-UP COIL CONTINUITY CHECK EE-30
4. PICK-UP COIL POWER SINGLE PULSE CHECK EE-31
5. TRANSISTOR IGNITION UNIT CHECK EE-31

DESCRIPTION

TRANSISTOR IGNITION UNIT

The transistor ignition unit provides the following functions:

1. It makes and breaks the electric current in the primary circuit of the ignition coil.
2. The duty control circuit sets the rate of make and break within one cycle, i.e., this maintains good ignition characteristics of engine from low speed to high speed and is equal to the dwell angle in the conventional breaker type distributor.
3. A preventive circuit against locking is provided. This cuts off the primary electric current in the ignition coil even when the ignition switch is turned on with the engine not running.

Each component part of this unit is highly reliable, however, should any part be found faulty, the entire assembly must be replaced.

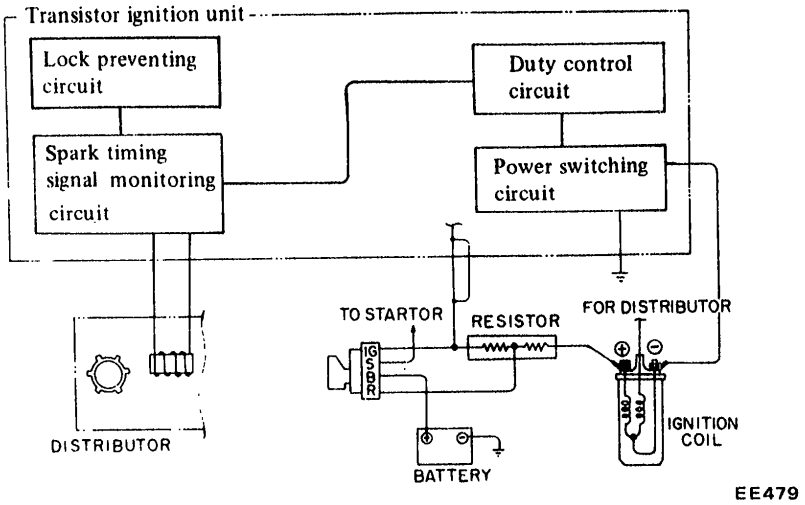

Fig. EE-62 Transistor ignition unit circuit diagram

REMOVAL AND INSTALLATION

Transistor ignition unit is located on the right-hand dash side panel in passenger compartment.

1. Disconnect battery negative cable.
2. Disconnect wiring harness from unit.
3. Remove two setscrews and remove unit.
4. To install, reverse the order of removal.

Note: Be sure to connect wiring harnesses to their proper positions. Failure to do so will damage the unit.
Refer to Figure EE-63.

Fig. EE-63 External view of ignition unit

INSPECTION

If the engine does not run due to faulty ignition system, check the ignition system as follows:

Check for a cracked distributor rotor or cap and corroded terminals. Visually inspect high tension wires for condition and, if necessary, use an ignition oscilloscope or a circuit tester to make performance checks. Check spark plugs and adjust gaps as necessary.

Downloaded from www.Manualslib.com manuals search engine

Replace a spark plug which is not suitable for further use. If the above checks cannot correct the problem, check the entire ignition system with an oscilloscope or a circuit tester.

CHECKING WITH AN OSCILLOSCOPE

An oscilloscope can be used for checking almost all the items in a transistor ignition system.

CHECKING WITH A CIRCUIT TESTER

A circuit tester can not be used for the duty control circuit and power transistor performance tests. Both methods (use of an oscilloscope and a circuit tester) are described in this section.

The items are classified by numerals in accordance with the objective of checks to be performed. Several wiring diagrams are found in Figures EE-75 through EE-79. The thick lines indicate the objective of each individual item check.

When checking a circuit with an oscilloscope or a circuit tester, be careful not to confuse the polarity of the lead wires if a potential difference exists between the check points at which the lead wires are to be contacted. Also, do not attempt to connect the lead wires to any points in the circuit other than those designated. Careless handling of the lead wires will result in damage to the transistor ignition unit as well as to the oscilloscope or ciruit tester.

The connection of a tachometer or a timing light in parallel with an oscilloscope or a circuit tester is allowable, provided that such a connection is made with due consideration to wiring connections.

1. POWER SUPPLY WIRING AND BATTERY CHECK (See wiring diagram in Figure EE-75)

Procedure:

1. Turn on ignition switch.
2. Connect a circuit tester or an oscilloscope as shown in the figure below.

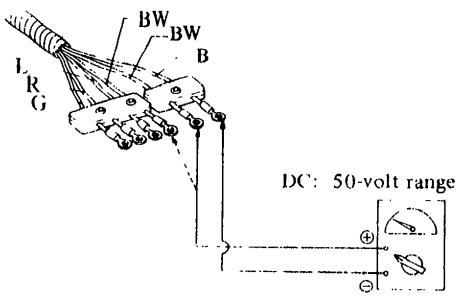

Fig. EE 64 Checking power supply wiring and battery

Criterion:

When power source (battery) voltage is indicated . . . . . OK
Lower or no indication . . N.G.

If the result is "N.G." Take the following measures:

1. Check "BW" and "B" color wire harness respectively, for proper conductance.
2. Check battery cables for proper connection.
3. Check charge condition of battery if an excessively low voltage is indicated.

2. CONTINUITY CHECK OF PRIMARY CIRCUIT

2-1. Checking primary circuit (See wiring diagram in Fig. EE-76)

Procedure:

1. Disconnect "L" color wire from ignition unit.
2. Turn on ignition switch.
3. Connect a circuit tester or an oscilloscope as shown in Figure EE-69.

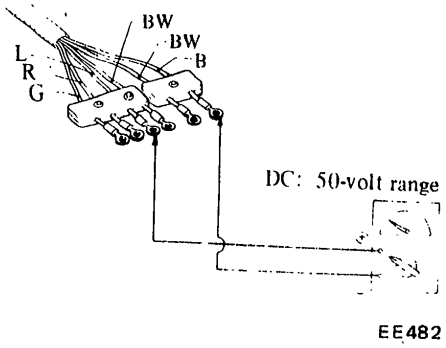

Fig. EE-65 Checking primary circuit

Criterion:

When normal power source (battery) voltage is indicated . OK
Lower or no indication . . . . . N.G.

If the result is "N.G." - Take the following measures:

1. Check "BW" and "L" color wire harness respectively for proper conductance.
2. Check resistor and ignition coil terminals for loose contact.
3. Check resistor and ignition coil for discontinuity.
4. Check "WB" color wire harness of ignition coil assembly for proper continuity.

2-2. Checking ignition coil assembly (See wiring diagram in Fig. EE-77)

Procedure:

1. Disconnect engine room harness from ignition coil external resistor terminals.
2. Connect a circuit tester as shown in the figure below.

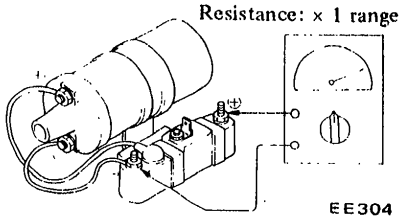

Fig. EE-66 Checking ignition coil assembly

Criterion:

When approximately 1.6 to 2.0 ohm is indicated . . . . . OK
More than 2.0 ohm . . . . . N.G.

If the result is "N.G." Replace ignition coil assembly.

3. PICK-UP COIL CONTINUITY CHECK (See wiring diagram in Figure EE-78)

Procedure:

1. Disconnect "R" and "G" color wires from ignition unit.
2. Connect a circuit tester as shown in the figure below:

Downloaded from www.Manualslib.com manuals search engine

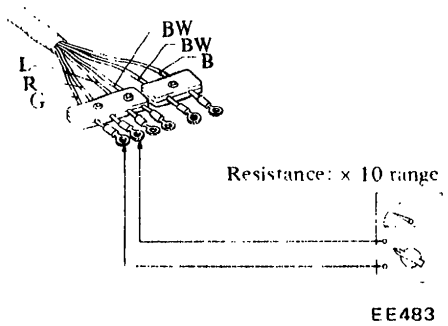

Fig EE-67 Checking pick-up coil

Criterion:

When approximately 720 ohm is indicated ..... OK

Far less than or more than 720 ohm ..... N.G.

If the result is "N.G." – Replace pick-up coil assembly.

4. PICK-UP COIL POWER SIGNAL PULSE CHECK

1. Turn ignition switch off and disconnect electronic fuel injection harness connector from cold start valve.
2. Disconnect pick-up coil lead wires from engine room harness at terminal block.
3. Connect positive lead of an oscilloscope to pick-up coil lead wire connected to "R" color wire of engine room harness, and negative lead to pick-up coil lead wire connected to "G" color wire of engine room harness
4. Set "SLOPE" select switch of oscilloscope to the positive side. (If so equipped.)
5. Rotate starter motor and check the wave form as shown in the figure below.

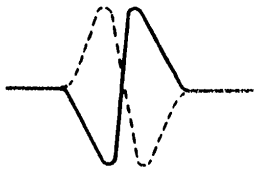

Fig. EE-68 Wave form of pick-up coil signal pulse

Criterion:

When the wave form takes the shape of a full line ..... OK

When the wave form takes the shape of a dashed line or when there is no wave form ..... N.G.

If the result is "N.G." Replace pick-up coil assembly.

– If an oscilloscope is not available –

Use a circuit tester for the check. For accurate testing of pulse signals, however, an oscilloscope is necessary.

Procedure:

1. Turn ignition switch off and disconnect electronic fuel injection harness connector from cold start valve.
2. Connect a circuit tester as shown in the figure below.
3. Rotate starter motor.
4. Read the tester indication.

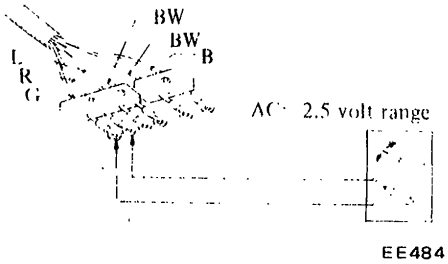

Fig. EE-69 Checking pick-up coil power signal pulse

Criterion:

When pointer deflects slightly ..... OK

When pointer does not deflect at all ..... N.G.

If the result is "N.G." – Replace pick-up coil assembly.

5. TRANSISTOR IGNITION UNIT CHECK (See wiring diagram in Figure EE-79)

Check items 5-1 and 5-2 with an oscilloscope.

Where an oscilloscope is not available, check to make sure that all previous tests are satisfactory and that no spark is issuing from the secondary high-tension wire.

If everything else is satisfactory, then the transistor ignition unit is faulty or there is discontinuity in the secondary high-tension wire. Replace the faulty part. After replacement check the sparks from the secondary wire.

5-1. Checking operation of transistor ignition unit

Procedure:

1. Connect engine room harness to ignition coil external resistor terminals.
2. Connect wiring harness to the ignition unit.

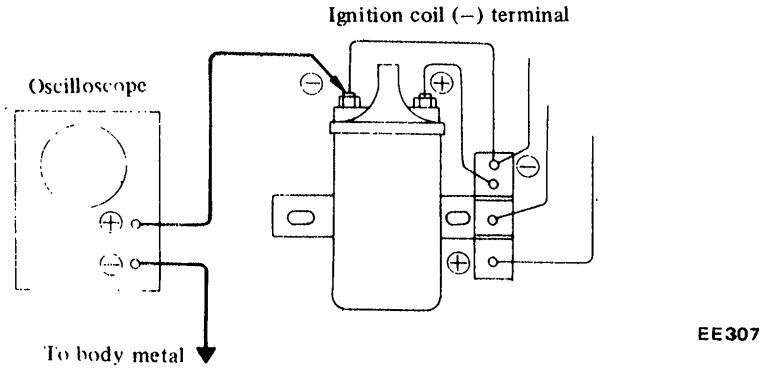

Fig. EE-70 Checking operation of transistor ignition unit

Downloaded from www.Manualslib.com manuals search engine

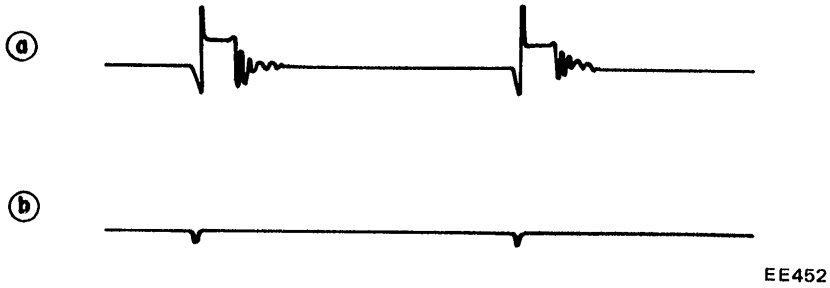

Fig. EE-71 Wave form of pulse

3. Connect pick-up coil lead wires to engine room harness at terminal block.
4. Turn ignition switch off and disconnect electronic fuel injection harness connectors from injectors and cold start valve.
5. Connect oscilloscope as shown in Figure EE-70, rotate the starter motor and observe the wave form on the oscilloscope.

Criterion:

See Figure EE-71.
When a wave form similar to (a) is observed ..... OK
When a wave form similar to (b) is observed or when no wave form is observed ..... N.G.

If the result is "N.G.", the fault lies either in the transistor unit or in the secondary high-tension wire.

Replace these parts.

– If an oscilloscope is not available –

Procedure:

1. Connect engine room harness to ignition coil external resistor terminals.
2. Connect wiring harness to ignition unit.
3. Turn ignition switch off and disconnect electronic fuel injection harness connectors from injectors and cold start valve.
4. Keep the secondary high tension wire end 4 to 5 mm (0.16 to 0.20 in) away from engine blocks or body metal, rotate the starter motor, and check whether sparks jump across the clearance.

Caution: Do not attempt to make this test near electronic fuel injection harness. If this harness is close to high tension wire end, sparks can jump across the air gap and damage control unit.

Criterion:

Where sparks issue ..... OK
Where no spark issues ..... N.G.

If the result is "N.G.", the fault lies either in the transistor unit or in the secondary high-tension wire.

Replace these parts.

5-2. Checking operation of duty

Procedure:

1. Turn ignition switch off and connect electronic fuel injection harness connectors to injectors and cold start valve.
2. While the engine is idling, observe the wave form on the oscilloscope in the same way as stated in item 5-1, Figure EE-70. Determine the ratio t/T as shown in Figure EE-72.

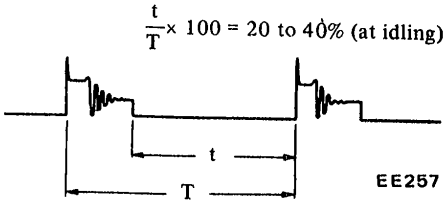

Fig. EE-72 Wave form of duty pulse

Criterion:

When a standard ratio of about 20 to 40% is obtained ..... OK
When the ratio obtained is less than 20%, or more than 40% ..... N.G.

If the result is "N.G." – Replace transistor ignition unit.

5-3. Checking lock preventive circuit

– If a circuit tester is used –

Procedure:

1. Connect a circuit tester as shown in Figure EE-70 or EE-73; positive terminal of tester is connected to "L" color wire and negative terminal of tester is grounded.
2. Turn on ignition switch. Check to see whether the tester indicates the voltage of power source (battery) as soon as ignition switch is turned on.

Criterion:

When power source voltage is indicated ..... OK
When approximately zero-voltage is indicated ..... N.G.

If the result is "N.G." – Take the following measures:

Replace transistor ignition unit.

– If an oscilloscope is used –

Procedure:

1. When using an oscilloscope instead of a tester, arrange the connection in the same way as shown in Figure EE-70 or Figure EE-73. Turn on ignition switch.

Check to see whether the wave form on the oscilloscope rises up to the power source voltage as soon as ignition switch is turned on.

Criterion:

The same as described before for use of a tester.

Downloaded from www.Manualslib.com manuals search engine

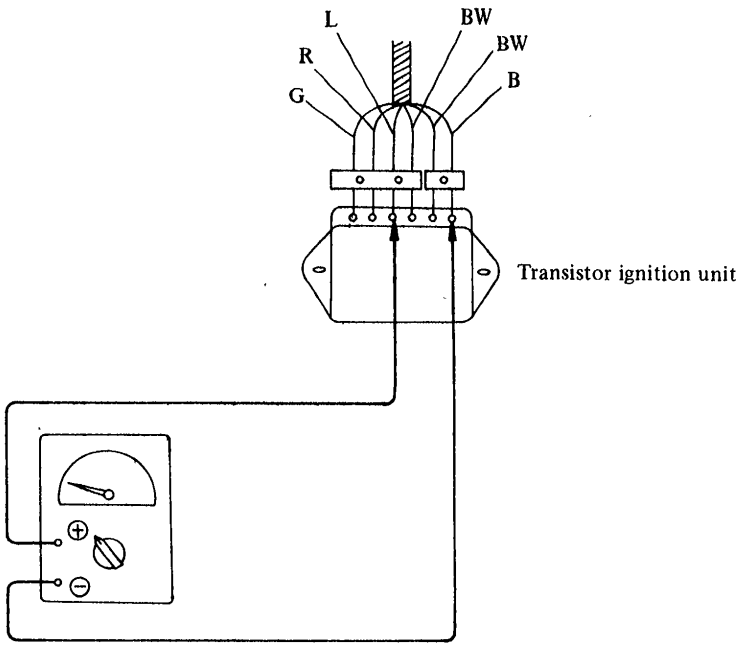

EE485

Fig. EE-73 Checking lock preventive circuit

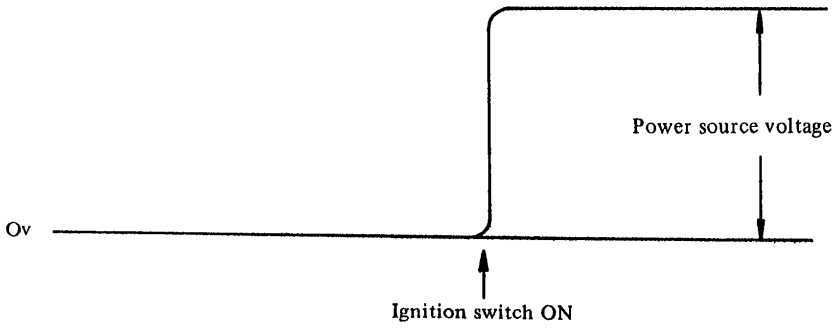

EE430

Fig. EE-74 Wave form of lock preventive circuit

Downloaded from www.Manualslib.com manuals search engine

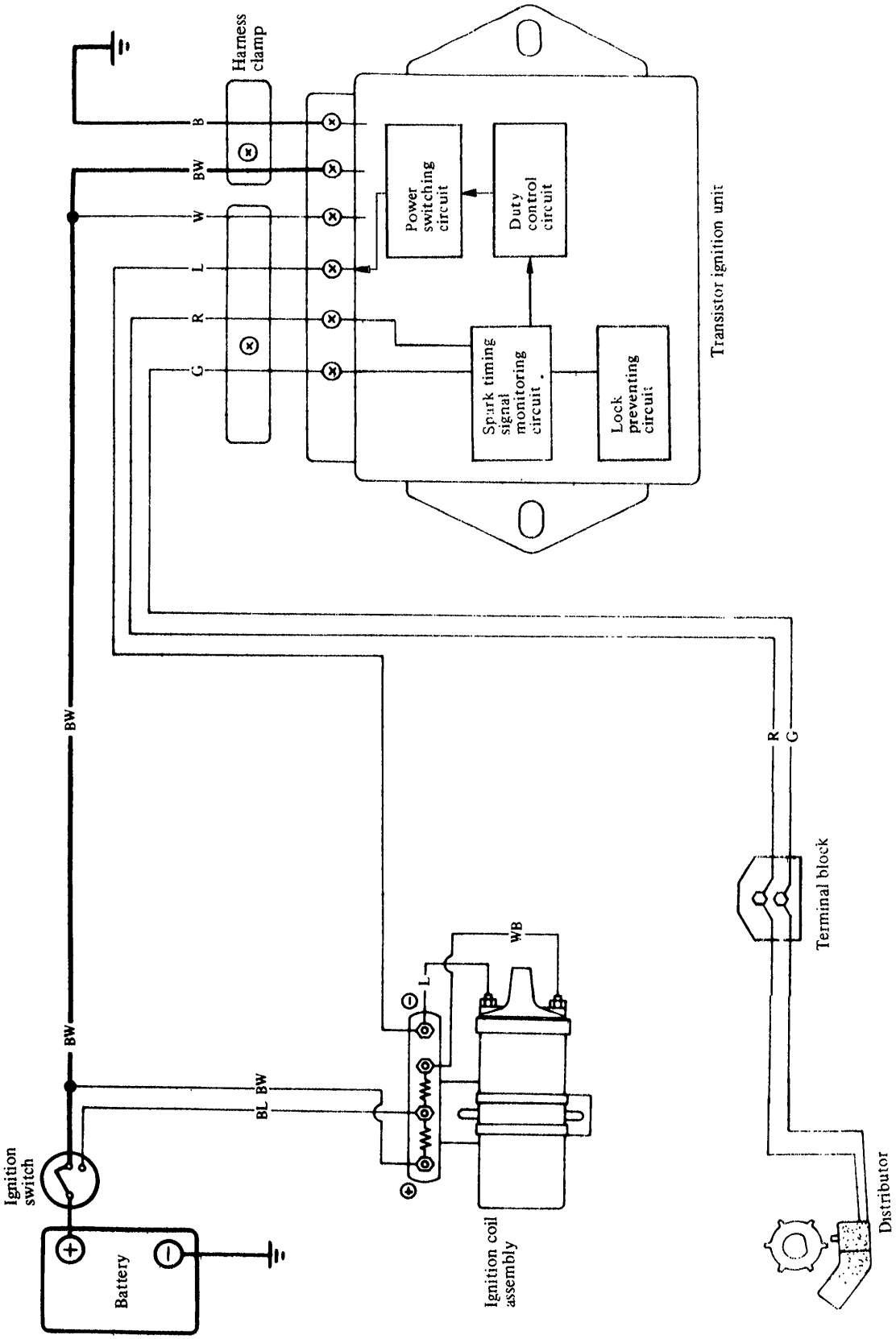

EE486

Fig. EE-75 Wiring diagram for item (1) (Power supply wiring and battery check)

Downloaded from www.Manualslib.com manuals search engine

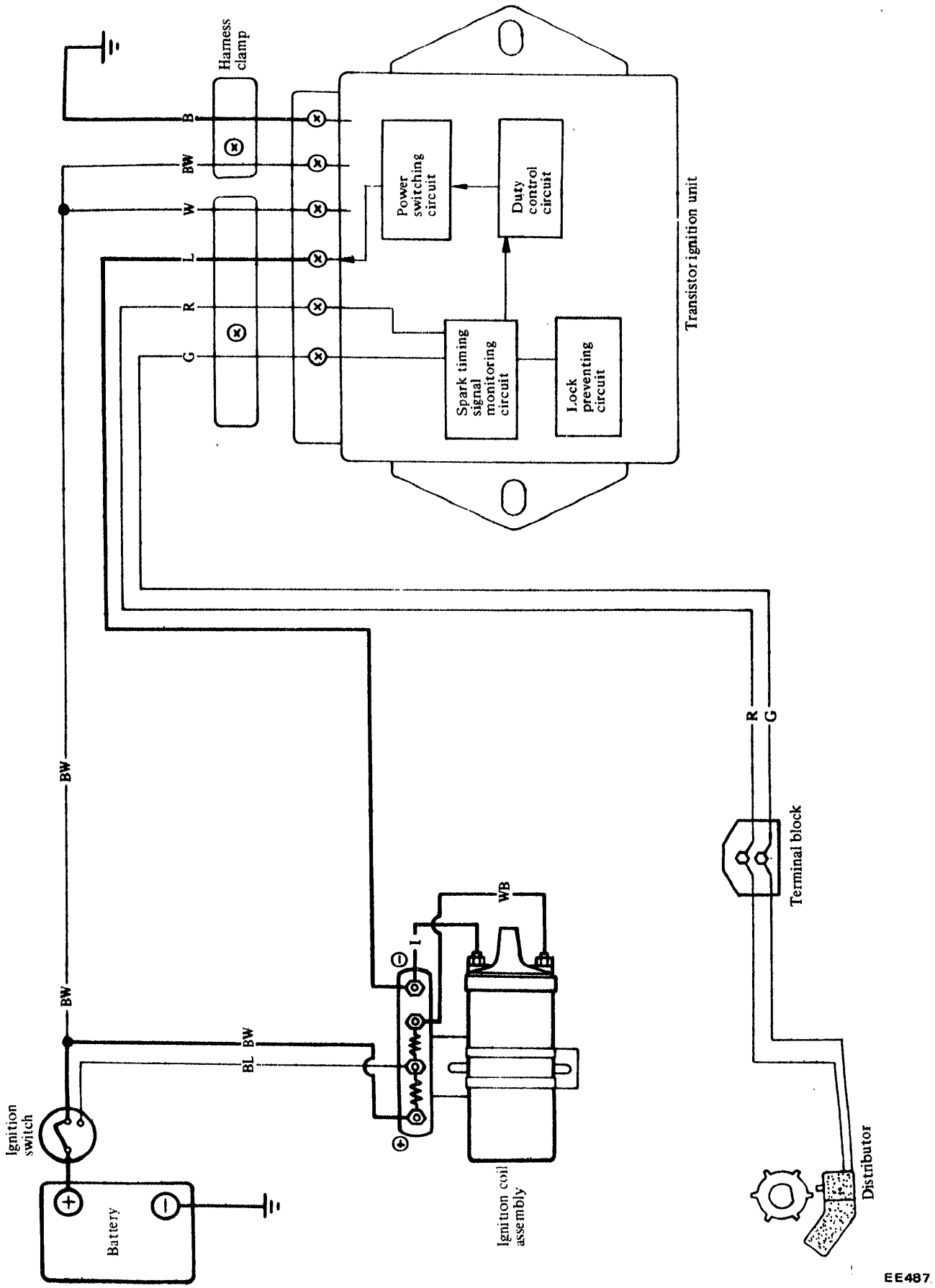

Fig. EE-76 Wiring diagram for item (2)-1 (Checking primary circuit)

Downloaded from www.Manualslib.com manuals search engine

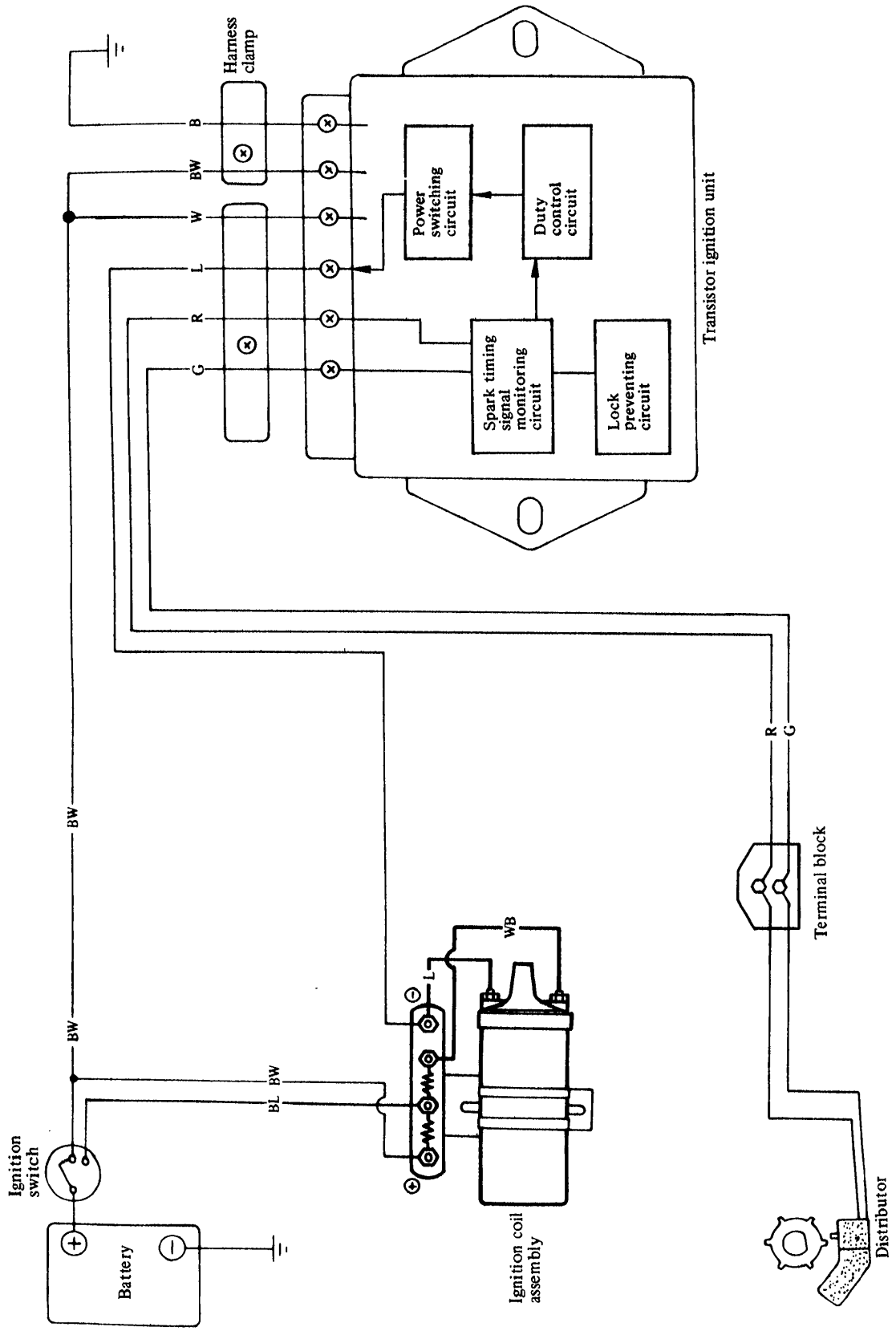

EE488

Fig. EE-77 Wiring diagram for item (2)-2 (Checking ignition coil assemoly)

Downloaded from www.Manualslib.com manuals search engine

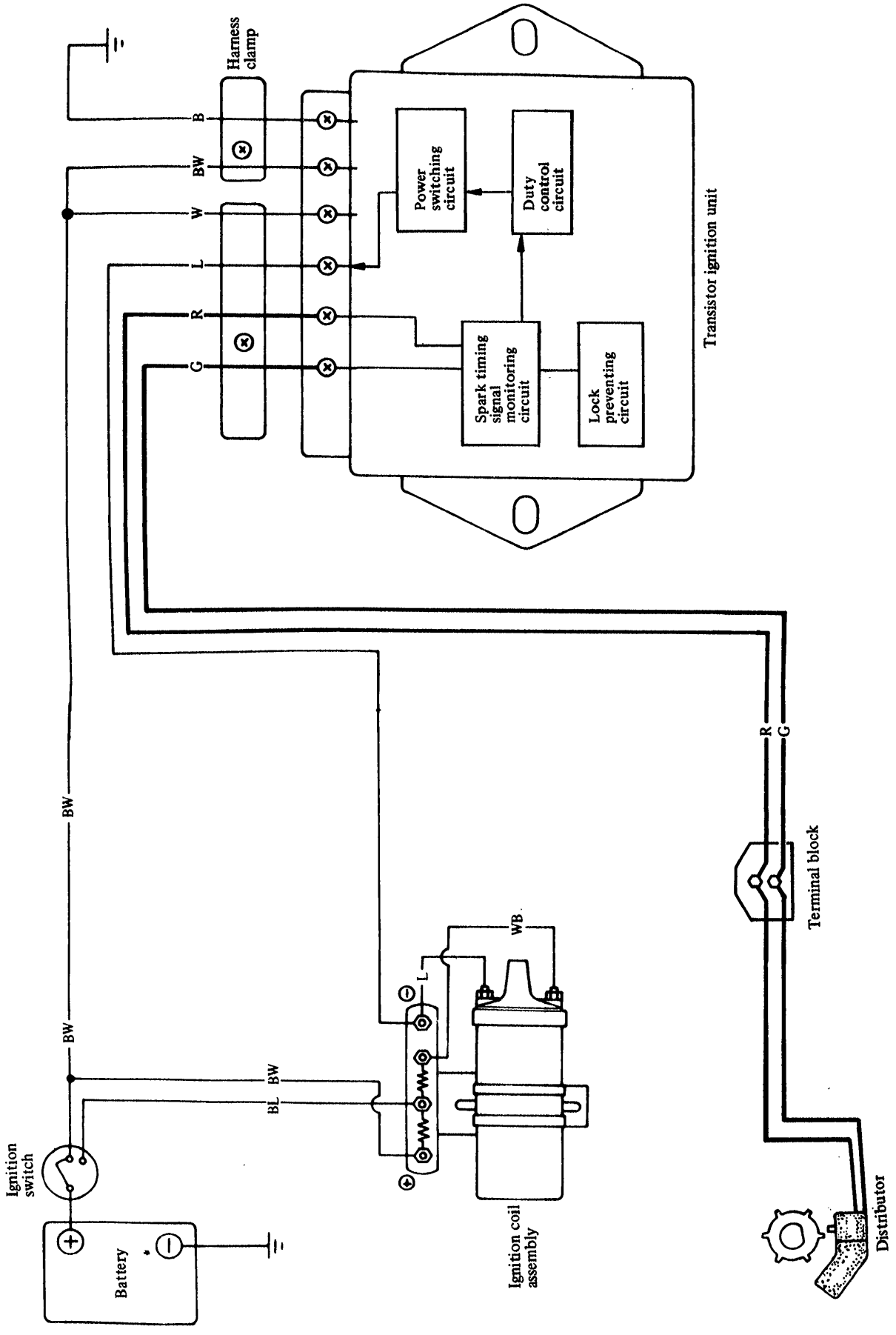

Fig. EE-78 Wiring diagram for item (3) (Pick-up coil continuity check)

Downloaded from www.Manualslib.com manuals search engine

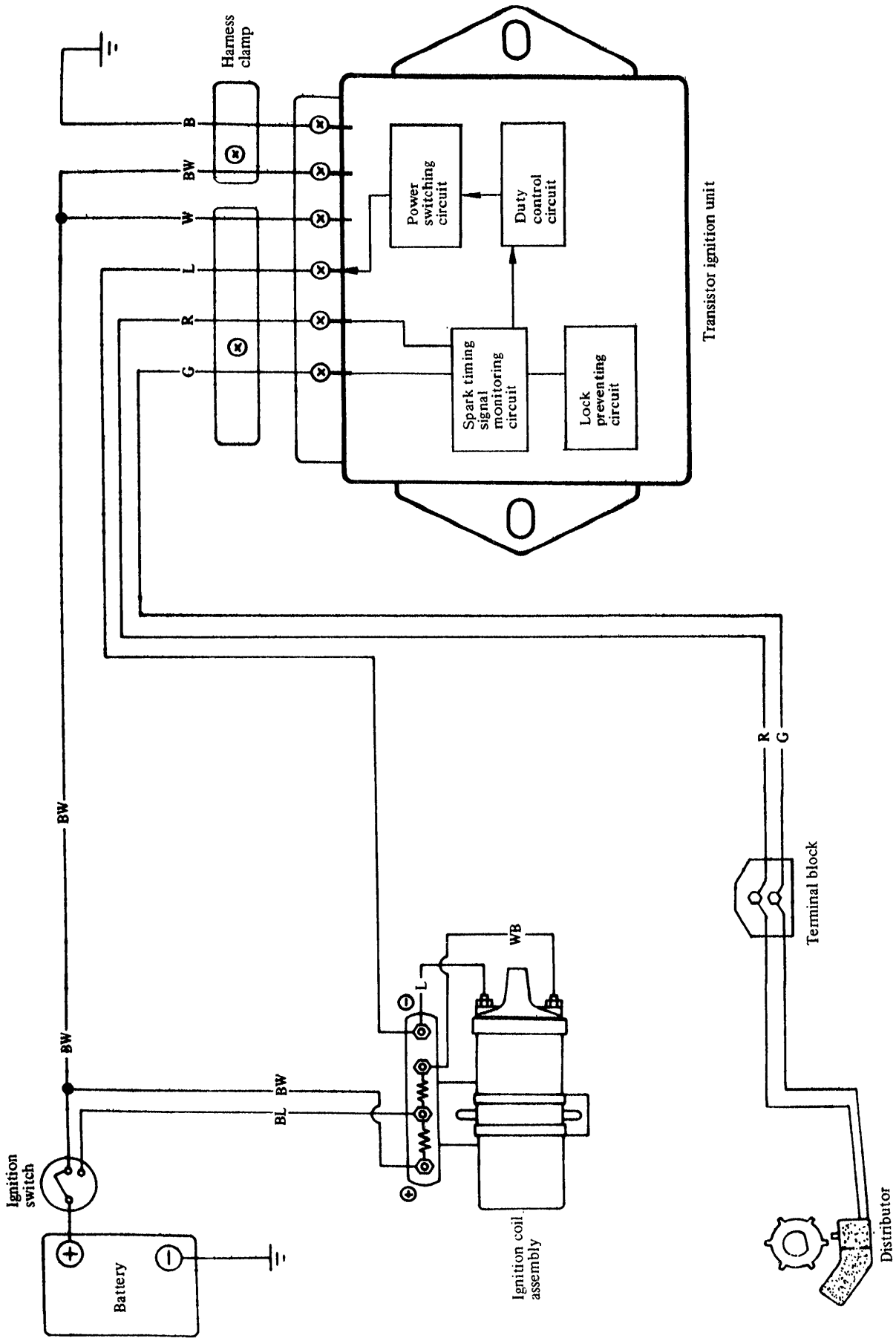

Fig. EE-79 Wiring diagram for item (5) (Transistor ignition unit check)

Downloaded from www.Manualslib.com manuals search engine

IGNITION COIL

The ignition coil is of an oil-filled type. The ignition coil case is filled with oil which has good insulating and heat-radiating characteristics.

The ignition coil has a greater ratio between the primary and secondary windings to step up the battery voltage to the high voltage to cause stronger sparks to jump the spark plug gap.

The cap is made of alkyd resin which offers high resistance to electric arc and increased insulation.

The ignition coil and external resistor should be handled as a matched set.

When high tension wire is installed to ignition coil, there should be no clearance between their caps. Always secure a sufficient clearance between high tension wire and electronic fuel injection harness as shown in Figure EE-81.

Note: Do not disconnect high tension wires from spark plugs during engine running.

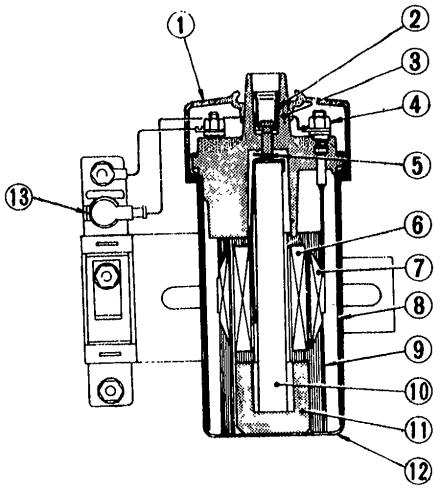

1 Rubber cap for ignition coil
2 Secondary terminal
3 Cap
4 Primary terminal
5 Spring
6 Secondary winding
7 Primary winding
8 Side core
9 Insulator coil
10 Center core
11 Segment
12 Case
13 Rubber cap for terminal

EE389

Fig. EE-80 Construction

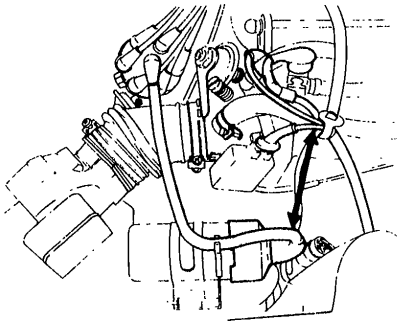

EE429

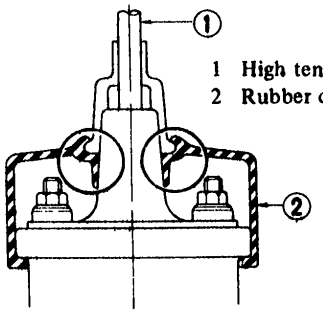

1 High tension wire
2 Rubber cap

EE354

Fig. EE-81 Correct installation of high tension wire

SPECIFICATIONS

Type		CIT18, STC-12
Primary voltage	V	12
Spark gap	mm (in)	More than 7 (0.276)
Primary resistance at 20°C (68°F)	Ω	0.45 to 0.55
Secondary resistance at 20°C (68°F)	kΩ	8.5 to 12.7
External resistor at 20°C (68°F)	Ω	1.15 to 1.45 (Standard resistor 0.4 + 0.9)

Downloaded from www.Manualslib.com manuals search engine

SPARK PLUG

CONTENTS

DESCRIPTION EE-40
INSPECTION EE-40
CLEANING AND REGAPPING EE-40
SERVICE DATA AND SPECIFICATIONS EE-41
TROUBLE DIAGNOSES AND CORRECTIONS EE-42

DESCRIPTION

The spark plugs are standard type, having 14 mm (0.551 in) threads and 1.0 to 1.1 mm (0.039 to 0.043 in) [Canadian models 0.7 to 0.8 mm (0.028 to 0.031)] gap.

Note: All spark plugs installed on an engine must be of the same brand and heat range.

INSPECTION

1. Remove spark plug wire by pulling on boot, not on wire itself.
2. Remove spark plugs with spark plug wrench.
3. Check electrodes and inner and outer porcelains of plugs, noting the type of deposits and the degree of electrode erosion. Refer to Figure EE-82.

Normal: Brown to grayish-tan deposits and slight electrode wear indicate correct spark plug heat range.

Carbon fouled: Dry fluffy carbon deposits on the insulator and electrode are usually caused by weak ignition, too rich fuel mixture, dirty air cleaner, etc.
Check engine and repair if necessary.
When the car is used primarily for short distance travel, so that the engine does not run long enough to reach its normal operating temperature, it is advisable to use hot-type spark plugs.

Oil fouled: Wet black deposits indicate excessive oil entrance into combustion chamber through worn rings and pistons or excessive clearance between valve guides and stems.
Repair engine and replace faulty parts if necessary.

Overheating: White or light gray insulator with black or gray brown spots and bluish burnt electrodes indicate engine overheating. Moreover, the appearance results from incorrect ignition timing, loose spark plugs, low fuel pump pressure, wrong selection of fuel, a hotter plug, etc.
Check engine and repair if necessary.
When the car is frequently operated with throttle wide open for long periods of time, such as when towing another vehicle, it is advisable to use cold-type spark plugs.

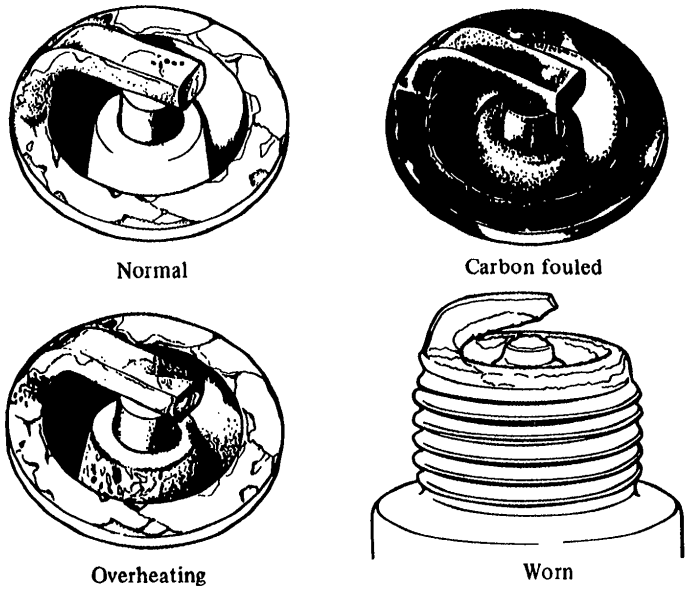

Fig. EE-82 Spark plug

4. After cleaning, dress electrodes with a small fine file to flatten the surfaces of both center and side electrodes in parallel. Set spark plug gap to specification.
5. Install spark plugs and torque each plug to 1.5 to 2.0 kg-m (11 to 14 ft-lb).
6. Connect spark plug wires.

CLEANING AND REGAPPING

Clean spark plugs in a sand blast type cleaner. Avoid excessive blasting. Clean and remove carbon or oxide

Downloaded from www.Manualslib.com manuals search engine

deposits, but do not wear away porcelain. If deposits are too stubborn, discard plugs.

After cleaning spark plugs, renew firing surface of electrodes with file mentioned above. Then gap spark plugs to 1.0 to 1.1 mm (0.039 to 0.043 in) [Canadian models 0.7 to 0.8 mm (0.028 to 0.031 in)] using a round wire feeler gauge. All spark plugs new or used should have gap checked and reset by bending ground electrode.

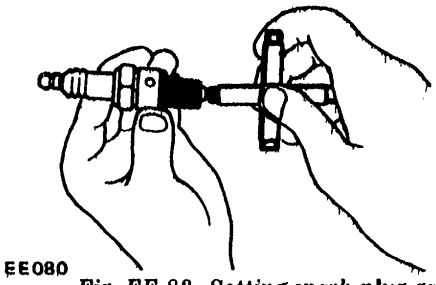

Fig. EE-83 Setting spark plug gap

SERVICE DATA AND SPECIFICATIONS

TYPE	Standard	B6ES-11, L45W-11 BR6ES*
	Hot type	B5ES-11, L46W-11 BR5ES*
	Cold type	B7ES-11, L44W-11 BR7ES*
Plug gap	mm (in)	1.0 to 1.1 (0.039 to 0.043) 0.7 to 0.8 (0.028 to 0.031)*
Tightening torque	kg-m (ft-lb)	1.5 to 2.0 (11 to 14)

*For Canada

Downloaded from www.Manualslib.com manuals search engine

TROUBLE DIAGNOSES AND CORRECTIONS

1. When engine does not start

If there is no problem in fuel system, ignition system should be checked. This can be easily done by detaching a high tension wire from spark plug, starting engine and observing condition of spark that occurs between high tension wire and spark plug terminal. After checking this, repair as necessary.

Note: Turn ignition switch off and disconnect ground cable from battery. Disconnect electronic fuel injection harness connector from injectors and cold start valve to cut off supply of fuel to engine. Then, observe the condition of sparks while starter motor is in operation.

Condition	Location	Probable cause	Corrective action
No spark at all	Distributor	Breakage of lead-wire on low tension side.	Repair.
		Poor insulation of cap and rotor head.	Replace.
		Open pick-up coil.	Replace.
		Air gap wider than specification.	Adjust.
	Ignition coil	Wire breakage or short circuit of coil.	Replace with new one.
	High tension wire	Wire coming off.	Repair.
		Faulty insulation.	Replace.
	Transistor ignition unit	Faulty transistor ignition unit.	Replace.
Spark length More than 6 mm (0.236 in)	Spark plugs	Spark plug gap too wide.	Correct or replace.
		Too much carbon.	Clean or replace.
		Broken neck of insulator.	Replace.
		Expiration of plug life.	Replace.
	Distributor	Air gap too wide.	Correct.
	Transistor ignition unit	Faulty transistor ignition unit.	Replace.

Downloaded from www.Manualslib.com manuals search engine

2. Engine rotates but does not run smoothly.

This may be caused by the ignition system or other engine conditions not related to ignition. Therefore, first a complete inspection of ignition system should be carried out.

Condition	Location	Probable cause	Corrective action
Engine misses.	Distributor	Foreign matter on pick-up coil.	Clean.
		Improper air gap.	Correct.
		Leak of electricity at cap and rotor head.	Repair or replace.
		Breakage of pick-up coil lead wire.	Replace.
		Worn or shaky breaker plate.	Replace assembly.
		Worn or shaky distributor driving shaft.	Replace assembly.
	Ignition coil	Layer short circuit or inferior quality coil.	Replace with good one.
	High tension wire	Deterioration of insulation with consequent leak of electricity.	Replace.
	Spark plugs	Fouled.	Clean.
		Leak of electricity at upper porcelain insulator.	Repair or replace.
	Transistor ignition unit	Faulty transistor ignition unit.	Replace.
Engine causes knocking very often.	Distributor	Improper ignition timing (too advanced).	Correct.
		Coming off or breakage of governor spring.	Correct or replace.
		Worn pin or hole of governor.	Replace.
	Spark plugs	Burnt too much.	Replace.
Engine does not deliver enough power.	Distributor	Improper ignition timing (too retarded).	Correct.
		Improper functioning governor.	Replace assembly.
		Foreign particles stuck in air gap.	Clean.
	Spark plugs	Fouled.	Clean.

Downloaded from www.Manualslib.com manuals search engine

DATSUN 280Z
MODEL S30 SERIES

NISSAN

NISSAN MOTOR CO., LTD.
TOKYO, JAPAN

SECTION ER

ENGINE REMOVAL & INSTALLATION

ER

ENGINE REMOVAL AND INSTALLATION ..... ER- 2

SERVICE DATA AND SPECIFICATIONS ..... ER- 6

Downloaded from www.Manualslib.com manuals search engine

ENGINE REMOVAL AND INSTALLATION

CONTENTS

REMOVAL ER-2
INSTALLATION ER-5
ENGINE MOUNTING INSULATORS ER-5
FRONT INSULATOR ER-5
REAR INSULATOR ER-6

REMOVAL

It is much easier to remove engine and transmission as a single unit than to remove them separately. After removal, engine can be separated from transmission assembly.

But, take note of the following points. There are two types of exhaust systems–one for California models, with a catalytic converter as an emission device, and the other for non-California models without catalytic converter. In the California models the component parts of exhaust system become hotter than those of the non-California models. Therefore, you should not remove the engine until the exhaust system has completely cooled off.

Otherwise, you may burn yourself and/or fire may break out in fuel line.

1. Follow the procedure below to decrease pressure in fuel hose to zero. (This is the same operation as the removal of cold start valve described in Section EF.)

(1) Disconnect ground cable from battery.
(2) Disconnect cold start valve harness connector.
(3) Using two jumper wires shown in illustration, connect each terminal to battery positive and negative terminals.
(4) Release pressure in fuel system by connecting other terminals of jumper wires to cold start valve connector for two or three seconds.

Note: Be careful to keep both terminals separate in order to avoid short circuit.

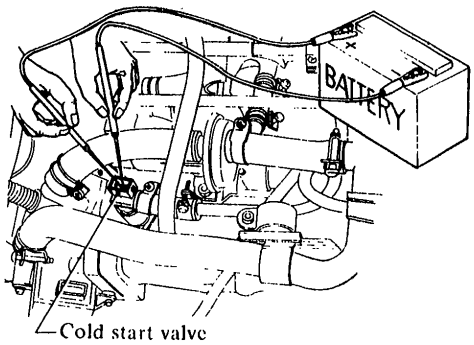

EF754

Fig. ER-1 Releasing pressure in fuel system

Notes:

a. **Be sure to hoist engine and jack up transmission in a safe manner.**
b. **Fender covers should be used to prevent damaging car body.**
c. **Place wheel chocks in front of front wheels and in rear of rear wheel.**

2. Disconnect battery ground cable.
3. Remove hood as follows:
(1) Mark hood hinge locations on hood to facilitate proper reinstallation.
(2) Support hood by hand and remove bolts securing it to hood hinge, taking care not to let hood slip when bolts are removed.
(3) Remove hood from hood hinge with the help of an assistant. See Figure ER-2.

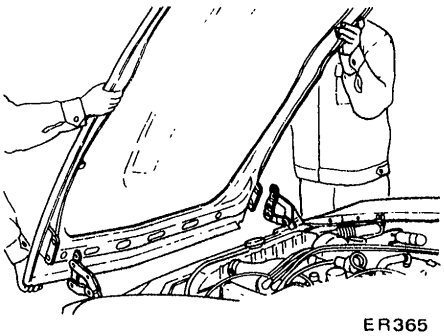

ER365

Fig. ER-2 Removing hood

4. Drain radiator coolant and engine oil.
5. Disconnect upper and lower hoses from radiator.
6. Remove air flow meter and air duct clamps (rubber hose). See Figure ER-3.

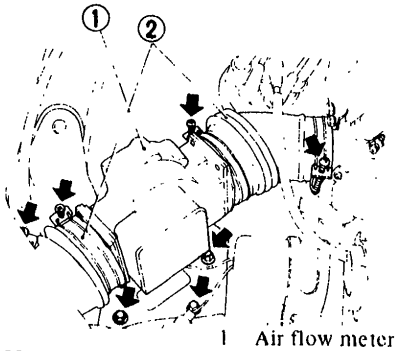

ER281

1 Air flow meter
2 Air duct

Fig. ER-3 Removing air flow meter

Note: On air conditioner equipped models, proceed as follows, referring to Section AC (pages AC-27 through AC-37).

a. **Disconnect inlet and outlet refrigerant lines from condenser.**
b. **Remove high and low flexible hoses from compressor.**
c. **Disconnect compressor clutch wire at connector.**
d. **Disconnect hoses to vacuum connector and fast idle actuator.**

7. Remove air cleaner.
8. Disconnect hoses ① from canister and remove canister. See Figure ER-4.
9. Disconnect fuel return hose ② and fuel charge hose ③. See Figure ER-4.

Downloaded from www.Manualslib.com manuals search engine

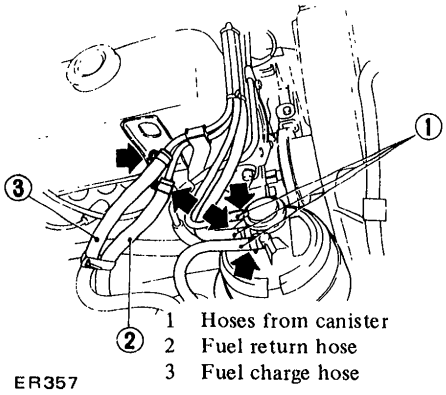

1 Hoses from canister
2 Fuel return hose
3 Fuel charge hose

Fig. ER-4 Removing canister and disconnecting fuel hoses

10. Remove radiator and shroud (if so equipped).

11. Disconnect accelerator linkage and wire for electric fuel injector. See Figure ER-5.

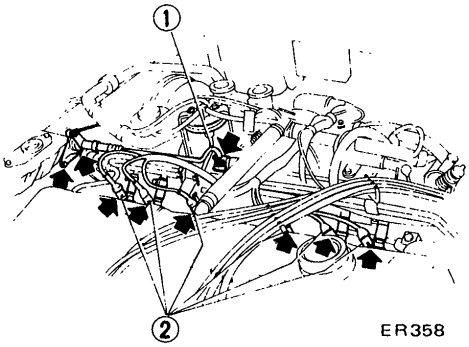

1 Accelerator linkage
2 Fuel injector connector

Fig. ER-5 Disconnecting accelerator linkage

Notes:

On automatic transmission models:

a. Remove splashboard.

b. Disconnect oil cooler hoses from oil cooler installed at lower end of radiator.

c. Disconnect vacuum hose.

12. Disconnect the following cables, connectors, wires and hoses:

- Engine ground cable at engine connection end
- Wires to starter motor and alternator
- Wire to throttle valve switch and B.C.D.D. solenoid valve. See Figure ER-6.

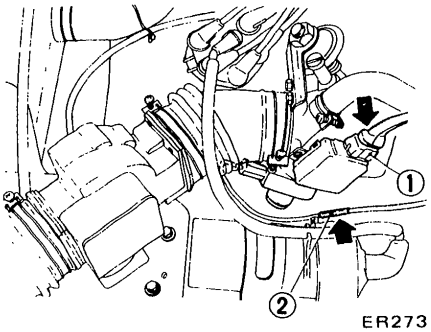

1 Throttle valve switch
2 B.C.D.D. connector

Fig. ER-6 Disconnecting wire for throttle valve switch and B.C.D.D. solenoid valve

- High tension wire (between ignition coil and distributor). See Figure ER-7.
- Wire to block terminal distributor harness. See Figure ER-7.

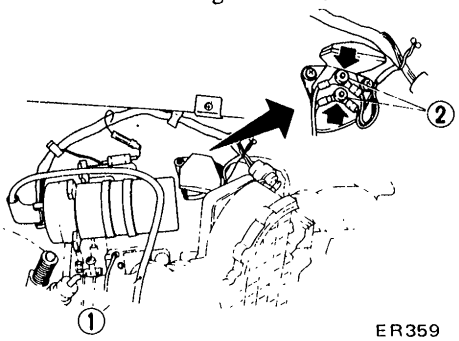

1 High tension cable
2 Block terminal

Fig. ER-7 Disconnecting wire for block terminal

- Wire for cold start valve and air regulator. See Figure ER-8.

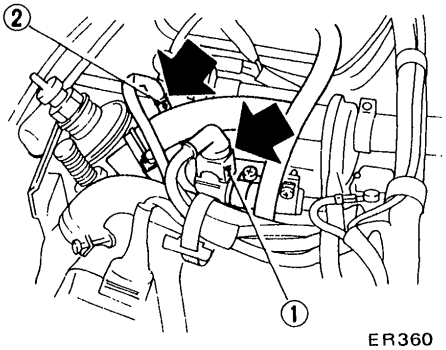

1 Cold start valve connector
2 Air regulator connector

Fig. ER-8 Disconnecting wire for cold start valve and air regulator

- Wire to thermostat housing. See Figure ER-9.

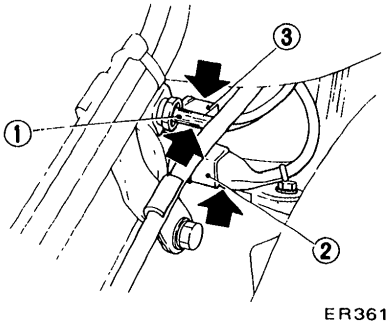

1 Thermal transmitter connector
2 Thermotime switch connector
3 Water temperature sensor connector

Fig. ER-9 Disconnecting wire for thermostat housing

- Heater inlet and outlet hoses. See Figure ER-10.

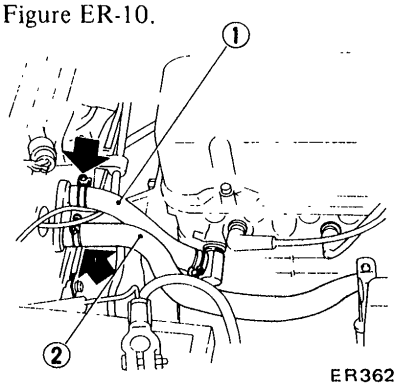

1 Heater inlet hose
2 Heater outlet hose

Fig. ER-10 Disconnecting heater inlet and outlet hoses

- Vacuum hose to Master-Vac at intake manifold.
- Wires for oil pressure switch.

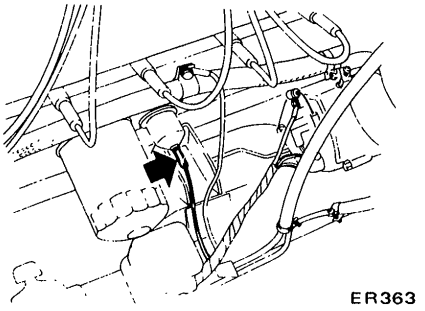

Fig. ER-11 Disconnecting wire for oil pressure switch

13. Remove clutch operating cylinder (Manual transmission models). See Figure ER-12.

14. Disconnect speedometer cable from rear extension housing and wire for back-up lamp switch. See Figure ER-12.

Downloaded from www.Manualslib.com manuals search engine

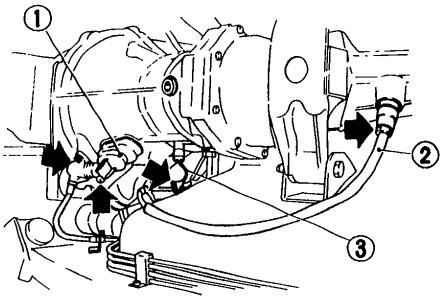

ER364

1 Clutch operating cylinder
Tightening torque:
2.5 to 3.0 kg-m (18 to 22 ft-lb)
2 Speedometer cable
3 Wire for back-up lamp switch

Fig. ER-12 Removing clutch operating cylinder

Note: On automatic transmission models:
Disconnect wire at connections of inhibitor switch and kickdown solenoid at wire connector.

15. Remove center console. Refer to Section BF (Page BF-29) for removal. (Manual transmission only)
16. Remove C-ring and control lever pin from transmission striking rod guide, and remove control lever. (Manual transmission only)

For car equipped with automatic transmission, disconnect range selector lever.

17. Disconnect exhaust front tube from exhaust manifold. See Figure ER-13.

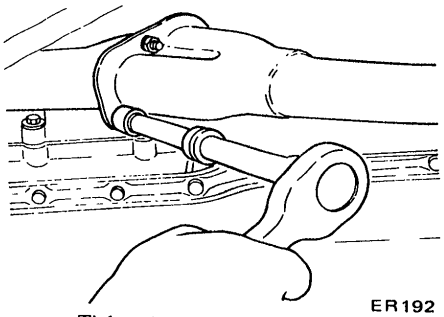

ER192

Tightening torque:
4.6 to 6.1 kg-m (33 to 44 ft-lb)

Fig. ER-13 Disconnecting exhaust front tube

18. Remove front tube bracket from rear extension housing. See Figure ER-14.

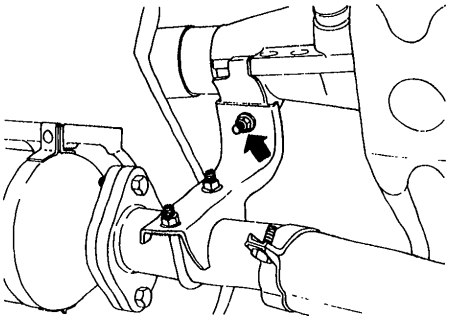

ER253

Fig. ER-14 Removing front tube bracket

Note: Hold front tube end up with a thread or wire to prevent tube from falling.

19. Remove bolts securing insulator and put it on exhaust tube. See Figure ER-15.

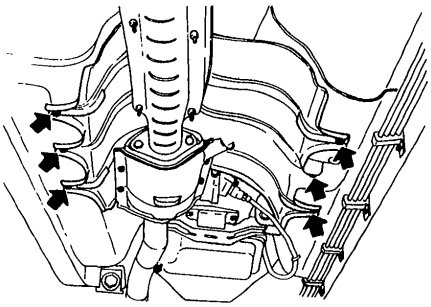

ER276

Fig. ER-15 Removing insulator

20. Remove propeller shaft.

Remove four bolts on the differential carrier side, withdraw propeller shaft, and seal end of rear extension housing to prevent oil leakage. See Figure ER-16.

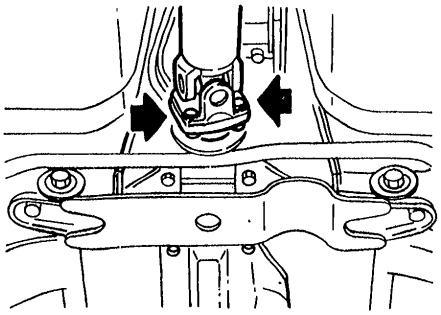

ER193

Tightening torque:
3.5 to 4.5 kg-m (25 to 33 ft-lb)

Fig. ER-16 Removing propeller shaft

Note: Put match marks on both shaft and companion flange so that shaft can be reinstalled in original position.

21. Support transmission with jack.
22. Remove bolts securing rear engine mounting member to body. See Figure ER-17.

Note: In this operation, care should always be taken to prevent the unit from hitting any adjacent parts.

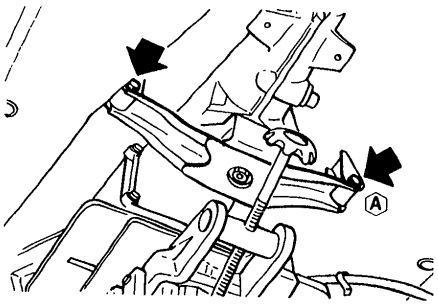

ER194

Tightening torque:
Ⓐ 3.2 to 4.3 kg-m (23 to 31 ft-lb)

Fig. ER-17 Removing rear engine mounting member

23. Connect suitable wire or chain to engine slingers and raise engine to take weight off front mounting insulators.
24. Remove bolts securing engine support to front mounting insulators.
25. Raise engine and transmission, and remove from car as a single unit. See Figure ER-18.

Downloaded from www.Manualslib.com manuals search engine

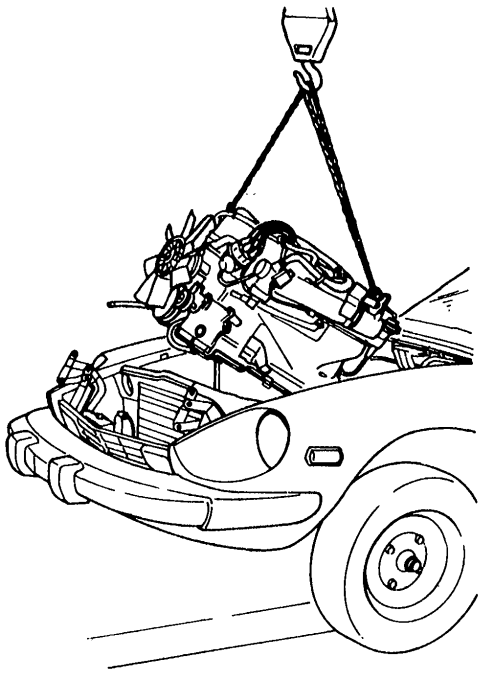

ER255

Fig. ER-18 Removing engine

INSTALLATION

Install in the reverse order of removal, observing the following:

1. When installing, first secure rear engine mounting member to body.
2. Refer to applicable section when installing and adjusting any parts.
3. When installing hood following engine installation, be sure that it is properly centered and that hood lock operates securely. Refer to Section BF for Adjustment.

ENGINE MOUNTING INSULATORS

Three insulators are used to mount the engine and transmission; two located at left and right front ends of the cylinder block and one at the transmission rear extension housing.

Replace insulator if it shows signs of separation or deterioration.

Be sure to keep insulator free from oil or grease.

Removal

1. Suspend engine with wire or chain.
2. Loosen front engine mounting insulator upper nuts (both sides).
3. Make sure that wire or chain used to suspend engine is positioned properly so that no load is applied to insulators, and remove nuts completely.
4. Lift up engine, and separate insulators from engine mounting brackets.

FRONT INSULATOR

Left and right front insulators are identical, and are interchangeable. See Figure ER-19.

Inspection

If there is damage, deterioration or separation of bounded surface, replace.

Installation

Install front insulators in reverse sequence of removal, noting the following:

1. Both the left and right front insulators are used commonly. However, when installing them, pay attention to their upper and lower directions. See Figure ER-19.
2. The shape of the right side bracket differs from that of the left side bracket. Tighten the bolts and nuts correctly and securely. See Figure ER-19.

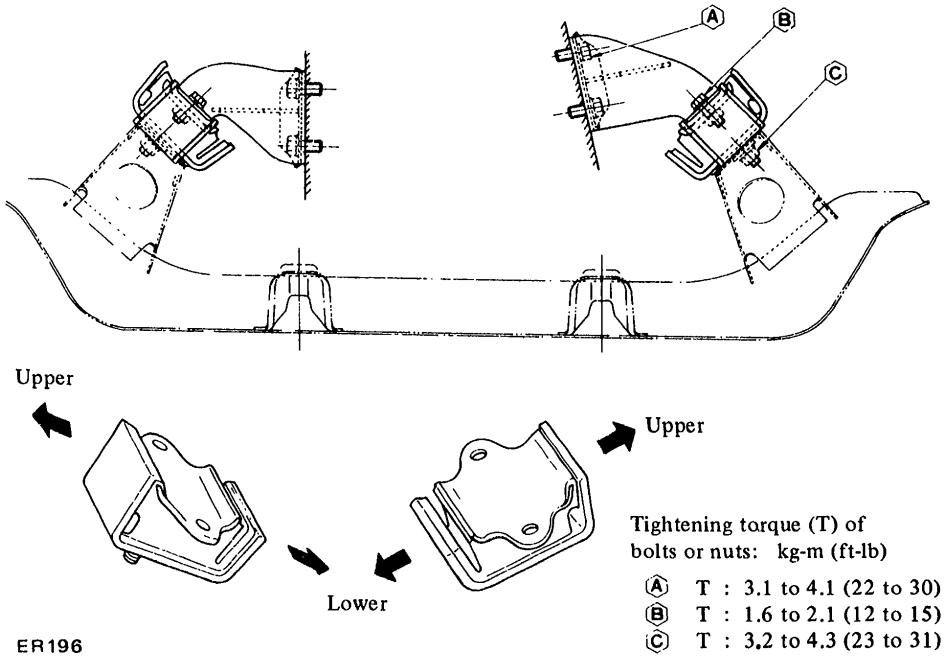

Fig. ER-19 Sectional view of front engine mounting, and front insulator

Downloaded from www.Manualslib.com manuals search engine

REAR INSULATOR

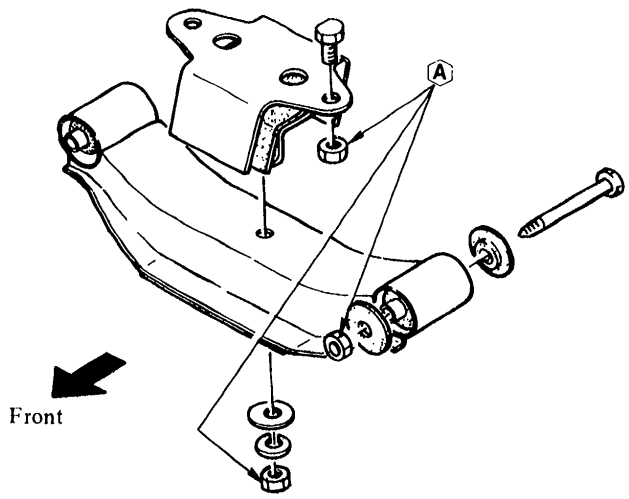

ER366

Tightening torque of bolts or nuts:
Ⓐ 3.2 to 4.3 kg-m (23 to 31 ft-lb)

Fig. ER-20 Rear engine mounting and rear insulator

Removal

1. Support transmission with a jack or suitable stand so that engine does not drop down.
2. Remove rear engine mounting member installation bolts.
3. Engine mounting member is provided with openings for removing and installing operations. Remove nuts and separate insulator from transmission.
4. Remove bolts. and separate insulator from engine mounting member.

Inspection

If there is demage, deterioration or separation of bounded surface, replace.

Installation

Install rear engine mounting member and insulator in reverse sequence of removal, noting the following:

1. Tighten nuts and bolts correctly and securely. As for tightening torque, see Figure ER-20.
2. Carefully arrange the front and rear directions of rear engine mounting member and insulator when installing. See Figure ER-20.

SERVICE DATA AND SPECIFICATIONS

TIGHTENING TORQUE

	kg-m (ft-lb)
Rear engine mounting to body	3.2 to 4.3 (23 to 31)
Rear insulator to rear engine mounting member	3.2 to 4.3 (23 to 31)
Rear insulator to transmission	3.2 to 4.3 (23 to 31)
Front engine mounting bracket to engine	3.1 to 4.1 (22 to 30)
Front insulator to engine mounting bracket	1.6 to 2.1 (12 to 15)
Front insulator to suspension member	3.2 to 4.3 (23 to 31)
Clutch operating cylinder to clutch housing	2.5 to 3.0 (18 to 22)
Front tube to exhaust manifold	4.6 to 6.1 (33 to 44)
Propeller shaft to companion flange	3.5 to 4.5 (25 to 33)

Downloaded from www.Manualslib.com manuals search engine

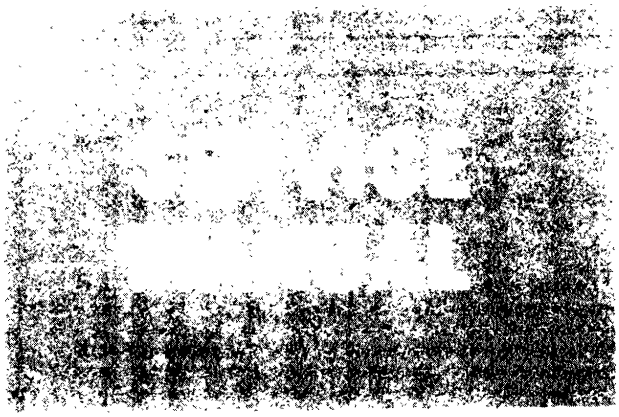

DATSUN 280Z
MODEL S30 SERIES

SECTION CL

CLUTCH

CL

CLUTCH ..... CL- 2

CLUTCH CONTROL ..... CL- 5

SERVICE DATA AND SPECIFICATION CL-1

TROUBLE DIAGNOSES AND CORRECTIONS CL-11

SPECIAL SERVICE TOOLS CL-13

NISSAN

NISSAN MOTOR CO., LTD.
TOKYO, JAPAN

Downloaded from www.Manualslib.com manuals search engine

CLUTCH

CONTENTS

DESCRIPTION CL-2
CLUTCH DISC AND COVER CL-2
REMOVAL CL-2
INSPECTION CL-2
INSTALLATION CL-3
RELEASE BEARING CL-4
REMOVAL CL-4
INSPECTION CL-4
INSTALLATION CL-4
PILOT BUSHING CL-4
REMOVAL CL-4
INSPECTION CL-4
INSTALLATION CL-4

DESCRIPTION

There are two types of clutch – C225S for S30 models and D240K for GS30 (2 + 2 seater) models.

The clutch is a single dry disc diaphragm spring type. The major components are clutch cover, pressure plate, diaphragm spring, and wire rings. The clutch disc is provided with riveted plates on both surfaces and coil springs arranged in a link. The coil springs absorb shock while engaging the clutch, softening the smoothing clutch engagement.

Release bearing, sleeve, and withdrawal lever are used to control clutch engagement and disengagement.

Each part of the clutch assembly is secured with rivets. Therefore, when a problem is uncorrectable, replace the clutch assembly.

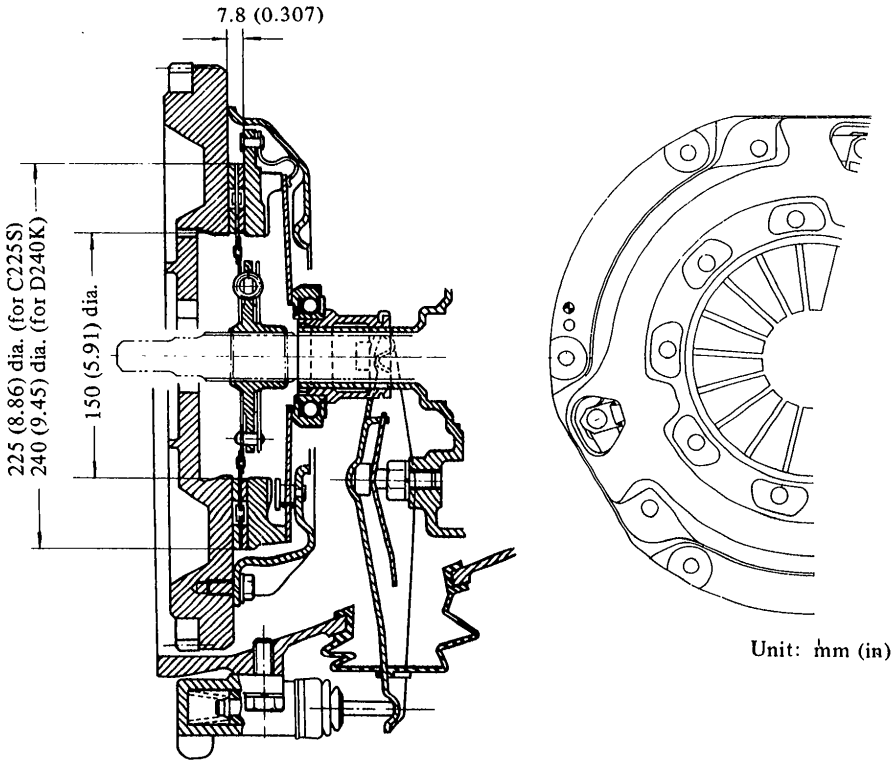

Fig. CL-1 Construction of clutch

CLUTCH DISC AND COVER

REMOVAL

1. Remove transmission from engine. For removal procedure, refer to the Section Transmission.
2. Insert Clutch Aligning Bar ST20660000 into clutch disc hub until it will no longer go. It is important to support weight of clutch disc in the steps that follow. See Figure CL-2.

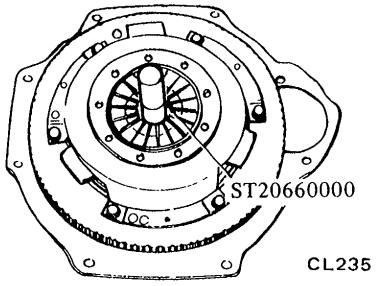

Fig. CL-2 Supporting clutch assembly

3. Loosen bolts attaching clutch cover to flywheel, one turn each at a time, until spring pressure is released. Be sure to turn them out in a criss-cross fashion.
4. Remove clutch disc and cover assembly.

INSPECTION

Wash all the disassembled parts except disc assembly in suitable cleaning solvent to remove dirt and grease before making inspection and adjustment.

Downloaded from www.Manualslib.com manuals search engine

Flywheel and pressure plate

Check friction surface of flywheel and pressure plate for scoring or roughness. Slight roughness may be smoothed by using fine emery cloth. If surface is deeply scored or grooved, the part should be replaced.

Clutch disc assembly

Inspect clutch disc for worn or oily facings, loose rivets and broken or loose torsional springs.

1. If facings are oily, the disc should be replaced. In this case, inspect transmission front cover oil seal, pilot bushing, engine rear oil seals and other points for oil leakage.
2. The disc should also be replaced when facings are worn locally or worn down to less than 0.3 mm (0.012 in) at rivet. See Figure CL-3.

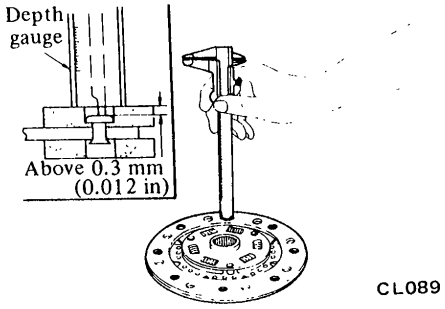

Fig. CL-3 Measuring clutch lining

3. Check disc plate for runout whenever the old disc or a new one is installed.
4. If runout exceeds the specified value at the outer circumference, replace or repair disc. See Figure CL-4.

Runout: 0.5 mm (0.020 in) total indicator reading

R (from the hub center):
112 mm (4.41 in)
C225S
119.5 mm (4.70 in)
D240K

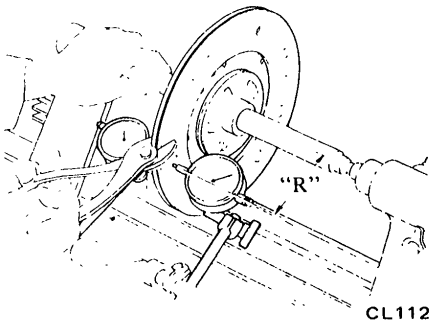

Fig. CL-4 Repairing disc runout

5. Check the fit of disc hub on transmission main drive gear splines for smooth sliding. If splines are worn that is, backlash exceeds 0.4 mm (0.016 in) at the outer edge of clutch disc, clutch disc or main drive gear should be replaced.

Clutch cover assembly

1. Check the end surface of diaphragm spring for wear. If excessive wear is found, replace clutch cover assembly.
2. Measure the height of diaphragm spring as outlined below:

(1) Place Distance Piece ST20050100 on Base Plate ST20050010 and then tighten clutch cover assembly on the base plate by using Set Bolts ST20050051. See Figure CL-5.

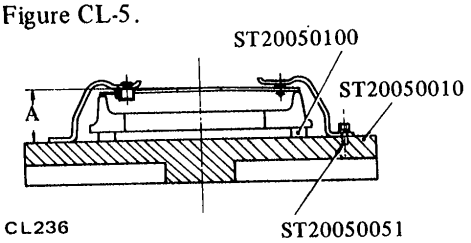

Fig. CL-5 Measuring the height of diaphragm spring

(2) Measure the height "A" at several points with a vernier caliper depth gauge. See Figure CL-5. If the height "A" of spring end is beyond the specified value, adjust the spring height with Diaphragm Spring Adjusting Wrench ST20050240 as shown in Figure CL-6.

A: 33 to 35 mm
(1.30 to 1.38 in)
C225S
37.5 to 39.5 mm
(1.48 to 1.56 in)
D240K

If necessary, replace clutch cover assembly. Also, unevenness of diaphragm spring toe height should be less than 0.5 mm (0.020 in).

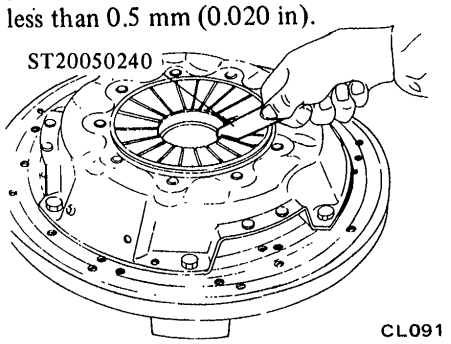

Fig. CL-6 Adjusting spring height

3. Inspect thrust rings for wear or damage. As these parts are invisible from outside, shake cover assembly up and down to listen for clattering noise, or hammer lightly on rivets and listen for a slightly cracked noise. Any of these noises indicates need of replacement as a complete assembly.

INSTALLATION

1. Apply a light coat of grease (including Molybdenum Disulphide) to transmission main drive gear splines. Slide clutch disc on main drive gear several times. Remove clutch disc and wipe off excess lubricant pushed off by disc hub.

Note: Take special care to prevent grease or oil from getting on clutch linings.

2. Install clutch disc and clutch cover assembly. Support clutch disc and cover assemblies with Clutch Aligning Bar ST20660000. See Figure CL-7.

Note: Be sure to keep disc facings, flywheel and pressure plate clean and dry.

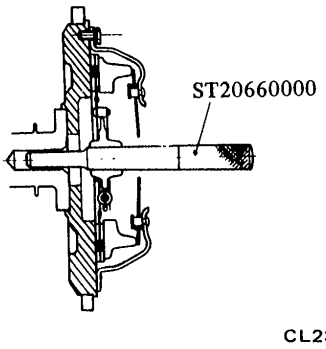

Fig. CL-7 Installing clutch cover assembly

3. Install bolts to tighten clutch cover assembly to flywheel squarely. Bolts should be tightened one turn each at a time in a criss-cross fashion to the specified torque, 1.5 to 2.2 kg-m (11 to 16 ft-lb).

Note: Dowels are used to locate clutch cover on flywheel properly.

4. Remove Clutch Aligning Bar.
5. Install transmission as described in the pertinent parts.

Downloaded from www.Manualslib.com manuals search engine

RELEASE BEARING

REMOVAL

1. Remove transmission from engine. For removal procedure, refer to the Section Transmission.
2. Remove holder spring from bearing sleeve; disconnect clutch withdrawal lever from bearing sleeve.
3. Remove release bearing and sleeve as an assembly from mainshaft. See Figure CL-8.

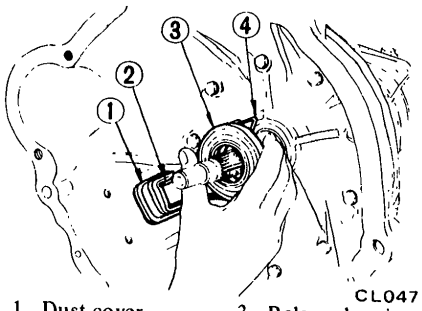

1 Dust cover
2 Withdrawal lever
3 Release bearing
4 Holder spring

Fig. CL-8 Removing clutch release mechanism

4. Remove clutch release bearing from bearing sleeve, using a universal puller and a suitable adapter. See Figure CL-9.

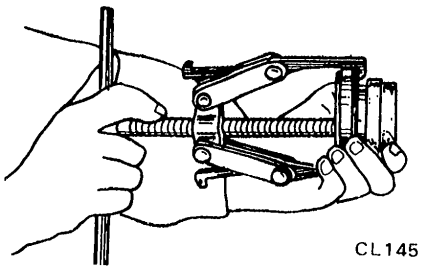

Fig. CL-9 Disassembling release bearing

INSPECTION

Check for abnormal wear on contact surface of withdrawal lever, ball pin and bearing sleeve.

Hold bearing inner race and rotate outer race while applying pressure to it. If the bearing rotation is rough or noisy, replace bearing.

INSTALLATION

1. Assemble release bearing on sleeve, using a press. See Figure CL-10.

Note: Do not press outer race.

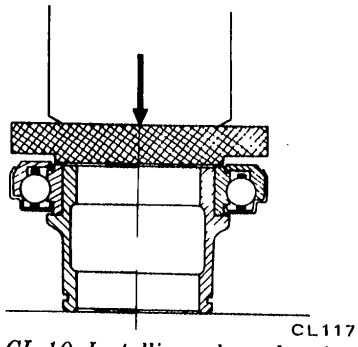

Fig. CL-10 Installing release bearing

2. Before or during assembly, lubricate the following points with a light coat of multi-purpose grease.

(1) Inner groove of release bearing sleeve.

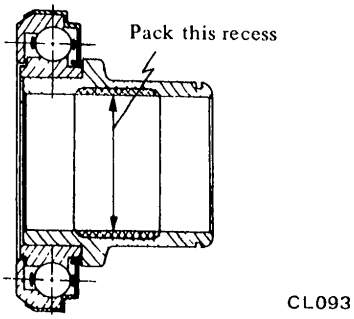

Fig. CL-11 Lubricating recess of bearing sleeve

(2) Contact surface of withdrawal lever, lever ball pin and bearing sleeve.
(3) Contact surfaces of transmission front cover. See Figure CL-12.

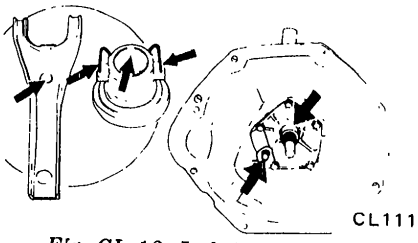

Fig. CL-12 Lubricating points of withdrawal lever and front cover

(4) Contact surfaces of transmission main drive gear splines. [grease (including Molybdenum Disulphide)]

Note: A very small amount of grease should be applied to the above points. If too much lubricant is applied, it will run out on the friction plates when hot, resulting in damaged clutch disc facings.

3. After lubricating, install withdrawal lever, release bearing and bearing sleeve on clutch housing. After connecting them to holder spring, install dust cover on clutch housing.
4. Reinstall transmission as described in Section Transmission.

PILOT BUSHING

REMOVAL

1. Remove transmission from engine. For removal procedure, refer to the Section under Transmission.
2. Remove clutch disc and cover assembly. Refer to Clutch Disc.
3. Remove pilot bushing in crankshaft by Pilot Bushing Puller ST16610001. See Figure CL-13.

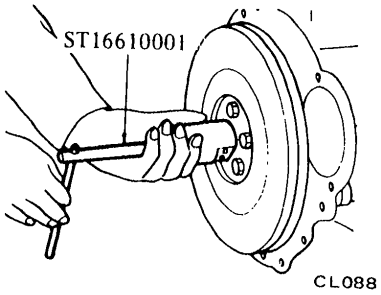

Fig. CL-13 Removing pilot bushing

INSPECTION

Check the fit of pilot bushing in the bore of crankshaft.

Check pilot bushing in crankshaft for wear, roughness or bellmouthed condition. If necessary, replace it. When bushing is faulty, be sure to check transmission main drive gear at the same time.

INSTALLATION

1. Before installing a new bushing, thoroughly clean bushing hole. Install bushing in crankshaft, using a soft hammer. Bushing need not be oiled. See Figure CL-14.

Downloaded from www.Manualslib.com manuals search engine

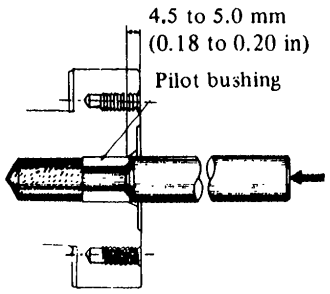

Fig. CL-14 Installing pilot bushing

2. Install clutch disc and clutch cover assembly. Refer to Clutch Disc.
3. Install transmission as described in Section Transmission.

CLUTCH CONTROL

CONTENTS

DESCRIPTION CL-5
BLEEDING CLUTCH SYSTEM CL-6
ADJUSTMENT CL-6
CLUTCH PEDAL HEIGHT CL-6
CLUTCH PEDAL CL-7
REMOVAL CL-7
INSPECTION CL-7
INSTALLATION CL-7
CLUTCH MASTER CYLINDER CL-7
REMOVAL CL-7
DISASSEMBLY CL-7
INSPECTION CL-7
ASSEMBLY CL-7
INSTALLATION CL-7
OPERATING CYLINDER CL-8
REMOVAL CL-8
DISASSEMBLY CL-8
INSPECTION CL-8
ASSEMBLY CL-8
INSTALLATION CL-8
CLUTCH LINE CL-8
INSPECTION CL-8
REMOVAL CL-8
INSTALLATION CL-8

DESCRIPTION

The hydraulic clutch control consists of a pendent pedal, master cylinder, operating cylinder and withdrawal lever.

When the clutch pedal is depressed, the piston of the master cylinder forces the brake fluid to the operating cylinder through a pipe line. The movement of the operating cylinder piston is transmitted to the withdrawal lever through the push rod, thus disengaging the clutch.

The operating cylinder is a non-adjustable type that uses no return spring. In this unit, the withdrawal-to-push rod play adjustment is not necessary since the "S" shown in Figure CL-16 serves to automatically compensate for wear on clutch disc.

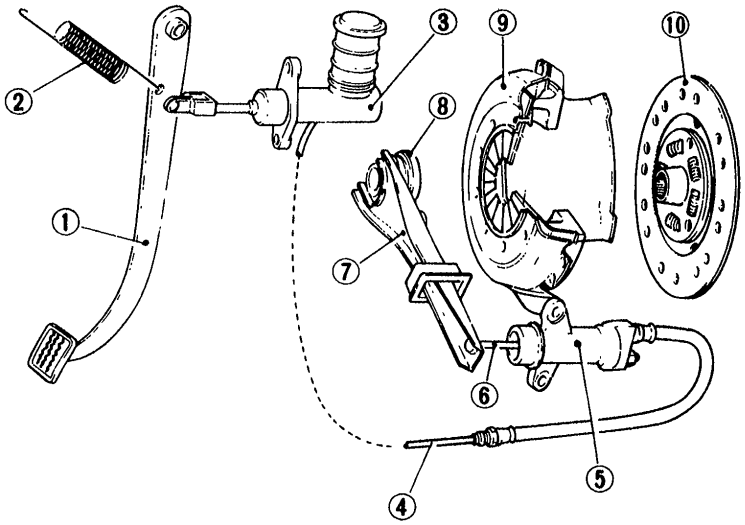

1 Clutch pedal
2 Return spring
3 Clutch master cylinder
4 Clutch piping
5 Operating cylinder
6 Push rod
7 Withdrawal lever
8 Release bearing
9 Clutch cover
10 Clutch disc

Fig. CL-15 Clutch operating system

Downloaded from www.Manualslib.com manuals search engine

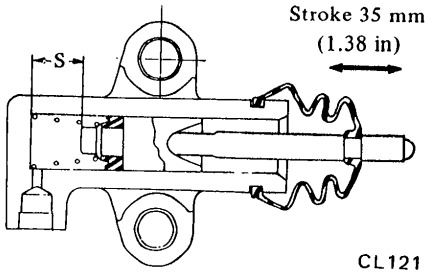

Fig. CL-16 Non-adjustable operating cylinder

BLEEDING CLUTCH SYSTEM

The hydraulic clutch system must be bled whenever clutch line has been disconnected or air has entered it.

When pedal action has a "spongy" feeling, it is an indication that air has entered into the system.

Bleeding clutch system is an essential part of regular clutch service.

1. Remove reservoir cap and top up with recommended brake fluid.
2. Thoroughly clean mud and dust from bleeder screw of operating cylinder so that outlet hole is free from any foreign material. Install bleeder hose (vinyl hose) on bleeder screw.

Place the other end of it in a container filled with brake fluid.

3. Have a co-worker depress clutch pedal two or three times. With clutch pedal depressed fully, loosen bleeder screw to bleed air out of clutch system.
4. Close bleeder screw quickly as clutch pedal is on down stroke.
5. Allow clutch pedal to return slowly with bleeder screw closed.
6. Repeat steps 4 and 5 until no air bubble shows in the vinyl hose.

Bleeder screw tightening torque:
0.7 to 0.9 kg-m
(5.1 to 6.5 ft-lb)

7. Operate clutch several times; then, check for external hydraulic leaks at connections.

Notes:

a. **Brake fluid containing air is white and has visible air bubbles.**
b. **Brake fluid containing no air runs out of bleeder screw in a solid stream without air bubbles.**
c. **Pay close attention to clutch fluid level in reservoir during bleeding operation.**
d. **Do not reuse brake fluid drained during bleeding operation.**
e. **Exercise care not to splash brake fluid on exterior finish as it will damage the paint.**
f. **Pour brake fluid into reservoir up to the specified level.**

ADJUSTMENT

CLUTCH PEDAL HEIGHT

1. Loosen lock nut A. Adjust pedal height to 223 mm (8.78 in) by adjusting pedal stopper, and tighten lock nut A to specifications.
2. Loosen lock nut B.
3. By turning push rod in or out, adjust clutch pedal free play resulting from clearance between clevis pin and clutch pedal to 1.0 to 3.0 mm (0.039 to 0.118 in). Measure on top face of pedal pad.
4. Then make sure that clutch pedal free travel is between 7.0 to 15.0 mm (0.276 to 0.591 in).

A free travel of 7.0 to 15.0 mm (0.276 to 0.591 in) is the sum of master cylinder valve play 6.0 to 12.0 mm (0.236 to 0.472 in) and clevis pin clearance 1.0 to 3.0 mm (0.039 to 0.118 in).

Tightening torque:
Lock nut A
(Pedal stopper lock nut)
0.8 to 1.2 kg-m
(5.8 to 8.7 ft-lb)
Lock nut B
(Push rod adjusting nut)
0.8 to 1.2 kg-m
(5.8 to 8.7 ft-lb)

Notes:

a. **In adjusting play, be careful not to block port of master cylinder. A blocked port may result if play at clevis pin is too small.**
b. **Depress and release clutch pedal over its entire stroke to ensure that the clutch linkage operates smoothly without squeaking, interference or binding.**

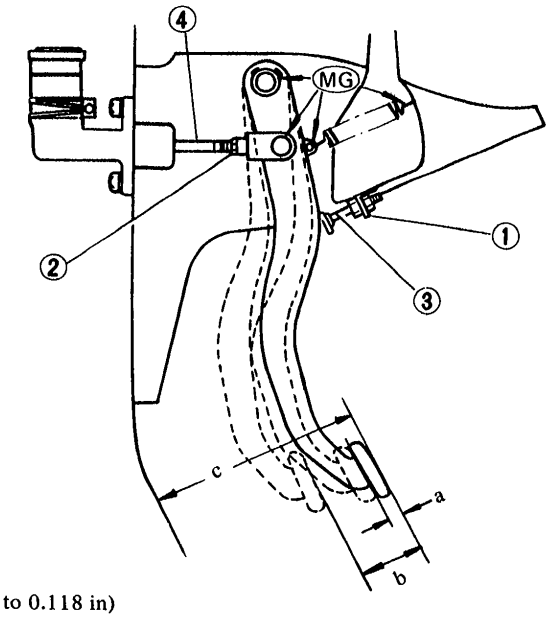

1 Lock nut A
2 Lock nut B
3 Pedal stopper.
4 Push rod

a: Free play
1.0 to 3.0 mm (0.039 to 0.118 in)
b: Free travel
7.0 to 15.0 mm (0.276 to 0.591 in)
c: Pedal height
223 mm (8.78 in)
MG = Multi-purpose grease

Fig. CL-17 Pedal height adjustment

Downloaded from www.Manualslib.com manuals search engine

CLUTCH PEDAL

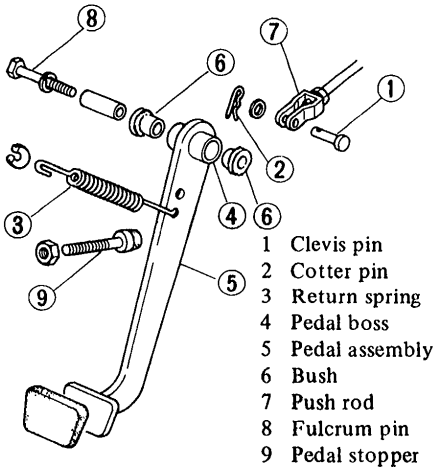

Fig. CL-18 Exploded view of clutch pedal

REMOVAL

1. Unhook return spring.
2. Pry off cotter pin and remove clevis pin; disconnect push rod from pedal assembly.
3. Back off fulcrum pin and remove pedal assembly

Note: Before removing pedal, be sure to measure the pedal head height from toe board.

INSPECTION

Thoroughly clean all disassembled parts (indicated below) and carefully check for wear, damage and other abnormal conditions. Repair or replace, if necessary.

1. Pedal head rubber
2. Return spring
3. Pedal lever boss
4. Clevis pin
5. Nylon bushing
6. Pedal shaft, etc.

INSTALLATION

Installation is in the reverse order of removal.

Apply multi-purpose grease to the friction surface of clevis pin. See Figure CL-17.

Tightening torque:
Fulcrum pin
3.5 to 4.8 kg-m
(25 to 35 ft-lb)

CLUTCH MASTER CYLINDER

REMOVAL

1. Remove clevis pin at push rod.
2. Disconnect clutch tube from master cylinder and drain clutch fluid.
3. Remove bolts securing master cylinder to the car, and dismount master cylinder.

Note: Remove dust cover from master cylinder body, on the driver's seat side.

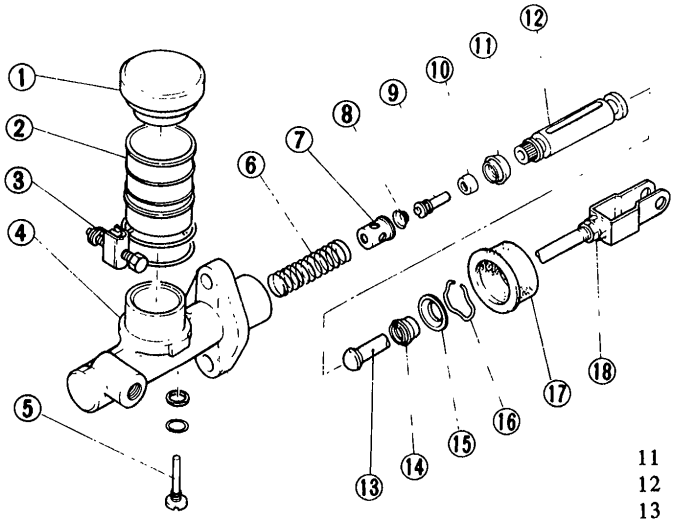

1	Reservoir cap	6	Return spring	11	Primary cup
2	Reservoir	7	Spring seat	12	Piston
3	Reservoir band	8	Valve spring	13	Push rod
4	Cylinder body	9	Supply valve rod	14	Secondary cup
5	Supply valve stopper	10	Supply valve	15	Stopper
				16	Stopper ring
				17	Dust cover
				18	Lock nut

Fig. CL-19 Exploded view of master cylinder

DISASSEMBLY

1. Remove dust cover and remove stopper ring from body.
2. Remove push rod and piston assembly.
3. Take off piston cups.
4. Remove spring seat from piston and take off supply valve if necessary. See Figure CL-19.

Note: Discard piston cup, supply valve and spring seat after removal.

INSPECTION

Note: To clean or wash all parts of master cylinder, clean brake fluid must be used. Never use mineral oils such as gasoline and kerosene. It will ruin the rubber parts of the hydraulic system.

1. Check cylinder and piston for uneven wear or damage, and replace if necessary.
2. If the clearance between cylinder and piston is more than 0.15 mm (0.0059 in), replace cylinder.
3. Renew piston cup when disassembled. It must also be replaced when wear or deformation due to fatigue or damage is found.
4. Damaged dust cover, oil reservoir or cap, should be replaced. Return spring and valve spring must also be replaced when they are broken or weak.
5. Replace clutch hose and tube if any abnormal sign of damage or deformation is found.

ASSEMBLY

To assemble, reverse the order of disassembly. Closely observe the following instructions.

1. Dip piston cup in brake fluid before installing. Make sure that it is correctly faced in position.
2. Apply a coating of brake fluid to cylinder and piston when assembling.
3. Press piston into spring seat when assembling.

INSTALLATION

To install, reverse the order of removal. Closely observe the following

Downloaded from www.Manualslib.com manuals search engine

instructions.

1. Adjust pedal height by changing push rod length.
2. Bleed air out of hydraulic system.

Tightening torque:
Master cylinder to dash panel securing bolts
0.8 to 1.1 kg-m
(5.8 to 8.0 ft-lb)
Clutch tube connector
1.5 to 1.8 kg-m
(11 to 13 ft-lb)

OPERATING CYLINDER

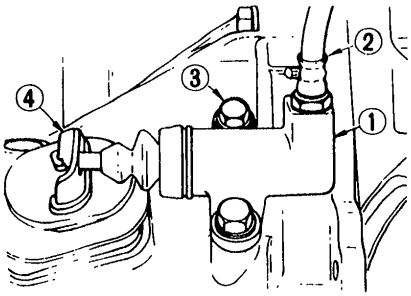

1 Clutch operating cylinder
2 Clutch hose
3 Bolts
4 Withdrawal lever

CL221

Fig. CL-20 Operating cylinder

REMOVAL

1. Remove return spring.
2. Detach clutch hose from operating cylinder.
3. Remove two bolts securing operating cylinder to clutch housing.

DISASSEMBLY

See Figure CL-21.

1. Remove push rod with dust cover.
2. Remove piston assembly and piston spring.
3. Remove bleeder screw.

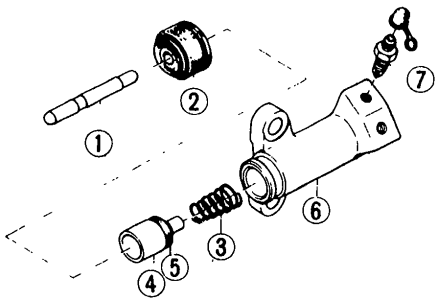

1 Push rod
2 Dust cover
3 Piston spring
4 Piston
5 Piston cup
6 Operating cylinder
7 Bleeder screw

CL222

Fig. CL-21 Exploded view of operating cylinder

INSPECTION

Visually inspect all disassembled parts, replacing those found worn or damaged beyond specifications.

Note: To clean or wash all parts of operating cylinder, clean brake fluid must be used.
Never use mineral oils such as gasoline and kerosene. It will ruin the rubber parts of the hydraulic system.

1. Check cylinder and piston for uneven wear or damage, and replace if necessary.
2. Renew piston cup when disassembled. It must also be replaced when wear or deformation due to fatigue or damage is found.
3. Damaged dust cover should be replaced. Return spring must also be replaced when it is broken or weak.

ASSEMBLY

Assembly is in the reverse order of disassembly. However, observe the following assembly notes.

1. Prior to assembly, dip a new piston cup in clean brake fluid. In installing piston cup, pay particular attention to its direction.
2. Dip cylinder and piston in clean brake fluid before assembly.

Note: Be sure to install piston assembly with piston spring in place.

INSTALLATION

Install operating cylinder in the reverse procedures of removal.

Notes:

a. **Bleed air thoroughly from clutch hydraulic system, referring to the section under Bleeding Clutch System.**
b. **When operating cylinder is removed from, and installed to, clutch housing without disconnecting clutch hose from operating cylinder, loosen bleeder screw so that push rod moves lightly.**

Tightening torque:
Operating cylinder to clutch housing securing bolts:
2.5 to 3.0 kg-m
(18 to 22 ft-lb)
Bleeder screw:
0.7 to 0.9 kg-m
(5.1 to 6.5 ft-lb)
Clutch hose connector:
1.7 to 2.0 kg-m
(12 to 14 ft-lb)

CLUTCH LINE

INSPECTION

Check clutch lines (tube and hose) for evidence of cracks, deterioration or other damage. Replace if necessary.

If leakage occurs at or around joints, retighten and, if necessary, replace damaged parts.

REMOVAL

When disconnecting clutch tube, use suitable flare nut wrench. Never use an open end wrench or adjustable wrench.

1. Disconnect clutch tube from clutch hose at bracket on side member.
2. Remove lock spring fixing hose to bracket, then disengage hose from bracket. Remove lock plate from bracket.
3. Remove clutch hose from operating cylinder.
4. Disconnect clutch tube from master cylinder.
5. Remove clamp fixing clutch tube to dash panel.

INSTALLATION

Wipe the opening ends of hydraulic line to remove any foreign matters before making connections.

1. (1) Connect clutch tube to master cylinder with flare nut.
(2) Fix clutch tube to dash panel with clamp.
(3) Then tighten flare nut to specified torque with Brake Pipe Wrench GG94310000.

Flare nut tightening torque:
1.5 to 1.8 kg-m
(11 to 13 ft-lb)

2. Install clutch hose on operating cylinder with a gasket in place.

Note: Use new gasket.

Downloaded from www.Manualslib.com manuals search engine

Tightening torque:
1.7 to 2.0 kg-m
(12 to 14 ft-lb)

3. Fit lock plate to bracket.
4. Engage the opposite end of hose with bracket. Install lock spring fixing hose to bracket.

Note: Exercise care not to warp or twist hose.

5. Connect clutch tube to hose with flare nut and tighten to specified torque.
6. Check distance between clutch line and adjacent parts (especially between hose and exhaust tube).
7. Bleed air out of hydraulic system. Refer to page CL-6.

Downloaded from www.Manualslib.com manuals search engine

SERVICE DATA AND SPECIFICATIONS

Clutch cover

Clutch cover type		C225S (S30) D240K [GS30 (2 + 2 seater)]
Diaphragm spring-to-flywheel height	mm (in)	34 (1.339) S30 38.5 (1.516) GS30 2 + 2 seater
Unevenness of diaphragm spring toe height	mm (in)	0.5 (0.020)
Diaphragm spring installed load	kg (lb)	550 (1,213) S30 500 (1,102) GS30 (2 + 2 seater)
Out of flatness of pressure plate	mm (in)	0.05 (0.0020)
Allowable refacing limit	mm (in)	1.0 (0.0394)

Clutch disc

Facing size Outer dia. x inside dia. x thickness	mm (in)	225 x 150 x 3.5 (C225S) (8.86 x 5.91 x 0.138) 240 x 150 x 3.5 (D240K) (9.45 x 5.91 x 0.138)
Allowable minimum depth of rivet head from facing surface	mm (in)	0.3 (0.0118)
Allowable free play of spline	mm (in)	0.4 (0.0157)

Clutch pedal

Free play	mm (in)	1 to 3.0 (0.039 to 0.118)
Free travel	mm (in)	7 to 15 (0.276 to 0.591)
Pedal height	mm (in)	223 (8.78)

Master cylinder – clutch

Master cylinder diameter	mm (in)	15.87 (0.6248)

Operating cylinder – clutch

Operating cylinder diameter	mm (in)	19.05 (0.7500)

Tightening torque

Clutch assembly securing bolt	kg-m (ft-lb)	1.5 to 2.2 (11 to 16)
Push rod adjusting nut	kg-m (ft-lb)	0.8 to 1.2 (5.8 to 8.7)
Pedal stopper lock nut	kg-m (ft-lb)	0.8 to 1.2 (5.8 to 8.7)
Clutch tube connector (Flare nut)	kg-m (ft-lb)	1.5 to 1.8 (11 to 13)
Operating cylinder to clutch housing securing bolts	kg-m (ft-lb)	2.5 to 3.0 (18 to 22)
Clutch hose connector	kg-m (ft-lb)	1.7 to 2.0 (12 to 14)

Downloaded from www.Manualslib.com manuals search engine

TROUBLE DIAGNOSES AND CORRECTIONS

Condition	Probable cause and testing	Corrective action
Clutch slips	Slipping of the clutch may be noticeable when any of the following symptoms is encountered during operation. (1) Car will not respond to engine speed during acceleration. (2) Insufficient car speed. (3) Lack of power during uphill driving. Some of the above conditions are also experienced when engine problem is occurring. First determine whether engine or clutch is causing the problem. If slipping clutch is left unheeded, wear and/or overheating will occur on clutch facing until it is no longer serviceable. TO TEST FOR SLIPPING CLUTCH, proceed as follows: During upgrade travelling, run engine at about 40 to 50 km/h (25 to 31 MPH) with gear shift lever in 3rd speed position, shift into highest gear and at the same time rev up engine. If clutch is slipping, car will not readily respond to depression of accelerator pedal.	
	• Clutch facing worn excessively.	Replace.
	• Oil or grease on clutch facing.	Replace.
	• Warped clutch cover or pressure plate.	Repair or replace.
Clutch drags	Dragging clutch is particularly noticeable when shifting gears, especially into low gear. TO TEST FOR DRAGGING CLUTCH, proceed as follows: (1) Start engine. Disengage clutch. Shift into reverse gear, and then into Neutral. Gradually increase engine speed, and again shift into reverse gear. If clutch is dragging, gear "grating" is heard when shifting from Neutral into Reverse. (2) Stop engine and shift gear. (Conduct this test at each gear position.) (3) Gears are smoothly shifted in step (2), but drag when shifting to 1st speed position at idling. a. If dragging is encountered at the end of shifting, check condition of synchro-mechanism in transmission. b. If dragging is encountered at the beginning of shifting, proceed to step (4) below. (4) Push change lever toward Reverse side, depress pedal to check for free travel. a. If pedal can be depressed further, check clutch condition. b. If pedal cannot be depressed further, proceed to step (5) below. (5) Check clutch control. (pedal height, free pedal play, free travel withdrawal lever play, etc.) If no abnormal condition exists and if pedal cannot be depressed further, check clutch condition.	
	• Clutch disc runout or warped.	Repair or replace.
	• Wear or rust on hub splines in clutch disc.	Clean and lubricate with grease, or replace.
	• Diaphragm spring toe height out of adjustment or toe tip worn.	Adjust or replace.
	• Worn or improperly installed parts.	Repair or replace.

Downloaded from www.Manualslib.com manuals search engine

Condition	Probable cause and testing	Corrective action
Clutch chatters	Clutch chattering is usually noticeable when car is just rolled off with clutch partially engaged.	
	• Weak or broken clutch disc torsion spring.	Replace.
	• Oil or grease on clutch facing.	Replace.
	• Clutch facing out of proper contact or clutch disc runout.	Replace.
	• Loose rivets.	Replace.
	• Warped pressure plate or clutch cover surface.	Repair or replace.
	• Unevenness of diaphragm spring toe height.	Adjust or replace.
	• Loose engine mounting or deteriorated rubber.	Retighten or replace.
Noisy clutch	A noise is heard after clutch is disengaged.	
	• Damaged release bearing.	Replace.
	A noise is heard when clutch is disengaged.	
	• Insufficient grease on the sliding surface of bearing sleeve.	Apply grease.
	• Clutch cover and bearing are not installed correctly.	Adjust.
	A noise is heard when car is suddenly started off with clutch partially engaged.	
	• Damaged pilot bushing.	Replace.
Clutch grabs	When grabbing of clutch occurs, car will not start off smoothly from a standing start or clutch is engaged before clutch pedal is fully depressed.	
	• Oil or grease on clutch facing.	Replace.
	• Clutch facing worn or loose rivets.	Replace.
	• Wear or rust on splines in drive shaft and clutch disc.	Clean or replace.
	• Warped flywheel or pressure plate.	Repair or replace.
	• Loose mountings for engine or power train units.	Retighten.

Downloaded from www.Manualslib.com manuals search engine

SPECIAL SERVICE TOOLS

No.	Tool number & tool name	Description Unit: mm (in)	For use on	Reference page or Figure No.
1	ST20050010 Base plate	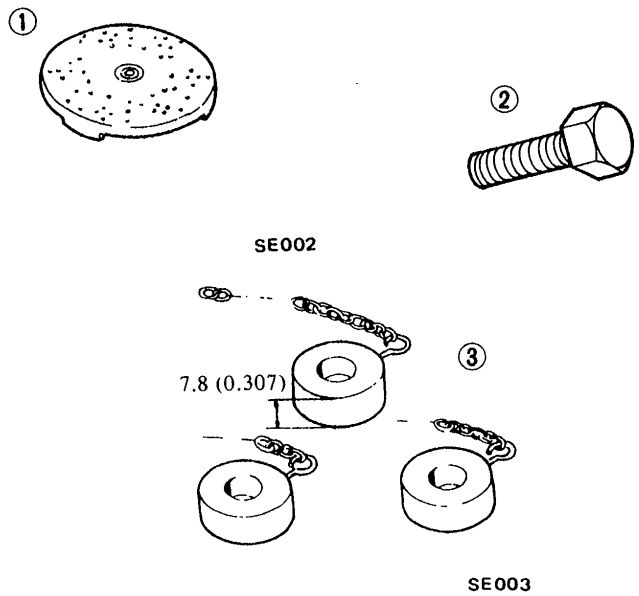	B210 610 710 S30 620	Fig. CL-5
2	ST20050051 Set bolt			
3	ST20050100 Distance piece 7.8 mm (0.307 in)			
4	ST20050240 Diaphragm spring adjusting wrench	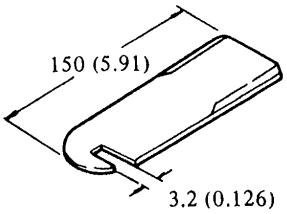	B210 610 710 S30 620	Fig. CL-6
5	ST20660000 Clutch aligning bar	Used to conduct disc centering by inserting the tool into pilot bushing in flywheel, when installing clutch assembly to flywheel. 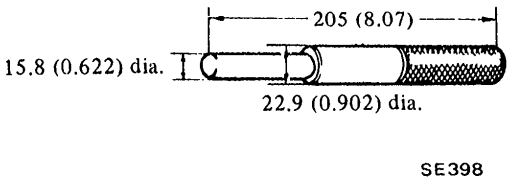	610 710 S30 620	Fig. CL-2 Fig CL-7
6	ST16610001 Pilot bushing puller	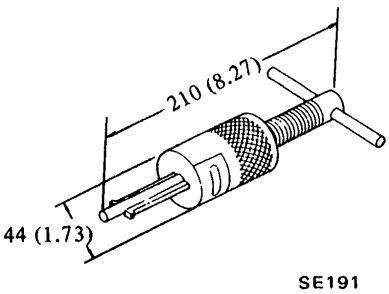	610 710 S30 620	Fig. CL-13

Downloaded from www.Manualslib.com manuals search engine

No.	Tool number & tool name	Description Unit: mm (in)	For use on	Reference page or Figure No.
7	GG94310000 Flare nut torque wrench	Used to tighten and loosen clutch tube flare nut. A built-in torque limiting wrench is provided to assure torque accuracy. 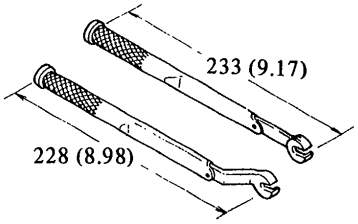	All models	Page CL-8

Downloaded from www.Manualslib.com manuals search engine

DATSUN 280Z
MODEL S30 SERIES

SECTION MT

MANUAL TRANSMISSION

MT

4-SPEED TRANSMISSION (TYPE: F4W71B) ..... MT- 2

5-SPEED TRANSMISSION (TYPE : FS5W71B) MT-14

SERVICE DATA AND SPECIFICATIONS MT-20

TROUBLE DIAGNOSES AND CORRECTIONS ..... MT 22

SPECIAL SERVICE TOOLS MT-23

NISSAN

NISSAN MOTOR CO., LTD.
TOKYO, JAPAN

Downloaded from www.Manualslib.com manuals search engine

4-SPEED TRANSMISSION (TYPE: F4W71B)

CONTENTS

DESCRIPTION ..... MT- 2
REMOVAL ..... MT- 4
DISASSEMBLY ..... MT- 4
TRANSMISSION CASE DISASSEMBLY .... MT- 4
DISASSEMBLY OF GEAR ASSEMBLY .... MT- 5
REAR EXTENSION DISASSEMBLY ..... MT- 7
ADAPTER PLATE DISASSEMBLY ..... MT- 8
INSPECTION ..... MT- 8
TRANSMISSION CASE AND REAR EXTENSION HOUSING ..... MT- 8
BEARING ..... MT- 8
GEARS AND SHAFTS ..... MT- 8
BAULK RING ..... MT- 8
OIL SEAL ..... MT- 8
ASSEMBLY ..... MT- 8
FRONT COVER ASSEMBLY ..... MT- 8
REAR EXTENSION ASSEMBLY ..... MT- 8
ADAPTER PLATE ASSEMBLY ..... MT- 9
GEAR ASSEMBLY ..... MT- 9
TRANSMISSION ASSEMBLY MT-12
INSTALLATION MT-13

DESCRIPTION

The transmission is of a 4-speed forward, fully synchronized constant-mesh type that uses helical gears.

The reverse gear is of a sliding-mesh type using spur gears.

In construction, the main drive gear is meshed with the counter drive gear which is keyed to the countershaft. The forward speed gears on the countershaft are in constant mesh with the mainshaft gears which ride on the mainshaft freely through the needle bearing. When shifting is accomplished, the inner teeth of the coupling sleeve slide over the synchronizer hub and mesh with the outer teeth which are provided on the mainshaft gear.

The synchronizer hub is fitted to the mainshaft by splines so the mainshaft gear turns together with the mainshaft.

The baulk ring serves to synchronize the coupling sleeve and mainshaft gear.

Placing the control lever in reverse position brings the reverse idler gear into mesh with mainshaft reverse gear.

The transmission assembly consists of three main parts; a transmission case with clutch housing, adapter plate to which all gears anc shafts are installed, and rear extension.

The cast-iron adapter plate supports the mainshaft, countershaft, reverse idler shaft and three fork rods, and bolted at the front to the transmission case and, at the rear, to the rear extension by means of through-bolts.

By removing these through-bolts all gears and shafts are stripped.

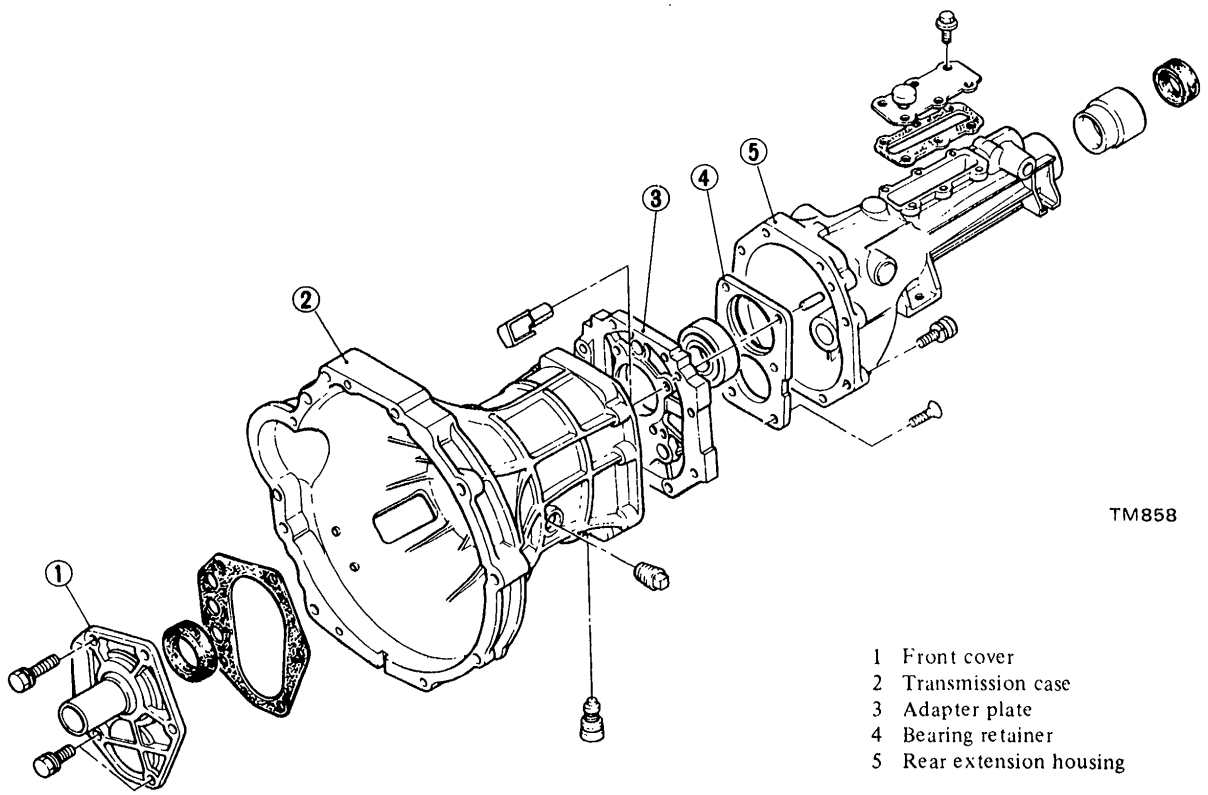

1 Front cover
2 Transmission case
3 Adapter plate
4 Bearing retainer
5 Rear extension housing

Fig. MT-1 F4W71B transmission case components

Downloaded from www.Manualslib.com manuals search engine

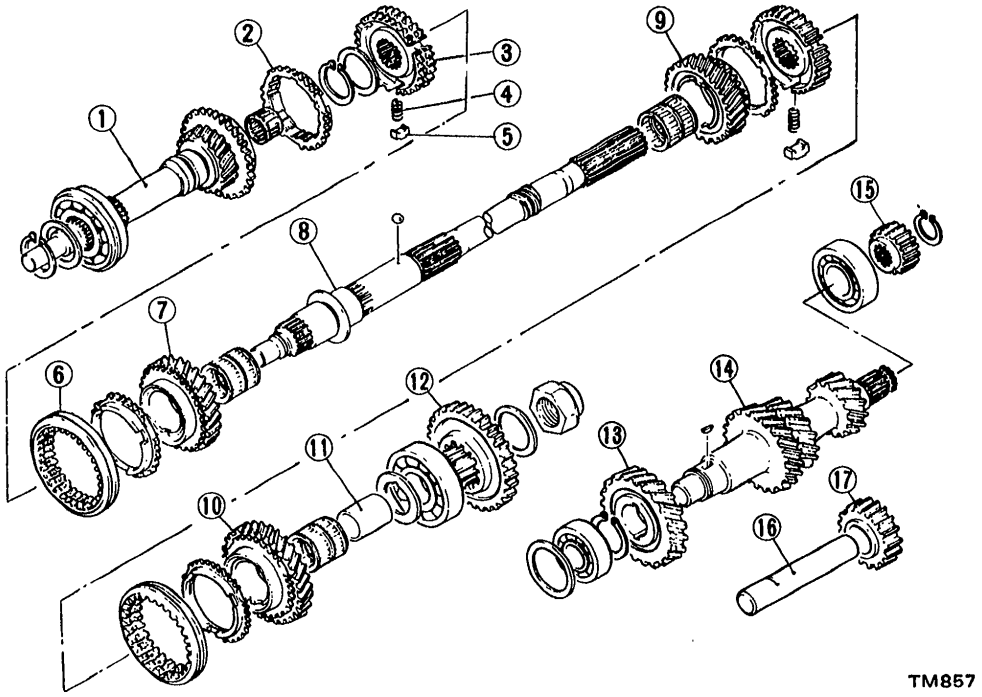

1 Main drive gear
2 Baulk ring
3 Synchronizer hub, 3rd & 4th
4 Shifting insert spring
5 Shifting insert
6 Coupling sleeve
7 3rd main gear
8 Mainshaft
9 2nd main gear
10 1st main gear
11 1st gear spacer
12 Reverse main gear
13 Counter drive gear
14 Countershaft
15 Reverse counter gear
16 Reverse idler shaft
17 Reverse idler gear

Fig. MT-2 F4W71B transmission gear components

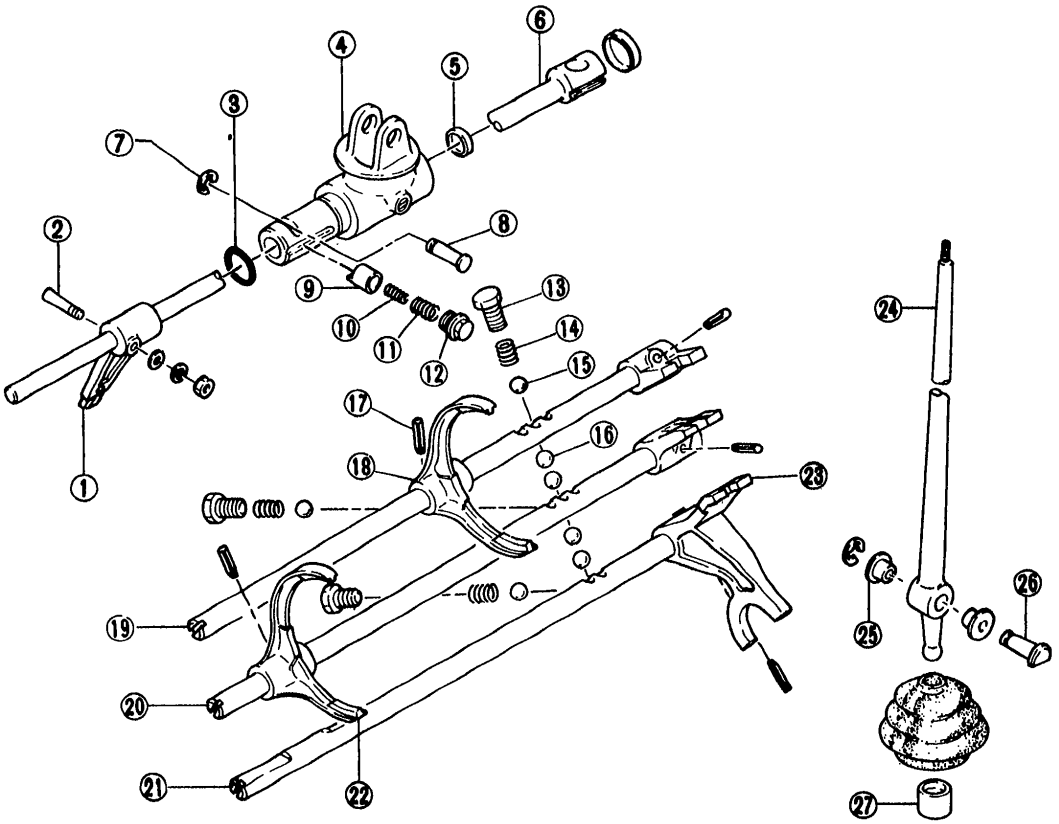

1 Striking lever
2 Lock pin
3 O-ring
4 Striking guide
5 Oil seal
6 Striking rod
7 E-ring
8 Stopper guide pin
9 Return spring plunger
10 Return spring
11 Reverse check spring
12 Return spring plug
13 Check ball plug
14 Check spring
15 Check ball
16 Interlock ball
17 Retaining pin
18 1st & 2nd shift fork
19 1st & 2nd fork rod
20 3rd & 4th fork rod
21 Reverse fork rod
22 3rd & 4th shift fork
23 Reverse shift fork
24 Control lever
25 Control lever bushing
26 Control lever pin
27 Control lever bushing

Fig. MT-3 F4W71B transmission shift control components

Downloaded from www.Manualslib.com manuals search engine

REMOVAL

In dismounting transmission from the vehicle, proceed as follows:

1. Disconnect battery ground cable from terminal.
2. Disconnect accelerator linkage.
3. Remove floor console. Refer to Section BF (Page BF-27) for Removal.
4. Remove E-ring and control lever pin from transmission striking rod guide, and remove control lever. See Figure MT-4.

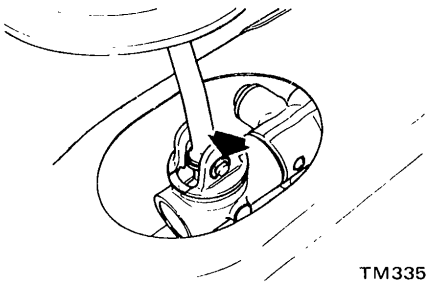

TM335

Fig. MT-4 Removing control lever

5. Jack up the vehicle and support its weight on safety stands. Use a hydraulic hoist or open pit, if available.

Confirm that safety is insured.

6. Disconnect exhaust front tube from exhaust manifold.
7. Remove front tube bracket from rear extension housing. Refer to Section ER for Removal.

Note: Hold front tube end up with a thread or wire to prevent tube from falling.

8. Disconnect wires (1) from reverse lamp switch and neutral switch. See Figure MT-5.
9. Remove clutch operating cylinder (2) from transmission case. See Figure MT-5.
10. Disconnect speedometer cable (3) from rear extension housing. See Figure MT-5.
11. Remove insulator securing bolts and place insulator on exhaust tube.
12. Remove propeller shaft.

Refer to Section PD (Page PD-2) for Removal.

Note: Plug up the opening in the rear extension housing to prevent oil from flowing out.

13. Support engine by locating a jack under oil pan with a wooden block used between oil pan and jack.
14. Support transmission with a transmission jack.
15. Remove nut attaching mounting member to rear mounting insulator. Remove two mounting member attaching bolts and then remove mounting member.

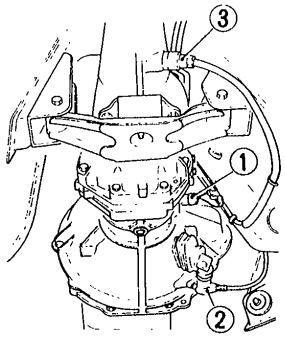

Fig. MT-5 Bottom view of car

16. Remove starter motor.
17. Remove bolts securing transmission to engine.

After removing these bolts, support the engine and transmission with jacks, and then slide transmission rearward away from engine and remove from the vehicle.

Note: Take care in dismounting transmission not to strike any adjacent parts and main drive shaft.

DISASSEMBLY

TRANSMISSION CASE DISASSEMBLY

1. Prior to disassembling transmission, thoroughly wipe off dirt and grease from it.
2. Drain oil thoroughly.
3. Remove dust cover from transmission case.

Remove release bearing and withdrawal lever.

4. Remove reverse lamp switch.
5. Move gear to Neutral.
6. Remove speedometer pinion and pinion sleeve by taking off lock plate.
7. Remove E-ring and stopper guide pin from rear end of rear extension. See Figure MT-6.

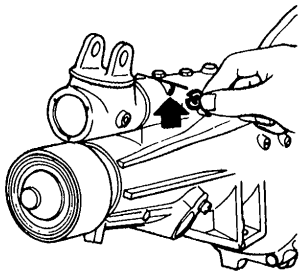

TM337

Fig. MT-6 Removing striking rod E-ring and stopper pin

8. Remove return spring plug, return spring, reverse check spring, and plunger from rear extension. See Figure MT-7.

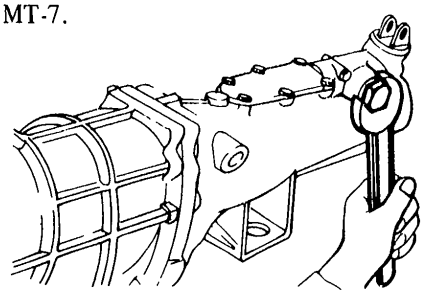

TM338

Fig. MT-7 Removing return spring plug

9. Remove rear extension securing bolts and turn the striking rod toward left.

Drive out rear extension backward by lightly tapping around it with a soft hammer. See Figure MT-8.

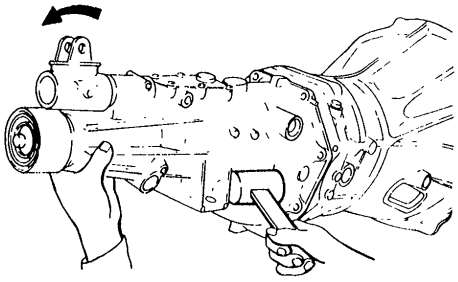

TM339

Fig. MT-8 Removing rear extension

10. Remove front cover securing bolts and remove front cover.

Detach countershaft front bearing shim.

11. Remove main drive bearing snap ring with Expander. See Figure MT-9.

Downloaded from www.Manualslib.com manuals search engine

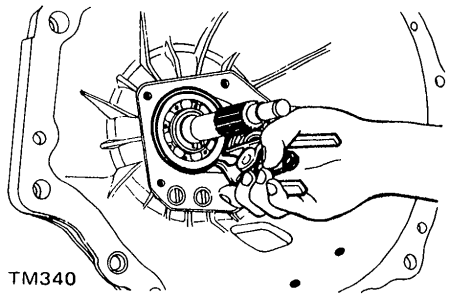

Fig. MT-9 Removing main drive bearing snap ring

12. Separate transmission case from adapter plate with a soft hammer. See Figure MT-10.

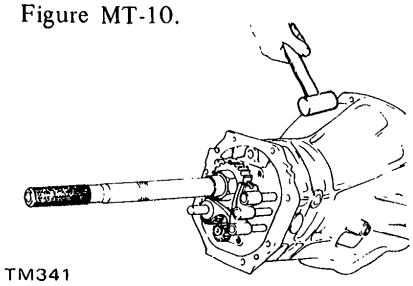

Fig. MT-10 Removing transmission case

13. Set up Setting Plate Adapter ST23810001 on adapter plate.

With countershaft side up, place the above assembly in a vise. See Figure MT-11.

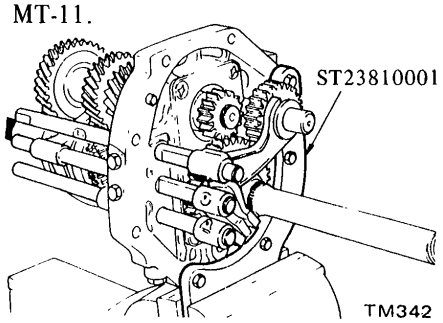

Fig. MT-11 Attaching gear assembly to special tool

DISASSEMBLY OF GEAR ASSEMBLY

Fork rod

1. Drive out retaining pins from each fork rod with Fork Rod Pin Punch ST23540000. See Figure MT-12.

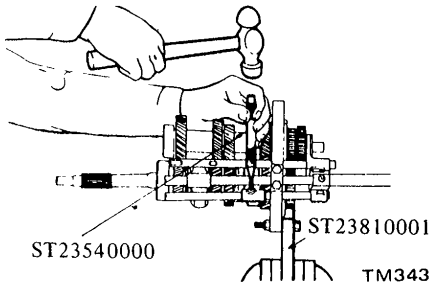

Fig. MT-12 Drive out retaining pins

2. Remove three(3) check ball plugs, and drive out fork rods from adapter plate by lightly tapping on the front end.

Be careful not to lose three(3) check balls and four(4) interlock balls. See Figure MT-13.

Note: Each gear and shaft can be detached from adapter plate without removing each fork rod.

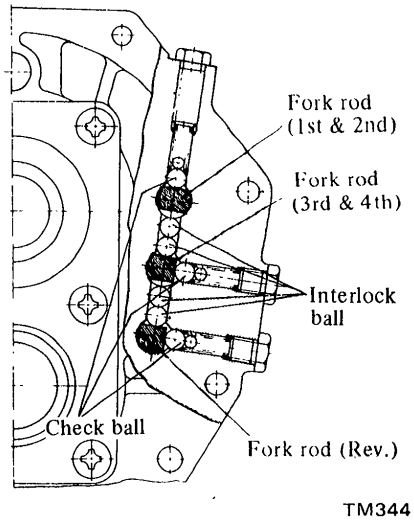

Fig. MT-13 Layout of check ball and interlock ball

Gear assembly

1. With gears doubly engaged, draw out countershaft front bearing using a suitable gear puller. See Figure MT-14.
2. Remove counter drive gear snap ring.
3. Draw out counter drive gear complete with main drive gear assembly by means of a gear puller.

When drawing out main drive gear assembly, be careful not to drop pilot needle bearing onto floor from the front end of mainshaft. See Figure MT-15.

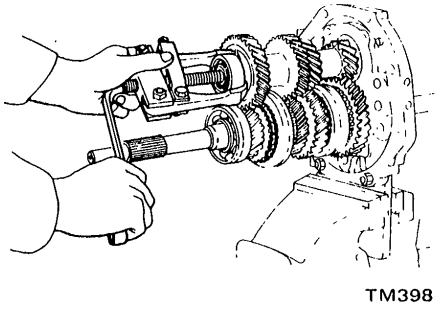

Fig. MT-14 Removing countershaft front bearing

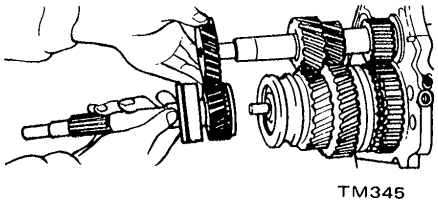

Fig. MT-15 Removing counter drive gear and main drive gear

4. Remove snap ring and then thrust washer from mainshaft front end.

Draw out 3rd & 4th synchronizer assembly and remove 3rd gear assembly.

5. Release caulking on mainshaft nut and loosen it. See Figure MT-16.

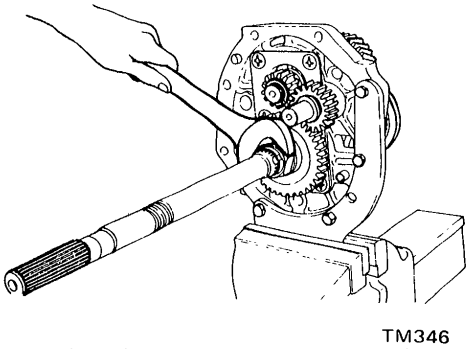

Fig. MT-16 Removing mainshaft nut

6. Remove mainshaft nut, thrust washer and mainshaft reverse gear.
7. Remove snap ring from countershaft rear end, and remove reverse idler gear.
8. Draw out mainshaft gear assembly together with countershaft by lightly tapping the rear end with a soft hammer while holding the front of mainshaft gear assembly by hand.

Be careful not to drop off gear shaft. See Figure MT-17.

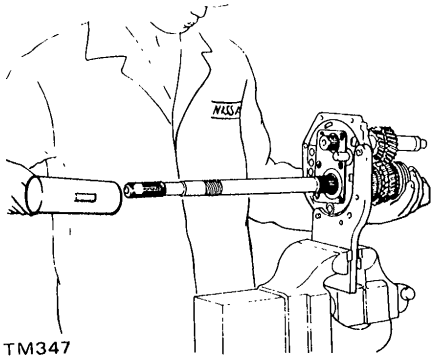

Fig. MT-17 Driving out gear assembly

Mainshaft assembly

1. Remove thrust washer, steel ball, 1st gear and needle bearing. Be careful not to lose steel ball retaining thrust washer.

Downloaded from www.Manualslib.com manuals search engine

2. Press out 1st gear mainshaft bushing together with 2nd gear and 1st & 2nd speed synchronizer using Bearing Puller ST30031000. See Figure MT-18.

Note: When pressing out bushing, hold mainshaft by hand so as not to drop it.

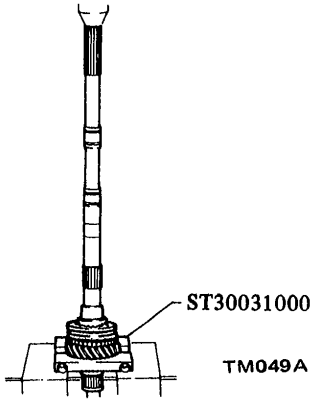

Fig. MT-18 Removing 1st gear mainshaft bushing

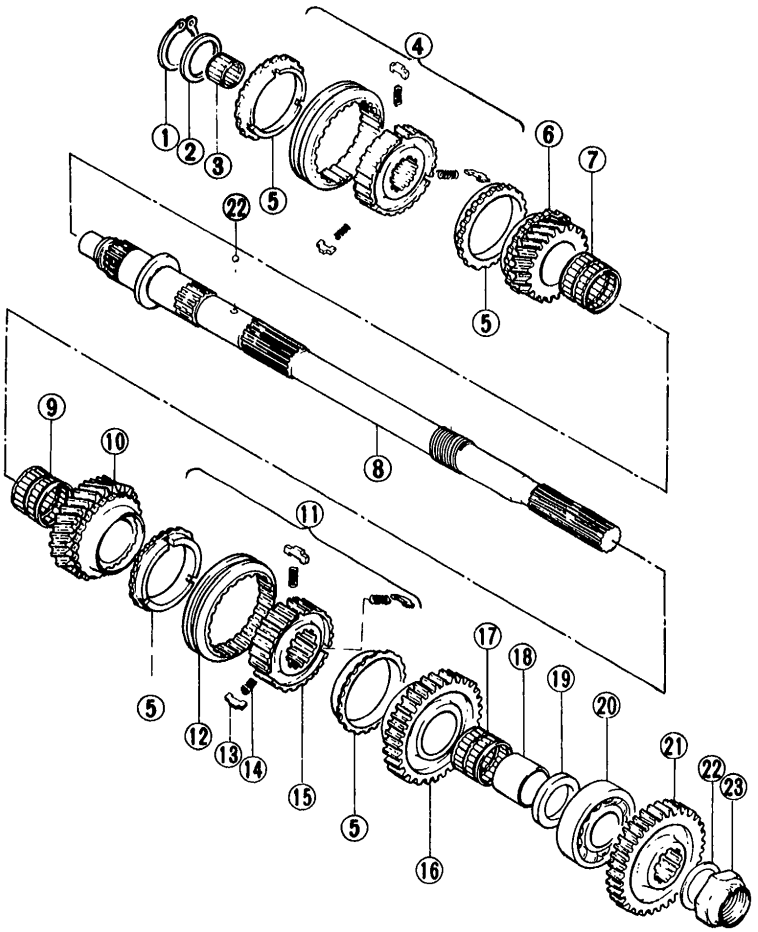

1 Snap ring
2 Thrust washer
3 Pilot bearing
4 3rd & 4th synchronizer assembly
5 Baulk ring
6 3rd main gear
7 Needle bearing
8 Mainshaft
9 Needle bearing
10 2nd main gear
11 1st & 2nd synchronizer assembly
12 Coupling sleeve
13 Shifting insert
14 Shifting insert spring
15 Synchronizer hub
16 1st main gear
17 Needle bearing
18 1st gear bushing
19 Thrust washer
20 Mainshaft bearing
21 Reverse main gear
22 Thrust washer
23 Nut
24 Steel ball

TM348

Fig. MT-19 Exploded view of mainshaft assembly

Main drive gear

1. Remove main drive gear snap ring and spacer.
2. Remove main drive bearing with Bearing Puller ST30031000 and a suitable press. See Figure MT-20.

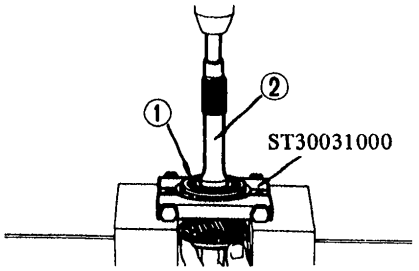

1 Main drive bearing
2 Main drive gear

TM349

Fig. MT-20 Removing main drive bearing

Downloaded from www.Manualslib.com manuals search engine

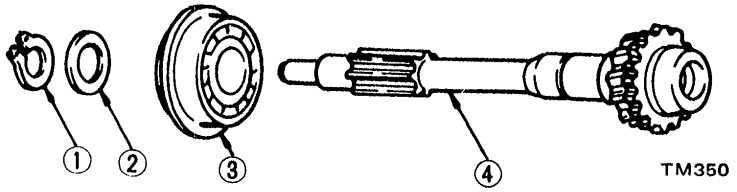

1 Snap ring
2 Spacer
3 Main drive bearing with snap ring
4 Main drive gear

Fig. MT-21 Exploded view of main drive gear

Countershaft assembly

Install Bearing Puller ST30031000 on countershaft rear bearing; press out countershaft rear bearing through a rod.

See Figure MT-22.

Note: When pressing out bearing, hold shaft by hand so as not to drop shaft onto floor.

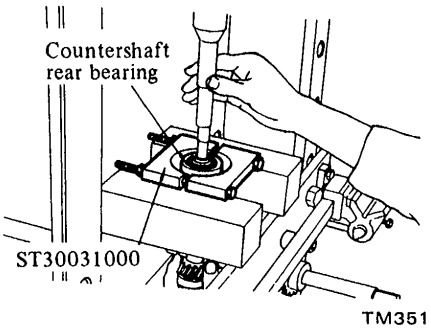

Fig. MT-22 Removing countershaft bearing

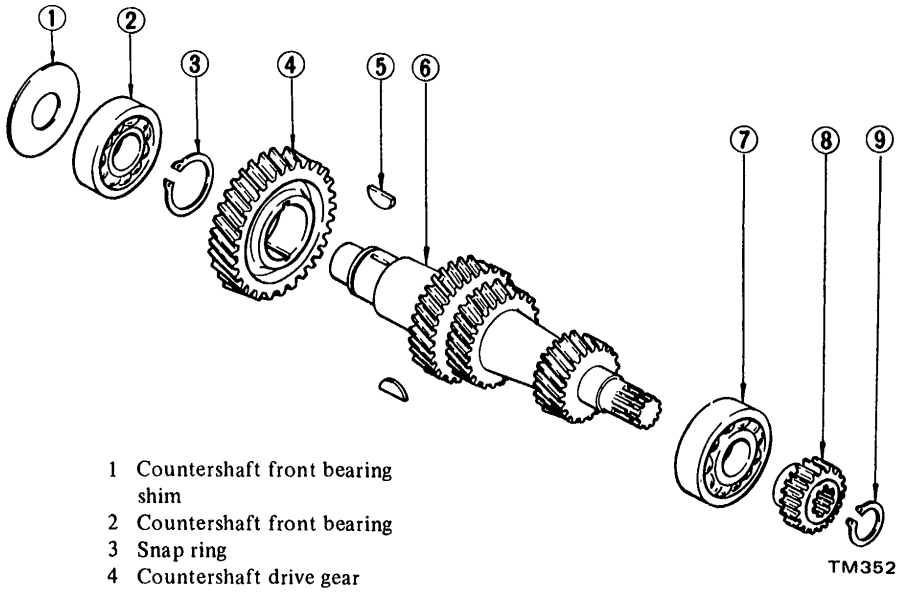

1 Countershaft front bearing shim
2 Countershaft front bearing
3 Snap ring
4 Countershaft drive gear
5 Woodruff key
6 Countershaft
7 Countershaft rear bearing
8 Reverse counter gear
9 Snap ring

Fig. MT-23 Exploded view of countershaft assembly

REAR EXTENSION DISASSEMBLY

Remove lock pin from striking lever, and remove striking rod.

Note: Do not disassemble rear extension bush from rear extension.

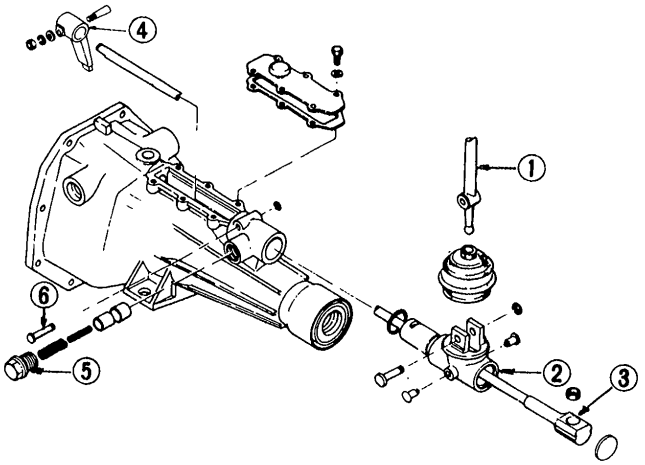

1 Control lever
2 Striking rod guide
3 Striking rod
4 Striking lever
5 Return spring plug
6 Stopper pin

Fig. MT-24 Exploded view of shifting mechanism

Downloaded from www.Manualslib.com manuals search engine

ADAPTER PLATE DISASSEMBLY

1. Remove six(6) bearing retainer attaching screws with an impact wrench and remove bearing retainer from adapter plate.
2. Remove reverse idler shaft.
3. Remove mainshaft bearing from the rear extension side.

INSPECTION

Wash all parts in a suitable cleaning solvent and check for wear, damage or other faulty conditions.

Notes:

a. **Be careful not to damage any parts with scraper.**
b. **Do not clean, wash or soak oil seals in solvent.**

TRANSMISSION CASE AND REAR EXTENSION HOUSING

1. Clean with solvent thoroughly and check for cracks which might cause oil leak or other faulty conditions.
2. Check mating surface of the case to engine or adapter plate for small nicks, projection or sealant.

Remove all nicks, projection or sealant with a fine stone.

3. If rear extension bush is worn or cracked, replace it as an assembly of bush and rear extension housing.

BEARING

1. Thoroughly clean bearing and dry with a compressed air.
2. When race and ball surfaces are worn or rough, or when balls are out-of-round or rough, replace bearing with a new one. See Figure MT-25.

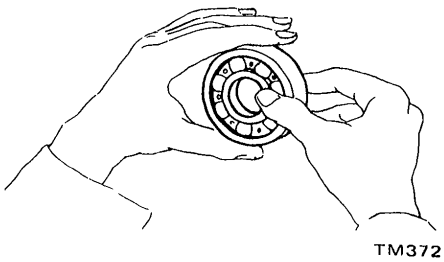

Fig. MT-25 Inspecting ball bearing

3. Replace needle bearing if worn or damaged.

GEARS AND SHAFTS

1. Check all gears for excessive wear, chips or cracks; replace as required.
2. Check shaft for bending, crack, wear, and worn spline; if necessary, replace.
3. Measure backlash in gears.

Standard:
0.05 to 0.10 mm
(0.0020 to 0.0039 in)

If the above limits are exceeded, replace drive and driven gears as a set.

4. Measure gear end play:

1st gear:
0.32 to 0.39 mm
(0.0126 to 0.0154 in)

2nd gear:
0.12 to 0.19 mm
(0.0047 to 0.0075 in)

3rd gear:
0.13 to 0.37 mm
(0.0051 to 0.0146 in)

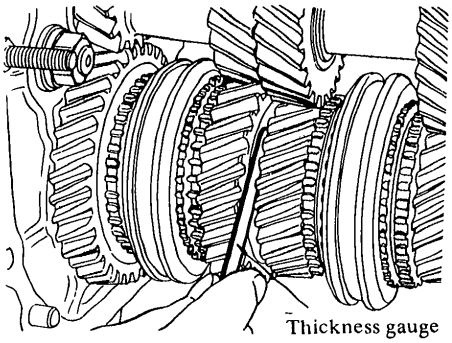

Fig. MT-26 Measuring end play

5. Check for stripped or damaged speedometer pinion gear. If necessary, replace.

BAULK RING

1. Replace baulk ring if found to be deformed, cracked or otherwise damaged excessively.
2. Place baulk ring in position on gear cone.

While holding baulk ring against gear as far as it will go, measure gap between baulk ring and outer gear.

If gap is small, discard baulk ring. See Figure MT-27.

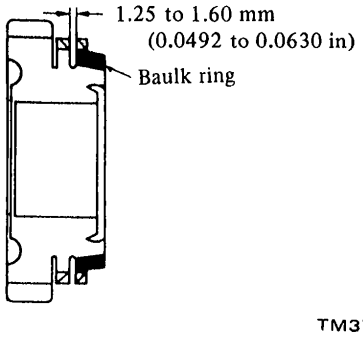

Fig. MT-27 Baulk ring-to-cone gap

OIL SEAL

Discard O-ring or oil seal which is once removed. Replace oil seal if sealing lip is deformed or cracked. Also discard oil seal if spring is out of position.

ASSEMBLY

To assemble, reverse the order of disassembly. Observe the following instructions.

FRONT COVER ASSEMBLY

1. Wipe clean seal seat in front cover, then press fit oil seal in place.

Coat oil seal with gear oil to provide initial lubrication.

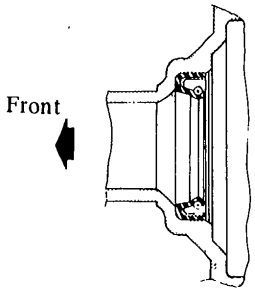

Fig. MT-28 Front cover oil seal

2. Apply sealant to withdrawal lever ball pin screw. Install withdrawal lever ball pin to front cover and tighten screw to 1.6 to 2.1 kg-m (12 to 15 ft-lb) torque.

REAR EXTENSION ASSEMBLY

1. Wipe clean seal seat in rear extension housing; press fit oil seal in place.

Downloaded from www.Manualslib.com manuals search engine

Coat oil seal and bushing with gear oil for initial lubrication.

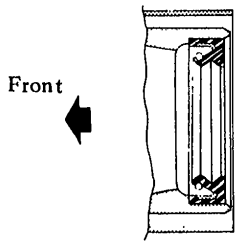

Fig. MT-29 Rear extension oil seal

2. Apply grease to O-ring and plunger grooves in striking rod.

Insert striking rod with striking rod guide through rear extension.

3. Install striking lever on front end of striking rod. Install lock pin and torque screw to 0.9 to 1.2 kg-m (7 to 9 ft-lb).

ADAPTER PLATE ASSEMBLY

1. Place dowel pin, mainshaft bearing and oil gutter on adapter plate, and tap with a soft hammer until they are properly positioned in place.

Use a new dowel pin.

Bend oil gutter on front side and expand on rear side. See Figure MT-30.

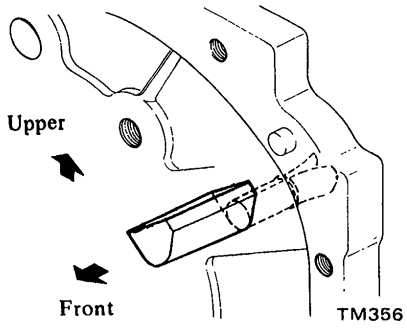

Fig. MT-30 Oil gutter

2. Install mainshaft bearing by lightly tapping around it with a soft hammer.

3. Insert reverse idler shaft in adapter plate by 1/3 of its entire length.

Make sure that the cut-out portion of reverse idler shaft is lined up with inner face of adapter plate.

4. Install bearing retainer in adapter plate.

Align bearing retainer with reverse idler shaft at the cut-out portion of this shaft, torque screws to 1.9 to 2.5 kg-m (14 to 18 ft-lb) and stake each screw at two points with a punch. See Figure MT-31.

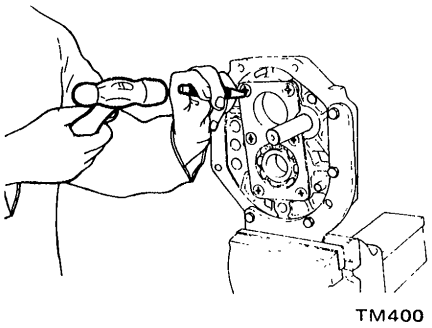

Fig. MT-31 Staking screw

5. Install countershaft rear bearing in adapter plate by lightly tapping around it with a soft hammer.

GEAR ASSEMBLY

Clean all parts in solvent and dry with compressed air.

Synchronizer assembly

Assemble synchronizer assembly.

Position shifting insert springs and shifting inserts in three(3) slots in synchronizer hub; put coupling sleeve on synchronizer hub.

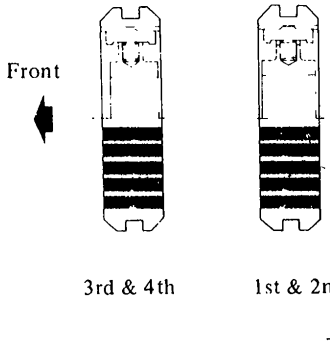

Fig. MT-32 Installing synchronizer hub

Mainshaft assembly

1. Assemble 2nd gear needle bearing, 2nd gear, baulk ring, 1st & 2nd speed synchronizer assembly, 1st gear baulk ring, 1st gear bush, needle bearing, 1st gear, steel ball, and thrust washer on mainshaft. Before installing a steel ball, apply grease to it. See Figure MT-33.

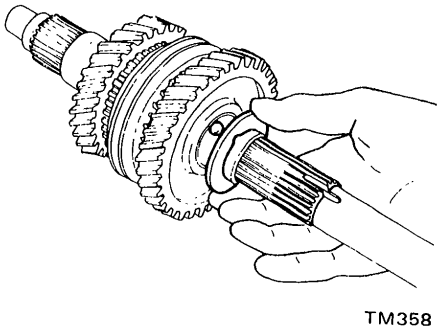

Fig. MT-33 Installing thrust washer

2. Set Transmission Press Stand KV31100400 and place adapter plate assembly on it. See Figure MT-34.

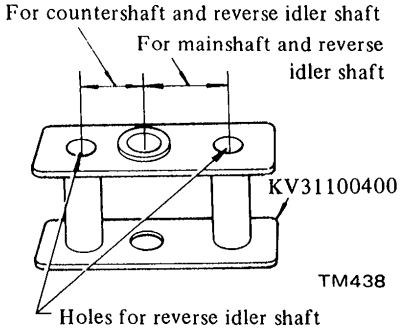

Fig. MT-34 Transmission Press Stand

3. Install mainshaft assembly to adapter plate assembly. Be sure to place bearing squarely against shaft and press it into place on shaft gradually. See Figure MT-35.

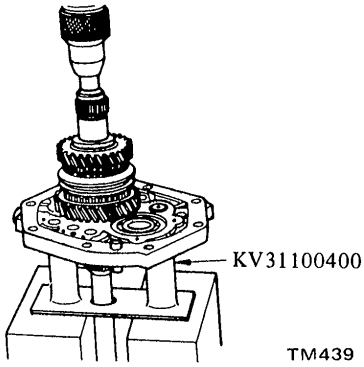

Fig. MT-35 Installing mainshaft assembly

Countershaft assembly

1. Place new woodruff keys in grooves in countershaft and tap them lightly until they are seated securely.

Use a soft hammer to avoid damaging keys.

Downloaded from www.Manualslib.com manuals search engine

2. Place adapter plate assembly and mainshaft assembly so that countershaft rear bearing rests on Transmission Press Stand KV31100400 properly.
3. Install countershaft into adapter plate by pressing it. See Figure MT-36.

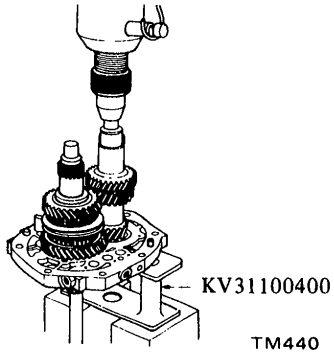

Fig. MT-36 Installing countershaft

4. Position 3rd gear needle bearing, mainshaft 3rd gear, baulk ring, and 3rd & 4th synchronizer assembly on the front of mainshaft.
5. Install thrust washer on mainshaft and secure it with snap ring of proper thickness that will fit the groove in mainshaft. See Figure MT-37.

Available snap ring

No.	Thickness mm (in)
1	1.4 (0.055)
2	1.5 (0.059)
3	1.6 (0.063)

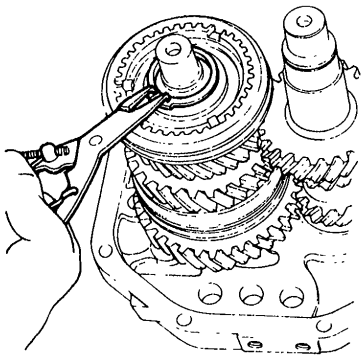

Fig. MT-37 Installing snap ring

Main drive gear assembly

1. Using Transmission Adapter ST23800000, press main drive bearing onto the shaft of main drive gear. Make sure that snap ring groove on shaft clears bearing.
2. Place main drive bearing spacer on main drive bearing and secure main drive bearing with thicker snap ring that will eliminate end play. See Figure MT-38.

Available snap ring

No.	Thickness mm (in)
1	1.80 (0.0709)
2	1.87 (0.0736)
3	1.94 (0.0764)
4	2.01 (0.0791)
5	2.08 (0.0819)
6	2.15 (0.0846)

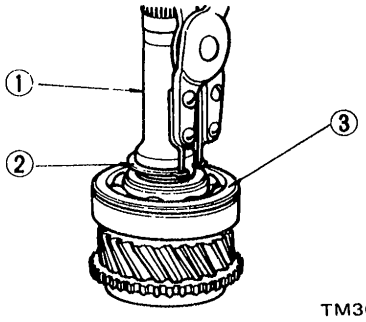

Fig. MT-38 Installing snap ring

3. Position baulk ring on cone surface of main drive gear. Apply gear oil to mainshaft pilot bearing and install it on mainshaft.

Assemble main drive gear assembly on the front end of mainshaft.

4. Press counter drive gear onto countershaft with Counter Gear Drift ST23860000 by meshing gears and secure counter drive gear with thicker snap ring. See Figures MT-39 and MT-40.

Note: Be sure to drive in counter drive gear and main drive gear simultaneously.

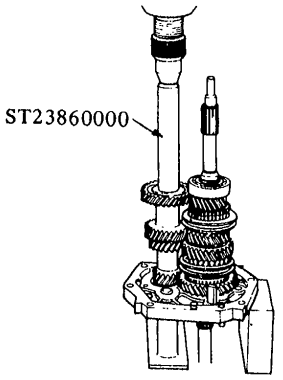

Fig. MT-39 Installing countershaft drive gear

Available counter drive gear snap ring

No.	Thickness mm (in)
1	1.4 (0.055)
2	1.5 (0.059)
3	1.6 (0.063)

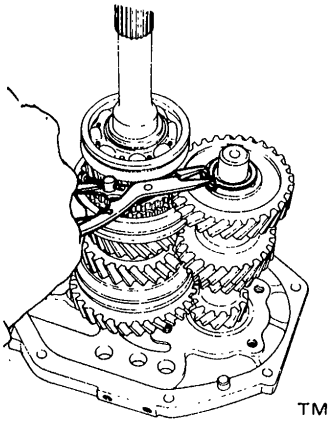

Fig. MT-40 Installing snap ring

5. Press countershaft front bearing onto countershaft with Drift C ST22360002. See Figure MT-40.

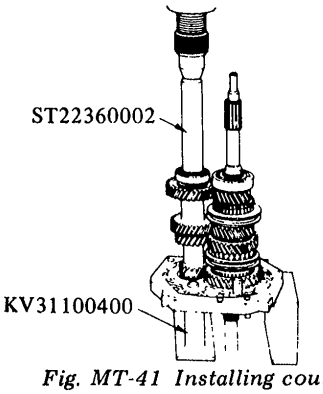

Fig. MT-41 Installing countershaft front bearing

6. Support adapter plate in a vise with Setting Plate Adapter ST23810001, with mainshaft facing down.

Downloaded from www.Manualslib.com manuals search engine

7. Install mainshaft reverse gear, plain washer on the rear of mainshaft and install mainshaft nut.

Tighten mainshaft nut temporarily.

8. Install counter reverse gear on the rear of countershaft and secure with snap ring.

Use snap ring to give a minimum gear end play. See Figure MT-42.

No.	Thickness mm (in)
1	1.4 (0.055)
2	1.5 (0.059)
3	1.6 (0.063)

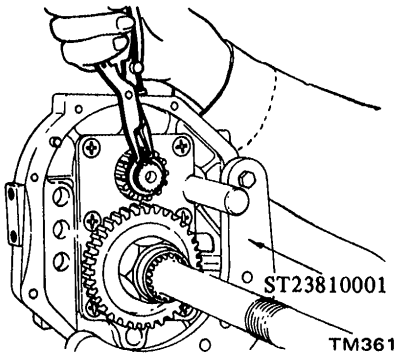

Fig. MT-42 Installing counter reverse gear snap ring

9. Install reverse idler gear on reverse idler shaft.

10. With 1st and 2nd gears doubly engaged, tighten mainshaft nut to the converted torque "C" (See Figure MT-45) using Wrench ST22520000. See Figure MT-43.

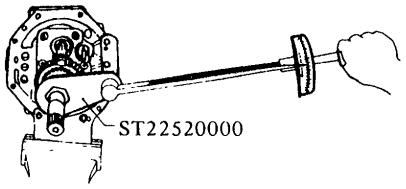

TM768

Fig. MT-43 Tightening mainshaft nut

Explanation of converted torque

Mainshaft nut should be tightened to 14 to 17 kg-m (101 to 123 ft-lb) torque with the aid of Wrench ST22520000. When doing so, the amount of torque to be read on wrench needle should be modified according to the following formula:

$$C \text{ kg-m} = 14 \times \left(\frac{L}{L + 0.10}\right) \text{ to } 17 \times \left(\frac{L}{L + 0.10}\right)$$

or

$$C \text{ (ft-lb)} = 101 \times \left(\frac{L}{L + 0.33}\right) \text{ to } 123 \times \left(\frac{L}{L + 0.33}\right)$$

Where,

C: Value read on the torque wrench kg-m (ft-lb)

L: Effective length of torque wrench m (ft)

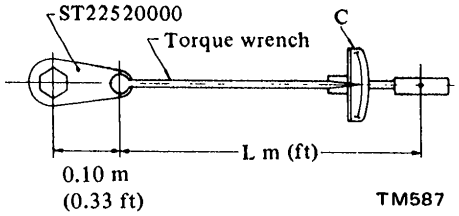

Fig. MT-44 Setting wrench

Example,

When a 0.40 m (1.31 ft)-long torque wrench is used, the "C" in Figure MT-45 will be 11.2 to 13.6 kg-m (81 to 98 ft-lb).

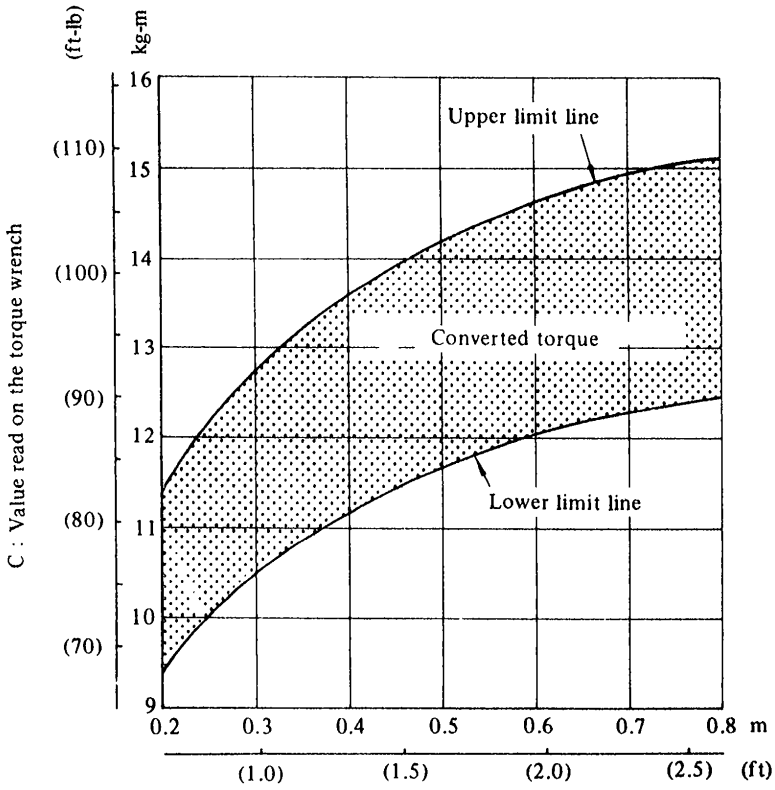

Fig. MT-45 Converted torque

Downloaded from www.Manualslib.com manuals search engine

11. Tighten mainshaft nut to 14.0 to 17.0 kg-m (101 to 123 ft-lb) torque, and stake mainshaft nut to groove of mainshaft with a punch. See Figure MT-46.

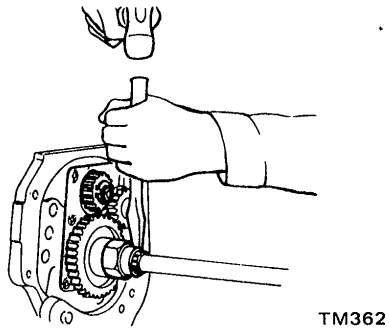

Fig. MT-46 Staking mainshaft nut

12. Measure gear end play and backlash.

Make sure that they are held within the specified values.

For details, refer to the instructions under topic "Inspection".

Note: The main drive gear and counter drive gear should be handled as a matched set.
When you replace a main drive gear or counter drive gear, be sure to replace as a set of main drive gear and counter drive gear.

Shift forks and fork rods assembly

1. Place 1st & 2nd shift fork in groove in 1st & 2nd coupling sleeve, and slide 1st & 2nd fork rod through adapter plate and 1st & 2nd shift fork. Prior to installing 1st & 2nd fork rod, install 3rd & 4th shift fork in groove in 3rd & 4th coupling sleeve.

Note: Shift forks for 1st & 2nd and 3rd & 4th are one and the same parts.
Make sure that the long end of shift fork for 1st & 2nd is placed on the counter gear side and the long end for 3rd & 4th is on the opposite side.

Secure 1st & 2nd fork rod to shift fork with a new retaining pin.

2. Install check ball, check ball spring, and check ball plug. Prior to tightening check ball plug, apply sealant to check ball plug.

Align notch in 1st & 2nd fork rod with check ball. See Figure MT-47.

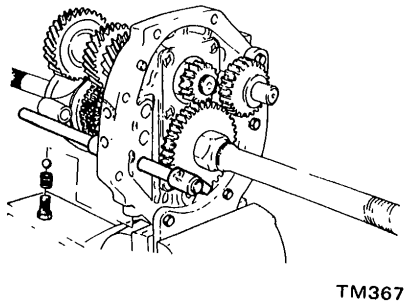

Fig. MT-47 Installing 1st & 2nd fork rod

3. Slide 3rd & 4th fork rod through adapter plate and 3rd & 4th shift fork, and secure with a new retaining pin.

Note: Prior to assembling 3rd & 4th fork rod, install two(2) interlock balls into adapter plate as shown in Figure MT-13.

4. Install check ball and check ball spring.

Apply sealant to check ball plug and install it in place.

Align notch in 3rd & 4th fork rod with check ball by sliding 3rd & 4th fork rod as necessary. See Figure MT-48.

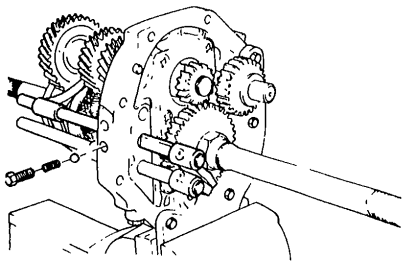

Fig. MT-48 Installing 3rd & 4th fork rod

5. Place reverse shift fork in reverse idler gear.

Slide reverse fork rod through reverse shift fork and adapter plate, and secure with a new retaining pin.

Note: Prior to assembling reverse fork rod, install two(2) interlock balls into adapter plate as shown in Figure MT-13.

6. Install check ball and check ball spring.

Apply sealant to check ball plug and install it in place.

Align notch in reverse fork rod with check ball. See Figure MT-49.

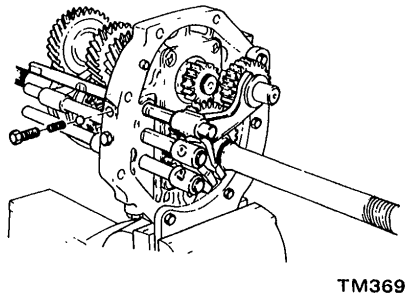

Fig. MT-49 Installing reverse fork rod

7. Torque each check ball plug to 1.9 to 2.5 kg-m (14 to 18 ft-lb).

Note: Ball plug for 1st & 2nd fork rod is longer than those for reverse shift fork rod and 3rd & 4th fork rod.

8. Apply gear oil to all sliding surfaces and check to see that shift rods operate correctly and gears are engaged smoothly.

TRANSMISSION ASSEMBLY

Transmission case assembly

1. Clean mating surfaces of adapter plate and transmission case.

Apply sealant to mating surfaces of adapter plate and transmission case.

2. Slide transmission case onto adapter plate by lightly tapping with a soft hammer until case bears against adapter plate.

Carefully install main drive bearing and countershaft front bearing.

Make certain that mainshaft rotates freely.

3. Fit main drive bearing snap ring to groove in main drive bearing by using Expander. See Figure MT-50.

Downloaded from www.Manualslib.com manuals search engine

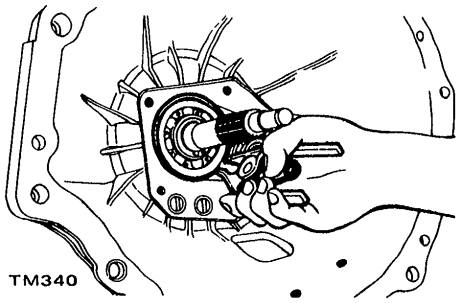

Fig. MT-50 Fitting main drive bearing snap ring

Rear extension assembly

1. Clean mating surfaces of adapter plate and rear extension.

Apply sealant to mating surfaces of adapter plate and rear extension.

2. With fork rods in their neutral positions, gradually slide rear extension onto adapter plate, making sure that speed change cross lever engages with fork rod brackets correctly.

3. Install washers and through-bolts and torque to 1.6 to 2.1 kg-m (12 to 15 ft-lb)

Front cover assembly

1. Select countershaft front bearing shim as follows: See Figure MT-51.

(1) Measure depth "A" from front end of transmission case to countershaft front bearing.

(2) Select a shim of thickness "A" measured.

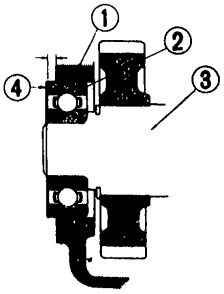

1 Transmission case
2 Countershaft front bearing
3 Countershaft
4 Shim

TM371

Fig. MT-51 Selecting countershaft front bearing shim

Available shim

No.	"A" mm (in)	Countershaft front bearing shim mm (in)
1	2.92 to 3.01 (0.1150 to 0.1185)	0.6 (0.024)
2	3.02 to 3.11 (0.1189 to 0.1224)	0.5 (0.020)
3	3.12 to 3.21 (0.1228 to 0.1264)	0.4 (0.016)
4	3.22 to 3.31 (0.1268 to 0.1303)	0.3 (0.012)
5	3.32 to 3.41 (0.1307 to 0.1343)	0.2 (0.008)
6	3.42 to 3.51 (0.1346 to 0.1382)	0.1 (0.004)
7	3.52 to 3.61 (0.1386 to 0.1421)	–
8	3.62 to 3.71 (0.1425 to 0.1461)	–

2. Clean mating surfaces of front cover and transmission case.

Apply grease to shim selected to retain it on front cover; install front cover to transmission case with gasket in place.

Install through-bolts with washers under them and tighten to 1.6 to 2.1 kg-m (12 to 15 ft-lb) torque.

Apply sealant to threads of through-bolts before installation.

3. Install speedometer pinion assembly on rear extension. After making sure that lock plate is lined up with groove in speedometer pinion sleeve, install through-bolts and torque to 0.4 to 0.5 kg-m (3 to 4 ft-lb).

4. Install back-up lamp switch and torque to 2.0 to 3.0 kg-m (14 to 22 ft-lb).

Be sure to apply sealant before installation.

5. Apply a light coat of multipurpose grease to withdrawal lever, release bearing and bearing sleeve; install them on clutch housing.

After connecting them with holder spring, install dust cover on clutch housing.

6. Install control lever temporarily, and shift control lever through all gears to make sure that gears operate smoothly.

Note: Install drain plug and filler plug with sealant in place.

INSTALLATION

Install the transmission in the reverse order of removal paying attention to the following points.

1. Before installing, clean mating surfaces of engine rear plate and transmission case.

2. Before installing, lightly apply grease to spline parts of clutch disc and main drive gear.

3. Tighten bolts securing transmission to engine to specifications. See Figure MT-52.

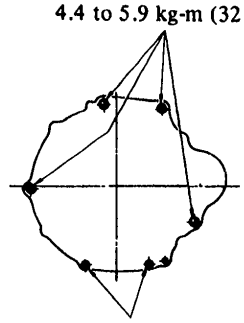

Fig. MT-52 Tightening torque

4. Remove filler plug and fill transmission with recommended gear oil to the level of the plug hole. [Approximately 1.7 liters (3⅝ pt, 3 pt)].

Downloaded from www.Manualslib.com manuals search engine

5-SPEED TRANSMISSION (TYPE : FS5W71B)

CONTENTS

DESCRIPTION MT-14
REMOVAL MT-16
DISASSEMBLY MT-16
TRANSMISSION CASE DISASSEMBLY MT-16
DISASSEMBLY OF GEAR ASSEMBLY MT-16
REAR EXTENSION DISASSEMBLY MT-17
ADAPTER PLATE DISASSEMBLY MT-18
INSPECTION MT-18
TRANSMISSION CASE AND REAR EXTENSION HOUSING MT-18
BEARING MT-18
GEARS AND SHAFTS MT-18
BAULK RING MT-18
OIL SEAL MT-18
ASSEMBLY MT-18
FRONT COVER ASSEMBLY MT-18
REAR EXTENSION ASSEMBLY MT-18
GEAR ASSEMBLY MT-19
TRANSMISSION ASSEMBLY MT-19
INSTALLATION MT-19

DESCRIPTION

The transmission is of a 5-speed forward with overdrive (4 + OD speed), fully synchronized constant-mesh type that uses helical gears.

The 5-speed transmission covered in this section is similar in all respects to the 4-speed transmission (type: F4W71B) stated previously except the overdrive position of it.

On 5-speed transmission, the reverse & OD speed position is reverse position of 4-speed version.

The overdrive gear rides on the mainshaft freely through the needle roller bearing and counter overdrive gear is fitted to the countershaft by splines.

The overdrive synchronizer system is on the mainshaft rear side.

Placing the control lever in overdrive position brings the reverse & OD coupling sleeve (reverse gear) on mainshaft into mesh with overdrive clutch gear. The reverse & OD synchronizer hub is fitted to the mainshaft by splines so the overdrive gear on mainshaft turns together with the mainshaft.

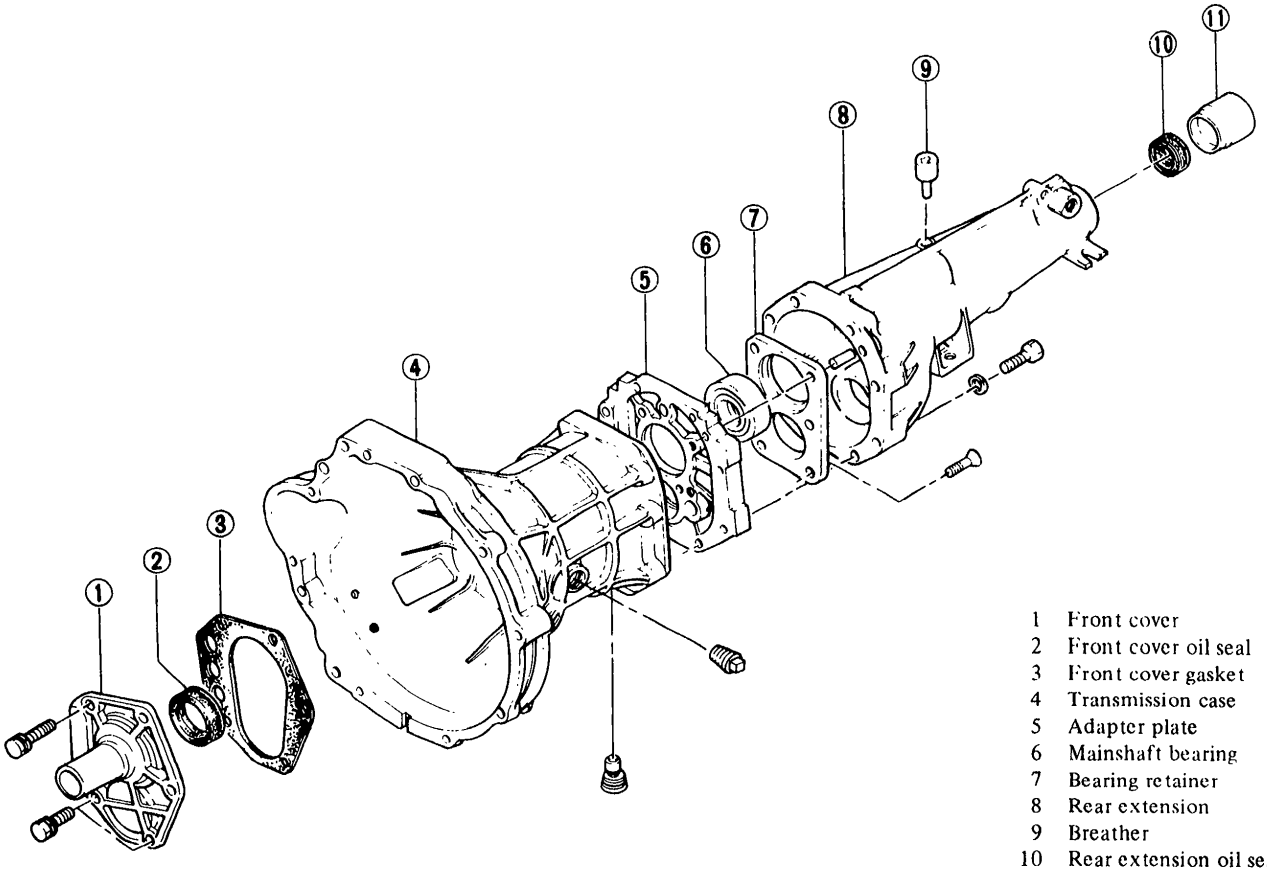

1 Front cover
2 Front cover oil seal
3 Front cover gasket
4 Transmission case
5 Adapter plate
6 Mainshaft bearing
7 Bearing retainer
8 Rear extension
9 Breather
10 Rear extension oil seal
11 Sleeve yoke dust cover

TM046A

Fig. MT-53 FS5W71B transmission case components

Downloaded from www.Manualslib.com manuals search engine

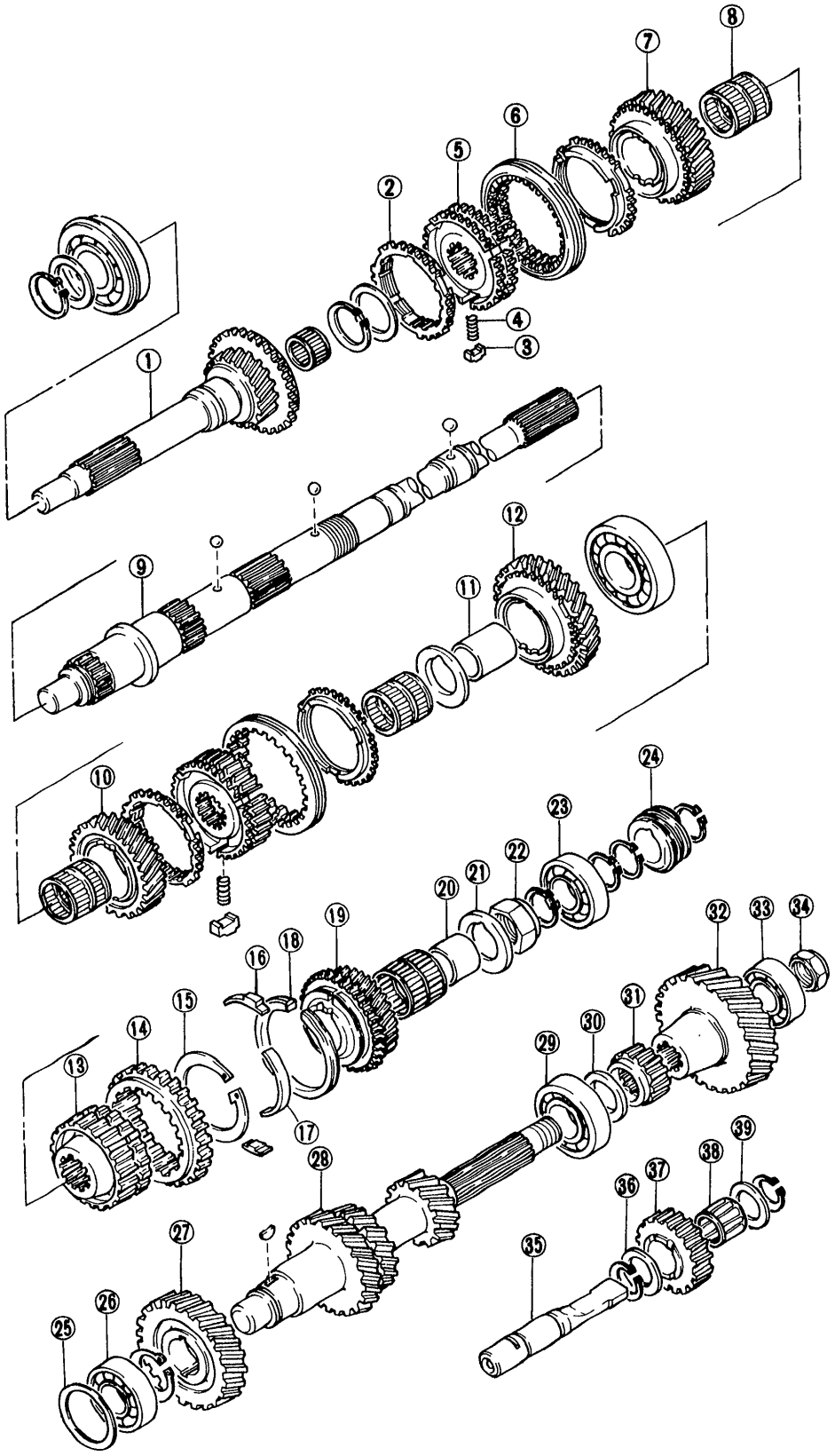

1 Main drive gear
2 Baulk ring
3 Shifting insert
4 Shifting insert spring
5 Synchronizer hub
6 Coupling sleeve
7 3rd main gear
8 Needle bearing
9 Mainshaft
10 2nd main gear
11 Bushing
12 1st main gear
13 OD-reverse synchronizer hub
14 Reverse gear
15 Circlip
16 Thrust block
17 Brake band
18 Synchronizer ring
19 Overdrive main gear
20 Overdrive gear bushing
21 Washer
22 Mainshaft nut
23 Overdrive mainshaft bearing
24 Speedometer drive gear
25 Countershaft front bearing shim
26 Countershaft front bearing
27 Countershaft drive gear
28 Countershaft
29 Countershaft bearing
30 Reverse counter gear spacer
31 Reverse counter gear
32 Overdrive counter gear
33 Countershaft rear bearing
34 Countershaft nut
35 Reverse idler shaft
36 Reverse idler thrust washer
37 Reverse idler gear
38 Reverse idler gear bearing
39 Reverse idler thrust washer

TM047A

Fig. MT-54 FS5W71B transmission gear components

Downloaded from www.Manualslib.com manuals search engine

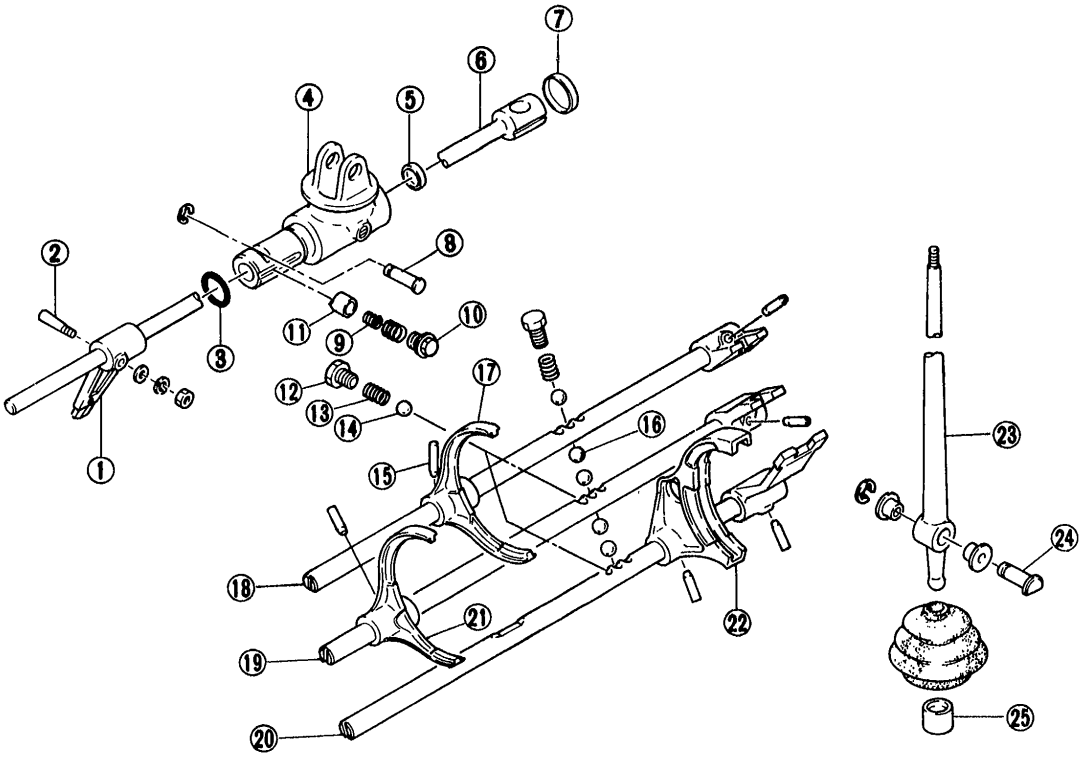

1 Striking lever
2 Lock pin
3 O-ring
4 Striking guide
5 Oil seal
6 Striking rod
7 Expansion plug
8 Stopper guide pin
9 Return spring
10 Return spring plug
11 Return spring plunger
12 Check ball plug
13 Check spring
14 Check ball
15 Retaining pin
16 Interlock ball
17 1st & 2nd shift fork
18 1st & 2nd fork rod
19 3rd & 4th fork rod
20 Reverse & OD fork rod
21 3rd & 4th shift fork
22 Reverse & OD shift fork
23 Control lever
24 Control lever pin
25 Control lever bushing

TM048A

Fig. MT-55 FS5W71B transmission shift control components

REMOVAL

Same as for the F4W71B.

DISASSEMBLY

TRANSMISSION CASE DISASSEMBLY

Same as for the F4W71B.

DISASSEMBLY OF GEAR ASSEMBLY

Fork rod

Same as for the F4W71B.

Gear assembly

1. With gears doubly engaged, draw out countershaft front bearing using a suitable gear puller. See Figure MT-56.
2. Remove counter drive gear snap ring.
3. Draw out counter drive gear complete with main drive gear assembly by means of a gear puller.

When drawing out main drive gear assembly, be careful not to drop pilot needle bearing onto floor from the front end of mainshaft. See Figure MT-57.

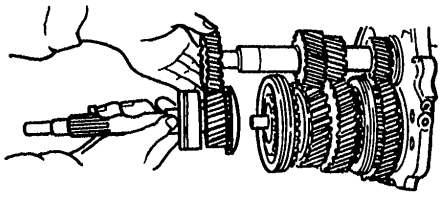

TM756

Fig. MT-57 Removing counter drive gear and main drive gear

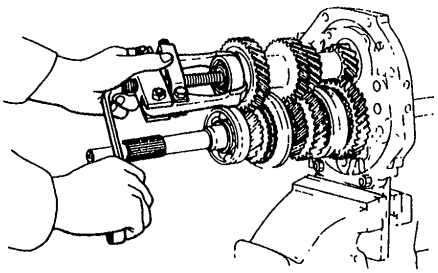

TM398

Fig. MT-56 Removing countershaft front bearing

4. Remove snap ring and then thrust washer from mainshaft front end.

Draw out 3rd & 4th synchronizer assembly and remove 3rd gear assembly.

5. Remove snap ring and then draw out speedometer gear and bearing from mainshaft rear side.
6. With gears doubly engaged, release caulking on countershaft and mainshaft nuts then loosen them.

Remove countershaft nut.

Downloaded from www.Manualslib.com manuals search engine

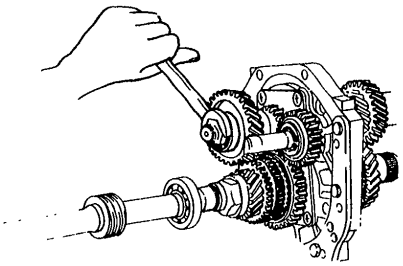

TM757

Fig. MT-58 Removing countershaft nut

Note: When removing mainshaft assembly, loosen mainshaft nut.

7. Draw out counter overdrive gear and bearing from countershaft rear end by using a suitable gear puller. See Figure MT-59.

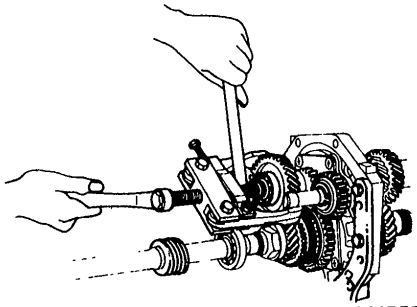

TM758

Fig. MT-59 Removing counter overdrive gear and bearing

8. Remove counter reverse idler gear and spacer.
9. Remove countershaft by lightly tapping the rear end with a soft hammer.

Be careful not to drop off gear shaft.

10. Remove reverse idler gear snap ring.

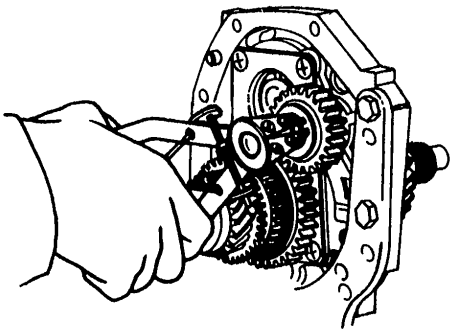

TM759

Fig. MT-60 Removing reverse idler gear snap ring

11. Remove reverse idler gear.
12. Remove snap ring of mainshaft end bearing. Draw out bearing using Mainshaft Rear Bearing Puller KV32101330. Remove other snap ring of mainshaft end bearing. See Figure MT-61.

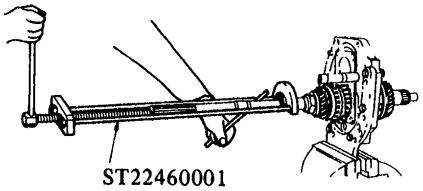

TM760

Fig. MT-61 Removing mainshaft end bearing

13. Remove mainshaft nut, thrust washer, mainshaft reverse gear, OD synchronizer and overdrive gear.
14. Draw out mainshaft gear assembly together with countershaft by lightly tapping the rear end with a soft hammer while holding the front of mainshaft gear assembly by hand.

Be careful not to drop off gear shaft. See Figure MT-62.

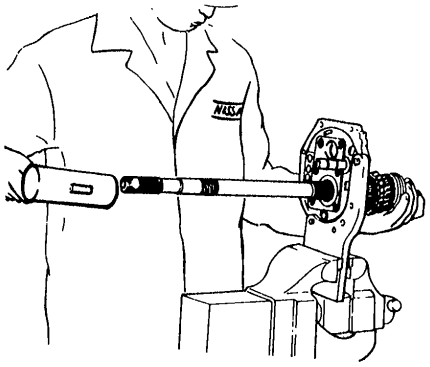

TM761

Fig. MT-62 Driving out gear assembly

Main drive gear

Same as for the F4W71B.

Countershaft assembly

Same as for the F4W71B.

REAR EXTENSION DISASSEMBLY

Remove lock pin from striking lever, and remove striking rod.

Note: Do not disassemble rear extension bushing from rear extension.

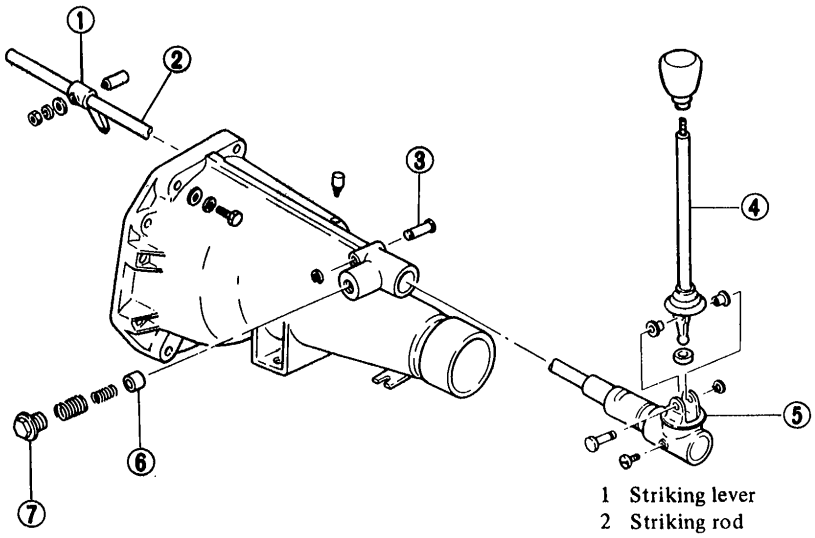

1 Striking lever
2 Striking rod
3 Stopper pin
4 Control lever
5 Striking rod guide
6 Reverse select plunger
7 Reverse select plug

TM767

Fig. MT-63 Exploded view of shifting mechanism

Downloaded from www.Manualslib.com manuals search engine

ADAPTER PLATE DISASSEMBLY

1. Remove six(6) bearing retainer attaching screws with an impact driver and remove bearing retainer from adapter plate. See Figure MT-64.

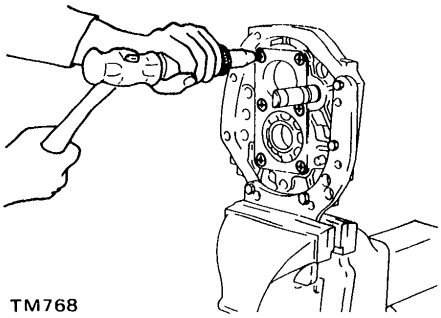

Fig. MT-64 Removing screws

2. Remove mainshaft bearing from the rear extension side.
3. To remove outer race of counter gear rear bearing, apply a brass drift to race side surface, and withdraw it by tapping the top of drift with a hammer.

INSPECTION

Wash all parts in a suitable cleaning solvent and check for wear, damage or other faulty conditions.

Notes:

a. **Be careful not to damage any parts with scraper.**
b. **Do not clean, wash or soak oil seals in solvent.**

TRANSMISSION CASE AND REAR EXTENSION HOUSING

Same as for the F4W71B.

BEARING

Same as for the F4W71B.

GEARS AND SHAFTS

1. Check all gears for excessive wear, chips or cracks; replace as required.
2. Check shaft for bending, crack, wear, and worn spline; if necessary, replace.
3. Measure backlash in gears.

Main drive and
counter drive gear:
0.05 to 0.10 mm
(0.0020 to 0.0039 in)
1st, 2nd, 3rd, 5th and
reverse gears:
0.05 to 0.20 mm
(0.0020 to 0.0040 in)

If the above limits are exceeded, replace drive and driven gears as a set.

4. Measure gear end play:

1st gear:
0.32 to 0.39 mm
(0.0126 to 0.0154 in)
2nd gear:
0.12 to 0.19 mm
(0.0047 to 0.0075 in)
3rd gear:
0.13 to 0.37 mm
(0.0051 to 0.0146 in)
OD gear (on mainshaft):
0.32 to 0.39 mm
(0.0126 to 0.0154 in)

BAULK RING

Same as for the F4W71B.

OIL SEAL

Same as for the F4W71B.

ASSEMBLY

To assemble, reverse the order of disassembly. Observe the following instructions.

FRONT COVER ASSEMBLY

Same as for the F4W71B.

REAR EXTENSION ASSEMBLY

1. Wipe clean seal seat in rear extension housing; press fit oil seal in place.

Coat oil seal and bushing with gear oil for initial lubrication. See Figure MT-65.

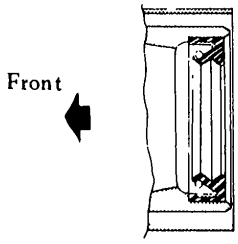

Fig. MT-65 Rear extension oil seal

2. Apply multi-purpose grease to O-ring and plunger grooves in striking rod.

Insert striking rod with striking rod guide through rear extension.

3. Install striking lever on front end of striking rod. Install lock pin and torque screw to 0.9 to 1.2 kg-m (7 to 9 ft-lb).
4. Install mainshaft bearing by lightly tapping around it with a soft hammer.
5. Insert reverse idler shaft in adapter plate.

Make sure that the cut-out portion of reverse idler shaft is lined up with inner face of adapter plate.

6. Install bearing retainer in adapter plate.

Align bearing retainer with reverse idler shaft at the cut-out portion of this shaft, torque screws to 1.9 to 2.5 kg-m (14 to 18 ft-lb) and stake each screw at two points with a punch. See Figure MT-66.

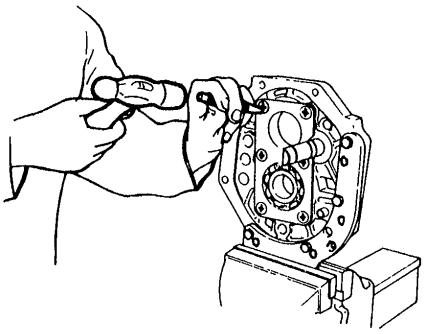

Fig. MT-66 Staking screw

7. Install countershaft rear bearing in adapter plate by lightly tapping around it with a soft hammer.

GEAR ASSEMBLY

Clean all parts in solvent and dry with compressed air.

Synchronizer assembly

Same as for the F4W71B.

Overdrive gear synchronizer assembly

1. Assemble reverse & OD synchronizer assembly.

Downloaded from www.Manualslib.com manuals search engine

2. Assemble overdrive gear assembly.

Position synchronizer ring, band brake, thrust block and anchor block on overdrive clutch gear; install circlip.

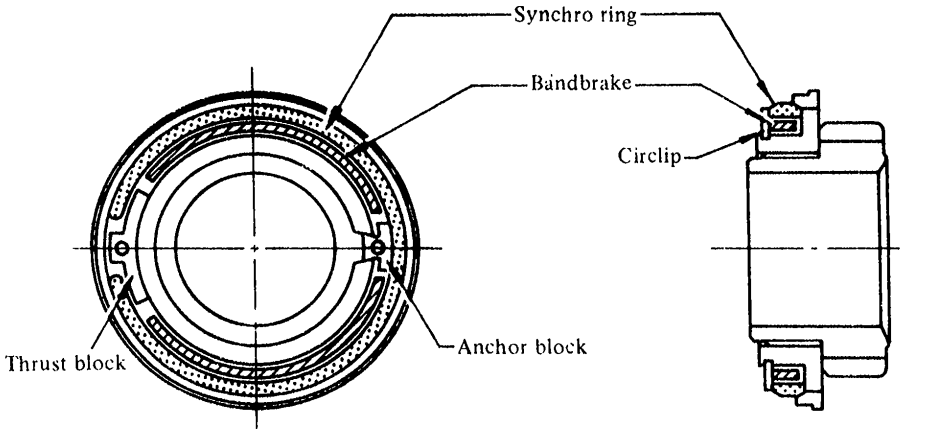

Fig. MT-67 Installing overdrive gear assembly

2. Assemble OD & reverse synchronizer assembly, OD gear bushing, needle bearing, OD gear assembly, steel ball, and thrust washer on mainshaft rear side. Before installing steel ball, apply grease to it.
3. Install new mainshaft nut, and tighten it temporarily.
4. Install counter reverse gear, counter 5th gear, bearing and new countershaft nut. Tighten nut temporarily.
5. Tighten mainshaft countershaft nuts and stake nuts at groove in shafts with a punch. Tightening procedures for the mainshaft nut are the same as those for the F4W71B.

Mainshaft assembly

Same as for the F4W71B.

Countershaft assembly

Same as for the F4W71B.

Main drive gear assembly

Procedures are the same as for the F4W71B transmission, except as follows:

1. Insert countershaft and mainshaft into adapter plate, and place adapter plate in a vise with setting plate.

Install snap ring, spacer, needle roller bearing, reverse idler gear, spacer and snap ring.

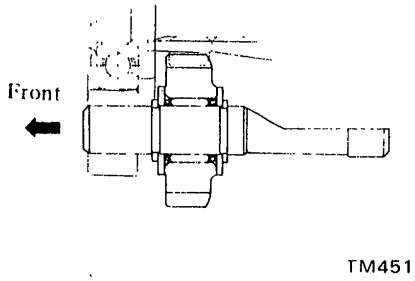

Fig. MT-68 Reverse idler gear

Shift forks and fork rods assembly

Same as for the F4W71B.

TRANSMISSION ASSEMBLY

Same as for the F4W71B.

INSTALLATION

Same as for the F4W71B.

Downloaded from www.Manualslib.com manuals search engine

SERVICE DATA AND SPECIFICATIONS

GENERAL SPECIFICATIONS

Transmission type	F4W71B	FS5W71B
Synchromesh type	Warner	Warner + Servo
Shift type	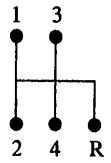	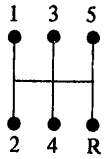
Gear ratio		
1st	3.321	3.321
2nd	2.077	2.077
3rd	1.308	1.308
4th	1.000	1.000
5th	–	0.864
Reverse	3.382	3.382
Final gear ratio	3.545	3.545
Speedometer gear ratio	17/6	17/6
Oil capacity (US pt, Imp pt)	1.7 (3⅝, 3)	2.0 (4¼, 3½)

Downloaded from www.Manualslib.com manuals search engine

TIGHTENING TORQUE

Installation	Unit: kg-m (ft-lb)
Engine to transmission installation bolt	4.4 to 5.9 (32 to 43)
Transmission to engine rear plate bolt	0.9 to 1.2 (7 to 9)
Clutch operating cylinder installation bolt	2.5 to 3.0 (18 to 22)
Rear mounting insulator to transmission installation bolt	0.8 to 1.1 (6 to 8)
Crossmember mounting bolt	3.2 to 3.7 (23 to 27)
Propeller shaft to diff. installation bolt	3.5 to 4.5 (25 to 33)
Gear assembly	
Rear extension installation bolt	1.6 to 2.1 (12 to 15)
Front cover installation bolt	1.6 to 2.1 (12 to 15)
Bearing retainer to adapter plate screw	1.9 to 2.5 (14 to 18)
Mainshaft nut	14.0 to 17.0 (101 to 123)
Check ball plug	1.9 to 2.5 (14 to 18)
Striking lever lock pin	0.9 to 1.2 (7 to 9)
Reverse select return plug	0.9 to 1.2 (7 to 9)
Speedometer sleeve locking plate nut	0.4 to 0.5 (3 to 4)
Reverse lamp switch	2.0 to 3.0 (14 to 22)
Gear oil filler plug	2.5 to 3.5 (18 to 25)
Gear oil drain plug	2.5 to 3.5 (18 to 25)

SPECIFICATIONS

Gear backlash	Unit: mm (in)
Maindrive gear to counter drive gear	0.05 to 0.10 (0.0020 to 0.0039)
1st gear	0.05 to 0.20 (0.0020 to 0.0079)
2nd gear	0.05 to 0.20 (0.0020 to 0.0079)
3rd gear	0.05 to 0.20 (0.0020 to 0.0079)
OD gear	0.05 to 0.20 (0.0020 to 0.0079)
Gear end play	
1st gear	0.32 to 0.39 (0.0126 to 0.0154)
2nd gear	0.12 to 0.19 (0.0047 to 0.0075)
3rd gear	0.13 to 0.37 (0.0051 to 0.0146)
OD gear	0.32 to 0.39 (0.0126 to 0.0154)
Counter gear	0.01 to 0.21 (0.0004 to 0.0083)
Reverse idler gear	0.05 to 0.20 (0.0020 to 0.0079)
Clearance between baulk ring and gear	
All gears	1.25 to 1.60 (0.0492 to 0.0630)
Counter bearing adjusting shim	0.6 (0.024) 0.5 (0.020) 0.4 (0.016) 0.3 (0.012) 0.2 (0.008) 0.1 (0.004)

Downloaded from www.Manualslib.com manuals search engine

TROUBLE DIAGNOSES AND CORRECTIONS

Condition	Probable cause	Corrective action
Difficult to intermesh gears Causes for difficult gear shifting are classified to troubles concerning control system and transmission. When gear shift lever is heavy and it is difficult to shift gears, clutch disengagement may also be unsmooth. First, make sure that clutch operates correctly, and inspect transmission.	Worn gears, shaft, and/or bearing. Insufficient operating stroke due to worn or loose sliding part. Faulty or damaged synchronizer.	Replace. Repair or replace. Replace.
Gear slips out of mesh. In most cases, this trouble occurs, when interlock ball, check ball, and/or spring is worn or weakened, or when control system is faulty. In this case, the trouble cannot be corrected by replacing gears, and therefore, trouble shooting must be carried out carefully. It should also be noted that gear slips out of mesh due to vibration generated by weakened front and rear engine mounts.	Worn interlock ball. Worn check ball and/or weakened or broken spring. Worn fork rod ball groove. Worn or damaged bearing. Worn or damaged gear.	Replace. Replace. Replace. Replace. Replace.
Noise When noise occurs with engine idling and ceases when clutch is disengaged, or when noise occurs while shifting gears, it is an indication that the noise is from transmission. (Transmission may rattle during engine idling. Check air-fuel mixture and ignition timing. After above procedure, readjust engine idling.)	Insufficient or improper lubricant. Oil leaking due to faulty oil seal or sealant, clogged breather, etc. Worn bearing (High humming occurs at a high speed.). Damaged bearing (Cyclic knocking sound occurs also at a low speed.). Worn spline. Worn bushing.	Add oil or replace with designated oil. Clean or replace. Replace. Replace. Replace. Replace.

Downloaded from www.Manualslib.com manuals search engine

SPECIAL SERVICE TOOLS

No.	Tool number & tool name	Description Unit: mm (in)	For use on	Reference page or Figure No.
1.	ST23540000 Fork rod pin punch	For removal of fork rod retaining pin. 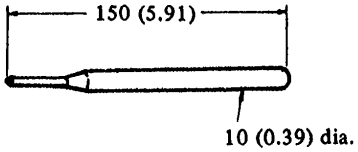	All models	Fig. MT-12
2.	ST22360002 Drift C	For assembly of counter drive bearing. 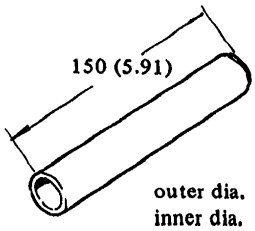 outer dia. 32 (1.26) inner dia. 23 (0.91) SE034	F4W71B FS5W-71B FS5W-63A	Fig. MT-39
3.	ST23800000 Transmission adapter	For assembly of main bearing. 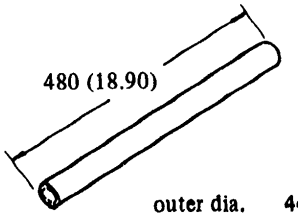 outer dia. 44 (1.73) inner dia. 31 (1.22) SE037	F4W71B FS5W-71B F4W63L	Page MT-10
4.	ST23810001 Setting plate adapter	For setting adapter plate in a vise. 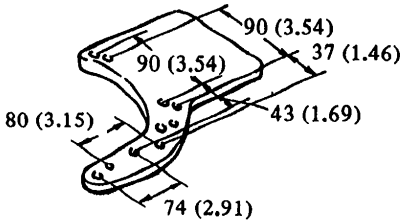 SE132	F4W71B FS5W-71B	Fig. MT-11 Fig. MT-12

Downloaded from www.Manualslib.com manuals search engine

No.	Tool number & tool name	Description Unit: mm (in)	For use on	Reference page or Figure No.
5.	ST22520000 Wrench [38 mm (1.50 in)]	For removal and assembly of mainshaft nut. 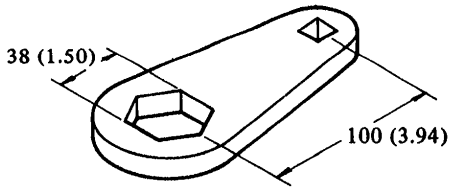 SE313	F4W71B FS5W-71B FS5W-63A	Fig. MT-43
6.	ST23860000 Counter gear drift	For assembly of counter drive gear. 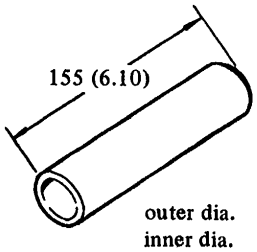 outer dia. 38 (1.50) inner dia. 33 (1.30) SE039	F4W71B FS5W-71B	Fig. MT-39
7.	KV31100400 Transmission press stand	For assembly of mainshaft, countershaft, counter drive gear and counter drive bearing. 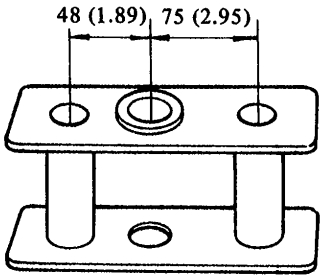 TM438	F4W71B FS5W-71B	Fig. MT-34 Fig. MT-36 Fig. MT-41
8.	ST30031000 Bearing puller	For replacing bearing. 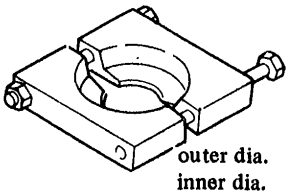 outer dia. 80 (3.15) inner dia. 50 (1.97) SE041	All except F4W60A	Fig. MT-20 Fig. MT-22

Downloaded from www.Manualslib.com manuals search engine

No.	Tool number & tool name	Description Unit: mm (in)	For use on	Reference page or Figure No.
9.	KV32101330 Bearing puller	For removal of mainshaft end bearing, counter overdrive gear and bearing. 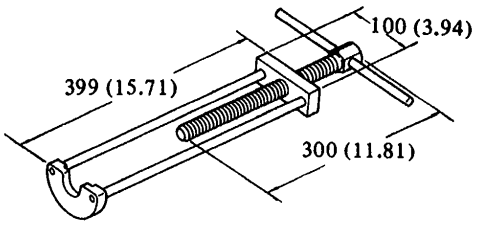	FS5W-71B	Fig. MT-61

Downloaded from www.Manualslib.com manuals search engine

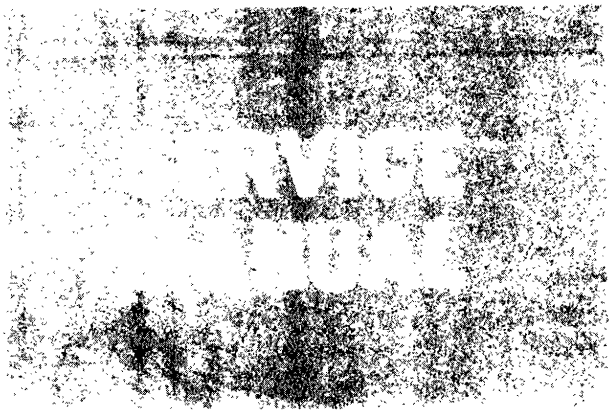

DATSUN 280Z
MODEL S30 SERIES

SECTION AT

AUTOMATIC TRANSMISSION

AT

DESCRIPTION ..... AT- 2
HYDRAULIC CONTROL SYSTEM ..... AT- 4
REMOVAL AND INSTALLATION AT-33
MAJOR REPAIR OPERATION AT-36
TROUBLE DIAGNOSES AND ADJUSTMENT AT-48
SERVICE DATA AND SPECIFICATIONS AT-59
SPECIAL SERVICE TOOLS AT-62

NISSAN

NISSAN MOTOR CO., LTD.
TOKYO, JAPAN

Downloaded from www.Manualslib.com manuals search engine

DESCRIPTION

The model 3N71B automatic transmission is a fully automatic unit consisting primarily of 3-element hydraulic torque converter and two planetary gear sets. Two multiple-disc clutches, a multiple-disc brake, a band brake and a one way sprag clutch provide the friction elements required to obtain the desired function of the two planetary gear sets.

The two planetary gear sets give three forward ratios and one reverse. Changing of the gear ratios is fully automatic in relation to vehicle speed and engine torque input. Vehicle speed and engine manifold vacuum signals are constantly fed to the transmission to provide the proper gear ratio for maximum efficiency and performance at all throttle openings.

The model 3N71B has six selector positions: P, R, N, D, 2, 1.

"P" – Park position positively locks the output shaft to the transmission case by means of a locking pawl to prevent the vehicle from rolling in either direction.

This position should be selected whenever the driver leaves the vehicle

The engine may be started in Park position.

"R" – Reverse range enables the vehicle to be operated in a reverse direction.

"N" – Neutral position enables the engine to be started and run without driving the vehicle.

"D" – Drive range is used for all normal driving conditions.

Drive range has three gear ratios, from the starting ratio to direct drive.

"2" – "2" range provides performance for driving on slippery surfaces. "2" range can also be used for engine braking.

"2" range can be selected at any vehicle speed, and prevents the transmission from shifting out of second gear.

"1" – "1" range can be selected at any vehicle speed and the transmission will shift to second gear and remain in second until vehicle speed is reduced to approximately 40 to 50 km/h (25 to 31 MPH).

"1" range position prevents the transmission from shifting out of low gear. This is particularly beneficial for maintaining maximum engine braking when continuous low gear operation is desirable.

The torque converter assembly is of welded construction and can not be disassembled for service.

FLUID RECOMMENDATION

Use automatic transmission fluid having "DEXRON" identifications only in the 3N71B automatic transmission.

IDENTIFICATION NUMBER

Stamped position:

The plate is attached to the right hand side of transmission case as shown in Figure AT-1.

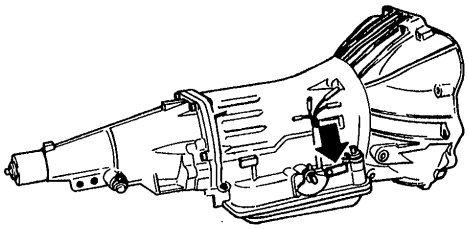

AT344

Fig. AT-1 Identification number

Identification of number Arrangements:

See below.

Model code

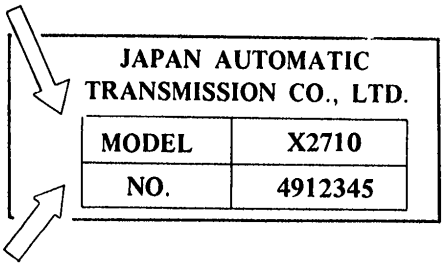

Unit number

Number designation

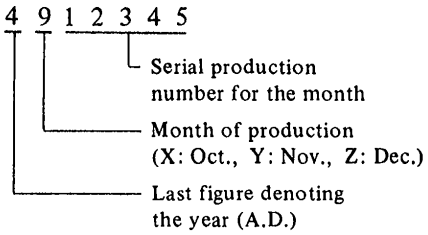

Downloaded from www.Manualslib.com manuals search engine

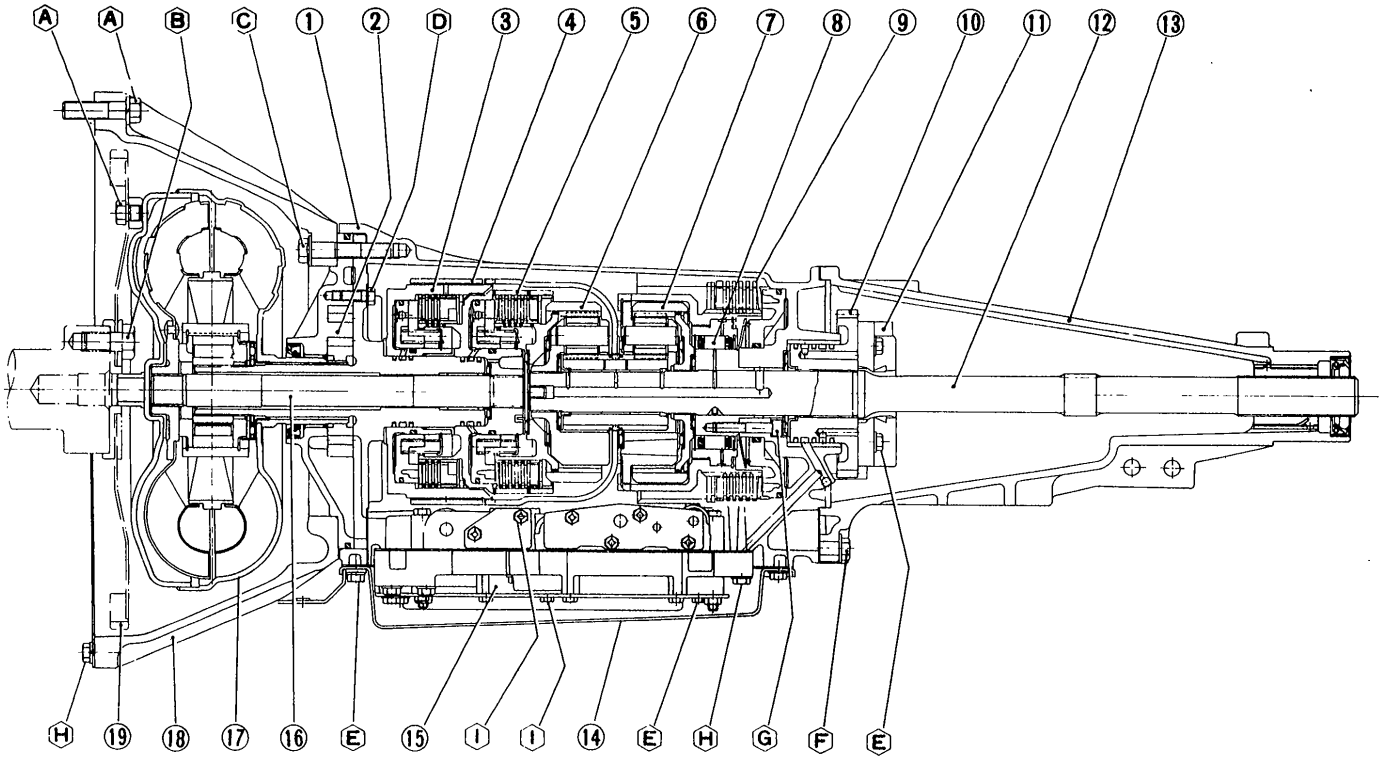

AT312

1 Transmission case
2 Oil pump
3 Front clutch
4 Band brake
5 Rear clutch
6 Front planetary gear
7 Rear planetary gear
8 One-way clutch
9 Low & Reverse brake
10 Oil distributor
11 Governor
12 Output shaft
13 Rear extension
14 Oil pan
15 Control valve
16 Input shaft
17 Torque converter
18 Converter housing
19 Drive plate

Tightening torque (T) of bolts and nuts kg-m (ft-lb)

Ⓐ T: 4 to 5 (29 to 36)
Ⓑ T: 14 to 16 (101 to 116)
Ⓒ T: 4.5 to 5.5 (33 to 40)
Ⓓ T: 0.6 to 0.8 (4 to 6)
Ⓔ T: 0.5 to 0.7 (4 to 5)
Ⓕ T: 2.0 to 2.5 (14 to 18)
Ⓖ T: 1.3 to 1.8 (9 to 13)
Ⓗ T: 0.55 to 0.75 (4 to 5)
Ⓘ T: 0.25 to 0.35 (2 to 3)

Fig. AT-2 Cross-sectional view of 3N71B automatic transmission

Downloaded from www.Manualslib.com manuals search engine

HYDRAULIC CONTROL SYSTEM

CONTENTS

FUNCTIONS OF HYDRAULIC CONTROL UNIT AND VALVES ..... AT- 4
OIL PUMP ..... AT- 4
MANUAL LINKAGE ..... AT- 4
VACUUM DIAPHRAGM ..... AT- 5
DOWNSHIFT SOLENOID ..... AT- 5
GOVERNOR VALVE ..... AT- 5
CONTROL VALVE ASSEMBLY ..... AT- 6
HYDRAULIC SYSTEM AND MECHANICAL OPERATION AT-13
"P" RANGE (PARK) AT-14
"R" RANGE (REVERSE) AT-16
"N" RANGE (NEUTRAL) AT-18
"D_1" RANGE (LOW GEAR) AT-20
"D_2" RANGE (2ND GEAR) AT-22
"D_3" RANGE (TOP GEAR) AT-24
"D" RANGE KICK-DOWN AT-26
"2" RANGE (2ND GEAR) AT-28
"1_1" RANGE (LOW GEAR) AT-30
"1_2" RANGE (2ND GEAR) AT-32

FUNCTIONS OF HYDRAULIC CONTROL UNIT AND VALVES

The hydraulic control system contains an oil pump for packing up oil from the oil pan through the oil strainer. A shift control is provided by two centrifugally operated hydraulic governors on the output shaft, vacuum control diaphragm and downshift solenoid. These parts work in conjunction with valves in the valve body assembly located in the base of the transmission. The valves regulate oil pressure and direct it to appropriate transmission components.

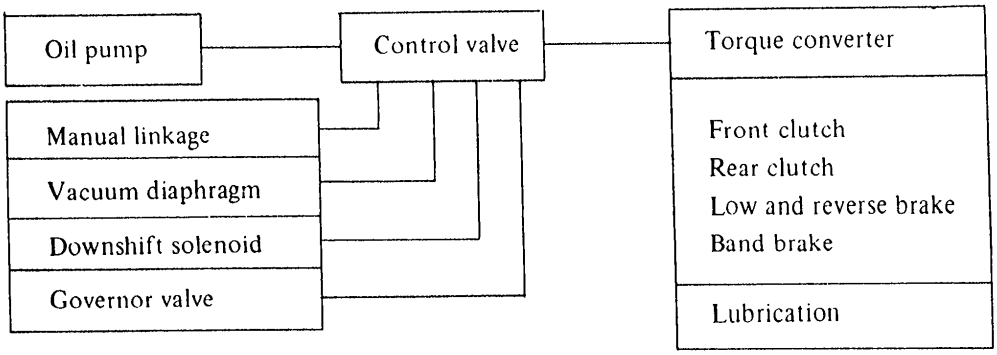

OIL PUMP

The oil pump is the source of control medium (i.e., oil) for the control system.

The oil pump is of an internal, involute gear type. The drive sleeve is a part of the torque converter pump impeller and serves to drive the pump inner gear with the drive sleeve directly coupled with the engine operation.

The oil flows through the following route:

Oil pan – Oil strainer (bottom of the control valve) – Control valve lower body suction port – Transmission case suction port – Pump housing suction port – Pump gear space – Pump housing delivery port – Transmission case delivery port – Lower body delivery port – Control valve line pressure circuit.

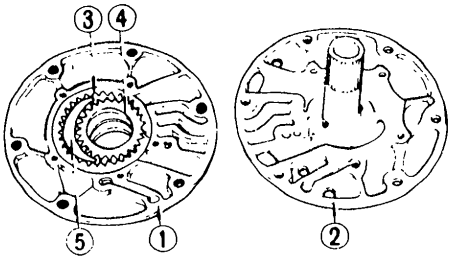

AT071

1 Housing
2 Cover
3 Outer gear
4 Inner gear
5 Crescent

Fig. AT-3 Oil pump

MANUAL LINKAGE

The hand lever motion (the hand lever is located in the driver's compartment), mechanically transmitted from the remote control linkage, is further transmitted to the inner manual lever in the transmission case from the range selector lever in the right center portion of the transmission case through the manual shaft. The inner manual lever is thereby turned.

A pin installed on the bottom of the inner manual lever slides the manual valve spool of the control valve thus positioning the spool opposite the appropriate select position.

The parking rod pin is held in the groove on the top of the inner manual

Downloaded from www.Manualslib.com manuals search engine

plate. The parking rod pin operates the rod at "P" range, and operates the mechanical lock system.

The above described manual shaft is further equipped with an inhibitor switch. A rotor inside the inhibitor switch rotates in response to each range. When the range is selected at "P" or "N", the rotor closes the starter magnet circuit so that the engine can be started. When the range is selected at "R", the rotor closes the back-up lamp circuit, and the back-up lamp lights.

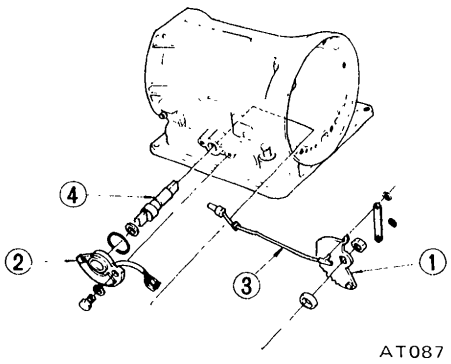

1 Manual plate
2 Inhibitor switch
3 Parking rod
4 Manual shaft

Fig. AT-4 Manual linkage

VACUUM DIAPHRAGM

The vacuum diaphragm is installed on the left center portion of the transmission case. The internal construction of the vacuum diaphragm is as follows

A rubber diaphragm forms a partition in the center. The engine intake manifold negative pressure is led through a vacuum tube and spring force is applied to the front surface of the rubber diaphragm while atmospheric pressure is applied to the back surface. The difference between pressure applied to the front and back surfaces causes a vacuum reaction, which activates the throttle valve of the control valve inside the transmission case.

When accelerator pedal is fully depressed and the carburetor is fully opened but the engine speed is not sufficiently increased, the manifold negative pressure lowers (i.e., tends towards atmospheric pressure) and the vacuum reaction increases since the flow velocity of mixture inside the intake manifold is slow. Contrarily, when the engine speed increases and the flow velocity of the mixture increases or when the carburetor is closed, the manifold negative pressure increases (i.e., tends towards vacuum) and the vacuum reaction is reduced.

Thus, a signal to generate hydraulic pressure perfectly suited to the engine loading at the control valve is transmitted from the vacuum diaphragm, and the most suitable timing for speed change and line pressure is obtained so that the most proper torque capacity is obtained against the transmitting torque.

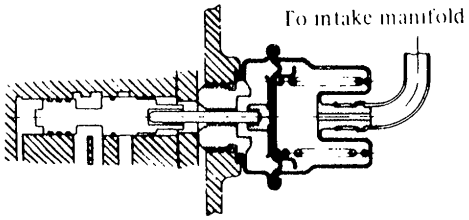

Fig. AT-5 Vacuum diaphragm

DOWNSHIFT SOLENOID

The downshift solenoid is of a magnetic type installed on the left rear portion of the transmission case. When a driver requires accelerating power and depresses the accelerator pedal down to the stopper, a kickdown switch located in the middle of the accelerator link is depressed by a push rod, the kickdown switch closes, current flows to the solenoid, the solenoid push rod is depressed, the downshift valve of the control valve inside the transmission case is depressed, and the speed is changed forcedly from "3rd" to "2nd" within a certain vehicle speed limit.

Note: Since the kickdown switch closes when the accelerator pedal is depressed from 7/8 to 15/16 of the whole stroke, the accelerator pedal should be correctly adjusted so as to afford a complete stroke.
The arrangement of the switch varies according to model.

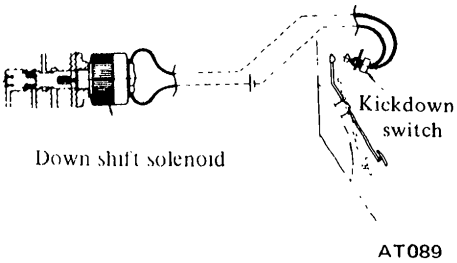

Fig. AT-6 Downshift solenoid

GOVERNER VALVE

The primary and secondary governor valves are installed separately on the back of the oil distributor on the transmission output shaft. They operate at the same speed as that of the output shaft. (that is, they operate at a speed in proportion to the vehicle speed.) The line pressure is applied to those valves as the input from the control valve, through the transmission case, rear flange and oil distributor. The governor pressure [in proportion to the output shaft speed (vehicle speed)] is led to the shift valve of the control valve through the opposite route of the output. In this manner speed change and line pressure are controlled.

Operation of secondary governor valve

The secondary valve is a control valve which receives line pressure (1) and controls the governor pressure.

When the manual valve is selected at "D", "2" or "1" range, line pressure is applied to the ring shaped area of this valve from circuit (1), and this valve is depressed toward the center. Movement of this valve to a certain position closes the circuit from (1) to (15) while simultaneously making a space from (15) to the center drain port, and pressure in the circuit (15) is lowered.

When the vehicle is stopped and the centrifugal force of this valve is zero, the valve is balanced. At this point, a governor pressure which is balanced with the spring force occurs on (15).

When the vehicle is started and the centrifugal force increases, this valve moves slightly to the outside, and as

Downloaded from www.Manualslib.com manuals search engine

the space from (1) to (15) increases, space from (15) to the drain port simultaneously decreases. As a result, governor pressure of (15) increases, and the governor pressure is balanced with the sum of centrifugal force and spring force. The governor pressure thus changes in response to the vehicle speed change (centrifugal force).

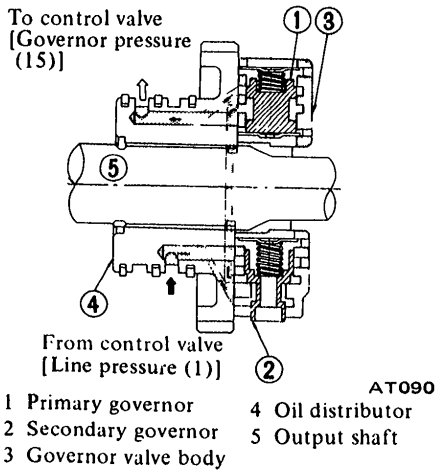

Fig. AT-7 Cross-sectional view of governor

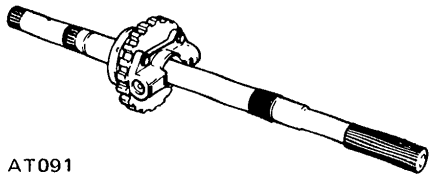

Fig. AT-8 Output shaft with oil distributor and governor

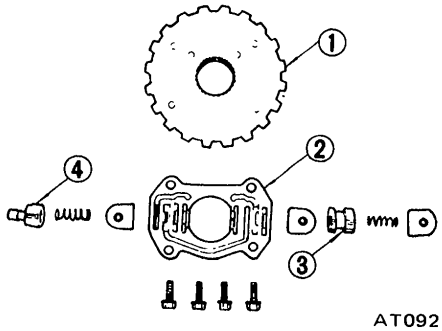

1 Oil distributor
2 Governor valve body
3 Primary governor valve
4 Secondary governor valve

Fig. AT-9 Exploded view of governor

Operation of primary governor valve

The valve is an ON-OFF valve which closes the governor pressure (15) regulated by the secondary governor valve when the vehicle reaches the minimum speed, and when the vehicle speed exceeds a certain level, the governor opens and forwards the governor pressure (15) to the control valve.

When the vehicle is stopped, the governor pressure is zero. However, when the vehicle is running slowly, this valve is depressed to the center and the groove to (15) is closed since the governor pressure applied to the ring shaped area is higher than the centrifugal force of this valve. When the governor speed exceeds a certain revolution, the governor pressure in the circuit (15) also increases. However, as the centrifugal force increases and exceeds the governor pressure, this valve moves toward the outside, and the governor pressure is transmitted to the circuit (15).

Two different valves are employed in the governor so that it will independently control the speed at high and low speeds. That is, within the low speed range, the governor pressure is not generated because of the primary valve; whereas at the high speed range above the breaking point, governor pressure is regulated by the secondary valve.

* The breaking point is the point at which the function of one of the governor is transferred to the other as the speed changes from the low-speed to the high-speed range.

CONTROL VALVE ASSEMBLY

Flow chart of control valve system

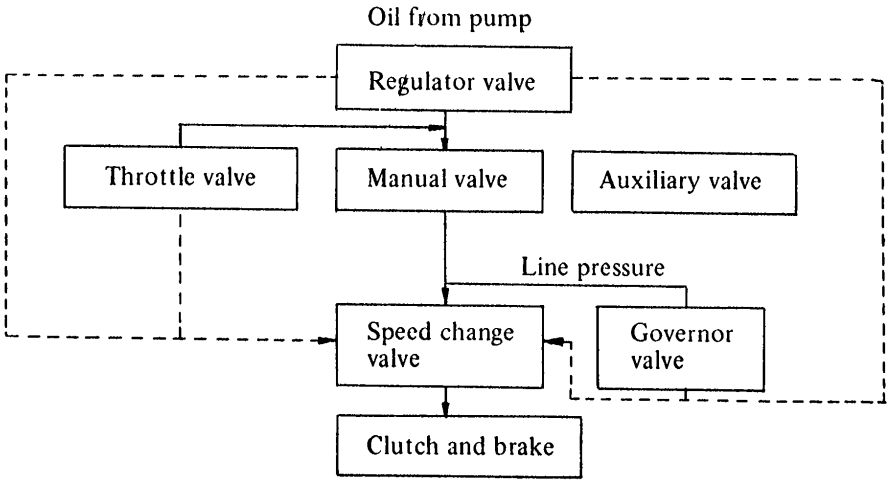

The control valve assembly receives oil from the pump and individual signals from the vacuum diaphragm, and transmits the individual line pressures to the transmission friction element, torque converter circuit, and lubricating system circuit as outputs. More specifically, the oil from the oil pump is regulated by the regulator valve as line pressure build up. The line pressure is fed out from the control valve assembly through various direction changeover valves (including ON-OFF valve) and regulator valves, are newly reformed to a throttle system oil pressure and operate other valves. Finally, the line pressure is transmitted to the required clutch or brake servo piston unit in response to the individual running conditions after receiving signals from the vacuum diaphragm, downshift solenoid, governor valve, and/or manual linkage.

Downloaded from www.Manualslib.com manuals search engine

The control valve assembly consists of the following valves (See Figure AT-20):

1. Pressure regulator valve (PRV)
2. Manual valve (MNV)
3. 1st-2nd shift valve (FSV)
4. 2nd-3rd shift valve (SSV)
5. Pressure modifier valve (PMV)
6. Vacuum throttle valve (VTV)
7. Throttle back-up valve (TBV)
8. Solenoid downshift valve (SDV)
9. Second lock valve (SLV)
10. 2nd-3rd timing valve (TMV)

Pressure regulator valve (PRV)

The pressure regulator valve receives valve spring force, force from the plug created by the throttle pressure (16) and line pressure (7), and force of the throttle pressure (18). With the interaction of those forces, the PRV regulates the line pressure (7) to that most suitable for individual driving conditions.

The oil from the oil pump is applied to the ring-shaped area through orifice (20). As a result, the PRV is depressed downward, and moves from port (7) up to such extent that the space to the next drain port (marked with "X" in Figure AT-10) opens slightly. Thus, the line pressure (7) is balanced with the spring force, thereby balancing the PRV. In this operation, the space from port (7) to the subsequent converter oil pressure (14) circuit has also been opened. As a result, the converter is filled with pressurized oil in circuit (14), and this oil is further used for lubrication of the rear unit. Moreover, part of the oil is branched and used for lubrication of the front unit for the front and rear clutches.

When the accelerator pedal is depressed, the throttle pressure (16) increases as described in the preceding paragraph, oil pressure is applied to the plug through orifice (21), and this pressure is added to the spring force. As a result, the PRV is contrarily forced upward, space to the drain port is reduced, and the line pressure (7) increases.

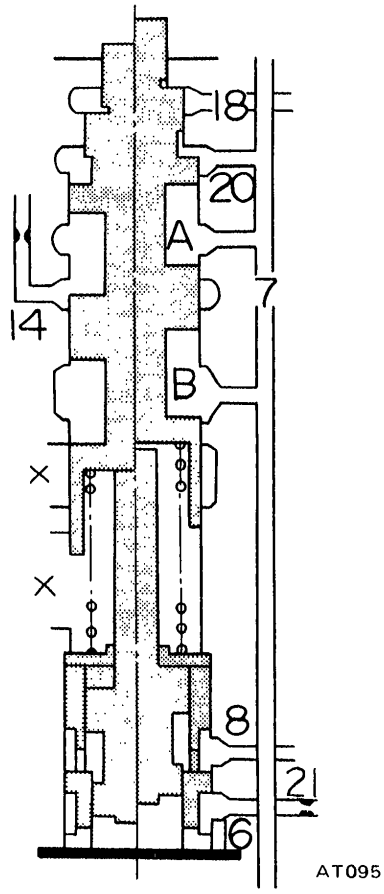

Fig. AT-10 Pressure regulator valve

When the range is selected at "R" (Reverse), the line pressure (6) is applied to the plug in a manner identical to the throttle pressure (16) and is added to the spring force. Consequently, the line pressure (7) further increases.

When vehicle speed increases and the governor pressure rises, the throttle pressure (18) is applied to the port on the top of the PRV, and pressure is applied contrarily against the spring force. As a result, the line pressure (7) decreases. Moreover, at individual conditions, the line pressure (7) is equal to the line pressure (6) and the throttle pressure (16) is equal to (18).

Manual valve (MNV)

The manual lever turning motion is converted to reciprocating motion of the manual valve through a pin, and the MNV is positioned so that the line pressure (7) is distributed to the individual line pressure circuits at each "P", "R", "N", "D", "2" or "1" range as shown below.

"P" range:
(7) – (4) – SDV and TBV
(5) – FSV (12) – TBV and Low & reverse brake

"R" range:
(7) – (4) – same as above
(5) – same as above
(6) – PRV and SSV – (F.C.) and band release

"N" range: (7) – None

"D" range:
(7) – (1) – Governor valve, FSV, and rear clutch
(2) – SLV
(3) – SLV and SSV

"2" range:
(7) – (1) – Same as above
(2) – SLV – (9) Band applied
(4) – SDV and TBV

"1" range:
(7) – (1) – Same as above
(4) – Same as above
(5) – FSV

Moreover, (1), (2), (3), (4), (5), and (6) are always drained at a position where the line pressure is not distributed from (7).

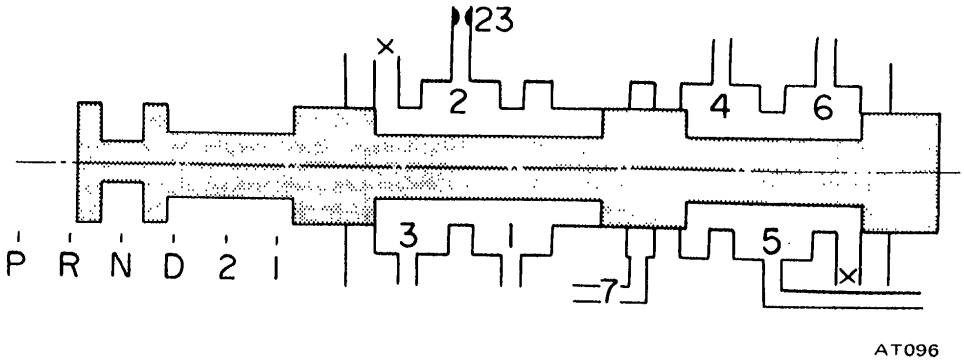

Fig. AT-11 Manual valve

Downloaded from www.Manualslib.com manuals search engine

1st-2nd shift valve (FSV)

The FSV is a transfer valve which shifts gears from low to second. When the vehicle is stopped, the FSV is depressed to the right side by force of a spring located on the left side, putting the FSV is in the "Low" position.

When vehicle speed increases, the governor pressure (15) is applied to the right side of the FSV, and the FSV is forced toward the left. Contrarily, the line pressure (1) together with the spring force, force the FSV toward the right opposing the governor pressure (15).

When the vehicle speed exceeds a certain level, the governor pressure (15) exceeds the sum of the throttle pressure and the spring force, and the FSV is forced toward the left.

When the FSV is depressed to a certain position, the line pressure (1) is closed, and only the spring depresses the FSV toward the right, and it is depressed to the end for a moment. As a result, the line pressure (1) is forwarded to (8), the band servo is engaged through the SLV, and the speed is shifted to "2nd" With the accelerator pedal depressed, the FSV remains in the "Low" position unless the governor pressure (15) increases to a high level corresponding to the line pressure (1) since the line pressure (1) increase when the accelerator pedal is depressed.

Contrarily, when vehicle speed decreases, the governor pressure (15) decreases. However, the gear is not shifted to "Low" unless the governor pressure (15) becomes zero, since the force depressing the FSV toward the right is being delivered only by the spring.

"Low" in range "1" is led to the low and reverse clutch from line pressure (5) through line pressure (12), and is simultaneously, led to the left end spring unit. Consequently, although the governor pressure increases, the valve is still forced toward the right, and the SFV is fixed in the "Low" position. When kicked down to the "2nd" speed, the SDV operates, and the line pressure (13) forces the FSV toward the right. Although the governor pressure (15) is considerably high, the valve is forced completely toward the right, and the FSV is returned to the "Low" position. (This operation is called "Kickdown shift".)

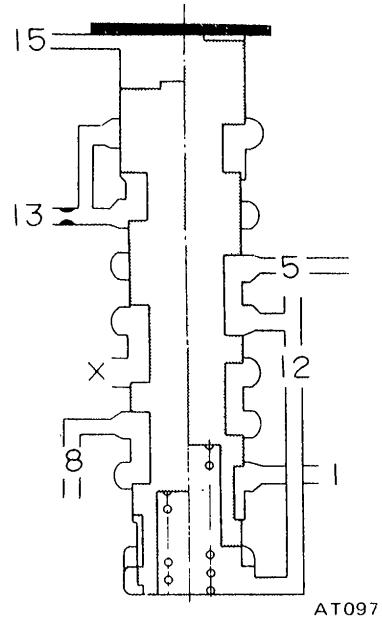

Fig. AT-12 "1st-2nd" shift valve

2nd-3rd shift valve (SSV)

The SSV is a transfer valve which shifts gears from "2nd" to "3rd". When the vehicle is stopped, the SSV is forced toward the right by the spring, and is in the "2nd" position. It is so designed, however, that the FSV can decide to shift either to "Low" or "2nd".

When the vehicle is running, the governor pressure (15) is applied to the right end surface, and the SSV is forced toward the left. Contrarily, the spring force, line pressure (3), and throttle pressure (19) force the SSV toward the right.

When vehicle speed exceeds a certain level, the governor pressure surpasses the sum of the spring force, line pressure, and throttle pressure, and the valve is forced toward the left. The line pressure (3) is then closed. Consequently, the forces being rapidly unbalanced, the force depressing the SSV toward the right decreases, and thus the SSV is depressed to the left end for a moment. With the SSV depressed toward the left end, the line pressure (3) is connected with the line pressure (10), the band servo is released, the front clutch is engaged, and speed is shifted to "3rd"

When the accelerator pedal is depressed, both the line pressure (3) and the throttle pressure (19) are high, and the SSV is thus retained in "2nd" unless the governor pressure (15) exceeds the line pressure (3) and the throttle pressure (19).

In the "3rd" position, force depressing the SSV toward the right is retained only by the throttle pressure (16), and the throttle pressure (16) is slightly lower than that toward the right which is applied while shifting from "2nd" to "3rd".

Consequently, the SSV is returned to the "2nd" position at a slightly lower speed. (Shifting from "3rd" to "2nd" occurs at a speed slightly lower than that for "2nd" to "3rd" shifting.)

When kicked down at "3rd", line pressure (13) is led from the SDV, and the SSV is forced toward the right. Although the governor pressure is considerably high, the valve is forced completely toward the right, and the SSV is thus returned to "2nd" position. (This operation is called "Kickdown shift".)

When the shift lever is shifted to "2" or "1" range at the "3rd" speed, the line pressure (3) is drained at the MNV. Consequently, the front clutch and band servo releasing oils are drained. As a result, the transmission is shifted to "2nd" or "low" speed although the SSV is in the "3rd" position.

When the speed is shifted to the "3rd", a one-way orifice (24) on the top of the SSV relieves oil transmitting velocity from the line pressure (3) to the line pressure (10), and reduces the shock generated from the shifting. Contrarily, when the lever is shifted from "3rd" to "2" or "1" range and the speed is shifted to the "2nd", the orifice checking valve spring (24) is depressed, the throttle becomes ineffective, the line pressure (10) is drained quickly, and delay in shifting speeds is thus eliminated.

The throttle of line pressure (6) transmits the oil transmitting velocity from line pressure (6) to line pressure (10) when the lever is shifted to the "R" range, and transmits drain velocity from line pressure (10) to line

Downloaded from www.Manualslib.com manuals search engine

pressure (6) when shifting from "3rd" to "2nd" at "D" range. Thus, the throttle of line pressure (6) reduces the shock generated from shifting.

A plug in the SSV left end readjust the throttle pressure (16) which varies depending on the engine throttle condition, to a throttle pressure (19) suited to the speed change control. Moreover, the plug is a valve which applies line pressure (13), in lieu of the throttle pressure, to the SSV and the FSV when kickdown is performed.

When the throttle pressure (16) is applied to the left side of this plug, and the plug is depressed toward the right, a slight space is formed from the throttle pressure (16) to (19). A throttle pressure (19) which is lower by the pressure loss equivalent to this space is generated, the pressure loss is added to the spring force, and the plug is thus forced back from the right to the left. When this pressure (19) increases excessively, the plug is further depressed toward the left, space from the throttle pressure (19) to the drain circuit (13) increases, and the throttle pressure (19) decreases. Thus, the plug is balanced, and the throttle pressure (19) is reduced to a certain value against the throttle pressure (16).

When performing kickdown, the SDV moves, a high line pressure is led to the circuit (19) from the line pressure circuit (13) (which had been drained), the plug is forced toward the left, and circuit (19) becomes equal to the line pressure (13).

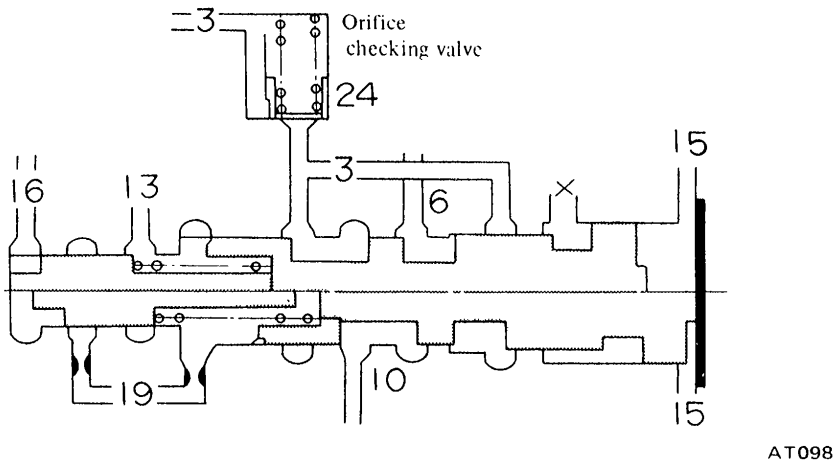

Fig. AT-13 "2nd-3rd" shift valve

Pressure modifier valve (PMV)

Compared to the operating pressure required in starting the vehicle, the power transmitting capacity of the clutch (that is, required operating pressure) may be lower when the vehicle is once started. When the line pressure is retained at a high level up to a high vehicle speed, shock generated from the shifting increases, and the oil pump loss also increases. In order to prevent this, the throttle pressure must be changed over with the operation of the governor pressure (15) to reduce the line pressure. The PMV is used for this purpose.

When the governor pressure (15) which is applied to the right side of the PMV is low, the valve is forced toward the right by the throttle pressure (16) (applied to the area difference of the value) and the spring force, and the circuit from circuit (16) to circuit (18) is closed. However, when vehicle speed increases and the governor pressure (15) exceeds a certain level, the governor pressure toward the left (which is applied to the right side) exceeds the spring force and the throttle pressure (16) toward the right, the valve is depressed toward the left, and the throttle pressure is led from circuit (16) to circuit (18). This throttle pressure (18) is applied to the top of the PRV, and the force of the line pressure source (7) is reduced. Contrarily, when the vehicle speed decreases and the governor pressure (15) decreases, the force toward the right exceeds the governor pressure, the valve is forced back toward the right, and the throttle pressure (18) is drained to the spring unit.

This valve is switched when the throttle pressure and the governor pressure are high or when they are both low.

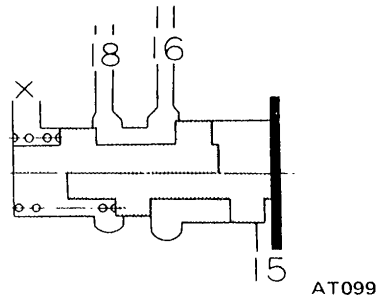

Fig. AT-14 Pressure modifier valve

Vacuum throttle valve (VTV)

The vacuum throttle valve is a regulator valve which uses the line pressure (7) for the pressure source and regulates the throttle pressure (16) which is proportioned to the force of the vacuum diaphragm. [The vacuum diaphragm varies depending on the engine throttle condition (negative pressure in the intake line)].

When the line pressure (7) is applied to the bottom through the valve hole and the valve is forced upward, space from the line pressure (7) to the throttle pressure (16) is closed, and the space from the throttle pressure (16) to the drain circuit (17) is about to open. In this operation, the throttle pressure (16) becomes lower than the line pressure (7) by the pressure equivalent of the loss of space, and the force depressing the rod of the vacuum diaphragm is balanced with the throttle pressure (16) applied upward to the bottom.

When the engine torque is high, the negative pressure in the intake line rises (tending toward atmospheric pressure), and the force of the rod to depress the valve increases. As a result, the valve is depressed downward, the

Downloaded from www.Manualslib.com manuals search engine

space from the throttle pressure (16) to the drain (17) decreases, and the space from the line pressure (7) to the throttle pressure (16) increases.

Consequently, the throttle pressure (16) increases, and the valve is balanced. Contrarily, when the engine torque lowers and the negative pressure in the intake line lowers (tending toward vacuum), the force of the rod depressing the valve decreases, and the throttle pressure (16) also decreases. When pressure regulated by the throttle back-up valve (described in the subsequent paragraph) is led to circuit (17), a high pressure is applied through the space from the circuit (17) to the throttle pressure (16). Consequently, the VTV is unbalanced, the throttle pressure (16) becomes equal to the back-up pressure (17), and the valve is locked upward.

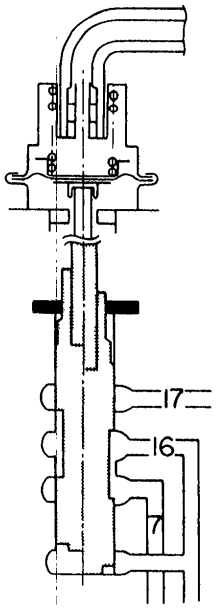

Fig. AT-15 Vacuum throttle valve

Throttle back-up valve (TBV)

Usually, this valve is depressed downward by the spring force.

As soon as the lever is shifted either to "2" or "1" range, line pressure is led from circuit (4), the line pressure is applied to the area difference of the valve, the valve is forced upward, the space from circuit (4) to circuit (17) is closed, and with the space from circuit (17) to the upper drain about to open, the back-up pressure (17) which is lower than the line pressure (4) by the pressure loss due to the space from circuit (4) to circuit (17) is balanced with the spring force.

Further, when gear is shifted from "2nd" to "Low" at the range "1", line pressure is led from circuit (12), and the line pressure is applied upward to the bottom of the valve through the valve hole. Consequently, the valve is forced upward, and locked. As a result, the space from the line pressure (4) to the back-up pressure (17) is closed completely, and the back-up pressure (17) is drained upward.

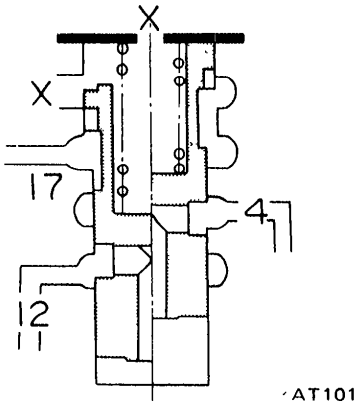

Fig. AT-16 Throttle back-up valve

Solenoid downshift valve (SDV)

This valve is a transfer valve which leads the line pressure (7) to (13) and transmits the same to the FSV and SSV when a kickdown signal is received from the downshift solenoid. Usually, the solenoid push rod and valve are locked upward by the spring in the lower end, and the circuit from line pressure (4) to line pressure (13) is opened.

When kickdown is performed, the push rod operates, the valve is depressed downward, and the circuit from line pressure (7) to line pressure (13) opens. Line pressure (13) opposes the governor pressure (15) at the SSV and FSV, thus accomplishing the downshift operation.

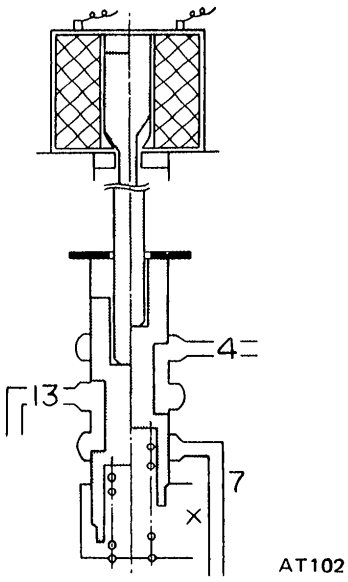

Fig. AT-17 Solenoid downshift valve

Second lock valve (SLV)

This valve is a transfer valve which assists the shift valve in determining the fixed "2nd" speed at the "2" range.

In the "D" range, the sum of the spring force and line pressure (3) applied upward exceeds the line pressure (2) which is applied to the valve area difference as a downward force. As a result, the valve is locked upward, and the circuit from line pressure (8) to line pressure (9) is opened.

Consequently, the FSV becomes the "2nd" speed condition, and line pressure is led to the band servo engaging circuit (9) only when line pressure (1) is released to line pressure (8).

In the "2" range, the upward force is retained only on the spring, and the downward line pressure (2) exceeds the upward force.

As a result, the valve is locked downward, line pressure (2) is released to (9) regardless of the operating condition of the FSV, and the band servo is engaged.

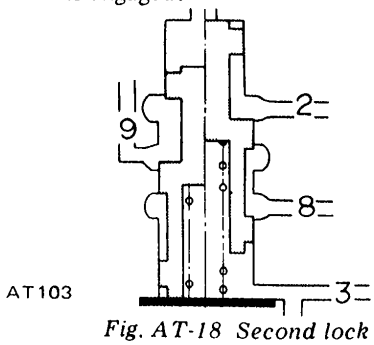

Fig. AT-18 Second lock valve

Downloaded from www.Manualslib.com manuals search engine

2nd-3rd timing valve (TMV)

This valve is a transfer valve which switches the by-pass circuit of the orifice (22) in the front clutch pressure circuit (11) in response to vehicle speed and throttle condition. A force created when the governor pressure (15) is applied to the bottom of the TMV constitutes the upward force, and a force created when the spring force and the throttle pressure are applied to the top of the TMV constitutes the downward force.

When the throttle pressure (16) is lower than the governor pressure (15), the upward force exceeds the downward force, the valve is locked upward, and passage from circuit (10) ("2nd" from the "Top") to circuit (11) is closed. Consequently, the line pressure (10) is led to the front clutch circuit (11) through the orifice (22), and the oil pressure is thus transmitted slowly. However, under normal shifting, the throttle pressure (16) has a pressure exceeding a certain level, and the downward force exceeds the upward force. As a result, the valve is locked downward, the passage from circuit (10) to circuit (11) is opened, and the orifice (22) is bypassed.

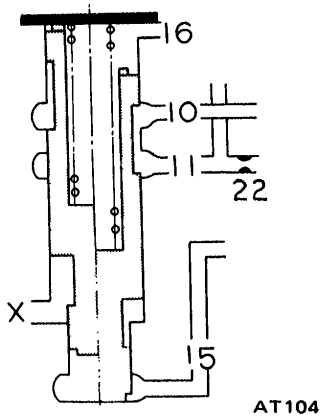

Fig. AT-19 "2nd-3rd" timing valve

Downloaded from www.Manualslib.com manuals search engine

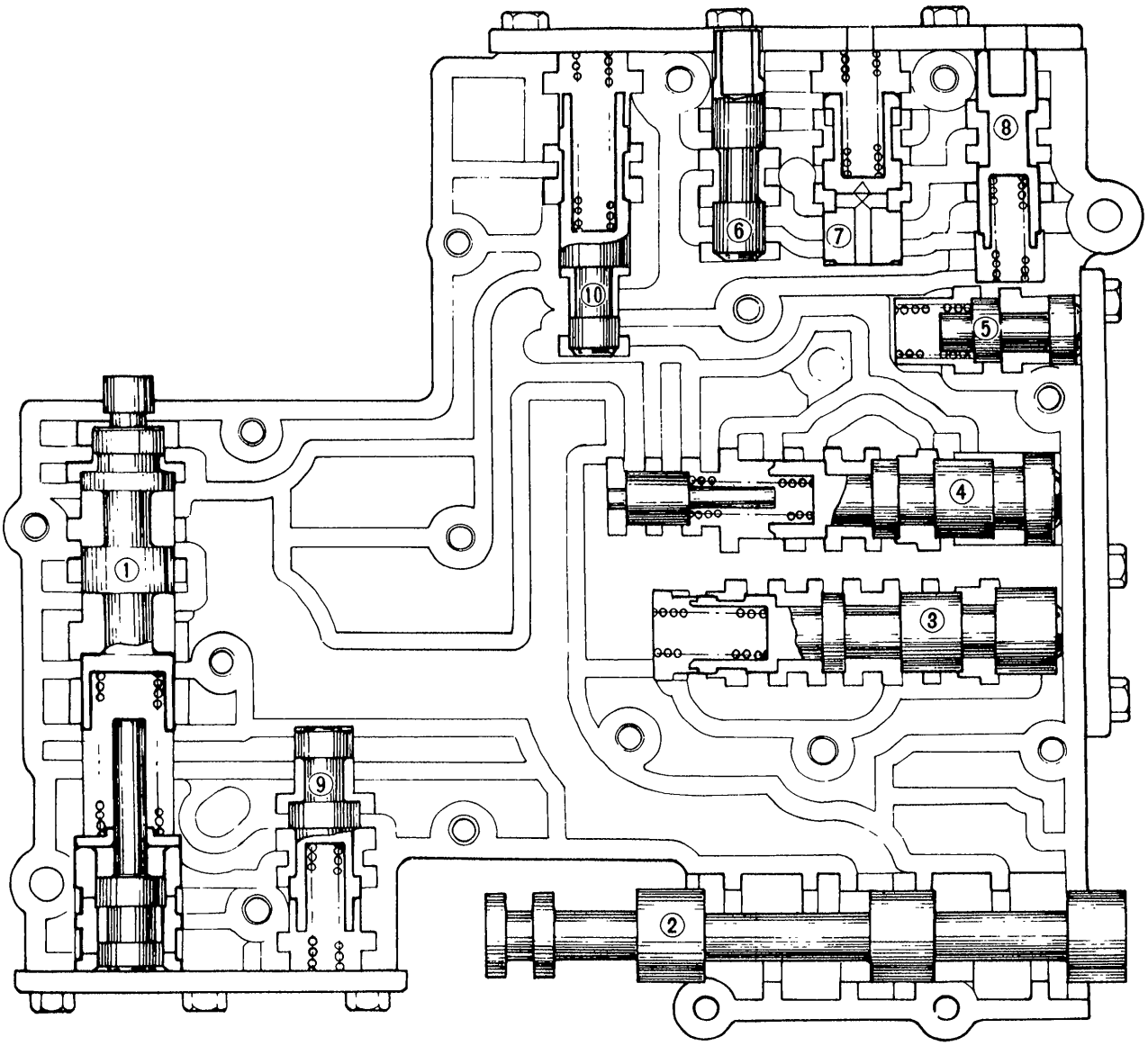

AT094

1 Pressure regulating valve (PRV)
2 Manual valve (MNV)
3 1st-2nd shift valve (FSV)
4 2nd-3rd shift valve (SSV)
5 Pressure modifier valve (PMV)
6 Vacuum throttle valve (VTV)
7 Throttle back-up valve (TBV)
8 Solenoid down shift valve (SDV)
9 Second lock valve (SLV)
10 2 - 3 timing valve (TMV)

Fig. AT-20 Control valve

Downloaded from www.Manualslib.com manuals search engine

HYDRAULIC SYSTEM AND MECHANICAL OPERATION

The operating system of oil pressure in each range is described below:

The oil pressure in each circuit shown in the illustration is classified as follows according to the function:
(The numerals show the circuit numbers.)

Pressure source of the line: 7

Operating line pressure for friction elements:
1, 2, 3, 4, 5, 6, 8, 9, 10, 11, 12.

Auxiliary line pressure: 13

Throttle system pressure:
16, 17, 18, 19.

Others: 14, 15

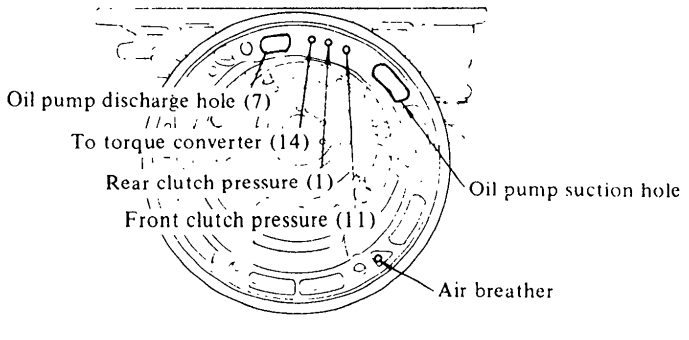

Fig. AT-22 Identification of oil channels in case front face

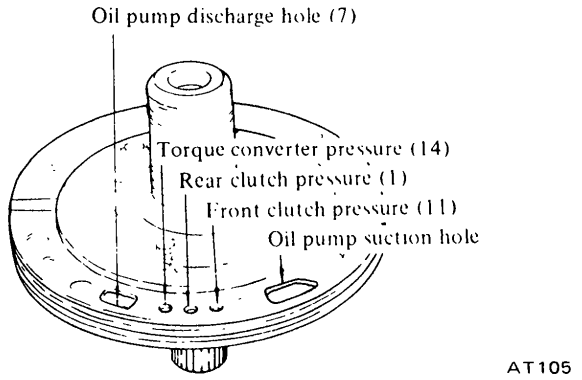

Fig. AT-21 Identification of oil channels in oil pump

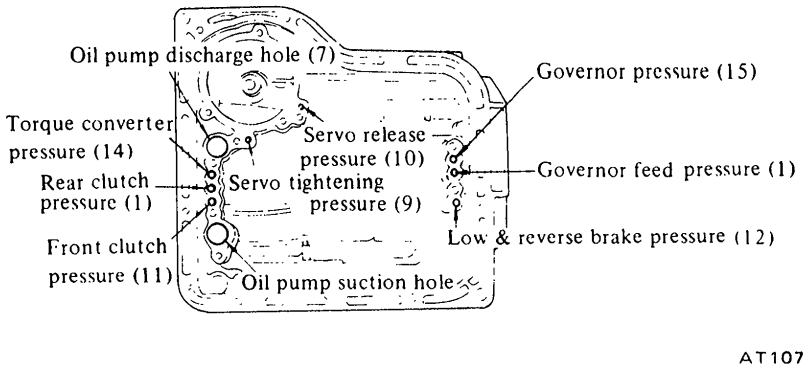

Fig. AT-23 Identification of oil channels in case face

Downloaded from www.Manualslib.com manuals search engine

"P" RANGE (PARK)

The operation of clutches and band are functionally the same as in "Neutral".

In parking, however, when the parking pawl meshes in a gear which is splined to the output shaft, the output shaft is mechanically locked from rotating.

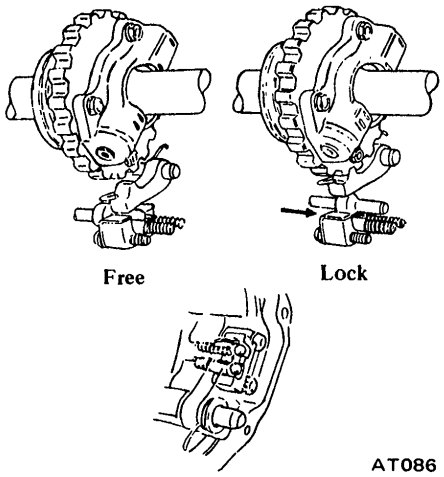

Fig. AT-24 Parking mechanism

The oil discharged from the oil pump is fed to each part in a similar manner to that of the "N" range. The oil having the line pressure (7) which has been introduced into the manual valve ② reaches the "1st-2nd" shift valve ③ through the line pressure circuit (5). As the "1st-2nd" shift valve is forced to the right-hand side by the spring, the line pressure (5) and (12) actuates the low and reverse brake through the groove. Also, the parking pawl engages with the outer teeth of the oil distributor by means of the manual lever, mechanically locking the output shaft.

Range			Gear ratio	Clutch		Low & reverse brake	Band servo		One way clutch	Parking pawl
				Front	Rear		Operation	Release		
Park						on				on
Reverse			2.182	on		on		on		
Neutral										
Drive	D1	Low	2.458		on				on	
	D2	Second	1.458		on		on			
	D3	Top	1.000	on	on		(on)	on		
2		Second	1.458		on		on			
1	1_2	Second	1.458		on		on			
	1_1	Low	2.458		on	on				

Downloaded from www.Manualslib.com manuals search engine

"P" range (Park)

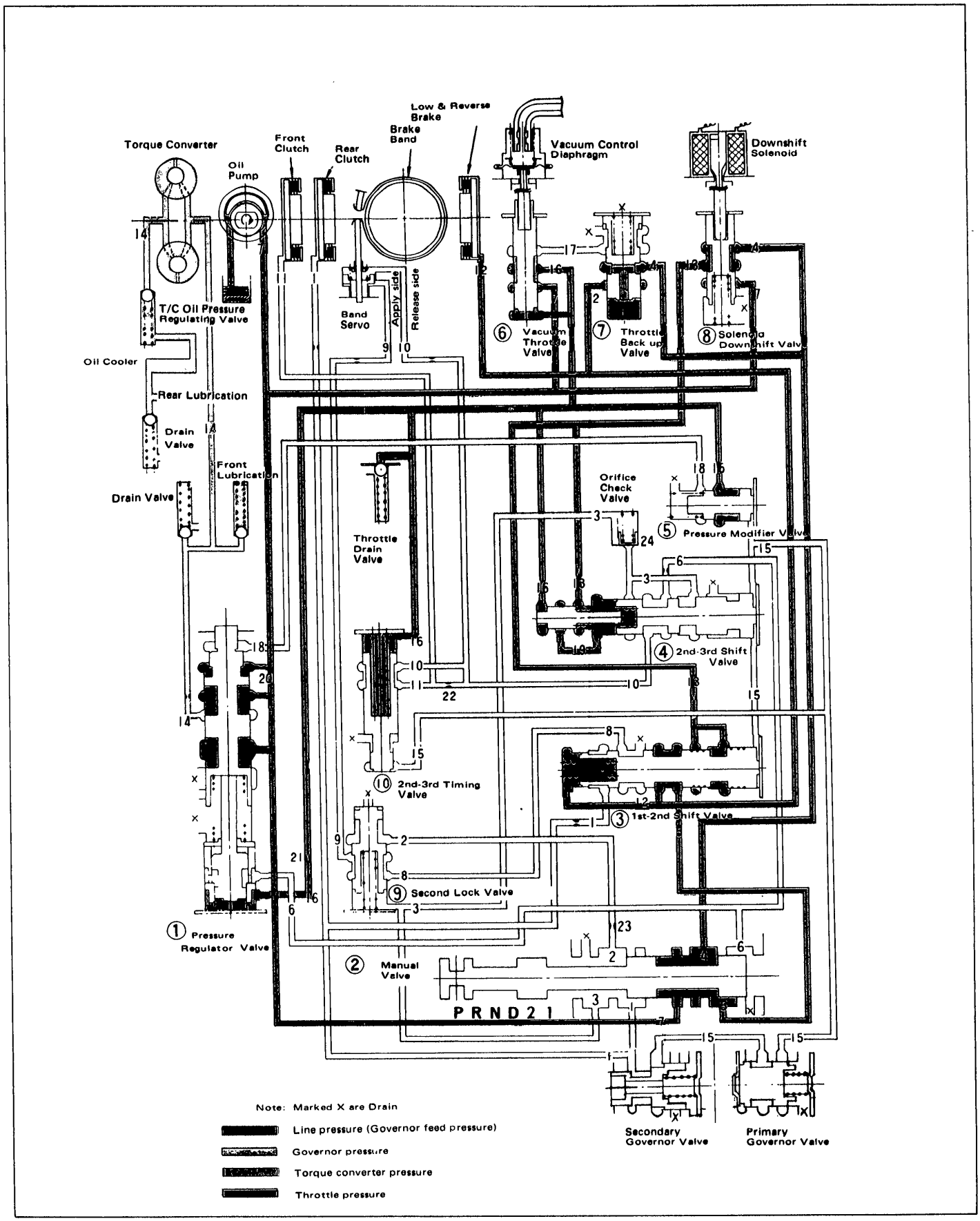

Fig. AT-25 Oil pressure circuit diagram — "P" range (Park)

Downloaded from www.Manualslib.com manuals search engine

"R" RANGE (REVERSE)

In "R" range, the front clutch and the low and reverse brake are applied. The power flow is through the input shaft, front clutch, and connecting shell to the sun gear. Clockwise rotation of the sun gear causes counterclockwise rotation of the rear planetary gears. With the connecting drum held stationary by the low and reverse brake, the rear planetary gears rotate the rear internal gear and drive the flange counterclockwise. The rear drive flange splined to the output shaft rotates the output shaft counterclockwise at a reduced speed with an increase in torque for reverse gear.

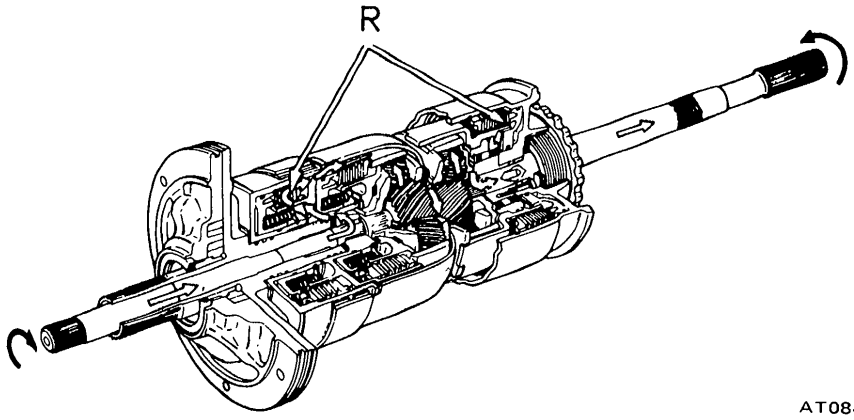

Fig. AT-26 Power transmission during "R" range

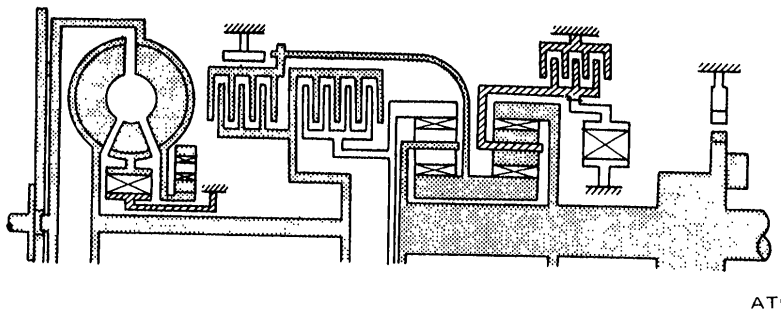

Fig. AT-27 Operation of each mechanism during "R" range

When the manual valve ② is positioned at "R" range, the oil having the line pressure (7) is directed to line pressure circuits (5) and (6). The pressure in the circuit (5) actuates the low and reverse brake after being introduced into line pressure circuit (12) through the "1st-2nd" shift valve ③. The pressure in the circuit operates the release side of the band servo and the front clutch after being led to line pressure circuit (10) through the "2nd-3rd" shift valve ④ The throttle pressure (16) and the line pressure (6) which vary with the degree of accelerator pedal depression both act on the pressure regulator valve ① and press against its valve ①, increasing line pressure (7). In "R" range, the governor pressure is absent, making all such valves as the "1st-2nd" shift valve ③, "2nd-3rd" shift valve ④, and pressure modifier valve ⑥ inoperative.

Range			Gear ratio	Clutch		Low & reverse brake	Band servo		One way clutch	Parking pawl
				Front	Rear		Operation	Release		
Park						on				on
Reverse			2.182	on		on		on		
Neutral										
Drive	D1	Low	2.458		on				on	
	D2	Second	1.458		on		on			
	D3	Top	1.000	on	on		(on)	on		
2		Second	1.458		on		on			
1	1_2	Second	1.458		on		on			
	1_1	Low	2.458		on	on				

Downloaded from www.Manualslib.com manuals search engine

"R" range (Reverse)

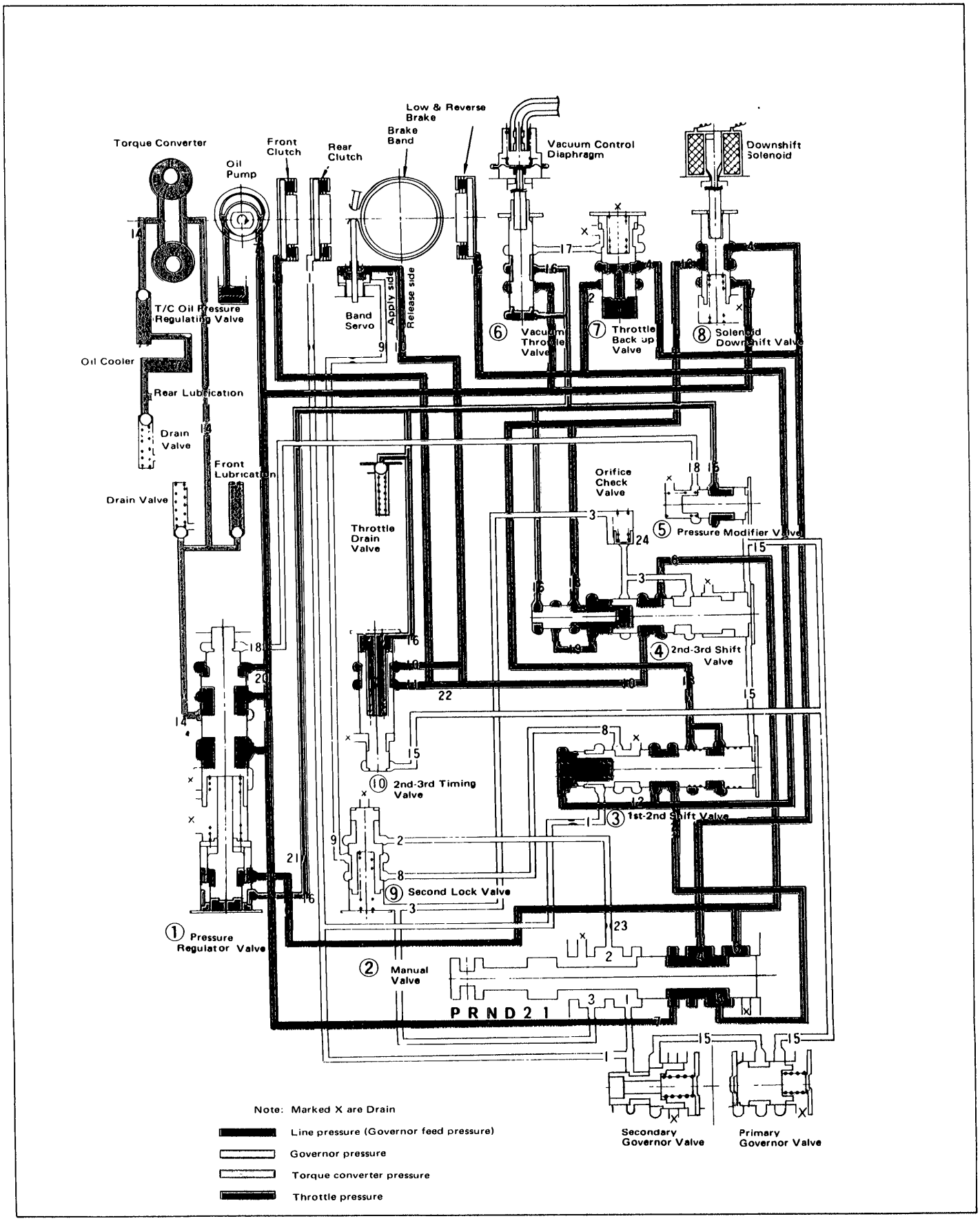

Fig. AT-28 Oil pressure circuit diagram — "R" range (Reverse)

Downloaded from www.Manualslib.com manuals search engine

"N" RANGE (NEUTRAL)

In "N" range none of the clutches and band are applied, thus no power is transmitted to the output shaft.

The pressure of oil discharged from the oil pump is regulated by the pressure regulator valve ① to maintain the line pressure (7), and the oil is led to the manual valve ②, vacuum throttle valve ⑥, and solenoid down shift valve ⑧. The oil is further introduced into the torque converter at its operating pressure (14), and a portion of this oil is distributed to each part as the front lubricant. The oil which has been discharged from the torque converter is also distributed to each part as the rear lubricant.

As the oil pump rotates at the same speed as the engine, the oil pump discharge increases with engine speed. But the surplus oil is returned to the oil pan by the pressure regulator valve ①

Range			Gear ratio	Clutch		Low & reverse brake	Band servo		One way clutch	Parking pawl
				Front	Rear		Operation	Release		
Park						on				on
Reverse			2.182	on		on		on		
Neutral										
Drive	D1	Low	2.458		on				on	
	D2	Second	1.458		on		on			
	D3	Top	1.000	on	on		(on)	on		
2		Second	1.458		on		on			
1	1_2	Second	1.458		on		on			
	1_1	Low	2.458		on	on				

Downloaded from www.Manualslib.com manuals search engine

"N" range (Neutral)

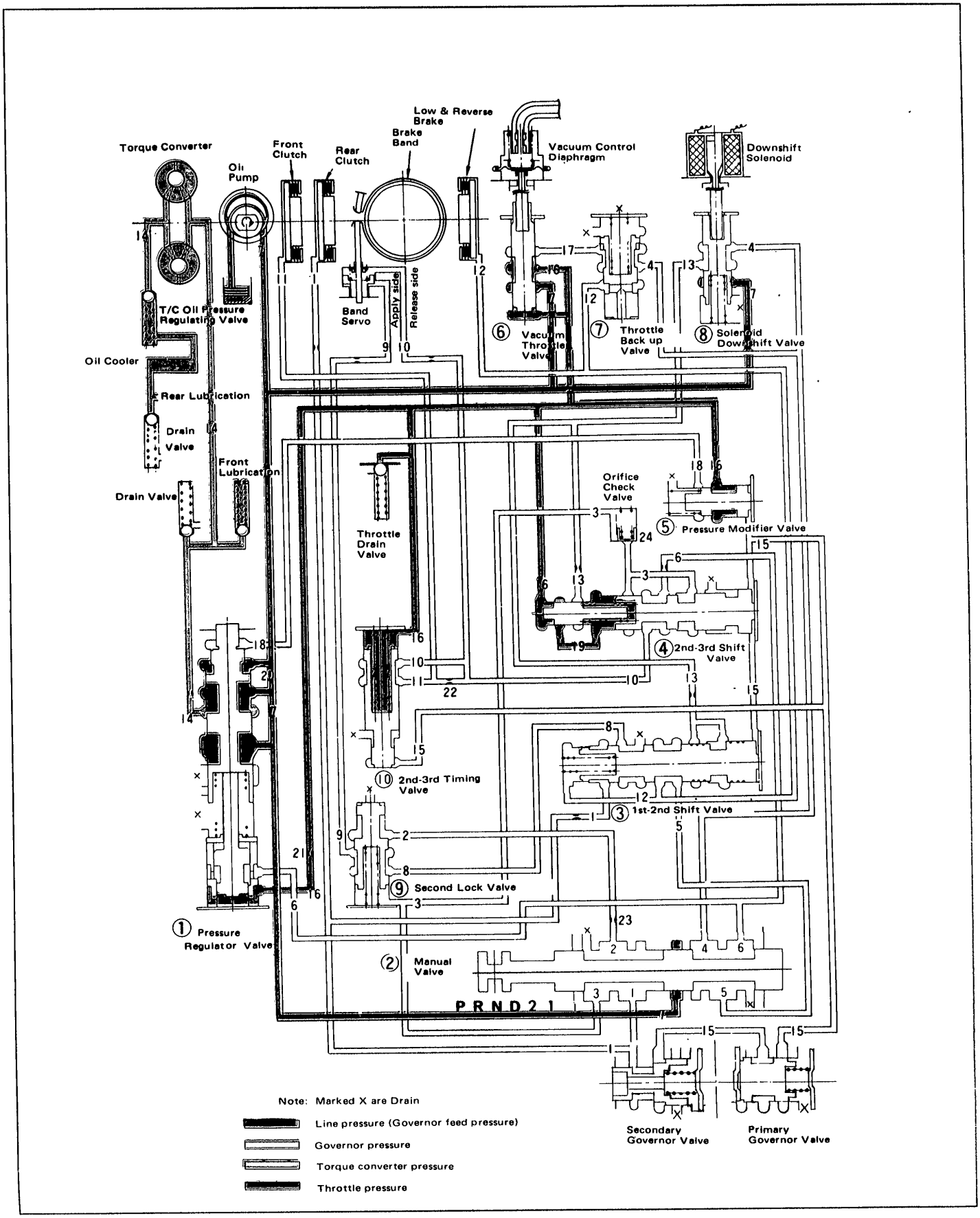

Fig. AT-29 Oil pressure circuit diagram — "N" range (Neutral)

Downloaded from www.Manualslib.com manuals search engine

"D_1" RANGE (LOW GEAR)

The low gear in "D" range is somewhat different from that in "1_1" range.

The rear clutch is applied as in "1_1" range, but the one-way clutch holds the connecting drum. The power flow is the same as in "1_1" range. That is, the power flow takes place through the input shaft and into the rear clutch. The input shaft is splined to the rear clutch drum and drives it. Rotation of the rear clutch drives the rear clutch hub and front internal gear.

The front internal gear rotates the front planetary gears clockwise to cause the sun gear to rotate counterclockwise. Counterclockwise rotation of the sun gear turns the rear planetary gears clockwise. With the rear planetary carrier held stationary by the one-way clutch, the clockwise rotation of the rear planetary gears rotates the rear internal gear and drives the flange clockwise. The internal drive flange is splined to the output shaft and rotates the output shaft clockwise.

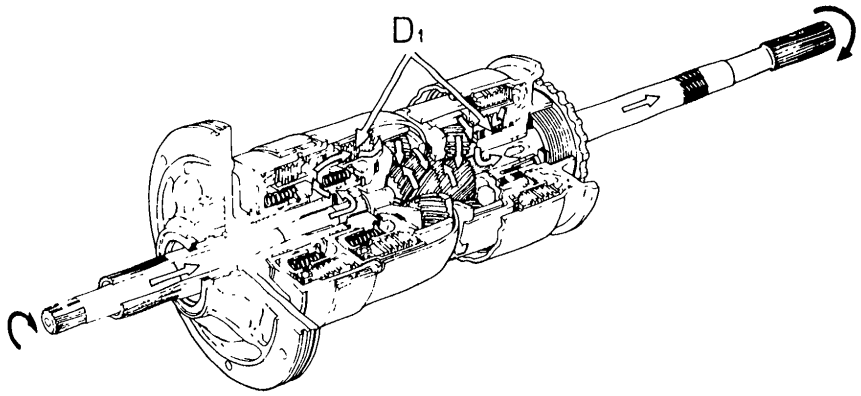

AT080

Fig. AT-30 Power transmission during "D_1" range

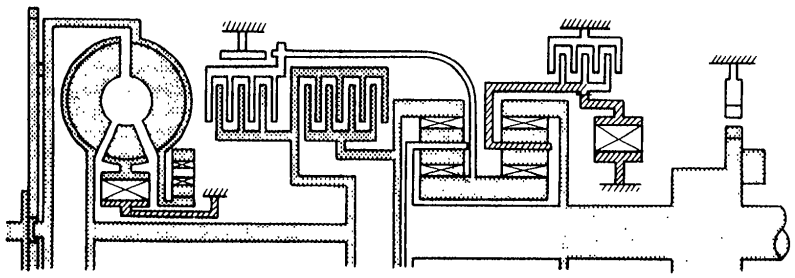

AT081

Fig. AT-31 Operation of each mechanism during "D_1" range

Range			Gear ratio	Clutch		Low & reverse brake	Band servo		One way clutch	Parking pawl
				Front	Rear		Operation	Release		
Park						on				on
Reverse			2.182	on		on		on		
Neutral										
Drive	D1	Low	2.458		on				on	
	D2	Second	1.458		on		on			
	D3	Top	1.000	on	on		(on)	on		
2		Second	1.458		on		on			
1	1_2	Second	1.458		on		on			
	1_1	Low	2.458		on	on				

When the manual valve is positioned at "D", the line pressure (7) introduced into the manual valve is led to the line pressure circuits (1), (2) and (3). The pressure in the circuit (1) actuates the rear clutch and the governor, and at the same time, operates the "1st-2nd" shift valve ③ to change the speed. The circuit (2) leads to the second lock valve ⑨. The circuit (3) actuates the "2nd-3rd" shift valve ④ for the "2nd-3rd" speed change, and at the same time, locks the second lock valve ⑨.

The throttle pressure (16) which changes with the degree of accelerator pedal depression, presses the pressure regulator valve ① and increases the line pressure (7). When the speed of the vehicle has increased, the governor pressure (15) introduced from the line pressure circuit (1) actuates the "1st-2nd" shift valve ③, "2nd-3rd" shift valve ④, and pressure modifier valve ⑤. When the governor pressure is high, the pressure modifier valve ⑤ acts in such a direction as to compress the spring, and the throttle pressure is led to the throttle pressure (18). This pressure acts against the force of the spring of the pressure regulator valve ① and also against the throttle pressure (16), thus lowering the line pressure (7).

The governor pressure also increases with the speed of the vehicle, exerting a pressure on one side of the "1st-2nd" shift valve, and counter acts the throttle pressure (19), line pressure (1), and the spring which are exerting against the governor pressure. Therefore, when the governor pressure exceeds this pressure, the speed is shifted from the "1st" gear to the "2nd" gear. The further the accelerator pedal is depressed, the higher becomes the throttle pressure (19), increasing the governor pressure and shifting the speed change point to the higher side.

Downloaded from www.Manualslib.com manuals search engine

"D_1" range (Low gear)

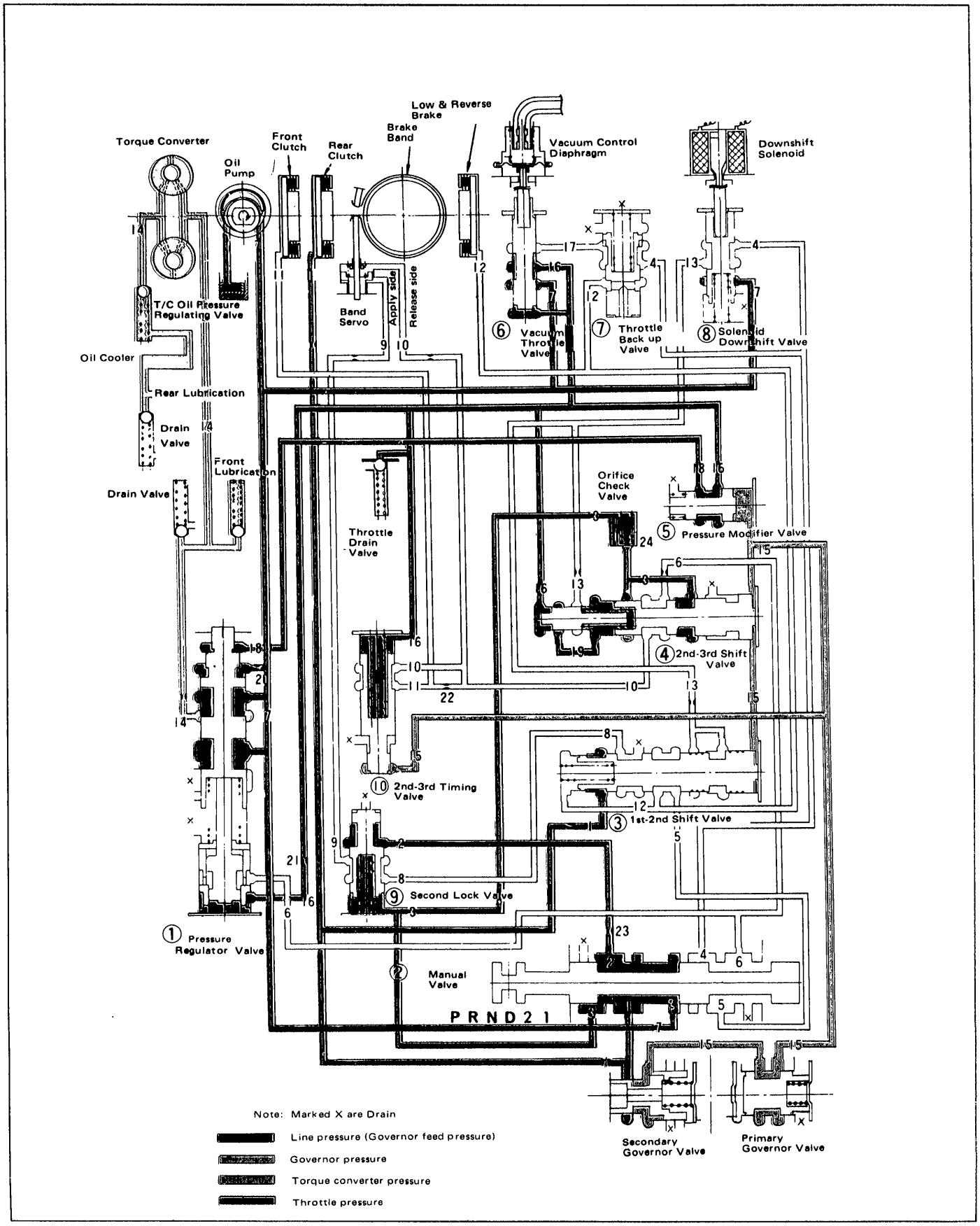

Fig. AT-32 Oil pressure circuit diagram — "D_1" range (Low gear)

Downloaded from www.Manualslib.com manuals search engine

"D_2" RANGE (2ND GEAR)

In this case, the rear clutch is applied and the band brake holds the front clutch drum, the connecting shell and the sun gear from rotating.

The power flow takes place through the input shaft into the rear clutch and the front internal gear. With the sun gear held stationary, the front planetary gears rotate around the sun gear, carrying the front planet carrier with them. The front planet carrier, being splined to the output shaft, causes clockwise rotation of the output shaft at a reduced speed compared with the speed of the input shaft, with an increase in torque. As the low and reverse brake is not applied, the clockwise rotation of the output shaft causes clockwise rotation of rear internal gear and the rear planet carrier also rotates around the sun gear in a clockwise direction. The one-way clutch will act to allow the clockwise rotation of connecting drum.

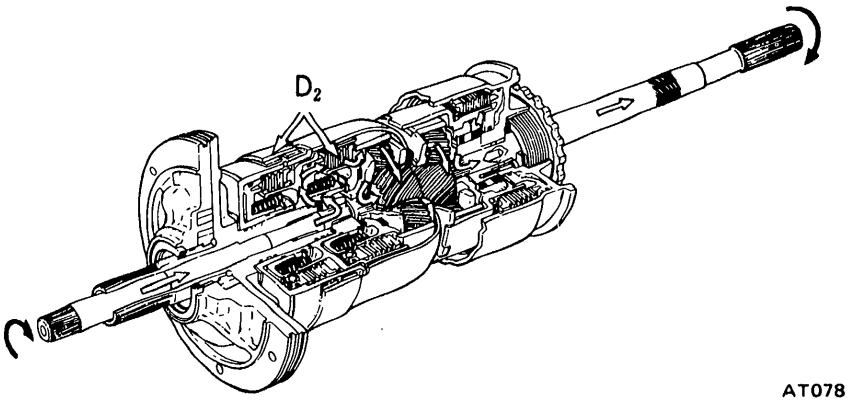

Fig. AT-33 Power transmission during "D_2" range

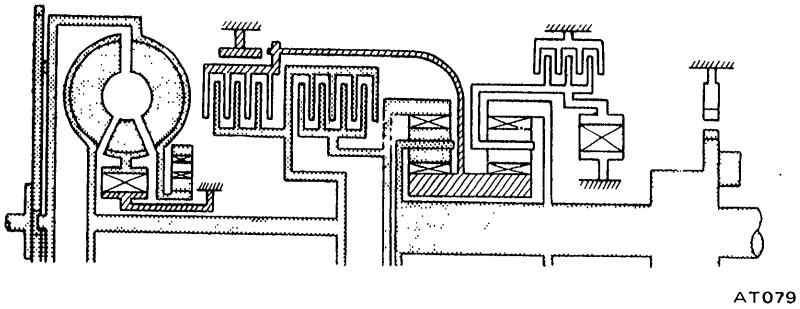

Fig. AT-34 Operation of each mechanism during "D_2" range

When the car speed increases while running at "D_1" range (1st gear), the "1st-2nd" shift valve ③ moves allowing the line pressure (1) to be introduced into the line pressure (8) through itself. The line pressure (8) is further led to the line pressure (9) through the second lock valve ⑨, and by locking the band servo, obtains the "2nd" gear condition.

Range			Gear ratio	Clutch		Low & reverse brake	Band servo		One way clutch	Parking pawl
				Front	Rear		Operation	Release		
Park						on				on
Reverse			2.182	on		on		on		
Neutral										
Drive	D1	Low	2.458		on				on	
	D2	Second	1.458		on		on			
	D3	Top	1.000	on	on		(on)	on		
2		Second	1.458		on		on			
1	1_2	Second	1.458		on		on			
	1_1	Low	2.458		on	on				

Downloaded from www.Manualslib.com manuals search engine

"D_2" range (2nd gear)

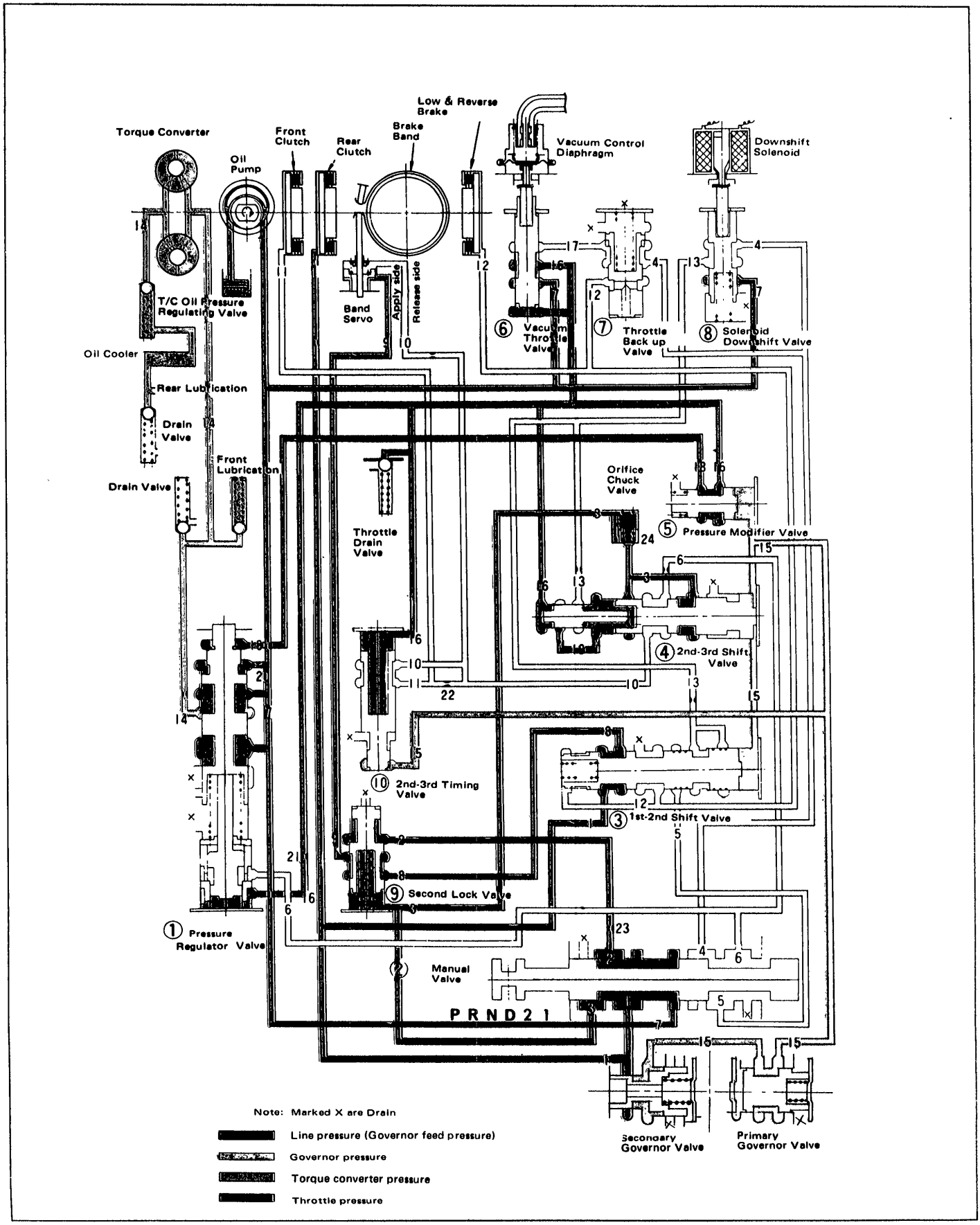

Fig. AT-35 Oil pressure circuit diagram — "D_2" range (2nd gear)

Downloaded from www.ManualsLib.com manuals search engine

"D_3" RANGE (TOP GEAR)

In 3rd gear position, the front and rear clutches are engaged. The power flow takes place through the input shaft into rear clutch drum. The rear clutch drum rotates the steel drive plates of the rear clutch and the lined drive plates of the rear clutch and the lined drive plates of the front clutch. The rear clutch directs the power flow through the rear clutch hub and front internal gear to the front planet carrier.

The front clutch directs the power flow through the connecting shell to the sun gear. With the sun gear and the rear clutch hub driven at the same speed, the front planet assembly is forced to rotate the output shaft at the same speed in the direction to provide the top gear.

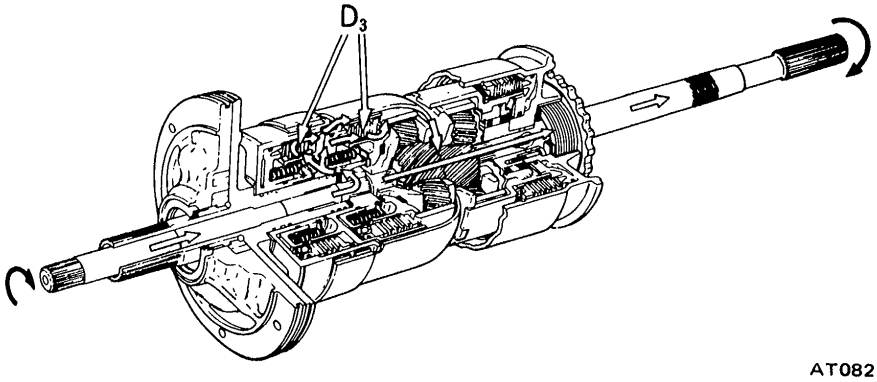

Fig. AT-36 Power transmission during "D_3" range

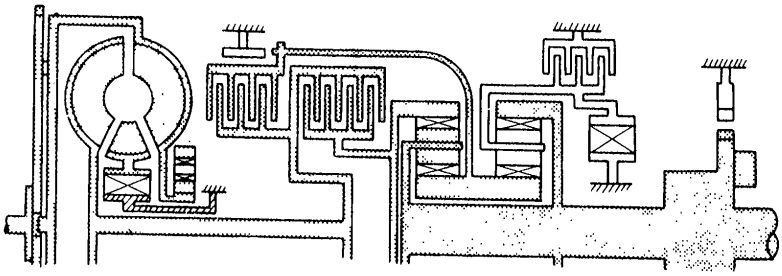

Fig. AT-37 Operation of each mechanism "D_3" range

When the car speed further increases while running at "D_2" range (2nd gear) and the governor pressure (15) exceeds the combined force of the spring of the "2nd-3rd" shift valve ④ and the throttle pressure (19), the "2nd-3rd" shift valve ④ moves, and the line pressure (8) acts to release the front clutch and band servo through the line pressure (10).

Range			Gear ratio	Clutch		Low & reverse brake	Band servo		One way clutch	Parking pawl
				Front	Rear		Operation	Release		
Park						on				on
Reverse			2.182	on		on		on		
Neutral										
Drive	D1	Low	2.458		on				on	
	D2	Second	1.458		on		on			
	D3	Top	1.000	on	on		(on)	on		
2		Second	1.458		on		on			
1	1_2	Second	1.458		on		on			
	1_1	Low	2.458		on	on				

Downloaded from www.Manualslib.com manuals search engine

"D" range (Top gear)

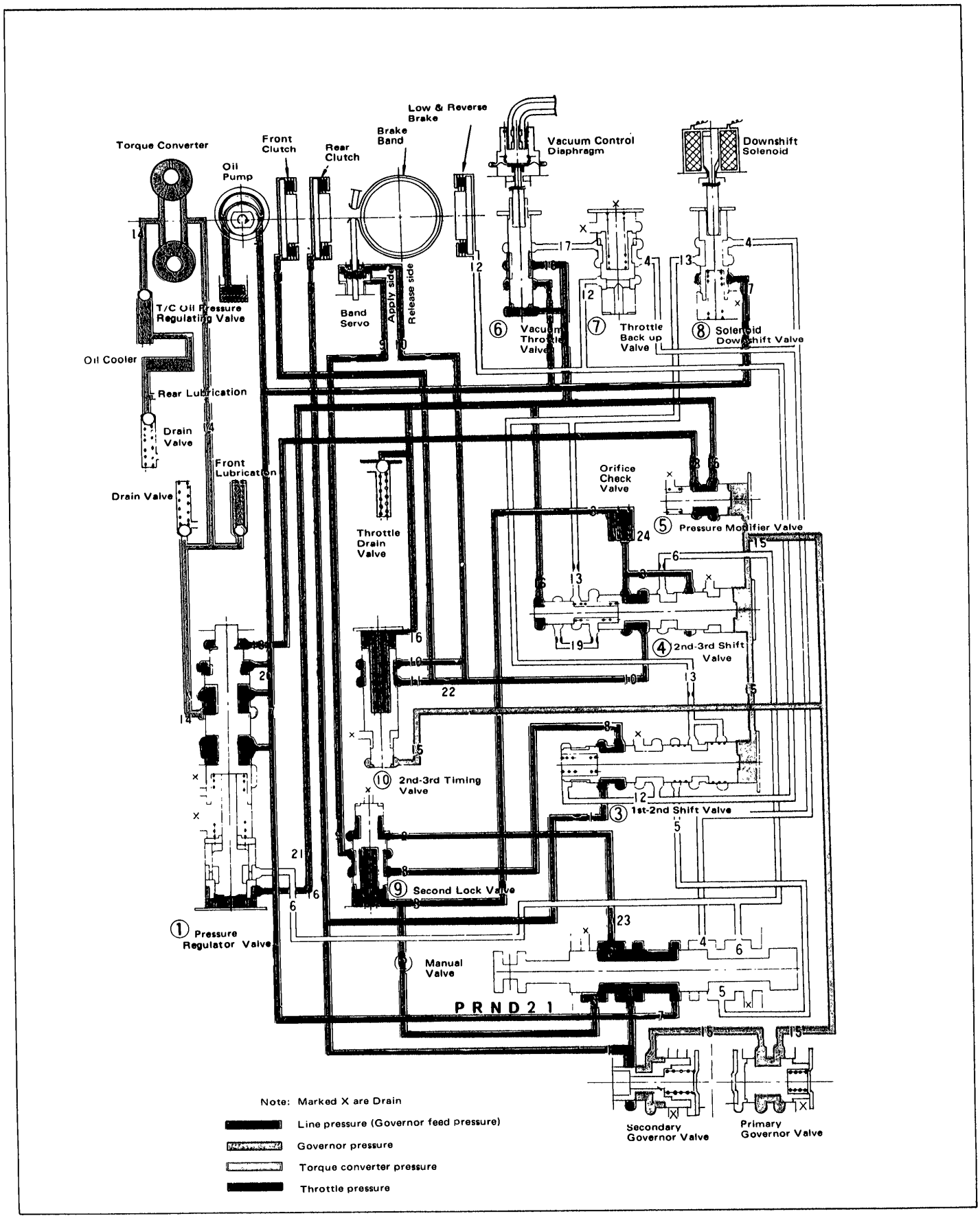

Fig. AT-38 Oil pressure circuit diagram — "D" range (Top gear)

Downloaded from www.Manualslib.com manuals search engine

"D" RANGE KICKDOWN

While operating at speeds below approximately 90 to 100 km/h (56 to 62 MPH), a kick "3rd-2nd" downshift can be accomplished by fully depressing the accelerator.

A kick "3rd-1st" or "2nd-1st" downshift can also be accomplished below approximately 40 to 50 km/h (25 to 30 MPH).

When kickdown is performed, the push rod operates by the solenoid, the valve is depressed downward, and the circuit from the line pressure (7) to the line pressure (13) opens. The line pressure (13), (3) plus the force of the "2nd-3rd" shift valve spring oppose the governor pressure (15) at the "2nd-3rd" shift valve ④, and thus, performs "3rd-2nd" downshift operation.

Moreover, the line pressure (13) plus the force of the "1st-2nd" shift valve spring oppose the governor pressure (15) at the "1st-2nd" shift valve ③, and thus, perform "3rd-2nd" or "2nd-1st" downshift operation.

Range			Gear ratio	Clutch		Low & reverse brake	Band servo		One-way clutch	Parking pawl
				Front	Rear		Operation	Release		
Park						on				on
Reverse			2.182	on		on		on		
Neutral										
Drive	D1	Low	2.458		on				on	
	D2	Second	1.458		on		on			
	D3	Top	1.000	on	on		(on)	on		
2		Second	1.458		on		on			
1	1_2	Second	1.458		on		on			
	1_1	Low	2.458		on	on				

Downloaded from www.Manualslib.com manuals search engine

"D" range kickdown (Shift valves in 2nd gear position)

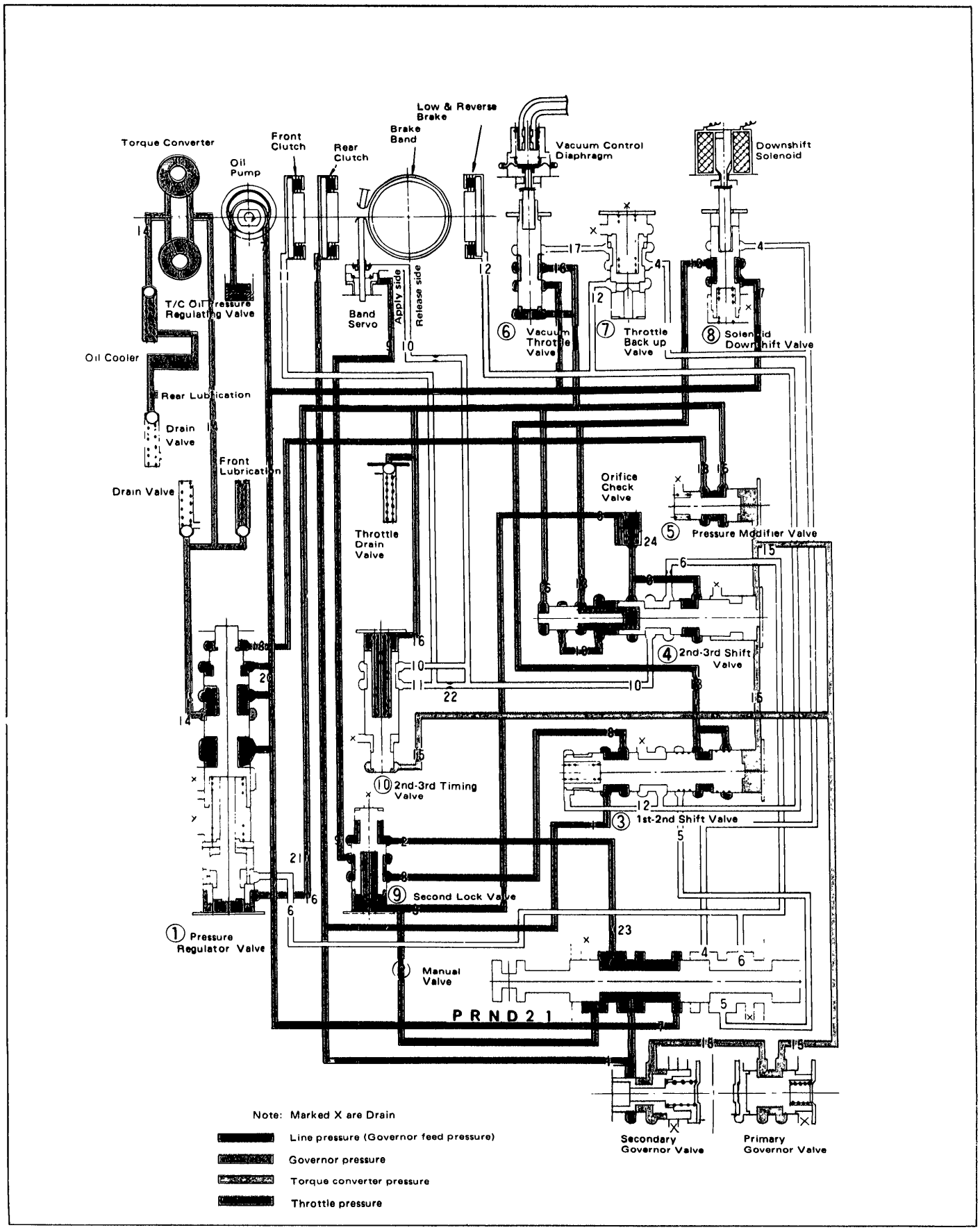

Fig. AT-39 Oil pressure circuit diagram — "D" range kickdown (shift valves in 2nd gear position)

Downloaded from www.Manualslib.com manuals search engine

"2" RANGE (2ND GEAR)

In "2" range the gear ratio is locked in the 2nd forward speed. In this case, the rear clutch is engaged and the band brake holds the front clutch drum, the connecting shell and sun gear from rotating.

The power flow takes place through the input shaft into the rear clutch and the front internal gear. With the sun gear held stationary, the front planetary gears rotate around the sun gear, carrying the front planet carrier with them. The front planet carrier, being splined to the output shaft, causes clockwise rotation of the output shaft at a reduced speed compared to the speed of the input shaft, with an increase in torque. As the low and reverse brake is not engaged, the clockwise rotation of the output shaft causes clockwise rotation of rear internal gear and the rear planet carrier also rotates around the sun gear in a clockwise direction. The one-way clutch will act to allow clockwise rotation of connecting drum.

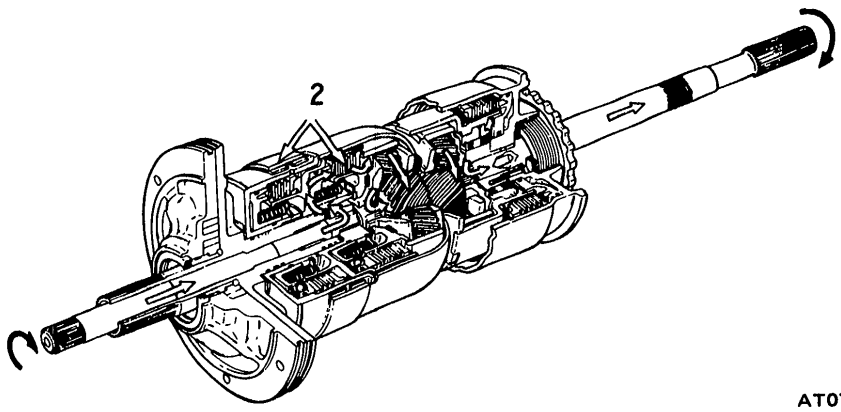

Fig. AT-40 Power transmission during "2" range

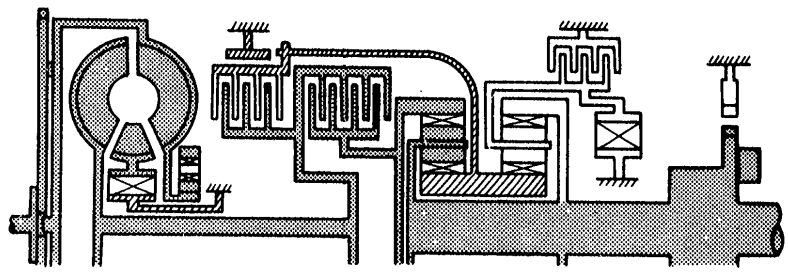

Fig. AT-41 Operation of each mechanism during "2" range

When the manual valve ② is positioned at "2", the line pressure (7) is introduced into the line pressure circuits (1), (2) and (4). The line pressure (1) is led to the governor, rear clutch and "1st-2nd" shift valve ③ as in the case of "D" range. The line pressure (2) locks the second lock valve ⑨ and is led to the tightening side of the band servo.

The "2nd" gear is therefore fixed regardless of vehicle speed. When "D_3" range (3rd gear) is shifted to "2" range, the line pressure (4) enters the throttle back-up valve ⑦ and produces a high pressure in the circuit (17), increasing the throttle pressure (16). The line pressure (7) is, therefore, increased and quickly tightens the band.

Range			Gear ratio	Clutch		Low & reverse brake	Band servo		One way clutch	Parking pawl
				Front	Rear		Operation	Release		
Park						on				on
Reverse			2.182	on		on		on		
Neutral										
Drive	D1	Low	2.458		on				on	
	D2	Second	1.458		on		on			
	D3	Top	1.000	on	on		(on)	on		
2		Second	1.458		on		on			
1	1_2	Second	1.458		on		on			
	1_1	Low	2.458		on	on				

Note: "D_3" range (3rd gear) to "2" range:
If "D_3" range (3rd gear) is shifted to "2" range during operation, the manual valve ② is also shifted to "2" position, causing the line pressure circuit (3) to be drained. Therefore, the line pressure circuit (10) which is situated at the release side of the front clutch and servo is also drained through the "2nd-3rd" shift valve ④, forcing the speed to decrease from "3rd gear" to "2nd gear." In this case the speed change quickly takes place because the line pressure (7) and other pressure are heightened by the action of the line pressure (4), in the same manner as described under "2" range.

Downloaded from www.Manualslib.com manuals search engine

"2" range (2nd gear)

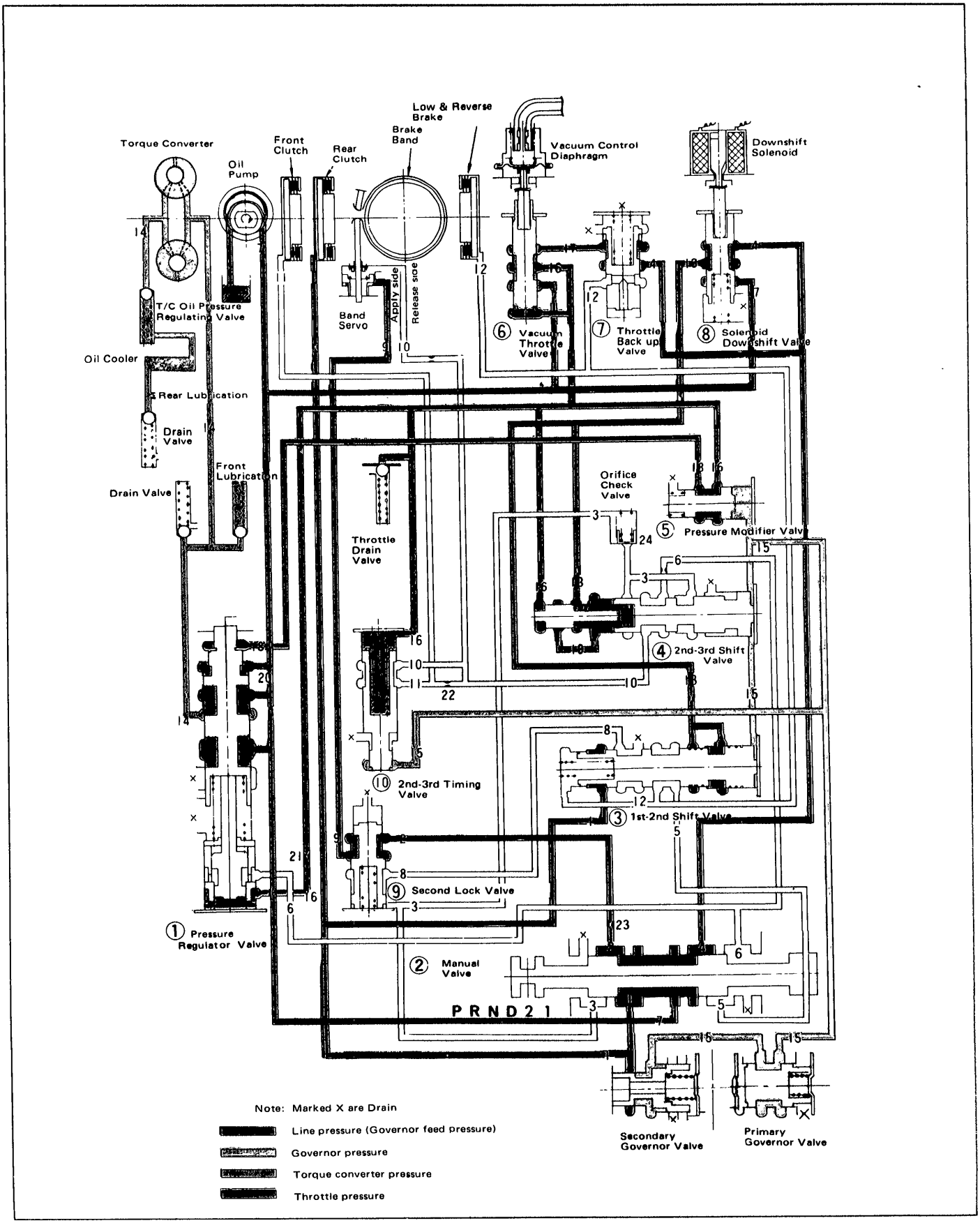

Fig. AT-42 Oil pressure circuit diagram — "2" range (2nd gear)

Downloaded from www.Manualslib.com manuals search engine

"1_1" RANGE (LOW GEAR)

When starting in "1" range, the driving gear is locked to the low gear ratio.

In "1" range, the rear clutch is engaged and the low and reverse brake holds the connecting drum and rear planet carrier from rotating. The power flow takes place through the input shaft and into the rear clutch. Rotation of the rear clutch drives the rear clutch hub and front internal gear. The front internal gear rotates the front planetary gears clockwise to cause the sun gear to rotate counter-clockwise.

Counterclockwise rotation of the sun gear turns the rear planetary gear clockwise.

The rear planet carrier splined to the connecting drum is held from rotating by the low and reverse brake.

The clockwise rotation of the rear planetary gears therefore rotates the rear internal gear and internal drive flange. The internal drive flange is splined to the output shaft and rotates the output shaft clockwise. However, the output shaft rotates at a lower speed compared to that of the input shaft. This is caused by the fact that the front planet carrier rotates at the same speed as the output shaft in the same direction since the carrier is splined to the output shaft. The front internal gear and planetary gear assembly are rotating in the same direction, but the planet carrier is rotating at a speed slower than the ring gear. So the gear ratio of this speed range is a combination of the ratios provided by the front and rear planetary gear assemblies.

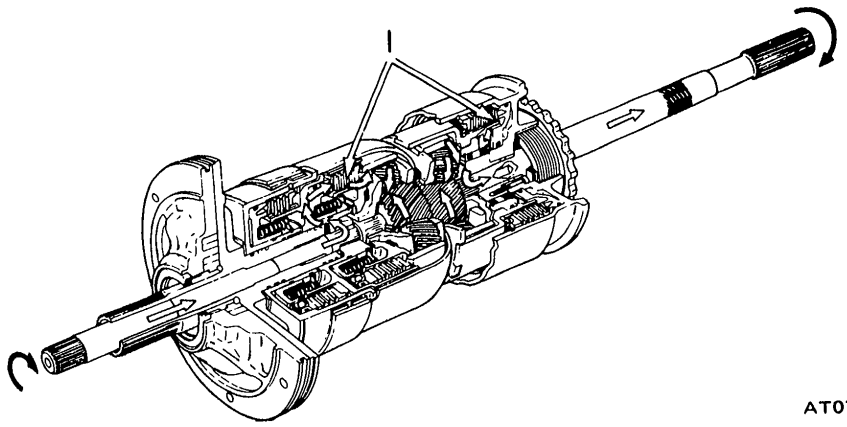

Fig. AT-43 Power transmission during "1_1" range

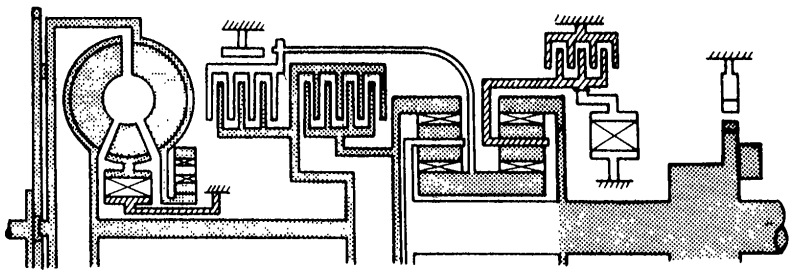

Fig. AT-44 Operation of each mechanism during "1_1" range

Range			Gear ratio	Clutch		Low & reverse brake	Band servo		One way clutch	Parking pawl
				Front	Rear		Operation	Release		
Park						on				on
Reverse			2.182	on		on		on		
Neutral										
Drive	D1	Low	2.458		on				on	
	D2	Second	1.458		on		on			
	D3	Top	1.000	on	on		(on)	on		
2		Second	1.458		on		on			
1	1_2	Second	1.458		on		on			
	1_1	Low	2.458		on	on				

When the manual valve ② is positioned at "1", the line pressure (7) is applied into the line pressure circuits (1), (4) and (5). The oil pressure in (5) actuates the low and reverse brake after being introduced into the circuit (12) through the "1st-2nd" shift valve ③, and the line pressure (1) acts on the rear clutch and governor. The line pressure (4) acts in the same manner as in "2" range.

Similar to that of the "D" range, the line pressure increases with the degree of accelerator pedal depression, and the line pressure decreases with the increase of car speed. The governor pressure (15) which acts on the "1st-2nd" shift valve does not increase until it overcomes the combined force of the line pressure (12) and the spring, causing no "1st-2nd" speed change.

Downloaded from www.Manualslib.com manuals search engine

"1_1" range (Low gear)

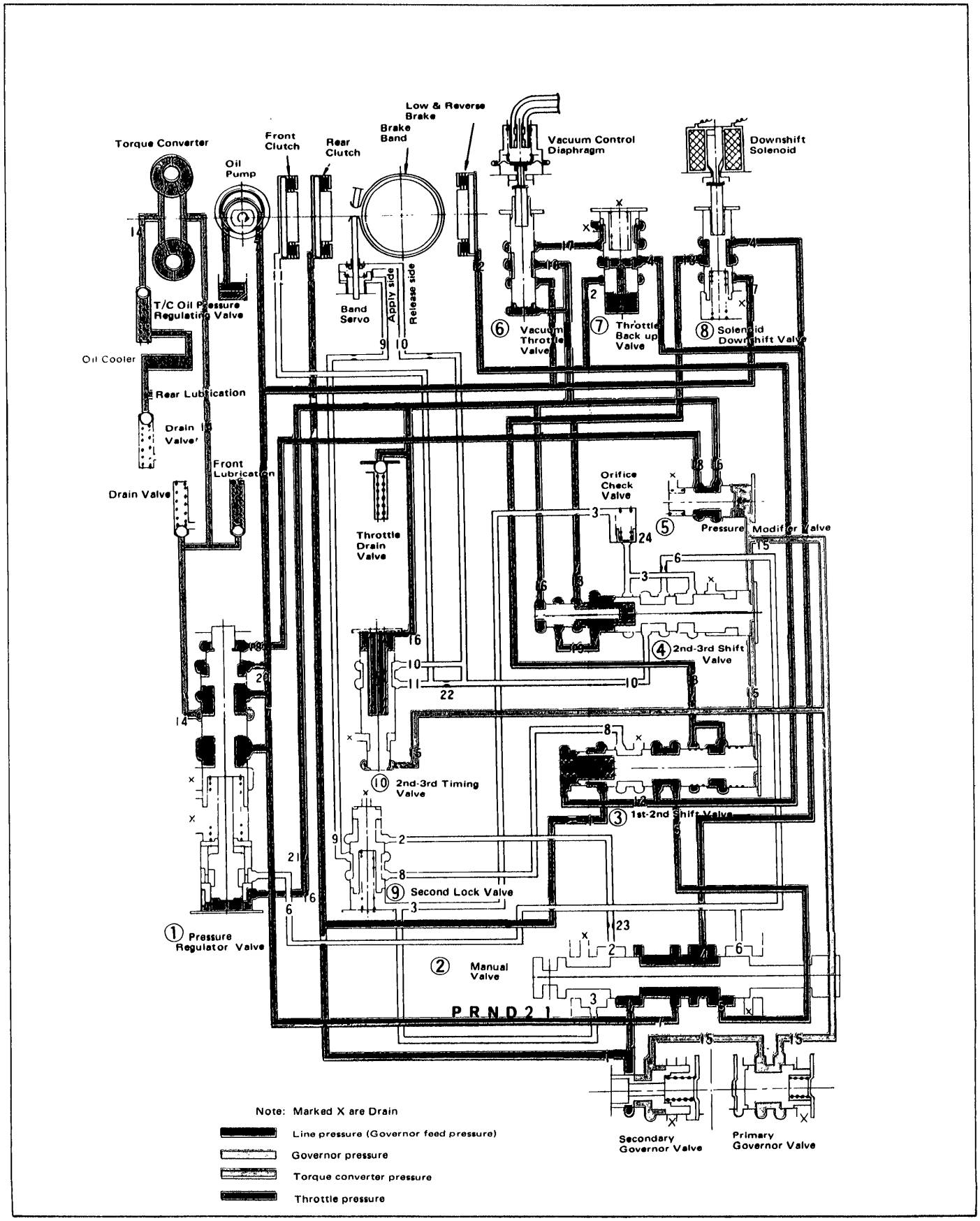

Fig. AT-45 Oil pressure circuit diagram — "1_1" range (Low gear)

Downloaded from www.Manualslib.com manuals search engine

"1_2" range (2nd gear)

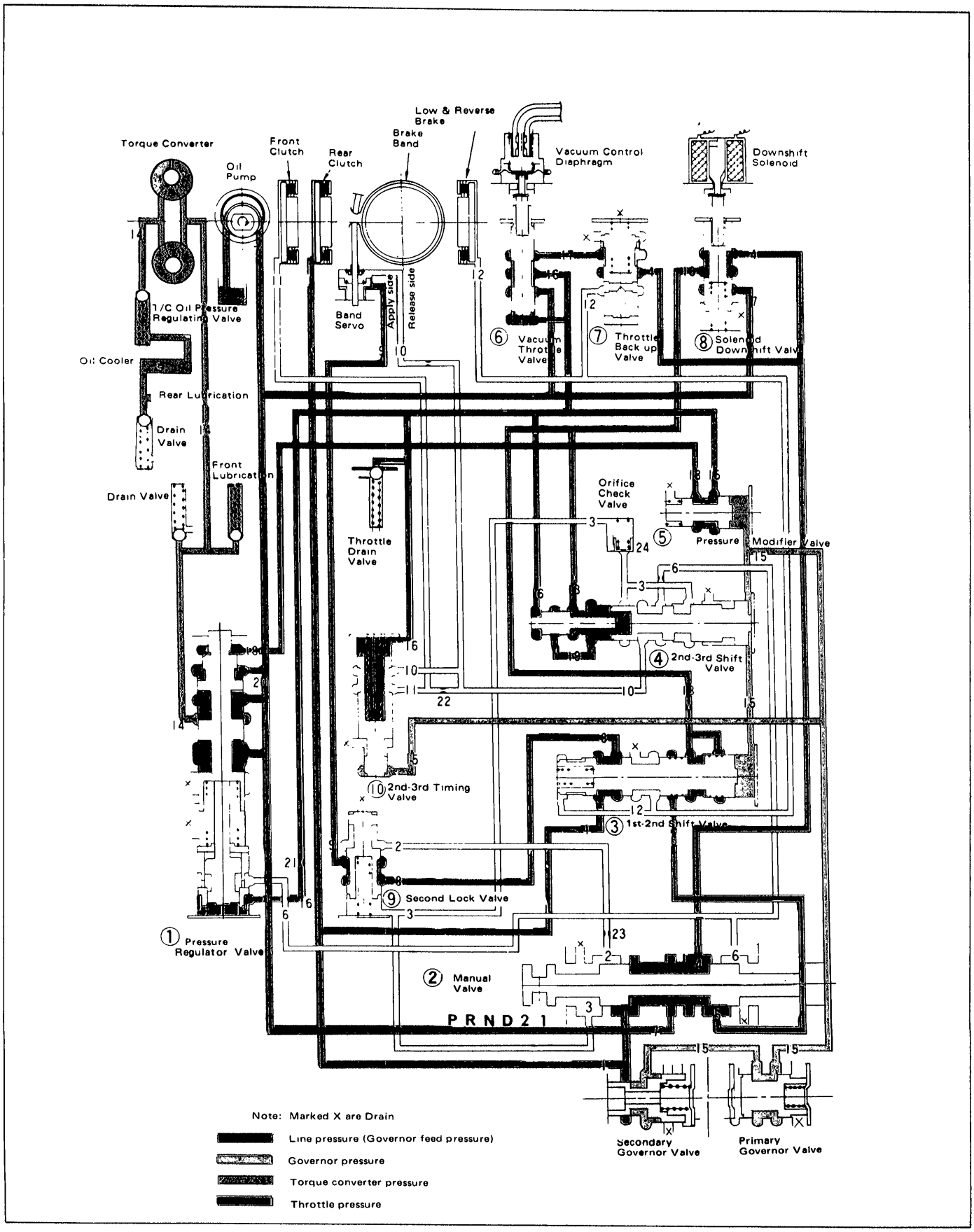

Fig. AT-46 Oil pressure circuit diagram — "1_2" range (2nd gear)

Downloaded from www.Manualslib.com manuals search engine

REMOVAL AND INSTALLATION

CONTENTS

TRANSMISSION ASSEMBLY AT-33
REMOVAL AT-33
INSTALLATION AT-33
TRANSMISSION CONTROL LINKAGE AT-35
REMOVAL AND INSTALLATION AT-35
ADJUSTMENT AT-35

TRANSMISSION ASSEMBLY

When dismounting the automatic transmission from a car, pay attention to the following points:

1. Before dismounting the transmission, rigidly inspect it by aid of the "Trouble-shooting Chart", and dismount it only when considered to be necessary.
2. Dismount the transmission with utmost care; and when mounting, observe the tightening torque indicated on another table, not to exert excessive force.

REMOVAL

In dismounting automatic transmission from car, proceed as follows:

1. Disconnect battery ground cable from terminal.
2. Disengage torsion shaft from accelerator linkage.
3. Jack up vehicle and support its weight on safety stands. Recommend a hydraulic hoist or open pit be utilized, if available.

   Make sure that safety is insured.
4. Remove propeller shaft.

Note: Plug up the opening in the rear extension to prevent oil from flowing out.

5. Disconnect front exhaust tube.
6. Disconnect selector range lever from manual shaft.
7. Disconnect wire connections at inhibitor switch.
8. Disconnect vacuum tube from vacuum diaphragm, and wire connections at downshift solenoid.
9. Disconnect speedometer cable from rear extension.
10. Disconnect oil charging pipe.
11. Disconnect oil cooler inlet and outlet tubes at transmission case.
12. Support engine by locating a jack under oil pan with a wooden block used between oil pan and jack. Support transmission by means of a transmission jack.
13. Detach converter housing dust cover. Remove bolts securing torque converter to drive plate. See Figure AT-47.

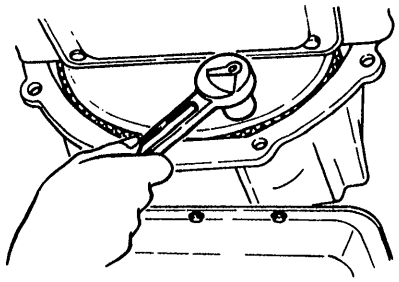

Fig. AT-47 Removing torque converter attaching bolts

Note: Before removing torque converter, scribe match marks on two parts so that they may be replaced in their original positions at assembly.

14. Remove rear engine mount securing bolts and crossmember mounting bolts.
15. Remove starter motor.
16. Remove bolts securing transmission to engine. After removing these bolts, support engine and transmission with jack, and lower the jack gradually until transmission can be removed and take out transmission under the car.

Note: Plug up the opening such as oil charging pipe, oil cooler tubes, etc.

INSTALLATION

Installation of automatic transmission on car is reverse order of removal. However, observe the following installation notes.

1. Drive plate runout

   Turn crankshaft one full turn and measure drive plate runout with indicating finger of a dial gauge rested against plate. See Figure AT-48.

   [Replace drive plate if in excess of 0.5 mm (0.020 in).]

- Maximum allowable runout: 0.3 mm (0.012 in)

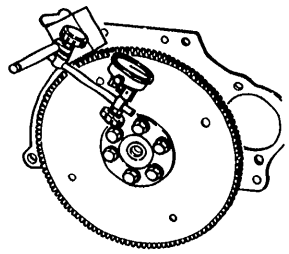

Fig. AT-48 Measuring drive plate runout

2. Installation of torque converter

   Line up notch in torque converter with that in oil pump. Be extremely careful not to cause undue stresses in parts in installing torque converter. See Figure AT-49.

Downloaded from www.Manualslib.com manuals search engine

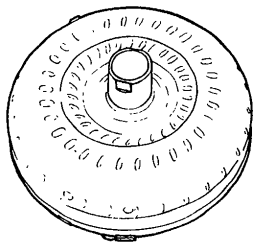

Fig. AT-49 Torque converter aligning cut

3. When connecting torque converter to transmission, measure distance "A" to be certain that they are correctly assembled. See Figure AT-50.

Distance "A":

More than 21.5 mm (0.846 in)

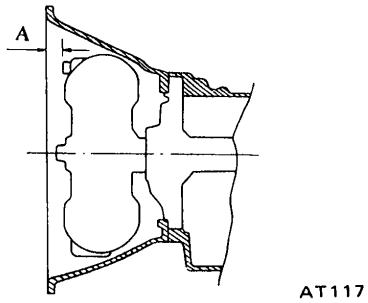

Fig. AT-50 Installing torque converter

4. Bolt converter to drive plate.

Note: Align chalk marks painted across both parts during disassembling processes.

5. After converter is installed, rotate crankshaft several turns and check to be sure that transmission rotates freely without binding.

6. Pour recommended automatic transmission fluid up to correct level through oil charge pipe.

7. Connect manual lever to shift rod. Operation should be carried out with manual and selector levers in "N".

8. Connect inhibitor switch wires.

Notes:

a. Refer to covering topic under "Checking and adjusting inhibitor switch" on page AT-49.

b. Inspect and adjust switch as above whenever it has to be removed for service.

9. Check inhibitor switch for operation:

Starter should be brought into operation only when selector lever is in "P" and "N" positions (it should not be started when lever is in "D", "2", "1" and "R" positions).

Back-up lamp should also light when selector lever is placed in "R" position.

10. Check level of oil in transmission. For detailed procedure, see page AT-48.

11. Move selector lever through all positions to be sure that transmission operates correctly.

With hand brake applied, rotate engine at idling. Without disturbing the above setting, move selector lever through "N" to "D", to "2", to "1" and to "R". A slight shock should be felt by hand gripping selector each time transmission is shifted.

Note: See page AT-49 for checking engine idling.

12. Check to be sure that line pressure is correct. To do this, refer to relative topic under "Testing line pressure" on page AT-52.

13. Perform stall test as per the instructions on page AT-50.

Downloaded from www.Manualslib.com manuals search engine

TRANSMISSION CONTROL LINKAGE

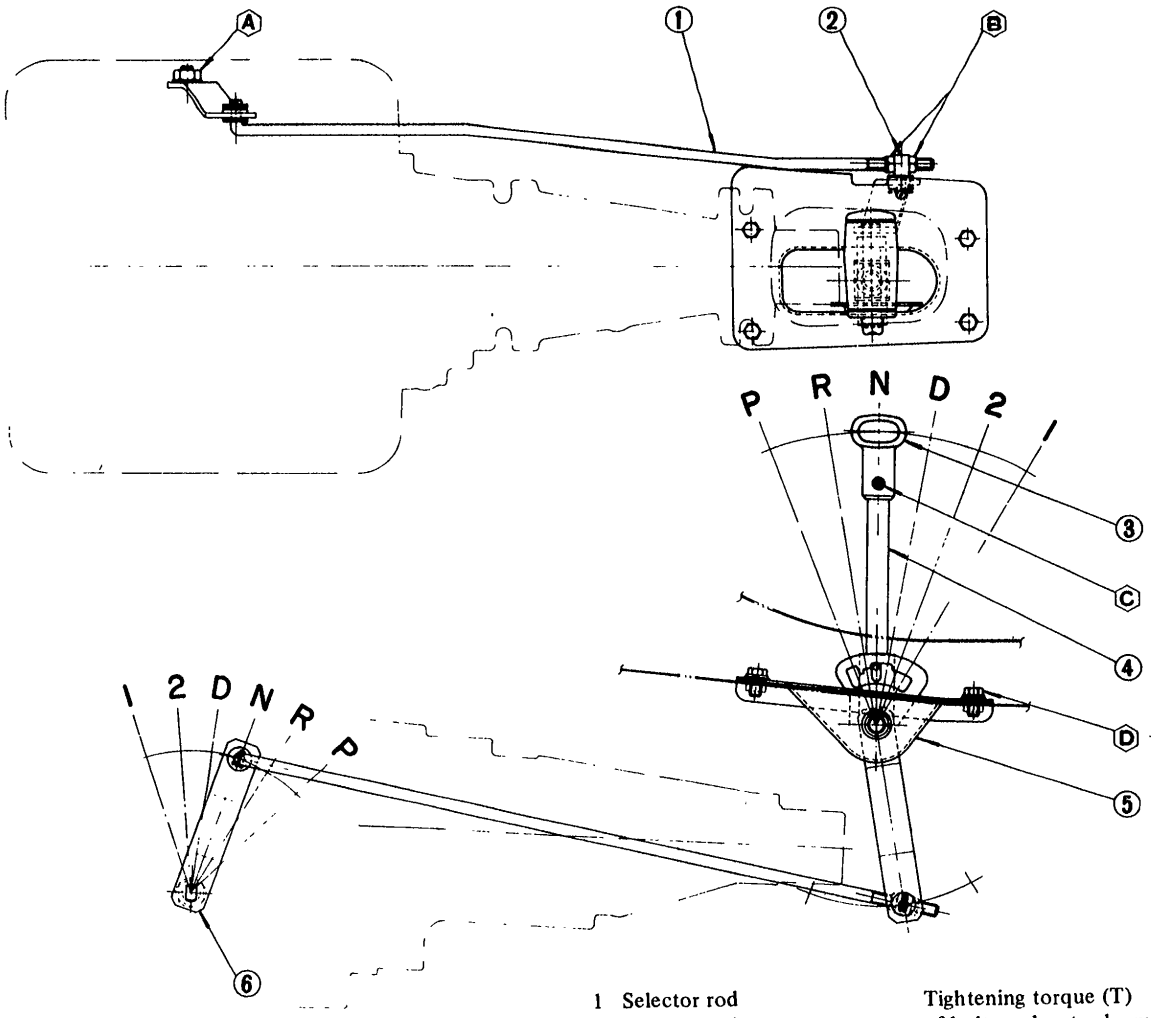

1 Selector rod
2 Joint trunnion
3 Control lever knob
4 Control lever assembly
5 Control lever bracket
6 Selector range lever

Tightening torque (T) of bolts and nuts kg-m (ft-lb)

Ⓐ T: 3.0 to 4.0 (22 to 29)
Ⓑ T: 0.8 to 1.1 (6 to 8)
Ⓒ T: 0.2 to 0.25 (1 to 2)
Ⓓ T: 0.8 to 1.1 (6 to 8)

Fig. AT-51 Control linkage system

REMOVAL AND INSTALLATION

1. Disconnect control knob from control lever by removing two(2) screws.
2. Remove console box.
3. Remove selector rod, selector range lever and control lever assembly with bracket.

To install, reverse the order of removal.

ADJUSTMENT

The adjustment of linkage is as important as "Inspection of oil level" for the automatic transmission.

Therefore, great care should be exercised because faulty adjustment will result in the breakdown of the transmission.

1. Loosen adjust nuts Ⓑ. See Figure AT-51.
2. Set control lever ④ and selector range lever ⑥ at "N" position. See Figure AT-51.
3. Set selector rod ① to trunnion ② by turning in or out adjust nuts. See Figure AT-51.

After adjusting, make sure that control lever can be set in any position correctly and that selector lever operates properly without any binding.

If levers do not operate satisfactorily, readjust or replace parts as necessary.

Downloaded from www.Manualslib.com manuals search engine

MAJOR REPAIR OPERATION

CONTENTS

SERVICE NOTICE FOR DISASSEMBLY AND ASSEMBLY AT-36
TORQUE CONVERTER AT-36
INSPECTION AT-36
TRANSMISSION AT-36
DISASSEMBLY AT-36
INSPECTION AT-38
ASSEMBLY AT-38
COMPONENT PARTS AT-40
FRONT CLUTCH AT-40
REAR CLUTCH AT-41
LOW & REVERSE BRAKE AT-42
SERVO PISTON AT-42
GOVERNOR AT-43
OIL PUMP AT-43
PLANETARY CARRIER AT-44
CONTROL VALVE AT-44

SERVICE NOTICE FOR DISASSEMBLY AND ASSEMBLY

1. It is advisable that repair operations be carried out in a dust-proof room.
2. Due to the differences of the engine capacities, the specifications of component parts for each model's transmission may be different. They do, however, have common adjustment and repair procedures as well as cleaning and inspection procedures, outlined hereinafter.
3. During repair operations, refer to "Service Data and Specifications" section for the correct parts for each model.
4. Before removing any of subassemblies, thoroughly clean the outside of the transmission to prevent dirt from entering the mechanical parts.
5. Do not use a waste rag. Use a nylon or paper cloth.
6. After disassembling, wash all disassembled parts, and examine them to see if there are any worn, damaged or defective parts, and how they are affected. Refer to "Service Data" for the extent of damage that justifies replacement.
7. As a rule, packings, seals and similar parts once disassembled should be replaced with new ones.

TORQUE CONVERTER

The torque converter is a welded construction and can not be disassembled.

INSPECTION

1. Check torque converter for any sign of damage, bending, oil leak or deformation. If necessary, replace.
2. Remove rust from pilots and bosses completely.

If torque converter oil is fouled or contaminated due to burnt clutch, flush the torque converter as follows:

(1) Drain oil in torque converter.
(2) Pour non lead gasoline or kerosene into torque converter [approximately 0.5 liter (1 ⅛ U.S.pt., ⅞ Imp. pt.)].
(3) Blow air into torque converter and flush and drain out gasoline.
(4) Fill torque converter with torque converter oil [approximately 0.5 liter (1 ⅛ U.S.pt., ⅞ Imp.pt.)].
(5) Again blow air into torque converter, and drain torque converter oil.

TRANSMISSION

DISASSEMBLY

1. Drain oil from the end of rear extension. Mount transmission on Transmission Case Stand ST07870000 or ST07860000. Remove oil pan. See Figure AT-52.

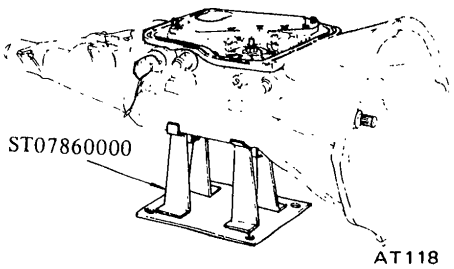

Fig. AT-52 Removing oil pan

2. Remove bolts securing converter housing to transmission case. Remove torque converter.
3. Remove speedometer pinion sleeve bolt. Withdraw pinion.
4. Remove downshift solenoid and vacuum diaphragm. Do not leave diaphragm rod at this stage of disassembly. Rod is assembled in top of vacuum diaphragm. See Figure AT-53.

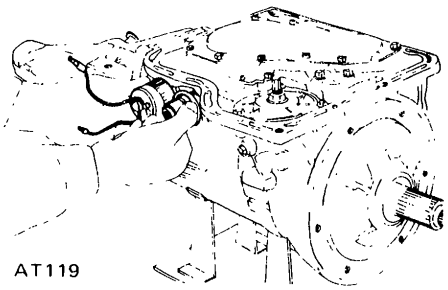

Fig. AT-53 Downshift solenoid and vacuum diaphragm

5. Remove bolts which hold valve body to transmission case. See Figure AT-54.

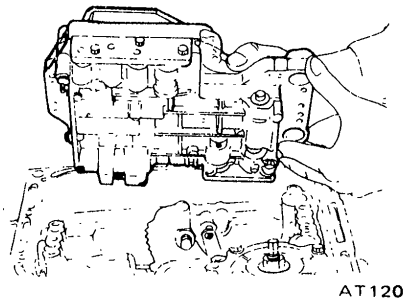

Fig. AT-54 Removing valve body

6. Loosen lock nut ② on piston stem ① as shown in Figure AT-55. Then tighten piston stem in order to prevent front clutch drum from falling when oil pump is withdrawn.

Downloaded from www.Manualslib.com manuals search engine

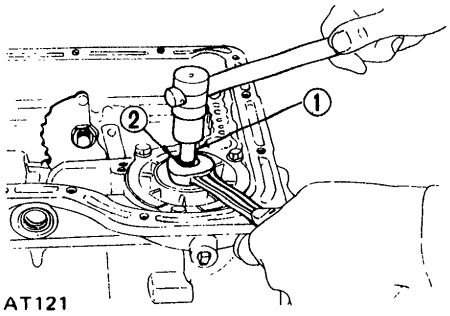

Fig. AT-55 Loosening band servo

7. Pull out input shaft.
8. Withdraw oil pump using Sliding Hammer ST25850000. Do not allow front clutch to come out of position and drop onto floor. See Figure AT-56.

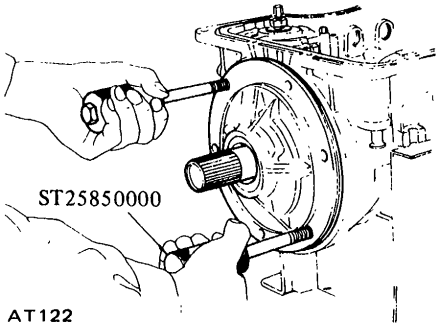

Fig. AT-56 Removing oil pump

9. Remove band strut. This can be done by loosening piston stem further. See Figure AT-57.

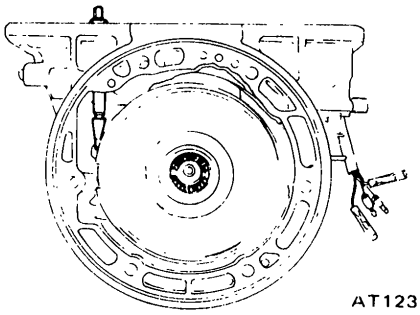

Fig. AT-57 Removing band strut

10. Remove brake band, front clutch and rear clutch as an assembled unit.

11. Remove connecting shell, rear clutch hub and front planetary carrier as a unit. See Figure AT-58.

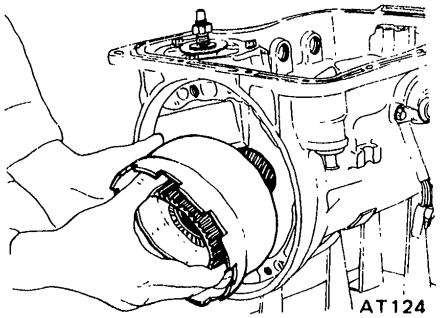

Fig. AT-58 Removing connecting shell

12. With the aid of Snap Ring Remover HT69860000, pry snap ring off output shaft. See Figure AT-59.

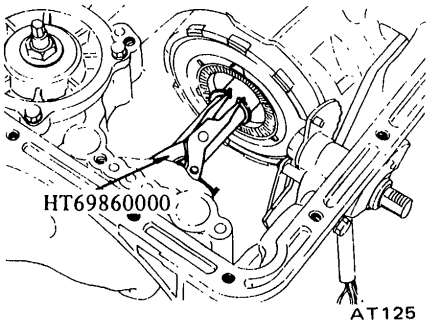

Fig. AT-59 Removing snap ring

13. Remove connecting drum and inner gear of rear planetary carrier as an assembly. See Figure AT-60.

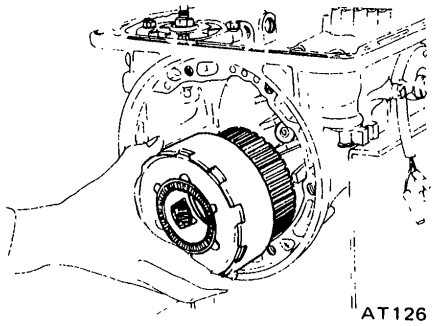

Fig. AT-60 Removing connecting drum

14. Remove snap rings and then remove rear planetary carrier, internal gear, connecting drum, one-way clutch outer race and one-way clutch in that order.

15. Remove rear extension by loosening securing bolts. See Figure AT-61.

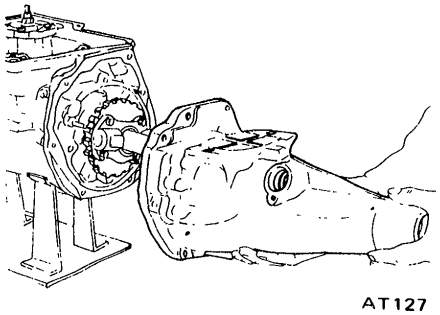

Fig. AT-61 Removing rear extension

16. Pull out output shaft; remove oil distributor ② together with governor valve ①. See Figure AT-62.

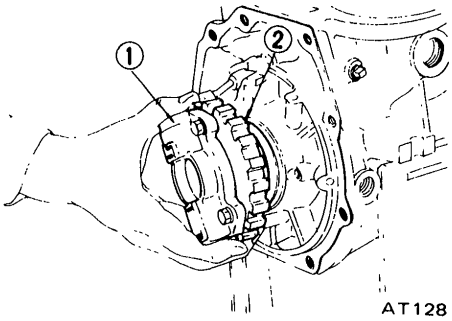

Fig. AT-62 Removing governor and oil distributor

17. Pry off snap ring using a pair of pliers. Remove retaining plate, drive plate, driven plate and dish plate in that order. See Figure AT-63.

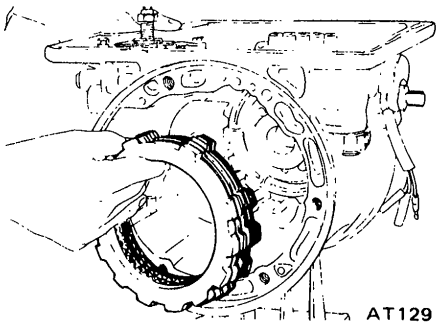

Fig. AT-63 Removing drive and driven plates

18. Reaching through back side of transmission case, remove hex-head slotted bolts as shown in Figure AT-64. To do this, use Hex-head Extension ST25570001 (ST25570000). One-way clutch inner race, thrust washer, piston return spring and thrust spring ring can now be removed.

Downloaded from www.Manualslib.com manuals search engine

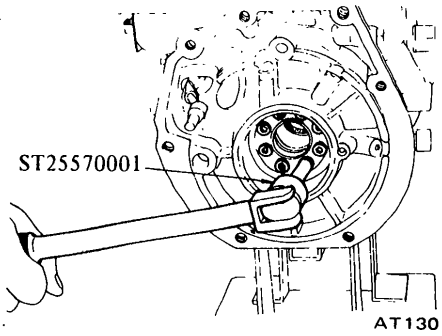

Fig. AT-64 Removing hex-head slotted bolt

19. Blow out low and reverse brake piston by directing a jet of air into hole in cylinder. See Figure AT-65.

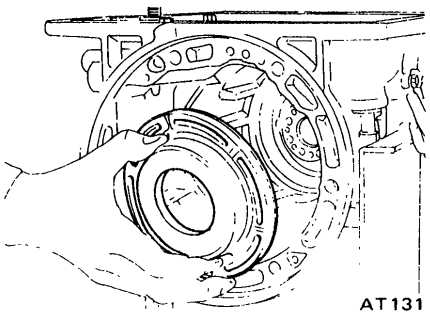

Fig. AT-65 Removing piston

20. Remove band servo loosening attaching bolts.

Note: If difficulty is encountered in removing retainer, direct a jet of air toward release side as shown in Figure AT-66.

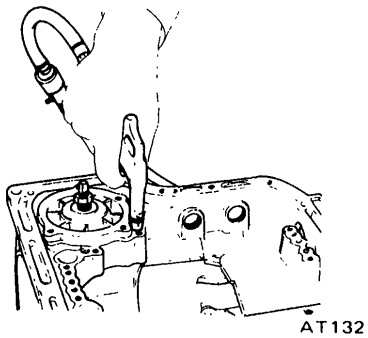

Fig. AT-66 Removing band servo

21. Pry snap rings ① from both ends of parking brake lever ② and remove the lever. Back off manual shaft lock nut ③ and remove manual plate ④ and parking rod ⑤ See Figure AT-67.

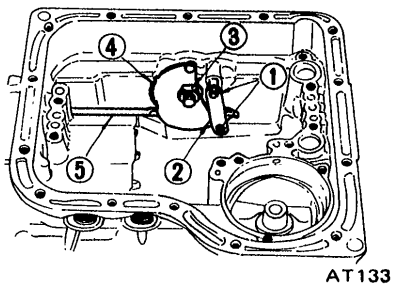

Fig. AT-67 Removing manual plate

22. Remove inhibitor switch and manual shaft by loosening two securing bolts.

INSPECTION

Torque converter housing, transmission case and rear extension

1. Check for damage or cracking; if necessary, replace.
2. Check for dents or score marks on mating surfaces. Repair as necessary.
3, If rear extension bushing is worn or cracked, replace it as an assembly of bushing and rear extension housing.

Gaskets and O-ring

1. Always use new gaskets when the units are to be disassembled.
2. Check O-rings for burrs or cracking. If necessary, replace with new rings.

Oil distributor

1. Check for signs of wear on seal ring and ring groove, replacing with new ones if found worn beyond use.
2. Check that clearance between seal ring and ring groove is correct. If out of specification, replace whichever is worn beyond limits. Correct clearance is from 0.04 to 0.16 mm (0.0016 to 0.0063 in). See Figure AT-68.

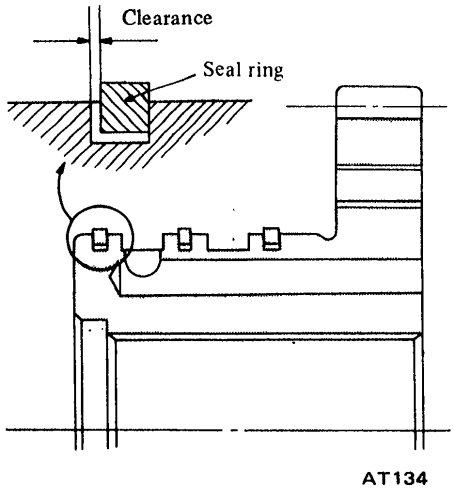

Fig. AT-68 Measuring seal ring to ring groove clearance

ASSEMBLY

Assembly is in reverse order of disassembly. However, observe the following assembly notes.

1. After installing piston of low and reverse brake, assemble thrust spring ring, return spring, thrust washer and one-way clutch inner race. Torque hex-head slotted bolt to 1.3 to 1.8 kg-m (9 to 13 ft-lb), using Hex-head Extension ST25570001 (ST25570000), Torque Wrench GG91060000 and Socket Extension ST25490000 (ST25512001). See Figure AT-69.

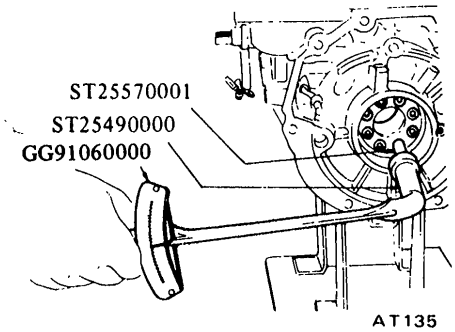

Fig. AT-69 Installing one-way clutch inner race

2. After low and reverse brake has been assembled, measure the clearance between snap ring ① and retaining plate ②. Select proper thickness of retaining plate to give correct ring to plate clearance. See Figure AT-70.

- Low and reverse brake clearance:
  0.8 to 1.05 mm
  (0.031 to 0.041 in)

Downloaded from www.Manualslib.com manuals search engine

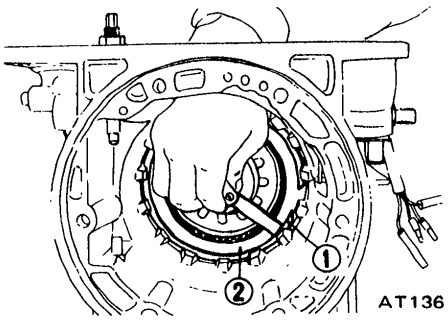

Fig. AT-70 Measuring ring to plate clearance

Available retaining plate

No.	Thickness mm (in)
1	7.8 (0.307)
2	8.0 (0.315)
3	8.2 (0.323)
4	8.4 (0.331)
5	8.6 (0.339)
6	8.8 (0.346)

For inspection procedure for low and reverse brake, see page AT-42 for Assembly.

3. Install one-way clutch so that the arrow mark "→" is toward front of vehicle. It should be free to rotate only in clockwise direction. See Figure AT-71.

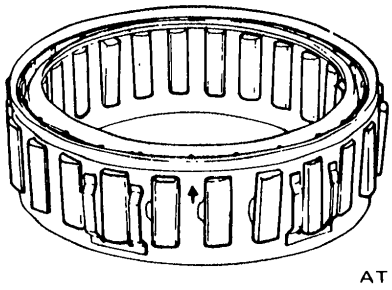

Fig. AT-71 One-way clutch

4. After installing rear extension, torque attaching bolts to 2.0 to 2.5 kg-m (14 to 18 ft-lb). Place manual lever in "P" range and check to be sure that rear output shaft is securely blocked.

5. Tighten servo retainer temporarily at this stage of assembly.

6. Place rear clutch assembly with needle bearing on front assembly.

7. Install rear clutch hub and front planetary carrier as shown in Figure AT-72.

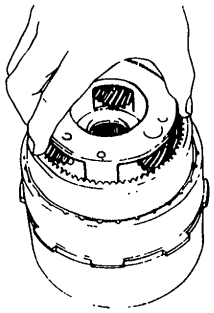

Fig. AT-72 Installing planetary carrier

8. Assemble connecting shell and other parts up to front clutch in reverse order of disassembly.

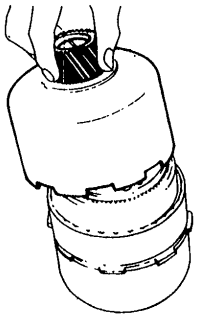

Fig. AT-73 Installing connecting shell

9. Adjust total end play and front end play as follows:

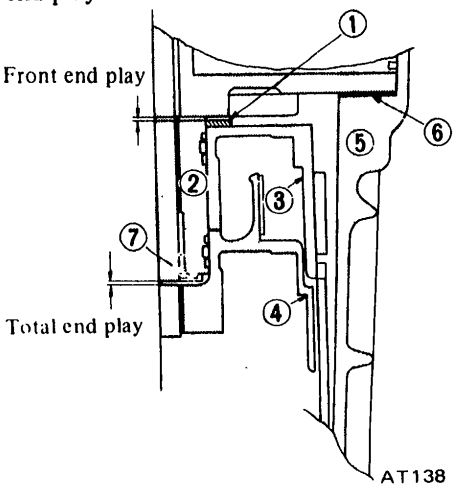

1 Front clutch thrust washer
2 Oil pump cover
3 Front clutch
4 Rear clutch
5 Transmission case
6 Oil pump gasket
7 Oil pump cover bearing race

Fig. AT-74 End play

(1) Measure the distance "A" and "C" by vernier calipers as shown in Figure AT-75.

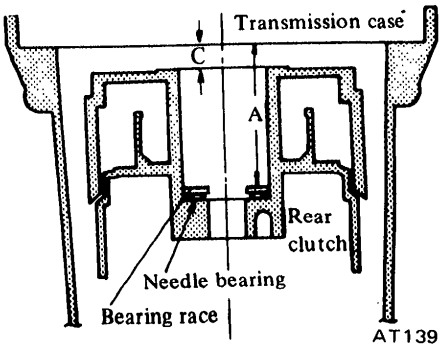

Fig. AT-75 Measuring the distance "A" and "C"

(2) Measure the distance "B" and "D" of oil pump cover as shown in Figure AT-76.

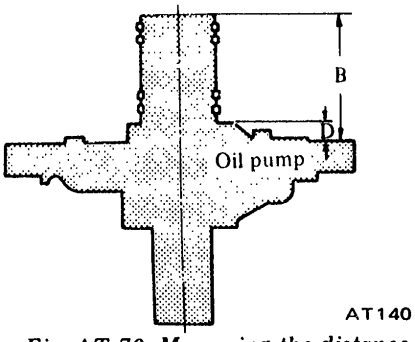

Fig. AT-76 Measuring the distance "B" and "D"

Adjustment of total end play

Select oil pump cover bearing race by calculating the following formula:

$$T_T = A - B + W$$

where,

T_T : Required thickness of oil pump cover bearing race mm (in)
A : Measured distance A mm (in)
B : Measured distance B mm (in)
W : Thickness of bearing race temporarily inserted mm (in)

Available oil pump cover bearing race

Thickness mm (in)
1.2 (0.047)
1.4 (0.055)
1.6 (0.063)
1.8 (0.071)
2.0 (0.079)
2.2 (0.087)

Specified total end play:
0.25 to 0.50 mm
(0.010 to 0.020 in)

Downloaded from www.Manualslib.com manuals search engine

Adjustment of front end play

Select front clutch thrust washer by calculating the following formula:

$$T_F = C - D - 0.2 \text{ (mm)}$$

where,

T_F : Required thickness of front clutch thrust washer mm (in)
C : Measured distance C mm (in)
D : Measured distance D mm (in)

Available front clutch thrust washer

Thickness mm (in)
1.5 (0.059)
1.7 (0.067)
1.9 (0.075)
2.1 (0.083)
2.3 (0.091)
2.5 (0.098)
2.7 (0.106)

Specified front end play:
0.5 to 0.8 mm
(0.020 to 0.031 in)

Notes:

a. **Correct thickness of bearing race and thrust washer is always the one which is nearest the calculated one.**
b. **Installed thickness of oil pump gasket is 0.4 mm (0.016 in).**

10. Check to be sure that brake servo piston moves freely. For detailed procedure, refer to page AT-42 for Servo Piston. Use care to prevent piston from coming out of place during testing since servo retainer is not tightened at this point of assembly.

11. Make sure that brake band strut is correctly installed. Torque piston stem to 1.2 to 1.5 kg-m (9 to 11 ft-lb); Back off two full turns and secure with lock nut. Lock nut tightening torque is 1.5 to 4.0 kg-m (11 to 29 ft-lb).

12. After inhibitor switch is installed, check to be sure that it operates properly in each range. For detailed procedure, refer to page AT-49 for Checking and Adjusting Inhibitor Switch.

13. Check the length "L" between case end to rod end of vacuum throttle valve fully pushed in. Then select adequate diaphragm rod of corresponding measured length. See Figure AT-77.

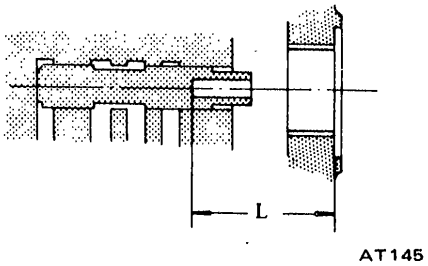

Fig. AT-77 Measuring the distance "L"

Available diaphragm rod

Distance measured "L" mm (in)	Diaphragm rod length mm (in)
Under 25.55 (1.0059)	29.0 (1.142)
25.65 to 26.05 (1.0098 to 1.0256)	29.5 (1.161)
26.15 to 26.55 (1.0295 to 1.0453)	30.0 (1.181)
26.65 to 27.05 (1.0492 to 1.0650)	30.5 (1.201)
Over 27.15 (1.0689)	31.0 (1.220)

COMPONENT PARTS

The transmission consists of many small parts that are quite alike in construction yet machined to very close tolerances. When disassembling parts, be sure to place them in order in part rack so they can be restored in the unit in their proper positions. It is also very important to perform functional test whenever it is designated.

FRONT CLUTCH

Disassembly

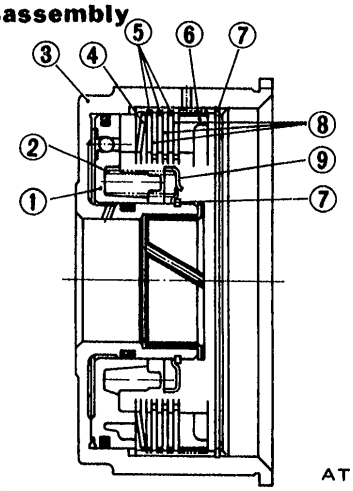

1 Piston
2 Coil spring
3 Front clutch drum
4 Dished plate
5 Driven plate
6 Retaining plate
7 Snap ring
8 Drive plate
9 Spring retainer

Fig. AT-78 Sectional view of front clutch

1. Pry off snap ring ① with a suitable screwdriver or a pair of pliers. Remove a retaining plate ②, drive plate ③, driven plate ④ and dished plate ⑤ in the order listed, as shown in Figure AT-78.

2. Compress clutch springs, using Clutch Spring Compressor ST25420001 (or ST25420000). Remove snap ring ⑥ from spring retainer, using Snap Ring Remover ST25320001. See Figure AT-79.

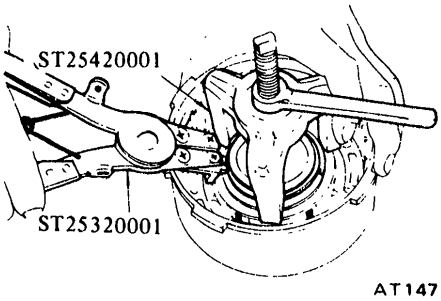

Fig. AT-79 Removing snap ring

Note: When Clutch Spring Compressor ST25420000 is to be used, cut the toe-tips of three legs by a grinding wheel. See Figure AT-80.

Downloaded from www.Manualslib.com manuals search engine

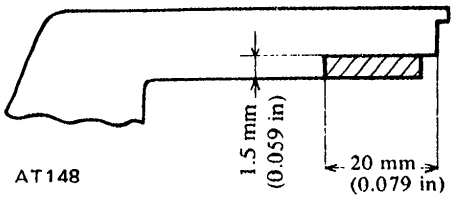

Cut off hatched portion

Fig. AT-80 Modifying coil spring compressor

3. Take out spring retainer ⑦ and spring ⑧. See Figure AT-78.
4. Blow out piston by directing a jet of air into hole in clutch drum. See Figure AT-81.

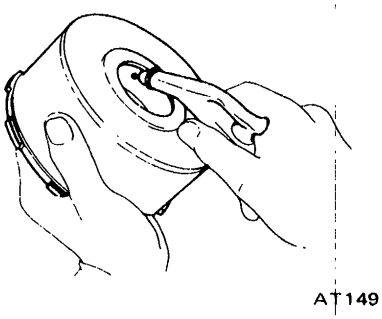

Fig. AT-81 Blowing out piston

Inspection

1. Check for signs of wear or damage to clutch drive plate facing. If found worn or damaged excessively, discard. See "Service Data" for limits.
2. Check for wear on snap ring and for weakened or broken coil spring.

If necessary, replace with new ones.

Spring retainer should also be inspected for warpage.

Assembly

1. Assembly is in reverse the order of disassembly. Dip all parts in clean automatic transmission fluid before installing.
2. Line up driven plates so that stripped arcs are properly aligned, paying particular attention to the location of oil holes in clutch drum. See Figure AT-82.

Note: The number of drive and driven plates varies with the type of vehicle. For detailed information, see "Service Data & Specifications."

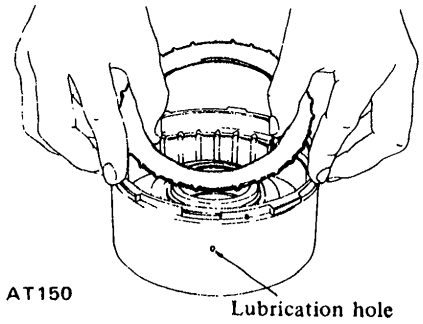

Fig. AT-82 Inserting clutch plate

3. After clutch is assembled, make sure that clearance between snap ring ① and retaining plate ② is held within specified limits. If necessary, try with other plates having different thickness until correct clearance is obtained. See Figure AT-83.

Specified clearance:
1.6 to 1.8 mm
(0.063 to 0.071 in)

Available retaining plate

Thickness mm (in)
10.6 (0.417)
10.8 (0.425)
11.0 (0.433)
11.2 (0.441)
11.4 (0.449)
11.6 (0.457)

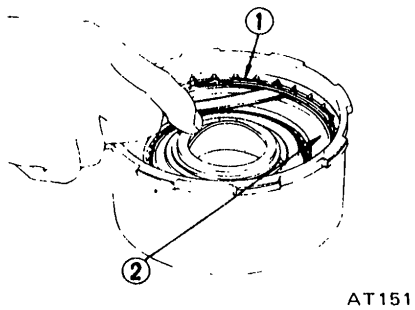

Fig. AT-83 Measuring ring to plate clearance

4. Testing front clutch

With front clutch assembled on oil pump cover, direct a jet of air into hole in clutch drum. See Figure AT-84.

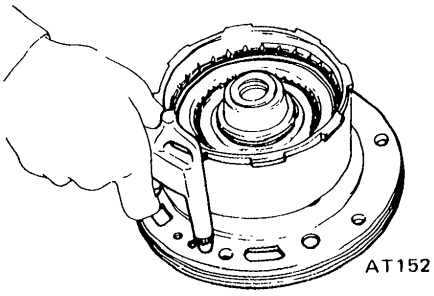

Fig. AT-84 Testing front clutch

REAR CLUTCH

Disassembly

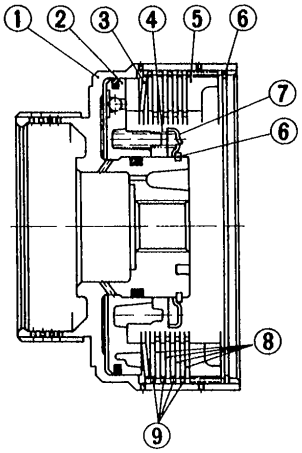

1	Rear clutch drum	6	Snap ring
2	Piston	7	Spring retainer
3	Dished plate	8	Drive plate
4	Coil spring	9	Driven plate
5	Retaining plate		

Fig. AT-85 Sectional view of rear clutch

1. Take out snap ring ⑤, retaining plate ⑥, drive plate ⑨, driven plate ⑩ and dished plate ③. Same technique can be applied as in disassembling front clutch. See Figure AT-85.
2. Remove snap ring from coil spring retainer. See Figure AT-86.

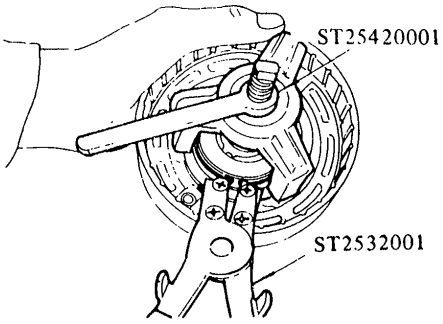

Fig. AT-86 Removing snap ring

Downloaded from www.Manualslib.com manuals search engine

3. Blow out piston by directing a jet of air into hole in clutch drum. See Figure AT-87.

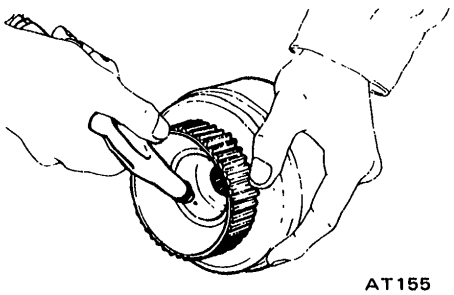

Fig. AT-87 Blowing out piston

Inspection

Refer to page AT-41 for Inspection of Front Clutch.

Assembly

Assemble in reverse the order of disassembly. Dip all parts in clean automatic transmission fluid before assembling. Note that the number of drive and driven plates varies with type of vehicle. For details, refer to "Service Data & Specifications".

1. After rear clutch is assembled, check to be sure that clearance between snap ring ① and retaining plate ② is held within prescribed tolerances. See Figure AT-88.

Specified clearance:
1.0 to 1.5 mm
(0.039 to 0.059 in)

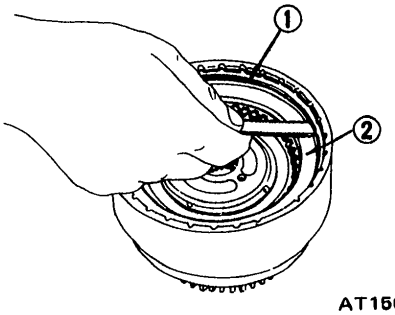

Fig. AT-88 Measuring ring to plate clearance

2. Testing rear clutch

Install rear clutch on oil pump cover.

Blow compressed air into oil hole to test for definite clutch operation as shown in Figure AT-89.

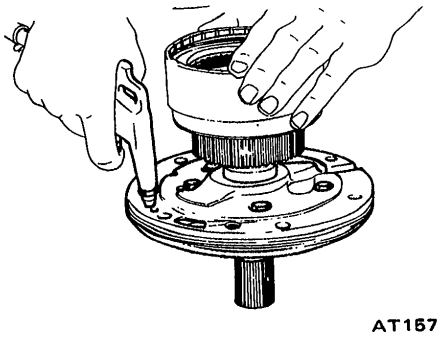

Fig. AT-89 Testing rear clutch

3. Without disturbing the above setting, check to be sure that clearance between snap ring and retaining plate is within specified limits. If necessary, use other plates of different thickness until correct clearance is obtained.

Specified clearance:
0.80 to 1.05 mm
(0.0315 to 0.0413 in)

4. Blow compressed air into oil hole in low & reverse brake to test for definite brake operation as shown in Figure AT-90.

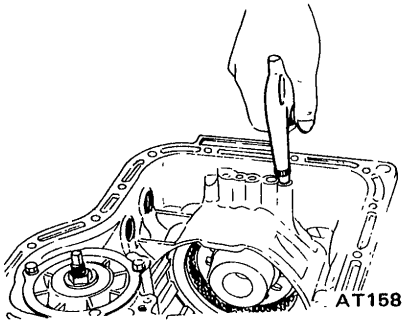

Fig. AT-90 Testing low & reverse brake

LOW & REVERSE BRAKE

Disassembly

1. Follow steps as described in page AT-37 for Transmission Disassembly.
2. Blow out piston by directing a jet of air into oil hole in clutch piston.

Inspection

1. Check drive plate facing for wear or damage; if necessary, replace. Refer to "Service Data & Specifications" for tolerances.
2. Test piston return spring for weakness. Discard if weakened beyond use.
3. Replace defective parts with new ones.

Assembly

1. After low & reverse piston is installed, assemble thrust spring ring, return spring, thrust washer and one-way clutch inner race. Using Hex-head Extension ST25570001 (ST25570000), torque hex-head slotted bolt 1.3 to 1.8 kg-m (9 to 13 ft-lb).
2. Insert dished plate, driven plate, drive plate and retaining plate into transmission case in that order. Install snap ring to secure the installation.

Note: The number of drive and driven plates varies with type of vehicle. For detailed information, refer to "Service Data & Specifications".

SERVO PISTON

Disassembly

1. Blow out piston by directing a jet of air into hole in release-side of piston.
2. Remove servo piston return spring.

Inspection

Check piston for wear, damage or other defects which might interfere with proper brake operation.

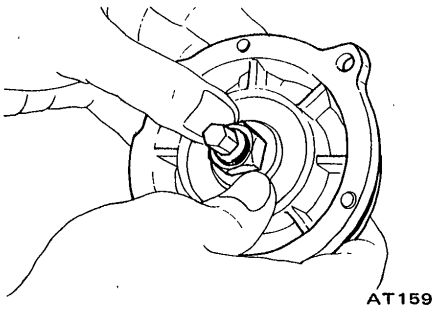

Fig. AT-91 Removing piston

Downloaded from www.Manualslib.com manuals search engine

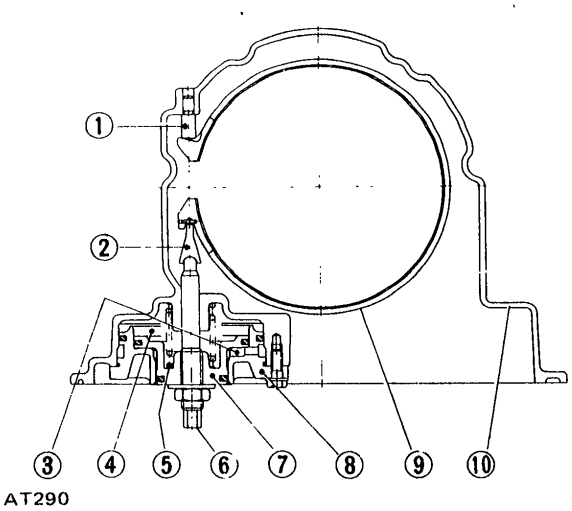

1 Anchor end pin
2 Band strut
3 Apply
4 Release
5 Return spring
6 Band servo piston stem
7 Band servo piston
8 Servo retainer
9 Brake band assembly
10 Transmission case

Fig. AT-92 Sectional view of servo piston

Assembly

1. Prior to assembly, dip all parts in clean automatic transmission fluid.

Reverse disassembly procedure to assemble brake.

2. Use extreme care to avoid damaging rubber ring when installing seal lace.
3. Blow compressed air from apply-side of piston to test for definite piston operation as shown in Figure AT-93.

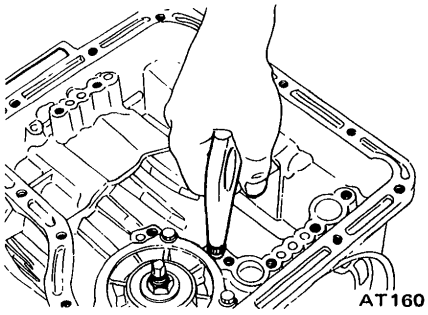

Fig. AT-93 Testing piston (Apply side)

4. With apply-side of piston plugged with thumb, blow compressed air into cylinder from release-side as shown in Figure AT-94. If retainer is raised a little, it is an indication that attaching bolts are loose, calling for retightening.

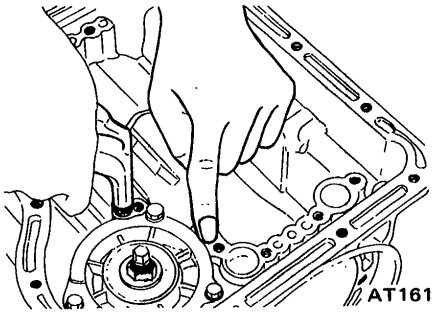

Fig. AT-94 Testing piston (Release side)

GOVERNOR

Disassembly

1. Separate governor from oil distributor by unscrewing attaching bolts.
2. To disassemble secondary governor, remove spring seat, spring and secondary governor valve from valve body in that order as shown in Figure AT-95.

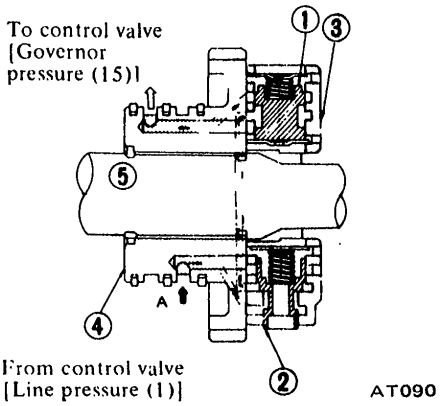

1 Primary governor
2 Secondary governor
3 Governor valve body
4 Oil distributor
5 Output shaft

Fig. AT-95 Testing secondary governor

3. If primary governor is to be disassembled for any purpose, remove spring seat, primary governor valve, spring and spring seat.

Inspection

1. Check valve for defective condition. Replace spring if found weakened beyond use. Defective piston should also be replaced with a new one.
2. Examine to see if primary governor slides freely without binding.
3. To determine if secondary governor is in good condition, blow air under light pressure into hole at "A" and listen for noise like that of a model plane.

Assembly

Reverse disassembly procedure to assemble governor.

Note: Do not confuse primary governor with secondary governor. After installation, check that spring is not deflected.

OIL PUMP

Disassembly

1. Free pump cover from pump housing by removing attaching bolts.
2. Take out inner and outer gears from pump housing.

Inspection

1. Inspect for wear or damage to gear teeth. Replace rubber ring if found damaged beyond use.
2. Using a straight edge and feelers, measure pump and gear clearances as follows:

- Clearance between inner (or outer) gear and pump cover. See Figure AT-96.

  Standard clearance:
  0.02 to 0.04 mm
  (0.0008 to 0.0016 in)

  [Replace if over 0.08 mm (0.0031 in).]

Downloaded from www.Manualslib.com manuals search engine

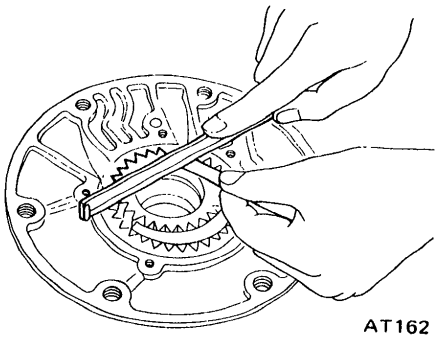

Fig. AT-96 Measuring clearance

- Clearance between seal ring and ring groove. See Figure AT-97.

  Standard clearance:
  0.04 to 0.16 mm
  (0.0016 to 0.0063 in)

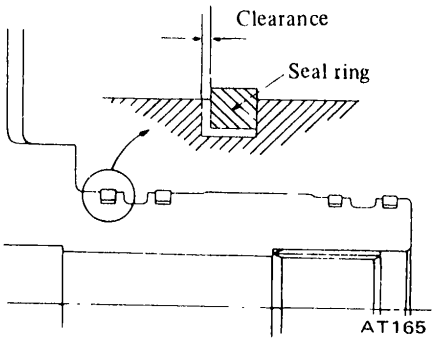

Fig. AT-97 Measuring clearance

Assembly

1. Set up pump housing with inner and outer pump gears on it.
2. Using Oil Pump Assembling Gauge ST25580000, install pump cover to pump housing as shown in Figure AT-98.

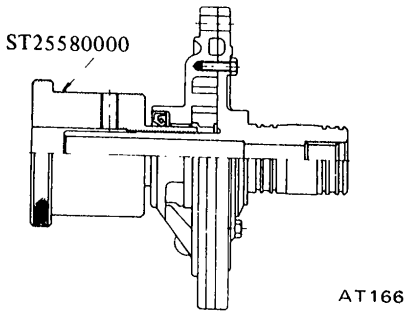

Fig. AT-98 Centering oil pump

3. Temporarily tighten pump securing bolts.
4. Set the runout of oil pump cover within 0.07 mm (0.0028 in) total indicator reading. See Figure AT-99.

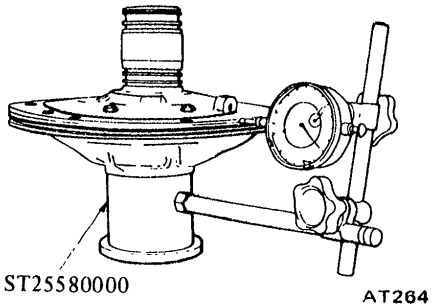

Fig. AT-99 Measuring runout

5. Tighten pump securing bolts to specified torque 0.6 to 0.8 kg-m (4 to 6 ft-lb).

Note: Be sure to align converter housing securing bolt holes.

6. Again, check the runout of oil pump cover.

Note: When former Oil Pump Assembling Gauge is to be used, make a screw hole in side of it.

PLANETARY CARRIER

The planetary carrier cannot be divided into its individual components.

If any part of component is defective, replace the carrier as a unit.

Inspection

Check clearance between pinion washer and planetary carrier with a feeler. See Figure AT-100.

- Standard clearance:
  0.20 to 0.70 mm
  (0.0079 to 0.0276 in)

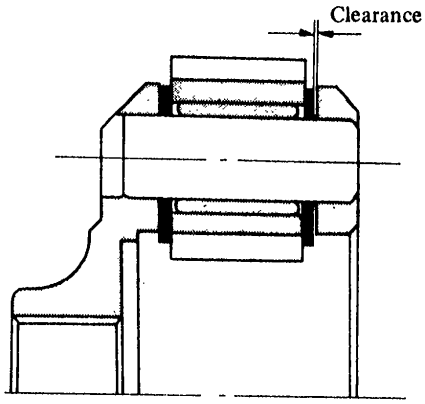

Fig. AT-100 Measuring pinion washer to carrier clearance

[Replace if over 0.80 mm (0.0315 in).]

CONTROL VALVE

The control valve assembly consists of many precision parts and requires extreme care when it has to be removed and serviced. It is good practice to place parts in a part rack so that they can be reassembled in valve body in their proper positions. Added care should also be exercised to prevent springs and other small parts from being scattered and lost.

Before assembly, dip all parts in clean automatic transmission fluid and check to be certain that they are free of lint and other minute particles. If clutch or band is burnt or if oil becomes fouled, the control valve assembly should be disassembled and flushed.

Disassembly

1. Remove bolts and nuts which retain oil strainer. Bolts may be removed with a screwdriver, but it is recommended that Hexagon Wrench HT61000800 and Spinner Handle HT62350000 be used. See Figure AT-101.

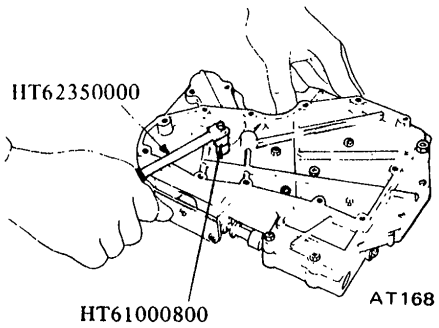

Fig. AT-101 Disassembling valve body

2. Remove attaching bolts. With bolts removed, lower valve body, separate plate, and upper valve body are free for removal. See Figure AT-102.

Note: Do not allow orifice check valve and valve spring in lower valve body to be scattered and lost when removing separate plate.

Downloaded from www.Manualslib.com manuals search engine

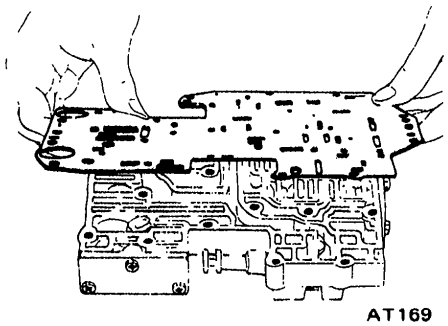

Fig. AT-102 Removing separate plate

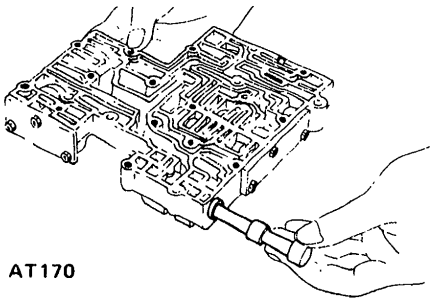

Fig. AT-103 Removing manual valve

Note: Do not work it off with screwdrivers. To avoid damaging machine screws do not work it off with screwdriver.

3. Pull out manual valve as shown in Figure AT-103.
4. Remove side plate. Take out "1st-2nd" shift valve, "2nd-3rd" shift valve, pressure modifier valve and three valve springs. See Figure AT-104.

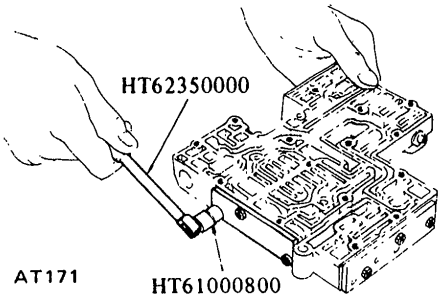

Fig. AT-104 Removing side plate

5. Remove side plate; pull out pressure regulator valve, second lock valve, pressure regulator plug and two valve springs.
6. Remove side plate. With side plate removed, solenoid downshift valve; throttle back-up valve, vacuum throttle valve, "2nd-3rd" timing valve and three valve springs are free for removal.

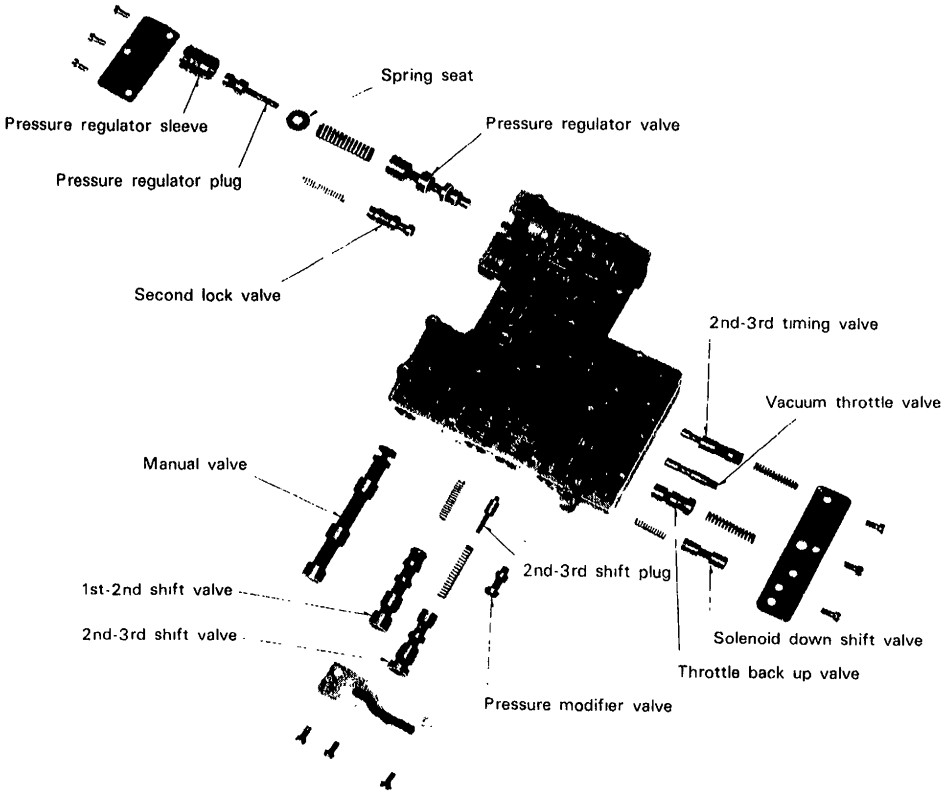

Fig. AT-105 Components parts of control valve

Inspection

1. Check valves for sign of burning and, if necessary, replace.
2. Check to be certain that oil strainer is in good condition. If found damaged in any manner, discard.
3. Test valve springs for weakened tension; if necessary replace.
4. Examine for any sign of damage or score marks on separate plate. If left unheeded, oil will bypass correct oil passages causing many types of abnormalities in the system.
5. Check oil passages in valve body for sign of damage and other conditions which might interfere with proper valve operation.
6. Check bolts for stripped threads. Replace as required.

Downloaded from www.Manualslib.com manuals search engine

Valve spring chart

Valve spring	Wire dia. mm (in)	Mean coil dia. mm (in)	No. of active coil	Free length mm (in)	Installed	
					Length mm (in)	Load kg (lb)
Manual detent	1.3 (0.051)	6.0 (0.236)	15.0	32.4 (1.276)	26.5 (1.043)	5.5 (12.1)
Pressure regulator	1.2 (0.047)	10.5 (0.413)	13.0	43.0 (1.693)	23.5 (0.925)	2.8 (6.2)
Pressure modifier	0.4 (0.016)	8.0 (0.315)	5.0	18.5 (0.728)	9.0 (0.354)	0.1 (0.2)
1st - 2nd shift	0.6 (0.024)	6.0 (0.236)	16.0	32.0 (1.260)	16.0 (0.630)	0.625 (1.378)
2nd - 3rd shift	0.7 (0.028)	6.2 (0.244)	18.0	41.0 (1.614)	17.0 (0.669)	1.40 (3.09)
2nd - 3rd timing	0.7 (0.028)	5.5 (0.217)	15.0	32.5 (1.280)	27.0 (1.063)	0.55 (1.21)
Throttle back-up	0.8 (0.031)	6.5 (0.256)	14.0	36.0 (1.417)	18.8 (0.740)	1.92 (4.23)
Solenoid downshift	0.55 (0.0217)	5.0 (0.197)	12.0	22.0 (0.866)	12.5 (0.492)	0.60 (1.32)
Second lock	0.55 (0.0217)	5.0 (0.197)	16.0	33.5 (1.319)	21.0 (0.827)	0.60 (1.32)
Throttle relief	0.9 (0.035)	5.6 (0.220)	14.0	26.8 (1.055)	19.0 (0.748)	2.19 (4.83)
Orifice check	0.23 (0.0091)	4.77 (0.1878)	12.0	15.5 (0.610)	11.5 (0.453)	0.01 (0.02)
Primary governor	0.45 (0.0177)	8.3 (0.327)	5.0	21.8 (0.858)	7.5 (0.295)	0.215 (0.474)
Secondary governor	0.7 (0.028)	8.5 (0.335)	5.5	25.2 (0.992)	10.5 (0.413)	1.10 (2.43)

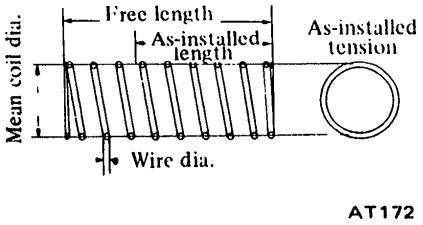

Fig. AT-106 Valve spring

Assembly

Assemble in reverse order of disassembly. However, observe the following assembly notes. Refer to "Valve Spring Chart" and illustration in assembling valve springs. Dip all parts in clean automatic transmission fluid before assembly. Tighten parts to specifications when designated.

1. Slide valve into valve body and be particularly careful that they are not forced in any way.
2. Install side plates using Torque Driver ST25160000 and Hexagon Wrench HT61000800. See Figure AT-107.

Downloaded from www.Manualslib.com manuals search engine

Tightening torque:
0.25 to 0.35 kg-m
(2 to 3 ft-lb)

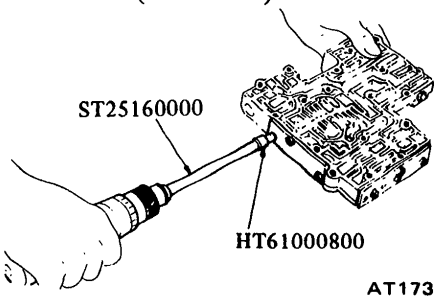

Fig. AT-107 Installing side plate

3. Install orifice check valve, valve spring, throttle relief valve spring and steel ball in valve body.

Note: Install check valve and relief spring so that they are properly positioned in valve body.

4. Install upper and lower valves. See Figure AT-108.

Tightening torque:
0.25 to 0.35 kg-m
(2 to 3 ft-lb)

Reamer bolt tightening torque:
0.5 to 0.7 kg-m
(4 to 5 ft-lb)

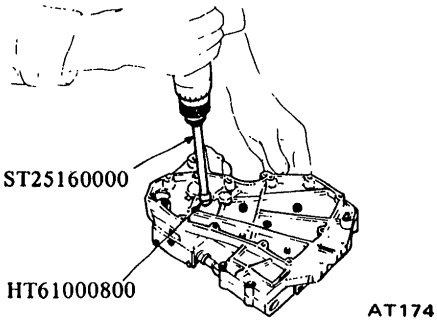

Fig. AT-108 Installing valve body

5. Install oil strainer.

Tightening torque:
0.25 to 0.35 kg-m
(2 to 3 ft-lb)

Downloaded from www.Manualslib.com manuals search engine

TROUBLE DIAGNOSIS AND ADJUSTMENT

CONTENTS

INSPECTION AND ADJUSTMENT BEFORE TROUBLE DIAGNOSIS AT-48
TESTING INSTRUMENT FOR INSPECTION . AT-48
CHECKING OIL LEVEL AT-48
INSPECTION AND REPAIR OF OIL LEAKAGE AT-49
CHECKING ENGINE IDLING REVOLUTION AT-49
CHECKING AND ADJUSTING KICKDOWN SWITCH AND DOWNSHIFT SOLENOID AT-49
INSPECTION AND ADJUSTMENT OF MANUAL LINKAGE AT-49
CHECKING AND ADJUSTING INHIBITOR SWITCH AT-49
STALL TEST AT-50
STALL TEST PROCEDURES AT-50
JUDGEMENT AT-50
ROAD TEST AT-51
CAR SPEED AT GEAR SHIFT AT-51
CHECKING SPEED CHANGING CONDITION AT-52
CHECKING ITEMS DURING SPEED CHANGE AT-52
SHIFT SCHEDULE AT-52
LINE PRESSURE TEST AT-52
LINE PRESSURE (governor feed pressure) AT-53
JUDGEMENT IN MEASURING LINE PRESSURE AT-53
TROUBLE SHOOTING CHART AT-53
INSPECTING ITEMS AT-53
TROUBLE SHOOTING CHART FOR 3N71B AUTOMATIC TRANSMISSION AT-54
TROUBLE SHOOTING GUIDE FOR 3N71B AUTOMATIC TRANSMISSION AT-57

Since most automatic transmission troubles can be repaired by simple adjustment, do not disassemble immediately.

Firstly inspect and adjust the automatic transmission in place utilizing the "Trouble Shooting Chart".

If the trouble can not be solved by this procedure, remove and disassemble the automatic transmission. It is advisable to check, overhaul and repair each part in the order listed in the "Trouble Shooting Chart".

1. In the "Trouble Shooting Chart" the diagnosis items are arranged according to difficulty from easy to difficult, therefore please follow these items. The transmission should not be removed, unless necessary.
2. Tests and adjustments should be made on the basis of standard values and the data should be recorded.

INSPECTION AND ADJUSTMENT BEFORE TROUBLE DIAGNOSIS

TESTING INSTRUMENT FOR INSPECTION

1. Engine tachometer
2. Vacuum gauge
3. Oil pressure gauge

It is convenient to install these instruments in a way that allows measurements to be made from the driver's seat.

CHECKING OIL LEVEL

In checking the automatic transmission the oil level and the condition of oil around the oil level gauge should be examined every 5,000 km (3,000 miles). This is an easy and effective trouble shooting procedure since some changes in oil condition are often linked with developed troubles.

For instance:

Lack of oil causes defective operation by making the clutches and brakes slip, resulting in severe wear.

This is because the oil pump sucks air causing oil foaming, thus rapidly deteriorating the oil quality and producing sludge and varnish.

Excessive oil is also bad because of oil foaming caused by the gears stirring up the oil. During high speed driving excessive oil in the transmission often blows out from the breather.

Measuring oil level

To check the fluid level, start the engine and run it until normal operating temperatures [oil temperature: 50 to 80°C (122 to 176°F). Approximately ten-minute of operation will raise the temperature to this range.] and engine idling conditions are stabilized. Then, apply the brakes and move the transmission shift lever through all drive positions and place it in park "P" position. In this inspection, the car must be placed on a level surface.

The amount of the oil varies with the temperature. As a rule the oil level must be measured after its temperature becomes sufficiently high.

1. Fill the oil to the line "H". The difference of capacities between both "H" and "L" is approximately 0.4 liter (⅞ U.S.pt., ¾ Imp.pt.) and, therefore, do not to fill beyond the line "H".
2. When topping-up and changing oil, care should be taken to prevent mixing the oil with dust and water.

Inspecting oil condition

The condition of oil sticking to the level gauge indicates whether to overhaul and repair the transmission or look for the defective part.

If the oil has deteriorated to a varnish-like quality, it causes the control valve to stick. Blackened oil indicates a burned clutch, brake band, etc.

Downloaded from www.Manualslib.com manuals search engine

In these cases, the transmission must be repaired.

Notes:

a. **In checking oil level, use special paper cloth to handle the level gauge and be careful not to let the scraps of paper and cloth stick to the gauge.**
b. **Insert the gauge fully and take it out quickly before splashing oil adheres to the gauge. Then observe the level.**
c. **Use automatic transmission fluid having "DEXRON" identifications only in the 3N71B automatic transmission.**
d. **Pay attention because the oil to be used differs from that used in the Nissan Full Automatic Transmission 3N71A. Never mix the oils.**

INSPECTION AND REPAIR OF OIL LEAKAGE

When oil leakage takes place, the portion near the leakage is covered with oil, presenting difficulty in detecting the spot. Therefore, the places where oil seals and gaskets are equipped are enumerated below:

1. Converter housing
- Rubber ring of oil pump housing.
- Oil seal of oil pump housing.
- Oil seal of engine crankshaft.
- Bolts of converter housing to case.

2. Transmission and rear extension
- Junction of transmission and rear extension.
- Oil cooler tube connectors.
- Oil pan.
- Oil-pressure inspection holes (Refer to Figure AT-112.).
- Mounting portion of vacuum diaphragm and downshift solenoid.
- Breather and oil charging pipe.
- Speedometer pinion sleeve.
- Oil seal of rear extension.

To exactly locate the place of oil leakage, proceed as follows:

- Place the vehicle in a pit, and by sampling the leaked oil, determine if it is the torque converter oil. The torque converter oil has a color like red wine, so it is easily distinguished from engine oil or gear oil.
- Wipe off the leaking oil and dust and detect the spot of oil leakage. Use nonflammable organic solvent such as carbon tetrachloride for wiping.
- Raise the oil temperature by operating the engine and shift the lever to "D" to increase the oil pressure. The spot of oil leakage will then be found more easily.

Note: **As oil leakage from the breather does not take place except when running at high speed, it is impossible to locate this leakage with vehicle stationary.**

CHECKING ENGINE IDLING REVOLUTION

The engine idling revolution should be properly adjusted.

If the engine revolution is too low, the engine does not operate smoothly, and if too high, a strong shock or creep develops when changing over from "N" to "D" or "R".

CHECKING AND ADJUSTING KICKDOWN SWITCH AND DOWNSHIFT SOLENOID

When the kickdown operation is not made properly or the speed changing point is too high, check the kickdown switch, downshift solenoid, and wiring between them. When the ignition key is positioned at the 1st stage and the accelerator pedal is depressed deeply, the switch contact should be closed and the solenoid should click. If it does not click, it indicates a defect. Then check each part with the testing instruments. See Figure AT-109.

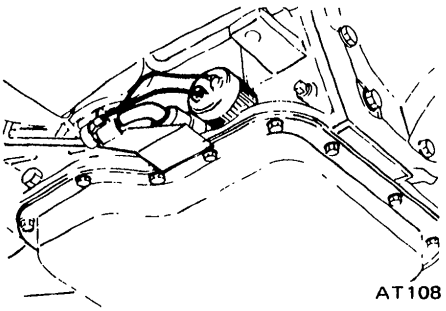

Fig. AT-109 Downshift solenoid

Note: **Watch for oil leakage from transmission case.**

INSPECTION AND ADJUSTMENT OF MANUAL LINKAGE

The adjustment of manual linkage is equally important as "Inspection of Oil Level" for the automatic transmission. Therefore, great care should be exercised because incorrect adjustment will result in the breakdown of the transmission.

Inspection

Pull the selector lever toward you and turn it as far as "P" to "1" range, where clicks will be felt by the hand. This is the detent of manual valve in the valve body, and indicates the correct position of the lever.

Inspect whether the pointer of selector dial corresponds to this point, and also whether the lever comes in alignment with the stepping of position plate when it is released.

Adjustment

This procedure can be accomplished by referring to page AT-34 for Removal and Installation.

CHECKING AND ADJUSTING INHIBITOR SWITCH

The inhibitor switch lights the reverse lamp in the range "R" of the transmission operation and also rotates the starter motor in the ranges "N" and "P".

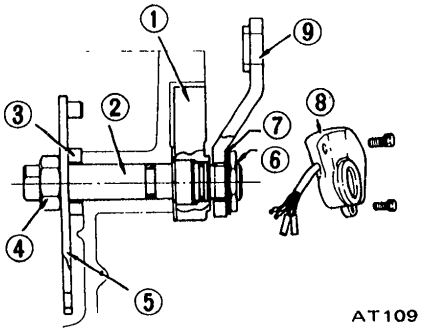

1 Inhibitor switch
2 Manual shaft
3 Washer
4 Nut
5 Manual plate
6 Nut
7 Washer
8 Inhibitor switch
9 Range select lever

Fig. AT-110 Construction of inhibitor switch

Downloaded from www.Manualslib.com manuals search engine

Check whether the reverse lamp and the starter motor operate normally in these ranges. If there is any trouble, first check the linkage. If no defect is found in the linkage, check the inhibitor switch.

Separate the manual lever from the remote control selector rod and turn the range select lever to "N".

Note: In the position "N" the slot of the manual shaft is vertical.

Using the tester, check the two black-yellow (BY) wires from the inhibitor switch in the ranges "N" and "P" and the two red-black (RB) wires in the range "R" for continuity. Turn range select lever in both directions from each lever set position and check each continuity range. It is normal if the electricity is on while the lever is within an angle of about 3° on both sides from each lever set line. However, if its continuity range is obviously unequal on both sides, adjustment is required.

If any malfunction is found, unscrew the fastening nut of the range selector lever and two fastening bolts of the switch body and then remove the machine screw under the switch body. Adjust the manual shaft correctly to the position "N" by means of the selector lever. (When the slot of the shaft becomes vertical, the detent works to position the shaft correctly with a clicking sound.)

Move the switch slightly aside so that the screw hole will be aligned with the pin hole of the internal rotor combined with the manual shaft and check their alignment by inserting a 1.5 mm (0.059 in) diameter pin into the holes. If the alignment is correct, fasten the switch body with the bolts, pull out the pin, tighten up the screw in the hole, and fasten the selector lever as before. Check the continuity again with the tester. If the malfunction still remains, replace the inhibitor switch.

STALL TEST

The purpose of this test is to check the transmission and engine for trouble by measuring the maximum numbers of revolutions of the engine while vehicle is held in a stalled condition. The carburetor is in full throttle operation with the selector lever in ranges "D", "2" and "1" respectively. Compare the measured results with the standard values.

Components to be tested and test items

1. Clutches, brake and band in transmission for slipping
2. Torque converter for proper functioning
3. Engine for overall properly

STALL TEST PROCEDURES

Before testing, check the engine oil and torque converter oil; warm up the engine cooling water to suitable temperature by running at 1,200 rpm with the selector lever in the range "P" for several minutes. Warm up the torque converter oil to suitable temperature [60 to 100°C (140 to 212°F)].

1. Mount the engine tachometer at a location that allows good visibility from the driver's seat and put a mark on specified revolutions on the meter.
2. Secure the front and rear wheels with chocks and apply the hand brake. Be sure to depress the brake pedal firmly with the left foot before depressing the accelerator pedal.
3. Throw the selector lever into the range "D".
4. Slowly depress the accelerator pedal until the throttle valve is fully opened. Quickly read and record the engine revolution when the engine begins to rotate steadily and then release the accelerator pedal.
5. Shift the selector lever to "N" and operate the engine at approximately 1,200 rpm for more than one minute to cool down the torque converter oil and coolant.
6. Make similar stall tests in ranges "2", "1" and "R".

Note: The stall test operation as specified in item (4) should be made within five seconds. If it takes too long, the oil deteriorates and the clutches, brake and band are adversely affected. Sufficient cooling time should be given between each test for the four ranges "D", "2", "1" and "R".

JUDGEMENT

1. High stall revolution more than standard revolution

If the engine revolution in stall condition is higher than the standard values, it indicates that one or more clutches in the transmission are slipping and, therefore, no further test is required.

For the following abnormalities, the respective causes are presumed.

- High rpm in all ranges . . . Low line pressure
- High rpm in "D", "2" and "1" and normal rpm in "R" . . . Rear clutch slipping
- High rpm in "D" and "2" and normal rpm in "1" . . . One-way clutch slipping
- High rpm in "R" only . . . Front clutch or low and reverse brake slipping

To determine which is slipping, front clutch or low and reverse brake, a road test is needed.

If, while coasting, after starting with the lever in "1" range, engine braking does not work properly, the low and reverse brake is slipping. Otherwise, the front clutch is slipping.

Slipping of the band brake is difficult to ascertain. However, if it occurs with the lever in "2" range, engine revolution increases up to the same level as in "1st" range. It is impossible to check it in the stall test.

2. Standard stall revolution

If the engine revolution in stall condition is within the standard values, the control elements are normally operating in the ranges "D", "2", "1" and "R".

Also, the engine and one-way clutch of the torque converter are normal in performance and operation.

The one-way clutch of the torque converter, however, sometimes sticks. This is determined in the road test.

3. Lower stall revolution than standard revolution

If the engine revolution in stall condition is lower than the standard

Downloaded from www.Manualslib.com manuals search engine

values, it indicates that the engine is in abnormal condition or the torque converter's one-way clutch is slipping.

4. Others

(1) If the accelerating performance is poor until vehicle speed of approximately 50 km/h (30 MPH) is attained and then normal beyond that speed, it can be judged that the torque converter's one-way clutch is slipping.

(2) If the torque converter's one-way clutch sticks, vehicle speed can not exceed approximately 80 km/h (50 MPH) in the road test. In such a case, the torque converter oil temperature rises abnormally and so special care is required.

(3) If the transmission does not operate properly at all vehicle speeds, it indicates poor engine performance.

ROAD TEST

An accurate knowledge of the automatic transmission is required for an exact diagnosis.

It is recommended that a diagnosis guide chart with the standard vehicle speeds for each stage of the up- and down-shiftings be prepared. Measured vehicle speeds are to be filled in the adjoining column after each testing.

Also it is advisable to mount a stopper for positioning the throttle opening.

CAR SPEED AT GEAR SHIFT

Throttle opening (–mmHg)	Gear shift	Car speed ** km/h (MPH)	Propeller shaft rpm
Kickdown (0)	$D_1 \rightarrow D_2$	57 to 73 (35 to 45)	1,720 to 2,220
	$D_2 \rightarrow D_3$	101 to 117 (63 to 73)	3,060 to 3,560
	$D_3 \rightarrow D_2$	106 to 90 (66 to 56)	3,220 to 2,720
	$D_2 \rightarrow D_1$	57 to 41 (35 to 25)	1,730 to 1,230
Half throttle (200)	$D_1 \rightarrow D_2$	13 to 30 (8 to 19)	400 to 900
	$D_2 \rightarrow D_3$	47 to 63 (29 to 39)	1,410 to 1,910
	$D_3 \rightarrow D_2$ or $D_3 \rightarrow D_1$	38 to 22 (24 to 14)	1,160 to 660
	$D_2 \rightarrow D_1$	23 Max. (14 Max.)	700 Max.
Full throttle (0)	$1_2 \rightarrow 1_1$ *	59 to 43 (37 to 27)	1,800 to 1,300
Minimum throttle (450)	$1_2 \rightarrow 1_1$ *	59 to 43 (37 to 27)	1,800 to 1,300

*1 Reduce the speed by shifting to "1" range from "D" range (output shaft 2,000 rpm).

Note: **Car speed can be calculated by the following formula;**

$$V = \frac{2 \times \pi \times r \times N_P \times 60}{R_F \times 1{,}000}$$

where, V = Car speed (km/h)
N_P = Propeller shaft revolution (rpm)
R_F = Final gear ratio
r = Tire effective radius (m)
π = The ratio of circumference of a circle to its diameter: 3.14

**: R_F = 3.545
r = 0.306

Downloaded from www.Manualslib.com manuals search engine

CHECKING SPEED CHANGING CONDITION

The driver's feeling during gear changes should also be checked attentively.

1. A sharp shock or unsmoothness is felt during a gear change.
2. A gear change is made with a long and dragging feeling.

These indicate that the throttle pressure is too low or some valve connected to the throttle is defective.

CHECKING ITEMS DURING SPEED CHANGE

1. In "D" range, gear changes, $D_1 \longrightarrow D_2 \longrightarrow D_3$ are effected. In "R" range, the speed does not increase.
2. The kickdown operates properly.
3. By moving the lever from "D" to "1", gear changes $D_3 \longrightarrow 2(1_2) \longrightarrow 1_1$ are effected. In the ranges "1_2" and "1_1", the engine braking works properly.
4. In "1", the speed does not increase.
5. Should be quickly fixed at "2" range.
6. In "P", vehicle can be parked properly.

If any malfunction occurs in second gear during the road test, that is, if vehicle shakes, drags or slings while shifting up from "D_1", directly to "D_3" or in shifting up from "D_1" to "D_2", the brake band should be adjusted. If these troubles remain after the brake band is adjusted, check the servo piston seal for oil leakage.

SHIFT SCHEDULE

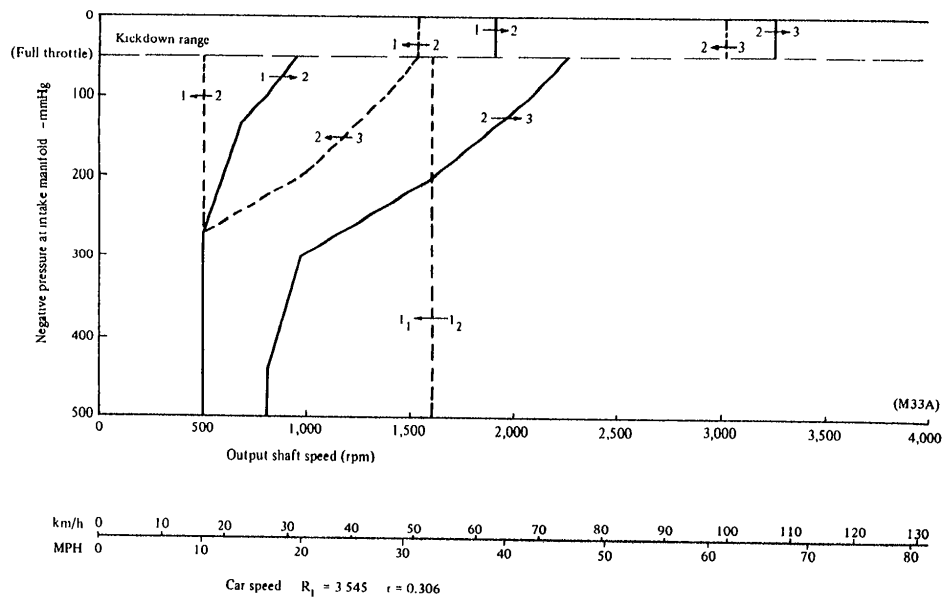

AT314

Fig. AT-111 Shift schedule for long wheelbase model

LINE PRESSURE TEST

When any slipping occurs in clutch or brake, or the feeling during a speed change is not correct, the line pressure must be checked.

Measuring line pressure is done by a pressure gauge attached to two pressure measuring holes after removing blind plugs located at transmission case. See Figure AT-112.

The line pressure measurement is begun at idling and taken step by step by enlarging the throttle opening.

1. A sharp shock in up-shifting or too high changing speeds are caused mostly by too high throttle pressure.
2. Slipping or incapability of operation is mostly due to oil pressure leakage within the gear trains or spool valve.

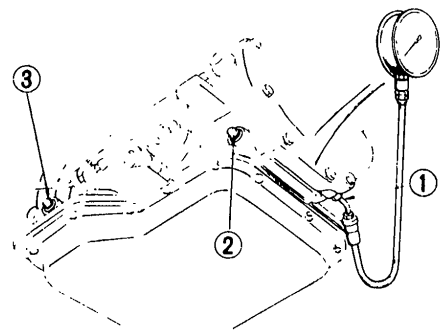

AT113

1 Line pressure
2 Governor feed
3 Servo release pressure

Fig. AT-112 Measuring line pressure

Downloaded from www.Manualslib.com manuals search engine

LINE PRESSURE (GOVERNOR FEED PRESSURE)

Range	Throttle opening Unit: mmHg		At cut back point [under approximately 15 km/h (9 MPH)] Unit: kg/cm^2 (psi)	After cut back [over approximately 40 km/h (25 MPH)] Unit: kg/cm^2 (psi)
"D"	Full throttle	0	11.0 to 13.0 (156 to 185)	7.5 to 8.5 (107 to 121)
	Minimum throttle	450	3.0 to 4.0 (43 to 57)	3.0 to 4.0 (43 to 57)
"2"	Full throttle	0	12.0 to 14.0 (171 to 199)	7.5 to 9.0 (107 to 128)
	Minimum throttle	450	7.5 to 14.0 (107 to 199)	7.5 to 9.0 (107 to 128)
"R"	Full throttle	0	21.0 to 24.0 (299 to 341)	21.0 to 24.0 (299 to 341)
	Minimum throttle	450	3.0 to 7.5 (43 to 107)	3.0 to 7.5 (43 to 107)

Notes: **a. The line pressure during idling corresponds to the oil pressure before cut down at minimum throttle.**
b. The oil pressure "After cut back" means that after the pressure modifier valve has operated.

JUDGEMENT IN MEASURING LINE PRESSURE

1. Low idling line pressure in the ranges "D", "2", "1", "R" and "P".

This can be attributed to trouble in the pressure supply system or too low output of power caused by:

(1) A worn oil pump
(2) An oil pressure leak in the oil pump, valve body or case
(3) A sticking regulator valve

2. Low idling, line pressure in certain ranges only

This is presumably caused by an oil leak in the devices or circuits connected to the relevant ranges.

(1) When there is an oil leak in the rear clutch and governor, the line pressure in "D", "2" and "1" are low but the pressure is normal in "R".
(2) When an oil leak occurs in the low and reverse brake circuit, the line pressure in "R" and "P" are low but the pressure is normal in "D", "2" and "1".

3. High idling line pressure

This is presumably caused by an increased vacuum throttle pressure owing to a leak in the vacuum tube or diaphragm or by an increased line pressure due to a sticking regulator valve.

Vacuum leakage is checked by directly measuring the negative pressure after removing the vacuum pipe.

A puncture of the vacuum diaphragm can be easily ascertained because the torque converter oil is absorbed into the engine and the exhaust pipe emits white smoke.

4. Items to be checked when the line pressure is increasing

In this check, the line pressure should be measured with vacuums of 450 mmHg and 0 mmHg in accordance with the stall test procedure.

(1) If the line pressure do not increase despite the vacuum decrease, check whether the vacuum rod is incorporated.
(2) If the line pressure do not meet the standard, it is caused mostly by a sticking pressure regulating valve, pressure regulating valve plug, or amplifier.

TROUBLE-SHOOTING CHART

INSPECTING ITEMS

1. Inspection with automatic transmission on vehicle.

A Oil level
B Range select linkage
C Inhibitor switch and wiring
D Vacuum diaphragm and piping
E Downshift solenoid, kickdown switch and wiring
F Engine idling rpm
G Oil pressure (throttle)
H Engine stall rpm
I Rear lubrication
J Control valve (manual)
K Governor valve
L Band servo
M Transmission air check
N Oil quantity
O Ignition switch and starter motor
P Engine adjustment and brake inspection

2. Inspection after inspecting automatic transmission on vehicle.

m Rear clutch
n Front clutch
q Band brake
r Low and reverse brake
s Oil pump
t Leakage of oil passage
u One-way clutch of troque converter
v One-way clutch of transmission
w Front clutch check ball
x Parking linkage
y Planetary gear

Downloaded from www.Manualslib.com manuals search engine

TROUBLE-SHOOTING CHART FOR 3N71B AUTOMATIC TRANSMISSION

(The number shown below indicates the sequence in which the checks should be taken up.)

Trouble	A B C D	E F G H	I J K L	M N O P	m n q r	s t u v	w x y
Engine does not start in "N", "P" ranges.	. 2 3 .	. . . .	. . . .	. . 1 .	. . . .	. . . .	. . .
Engine starts in other range than "N" and "P".	. 1 2 .	. . . .	. . . .	. . . .	. . . .	. . . .	. . .
Sharp shock in shifting from "N" to "D" range.	. . . 2	. 1 3 .	. 4 . .	. . . .	⑤. . .	. . . .	. . .
Vehicle will not run in "D" range (but runs in "2", "1" and "R" ranges).	. 1 . .	. . 2 .	. 3 . .	. . . .	. . . .	. . . ④	. . .
Vehicle will not run in "D", "1", "2" ranges (but runs in "R" range). Clutch slips. Very poor acceleration.	1 2 . .	. . 4 .	. 5 . .	6 3 . 7	⑧. . .	. ⑨. .	. . .
Vehicle will not run in "R" range (but runs in "D", "2" and "1" ranges.) Clutch slips. Very poor acceleration.	1 2 . .	. . 3 .	. 5 . .	6 4 . .	⑨⑧. ⑦	. ⑩. .	⑪. .
Vehicle will not run in any range.	1 2 . .	. . 3 .	. 5 . .	6 4 . .	. . . .	⑦⑧. .	. ⑨.
Clutches or brakes slip somewhat in starting.	1 2 . 6	. . 3 .	. 5 . .	7 4 . .	. . . .	⑧⑨. .	. . .
Vehicle runs in "N" range.	. 1 . .	. . . .	. 3 . .	. 2 . .	④. . .	. . . .	
Maximum speed not attained. Acceleration poor.	1 2 . .	. . 4 5	. 7 . 6	. 3 . 8	⑪⑫⑨⑩	⑬. . .	. . .
Vehicle braked by throwing lever into "R" range.	. . . .	. . . .	. . . 3	2 1 . .	④. ⑤.	. . . .	. ⑥.
Excessive creep.	. . . .	. 1 . .	. . . .	. . . .	. . . .	. . . .	. . .
No creep at all.	1 2 . .	. 3 . .	. 5 . .	. 4 . .	⑧⑨. .	⑥⑦. .	. . .
Failure to change gear from "2nd" to "3rd".	. 1 . 2	3 . . .	. 5 6 8	7 4 . .	. . ⑨.	. ⑩. .	. . .
Failure to change gear from "1st" to "2nd",	. 1 . 2	3 . . .	. 5 6 8	7 4 . .	. ⑨. .	. ⑩. .	⑪. .
Too high a gear change point from "1st" to "2nd", from "2nd" to "3rd".	. . . 1	2 . 3 .	. 5 6 .	. 4 . .	. . . .	. ⑦. .	. . .
Gear change directly from "1st" to "3rd" occurs.	. . . .	. . . .	. 2 4 .	3 1 . .	. . ⑤.	. ⑥. .	. . .

Downloaded from www.Manualslib.com manuals search engine

Trouble	A B C D	E F G H	I J K L	M N O P	m n q r	s t u v	w x y
Too sharp a shock in change from "1st" to "2nd".	. . . 1	. . . 2	. 4 . 5	. 3 . .	. . ⑥ .	. . . .	. . .
Too sharp a shock in change from "2nd" to "3rd".	. . . 1	2 . 3 .	. 3 . 5	4 . . .	. ⑥ . .	. . . .	. . .
Almost no shock or clutches slipping in change from "1st" to "2nd".	1 2 . 3	. . 4 .	. 6 . 8	7 5 . .	. . ⑨ .	. ⑩ . .	. . .
Almost no shock or slipping in change from "2nd" to "3rd". Engine races extremely.	1 2 . 3	. . 4 .	. 6 . 8	7 5 . .	. ⑨ . .	. ⑩ . .	⑪ . .
Vehicle braked by gear change from "1st" to "2nd".	. . . .	. . . .	. 2 . .	. 1 . .	. ④ . ③	. . . ⑤	. . .
Vehicle braked by gear change from "2nd" to "3rd".	. . . .	. . . .	. 3 . 2	. 1 . .	. . ④ .	. . . .	. . .
Failure to change gear from "3rd" to "2nd".	. . . 1	. . . .	. 3 4 6	5 2 . .	. ⑦⑧ .	. ⑨ . .	. . .
Failure to change gear from "2nd" to "1st" or from "3rd" to "1st".	. . . 1	. . . .	. 3 4 6	5 2 . .	. . ⑦ .	. . . ⑧	. . .
Gear change shock felt during deceleration by releasing accelerator pedal.	. 1 . 2	3 . 4 .	. 5 6 .	. . . .	. . . .	. ⑦ . .	. . .
Too high a change point from "3rd" to "2nd", from "2nd" to "1st".	. 1 . 2	3 . 4 .	. 5 6 .	. . . .	. . . .	. ⑦ . .	. . .
Kickdown does not operate when depressing pedal in "3rd" within kickdown vehicle speed.	. . . 2	1 . . .	. 4 5 .	. 3 . .	. . ⑥ .	. ⑦ . .	. . .
Kickdown operates or engine over-runs when depressing pedal in "3rd" beyond kickdown vehicle speed limit.	. 1 . 2	. . 3 .	. 5 6 .	7 4 . .	. ⑧ . .	. ⑨ . .	. . .
Races extremely or slips in changing from "3rd" to "2nd" when depressing pedal.	. . . 1	. . 2 .	. 4 . 6	5 3 . .	. ⑦⑧ .	. ⑨ . .	⑩ . .
Failure to change from "3rd" to "2nd" when changing lever into "2" range.	. 1 . .	. . 2 .	. 4 . 5	. 3 . .	. . ⑥ .	. ⑦ . .	. . .
Gear change from "2nd" to "1st" or from "2nd" to "3rd" in "2" range.	. 1 . .	. . 2 .	. 3 . .	. . . .	. . . .	. . . .	. . .

Downloaded from www.Manualslib.com manuals search engine

Trouble	A B C D	E F G H	I J K L	M N O P	m n q r	s t u v	w x y
No shock at change from "1" to "2" range or engine races extremely.	1 2 . 3	. 4 . 1	. 6 . .	7 5 . .	. . ⑨ .	⑩ . . .	. . .
Failure to change from "3rd" to "2nd" when shifting lever into "1" range.	. 1 . .	. . 2 .	. 4 5 7	6 3 . .	. ⑧⑨ .	. ⑩ . .	. . .
Engine brake does not operate in "1" range.	. 1 . .	. . 2 .	. 4 . .	5 3 . .	. . . ⑥	. ⑦ . .	. . .
Gear change from "1st" to "2nd" or from "2nd" to "3rd" in "1" range.	. 1 . .	. . . .	. 2 . .	. . . .	. . . .	. ③ . .	. . .
Does not change from "2nd" to "1st" in "1" range.	1 2 . .	. . . .	. 4 5 6	7 3 . .	. . . ⑧	. ⑨ . .	. . .
Large shock changing from "2nd" to "1st" in "1" range.	. . . 1	. . . 2	. 4 . .	. 3 . .	. . . ⑤	. . . .	. . .
Vehicle moves when changing into "P" range or parking gear does not disengage when shifted out of "P" range.	. 1 . .	. . . .	. . . .	. . . .	. . . .	. . . .	. ②
Transmission overheats.	1 . . .	. . 3 4	2 6 . 8	7 5 . .	. ⑨⑩⑪	⑫⑬⑭ .	. . ⑮
Oil shoots out during operation. White smoke emitted from exhaust pipe during operation.	1 . . 3	. . 5 6	2 7 . .	8 4 . .	. ⑨⑩⑪	⑫⑬⑭ .	. . ⑮
Offensive smell at oil charging pipe.	1 . . .	. . . .	. . . .	. 2 . .	③④⑤⑥	⑦⑧⑨ .	. . ⑩
Transmission noise in "P" and "N" ranges.	1 . . .	. . 2 .	. . . .	. . . .	. . . .	③ . . .	. . .
Transmission noise in "D", "2", "1" and "R" ranges.	1 . . .	. . 2 .	. . . .	. . . .	③ . . .	④ . . ⑤	. . ⑥

Downloaded from www.Manualslib.com manuals search engine

TROUBLE-SHOOTING GUIDE FOR 3N71B AUTOMATIC TRANSMISSION

Order	Test item	Procedure
Checking.	1. Oil level gauge	Check gauge for oil level and leakage before and after each test.
	2. Downshift solenoid	Check for sound of operating solenoid when depressing accelerator pedal fully with ignition key "ON".
	3. Manual linkage	Check by shifting into "P", "R", "N", "D", "2" and "1" ranges with selector lever.
	4. Inhibitor switch	Check whether starter operates in "N" and "P" ranges only and whether reverse lamp operates in "R" range only.
	5. Engine idling rpm.	Check whether idling rpm meet standard.
	6. Vacuum pressure of vacuum pipe.	Check whether vacuum pressure is more than 450 mmHg in idling and whether it decreases with increasing rpm.
	7. Operation in each range.	Check whether transmission engages positively by shifting "N"→"D", "N"→"2", "N"→"1" and "N"→"R" range while idling with brake applied.
	8. Creep of vehicle.	Check whether there is any creep in "D", "2", "1" and "R" ranges.
Stall test	1. Oil pressure before testing.	Measure line pressures in "D", "2", "1" and "R" range while idling.
	2. Stall test.	Measure engine rpm and line pressure in "D", "2", "1" and "R" ranges during full throttle operation. **Notes:** **a. Temperature of torque converter oil used in test should be from 60° to 100°C (140° to 212°F) i.e., sufficiently warmed up but not overheated.** **b. To cool oil between each stall test for "D", "2", "1" and "R" ranges, idle engine, i.e., rpm at about 1,200 rpm for more than 1 minute in "P" range. Measurement time must not be more than 5 seconds.**
	3. Oil pressure after testing	Same as item 1.
Road test	1. Slow acceleration, 1st→2nd 2nd→3rd	Check vehicle speeds and engine rpm in shifting up 1st→2nd range and 2nd→3rd range while running with lever in "D" range and engine vacuum pressure of about 200 mmHg.
	2. Quick acceleration, 1st→2nd 2nd→3rd	Same as item 1 above except with engine vacuum pressure of 0 mmHg (i.e., in position just before kickdown.).
	3. Kick-down operation, 3rd→2nd or 2nd→1st	Check whether the kickdown operates and measure the time delays while running at 30, 40, 50, 60, 70 km/h (18, 25, 30, 37, 43 MPH) in "D_3" range.

Downloaded from www.Manualslib.com manuals search engine

Order	Test item	Procedure
	4. Shift down, $D_3 \rightarrow D_2 \rightarrow D_1$	Check vehicle speeds and engine rpm in shifting down from 3rd → 2nd → 1st (sequentially) while coasting with accelerater pedal released in "D_3" range and engine vacuum pressure of about 450 mmHg.
	5. Shift down, $D_3 \rightarrow 1_2 \rightarrow 1_1$	Check for shifting down $D_3 \rightarrow 1_2$ and engine braking, and further for shifting down $1_2 \rightarrow 1_1$ and engine braking, after shifting the lever into "1" range with the accelerator pedal released and the engine vacuum pressure of 0 mmHg while driving at about 50 km/h (30 MPH) in "D_3" range.
	6. Shift down, $D_3 \rightarrow 2$	Check for quick shifting down $D_3 \rightarrow 2$ and engine braking, after shifting the lever into "2" range while driving at about 50 km/h (30 MPH) in "D_3" range. Further, check for locking of the transmission in 2nd gear ratio regardless of vehicle speed.
	7. Shift up, $1_1 \rightarrow 1_2$	Check for failure of the transmission to shift up during acceleration, when starting in "1" range.
	8. Shift up or down when starting in "2" range.	Check the transmission for not shifting up or down during acceleration or deceleration, when starting in "2" range.
	9. Parking.	Confirm that vehicle will not move on grade when shifting to "P" range.
Others	Abnormal shock, oil leakage.	Enter into record conditions observed during these tests such as gear noise, abnormal clutch noise and acceleration performance.

Downloaded from www.Manualslib.com manuals search engine

SERVICE DATA AND SPECIFICATIONS

General specifications

Automatic transmission model	3N71B
Stall torque ratio	2.0 : 1
Transmission gear ratio	
1st	2.458
2nd	1.458
Top	1.000
Reverse	2.182
Oil	Automatic transmission fluid "Dexron" type
Oil capacity	5.5 liters (5⅞ US qt, 4⅞ Imp qt) Approximately 2.7 liters (2⅞ US qt, 2⅜ Imp qt) in torque converter

Specifications and adjustment

Automatic transmission assembly		
Model code number		X2710
Torque converter assembly		
Stamped mark on the T/C		20-D
Front clutch		
Number of drive plates		3
Number of driven plates		3
Clearance	mm (in)	1.6 to 1.8 (0.063 to 0.071)
Thickness of retaining plate	mm (in)	10.6 (0.417) 10.8 (0.425) 11.0 (0.433) 11.2 (0.441) 11.4 (0.449) 11.6 (0.457)
Rear clutch		
Number of drive plates		5
Number of driven plates		5
Clearance	mm (in)	1.0 to 1.5 (0.039 to 0.059)
Thickness of retaining plate	mm (in)	8.35 (0.3287)

Downloaded from www.Manualslib.com manuals search engine

Low & reverse brake

Number of drive plates		5
Number of driven plates		5
Clearance	mm (in)	0.80 to 1.05 (0.0315 to 0.0413)
Thickness of retaining plate	mm (in)	7.8 (0.307) 8.0 (0.315) 8.2 (0.323) 8.4 (0.331) 8.6 (0.339) 8.8 (0.346)

Brake band

Piston size	mm (in)	
Big dia.		72 (2.83)
Small dia.		44 (1.73)

Control valve assembly

Stamped mark on strainer	N5

Governor assembly

Stamped mark on governor body	M33

Engine idling and stall revolution

Idling revolution	rpm	700 at "D" position
Stall revolution	rpm	2,100 to 2,400

Tightening torque

kg-m(ft-lb)

Drive plate to crankshaft	14.0 to 16.0	(101 to 116)
Drive plate to torque converter	4.0 to 5.0	(29 to 36)
Converter housing to engine	4.0 to 5.0	(29 to 36)
Transmission case to converter housing	4.5 to 5.5	(33 to 44)
Transmission case to rear extension	2.0 to 2.5	(14 to 18)
Oil pan to transmission case	0.5 to 0.7	(4 to 5)
Servo piston retainer to transmission case	0.5 to 0.7	(4 to 5)
Piston stem (when adjusting band brake)	*1.2 to 1.5	(9 to 11)
Piston stem lock nut	1.5 to 4.0	(11 to 29)
One-way clutch inner race to transmission case	1.3 to 1.8	(9 to 13)
Control valve body to transmission case	0.55 to 0.75	(4 to 5)
Lower valve body to upper valve body	0.25 to 0.35	(2 to 3)
Slide plate to control valve body	0.25 to 0.35	(2 to 3)
Nut for control valve reamer bolt	0.5 to 0.7	(4 to 5)

Downloaded from www.Manualslib.com manuals search engine

Oil strainer to lower valve body	0.25 to 0.35	(2 to 3)
Governor valve body to oil distributor	0.5 to 0.7	(4 to 5)
Oil pump housing to oil pump cover	0.6 to 0.8	(4 to 6)
Inhibitor switch to transmission case	0.5 to 0.7	(4 to 5)
Manual shaft lock nut	3.0 to 4.0	(22 to 29)
Oil cooler pipe to transmission case	3.0 to 5.0	(22 to 36)
Test plug (oil pressure inspection hole)	1.4 to 2.1	(10 to 15)
Support actuator (parking rod inserting position) to rear extension	0.8 to 1.1	(6 to 8)

* Turn back two turns after tightening.

Downloaded from www.Manualslib.com manuals search engine

SPECIAL SERVICE TOOLS

No.	Tool number & tool name	Description	For use on	Reference page or Figure No.
1.	ST2505S001 (ST25050001) Oil pressure gauge set	Use for checking hydraulic pressure 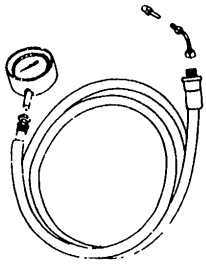 SE119	3N71B and 3N71A A/T	Fig. AT-112
2.	ST07870000 Transmission case stand	Use for setting transmission 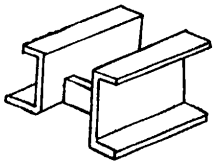 SE120	3N71B A/T	Page AT-36
3.	ST25850000 Sliding hammers	Use for removing oil pump 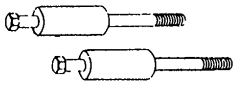 SE121	3N71B and 3N71A A/T	Fig. AT-56
4.	ST25420001 (ST25420000) Clutch spring compressor	Use for assembling or disassembling front and rear clutch 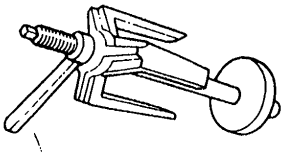 SE122	3N71B and 3N71A A/T	Fig. AT-79 Fig. AT-86
5.	GG91060000 Torque wrench	Use for tightening correct torque Max. torque: 4.6 kg-m (0.33 ft-lb) Drive angle 3/8" square 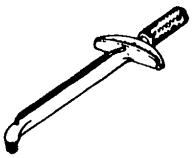 SE123	3N71B and 3N71A A/T	Fig. AT-69

Downloaded from www.Manualslib.com manuals search engine

No.	Tool number & tool name	Description	For use on	Reference page or Figure No.
6.	ST25490000 (ST25512001) Socket extension	Socket extension to connect torque wrench (GG91060000) with ½" square socket wrench 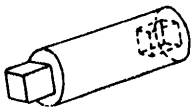 SE124	3N71B A/T	Fig. AT-69
7.	ST25160000 Torque driver	Use for tightening correct torque Max. torque: 1.04 kg-m (90 ft-lb) SE125	3N71B A/T and 3N71A	Fig. AT-107 Fig. AT-108
8.	HT69860000 Snap ring remover	Use for removing and replacing snap ring SE126	3N71B and 3N71A A/T	Fig. AT-59
9.	ST25320001 Snap ring remover	Use for removing and replacing snap ring 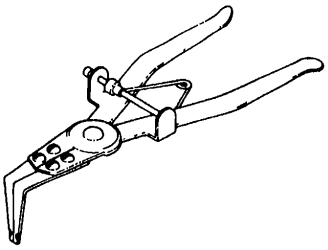 SE305	3N71B and 3N71A A/T	Fig. AT-79 Fig. AT-86
10.	ST25570001 (ST25570000) Hex-head extension	Use for removing and installing one-way clutch inner race with torque wrench. Drive angle ½" square and 6 mm (across flat width) 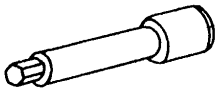 SE128	3N71B A/T	Fig. AT-64 Fig. AT-69 Page AT-42

Downloaded from www.Manualslib.com manuals search engine

No.	Tool number & tool name	Description	For use on	Reference page or Figure No.
11.	HT62350000 Spinner handle	Use for disassemlbing and assembling control valve 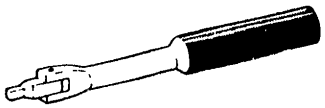 SE129	3N71B and 3N71A A/T	Fig. AT-101 Fig. AT-104
12.	HT61000800 Hexagon wrench	Use for disassembling and assembling control valve 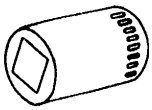 SE130	3N71B and 3N71A A/T	Fig. AT-101 Fig. AT-104 Fig. AT-107 Fig. AT-108
13.	ST25580000 Oil pump assemlbing gauge	Use for centering oil pump 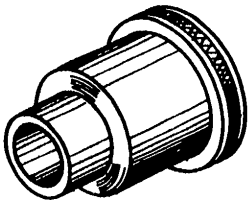 SE131	3N71B and 3N71A A/T	Fig. AT-98 Fig. AT-99

Downloaded from www.Manualslib.com manuals search engine

DATSUN 280Z
MODEL S30 SERIES

SECTION PD

PROPELLER SHAFT & DIFFERENTIAL CARRIER

PD

PROPELLER SHAFT ..... PD- 2

DIFFERENTIAL CARRIER (Type R180) ..... PD- 4

DIFFERENTIAL CARRIER (Type R200) PD-13

SERVICE DATA AND SPECIFICATIONS PD-24

TROUBLE DIAGNOSES AND CORRECTIONS PD-26

SPECIAL SERVICE TOOLS PD-28

NISSAN

NISSAN MOTOR CO., LTD.
TOKYO, JAPAN

Downloaded from www.Manualslib.com manuals search engine

PROPELLER SHAFT

CONTENTS

DESCRIPTION PD-2
INSPECTION PD-2
REMOVAL PD-2
INSTALLATION PD-2
CHECKING AND CORRECTING UNBALANCED PROPELLER SHAFT PD-2
SERVICE DATA AND SPECIFICATIONS PD-3
TROUBLE DIAGNOSES AND CORRECTIONS PD-3

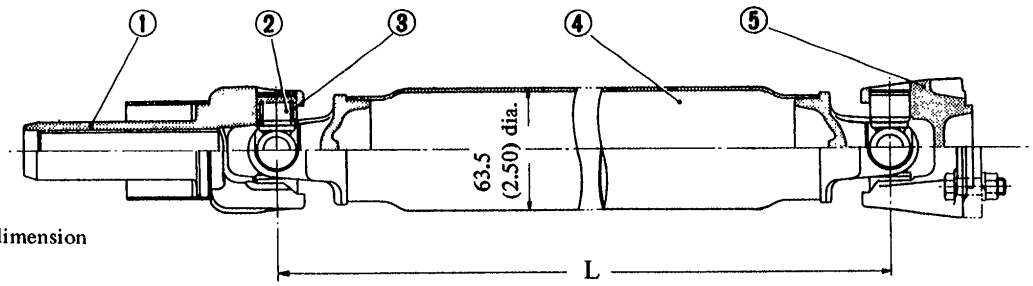

1 Sleeve yoke assembly
2 Journal assembly
3 Bearing race assembly
4 Propeller shaft tube assembly
5 Flange yoke

L dimension

Unit: mm (in)

565 (22.24): HLS30 (2 seater)
865 (34.06): GHLS30 (2 + 2 seater)

Fig. PD-1 Cross-sectional view of propeller shaft

DESCRIPTION

The propeller shaft is a 2-joint type.

The propeller shaft and universal joint assembly are carefully balanced during original assembly; that is, the dynamic unbalance is under 35 gr-cm (0.5 in-oz) at 5,800 rpm.

The length of propeller shafts differs for HLS30 (2 seater) and GHLS30 (2 + 2 seater) models.

If the propeller shaft is found damaged, replace it as an assembly. When removing or installing the propeller shaft assembly, be careful not to drop it.

INSPECTION

1. Check journal for axial play. If play exists, replace propeller shaft assembly.

Note: Journal cannot be disassembled.

2. Check the propeller shaft tube surface for dents or cracks. If necessary, replace propeller shaft assembly.

REMOVAL

1. Raise car on hoist.

Remove insulator, exhaust tube and main muffler mounting bolts to free them from car body.

2. Scribe match marks both on propeller shaft and companion flange so that shaft can be reinstalled in the original position.
3. Remove bolts securing shaft to companion flange.
4. Draw out propeller shaft sleeve yoke from transmission by moving shaft rearward, passing it under rear axle.

Watch for oil leakage from transmission rear end. Take proper action if oil leak is discovered.

Note: Remove propeller shaft carefully so as not to damage the spline, sleeve yoke or rear oil seal.

INSTALLATION

To install, reverse the foregoing removal procedure.

Align propeller shaft with companion flange using reference marks prescribed in "Removal" procedure and tighten them with bolts.

Tightening torque:
3.5 to 4.5 kg-m
(25 to 33 ft-lb)

CHECKING AND CORRECTING UNBALANCED PROPELLER SHAFT

To check and correct an unbalanced propeller shaft, proceed as follows:

1. Remove undercoating and other foreign material which could upset shaft balance, and check shaft vibration by road test.
2. If shaft vibration is noted during road test, disconnect propeller shaft at differential carrier companion flange, rotate companion flange 180 degrees and reinstall propeller shaft.
3. Again check shaft vibration. If vibration still persists, replace propeller shaft assembly.

Downloaded from www.Manualslib.com manuals search engine

SERVICE DATA AND SPECIFICATIONS

Permissible dynamic unbalance	gr-cm (in-oz)	35 (0.5) at 5,800 rpm
Axial play of spider journal	mm (in)	0 (0)
Journal swinging torque	kg-cm (in-lb)	2.4 to 3.3 (2.1 to 2.9)
Tightening torque	kg-m (ft-lb)	
Propeller shaft to companion flange bolt		3.5 to 4.5 (25 to 33)

TROUBLE DIAGNOSES AND CORRECTIONS

Condition	Probable cause	Corrective action
Vibration at medium or high speed	Worn or damaged universal joint needle bearing.	Replace propeller shaft assembly.
	Unbalance due to bent or dented propeller shaft.	Replace propeller shaft assembly.
	Loose propeller shaft installation.	Retighten.
	Worn transmission rear extension bushing.	Replace.
	Undercoating or mud on the shaft causing unbalance.	Clean shaft.
	Tire unbalance.	Balance wheel and tire assembly.
	Balance weights missing.	Replace.
Knocking sound on propeller shaft while starting or noise while coasting.	Worn or damaged universal joint.	Replace propeller shaft assembly.
	Worn sleeve yoke and main shaft spline.	Replace propeller shaft assembly.
	Loose propeller shaft installation.	Retighten.
Scraping noise	Dust cover on sleeve yoke rubbing on transmission rear extension. Dust cover on companion flange rubbing on differential carrier.	Straighten dust cover to remove interference.

Downloaded from www.Manualslib.com manuals search engine

DIFFERENTIAL CARRIER (Type R180)

CONTENTS

DESCRIPTION ..... PD- 4
REMOVAL ..... PD- 6
PRE-DISASSEMBLY INSPECTION ..... PD- 6
DISASSEMBLY ..... PD- 6
DISASSEMBLY OF DIFFERENTIAL CASE ..... PD- 6
INSPECTION ..... PD- 7
ASSEMBLY AND ADJUSTMENT ..... PD- 7
PRECAUTIONS IN REASSEMBLY ..... PD- 7
ASSEMBLY OF DIFFERENTIAL GEAR CASE ..... PD- 7
ADJUSTMENT OF DRIVE PINION PRELOAD ..... PD- 8
ADJUSTMENT OF DRIVE PINION HEIGHT ..... PD- 9
ADJUSTMENT OF SIDE RETAINER SHIMS PD-10
INSTALLATION PD-12
REPLACEMENT OF FRONT OIL SEAL PD-12

DESCRIPTION

The differential gear carrier assembly on the S30 series is available in the different types.

The R180 type differential carrier is adopted on automatic transmission equipped models.

The drive pinion is mounted with one ball bearing and two tapered roller bearings which are preloaded by pinion bearing adjusting spacer and washer during assembly.

The drive pinion is positioned by a washer located between a shoulder of the drive pinion and the rear bearing.

The differential case is supported in the carrier by two tapered roller side bearings. These are preloaded by inserting shims between the carrier and the side retainers. The differential case assembly is positioned for proper ring gear-to-drive pinion backlash by varying these shims. The ring gear is bolted to the differential case. The case houses two side gears in mesh with two pinions mounted on a pinion shaft. The pinion shaft is anchored in the case by lock pin. The pinions and side gears are backed by thrust washers.

Car model	HLS30 (2 seater)		GHLS30 (2 + 2 seater)	
Transmission	Manual	Automatic	Manual	Automatic
Type of differential carrier	R200	R180	R200	R180
Gear ratio	3.545			

Downloaded from www.Manualslib.com manuals search engine

(TYPE R180)

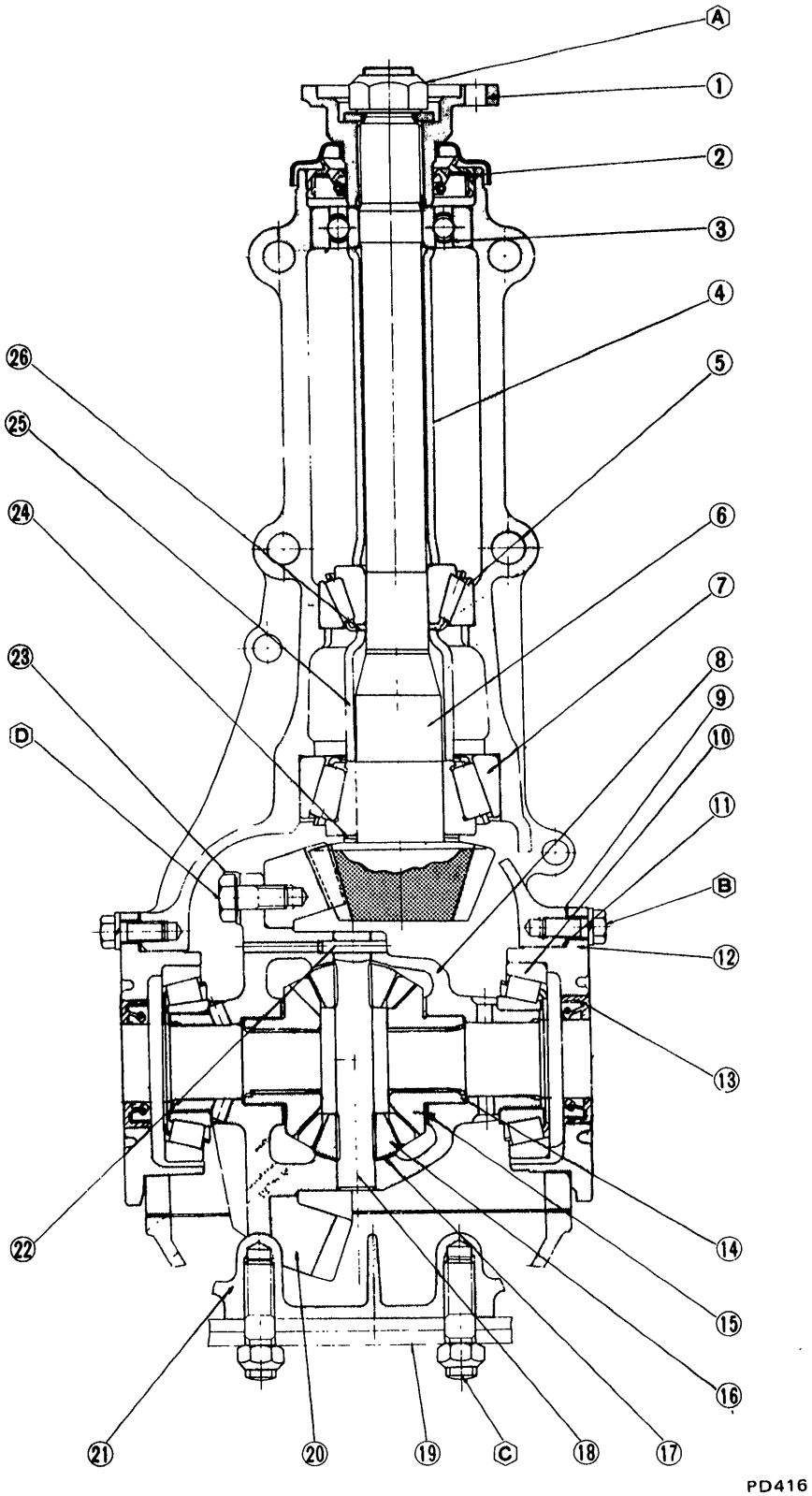

1 Companion flange
2 Front oil seal (Supply grease to oil seal lip when assembling)
3 Front pilot bearing
4 Spacer-front pilot bearing
5 Pinion front bearing
6 Drive pinion
7 Pinion rear bearing
8 Differential case
9 Side retainer adjusting shim (Adjust side bearing preload and ring gear-to-drive pinion backlash by selecting ⑨.)
10 Side bearing
11 O-ring
12 Side retainer
13 Side oil seal (Supply grease to oil seal lip when assembly.)
14 Side gear
15 Thrust washer (Adjust the pinion mate-to-side gear backlash to 0.1 to 0.2 mm (0.0039 to 0.0079 in) by ⑮.)
16 Pinion mate
17 Thrust washer
18 Pinion mate shaft
19 Diff. mounting member
20 Ring gear
21 Rear cover
22 Lock pin
23 Lock strap
24 Pinion height adjusting washer
25 Pinion bearing adjusting spacer
26 Pinion bearing adjusting washer (Adjust pinion bearing preload by selecting ㉕ and ㉖.)

Tightening torque (T) of bolts and nuts kg-m (ft-lb)

Ⓐ T : 17 to 20 (123 to 145)
Ⓑ T : 0.9 to 1.2 (6.5 to 8.7)
Ⓒ T : 6.0 to 7.0 (43 to 51)
Ⓓ T : 9.0 to 10.0 (65 to 72)

Fig. PD-2 Cross-sectional view of differential carrier

Downloaded from www.Manualslib.com manuals search engine

REMOVAL

Service procedures are covered under Gear Carrier in Section RA.

PRE-DISASSEMBLY INSPECTION

Differential carrier should be inspected before any parts are removed from it.

These inspections are helpful in finding the cause of the trouble and in determining the corrections needed.

1. Mount carrier on Gear Carrier Attachment KV38100800. See Figure PD-3. Remove mounting member and rear cover.

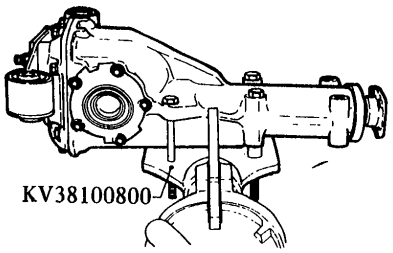

Fig. PD-3 Holding differential carrier

2. Visually inspect parts for wear or damage.
3. Rotate gears to see that there is any roughness which would indicate damaged bearings or chipped gears. Check the gear teeth for scoring or signs of abnormal wear. Measure preload of drive pinion.
4. Set up a dial indicator and check the backlash at several points around ring gear. Backlash should be within 0.1 to 0.2 mm (0.0039 to 0.0079 in).
5. Check the gear tooth contact with a mixture of recommended powder and oil apply sparingly to all ring gear teeth.

For the tooth contact pattern, see paragraph dealing with tooth contact pattern adjustment.

DISASSEMBLY

1. Remove side retainer fixing bolts, and extract side retainer.

Notes:
a. **Mark left and right side retainers before removal.**
b. **Be careful not to confuse left and right hand side retainers and shims for proper reassembly.**

2. Extract differential case from carrier using slide hammer.
3. When replacing side bearing, extract bearing outer race from side retainer using Puller ST33290001. See Figure PD-4.

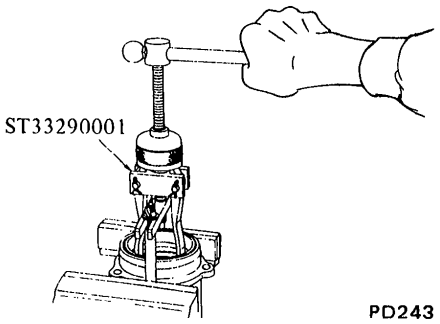

Fig. PD-4 Removing side bearing outer race

4. Loosen drive pinion nut, holding companion flange with Drive Pinion Flange Wrench ST31530000 and pull off companion flange using a standard puller. See Figure PD-5.

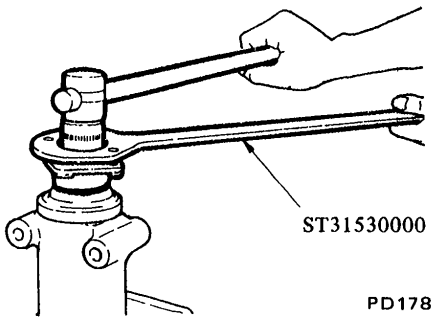

Fig. PD-5 Removing drive pinion nut

5. Extract drive pinion from carrier using a press. Take out drive pinion together with rear bearing cone, bearing spacer and adjusting washers.
6. Remove front oil seal.

Note: Oil seal must not be reused.

7. Remove pilot bearing together with pilot bearing spacer and front bearing cone using Pilot Bearing Drift ST30650001.
8. Hold rear bearing inner race with Drive Pinion Rear Bearing Inner Race Puller ST30031000 and extract from drive pinion with a press. See Figure PD-6.

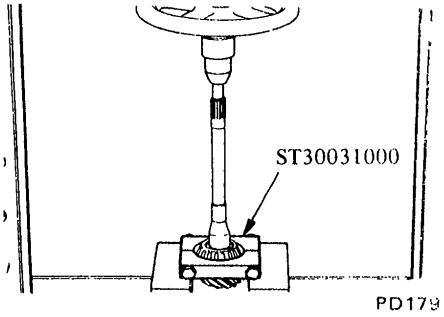

Fig. PD-6 Removing pinion rear bearing inner race

9. To remove front and rear bearing outer races, put a drift to race surface, and withdraw them by tapping the top of drift with a hammer.

DISASSEMBLY OF DIFFERENTIAL CASE

1. Extract bearing using Differential Side Bearing Puller ST3306S001 (set of ST33051001 and ST33061000). See Figure PD-7.

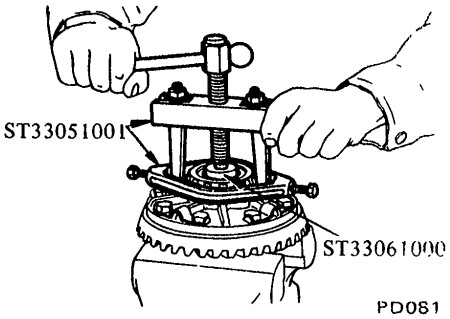

Fig. PD-7 Removing side bearing

Downloaded from www.Manualslib.com manuals search engine

Notes:

a. **The puller should be handled with care in catching the edge of bearing inner race.**

b. **Be careful not to confuse the left and right hand parts.**

2. Remove ring gear by unfolding lock strap and loosening ring gear bolts.

Note: **Loosen bolts diagonally.**

3. Punch off pinion mate shaft lock pin from ring gear side using Solid Punch KV31100300.

Note: **Lock pin is caulked at pin hole mouth on differential case. Do not punch it off forcibly without checking how it is caulked.**

4. Draw out pinion mate shaft and remove pinion mate gears, side gears and thrust washers.

Note: **Put marks on gear and thrust washer so that they can be reinstalled in their original positions from which they were removed.**

INSPECTION

Thoroughly clean all disassembled parts, and examine them to see that they are worn, damaged or otherwise defective, and how they are affected. Repair or replace all defective parts, whichever is necessary.

1. Check gear teeth for scoring, cracking or chipping, and make sure that tooth contact pattern indicates correct meshing depth. If any defect is evident, replace parts as required.

Note: **Drive pinion and drive gear are supplied for replacement as a set, therefore, should either part be damaged, replace as a set.**

2. Check pinion gear shaft, and pinion gear for scores and signs of wear, and replace as required.

Follow the same procedure for side gear and their seats on differential case.

3. Inspect all bearing races and rollers for scoring, chipping or evidence of excessive wear. They should be in tiptop condition such as not worn and with mirror-like surfaces. Replace if there is a shadow of doubt on their efficiency, as an incorrect bearing operation may result in noises and gear seizure.

4. Inspect thrust washer faces. Small defects can be corrected with sand paper. If pinion mate-to-side gear backlash (or the clearance between side gear and thrust washer) exceeds limits 0.1 to 0.2 mm (0.0039 to 0.0079 in), replace thrust washers.

5. Inspect carrier and differential case for cracks or distortion. If either condition is evident, replace defective parts.

6. As a general rule, oil seal should be replaced at each disassembly.

ASSEMBLY AND ADJUSTMENT

Assembly can be done in the reverse order of disassembly. The following directions for adjustment and usage of special tools enable to obtain a perfect differential operation.

PRECAUTIONS IN REASSEMBLY

1. Arrange shims, washers and the like to install them correctly.
2. Thoroughly clean the surfaces on which shims, washers, bearings and bearing retainers are installed.
3. Apply gear oil when installing bearings.
4. Pack grease cavity between lips when fitting oil seal.

ASSEMBLY OF DIFFERENTIAL GEAR CASE

1. Assemble pinion mates, side gears and thrust washers in differential case.
2. Fit pinion shaft to differential case so that it meets lock pin holes.
3. Adjust side gear-to-pinion mate backlash or adjust the clearance between the rear face of side gear and thrust washer. See Figure PD-8.

If above procedure is not effective with existing washer, try with other washers available for the purpose.

Normal backlash or clearance:
0.1 to 0.2 mm
(0.0039 to 0.0079 in)

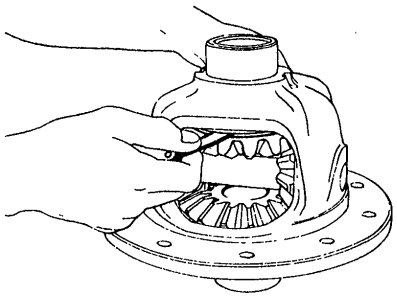

PD023

Fig. PD-8 Measuring clearance

Side gear thrust washer

Thickness mm (in)
0.75 to 0.80 (0.0295 to 0.0315)
0.80 to 0.85 (0.0315 to 0.0335)
0.85 to 0.90 (0.0335 to 0.0354)

4. Lock pinion shaft lock pin using a punch after it is secured into place.
5. Apply oil to gear tooth surfaces and thrust surfaces and check if they turn properly.
6. Place ring gear on differential case and install bolts and lock washers.

Tightening torque:
9.0 to 10.0 kg-m
(65 to 72 ft-lb)

Notes:

a. **Use only genuine ring gear bolts and new lock washers.**

b. **Tighten bolts in criss-cross fashion lightly tapping around bolt heads with a hammer. See Figure PD-9.**

Downloaded from www.Manualslib.com manuals search engine

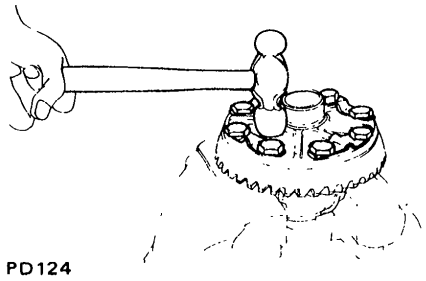

Fig. PD-9 Tapping bolt head

7. When replacing side bearing, measure bearing width using Master Gauge KV38101900 and Weight Block ST32501000 prior to installation. See Figure PD-10.

Standard bearing width:
20.00 mm (0.7874 in)

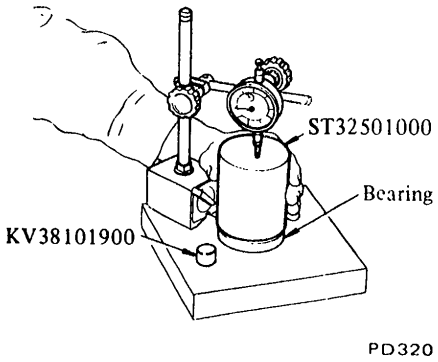

Fig. PD-10 Measuring bearing width

8. Press fit side bearing cone on differential case using Gear Carrier Side Bearing Drift ST33230000 and Adapter ST33061000. See Figure PD-11.

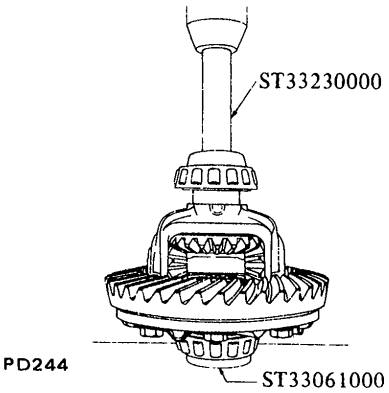

Fig. PD-11 Installing side bearing cone

9. Press fit side bearing outer race into side retainer using Drive Pinion Outer Race Drift Set ST30611000 and ST30621000.

10. Set new oil seal on side retainer using Oil Seal Drift Assembly ST33270000. Apply grease cavity between seal lips.

ADJUSTMENT OF DRIVE PINION PRELOAD

Adjust preload of drive pinion with spacer and washer between front and rear bearing cones, regardless of thickness of pinion height adjusting washer.

This adjustment must be carried out without oil seal inserted.

1. Press fit front and rear bearing outer races into gear carrier using Drive Pinion Outer Race Drift Set ST30611000, ST30701000 and ST30621000.

Front:	ST30611000 and ST30701000
Rear:	ST30611000 and ST30621000

2. Insert Dummy Shaft Spacer ST31851000, pinion height adjusting washer (use one of 3.09 to 3.27 thickness) and rear bearing cone into Dummy Shaft ST31212000 to make convenient to adjust pinion height. See Figure PD-14.

Note: Reuse the old washer if they have normal tooth contact pattern in a pre-disassembly check.

3. Fit drive pinion bearing spacer, washer, front bearing cone, Drive Pinion Dummy Collar ST31214000 and companion flange in this order on dummy shaft and tighten drive pinion nut to the specified torque using Stopper ST31852000 and checking pinion bearing preload. See Figure PD-12.

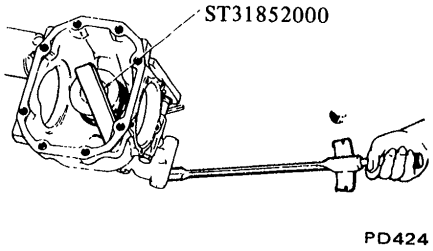

Fig. PD-12 Tightening drive pinion nut

Measure pinion bearing preload using Preload Gauge ST3127S000, and select washer and spacer that will provide required preload. See Figure PD-13.

Pinion bearing preload
(Without oil seal):
10 to 13 kg-cm
(8.7 to 11.4 in-lb)
Tightening torque of pinion nut:
17 to 20 kg-m
(123 to 145 ft-lb)

Note: Replace bearing washer and spacer with thicker ones if pinion cannot be turned by hand while it is being tightened.

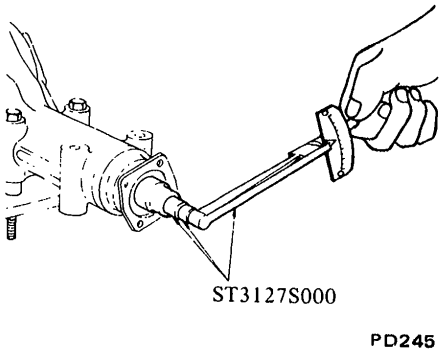

Fig. PD-13 Measuring pinion preload

Pinion bearing adjusting spacer

Length mm (in)
52.20 (2.0551)
52.40 (2.0630)
52.60 (2.0709)
52.80 (2.0787)
53.00 (2.0866)
53.20 (2.0945)

Downloaded from www.Manualslib.com manuals search engine

Pinion bearing adjusting washer

Thickness mm (in)
2.30 to 2.32 (0.0906 to 0.0913)
2.32 to 2.34 (0.0913 to 0.0921)
2.34 to 2.36 (0.0921 to 0.0929)
2.36 to 2.38 (0.0929 to 0.0937)
2.38 to 2.40 (0.0937 to 0.0945)
2.40 to 2.42 (0.0945 to 0.0953)
2.42 to 2.44 (0.0953 to 0.0961)
2.44 to 2.46 (0.0961 to 0.0969)
2.46 to 2.48 (0.0969 to 0.0976)
2.48 to 2.50 (0.0976 to 0.0984)
2.50 to 2.52 (0.0984 to 0.0992)
2.52 to 2.54 (0.0992 to 0.1000)
2.54 to 2.56 (0.1000 to 0.1008)
2.56 to 2.58 (0.1008 to 0.1016)
2.58 to 2.60 (0.1016 to 0.1024)

ADJUSTMENT OF DRIVE PINION HEIGHT

Adjust pinion height with washer provided between rear bearing cone and back of pinion gear.

1. Install Height Gauge ST31211000 on carrier with dummy shaft mounted. See Figure PD-14.
2. Measure the clearance (N) between the tip end of height gauge and the end surface of dummy shaft, using a thickness gauge. See Figure PD-15.

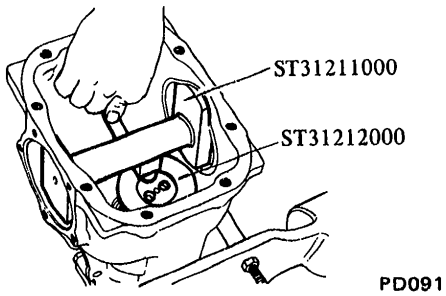

Fig. PD-15 Adjusting pinion height

3. The thickness of drive pinion height adjusting washer can be obtained from the following formula:

$$T = W + N - [(H - D' - S) \times 0.01] - 0.2$$

Where,

- T : Required thickness of rear bearing adjusting washers (mm).
- W : Thickness of washers temporarily inserted (mm).
- N : Measured value with thickness gauge (mm).
- H : Figure marked on the drive pinion head. See Figure PD-16.
- D′ : Figure marked on the dummy shaft.
- S : Figure marked on the height gauge.

Figures for H, D′ and S are dimensional variations in a unit of 1/100 mm against each standard measurement.

Example of calculation

W = 3.09 mm
N = 0.33 mm
H = +2, D′ = −1, S = 0

$$T = W + N - [(H - D' - S) \times 0.01] - 0.2$$
$$= 3.09 + 0.33 - [(2 - (-1) - 0) \times 0.01] - 0.2$$
$$= 3.19 \text{ mm}$$

The correct washer is 3.18 mm thick.

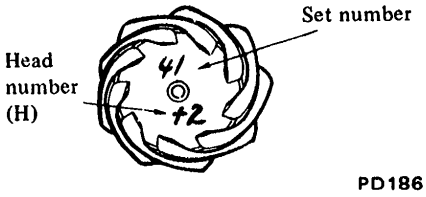

Fig. PD-16 Variation number on drive pinion

Pinion height adjusting washer

Thickness mm (in)
3.09 (0.1217)
3.12 (0.1228)
3.15 (0.1240)
3.18 (0.1252)
3.21 (0.1264)
3.24 (0.1276)
3.27 (0.1287)
3.30 (0.1299)
3.33 (0.1311)
3.36 (0.1323)
3.39 (0.1335)
3.42 (0.1346)
3.45 (0.1358)
3.48 (0.1370)
3.51 (0.1382)
3.54 (0.1394)
3.57 (0.1406)
3.60 (0.1417)
3.63 (0.1429)
3.66 (0.1441)

4. Fit determined pinion height adjusting washer in drive pinion, and press fit rear bearing cone in it using Base ST30901000. See Figure PD-17.

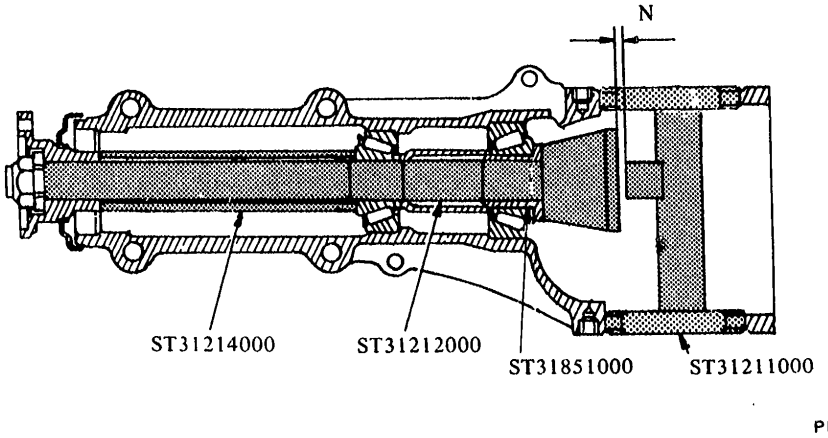

Fig. PD-14 Measuring the clearance

Downloaded from www.Manualslib.com manuals search engine

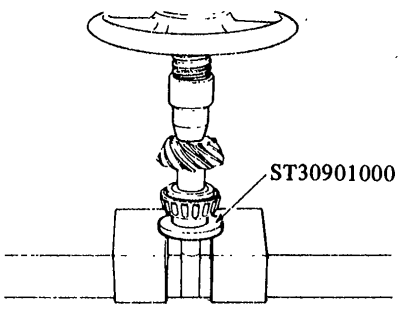

PD417

Fig. PD-17 Pressing rear bearing cone

5. Lubricate pinion front and rear bearings. Install drive pinion in gear carrier into which drive pinion bearing spacer and wahser, front bearing cone and front bearing pilot spacer, moreover, pilot bearing and oil seal are fitted. Fit oil seal using Oil Seal Drift ST30720000.
6. Press fit companion flange in drive pinion and secure them in position by tightening nut to specified torque confirming preload.

Tightening torque:
17 to 20 kg-m
(123 to 145 ft-lb)
Preload (with oil seal):
11 to 17 kg-cm
(9.5 to 15.0 in-lb)

Note: If drive pinion lock nut is worn, replace it.

ADJUSTMENT OF SIDE RETAINER SHIMS

1. If the hypoid gear set, carrier, differential case, side bearing or side bearing retainer has been replaced with new part, adjust the side bearing preload with adjusting shim. The required thicknesses of the left and right retainer shims can be obtained from the following formulas:

$$T_1 = (A + C + G_1 - D) \times 0.01 + 0.76 - E$$
$$T_2 = (B + D + G_2) \times 0.01 + 0.76 - F$$

Where,

T_1 : Required thickness of left side retainer shim (mm).
T_2 : Required thickness of right side retainer shim (mm).
A & B : Figure marked on the gear carrier. See Figure PD-19.
C & D : Figure marked on the differential case. See Figure PD-20.
E & F : These are differences in width of left or right side bearing against the standard width 20.0 mm (0.7874 in).
G_1 & G_2 : Figure marked on the left or right side retainer. See Figure PD-21.

Figures for A, B, C, D, G_1 and G_2 are dimensional variations in a unit of 1/100 mm against each standard measurement.

To measure width of side bearing, see differential case assembly procedure.

Note: Preload of the old bearing should be the same as that of a new bearing.

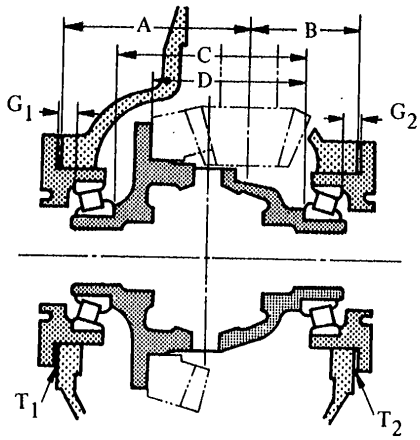

PD093

Fig. PD-18 Thickness of left and right shims

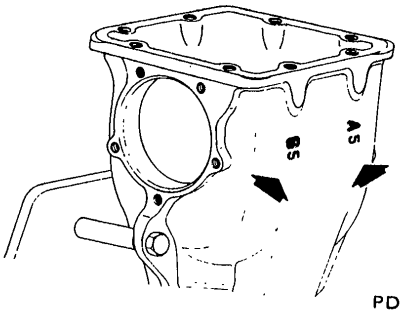

PD187

Fig. PD-19 A & B figure

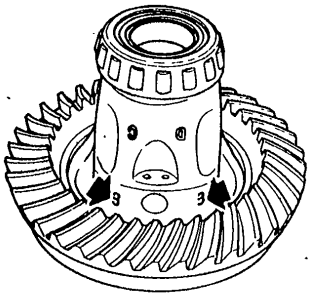

PD188

Fig. PD-20 C & D figures

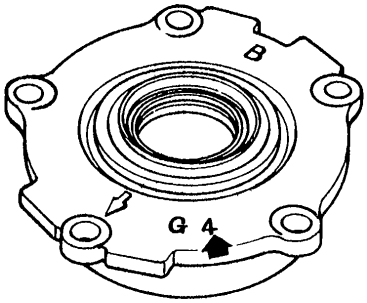

PD189

Fig. PD-21 G1 & G2 figure

Example of calculation,

A = 5, B = 5, C = 3, D = 3,
G_1 = 4, G_2 = 1, E = –0.01 mm,
F = +0.02 mm

Left side:

$$T_1 = (A + C + G_1 - D) \times 0.01 + 0.76 - E$$
$$= [5 + 3 + 4 - (+3)] \times 0.01 + 0.76 - (-0.01)$$
$$= 0.86 \text{ mm}$$

Right side:

$$T_2 = (B + D + G_2) \times 0.01 + 0.76 - F$$
$$= (5 + 3 + 1) \times 0.01 + 0.76 - (+0.02)$$
$$= 0.83 \text{ mm}$$

Side retainer adjusting shim

Thickness mm (in)
0.05 (0.0020)
0.07 (0.0028)
0.10 (0.0039)
0.20 (0.0079)
0.50 (0.0197)

Downloaded from www.Manualslib.com manuals search engine

2. Install differential case assembly in gear carrier in reverse order to which it is disassembled.
3. Fit given shims and O-ring in both side retainers, and install retainers in carrier using Gear Carrier Side Retainer Guide ST33720000 (See Figure PD-22), and the arrow mark on retainer positioned as shown in Figure PD-23.

Note: When installing retainers, take care that side bearing outer races are not damaged by roller.

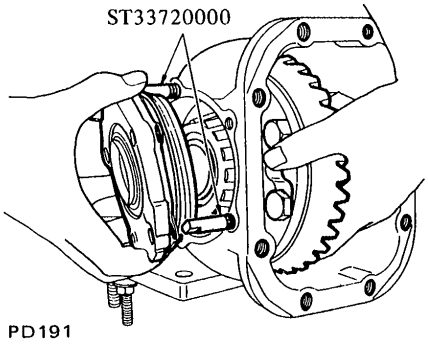

Fig. PD-22 Installing side retainer

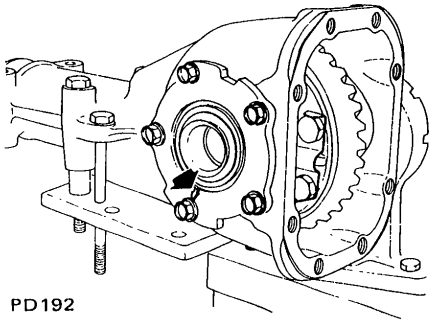

Fig. PD-23 The arrow mark on retainer

4. Measure ring gear-to-drive pinion backlash by using a dial indicator and adjust it to 0.1 to 0.2 mm (0.0039 to 0.0079 in). See Figure PD-24.

If it is below the specified value, move shim from right to left. If it is over it, move it inversely.

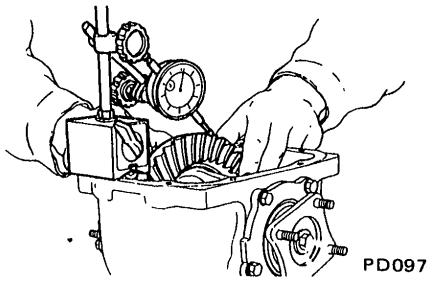

Fig. PD-24 Measuring the backlash of ring gear and pinion

5. At the same time, check side bearing preload. Bearing preload should be 12 to 20 kg-cm (10.4 to 17.3 in-lb) of rotating torque at companion flange.

If preload is not according to this specification, adjust it with side retainer shims.

Incidentally, decrease or increase in thickness of shims causes change of ring gear-to-pinion backlash.

Thus, check if they have proper backlash.

6. Check and adjust the tooth contact pattern of ring gear and drive pinion.

(1) Thoroughly clean ring and drive pinion gear teeth.

(2) Paint ring gear teeth lightly and evenly with a mixture of recommended powder and oil of a suitable consistency to produce a contact pattern.

(3) Rotate pinion through several revolutions in the forward and reverse direction until a definite contact pattern is developed on ring gear.

(4) When contact pattern is incorrect, readjust thickness of adjust shim.

Be sure to wipe off red lead completely upon completion of adjustment.

(5) Incorrect contact pattern of teeth can be adjsuted in the following manner.

a. Heel contact

To correct, increase thickness of drive pinion adjusting washer in order to bring drive pinion close to ring gear. See Figure PD-25.

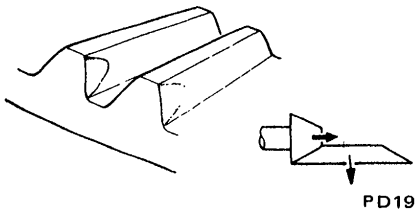

Fig. PD-25 Heel contact

b. Toe contact

To correct, reduce thickness of drive pinion adjusting washer in order to make drive pinion go away from ring gear. See Figure PD-26.

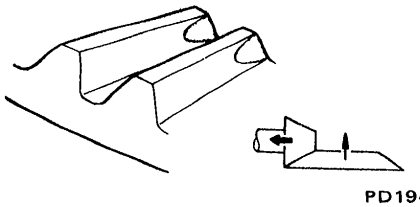

Fig. PD-26 Toe-contact

c. Flank contact

Adjust in the same manner as in b. See Figure PD-27.

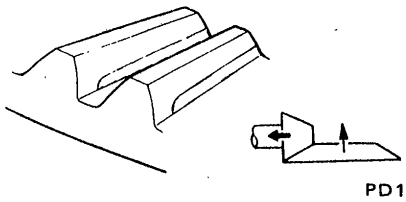

Fig. PD-27 Flank contact

d. Face contact

Adjust in the same manner as in a. See Figure PD-28.

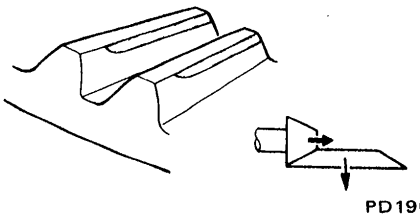

Fig. PD-28 Face contact

e. Correct tooth contact

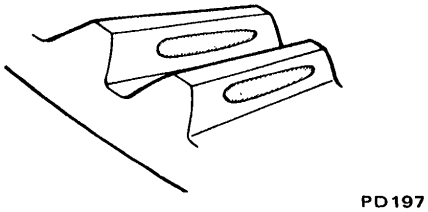

Fig. PD-29 Correct contact

Note: Change in thickness of adjusting washer is accompanied by change in backlash. Check it when installing gear.

Downloaded from www.Manualslib.com manuals search engine

INSTALLATION

Install in the reverse order of removal. Refer to Section RA for Installation.

Note: Oil quantity: 1 liter (1 U.S.qt., ⅞ Imp.qt.)

REPLACEMENT OF FRONT OIL SEAL

Replacement of front oil seal with differential gear carrier assembly installed on the car.

procedures are as follows:

1. Drain gear oil.
2. Raise car on hoist.
3. Remove insulator, exhaust tube and main muffler mounting bolts to free them from car body.
4. Detach propeller shaft.
5. Remove drive pinion nut.
6. Extract companion flange using a standard puller. See Figure PD-30.

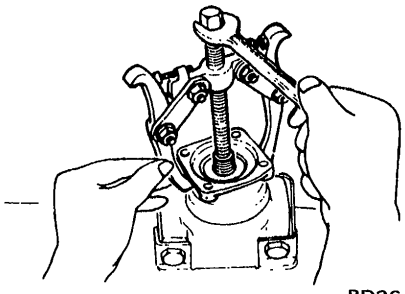

PD264

Fig. PD-30 Removing companion flange

7. Remove oil seal.
8. Set new oil seal in position using Gear Carrier Oil Seal Drift ST30720000. Apply grease cavity between seal lips.
9. Fit companion flange on drive pinion, and secure them in position by tightening nut to specified torque confirming the following preload, using Drive Pinion Flange Wrench ST31530000.

Tightening torque of pinion nut:
17 to 20 kg-m
(123 to 145 ft-lb)
Pinion bearing preload (with oil seal):
11 to 14 kg-cm
(9.6 to 12.2 in-lb)

Note: The preload of old bearing is the same value as that of a new bearing.

10. Reinstall propeller shaft by reversing the foregoing removal procedure. And fill up gear oil.

Side oil seal is replaced by using the following procedures.

(1) Detach drive shaft from gear carrier.
(2) Remove oil seal.
(3) Set in new oil seal.

Note: Apply grease cavity between oil seal lips.

(4) Reinstall drive shaft.

Tightening torque of flange yoke fixing bolt:
3.2 to 4.3 kg-m
(23 to 31 ft-lb)
Drive shaft to companion flange fixing bolt:
5.0 to 6.0 kg-m
(36 to 43 ft-lb)

Note: Check O-ring of side flange fixing bolt, and replace if necessary.

Downloaded from www.Manualslib.com manuals search engine

DIFFERENTIAL CARRIER (Type R200)

CONTENTS

DESCRIPTION PD-13
REMOVAL PD-15
PRE-DISASSEMBLY INSPECTION PD-15
DISASSEMBLY PD-15
DISASSEMBLY OF DIFFERENTIAL CASE .. PD-16
INSPECTION PD-17
ASSEMBLY AND ADJUSTMENT PD-17
PRECAUTIONS IN REASSEMBLY PD-17
ASSEMBLY OF DIFFERENTIAL GEAR CASE PD-17
ADJUSTMENT OF DRIVE PINION PRELOAD PD-18
ADJUSTMENT OF DRIVE PINION HEIGHT PD-18
ADJUSTMENT OF SIDE BEARING WASHERS PD-20
INSTALLATION PD-22
REPLACEMENT OF OIL SEALS PD-22
FRONT OIL SEAL PD-22
SIDE OIL SEAL PD-23

DESCRIPTION

The R200 type differential carrier assembly is adopted on manual transmission equipped models.

The drive pinion is mounted with one ball bearing and two tapered roller bearings which are preloaded by pinion bearing adjusting spacer and washer during assembly.

The drive pinion is adjusted by a washer located between a shoulder of the drive pinion and the rear bearing.

The differential case is supported in the carrier by two tapered roller side bearings. These bearings are preloaded with an interference fit of 0.1 mm (0.0039 in) to the final drive housing. The side bearing adjustment is properly made by washer(s) inserted between the housing and side bearings. The differential case assembly is positioned for proper ring gear-to-drive pinion backlash by varying these washers. The ring gear is bolted to the differential case. The case houses two side gears in mesh with two pinions mounted on a pinion mate shaft. The pinion mate shaft is anchored in the case by lock pin. The pinions and side gears are backed by thrust washers.

Car model	HLS30 (2 seater)		GHLS30 (2 + 2 seater)	
Transmission	Manual	Automatic	Manual	Automatic
Type of differential carrier	R200	R180	R200	R180
Gear ratio	3.545			

Downloaded from www.Manualslib.com manuals search engine

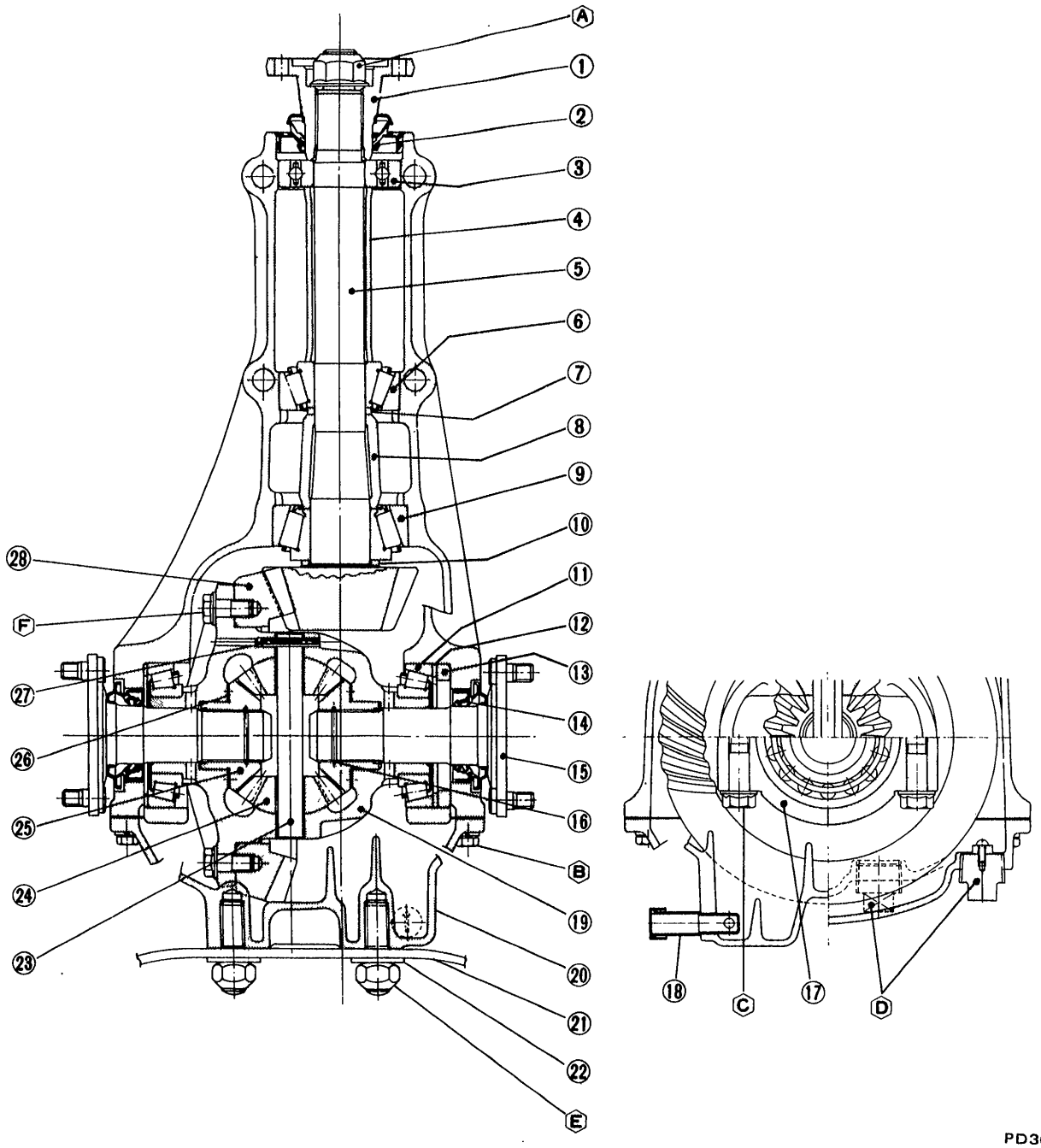

1 Companion flange
2 Front oil seal
(Supply multi-purpose grease to oil seal lip when assembling)
3 Front pilot bearing
4 Front pilot bearing spacer
5 Drive pinion
6 Pinion front bearing
7 Pinion bearing adjusting washer
(Adjust pinion bearing preload by selecting ⑦ and ⑧.)
8 Pinion bearing adjusting spacer
9 Pinion rear bearing
10 Pinion height adjusting washer
(Adjust pinion height by selecting ⑩.)
11 Side bearing
12 Side bearing adjusting washer
(Adjust side bearing preload and ring gear-to-drive pinion backlash by selecting ⑫.)
13 Side bearing spacer
14 Side oil seal
(Supply multi-purpose grease to oil seal lip when assembling)
15 Side flange
16 Side flange circlip
17 Side bearing cap
18 Breather
(Install with an arrow towards front.)
19 Differential case
20 Rear cover
21 Differential rear mounting member
22 Special washer
23 Pinion mate shaft
24 Pinion mate
25 Side gear
26 Thrust washer
(Adjust the pinion mate-to-side gear backlash (or the clearance between the rear face of side gear and thrust washer) to 0.1 to 0.2 mm (0.039 to 0.0079 in) by ㉖.)
27 Lock pin
28 Ring gear

Tightening torque (T) of bolts and nuts kg-m (ft-lb)

Ⓐ T : 19 to 22 (137 to 159)
Ⓑ T : 1.6 to 2.4 (12 to 17)
Ⓒ T : 9.0 to 10.0 (65 to 72)
Ⓓ T : 4.2 to 6.9 (30 to 50)
Ⓔ T : 7.5 to 9.5 (54 to 69)
Ⓕ T : 6.0 to 7.0 (43 to 51)

Using locking agent [Locktite (stud lock) or equivalent]

Fig. PD-31 Sectional view of differential carrier

Downloaded from www.Manualslib.com manuals search engine

REMOVAL

Service procedures are covered under Gear Carrier in Section RA.

PRE-DISASSEMBLY INSPECTION

Differential carrier should be inspected before parts except rear cover are removed from it.

These inspections are helpful in finding the cause of the problem and in determining necessary corrections.

1. Using three 45 mm (1.77 in) spacers, mount carrier on Gear Carrier Attachment KV38100800.

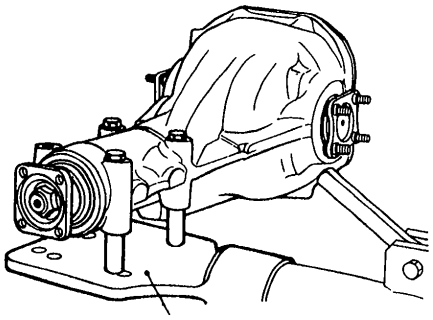

Fig. PD-32 Mounting differential carrier

2. Remove rear cover.
3. Visually inspect parts for wear or damage.
4. Rotate gears checking for any roughness which would indicate damaged bearings or chipped gears. Check gear teeth for scoring or signs of abnormal wear. Measure preload of drive pinion.

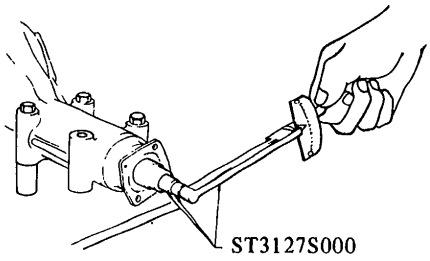

Fig. PD-33 Measuring pinion preload

5. Set up a dial indicator and check the backlash at several points around ring gear. Backlash should be within 0.13 to 0.18 mm (0.0051 to 0.0071 in).

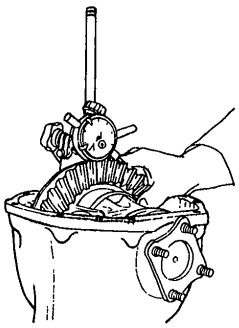

Fig. PD-34 Measuring the backlash of ring gear and pinion

6. Check gear tooth contact with a mixture of recommended powder and oil.

For the tooth contact pattern, see page PD-21 – Contact Pattern.

DISASSEMBLY

1. Drive side flange out with pry bar. See Figure PD-35.

Note: Hold side flange with hand to prevent it from jumping out of carrier.

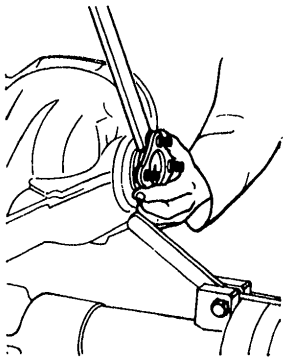

Fig. PD-35 Removing side flange

2. Put match marks on side bearing caps and carrier.
3. Loosen side bearing cap bolts and remove bearing caps.

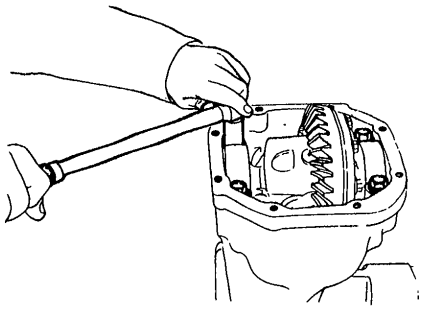

Fig. PD-36 Removing side bearing cap

4. Using Slide Hammer HT72400000 lift differential case assembly out. See Figure PD-37.

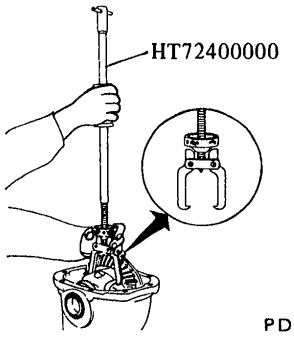

Fig. PD-37 Removing differential case assembly

Note: Care should be taken not to confuse the left and right hand bearing caps and bearing outer races so that parts may be installed to the original position.

5. Loosen drive pinion nut, holding companion flange with Drive Pinion Flange Wrench ST31530000 and pull off companion flange using a suitable puller. See Figures PD-38 and PD-39.

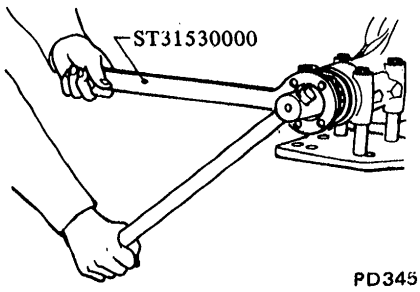

Fig. PD-38 Removing drive pinion nut

Downloaded from www.Manualslib.com manuals search engine

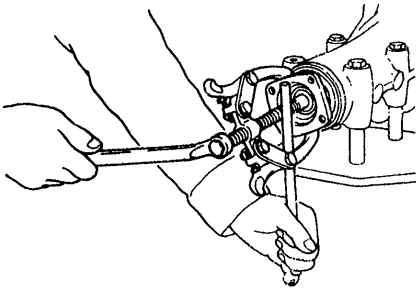

PD346

Fig. PD-39 Removing companion flange

6. Extract drive pinion from carrier using a press. Take out drive pinion together with rear bearing inner race, bearing spacer and adjusting washer.

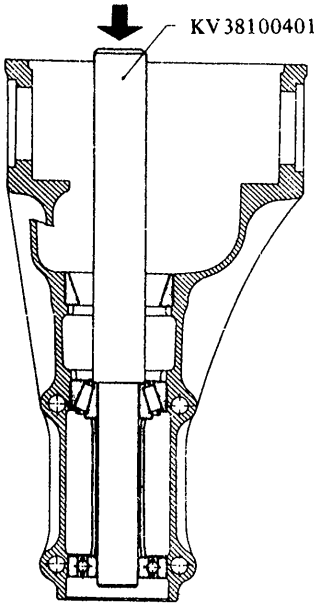

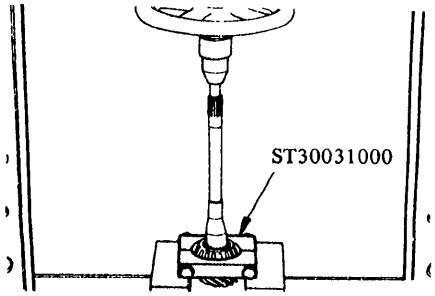

PD179

Fig. PD-41 Removing pinion rear bearing inner race

11. To remove front and rear bearing outer races, put a drift to race surface, and withdraw them by tapping the top of drift with a hammer. See Figure PD-42.

7. Remove oil seal.

Note: Oil seal must not be reused.

8. Remove pilot bearing together with pilot bearing spacer and front bearing inner race using Pilot Bearing Drift KV38100401. See Figure PD-40.

9. Remove side oil seal.

Note: Oil seal must not be reused.

10. Hold rear bearing inner race with Drive Pinion Rear Bearing Inner Race Puller ST30031000 and extract from drive pinion with a press. See Figure PD-41.

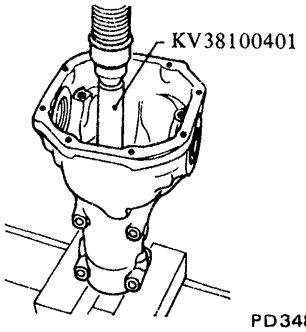

PD348

Fig. PD-40 Removing pilot bearing

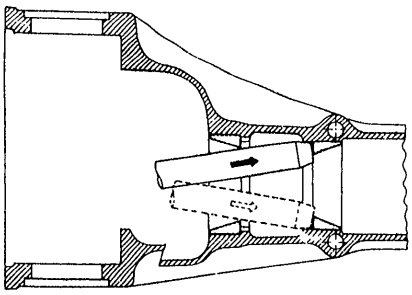

PD349

Fig. PD-42 Removing pinion bearing outer races

DISASSEMBLY OF DIFFERENTIAL CASE

1. Extract bearing using Differential Side Bearing Puller ST3306S001 (set of ST33051001 and ST33061000). See Figure PD-43.

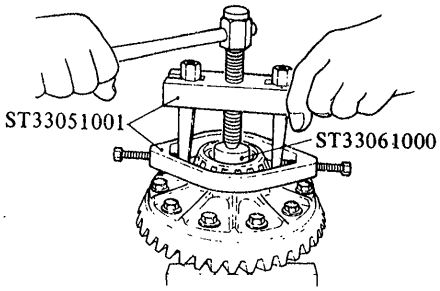

PD350

Fig. PD-43 Removing side bearing

Notes:

a. **Securely attach puller to bearing inner race, utilizing two grooves in differential case.**

b. **Be careful not to confuse the left and right hand parts.**

2. Remove ring gear by loosening ring gear bolts.

Note: Loosen bolts diagonally.

Punch off pinion mate shaft lock pin from ring gear side using Sold Punch KV31100300.

Note: Lock pin is caulked at pin hole mouth on differential case. Do not punch it off forcibly without checking how it is caulked.

4. Draw out pinion mate shaft and remove pinion mate gears, side gears and thrust washers.

Note: Put marks on gear and thrust washer so that they can be re-installed in their original positions from which they were removed.

Downloaded from www.Manualslib.com manuals search engine

INSPECTION

Thoroughly clean all disassembled parts, and examine them to see that they are worn, damaged or otherwise faulty, and how they are affected. Repair or replace all faulty parts, whichever is necessary.

1. Check gear teeth for scoring, cracking or chipping, and make sure that tooth contact pattern indicates correct meshing depth. If any fault is evident, replace parts as required.

Note: Drive pinion and drive gear are supplied for replacement as a set, therefore, should either part be damaged, replace as a set.

2. Check pinion gear shaft, and pinion gear for scores and signs of wear, and replace as required.

Follow the same procedure for side gears and their seats on differential case.

3. Inspect all bearing races and rollers for scoring, chipping or evidence of excessive wear. They should be in tiptop condition such as not worn and with mirror-like surfaces. Replace if there is a shadow of doubt on their efficiency, as an incorrect bearing operation may result in noise and gear seizure.

4. Inspect thrust washer faces. Small faults can be corrected with sandpaper. If pinion mate to side gear backlash (or the clearance between side gear and thrust washer) exceeds limits 0.1 to 0.2 mm (0.0039 to 0.0079 in), replace thrust washers.

5. Inspect carrier and differential case for cracks or distortion. If either condition is evident, replace faulty parts.

6. As a general rule, oil seal should be replaced at each disassembly.

ASSEMBLY AND ADJUSTMENT

Assembly can be done in the reverse order of disassembly. Adherence to the following directions for adjustment and usage of special tools enable to obtain a perfect differential operation.

PRECAUTIONS IN REASSEMBLY

1. Arrange shims, washers and the like to install them correctly.
2. Thoroughly clean the surfaces on which shims, washers, bearings and bearing retainers are installed.
3. Thoroughly clean oil from ring gear bolt and its hole with "Locktite Lacquic Primer" or equivalent.
4. Apply gear oil when installing bearings.
5. Pack recommended multi-purpose grease into cavity between lips when fitting oil seal.

ASSEMBLY OF DIFFERENTIAL GEAR CASE

1. Assemble pinion mates, side gears and thrust washers in differential case.
2. Fit pinion shaft to differential case so that it meets lock pin holes.
3. Adjust side gear-to-pinion mate backlash or adjust the clearance between the rear face of side gear and thrust washer. See Figure PD-44.

If above procedure is not effective with existing washer, try with other washers.

Normal backlash or clearance:
0.1 to 0.2 mm
(0.0039 to 0.0079 in)

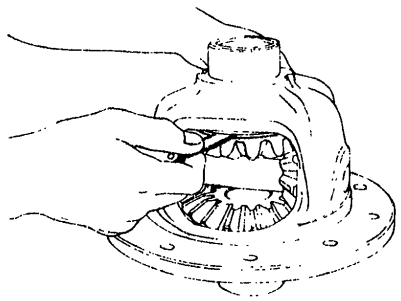

PD023

Fig. PD-44 Measuring clearance

Side gear thrust washer

Thickness mm (in)
0.75 to 0.80 (0.0295 to 0.0315)
0.80 to 0.85 (0.0315 to 0.0335)
0.85 to 0.90 (0.0335 to 0.0354)

4. Lock pinion shaft lock pin using a punch after it is secured in place.
5. Apply oil to gear tooth surfaces and thrust surfaces and check that they turn properly.
6. Place ring gear on differential case and apply a small amount of locking agent [Locktite (stud lock) or equivalent] to the bolts; then install bolts.

Note: Use only genuine ring gear bolts.

7. Tighten bolts in a criss-cross fashion to specified torque, and apply light hammer blows to bolt heads. Again tighten bolts to specified torque.

Tightening torque:
7 to 8 kg-m
(51 to 58 ft-lb)

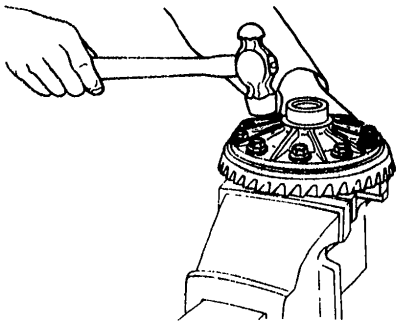

PD351

Fig. PD-45 Tapping bolt heads

8. When replacing side bearing, measure bearing width using Master Gauge KV38102000 and Weight Block ST32501000 prior to installation. See Figure PD-46.

Standard bearing width:
21.00 mm (0.8268 in)

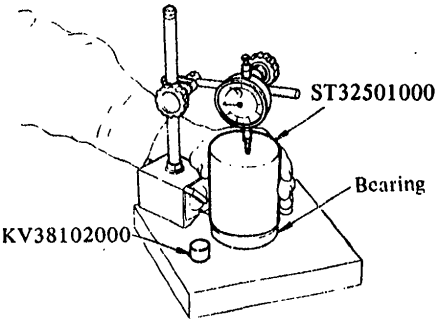

PD425

Fig. PD-46 Measuring bearing width

Downloaded from www.Manualslib.com manuals search engine

9. Press fit side bearing inner race on differential case with Gear Carrier Side Bearing Drift KV38100300 and Adapter ST33061000. See Figure PD-47.

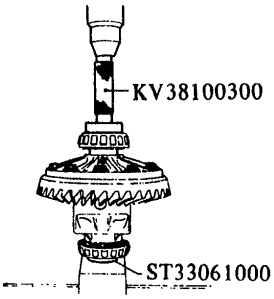

PD353
Fig. PD-47 Installing side bearing inner race

ADJUSTMENT OF DRIVE PINION PRELOAD

Adjust drive pinion preload with spacer and washer between front and rear bearing inner races, regardless of thickness of pinion height adjusting washer.

This adjustment must be carried out without oil seal inserted.

1. Press fit front and rear bearing outer races into gear carrier using Drive Pinion Outer Race Drift Set ST30611000, ST30613000 and ST30621000.

Front:	ST30611000 and ST30613000
Rear:	ST30611000 and ST30621000

2. Insert rear bearing inner race into Dummy Shaft KV38100110.
3. Fit drive pinion bearing spacer, washer, front bearing inner race, Dummy Shaft Collar KV38100130 and companion flange in that order on dummy shaft and tighten drive pinion nut to specified torque with Stopper KV38100140. See Figure PD-48.

Tightening torque of pinion nut:
19 to 22 kg-m
(137 to 159 ft-lb)

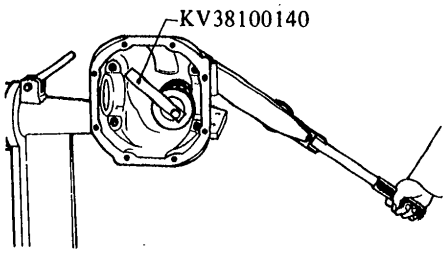

PD354
Fig. PD-48 Tightening drive pinion nut

4. Measure pinion bearing preload using Preload Gauge ST3127S000, and select washer and spacer that will provide required preload. See Figure PD-49.

Pinion bearing preload
(without oil seal):
10 to 13 kg-cm
(8.7 to 11.3 in-lb)

Notes:
a. **Replace bearing washer and spacer with thicker ones if pinion cannot be turned by hand while it is being tightened.**
b. **Preload of old bearing is the same value as that of a new bearing.**

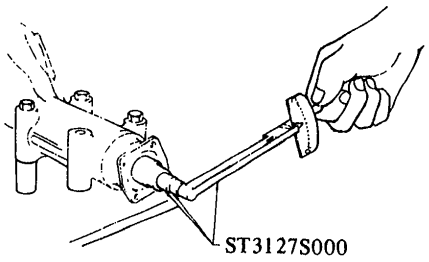

PD340
Fig. PD-49 Measuring pinion preload

Pinion bearing adjusting spacer

Length mm (in)
55.10 (2.1693)
55.40 (2.1811)
55.70 (2.1929)
56.00 (2.2047)
56.25 (2.2146)

Pinion bearing adjusting washer

Thickness mm (in)
3.80 to 3.82 (0.1496 to 0.1504)
3.82 to 3.84 (0.1504 to 0.1512)
3.84 to 3.86 (0.1512 to 0.1520)
3.86 to 3.88 (0.1520 to 0.1528)
3.88 to 3.90 (0.1528 to 0.1535)
3.90 to 3.92 (0.1535 to 0.1543)
3.92 to 3.94 (0.1543 to 0.1551)
3.94 to 3.96 (0.1551 to 0.1559)
3.96 to 3.98 (0.1559 to 0.1567)
3.98 to 4.00 (0.1567 to 0.1575)
4.00 to 4.02 (0.1575 to 0.1583)
4.02 to 4.04 (0.1583 to 0.1591)
4.04 to 4.06 (0.1591 to 0.5598)
4.06 to 4.08 (0.5598 to 0.1606)
4.08 to 4.10 (0.1606 to 0.1614)

ADJUSTMENT OF DRIVE PINION HEIGHT

Adjust pinion height with washer located between rear bearing inner race and back of pinion gear.

1. Install Height Gauge KV38100120 on carrier with dummy shaft mounted. See Figure PD-50.

Downloaded from www.Manualslib.com manuals search engine

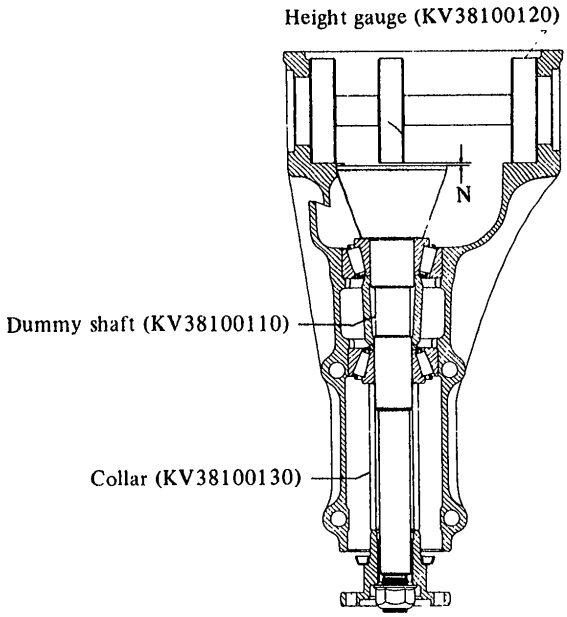

PD355

Fig. PD-50 Measuring the clearance (N)

2. Measure the clearance (N) between the tip end of height gauge and the end surface of dummy shaft, using a thickness gauge. See Figure PD-51.

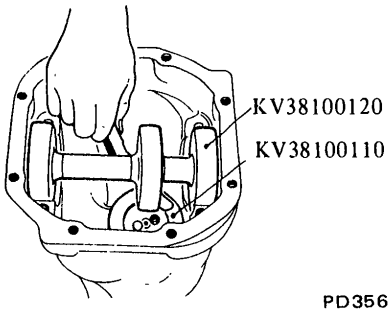

PD356

Fig. PD-51 Adjsuting pinion height

3. The thickness of drive pinion height adjusting washer can be obtained from the following formula:

$$T = N - [(H - D') \times 0.01] + 3.00$$

Where,

T : Required thickness of rear bearing adjusting washers (mm).
N : Measured value with thickness gauge (mm).
H : Figure marked on the drive pinion head. See Figure PD-25.
D' : Figure marked on the dummy shaft.

Figures for H and D' are dimensional variations in a unit of 1/100 mm against each standard measurement.

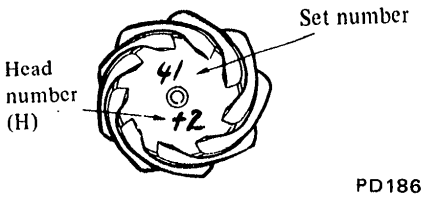

PD186

Fig. PD-52 Variation number on drive pinion

Examples of calculation

Ex. 1 ---

N = 0.23 mm
H = +2, D' = 1

$$T = N - [(H - D') \times 0.01] + 3.00$$
$$= 0.23 - [((+2) - 1) \times 0.01] + 3.00$$
$$= 0.23 - [(2 - 1) \times 0.01] + 3.00$$
$$= 0.23 - [1 \times 0.01] + 3.00$$
$$= 0.23 - 0.01 + 3.00$$
$$= 3.22 \text{ mm}$$

The correct washer is 3.21 mm thick.

Ex. 2 ---

N = 0.35 mm
H = –1, D' = 2

$$T = N - [(H - D') \times 0.01] + 3.00$$
$$= 0.35 - [((-1) - 2) \times 0.01] + 3.00$$
$$= 0.35 - [(-1 - 2) \times 0.01] + 3.00$$
$$= 0.35 - [(-3) \times 0.01] + 3.00$$
$$= 0.35 - [-0.03] + 3.00$$
$$= 0.35 + 0.03 + 3.00$$
$$= 3.38$$

The correct washer is 3.39 mm thick.

Ex. 3 ---

N = 0.27 mm
H = 0, D' = 0

$$T = N - [(H - D') \times 0.01] + 3.00$$
$$= 0.27 - [(0 - 0) \times 0.01] + 3.00$$
$$= 0.27 - [0 \times 0.01] + 3.00$$
$$= 0.27 - 0 + 3.00$$
$$= 3.27$$

The correct washer is 3.27 mm thick.

Note: If values signifying H and D' are not given, regard them as zero and compute. After assembly, check to see that tooth contact is correct. If not, readjust.
For the tooth contact pattern, see page PD-11 for Contact Pattern.

Pinion bearing adjusting washer

Thickness mm (in)
3.09 (0.1217)
3.12 (0.1228)
3.15 (0.1240)
3.18 (0.1252)
3.21 (0.1264)
3.24 (0.1276)
3.27 (0.1287)
3.30 (0.1299)
3.33 (0.1311)
3.36 (0.1323)
3.39 (0.1335)
3.42 (0.1346)
3.45 (0.1358)
3.48 (0.1370)
3.51 (0.1382)
3.54 (0.1394)
3.57 (0.1406)
3.60 (0.1417)
3.63 (0.1429)
3.66 (0.1441)
0.05 (0.0020)
0.07 (0.0028)

Downloaded from www.Manualslib.com manuals search engine

Note: Pinion height adjustment can be made in a unit of 1/100 mm (4/10,000 in) by selecting either 0.05 mm (0.0020 in) or 0.07 mm (0.0028 in) shim in above chart.

4. Fit determined pinion height adjusting washer in drive pinion, and press fit rear bearing inner race in it using Base ST30901000. See Figure PD-53.

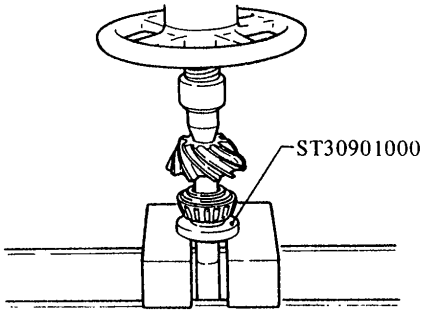

PD092

Fig. PD-53 Pressing rear bearing inner race

Note: Insert washer into pinion with the chamfered side towards gear.

5. Lubricate pinion front and rear bearings. Install drive pinion in gear carrier into which drive pinion bearing spacer and washer, front bearing inner race and front pilot bearing spacer, moreover, pilot bearing and front oil seal are fitted. Fit front oil seal using Gear Carrier Front Oil Seal Drift KV38100500.

6. Fit companion flange on drive pinion, and secure it in position by tightening nut to specified torque confirming preload.

Tightening torque:
19 to 22 kg-m
(137 to 159 ft-lb)

Preload (with oil seal):
11 to 17 kg-cm
(9.5 to 15.0 in-lb)

Note: If drive pinion lock nut is worn, replace it.

ADJUSTMENT OF SIDE BEARING WASHERS

1. If the hypoid gear set, carrier, differential case or side bearing has been replaced with new part, adjust the side bearing preload with adjusting washer. The required thicknesses of the left and right washers can be obtained from the following formulas:

$$T_1 = (A - C + D - H') \times 0.01 + E + 2.05$$
$$T_2 = (B - D + H') \times 0.01 + F + G + 1.95$$

Where,

T_1 : Required thickness of left side washer (mm).

T_2 : Required thickness of right side washer (mm).

A & B : Figure marked on the gear carrier. See Figure PD-55.

C & D : Figure marked on the differential case. See Figure PD-56.

E & F : These are differences in width of left or right side bearing against the standard width (21.00 mm).

If bearing width is 20.82 mm, this figure will be as follows:

21.00 – 20.82 = 0.18 (mm)

G : This is the difference in thickness of side spacer against the standard width (8.10 mm). If spacer width is 8.02 mm, this figure will be as follows.

H': Figure marked on ring gear. See Figure PD-57.
8.10 – 8.02 = 0.08 (mm)

Figures for A, B, C and D are dimensional variations in a unit of 1/100 mm against each standard measurement.

To measure width of side bearing, see differential case assembly procedure.

Before calculation, determine "G" value by measuring spacer thickness. If spacer is deformed or scratched, replace.

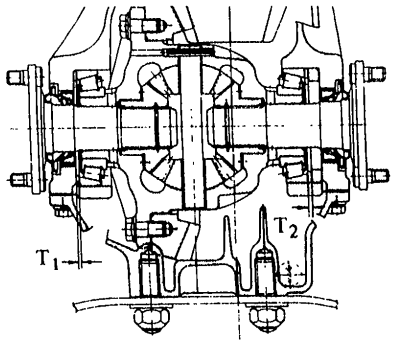

PD357

Fig. PD-54 Thickness of left and right washers

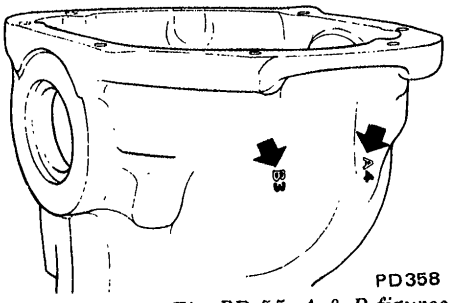

PD358

Fig. PD-55 A & B figures

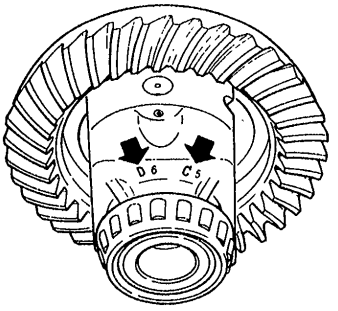

PD359

Fig. PD-56 C & D figures

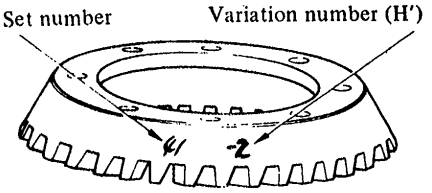

PD190

Fig. PD-57 Variation number on ring gear

Side bearing adjusting washer

Thickness mm (in)
2.00 (0.0787)
2.05 (0.0807)
2.10 (0.0827)
2.15 (0.0846)
2.20 (0.0866)
2.25 (0.0886)
2.30 (0.0906)
2.35 (0.0925)
2.40 (0.0945)
2.45 (0.0965)
2.50 (0.0984)
2.55 (0.1004)
2.60 (0.1024)

Downloaded from www.Manualslib.com manuals search engine

Example of calculation

Ex. 1 ---

A = 4, B = 3, C = 5, D = 6
E = 0.18 mm, F = 0.15 mm
G = 0.08 mm, H′ = –2

Left side:

T_1 = (A – C + D – H′) x 0.01 + E + 2.05
= [4 – 5 + 6 – (–2)] x 0.01 + 0.18 + 2.05
= 7 x 0.01 + 0.18 + 2.05
= 0.07 + 0.18 + 2.05
= 2.30

The correct washer is 2.30 mm thick.

Right side:

T_2 = (B – D + H′) x 0.01 + F + G + 1.95
= [3 – 6 + (–2)] x 0.01 + 0.15 + 0.08 + 1.95
= (–5) x 0.01 + 0.15 + 0.08 + 1.95
= –0.05 + 0.15 + 0.08 + 1.95
= 2.13

The correct washer is 2.15 mm thick.

Ex. 2 ---

A = 6, B = 6, C = 5, D = 3
E = 0.17 mm, F = 0.22 mm
G = 0.10 mm, H′ = 2

Left side:

T_1 = (A – C + D – H′) x 0.01 + E + 2.05
= (6 – 5 + 3 – 2) x 0.01 + 0.17 + 2.05
= 2 x 0.01 + 0.17 + 2.05
= 0.02 + 0.17 + 2.05
= 2.24

The correct washer is 2.25 mm thick.

Right side:

T_2 = (B – D + H′) x 0.01 + F + G + 1.95
= (6 – 3 + 2) x 0.01 + 0.22 + 0.10 + 1.95
= 5 x 0.01 + 0.22 + 0.10 + 1.95
= 0.05 + 0.22 + 0.10 + 1.95
= 2.32

The correct washer is 2.30 mm thick.

Note: If values signifying A, B, C and D are not given, regard them as zero and compute.
After assembly, check to see that preload and backlash are correct. If not, readjust.

2. Install differential case assembly with side bearing outer races into carrier.
3. Insert left and right side bearing preload adjusting washers in place between side bearings and housing.
4. Drive in side bearing spacer between R.H. washer and housing with Side Bearing Spacer Drift KV38100600. See Figure PD-58. If too great or too small a driving force is required, check to be sure that calculation and side bearing width are correct.

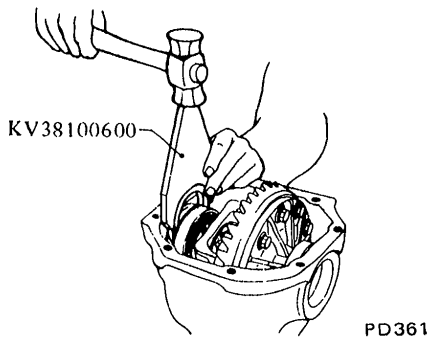

Fig. PD-58 Driving spacer into place

Note: When driving spacer into place, be careful not to tilt side bearing outer race to either side.

5. Align mark on bearing cap with that on carrier and install bearing cap on carrier. And tighten bolts to specified torque.

Tightening torque:
9 to 10 kg-m (65 to 72 ft-lb)

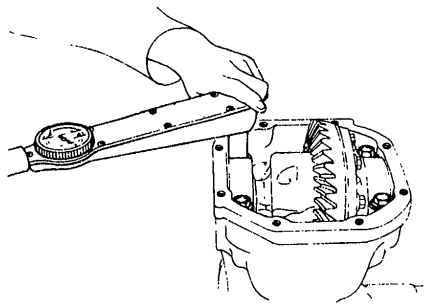

Fig. PD-59 Tightening side bearing cap

6. Measure ring gear-to-drive pinion backlash with a dial indicator and adjust it to 0.13 to 0.18 mm (0.0051 to 0.0071 in). See Figure PD-60.

If it is below the specified value, replace left washer with a thinner one and right washer with a thicker one. If it is over it, replace left washer with a thicker one and right washer with a thinner one.

Note: To maintain correct preload at all times, do not change total thickness of washers.

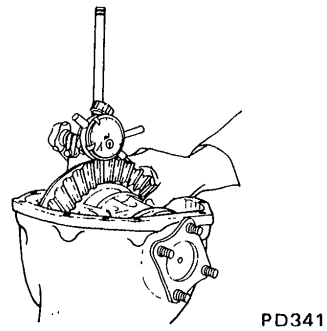

Fig. PD-60 Measuring the backlash of ring gear and pinion

Incidentally a decrease or increase in thickness of washers causes change in ring gear-to-pinion backlash.

Thus, check for proper backlash.

7. Check and adjust the tooth contact pattern of ring gear and drive pinion.

(1) Thoroughly clean ring and drive pinion gear teeth.
(2) Paint ring gear teeth lightly and evenly with a mixture of powdered red lead and oil of a suitable consistency to produce a contact pattern.
(3) Rotate pinion through several revolutions in the forward and reverse direction until a definite contact pattern is developed on ring gear.
(4) If contact pattern is incorrect, readjust thickness of adjusting washer.

Be sure to completely wipe off red lead upon completion of adjustment.

(5) Incorrect teeth contact pattern can be adjusted in the following manner.

Contact pattern

a. Heel contact

To correct, increase thickness of pinion height adjusting washer in order to bring drive pinion close to ring gear. See Figure PD-61.

Downloaded from www.Manualslib.com manuals search engine

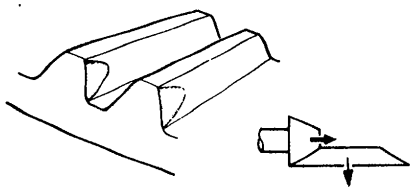

Fig. PD-61 Heel contact

b. Toe contact

To correct, reduce thickness of pinion height adjusting washer in order to make drive pinion move away from ring gear. See Figure PD-62.

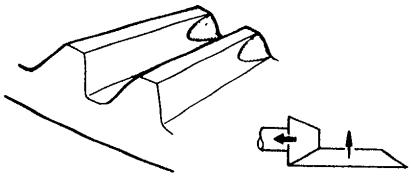

Fig. PD-62 Toe contact

c. Flank contact

Adjust in the same manner as in b. See Figure PD-63.

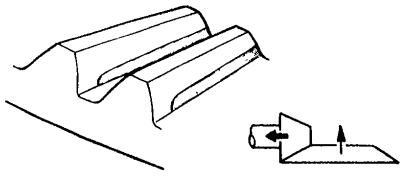

Fig. PD-63 Flank contact

d. Face contact

Adjust in the same manner as in a. See Figure PD-64.

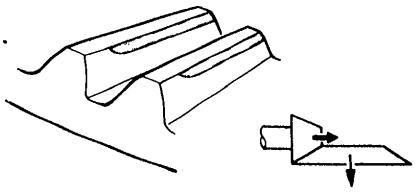

Fig. PD-64 Face contact

e. Correct tooth contact

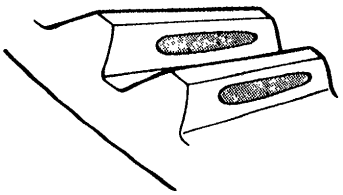

Fig. PD-65 Correct contact

Note: Change in thickness of adjusting washer is accompanied by change in backlash. Check it when installing gear.

8. Install rear cover.

Tightening torque:
1.6 to 2.4 kg-m
(12 to 17 ft-lb)

9. Apply grease to cavity at sealing lips of oil seal.

Press side oil seal into carrier with Gear Carrier Side Oil Seal Drift KV38100200.

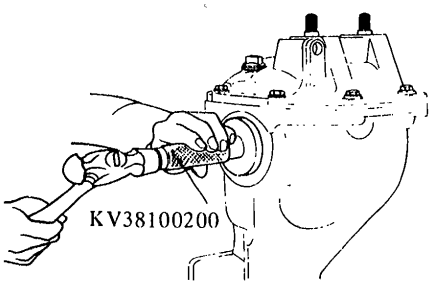

Fig. PD-66 Installing side oil seal

10. Install side flange on carrier. Engage spline in side flange with that in side gear and apply light hammer blows until side flange circlip is fitted into groove in side flange.

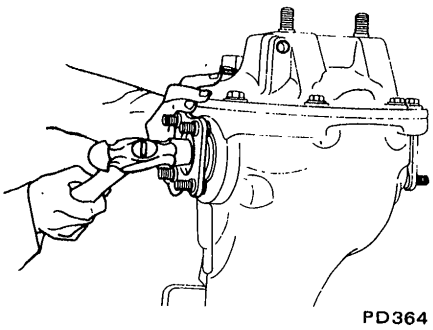

Fig. PD-67 Installing side flange

Notes:

a. **The length of side flanges differs for their locations. Install the shorter flange on the left side (ring gear) and the longer one on the right side.**

b. **Be careful not to scratch oil seal lips with side flange.**

INSTALLATION

Install in the reverse order of removal. Refer to Section RA for Installation.

Note: **Oil quantity: 1.3 liters (2 ¾ U.S. pt., 2 ¼ Imp. pt., use API GL-5).**

REPLACEMENT OF OIL SEALS

Replacement of oil seals with differential gear carrier assembly installed on the car.

FRONT OIL SEAL

Procedures are as follows:

1. Drain gear oil.
2. Raise car on hoist.
3. Remove insulator, exhaust tube and main muffler mounting bolt to free them from car body.
4. Detach propeller shaft.
5. Remove drive pinion nut.
6. Extract companion flange with a suitable puller.
7. Remove oil seal with Gear Carrier Oil Seal Puller ST33290001.
8. Set new oil seal in position with Gear Carrier Front Oil Seal Drift KV38100500. Apply grease to cavity between seal lips.
9. Fit companion flange on drive pinion, and secure it in position by tightening nut to specified torque confirming the following preload, with Drive Pinion Flange Wrench ST31530000.

Downloaded from www.Manualslib.com manuals search engine

Tightening torque of pinion nut:
19 to 22 kg-m
(137 to 159 ft-lb)
Pinion bearing preload (with oil seal):
11 to 17 kg-cm
(9.5 to 15.0 in-lb)
At companion flange bolt hole:
3.1 to 4.9 kg
(6.8 to 10.8 lb)

10. Reinstall rear stabilizer, propeller shaft and muffler in reverse order of removal, and fill up gear oil.

SIDE OIL SEAL

Side oil seal is replaced as follows:

1. Disconnect drive shaft on the gear carrier side.
2. Drive side flange out with pry bar.

Note: Hold side bearing flange with hand to prevent it from jumping out of carrier.

3. Remove oil seal.
4. Set in new oil seal with Gear Carrier Side Oil Seal Drift KV38100200.

Note: Apply grease to cavity between oil seal lips.

5. Install side flange on carrier. Engage spline in side flange with that in side gear and apply light hammer blows until side flange circlip is fitted into groove in side flange.
6. Join drive shaft with side flange and tighten nuts to specified torque.

Tightening torque:
5.0 to 6.0 kg-m
(36 to 43 ft-lb)

Note: Be careful not to scratch oil seal lips with side flange.

Downloaded from www.Manualslib.com manuals search engine

SERVICE DATA AND SPECIFICATIONS

		R180	R200
Gear ratio (number of teeth)		3.545 (39/11)	3.545 (39/11)
Drive pinion preload adjusted by		Washer	Washer
Drive pinion			
Preload	kg-cm (in-lb)		
(without oil seal)		10 to 13 (8.7 to 11.3)	10 to 13 (8.7 to 11.3)
(with oil seal)		11 to 17 (9.5 to 15.0)	11 to 17 (9.5 to 15.0)
Thickness of pinion height adjusting washer	mm (in)	3.09 (0.1217) 3.39 (0.1335) 3.12 (0.1228) 3.42 (0.1346) 3.15 (0.1240) 3.45 (0.1358) 3.18 (0.1252) 3.48 (0.1370) 3.21 (0.1264) 3.51 (0.1382) 3.24 (0.1276) 3.54 (0.1394) 3.27 (0.1287) 3.57 (0.1406) 3.30 (0.1299) 3.60 (0.1417) 3.33 (0.1311) 3.63 (0.1429) 3.36 (0.1323) 3.66 (0.1441)	3.09 (0.1217) 3.39 (0.1335) 3.12 (0.1228) 3.42 (0.1346) 3.15 (0.1240) 3.45 (0.1358) 3.18 (0.1252) 3.48 (0.1370) 3.21 (0.1264) 3.51 (0.1382) 3.24 (0.1276) 3.54 (0.1394) 3.27 (0.1287) 3.57 (0.1406) 3.30 (0.1299) 3.60 (0.1417) 3.33 (0.1311) 3.63 (0.1429) 3.36 (0.1323) 3.66 (0.1441) 0.05 (0.0020) 0.07 (0.0028)
Length of pinion bearing adjusting spacer	mm (in)	52.20 (2.0551) 52.40 (2.0630) 52.60 (2.0709) 52.80 (2.0787) 53.00 (2.0866) 53.20 (2.0945)	55.10 (2.1693) 55.40 (2.1811) 55.70 (2.1929) 56.00 (2.2047) 56.25 (2.2146)
Thickness of pinion bearing adjusting washer	mm (in)	2.30 to 2.32 (0.0910 to 0.0913) 2.32 to 2.34 (0.0913 to 0.0921) 2.34 to 2.36 (0.0921 to 0.0929) 2.36 to 2.38 (0.0929 to 0.0937) 2.38 to 2.40 (0.0937 to 0.0945) 2.40 to 2.42 (0.0945 to 0.0953) 2.42 to 2.44 (0.0953 to 0.0961) 2.44 to 2.46 (0.0961 to 0.0969) 2.46 to 2.48 (0.0969 to 0.0976) 2.48 to 2.50 (0.0976 to 0.0984) 2.50 to 2.52 (0.0984 to 0.0992) 2.52 to 2.54 (0.0992 to 0.0999) 2.54 to 2.56 (0.0999 to 0.1008) 2.56 to 2.58 (0.1008 to 0.1016) 2.58 to 2.60 (0.1016 to 0.1024)	3.80 to 3.82 (0.1496 to 0.1504) 3.82 to 3.84 (0.1504 to 0.1512) 3.84 to 3.86 (0.1512 to 0.1520) 3.86 to 3.88 (0.1520 to 0.1528) 3.88 to 3.90 (0.1528 to 0.1535) 3.90 to 3.92 (0.1535 to 0.1543) 3.92 to 3.94 (0.1543 to 0.1551) 3.94 to 3.96 (0.1551 to 0.1559) 3.96 to 3.98 (0.1559 to 0.1567) 3.98 to 4.00 (0.1567 to 0.1575) 4.00 to 4.02 (0.1575 to 0.1583) 4.02 to 4.04 (0.1583 to 0.1591) 4.04 to 4.06 (0.1591 to 0.1598) 4.06 to 4.08 (0.1598 to 0.1606) 4.08 to 4.10 (0.1606 to 0.1614)
Side gear and pinion mate			
Thickness of side gear thrust washer	mm (in)	0.75 to 0.80 (0.0295 to 0.0315) 0.80 to 0.85 (0.0315 to 0.0335) 0.85 to 0.90 (0.0335 to 0.0354)	0.75 to 0.80 (0.0295 to 0.0315) 0.80 to 0.85 (0.0315 to 0.0335) 0.85 to 0.90 (0.0335 to 0.0354)

Downloaded from www.Manualslib.com manuals search engine

	R180	R200
Pinion mate-to-side gear backlash (or clearance between side gear and thrust washer) mm (in)	0.1 to 0.2 (0.0039 to 0.0079)	0.1 to 0.2 (0.0039 to 0.0079)
Ring gear		
Ring gear-to-drive pinion backlash mm (in)	0.1 to 0.2 (0.0039 to 0.0079)	0.13 to 0.18 (0.0051 to 0.0071)
Thickness of side retainer shim (R180) or side bearing adjusting washer (R200) mm (in)	0.05 (0.0020) 0.07 (0.0028) 0.10 (0.0039) 0.20 (0.0079) 0.50 (0.0197)	2.00 (0.0787) 2.05 (0.0807) 2.10 (0.0827) 2.15 (0.0846) 2.20 (0.0866) 2.25 (0.0886) 2.30 (0.0906) 2.35 (0.0925) 2.40 (0.0945) 2.45 (0.0965) 2.50 (0.0984) 2.55 (0.1004) 2.60 (0.1024)
Side bearing standard width mm (in)	20.00 (0.7874)	21.00 (0.8268)
Oil capacity (about) liter (U.S. pt, Imp. pt)	1.0 (2 1/8, 1 3/4)	1.3 (2 3/4, 2 1/4)
Tightening torque kg-m (ft-lb)		
Drive pinion nut	17 to 20 (123 to 145)	19 to 22 (137 to 159)
Ring gear bolt [using Locktite (stud lock) or equivalent]	9.0 to 10.0 (65 to 72)	6.0 to 7.0 (43 to 51)
Side bearing cap bolt	———	9.0 to 10.0 (65 to 72)
Side retainer bolt	0.9 to 1.2 (6.5 to 8.7)	———
Rear cover fixing bolt	1.9 to 2.5 (14 to 18)	1.6 to 2.4 (12 to 17)
Rear cover to rear mounting member lock nut	6.0 to 7.0 (43 to 51)	7.5 to 9.5 (54 to 69)
Differential carrier to front mounting Insulator fixing bolt	6.0 to 8.0 (43 to 58)	6.0 to 8.0 (43 to 58)
Companion flange to propeller shaft fixing bolt	3.5 to 4.5 (25 to 33)	3.5 to 4.5 (25 to 33)
Side flange to drive shaft fixing nut	———	5.0 to 6.0 (36 to 43)
Flange yoke to side gear fixing bolt	3.2 to 4.3 (23 to 31)	———
Filler and drain plug	4.0 to 6.0 (29 to 43)	4.0 to 6.0 (29 to 43)

Downloaded from www.Manualslib.com manuals search engine

TROUBLE DIAGNOSES AND CORRECTIONS

When gear carrier is suspected causing noise, it is advisable to make a thorough test to determine whether the noise originates in the tires, road surface, exhaust, universal joint, propeller shaft, wheel bearings, engine, transmission, or gear carrier. Noise which originates in other places cannot be corrected by adjustment or replacement of parts in the rear axle assembly.

Condition	Probable cause	Corrective action
Noise during driving and/or coasting	Shortage of oil.	Supply gear oil. Rebuild gear carrier if necessary.
	Incorrect tooth contact between ring gear and drive pinion.	Adjust tooth contact or replace the hypoid gear set.
	Incorrect backlash between ring gear and drive pinion.	Adjust backlash or replace the hypoid gear set if necessary.
	Seized or damaged ring gear and drive pinion.	Replace the hypoid gear set.
	Seized, damaged or broken drive pinion bearing.	Replace the pinion bearing and faulty parts.
	Seized, damaged or broken side bearing.	Replace the side bearing and faulty parts.
	Loose bolts or nuts fixing ring gear, side bearing caps, etc.	Tighten to specified torque, and replace faulty parts.
Noise on turns.	Seized, damaged or broken side and pinion gears.	Replace faulty parts.
	Seized, damaged or broken side gear and pinion thrust washer.	Replace faulty parts.
	Pinion gears too tight on their shaft.	Replace faulty parts.
	Interference between side flange and differential case.	Repair the part responsible for interference, or replace the side flange and differential case.
Knocking sound during starting or gear shifting	Excessive backlash.	
	Incorrect backlash of ring gear-to-drive pinion or side gear-to-pinion gear.	Adjust backlash.
	Worn gears or case.	Replace worn parts.
	Worn side flange and side gear spline.	Replace worn parts.
	Pinion bearing under preload.	Adjust preload.
	Loose drive pinion nut.	Repair or replace.
	Loose bolts or nuts fixing ring gear, side bearing caps, etc.	Tighten or replace if necessary.
Seizure or breakage.	Shortage of oil or use of unsuitable oil.	Replace faulty parts.
	Excessively small backlash.	Adjust backlash and replace as required.
	Incorrect adjustment of bearings or gears.	Replace faulty parts.
	Severe service due to excessive loading, improper use of clutch.	Replace faulty parts.
	Loose bolts and nuts, such as ring gear bolts.	Replace faulty parts.

Downloaded from www.Manualslib.com manuals search engine

Condition	Probable cause	Corrective action
Oil leakage.	Worn-out, damaged or improperly driven front oil seal, or bruised, dented or abnormally worn slide face of companion flange.	Replace the faulty oil seal. Ammend the affected flange with sandpaper or replace if necessary.
	Worn, damaged or improperly driven side oil seal, or bruised, dented or abnormally worn slide flange.	Treat as above.
	Loose rear cover bolts.	Tighten the bolts to specified torque.
	Worn rear cover gasket.	Replace the faulty gasket with new one.
	Loose filler or drain plug..	Tighten the plug.
	Clogged or damaged breather.	Repair or replace.

Downloaded from www.Manualslib.com manuals search engine

SPECIAL SERVICE TOOLS

No.	Tool number & tool name	Description Unit: mm (in)	For use on	Reference page or Figure No.
1.	KV38100800 Gear carrier attachment	This attachment is used with engine stand (ST0501S000). 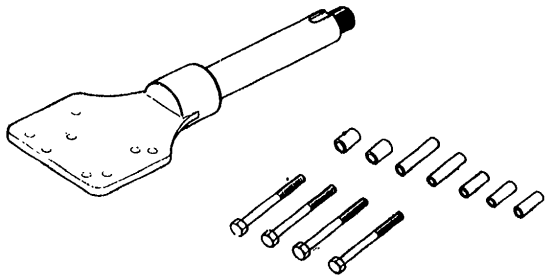 SE346	S30 610 {R160 R180 R200}	Fig. PD-3 Fig. PD-32
2.	KV31100300 Solid punch	This tool is used to drive out lock pin of pinion mate shaft. 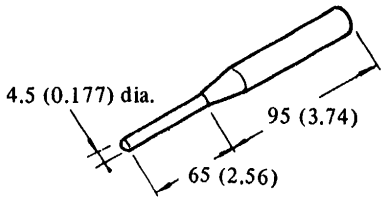 	All except B210 (except H150)	Page PD-7 Page PD-16
3.	Drive pinion outer race drift ST30611000 Bar ST30701000 Adapter	These tools are used when assembling drive pinion outer race. 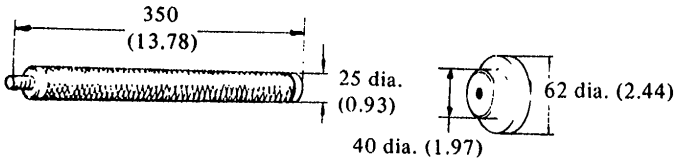 	Front B210 710 610 S30 {H150 H165B R160 R180} Rear B210 [H150]	Page PD-11
	ST30611000 Bar ST30613000 Adapter	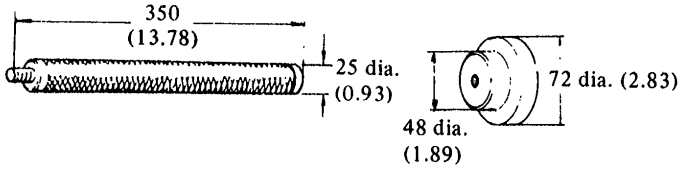 	Front S30 W610 {H190 R200} Rear 710 610 {H165B R160}	Page PD-18
	ST30611000 Bar ST30621000 Adapter	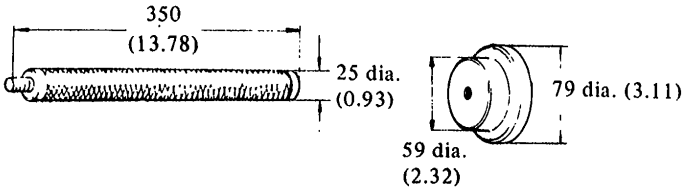 	Rear W610 620 S30 {H190 R180 R200} Side 610 S30 {R160 R180}	Page PD-11 Page PD-18

Downloaded from www.Manualslib.com manuals search engine

No.	Tool number & tool name	Description Unit: mm (in)	For use on	Reference page or Figure No.
4.	ST3090S000 Drive pinion rear bearing inner race puller set ① ST30031000 Puller ② ST30901000 Base	This assembly clamps rear bearing inner race and pulls it out by a hydraulic press. Before insertion, place another drift facing inner race, and then press-fit. 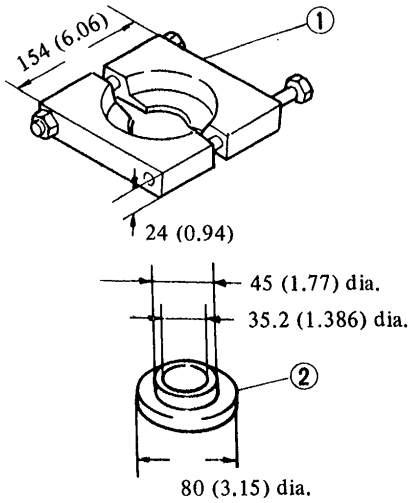 	S30 W610 620 (R180 R200 H190)	Fig. PD-6 Fig. PD-17 Fig. PD-41 Fig. PD-53
5.	ST3127S000 Preload gauge ① GG91030000 Torque wrench ② HT62940000 Socket adapter ③ HT62900000 Socket adapter	This tool is used to measure pinion bearing preload. 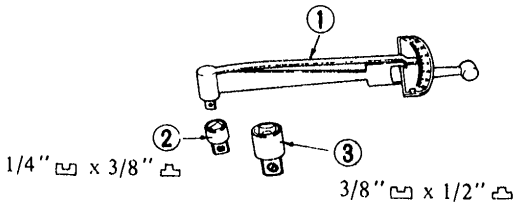 	All models	Fig. PD-13 Fig. PD-33 Fig. PD-49
6.	ST31530000 Drive pinion flange wrench	This tool is used to hold the flange to ease the operation of tightening and loosening drive pinion nut. 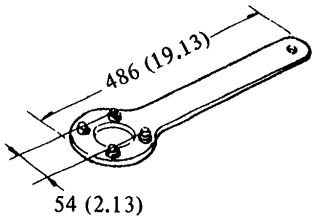 	All models	Page PD-12 Page PD-22 Fig. PD-5 Fig. PD-38
7.	ST3306S001 Diff. side bearing puller set ① ST33051001 Body ② ST33061000 Adapter	This tool is used to pull out side bearing. 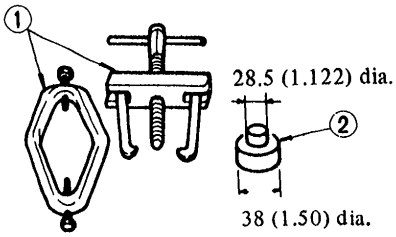 	S30 610 W610 620 (R160 R180 R200 H190)	Fig. PD-7 Fig. PD-11 Fig. PD-43 Fig. PD-47

Downloaded from www.Manualslib.com manuals search engine

No.	Tool number & tool name	Description Unit: mm (in)	For use on	Reference page or Figure No.
8.	ST33290001 Puller	This tool is used to remove side bearing outer race from retainer without damaging it. 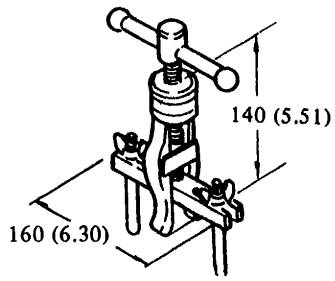 	610 S30 {R160 R180}	Page PD-22 Fig. PD-4
9.	Drive pinion setting gauge assembly ST31851000 Spacer ST31852000 Stopper ST31211000 Height gauge ST31212000 Dummy shaft ST31214000 Collar	These tools are used to adjust the pinion height. 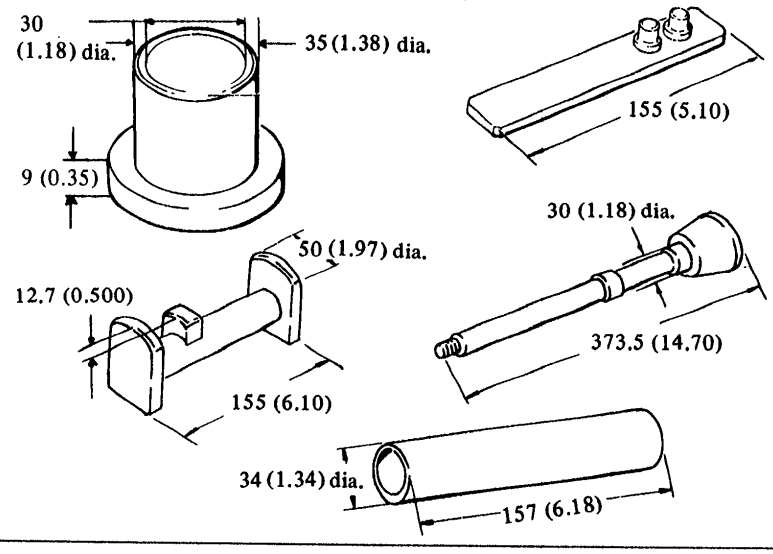 	S30 (R180)	Page PD-11 Fig. PD-12 Fig. PD-14 Fig. PD-15
10.	KV381001S0 Drive pinion setting gauge set ① KV38100110 Dummy shaft ② KV38100120 Height gauge ③ KV38100130 Collar ④ KV38100140 Stopper	These tools are used to adjust the pinion height. 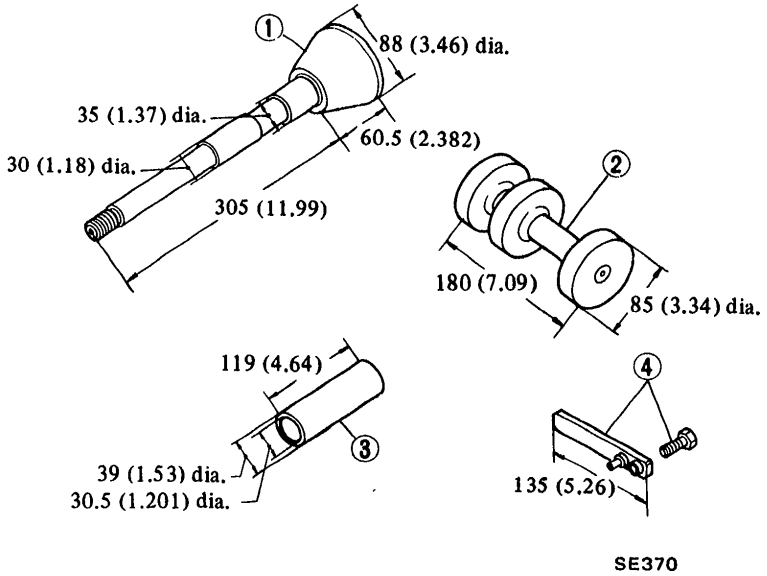 	S30 (R200)	Page PD-18 Fig. PD-48 Fig. PD-50 Fig. PD-51

Downloaded from www.Manualslib.com manuals search engine

No.	Tool number & tool name	Description Unit: mm (in)	For use on	Reference page or Figure No.
11.	ST33270000 Gear carrier oil seal drift	This tool is used when driving in oil seal. Using this drift completely eliminates the possibility of damaging oil seal. 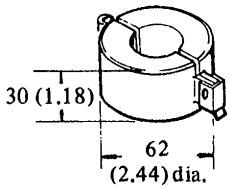 	610 S30 {R160 R180}	Page PD-8
12.	KV38100200 Gear carrier side oil seal drift	This tool is used when driving in side oil seal. Using this drift completely eliminates the possibility of damaging oil seal. 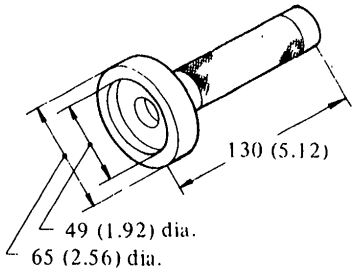 SE371	S30 (R200)	Page PD-23 Fig. PD-66
13.	ST33230000 Diff. side bearing drift	Use of this tool makes it possible to drive in bearing without damaging it. 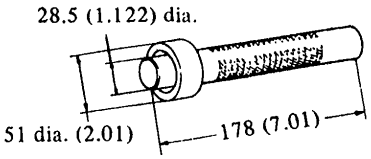 	710 610 W610 S30 620 {R160 R180 H190}	Fig. PD-11
14.	KV38100300 Diff. side bearing drift	Use of this tool makes it possible to drive in bearing without damaging it. 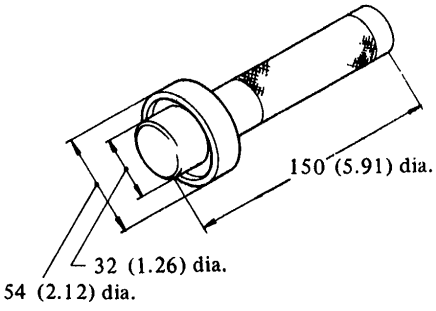 SE372	S30 (R200)	Fig. PD-47

Downloaded from www.Manualslib.com manuals search engine

No.	Tool number & tool name	Description Unit: mm (in)	For use on	Reference page or Figure No.
15.	ST30650001 Pilot bearing drift	For use when pulling out front pilot bearing. After drive pinion has been pulled, insert this tool from behind the gear carrier case, and apply it onto pinion front bearing inner race, and then press out pinion front bearing inner race, front pilot bearing spacer and pilot bearing. 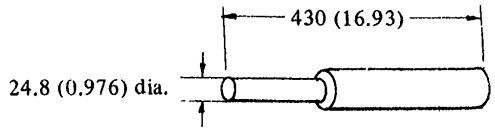 	610 S30 (R160 R180)	Page PD-6
16.	KV38100401 Pilot bearing drift	This tool is used to pull out front pilot bearing. After drive pinion has been pulled, insert this tool from behind the gear carrier case, and apply it onto pinion front bearing inner race. Then press out pinion front bearing inner race, front pilot bearing spacer and pilot bearing. 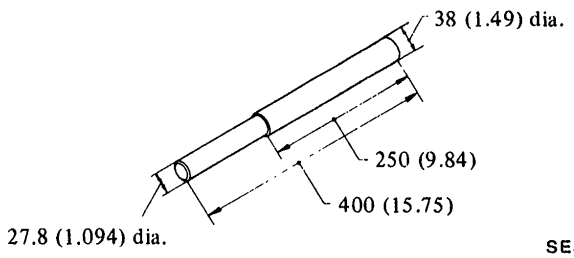 	S30 (R200)	Fig. PD-40
17.	ST30720000 Gear carrier front oil seal drift	This tool is used to drive in front oil seal without damaging it. 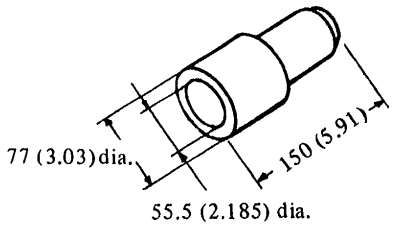 	610 S30 (R160 R180)	Page PD-10 Page PD-12
18.	KV38100500 Gear carrier front oil seal drift	This tool is used to drive in front oil seal without damaging it. 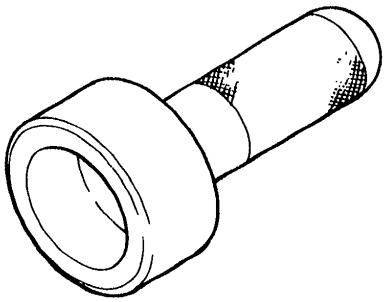 	S30 (R200)	Page PD-20 Page PD-22

Downloaded from www.Manualslib.com manuals search engine

No.	Tool number & tool name	Description Unit: mm (in)	For use on	Reference page or Figure No.
19.	KV38100600 Side bearing spacer drift	This tool is used to drive in side bearing spacer without damaging it. 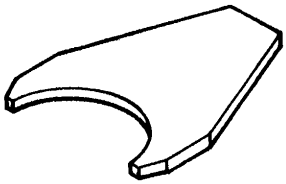 SE375	S30 [R200]	Fig. PD-58
20.	ST33720000 Gear carrier side retainer guide	This guide bolt is used when attaching retainer to gear carrier. Use of this tool prevents damaging O-ring and helps smooth the operation. 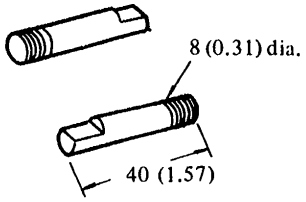 	610 S30 {R160 R180}	Fig. PD-22
21.	ST32501000 Weight block	These tools are used to measure difference in width of side bearing against standard width. 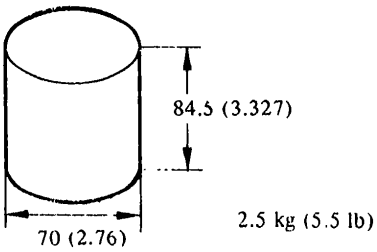 SE417	All models	Fig. PD-10 Fig. PD-46
22.	KV38101900 Master gauge	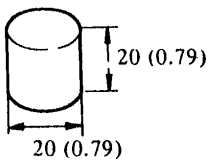 SE419	610 W610 S30 620 {R160 R180 H190}	Fig. PD-10

Downloaded from www.Manualslib.com manuals search engine

No.	Tool number & tool name	Description Unit: mm (in)	For use on	Reference page or Figure No.
23.	KV38102000 Master gauge	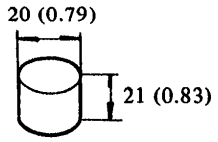 SE435	S30 [R200]	Fig. PD-46
24.	HT72400000 Slide hammer	This tool is used to lift out differential case assembly. 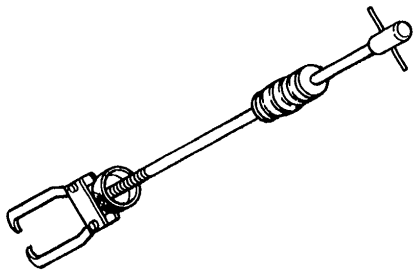 SE384	S30 [R200]	Fig. PD-37

Downloaded from www.Manualslib.com manuals search engine

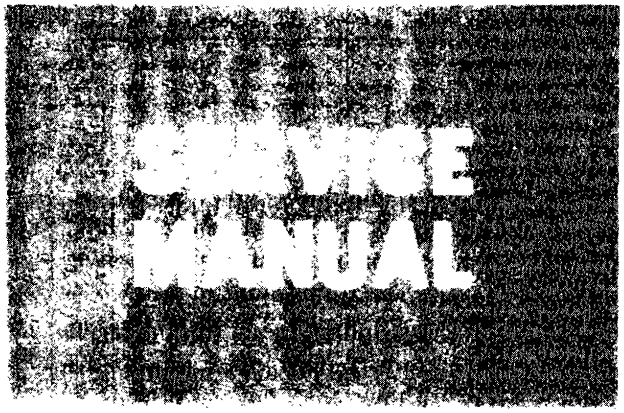

DATSUN 280Z
MODEL S30 SERIES

SECTION FA

FRONT AXLE & FRONT SUSPENSION

FA

DESCRIPTION ..... FA- 2
INSPECTION AND ADJUSTMENT ..... FA- 3
FRONT AXLE ..... FA- 5
FRONT SUSPENSION ..... FA- 7
SERVICE DATA AND SPECIFICATIONS FA-13
TROUBLE DIAGNOSES AND CORRECTIONS FA-16
SPECIAL SERVICE TOOLS FA-19

NISSAN

NISSAN MOTOR CO., LTD.
TOKYO, JAPAN

Downloaded from www.Manualslib.com manuals search engine

DESCRIPTION

All models employ a strut type front suspension in which the shock absorber and spindle are assembled into a single unit. It is supported by a coil spring at the top and by the transverse link at the bottom.

The spindle and outer casing are of an integral design. The ball joint, located at the outer end of the transverse link, serves as a pivot for the movement of the spindle.

These are assembled on the suspension member through a rubber bushing to avoid metal to metal contact.

The shock absorber is basically a double-acting hydraulic ram consisting mainly of an outer casing, an inner casing, a piston and a piston rod.

The gland packing and piston guide keep the rod in place and prevent leakage, and dust cover keeps out mud and water.

The coil spring is placed on the piston rod with its seat on the bottom.

The seat is welded to the outer casing. These are mounted on the chassis frame through the thrust bearing at the top. The transverse link, compression rod and rubber bushing take thrusts from front and rear.

The stabilizer uses a torsion bar; it takes thrusts from either side of the car. Thus, the entire suspension handles thrusts from any angle: i.e. those from front and rear by the compression rod, those in a vertical direction with the strut, and those from either side of the car by means of the transverse link.

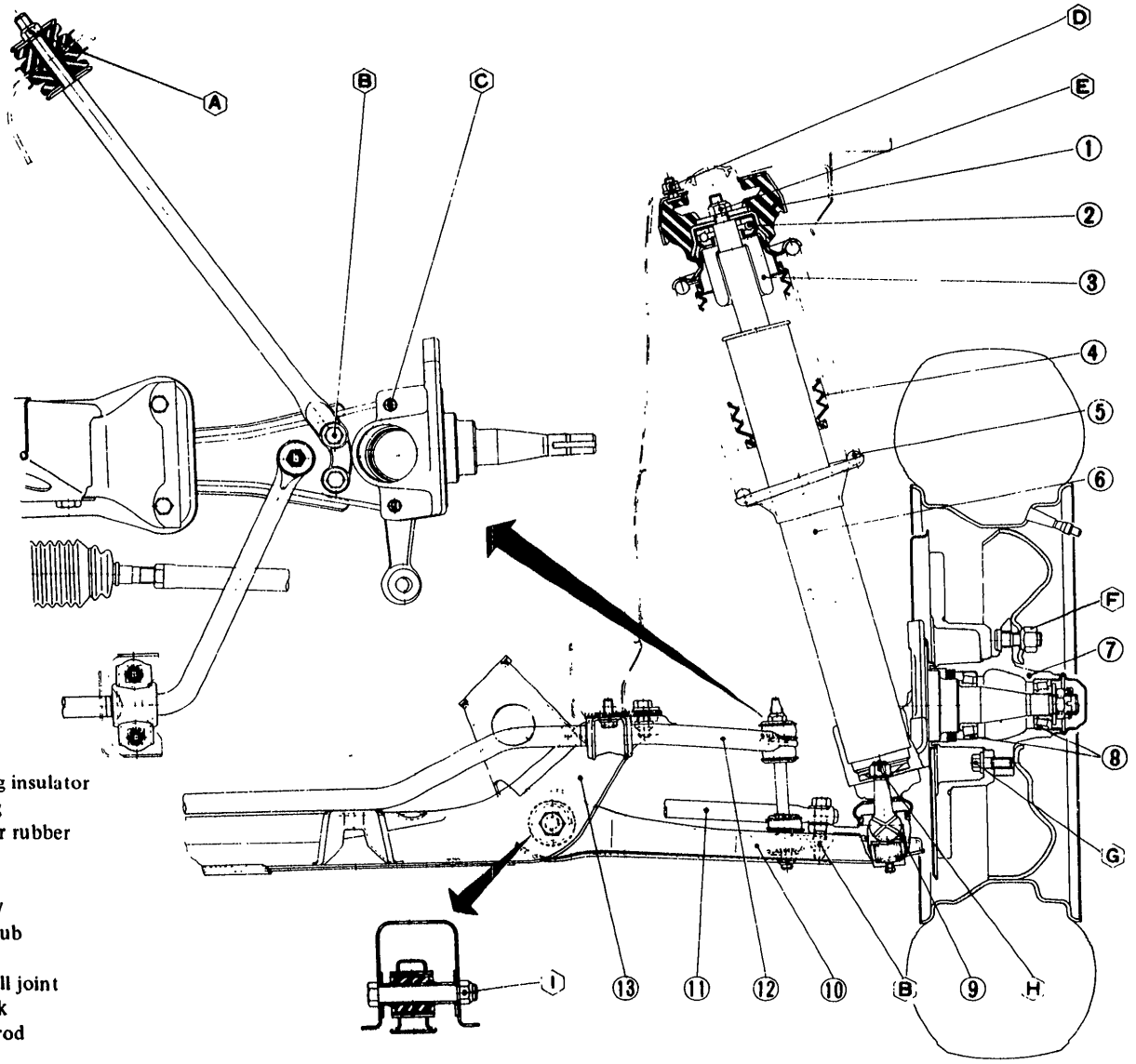

1 Strut mounting insulator
2 Thrust bearing
3 Bound bumper rubber
4 Dust cover
5 Coil spring
6 Strut assembly
7 Front wheel hub
8 Wheel bearing
9 Suspension ball joint
10 Transverse link
11 Compression rod
12 Stabilizer bar
13 Front suspension member

Tightening torque (T) of bolts and nuts kg-m (ft-lb)

Ⓐ T : 4.5 to 5.5 (33 to 40)
Ⓑ T : 6.1 to 7.1 (44 to 51)
Ⓒ T : 7.3 to 10.0 (53 to 72)
Ⓓ T : 2.5 to 3.5 (18 to 25)
Ⓔ T : 7.5 to 9.5 (54 to 69)
Ⓕ T : 8 to 9 (58 to 65)
Ⓖ T : 3.9 to 5.3 (28 to 38)
Ⓗ T : 5.5 to 7.5 (40 to 54)
Ⓘ T : 11.1 to 14.0 (80 to 101)

Fig. FA-1 Front axle and suspension assembly

Downloaded from www.Manualslib.com manuals search engine

INSPECTION AND ADJUSTMENT

CONTENTS

INSPECTION FA-3
SUSPENSION PARTS FA-3
ADJUSTMENT FA-3
WHEEL BEARING FA-3
WHEEL ALIGNMENT FA-4
CAR LEVEL FA-4

INSPECTION

Periodically inspect in accordance with the specified maintenance schedule.

SUSPENSION PARTS

1. Jack up the front of car until front wheels clear the floor.
2. Shaking each front wheel by grasping the upper and lower surfaces of tire, check suspension parts for looseness, wear, or damage. Tighten all loose bolts and nuts to the specified torque. Replace all worn parts as described under "Front Suspension".
3. Check wheel bearings. If any axial end-play is present, adjust bearings to specifications. Replace worn or damaged bearings as described under "Front Axle".
4. Check shock absorbers assembled into strut. If these are not in good condition, car posture and wheel alignment may be affected.

ADJUSTMENT

WHEEL BEARING

Improper adjustment of wheel bearings causes abnormal wear and score on the bearings and knuckle spindle.

To obtain proper preload on wheel bearings, proceed as follows:

Note: **In order to assure correct bearing preload and to extend service life of wheel bearings, be sure to prevent dirt and foreign particles from getting in bearings, grease seal and spindle nut.**

1. Jack up and support car with stands. See the section GI.
2. Remove pad. Refer to section BR for "Pad Replacement".
3. Tighten wheel bearing lock nut to 2.5 to 3.0 kg-m (18 to 22 ft-lb) torque. See Figure FA-2.

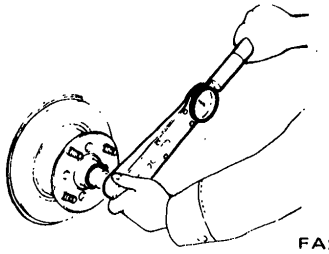

FA263

Fig. FA-2 Tightening wheel bearing lock nut

4. Rotate wheel hub a few turns in both directions to seat wheel bearing correctly. Then, retighten spindle nut to the above torque.
5. Loosen wheel bearing lock nut 60 degrees. Install adjusting cap and align groove of nut with hole in spindle. If groove does not align with hole, relocate adjusting cap. If the hole and groove still do not come into alignment, loosen wheel bearing lock nut as much as 15 degrees more.

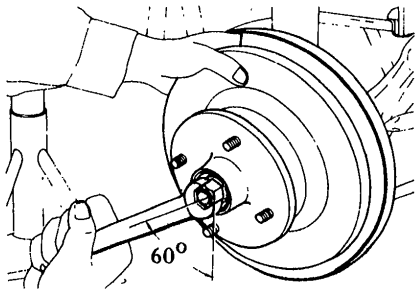

FA456

Fig. FA-3 Loosen wheel bearing lock nut 60°

6. Again spin wheel hub several turns in both directions to see if it rotates freely. Then, measure bearing preload using a spring balance as follows:

Wheel bearing rotation starting torque:

New parts: 4.0 to 8.5 kg-cm (3.5 to 7.4 in-lb)
As measured at wheel hub bolt: 0.7 to 1.5 kg (1.5 to 3.3 lb)

Adjustment with old parts: 1.0 to 4.5 kg-cm (0.9 to 3.9 in-lb)
As measured at wheel hub bolt with old parts: 0.2 to 0.8 kg (0.4 to 1.8 lb)

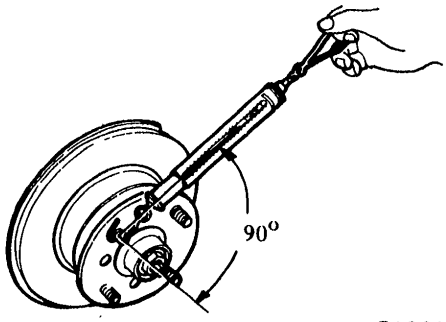

FA264

Fig. FA-4 Measuring wheel bearing rotation starting torque

Repeat above procedures until correct preload is obtained.

Notes:

a. **To measure bearing preload, attach a spring balance to hub bolt and pull it at right angle to a line drawn through center of bearing and hub bolt to which it is attached.**
b. **The slightest shaft play cannot be tolerated here.**

7. Insert a new cotter pin with the legs through adjusting cap and spindle, and spread legs away from each other against sides of adjusting cap to secure the installation. See Figure FA-5.

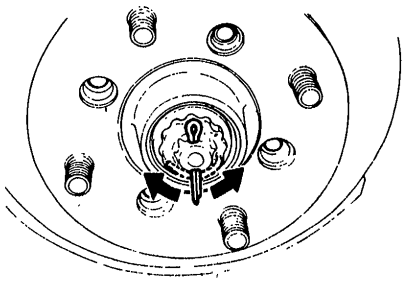

FA457

Fig. FA-5 Installing cotter pin

Downloaded from www.Manualslib.com manuals search engine

8. Install hub cap.

WHEEL ALIGNMENT

Correct front wheel alignment assures proper vehicle handling characteristics and minimum steering effort with the least amount of tire wear.

Before adjusting front wheel alignment, be sure to carry out a preliminary inspection of the front end parts as follows:

1. Tire pressure
2. Wheel bearings and spindle nuts
3. Steering gear play
4. Steering gear housing (loose at suspension member.).
5. Steering linkage and connections
6. Shock absorber action

When using the equipment for front wheel alignment inspection, follow the instructions furnished with the equipment. Moreover, the inspection should be made with the car set level and at curb weight.

Camber and caster

Camber and caster are preset at factory and cannot be adjusted.

Car requires only toe-in and leveling adjustments.

Toe-in

1. Measure toe-in with a toe-in gauge. See Figure FA-6.

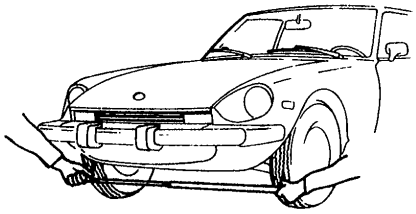

FA467

Fig. FA-6 Measuring toe-in

2. Loosen side rod lock nut ①, and adjust length of side rod ② properly to the standard value. See Figure FA-7.

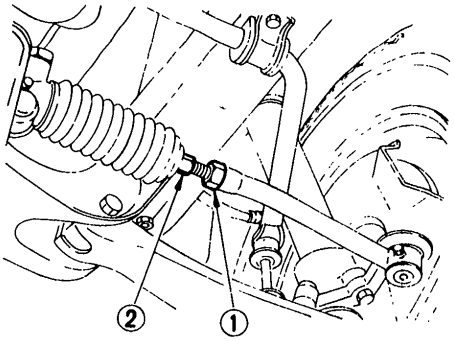

FA452

Fig. FA-7 Adjusting toe-in

Notes:

a. Distance between centers of side rods at any point should be equal.

Standard length of side rod: 37.9 mm (1.492 in)

See Figure FA-8.

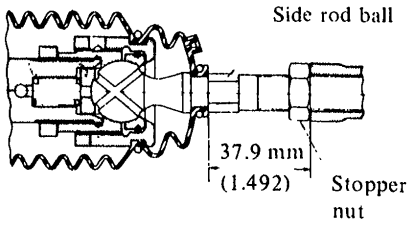

ST447

Tightening torque:
8 to 10 kg-m (58 to 72 ft-lb)

Fig. FA-8 Standard length of side rod

b. When steering gear housing is removed, be sure to adjust the steering angle at side rod unit with a turning radius gauge after installation.

c. Adjust toe-in after steering angle adjustment.

d. When adjusting toe-in, be sure to move the left and right side rods equally.

e. When steering angle is incorrect, disassemble rack and pinion because incorrectly assembled rack and pinion cause improper steering angle.

f. Side rod lock nut end surface comes into contact with steering gear housing end forming a steering stopper.

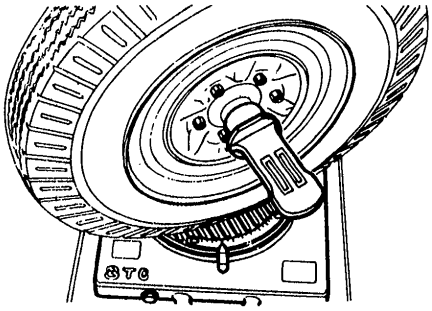

FA032

Fig. FA-9 Measuring steering angle, camber and caster

CAR LEVEL

Adjustment can be made by selecting spring which will keep car in a normal, level position.

	S30	GS30 (2 + 2 seater)
Toe-in mm (in)	0 to 3 (0 to 0.118)	0 to 3 (0 to 0.118)

Downloaded from www.Manualslib.com manuals search engine

FRONT AXLE

CONTENTS

FRONT AXLE FA-5
REMOVAL FA-5
INSPECTION FA-5
INSTALLATION FA-6

FRONT AXLE

REMOVAL

1. Jack up car until wheel drops to full down position.

Remove wheels and disconnect brake tube. See Figure FA-10.

2. Remove bolts retaining brake caliper and take out caliper assembly. See Figure FA-10.

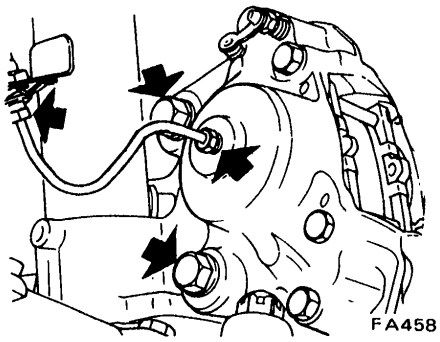

Tightening torque:

Brake tube flare nut
1.5 to 1.8 kg-m (11 to 13 ft-lb)
Caliper fixing bolt
7.3 to 9.9 kg-m (53 to 72 ft-lb)

Fig. FA-10 Removing brake tube and caliper fixing bolts

3. Work off hub cap from end of spindle using two screwdrivers or any other suitable tool as shown in Figure FA-11. If necessary, tap around it with a soft hammer while removing cap.

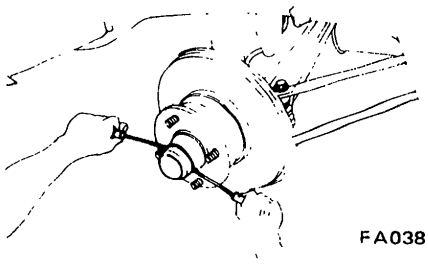

Fig. FA-11 Removing hub cap

Note: During this operation, use caution to avoid damaging O-ring.

4. Pry off cotter pin; take out adjusting cap and wheel bearing lock nut.

5. Remove wheel hub from spindle with bearing installed.

6. Wheel hub may be removed together with disc rotor.

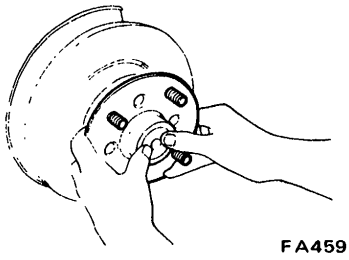

Fig. FA-12 Removing wheel hub

7. Utilizing two grooves inside hub, drive out wheel bearing outer race from hub with a brass drift.

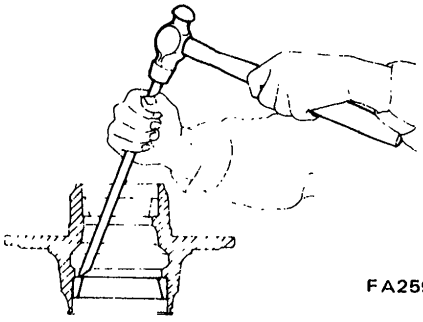

Fig. FA-13 Removing wheel bearing outer race

8. Loosen four bolts securing brake disc in position; remove disc brake rotor from wheel hub assembly.

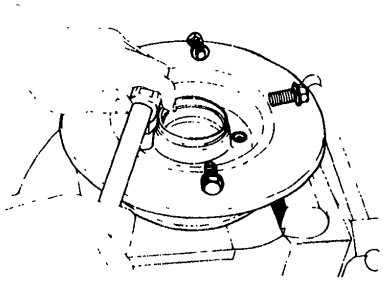

Tightening torque:
3.9 to 5.3 kg-m (28 to 38 ft-lb)

Fig. FA-14 Removing disc brake rotor

9. Loosen screws securing baffle plate in position; take out baffle plate.

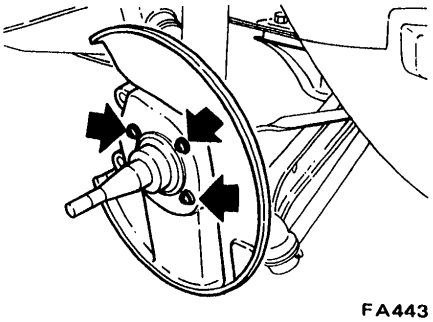

Tightening torque:
0.32 to 0.44 kg-m (2.3 to 3.2 ft-lb)

Fig. FA-15 Removing baffle plate screws

INSPECTION

Wheel hub

Check hub for cracks by means of a magnetic exploration or dyeing test, and replace if cracked.

Grease seal

Replace grease seal every disassembly even if it appears good.

Wheel bearing

Thoroughly clean grease and dirt from wheel bearing with cleaning solvent, and dry with compressed air free of moisture. Check wheel bearing to see that it rolls freely and is free from noise, crack, pitting, or wear. Also, check condition of outer race. Removal of outer race from hub is not necessary.

Downloaded from www.Manualslib.com manuals search engine

INSTALLATION

Install front axle in the reverse order of removal, noting the following:

1. Install baffle plate to knuckle spindle, tighten screws to 0.32 to 0.44 kg-m (2.3 to 3.2 ft-lb).
2. Install disc brake rotor to wheel hub, tighten to 3.9 to 5.3 kg-m (28 to 38 ft-lb).
3. Install bearing outer race with Front Wheel Bearing Drift ST35300000.

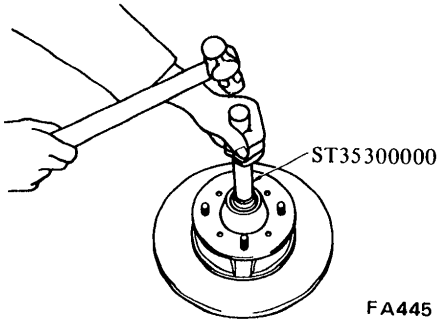

Fig. FA-16 Installing wheel bearing outer race

4. Pack the inside of hub and hub cap with recommended multi-purpose grease to the specified level. See Figure FA-17.

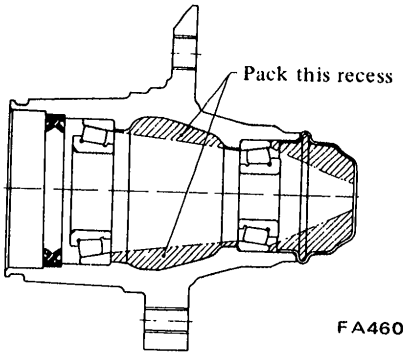

Fig. FA-17 Lubricating points of wheel hub

5. Pack cavities of each bearing cone and grease seal lip pocket with grease.

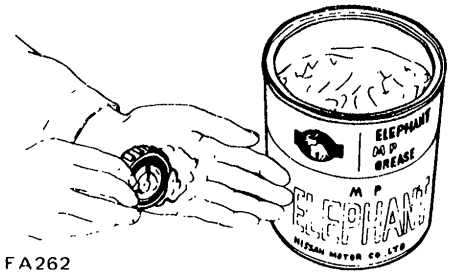

Fig. FA-18 Filling bearing cone with grease

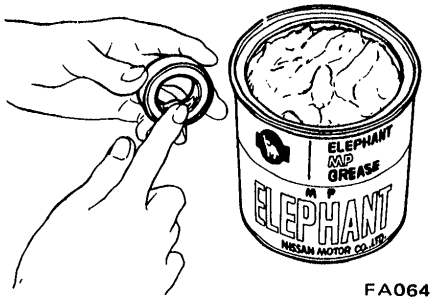

Fig. FA-19 Filling grease seal lip pocket with grease

6. Put inner bearing cone in hub and install a new grease seal. Be sure to lubricate sealing lips of the grease seal before installation.
7. Put hub assembly on spindle and then install outer bearing cone.
8. Apply sparingly grease to washer and threaded parts of spindle and spindle nut. Then, install washer and spindle nut. Adjust the installation as outlined under "Wheel Bearing Adjustment".

Note: **In order to assure correct bearing preload and to extend service life of wheel bearings, be sure to avoid dirt and foreign particles getting in bearings, grease seal, washer and spindle nut.**

9. Install caliper and connect brake tube.
10. After lowering car to the ground, tighten wheel nut, bleed brake system.

Downloaded from www.Manualslib.com manuals search engine

FRONT SUSPENSION

CONTENTS

SPRING AND STRUT ASSEMBLY ..... FA- 7
DESCRIPTION ..... FA- 7
REMOVAL ..... FA- 8
DISASSEMBLY ..... FA- 8
INSPECTION ..... FA- 9
ASSEMBLY ..... FA- 9
INSTALLATION FA-10
COMPRESSION ROD AND STABILIZER BAR . FA-11
REMOVAL FA-11
INSPECTION FA-11
INSTALLATION FA-11
TRANSVERSE LINK AND LOWER BALL JOINT FA-11
REMOVAL FA-11
INSPECTION FA-12
INSTALLATION FA-12
SUSPENSION CROSSMEMBER FA-12
REMOVAL FA-12
INSPECTION FA-13
INSTALLATION FA-13

SPRING AND STRUT ASSEMBLY

DESCRIPTION

The front suspension employs struts, right and left. Each strut consists of an outer casing, a piston, a piston rod and an inner cylinder.

The cylinder incorporates a piston rod guide at the top and a check valve at the bottom.

The piston rod, piston rod guide, cylinder and bottom valve should be handled as a matched set.

If any of these parts becomes faulty, all the parts must be replaced as a unit.

The spring comes in few types with individual markings.

When a spring requires replacement, use the one having the same color identification. If this is not done, the car may not settle in a normal level posture.

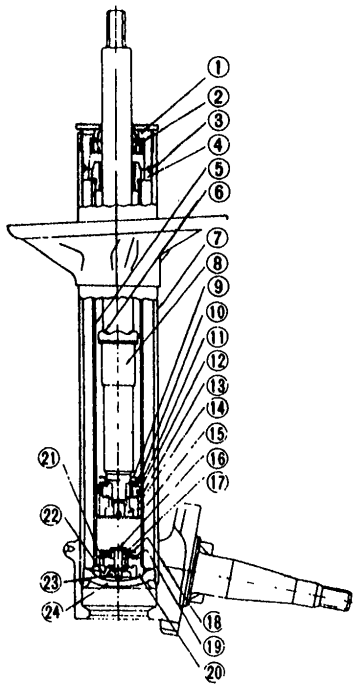

1 Gland packing assembly
2 Oil seal
3 O-ring
4 Piston rod guide assembly
5 Cylinder
6 Rebound stopper
7 Strut-outer casing
8 Piston rod
9 Check valve spring retainer
10 Check valve spring
11 Check valve plate
12 Piston ring
13 Valve plate
14 Piston body
15 Nut
16 Bolt
17 Distance collar
18 Spring retainer
19 Check valve spring
20 Bottom valve body
21 Check valve plate
22 Valve plate
23 Nut
24 Bottom plate

Shock absorber operation

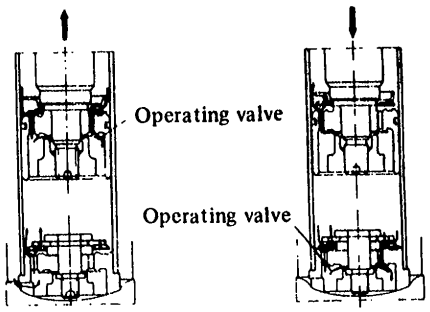

FA268

Fig. FA-20 Sectional view of strut assembly

Downloaded from www.Manualslib.com manuals search engine

REMOVAL

1. Jack up car and support it with safety stands. Remove wheel.
2. Loosen brake tube, remove brake hose locking spring, withdraw plate, and remove brake hose from strut assembly bracket.

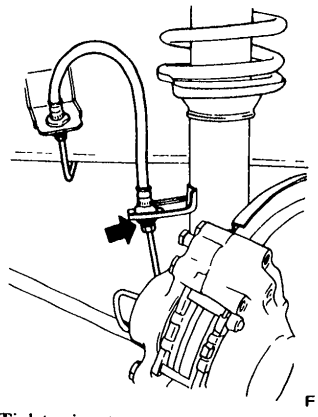

Tightening torque:

1.5 to 1.8 kg-m (11 to 13 ft-lb)

Fig. FA-21 Disconnecting brake hose

3. Loosen bolts retaining caliper in place; take out caliper as an assembled unit.
4. Remove bolts connecting strut to knuckle arm. See Figure FA-22.

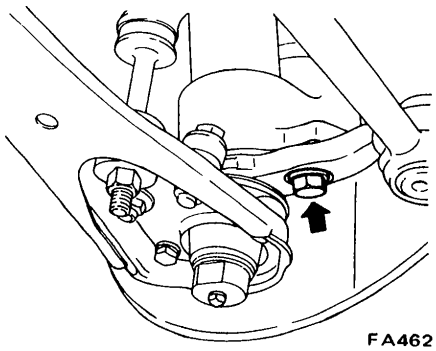

Tightening torque:

7.3 to 10.0 kg-m (53 to 72 ft-lb)

Fig. FA-22 Removing bolts connecting knuckle arm

6. Detach knuckle arm from bottom of strut. This can be done by forcing transverse link down with a suitable bar.
7. Place jack under strut to receive its weight when nuts are removed.
8. Lift engine hood to gain access to nuts holding strut in place on car body. See Figure FA-23.

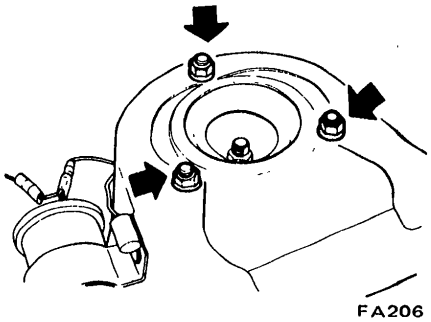

Tightening torque:

2.5 to 3.5 kg-m (18 to 25 ft-lb)

Fig. FA-23

9. With springs attached, lower jack slowly while holding strut by hand; take out strut.

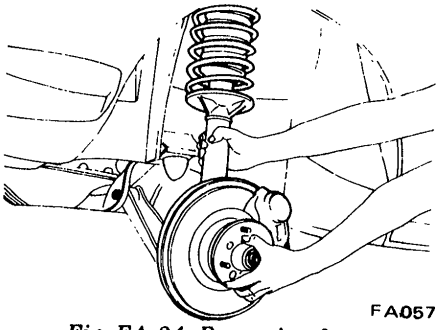

Fig. FA-24 Removing front strut Assembly

DISASSEMBLY

When disassembling a strut, caution should be exercised to prevent dirt and dust from getting inside strut. This dirt and dust is extremely abrasive and, if permitted to enter strut, causes internal leaks and premature wear of moving parts.

1. Install attachment on bottom of strut; secure above assembly in jaws of a suitable vise. See Figure FA-26.
2. Pry snap ring off dust cover.
3. Set up Spring Compressor ST3565S001 on spring. Compress spring just far enough to permit turning of strut insulator by hand. Remove self-locking nut. See Figure FA-25.

Note: When loosening self-locking nut, use a screwdriver as a shifter. Moreover, when loosening self-locking nut (used to hold down spring), install a nut on bolt (used to install strut on the body) and apply screwdriver to nut so that the thread of bolt is not damaged.

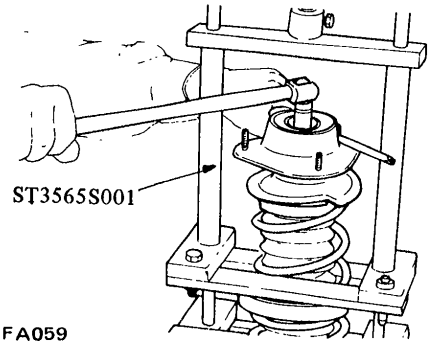

Fig. FA-25 Removing self-locking nut

4. Take out strut insulator, strut bearing, oil seal, upper spring seat and bound bumper rubber in the order listed.
5. Remove spring from strut with Spring Compressor ST3565S001 left on spring.
6. Retract piston rod by pushing it down until it bottoms. Without disturbing the above setting, remove gland packing with Gland Packing Wrench KV40100800. See Figure FA-26.

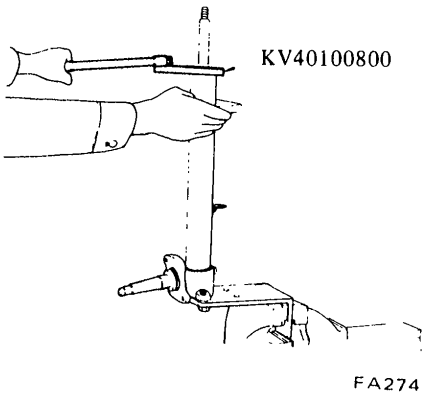

Fig. FA-26 Removing gland packing

Note: Clean gland packing of mud and other accumulated foreign particles.

7. Remove O-ring from top of piston rod guide.
8. Lift out piston rod together with cylinder. See Figure FA-27.

Downloaded from www.Manualslib.com manuals search engine

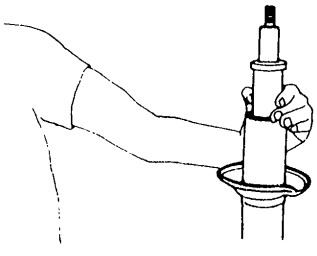

Fig. FA-27 Removing piston rod and cylinder

Note: **Under no circumstances should piston and piston rod guide be removed from cylinder since these are adjusted to each other to provide precision mating surfaces and should be handled as a matched set.**

9. Drain fluid thoroughly from inner cylinder. Use a suitable container to receive fluid drained.
10. Wash all parts in cleaning solvent.
11. Drain fluid which collects inside outer casing thoroughly.

Note: **This operation is very important since performance of strut varies with amount of fluid initially filled.**

INSPECTION

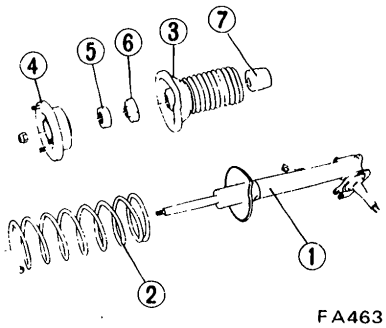

1	Strut assembly	5	Thrust bearing
2	Coil spring	6	Dust seal
3	Spring upper seat	7	Bound bumper rubber
4	Strut mounting insulator		

Fig. FA-28 Exploded view of strut assembly

1. Replace gland packing, O-ring and fluid with new ones or fresh oil whenever strut is disassembled.
2. Wash all parts, except for non-metalic parts, with solvent and dry with compressed air.
3. Blow dirt and dust off of non-metalic parts using compressed air.

- **Outer casing**
  Check outer casing for evidence of deformation, cracking or other damage. If necessary, replace.
- **Spindle**
  Check spindle for hair cracks on base and damaged threads. Replace strut if any of above conditions exceed limits.
- **Strut mounting insulator**
  Replace if rubber and metal joints are melted or cracked. Rubber parts should be replaced if deteriorated.
- **Thrust bearing**
  Replace if inspection reveals abnormal noise or excessive rattle in axial direction.
- **Front coil spring**
  Replace if weakened or cracked.

ASSEMBLY

When assembling strut, be careful not to drop or scratch parts since they are precisely machined to very close tolerances. Before assembly, clean away all dirt to prevent any possible entry of dirt into strut.

1. Set attachment in place on bottom of strut and place attachment in jaws of a suitable vise.
2. Install piston rod and cylinder into place in outer casing.
3. Pour correct amount of fluid into outer casing. See Figure FA-29.

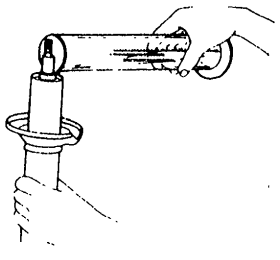

Fig. FA-29 Filling outer casing with fluid

Notes:

a. **It is important that correct amount of fluid be poured into strut to assure correct damping force of shock absorber.**

Amount of oil:
340 cc (20.7 cu in)

b. **Use Nissan genuine shock absorber oil "NISSAN GENUINE STRUT OIL" or equivalent.**

4. Place rod guide on top of piston rod guide; install gland packing using Gland Packing Guide ST35540000. See Figure FA-30.

Lubricate sealing lip, asterisked in Figure FA-31, with recommended multi-purpose grease.

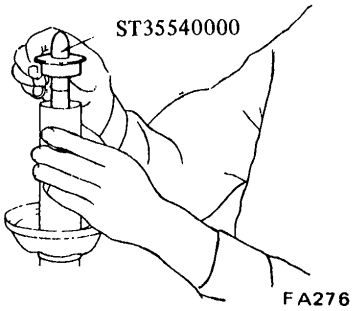

Fig. FA-30 Installing gland packing

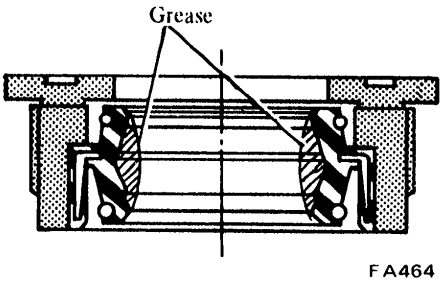

Fig. FA-31 Sectional view of gland packing

5. Tighten gland packing to 7 to 13 kg-m (51 to 94 ft-lb) torque. See Figure FA-32.

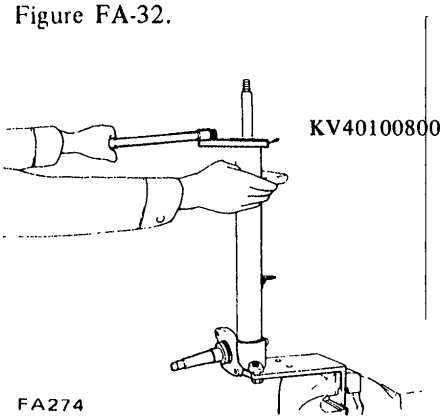

Fig. FA-32 Tightening gland packing

Downloaded from www.Manualslib.com manuals search engine

Notes:

a. When tightening gland packing, it is important that piston rod be extended approximately 120 mm (4.72 in) from end of outer casing to expel most of air out of strut.

b. Gland packing should be tightened to 7.0 to 13.0 kg-m (51 to 94 ft-lb) torque with the aid of Gland Packing Wrench KV40100800. When doing so, the amount of torque to be read beneath wrench needle should be modified according to the following formula:

$$C\ \text{kg-m} = 7 \times \left(\frac{\ell}{\ell + 0.10}\right) \text{ or}$$

$$C\ \text{ft-lb} = 51 \times \left(\frac{\ell}{\ell + 0.33}\right)$$

Where,

C ..Value read on the torque wrench [kg-m (ft-lb)]

ℓ..Effective length of torque wrench [m (ft)]

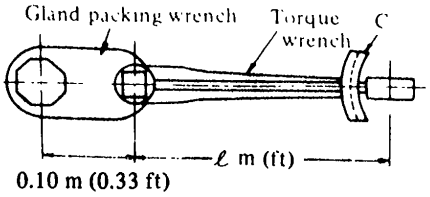

FA278

Fig. FA-33 Gland packing wrench

6. After the above steps have been completed, air should be removed from shock absorber system in the following manner.

(1) Hold strut by hand with its spindle end facing down; without disturbing the above setting, pull out piston rod completely. Then, turn strut upside down so that spindle end is now facing up. Under this condition, retract piston rod all the way. See Figure FA-34.

(2) Repeat the above procedure several times so that air will be completely bled from strut.

(3) If, during the above step, equal pressure is felt through the hand gripping piston rod on both strokes, it is an indication that air has been completely expelled from strut.

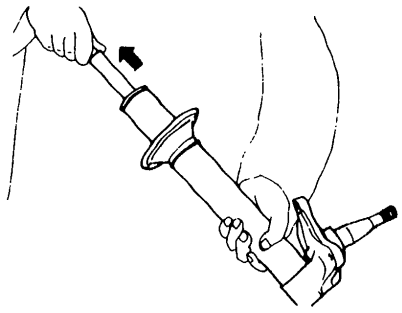

FA279

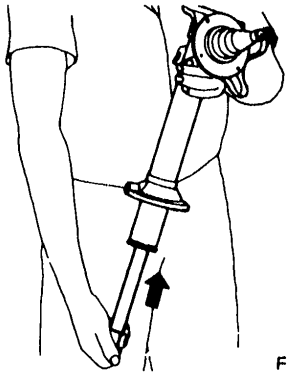

FA280

Fig. FA-34 Bleeding air from strut

7. Place attachment in jaws of a vise.

8. Before proceeding any further, pull piston rod all the way out to the limit of its stroke; install bound bumper rubber to prevent piston rod from falling by its own weight.

9. Place front spring on lower spring seat and compress spring with Spring Compressor ST3565S000.

Install dust cover, upper spring seat, mounting bearing and insulator in the order listed.

10. Lubricate parts, indicated by arrow in Figure FA-35, with recommended multi-purpose grease.

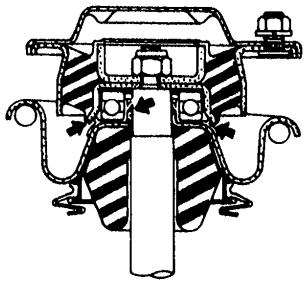

FA281

Fig. FA-35 Strut mounting bearing greasing point

Notes:

a. Use care to avoid damaging piston rod during disassembly and assembly. Do not use pliers or the like to extract piston rod.

b. Install mounting bearing so that it points in correct direction. See Figure FA-35.

11. Tighten piston rod self-locking nut to 7.5 to 9.5 kg-m (54 to 69 ft-lb) torque.

Note: Use new self-locking nuts whenever strut assembly is reassembled.

12. After placing spring in position (Figure FA-36) between upper and lower spring seats, release compressor gradually.

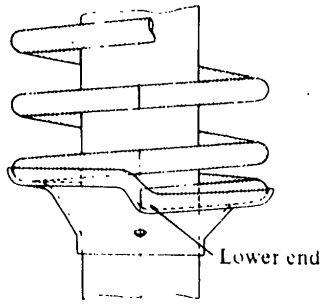

FA282

Fig. FA-36 Installing front spring

13. Raise bound bumper rubber to upper spring seat.

INSTALLATION

Install the strut and spring assembly in the reverse order of removal.

Tightening torque:

Nuts used to install the strut assembly on the body:

2.5 to 3.5 kg-m
(18 to 25 ft-lb)

Bolts used to install the knuckle arm to strut:

7.3 to 10.0 kg-m
(53 to 72 ft-lb)

Downloaded from www.Manualslib.com manuals search engine

COMPRESSION ROD AND STABILIZER BAR

REMOVAL

1. Jack up car and support it with safety stands; remove wheel.
2. Remove splash board.
3. Back off nut ① securing compression rod to bracket, and remove bolts ② which secure compression rod to transverse link. Compression rod can then be taken out.
4. Remove nut ③ connecting stabilizer connecting rod to transverse link.
5. Take out bolts ④ securing stabilizer bracket in position. Remove stabilizer from car frame. See Figure FA-37.

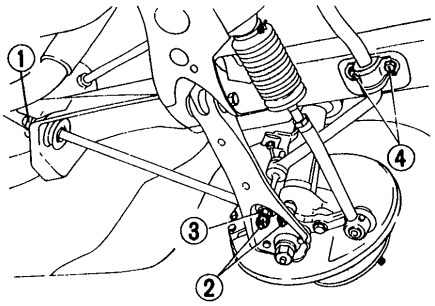

FA465

Fig. FA-37 Removing stabilizer and compression rod

INSPECTION

1. Check compression rod and stabilizer for evidence of deformation and cracking; if necessary, replace.
2. Check rubber parts such as compression rod and stabilizer bushings to be sure they are not deteriorated or cracked.

INSTALLATION

Install compression rod and stabilizer bar in the reverse order of removal, noting the following:

1. Ensure that stabilizer is correctly installed to the portion of the left and right sides.
2. Check to be sure that compression rod bushing is properly centered in its seat.

Tightening torque:

Nut used to install compression rod on transverse link:
6.1 to 7.1 kg-m
(44 to 51 ft-lb)

Stabilizer installation bolts

Transverse link side:
1.2 to 2.7 kg-m
(9 to 20 ft-lb)

Frame bracket side:
1.9 to 2.5 kg-m
(14 to 18 ft-lb)

Connecting rod side:
1.2 to 2.7 kg-m
(9 to 20 ft-lb)

TRANSVERSE LINK AND LOWER BALL JOINT

The transverse link is connected to the suspension member through a rubber bushing and to the strut through a ball joint.

The lower ball joint is assembled at the factory and cannot be disassembled. Lubricate ball joints with recommended multi-purpose grease at specified intervals.

REMOVAL

1. Jack up car and support it with safety stands; remove wheel.
2. Remove splash board.
3. Pry cotter pin off side rod ball joint socket. Remove castle nut and separate side rod socket from knuckle arm, using Ball Joint Puller HT72520000. For details, refer to ST section.
4. Loosen bolts holding knuckle arm in place. Separate knuckle arm from bottom end of strut. For details, refer to "Spring and Strut Assembly".
5. Remove compression rod and stabilizer bar.

For details, refer to "Compression Rod and Stabilizer Bar" section.

6. Loosen transverse link mounting bar and separate transverse link from suspension member.

Remove transverse link with suspension ball joint and knuckle arm. See Figures FA-38 and FA-39.

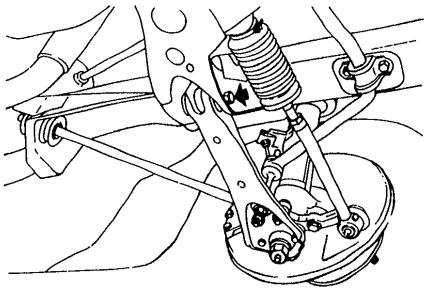

FA466

Fig. FA-38 Removing transverse link

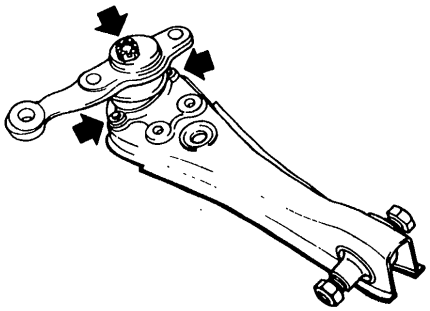

FA448

Fig. FA-39 Removing knuckle arm

Note: Knuckle arm is taper-fit to ball joint. If knuckle arm can not be easily removed, screw nut onto threaded portion of ball stud and hammer on top of nut.

7. Place transverse link in a vise, loosen bolt securing ball joint to transverse link and remove ball joint from transverse link.
8. Withdraw transverse link bushing from transverse link using Front Transverse Link Bushing Replacer Set ST36710000 and a press.

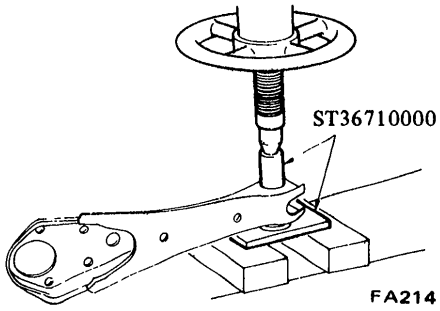

FA214

Fig. FA-40 Removing transverse link bushing

Downloaded from www.Manualslib.com manuals search engine

INSPECTION

Transverse link

1. Check for signs of cracks, distortion or other damage. Replace if any of above conditions are beyond repair.
2. If rubber bushing shows evidence of cracking, replace with a new one.

Ball joint

1. Ball joint is assembled at factory and cannot be disassembled. Check ball stud turning torque with nut in place.

Turning torque:

New parts	75 to 125 kg-cm (65 to 109 in-lb)
Used parts	More than 50 kg-cm (43 in-lb)

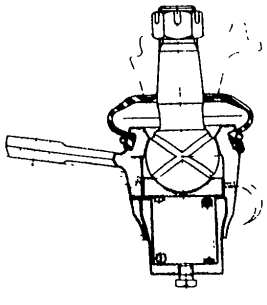

Fig. FA-41 Sectional view of lower ball joint

2. Check conditional dust cover. If found to be cracked excessively beyond use, replace ball joint with a new one.
3. At specified intervals, lubricate ball joint with recommended multi-purpose grease.

To lubricate, remove plug and install grease nipple in its place.

Pump grease slowly until old grease is completely forced out. After greasing, reinstall plug.

Note: When a high-pressure grease gun is used, operate the grease gun carefully so that grease is injected slowly and new grease does not come out from the clamp portion.

INSTALLATION

Install transverse link and lower ball joint in reverse sequence of removal, noting the following:

1. When installing transverse link bushing, use the special tool ST36710000, and fit it until transverse link bushing outer tube end surface is made flush with the transverse link end surface. Carefully align bushing direction correctly (front and rear). See Figure FA-42.

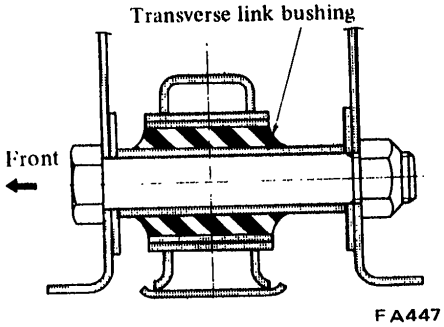

Fig. FA-42 Sectional view of transverse link bushing

2. When installing knuckle arm to ball joint, wipe off any grease on the tapered and threaded portions. Tighten nut to 5.5 to 7.5 kg-m (39.8 to 54.2 ft-lb) torque.

Align cotter pin hole with nut groove by retightening nut within the range of 60 degrees. Insert new cotter pin in hole and spread pin legs to secure the installation. See Figure FA-43.

Tightening torque:

Ball joint bolt:
1.9 to 2.5 kg-m
(13.7 to 18.0 ft-lb)

Ball joint castle nut:
5.5 to 7.5 kg-m
(39.8 to 54.2 ft-lb)

Transverse link mounting bolt:
11.1 to 14.0 kg-m
(80 to 101 ft-lb)

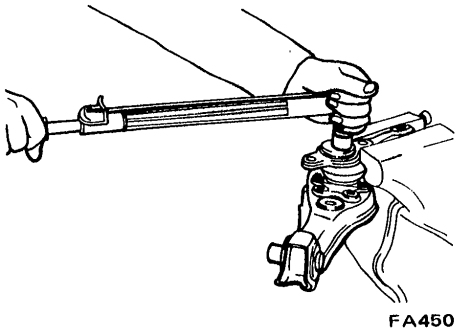

Fig. FA-43 Tightening knuckle arm castle nut

3. First, tighten transverse link mounting bolt temporarily, and then tighten to the rated torque with the car under the standard load.

SUSPENSION CROSSMEMBER

REMOVAL

1. Jack up car and support it with safety stands: remove wheels.
2. Remove splash board.
3. Remove steering gear box from suspension member. Refer to section ST.
4. Remove transverse link. For details, refer to "Transverse Link and Lower Ball Joint".
5. With an overhead hoist and lifting cable, support weight of engine to remove load from mountings.
6. Remove engine mounting bolts and nuts indicated by arrows in the sketch below. Separete suspension crossmember from engine.

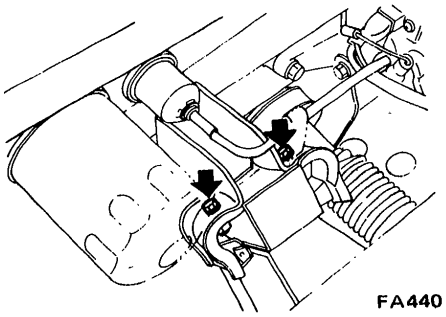

Tightening torque:
1.6 to 2.1 kg-m (12 to 15 ft-lb)

Fig. FA-44 Removing engine mounting bolts

Downloaded from www.Manualslib.com manuals search engine

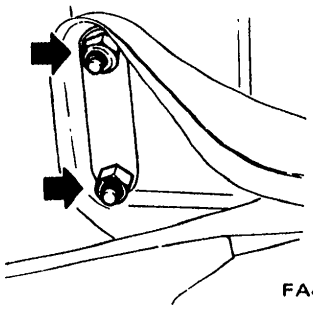

Tightening torque:
4.5 to 5.0 kg-m (33 to 36 ft-lb)

Fig. FA-45 Removing suspension crossmember

INSPECTION

1. Check suspension crossmember for evidence of deformation and cracking; if necessary, replace.

INSTALLATION

Install suspension crossmember in the reverse order of removal.

Tightening torque:
Suspension member to frame
4.5 to 5.0 kg-m
(33 to 36 ft-lb)

SERVICE DATA AND SPECIFICATIONS

Wheel alignment

		S30	GS30 (2 + 2 seater)
Camber degree		0°18′ to 1°48′	0°21′ to 1°51′
Caster degree		2°3′ to 3°33′	2°3′ to 3°33′
Kingpin inclination degree		11°14′ to 12°44′	11°14′ to 12°44′
Toe-in mm (in)		0 to 3 (0 to 0.118)	0 to 3 (0 to 0.118)
*Steering angle degree	In	33°54′ to 34°54′	36°18′ to 37°18′
	Out	32°6′ to 34°6′	34°24′ to 36°24′

*With the exception of steering angle, all chart specifications are based upon unloaded condition.
Steering angle is based upon loaded condition.

Downloaded from www.Manualslib.com manuals search engine

Coil spring

	S30	GS30
Active turns of coil	9.5	8.5
Free length mm (in)	406 (15.98)	399 (15.71)
Spring constant kg/mm (lb/in)	1.84 (103.0)	2.06 (115.4)

Strut assembly

Damping force at piston speed 0.3 m (1.0 ft)/sec. Expansion/Compression	kg (lb)/kg (lb)	55 (121)/30 (66)
Front wheel bearing rotation starting torque		
New parts	kg-cm (in-lb)	4.0 to 8.5 (3.5 to 7.4)
As measured at wheel hub bolt	kg (lb)	0.7 to 1.5 (1.5 to 3.3)
Adjustment with old parts	kg-cm (in-lb)	1.0 to 4.5 (0.9 to 3.9)
As measured at wheel hub bolt	kg (lb)	0.2 to 0.8 (0.4 to 1.8)
Ball joint turning torque		
New parts	kg-cm (in-lb)	75 to 125 (65 to 109)
Used parts	kg-cm (in-lb)	More than 50 (43)

Downloaded from www.Manualslib.com manuals search engine

Tightening torque

Front axle	**kg-m (ft-lb)**
Brake disc rotor and hub assembly tightening bolt	3.9 to 5.3 (28 to 38)
Brake tube installation nut	1.5 to 1.8 (11 to 13)
Wheel bearing lock nut	2.5 to 3.0 (18 to 22)
Disc brake caliper fixing bolt	7.3 to 9.9 (53 to 72)
Baffle plate installation screw	0.32 to 0.44 (2.3 to 3.2)
Strut assembly	**kg-m (ft-lb)**
Gland packing tightening torque	7 to 13 (51 to 94)
Piston rod self-locking nut	7.5 to 9.5 (54 to 69)
Nut used to install the strut assembly on the body	2.5 to 3.5 (18 to 25)
Transverse link and ball joint	**kg-m (ft-lb)**
Bolts used to install the knuckle arm to strut	7.3 to 10.0 (53 to 72)
Ball joint castle nut	5.5 to 7.5 (40 to 54)
Bolts used to install the transverse link to ball joint	1.9 to 2.5 (13.7 to 18.0)
Transverse link mounting bolt	11.1 to 14.0 (80 to 101)
Compression rod	**kg-m (ft-lb)**
Transverse link side	6.1 to 7.1 (44 to 51)
Body side	4.5 to 5.5 (33 to 40)
Stabilizer bar	**kg-m (ft-lb)**
Connecting rod and transverse link installation nut	1.2 to 2.7 (8.7 to 19.5)
Connecting rod and stabilizer bar installation nut	1.2 to 2.7 (8.7 to 19.5)
Stabilizer bar and body installation bolt	1.9 to 2.5 (14 to 18)
Suspension member	**kg-m (ft-lb)**
Body side	4.5 to 5.0 (33 to 36)
Engine mounting bolt	1.6 to 2.1 (12 to 15)
Steering mounting bolt	
Bolt to welded nut	2.6 to 3.0 (19 to 22)
Lock nut	3.1 to 3.5 (22 to 25)
Side rod socket and knuckle arm	kg-m (ft-lb) 5.5 to 7.5 (40 to 54)
Wheel nut	kg-m (ft-lb) 8.0 to 9.0 (58 to 65)

Downloaded from www.Manualslib.com manuals search engine

TROUBLE DIAGNOSES AND CORRECTIONS

Condition	Probable cause	Corrective action
Vibration, shock and shimmying of steering wheel.	Improper tire pressure.	Adjust.
	Imbalance and deformation of roadwheel.	Correct the imbalance or replace.
Vibration: Loose connection of the serration parts and wear of each part of linkage cause vibration of front wheels, which in turn is transmitted to the steering wheel. This is very noticeable when travelling over rough roads.	Unevenly worn tire or insufficient lightening.	Replace or tighten.
	Improperly adjusted or worn front wheel bearing.	Adjust or tighten.
	Faulty wheel alignment.	Adjust.
	Worn fitting transverse link bushings.	Replace.
Shock: When the front wheels are travelling over bumpy roads, the play of the steering linkage is transmitted to the steering wheel. This is especially noticeable when travelling on rough roads.	Insufficiently tightened steering gear housing.	Retighten
	Wear of steering linkage.	Replace faulty. parts.
	Worn suspension ball-joint.	Replace.
	Excessive backlash due to improper adjustment of the retainer parts.	Adjust correctly.
Shimmying: Abnormal vibration of the front suspension group and the whole steering linkage, which occur when a specific speed is attained.	Damaged idler arm.	Replace.
	Worn column bearing, weakened column bearing spring, or loose clamp.	Replace or retighten.
	Malfunction of shock absorber (inside the strut) or loose installation bolts.	Replace or retighten.
	Imbalance of vehicle level.	Correct the imbalance.
Vehicle pulls to right or left When driving with hands off the steering wheel over a flat road, the car gently swerves to right or left.	Improper tire pressure or insufficient tightening of wheel nuts.	Adjust or tighten.
	Difference in height of right and left tire treads.	Replace tires.
	Incorrect adjustment or abrasion of front wheel bearing.	Adjust or replace.
Note: **A faulty rear suspension may also be the cause of this trouble, therefore, see also the chapter dealing with the rear suspension.**	Collapsed or twisted front spring.	Replace.
	Incorrect wheel alignment.	Adjust.
	Incorrect brake adjustment (binding).	Adjust.
	Worn rubber bushings for transverse link and compression rod.	Replace.
	Deformed steering linkage and suspension link.	Replace.
	Imbalance of car level.	Correct the imbalance.
Instability of car	Improper tire pressure.	Adjust.
	Worn rubber bushings for transverse link and tension rod.	Replace.
	Incorrect wheel alignment.	Adjust.

Downloaded from www.Manualslib.com manuals search engine

Condition	Probable cause	Corrective action
Instability of car	Worn or deformed steering linkage and suspension link.	Replace.
	Incorrect adjustment of steering gear.	Adjust.
	Deformed or imbalanced wheel.	Correct or replace.
Stiff steering wheel (check-up procedure)	Improper tire pressure.	Adjust.
	Insufficient lubricants or mixing impurities in steering linkage or excessively worn steering linkage.	Replenish grease or replace the part.
Jack up front wheels, detach the steering gear and operate the steering wheel, and;	Stiff or damaged suspension ball-joint, or lack of grease.	Replace.
	Worn or incorrectly adjusted wheel bearing.	Replace or adjust.
If it is light, check steering linkage, and suspension groups.	Worn damaged steering gear and bearing.	Replace.
	Incorrectly adjusted steering gear.	Adjust.
If it is heavy, check steering gear and steering column groups.	Deformed steering linkage.	Replace.
	Incorrect wheel alignment.	Adjust.
	Worn strut upper end bearing.	Replace.
	Damaged or stiff piston or shock absorber rod (in the strut).	Replace.
	Interference of steering column with turn signal switch.	Adjust.
Excessive steering wheel play	Incorrectly adjusted steering gear housing.	Adjust.
	Worn steering linkage.	Replace.
	Improperly fitted gear box.	Retighten.
	Incorrectly adjusted wheel bearing.	Adjust.
	Worn transverse link and tension rod fitting bushings.	Replace.
Noises	Improper tire pressure.	Adjust.
	Insufficient lubricating oil and grease for suspension ball joint and steering linkage, or their breakage.	Replenish lubricating oil and grease, or replace.
	Loose steering gear bolts, linkage and suspension groups.	Retighten.
	Damaged shock absorber (inside the strut).	Replace.
	Worn wheel bearing.	Replace.
	Worn steering linkage and steering gear.	Replace.
	Worn transverse link and tension rod fitting bushings.	Replace.
	Broken or collapsed coil spring.	Replace.
	Loose strut mounting insulator tightening nuts.	Retighten.
	Loose stabilizer bolt.	Retighten.

Downloaded from www.Manualslib.com manuals search engine

Condition	Probable cause	Corrective action
Grating tire noise	Improper tire pressure.	Adjust.
	Incorrect wheel alignment.	Adjust.
	Deformed knuckle spindle and suspension linkage.	Replace.
Jumping of disc wheel	Improper tire pressure.	Adjust.
	Imbalance wheels.	Adjust.
	Damaged shock absorber.	Replace.
	Faulty tire.	Replace.
	Deformed wheel rim.	Replace.
Excessively or partially worn tire.	Improper tire pressure.	Adjust.
	Incorrect wheel alignment.	Adjust.
	Worn wheel bearing.	Replace.
	Incorrect brake adjustment.	Adjust.
	Improper tire shifting (rotation).	Adjust.
	Rough and improper driving manner.	Drive more gently.

Downloaded from www.Manualslib.com manuals search engine

SPECIAL SERVICE TOOLS

No.	Tool number & tool name	Description Unit: mm (in)	For use on	Reference page or Figure No.
1.	ST35300000 Front wheel bearing drift	Used to assemble front wheel bearing. 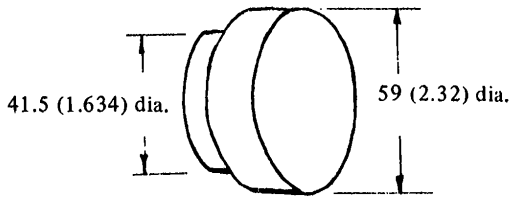	B210 610 710 S30	Fig. FA-16
2.	KV40100800 Gland packing wrench	Used to remove or install gland packing at the top end of strut. 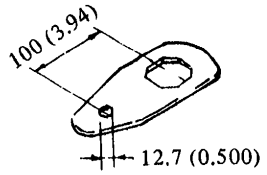 Width across flats; 55 (2.17) SE220	S30	Fig. FA-26 Fig. FA-32
3.	ST35540000	Used as a guide in installing gland packing by covering shock absorber shaft to prevent the marring of oil seal in packing. 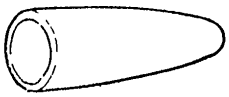 SE093	S30	Fig. FA-30
4.	ST3565S001 Coil spring compressor set ST35651001 Coil spring compressor ST35652000 Clamp	Used to compress coil spring in disassembling or assembling strut assembly. 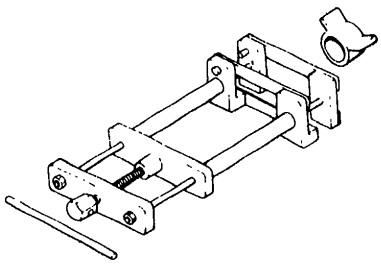 SE221	F10 B210 610 710 S30	Fig. FA-25

Downloaded from www.Manualslib.com manuals search engine

No.	Tool number & tool name	Description Unit: mm (in)	For use on	Reference page or Figure No.
5.	**ST36710000** **Transverse link bushing replacer** **ST36710010** **Drift** **ST36710020** **Support base**	Used to replace transverse link bushing. In its application, align the tool with the bushing center by using a press. 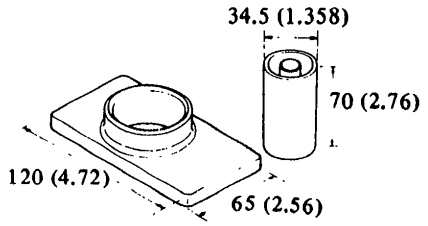 SE222	S30	Fig. FA-40
6.	HT72520000 Ball joint puller	Used to remove side rod ball joint socket from knuckle arm. **Caution: Do not hammer on bolts.** 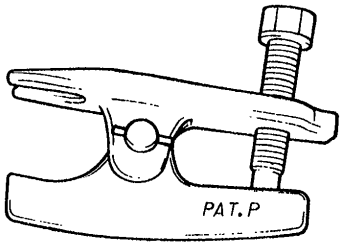 SE399	All models	Page FA-11

Downloaded from www.Manualslib.com manuals search engine

SERVICE MANUAL

DATSUN 280Z
MODEL S30 SERIES

NISSAN

NISSAN MOTOR CO., LTD.
TOKYO, JAPAN

SECTION RA

REAR AXLE & REAR SUSPENSION

RA

DESCRIPTION ..... RA- 2
REAR AXLE ..... RA- 4
REAR SUSPENSION ..... RA- 8
SERVICE DATA AND SPECIFICATIONS RA-13
TROUBLE DIAGNOSES AND CORRECTIONS RA-15
SPECIAL SERVICE TOOLS RA-16

Downloaded from www.Manualslib.com manuals search engine

DESCRIPTION

The rear suspension is a strut type independent suspension. Briefly, this means that the rear wheel is supported by the strut and transverse link, the gear carrier is aligned independently and separately from the suspension, and the gear carrier is installed directly on the body with rubber insulators. Thus, the three major rear suspension elements supporting the left wheel, right wheel, and gear carrier, are separated, and very high suspension performance is obtained.

As regards construction, the rear axle housing is brazed on the lower end of the strut which has a self-contained shock absorber, and the lower side is connected to the transverse link through rubber bushing. On the intermediate position of the strut, the body is suspended with a coil spring, the upper end is installed on the body through a rubber insulator, and the transverse link is also directly installed on the body with rubber bushings.

A horizontal leaf spring is connected to the rear end of the gear carrier, and the gear carrier is installed on the body at three positions (both ends of the leaf spring and the front end of the gear carrier) through rubber insulators.

There are two types of drive shafts. One is called Side Flange type (for M/T model with R200 differential). The other is Side Yoke type (for A/T model with R180 differential).

Driving power is transmitted to the rear axle shaft by the freely extensible drive shaft through side flanges or side yokes on both ends of the gear carrier. The rear axle shaft is supported by two ball bearings in the axle housing.

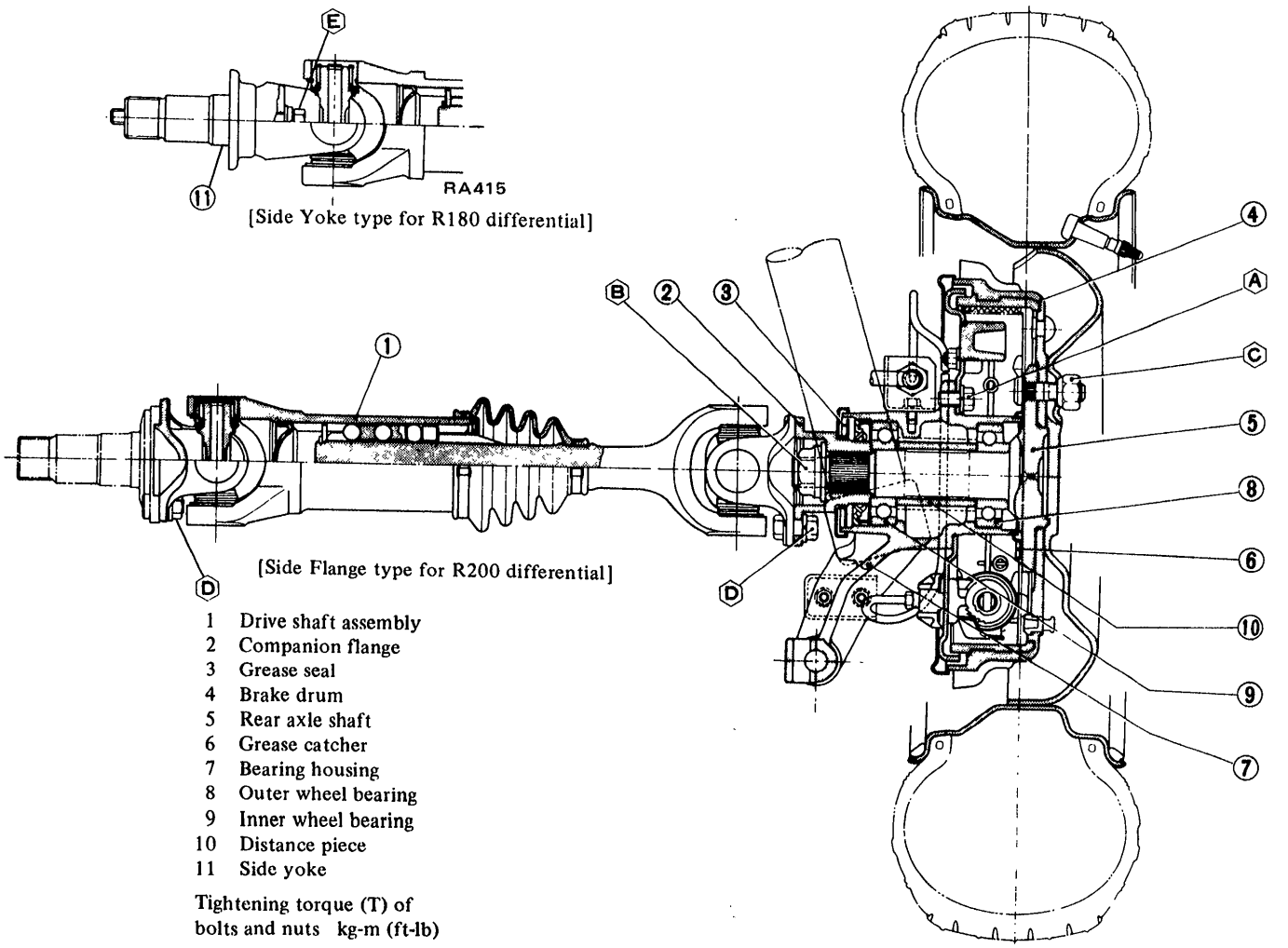

1 Drive shaft assembly
2 Companion flange
3 Grease seal
4 Brake drum
5 Rear axle shaft
6 Grease catcher
7 Bearing housing
8 Outer wheel bearing
9 Inner wheel bearing
10 Distance piece
11 Side yoke

Tightening torque (T) of bolts and nuts kg-m (ft-lb)

Ⓐ T : 4.0 to 5.3 (29 to 38)
Ⓑ T : 25 to 33 (181 to 239)
Ⓒ T : 8.0 to 9.0 (58 to 65)
Ⓓ T : 5.0 to 6.0 (36 to 43)
Ⓔ T : 2.4 to 3.2 (17 to 23)

Fig. RA-1 Cross sectional view of rear axle

Downloaded from www.Manualslib.com manuals search engine

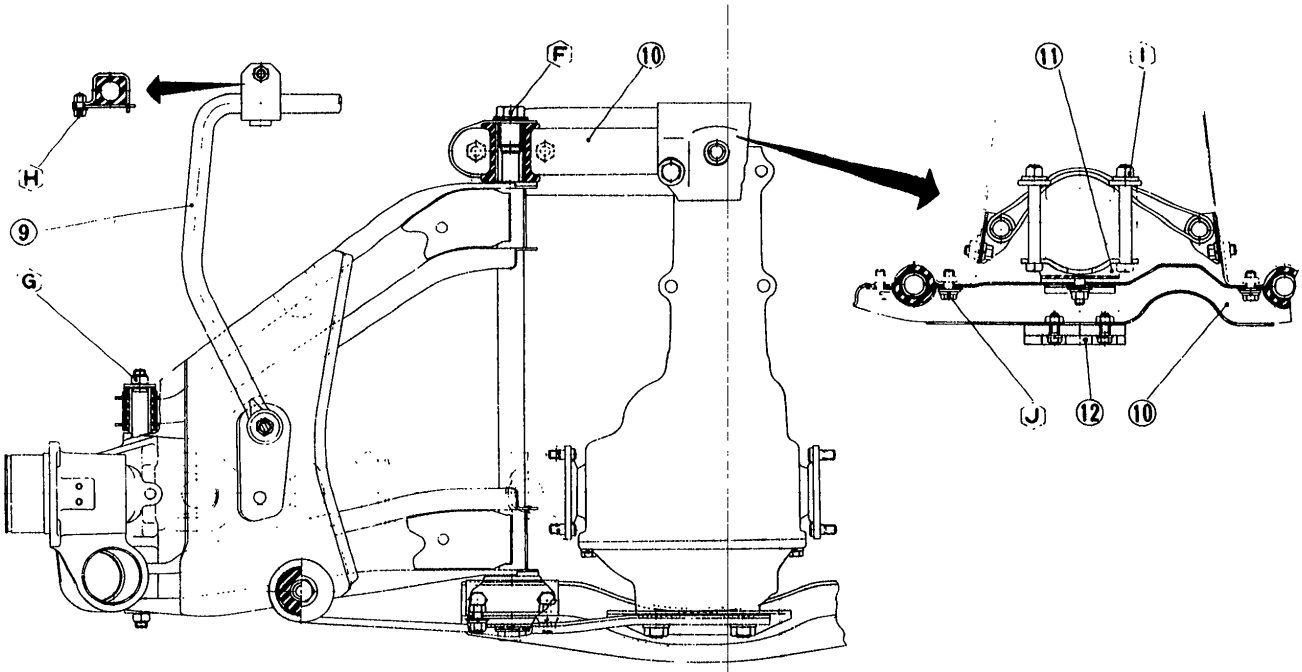

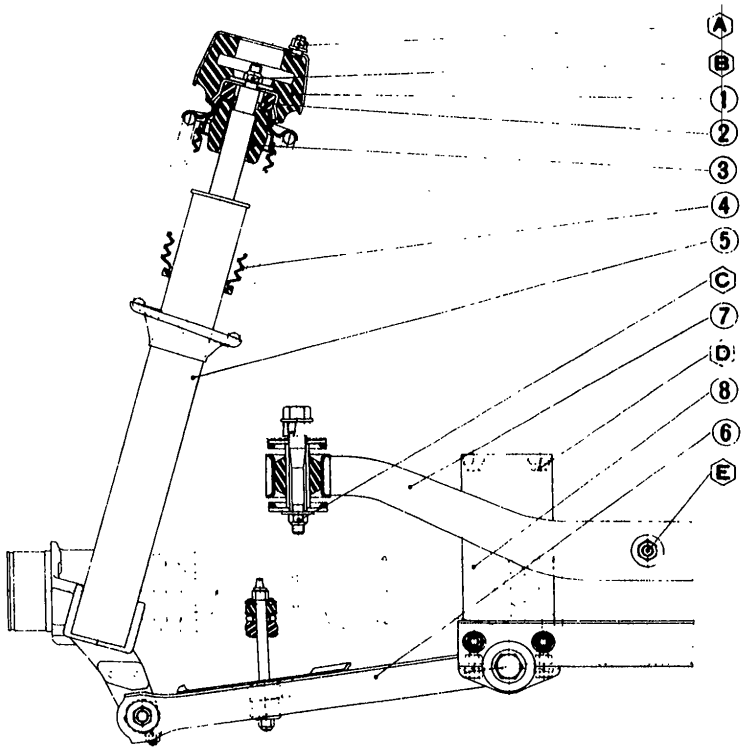

RA316

1 Rear strut mounting insulator
2 Spacer
3 Bound bumper rubber
4 Dust cover
5 Strut assembly
6 Transverse link
7 Differential case mounting member
8 Link mounting brace
9 Stabilizer bar
10 Differential case mounting front member
11 Differential case mounting front insulator
12 Damper plate

Tightening torque (T) of bolts and nuts kg-m (ft-lb)

- A T : 2.5 to 3.5 (18 to 25)
- B T : 7.5 to 9.5 (54 to 69)
- C T : 7.5 to 9.5 (54 to 69)
- D T : 4.6 to 6.1 (33 to 44)
- E T : 7.5 to 9.5 (54 to 69)
- F T : 14 to 16 (101 to 116)
- G T : 7.5 to 9.5 (54 to 69)
- H T : 1.0 to 1.2 (7 to 9)
- I T : 6.0 to 8.0 (43 to 58)
- J T : 4.6 to 6.1 (33 to 44)

Fig. RA-2 Rear suspension system

Downloaded from www.Manualslib.com manuals search engine

REAR AXLE

CONTENTS

WHEEL BEARING, OIL SEAL AND REAR AXLE SHAFT RA-4
REMOVAL RA-4
INSPECTION RA-4
INSTALLATION RA-4
INSTRUCTIONS FOR ASSEMBLY OF REAR WHEEL BEARING RA-4
DRIVE SHAFT RA-5
REMOVAL RA-6
DISASSEMBLY RA-6
INSPECTION RA-6
ASSEMBLY RA-6

WHEEL BEARING, OIL SEAL AND REAR AXLE SHAFT

REMOVAL

1. Chock front wheels.
2. Loosen wheel nuts, jack up the car, and support it with stands.
3. Remove wheel nuts and wheels.
4. Remove drive shaft installation bolts (wheel side). Refer to Figure RA-3.

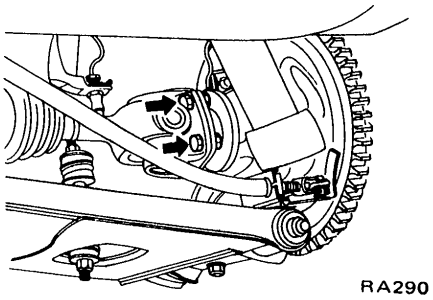

Tightening torque:
5.0 to 6.0 kg-m (36 to 43 ft-lb)

Fig. RA-3 Removing drive shaft

5. Remove rear wheel bearing lock nut. See Figure RA-4.

Note: Do not release caulking when removing the rear wheel bearing lock nut.

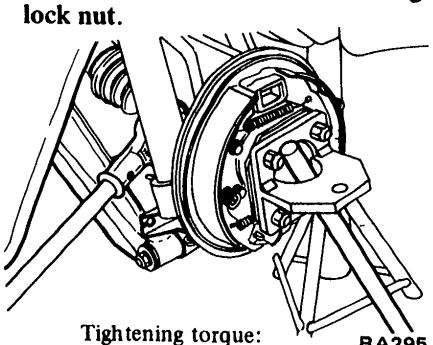

Tightening torque:
25 to 33 kg-m (181 to 239 ft-lb)

Fig. RA-4 Removing rear wheel bearing lock nut

6. Remove the rear axle shaft with Rear Axle Stand KV40101000 and Sliding hammer ST36230000. See Figure RA-5.

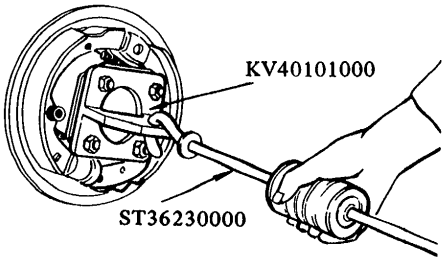

Fig. RA-5 Removing rear axle shaft

7. Remove companion flange and bearing washer.
8. Remove inner rear wheel bearing and grease seal.
9. Remove outer rear wheel bearing from rear axle shaft. See Figure RA-6.

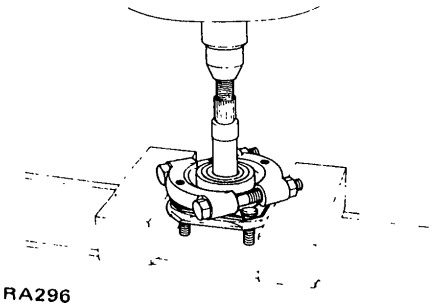

Fig. RA-6 Removing rear wheel bearing (outer side)

Note: Do not reuse bearing after removal.

INSPECTION

1. Check wheel bearing for end play, the rolling surface for flaking, wear, seizure, and grease seal for cracks or deformation.
   Replace wheel bearing as required.
2. Check rear axle shaft for cracks or seizure.
   Replace rear axle shaft and wheel bearing, as required.
3. Check grease seal lip for damage or wear.

INSTALLATION

Install wheel bearing, grease seal and rear axle shaft in reverse sequence of removal.

Note: Replace grease seal every disassembly.

INSTRUCTIONS FOR ASSEMBLY OF REAR WHEEL BEARING

1. Outer bearing has a seal on one side. Install outer bearing to the rear axle shaft so that the side to which the seal is attached faces the wheel. See Figure RA-8.
2. Relationship between rear bearing housing and distance piece is shown in Figure RA-7.

A mark "A", "B", or "C" is stamped on housing. Select a distance piece having a mark corresponding to the mark on housing.
When a distance piece is reused, make sure that both ends are not collapsed or deformed.

Downloaded from www.Manualslib.com manuals search engine

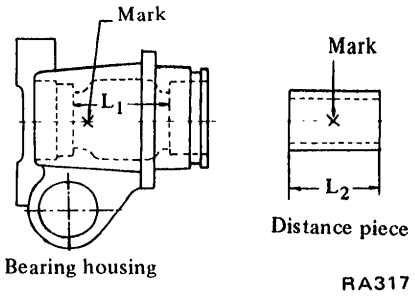

Fig. RA-7 Rear bearing housing and distance piece

3. For wheel bearing grease, use recommended multi-purpose grease.

Fill the portions indicated by asterisk (*) in Figure RA-8.

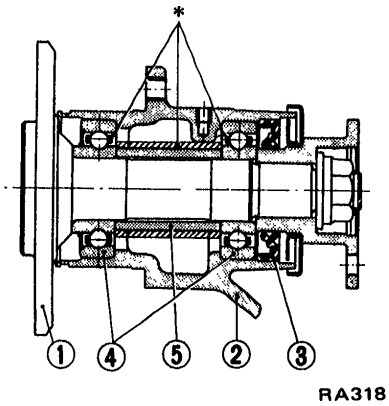

1 Rear axle shaft
2 Bearing housing
3 Grease seal
4 Wheel bearing
5 Distance piece

Fig. RA-8 Lubrication chart of rear axle

4. Tighten wheel bearing lock nut, and measure the preload and rear axle shaft end play. Readjust as required.

Tightening torque of wheel bearing lock nut:
25 to 33 kg-m
(181 to 239 ft-lb)

Wheel bearing preload:
4.5 kg-cm (3.9 in-lb)
At the hub bolt 790 gr (27.9 oz) or less

Rear axle shaft end play:
0 to 0.15 mm (0 to 0.0059 in)

Note: Use new lock nuts every disassembly.

5. Caulk wheel bearing lock nuts securely after tightening.

6. When fitting outer rear wheel bearing, use Rear Axle Shaft Outer Bearing Drift ST37780000.

Rear bearing housing		Distance piece	
Mark	Size mm (in)	Mark	Size mm (in)
A	52.63 (2.0720) to 52.73 (2.0760)	A	52.60 (2.0709) to 52.66 (2.0732)
B	52.53 (2.0681) to 52.63 (2.0720)	B	52.50 (2.0669) to 52.56 (2.0693)
C	52.43 (2.0642) to 52.53 (2.0681)	C	52.40 (2.0630) to 52.46 (2.0654)

DRIVE SHAFT

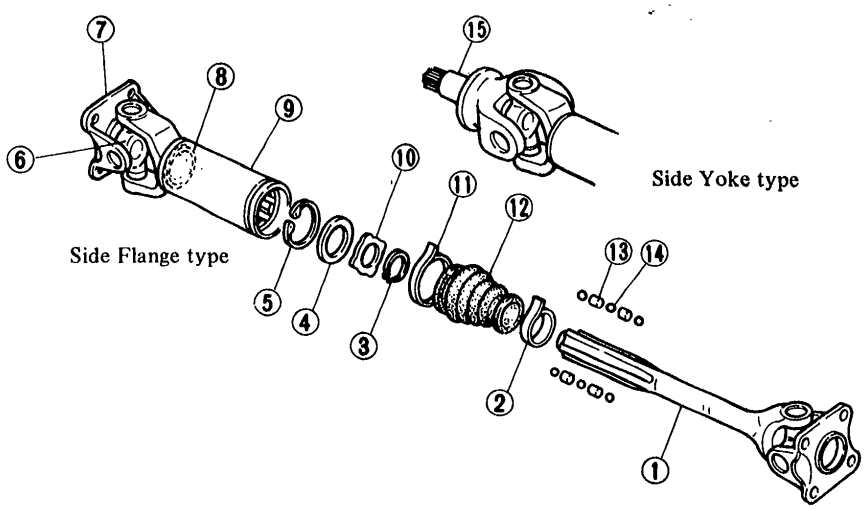

1 Drive shaft
2 Boot band
3 Snap ring
4 Sleeve yoke stopper
5 Snap ring
6 Spider journal
7 Side yoke
8 Sleeve yoke plug
9 Sleeve yoke
10 Drive shaft stopper
11 Boot band
12 Rubber boot
13 Ball spacer
14 Drive shaft ball
15 Side yoke

Fig. RA-9 Drive shaft components

Downloaded from www.Manualslib.com manuals search engine

REMOVAL

1. Chock front wheels.
2. Jack up rear of car and support on safety stands.
3. R200 type:

Remove drive shaft universal joint yoke flange bolts from both sides. See Figure RA-10.

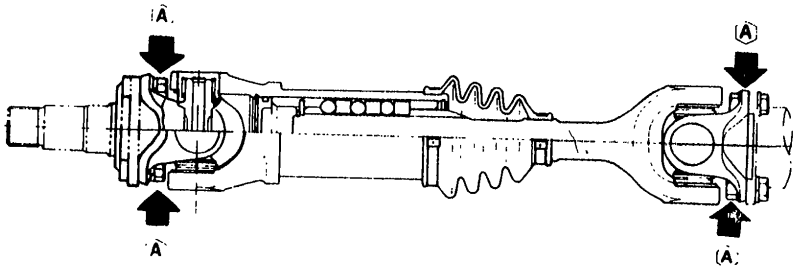

RA304

Tightening torque:
Ⓐ : 5.0 to 6.0 kg-m (36 to 43 ft-lb)

Fig. RA-10 Removing drive shaft

4. R180 type:

Disconnect drive shaft on the wheel side.

Remove side yoke fitting bolts, and extract side yokes together with drive shafts. See Figure RA-11.

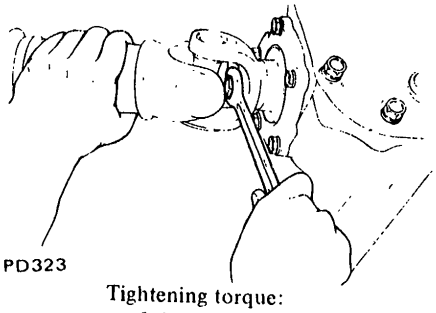

PD323

Tightening torque:
2.4 to 3.2 kg-m (17 to 23 ft-lb)

Fig. RA-11 Removing side yoke fitting bolt

Note: The drive shaft is easily damaged; handle it carefully. Lubricate needle bearings at specified intervals. Remove plug screw at journal and screw nipple in place when lubricating. Be sure to screw in plug screw after lubricating.

DISASSEMBLY

Drive shaft should be disassembled only when lubricating the ball spline.

Lubrication is required at specified intervals.

1. Remove boot band and remove boot from sleeve yoke.
2. Remove snap ring from sleeve yoke using suitable snap ring plier and take out sleeve yoke stopper.
3. Withdraw drive shaft carefully from sleeve yoke so as not to lose balls and spacers.

INSPECTION

1. Replace boot and O-ring of side yoke bolt, if damaged.
2. Check drive shaft for straightness, cracks, damage, wear or distortion.

Replace drive shaft assembly as required.

3. **Check steel balls and sleeve yoke for damage, wear or distortion.**

Replace drive shaft assembly as required.

4. If faulty condition is detected, replace universal joint.
5. **Thoroughly remove grease from sleeve yoke, drive shaft ball rolling groove and oil groove, and clean them.**
6. **Measure the drive shaft play as shown in Figure RA-12. If play exceeds 0.1 mm (0.004 in), replace drive shaft assembly. Be sure to measure the drive shaft play with drive shaft completely compressed.**

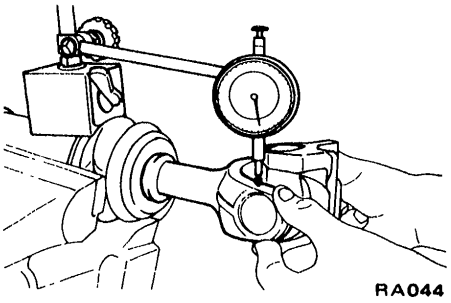

RA044

Fig. RA-12 Measuring drive shaft play

ASSEMBLY

Assemble drive shaft in reverse sequence of disassembly noting the following:

1. Correctly align yokes, and make sure that steel balls and spacers are installed in the correct order.
2. Selecting a suitable snap ring, adjust the axial play of universal joint to within 0.02 mm (0.0008 in). Snap rings of seven different thicknesses are available.

Downloaded from www.Manualslib.com manuals search engine

Universal joint bearing snap ring

Thickness mm (in)	Color identification
1.49 (0.0587)	White
1.52 (0.0598)	Yellow
1.55 (0.0610)	Red
1.58 (0.0622)	Green
1.61 (0.0634)	Blue
1.64 (0.0646)	Light brown
1.67 (0.0657)	Black

3. Apply an adequate amount of recommended multi-purpose grease [approximately 10 gr (0.35 oz)] to ball rolling groove and oil groove.

Moreover, apply approximately 35 gr (1.23 oz) of grease to the area shown in Figure RA-13.

Note: Drive shaft components are not available as service parts.
Therefore, drive shaft must be replaced as an assembly, even if only one component is faulty.

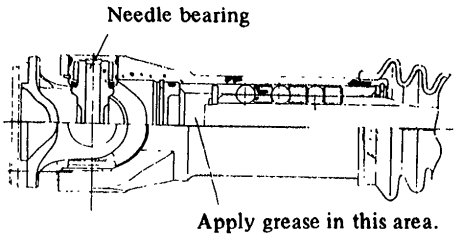

RA045

Fig. RA-13 Cross-sectional view of drive shaft

Downloaded from www.Manualslib.com manuals search engine

REAR SUSPENSION

CONTENTS

REAR STRUT AND COIL SPRING ..... RA- 8
REMOVAL ..... RA- 8
INSTALLATION ..... RA- 9
GEAR CARRIER AND DIFFERENTIAL MOUNTING MEMBER ..... RA- 9
REMOVAL ..... RA- 9
INSPECTION RA-10
INSTALLATION RA-10
TRANSVERSE LINK RA-10
REMOVAL RA-10
INSPECTION RA-11
INSTALLATION RA-11
STABILIZER RA-11
REMOVAL RA-11
INSPECTION RA-12
INSTALLATION RA-12

REAR STRUT AND COIL SPRING

REMOVAL

1. Chock the front wheels.
2. Loosen wheel nuts, jack up car, and support body with stands.
3. Remove wheel nuts and remove wheels.
4. Disconnect brake line connector (body side) ① and side brake linkage ② . See Figure RA-14.

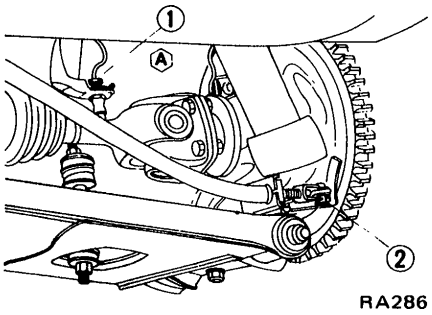

Tightening torque:
Ⓐ : 1.5 to 1.8 kg-m (11 to 13 ft-lb)

Fig. RA-14 Removing brake hose and side brake linkage

5. Remove stabilizer bar from transverse link. See Figure RA-15.

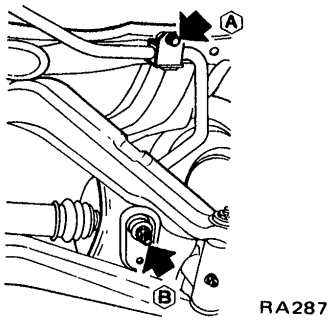

Tightening torque:
Ⓐ : 1.0 to 1.2 kg-m (7 to 9 ft-lb)
Ⓑ : 1.2 to 1.7 kg-m (9 to 12 ft-lb)

Fig. RA-15 Removing stabilizer from transverse link

6. Remove transverse link outer self-lock nuts ② and lock bolt ① of rear transverse spindle from the lower end of bearing housing. See Figure RA-16.

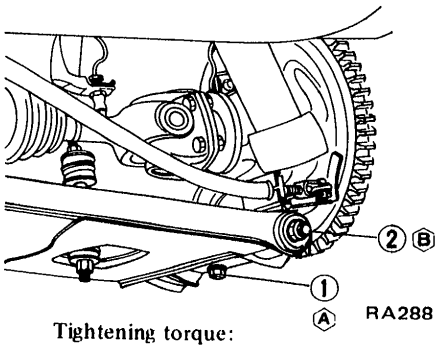

Tightening torque:
Ⓐ : 1.0 to 1.2 kg-m (7 to 9 ft-lb)
Ⓑ : 7.5 to 9.5 kg-m (54 to 69 ft-lb)

Fig. RA-16 Removing lock bolt and self-lock nuts

7. Withdraw spindle, and separate transverse link from strut assembly. See Figure RA-17.

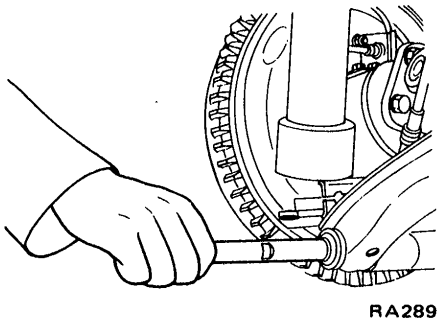

Fig. RA-17 Removing spindle

8. Disconnect drive shaft (wheel side).
9. Remove strut installation nuts (from the passenger compartment side). The strut assembly can be removed downward. See Figures RA-18 and RA-19.

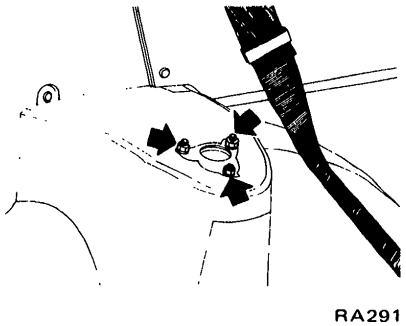

Tightening torque:
2.5 to 3.5 kg-m (18 to 25 ft-lb)

Fig. RA-18 Removing strut installation nuts

Downloaded from www.Manualslib.com manuals search engine

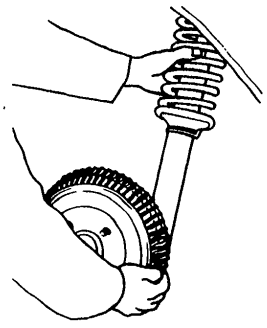

RA292

Fig. RA-19 Removing strut assembly

Note: When removing strut assembly, place a jack under the lower end of strut, and remove it gradually.

9. For the removal and reinstallation of spring, disassembly of strut, inspection and adjustment, apply the instructions for front strut assembly.
Refer to Section FA.

INSTALLATION

Install strut assembly in reverse sequence of removal.

Notes:

a. Install spindle so that the shorter side (when measured from the position where the lock bolt is installed) faces the front of car. See Figure RA-20.

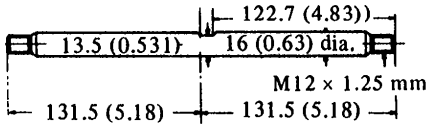

Unit: mm (in)

RA325

Fig. RA-20 Spindle

b. After installing wheels and placing car under the standard load, tighten transverse link outer self-lock nut completely.

c. When installing spring, make sure that it is correctly seated on spring seat.

GEAR CARRIER AND DIFFERENTIAL MOUNTING MEMBER

REMOVAL

1. Chock front wheels.
2. Jack up car, and support body with stands.
3. Remove main muffler. Refer to Section FE.
4. Separate propeller shaft from gear carrier. Refer to Section PD.
5. Loosen front side transverse link inner bolts. See Figure RA-21.

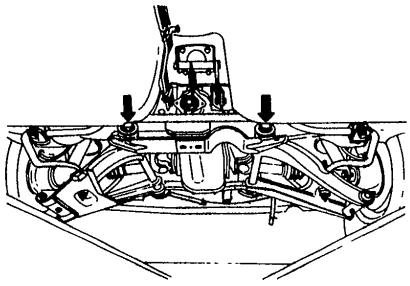

RA274

Tightening torque:
14 to 16 kg-m (101 to 116 ft-lb)

Fig. RA-21 Removing transverse link inner bolts

6. Remove drive shaft installation bolts (wheel side and gear carrier side), and separate drive shaft from the gear carrier. See Figures RA-11, RA-22 and RA-23.

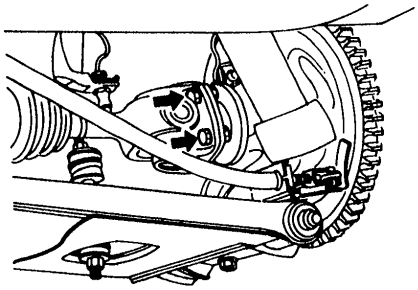

Tightening torque:
5.0 to 6.0 kg-m (36 to 43 ft-lb)

Fig. RA-22 Removing drive shaft installation bolts (wheel side)

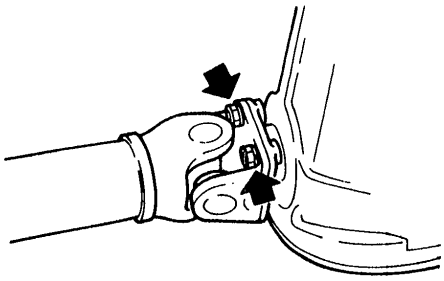

Tightening torque: RA302
5.0 to 6.0 kg-m (36 to 43 ft-lb)

Fig. RA-23 Loosening drive shaft installation bolts (gear carrier side)

7. **Place a jack beneath gear carrier and raise it.**
8. **Remove differential mounting rear member installation nut. See Figure RA-24.**

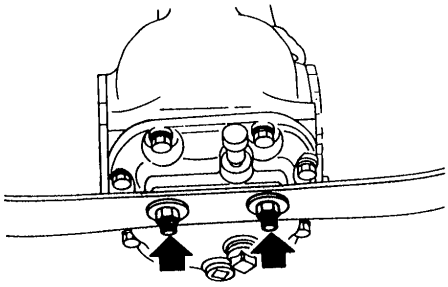

RA306

Tightening torque:
7.5 to 9.5 kg-m (54 to 69 ft-lb)

Fig. RA-24 Removing differential mounting rear member

9. Remove differential mounting front member installation bolts, lower the jack slowly, and remove gear carrier and front mounting member as an assembly. See Figure RA-25.

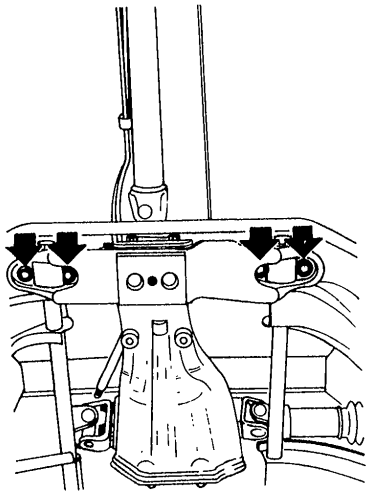

RA319

Tightening torque:
4.6 to 6.1 kg-m (33 to 44 ft-lb)

Fig. RA-25 Removing differential mounting front member

10. Remove front mounting damper and differential mounting front insulator. Gear carrier can then be removed. See Figure RA-26.

Downloaded from www.Manualslib.com manuals search engine

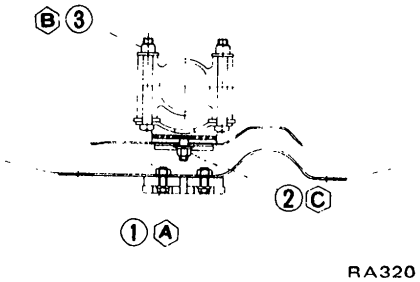

1 Front mounting damper plate installation bolt
2 Front mounting member and front insulator installation nut
3 Gear carrier and front insulator installation nut

Tightening torque:
Ⓐ : 1.6 to 2.1 kg-m (12 to 15 ft-lb)
Ⓑ : 3.2 to 4.3 kg-m (23 to 31 ft-lb)
Ⓒ : 6.0 to 8.0 kg-m (43 to 58 ft-lb)

Fig. RA-26 ***Removing damper plate bolts and mounting front insulator nuts***

11. Loosen rear side transverse link inner bolts. See Figure RA-27.

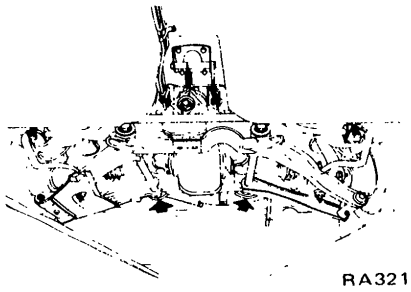

Fig. RA-27 Removing transverse link inner bolts

12. Remove link mounting rear bracket. See Figure RA-28.

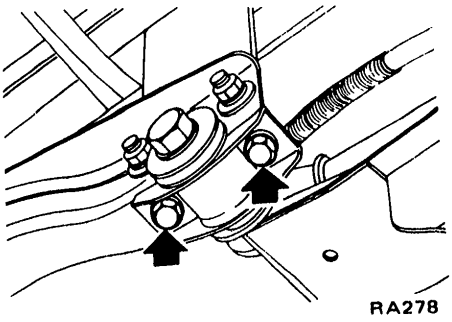

Tightening torque:
3.2 to 4.3 kg-m (23 to 31 ft-lb)

Fig. RA-28 Removing rear bracket

13. Remove transverse link mounting brace and body installation bolts ① and differential mounting rear insulator and body installation bolts ②. See Figure RA-29.

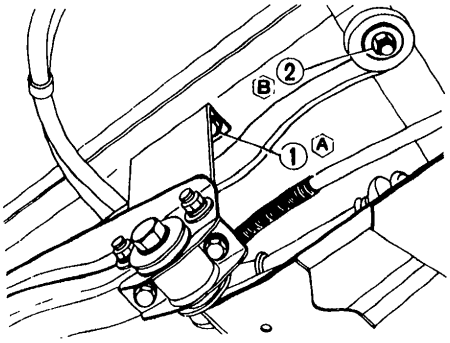

1 Transverse link mounting brace installation bolt
2 Differential mounting rear insulator installation bolt

Tightening torque:
Ⓐ : 4.6 to 6.1 kg-m (33 to 44 ft-lb)
Ⓑ : 7.5 to 9.5 kg-m (54 to 69 ft-lb)

Fig. RA-29 ***Removing link mounting brace and differential mounting member installation bolts***

INSPECTION

1. Check gear carrier assembly. Refer to Section PD.
2. Check differential mounting front and rear members for cracks, deformation or damage. Replace as required.
3. Replace differential mounting front insulator if the dimension "A" is 9 mm (0.35 in) or greater, 2 mm (0.08 in) or smaller (unloaded). See Figure RA-30.

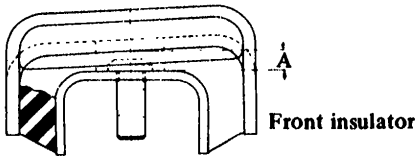

Fig. RA-30 Sectional view of differential mounting insulators

4. Replace rubber insulators of differential mounting member, if worn, using Differential Mounting Insulator Drift ST33260010 (for removal) and ST33260020 (for installation). See Figures RA-31 and RA-32.

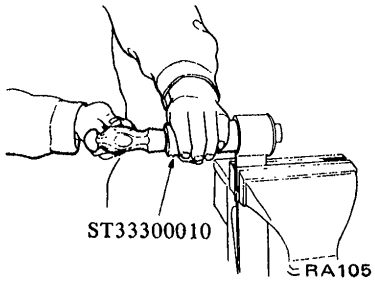

Fig. RA-31 Removing insulator from differential mounting member

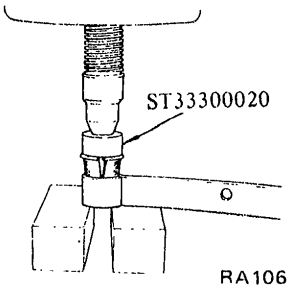

Fig. RA-32 Installing insulator to differential mounting member

INSTALLATION

Install gear carrier and differential mounting member in reverse sequence of removal.

Notes:

a. **Tighten transverse link inner bolts after installing wheels and placing car on ground under the standard load.**
b. **Install differential front insulator carefully with arrow towards the front.**

TRANSVERSE LINK

REMOVAL

1. Chock front wheels.
2. Loosen wheel nuts, jack up car, and support body with stands.
3. Remove wheel nuts, and remove wheels.
4. Remove stabilizer bar from transverse link.
5. Separate transverse link from the strut. (Refer to the paragraph on Strut and Coil Spring.)

Downloaded from www.Manualslib.com manuals search engine

6. Place a jack beneath gear carrier, and raise it.
7. Loosen transverse link inner bolts ① and damper plate installation bolts ②. See Figure RA-33.
8. Remove the differential mount front insulator installation nut ③.
9. Remove differential mounting front member installation nuts ④, and remove differential mounting front member ⑤

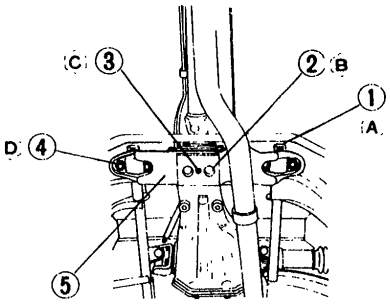

Tightening torque:
- (A) : 13 to 14 kg-m (94 to 101 ft-lb)
- B : 1.6 to 2.1 kg-m (12 to 15 ft-lb)
- C : 3.2 to 4.3 kg-m (23 to 31 ft-lb)
- D : 3.0 to 4.6 kg-m (22 to 33 ft-lb)

Fig. RA-33 Removing differential mounting front member

10. Remove link mounting rear bracket. Transverse link can now be removed. See Figure RA-34.

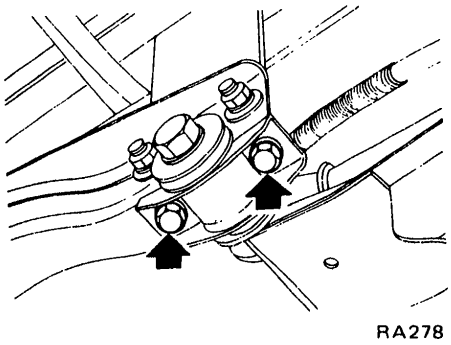

Tightening torque:
3.2 to 4.3 kg-m (23 to 31 ft-lb)

Fig. RA-34 Removing transverse link

11. Remove outer bushing from transverse link with Rear Transverse Link Bushing Replacer ST38800000. See Figure RA-35.

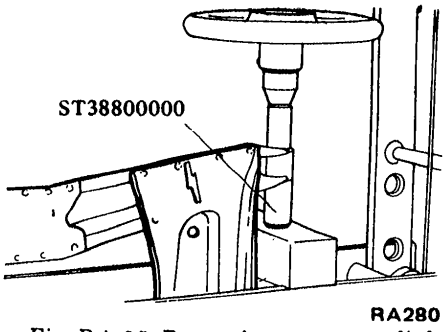

Fig. RA-35 Removing transverse link outer bushing

INSPECTION

1. Check transverse link differential mounting front member for cracks, deformation, or damage. Replace as required.
2. Check rubber bushing for decline, wear, or other faulty conditions and replace as required.

INSTALLATION

1. Install transverse link in reverse sequence of removal.
2. Install transverse link inner bushing by the following instructions. Figures RA-36 and RA-37.

(1) Install inner bushing to link shaft.

(2) Align projection on bushing (directed to the axis direction) horizontally.

(3) Align the center of bushing (directed toward the axis direction) to the center of bracket.

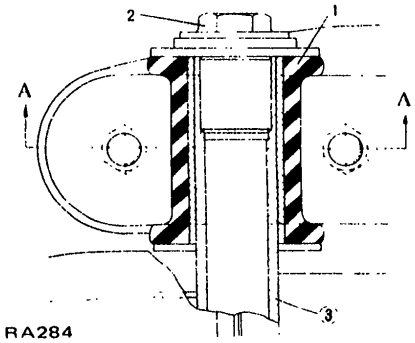

1 Transverse link inner bush
2 Transverse link inner bolt
3 Transverse link

Fig. RA-36 Cross-sectional view of transverse link inner bushing (I)

(4) First, tighten bolts supported in the vertical direction (differential mounting front member or link mounting rear bracket).

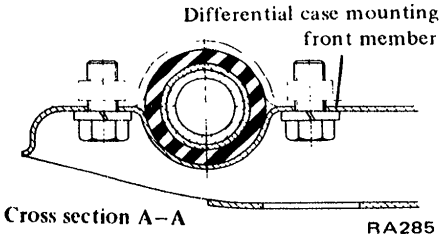

Fig. RA-37 Cross-sectional view of transverse link inner bushing (II)

(5) Temporarily tighten transverse link inner bolts.

Notes:
- a. **Tighten transverse link inner bolts and outer self-lock nuts after installing wheels and placing car on ground under the standard load.**
- b. **Install differential carrier front insulator carefully with arrow towards the front.**

STABILIZER

REMOVAL

1. Remove main muffler. Refer to Section FE.
2. Remove stabilizer bar from side member and remove connecting rod. See Figure RA-38.

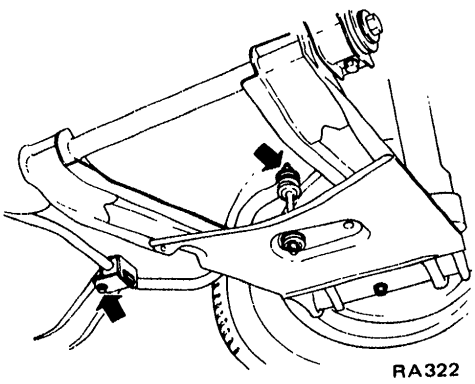

Fig. RA-38 Removing stabilizer

Downloaded from www.Manualslib.com manuals search engine

INSPECTION

1. Check stabilizer for condition. Discard if it is found damaged or cracked.
2. Check that bushings are in good condition. If necessary, replace.

INSTALLATION

To install stabilizer, reverse the above procedure, being sure that bushing on side member is properly seated.

Note: Make sure that the dent in rubber bushing faces towards the rear upper side. See Figure RA-39.

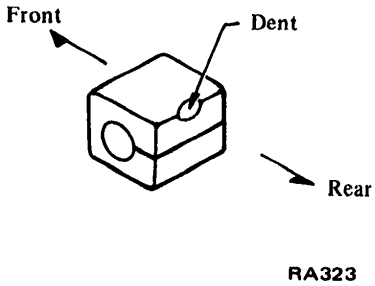

Fig. RA-39 Rubber bushing

Downloaded from www.Manualslib.com manuals search engine

SERVICE DATA AND SPECIFICATIONS

Wheel alignment (unladen)

		S30	GS30 (2 + 2 seater)
Camber	degree	–3′ to 1°27′	–9′ to 1°21′
Toe-in	mm (in)	–5 to 5 (–0.20 to 0.20)	–5 to 5 (–0.20 to 0.20)

Coil spring

Active turns of coil		8.5
Free length	mm (in)	392 (15.43)
Spring constant	kg/mm (lb/in)	2.28 (127.7)

Strut assembly

Damping force at piston speed 0.3 m (0.98 ft)/sec Expansion/Compression	kg (lb)/kg (lb)	55 (121)/30 (66)
Rear axle end play	mm (in)	0 to 0.15 (0 to 0.0059)

Tightening torque

Drive shaft installation bolts		
Gear carrier side (R200 diff.)	kg-m (ft-lb)	5.0 to 6.0 (36 to 43)
Gear carrier side (R180 diff.)	kg-m (ft-lb)	2.4 to 3.2 (17 to 23)
Wheel side	kg-m (ft-lb)	5.0 to 6.0 (36 to 43)
Strut installation nut	kg-m (ft-lb)	**2.5 to 3.5 (18 to 25)**
Strut rod self-lock nut	kg-m (ft-lb)	**7.5 to 9.5 (54 to 69)**
Gland packing	kg-m (ft-lb)	7 to 13 (51 to 94)
Rear axle bearing lock nut	kg-m (ft-lb)	25 to 33 (181 to 239)
Brake disc installation bolt	kg-m (ft-lb)	**2.7 to 3.7 (20 to 27)**
Brake hose (line) clamp nut	kg-m (ft-lb)	**1.5 to 1.8 (11 to 13)**
Wheel nut	kg-m (ft-lb)	**8 to 9 (58 to 65)**
Bearing housing spindle lock bolt	kg-m (ft-lb)	1.0 to 1.2 (7 to 9)
Transverse link outer self-lock nut	kg-m (ft-lb)	**7.5 to 9.5 (54 to 69)**
Transverse link inner bolt	kg-m (ft-lb)	14 to 16 (101 to 106)
Rear link mounting bracket installation bolt	kg-m (ft-lb)	**3.2 to 4.3 (23 to 31)**

Downloaded from www.Manualslib.com manuals search engine

Front differential mounting member installation bolt	kg-m (ft-lb)	4.6 to 6.1 (33 to 44)
Front differential mounting member and front differential mounting insulator installation nut	kg-m (ft-lb)	3.2 to 4.3 (23 to 31)
Front mounting damper plate installation bolt	kg-m (ft-lb)	1.6 to 2.1 (12 to 15)
Gear carrier and differential mounting front insulator installation nut	kg-m (ft-lb)	6.0 to 8.0 (43 to 58)
Belt fitting self-lock nut	kg-m (ft-lb)	11.3 to 13.8 (82 to 100)
Belt fitting bracket installation bolt	kg-m (ft-lb)	3.2 to 4.3 (23 to 31)
Rear differential mounting member installation nut	kg-m (ft-lb)	7.5 to 9.5 (54 to 69)
Rear differential mounting insulator installation nut	kg-m (ft-lb)	7.5 to 9.5 (54 to 69)
Transverse link mounting brace installation bolt	kg-m (ft-lb)	4.6 to 6.1 (33 to 44)
Propeller shaft and differential companion flange installation nut	kg-m (ft-lb)	3.5 to 4.5 (25 to 33)

Downloaded from www.Manualslib.com manuals search engine

TROUBLE DIAGNOSES AND CORRECTIONS

Condition	Probable cause	Corrective action
Noise (unusual sound) It is difficult to definitely distinguish noise, or unusual sounds, emanating from the rear axle from other noises (unusual sounds) generated by the differential carrier and propeller shaft. If an unusual sound is present, therefore, check closely to be sure that the noise is in fact coming from the rear axle.	1) Loose joint.	Retighten.
	2) Unbalanced tires.	Adjust.
	3) Insufficient lubrication, improper adjustment, worn, or damaged wheel bearing.	Lubricate, adjust, or replace.
	4) Damaged transverse link rubber bushing.	Replace.
	5) Faulty shock absorber (in strut).	Replace.
	6) Damaged differential mount insulator.	Replace.
	7) Damaged universal joint.	Replace.
	8) Worn or seized drive shaft ball spline.	Replace.
	9) Broken coil spring.	Replace.
Unstable running. This problem is also related to the front suspension. For trouble diagnosis, refer to the paragraph covering the front suspension, also.	1) Loose wheel nut(s).	Retighten.
	2) Damaged transverse link bushing.	Replace.
	3) Reduced shock absorber damping force.	Replace.
	4) Seized or damaged drive shaft ball spline.	Replace.
	5) Weakened spring.	Replace.
Oil leakage	1) Damaged drive shaft dust cover.	Disassemble, clean, and reassemble, or replace dust cover.
	2) Worn or damaged rear axle shaft grease seal.	Replace.

Downloaded from www.Manualslib.com manuals search engine

SPECIAL SERVICE TOOLS

No.	Tool number & tool name	Description Unit: mm (in)	For use on	Reference page or Figure No.
1.	KV40101000	Rear axle stand. 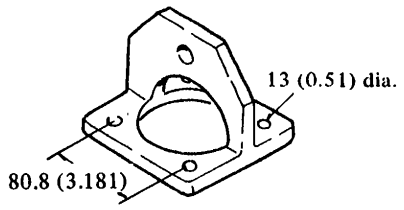 SE063	All models	Fig. RA-4 Fig. RA-5
2.	ST36230000	Sliding hammer. 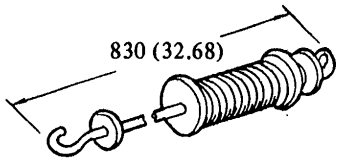 SE059	All models	Fig. RA-5
3.	ST38800000 Rear transverse link bushing replacer	For assembly and disassembly of the rear transverse link bushing 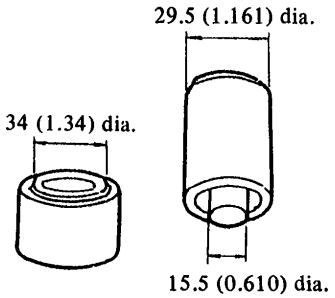 	S30	Fig. RA-35
4.	ST37780000 Rear axle shaft outer bearing drift	For assembly of the rear wheel bearing (outer side) 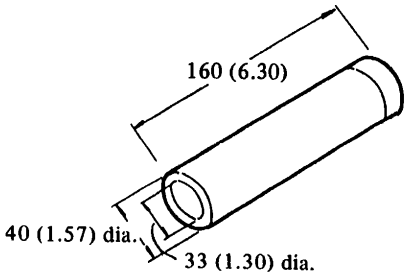 	S30	Page RA-5

Downloaded from www.Manualslib.com manuals search engine

No.	Tool number & tool name	Description Unit: mm (in)	For use on	Reference page or Figure No.
5.	ST33260000 Diff. mounting member insulator drift set	(1) Drift O.D.: 48 mm (1.89 in) (ST33260010) To take insulator out of place, use this drift. (2) Drift O.D.: 62 mm (2.44 in) (ST33260020) To push insulator into place, use this drift together with a press. 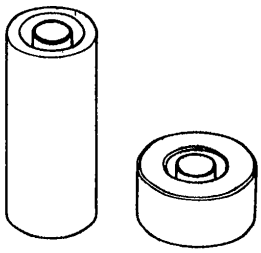 SE223	S30	Fig. RA-31 Fig. RA-32

*As to special tools for Rear Strut, refer to FA Section.

Downloaded from www.Manualslib.com manuals search engine

SERVICE MANUAL

DATSUN 280Z
MODEL S30 SERIES

NISSAN

NISSAN MOTOR CO., LTD.
TOKYO, JAPAN

SECTION BR

BRAKE SYSTEM

BRAKE SYSTEM ..... BR- 2
FRONT DISC BRAKE ..... BR- 8
REAR BRAKE BR-10
HAND BRAKE BR-14
MASTER-VAC BR-15
SERVICE DATA AND SPECIFICATIONS BR-20
TROUBLE DIAGNOSES AND CORRECTIONS BR-22
SPECIAL SERVICE TOOLS BR-25

BR

Downloaded from www.ManualsLib.com manuals search engine

BRAKE SYSTEM

CONTENTS

DESCRIPTION BR-2
BRAKE PEDAL BR-3
REMOVAL BR-3
INSPECTION BR-3
INSTALLATION BR-3
ADJUSTMENT BR-3
ADJUSTING BRAKE PEDAL BR-3
MASTER CYLINDER BR-3
REMOVAL BR-4
DISASSEMBLY BR-4
INSPECTION BR-4
ASSEMBLY BR-4
INSTALLATION BR-4
BRAKE LINE BR-5
INSPECTION BR-5
NP-VALVE BR-6
OPERATING TEST BR-6
REMOVAL AND INSTALLATION BR-6
BRAKE INDICATOR SWITCH BR-6
BLEEDING HYDRAULIC SYSTEM BR-7

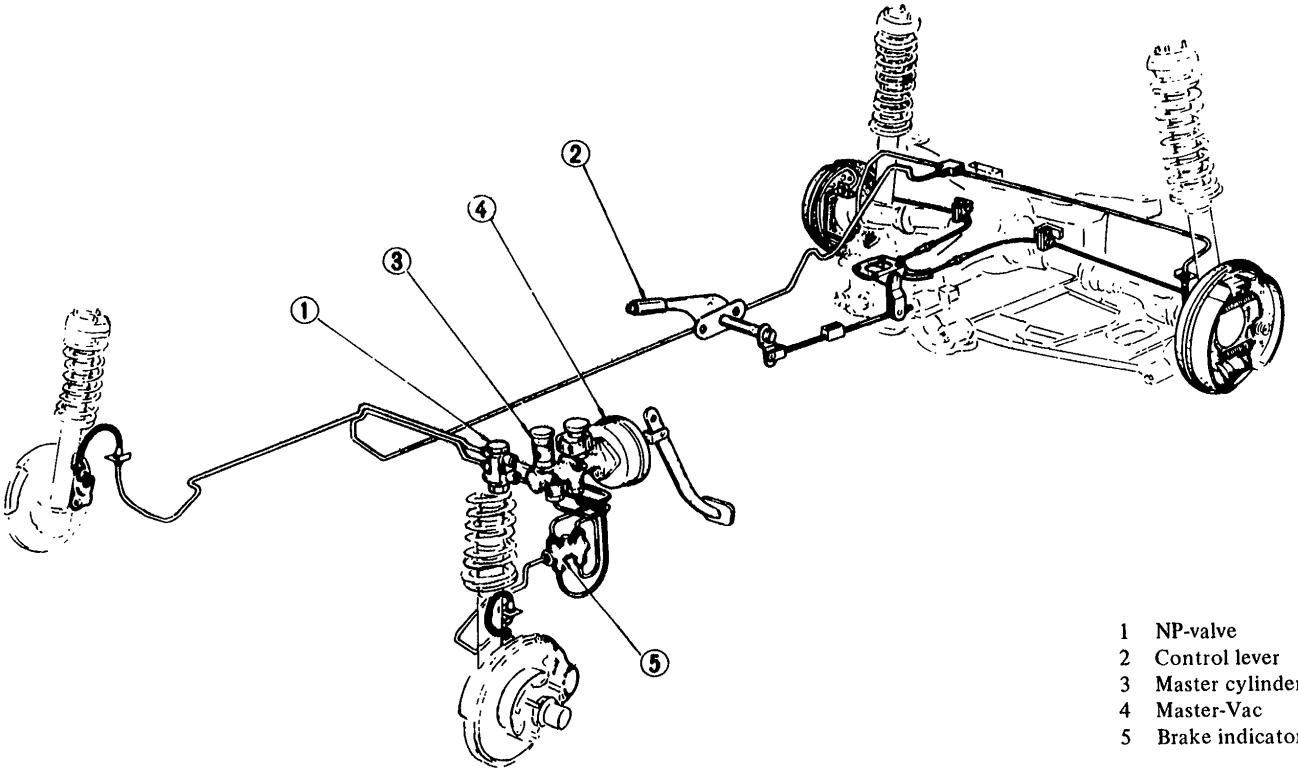

1 NP-valve
2 Control lever
3 Master cylinder
4 Master-Vac
5 Brake indicator switch

BR677

Fig. BR-1 Brake system

DESCRIPTION

The S30 series cars are equipped with disc brake for front, drum brake for rear, and a Master-Vac, to get great braking force.

The front disc brake is Girling-Sumitomo model S-16, and the pad is operated with two pistons.

The leading-trailing type rear drum brake is equipped with auto-adjuster, and in order to get enough cooling effect, aluminum finned brake drums are installed.

Moreover, the brake system is equipped with a NP-valve to prevent skid due to early rear wheel locking.

The hand brake is of a mechanical type, which brakes rear wheels, and is operated by the control lever through linkage and wire.

The control lever is located in the seat side center. The hand brake may also be used as an emergency brake.

Downloaded from www.Manualslib.com manuals search engine

BRAKE PEDAL

The brake pedal is installed on the bracket which also supports the steering column, and the bracket is secured under the dash panel. The stop lamp switch is installed on the pedal bracket, and is operated by pedal arm.

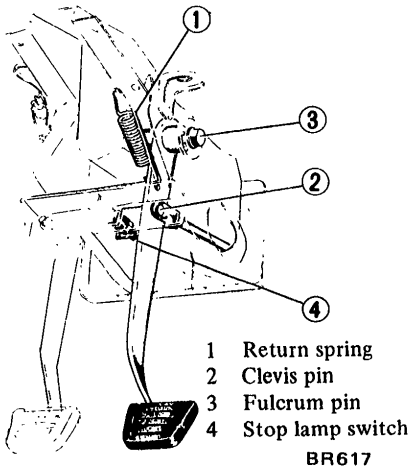

Fig. BR-2 Brake pedal mounting

REMOVAL

(For parts item numbers, refer to Fiugre BR-2.)

1. Remove return spring ①
2. Remove clevis pin ② from the push rod, and separate pedal from Master-Vac.
3. Remove fulcrum pin ③ and remove the pedal.

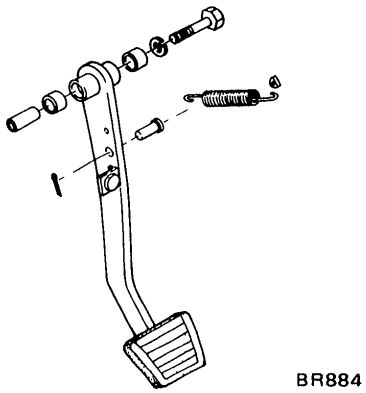

Fig. BR-3 Brake pedal components

INSPECTION

Check brake pedal for the following items, and correct or replace if required.

1. Pedal bushing and sleeve for wear, deformation, and/or damage.
2. Pedal arm for twisting, bending, and/or cracking.

INSTALLATION

Install brake pedal in reverse sequence of removal, noting the following:

1. Be sure to fill pedal shaft sleeve unit and clevis pin unit with recommended multi-purpose grease sufficiently.
2. Be sure to tighten fulcrum pin under tightening torque of 3.5 to 4.0 kg-m (25 to 29 ft-lb).

ADJUSTMENT

ADJUSTING BRAKE PEDAL

1. Loosen lock nut, turn the push rod clevis, and adjust push rod length properly so that height of pedal pad upper surface is 206 mm (8.11 in) with pedal stopper non-effected.
2. Next, turn back stopper, and depress pedal so that pedal pad height is reduced from 206 mm (8.11 in) to 203 mm (7.99 in). See Figure BR-4.

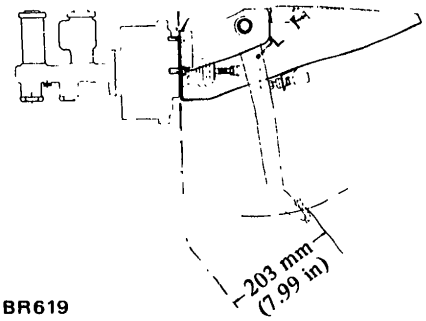

Fig. BR-4 Adjusting brake pedal

Notes:

a. **Install stop lamp switch so that installation screw end surface is flush against bracket.**
b. **After the above processes, make sure that lamp is on when pedal is pushed down by 15 mm (0.59 in) at the place of the brake pedal pad and it is off when pedal is released. Repeat it for several times.**

MASTER CYLINDER

The brake system adopts a tandem type master cylinder. Even the front or rear hydraulic circuit falls into a faulty condition, sufficient braking force can be obtained by another. For the front wheels, the disc brake is used, and thus, a large capacity reservoir is used.

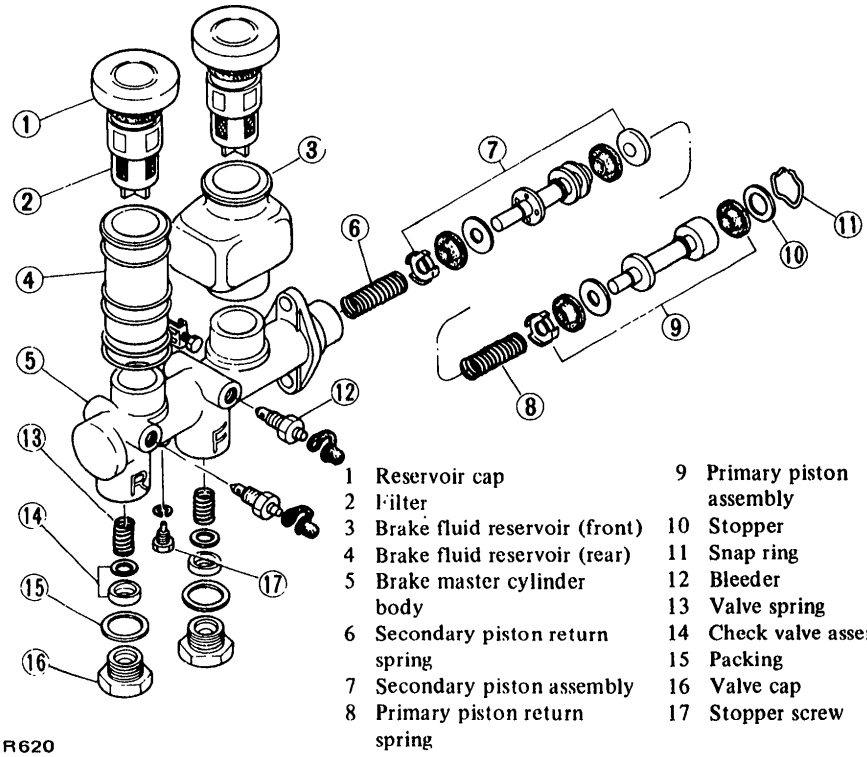

1 Reservoir cap
2 Filter
3 Brake fluid reservoir (front)
4 Brake fluid reservoir (rear)
5 Brake master cylinder body
6 Secondary piston return spring
7 Secondary piston assembly
8 Primary piston return spring
9 Primary piston assembly
10 Stopper
11 Snap ring
12 Bleeder
13 Valve spring
14 Check valve assembly
15 Packing
16 Valve cap
17 Stopper screw

Fig. BR-5 Master cylinder

Downloaded from www.Manualslib.com manuals search engine

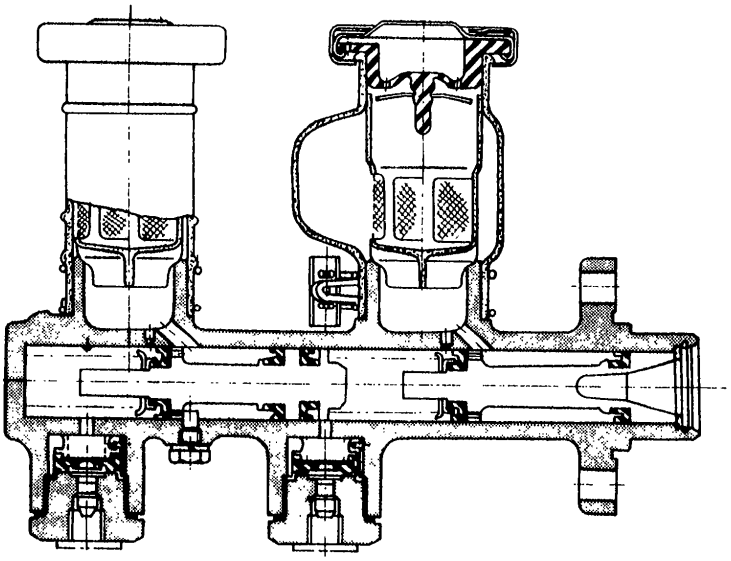

BR212

Fig. BR-6 Cross-sectional view of master cylinder

REMOVAL

1. Disconnect brake tubes from master cylinder.
2. Remove master cylinder installation nuts, and remove master cylinder from Master-Vac.

DISASSEMBLY

(For parts item numbers refer to Figure BR-5)

1. Drain brake fluid, and remove stopper screw (17).
2. Remove snap ring (11), and remove primary piston assembly, secondary piston assembly, and other parts.
3. Remove valve cap (16), and remove check valve (14).

Note: Disassemble master cylinder carefully so that the sliding surface of the piston and piston cup are not damaged. Do not remove fluid reservoir unless really necessary. Moreover, do not remove piston cup unless piston is replaced.

INSPECTION

Thoroughly clean all disassembled parts, check for wear, damage, and other faulty conditions, and replace if necessary.

Note: Do not clean rubber parts with mineral oil since they are deteriorated. Use brake fluid or alcohol. When alcohol is used, however, do not immerse rubber parts under alcohol longer than 30 seconds. After parts are cleaned, dry them with compressed air.

1. Check cylinder and piston for damage and uneven wear on the sliding surface and for other faulty conditions. Replace as required.
2. Replace, if the cylinder and piston clearance is more than 0.15 mm (0.0059 in).
3. In principle replace piston cup, packing and valves with new ones whenever the master cylinder is disassembled. Be sure to replace, if damaged, worn, weakened, or expanded.
4. Check return springs for wear, damage and other faulty conditions, and replace as required.
5. Replace others, if deformed, damaged, or faulty.

ASSEMBLY

Assemble master cylinder in reverse sequence of disassembly, noting the following:

Apply brake fluid to component parts such as cylinder bore, piston, etc., and install carefully so as not to damage them. Moreover, for rubber parts such as piston cup, etc., apply rubber grease slightly.

Tightening torque:
- Stopper screw
  - 0.4 to 0.5 kg-m
  - (3 to 4 ft-lb)
- Valve cap
  - 8 to 9 kg-m
  - (58 to 65 ft-lb)

Note: The brake master cylinder is available in both NABCO make and TOKICO make. There is no interchangeability of repair kits or component parts between NABCO and TOKICO makes. When replacing the repair kit or component parts, ascertain the brand of the brake master cylinder body. Be sure to use parts of the same make as the former ones.

INSTALLATION

Install master cylinder in reverse sequence of removal. After air bleeding, make sure that no brake fluid leaks from the circuit. For pedal height adjustment, refer to the paragraph of pedal adjustment.

Tightening toruqe:
- Brake tube
  - 1.5 to 1.8 kg-m
  - (11 to 13 ft-lb)
- Master cylinder installation nut
  - 0.8 to 1.1 kg-m
  - (6 to 8 ft-lb)

Downloaded from www.Manualslib.com manuals search engine

BRAKE LINE

The brake lines branched from the tandem type master cylinder are extended to the front and rear wheels, forming independent hydraulic circuits. An indicator switch is equipped for warning faulty condition in brake line. In addition, the rear wheel side circuit is equipped with the proportioning valve in front of the 3-way connector so as to protect the rear wheels from locking during rapid braking. The brake line is a galvanized double-layer steel tube.

INSPECTION

Check brake lines (tubes and hoses) for crack and/or damage, and replace, if faulty. When brake fluid leaks from joint, retighten or replace.

Pay attention to the following when installing brake lines.

1. Provide a sufficient space between brake lines and other parts so that brake lines are not interfered with other parts due to vibration during driving.
2. Be careful not to warp or twist brake hose, and particularly be careful not to bring brake hose into contact with tires and suspension components.
3. Using Brake Pipe Torque Wrench GG94310000, tighten each connector to the specified torque.
4. Upon completion of brake line installation, be sure to bleed the air.

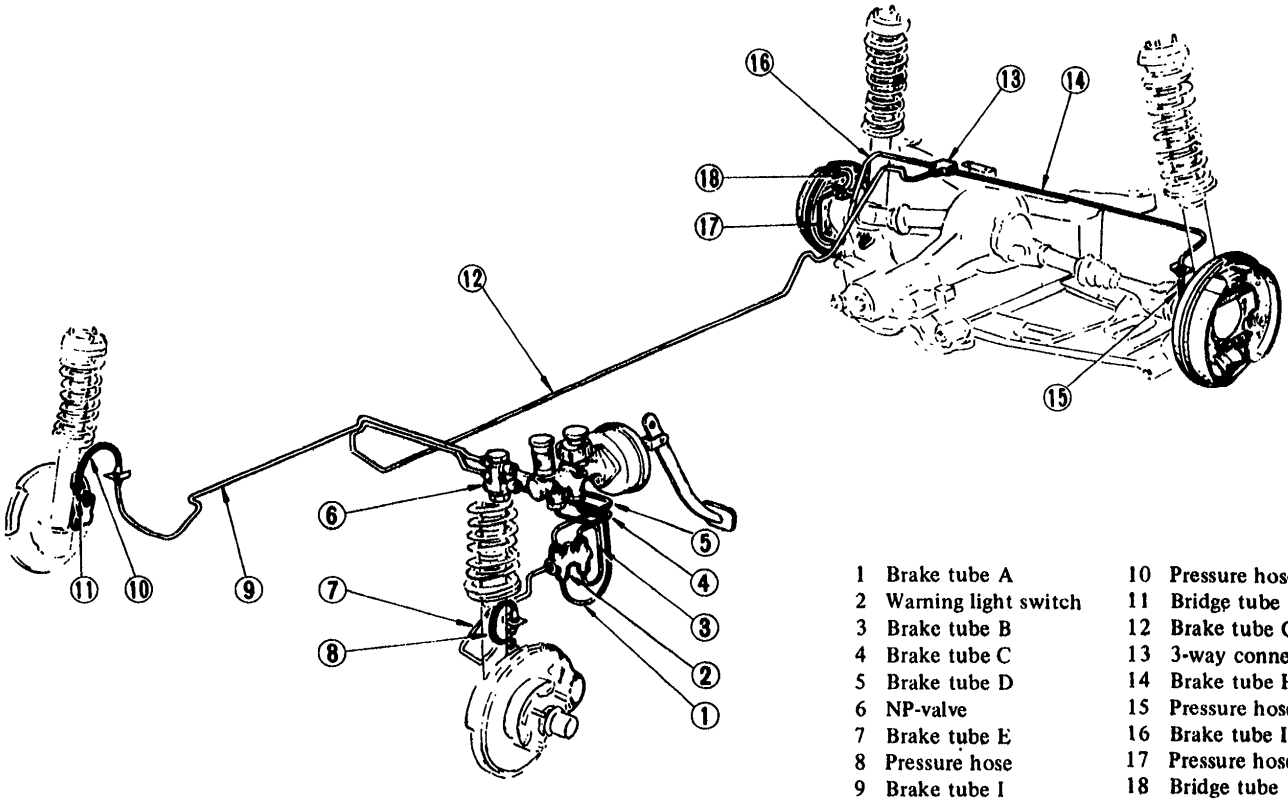

Fig. BR-7 Brake line

Downloaded from www.Manualslib.com manuals search engine

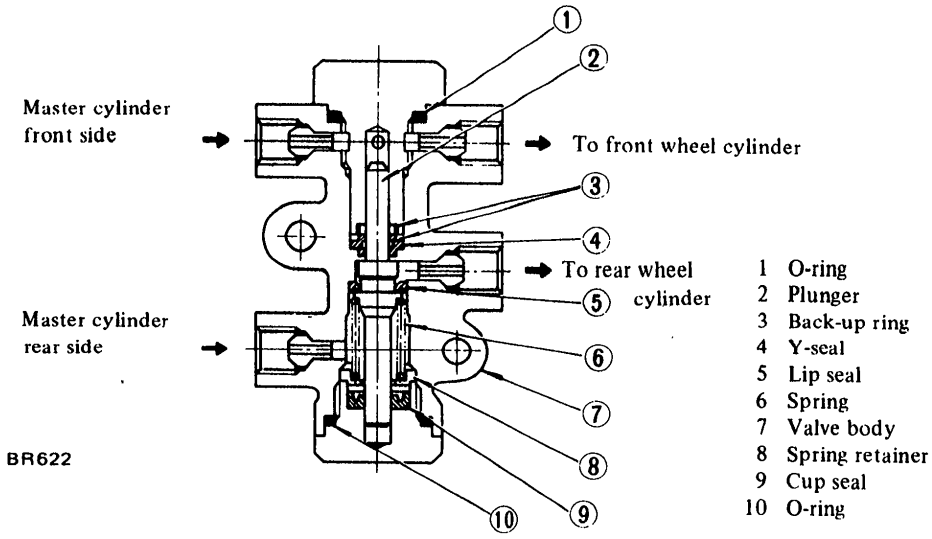

Fig. BR-8 Cross-sectional view of NP-valve

NP-VALVE

This valve controls the pressure of the rear wheel cylinder to prevent the earilier locking of the rear wheel. The valve serves as a mere connector earlier locking of the rear wheel. The valve serves as a mere connector independently of the rear system.

When the front brake is leaking, the split point becomes much higher. This causes the rear brake to behave as if it were without the NP-valve.

OPERATING TEST

Conduct the following periodic test at specified interval.

At the test, place the car on dry concrete road with only driver laden and apply a sudden brake at 50 km/h (30 MPH).

1. NP-valve functions normally when rear wheels lock simultaneously with front wheels lock ahead of rear wheels.
2. If the rear, instead of front, wheels have locked in advance, it may be attributable to malfunctioning of NP-valve. Replace NP-valve with a new one as an assembly.

Note: When this test is conducted, pay attention to other cars.

REMOVAL AND INSTALLATION

NP-valve can be removed easily by removing installation bolts. When installing, however, note the following:

1. Appearance of NP-valve for S30 series is the same as 610 series cars. However, the performance differs. Be careful not to mix up.
2. Connect brake lines with "F" mark toward front brake side and with arrow mark toward the rear brake side.

Note: Identification for inlet and outlet is facilitated by an arrow mark.

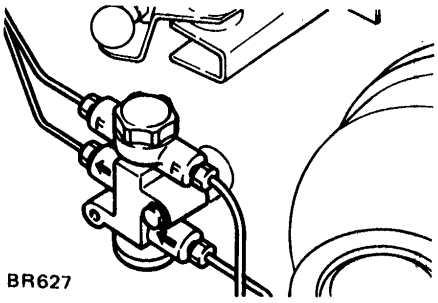

Fig. BR-9 Proportioning valve

BRAKE INDICATOR SWITCH

The brake indicator lamp is located in the speedometer on the instrument panel. This indicator lamp will come on when the pressure differential between the front and rear brake lines is between 5.0 to 15.75 kg/cm^2 (71 to 244 psi).

The brake indicator switch is located in the engine compartment and is hydraulically connected to the front and rear brake lines.

If a pressure differential occurs between these two systems, the valve will shuttle toward the low pressure side and come into contact with the switch terminal. This completes the ground circuit for the indicator switch, causing the lamp to come on. After the indicator lamp has lighted, the valve is held in this position. The light does not go out until the line pressure imbalance is corrected. The valve will automatically return to its original position after the problem as been corrected as follows:

1. When the front brake line pressure drops lower than the rear:

After brake pedal is applied, as rear pressure is higher than front, the valve moves toward the left-hand side (Figure BR-10) and the switch comes on. The light does not go out until the line pressure imbalance is corrected.

After correction, if brake pedal is applied, since the pressures in the front and rear brake lines are now equal and cross-sectional area D_2 is larger than D_3 the valve moves to the right-hand side (Figure BR-10) until sleeve B comes into contact with the stopper. At this point, the valve is properly brought into balance and the indicator lamp goes out.

2. When the rear brake line pressure drops lower than the front:

The valve moves toward the right-hand side and sleeve A comes into contact with the valve stopper.

After correction, since the pressures in the front and rear brake lines are now equal and corss-sectional area D_3 is larger than D_1, the valve moves to the left-hand side until it makes contact with sleeve B. At this point, the valve is properly brought into balance and indicator lamp goes out.

Downloaded from www.Manualslib.com manuals search engine

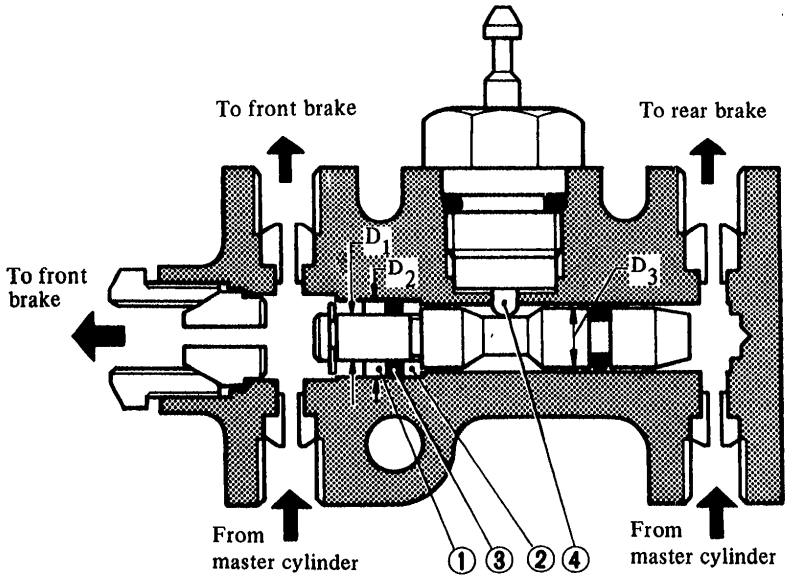

BR811

1	Sleeve A	D_1 :	6.6 mm (0.260 in)
2	Sleeve B	D_2 :	9.5 mm (0.374 in)
3	Rubber seal	D_3 :	8.0 mm (0.315 in)
4	Switch terminal		

Fig. BR-10 Sectional view of brake indicator switch

Whenever the brake warning light comes on, check to ensure that:

(1) no leakage occurs at or around the front brake line, rear brake line or warning light switch; and
(2) the warning light switch functions properly.

Note: Do not attempt to repair switch. Always replace it as an assembly.

BLEEDING HYDRAULIC SYSTEM

Hydraulic brake system must be bled whenever any line has been disconnected or air has entered into system.

When pedal action has a "spongy" feel, it is an indication that air has entered the system.

Bleeding the hydraulic system is an essential part of regular brake service.

1. Clean all dirt around master cylinder reservoir, remove cap and top up reservoir with recommended brake fluid.
2. Thoroughly clean mud and dust from bleeder valve so that outlet hole is free from any foreign material. Install a bleeder hose on bleeder valve.
   Place the other end of hose in a container filled with brake fluid.
3. Depress brake pedal two or three times, then keep pedal fully depressed.
4. With brake pedal fully depressed, open bleeder valve to expel air.

Notes:
a. **Pay attention to brake fluid level in master cylinder reservoir during bleeding operation.**
b. **Do not reuse brake fluid drained during bleeding operation.**
c. **Bleed air as follows;**
   Rear wheels ⟶ Front wheels
d. **Exercise care not to splash brake fluid on exterior finish as it will damage the paint.**

5. Close bleeder valve quickly as brake pedal is on down stroke.
6. Allow brake pedal to return slowly with bleeder screw closed.
7. Repeat bleeding operations until no air bubbles show in hose.

Notes:
a. **Brake fluid containing air is white and has visible air bubbles.**
b. **Brake fluid containing no air runs out of bleeder valve in a solid stream free of air bubbles.**

8. Repeat above steps on the remaining brake lines to expel all air.

Downloaded from www.Manualslib.com manuals search engine

FRONT DISC BRAKE

CONTENTS

REPLACING PAD ..... BR- 8
REMOVAL ..... BR- 8
INSPECTION ..... BR- 9
INSTALLATION ..... BR- 9
REPLACING PISTON SEAL ..... BR- 9
REMOVAL ..... BR- 9
DISASSEMBLY ..... BR- 9
INSPECTION ..... BR- 9
ASSEMBLY BR-10
REINSTALLATION BR-10
DISASSEMBLING CALIPERS BR-10
INSPECTING ROTOR BR-10
ADJUSTING FRONT BRAKE BR-10

Girling-Sumitomo model S-16 disc brake is used. Rigidity of the caliper is high, brake pedal feeling is adequate, and the pad dragging is minimized. The pad is returned by elasticity of the piston seal. When the pad is worn, the piston operating stroke increases, slipping occurs on the piston seal surface, and thus, clearance is adjusted automatically. See Figure BR-12.

Moreover, in order to prevent brake squealing, a shim is inserted behind the pad.

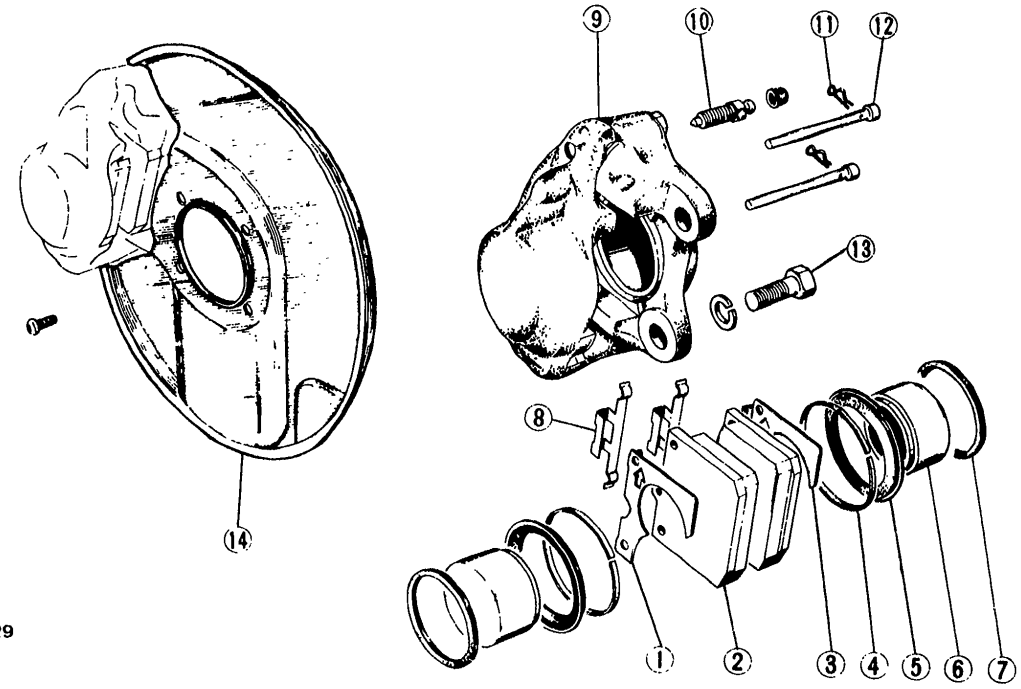

1 Anti-squeal shim R.H.
2 Pad
3 Anti-squeal shim L.H.
4 Retaining ring
5 Dust cover
6 Piston
7 Piston seal
8 Anti-squeal spring
9 Caliper assembly
10 Bleeder
11 Clip
12 Retaining pin
13 Caliper fixing bolt
14 Baffle plate

Fig. BR-11 Front disc brake

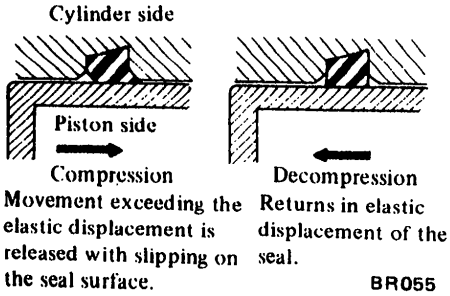

Fig. BR-12 Piston seal automatic adjusting operation

REPLACING PAD

REMOVAL

1. Jack up the front side of car, and remove wheel.
2. Remove clip ①, retaining pin ②, and anti-squeal spring ③, and remove pad ④ together with the shim as shown in Figure BR-13.

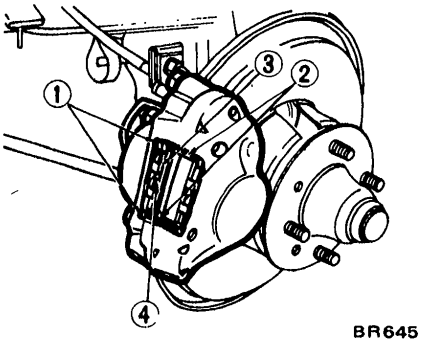

Fig. BR-13 Removing pad

Downloaded from www.Manualslib.com manuals search engine

INSPECTION

1. Clean pad with carbon tetrachloride.
2. When oil and/or grease is heavily sticked on pad, or when deteriorated or deformed due to overheating, replace pad with a new one.
3. When thickness of the friction material is less than 2 mm (0.08 in), replace. Replace, when total pad thickness is less than 7.5 mm (0.295 in).

Note: Replace pads as a set. Replacement at only one position may cause uneven brake effect. Rotation of pads is recommended to be made periodically.

INSTALLATION

1. Clean calipers and piston pad installing parts.

Note: Do not use mineral oil. Be careful not to apply oil on rotor.

2. Depress piston into cylinder so that new pad can be installed.

Note: Note that brake fluid may overflow from reservoir. Carry out operation by loosening breather to release brake fluid.

3. Apply pad grease to working portions of caliper and both sides of shim (portion marked with oblique line in figure). See Figure BR-14.

Note: Do not grease friction face of pad.

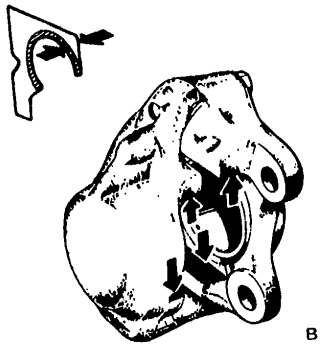

Fig. BR-14 Applying grease

4. Install pad and anti-squeal shim, assemble anti-squeal spring and retaining pin, and secure them with clip.

Note: Install shim so that the arrow mark points to rotor forward rotating direction.

5. When pad is installed, depress brake pedal several times so as to settle down the pad in its position.

REPLACING PISTON SEAL

If brake fluid leaks from piston unit or pad does not return properly, replace piston seal with a new one in accordance with the following instructions. It should be noted that components should be maintained under clean state while disassembling.

REMOVAL

1. Remove pad.
2. Disconnect the brake line (1) and caliper installation bolt (2), and remove caliper assembly from knuckle spindle. See Figure BR-15.

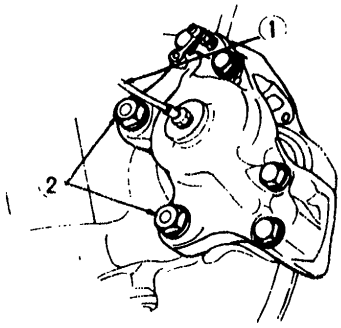

Fig. BR-15 Removing calipers

DISASSEMBLY

1. Remove mud and dust from caliper assembly before disassembly.
2. Remove retaining ring 4 and dust cover (5) in that order. (Refer to Figure BR-11.)
3. Hold caliper with hand, apply compressed air from brake line joint, and remove pistons. See Figure BR-16.

Notes:

a. **In feeding air, feed air a little at first. If only one piston move smoothly, hold smoother side piston with a piece of wood, and remove both pistons evenly.**
b. **Take special care not to damage your finger during the operation.**

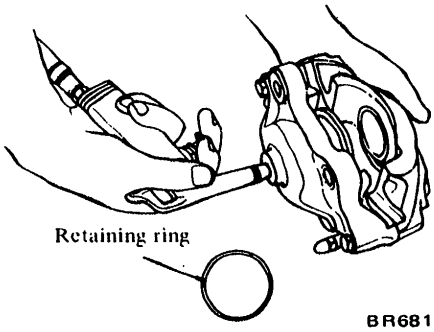

Fig. BR-16 Removing piston

4. Remove piston seal from cylinder, and clean inside.

Note: Remove piston seal carefully with finger so that cylinder wall is not damaged.

INSPECTION

Thoroughly clean all disassembled parts, and check them for the following items.

Note: When cleaning rubber parts, use alcohol or brake fluid. If rubber parts are cleaned with mineral oil, they will be deteriorated.

1. Calipers

If cylinder wall is damaged or worn, replace. If cylinder wall is rusted or foreign matters are accumulated on cylinder wall, carefully polish with fine emery paper so that cylinder wall is not damaged. If rusted or roughened excessively, replace.

2. Pad

See paragraph covering replacement of pad.

3. Piston

Replace, if unevenly worn, damaged, and/or rusted.

Note: Piston sliding surface is plated. Thus, although rusted or foreign matters are sticked on the sliding surface, do not use emery paper.

4. Seals

Primarily, replace both piston seals and dust covers whenever overhauling.

Note: The piston seal affects not only leaking but also piston return. For this reason, replace although damage is minor.

Downloaded from www.Manualslib.com manuals search engine

ASSEMBLY

1. Install the piston seal carefully so that the seal is not damaged.

Note: Be sure to apply rubber grease to the piston seal before installing.

2. Install dust cover on the piston, and the piston into the cylinder. Clamp the dust cover with the retaining ring.

Note: When inserting the piston, apply brake fluid to the piston sliding surface.

3. After assembly is completely accomplished on one cylinder, assemble another side in the same manner.

REINSTALLATION

Reinstallation is in reverse sequence of removal. After pad is installed completely, bleed hydraulic line.

Tightening torque:
Caliper installation bolt:
7.3 to 9.9 kg-m
(53 to 72 ft-lb)

DISASSEMBLING CALIPERS

Do not remove bridge bolt.

If brake fluid leaks from bridge seal, replace a new assembly: **(Be sure to replace calipers as an assembly.)**

INSPECTING ROTOR

Remove caliper assembly, check rotor for deflection and damage, and correct or replace as required.

1. Runout

With wheel bearing adjusted correctly, measure deflection at the center of rotor pad contact surface using dial gauge. See Figure BR-17.

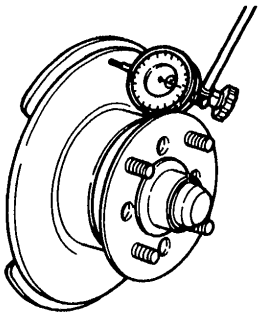

BR350

Fig. BR-17 Measuring runout

Runout limit:
0.10 mm (0.0039 in)
Total indicator reading

2. Parallelism

Measure thickness toward the entire periphery on the same circumference using a micrometer. See Figure BR-18.

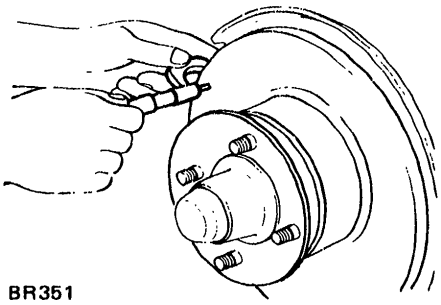

BR351

Fig. BR-18 Measuring parallelism

Parallelism:
Less than 0.03 mm (0.0012 in)

3. Thickness

If the rotor thickness is out of limit, replace. When correcting thickness, be sure that the thickness after correction does not exceed the limit.

Standard thickness: 12.5 mm (0.492 in)
Wear limit: 10.5 mm (0.413 in)

ADJUSTING FRONT BRAKE

Ordinarily, adjustment is not required because clearance between pad and rotor is adjusted automatically by elasticity of piston seal.

REAR BRAKE

CONTENTS

REPLACING BRAKE SHOE BR-11
REMOVAL BR-11
INSTALLATION BR-11
DISASSEMBLY AND INSPECTION BR-12
REMOVAL BR-12
INSPECTION BR-13
ASSEMBLY AND INSTALLATION BR-13
ADJUSTING REAR BRAKE BR-13

Downloaded from www.Manualslib.com manuals search engine

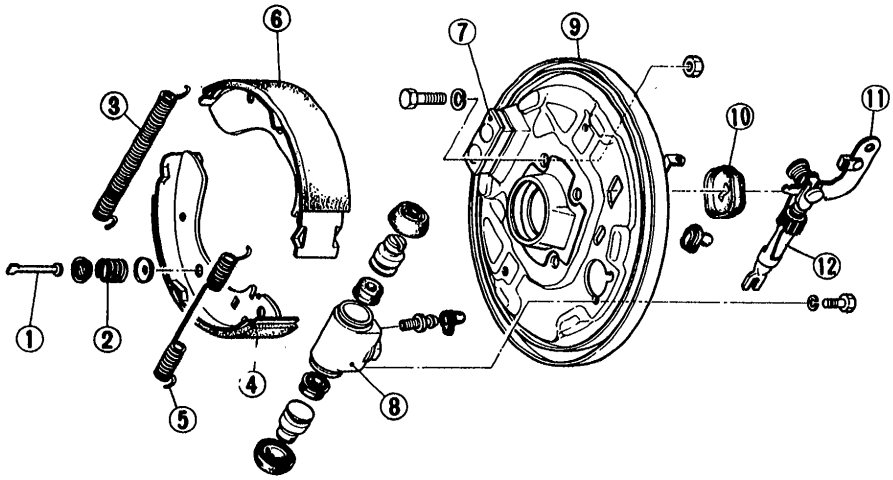

1	Anti-rattle pin	7	Anchor block
2	Anti-rattle spring	8	Wheel cylinder
3	Return spring	9	Brake disc
4	Fore-shoe assembly	10	Dust cover
5	Return spring	11	Toggle lever
6	After-shoe assembly	12	Adjuster

BR885

Fig. BR-19 Rear brake

The rear brake system is a leading-trailing type with aluminum finned drum. Parking brake is of an auto-adjusting type. When the hand brake is operated, the toggle lever turns the adjusting nut, and thus, clearance between the brake shoe and brake drum is adjusted automatically.

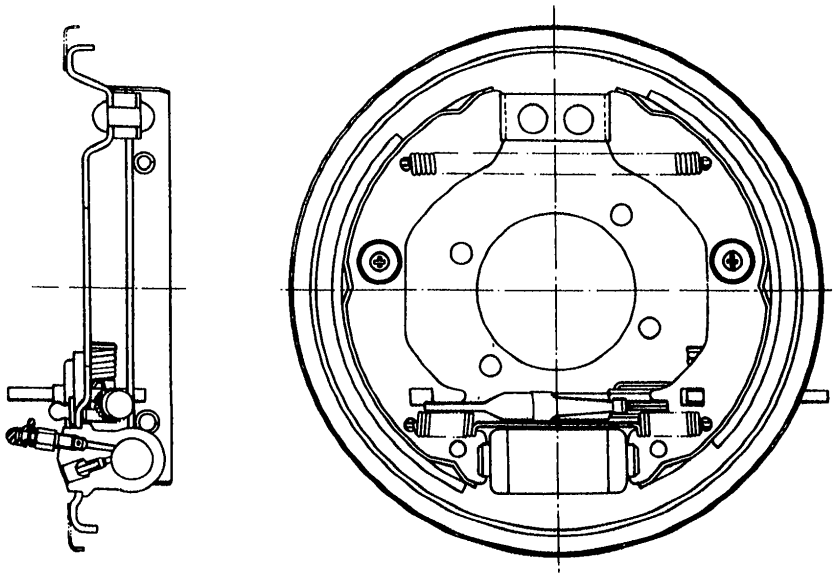

BR886

Fig. BR-20 Sectional view of rear brake

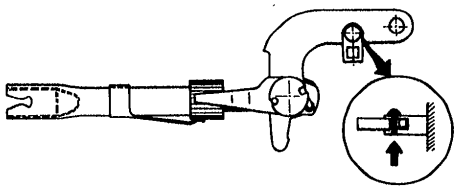

BR887

Fig. BR-21 Adjuster assembly (Left-hand side)

REPLACING BRAKE SHOE

REMOVAL

1. Jack up car, support it with a stand and remove tire.
2. Remove brake drum. When it is hard to remove brake drum, apply the following instructions.
(1) Fully pull up center brake lever.
(2) Push out or tap out cotter pin and remove stopper from toggle lever. (See Figures BR-21 and BR-22.)

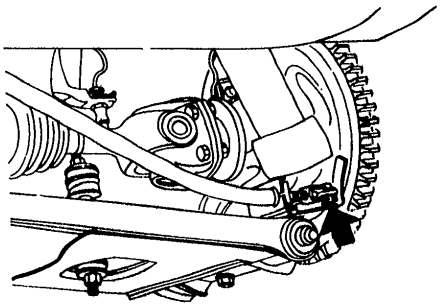

RA286

Fig. BR-22 Removing toggle lever stopper

(3) Release center brake lever.
3. Remove anti-rattling spring, and then remove both brake shoes.

INSTALLATION

Before installing brake shoe, check wheel cylinder operation. If it does not operate properly, disassemble and adjust. For details, see the paragraph covering disassembly. When replacing

Downloaded from www.Manualslib.com manuals search engine

brake shoe, be sure that fore-shoe is in trailing side and after-shoe is in leading side. (See Figures BR-19 and BR-20.)

1. Apply brake grease to adjuster, adjusting nut and threaded portion of adjusting nut.

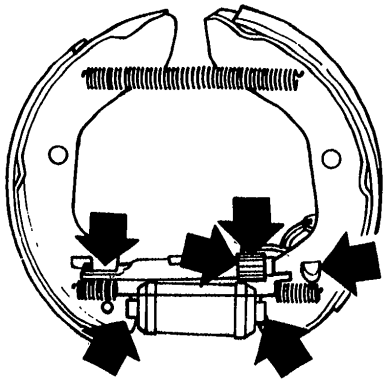

BR888

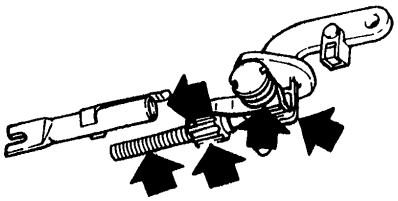

BR889

Fig. BR-23 Applying brake grease

2. Apply brake grease to brake disc and anchor block.

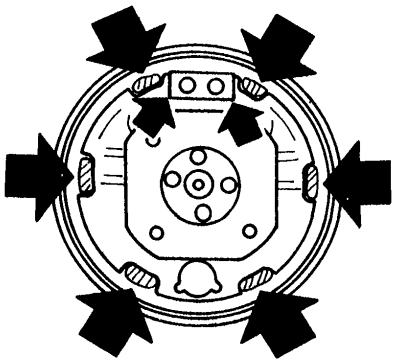

BR890

Fig. BR-24 Applying brake grease

3. Install brake shoe, return spring, and anti-rattling spring.

Note: Be careful not to allow grease to stick on brake shoe lining.

4. Install brake drum, pull hand lever several times, and with the automatic adjusting operation, adjust brake shoe and brake drum clearance.

Note: Continue the adjustment until click is eliminated from adjusting wheel claw.

DISASSEMBLY AND INSPECTION

REMOVAL

1. Jack up car, and remove wheels, brake drum and brake shoe.

Note: For details, refer to the paragraph covering brake shoe replacement.

2. Remove brake tube ①, loosen bolts ② and remove wheel cylinder. See Figure BR-25.

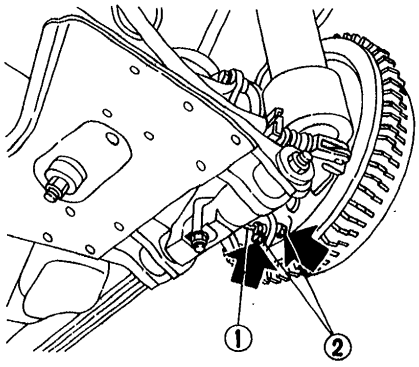

BR891

Fig. BR-25 Removing wheel cylinder

3. When removing brake disc, withdraw axle shaft, and remove attaching bolts. (Refer to Section "RA".)

4. Disassemble wheel cylinder (See Figure BR-26.)

Remove dust cover and withdraw piston.

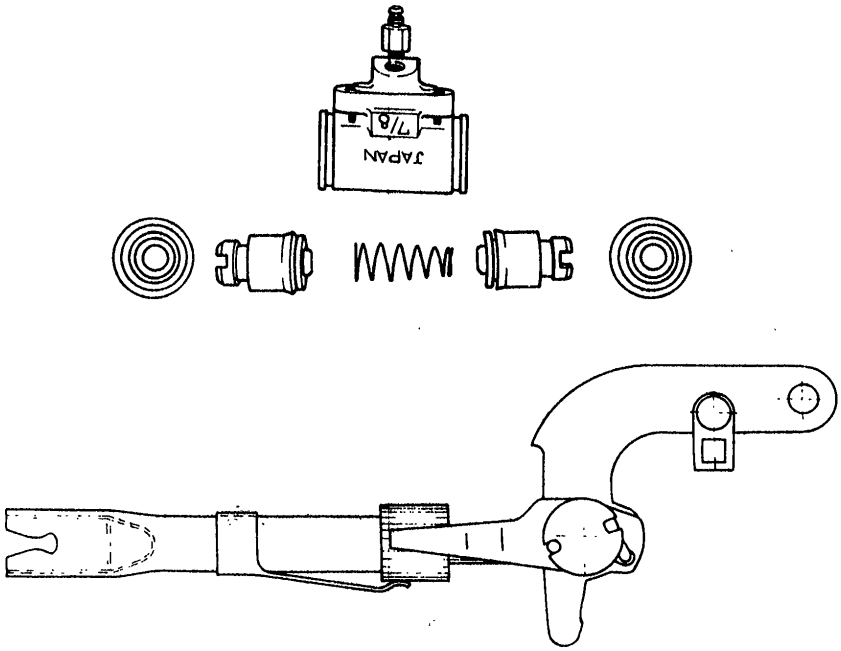

BR892

Fig. BR-26 Wheel cylinder and adjustor

Downloaded from www.Manualslib.com manuals search engine

INSPECTION

Brake drum

1. Check brake drum for cracks, uneven wear or deflection, and replace as required.
2. Replace any brake drum whose diameter is 1.4 mm (0.055 in) beyond the standard inner diameter of 228.60 mm (9 in).
3. The maximum allowable out of round of drum inside is 0.05 mm (0.0020 in).

Recondition or replace brake drum if specified limit is exceeded.

4. Drum surface with which linings come into contact should be finished by grinding with #120 to #150 sandpaper.
5. If brake drum shows any sign of score marks or partial or stopped wear on its contact surface, machine finish it with a drum racer.

Note: After brake drum has been completely reconditioned or replaced, check drum and shoe for proper contact pattern.

Wheel cylinder

1. Replace any cylinder or piston which is scratched, scored or worn on its sliding contact surface.
2. Replace piston cup.

Note: It is difficult to detect damage or wear in a cup; thus, always replace it at each disassembly.

3. Replace cylinder if contacting face of cylinder is worn locally or stepped.
4. Replace if the cylinder and piston clearance is more than 0.15 mm (0.0059 in).
5. Replace dust cover if damaged.

ASSEMBLY AND INSTALLATION

The rear brake can be assembled and installed in reverse sequence of disassembly and removal. However, note the following:

1. Apply brake fluid to piston cup and insert pistons into cylinder with spring.
2. Apply rubber grease to inside of rubber boot and install it to cylinder.

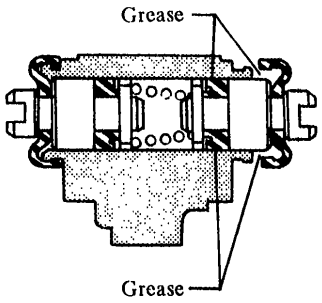

BR893

Fig. BR-27 Applying rubber grease to piston cup

3. When installing wheel cylinder and adjuster to brake disc, apply brake grease to cylinder, disc and the specified portion of adjuster as shown in Figure BR-23.

Note: The brake wheel cylinder is available in both NABCO make and TOKICO make. There is no interchangeability of repair kits or component parts between NABCO and TOKICO makes.
When replacing the repair kit or component parts, ascertain the brand of the brake wheel cylinder body. Be sure to use parts of the same make as the former ones.

ADJUSTING REAR BRAKE

Ordinarily, adjustment is not required because brake shoe clearance is adjusted automatically by operating the hand brake, as well as front brake.

After reassembly of rear brake, pull hand brake lever up and down several times. Clearance between shoe and drum will then be adjusted automatically.

Downloaded from www.Manualslib.com manuals search engine

HAND BRAKE

The hand brake linkage is in floor tunnel. Hence, removal and other operations must be done after removing propeller shaft.

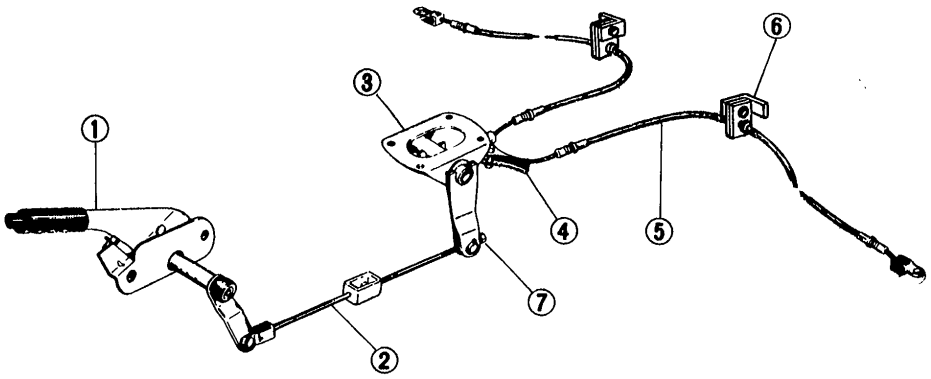

BR639

1 Control lever
2 Front rod
3 Center lever
4 Equalizer
5 Rear cable
6 Wire hanger
7 Adjusting rod

Fig. BR-28 Hand brake linkage

REMOVAL

1. Remove lock nut ① and adjusting rod ② from the rear end, clevis pin ③ from the front end, and remove front rod. See Figure BR-29.
2. Remove hanger spring and clevis pin ④. See Figure BR-29.

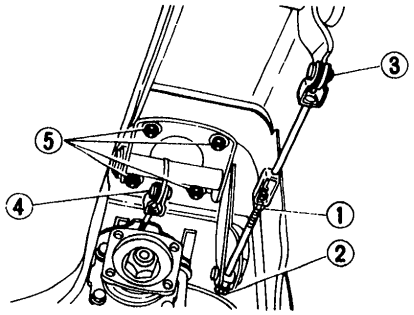

BR696

Fig. BR-29 Removal of hand brake

3. Remove clevis pin ⑥ and separate rear cable from lever.

Remove wheel side retainers ⑦ from both sides, and remove equalizer side retainer in the same manner. Rear cable can be removed. See Figure BR-30.

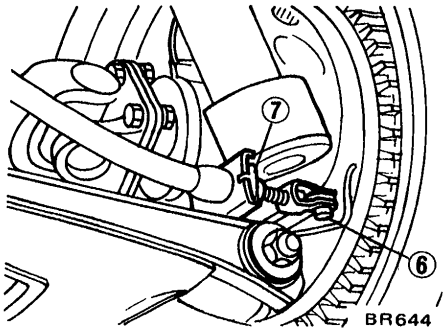

BR644

Fig. BR-30 Removing rear cable

4. Remove four bolts ⑤ (shown in the Figure BR-29), and remove center arm assembly from floor.

Note: Nuts are secured on floor panel by means of welding.

5. Remove front rod end and attaching bolt ①, and remove control lever toward passenger's compartment. See Figure BR-31.

Note: When removing control lever, first, remove right side seat. Boot is secured with four fasteners (2)

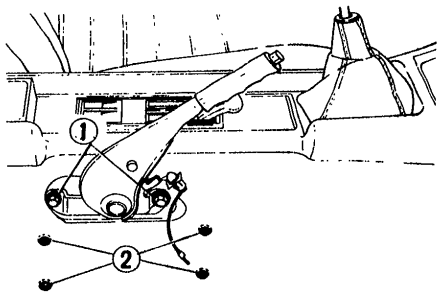

BR641

Fig. BR-31 Removing control lever

INSPECTION

Check all parts for excessive wear and damage, and replace, if necessary.

INSTALLATION

Install hand brake in reverse sequence of removal, noting the following.

1. Be sure to apply recommended multi-purpose grease to the pivot on control lever head and other sliding portions sufficiently.
2. Before adjusting hand brake, complete the adjustment of rear brakes. (Refer to page BR-11 "REPLACING BRAKE SHOE".)

   Reduce the linkage play with adjusting rod.
3. After adjusting hand brake, operate the control lever to stabilize cable.
4. Make sure that no adjacent parts interfere with cables. Do not apply undue stress to cables.

Downloaded from www.Manualslib.com manuals search engine

MASTER-VAC

CONTENTS

DESCRIPTION BR-16
INSPECTING VACUUM PRESSURE BR-16
INSPECTING CHECK VALVE BR-16
OPERATING TEST BR-16
REMOVAL BR-17
DISASSEMBLY BR-17
REAR SHELL-SEAL ASSEMBLY BR-17
DIAPHRAGM PLATE ASSEMBLY BR-18
FRONT SHELL-SEAL ASSEMBLY BR-18
INSPECTION BR-18
ASSEMBLY AND ADJUSTMENT BR-18
REAR SHELL-SEAL ASSEMBLY BR-18
DIAPHRAGM PLATE ASSEMBLY BR-19
FRONT SHELL-SEAL ASSEMBLY BR-19
FINAL ASSEMBLY BR-19
INSTALLATION BR-19

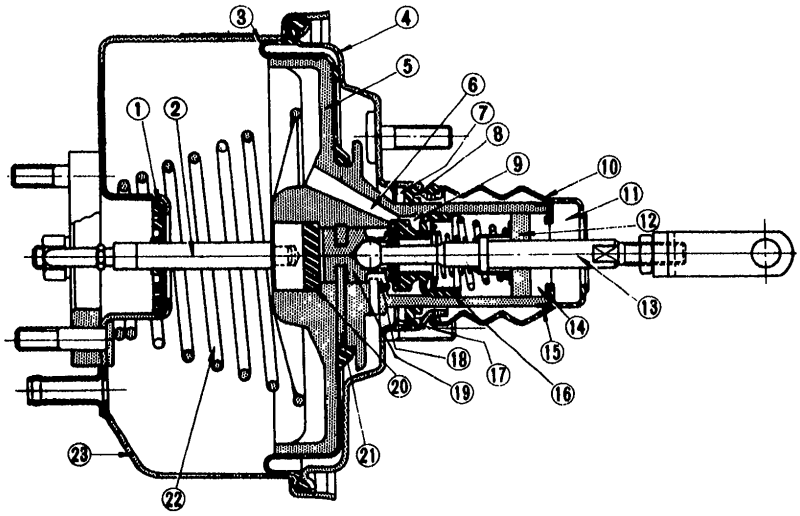

M75 type Master-Vac

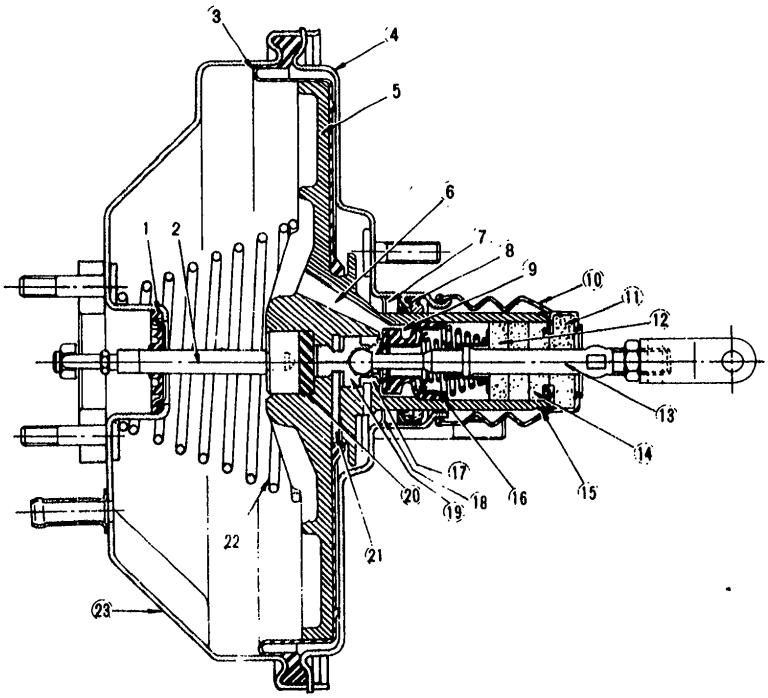

M90 type Master-Vac

1 Plate and seal assembly
2 Push rod
3 Diaphragm
4 Rear shell
5 Power piston (Valve body and diaphragm plate)
6 Vacuum route
7 Bearing
8 Seal
9 Vacuum valve
10 Valve body guard
11 Air silencer filter
12 Air silencer filter
13 Valve operating rod assembly
14 Silencer
15 Air silencer retainer
16 Poppet assembly
17 Air valve
18 Retainer
19 Valve plunger
20 Reaction disc
21 Valve plunger stop key
22 Diaphragm return spring
23 Front shell

BR684

Fig. BR-32 Cross-sectional view of Master-Vac

Downloaded from www.Manualslib.com manuals search engine

DESCRIPTION

A Master-Vac which decreases the pedal operating force and effectively and certainly brakes all wheels is installed between the brake pedal and the master cylinder. As the brake pedal is depressed, fluid is forced under high pressure through the brake pipes to the wheel cylinders to retard or stop the car.

The tandem master cylinder is capable of producing high pressure even if the Master-Vac is faulty.

The S30 models are equipped with M75 type Master-Vac (7½ in diaphragm) and GS30 (2 + 2 seater) models with M90 type Master-Vac (9 in diaphragm). The construction of both Master-Vacs is basically the same.

INSPECTING VACUUM PRESSURE

1. Install a vacuum gauge between check valve and Master-Vac.
2. Increase engine speed, and stop the engine when the vacuum gauge indicates 500 mmHg (19.69 inHg). See Figure BR-33.

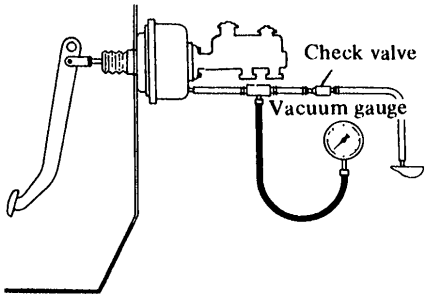

BR072

Fig. BR-33 Installing vacuum gauge

(1) When 15 seconds are elapsed after stopping the engine without braking and pressure drops more than 25 mmHg (0.98 in Hg);

Possible cause	Corrective action
1. Faulty check valve airtightness.	Replace.
2. Faulty push rod seal airtightness.	Replace.
3. Faulty airtightness between valve body and seal.	Repair or replace.
4. Faulty valve plunger seat airtightness.	Repair or replace.
5. Damaged piping or faulty joint airtightness.	Repair or replace.

(2) When 15 seconds are elapsed after stopping the engine by applying full braking force, and pressure drops more than 25 mmHg (0.98 in Hg);

Possible cause	Corrective action
1. Faulty check valve airtightness.	Replace.
2. Damaged diaphragm.	Replace.
3. Dropped off reaction disc.	Reinstall and check the push rod for returning.
4. Faulty airtightness on poppet assembly seat surface and valve body surface.	Repair or replace.

Note: When a replacement is required, be sure to replace Master-Vac as an assembly.

INSPECTING CHECK VALVE

1. Remove clip and disconnect the hoses from both ends. Check valve can be removed.

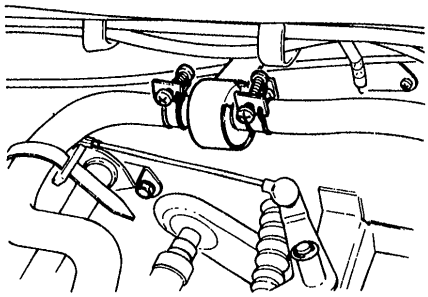

BR685

Fig. BR-34 Removing check valve

2. Using a Master-Vac tester, apply vacuum pressure of 500 mmHg (19.69 in Hg) to Master-Vac side of check valve. When pressure drops more than 10 mmHg (0.39 in Hg) within 15 seconds replace check valve with a new one.
3. When pressure is applied to Master-Vac side of check valve and valve does not open, replace check valve with a new one. See Figure BR-35.

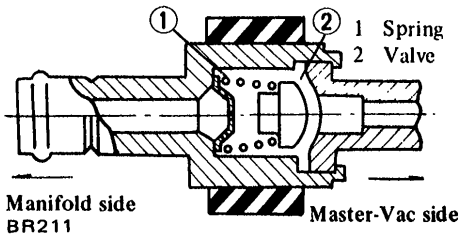

Fig. BR-35 Cross-sectional view of check valve

OPERATING TEST

1. Connect an oil pressure gauge to brake line at master cylinder connection.
2. Start engine and increase engine speed until vacuum pressure gauge indicates 500 mmHg (19.69 inHg).
3. With the vacuum pressure constant at 500 mmHg (19.69 inHg), measure the oil pressure with respect to various pedal operating forces.
4. Relationship between oil pressure and pedal operating force is illustrated in Figure BR-36 or BR-37. If test results are not as specified in Figure BR-36 or BR-37, check Master-Vac as

Downloaded from www.Manualslib.com manuals search engine

described under "Inspection" before removal of this unit. Also check brake line for any evidence of fluid leakage.

Note: Determine whether source of problem is in Master-Vac or check valve.

Before coming to any final conclusion, always inspect check valve.

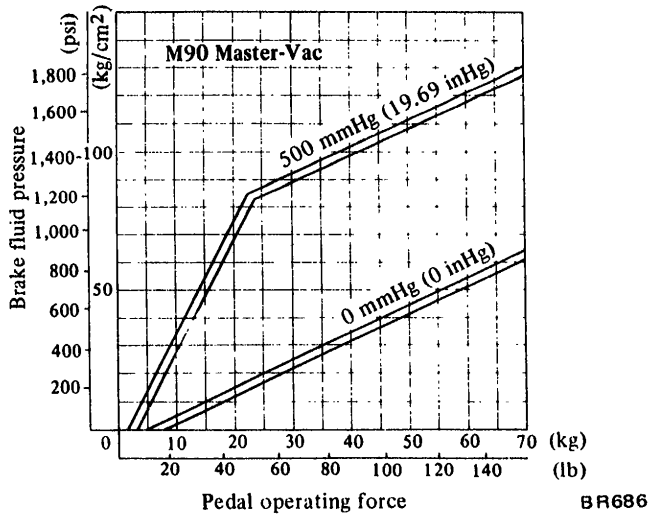

Fig. BR-36 Performance curve of Master-Vac (M90 type)

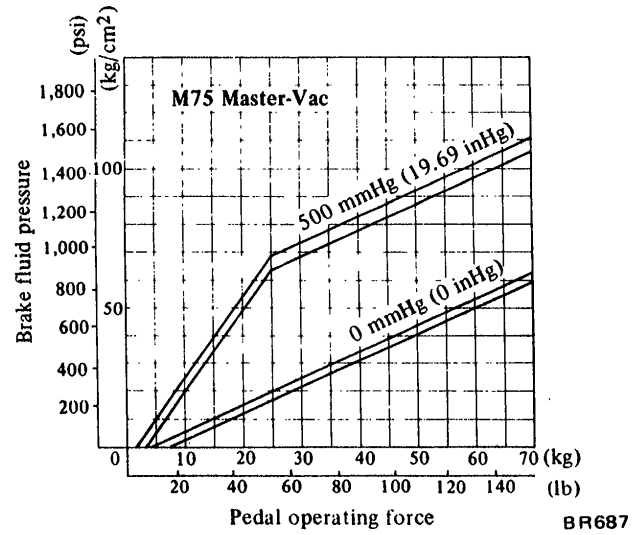

Fig. BR-37 Performance curve of Master-Vac (M75 type)

REMOVAL

Referring to Figure BR-38, remove parts in numerical order enumerated.

Install these parts in reverse sequence of removal.

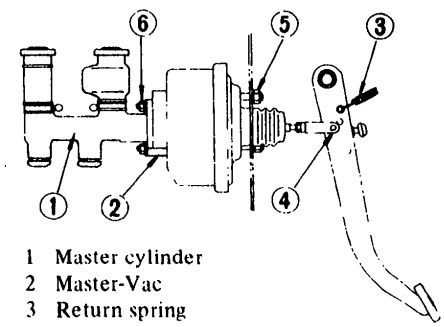

1 Master cylinder
2 Master-Vac
3 Return spring
4 Clevis pin
5 Master-Vac fixing nut
6 Master cylinder fixing nut

BR689

Fig. BR-38 Removal method of Master-Vac

Note: After Master-Vac is properly installed on car, be sure to conduct an air-tight test and operation test described previously in this Section.

DISASSEMBLY

When disassembling Master-Vac, observe the following instructions.

a) Thoroughly clean mud or dust from Master-Vac.

b) Extreme care should be taken not to allow dirt, dust, water or any other foreign matter getting into any component-parts.
Be sure to select a clean place before disassembly or assembly.

c) Mark mating joints so that they may be installed exactly in their original positions.

d) Keep all disassembled parts arranged properly so that they may readily be assembled at any time.

e) Clean rubber parts and synthetic-resin parts in alcohol.

f) After all disassembled parts are cleaned in an approved solvent, place on a clean work bench. Use care not to allow dirt and dust coming into contact these parts.

1. Install spacer on rear shell spacer temporarily. Place Master-Vac in a vise. Use of soft jaws is suggested.

2. Remove clevis and lock nut. Detach valve body guard.

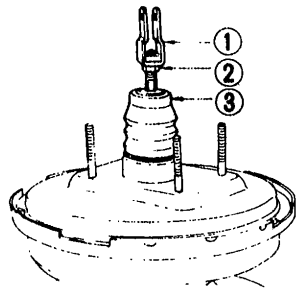

1 Clevis
2 Lock nut
3 Valve body guard

BR176

Fig. BR-39 Removing rear shell

3. Identify front shell and rear shell clearly so that they may be reassembled in their original positions from which they were withdrawn. (Bolts to be attached on dashboard are not same in pitch.)

4. Using special tool "Master-Vac Wrench ST08080000", remove rear shell-seal assembly, and disassemble diaphragm plate assembly, front shell assembly, diaphragm spring and push rod assembly.

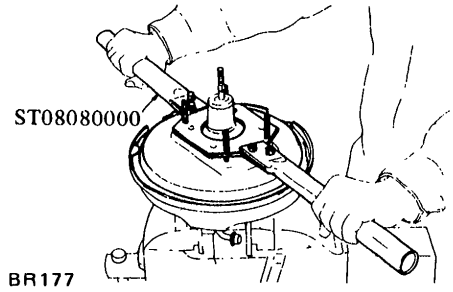

Fig. BR-40 Removing rear shell

REAR SHELL-SEAL ASSEMBLY

Pry off seal assembly with use of a screwdriver as shown.

Note: Do not disassemble seal assembly unless absolutely necessary. Whenever this is to be removed, use care not to damage it.

Downloaded from www.Manualslib.com manuals search engine

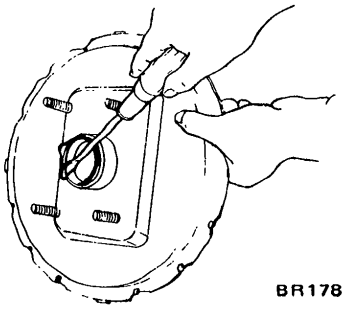

Fig. BR-41 Removing seal

DIAPHRAGM PLATE ASSEMBLY

1. Place diaphragm plate assembly on a clean work bench. Detach diaphragm from groove in plate as shown.

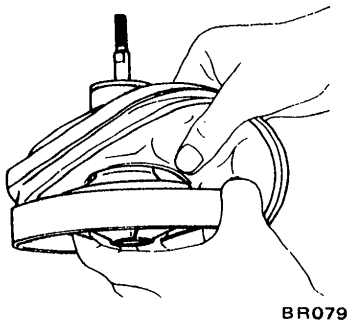

Fig. BR-42 Separating diaphragm

2. Using a screwdriver as shown, evenly pry air silencer retainer until it is detached from diaphragm plate assembly.

Note: Never use a hammer to remove this retainer, since this will be the sure way of damaging it.

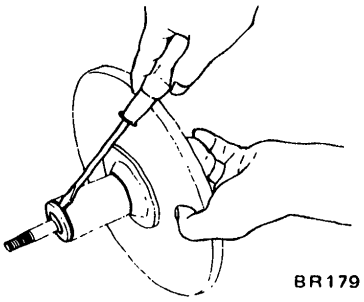

Fig. BR-43 Removing air silencer retainer

3. Pull out valve plunger stop key and withdraw silencer and plunger assembly.

Note: To remove valve plunger stop key properly, proceed as follows: With key hole facing down, lightly push valve operating rod simultaneously while applying vibration to it.

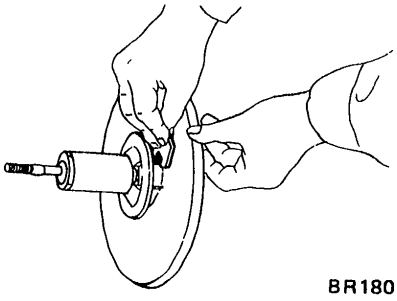

Fig. BR-44 Pulling out stop key

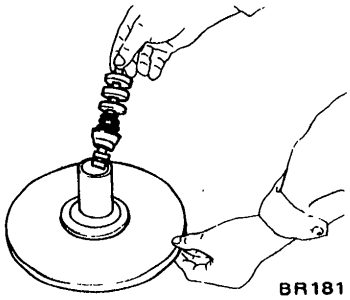

Fig. BR-45 Removing valve operating rod assembly

4. Withdraw reaction disc.

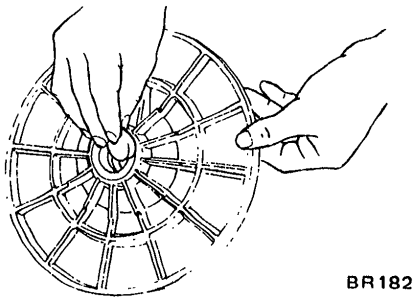

Fig. BR-46 Removing reaction disc

Note: Valve rod and plunger assembly cannot be disassembled, since they are calked.

FRONT SHELL-SEAL ASSEMBLY

1. Detach spacer from front shell assembly.

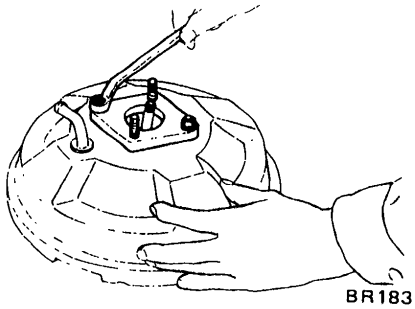

Fig. BR-47 Removing spacer

2. Withdraw front seal assembly.

INSPECTION

1. Check poppet assembly for condition. If it shows evidence of wear or otherwise damage, replace it and valve operating rod assembly.
2. Check other component-parts for condition. If any part shows evidence of wear or otherwise damage, replace it with a new one.

ASSEMBLY AND ADJUSTMENT

Assemble in reverse sequence of disassembly.

REAR SHELL-SEAL ASSEMBLY

1. Apply a coating of Master-Vac grease to sealing surface and lip of seal, and install that seal in rear shell with the use of special tool "Master-Vac Oil Seal Retainer Drift ST08090000" [190.50 mm (7½ in) diameter diaphragm ST08060000)].

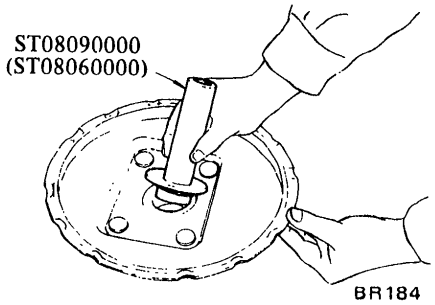

Fig. BR-48 Installing oil seal

Note: Referring to Figure BR-49, install seal in place by properly aligning pawl of special tool with seal hole. Adjustment is correct when specified length at "A" is obtained.

Diaphragm dia. mm (in)	Length "A" mm (in)
228.60 (9)	10.2 to 10.8 (0.402 to 0.425)
190.50 (7½)	6.7 to 7.0 (0.264 to 0.276)

Downloaded from www.Manualslib.com manuals search engine

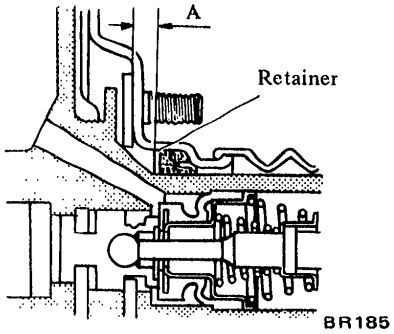

Fig. BR-49 Length at "A"

DIAPHRAGM PLATE ASSEMBLY

1. Apply a thin coating of grease to sliding contact portion on periphery of plunger assembly.

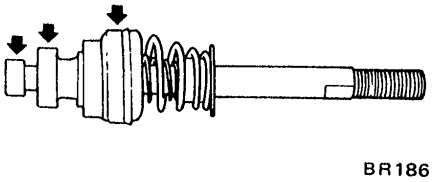

Fig. BR-50 Requiring grease place

2. Install plunger assembly and silencer in diaphragm plate, and lightly push plunger stop key in place.

Note: Diaphragm plate is made of bakelite. Exercise care in installing plunger assembly not to damage diaphragm plate.

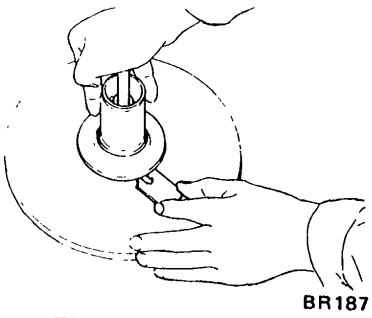

Fig. BR-51 Inserting stop key

3. Before installing diaphragm into position, apply a thin coating of mica-power to it except outer diameter and seating portion with which shell comes into contact.
4. Before installing reaction disc in place on diaphragm plate, apply a thin coating of Master-Vac grease.

FRONT SHELL-SEAL ASSEMBLY

Before installing front shell-seal assembly, apply a coating of Master-Vac grease to inner wall of seal and front shell with which seal comes into contact.

FINAL ASSEMBLY

1. Apply a thin coating of Master-Vac grease to outer edges of diaphragm with which rear and front shells come into contact, before installing diaphragm in position.
2. Before installing push rod assembly in place, apply a coating of Master-Vac grease to sliding contact surface of diaphragm plate.
3. Align marks scribed in rear shell and front shell. Carefully turn special tool "Master-Vac Wrench ST08080000" clockwise until it reaches notch in shell retainer.

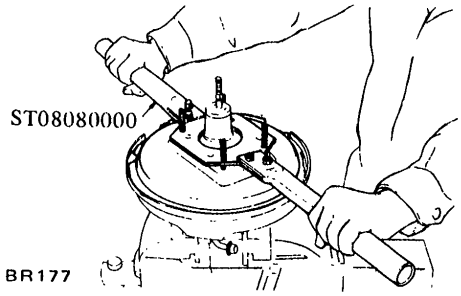

Fig. BR-52 Tightening rear shell

4. After assembly, adjust length of push rod to less than specified value indicated in Figure BR-53. Length adjustment of push rod is made at the tip of push rod.

Length "B"
9.75 to 10.00 mm
(0.3839 to 0.3937 in)

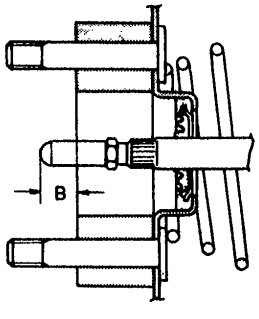

Fig. BR-53 Length at "B"

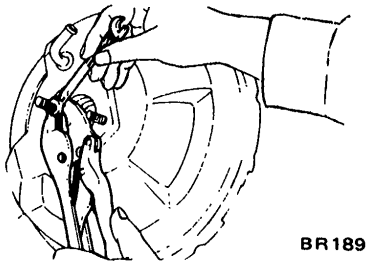

Fig. BR-54 Adjusting push rod length

INSTALLATION

Install in reverse sequence of removal.

Note: After Master-Vac is properly installed in car, conduct an air-tight and operating tests.

Downloaded from www.Manualslib.com manuals search engine

SERVICE DATA AND SPECIFICATIONS

Brake pedal		
Height	mm (in)	203 (7.99)
Free play (at pedal pad)	mm (in)	0 to 2.1 (0 to 0.083)
Full stroke	mm (in)	123 (4.84)
Depressed height	mm (in)	92 (3.62)
Master cylinder		
Inner diameter	mm (in)	22.23 (7/8)
Allowable clearance between cylinder and piston	mm (in)	0.15 (0.0059)
Master-Vac		
Diaphragm diameter		
2 seater	mm (in)	190.50 (7½)
2 + 2 seater	mm (in)	228.60 (9)
Length "A"		
2 seater	mm (in)	6.7 to 7.0 (0.264 to 0.276)
2 + 2 seater	mm (in)	10.2 to 10.8 (0.402 to 0.425)
Length "B"	mm (in)	9.75 to 10.00 (0.3839 to 0.3937)
Parking brake		
Type		Mechanical, operating on rear wheels
Notch		5 to 7
Service brake		
Type		
Front		Disc (Girling-Sumitomo S-16)
Rear		Drum (Leading-trailing)
Wheel cylinder		
Inner diameter		
Front	mm (in)	53.98 (2 1/8)
Rear	mm (in)	22.23 (7/8)
Brake rotor		
Outer diameter x Thickness	mm (in)	271 x 12.5 (10.67 x 0.492)
Run-out	mm (in)	0.10 (0.0039)
Minimum thickness	mm (in)	10.5 (0.413)
Brake pad		
Dimension (Width x thickness x length)	mm (in)	51.6 x 9.7 x 77.8 (2.031 x 0.382 x 3.063)
Wear limit (Min. thickness)	mm (in)	2.0 (0.079)

Downloaded from www.Manualslib.com manuals search engine

Brake drum		
Inner diameter	mm (in)	228.60 (9)
Repair limit of diameter	mm (in)	230.0 (9.06)
Brake lining		
Dimension (Width x thickness x length)	mm (in)	40 x 4.5 x 219.5 (1.57 x 0.177 x 8.64)
Wear limit (Min. thickness)	mm (in)	1.5 (0.059)
Brake adjustment notches		
Front		Not necessary
Rear		Not necessary

Tightening torque

Master cylinder to Master-Vac	kg-m (ft-lb)	0.8 to 1.1 (6 to 8)
Master cylinder stopper screw	kg-m (ft-lb)	0.4 to 0.5 (3 to 4)
Brake tube connector	kg-m (ft-lb)	1.5 to 1.8 (11 to 13)
Brake hose connector	kg-m (ft-lb)	1.7 to 2.0 (12 to 14)
Air bleeder valve	kg-m (ft-lb)	0.7 to 0.9 (5 to 7)
Fulcrum shaft (Brake pedal)	kg-m (ft-lb)	3.5 to 4.0 (25 to 29)
Connector mounting bolt		
6 mm dia. bolt	kg-m (ft-lb)	0.5 to 0.7 (4 to 5)
8 mm dia. bolt	kg-m (ft-lb)	0.8 to 1.1 (6 to 8)
Caliper bolt	kg-m (ft-lb)	7.3 to 9.9 (53 to 72)
Rotor bolt	kg-m (ft-lb)	3.9 to 5.3 (28 to 38)
Wheel cylinder bolt	kg-m (ft-lb)	0.6 to 0.8 (4 to 6)
Brake disc (Back plate) nut	kg-m (ft-lb)	4.0 to 5.3 (29 to 38)
Master-Vac		
Master-Vac to body nut	kg-m (ft-lb)	0.8 to 1.1 (6 to 8)
Operating rod lock nut	kg-m (ft-lb)	1.6 to 2.2 (12 to 16)

Downloaded from www.Manualslib.com manuals search engine

TROUBLE DIAGNOSES AND CORRECTIONS

Condition	Possible causes	Corrective action
Locked brake pedal	Swollen master cylinder seals due to poor fluid quality or contamination by kerosene, gasoline or mineral oil.	Flush the system, replace all rubber parts, refill with new fluid and air bleed the lines.
	Pistons or valve carrier locked by deposits of fluid, foreign matter, etc.	Clean and bleed the system.
	Seized master cylinder piston due to infiltrations of water through rear end due to faulty boot or seals.	Service the master cylinder, replace the piston and the boot and/or seals, to prevent water infiltration.
	Seized pedal shaft.	Smooth bushings, or if other sliding parts are damaged to a remarkable extent, replace them and lubricate.
	Clogged transfer port.	Disassemble and clean master cylinder.
	No compensation takes place. Weak return spring.	Replace faulty spring.
Spongy pedal	Air in brake system because of imperfect bleeding.	Bleed thoroughly.
	Swollen hose due to deterioration.	Replace the hose and bleed the system.
	Hose swells under fluid pressure due to poor hose quality.	Fit new hoses and bleed the system.
	Use of a poor quality brake fluid (boiling point of which is too low).	Replace the fluid with the specified brake fluid and bleed the system.
	Clogged reservoir filler cap vent hole. This promotes a vacuum in master cylinder that sucks air through rear seal.	Clean reservoir filler cap and bleed the system.
Pedal yields under slight pressure	Deteriorated check valve.	Fit a new check valve, make sure that there are no burrs, roughness or blow holes in master cylinder, and bleed the system.
	Fluid leaks through connection.	Tighten connections, and if necessary, replace faulty parts. Bleed the system.
	Fluid leaks at wheel cylinders.	Replace the seals and packings being damaged. Wipe and clean brake shoe linings.
	Fluid leaks through hoses.	Replace the damaged hose, and bleed the system.
	Low fluid level in reservoir.	Add specified fluid up to correct level.

Downloaded from www.Manualslib.com manuals search engine

Condition	Probable cause	Corrective action
Poor pedal reserve	Master cylinder relief port clogged with foreign matter.	Clean and bleed the system.
	System has not been bled.	Bleed the system.
	Excessive clearance between shoes and drum.	Adjust auto-adjuster operation.
Excessive pedal reserve	Fluid level in reservoir is too low.	Top up with specified brake fluid, bleed the system, if required.
	Deteriorated rubber seals in master cylinder or in wheel cylinders.	Replace seals and bleed the system.
	Excessively swollen hoses due to poor hose quality.	Replace by designated hoses and bleed the system.
	Thermal expansion of drums due to excessive overheating.	Allow drums to cool off. Check brake shoe linings and drums. Replace damaged parts.
Brake locked after pedal return	Worn or broken return spring.	Replace faulty springs.
	Improper brake shoe return.	Grease brake shoe and wheel cylinder sliding surface.
	Clogged master cylinder relief port.	Clean and bleed the system.
	Swollen or stuck rubber seals due to contamination by kerosene, mineral oil, gasoline, etc.	Flush the system, replace all rubber parts, refill with new brake fluid and bleed the system.
Unbalanced brakes	Fluid leakage at one wheel cylinder only.	Wipe, clean or replace the brake shoe linings or lining pads, service the wheel cylinder and bleed the system.
	Rusted or corroded edges of a wheel cylinder.	Eliminate rust and replace the boots.
	Seized piston in wheel cylinder or caliper assembly.	Service the wheel cylinder, replace the rear wheel cylinder piston or caliper assembly and bleed the system.
	Hose obstructed due to swollen or clogged inner lining.	Replace or clean the hose and bleed the system.
	Obstructed flow in metal pipe due to crushing or clogging (if the brakes on one axle are excluded, weak braking may result).	Replace or clean the pipe and bleed the system.
	Faulty seals at one half caliper.	Take down and strip the half caliper, replace seals and dust covers.

Downloaded from www.Manualslib.com manuals search engine

Condition	Probable cause	Corrective action
Brake linings dragging all the time on drums or brake discs	Insufficient shoe-to-drum clearance.	Adjust clearance.
	Weak shoe return springs.	Replace the springs.
	Brake pedal has no free travel.	Set the push rod length as prescribed.
	Seized master cylinder piston.	Service the master cylinder, replace the piston and bleed the system.
	Master cylinder flooded due to clogged relief port.	Service the master cylinder, replace the check valve if deteriorated, clean the relief port and bleed the system.
	Brake disc run-out.	Check brake disc for run-out, and replace Faulty parts, if necessary.
Weak brakes	Fluid leakage from wheel cylinders.	Wipe and clean the brake shoe linings, service the wheel cylinder replacing damaged parts, and bleed the system.
	Fluid leakage from caliper cylinders.	Take down and strip the calipers; replace all rubber seals and clean lining pads.
	--- Master-Vac ---	
	This problem mainly results from improper function of Master-Vac. Please check as follows:	
	Improper Master-Vac function due to poor vacuum.	Check the pipe or hose connections, and fasten if necessary. Or replace a faulty vacuum hose.
	Required vacuum is not maintained.	Wipe, clean or replace the check valve and check the grommet for loose fit, re-fit or replace it. Replace seal or retighten plate and seal assembly-to-front shell bolts. Clean or replace poppet rubber. Replace diaphragm and diaphragm plate.
	Weak pressure on shoes due to use of too thick fluid.	Flush the system and refill with specified fluid. Bleed the system.
	Dust on drums or linings soiled with oil.	Remove and clean drums thoroughly.
	Weak shoe return springs.	Check springs and replace as required.
	Drum out of round.	Correct drums by means of a lathe.

Downloaded from www.Manualslib.com manuals search engine

SPECIAL SERVICE TOOLS

No.	Tool number & tool name	Description Unit: mm (in)	For use on	Reference page or Figure No.
1.	GG94310000 Brake pipe torque wrench	This tool is used to tighten and loosen brake tube flare nut. A built-in torque limiting wrench is provided to assure torque accuracy. 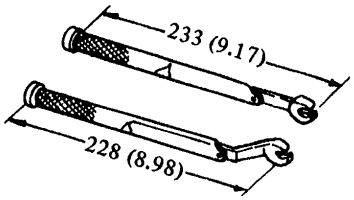 SE227	All models	Page BR-5
2.	ST08080000 Master-Vac wrench	This tool is used to remove rear shell after aligning rear shell stud bolt with the opening in this tool. 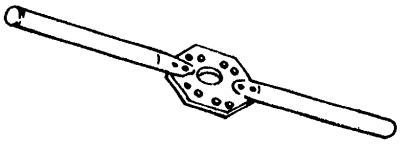 SE073	F10 B210 610 710 S30 GS30 620	Fig. BR-40
3.	ST08060000 Drift	This tool is used when rear shell seal is driven into position. **Note: Make sure that this tool is pushed in until rear guide of this tool touches rear shell.** 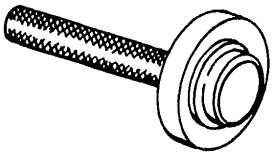 SE115	F10 B210 610 710 S30 620	Fig. BR-48
4.	ST08090000 Drift	This tool is used when rear shell seal is driven into position. **Note: Make sure that this tool is pushed in until rear guide of this tool touches rear shell.** 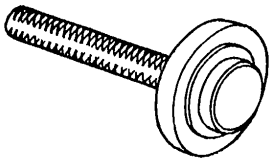 SE115	GS30	Fig. BR-48

Downloaded from www.Manualslib.com manuals search engine

SERVICE MANUAL

DATSUN 280Z
MODEL S30 SERIES

NISSAN

NISSAN MOTOR CO., LTD.
TOKYO, JAPAN

SECTION WT

WHEEL AND TIRE

WT

WHEEL AND TIRE ..... WT- 2

TROUBLE DIAGNOSES AND CORRECTIONS ..... WT- 7

Downloaded from www.Manualslib.com manuals search engine

WHEEL AND TIRE

CONTENTS

DESCRIPTION WT-2
TIRE AND WHEEL SIZE WT-2
RECOMMENDED INFLATION PRESSURE .. WT-2
MAINTENANCE AND SERVICE WT-2
TIRE INFLATION WT-2
REPAIR WT-3
WEAR WT-3
RADIAL TIRE WT-3
TIRE ROTATION WT-4
CHANGING TIRE WT-4
SPACE SAVER SPARE TIRE WT-5
INSPECTION WT-5
WHEEL BALANCE WT-5
WHEEL AND TIRE WT-5

DESCRIPTION

TIRE AND WHEEL SIZE

Tire		Wheel	
Size	Remarks	Size	Remarks
195/70HR-14	Steel radial, tubeless	5½J-14	Aluminum wheel Offset 15 mm (0.95 in)
175HR-14	Radial, tubeless		
C78-14	Spare tire (space saver spare)	5J-14	Steel wheel Offset 15 mm (0.95 in)

RECOMMENDED INFLATION PRESSURE

Tire	Car speed	Pressure
195/70HR-14 175HR-14	Under 160 km/h (100 MPH)	2.0 kg/cm^2 (28 psi)
	Over 160 km/h (100 MPH)	2.3 kg/cm^2 (32 psi)
C78-14	Under 80 km/h (50 MPH)	2.0 kg/cm^2 (28 psi)

Notes:

a. For continuous high-speed driving [over 100 km/h (62 MPH)], increase inflation pressure by the amount shown in the above chart.

b. Inflation pressure should be measured when the tire is cold.

MAINTENANCE AND SERVICE

TIRE INFLATION

Correct tire pressure is very important for steering ease and riding comfort. Correct pressure also makes for a quieter ride and extends tire life; overinflation or underinflation promotes wear at center tread or shoulder of tire.

If all tires are inspected frequently and maintained at the correct pressure, any sharp objects can be quickly detected in the tread and abnormal wear, which invites serious problem, can be avoided.

After inflating tires, valves should be checked for leakage. Without valve

Downloaded from www.Manualslib.com manuals search engine

caps, leakage will occur due to dirt and water, resulting in underinflation. Accordingly, whenever tire pressure is checked, be sure to tighten valve caps firmly by hand.

REPAIR

Tubeless tire

To check for leaks, apply soapy solution to tire or submerge tire and wheel in water after tire has been inflated to specified pressure. Special inspection for leaks should be carried out around the valve, wheel rim and along the tread. Note bead and rim where leakage occurs. Wipe water away from any area which leaks air bubbles and then mark the place with chalk.

After removing object which caused puncture, seal the point. When repairing a puncture, use a tire repair kit furnished by any tire dealer, following the instructions provided with the kit. If a puncture is too large or there is some damage to tire fabric, repair should be carried out by authorized tire dealer.

Wheel

Inspect wheel rim flange for bent sections or dents. If any are detected, repair should be made to secure complete sealing. The flange should be cleaned with a wire brush when rust is found on it. Furthermore, if there is excessive pitting on the rim, eliminate it with a file.

Note: **Aluminum wheel**
Do not wash the wheel with wire brush. Always use a neutral cleanser.

WEAR

Tread wear indicator

The tires are provided with "tread wear indicator" at six places around tire circumference, indicating 1.6 mm (1/16 in) tread depth. When the tires wear and then the marks appear, replace them with new ones. See Figure WT-1.

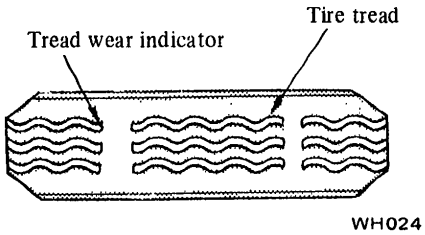

Fig. WT-1 Tread wear indicator

Misalignment

When the front wheels are aligned in an excessive toe-in or toe-out condition, the tires will tend to scrape the tread rubber off and the tread will develop a feathered edge.

Center wear

Center wear is caused by overinflation of the tire.

Shoulder wear

This wear may be caused by underinflation, incorrect wheel camber, or continued excessive speed around curves. In general, the first two causes are the most common. Underinflation causes wear on both sides of treads, while camber causes wear on only one side of tread.

Uneven wear

Uneven wear is caused by incorrect camber or caster, malfunctioning suspension, unbalanced wheel, out-of-round brake drum, or other mechanical conditions. To stop this abnormal wear, correct the above faulty parts.

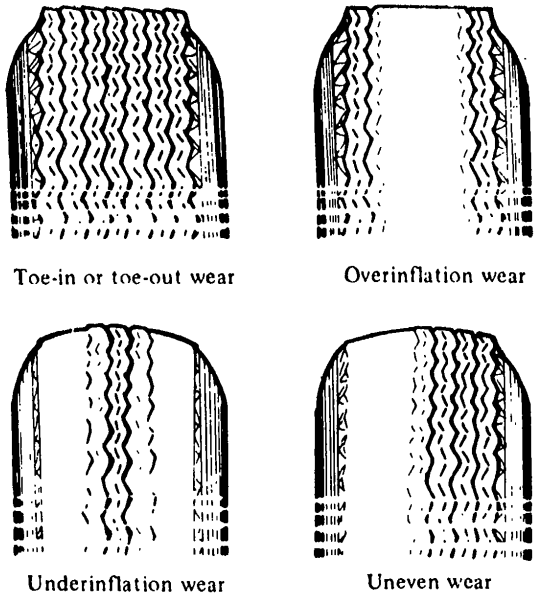

Fig. WT-2 Abnormal tire wear

RADIAL TIRE

Tires of radial ply construction roll with less camber thrust force and with greater cornering power on turns. This tends to cause local or rapid wear on the treads with excessive toe-in. Exercise special care in front wheel alignment during the life of tires.

Notes:

a. Radial ply tires should not be mixed with ordinary tires since their respective characteristics differ.

b. The same brand radial ply tires should be installed on all wheels.

c. Only tubes designed exclusively for radial tires should be used.

d. Snow chains should not be used because they cause damage to side walls.

Downloaded from www.Manualslib.com manuals search engine

TIRE ROTATION

Tires tend to wear unevenly and become unbalanced after a certain running distance. Uneven tire wear often results in tire noise which is attributed to rear axle gears, bearing, etc. Front tires also tend to wear unevenly because of improperly aligned front wheels.

Accordingly, to equalize tire wear, it is necessary to rotate tires periodically as recommended in the "Periodic Maintenance". See Figures WT-3 and WT-4.

Radial ply tires

All the tires are of the same type.

- 5-tire rotation

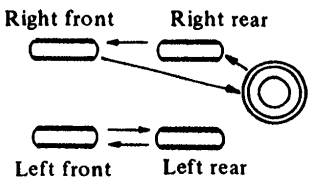

WH205

Fig. WT-3 Tire rotation

- 4-tire rotation

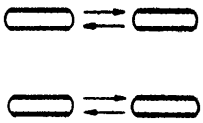

WH206

Fig. WT-4 Tire rotation

Note: Do not include the space saver spare in tire rotation.

CHANGING TIRE

To change a tire and wheel with a jack in a safe manner, observe the following procedures:

1. Engage parking brake and block front wheels when rear wheel is being changed.
2. Remove wheel cover and loosen wheel nuts.
3. Place jack at jacking point as described in Section GI and raise car until wheel clears ground.
4. Remove wheel nuts and wheel from drum.
5. To install wheel, reverse the above steps. Tighten wheel nuts in criss-cross fashion.

Tire wheel	Tightening torque
Steel wheel	8 to 9 kg-m (58 to 65 ft-lb)
Aluminum wheel	8 to 10 kg-m (58 to 72 ft-lb)

Note: Never get under car while it is supported only by jack.
Always use safety stands to support side member of body construction when you must get beneath car.

Care of aluminum wheel

1. Use the wheel nut for exclusive use in aluminum wheels.

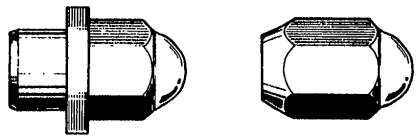

For aluminum wheels only — For steel wheels only

WH178

Fig. WT-5 Wheel nut

2. To install an aluminum wheel, proceed as follows:
(1) Snugly tighten the four nuts after the wheel is positioned. See Figure WT-6.
(2) Slightly pull the wheel back to properly align the nuts with bolt holes in the wheel, and tighten the nuts as much as possible with your fingers.
(3) Tighten the four nuts evenly with a wheel wrench in criss-cross fashion.

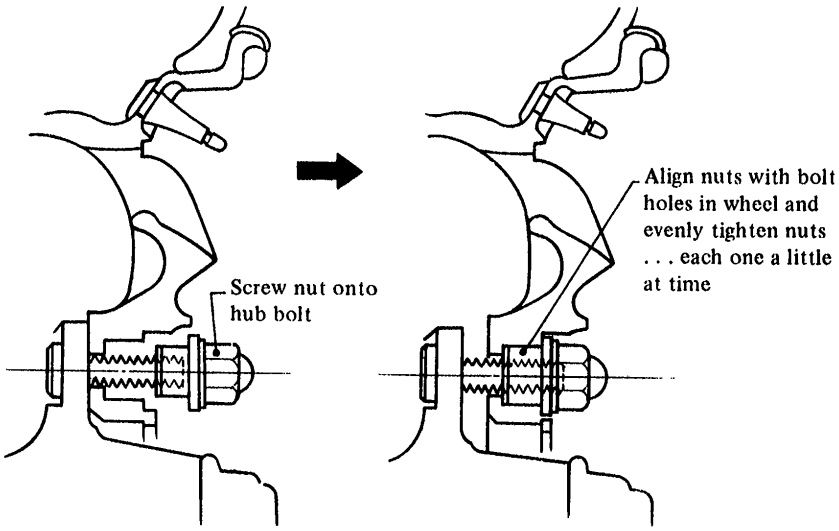

WT016

Fig. WT-6 Installing aluminum wheel

Note: After the aluminum wheel has been run for the first 1,000 km (600 miles) of operation (as in case of repairing a flat tire, tire rotation, etc.), be sure to check the wheel nuts for tightness. Retighten if necessary.

Downloaded from www.Manualslib.com manuals search engine

SPACE SAVER SPARE TIRE

The S.S.T. is a foldable spare tire designed for emergency use only. The S.S.T. is stored in a deflated condition.

An inflator (canister) has been provided to inflate the spare.

The S.S.T. can be used repeatedly for emergency situations. However, the inflator (canister) must be replaced after each inflation.

Be sure to obtain the proper size inflator for S.S.T. tire size.

The S.S.T. is restricted in driving speed up to a maximum of 80 km/h (50 MPH) for short distances and emergency use only.

Inflation with approved inflator

1. Before changing tire, carefully read the caution and directions affixed on both the inflator and the S.S.T.
2. Remove the uninflated S.S.T. and the inflator canister from rear compartment.

Note: Do not inflate at this point.

3. Jack up front or rear of car as required and remove the damaged tire. Then mount the uninflated S.S.T. to the axle. (Tighten wheel nuts slightly.)

Note: On aluminum wheels equipped cars, be sure to use spare wheel nuts.
The wheel nuts for aluminum wheels must not be used on the S.S.T. wheel to avoid the wheel coming off the axle and causing personal injury.

4. With tire valve at 6 o'clock position, inflate the S.S.T. with the inflator (canister). Place tire inflator on the tire inflation valve and push squarely until gas can be heard entering the tire. It takes about 3 minutes.

Note: The metal parts of the inflator become extremely cold during inflation and can cause frost bite. Therefore, avoid contact with the metal, use a glove or other means of protection.

5. To ensure complete emptying of the inflator, hold the inflator in position for one minute after sound stops.

Note: If temperature is below –10°C (14°F), the canister must be warmed on the windshield defroster for five to ten minutes to provide tire inflation.

6. Lower car and fully tighten wheel nuts.

Notes:
a. **Do not install the wheel cover on the S.S.T.**
b. **In cold weather, the tire may not look fully inflated. Therefore, drive slowly for the first mile, as the tire temperature rises the pressure will increase.**

Deflation

1. Deflate tire by depressing button on tire inflation valve or by removing valve core.

Note: To avoid personal injury, do not inhale the gas which is vented while the tire is deflating.

2. Flatten tire. The S.S.T. becomes folded gradually while deflating.
3. Store tire in rear compartment.

Repair

Note: Only qualified tire experts are authorized to dismount the S.S.T. from its rim or repair it in any way. Improper service can result in serious personal injury. Contact Datsun dealers or any authorized tire dealers to repair the S.S.T.

INSPECTION

WHEEL BALANCE

The wheel and tire assembly should be kept balanced statically and dynamically.

Proper tire balance is necessary when driving the car at high speeds. Consequently, the wheel and tire assembly should be properly rebalanced whenever puncture is repaired.

The wheel and tire assembly becomes out of balance according to uneven tire wear. Severe acceleration and braking, or fast cornering is the cause of wear on tire, resulting in unbalance of tire and wheel assembly.

The symptom of unbalance appears as tramp, car shake and steering malfunction.

To correct unbalance, use proper wheel balancer.

Maximum allowable static unbalance:
177 gr-cm (2.5 in-oz)
At rim flange:
10 gr (0.35 oz)
Balance weight:
10 to 60 gr (0.35 to 2.12 oz)
at 10 gr (0.35 oz) interval

Notes:
a. **Be sure to place correct balance weights on inner edge of rim as shown in Figure WT-7.**
Do not put more than two weights on each side.
b. **Aluminum wheel**
Use balance weights for exclusive use in aluminum wheel.

WHEEL AND TIRE

In order to ensure satisfactory steering condition as well as maximum tire life, proceed as follows:

1. Check wheel rim, especially, rim flange and bead seat for rust, distortion, cracks or other defects which might cause air leaks. Function of tubeless tire depends on a good seal between tire bead and wheel rim. Thoroughly remove rust, dust, oxidized rubber or sand from wheel rim with wire brush, emery cloth or paper. Use dial gauge to examine wheel rim for lateral and diametral runout. See Figure WT-7.

Lateral runout limit:
Less than 1.0 mm (0.039 in) total indicator reading

Note: Aluminum wheel
Remove fragments of rubber, dust or sand from rim flange with cloth. Do not use sandpaper or wire brush.

Downloaded from www.Manualslib.com manuals search engine

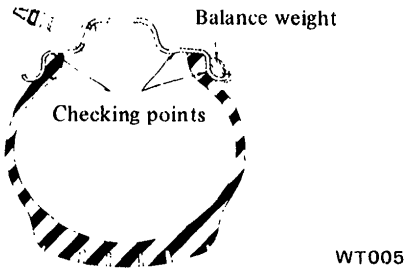

Fig. WT-7 Wheel rim run-out check points

2. Discard when any of the following conditions occur;
(1) Broken or damaged bead wire.
(2) Ply or tread separation.
(3) Worn fabric injuries on tubeless tire.
(4) Cracked or damaged sidewall, etc.

Note: In replacing tire, take extra care not to damage tire bead, rim-flange and bead seat.
Do not use tire irons to force beads away from wheel rim-flange; that is, always use tire replacement device whenever tire is removed.

Downloaded from www.ManualsLib.com manuals search engine

TROUBLE DIAGNOSES AND CORRECTIONS

Condition	Probable cause	Corrective action
Wheel wobbles.	Improper tire pressure.	Measure and adjust correctly.
	Damaged tire or distorted wheel rim.	Repair or replace.
	Unbalanced wheel.	Balance or replace.
	Loose wheel nuts.	Tighten.
	Worn or damaged wheel bearing, or excessive play of wheel bearing.	Correct play or replace wheel bearing.
	Improper front wheel alignment.	Align correctly.
	Worn or damaged ball joint.	Replace.
	Excessive steering linkage play or worn steering linkage.	Adjust or replace.
	Loose steering linkage connection.	Tighten the nuts to the rated torque, or replace worn parts if any.
	Broken suspension spring.	Replace.
	Faulty shock absorber.	Replace.
Unevenly or excessively worn tire.	Improper tire rotation.	Conduct tire rotation periodically.
	Improper tire pressure.	Measure and adjust correctly.
	Unbalanced wheel.	Balance or replace.
	Improperly adjusted brake.	Adjust correctly.
	Improper wheel alignment.	Align correctly.
	Excessively distorted or improperly installed suspension link.	Repair or replace if necessary, or reinstall correctly.
	High speed on curves.	Reduce speed.
	Sudden start and improper speed due to rapid acceleration or improper brake application.	Follow correct and proper driving manner.
Tire squeals.	Improper tire pressure.	Measure and adjust correctly.
	Improper front wheel alignment.	Align correctly.
	Distorted knuckle or suspension link.	Repair or replace if necessary.

Downloaded from www.Manualslib.com manuals search engine

SERVICE MANUAL

DATSUN 280Z
MODEL S30 SERIES

SECTION ST

STEERING SYSTEM

ST

STEERING SYSTEM ..... ST- 2

SERVICE DATA AND SPECIFICATIONS ST-12

TROUBLE DIAGNOSES AND CORRECTION ST-13

SPECIAL SERVICE TOOLS ST-17

NISSAN

NISSAN MOTOR CO., LTD.
TOKYO, JAPAN

Downloaded from www.Manualslib.com manuals search engine

STEERING SYSTEM

CONTENTS

DESCRIPTION ..... ST- 2
STEERING WHEEL ..... ST- 3
REMOVAL ..... ST- 3
INSTALLATION ..... ST- 3
STEERING COLUMN
(Collapsible type) ..... ST- 3
REMOVAL ..... ST- 3
INSPECTION ..... ST- 4
INSTALLATION ..... ST- 5
STEERING LOCK ..... ST- 5
REMOVAL ..... ST- 5
INSTALLATION ..... ST- 5
STEERING GEAR AND LINKAGE ..... ST- 6
REMOVAL ..... ST- 6
DISASSEMBLY ..... ST- 7
INSPECTION ..... ST- 8
ASSEMBLY AND ADJUSTMENT ..... ST- 9
INSTALLATION ST-11

DESCRIPTION

The steering assembly is direct-acting rack-and-pinion type with a gear ratio of 18.0 : 1, providing sharp, light, and accurate control under all conditions.

It consists of a rack bar and toothed pinion, both working in the plain bearings of the housing. Backlash is held to 0 mm (0 in) by the retainer and the retainer spring.

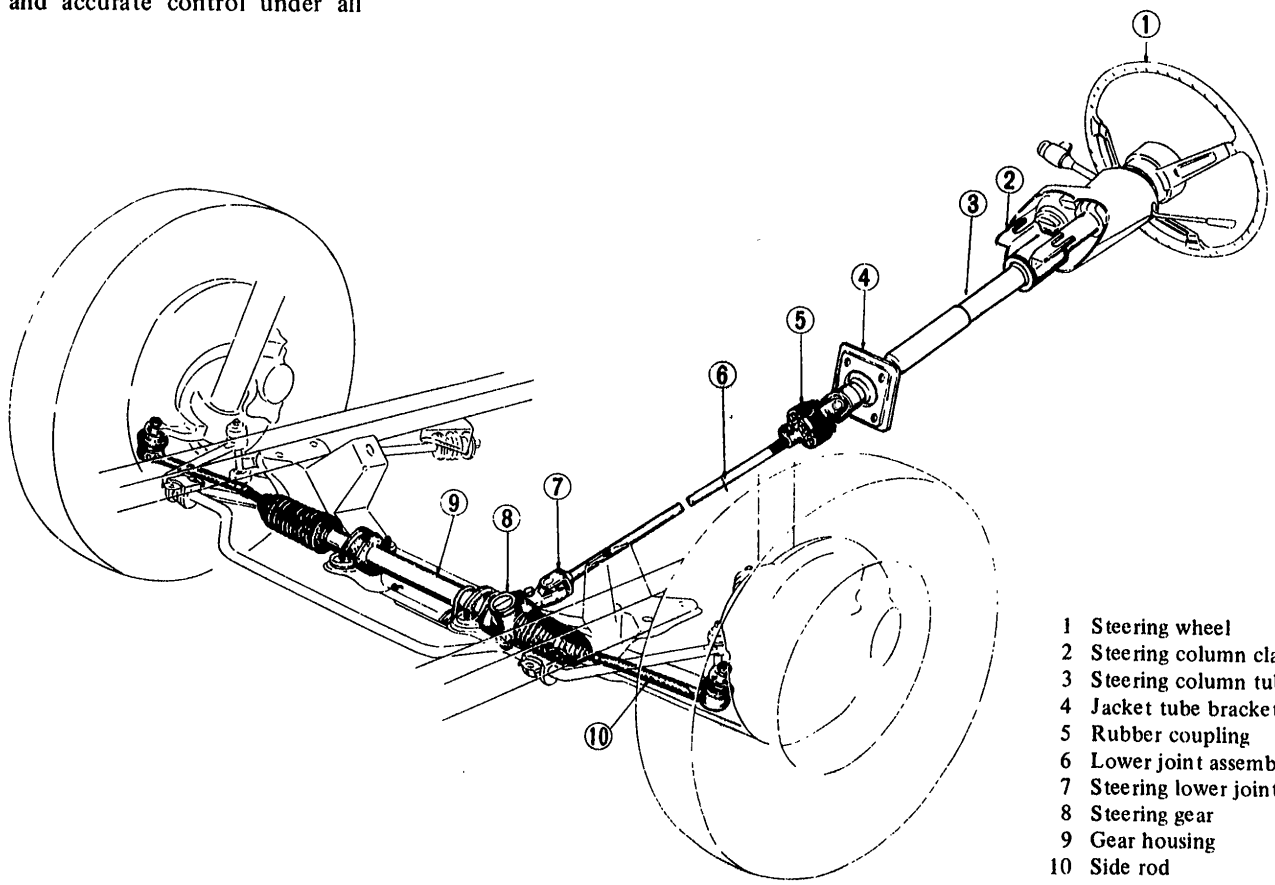

1 Steering wheel
2 Steering column clamp
3 Steering column tube
4 Jacket tube bracket
5 Rubber coupling
6 Lower joint assembly
7 Steering lower joint
8 Steering gear
9 Gear housing
10 Side rod

ST429

Fig.ST-1 Structural view of steering system

The steering wheel is a cone type which exhibits excellent safety characteristics. Between the steering wheel and gear assembly, a rubber coupling is used to prevent the transmission of vibrations from the road surface, insuring excellent handling and safety. Two universal joints are used between the gear assembly and steering wheel to give the most suitable steering wheel position and angle.

These joints require no lubrication and have an excellent service life.

The collapsible steering column is a steel ball type, which collapses upon

Downloaded from www.Manualslib.com manuals search engine

impact. Thus, if the car should be involved in a head-on collision that throws the driver forward, the steering column will absorb the energy of his forward movement and greatly reduce the possibility of his being injured.

The gear housing is located in front of the front suspension, and a ball joint with excellent sealing and long durability is used on the knuckle arm end of the steering linkage.

As mentioned above, this steering assembly is of simple construction. Shim adjustment or selective assembly of parts, essential in the case of conventional assemblies, is not necessary. Thus, servicing is very convenient and structural strength is more than adequate.

The oil level in the gear housing should be checked and corrected at recommended maintenance intervals. Apply the recommended multi-purpose grease to idler side joint and ball joints in the steering linkage at recommended maintenance intervals.

STEERING WHEEL

REMOVAL

1. Disconnect battery ground cable.
2. Remove horn pad by depressing it and turning counterclockwise.
3. Remove steering wheel nut.
4. Using the Steering Wheel Puller ST27180001, install puller anchor screws into threaded holes provided in steering wheel. Turn center bolt of the special tool clockwise to remove steering wheel. See Figure ST-2.

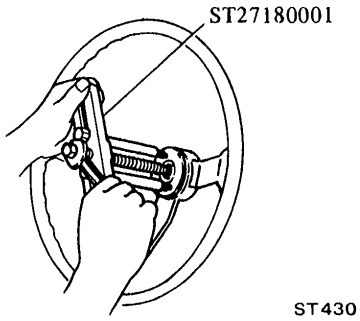

Fig. ST-2 Removing steering wheel

Notes:

a. **Do not strike the end of the steering column shaft with a hammer. This will damage bearing.**
b. **Be careful not to damage cancel pole.**

INSTALLATION

Install the steering wheel in the reverse order of removal. Observe the following instructions.

1. Apply grease to sliding portions.
2. Install steering wheel to column shaft in a straight ahead position after facing the punch mark on the top of upper column shaft and tighten steering wheel nut to specified torque.

Tightening torque:
4 to 5 kg-m (29 to 36 ft-lb)

Note: After installing steering wheel, turn it clockwise or counterclockwise and check for catch or drag. Also check horn operation.

STEERING COLUMN (Collapsible type)

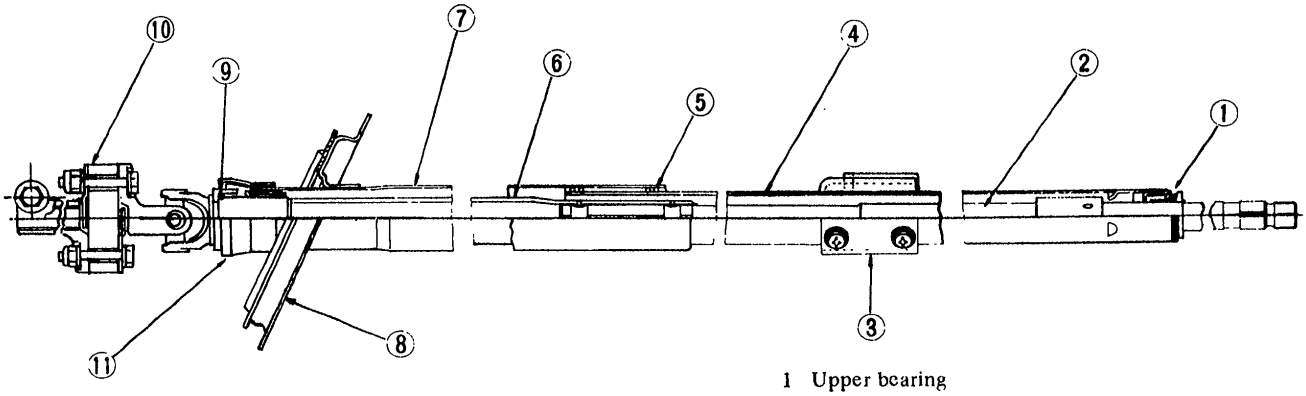

1 Upper bearing
2 Upper jacket shaft
3 Steering column clamp
4 Upper jacket tube
5 Steel ball
6 Lower jacket shaft
7 Lower jacket tube
8 Jacket tube bracket
9 Steering column spring
10 Rubber coupling
11 Column dust cover

Fig. ST-3 Sectional view of collapsible type steering

INSTRUCTIONS FOR HANDLING COLLAPSIBLE STEERING COLUMN

1. Never in any case should an undue stress be applied to the steering column in an axial direction.
2. When installing, do not apply bending force to the steering column.

REMOVAL

1. Disconnect steering column assembly from lower joint shaft at rubber coupling by removing bolt. See Figure ST-4.

Downloaded from www.Manualslib.com manuals search engine

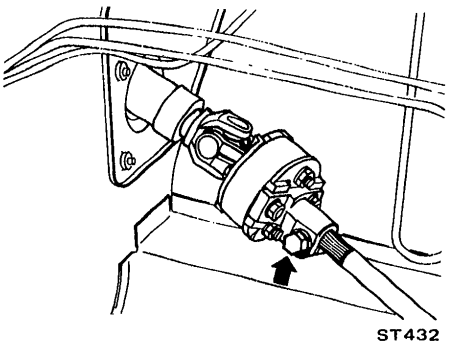

Fig. ST-4 Removing rubber coupling bolt

2. Remove steering wheel. Refer to Steering Wheel.
3. By loosening screws, remove steering column shell covers.
4. Remove turn signal switch assembly and combined light switch assembly by loosening screws.
5. Remove bolts securing jacket tube bracket to dash panel. See Figure ST-5.

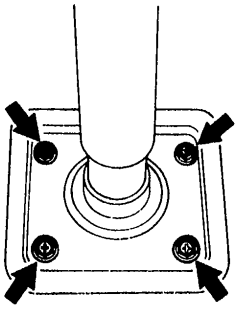

Fig. ST-5 Removing jacket tube bracket securing bolts

6. Supporting steering column at the top portion, remove two column clamp securing bolts. See Figure ST-6.

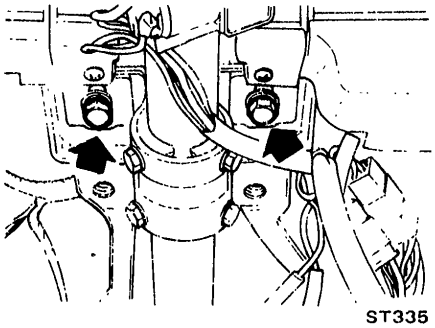

Fig. ST-6 Removing column clamp securing bolts

7. Draw out steering column assembly from the interior side. See Figure ST-7.

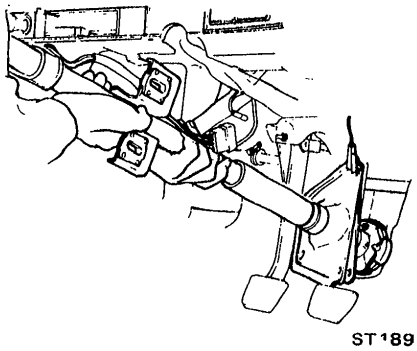

Fig. ST-7 Drawing out steering column assembly

8. By loosening nut securing lower joint to pinion gear, take lower joint assembly out. See Figure ST-8.

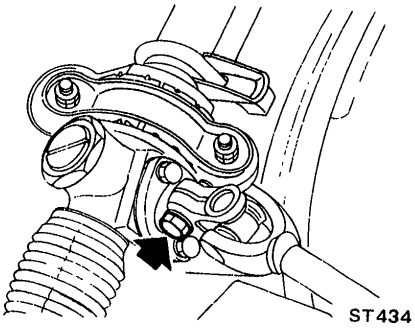

Fig. ST-8 Loosening nut securing lower joint to pinion gear

When an accident (collision) occurs and the car, especially its front unit, is damaged, conduct an inspection in accordance with the following instructions.

Inspect steering system particularly carefully because it is a very important unit for driving. The collapsible type steering should not be disassembled; if necessary, replace it as an assembly.

INSPECTION

1. When steering wheel cannot be rotated smoothly but steering gear, steering linkage and suspension system are normal, check the steering system for the following matters and replace faulty parts.

(1) Check column bearings for damage or unsmoothness. If required, lubricate with recommended multipurpose grease or replace with a new one as steering column assembly.

(2) Check jacket tube for deformation or breakage, and replace if necessary.

(3) Check column shaft spring, and replace if damaged or weakened.

Wire diameter	3.5 mm (0.138 in)
Free length	27.3 mm (1.075 in)
Load x length	30 kg (66 lb) x 15 mm (0.59 in)

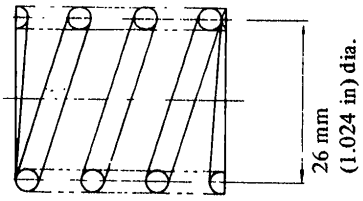

2. If the car has been involved in a light collision, check the following parts and replace if necessary.

(1) Jacket tube

Measure the dimension A as shown in Figure ST-9. Standard installed dimension is 176.1 mm (6.933 in). When jacket tube is crushed, dimension A becomes smaller.

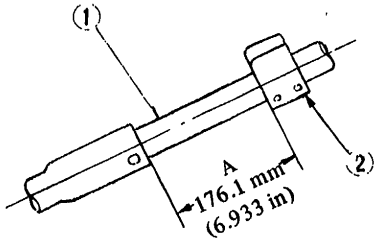

1 Jacket tube
2 Column clamp

ST192

Fig. ST-9 Standard dimension between column clamp and the top end of lower jacket tube

(2) Column clamp

Measure dimension B as shown in Figure ST-10.

Standard B dimension is 0 mm (0 in).

When jacket tube is crushed, dimension B becomes larger.

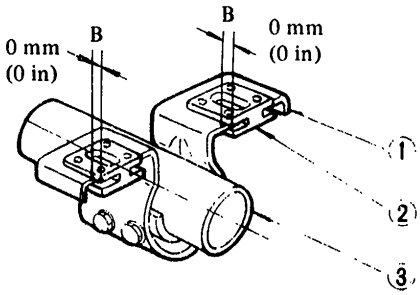

1 Column clamp
2 Block
3 Jacket tube

ST193

Fig. ST-10 Standard dimension B

Downloaded from www.Manualslib.com manuals search engine

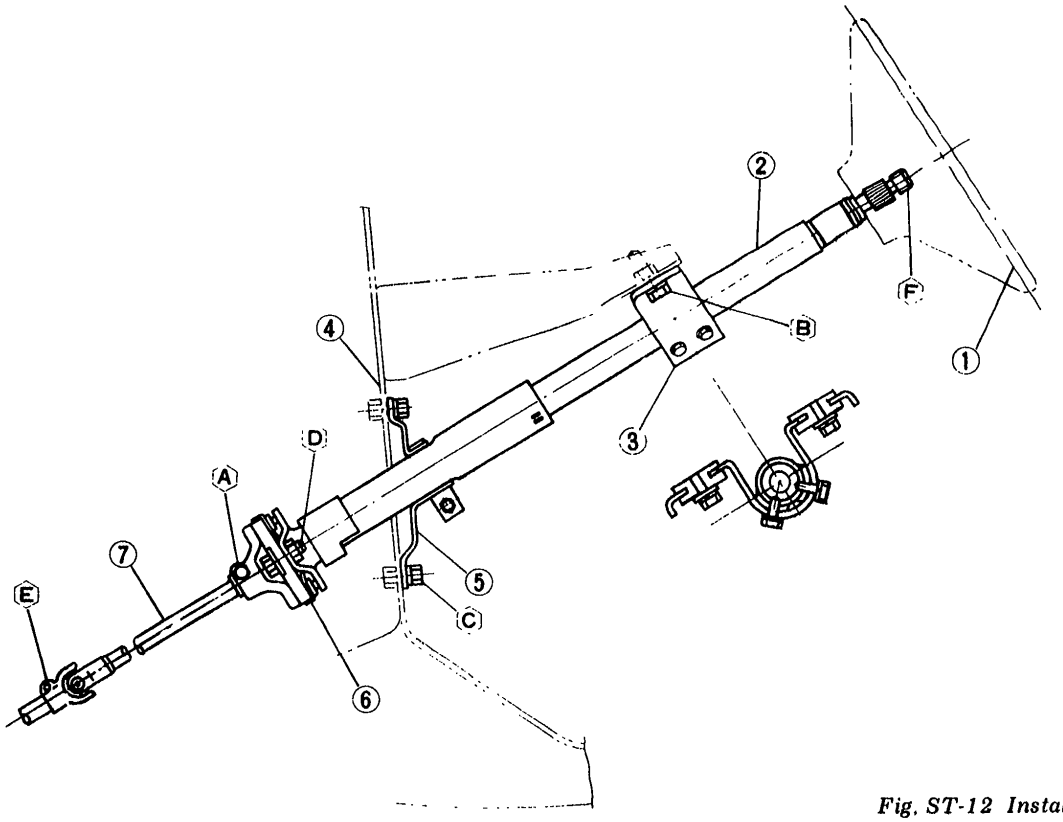

1 Steering wheel
2 Steering column assembly
3 Steering column clamp
4 Dash panel
5 Jacket tube bracket
6 Rubber coupling
7 Lower joint assembly

Tightening torque (T) of bolts and nuts kg-m (ft-lb)

Ⓐ T : 2.3 to 2.7 (17 to 20)
Ⓑ T : 0.8 to 1.1 (5.8 to 8.0)
Ⓒ T : 0.54 to 0.74 (3.9 to 5.4)
Ⓓ T : 1.7 to 2.0 (12 to 14)
Ⓔ T : 4 to 5 (29 to 36)
Ⓕ T : 4 to 5 (29 to 36)

ST435

Fig. ST-12 Installing steering column assembly

(3) Steering wheel

Check steering wheel for axial play.

When steering jacket shaft is crushed, axial play occurs. See Figure ST-11.

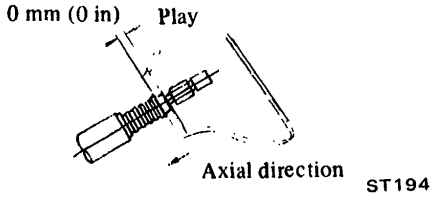

Fig. ST-11 Inspecting steering wheel for axial play

INSTALLATION

Install steering column in the reverse order of removal. Observe the following instructions. See Figure ST-12.

1. Install lower joint assembly after installing steering column assembly.
2. Set the wheels in a straight ahead position.
3. Line up the slits of universal joints with the punched mark located on the top end of upper steering shaft. See Figure ST-13.

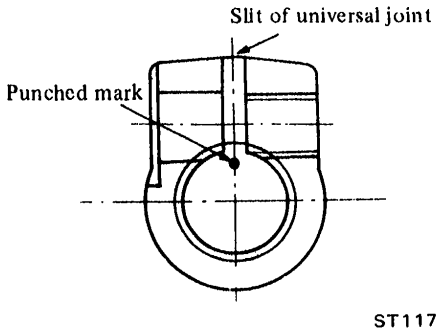

Fig. ST-13 Lining up slit with punched mark

Note: Make sure that no undue stress is applied to rubber coupling.

4. Tighten bolts and nuts correctly and securely.

For tightening torque, see Figure ST-12.

5. After installation, make sure that steering wheel turns smoothly.

STEERING LOCK

To make tamper-proof, self-shear type screws are used, and their heads are sheared off when installed so that the steering lock system cannot be removed easily.

REMOVAL

1. Break two self-shear type screws with a drill or other proper tool.
2. Remove two screws and dismount steering lock from the steering jacket tube. See Figure ST-14.

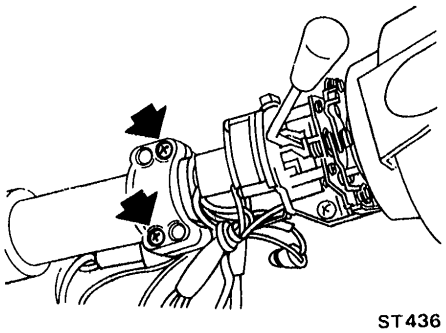

Fig. ST-14 Removing steering lock securing screws

INSTALLATION

1. Align steering lock hole in jacket tube with the mating portion of steering lock.
2. Install self-shear type screws and cut off their heads.

Downloaded from www.Manualslib.com manuals search engine

STEERING GEAR AND LINKAGE

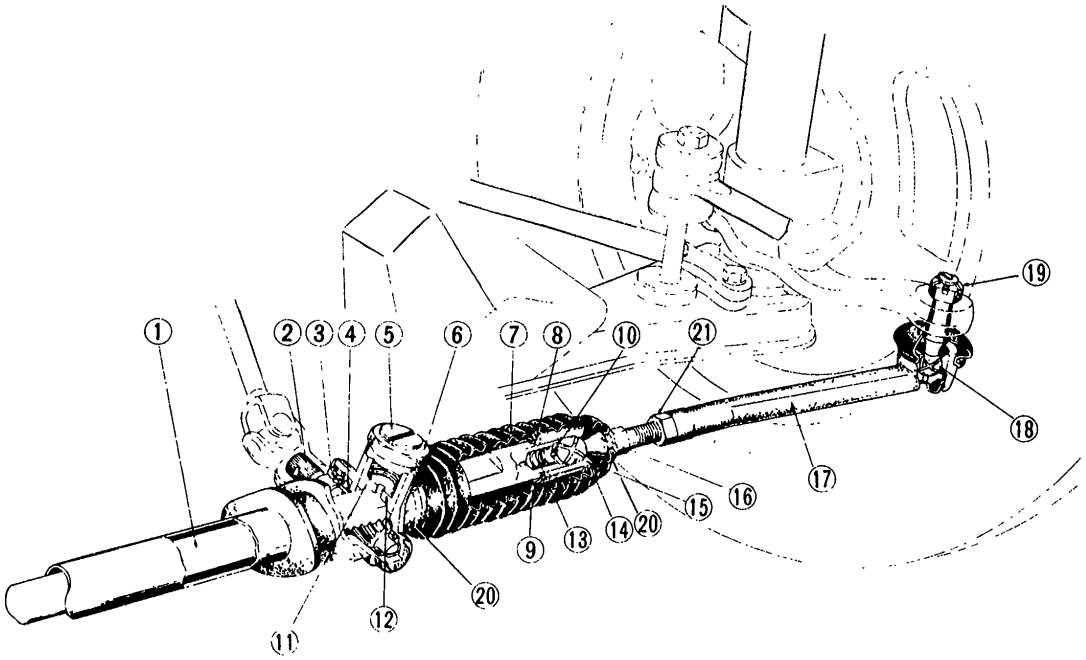

1 Rack
2 Pinion
3 Oil seal
4 Pinion bearing
5 Retainer adjust screw
6 Adjust lock nut
7 Gear boot
8 Side rod lock nut
9 Lock nut spacer
10 Side rod spring seat
11 Retainer spring
12 Retainer
13 Side rod inner spring
14 Dust cover clamp
15 Side rod inner socket
16 Ball stud
17 Side rod
18 Side rod ball stud
19 Side rod ball stud nut
20 Gear boot clamp
21 Steering stopper nut

ST437

Fig. ST-15 Cross-section of rack-and-pinion and side rod assembly

REMOVAL

1. Jack up the front of car and support it with suitable safety stands.
2. Remove front wheels.
3. Disconnect lower joint from steering column at rubber coupling by loosening bolts securing lower joint assembly. See Figure ST-16.

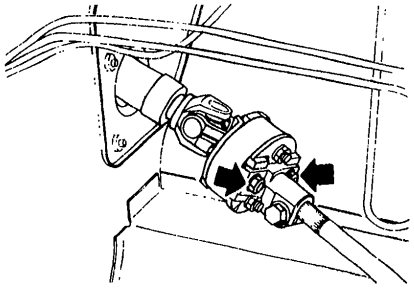

ST432

Tightening torque:
1.7 to 2.0 kg-m
(12 to 14 ft-lb)

Fig. ST-16 Loosening bolts securing lower joint assembly

4. Loosen bolt securing lower joint assembly to pinion, and then remove lower joint assembly from engine compartment. See Figure ST-17.

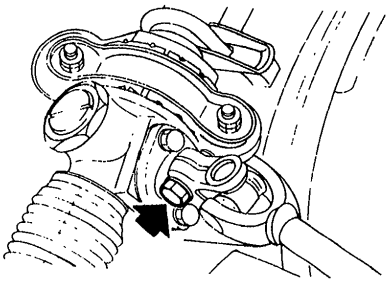

ST434

Tightening torque:
4 to 5 kg-m
(29 to 36 ft-lb)

Fig. ST-17 Disconnecting lower joint from pinion

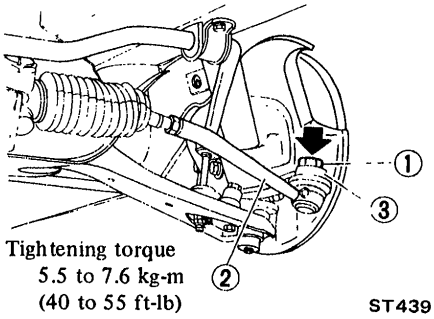

Tightening torque
5.5 to 7.6 kg-m
(40 to 55 ft-lb)

ST439

1 Side rod outer ball stud nut
2 Side rod
3 Knuckle arm

Fig. ST-18 Removing outer ball stud nut

5. Remove splash board.
6. Remove cotter pins and nuts fastening side rod ball studs to knuckle arms. See Figure ST-18.
7. To detach side rod ball studs from knuckle arms, insert Ball Joint Puller HT72520000 between them and separate by tightening the bolt of this tool with a wrench.

If this operation must be done without this tool, strike knuckle arm boss with a copper hammer backing up the opposite side of it with a large hammer and ball stud will be free from knuckle arm. Do not strike the ball stud head, the ball socket of side rod and side rod with a hammer in this operation.

7. Remove bolts securing steering gear housing to suspension member. See Figure ST-19.

Downloaded from www.Manualslib.com manuals search engine

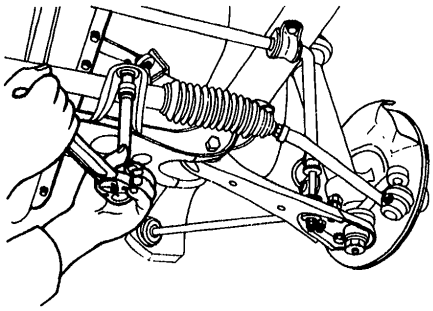

Tightening torque:
Bolt to welded nut
2.6 to 3.0 kg-m
(19 to 22 ft-lb)

Lock nut
3.1 to 3.5 kg-m
(22 to 25 ft-lb)

ST440

Fig. ST-19 Removing bolts securing housing to suspension member

8. Remove steering gear and linkage assembly.

Note: Raise the assembly a little and draw it out transversely.

DISASSEMBLY

1. Clamp the rack-and-pinion assembly in a vise using patches on steering gear housing to avoid scarring.
2. Remove dust cover clamp and boot clamp from steering gear boot. (Both left and right) See Figure ST-20.

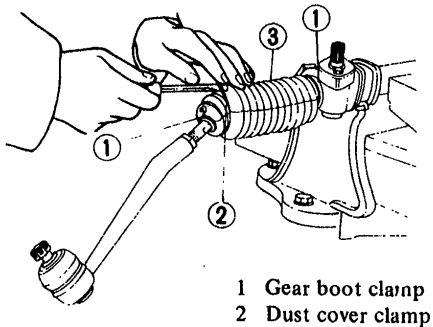

1 Gear boot clamp
2 Dust cover clamp
3 Gear boot

ST441

Fig. ST-20 Removing clamps

3. Loosen side lock nut and inner socket assembly.
4. Remove side rod assembly from rack. See Figure ST-21.

Note: Do not disassemble side rod assembly.

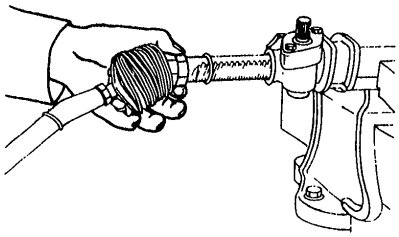

ST442

Fig. ST-21 Disconnecting side rod assembly

5. Remove side rod spring seat and side rod inner spring.
6. Loosen adjust lock nut and remove retainer adjust screw.

And then take retainer spring and steering gear retainer out. See Figure ST-22.

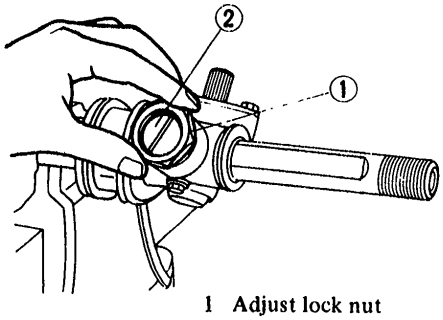

1 Adjust lock nut
2 Retainer adjust screw

ST443

Fig. ST-22 Removing adjust lock nut

7. Remove oil seal. See Figure ST-23.

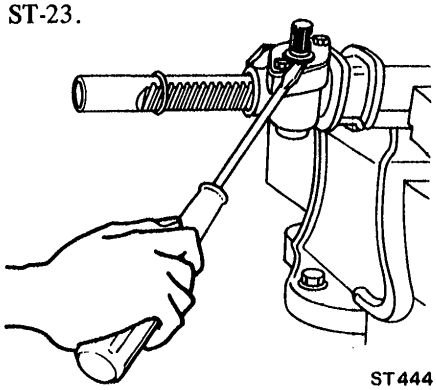

ST444

Fig. ST-23 Removing oil seal

8. Remove bolts, housing cover and pinion adjust shim. See Figure ST-24.

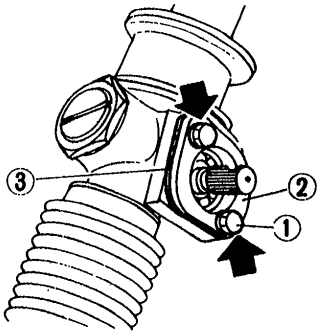

1 Bolt
2 Housing cover
3 Pinion adjust shim

ST444

Fig. ST-24 Removing bolts and housing cover

9. Draw steering pinion assembly out.
10 Draw rack out from gear housing.
11. Pry off pinion lower bearing located at the bottom of gear housing.
12. Press pinion bearing out of pinion shaft. See Figure ST-25.

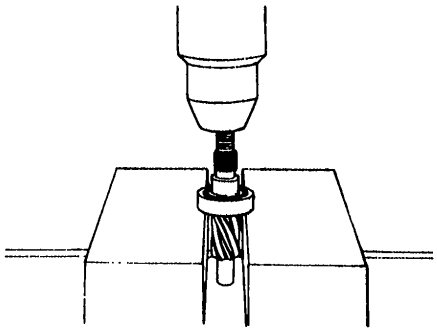

ST445

Fig. ST-25 Pressing pinion bearing out of pinion shaft

13. Draw rack out of gear housing.

Downloaded from www.Manualslib.com manuals search engine

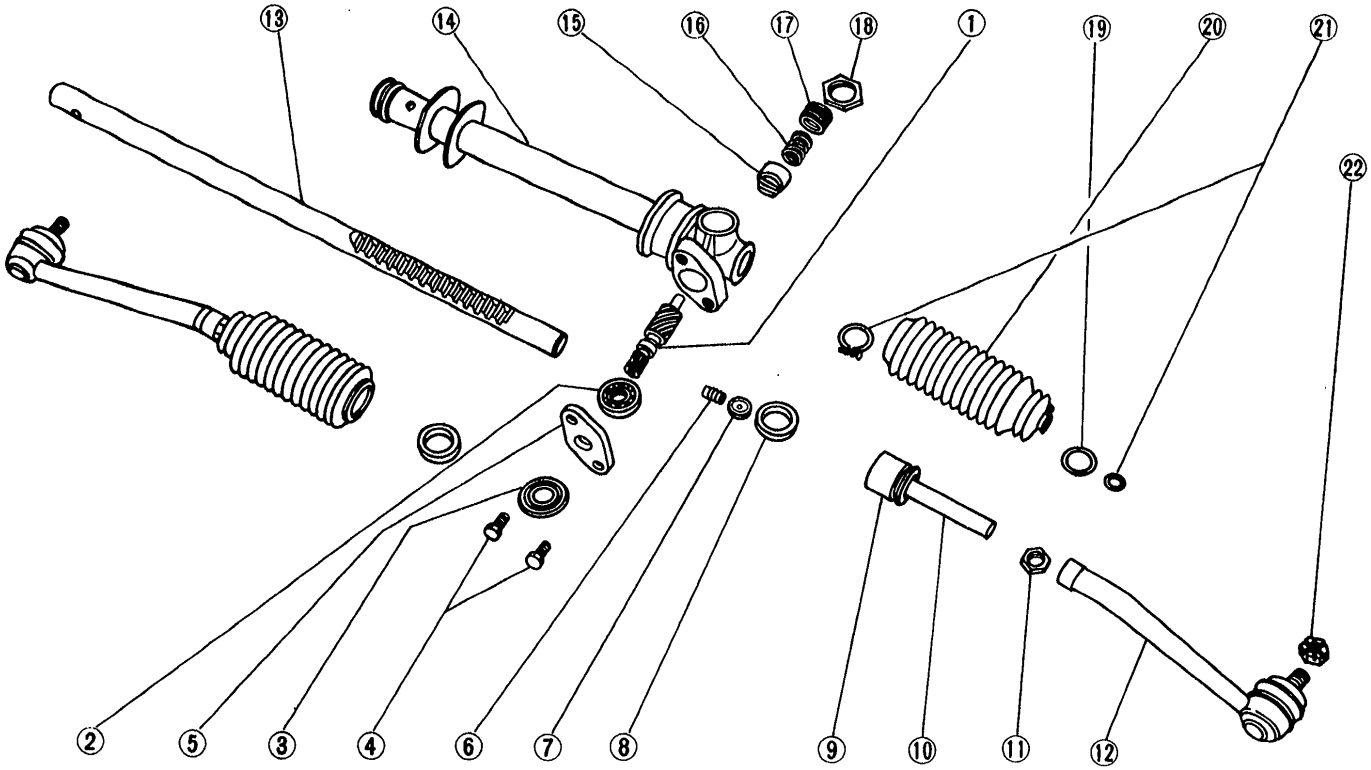

1 Pinion
2 Pinion bearing
3 Oil seal
4 Housing cover bolt
5 Housing cover
6 Side rod spring
7 Spring seat
8 Side rod lock nut
9 Inner socket assembly
10 Inner socket assembly
11 Steering stopper nut
12 Side rod
13 Rack
14 Steering gear housing
15 Retainer
16 Retainer spring
17 Retainer adjust screw
18 Lock nut
19 Dust cover clamp
20 Boot
21 Boot clamp
22 Outer ball stud nut
23 Pinion lower bearing

ST446

Fig. ST-26 Rack-and-pinion and side rod components

INSPECTION

Thoroughly clean all parts in cleaning solvent, and blow dry with compressed air, if available.

Rack

Thoroughly examine all parts; components showing signs of wear must be replaced.

Fractures, hollows, or roughness in the surfaces of the rack indicates unserviceability.

Pinion

Thoroughly examine all parts; components showing signs of damage, cracking, or wear must be replaced. A damaged bearing or oil seal must be replaced.

Side rod ball and spring seat

Components showing signs of damage or wear must be replaced.

Side rod outer ball joint

Measure the swinging torque and axial play. When values are not within the specified range, replace. See Figure ST-27.

Side rod outer ball joint

Swinging torque:
0.8 to 1.5 kg-m
(5.8 to 10.8 ft-lb)

Axial play:
0.1 to 0.5 mm
(0.0039 to 0.0197 in)

1 Ball stud
2 Dust cover
3 Ball seat
4 Urethane ring
5 Plug
6 Spring seat

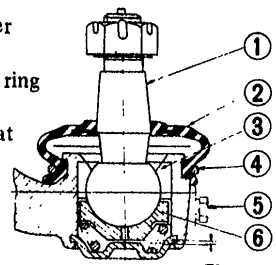

Clearance
0.1 to 0.5 (0.0039 to 0.0197)

ST179

Fig. ST-27 Cross-section of outer ball joint

Side rod inner ball joint

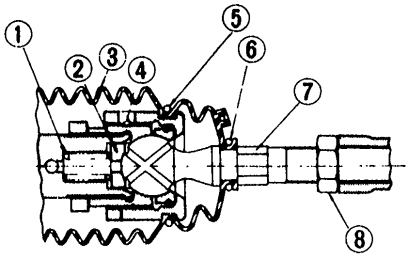

ST447

1 Side rod spring
2 Spring seat
3 Boot
4 Welded
5 Dust cover clamp
6 Boot clamp
7 Side rod ball
8 Stopper nut

Fig. ST-28 Side rod inner ball joint

Check inner ball joint for play. If ball stud is worn and play in axial direction is excessive or joint is hard to swing, replace as a complete unit. See Figure ST-28.

Downloaded from www.Manualslib.com manuals search engine

Side rod inner ball joint

Swinging torque:
0 to 0.5 kg-m
(0 to 3.6 ft-lb)

Axial play:
0 to 0.05 mm
(0 to 0.0020 in)

Pinion bearing and inner bearing

Inspect bearings to see that they roll freely and are free from cracked, pitted, or worn balls, rollers and races. Replace if they are faulty.

Oil seal

If grease leakage is detected during assembly, replace.

Replace oil seal every disassembly even if it appears serviceable.

Retainer spring

Wire diameter	2.9 mm (0.114 in)
Free length	19.6 mm (0.772 in)
Load x length	20 kg (44 lb) x 16.3 mm (0.642 in)

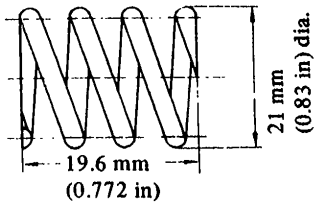

Side rod spring

Wire diameter	2.6 mm (0.102 in)
Free length	19.0 mm (0.748 in)
Load x length	40 kg (88 lb) x 17.0 mm (0.669 in)

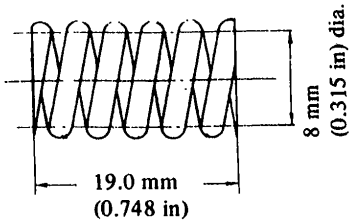

ASSEMBLY AND ADJUSTMENT

1. Press bearing onto pinion gear. See Figure ST-29.

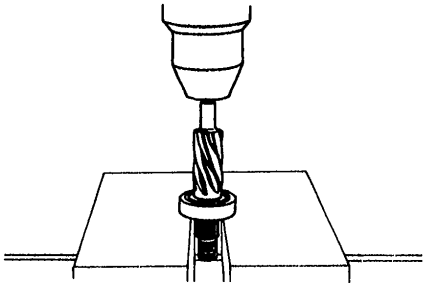

ST448

Fig. ST-29 Pressing bearing onto pinion gear

2. Clamp steering gear housing in a vise.
3. Thinly apply recommended multi-purpose grease to toothed faces and friction surfaces of rack.
4. Insert pinion lower bearing with seal of bearing upward, then insert pinion assembly into housing.
5. Tighten bolts of housing cover after selecting adequate pinion adjust shim to obtain specified rotary torque.

Tightening torque of nuts:
2.0 to 3.0 kg-m
(14 to 22 ft-lb)

Rotary torque of pinion:
3 to 6 kg-cm
(2.6 to 5.2 in-lb)

Pinion adjust shim oversize

Thickness mm (in)
0.05 (0.0020)
0.127 (0.0050)
0.25 (0.0098)
0.50 (0.0197)
1.00 (0.0394)

6. After this, remove bolts, housing cover, shim and pinion assembly.
7. Insert rack into tube from gear housing side.

Note: Pay attention to the direction of rack.

8. Make sure that rack protrudes by the same amount from both ends of housing. See Figure ST-30.

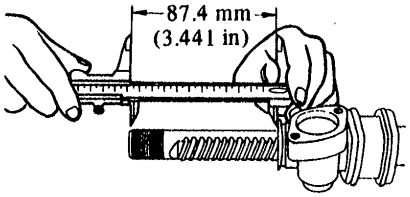

ST449

Fig. ST-30 Measuring protruding portion of rack

9. Apply a coating of recommended multi-purpose grease to pinion teeth and pinion bearing.
10. Properly mesh pinion with rack, and insert pinion assembly with the groove on the pinion serration part directed upward. See Figure ST-31.

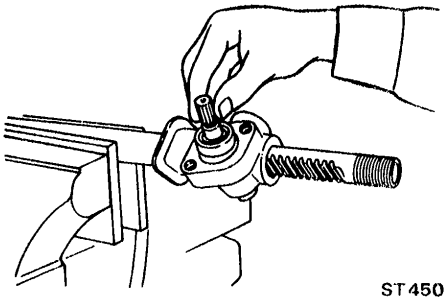

ST450

Fig. ST-31 Inserting pinion assembly

11. Make sure again of the length protruding from both the left and right sides of housing. See Figure ST-32.

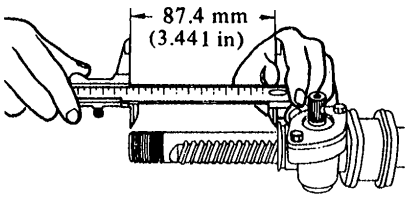

ST451

Fig. ST-32 Measuring protruding portion of rack

12. Tighten housing cover bolts.

Tightening torque:
2.0 to 3.0 kg-m
(14 to 22 ft-lb)

13. Fit oil seal. See Figure ST-33.

Downloaded from www.Manualslib.com manuals search engine

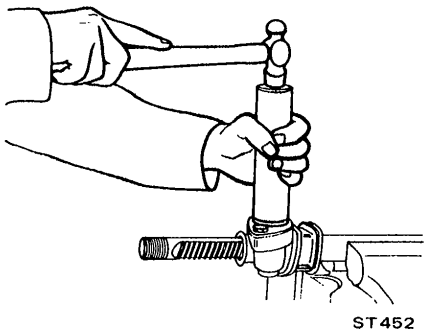

Fig. ST-33 Fitting oil seal

14. Make sure that pinion assembly rotates smoothly.
15. Measure pinion axial play. See Figure ST-34.

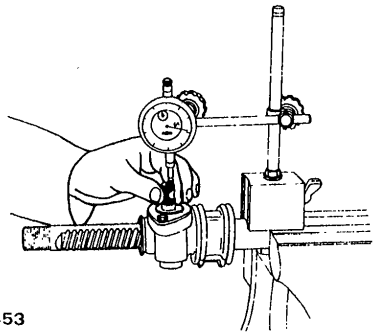

Fig. ST-34 Measuring pinion axial play

Pinion axial play:
0 to 0.3 mm
(0 to 0.0118 in)

16. Apply an adequate amount of recommended multi-purpose grease to steering gear retainer.
17. Insert gear retainer and retainer spring into housing. Turn retainer adjusting screw in, and install adjusting lock nut.
18. Turn adjusting screw in until retainer is tight, then turn this screw round approximately 20 to 25 degrees. Tighten retainer lock nut after selecting adequate steering adjust shim to obtain specified rotary torque. See Figure ST-35.

Tightening torque:
4 to 6 kg-m (29 to 43 ft-lb)

Steering adjust shim oversize

Thickness mm (in)
0.25 (0.0098)
0.50 (0.0197)
1.00 (0.0394)

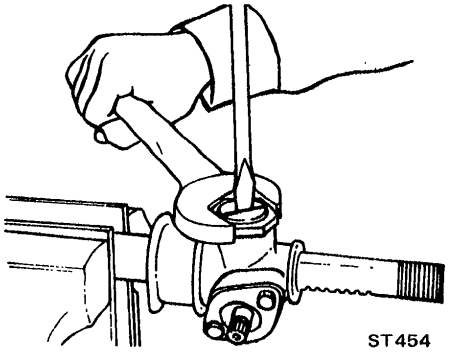

Fig. ST-35 Locking retainer lock nut

19. After this, apply suitable liquid sealant around lock nut at "A". See Figure ST-36.

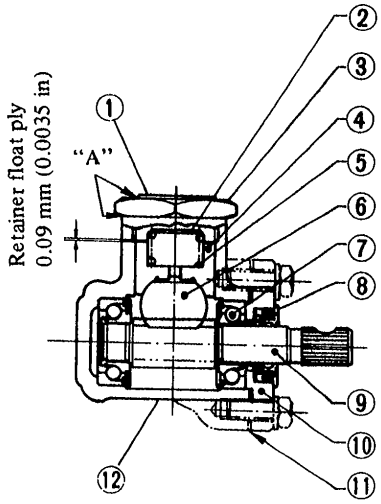

1	Adjust screw	7	Pinion bearing
2	Steering adjust shim	8	Oil seal
		9	Pinion
3	Lock nut	10	Housing cover
4	Retainer	11	Pinion adjust shim
5	Retainer spring	12	Steering gear housing
6	Rack		

ST455

Fig. ST-36 Area to which liquid sealant is applied

20. Upon completion of gear assembly measure the torque required to keep pinion and rack in motion. Readjust retainer adjusting screw as necessary to obtain proper torque shown in the following chart. See Figures ST-37 and ST-38.

Pinion (rotary torque):
0 to 20 kg-cm
(0 to 17 in-lb)
Rack (force to pull):
14 to 17 kg
(31 to 37 lb)

Note: Both parts should move smoothly over their entire travel.

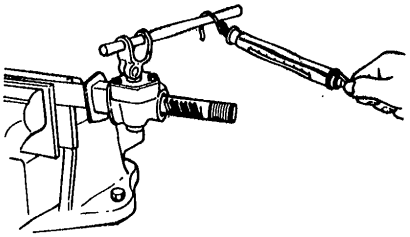

Fig. ST-37 Measuring pinion rotary torque

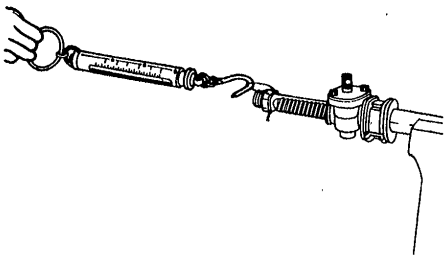

Fig. ST-38 Measuring rack force to pull

21. Fit boot on side rod assembly, and boot clamp (rubber) and dust cover on boot.
22. Thread lock nut spacer and lock nut over the threaded portion of rack.
23. Apply an adequate amount of recommended grease to the sliding surfaces of side rod inner socket and spring seat.
24. Fit side rod assembly to rack end together with inner spring and spring seat. See Figure ST-39.

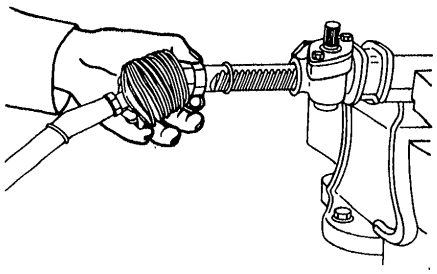

Fig. ST-39 Fitting side rod assembly to rack

Notes:

a. Make sure that boot is carefully positioned toward the ball stud end.

b. Side rod assembly for the left side has an L-mark. (No mark is used for the right side.) See Figure ST-40.

Downloaded from www.Manualslib.com manuals search engine

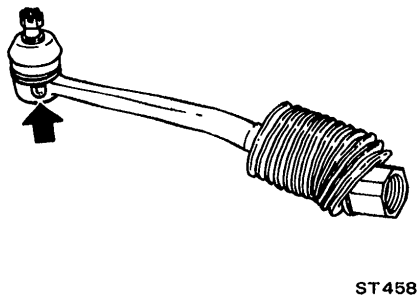

ST458

Fig. ST-40 L-mark

25. Screw inner socket portion until ball seat reaches the rack end, and then tighten lock nut securely. See Figure ST-41.

Tightening torque:
8 to 10 kg-m
(58 to 72 ft-lb)

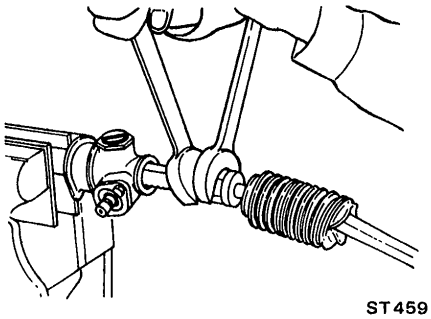

ST459

Fig. ST-41 Tightening lock nut

26. Upon completion of side rod assembly, measure swinging torque and axial play of inner ball joint. See Figure ST-42.

Swinging torque:
0 to 0.5 kg-m
(0 to 3.6 ft-lb)
Axial play:
0 to 0.05 mm
(0 to 0.0020 in)

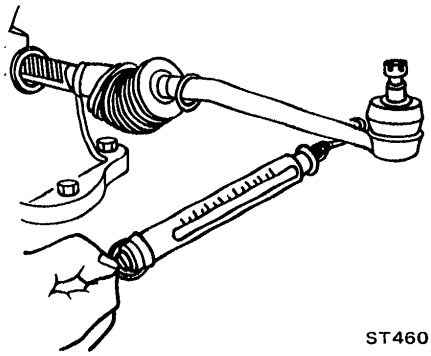

ST460

Fig. ST-42 Measuring swinging torque

27. Measure rack stroke. See Figure ST-43.

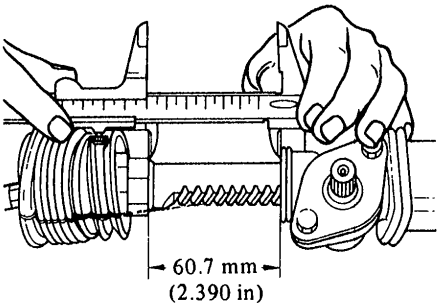

ST461

Fig. ST-43 Measuring rack stroke

Rack stroke:
60.7 mm (2.390 in)

28. Fit boot, boot clamp (rubber) and dust cover clamp, install a grease nipple at both ends of rack, and apply recommended multi-purpose grease to each joint.

Note: Lubrication of the rack ends is made so that a small quantity of new grease appears at the boot grease outlet hole.
Do not apply an excessive amount of grease.

29. Fit spacer to outer side until it reaches stopper nut.

Install boot to gear housing, then tighten inside boot clamp securely. See Figure ST-44.

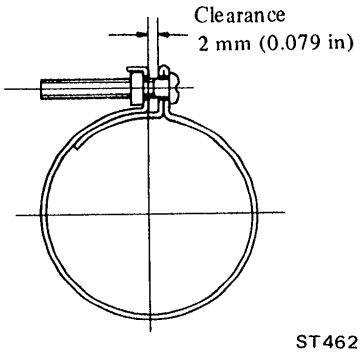

ST462

Fig. ST-44 Tightening boot clamp

Note: Boot should be neither too inflated nor too elongated.

30. Adjust the side rod length both left and right, and tighten steering stopper nuts. See Figure ST-45.

Tightening torque:
8 to 10 kg-m
(58 to 72 ft-lb)

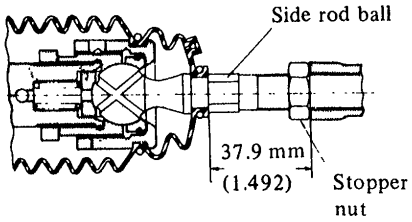

ST447

Fig. ST-45 Adjusting side rod length

INSTALLATION

Install steering linkage in the reverse order of removal.

Observe the followings:

1. For tightening torque, refer to Removal.
2. Check wheel alignment, and if necessary adjust.

See Section FA.

Downloaded from www.Manualslib.com manuals search engine

SERVICE DATA AND SPECIFICATIONS

SPECIFICATIONS

Steering gear type		Rack-and-pinion type
Turns of steering wheel (lock to lock)		3.1
Steering gear ratio		18 : 1
Turning angle of front wheel		
inside (2 seater)	degree	33°54′ to 34°54′
outside (2 seater)	degree	32°6′ to 34°6′
inside (2+2 seater)	degree	36°18′ to 37°18′
outside (2+2 seater)	degree	34°24′ to 36°24′
Minimum turning radius	m (ft)	4.8 (15.7)
Steering wheel free play	mm (in)	20 to 30 (0.79 to 1.18)
Rack stroke	mm (in)	60.7 (2.390)

SERVICE DATA

Standard clearance between clamp and lower jacket	mm (in)	176.1 (6.933)
Side rod outer ball joint		
Swinging torque	kg-m (ft-lb)	0.8 to 1.5 (5.8 to 10.8)
Side rod inner ball joint		
Swinging torque	kg-m (ft-lb)	0 to 0.5 (0 to 3.6)
Rock force to pull	kg (lb)	14 to 17 (31 to 37)
Side rod length	mm (in)	37.9 (1.492)
Pinion adjust shim oversize:		
Thickness	mm (in)	0.05 (0.0020)
		0.127 (0.0050)
		0.25 (0.0098)
		0.50 (0.0197)
		1.00 (0.0394)
Steering adjust shim oversize:		
Thickness	mm (in)	0.25 (0.0098)
		0.50 (0.0197)
		1.00 (0.0394)

Downloaded from www.Manualslib.com manuals search engine

TIGHTENING TORQUE

Column shaft		
Steering wheel nut	kg-m (ft-lb)	4 to 5 (29 to 36)
Column clamp bolt	kg-m (ft-lb)	0.8 to 1.1 (6 to 8)
Rubber coupling securing bolt	kg-m (ft-lb)	1.7 to 2.0 (12 to 14)
Lower joint to rubber coupling bolt	kg-m (ft-lb)	2.3 to 2.7 (17 to 20)
Lower joint to pinion gear bolt	kg-m (ft-lb)	4 to 5 (29 to 36)
Steering gear and linkage		
Nut securing side rod ball stud to knuckle arm	kg-m (ft-lb)	5.5 to 7.6 (40 to 55)
Side rod stopper nut	kg-m (ft-lb)	8 to 10 (58 to 72)
Side rod lock nut	kg-m (ft-lb)	8 to 10 (58 to 72)
Gear housing cover bolt	kg-m (ft-lb)	2 to 3 (14 to 22)
Retainer lock nut	kg-m (ft-lb)	4 to 6 (29 to 43)
Side rod inner socket lock nut	kg-m (ft-lb)	8 to 10 (58 to 72)

TROUBLE DIAGNOSES AND CORRECTIONS

Problems in the Front Axle and Front Suspension are discussed at this point, because they are generally associated with steering malfunctions.

1. Vibration, shock and shimmying of steering wheel

Vibration: Too much backlash of the steering gear, wear of linkage parts or the rubber coupling, and vibration of front wheels are, in many cases, transmitted to the steering wheel. This is very noticeable when traveling over rough roads.

Shock: When the front wheels are traveling over bumpy roads, shock is transmitted to the steering wheel. This is also very noticeable when traveling over rough roads.

Shimmying: This is abnormal vibration of the front suspension group and the entire steering linkage, and occurs when a specific speed is attained.

Possible causes	Corrective action
Improper tire pressure or insufficient tightening of wheel nuts.	Adjust or tighten.
Difference in height of right and left tire treads.	Replace tires.
Incorrect adjustment or wear of front wheel bearing.	Adjust or replace.
Collapsing or twisting of front spring.	Replace.
Incorrect brake (binding) adjustment.	Adjust.
Incorrect adjustment of brakes (binding).	Readjust.
Wear of rubber bushings for fitting transverse link and compression rod.	Replace.
Deformation of steering linkage and suspension link.	Replace.

Downloaded from www.Manualslib.com manuals search engine

Possible causes	Corrective action
Excessive clearance of side rod inner or outer ball joint.	Replace.
Loose side rod lock nut.	Tighten more.
Car level unbalance.	Correct the unbalance.

2. Wandering of car in one direction

When driving with hands off the steering wheel over a flat road, the car gently pulls to one side of the road.

Note: Faulty rear suspension may also be the cause of this tendency. Refer to information concerning the rear suspension.

Possible causes	Corrective action
Improper tire pressure.	Adjust.
Unbalance or deformation of load wheel.	Correct the unbalance or replace.
Uneven tire wear or insufficient tightening.	Replace or tighten.
Faulty wheel alignment.	Adjust.
Wear of bushings for fitting transverse link and compression rod.	Replace.
Loose steering post clamp.	Retighten.
Wear of steering column bearing.	Replace steering column assembly.
Breakage or collapsing of steering column shaft spring.	Replace.
Loose rubber coupling bolts or wear of rubber coupling.	Retighten or replace.
Excessive serration play.	Replace.
Wear of lower joint journal.	Replace.
Insufficient tightening of steering gear housing.	Retighten.
Wear of suspension ball joint.	Replace.
Improper adjustment of retainer. (Too much backlash)	Adjust.
Malfunction of shock absorber (inside strut) or loose bolts.	Replace or tighten.
Car level unbalance.	Correct the unbalance.

Downloaded from www.Manualslib.com manuals search engine

3. Instability of car

Possible causes	Corrective action
Improper tire pressure.	Adjust.
Wear of rubber bushings for fitting transverse link and compression rod.	Replace.
Incorrect wheel alignment.	Adjust.
Wear or deformation of steering linkage and suspension link.	Replace.
Worn mounting rubber.	Replace.
Loose gear housing bolt.	Retighten.
Loose side rod lock nut.	Retighten.
Excessive play of side rod inner or outer ball joint.	Replace.
Incorrect adjustment of retainer.	Readjust.
Deformation and unbalance of wheel.	Correct or replace.

4. Steering wheel resistance

(Sequence of checking)

Jack up the front of the car, detach the lower joint upper part and operate the steering wheel. If resistance is low, check the steering gear, steering linkage, suspension and accelerator groups. If high, check the steering column.

Possible causes	Corrective action
Improper tire pressure.	Adjust.
Insufficient grease or impurities in gear housing.	Replenish grease or replace gear housing.
Insufficient grease, impurities in steering linkage, or abnormal wear.	Replenish grease or replace the part.
Stiffness, damage, or insufficient grease in suspension ball joint.	Replace.
Wear or incorrect adjustment of wheel bearing.	Replace or adjust.
Seizing of housing bushing.	Replace with gear housing.
Wear or damage of rack-and-pinion or bearing.	Replace.
Incorrect adjustment of retainer.	Readjust.
Tight retainer.	Adjust.
Deformation of steering linkage.	Replace.

Downloaded from www.Manualslib.com manuals search engine

Possible cause	Corrective action
Incorrect wheel alignment.	Adjust.
Damage of bearing at upper end of strut.	Replace.
Damage or stiffness of piston or rod of shock absorber (in the strut).	Replace.
Interference of steering column with turn signal switch.	Adjust.
Damage, seizing, or stiffness of steering column bearing.	Replace with steering column jacket.

5. Excessive steering wheel play

Possible causes	Corrective action
Incorrect adjustment of retainer.	Adjust.
Wear of steering linkage.	Replace.
Improper fitting of gear housing.	Tighten.
Worn mounting rubber.	Replace.
Incorrect adjustment of wheel bearing.	Adjust.
Wear of bushings for fitting transverse link and tension rod.	Replace.
Loose rubber coupling bolts.	Retighten.
Wear of rubber coupling.	Replace.
Loose lower joint bolts.	Retighten.

6. Noises

Possible causes	Corrective action
Improper tire pressure.	Adjust.
Insufficient grease for suspension ball joint and steering linkage, or breakage.	Replenish grease, or replace.
Loose bolts of steering gear housing, linkage, and suspension groups.	Retighten.
Faulty shock absorber (inside strut).	Replace.
Faulty wheel bearing.	Replace.

Downloaded from www.Manualslib.com manuals search engine

Possible cause	Corrective action
Wear of steering linkage and rack-and-pinion.	Replace.
Wear of bushings for fitting transverse link and compression rod.	Replace.
Breakage or collapsing of coil spring.	Replace.
Loose nuts (holding strut mounting insulator).	Retighten.
Wear of housing bushing.	Replace housing gear assembly.
Excessive thrust play of pinion.	Adjust or replace.
Loose retainer part.	Replace retainer spring or tighten lock nut.

SPECIAL SERVICE TOOLS

No.	Tool number & tool name	Description	For use on	Reference page or Figure No.
1.	ST27180001 Steering wheel puller	This tool is used to drive out steering wheel. **Caution: Do not hammer on steering column shaft.** 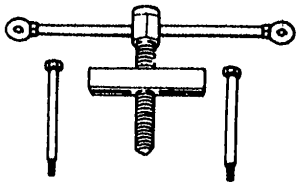 SE116	F10 B210 610 710 S30 620	Fig. ST-2
2.	HT72520000 Ball joint puller	This tool is used to remove side rod ball joint socket from knuckle arm. **Caution: Do not hammer on bolts.** 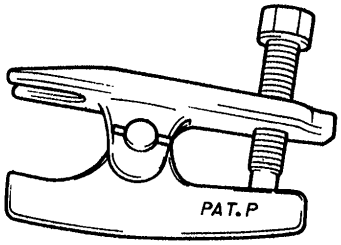 SE399	F10 B210 610 710 S30 620	Page ST-6

Downloaded from www.Manualslib.com manuals search engine

SERVICE MANUAL

DATSUN 280Z
MODEL S30 SERIES

NISSAN

NISSAN MOTOR CO., LTD.
TOKYO, JAPAN

SECTION FE

ENGINE CONTROL, FUEL & EXHAUST SYSTEMS

FE

ENGINE CONTROL SYSTEM ..... FE- 2
FUEL SYSTEM ..... FE- 4
EXHAUST SYSTEM ..... FE- 7

Downloaded from www.Manualslib.com manuals search engine

ENGINE CONTROL SYSTEM

CONTENTS

ACCELERATOR SYSTEM FE-2
DESCRIPTION FE-2
REMOVAL AND INSTALLATION FE-2
INSPECTION FE-3
ADJUSTMENT FE-3

ACCELERATOR SYSTEM

DESCRIPTION

The accelerator linkage has been constructed with minimized weight so that it will not be affected by engine vibration and will operate smoothly at all times.

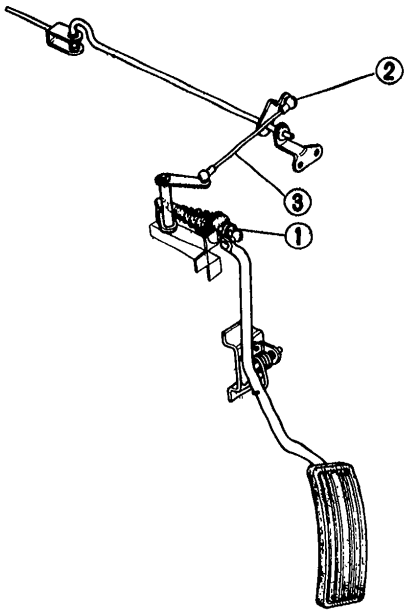

FE222

1 Ball joint No. 1
2 Ball joint No. 2
3 Joint rod

Fig. FE-1 Accelerator linkage

REMOVAL AND INSTALLATION

1. Remove three screws from accelerator pedal bracket.

2. Separate accelerator rod from pedal arm at ball joint. See Figure FE-1.

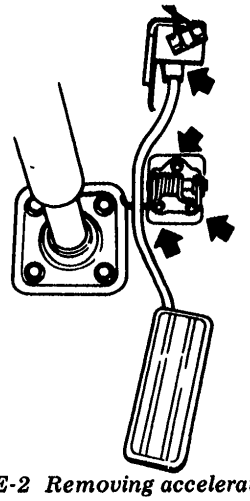

FE164

Fig. FE-2 Removing accelerator pedal arm

3. Disconnect ball joints of each rod at torsion shaft support and bell crank bracket in the engine compartment.

Joint rods can then be taken out.

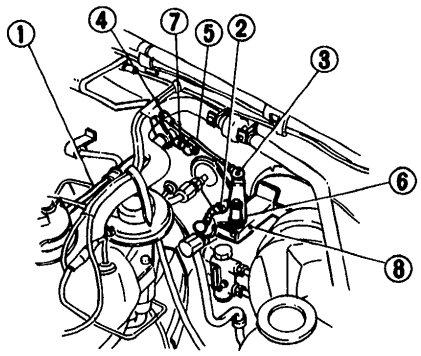

1 Torsion shaft
2 Boot
3 Ball joint
4 Ball joint No. 2
5 Joint rod
6 Bell-crank
7 Torsion shaft support
8 Bell-crank bracket

FE385

Fig. FE-3 Disconnecting ball joints and joint rods

Downloaded from www.Manualslib.com manuals search engine

4. Installation is in the reverse sequence of removal.

INSPECTION

1. Check accelerator pedal return spring for rust, fatigue or damage.
   Replace if necessary.
2. Check accelerator linkage for rust, damage or looseness.
   Repair or replace if necessary.

ADJUSTMENT

LINKAGE

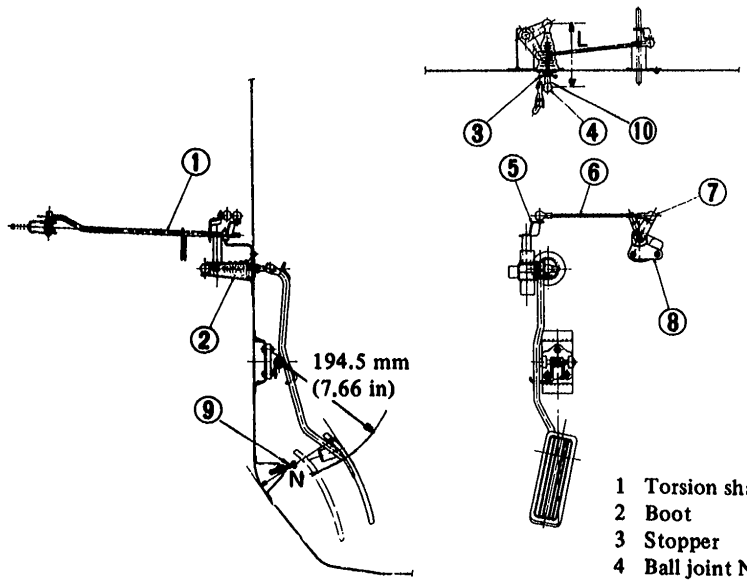

FE165

1 Torsion shaft
2 Boot
3 Stopper
4 Ball joint No. 1
5 Bell crank
6 Joint rod
7 Ball joint No. 2
8 Torsion shaft support
9 Pedal stopper and nut
10 Joint rod

Fig. FE-4 Accelerator linkage setting

1. Adjust the stopper bolt height to 22.5 mm (0.886 in) from toe board.
2. Adjust the joint rod running through dashboard to L = 117 mm (4.61 in).
   Adjust the other joint rod ⑥ to 123 mm (4.84 in).
3. Upon completion of the above adjustment, depress accelerator pedal, and adjust stopper bolt properly so that it comes into contact with pedal when throttle shaft is in "Fully Open" position. Now, turn stopper bolt clockwise one full turn and lock stopper bolt with lock nut.

Kickdown switch

On automatic transmission models, it is necessary to adjust kickdown switch. Kickdown switch adjustment is correct if switch is actuated by kickdown switch striker when accelerator pedal is fully depressed.

Always tighten stopper nut securely after proper adjustment is obtained.

Downloaded from www.Manualslib.com manuals search engine

FUEL SYSTEM

CONTENTS

DESCRIPTION FE-4
REMOVAL AND INSTALLATION FE-4
FUEL TANK FE-4
FILLER TUBE AND FILLER HOSE FE-5
FUEL PIPE AND RUBBER HOSE FE-5
FUEL TANK GAUGE FE-5
INSPECTION FE-5
FUEL TANK FE-5
FUEL RUBBER HOSE FE-6
FUEL PIPES FE-6
FUEL TANK GAUGE FE-6

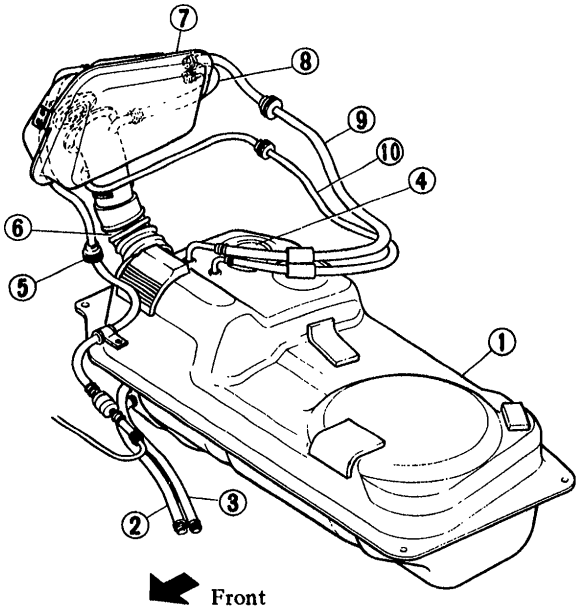

1 Fuel tank
2 Fuel hose (return)
3 Fuel hose (outlet)
4 Fuel tank gauge
5 Vapor vent line
6 Filler hose
7 Reservoir tank
8 Breather hose
9 Breather hose
10 Breather hose

FE379

Fig. FE-5 Fuel tank and fuel line

DESCRIPTION

The fuel tank is installed in the spare tire compartment. The fuel pump is installed in front of the fuel tank. The electronic fuel injection system requires high fuel pressure in the fuel line.

Thus, pay close attention to the fuel line. The fuel tank is equipped with a thermistor for fuel warning. When the fuel level drops below 10 liters (10⅝ U.S. qt., 8¾ Imper. qt.) the thermistor is activated and the warning lamp goes on.

A large capacity fuel strainer is also installed midway in the fuel line in the engine compartment.

For evaporative emission control, a reservoir tank and a carbon canister are also equipped. The reservoir tank is located at the right-hand rear quarter and the carbon canister in the engine compartment.

For fuel pump, fuel damper and fuel strainer, refer to Section EF.

REMOVAL AND INSTALLATION

FUEL TANK

1. Disconnect battery ground cable.
2. Remove drain plug from tank bottom, and drain fuel completely.

Note: Fuel vapors are highly explosive. Keep flames or sparks away from vicinity of empty fuel tank.

3. Disconnect fuel tank gauge cable through inspection hole, outlet hose and return hose from tank.
4. Remove nuts from two tank securing bands, and lower tank slightly.

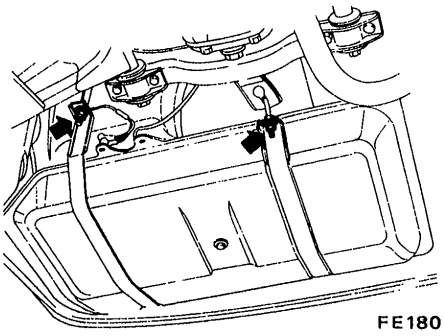

FE180

Fig. FE-6 Removing nuts from tank securing bands

5. Disconnect three ventilation hoses (used to connect reservoir to tank) and filler hose from tank, and dismount tank.
6. Disconnect breather hose (used to connect filler hose to reservoir), remove reservoir installation bolts, and remove reservoir.

Note: Plug hose and pipe openings to prevent entry of dust or dirt during removal.

Downloaded from www.Manualslib.com manuals search engine

7. Installation is in the reverse sequence of removal.

Note: Install fuel filler hose after fuel tank has been mounted in place. Failure to do so could result in leakage from around hose connections.
Do not twist or smash breather hoses when they are routed. Be sure to retain them with clips securely.

FILLER TUBE AND FILLER HOSE

Filler tube and hose can be removed without lowering fuel tank.
1. Disconnect battery ground cable.
2. Remove right-hand rear quarter trim and reservoir tank protector. See Figure FE-7. Refer to Section BF.

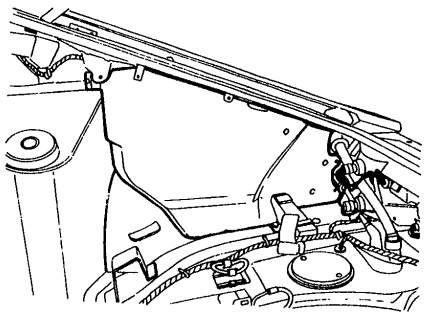

Fig. FE-7 Removing rear quarter trim

3. Loosen screws attaching fuel filler hose protector and remove it. See Figure FE-8.

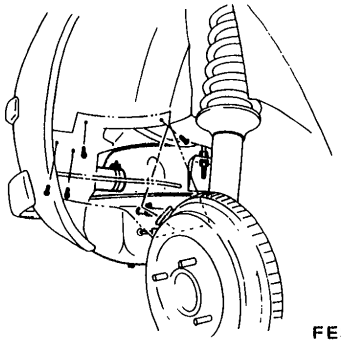

Fig. FE-8 Removing fuel filler hose protector

4. Loosen hose clamp and detach hose from fuel tank.

Note: Plug pipe opening of fuel tank to prevent entry of dust or dirt.

5. Loosen clamp ① tightening hose with tube and rubber grommet attaching nuts ② from the inside of rear compartment.

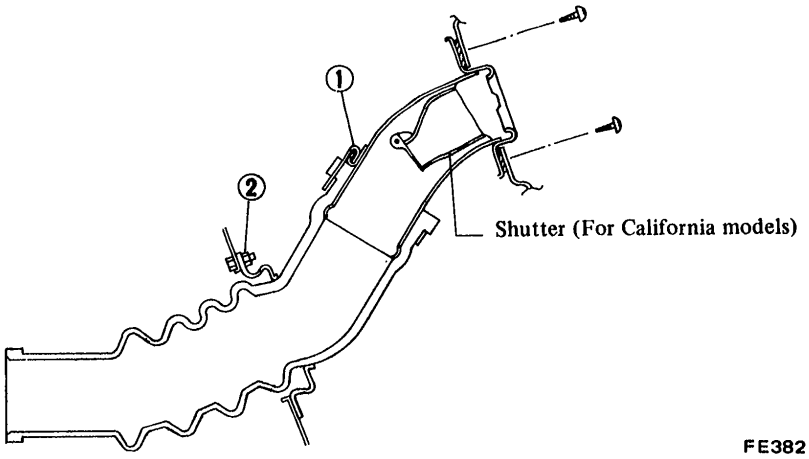

Fig. FE-9 Cross-sectional view of fuel hose

6. Pull out fuel filler hose toward the inside of car body.
7. Loosen screws fixing filler neck to rear fender and remove it toward the inside of compartment.
8. Installation is in the reverse sequence of removal.

Note: Be sure to place stopper of clamp in place when tightening clamp to prevent hose from being pulled out.

FUEL PIPE AND RUBBER HOSE

The fuel line between fuel pump and fuel strainer is a single molded unit construction which completely eliminate fuel leakage. Fuel pipes are serviced as an assembly.

Do not disconnect any fuel line unless absolutely necessary.
1. Drain fuel from fuel tank.
2. Loosen fuel hose clamps and disconnect fuel pipe at each end.

Note: Plug hose and pipe openings to prevent entry of dust or dirt during removal.

3. Unfasten clips that hold pipe on underbody and remove pipe from car.
4. For installation of fuel hoses and clamps, refer to section "EF".

FUEL TANK GAUGE

1. Drain fuel from fuel tank.
2. Disconnect battery ground cable.
3. Loosen screws and remove inspection hole lid.
4. Disconnect wires from fuel tank gauge through inspection hole.
5. Turn fuel tank gauge counterclockwise with a screwdriver.

Note: Tank gauge is a bayonet type; To remove, turn it counterclockwise.

6. Installation is in the reverse sequense of removal.

Note: When installing fuel tank gauge, align projection of fuel tank gauge with notch in fuel tank and tighten it securely. Be sure to install fuel tank gauge with O-ring in place.

INSPECTION

FUEL TANK

Check fuel tank for cracks or deformation. If necessary, replace.

Downloaded from www.Manualslib.com manuals search engine

FUEL RUBBER HOSE

Inspect all hoses for cracks, fatigue, sweating or deterioration.

Replace any hose that is damaged.

FUEL PIPES

Replace any fuel pipe that is cracked, rusted, collapsed or deformed.

Note: Inspect hoses and pipes according to the periodic maintenance schedule.

FUEL TANK GAUGE

1. Test resistance between ①-② terminals with a low reading ohmmeter. Resistance should be between approximately 10 to 80Ω.
2. Check resistance between ①-③ terminals when thermistor is submerged in fuel.
3. Then remove it from fuel, and drain fuel. At this step, resistance between ①-③ terminals should be different than that in step 2.
4. If anything is distorted, replace fuel tank gauge as an assembly.

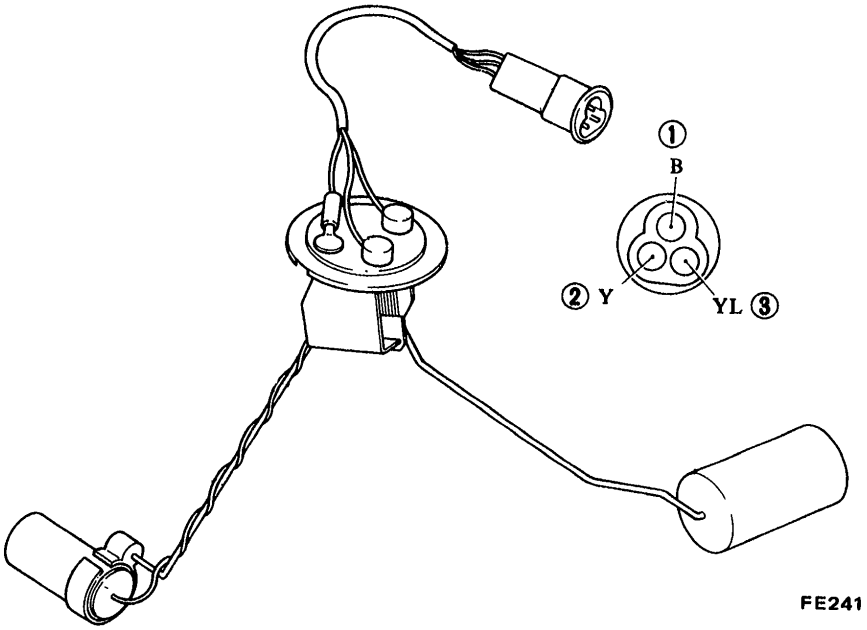

Fig. FE-10 Fuel tank gauge

Downloaded from www.Manualslib.com manuals search engine

EXHAUST SYSTEM

CONTENTS

CALIFORNIA MODELS ..... FE- 7
NON-CALIFORNIA MODELS FE-12

CALIFORNIA MODELS

Because all S30 California models are equipped with catalytic converters, it is necessary to maintain a proper clearance between the exhaust system components and adjacent parts on the car body.

The exhaust system consists essentially of a front tube, catalytic converter and center tube with a muffler. When it becomes necessary to replace any of these parts, heat shield plates should be installed before the replacement part is installed on the car body.

When installing the heat shield plate, care should be taken to install it in its proper position. If the heat shield plate is not properly installed, the relative position of body parts cannot be properly aligned after the exhaust system has been installed.

All non-California S30 models must also be checked for clearance between exhaust system components and body parts after installation of the exhaust system.

Installing heat shield plates

1. Muffler heat shield plate

Install muffler heat shield plate so that heat shield plate-to-muffler clearance is 3 mm (0.118 in) in fore-and-aft direction, as shown in the figure. Up-and-down and in-and-out alignment can be readily adjusted by means of seats.

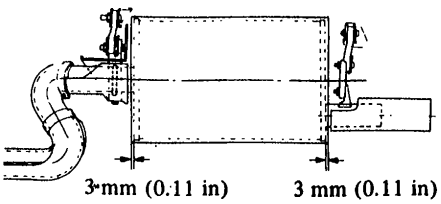

FE264

Fig. FE-11 Heat shield plate-to-muffler clearance

2. Exhaust center tube heat shield plate.

- Install muffler front mounting on center tube. Make sure that there is a distance of 38 mm (1.469 in) between center of muffler mounting securing bolt and front outer face of muffler when muffler front mounting has been installed. Refer to Figure FE-12.

Note: The above distance can also be obtained when distance between front outer face of muffler heat shield plate and rear end face of mounting rubber is 17 mm (0.669 in).

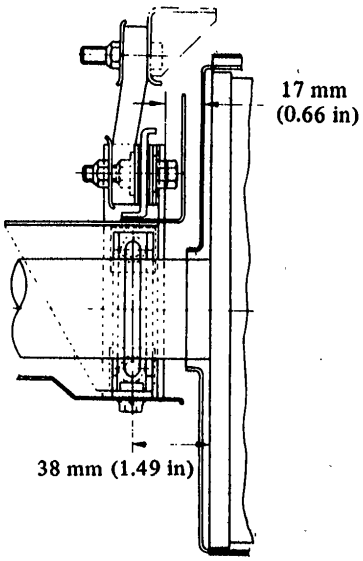

FE255

Fig. FE-12 Installing muffler front mounting

- Install lower heat shield plate ① on lower face of muffler front bracket, and secure with bolt. Refer to Figure FE-13.

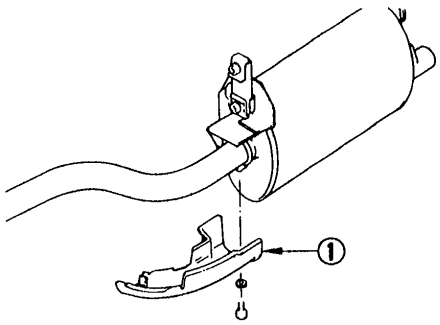

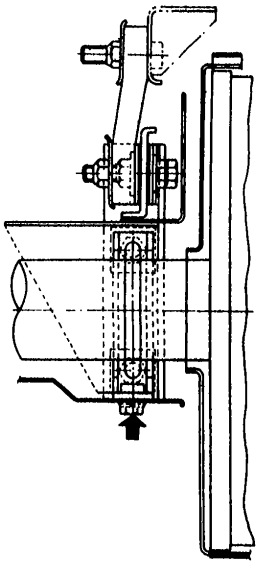

FE266

Fig. FE-13 Installing lower heat shield plate

Downloaded from www.Manualslib.com manuals search engine

- Tighten upper heat shield plate ② together with lower heat shield plate ① by means of clamp at position indicated by arrow, and secure to exhaust tube.

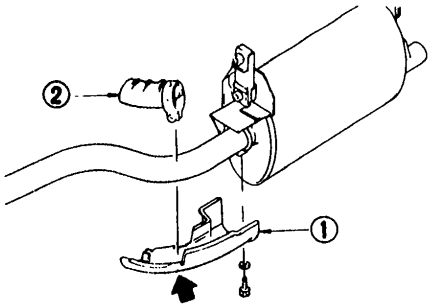

Fig. FE-14 Installing upper heat shield plate

- Put rear of lower heat shield plate ④ upon front of lower heat shield plate ①.
  Put rear of upper heat shield plate ③ upon front of upper heat shield plate ②, and tighten with upper heat shield plate ③ clamp. Refer to Figure FE-15.
  Align brackets of upper and lower heat shield plates ③ and ④, and tighten with bolts evenly. Install lower heat shield plate ⑤ to assembly.

Note: Upper and lower heat shield plates ③ and ④ must be adjusted in fore-and-aft direction so that they are parallel with exhaust tube.

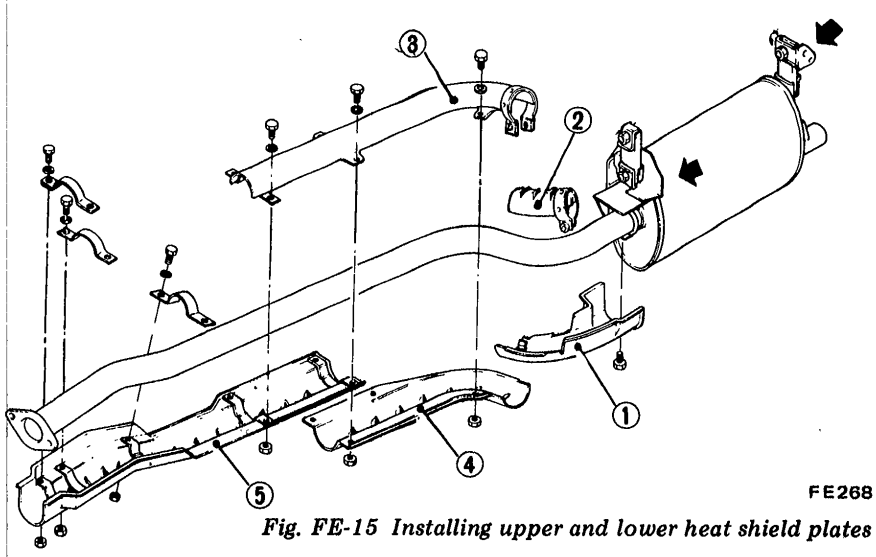

Fig. FE-15 Installing upper and lower heat shield plates

3. Upper and lower catalytic converter heat shield plates.
   These shield plates can be installed in accordance with standard shop practice.

4. Exhaust front tube heat shield plate.

- Install upper and lower heat shield plates ⑥ and ⑦ on their brackets, and tighten securely with bolts. Make sure that distance between rear face of exhaust front tube and rear end of heat shield plate is 108 mm (4.25 in). If necessary, adjust until correct distance is obtained. Refer to Figure FE-16.

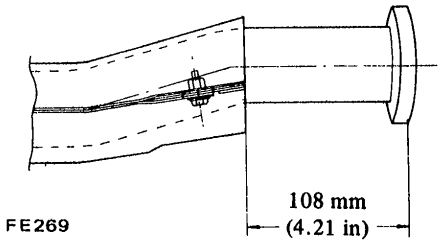

Fig. FE-16 Mounting position of exhaust front tube heat shield plate

- Snugly tighten front tube mounting bracket and U-bolt on front tube. Align and install exhaust front tube on car body, and tighten securely.
- Install lower heat shield plate ⑧ on lower face of exhaust tube mounting bracket, and tighten with bolt at weld nut hole.
  Note that front end of plate ⑧ is secured at two places together with rear bracket of heat shield plates ⑥ and ⑦.

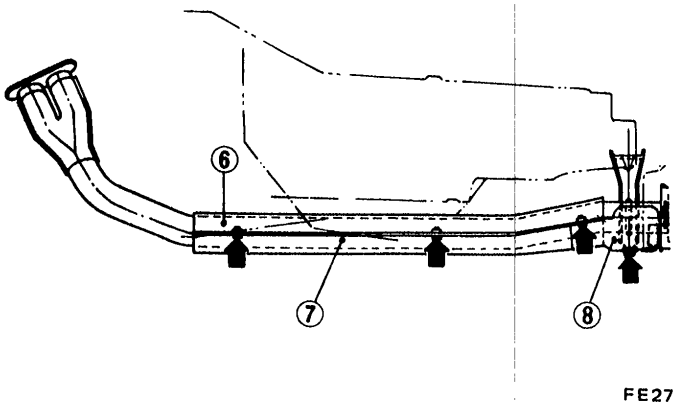

Fig. FE-17 Exhaust front tube heat shield plate

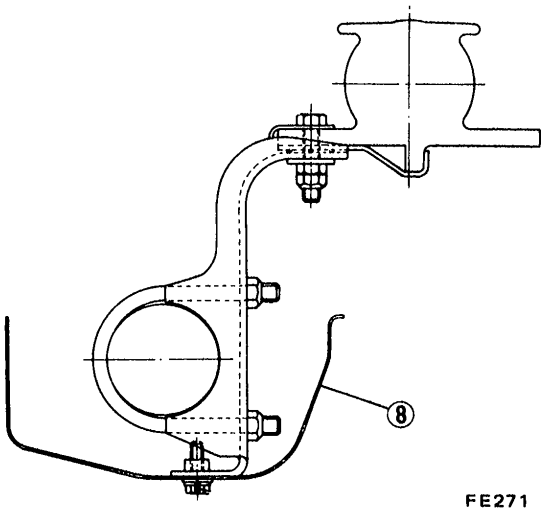

Fig. FE-18 Exhaust front tube mounting bracket

Downloaded from www.Manualslib.com manuals search engine

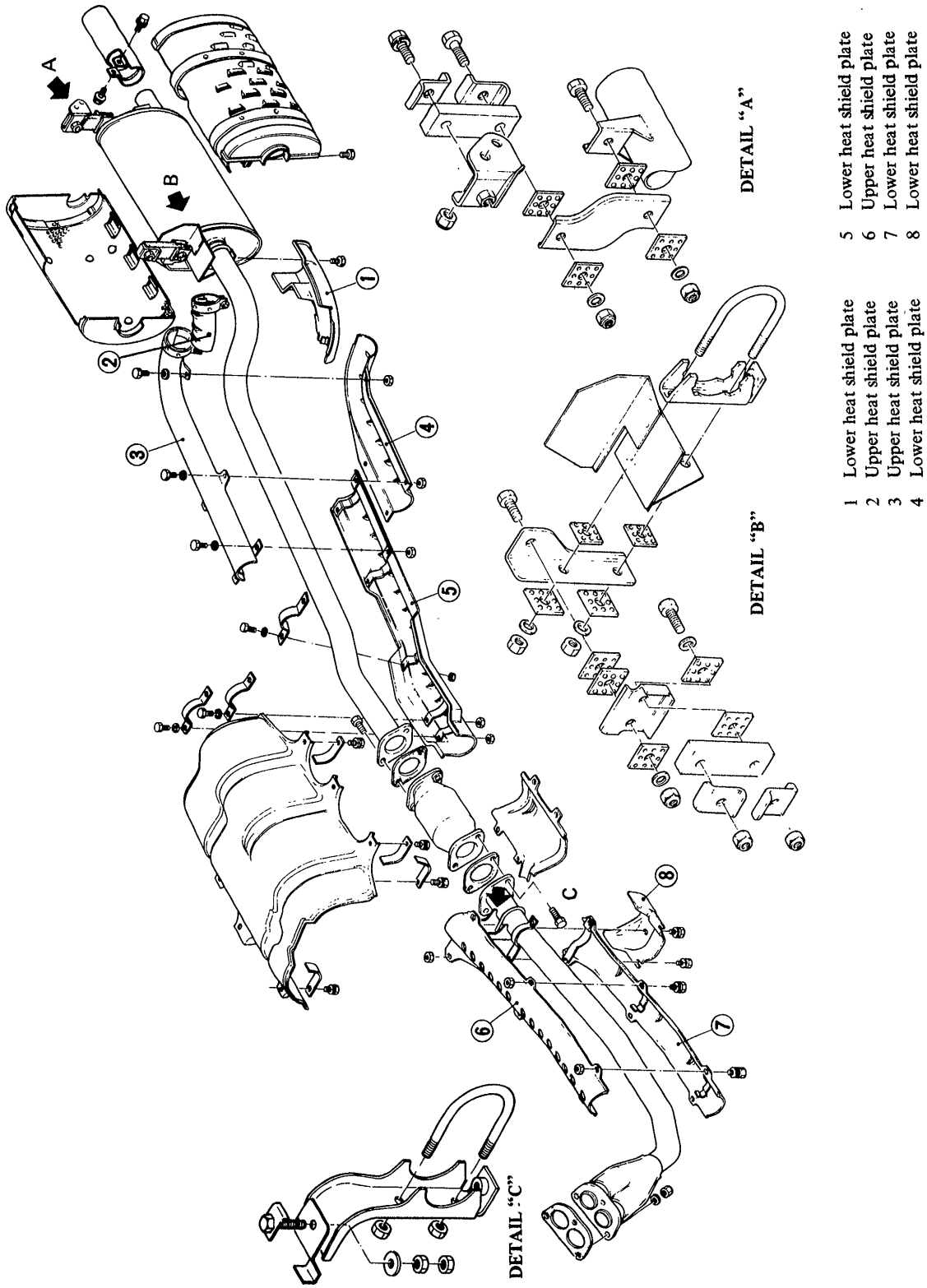

FE383

Fig. FE-19 Exploded view of exhaust system (California models)

Downloaded from www.Manualslib.com manuals search engine

Installing exhaust system

This section deals with installation procedures for the exhaust system assembly. The front tube, catalytic converter and muffler with center tube alone can be replaced as a single unit. General precautions regarding these units are the same as in the exhaust system assembly. When installing the exhaust system, the following general precautions should be observed:

Installing exhaust system

a) Make sure that there are no gas leaks at connections. Evenly tighten nuts securing fixing plate located between exhaust manifold and front tube.
b) Maintain proper clearances between exhaust heat shield plates and adjacent parts.

- Exhaust front tube-to-compression rod rubber heat shield plate clearance: 7 mm (0.276 in) min. Refer to section F-F in Figure FE-20.
- Exhaust front tube heat shield plate-to-transmission lower face/body floor clearance: 15 mm (0.591 in) min. Refer to section G-G in Figure FE-20.
- Exhaust front tube heat shield plate-to-rear engine mounting lower face clearance: 8 mm (0.315 in) min. Refer to section H-H in Figure FE-20.
- Floor heat shield plate-to-catalytic converter heat shield plate clearance: 18 mm (0.709 in) min. Refer to section I-I in Figure FE-20.
- Flatness of side member lower face with catalytic converter lower face: –5 to +5 mm (–0.197 to +0.197 in). Refer to section I-I in Figure FE-20.
- Front differential mounting member-to-exhaust center tube clearance: 10 mm (0.394 in) min. Refer to section J-J in Figure FE-20.
- Exhaust center tube heat shield plate-to-differential case lower face clearance: 10 mm (0.394 in) min. Refer to section K-K in Figure FE-20.
- Transverse link mounting bracket-to-exhaust center tube heat shield plate clearance: 10 mm (0.394 in) min. Refer to section K-K in Figure FE-20.
- Spare tire housing heat shield plate-to-main muffler heat shield plate clearance: 22 mm (0.866 in) min. Refer to section L-L in Figure FE-20.
- Shock absorber heat sield plate-to-main muffler heat shield plate clearance: 24 mm (0.945 in) min. Refer to section L-L in Figure FE-20.

Downloaded from www.Manualslib.com manuals search engine

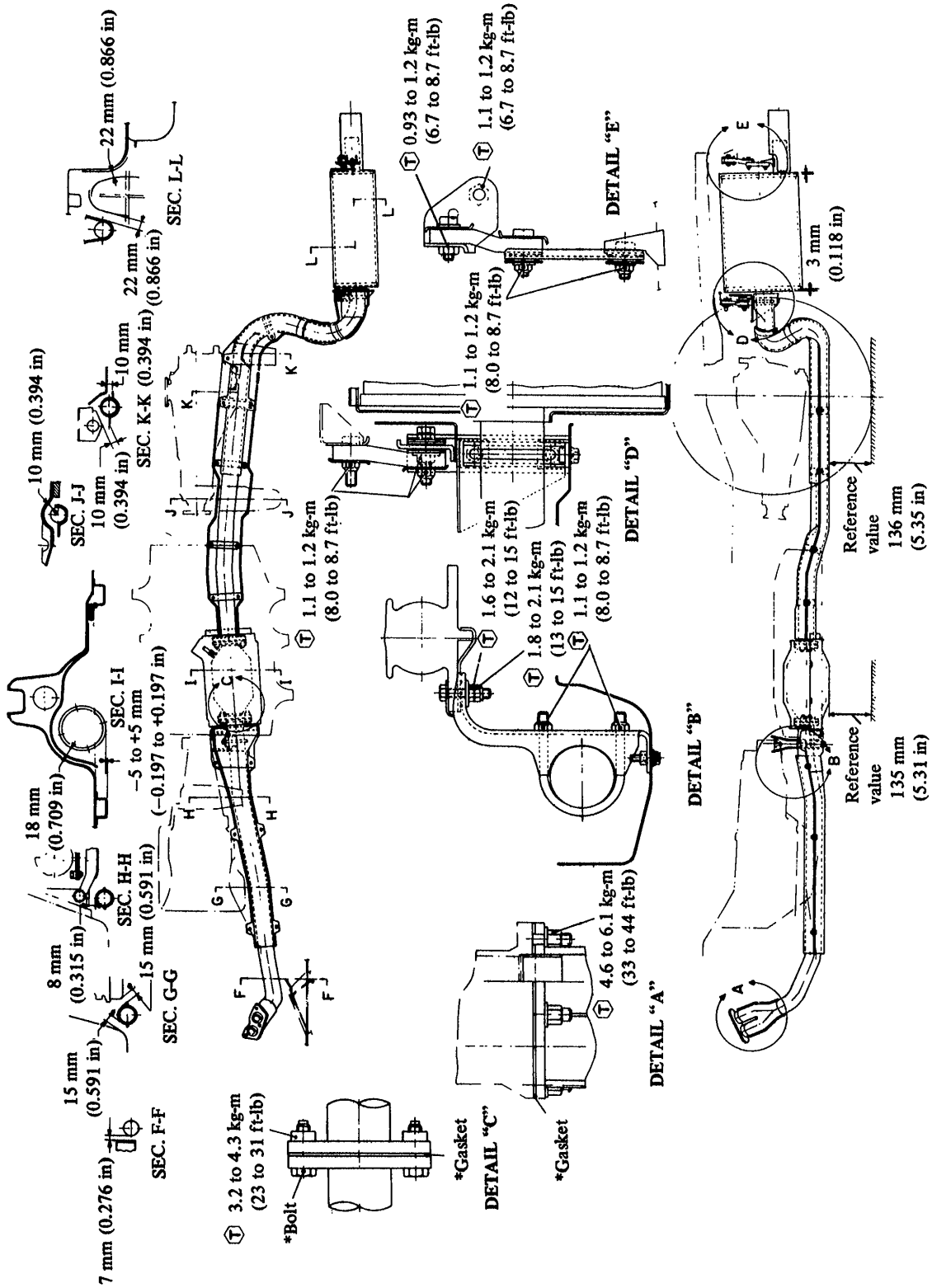

FE384

Fig. FE-20 Exhaust system (California models)

Downloaded from www.Manualslib.com manuals search engine

c) Before mounting tubes, install all associated parts on front tube and center tube with main muffler. Refer to details B, D and E in Figure FE-20.

- Be sure that mounting insulators are not subject to undue stress due to misaligned piping.
- Muffler mounting should be installed within specified limit in Figure FE-21.

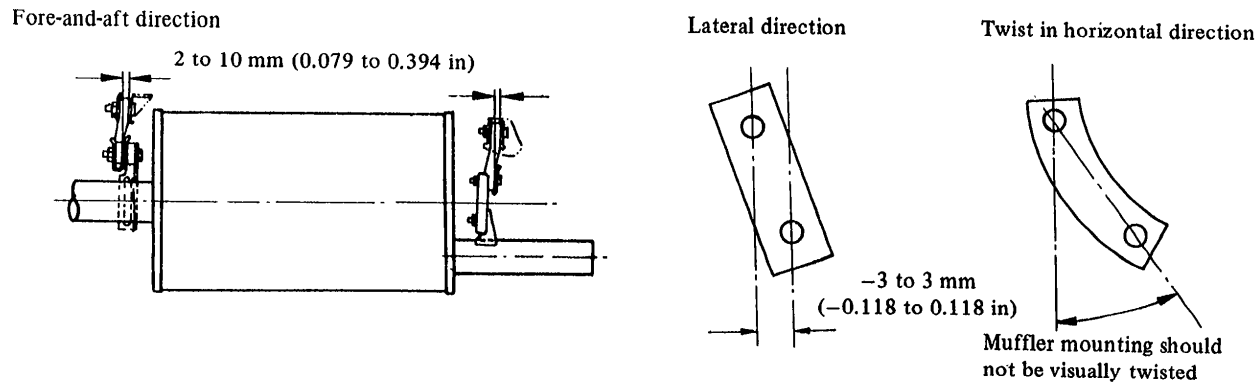

Fig. FE-21 Mounting rubbers

CAUTION:

Always use new gaskets and bolts when replacing front tube, center tube with muffler or catalytic converter. Gaskets and bolts requiring replacement are indicated by an asterisk "*" in details A, B and C in Figure FE-20.

Installation instructions

a) Front tube and center tube with muffler sub-assembly.

- Snugly install heat shield plates to front tube.
- Securely install heat shield plates and mounting parts on center tube with main muffler.

b) Temporarily tighten front mounting parts on front tube sub-assembly assembled in step (a) above. Insert front tube into exhaust manifold, and tighten snugly.

c) Install front mounting bracket on extension of transmission.

Note: Adjust mounting location of front exhaust tube in accordance with location of transmission extension. Then install exhaust front tube on exhaust manifold, and tighten to specified torque.

d) Insert catalytic converter into exhaust front tube, and tighten snugly.

e) Temporarily tighten center tube with main muffler sub-assembly on body mounting. Install sub-assembly to rear end of catalytic converter, and tighten snugly.

f) After all parts have been snugly tightened, check ground clearance and other clearances between parts involved, and retighten firmly.

g) After retightening, install catalytic converter heat shield plates and install heat shield plates of front tube rear end (heat shield plate ⑧ in Figure FE-19) on lower face of front tube mounting bracket.

NON-CALIFORNIA MODELS

General assembling precautions

Refer to instructions outlined under "California models". Clearances between exhaust system parts and adjacent body parts are as follows:

- Exhaust front tube-to-compression rod rubber heat shield plate clearance: 7 mm (0.276 in) min. Refer to section F-F in Figure FE-23.
- Exhaust front tube heat shield plate-to-transmission lower face/body floor clearance: 15 mm (0.591 in) min. Refer to section G-G in Figure FE-23.
- Exhaust front tube heat shield plate-to-rear engine mounting member lower face clearance: 8 mm (0.315 in) min. Refer to section H-H in Figure FE-23.
- Propeller shaft-to-pre-muffler clearance: 40 mm (1.575 in) min. Refer to section I-I in Figure FE-23.
- Front differential mounting member-to-exhaust center tube clearance: 10 mm (0.394 in) min. Refer to section J-J in Figure FE-23.
- Exhaust center tube-to-differential case clearance: 10 mm (0.394 in) min. Refer to section K-K in Figure FE-23.
- Exhaust center tube-to-transverse link mounting bracket clearance: 10 mm (0.394 in) min. Refer to section K-K in Figure FE-23.
- Spare tire housing heat shield plate-to-main muffler clearance: 15 mm (0.591 in) min. Refer to section L-L in Figure FE-23.
- Shock absorber heat shield plate-to-main muffler clearance: 15 mm (0.591 in) min. Refer to section L-L in Figure FE-23.

Downloaded from www.Manualslib.com manuals search engine

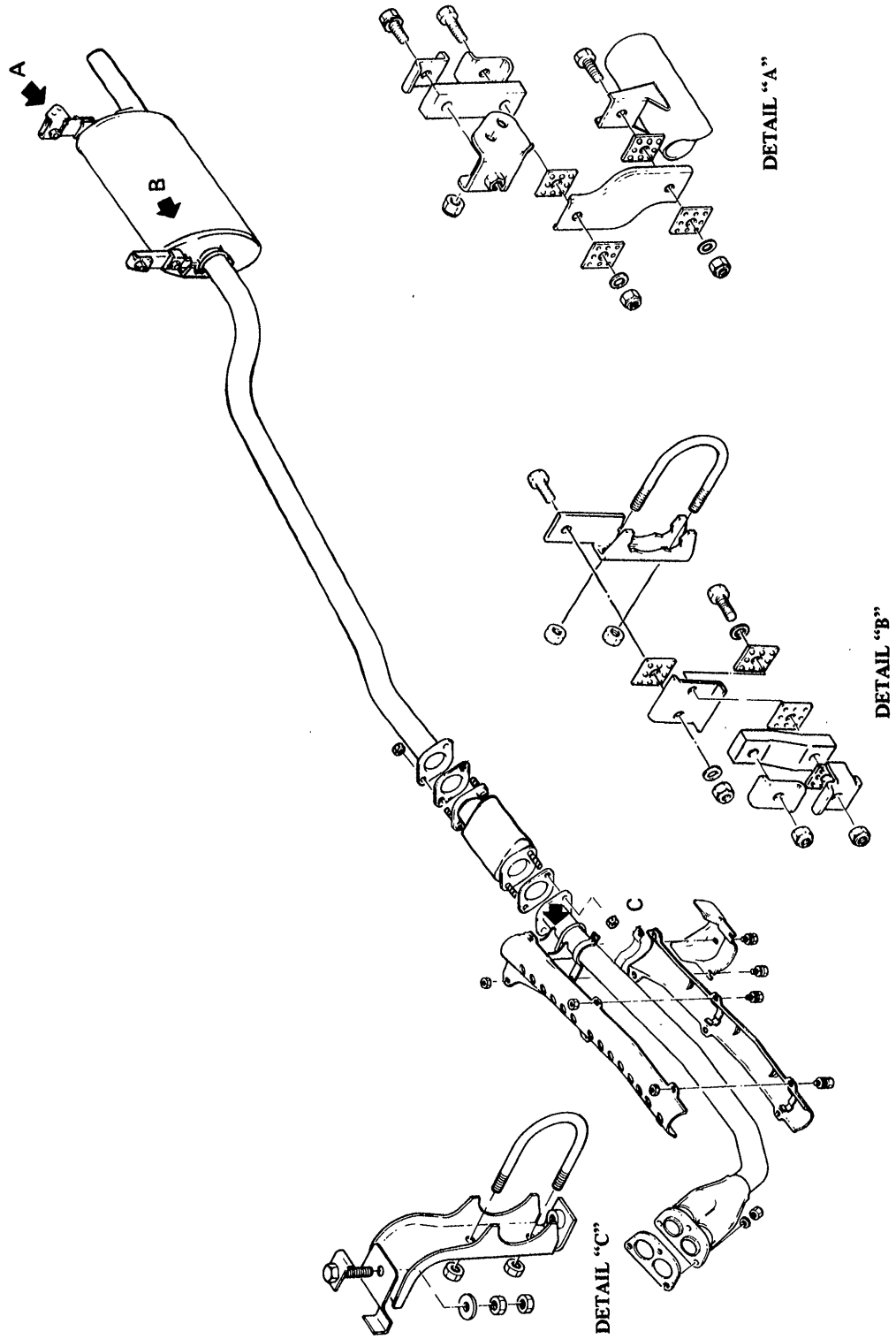

FE275

Fig. FE-22 Exploded view of exhaust system (Non-California models)

Downloaded from www.Manualslib.com manuals search engine

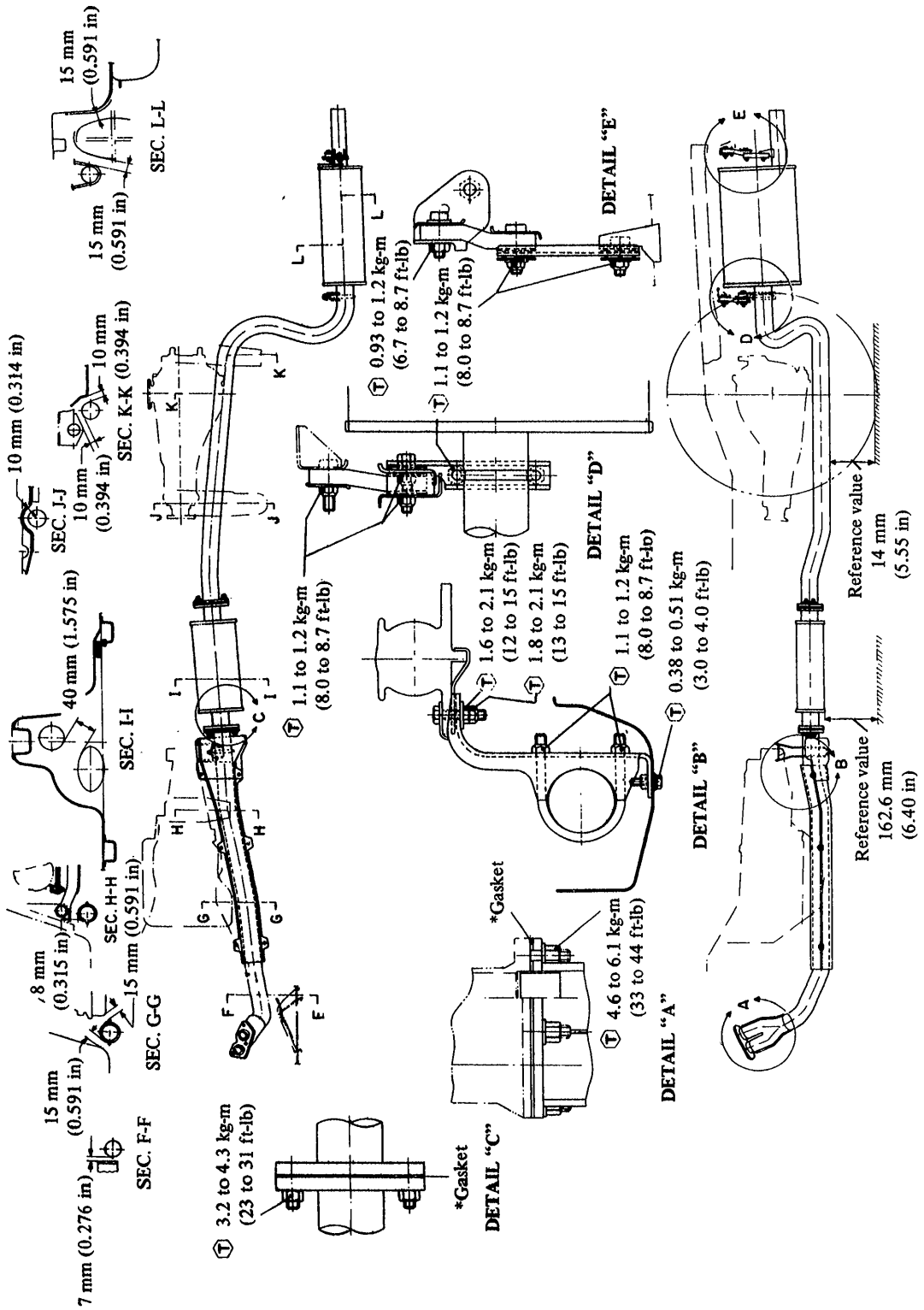

FE276

Fig. FE-23 Exhaust system (Non-California models)

Downloaded from www.Manualslib.com manuals search engine

Installing exhaust system

a) Front tube and center tube with muffler sub-assembly.

- Snugly tighten heat shield plate on front tube.
- Securely tighten exhaust mounting parts on center tube with muffler.

b) Snugly tighten mounting parts on front tube sub-assembly. Install front tube to exhaust manifold, and tighten snugly.

c) Install exhaust front mounting on transmission extension.

Note: Adjust mounting location of exhaust front tube as required in accordance with location of transmission extension.

d) Install pre-muffler to front tube, and tighten snugly.

e) Snugly tighten mounting of center tube with main muffler sub-assembly on body mounting. Install the center tube with main muffler sub-assembly to rear end of pre-muffler, and tighten snugly.

f) After all parts have been snugly tightened, check ground clearance and clearances between parts involved. If nothing is wrong, retighten.

g) Install front tube rear end heat shield plates to lower face of front tube mounting bracket.

CAUTION:

Unless otherwise indicated in this Manual, bolts and nuts should be tightened to 0.38 to 0.51 kg-m (3.0 to 4.0 ft-lb).

Downloaded from www.Manualslib.com manuals search engine

SERVICE MANUAL

DATSUN 280Z
MODEL S30 SERIES

NISSAN

NISSAN MOTOR CO., LTD.
TOKYO, JAPAN

SECTION BF

BODY

GENERAL DESCRIPTIONS ..... BF- 2
UNDERBODY ALIGNMENT ..... BF- 4
BUMPER AND RADIATOR GRILLE ..... BF- 7
ENGINE HOOD AND HOOD LOCK BF-10
COWL TOP GRILLE AND FRONT FENDER BF-13
TAIL GATE AND REAR PANEL FINISHER BF-14
DOOR BF-16
WINDSHIELD GLASS BF-23
SEAT BF-25
SEAT BELT BF-26
INTERIOR TRIM BF-28
INSTRUMENT PANEL BF-30
BODY SEALING BF-31
SPECIAL SERVICE TOOL BF-32

Downloaded from www.Manualslib.com manuals search engine

GENERAL DESCRIPTIONS

There are two different types of body construction, the two-passenger type (S30) and the four-passenger type (GS30 2 + 2 seater). The basic body utilizes a unit construction system for reduced car weight as well as increased rigidity and safety. The fuel tank is located beneath the floor and the spare tire is stored in the spare tire housing flush with floor level. In addition, the rear of the body is provided with a large tail gate.

The four-passenger type model differs from the two-passenger type in the following points:

The wheelbase is 300 mm (11.81 in) longer and an extension is placed between the front and rear floors. The door and tail gate panels are of a different design.

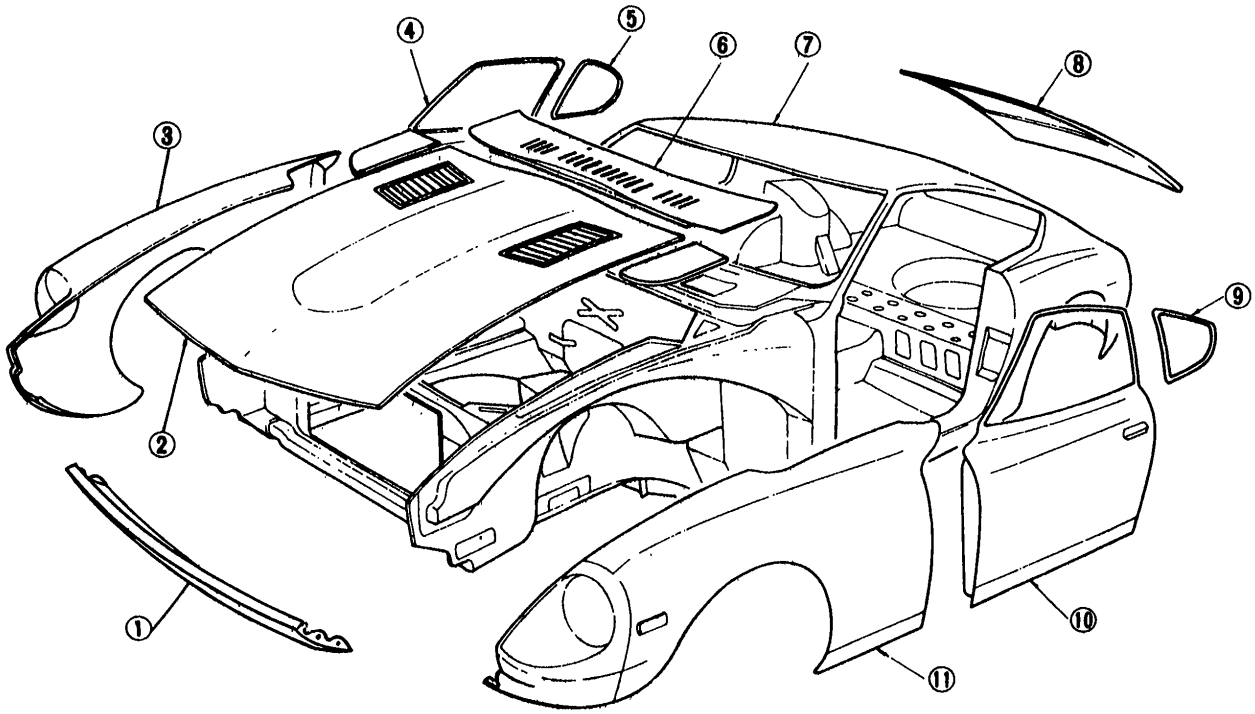

1 Front apron
2 Hood
3 Front fender (RH)
4 Door (RH)
5 Side window (RH)
6 Cowl top grille
7 Body main unit
8 Tail gate
9 Side window (LH)
10 Door (LH)
11 Front fender (LH)

BF974A

Fig. BF-1 Body construction

Downloaded from www.Manualslib.com manuals search engine

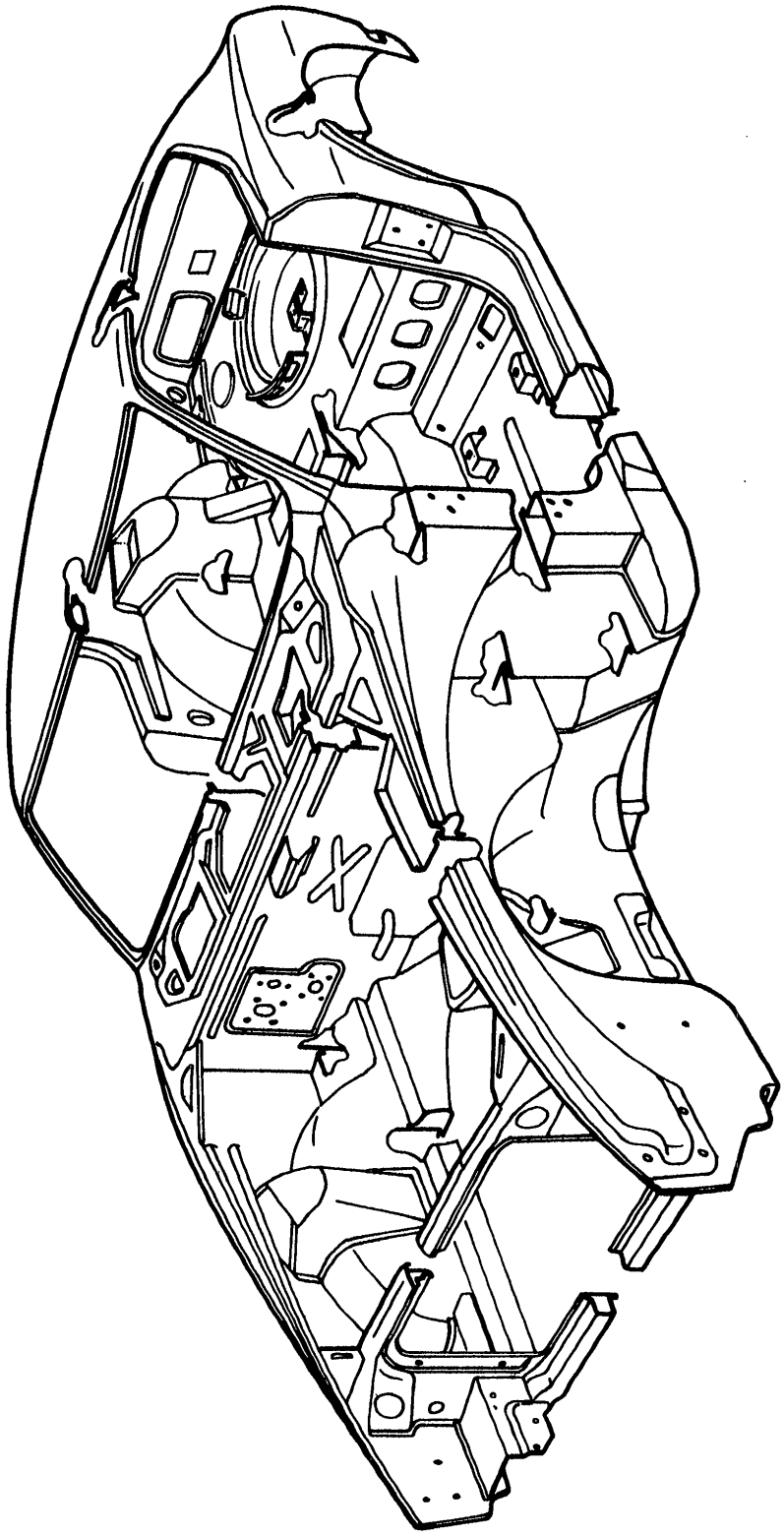

BF975A

Fig. BF-2 Structure of body main unit

Downloaded from www.Manualslib.com manuals search engine

UNDERBODY ALIGNMENT

UNDERBODY GENERAL SERVICE INFORMATION

Since each underbody component directly affects the overall strength of the body, it is essential that proper welding, sealing and rust-proofing techniques be observed during service operations.

Whenever the body is repaired, be sure to rust-proof the repaired body parts.

When rust-proofing critical underbody components, it is essential that a good quality air dry type primer such as corrosion resistant zinc chromate be used.

Do not use combination type primer surfacers.

ALIGNMENT CHECKING PROCEDURE

Misalignment in the underbody affects the front fender, door, tail gate and window alignments. Underbody misalignment particularly affects the suspension system.

Accordingly, in the event of collision damage, it is essential that underbody be thoroughly rechecked, and if necessary, aligned within the specified dimensions given in Figure BF-3.

There are many tools which may be employed to correct collision damage such as frame straightening machines, external pulling equipment or other standard body jacks.

To assist in checking alignment of the underbody components, repairing minor underbody damage or locating replacement parts, the following underbody dimensions and alignment checking information are presented.

PRINCIPLES OF TRAMMING

Figure BF-3 shows reference locations required to determine the extent of misalignment in the underbody structure; the reference locations are symmetrical along the center line of the car.

Tramming underbody correctly calls for two measurements: the vertical dimension from the datum line to the points to be measured, and the horizontal distance between any two points of measurement.

Note that precise measurement can be made only when the tram gauge is parallel to the underbody.

If two points of measurement are on a horizontal plane, the vertical pointer of the tram gauge should be extended equally to bring the gauge parallel to the center of the underbody. If one of the two reference points is included in misaligned area, the parallel plane between the body and tram gauge may not exist, indicating the necessity of underbody repair.

CAR PREPARATION

Preparing the car for the underbody alignment check involves the following:

1. Place car on a level surface.
2. The weight of car should be supported at wheel locations.
3. A visual damage inspection should be made to eliminate unnecessary measuring since obviously damaged or misaligned areas may often be located visually.

TRAMMING SEQUENCE

The tramming sequence will vary depending upon the nature and location of the misaligned area. Prior to performing any tramming operation, the accuracy of reference points to be used must be determined.

A measurement that originates from a reference point located in a damaged area will produce untrue results and confuse the evaluation of the underbody construction.

Unlike the conventional type of frame design, the unitized type of body construction seldom develops a "diamond" condition in the floor pan area as a result of front or rear end collision. Therefore, underbody alignment checking can usually originate from the body floor pan area.

If inspection indicates that these locations have been disturbed and are not suitable for measuring, one of the undamaged suspension locations should be used as an initial reference point.

If all of these locations are unsuitable as reference points, repair operations should begin with the body floor pan area. All other underbody components should be aligned progressively from this area.

Downloaded from www.Manualslib.com manuals search engine

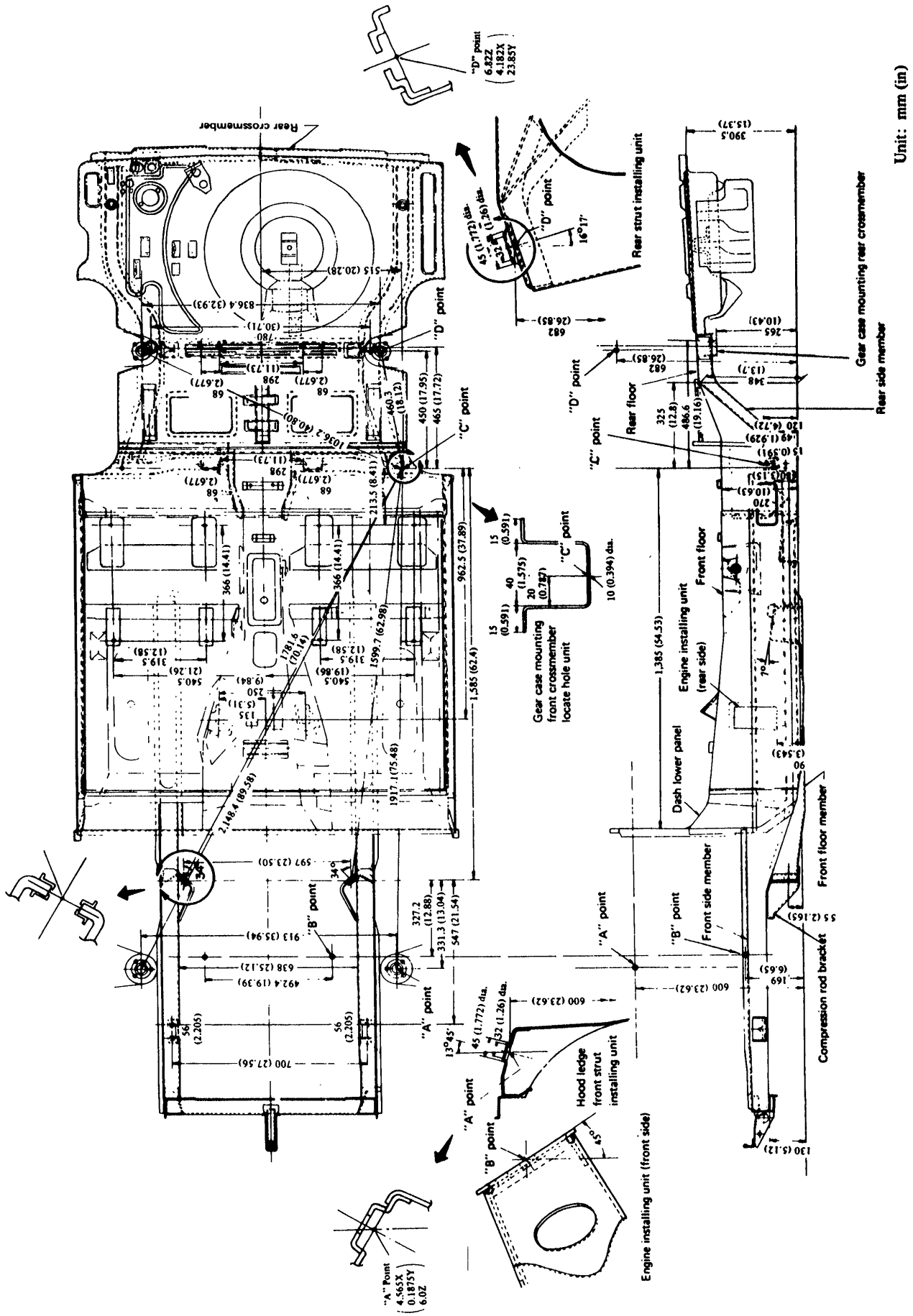

Fig. BF-3 Underbody alignment for S30 (2 seater)

Downloaded from www.Manualslib.com manuals search engine

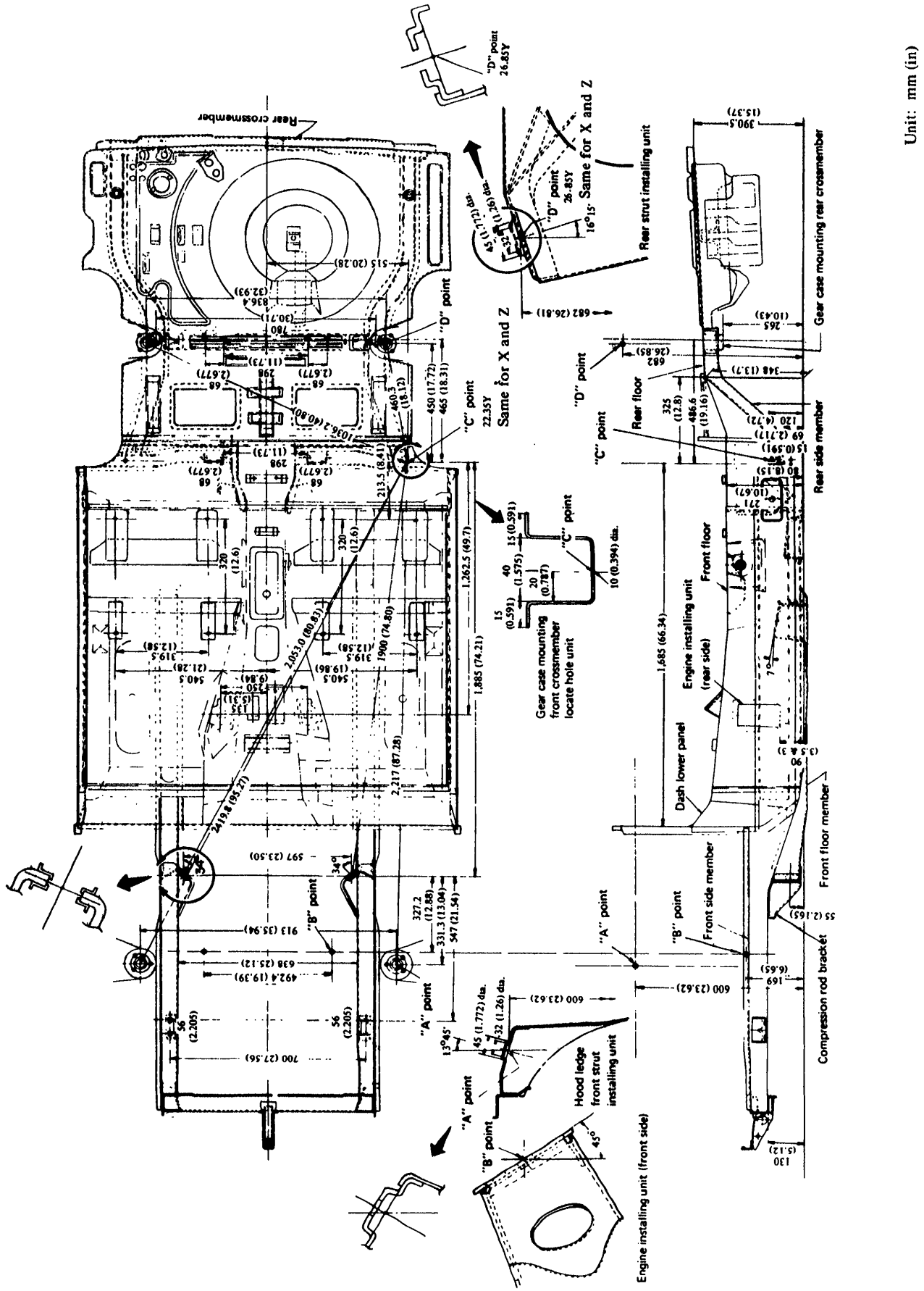

BF977A

Fig. BF-4 Underbody alignment for GS30 (2 + 2 seater)

Downloaded from www.Manualslib.com manuals search engine

BUMPER AND RADIATOR GRILLE

CONTENTS

BUMPER ..... BF- 7
DESCRIPTION ..... BF- 7
INSPECTION ..... BF- 7
REMOVAL AND INSTALLATION ..... BF- 9
RADIATOR GRILLE BF-10
REMOVAL AND INSTALLATION BF-10

BUMPER

DESCRIPTION

The front and rear bumpers are installed on the car body through the strut-type, gas-and-oil-filled shock absorbers. These bumpers are so designed that when the car is involved in a collision (solid barrier) at a speed of 8 km/h (5 MPH) or less, they retract to effectively absorb impact energy and to prevent car from damage.

The bumpers will be returned to their original positions upon absorbing impact energy.

Notes:

a. **Do not attempt to hit the car against the wall intentionally.**

b. **The shock absorber is filled with a high pressure gas and should not be disassembled, drilled or exposed to an open flame.**

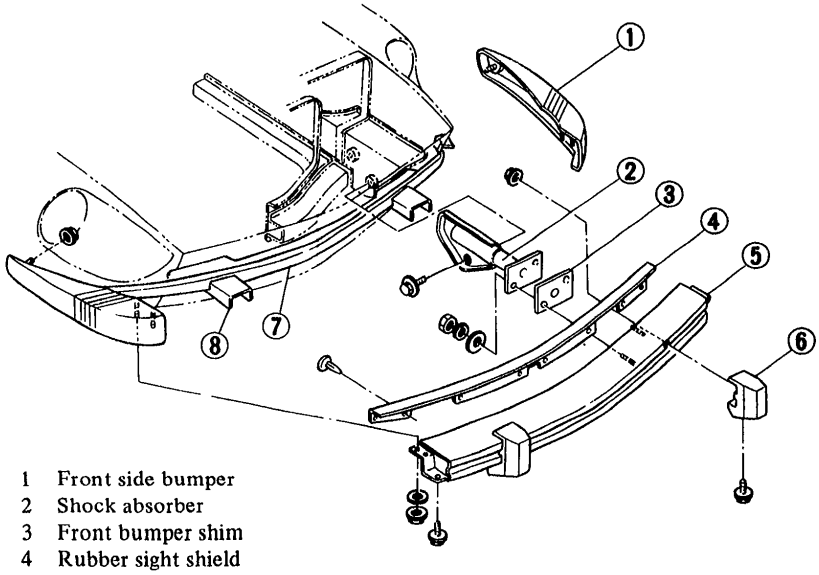

1 Front side bumper
2 Shock absorber
3 Front bumper shim
4 Rubber sight shield
5 Front bumper
6 Overrider
7 Metal sight shield
8 Shock absorber cover

BF978A

Fig. BF-5 Exploded view of front bumper

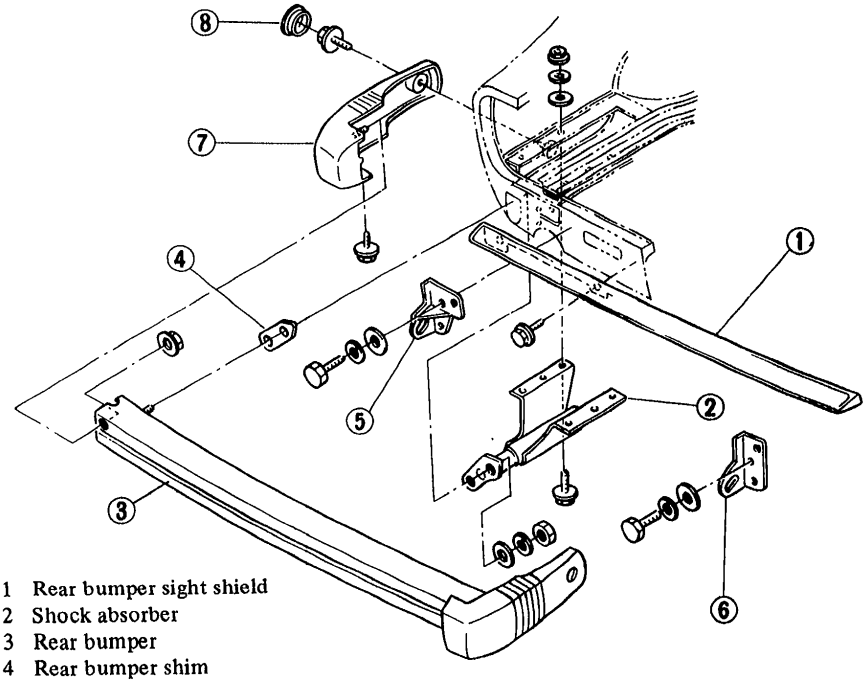

1 Rear bumper sight shield
2 Shock absorber
3 Rear bumper
4 Rear bumper shim
5 Rear tie-down hook (LH)
6 Rear tie-down hook (RH)
7 Rear side bumper
8 Rubber plug

BF979A

Fig. BF-6 Exploded view of rear bumper

INSPECTION

To inspect bumper and shock absorber, utilize the following chart as a guide and proceed in the order indicated in the chart.

Downloaded from www.Manualslib.com manuals search engine

Bumper system inspection chart

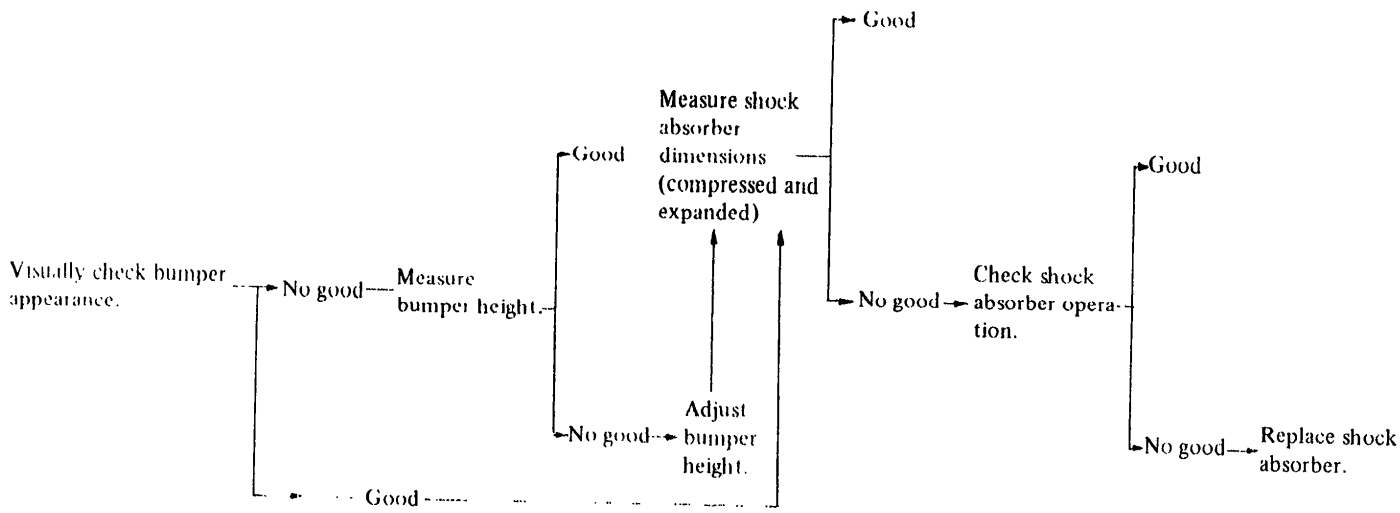

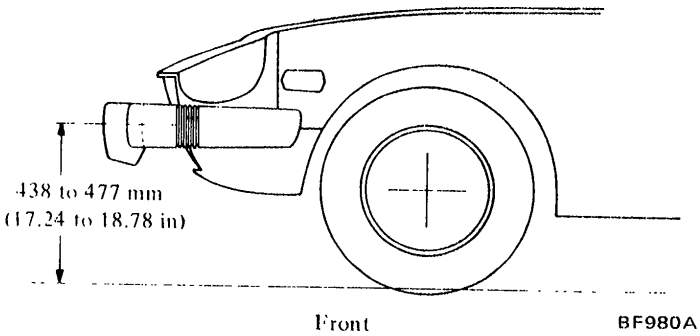

Fig. BF-7 Standard height of front bumper

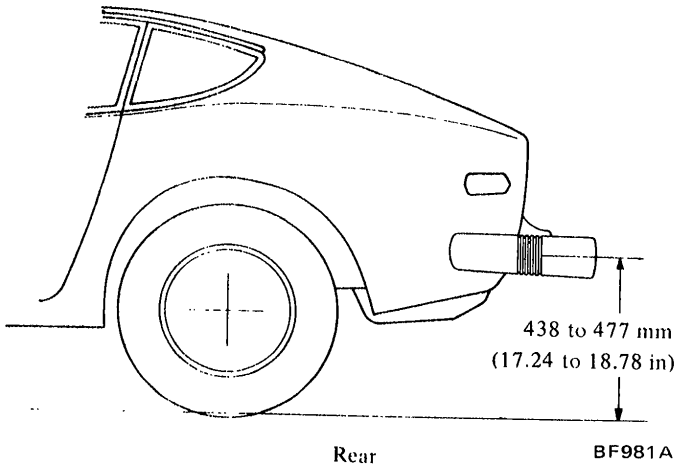

Fig. BF-8 Standard height of rear bumper

1. Bumper height

(1) Place car on a flat surface under curb weight conditions. Tires must be inflated to rated pressure.

(2) Measure the height of bumper above ground at two mounting locations as shown in Figures BF-7 and BF-8.

If bumper height is far out of the standard value, loosen shock absorber attaching bolts and set bumper level and as close to the standard height as possible. After adjustment, tighten bolts securely.

2. Length of shock absorber

The standard dimension of shock absorbers is 86 to 90 mm (3.39 to 3.54 in). See Figure BF-9.

3. Checking functioning of shock absorber

(1) Locate car with the front side towards a solid wall or pillar.

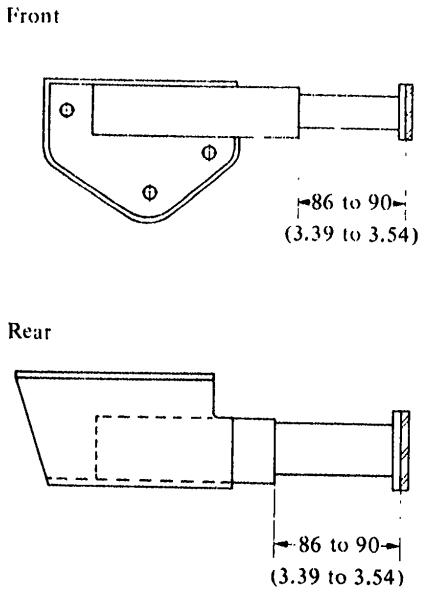

Fig. BF-9 Length of shock absorber

(2) Set parking brake and set transmission in 1st gear (manual transmission), or park position (automatic transmission).

Place wheel chocks securely.

Notes:

a. Make sure that car does not move at all.

b. Make sure that ignition switch is turned off.

(3) Place a jack between wall and either bumper overrider aligning it with shock absorber on that side.

Note: Use a jack of more than 400 kg (881 lb) capacity.

(4) Gradually extend jack approximately 40 mm (1.57 in). [The bumper should move approximately 40 mm (1.57 in) back through shock absorber

Downloaded from www.Manualslib.com manuals search engine

effect]. See Figure BF-10.

(5) Retract jack and check that bumper returns to its original position without binding and hesitation.

Conduct a test as above on the other shock absorber.

If either shock absorber fails to return to the original position, replace.

(6) Utilize the same test procedure as above when testing rear bumper shock absorbers.

Note: Be careful not to allow jack slipping out of overrider.

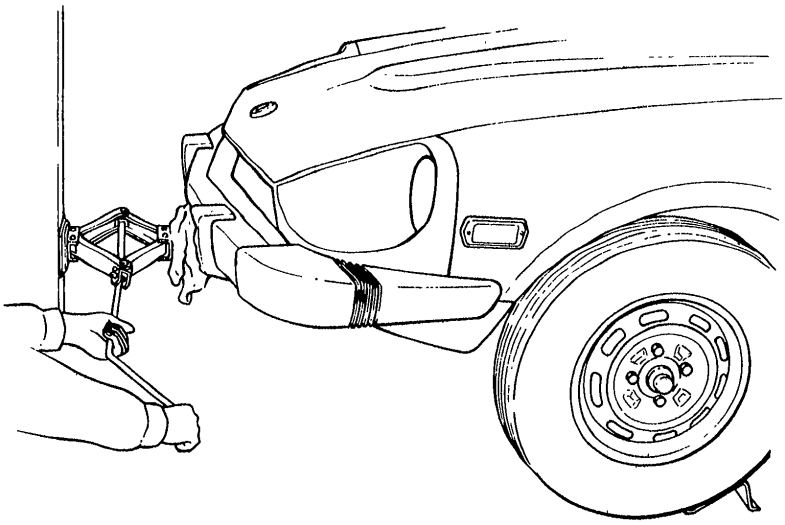

BF982A

Fig. BF-10 Checking shock absorber function

REMOVAL AND INSTALLATION

Front bumper

1. Loosen three screws securing front inner fender front protector to car body, then remove two nuts securing front side bumper to car body.

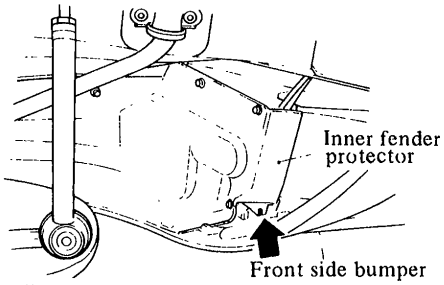

BF023B

Fig. BF-11 Removing front side bumper securing nut

2. Remove two nuts securing bumper to shock absorber and remove bumper assembly. See Figure BF-12.

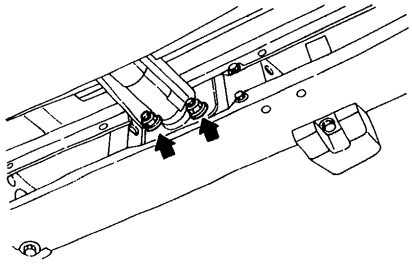

BF983A

Fig. BF-12 Removing front bumper

3. Remove two bolts securing horn to car body and remove horn.

4. Loosen three bolts securing shock absorber to car body and remove shock absorber. See Figure BF-13.

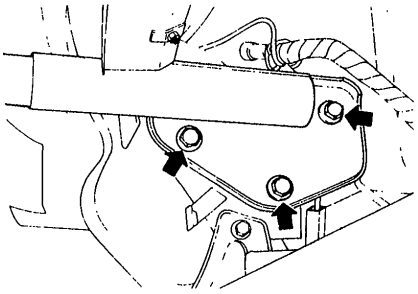

BF498A

Fig. BF-13 Removing shock absorber

5. Install front bumper assembly in the reverse order of removal.

When installing bumper, set it level and as close to the standard height as possible. See Figure BF-7.

Rear bumper

1. Remove side bumper plug, then remove two bolts securing rear side bumper to car body.

2. Remove two nuts securing bumper to shock absorber and remove bumper assembly. See Figure BF-14.

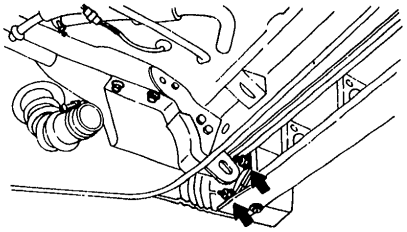

BF984A

Fig. BF-14 Removing rear bumper

3. Remove fuel tank and muffler. For removal procedures, refer to Section FE.

4. Remove bolts and nuts securing shock absorber to car body, and take shock absorber out of the opening in car body. See Figure BF-15.

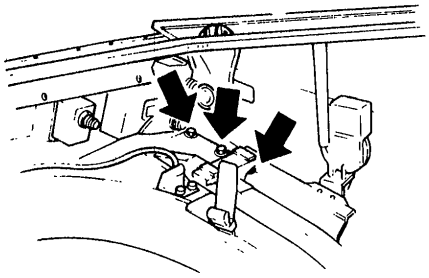

BF985A

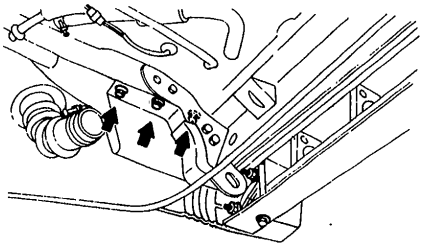

BF986A

Fig. BF-15 Removing shock absorber

Downloaded from www.Manualslib.com manuals search engine

5. Install rear bumper assembly in the reverse order of removal.

When installing bumper, set it level and as close to the standard height as possible. See Figure BF-8.

Make sure that clearance between muffler and left shock absorber heat shield, and between muffler and spare tire housing heat shield is as indicated in Figure BF-16.

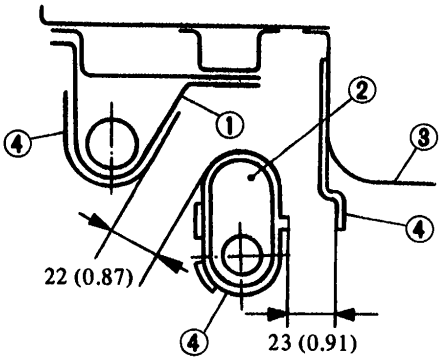

Unit: mm (in)

1 Shock absorber bracket
2 Muffler
3 Spare tire housing
4 Heat shield plate

BF987A

Fig. BF-16 Clearances between muffler and L.H. shock absrober heat shield and between muffler and spare tire heat shield

RADIATOR GRILLE

REMOVAL AND INSTALLATION

1. Loosen two screws securing front combination lamp cover and move cover inside, then remove screw securing center grille upper bar to body. See Figure BF-17.

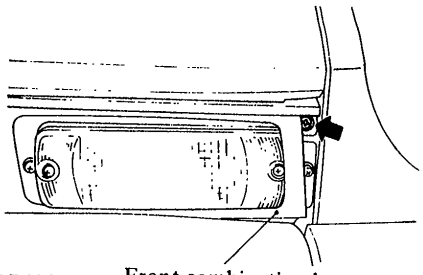

BF499A

Fig. BF-17 Removing center grille upper bar attaching screw

2. Remove four screws securing center grille in place and remove center grille. See Figure BF-18.

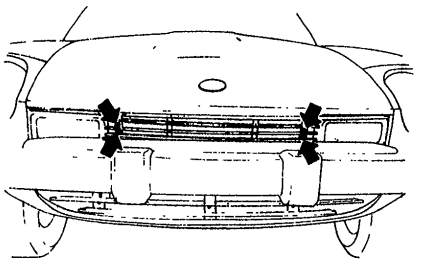

BF500A

Fig. BF-18 Removing center grille

3. Remove three screws securing lower grille in place and remove lower grille. See Figure BF-19.

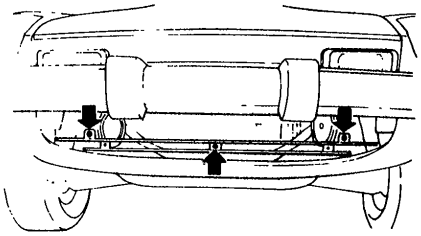

BF501A

Fig. BF-19 Removing lower grille

4. Install center and lower grille in the reverse order of removal.

ENGINE HOOD AND HOOD LOCK

CONTENTS

ADJUSTMENT BF-10
LUBRICATION BF-12
REMOVAL AND INSTALLATION BF-12
ENGINE HOOD BF-12
TORSION BAR BF-12
HOOD HINGE BF-12
HOOD LOCK BF-12

ADJUSTMENT

Hood can be adjusted by bolts attaching hood to hood hinge, hood lock mechanism and hood bumpers.

Adjust hood for an even fit between front fenders and for a flush fit with the headlight cases.

Adjust hood according to the following procedure:

1. Adjust hood fore and aft by loosening bolts attaching hood to hinge and repositioning hood. See Figure BF-20.

Downloaded from www.Manualslib.com manuals search engine

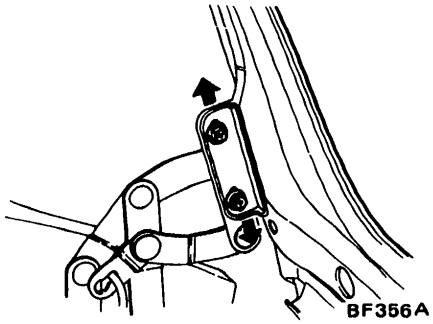

Fig. BF-20 Adjusting hood attaching bolts

2. Loosen hood bumper lock nuts and lower bumpers until bumpers do not come into contact with the rear of hood when hood is closed. See Figure BF-21.

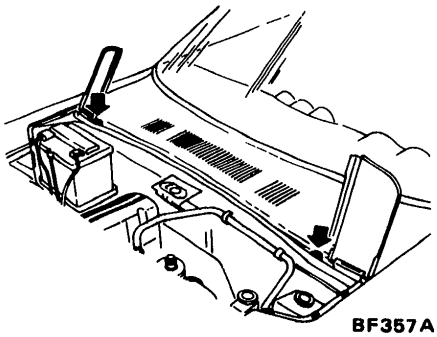

Fig. BF-21 Adjusting hood bumper height

3. Adjust hood lock mechanism after hood has been properly aligned. Hood lock male part can be moved fore and aft and from side to side to align it with hood lock female part by loosening attaching bolts.

Rear end of hood can also be moved up and down by adjusting the height of dovetail bolt of hood lock male part to obtain a flush fit with fenders.

4. Loosen hood lock male part attaching bolts until they are just loose enough to move hood lock male part.

5. Move hood lock male part until it is aligned with hood lock female part. See Figure BF-22.

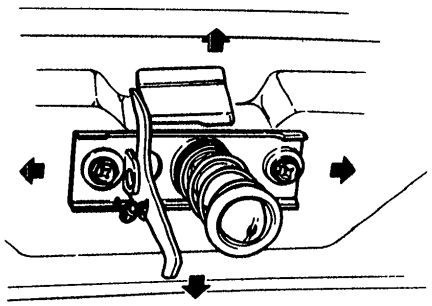

Fig. BF-22 Adjusting hood lock male part

6. After the desired alignment is obtained, tighten hood lock male part attaching bolts.

Tightening torque:
Male and female part attaching bolts
0.38 to 0.51 kg-m
(3 to 4 ft-lb)

7. Lower hood 1 to 3 mm (0.04 to 0.12 in) from top of front fender by adjusting dovetail bolt.

After the desired alignment is obtained, tighten lock nut of dovetail bolt.

Tightening torque:
Lock nut of dovetail
1.5 to 2.6 kg-m
(11 to 19 ft-lb)

8. Raise two hood bumpers until hood is flush with fenders.

9. Open and close hood several times to check the operation.

Check hood lock male part for complete engagement with hood lock female part.

Note: Full engagement must be obtained for proper hood lock male part adjustment. If complete engagement is not obtained, readjust hood lock male part for full engagement of dovetail bolt and hood lock female part.

10. Make sure that safety catch lever retains hood properly when hood lock is disengaged. See Figure BF-23.

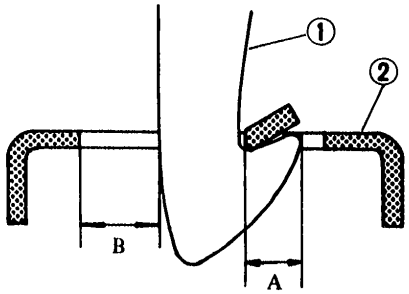

1 Safety catch lever
2 Hood lock female part

A : 5.0 mm (0.197 in)
B : 8.0 mm (0.315 in)

BF360A

Fig. BF-23 Safety catch lever

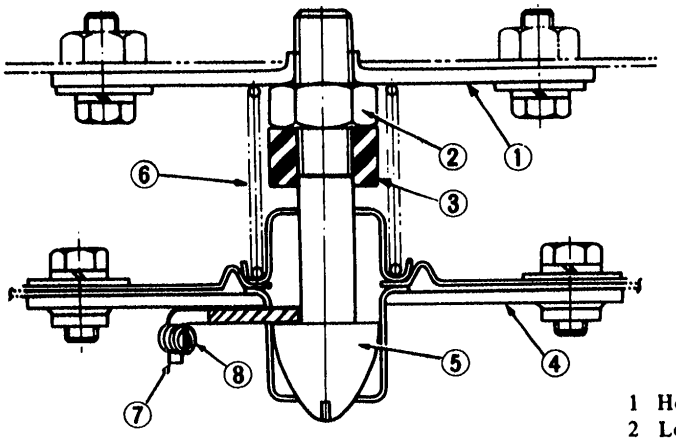

1 Hood lock male body
2 Lock nut
3 Cushion rubber
4 Hood lock female
5 Dovetail bolt
6 Lift spring
7 Female lever
8 Return spring

BF358A

Fig. BF-24 Sectional view of hood lock

Downloaded from www.Manualslib.com manuals search engine

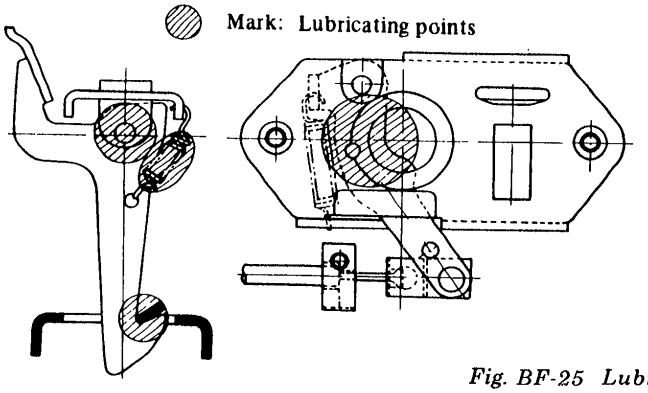

Fig. BF-25 Lubricating points

Notes: When inspecting the hood lock, observe the following:

a. Operation of safety catch lever
Check caulking portion of safety catch lever shaft for wear.
Check spring for weakness and breakdown. If spring is broken, hood may unlock and spring open during driving.

b. Operation of female lever
Check female lever for smooth and correct operation.
Check spring for weakness and breakdown. If female lever does not move smoothly, engaging stroke will be reduced, and it may be disengaged from the hood lock.

LUBRICATION

When checking or adjusting the hood lock, thoroughly lubricate the pivot, catcher and return spring of the safety catch lever. Also lubricate the lever of the hood lock female part for smooth and correct operation. See Figure BF-25.

REMOVAL AND INSTALLATION

ENGINE HOOD

1. Open engine hood and protect body with covers to prevent scratching the paint.
2. Mark hood hinge locations on hood for proper reinstallation.
3. Support engine hood with hand and remove bolts securing hood hinge to hood, taking care not to let the hood slip when bolts are removed. See Figure BF-26.

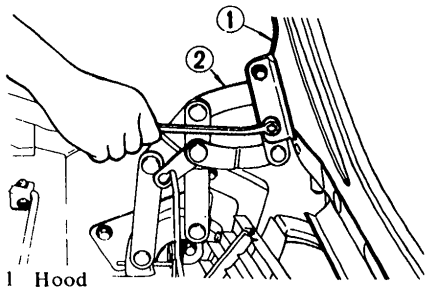

Fig. BF-26 Removing hood

4. Remove hood from car.
5. Install hood in the reverse order of removal.

TORSION BAR

1. Open engine hood.
2. Support hood and remove each torsion bar by disengaging end of torsion bar from hood hinge. Use a suitable screwdriver. See Figure BF-27.

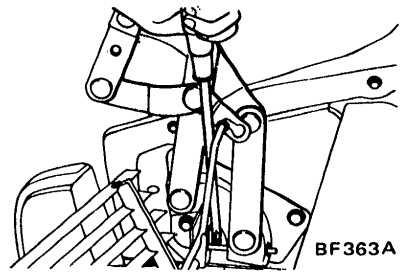

Fig. BF-27 Removing hood torsion bar

3. Install torsion bars in the reverse order of removal.

HOOD HINGE

1. Open engine hood and protect body with covers to prevent scratching the paint.
2. Remove hood.
3. Remove torsion bars.
4. Remove screws securing hood hinge and remove hinge.
5. Install hood hinge in the reverse order of removal.

HOOD LOCK

1. Remove hood lock male part attaching bolts and remove hood lock male part from hood.
2. Disconnect hood lock wire from hood lock female part.
3. Remove hood lock female part attaching bolts and remove hood lock female part from hood lock bracket.
4. Remove clamp attaching screw and remove clamp. Remove hood lock wire bracket attaching screws. Then, remove hood lock wire.
5. Install hood lock mechanism in the reverse order of removal.

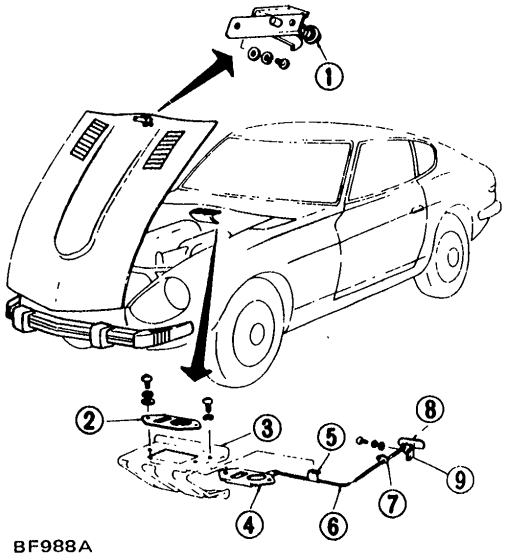

1 Hood lock male part
2 Guide
3 Hood lock bracket
4 Hood lock female part
5 Clamp
6 Hood lock wire
7 Grommet
8 Hood lock knob
9 Hood lock wire bracket

Fig. BF-28 Hood lock

Downloaded from www.Manualslib.com manuals search engine

COWL TOP GRILLE AND FRONT FENDER

CONTENTS

COWL TOP GRILLE BF-13
REMOVAL AND INSTALLATION BF-13
FRONT FENDER BF-13
REMOVAL AND INSTALLATION BF-13

COWL TOP GRILLE

REMOVAL AND INSTALLATION

1. Open engine hood and protect front fenders with covers to prevent scratching the paint.
2. Remove windshield wiper arms and blades as a unit.
3. Remove four screws securing cowl top grille in place.
4. Take cowl top grille out in forward direction with the front end lifted. See Figure BF-29.
5. Install cowl top grille in the reverse order of removal.

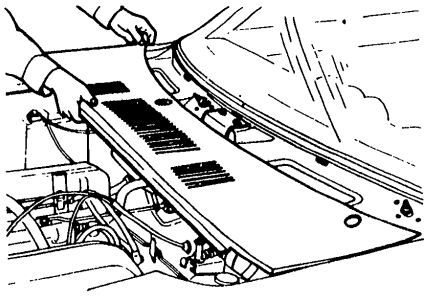

BF365A

Fig. BF-29 Removing cowl top grille

FRONT FENDER

REMOVAL AND INSTALLATION

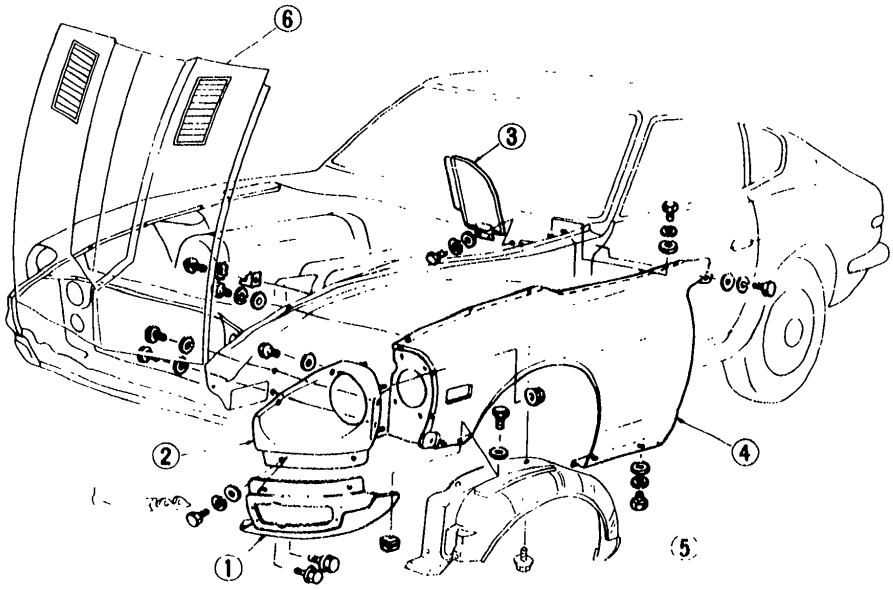

1 Front fender front assembly
2 Headlight case
3 Inspection lid
4 Front fender
5 Inner fender protector
6 Hood

BF989A

Fig. BF-30 Removing front fender

1. Remove inner fender protector.
2. Remove front bumper.
3. Remove headlight and side flasher lamp.
4. Remove two screws securing inspection lid in place, and remove inspection lid.
5. Remove windshield wiper arms and blades as a unit, and remove cowl top grille.
6. Remove screws securing front fender front to front apron.
7. Remove screws securing front fender front to front fender.
8. Remove screws securing front fender front to headlight case, and remove front fender front.
9. Remove nuts securing headlight case to front fender.
10. Remove screws securing headlight case to hood ledge and remove headlight case.
11. Remove screws and bolts in the following manner. Then remove front fender.

a) Front fender to side sill	(2)
b) Front fender to front pillar	(1)
c) Front fender to cowl top	(2)
d) Hood bumper to front fender	(2)
e) Front fender to hood ledge	(3)

12. Install front fender in the reverse order of removal.

Downloaded from www.Manualslib.com manuals search engine

TAIL GATE AND REAR PANEL FINISHER

CONTENTS

DESCRIPTION BF-14
ADJUSTMENT BF-15
TAIL GATE HINGE BF-15
TAIL GATE LOCK, STRIKER AND DOWN STOPPER BF-15
REMOVAL AND INSTALLATION BF-15
TAIL GATE BF-15
TAIL GATE LOCK AND STRIKER BF-15
REAR PANEL FINISHER BF-15

DESCRIPTION

The tail gate opens upward and utilizes a single-sheet construction. Thus, luggage can be loaded and unloaded conveniently.

The tail gate stay utilizes a gas spring (filled with nitrogen gas) which increases the operating smoothness and improves the external appearance.

Note: The tail gate stay is filled with highly compressed nitrogen gas. Do not disassemble it.

In order to ease tail gate installation and removal, split type hinges are used. The hinges are secured with both side installation screws.

A push-button type tail gate lock has been adopted. When the push-button is locked, the push-button can be depressed but not unlocked.

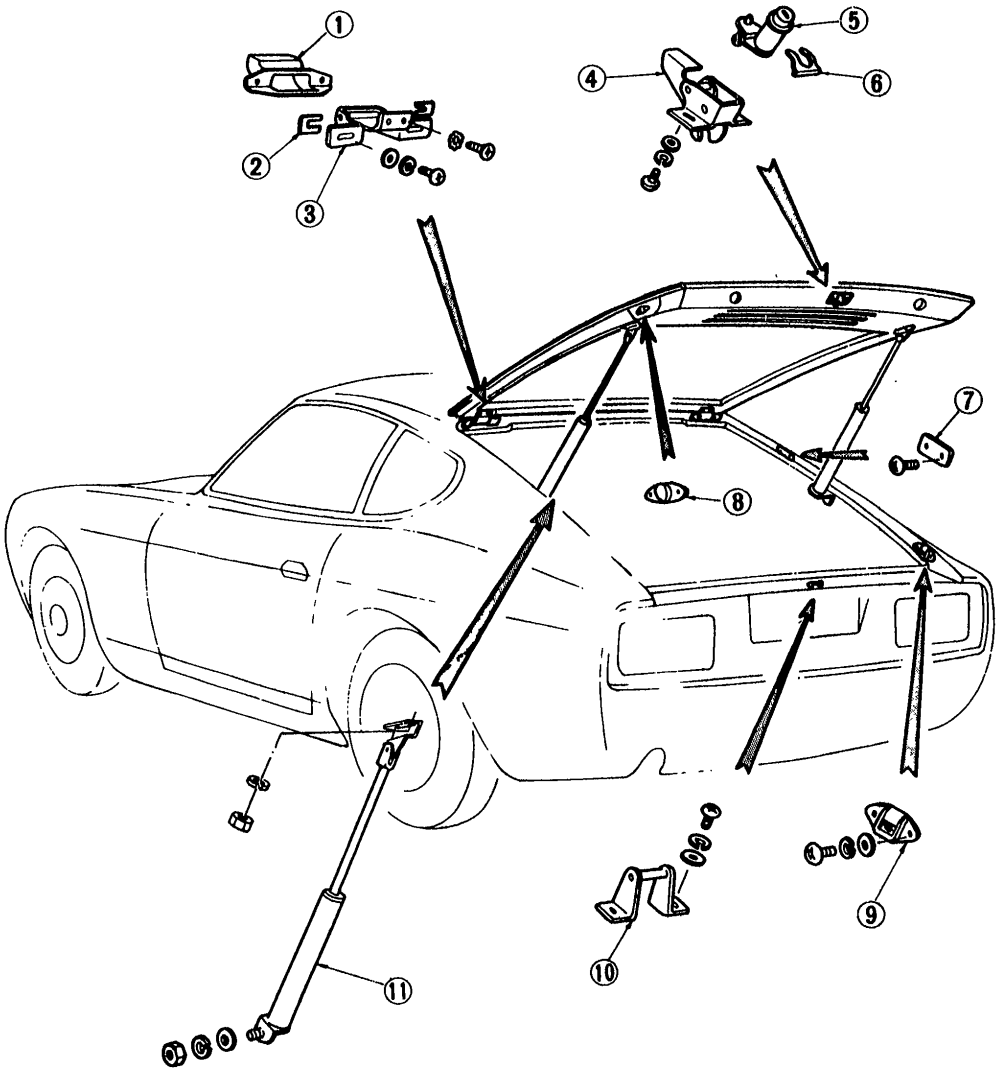

1 Seal cover
2 Shim
3 Tail gate hinge
4 Tail gate lock
5 Key cylinder
6 Clip
7 Bumper rubber
8 Dovetail
9 Down stopper
10 Striker
11 Tail gate stay

BF367A

Fig. BF-31 Structural view of tail gate

Downloaded from www.Manualslib.com manuals search engine

ADJUSTMENT

TAIL GATE HINGE

1. The fore-and-aft adjustment is correct when the clearance between tail gate and roof is held within 3.5 to 5.5 mm (0.138 to 0.217 in). If necessary, adjust it by shim(s) between hinge and body. The rear end of tail gate should be made flush with rear fender. See Figure BF-32.
2. Before making side-to-side and up-and-down adjustments of tail gate, loosen tail gate hinge attaching bolt just enough to move tail gate.
3. Move tail gate to left or right as required to obtain an equal clearance between tail gate and rear fender on both sides.
4. Move tail gate up and down to obtain a flush fit between tail gate and roof.
5. After adjustment is completed, tighten tail gate hinge attaching bolts securely.

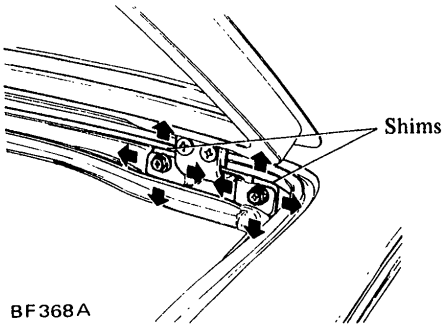

Fig. BF-32 Adjusting tail gate hinge

TAIL GATE LOCK, STRIKER AND DOWN STOPPER

1. Remove license plate lamp.
2. Temporarily loosen tail gate striker to rear panel attaching screws until they are just loose enough to move striker.
3. Move striker up or down as required until tail gate is flush with rear fenders. See Figure BF-33.
4. After correct adjustment is made, tighten screws securely.
5. Loosen tail gate lock attaching screws until they are just loose enough to move tail gate lock.
6. Open and close tail gate two or three times to ensure that it is locked properly without binding. Then tighten attaching screws. See Figure BF-34.

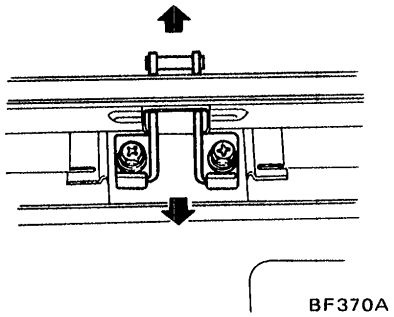

Fig. BF-33 Adjusting striker

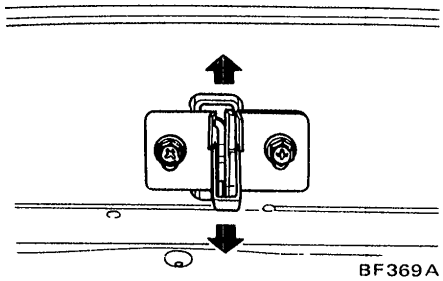

Fig. BF-34 Adjusting tail gate lock

The down stopper is adjustable in the forward and rearward directions only. See Figure BF-35.

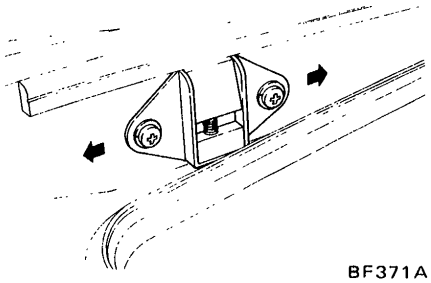

Fig. BF-35 Adjusting down stopper

REMOVAL AND INSTALLATION

TAIL GATE

1. Open tail gate and remove tail gate stay.
2. Hold a rag between tail gate and roof, and securely support the tail gate.
3. Remove tail gate to hinge attaching screws.
4. Hold tail gate and remove it.

TAIL GATE LOCK AND STRIKER

1. Remove lock from tail gate.
2. Remove trim, insert hand into the gate, remove retaining clip, and remove key cylinder.
3. Remove license plate lamp, and remove striker.
4. The down stopper and rubber bumper can be removed simply by loosening the installation screws.

REAR PANEL FINISHER

1. Remove rear panel trim.
2. Disconnect rear combination lamp connector.
3. Remove nuts securing rear combination lamp to body. See Figure BF-36.

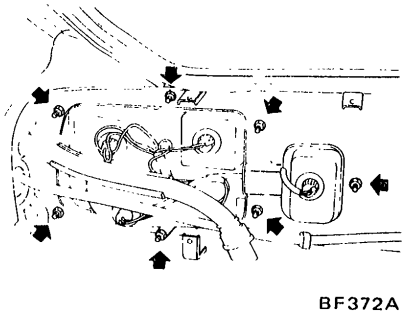

Fig. BF-36 Removing nuts attaching rear combination lamp to body

4. Remove screws securing license lamp in place, and detach lamp. See Figure BF-37.

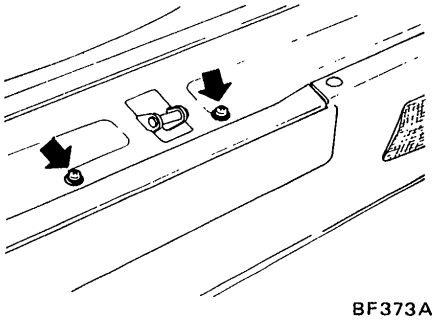

Fig. BF-37 Removing license lamp

5. Remove plastic rivets securing rear panel finisher to rear panel. See Figure BF-38.

Downloaded from www.Manualslib.com manuals search engine

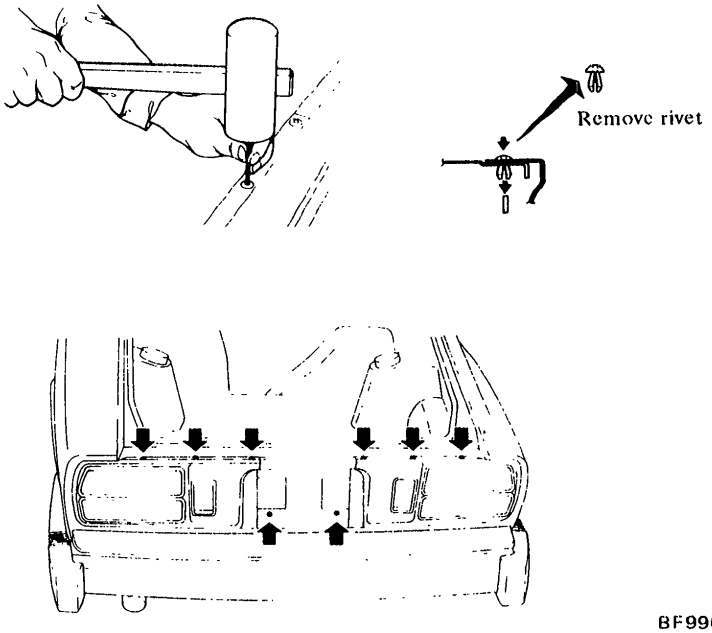

BF990A

Fig. BF-38 Removing rivets

6. Remove finisher and rear combination lamp as a unit.

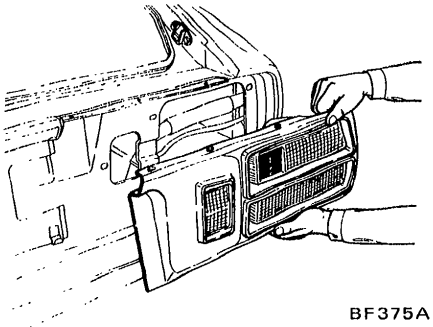

BF375A

Fig. BF-39 Removing finisher and combination lamp assembly

7. Remove screws securing rear combination lamp to finisher, and remove rear combination lamp.
8. Remove screws securing rim to finisher, and remove rim.

Note: Be careful not to scratch the painted surface of body, finisher, etc. with tool or the like.

9. Install finisher in the reverse order of removal.

DOOR

CONTENTS

DOOR BF-16
ADJUSTMENT BF-16
REMOVAL AND INSTALLATION BF-17
DOOR TRIM BF-17
REMOVAL AND INSTALLATION BF-17
DOOR WINDOW GLASS AND REGULATOR BF-18
ADJUSTMENT BF-19
REMOVAL AND INSTALLATION BF-19
DOOR LOCK AND STRIKER BF-20
ADJUSTMENT BF-21
REMOVAL AND INSTALLATION BF-21
BODY SIDE AND DOOR WEATHERSTRIPS BF-22

DOOR

ADJUSTMENT

Proper door alignment can be obtained by adjusting door hinge and door lock striker.

Door hinge can be moved up and down and fore and aft in enlarged holes by loosening attaching bolts.

The bolts securing hinge to door are not adjustable. Striker also can be moved up and down and inside and outside.

Door should be adjusted for an even and parallel fit with the door opening and surrounding body panels.

Be careful not to distort or mar door and surrounding body panels when adjusting. See Figures BF-40 and BF-41.

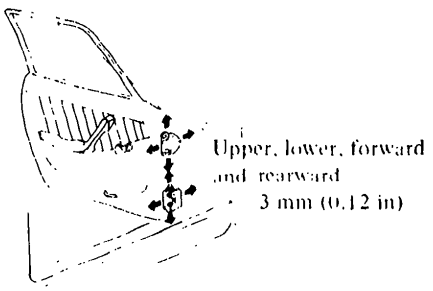

BF653A

Fig. BF-40 Adjusting door hinge

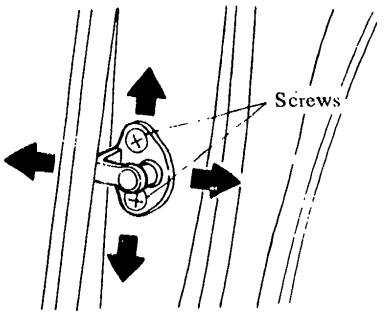

BF991A

Fig. BF-41 Adjusting door lock striker

Downloaded from www.Manualslib.com manuals search engine

Front door hinge can be adjusted without removing front fender by using Door Hinge Wrench ST08720000. See Figure BF-42.

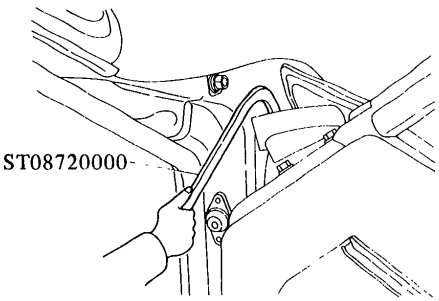

BF992A

Fig. BF-42 Adjusting door hinge

REMOVAL AND INSTALLATION

1. With door in full open position, place a garage jack or stand under door to support its weight. Place rag between door and jack or stand to protect door from scratches.
2. Loosen bolts attaching door hinge to body and remove door with hinge from the car by using Door Hinge wrench ST08720000. See Figure BF-42.
3. Untighten bolts attaching hinge to door and remove hinge.
4. Install door in the reverse order of removal.

DOOR TRIM

REMOVAL AND INSTALLATION

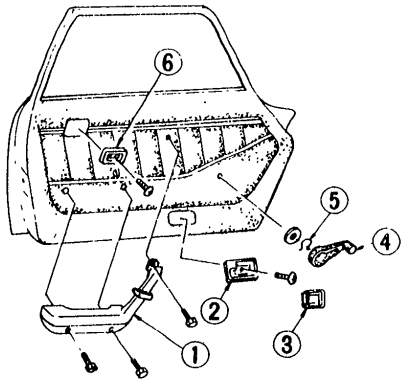

BF485A

1 Arm rest
2 Escutcheon
3 Escutcheon cover
4 Door regulator handle
5 Retaining spring
6 Rear inside handle escutcheon (GS30 2 + 2 seater only)

Fig. BF-43 Removing door trim

1. Open door and leave it open.
2. Remove door lock knob by unscrewing it.
3. Loosen screws securing arm rest to door, and remove arm rest. Remove screw from tip end of arm rest by prying cover with a flat-head screwdriver and backing screw off with a cross-head screwdriver.
4. Remove door inside handle escutcheon cover and screw, and detach escutcheon.

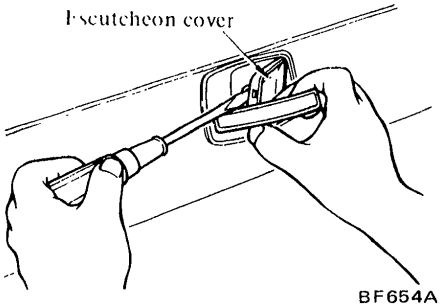

BF654A

Fig. BF-44 Removing escutcheon cover

5. Remove rear inside handle escutcheon and rear inside handle. (GS30 2 + 2 seater only)
6. Remove spring retaining regulator handle in place, and detach regulator handle and washer. See Figure BF-43.
7. Using a screwdriver, remove door finisher retaining clips from door, and remove door trim. See Figure BF-45.

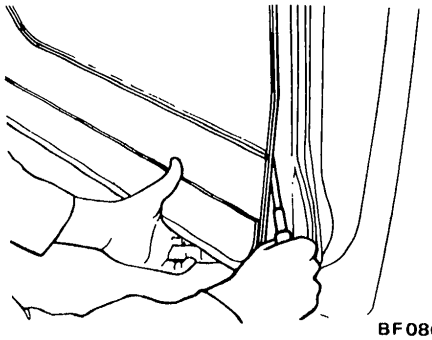

BF086

Fig. BF-45 Removing door trim

8. Remove water seal screen from door.
9. Install water seal screen, door trim and fittings in the reverse order of removal.

However, observe the following installation notes.

(1) When water seal screen is to be installed, it must be replaced with a new one if broken or suspected of leaking.

(2) When installing door regulator handle, make sure that knob is faced forward with side window glass completely closed.

(3) When cleaning door finisher, use a damp or wet cloth; do not use any solvent harmful to the material.

Downloaded from www.Manualslib.com manuals search engine

DOOR WINDOW GLASS AND REGULATOR

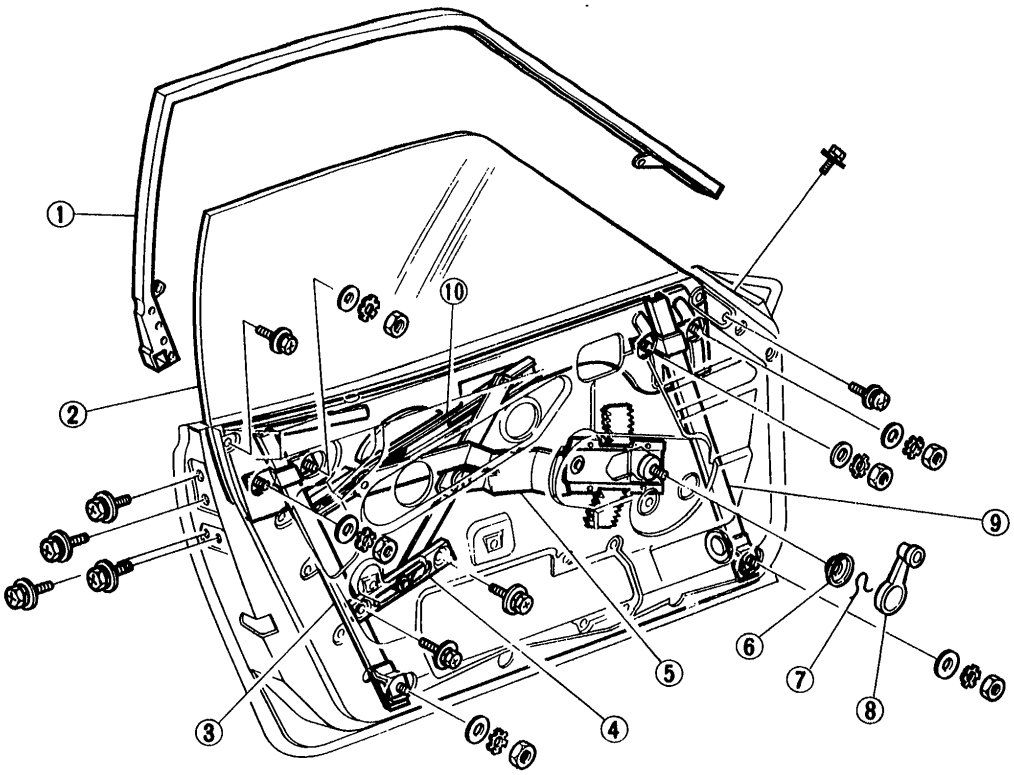

1 Door sash
2 Door glass
3 Rear guide rail
4 Guide channel A
5 Regulator assembly
6 Nylon washer
7 Retaining spring
8 Regulator handle
9 Front guide rail
10 Guide channel B

BF993A

Fig. BF-46 Door window glass and regulator for S30 (2 seater)

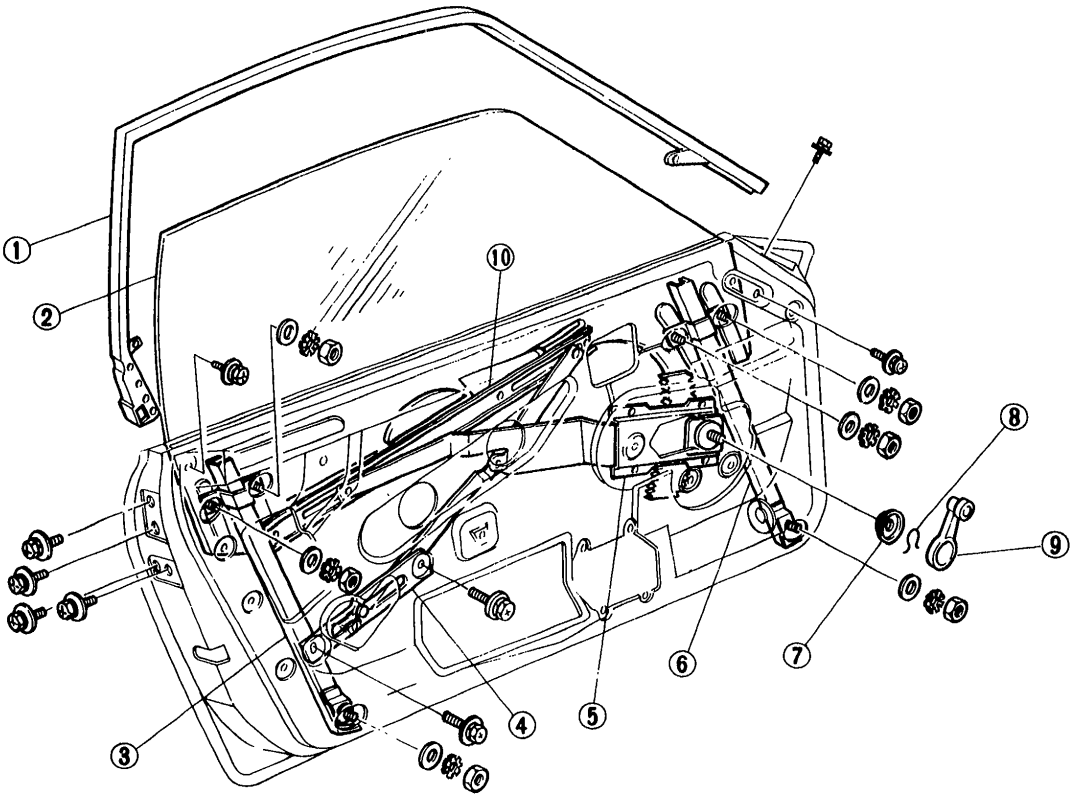

1 Door sash
2 Door glass
3 Rear guide rail
4 Guide channel A
5 Regulator assembly
6 Front guide rail
7 Nylon washer
8 Retaining spring
9 Regulator handle
10 Guide channel B

BF994A

Fig. BF-47 Door window glass and regulator for GS30 (2 + 2 seater)

Downloaded from www.Manualslib.com manuals search engine

ADJUSTMENT

Door glass alignment can be accomplished by adjusting front and rear guide rails and guide channel.

1. To obtain proper alignment of glass, temporarily loosen front and rear guide rails.

For lower adjusting bolt, tighten it all the way. Then return four turns and secure lock nut at that position. See Figure BF-48.

2. With glass in the up position, adjust guide rail upper adjusting bolts so that the clearance between outside door panel and outside glass face is 22

and lower glass to assure a fit. See Figure BF-49.

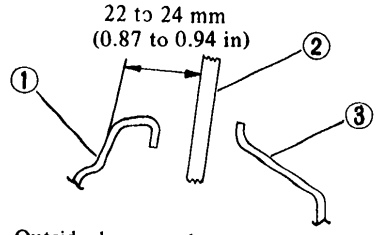

1 Outside door panel
2 Glass
3 Inside door panel

BF996A

Fig. BF-49 Proper clearance between outside door panel and glass

3. Make sure that outside door weatherstrip makes proper contact with door glass when door glass is raised and lowered.

4. With glass up, adjust glass in parallel with the top rail of door sash by moving guide channel A up and down.

The sideways free play of glass can be adjusted by moving front and rear guide rails fore and aft. See Figure BF-50.

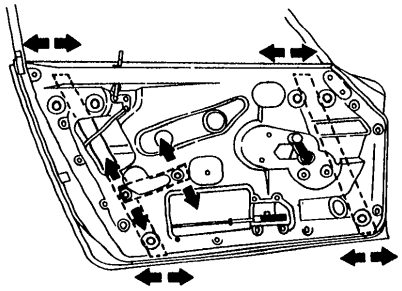

BF997A

Fig. BF-50 Adjusting front and rear guide rails

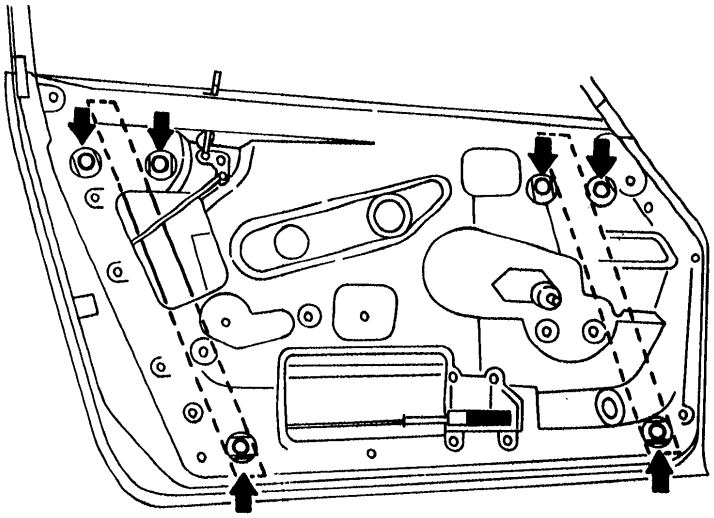

BF995A

Fig. BF-48 Guide rail adjusting mechanism

5. Adjustment of guide channel A can be accomplished by the following procedure:

When door glass is as in picture (A) of Figure BF-51, move guide channel up. Move it down if as in picture (B).

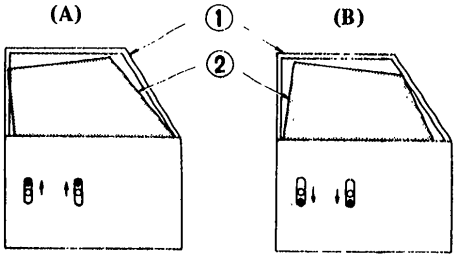

1 Door sash
2 Door glass

BF479

Fig. BF-51 Adjusting guide channel A

6. With glass up, move the top edge of glass into the top rail of door sash. Obtain a tight seal by adjusting guide rail lower adjusting bolts evenly.

7. Turn lower adjusting bolts clockwise to release the top edge of glass from door sash inside welt and counterclockwise to tighten.

8. Raise and lower door glass to be sure the operation of regulator handle is smooth. The operating force of regulator handle should be less than 3.5 kg (7.7 lb) at the knob of regulator handle.

If proper operating force is still not obtained, adjust regulator mechanism according to the following procedures:

(1) Lubricate guide rollers, guide rails and regulator linkage.
(2) Perform outside and inside door weatherstrip-to-door glass adjustment.
(3) Adjust guide rails in parallel.

REMOVAL AND INSTALLATION

1. Lower door glass.
2. Remove arm rest, regulator handle, inside door handle escutcheon, door lock knob, rear inside handle (GS30 2 + 2 seater only), door trim and water seat screen. See Figure BF-52.

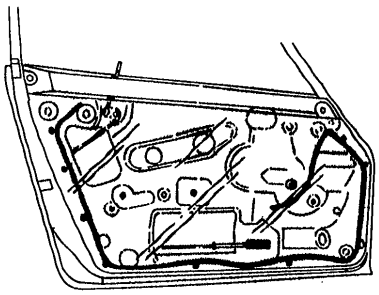

BF998A

Fig. BF-52 Removing door trim

Downloaded from www.ManualsLib.com manuals search engine

3. Remove door outer molding.
4. Remove screws securing door sash to door inner panel and draw door sash up.
5. With glass in the full down position, support door glass and remove screws attaching glass back plate to guide channel B. See Figure BF-53.

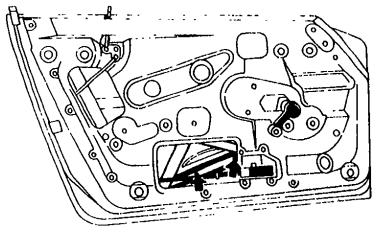

BF999A

Fig. BF-53 Removing screws attaching glass back plate to guide channel B

6. Loosen bolts adjusting front and rear guide rail and raise door glass and draw it upwards.
7. Remove guide rails from door. See Figure BF-54.

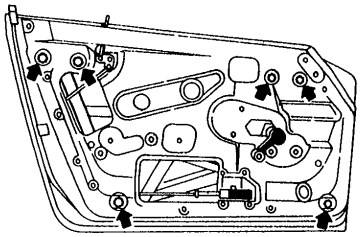

BF1000A

Fig. BF-54 Removing guide rail

8. Remove screws attaching guide channel A, regulator arm base and regulator base and then remove them through the lower opening of inside door panel. See Figure BF-55.

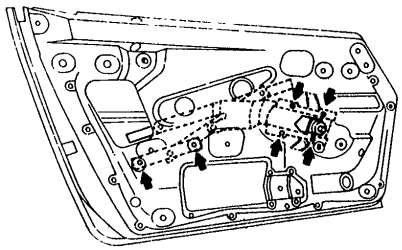

BF001B

Fig. BF-55 Removing regulator assembly

9. Install regulator assembly, guide rails, and door glass in the everse order of removal.

DOOR LOCK AND STRIKER

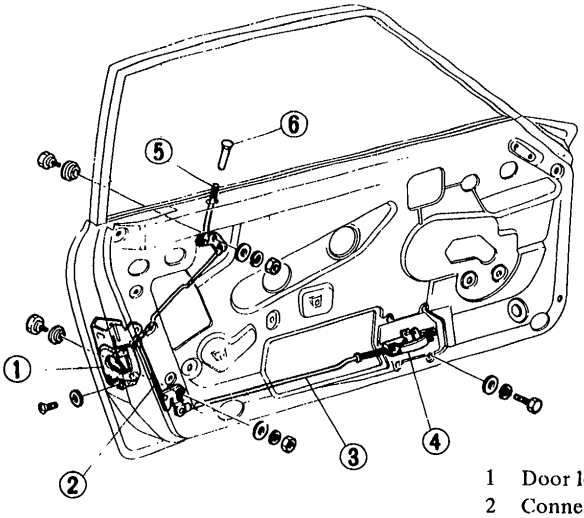

1 Door lock
2 Connecting rod
3 Remote control rod
4 Door remote control handle
5 Knob rod
6 Lock knob

BF002B

Fig. BF-56 Door lock mechanism for S30 (2 seater)

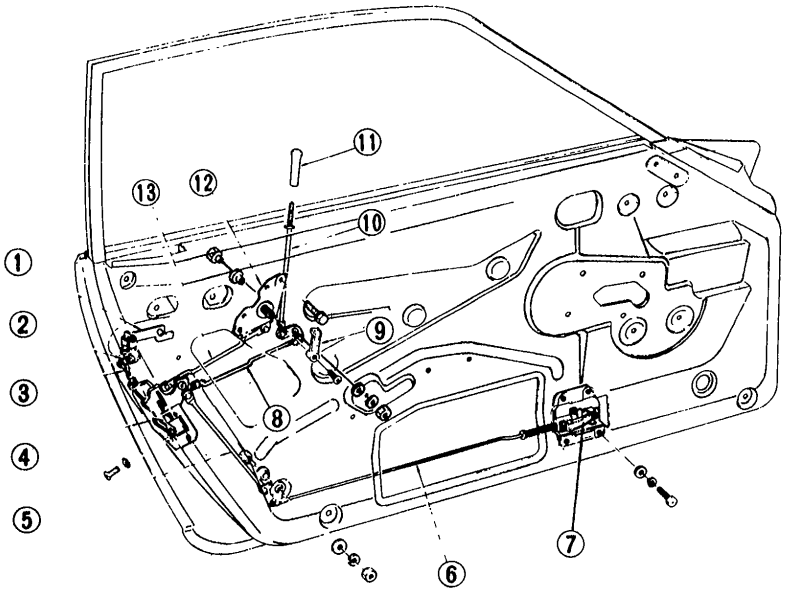

1 Outside door handle
2 Key cylinder
3 Outside door handle rod
4 Door lock
5 Connecting rod
6 Remote control rod
7 Door remote control handle
8 Rod
9 Rear inside handle
10 Knob rod
11 Lock knob
12 Rear inside handle bracket
13 Rod

BF003B

Fig. BF-57 Door lock mechanism for GS30 (2 + 2 seater)

Downloaded from www.Manualslib.com manuals search engine

ADJUSTMENT

Outside door handle

Outside door handle adjustment can be accomplished by adjusting the clearance between outside door lock lever and adjusting nut (nylon) located on outside door handle rod.

To adjust outside door handle, turn adjusting nut clockwise or counter-clockwise to obtain clearance of 0 to 1.0 mm (0 to 0.039 in). See Figure BF-58.

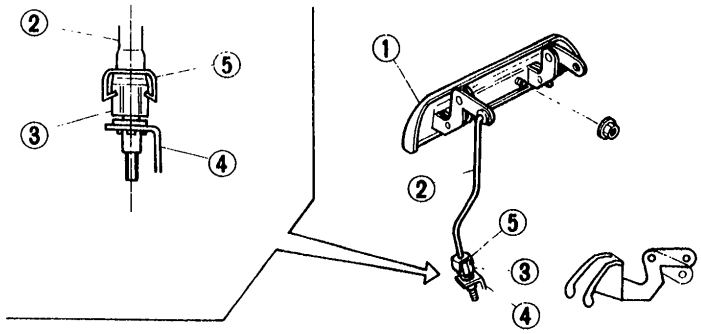

1 Outside door handle
2 Remote control rod
3 Adjusting nut (Nylon)
4 Door lock lever
5 Clip

BF004B

Fig. BF-58 Adjusting outside door handle free play

Inside door handle

1. Partially loosen inside door handle attaching screws.
2. With inside door lock knob set on (closed), move inside door handle in elongated holes toward the rear of door until it stops moving. See Figure BF-59.
3. Tighten inside door handle attaching screws.
4. Check the operation of inside door handle and lock.

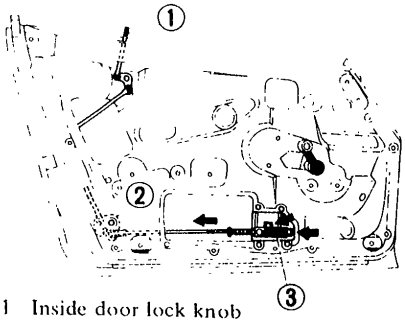

1 Inside door lock knob
2 Bell-crank
3 Door inside handle

BF005B

Fig. BF-59 Adjusting inside door handle

Door lock striker

Door lock striker can be moved from side to side and up and down to align it with door lock latch. Adjust door lock striker after door hinge has been adjusted.

REMOVAL AND INSTALLATION

1. Open door and leave it open.
2. Remove door trim and water seal screen. Refer to page BF-17 for Removal and Installation of Door Trim.
3. With glass down, remove door sash.
4. Draw out window glass. Refer to Door Window Glass and Regulator section.
5. Remove inside door handle and bell-crank attaching screws.
6. Remove rear remote control bracket securing bolts and remove rear inside handle. (GS30 2 + 2 seater only)
7. Loosen screws securing rear guide rail and remove rear guide rail.
8. Loosen screw attaching bell crank with lock knob rod and remote control knob.
9. Remove key cylinder retaining clip, and remove key cylinder.
10. Loosen nuts attaching outside door handle and remove handle with rod. See Figure BF-60.

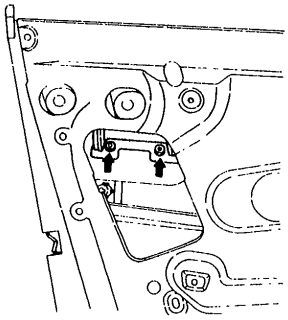

BF006B

Fig. BF-60 Removing outside door handle

11. Remove door lock installation screws. Then, remove door lock from opening on the inside door panel.

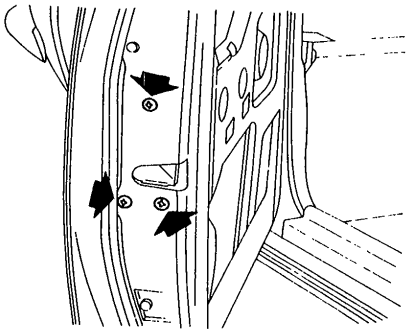

BF466

Fig. BF-61 Removing door lock assembly

12. Loosen door lock striker attaching screws and remove door lock from body. See Figure BF-62.

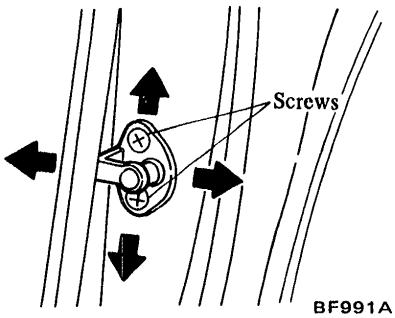

BF991A

Fig. BF-62 Removing door lock striker

Downloaded from www.Manualslib.com manuals search engine

13. Install door lock mechanism in the reverse order of removal and apply small amount of multi-purpose grease to all movable surfaces of door lock assembly to obtain smooth operation.

Notes:

a. **If door is heated over 80°C (176°F) when repainting door, nylon nut should be removed to avoid deformation.**

b. **Check return springs, actuating levers and other component parts for deformation, fatigue or rusting. Faulty parts must be replaced.**

BODY SIDE AND DOOR WEATHERSTRIPS

Body side weatherstrip is attached to body side flange. Door weatherstrip is attached to door sash. See Figure BF-63.

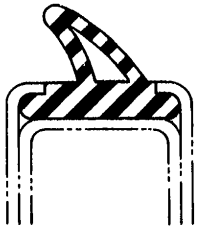

Section: A-A

Section: B-B (2 seater)

Section: B-B, C-C (2 + 2 seater)

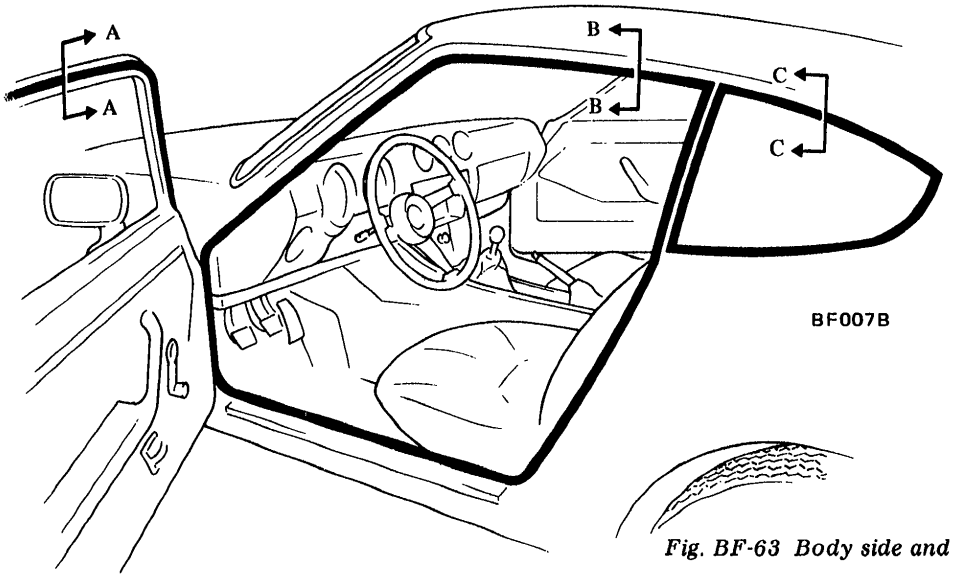

Fig. BF-63 Body side and door weatherstrips

Removal

Body side weatherstrip:

1. Loosen screws retaining scuff plate, and remove body side weatherstrip assembly by pulling out by hand. See Figure BF-64.

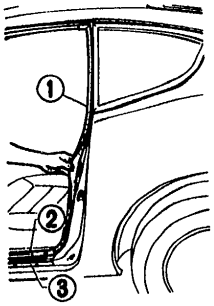

1 Body side weatherstrip
2 Scuff plate
3 Kicking plate

Fig. BF-64 Removing body side weatherstrip

Door weatherstrip:

1. Remove rivets retaining door weatherstrip from door by prying off with standard screwdriver. See Figure BF-65.

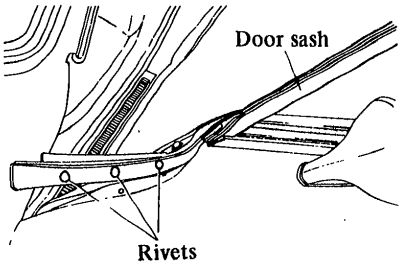

Fig. BF-65 Prying off rivets

2. Pull out door weatherstrip from groove of door sash.

Installation

1. Sweep up foreign materials, dust or dirt on the body side flange or door sash groove. If necessary, use rag soaking wet with thinner.
2. Apply adhesive evenly to the weatherstrip and the portion where weatherstrip may be seated.
3. Position weatherstrip and bite body side flange with welt or install rivets in position.

Downloaded from www.Manualslib.com manuals search engine

WINDSHIELD GLASS

CONTENTS

FRONT WINDSHIELD GLASS BF-23
REMOVAL BF-23
INSTALLATION BF-23
SIDE WINDOW BF-24
TAIL GATE GLASS BF-25

FRONT WINDSHIELD GLASS

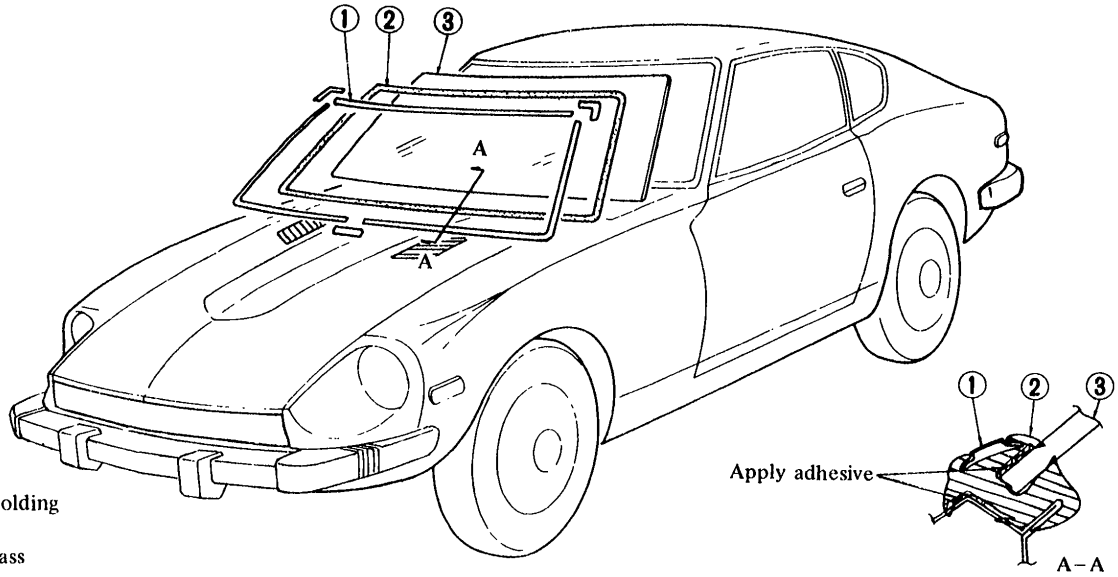

1 Windshield molding
2 Weatherstrip
3 Windshield glass

BF012B

Fig. BF-66 Front windshield glass

REMOVAL

1. Remove inside rearview mirror.
2. Remove instrument panel garnish.
3. Remove windshield wiper blades together with arms.
4. Remove windshield molding.

Note: Be careful not to deform the molding.

5. Detach adhesive on the windshield flange side by applying a spatula or standard screwdriver from the outside.
6. Depressing weatherstrip toward outside, lightly tap and remove windshield glass to the outside.

Note: Windshield glass removal must be started from the upper side portion.

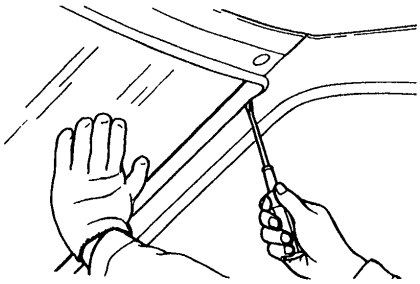

BF390A

Fig. BF-67 Removing front windshield glass

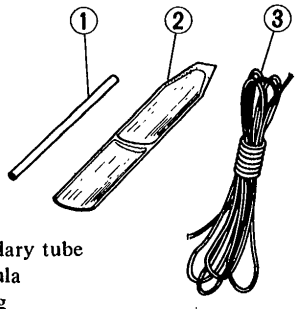

1 Capillary tube
2 Spatula
3 String

BF391A

Fig. BF-68 Tools for installation of windshield glass

INSTALLATION

1. For installation, use string and spatula as shown in Figure BF-68.
2. Apply adhesive to appropriate portions of weatherstrip as shown in Figure BF-66, and apply the weatherstrip to the windshield glass.
3. Place string into weatherstrip groove.
4. Set windshield glass in the windshield flange from the outside, and put the string into the compartment side.

Note: The operation should be carried out by two persons; one works outside and the other inside.

Downloaded from www.ManualsLib.com manuals search engine

5. Pull the string (person working inside) in such a manner that the weatherstrip correctly engages with the flange. At the same time, lightly tap the glass (person working outside) by hand and assist the person working inside.

Note: If the weatherstrip is not fitted into the flange correctly but mounted on the flange, correctly fit the weatherstrip into the flange by the use of a spatula.

6. Tap the overall glass area lightly to settle the weatherstrip down evenly and tightly on the flange.
7. Apply adhesive to the entire periphery.
8. Install windshield molding.
9. Install windshield wiper blades and arms.
10. Install instrument panel garnish.
11. Install inside rearview mirror.

SIDE WINDOW

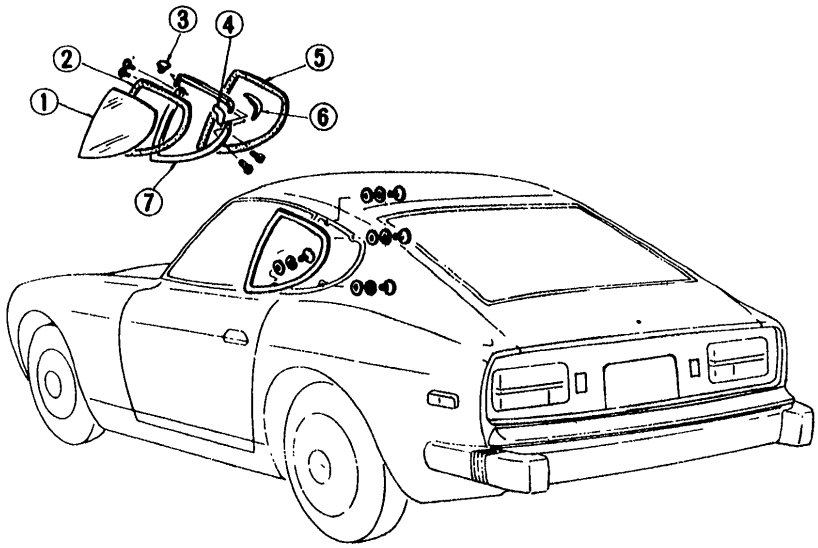

1 Glass
2 Weatherstrip
3 Upper weatherstrip
4 Joint cover
5 Outer weatherstrip
6 Sealing rubber
7 Side window sash
8 Side window lower rubber

BF014B

Fig. BF-69 Structural view of side window for S30 (2 seater)

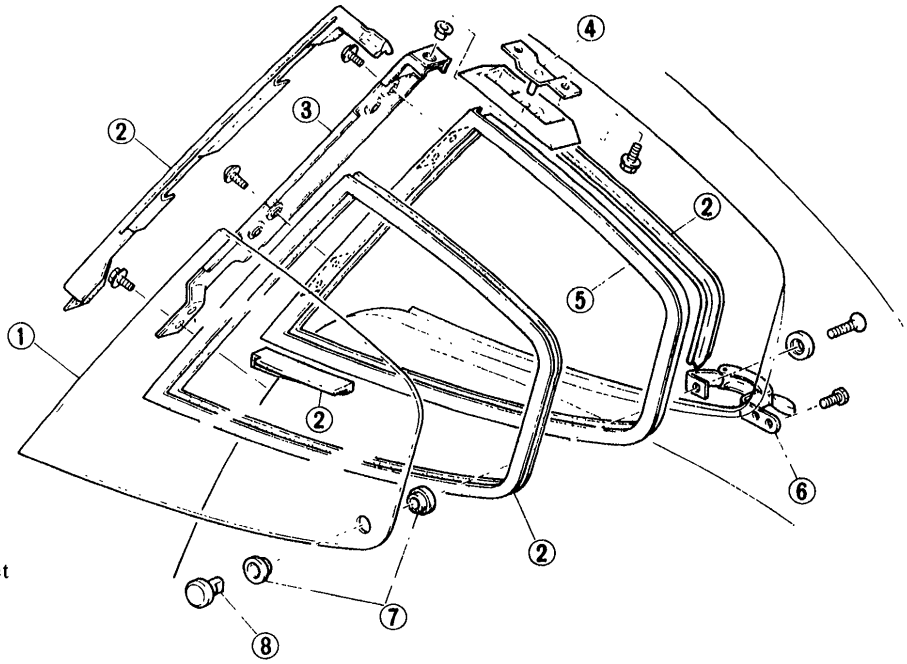

1 Side window glass
2 Side window weatherstrip
3 Center pillar
4 Side window upper bracket
5 Side window sash
6 Side window handle
7 Rubber washer
8 Finisher nut

BF657A

Fig. BF-70 Structural view of side window for GS30 (2 + 2 seater)

Downloaded from www.Manualslib.com manuals search engine

TAIL GATE GLASS

The instructions for windshield glass apply also to tail gate glass removal and installation, with the exception that sealing agent is used rather than adhesive.

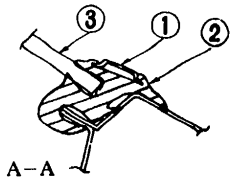

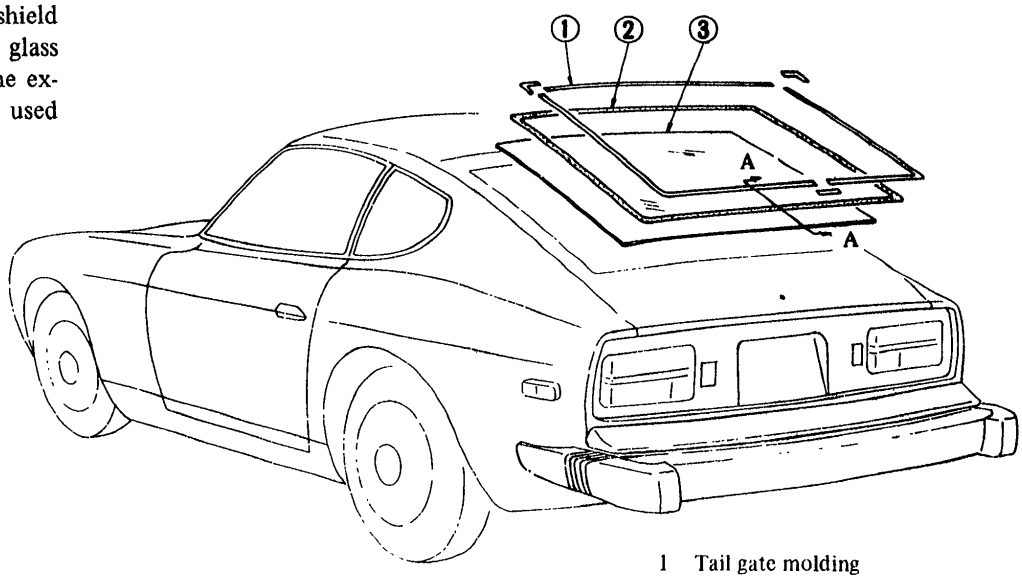

1 Tail gate molding
2 Weatherstrip
3 Tail gate glass

BF015B

Fig. BF-71 Structural view of tail gate glass

SEAT

CONTENTS

DESCRIPTION BF-25
FRONT SEAT BF-26
REMOVAL AND INSTALLATION BF-26
REAR SEAT (GS30 2 + 2 seater models only) BF-26
REMOVAL AND INSTALLATION BF-26

DESCRIPTION

The front seats are a separate, bucket type which is equipped with a high seatback. The high seatback is combined with a head rest.

The reclining seat can be tilted 6° forward and 36° backward, from the neutral position, with a pitch of 3° by lifting the tilt control lever located on the door side of the seat cushion.

These seats can also be moved 180 mm (7.09 in) in the fore-and-aft direction with a pitch of 20 mm (0.79 in).

The seatback of rear seat can be folded flush to the rear floor by releasing seatback lock. (GS30 2 + 2 seater only)

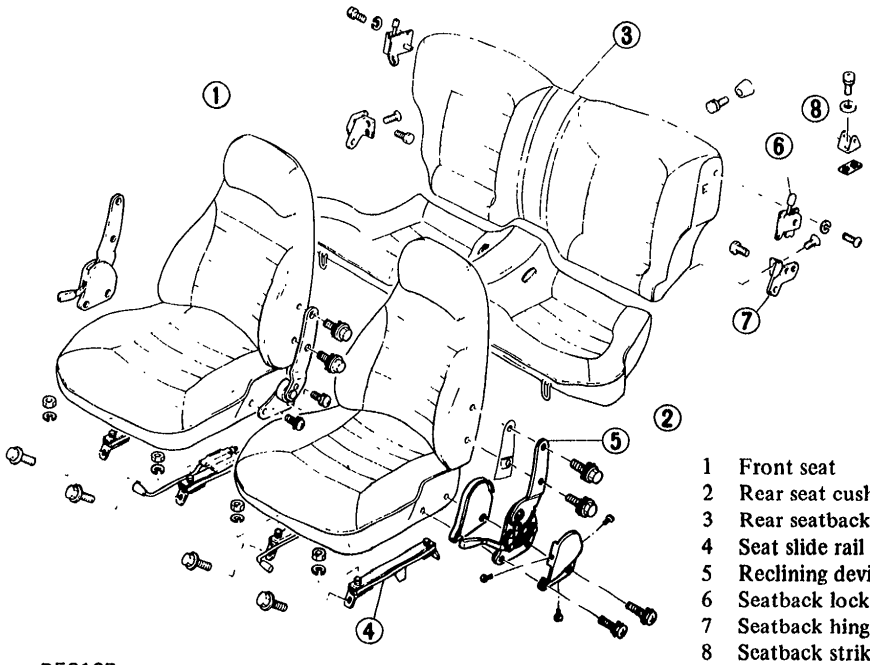

1 Front seat
2 Rear seat cushion
3 Rear seatback
4 Seat slide rail
5 Reclining device
6 Seatback lock
7 Seatback hinge
8 Seatback striker

BF016B

Fig. BF-72 Structural view of front and rear seats

Downloaded from www.Manualslib.com manuals search engine

CAUTION: In conformity with MVSS No. 302, be sure to remove the thin polyethylene covers from seat cushions and seat backs at:
a. Pre-delivery service
b. Parts replacements

FRONT SEAT

REMOVAL AND INSTALLATION

1. Remove bolts attaching the front of seat bracket to floor. See Figure BF-73.

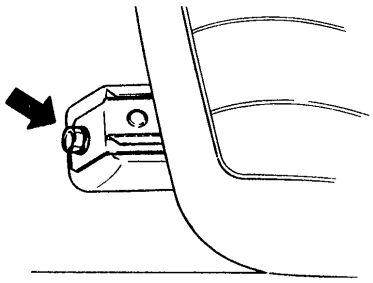

BF488A

Fig. BF-73 Removing front attaching bolts of front seat

2. Remove bolts attaching the rear of seat bracket to floor.
3. Then remove front seat assembly from car.
4. Install front seat assembly in the reverse order of removal.

REAR SEAT (GS30 2+2 seater models only)

REMOVAL AND INSTALLATION

1. Remove screws attaching rear seat front end and rear seat cushion. See Figure BF-74.

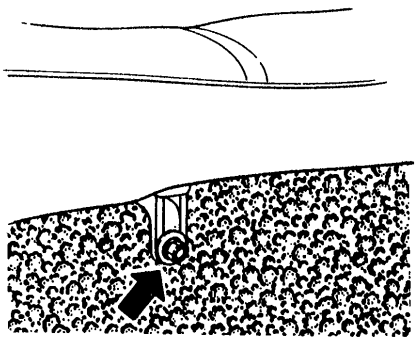

BF489A

Fig. BF-74 Removing rear seat cushion

2. Fold seatback forward by releasing seatback lock, and remove screws attaching rear floor mat.
3. Remove bolts attaching rear seatback to body and remove it from body. See Figure BF-75.

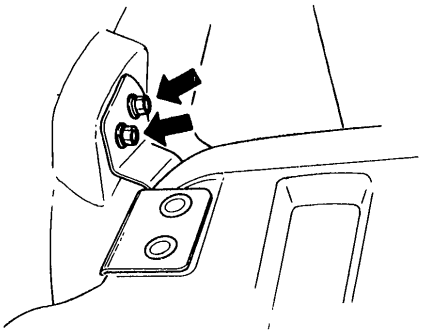

BF490A

Fig. BF-75 Removing rear seatback

4. Install rear seat cushion and seatback in the reverse order of removal.

SEAT BELT

CONTENTS

DESCRIPTION BF-26
REMOVAL AND INSTALLATION BF-27
INSPECTION OF BUCKLE SWITCH BF-27

DESCRIPTION

The front seat belt assembly is a three-point type and consists essentially of a shoulder belt, outer and inner lap belts. The shoulder and outer lap belts are a combined unit and cannot be separated from each other.

The outer lap and the shoulder belt incorporate sensitive emergency locking retractors in their construction. This retractor serves to securely restrain the belt in case of emergency, as in a collision or abrupt stop of the car, thus protecting the seat occupant against serious injury. Under normal conditions, the belt can be freely pulled out.

The inner lap belt is a flexible wire combined with a buckle. The buckle includes a switch which functions as a seat belt warning device.

The rear seat belt is a two point type. It includes an automatic belt locking-retractor device.

Cautions

1. In conformity with MVSS No. 302, be sure to remove the thin polyethylene covers from seat belts at:
(1) Pre-delivery service
(2) Parts replacements

2. If the car has been in a collision or has overturned, replace the entire belt assembly, regardless of the exact nature of accident.

3. If the condition of any component of a seat belt is questionable, replace entire belt assembly. Never

Downloaded from www.Manualslib.com manuals search engine

attempt to repair belt components.
4. If webbing is cut, frayed, or damaged, replace belt assembly.
5. Do not spill drinks, oil, etc. on inner lap belt buckle. Never oil tongue and buckle.
6. Use only a genuine Nissan seat belt assembly.

REMOVAL AND INSTALLATION

1. Disconnect battery ground cable.
2. Disconnect buckle switch harness at connector.
3. Loosen bolt holding inner lap belt and remove inner lap belt. See Figure BF-76.

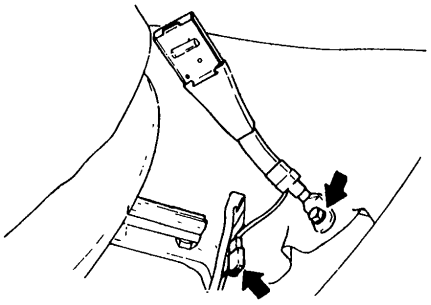

Fig. BF-76 Removing inner lap belt

4. Removing shoulder blet

S30 models

(1) Remove synthetic resin clip and strut cover.

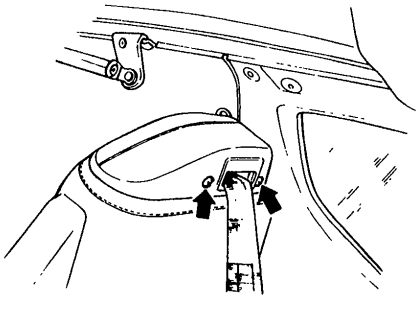

Fig. BF-77 Removing strut cover clip

(2) Loosen anchor bolt securing shoulder belt and remove shoulder belt with escutcheon.

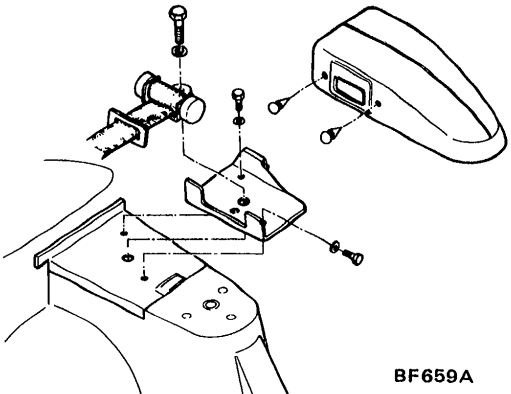

Fig. BF-78 Removing shoulder belt (for S30 2 seater models)

GS30 2 + 2 seater models

(1) Remove screws securing escutcheon.
(2) Detach door weatherstrip.
(3) Remove garnish and quarter panel.
(4) Loosen anchor bolt securing shoulder belt and remove shoulder belt with escutcheon.

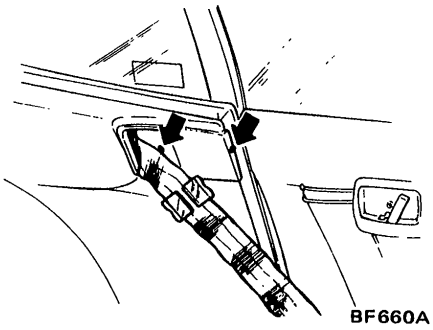

Fig. BF-79 Removing shoulder belt (for GS30 2 + 2 seater models)

5. Remove E.L.R. cover and loosen two anchor bolts securing outer lap belt, then remove shoulder and outer lap belt assembly. See Figure BF-80.

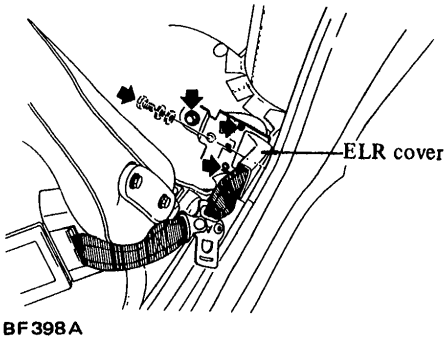

Fig. BF-80 Removing shoulder and outer lap belts

6. Removing rear seat belt.
Remove seat cushion and seatback, then loosen anchor bolts securing rear seat belts and remove rear seat belts. See Figure BF-81.

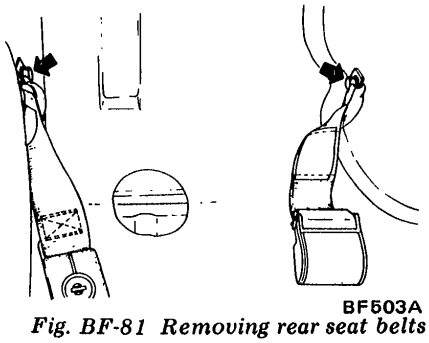

Fig. BF-81 Removing rear seat belts

7. Install front and rear seat belts in the reverse order of removal.
Observe the following.

Note: Install inner lap belt in such a way that it is routed midway between seat cushion and seatback.

INSPECTION OF BUCKLE SWITCH

The buckle switch contacts are normally closed. When tongue is latched to buckle, the tip end of tongue pushes push rod, thus opening the switch contacts.

1. Disconnect battery ground cable.
2. Disconnect buckle switch wire harness.
3. Check buckle switch for proper operation, using a test light. The light should go out when tongue of outer lap belt is latched to buckle, and go on when it is unlatched. Replace belt assembly if necessary.

Note: When checking buckle switch operation, make sure that power is held below 16 volts and 13mA.

Downloaded from www.Manualslib.com manuals search engine

INTERIOR TRIM

CONTENTS

DASH SIDE TRIM BF-28
REMOVAL AND INSTALLATION BF-28
BODY SIDE TRIM BF-28
SPARE TIRE COMPARTMENT LID BF-28
TAIL GATE TRIM BF-28
FLOOR CONSOLE BF-29
REMOVAL AND INSTALLATION BF-29
INSIDE REARVIEW MIRROR BF-29

DASH SIDE TRIM

REMOVAL AND INSTALLATION

Driver's seat side

1. Remove two flasher units (for turn signal and hazard).
2. Remove hood lock control bracket.
3. Remove fastener securing dash side trim to dash side panel and remove dash side trim.
4. Install dash side trim in the reverse order of removal.

Passenger's seat side

1. Remove fuse block and relay bracket.
2. Remove fastener securing dash side trim to dash side panel and remove dash side trim.
3. Install dash side trim in the reverse order of removal.

SPARE TIRE COMPARTMENT LID

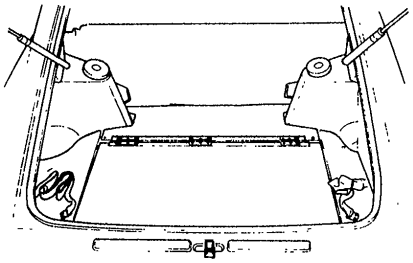

BF018B

Fig. BF-83 Spare tire compartment lid

BODY SIDE TRIM

Push in the center of the fastener with skinny bar. Fastener can be pulled out easily. See Figure BF-38.

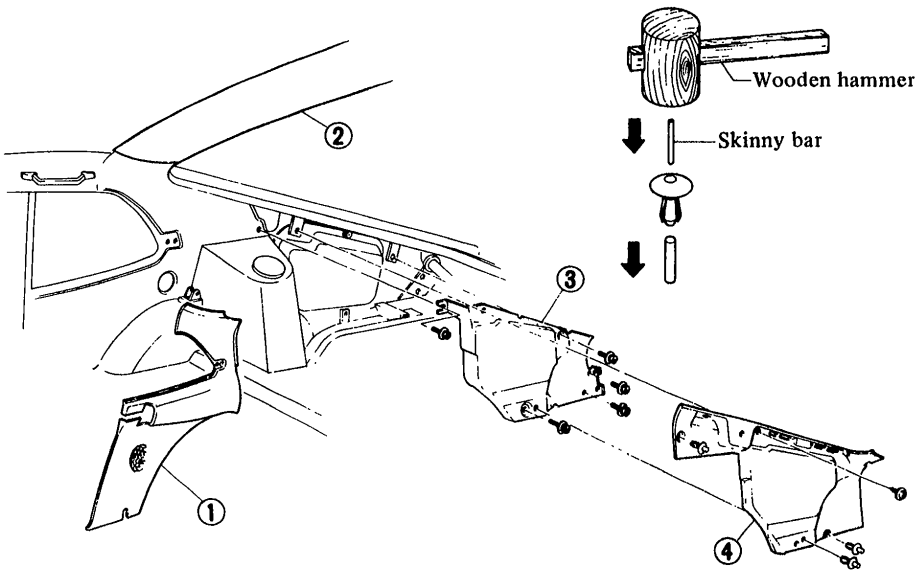

1 Quarter panel garnish
2 Tail rail garnish
3 Reservoir tank protector
4 Body side rear trim

BF024B

Fig. BF-82 Body side trim (2 + 2 seater)

TAIL GATE TRIM

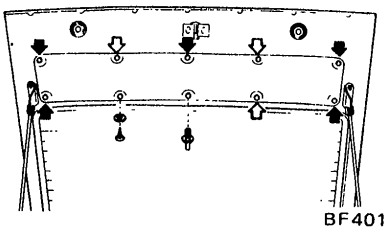

BF401A

Fig. BF-84 Tail gate trim

Downloaded from www.Manualslib.com manuals search engine

FLOOR CONSOLE

REMOVAL AND INSTALLATION

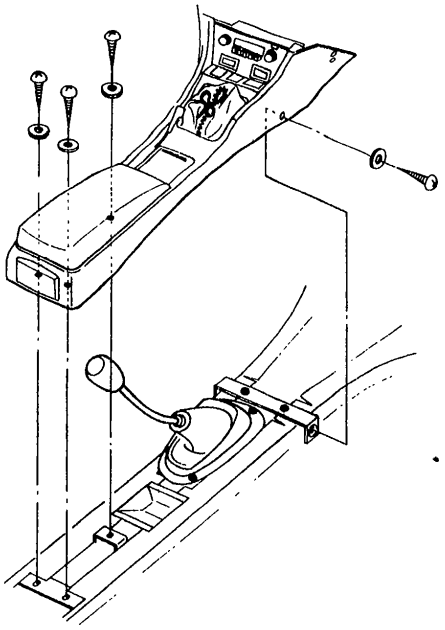

BF019B

Fig. BF-85 Floor console

1. Remove five screws securing floor console in place.
2. Disconnect wiring harnesses from console.
3. Install floor console in the reverse order of removal.

INSIDE REARVIEW MIRROR

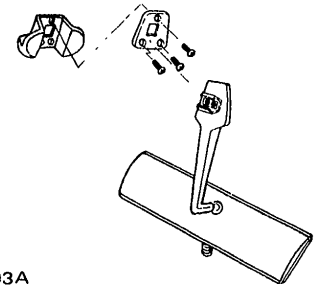

BF403A

Fig. BF-86 Inside rearview mirror

Downloaded from www.Manualslib.com manuals search engine

INSTRUMENT PANEL

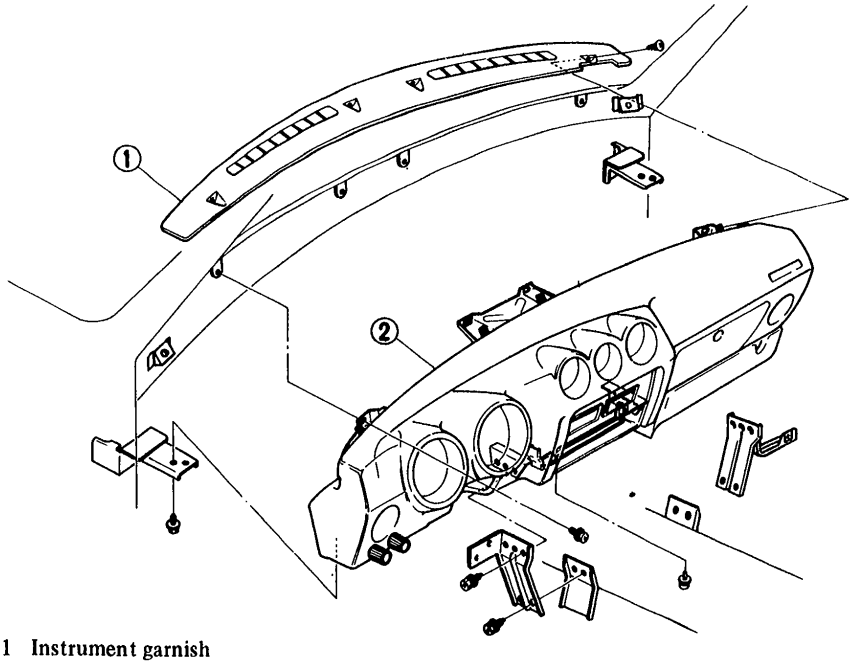

1 Instrument garnish
2 Instrument panel with pad

BF020B

Fig. BF-87 Instrument panel

REMOVAL AND INSTALLATION

1. Remove cable from battery terminal.
2. Remove horn pad, steering wheel and shell cover.

Refer to Section ST (Page ST-3) for Removal.

3. Remove screws securing instrument garnish to instrument, and detach garnish.
4. Remove screws securing upper instrument to cowl top panel.
5. Remove screws securing instrument finisher to instrument, and detach finisher.

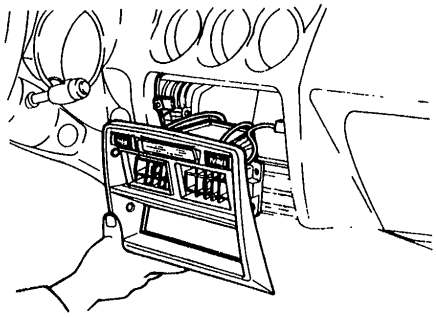

BF405A

Fig. BF-88 Removing instrument finisher

6. Remove floor console.
7. Remove screws securing air control finisher to instrument.
8. Remove screws securing instrument to the upper side of floor tunnel.
9. Remove screws securing side ventilator control bracket in place.
10. Remove screws from each side of lower instrument.
11. Disconnect instrument harnesses at:

(1) Junction block
(2) Combination switch
(3) Ignition switch
(4) Stop lamp switch
(5) Flasher units (for turn signal and hazard)
(6) Door switch

12. Disconnect cable from speedometer.
13. Install instrument panel in the reverse order of removal.

INSTRUMENT PANEL UNDER COVER

1. Remove two screws securing under cover to instrument panel.

2. Install instrument panel under cover in the reverse order of removal.

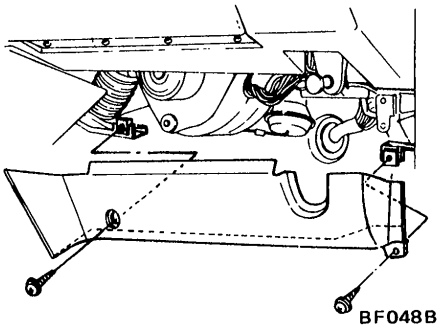

BF048B

Fig. BF-89 Instrument panel under cover

Downloaded from www.Manualslib.com manuals search engine

BODY SEALING

DESCRIPTION

Sealer is applied to the individual panel joints to secure body sealing.

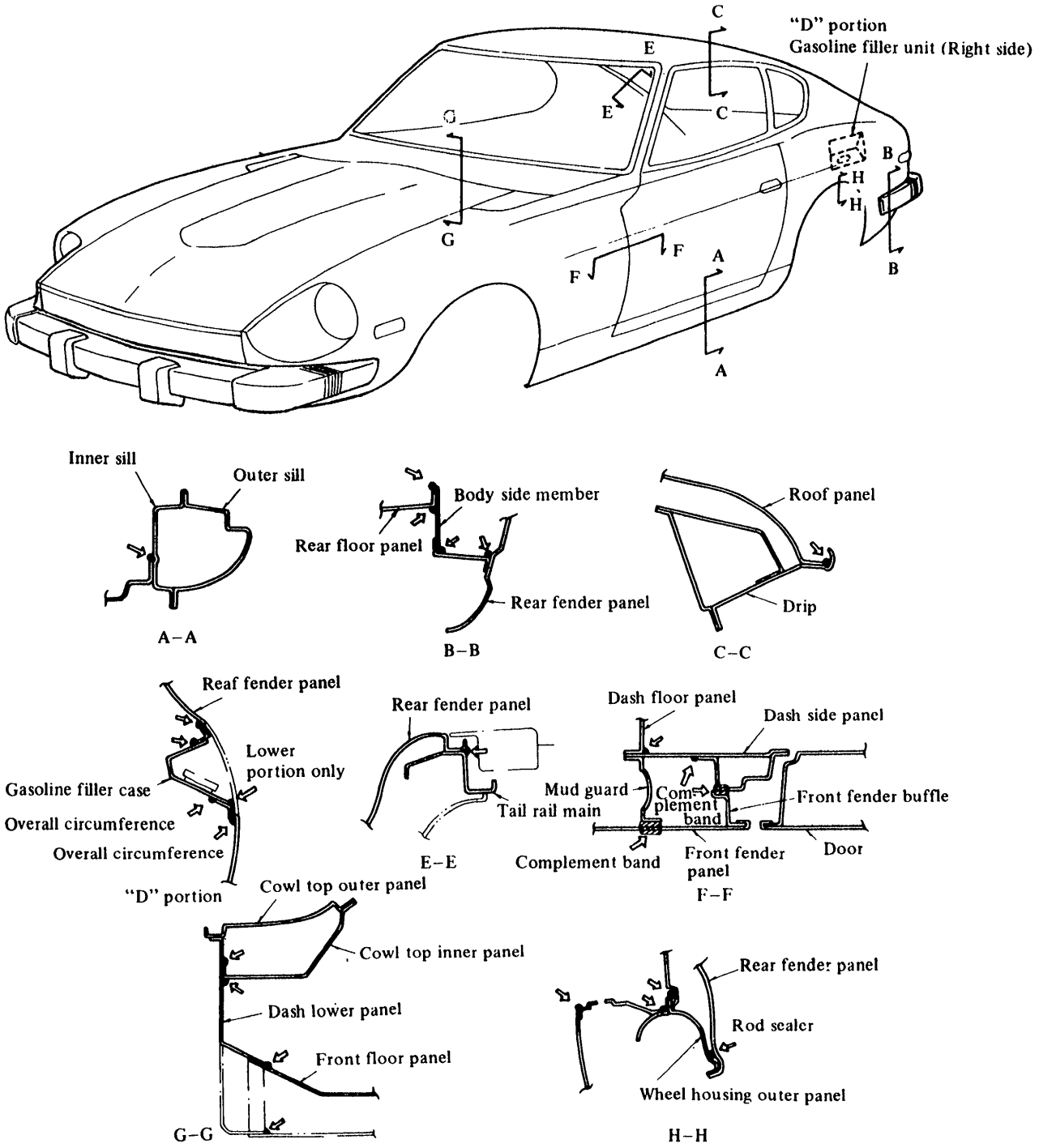

BF021B

Fig. BF-90 Sealing body panel joint

Downloaded from www.Manualslib.com manuals search engine

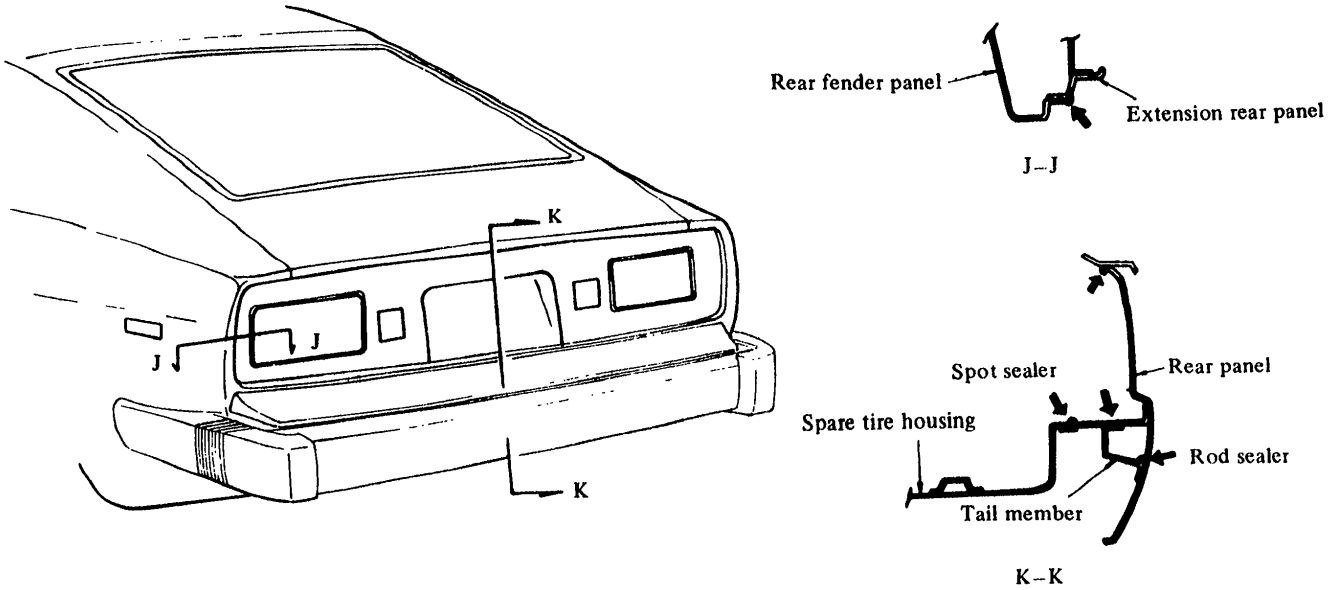

BF022B

Fig. BF-91 Sealing rear panel joint

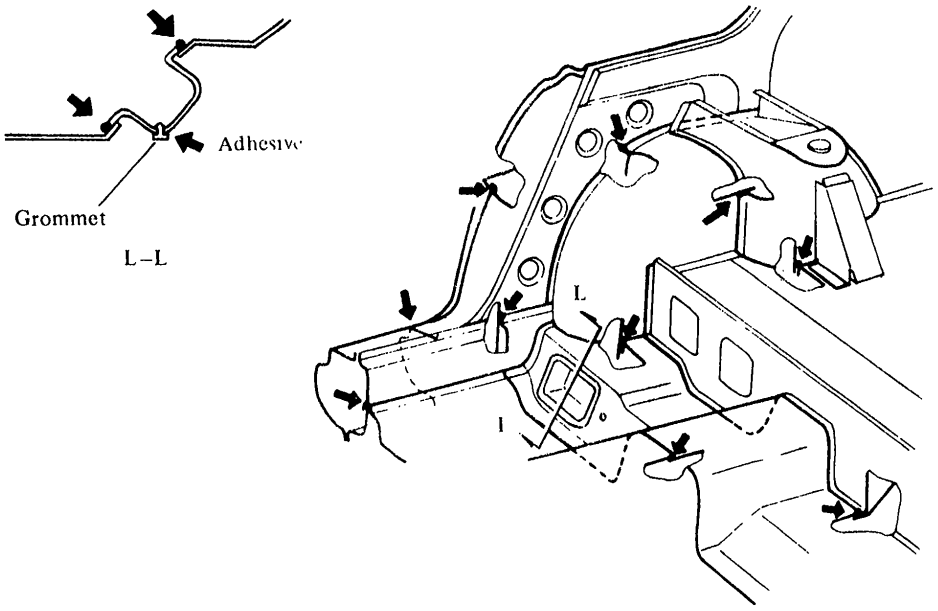

BF408A

Fig. BF-92 Sealing rear wheel housing

SPECIAL SERVICE TOOL

No.	Tool number & tool name	Description	For use on	Reference page or Figure No.
1.	ST08720000 Door adjusting wrench	This special wrench is used to make door adjustments without dismounting fender. SE232	610 S30	Fig. BF-42 Page BF-17

Downloaded from www.Manualslib.com manuals search engine

SERVICE MANUAL

DATSUN 280Z
MODEL S30 SERIES

NISSAN

NISSAN MOTOR CO., LTD.
TOKYO, JAPAN

SECTION BE

BODY ELECTRICAL SYSTEM

BODY ELECTRICAL WIRING ..... BE- 2
LIGHTING AND SIGNAL LAMP SYSTEM ..... BE- 7
METERS AND GAUGES BE-29
ELECTRICAL ACCESSORY BE-46
EMISSION WARNING SYSTEM BE-96

BE

Downloaded from www.Manualslib.com manuals search engine

BODY ELECTRICAL WIRING

CONTENTS

DESCRIPTION BE-2
WIRING HARNESS BE-2
COLORS OF CABLES BE-2
WIRING BE-3
INSPECTION BE-5
MAINTENANCE BE-5
FUSE BLOCK AND FUSIBLE LINK BE-5
DESCRIPTION BE-5
MAINTENANCE INSTRUCTIONS BE-5
RELAY BRACKET BE-6

DESCRIPTION

Cables used for body electrical wiring are low tension cables. They are covered with color-coded vinyl for easy identification. Each system (e.g. ignition, lighting, or signal system) has its own distinctive color. This facilitates trouble-shooting. In the wiring diagram, the colors are indicated by one or two alphabetical letters.

The entire wiring system consists of several harnesses connected one to another by means of connectors.

These include the engine room harness, engine room sub-harness, instrument harness, dash harness, console harness, electronic fuel injection harness, electronic fuel injection sub-harness, and battery cable.

It is recommended that the battery be disconnected before performing any electrical service other than bulb, or fuse replacement. To protect the electrical devices, fuses are installed in the middle of circuit.

In addition to fuses, some fusible links are installed to protect wiring. Fusible links function almost the same as fuses, though they are slightly different in their characteristics.

Refer to Section EE for engine harness and Section EF for electronic fuel injection harness.

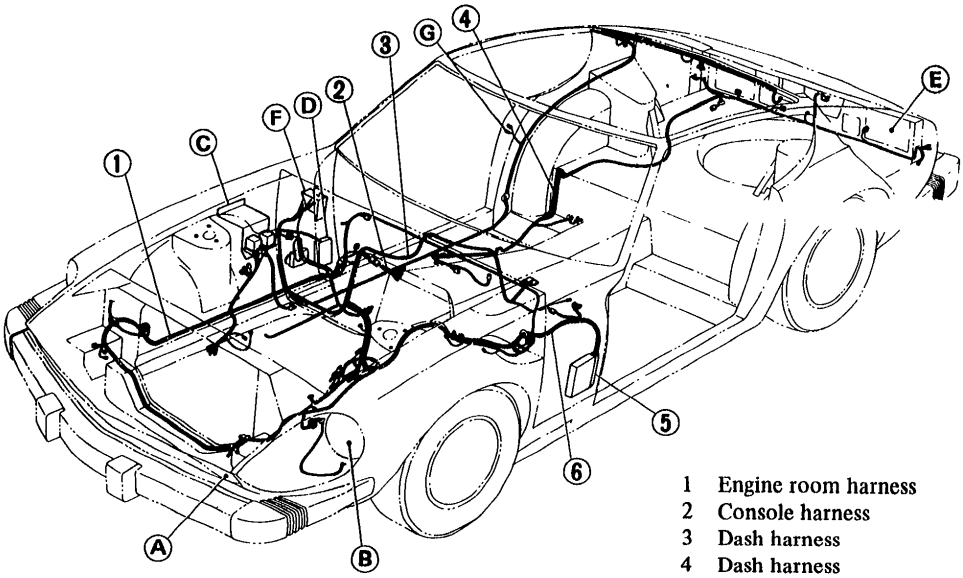

1 Engine room harness
2 Console harness
3 Dash harness
4 Dash harness
5 EFI control unit
6 Electronic fuel injection harness

A Front combination lamp
B Headlamp
C Relay bracket
D Fuse block
E Rear combination lamp
F Junction block
G Speaker

BE428B

Fig. BE-1 Wiring harness (2 seater)

WIRING HARNESS

COLORS OF CABLES

The system of colors used in the covering of cable conductors are as shown in the following table:

Circuit system	Standard color	Supplementary color	Supplementary color Standard color
Starting and ignition system	B (Black)	W, Y, R	
Charging system	W (White)	B, R, L	Y
Lighting system	R (Red)	W, B, G, Y, L	
Signal system	G (Green)	W, B, R, Y, L	W, Br (Brown)
Instrument system	Y (Yellow)	W, B, G, R, L	
Others	L (Blue) Lg (Light green)	W, R, Y	Y Br Lg (Light green)
Grounding system	B (Black)		

Downloaded from www.Manualslib.com manuals search engine

The main cable of each system is generally coded with a standard or supplementary color. These colors are represented by such letters as G, W, and B. Minor items of each circuit's terminal are coded with a two-tone color composed of both standard and supplementary colors. These colors are represented by a combination of two letters like RW or GY. The first letter of each combination stands for standard color, and the second for supplementary color.

WIRING

Engine room harness

Engine room harness is connected to instrument harness with one connector and dash harness with four connectors at junction block under right side of instrument panel.

It has three branches. One branch runs along right side of engine room, servicing starting motor, voltage regulator, fusible link, seat belt relay, alternator, headlamp, combination lamp, horn, etc., and transverse engine room under radiator, servicing headlamp, horn, combination lamp, etc. and is connected to distributor, ignition coil, B.C.D.D. solenoid, water temperature sensor (thermal transmitter), etc. on left side of engine room.

Another branch runs along rear end of engine room to inspection lamp, servicing wiper motor, washer motor, brake stop switch, etc.

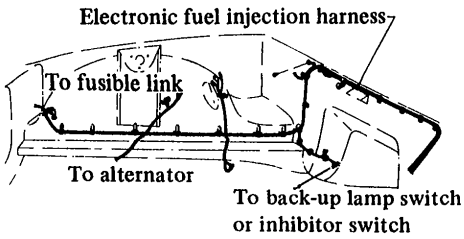

BE429B

Fig. BE-2 Engine room harness

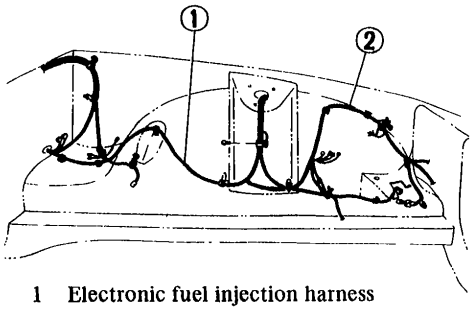

1 Electronic fuel injection harness
2 Engine room harness

BE430B

Fig. BE-3 Engine room harness

The other branch runs along transmission housing to back-up lamp switch (Manual transmission models) and inhibitor switch (Automatic transmission models).

On automatic transmission models, this also services kickdown solenoid via engine sub-harness.

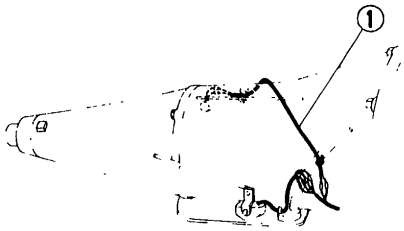

1 Engine sub-harness

BE431B

Fig. BE-4 Engine sub-harness (A/T models)

Instrument harness

Instrument harness is connected to engine room harness and dash harness with three connectors at junction block under right side of instrument panel.

Two connectors for dash harness are white and black. Connector for engine room harness is blue.

This harness traverses to left side of passenger compartment behind instrument panel and services glove box lamp, map lamp, fuel warning lamp, clock, volt and fuel gauge, water temperature and oil pressure gauge, floor temperature warning lamp (California models), cigarette lighter, tachometer, speedometer, warning buzzer, and illumination control rheostat.

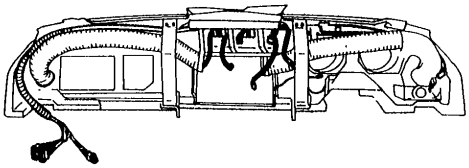

BE432B

Fig. BE-5 Instrument harness

Dash harness

Dash harness is connected to engine room harness and instrument harness with six connectors at junction block under right side of instrument panel. Two connectors (white and black) for instrument harness and four (white, green and black) for engine room harness.

This harness has four main branches. One goes to relay bracket and services timer unit, horn relay, intermittent wiper amplifier, defogger relay and ignition relay, and goes to right-hand side door switch.

One goes to left side of car along dash panel and services console harness, air conditioner harness, turn signal flasher unit, kickdown solenoid, brake stop switch, steering lock switch, combination switch, ignition switch, electronic fuel injection harness, hazard flasher unit, and left-hand side door switch.

The other goes along right side of car backward and has four branches. One services seat belt switch, floor sensor relay, brake lamp check relay, hand brake switch.

One services radio speaker, rear defogger, room lamp and tailgate switch.

One services fuel pump.

The other services fuel unit gauge.

Main line goes around rear right side corner and goes along rear panel servicing side marker lamp, combination lamp, floor temperature sensor (California models) and license lamp, and goes around the other rear corner of car and services auto antenna.

Downloaded from www.Manualslib.com manuals search engine

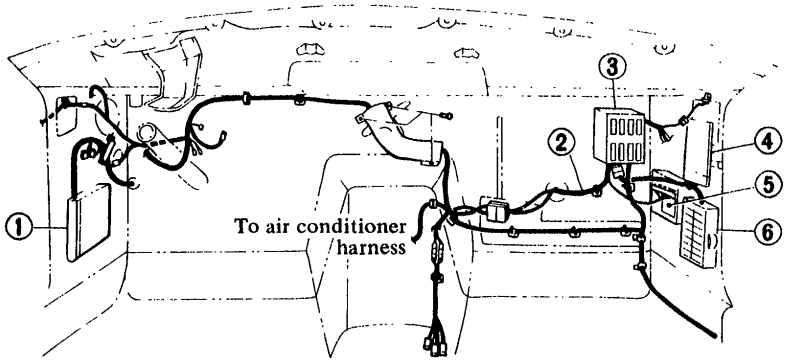

1 EFI control unit
2 Engine room harness
3 Junction block
4 Relay bracket
5 Transistor ignition unit
6 Fuse block

BE433B

Fig. BE-6 Dash harness

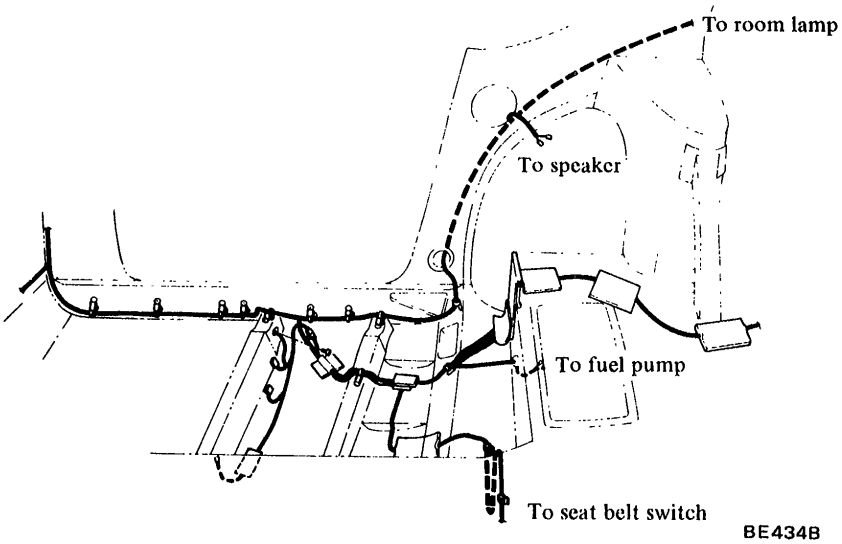

BE434B

Fig. BE-7 Dash harness (2 seater)

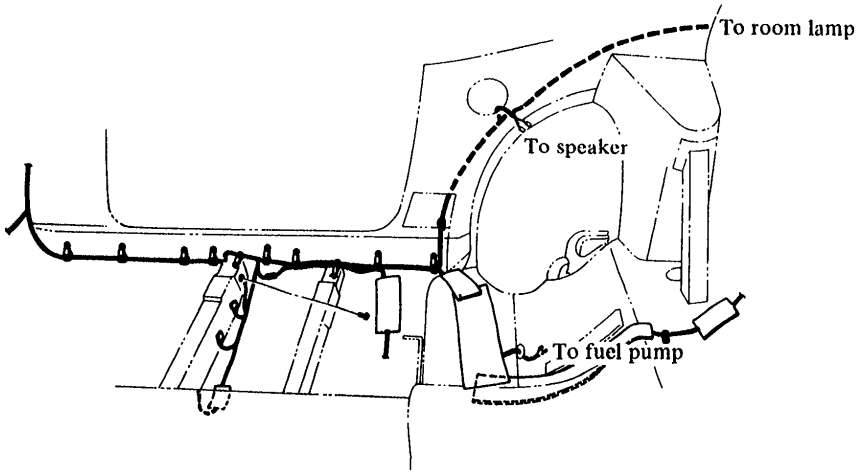

BE435B

Fig. BE-8 Dash harness (2 + 2 seater)

Console harness

Console harness is connected to dash harness with a pair of connectors. It services automatic transmission indicator lamp, ashtray lamp, antenna switch, radio, rear defogger switch and lamp, seat belt warning lamp and hazard switch.

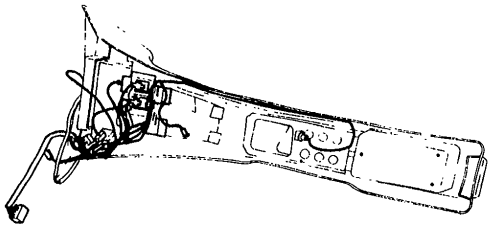

BE436B

Fig. BE-9 Console harness

Electronic fuel injection harness and electronic fuel injection sub-harness

The electronic fuel injection harness is connected to electronic fuel injection system components. It is connected to the positive battery terminal through a fusible link and to the negative battery terminal through a battery cable terminal at the right side of the engine compartment.

It is connected to the dash harness under the left side of the passenger compartment instrument panel.

It is connected to the control unit, electronic fuel injection relay, altitude switch in the passenger compartment, and to the dropping resistor, throttle valve switch, air flow meter, cold start valve, air regulator and injectors of each cylinder on the left side of the engine compartment. The electronic fuel injection sub-harness is connected to the electronic fuel injection harness on the left front side of the engine and also to the thermotime switch and water temperature sensor. These harnesses are stamped with an identification number to facilitate maintenance. See Section EF for details.

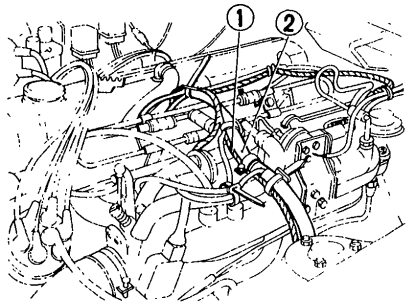

BE971A

1 Engine harness
2 Electronic fuel injection harness

Fig. BE-10 Electronic fuel injection harness

Downloaded from www.Manualslib.com manuals search engine

INSPECTION

Inspect all electrical circuits, referring to wiring or circuit diagrams.

Circuits should be tested for continuous or short circuit with a conventional test lamp or low reading voltmeter. Before inspection of circuit, insure the following items.

1. Each electrical component part or cable is securely fastened to its connector or terminal.
2. Each connection is tight in place and free from rust and dirt.
3. Each cable covering shows no evidence of cracks, deterioration or other damage.
4. Each terminal is kept away from any adjacent metal parts.
5. Each cable is fastened to its proper connector or terminal.
6. Each grounding bolt is planted tight.
7. Wiring is kept away from any adjacent sharp edges of parts or parts having high temperature (such as exhaust pipe).
8. Wiring is kept away from any rotating or working parts such as fan pulley, fan belt, etc.
9. Cables between fixed portions and moving equipment are long enough to withstand shocks and vibratory forces.

MAINTENANCE

Wire harness must be replaced if insulation becomes burned, cracked, or deteriorated. Whenever it is necessary to splice or repair a wire, be sure to use resin flux solder or electrical connections. And use insulating tape to cover all splices or bare wire. In replacing wire, correct size wire must be used. Never replace a wire with smaller one. Each harness and wire must be held securely in place with clips or other holding devices to avoid chafing or wearing away insulation due to vibration.

Notes:

a. **Before starting to inspect and repair any part of electrical system or other parts which may lead to a short circuit, disconnect cables at battery terminals as follows:**

Disconnect cable at negative (–) terminal, and then disconnect cable at positive (+) terminal.

Before connecting cables to battery terminals, be sure to clean terminals with a rag. Fasten cable at positive (+) terminal, and then ground cable at negative (–) terminal. Apply grease to the top of these terminals to prevent rust from developing on them.

b. **Never use a screwdriver or service tool to conduct a continuity test. Use test leads to conduct this check.**

c. **Never ground an open circuit or circuits under no load. Use a test lamp (12V-3W) or circuit tester as a load.**

FUSE BLOCK AND FUSIBLE LINK

DESCRIPTION

The fuse and fusible link are protective devices used in an electric circuit. When current increases beyond rated amperage, fusible metal melts and the circuit is broken, thus protecting cable and electrical equipment from burning. Whenever a fuse is melted for one reason or another, use a systematic procedure to check and eliminate cause of problem before installing new fuse.

MAINTENANCE INSTRUCTIONS

Fuse

In nearly all cases, visual inspection can reveal a faulty fuse. If condition of fuse is questionable, conduct a continuity test with a circuit tester or test lamp.

Notes:

a. **If fuse is blown, be sure to eliminate the cause before installing new fuse in position.**

b. **Use fuse of specified rating. Do not use fuse of more than specified rating. See the following figure.**

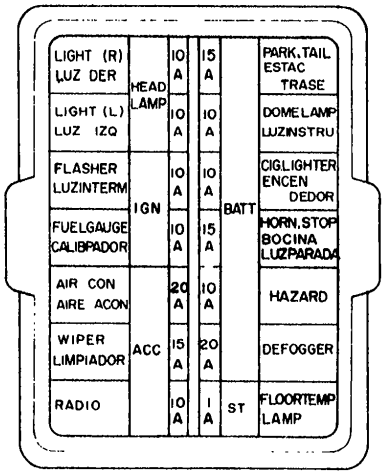

BE437B

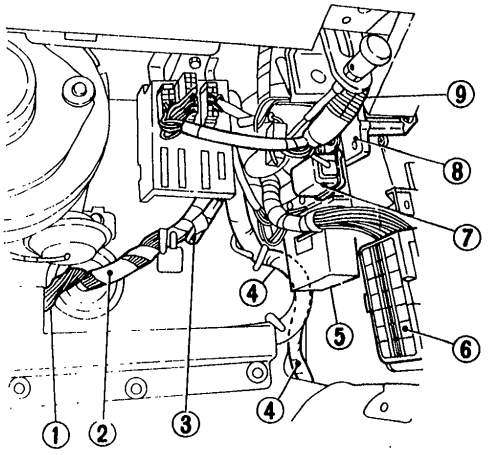

BE438B

1 Dash harness
2 Engine room harness
3 Resistor for tachometer
4 Dash harness
5 Transistor ignition unit
6 Fuse block
7 Timer unit
8 Relay bracket
9 Instrument harness

Fig. BE-11 Fuse block

c. **Check fuse holders for condition. If rust or dirt is found thereon, clean metal parts with fine-grained sandpaper until proper metal-to-metal contact is made.**

Poor contact of any fuse holder will often lead to voltage drop or heating in the circuit and could result in improper operation of circuit.

Downloaded from www.Manualslib.com manuals search engine

Fusible link

Color	Size mm² (sq in)
Black	1.25 (0.0019)
Green	0.5 (0.00078)
Brown	0.3 (0.00047)

The fusible link holder is mounted on the relay bracket in the engine compartment, a fusible link for electronic fuel injection system is connected between battery cable (+) and fuel injection harness.

A melted fusible link can be detected by either visual or finger-tip inspection. If its condition is questionable, use circuit tester or test lamp, as required, to conduct continuity test. This continuity test can be performed in the same manner as for any conventional fuse.

Notes:

a. **Should melting of fusible link occur, it is possible that critical circuit (power supply or large current carrying circuit) is shorted. In such case, carefully check and eliminate the cause of problem.**

b. **Never wrap periphery of fusible link with vinyl tape. Extreme care should be taken with this link so that it does not come into contac with any other wiring harness or vinyl or rubber parts.**

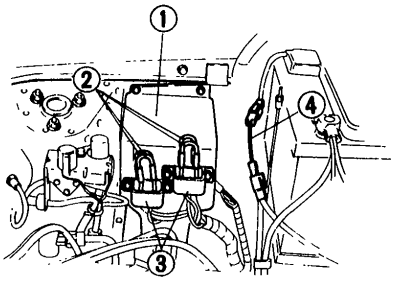

1 Relay bracket
2 Fusible link
3 Fusible link holder
4 Fusible link for electronic fuel injection harness

BE975A

Fig. BE-12 Fusible link

RELAY BRACKET

The realy bracket is so installed that a number of relays can be located in the same place for easy maintenance.

There are two relay brackets. One is installed on the hoodledge on the right side of the engine compartment, and the other on the dash side panel.

The following parts are attached to the relay brackets:

A. Engine compartment

1. Voltage regulator
2. Fusible link holder
3. Seat belt (starter) relay (A/T only)
4. Air conditioner (compressor) relay (Optional)
5. Condenser

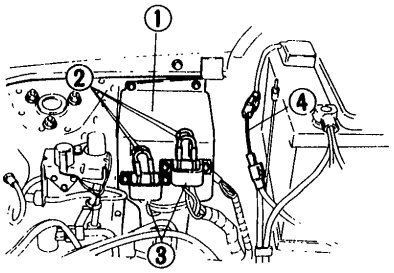

1 Relay bracket
2 Fusible link
3 Fusible link holder
4 Fusible link for electronic fuel injection harness

BE975A

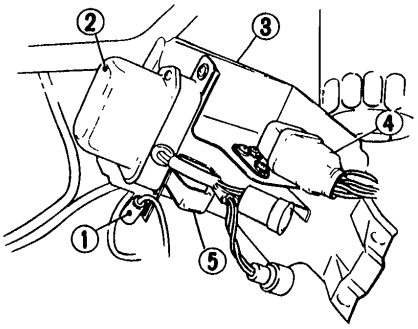

1 Condenser
2 Voltage regulator
3 Relay bracket
4 Seat belt relay (Starter relay) (A/T only)
5 Air conditioner relay (Compressor relay)

BE556B

Fig. BE-13 Relay bracket

B. Inside passenger compartment

1. Intermittent wiper amplifier
2. Horn relay
3. Defogger relay
4. Ignition relay
5. Timer unit

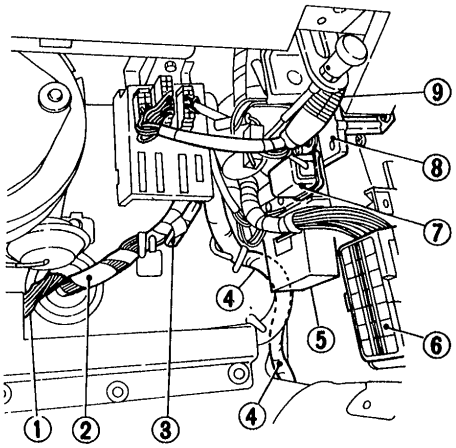

1 Dash harness
2 Engine room harness
3 Resistor for tachometer
4 Dash harness
5 Transistor ignition unit
6 Fuse block
7 Timer unit
8 Relay bracket
9 Instrument harness

BE438B

Fig. BE-14 Relay bracket

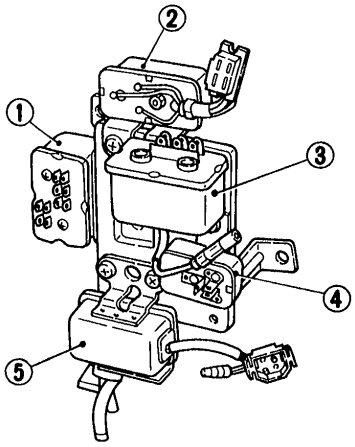

1 Intermittent wiper amplifier
2 Rear defogger relay
3 Ignition relay
4 Horn relay
5 Timer unit

BE439B

Fig. BE-15 Relay bracket

Downloaded from www.Manualslib.com manuals search engine

LIGHTING AND SIGNAL LAMP SYSTEM

CONTENTS

DESCRIPTION ..... BE- 7
BULB SPECIFICATIONS ..... BE- 8
CIRCUIT DIAGRAM OF LIGHTING SYSTEM ..... BE- 9
HEADLAMP BE-19
AIMING ADJUSTMENT BE-19
HEADLAMP BEAM REPLACEMENT BE-19
FRONT COMBINATION LAMP BE-20
BULB REPLACEMENT BE-20
LAMP BODY REPLACEMENT BE-20
SIDE MARKER LAMP BE-20
BULB REPLACEMENT BE-20
LAMP BODY REPLACEMENT BE-20
INTERIOR LAMP BE-21
BULB REPLACEMENT BE-21
LAMP BODY REPLACEMENT BE-21
REAR COMBINATION LAMP BE-21
BULB REPLACEMENT BE-21
LAMP BODY REPLACEMENT BE-21
LICENSE LAMP BE-21
BULB REPLACEMENT BE-21
LAMP BODY REPLACEMENT BE-22
MAP LAMP BE-22
BULB REPLACEMENT BE-22
LAMP BODY REPLACEMENT BE-22
GLOVE BOX LAMP BE-23
BULB REPLACEMENT BE-23
LAMP BODY REPLACEMENT BE-23
INSPECTION BE-23
AUTOMATIC TRANSMISSION INDICATOR ILLUMINATION LAMP BE-23
BULB REPLACEMENT BE-23
ASHTRAY ILLUMINATION LAMP BE-23
REMOVAL AND INSTALLATION BE-23
INDICATOR LAMPS BE-23
INSPECTION LAMP BE-23
REMOVAL AND INSTALLATION BE-23
BULB REPLACEMENT BE-24
INSPECTION BE-24
COMBINATION SWITCH BE-24
REMOVAL AND INSTALLATION BE-24
INSPECTION BE-24
DOOR SWITCH BE-25
REMOVAL AND INSTALLATION BE-25
INSPECTION BE-25
STOP LAMP SWITCH BE-25
REMOVAL AND INSTALLATION BE-25
INSPECTION BE-25
BACK-UP LAMP SWITCH BE-25
REPLACEMENT BE-25
INSPECTION BE-25
HAZARD SWITCH BE-26
REMOVAL AND INSTALLATION BE-26
BULB REPLACEMENT BE-26
INSPECTION BE-26
IGNITION AND STARTING SWITCH BE-26
REPLACEMENT BE-26
INSPECTION BE-26
RHEOSTAT (FOR ILLUMINATION CONTROL) BE-27
REMOVAL AND INSTALLATION BE-27
INSPECTION BE-27
FLASHER UNIT REPLACEMENT BE-27
TROUBLE DIAGNOSES AND CORRECTIONS BE-28
HEADLAMP BE-28
TURN SIGNAL LAMP BE-28
TAIL LAMP, STOP LAMP AND BACK-UP LAMP BE-29

DESCRIPTION

Lighting and signal lamp system includes headlamps, front combination lamps, side marker lamps, rear combination lamps, license lamps, interior lamp, map lamp and some illumination lamps.

They are controlled by combination switch, flasher unit, hazard unit, hazard switch and resistor.

Each lighting system is not completely independent; Consequently, there are some wires used in common. Refer to Circuit Diagram for detailed description of each system.

Downloaded from www.Manualslib.com manuals search engine

BULB SPECIFICATIONS

Item	Wattage	SAE trade number	Remarks
Headlamp Main / Dimmer	50W/40W	6012	Double filament type
Front combination lamp Turn / Clearance	23W/8W	1034	Double filament type
Side marker lamp	8W	67	
License lamp	7.5W	89	
Rear combination lamp Stop / Tail Tail Reverse Turn	 23W/8W 8W 23W 23W	 1034 67 1073 1073	
Map lamp	5W	–	
Interior lamp	10W	–	
Inspection lamp	8W	67	
Glove box lamp	3.4W	57X	
Automatic transmission indicator illumination lamp	3.4W	57X	A/T only
Indicator lamps (High beam indicator lamp and turn signal indicator lamp)	3.4W	57X	
Hazard switch illumination lamp	1.4W	–	
Fuel warning lamp	3.4W	57X	

Downloaded from www.Manualslib.com manuals search engine

CIRCUIT DIAGRAM OF LIGHTING SYSTEM

Headlamp system

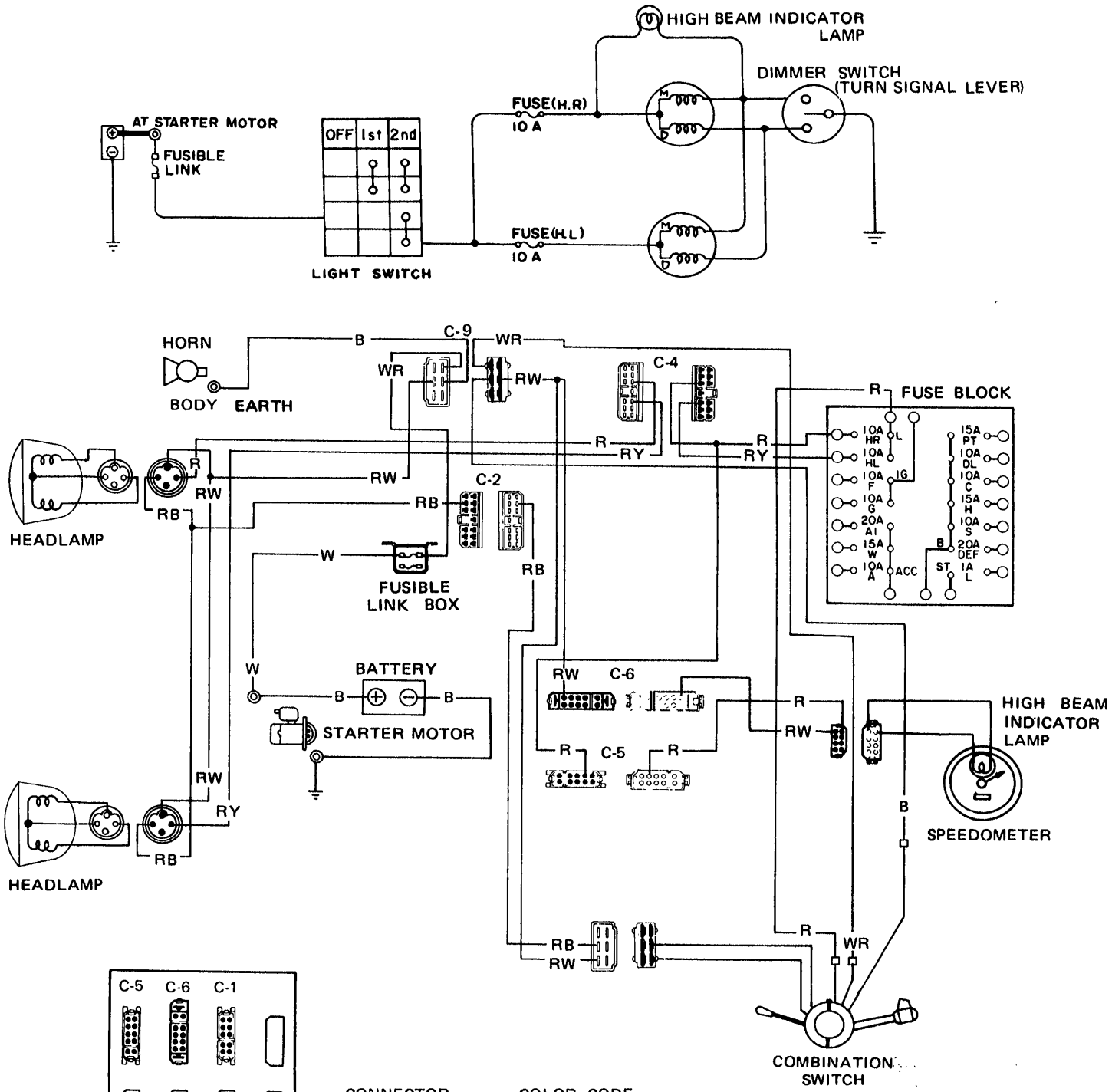

CONNECTOR		COLOR CODE		
C-2	: Black	B	:	Black
C-4	: White	W	:	White
C-5	: White	WR	:	White with red stripe
C-6	: Black	R	:	Red
C-9	: White	RB	:	Red with black stripe
		RW	:	Red with white stripe
		RY	:	Red with yellow stripe

BE440B

Fig. BE-16 Circuit diagram for headlamp

Downloaded from www.Manualslib.com manuals search engine

Turn signal lamp system

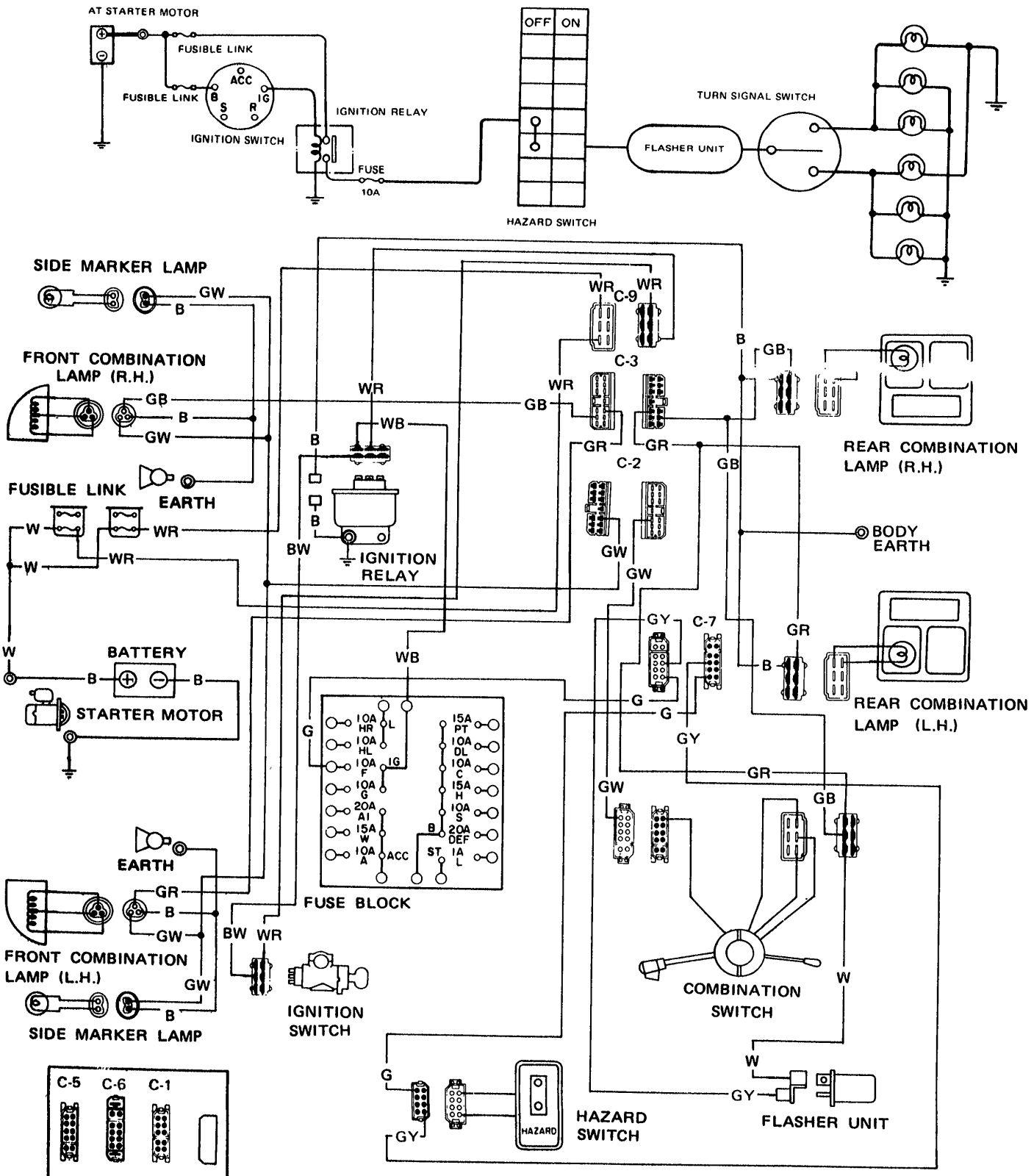

CONNECTOR

C-2	:	Black
C-3	:	Green
C-7	:	Black
C-9	:	White

COLOR CODE

B	:	Black	GB	:	Green with black stripe
BW	:	Black with white stripe	GW	:	Green with white stripe
W	:	White	GR	:	Green with red stripe
WB	:	White with black stripe	GY	:	Green with yellow stripe
WR	:	White with red stripe			
G	:	Green			

BE441B

Fig. BE-17 Circuit diagram for turn signal lamp

Downloaded from www.Manualslib.com manuals search engine

Hazard warning system

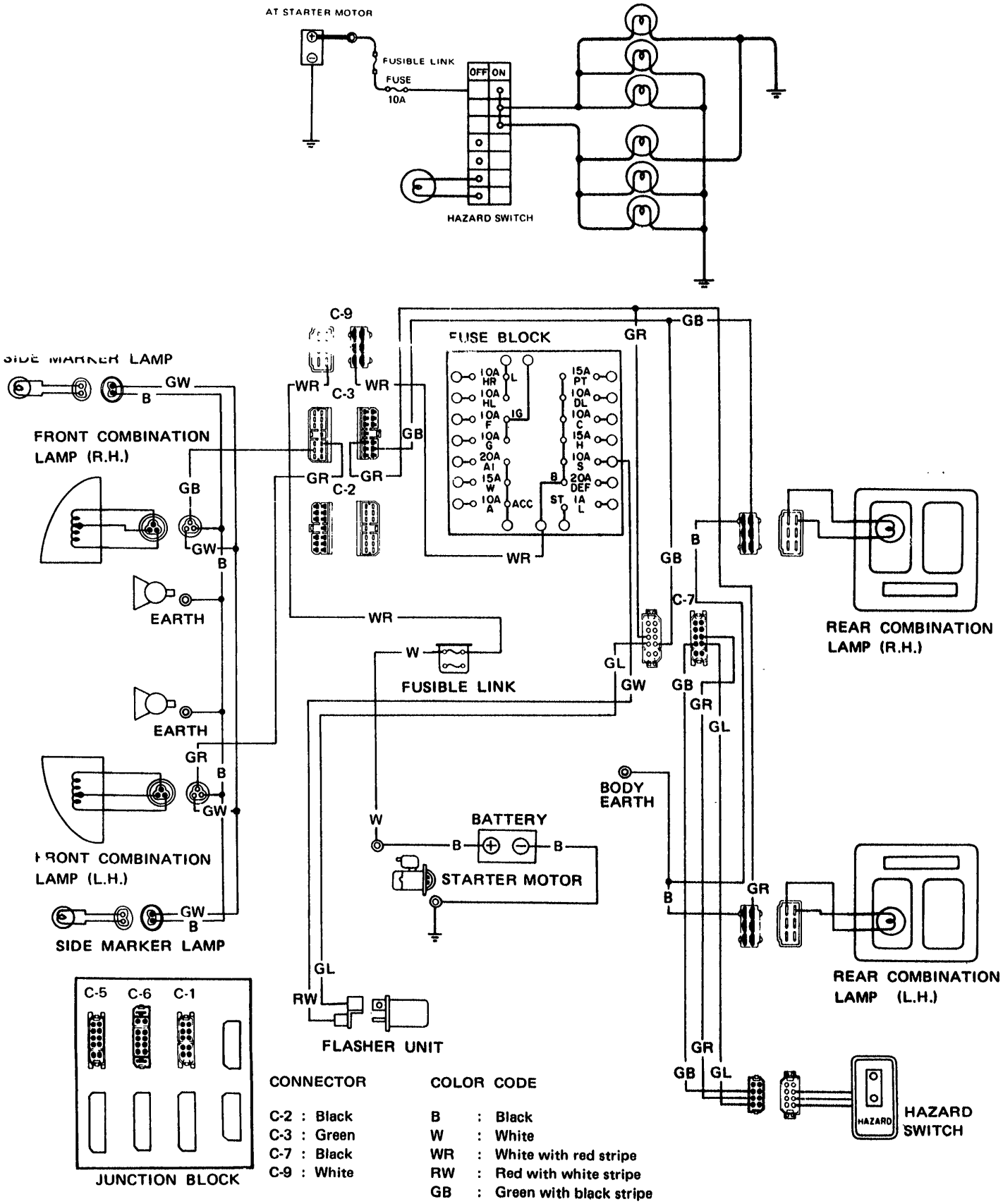

Fig. BE-18 Circuit diagram for hazard warning system

Downloaded from www.Manualslib.com manuals search engine

Stop lamp system

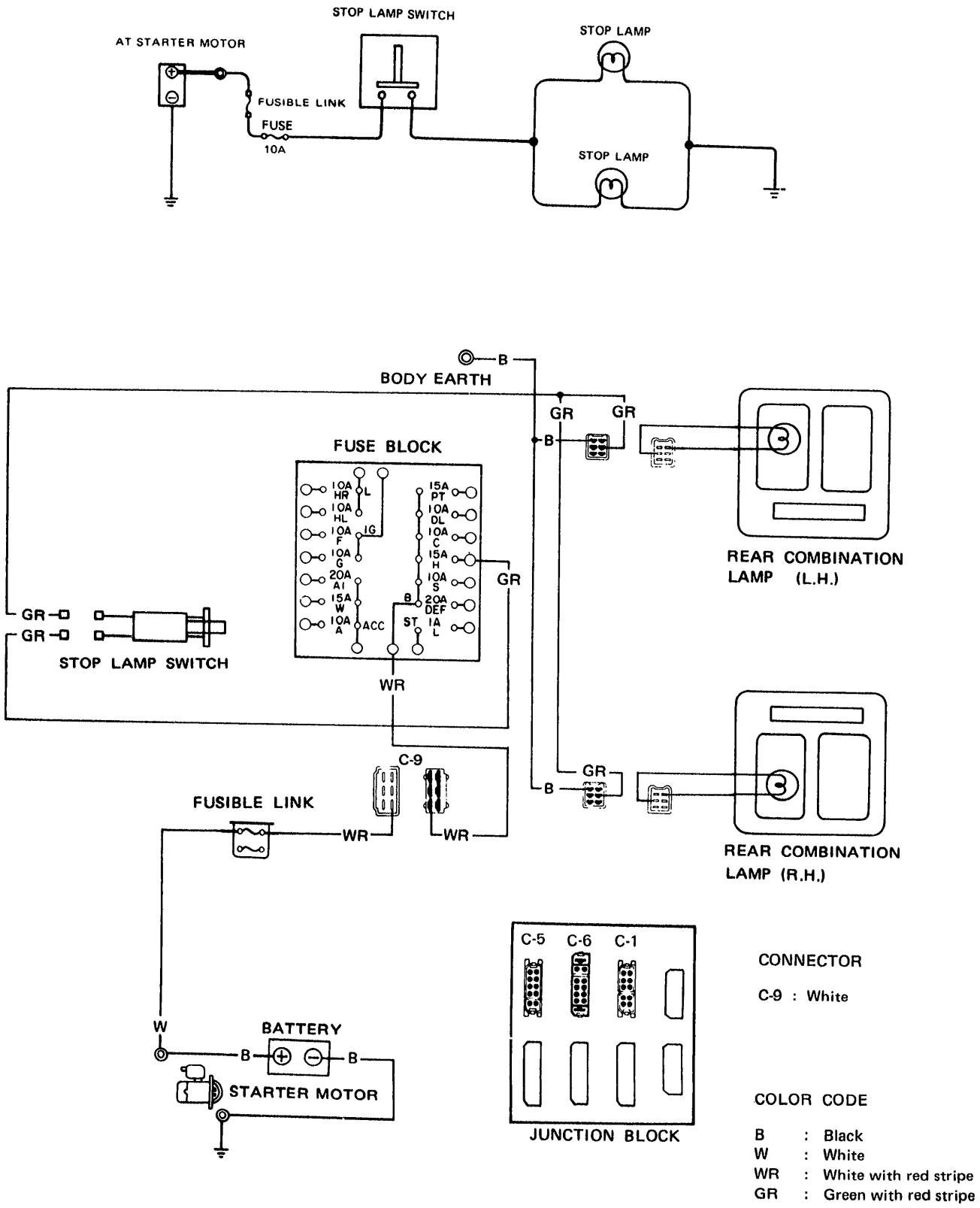

Fig. BE-19 Circuit diagram for stop lamp system

Downloaded from www.Manualslib.com manuals search engine

Clearance and tail lamp system

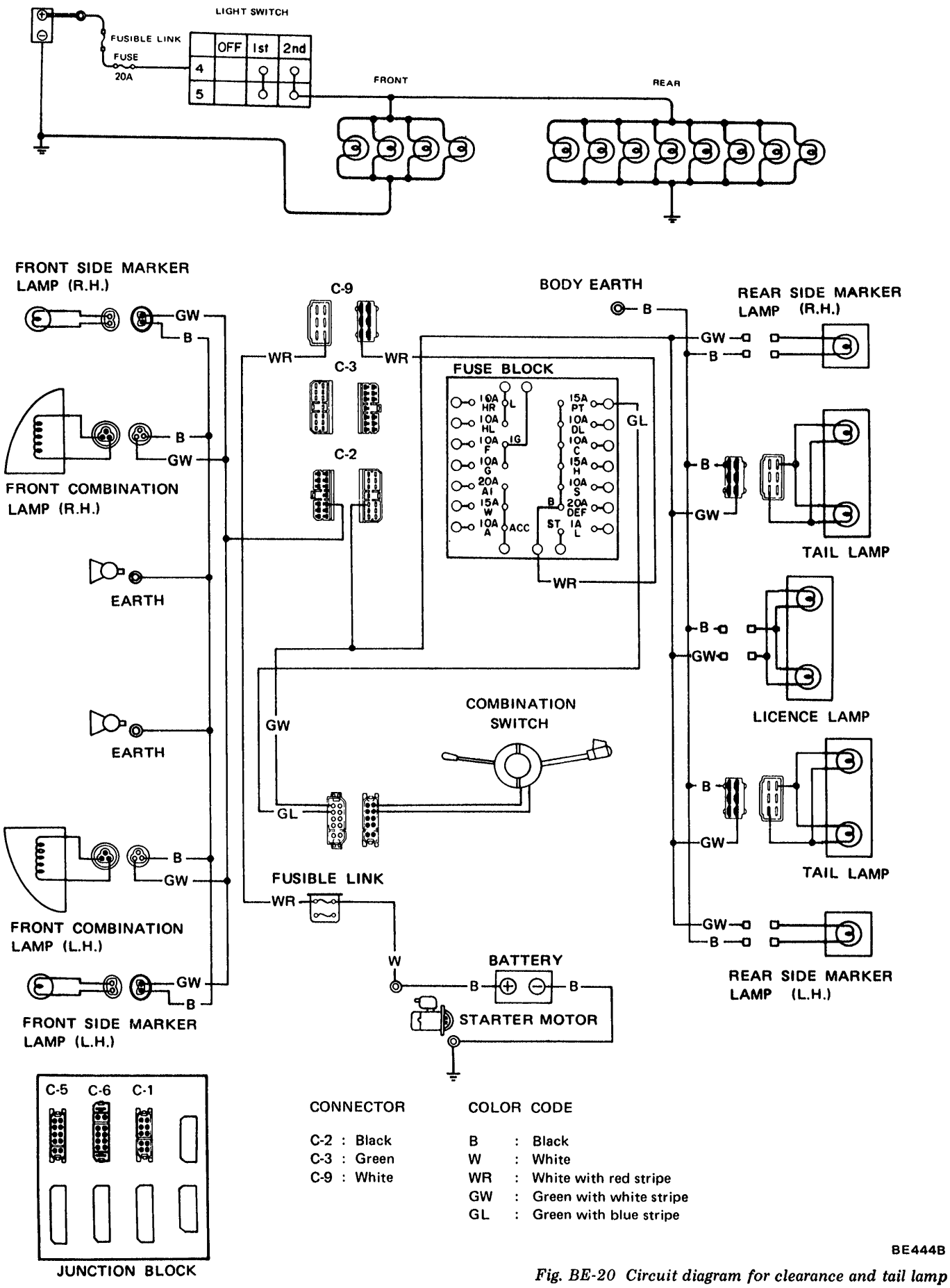

Fig. BE-20 Circuit diagram for clearance and tail lamp

Downloaded from www.Manualslib.com manuals search engine

Back-up lamp system

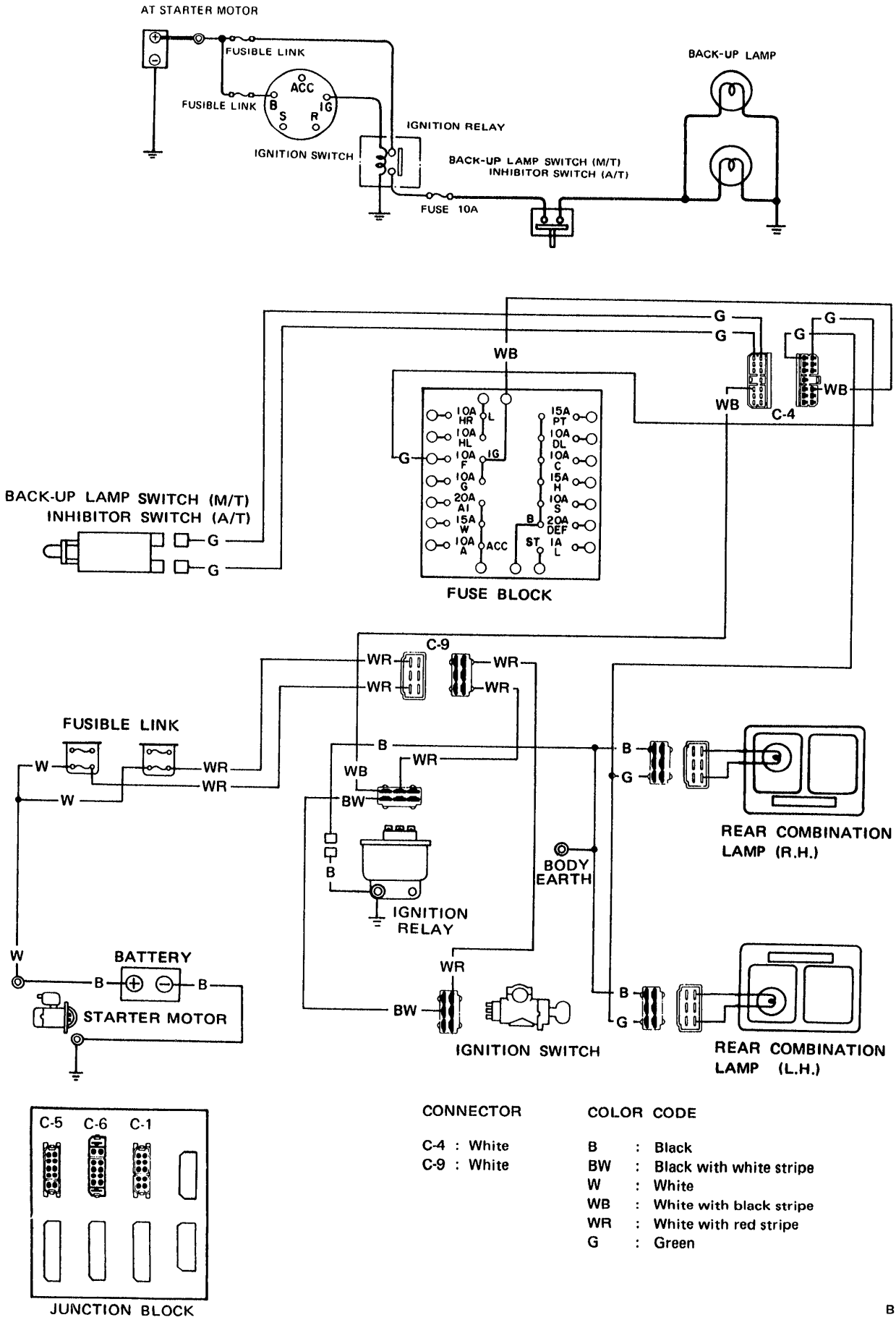

CONNECTOR		COLOR CODE		
C-4	: White	B	:	Black
C-9	: White	BW	:	Black with white stripe
		W	:	White
		WB	:	White with black stripe
		WR	:	White with red stripe
		G	:	Green

Fig. BE-21 Circuit diagram for back-up lamp system

Downloaded from www.Manualslib.com manuals search engine

Meter illumination system

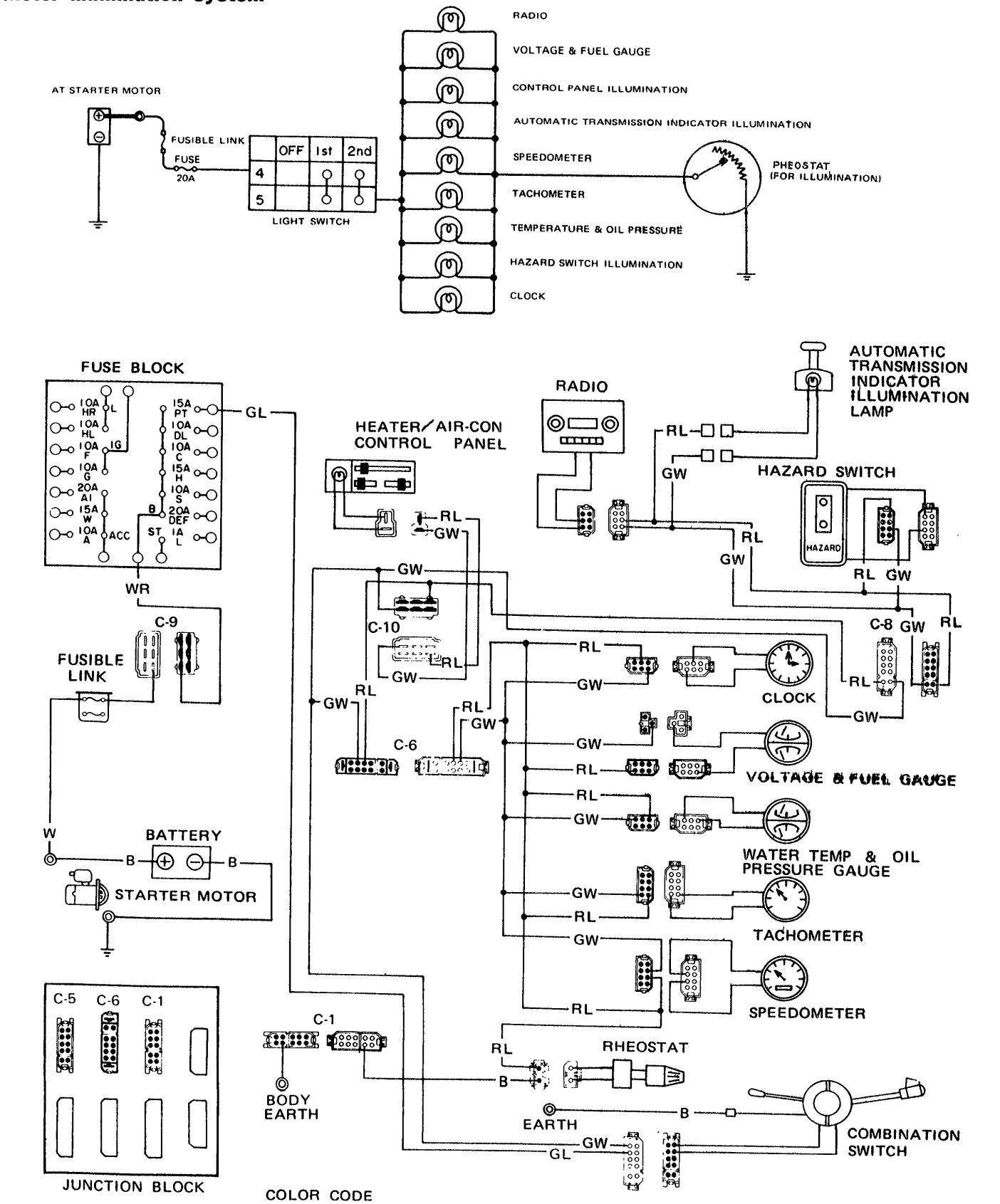

CONNECTOR

C- 1 : Blue
C- 6 : Black
C- 8 : Black
C- 9 : White
C-10 : White

COLOR CODE

B : Black
W : White
WR : White with red stripe
RL : Red with blue stripe
GW : Green with white stripe
GL : Green with blue stripe

BE446B

Fig. BE-22 Circuit diagram for meter illumination lamp

Downloaded from www.Manualslib.com manuals search engine

Interior lamp system

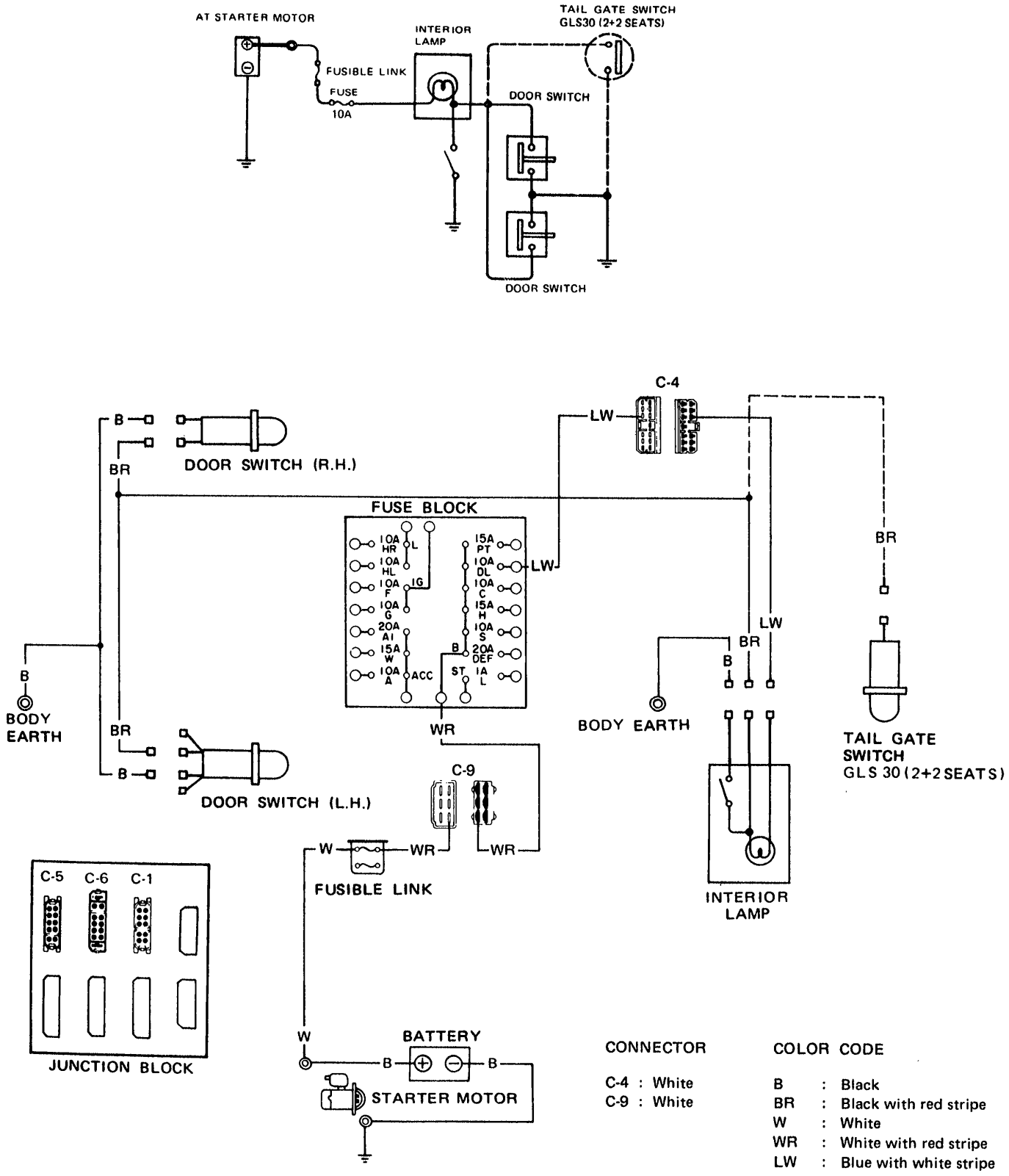

Fig. BE-23 Circuit diagram for interior lamp

Downloaded from www.Manualslib.com manuals search engine

Glove box, cigarette lighter and ashtray lamp illumination

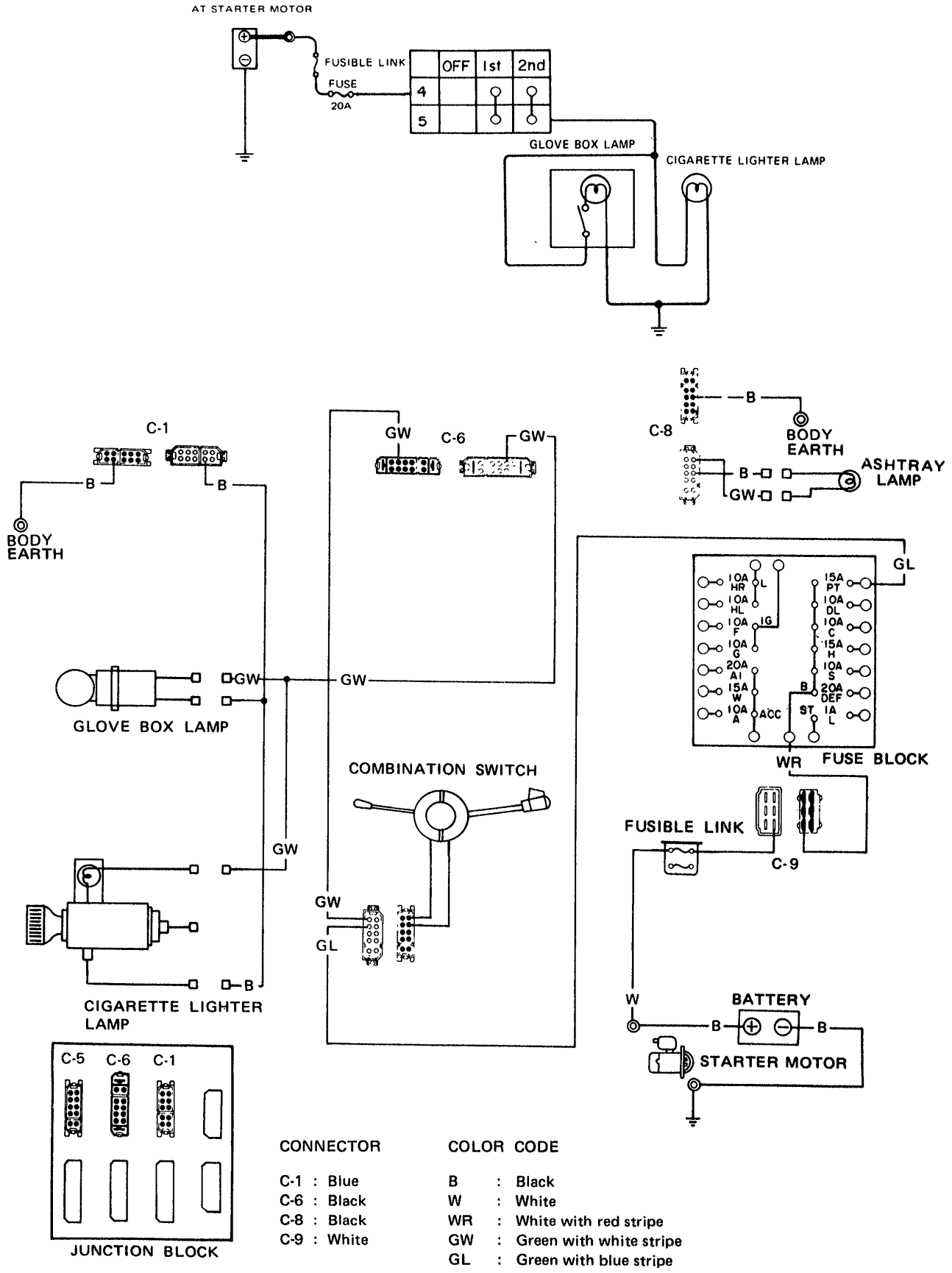

BE448B

Fig. BE-24 Circuit diagram for glove box and cigarette lighter illumination

Downloaded from www.Manualslib.com manuals search engine

Map lamp system

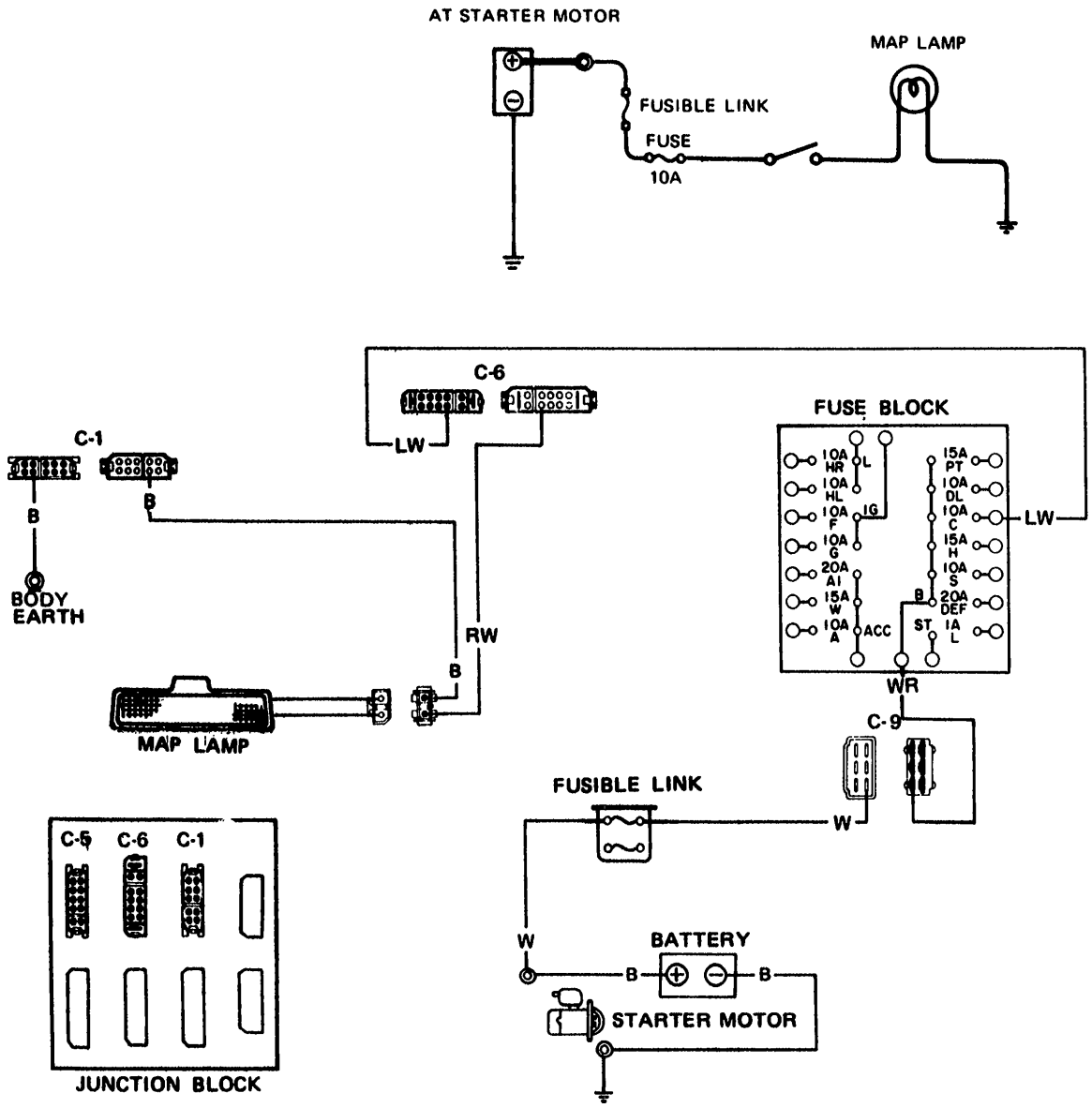

CONNECTOR	COLOR CODE	
C-1 : Blue	B	: Black
C-6 : Black	W	: White
C-9 : White	WR	: White with red stripe
	RW	: Red with white stripe
	LW	: Blue with white stripe

BE449B

Fig. BE-25 Circuit diagram for map lamp

Downloaded from www.Manualslib.com manuals search engine

HEADLAMP

AIMING ADJUSTMENT

Both vertical and horizontal aiming adjustments can be carried out through the cutting hole of headlight case.

Adjust the adjusting screw on upper side of each headlamp to adjust vertical aiming and adjust the adjusting screw on side of each headlamp to adjust horizontal aiming as sketched below.

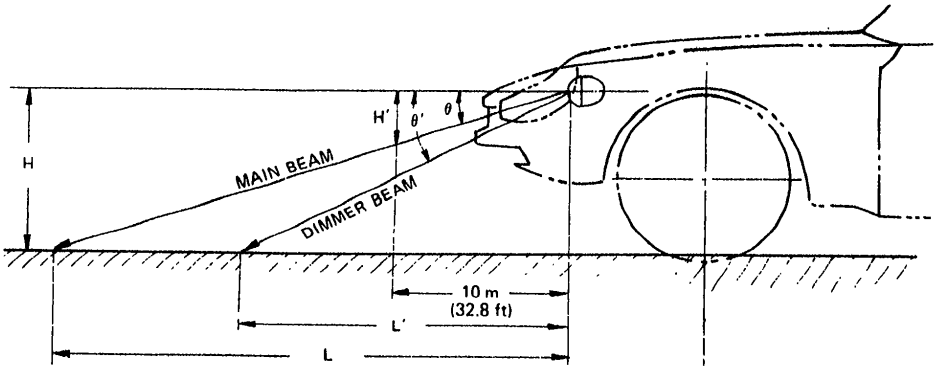

Dimensions/Angle	Values for adjustment
H mm (in)	620.6 (24.43) *624 (24.57)
θ	36'
θ'	1°26'
L m (ft)	59.3 (194.6) *59.6 (195.5)
L' m (ft)	24.8 (81.4) *24.9 (81.7)
H' mm (in)	104.7 (4.12)

* means GS30 (2 + 2 seats)

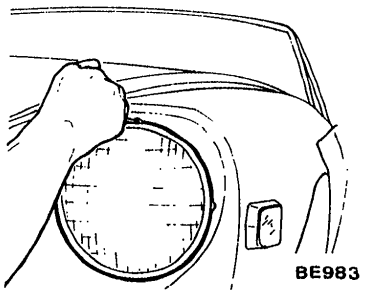

Fig. BE-26 Headlamp aiming adjustment

Notes:

Before making headlamp aiming adjustment, observe the following:

a. Keep all tires inflated to correct pressure.
b. **Place car and tester on the same flat surface.**
c. **See that there is no load in car.**
   1) **Gasoline, radiator and engine oil pan filled to correct levels.**
   2) **No passenger.**

When performing headlamp aiming adjustment, use an aiming device, aiming wall screen or headlamp tester. For operating instructions of any aimer, refer to the operation manuals supplied with the unit.

Adjust each headlamp beam as shown in Figure BE-26.

HEADLAMP BEAM REPLACEMENT

1. Disconnect connector behind front fender panel.
2. Remove four screws retaining headlamp housing to fender panel. These screws can be removed through wheel opening of front fender panel.
3. Remove headlamp assembly from body.

Then, remove headlamp retaining ring by loosening three crews. Retaining ring can be taken out by rotating it clockwise.

4. Removing headlamp beam from housing, disconnect a connector. Headlamp beam can then be taken out.
5. Change headlamp beam and connect wiring connector to new beam.
6. Place headlamp beam in position so that three location tabs behind beam fit in with three hollows on mounting ring. Make sure that the letters on beam are in an upright position.
7. Install headlamp retaining ring by rotating it counterclockwise and tighten retaining screws.
8. Install the lamp assembly in the reverse sequence of removal.

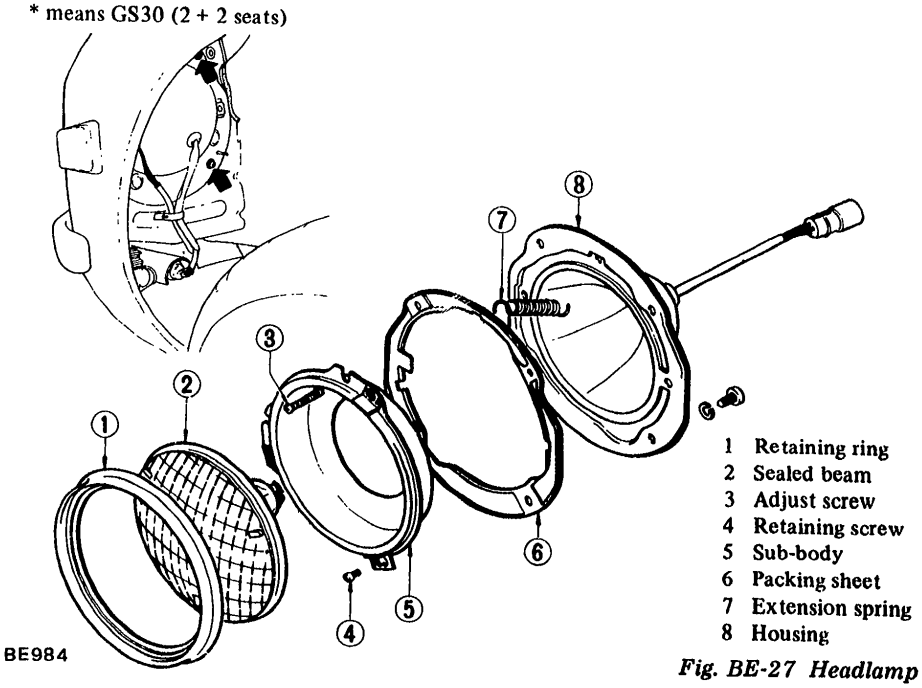

Fig. BE-27 Headlamp

Notes:

a. **Whenever beam is replaced, adjust headlamp aiming.**
b. **Lamp housing for L.H. and R.H. are different from each other. They can be distinguished by the letter "L" and "R" on lamp housing.**

Bulb wattage
Headlamp beam
Main/Dimmer 50W/40W

Downloaded from www.Manualslib.com manuals search engine

FRONT COMBINATION LAMP

BULB REPLACEMENT

1. Remove two screws and remove lens.
2. Push in on bulb, twist it counter-clockwise, and remove it from socket.
3. Insert new bulb into socket, press it inward and rotate it clockwise. Make sure that the bulb is locked in socket.

Bulb wattage
Front combination lamp
Turn/Clearance 23W/8W

LAMP BODY REPLACEMENT

1. Disconnect connector for front combination lamp behind lamp body.
2. Remove front combination lamp cover by removing two screws.
3. Remove screws retaining lamp body to front grille from front of the panel and remove front combination lamp.
4. Installation is in the reverse sequence of removal.

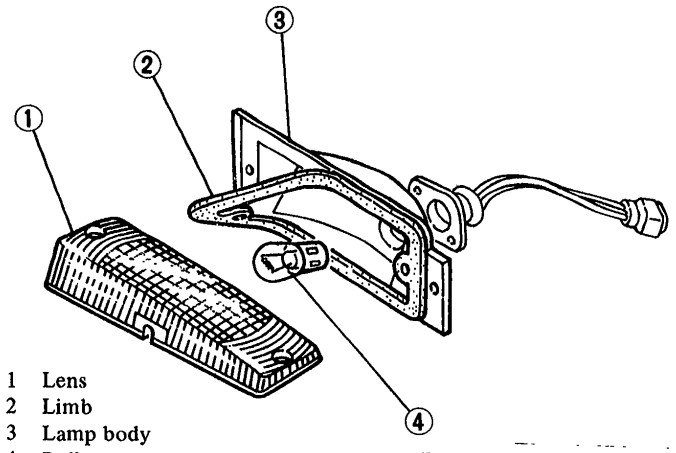

1 Lens
2 Limb
3 Lamp body
4 Bulb

BE614A

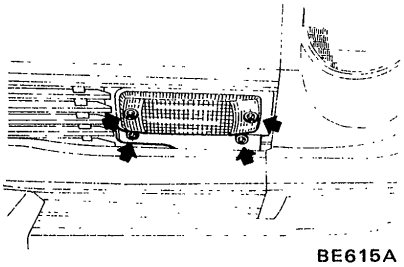

BE615A

Fig. BE-28 Front combination lamp

SIDE MARKER LAMP

BULB REPLACEMENT

1. Remove two lens retaining screws.
2. Remove lens from lamp body.
3. Push in on bulb, twist it counter-clockwise and remove from socket.
4. Insert new bulb into socket, press it inward and rotate it clockiwse. Make sure that bulb is locked in socket.
5. Install lens in the reverse sequence of removal.

Bulb wattage:
Side marker lamp 8W

LAMP BODY REPLACEMENT

1. Disconnect lead wire at a connector (front) or at two connectors (rear).
2. Remove two lens retaining screws and take out lamp body assembly.
3. Install new lamp body assembly in the reverse sequence of removal.

Front

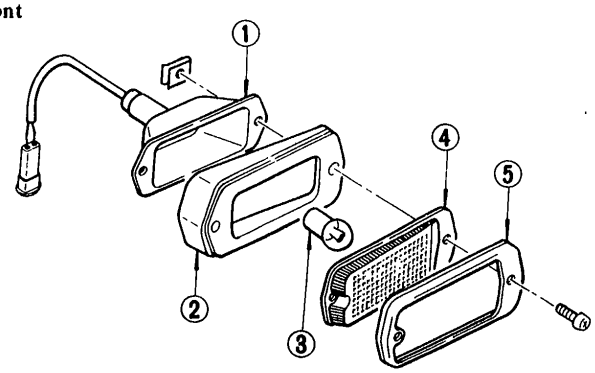

1 Lamp body
2 Adapter
3 Bulb
4 Lens
5 Limb

Rear

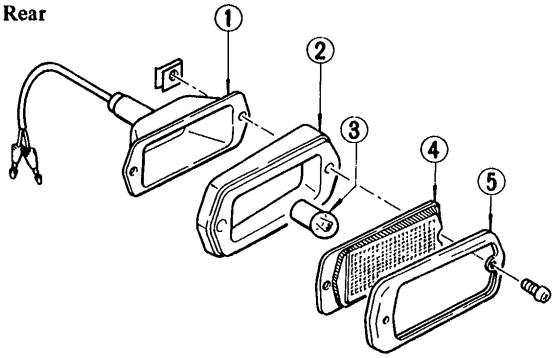

BE616A

BE986

Fig. BE-29 Side marker lamp

Downloaded from www.Manualslib.com manuals search engine

INTERIOR LAMP

BULB REPLACEMENT

1. Remove interior lamp assembly from roof. Interior lamp is retained by its spring back.
2. Pulling lamp body out a little, disconnect three connectors on its back.
3. Remove bulb from lamp body through the hole in its back.
4. Install new bulb in the reverse sequence of removal.

Bulb wattage:
Interior lamp 10W

LAMP BODY REPLACEMENT

1. Remove lamp body from roof.
Lamp body is attached by its spring back.
2. Pulling body out from roof, disconnect three connectors. Lamp body can then be taken out easily.
3. Install new lamp body in the reverse sequence of removal.

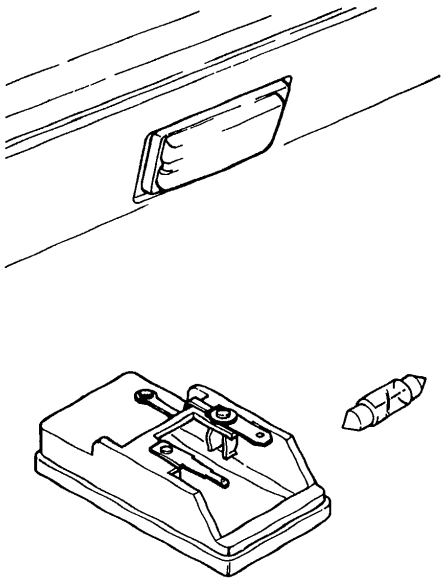

BE987

Fig. BE-30 Interior lamp

REAR COMBINATION LAMP

BULB REPLACEMENT

1. Loosen two screws retaining rear compartment carpet.
2. Lift up spare tire house lid, and twist socket counterclockwise and remove socket with bulb.
3. Press in on hulb, twist it counterclockwise, and remove it from socket.
4. Install new bulb in the reverse sequence of removal.

Bulb wattage:
Stop/Tail 23W/8W
Tail 8W
Turn 23W
Reverse 23W

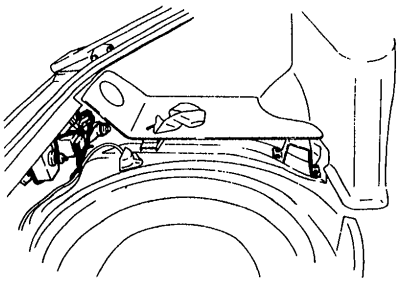

BE450B

Fig. BE-31 Replacing bulbs

LAMP BODY REPLACEMENT

1. Remove plastic rivets retaining rear panel finisher and make rear panel finisher free. Refer to Section BF for details.
2. Disconnect lead wires for rear combination lamp at a connector.
3. Remove six flange nuts retaining rear combination lamp body to rear body panel. Lamp body can then be taken out.
4. Rear panel finisher can be separated by removing four screws.
5. Installation is in the reverse sequence of removal.

LICENSE LAMP

BULB REPLACEMENT

1. Remove two screws retaining lamp body to rear panel and take out lamp body. Refer to Figure BE-32.
2. Twist the socket counterclockwise and remove socket, with bulb, from lamp body.
3. Push in on bulb and twist it counterclockwise. Bulb can then be easily taken out from socket.
4. Install new bulb in the reverse sequence of removal.

Bulb wattage:
License lamp ..... 7.5W x 2

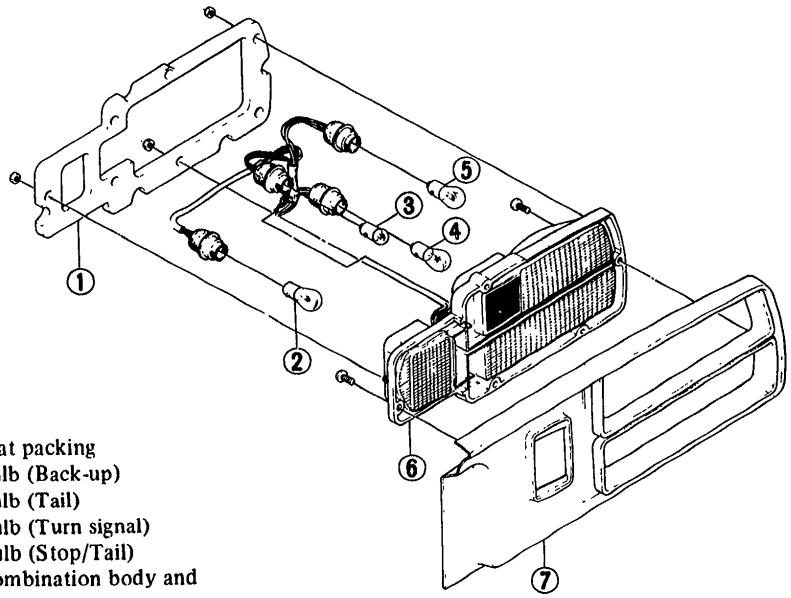

1 Seat packing
2 Bulb (Back-up)
3 Bulb (Tail)
4 Bulb (Turn signal)
5 Bulb (Stop/Tail)
6 Combination body and lens
7 Rear finisher

BE451B

Fig. BE-32 Rear combination lamp

Downloaded from www.Manualslib.com manuals search engine

LAMP BODY REPLACEMENT

1. Remove two screws retaining lamp body to rear finisher and take out lamp body.
2. Disconnect pair of lead wires at connectors.
3. Install new lamp body in the reverse sequence of removal.

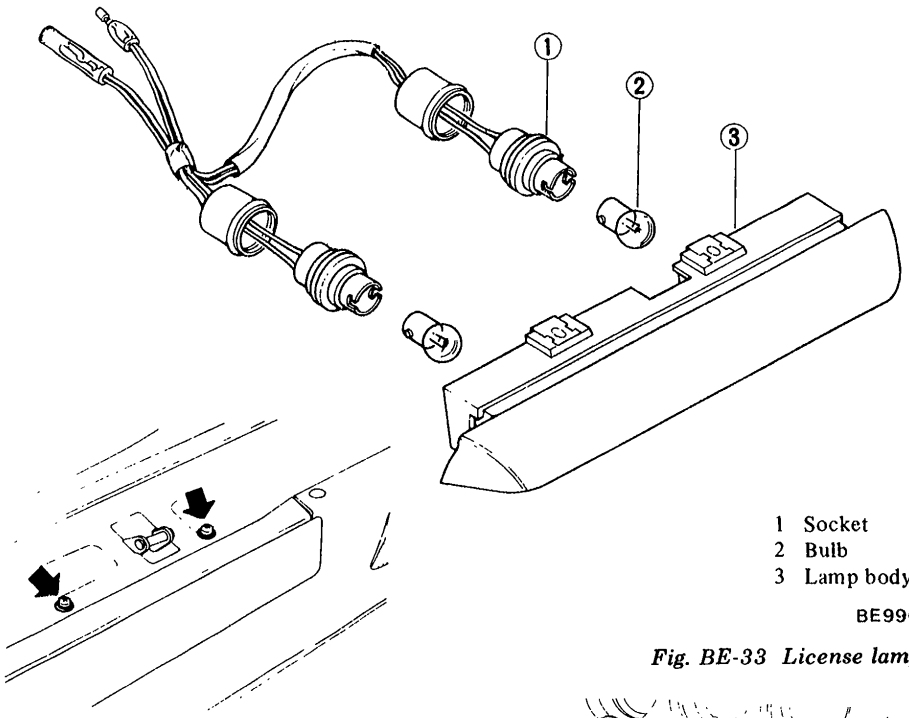

1 Socket
2 Bulb
3 Lamp body

BE990

Fig. BE-33 License lamp

MAP LAMP

BULB REPLACEMENT

1. Remove four screws retaining instrument finisher to instrument panel.
2. Pulling instrument finisher out a little, disconnect lead wires at three connectors. Instrument finisher can then be removed from instrument panel.

Note: Three connectors are for map lamp, floor temperature warning lamp (California models) and fuel warning lamp.

3. Remove two screws retaining map lamp body to instrument finisher. Lamp body can then be taken out.
4. Installation is in the reverse sequence of removal.

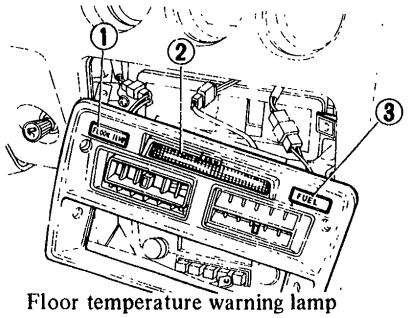

1 Floor temperature warning lamp
2 Map lamp
3 Fuel warning lamp

BE989A

Fig. BE-34 Removing instrument finisher

3. Twist socket behind map lamp and remove socket with bulb.
4. Extract bulb from socket.
5. Installation is in the reverse sequence of removal.

Bulb wattage:
Map lamp 5W

LAMP BODY REPLACEMENT

1. Remove four screws retaining instrument finisher to instrument panel.
2. Pulling instrument finisher out a little, disconnect three connectors. Instrument finisher can then be removed from instrument panel.

Note: Three connectors are for map lamp and for floor temperature warning lamp (California models) and fuel warning lamp.

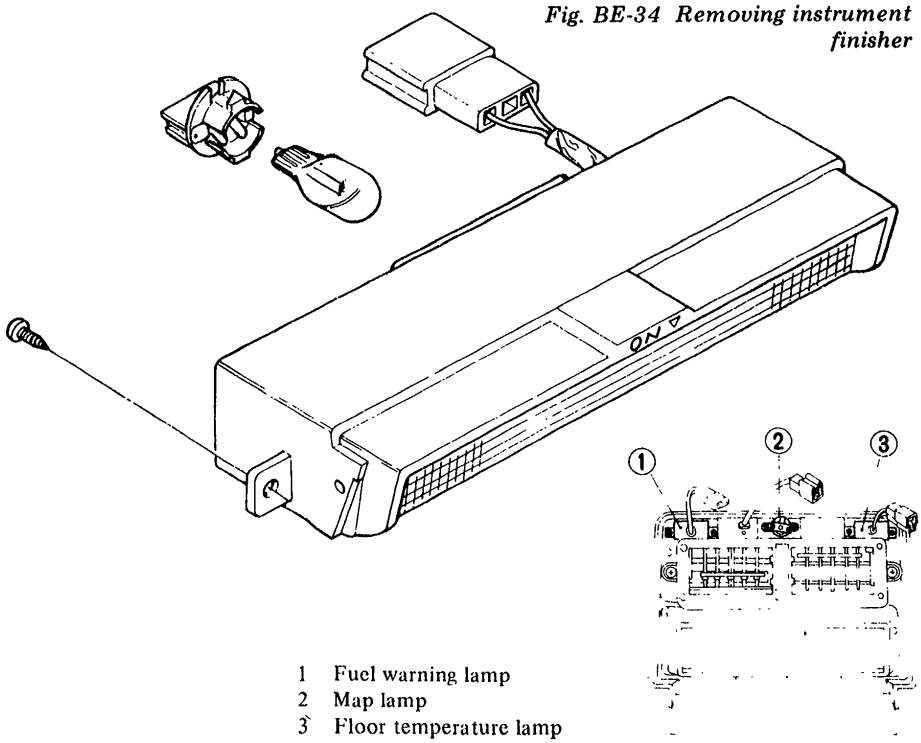

1 Fuel warning lamp
2 Map lamp
3 Floor temperature lamp (California model)

BE990A

Fig. BE-35 Map lamp

Downloaded from www.Manualslib.com manuals search engine

GLOVE BOX LAMP

BULB REPLACEMENT

Bulb is installed at the bottom of lamp body. Pushing the bulb into switch body, twist it counterclockwise. Bulb can then be taken out. Install new bulb in reverse sequence of removal.

Bulb wattage:
Glove box lamp 3.4W

LAMP BODY REPLACEMENT

1. Disconnect battery ground cable.
2. Disconnect pair of lead wires at connectors in glove box.
3. Pull the lamp body with bulb out from bracket.
4. Installation is in the reverse sequence of removal.

INSPECTION

Test continuity between two lead wires. When plunger is pressed into lamp body, continuity must not exist. Conversely, continuity must exist when the plunger is projecting.

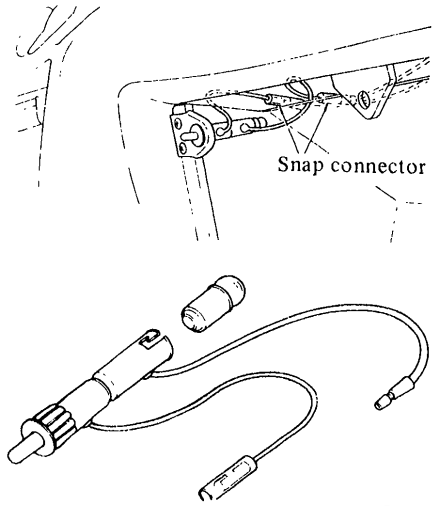

Fig. BE-36 Glove box lamp

AUTOMATIC TRANSMISSION INDICATOR ILLUMINATION LAMP

The illumination lamp is located in the indicator finisher and illuminates the indicator of select lever. Removal and installation is described in Section BF.

BULB REPLACEMENT

1. Remove console box.
2. Remove automatic transmission indicator finisher.
3. Remove socket with bulb from beneath indicator finisher.
4. Remove bulb from socket.
5. Install new bulb in the reverse sequence of removal.

Bulb wattage:
Automatic transmission indicator illumination lamp 3.4W

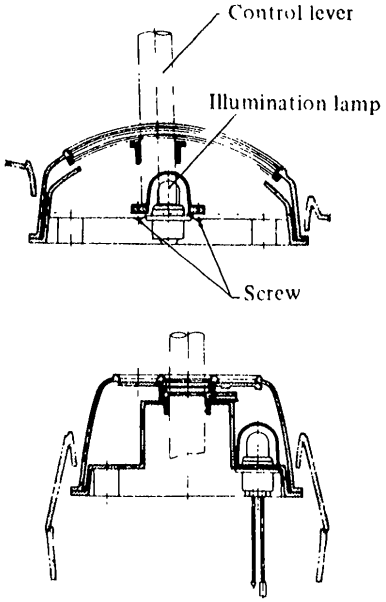

Fig. BE-37 Automatic transmission indicator lamp

ASHTRY ILLUMINATION LAMP

Ashtray illumination lamp is installed in the ashtray on the console.

This lamp is useful at night when using ashtray.

REMOVAL AND INSTALLATION

1. Pull up the ashtray pan and remove it.
2. Push in bulb with socket backward and take it out.
3. Remove bulb from socket (Push and turn counterclockwise).

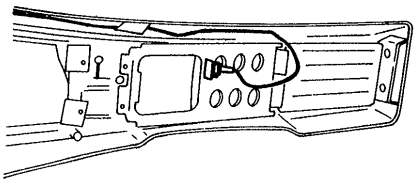

Fig. BE-38 Ashtray illumination lamp

INDICATOR LAMPS

Turn signal indicator lamps and high beam indicator lamp are installed on tachometer and speedometer.

They can be replaced easily by pulling socket, with bulb, from back of meter. Refer to Meters and Gauges.

INSPECTION LAMP

Inspection lamp is located on left side of engine room. Should some mechanical difficulty occur at night, this lamp is extremely useful for detection of the source of the problem and/or illumination of the repair job.

REMOVAL AND INSTALLATION

1. Disconnect lead wire at a connector.
2. Remove two screws retaining lamp to engine room. Lamp assembly can then be taken out easily.
3. Installation is in the reverse sequence of removal.

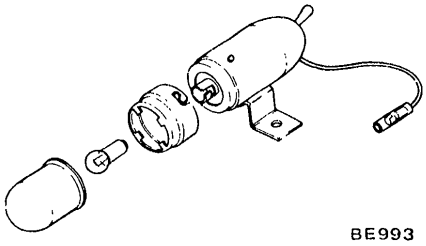

Fig. BE-39 Inspection lamp

Downloaded from www.Manualslib.com manuals search engine

BULB REPLACEMENT

1. Twist socket and lens and take them out from lamp housing.
2. Push on lens and twist counterclockwise. Lens can then be taken out from socket.
3. Push in on bulb and twist bulb counterclockwise. Bulb can then be taken out from socket.

INSPECTION

Test continuity between terminal for power source harness and body at each step of switch. Test can be carried out by using ohmmeter or test lamp.

COMBINATION SWITCH

The combination switch consists of a light switch, a wiper switch, a washer switch, a turn signal and lane changer switch, and a dimmer switch. The two levers on the switch are for turn signal and lane changer switch and for light and wiper switch. They can be separated into two pieces. Position the turn signal switch lever at the first stop position, for left or right direction, when changing lanes. Turn signal lamps operate until the lever is released. Move the lever up and down to change headlamp between high and low beams.

Lighting switch is operated by a dial with a small knob. Wiper switch is operated by outer dial; washer switch is at the top of the switch lever.

REMOVAL AND INSTALLATION

1. Disconnect battery ground cable.
2. Remove all screws retaining shell covers to each other and remove shell covers from steering column jacket.
3. Disconnect lead wires from combination switch at five connectors. They consist of two large connectors. One with nine terminals and the other with six terminals.
4. Remove two screws retaining combination switch to steering column jacket.

The switch will then separate into two pieces and can be easily removed.

Note: There is a lead wire between L.H. and R.H. piece. It is unnecessary to disconnect the connector for it.

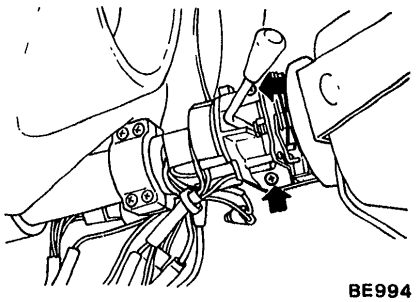

BE994

Fig. BE-40 Removing combination switch

5. Installation is in the reverse sequence of removal.

Note: Make sure that location tab of combination switch lines up with hole in steering column jacket. Location tab is inside of turn signal switch.

INSPECTION

Test continuity through turn signal switch at each step and position with a test lamp or ohmmeter. Consult continuity diagram described in Figure BE-41.

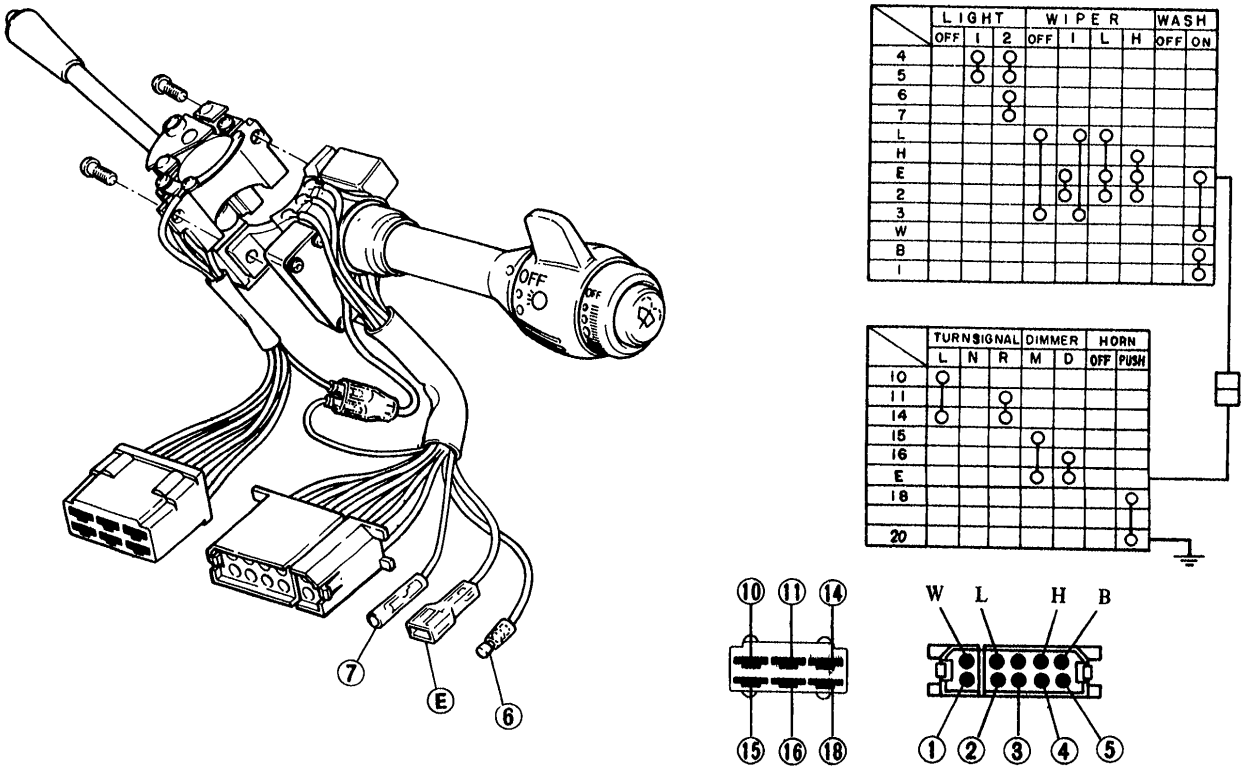

BE453B

Fig. BE-41 Combination switch

Downloaded from www.Manualslib.com manuals search engine

DOOR SWITCH

The switch for L.H. door is different than that for R.H. door.

The switch for L.H. door has four lead wires. Two of them are for the theft protection system and the other two for the interior lamp.

The switch for R.H. door has two lead wires for the interior lamp.

REMOVAL AND INSTALLATION

Door switch is located at L.H. and R.H. front door pillar.

1. Withdraw switch and wire assembly from front pillar.

Note: If it proves difficult to remove by hand, it can be removed easily with aid of screwdriver.
In using screwdriver, however, take care not to damage painted surface.

2. Disconnect lead wires at connectors. Switch can then be taken out.
3. Installation is in the reverse sequence of removal.

INSPECTION

Test continuity through door switch with a test lamp or ohmmeter.

When plunger is pressed into switch assembly, door switch contacts are open. Conversely, contacts are closed when plunger is projected.

STOP LAMP SWITCH

REMOVAL AND INSTALLATION

Stop lamp switch is integral part of brake pedal height.

Whenever stop lamp switch is removed, some adjustment is required.

1. Disconnect lead wires at connectors.
2. Loosen lock nut. Switch assembly can then be taken out by rotating switch.
3. Install in reverse sequence of removal.

INSPECTION

When plunger is pressed into switch assembly, stop lamp switch contacts are open; contacts are closed when plunger is projected.

Test continuity as previously described with a test lamp or ohmmeter.

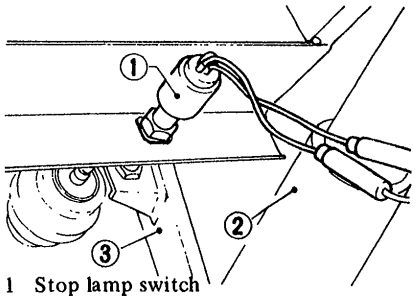

1 Stop lamp switch
2 Steering column
3 Brake pedal

BE997

Fig. BE-43 Stop lamp switch

BACK-UP LAMP SWITCH

REPLACEMENT

Back-up lamp switch is installed on transmission. In manual transmission, this switch is installed on its case. In automatic transmission, the switch is an integral part of inhibitor switch. Removal and installation are described in Sections MT and AT.

INSPECTION

When the transmission lever is in R position, continuity between these harnesses for back-up lamp switch must exist.

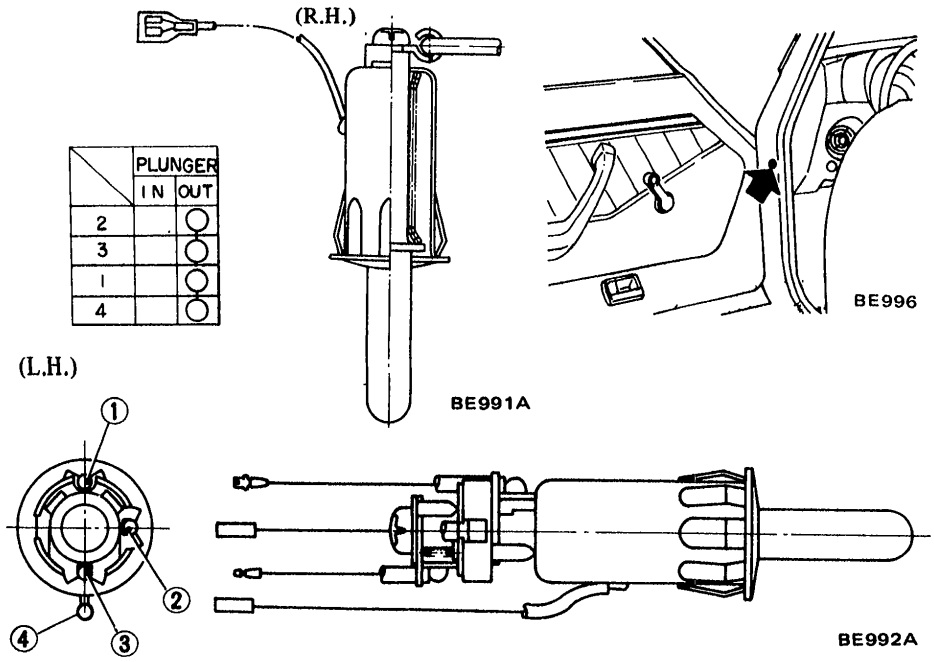

Fig. BE-42 Door switch

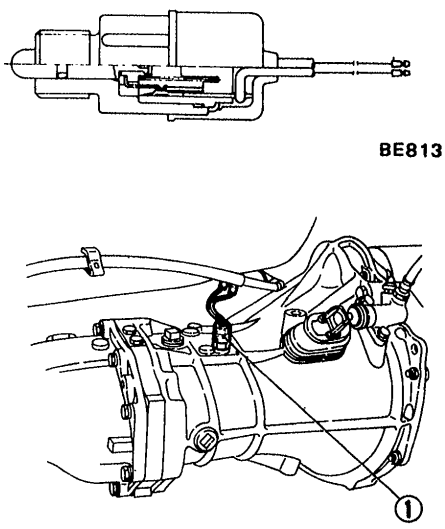

1 Back-up lamp switch

BE454B

Fig. BE-44 Back-up lamp switch

Downloaded from www.Manualslib.com manuals search engine

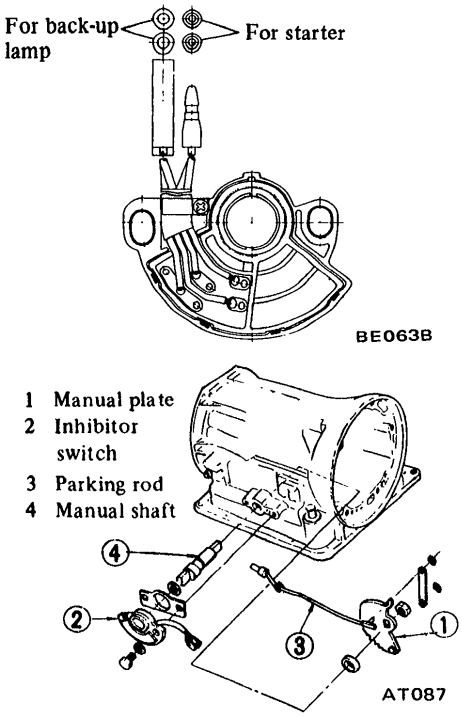

Fig. BE-45 Inhibitor switch

HAZARD SWITCH

REMOVAL AND INSTALLATION

1. Disconnect battery ground cable.
2. Remove console box, referring to Section BF.
3. From behind console box, grasp nail of switch body and push it out of console box.
4. Disconnect lead wires at a connector.
5. Installation is in the reverse sequence of removal.

Note: Switch body can be installed on console box only by pressing it in.

BULB REPLACEMENT

1. Take out switch assembly as described previously.
2. Push the socket and twist counterclockwise; socket with bulb can then be taken out.
3. Extract the bulb from socket.
4. Installation is in the reverse sequence of removal.

Bulb wattage:
Hazard switch
illumination lamp 1.4W

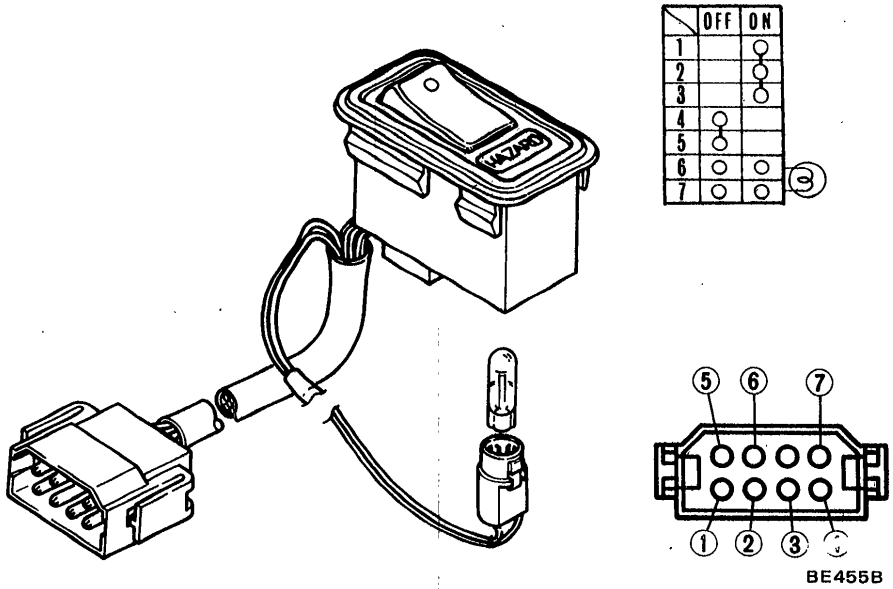

Fig. BE-46 Hazard switch

INSPECTION

Test continuity through the switch at each step with an ohmmeter or test lamp.

The continuity diagram is indicated in the following figure.

IGNITION AND STARTING SWITCH

The ignition switch is installed at bottom of steering lock. For information on engine electrical system, refer to Section EE.

REPLACEMENT

1. Remove screws retaining shell covers to each other.
2. Remove shell covers and disconnect lead wires at a connector.

Note: Connector is at the bottom of steering lock.

3. Remove screw retaining switch to steering lock.

Switch assembly can be taken out easily.

4. Installation is in reverse sequence of removal.

INSPECTION

Test continuity through ignition switch at each step with ohmmeter or test lamp. Refer to following continuity diagram.

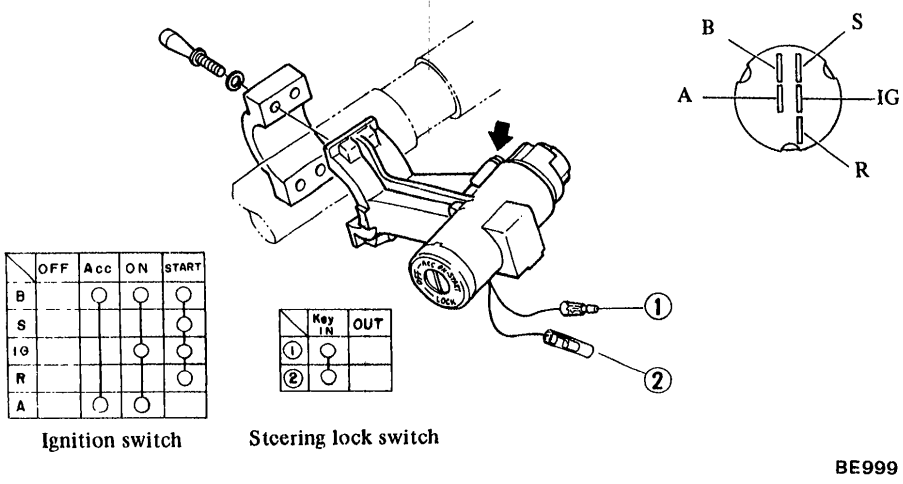

Fig. BE-47 Ignition and starting switch

Downloaded from www.Manualslib.com manuals search engine

RHEOSTAT (For illumination control)

This rheostat controls the brightness of illumination for each meter, clock, radio and heater control; it is a rheostat (variable resistor) and its value can be controlled by a knob.

REMOVAL AND INSTALLATION

1. Pull off illumination control knob and tripmeter reset knob.
   They should come off easily.
2. Remove tachometer.
   Refer to METER AND GAUGE REPLACEMENT section.
3. Loosen small screw retaining tripmeter cable to speedometer and detach cable from the hole of tachometer.
4. Disconnect leading wire to rheostat at the connector from behind instrument panel.
5. Disconnect left-hand air duct from behind instrument panel.
6. Remove screws securing tripmeter reset cable to a bracket and detach trip reset cable.
7. Loosen nut securing rheostat to the bracket and then rheostat can be taken out from behind instrument panel.

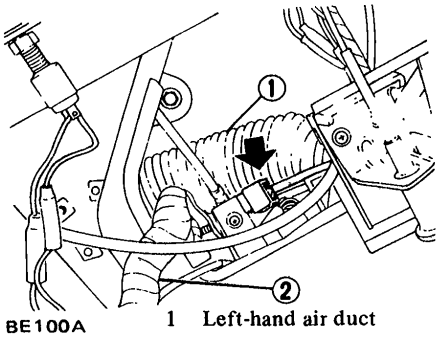

BE100A

1 Left-hand air duct
2 Floor duct
(Air conditioned model)

Fig. BE-48 Disconnect connector for rheostat

8. Installation is in the reverse requence of removal.

INSPECTION

Test continuity and resistance between two lead wires with ohmmeter.

When switch is in OFF position, continuity must not exist. In ON position the resistance varies from about 10 Ω to 0Ω depending on the setting of the knob.

FLASHER UNIT REPLACEMENT

Two flasher units are installed at L.H. side trim under instrument panel. One is for turn signal and the other is for hazard. They are different from each other.

1. Disconnect battery ground cable.
2. Disconnect lead wires at connector.
3. Remove screw retaining flasher unit.
4. Install new flasher unit in the reverse sequence of removal.

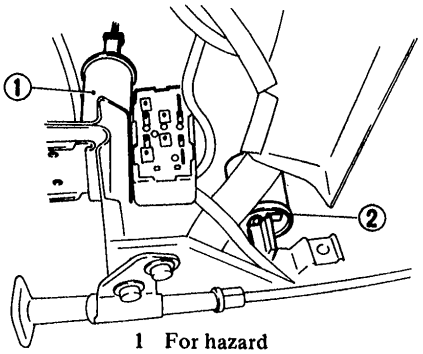

1 For hazard
2 For turn signal

BE570A

Fig. BE-50 Flasher units

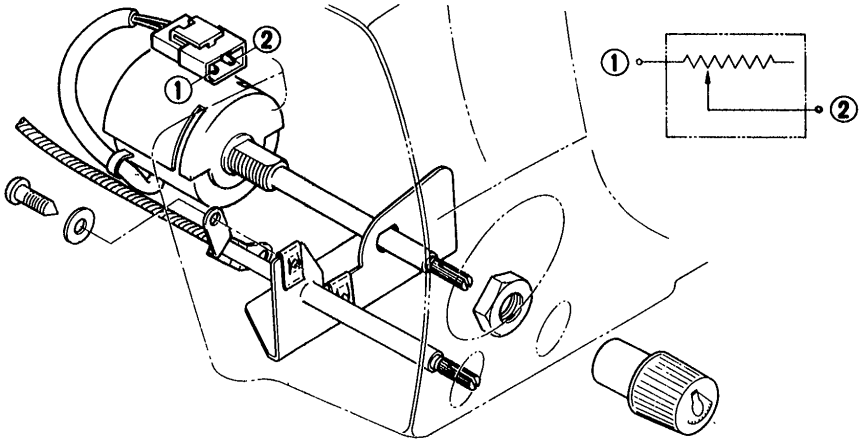

BE456B

Fig. BE-49 Illumination control rheostat

Downloaded from www.Manualslib.com manuals search engine

TROUBLE DIAGNOSES AND CORRECTIONS

HEADLAMP

Condition	Probable cause	Corrective action
Headlamps do not light for either high or low beams.	Burnt fusible link.	Correct cause and replace fuse.
	Loose connection or open circuit.	Check wiring and/or repair connection.
	Faulty combination switch.	Conduct continuity test and replace if necessary.
	No ground.	Clean and tighten ground terminal.
High beam cannot be switched to low beam or vice versa.	Faulty combination switch.	Conduct continuity test and replace if necessary.
Headlamps dim.	Partly discharged or faulty battery.	Measure specific gravity of electrolyte and recharge or replace battery if necessary.
	Faulty charging system.	Measure voltage at headlamp terminals. If it is less than 12.8V, check charging system for proper operation.
	Poor ground or loose connection.	Clean and/or tighten.
	Burnt fusible link.	Replace.
Headlamp lights on only one side.	Loose headlamp connection.	Repair.
	Faulty headlamp beam.	Replace.

TURN SIGNAL LAMP

Condition	Probable cause	Corrective action
Turn signals do not operate.	Burnt fuse.	Correct cause and replace.
	Faulty ignition relay.	Check for operation of circuits (i.e., meters and gauges) electrically connected to ignition relay. If they do not function, replace ignition relay.
	Loose connection or open circuit.	Check wiring and/or repair connection.
	Faulty flasher unit.	Replace.
	Faulty turn signal switch.	Conduct continuity test and replace if necessary.
Flashing cycle is too slow, (Pilot lamp does not go out.) or too fast.	Bulbs of other than specified wattage are being used.	Replace with one specified.
	Burnt bulbs.	Replace.
	Loose connection.	Repair.
	Faulty flasher unit.	Replace.
Flashing cycle is irregular.	Burnt bulb.	Replace.
	Loose connection.	Repair.
	Bulb of other than specified wattage is being used.	Replace with one specified.

Downloaded from www.Manualslib.com manuals search engine

TAIL LAMP, STOP LAMP AND BACK-UP LAMP

Condition	Probable cause	Corrective action
Both right and left lamps do not light.	Burnt fuse.	Correct cause and replace.
	Faulty ignition relay (Back-up lamp only).	Check for operation of circuits (i.e., meters, gauges and turn signal lamp) electrically connected to ignition relay. If they do not function, replace ignition relay.
	Faulty back-up lamp switch. Faulty inhibitor switch.	Conduct continuity test and replace if necessary.
	Loose connection or open circuit.	Check wiring and/or repair connection.
Lamp on only one side lights.	Burnt bulb.	Replace.
	Loose bulb.	Repair lamp socket.

METERS AND GAUGES

CONTENTS

DESCRIPTION BE-29
BULB SPECIFICATIONS BE-30
CIRCUIT DIAGRAM BE-31
METER AND GAUGE REPLACEMENT BE-37
TACHOMETER BE-37
SPEEDOMETER BE-38
TEMP-OIL AND VOLT-FUEL GAUGES BE-39
OIL PRESSURE AND WATER TEMPERATURE INDICATING SYSTEM BE-40
DESCRIPTION BE-40
REPLACEMENT BE-40
INSPECTION BE-40
VOLTMETER AND FUEL LEVEL INDICATING SYSTEM BE-40
DESCRIPTION BE-40
REPLACEMENT BE-40
INSPECTION BE-41
CHARGE WARNING SYSTEM BE-41
DESCRIPTION BE-41
REPLACEMENT BE-42
INSPECTION BE-42
BRAKE WARNING SYSTEM BE-42
DESCRIPTION BE-42
REPLACEMENT BE-43
INSPECTION BE-43
TROUBLE DIAGNOSES AND CORRECTIONS BE-43
SPEEDOMETER BE-43
WATER TEMPERATURE AND OIL PRESSURE GAUGES BE-44
FUEL GAUGE BE-45

DESCRIPTION

This section includes information on all meters and gauges. Bulbs for indicator or for illumination can be easily replaced by twisting bulb socket.

All meters and gauges can be easily replaced without removing instrument panel.

Downloaded from www.Manualslib.com manuals search engine

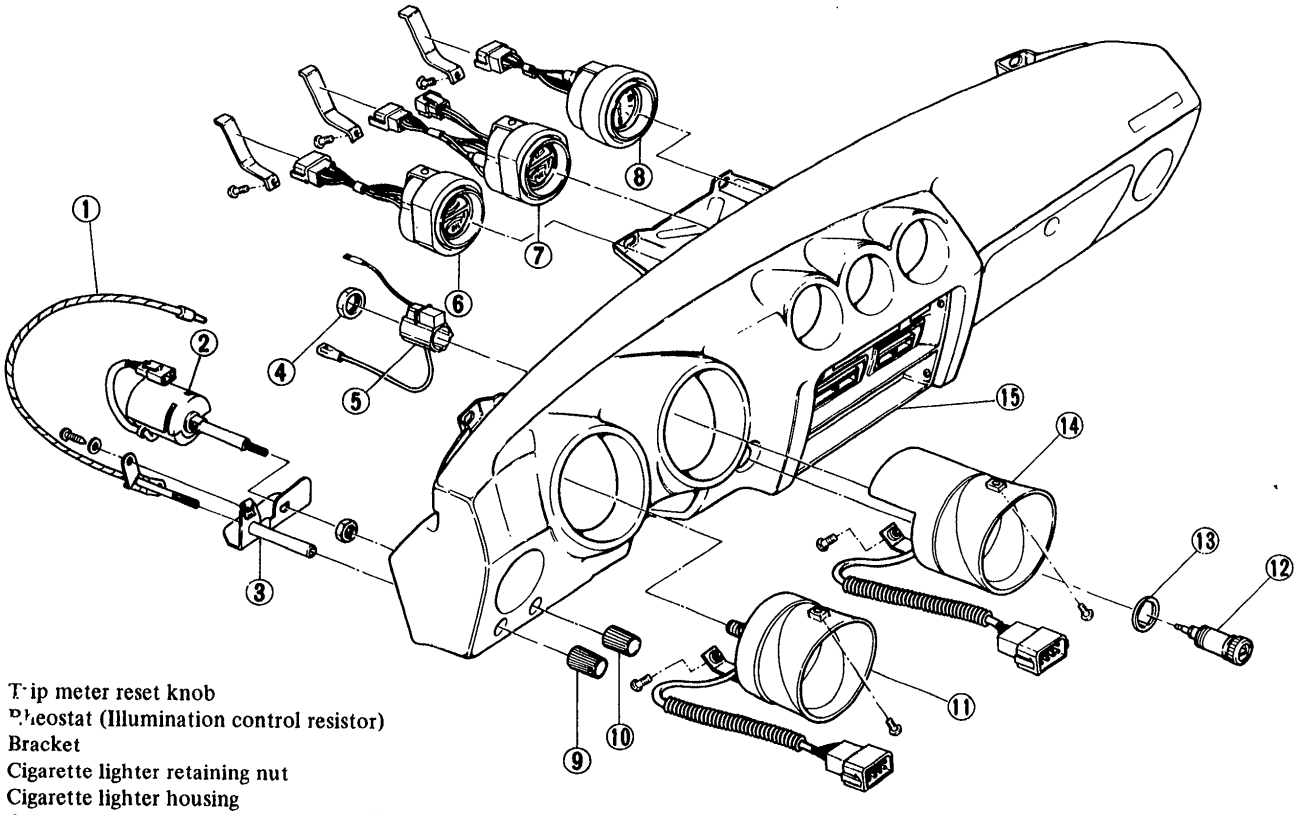

1 Trip meter reset knob
2 Rheostat (Illumination control resistor)
3 Bracket
4 Cigarette lighter retaining nut
5 Cigarette lighter housing
6 OIL-TEMP gauge
7 VOLT-FUEL gauge
8 Clock
9 Knob (Trip meter reset)
10 Knob (Rheostat)
11 Speedometer
12 Cigarette lighter
13 Escutcheon
14 Tachometer
15 Instrument finisher

BE457B

Fig. BE-51 Meters and gauges

BULB SPECIFICATIONS

Item	Wattage	Q'ty	SAE trade number	Remarks
Speedometer Illumination lamp	3.4W	2	57X	
Tachometer Illumination lamp	3.4W	2	57X	
Brake warning lamp	3.4W	1	57X	
OIL-TEMP gauge illumination	3.4W	1	57X	
VOLT-FUEL gauge illumination	3.4W	1	57X	
CLOCK illumination lamp	3.4W	1	57X	
Charge warning lamp	3.4W	1	57X	

Downloaded from www.Manualslib.com manuals search engine

CIRCUIT DIAGRAM

Tachometer operating system

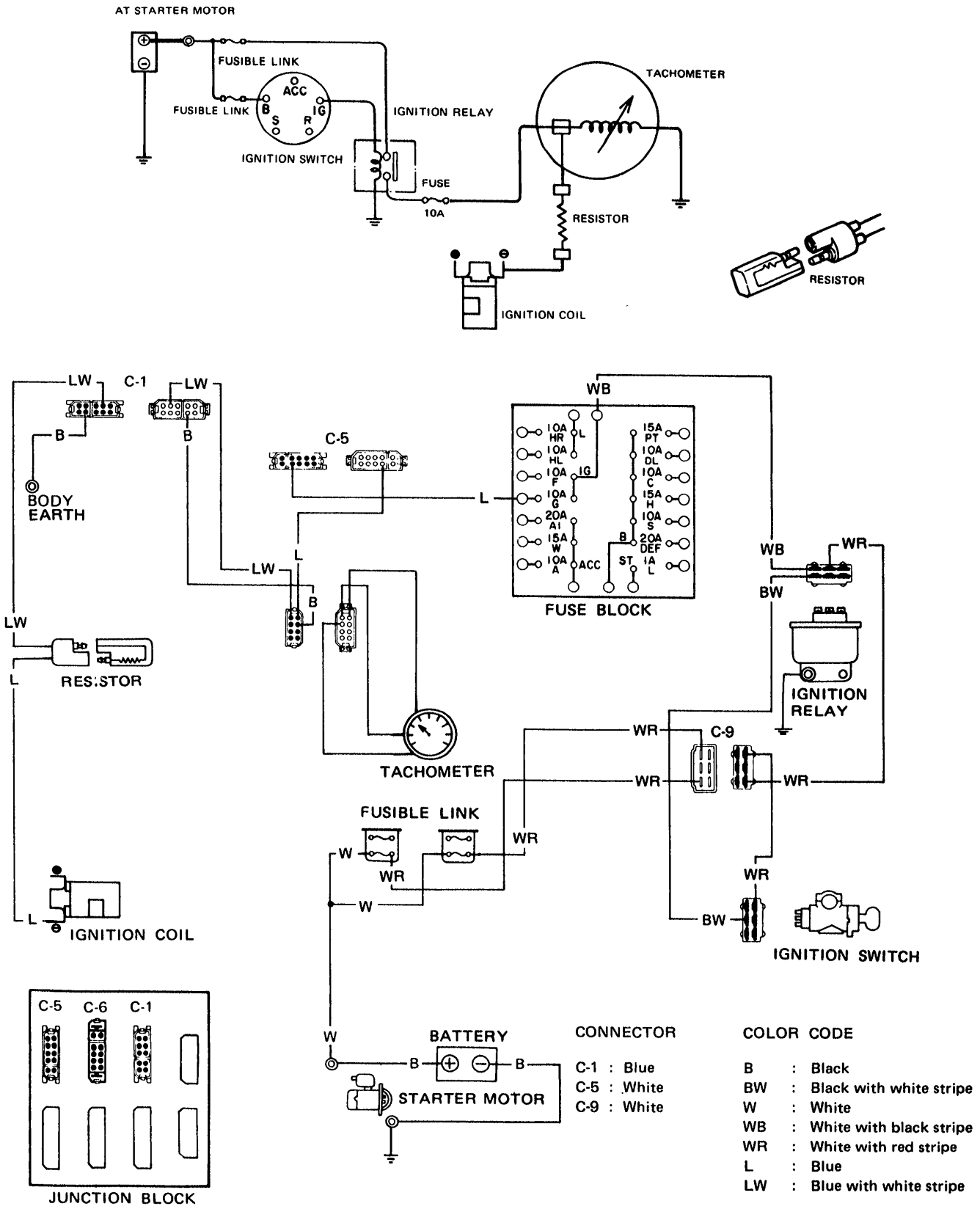

Fig. BE-52 Circuit diagram for tachometer

Downloaded from www.Manualslib.com manuals search engine

Water temperature and oil pressure indicating system

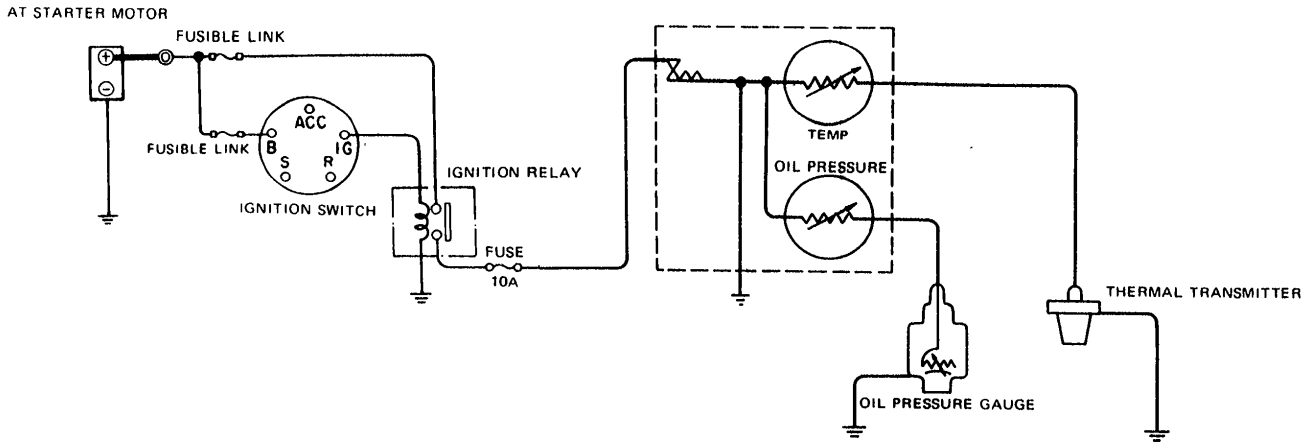

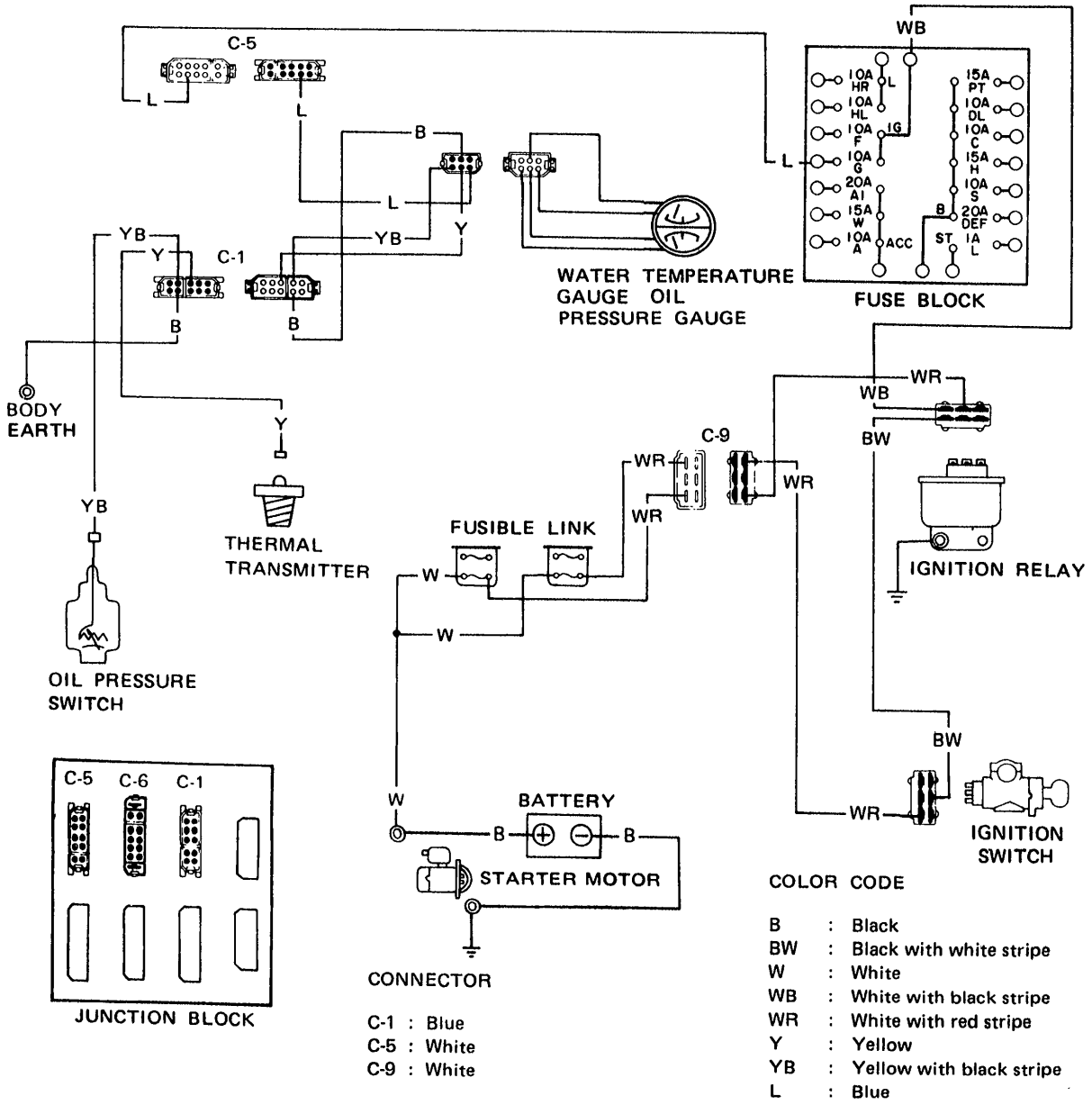

Fig. BE-53 Circuit diagram for water temperature and oil pressure

Downloaded from www.Manualslib.com manuals search engine

Voltmeter and fuel level indicating and fuel level warning system

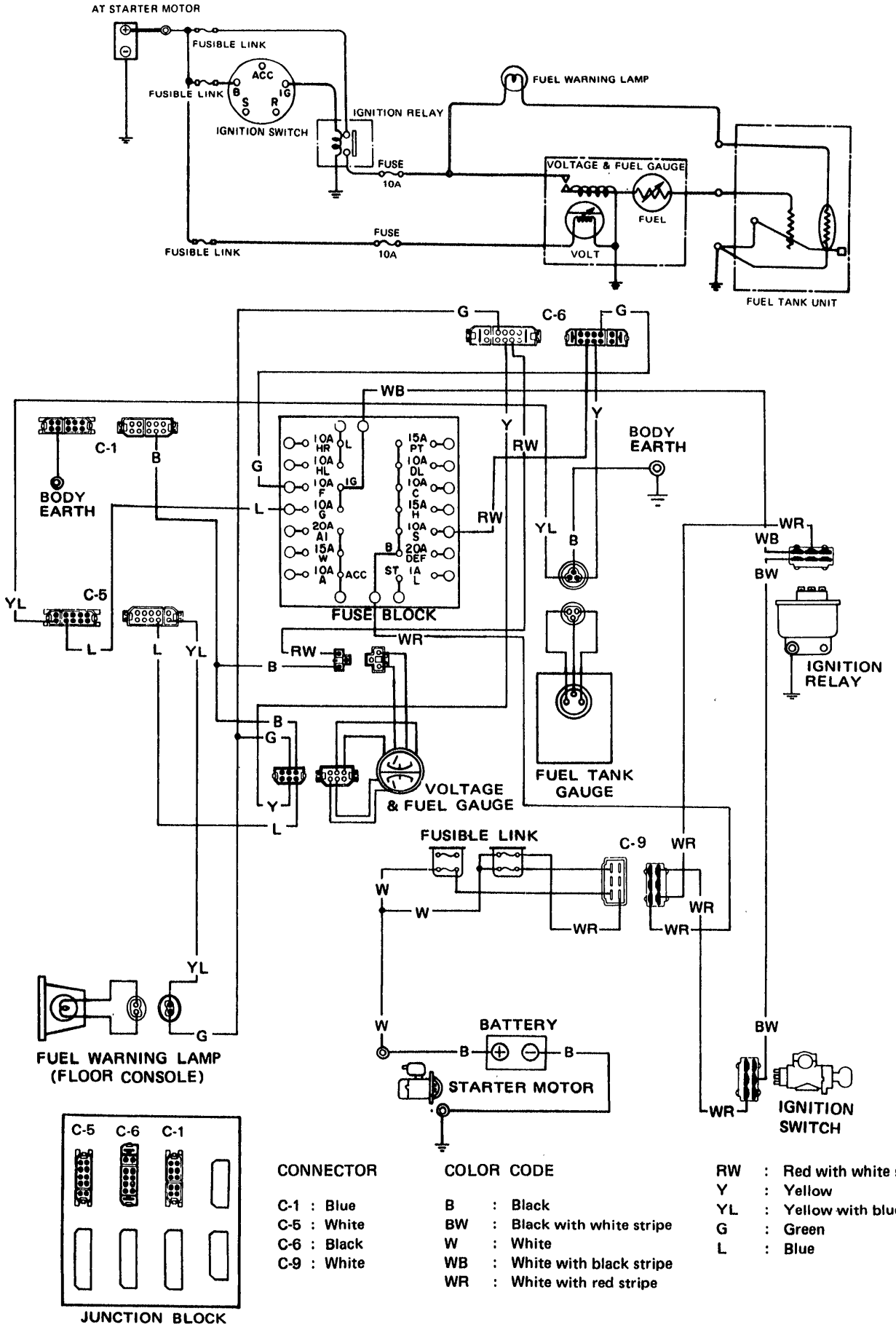

Fig. BE-54 Circuit diagram for voltmeter and fuel level indicating and fuel level warning system

Downloaded from www.Manualslib.com manuals search engine

Brake warning system

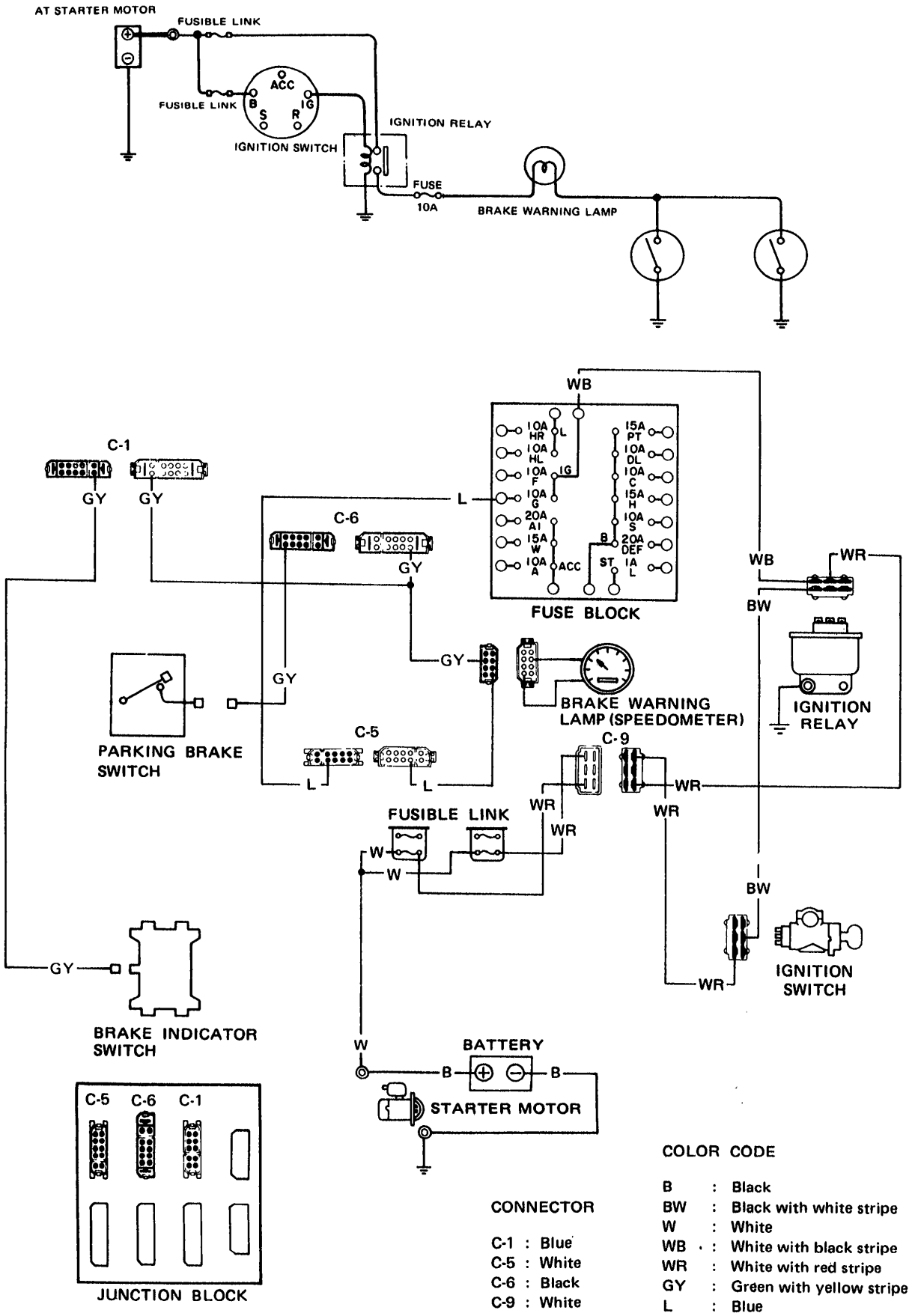

Fig. BE-55 Circuit diagram for brake warning system

Downloaded from www.Manualslib.com manuals search engine

Brake warning lamp checking system

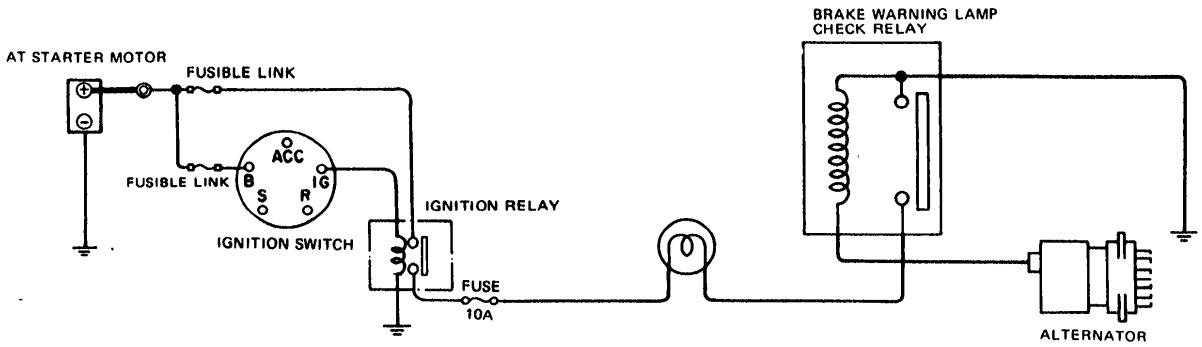

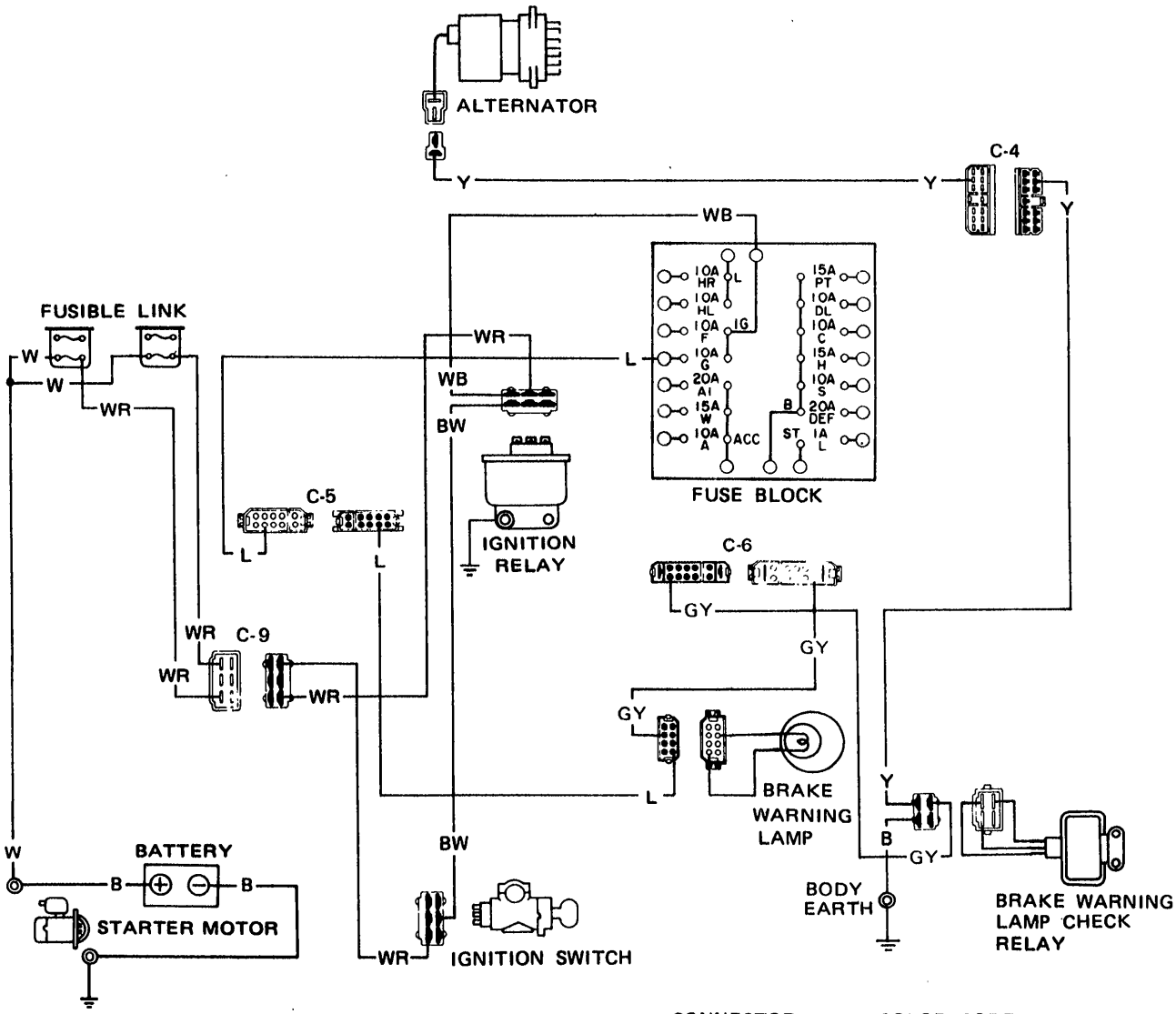

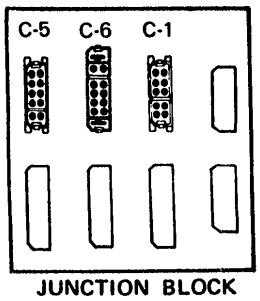

CONNECTOR		COLOR CODE		
C-4	: White	B	:	Black
C-5	: White	BW	:	Black with white stripe
C-6	: Black	W	:	White
C-9	: White	WB	:	White with black stripe
		WR	:	White with red stripe
		Y	:	Yellow
		GY	:	Green with yellow stripe
		L	:	Blue

BE462B

Fig. BE-56 Circuit diagram for brake warning lamp checking system

Downloaded from www.Manualslib.com manuals search engine

Charge warning lamp system

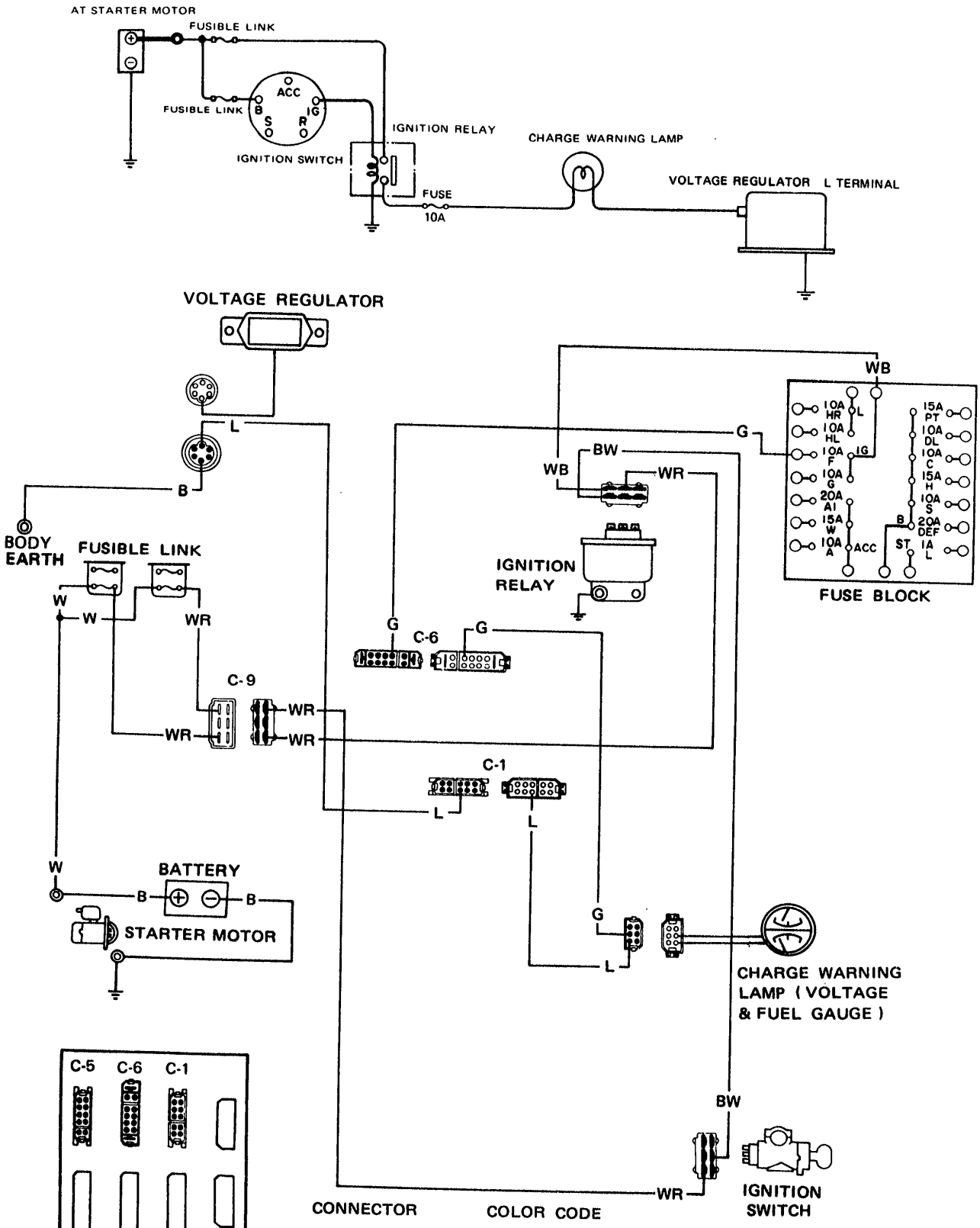

CONNECTOR		COLOR CODE		
C-1	: Blue	B	:	Black
C-6	: Black	BW	:	Black with white stripe
C-9	: White	W	:	White
		WB	:	White with black stripe
		WR	:	White with red stripe
		G	:	Green
		L	:	Blue

BE463B

Fig. BE-57 Circuit diagram for charge warning lamp

Downloaded from www.Manualslib.com manuals search engine

METER AND GAUGE REPLACEMENT

TACHOMETER

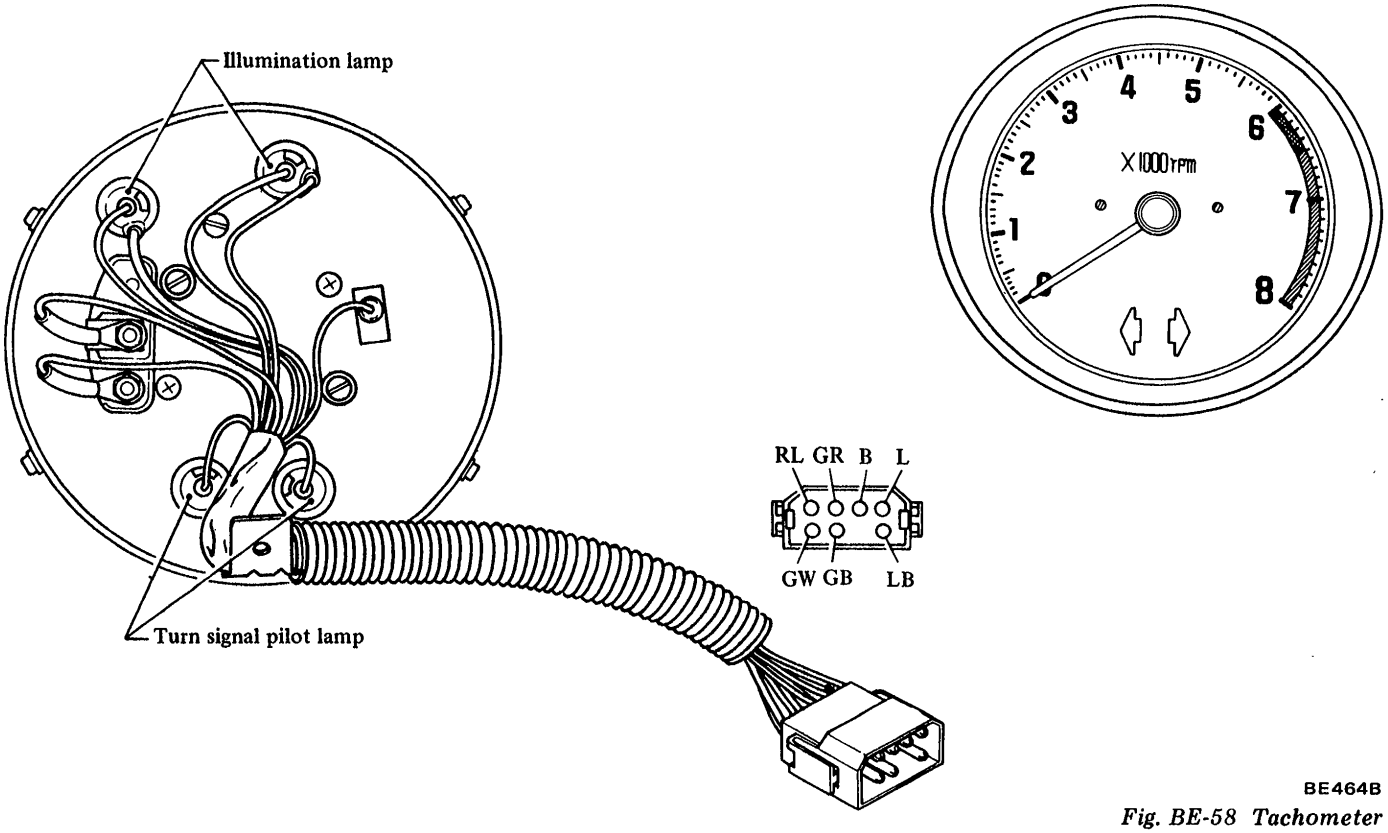

BE464B

Fig. BE-58 Tachometer

The tachometer is retained by two screws, and can be taken out easily. A pair of turn signal indicator lamps and a pair of illumination lamps are also installed. Their bulbs can be removed easily by twisting socket at back of tachometer.

This tachometer is a voltage trigger type.

Removal and Installation

1. Remove screw ① retaining tachometer at upper side of instrument panel. See following figure.

2. Working from beneath instrument panel, remove the other screw ② retaining tachometer to bracket of instrument panel.

3. Pulling tachometer assembly out from instrument panel, disconnect connector to instrument harness. Tachometer assembly can then be taken out easily.

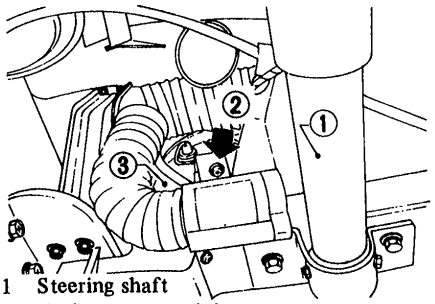

1 Steering shaft
2 Tachometer retaining screw
3 Tachometer

BE110A

Fig. BE-61 Removing screw—②

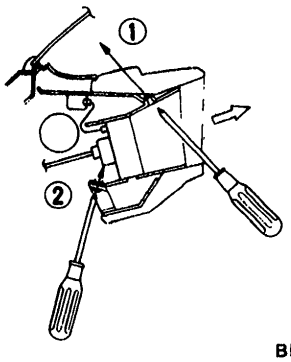

BE465B

Fig. BE-59 Removing screws

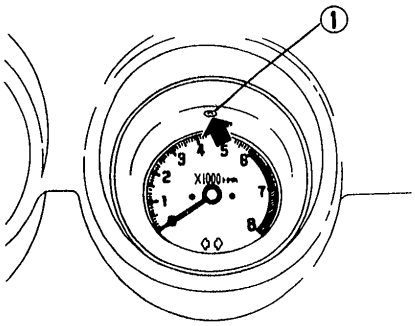

BE663A

Fig. BE-60 Removing screw—①

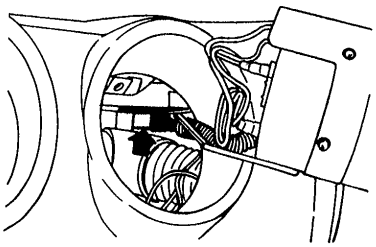

BE669B

Fig. BE-62 Disconnecting connector

Downloaded from www.Manualslib.com manuals search engine

Bulb replacement

Pull out socket, with bulb, from back of tachometer and extract bulb from socket.

Install new bulb in reverse sequence of removal.

Bulb wattage:

Turn signal indicator lamp	3.4W
Illumination lamp	3.4W

SPEEDOMETER

Speedometer is attached by two screws.

High beam indicator lamp, brake warning lamp, an odometer and a tripmeter are integral parts of speedometer. On manual transmission models, a speed switch with amplifier is added.

Consequently, speedometer on manual transmission models is different from that on automatic transmission models. All bulbs on speedometer can be replaced easily.

Removal and installation

1. Remove tachometer as described previously.
2. Disconnect speedometer cable at junction screw on back of meter.
3. Through hole in which tachometer is installed, disconnect trip meter reset cable.

Note: Reset cable can be removed from speedometer by loosening a small screw.

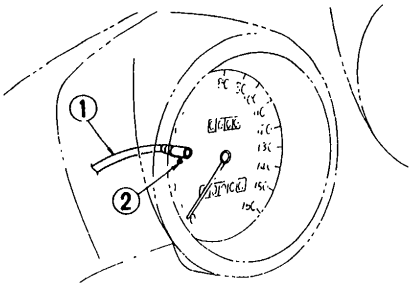

1 Tripmeter reset cable
2 Retaining small screw

BE113A

Fig. BE-64 Removing reset cable

4. Remove screw ① retaining speedometer. See following figure.

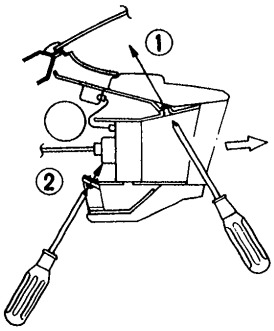

BE671B

Fig. BE-65 Removing screws

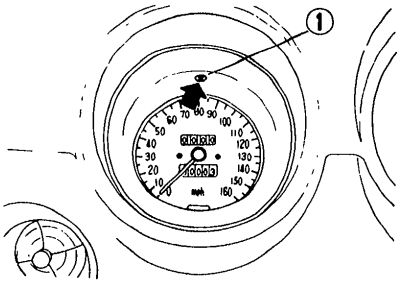

BE114A

Fig. BE-66 Removing screw ①

5. Working from beneath instrument panel, remove other screw ② retaining speedometer to bracket of instrument panel.

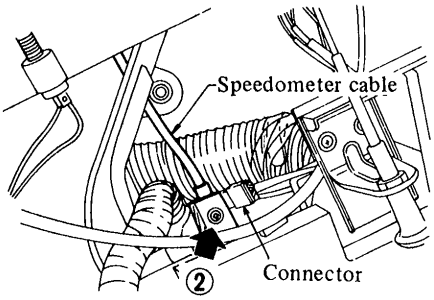

BE100A

Fig. BE-67 Removing screw ②

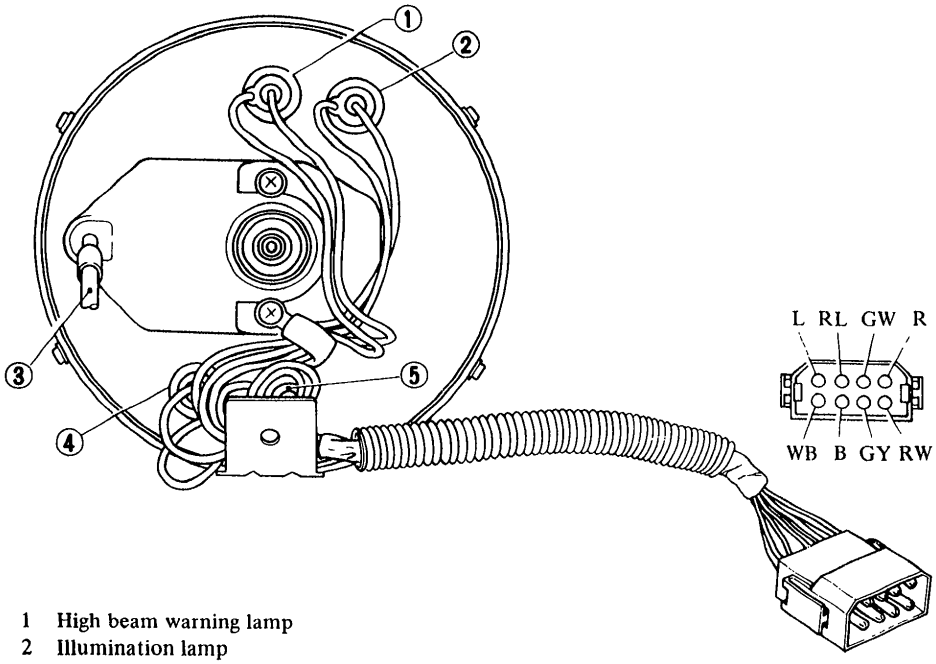

1 High beam warning lamp
2 Illumination lamp
3 Trip counter reset cable
4 Illumination lamp
5 Brake warning lamp

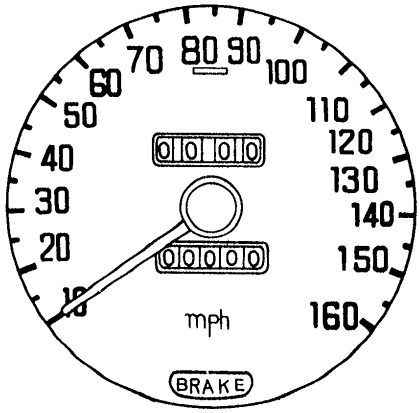

Except Canada

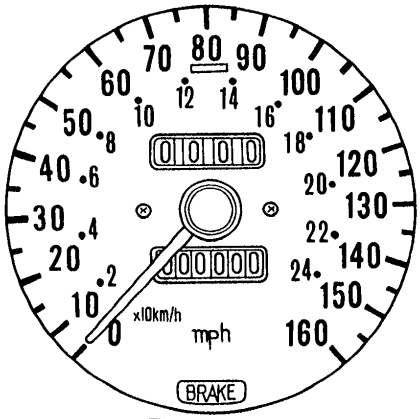

For Canada

BE670B

Fig. BE-63 Speedometer

Downloaded from www.Manualslib.com manuals search engine

6. Pulling speedometer out from instrument harness, disconnect a connector for instrument harness.

Speedometer can then be taken out.

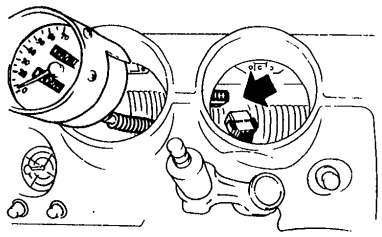

BE672B

Fig. BE-68 Disconnecting connector

Bulb replacement

Pull out socket, with bulb, from back of speedometer and extract bulb from socket.

Install new bulb in reverse sequence of removal.

Bulb wattage:

High beam indicator 3.4W
Brake warning lamp 3.4W

TEMP-OIL AND VOLT-FUEL GAUGES

These gauges are attached to instrument panel with spring bracket. The spring bracket is retained by a screw. Consequently, each gauge can be easily taken out by removing retaining screw.

Removal and installation

1. Remove four screws retaining instrument finisher to instrument panel. Pulling instrument finisher out a little, disconnect two connectors.

Instrument finisher can then be taken out.

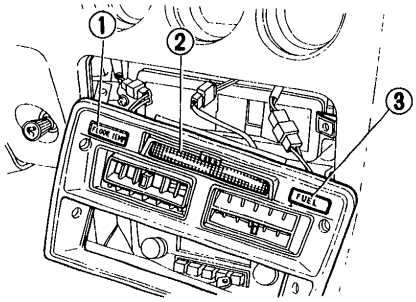

1 Floor temperature warning lamp (California models)
2 Map lamp
3 Fuel warning lamp

BE989A

Fig. BE-70 Removing instrument finisher

2. Remove two screws retaining three-way venti-duct to instrument panel and four screw for bracket.

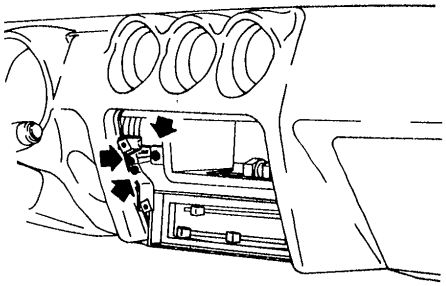

Fig. BE-71 Removing three-way duct retaining screws

3. Disconnect duct hoses from three-way duct and take out three-way duct.

4. Remove screw retaining each gauge to instrument panel.

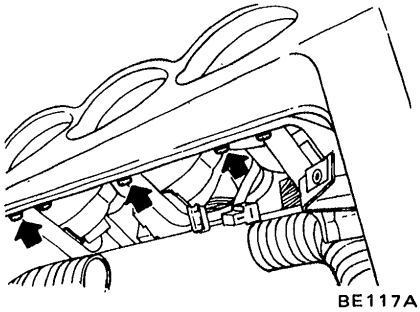

BE117A

Fig. BE-72 Removing gauge retaining screws

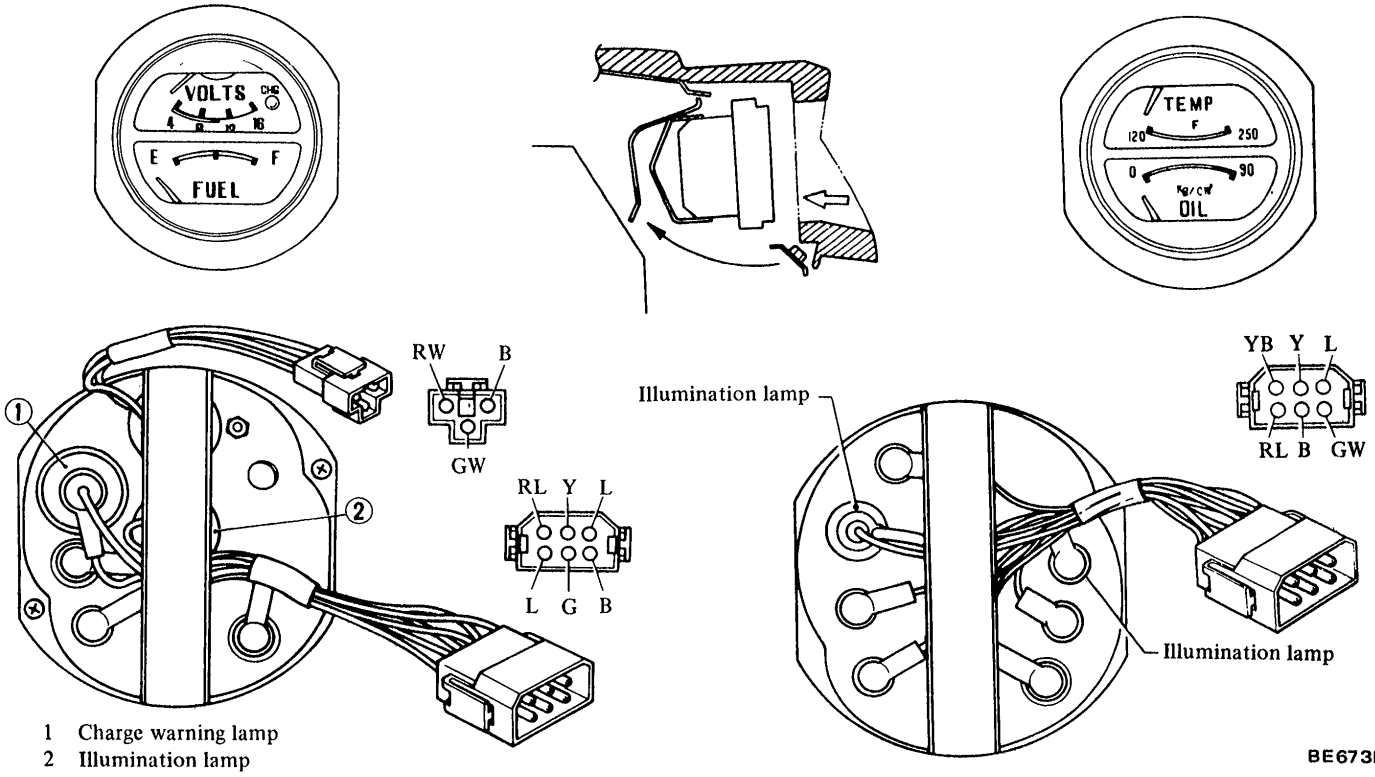

1 Charge warning lamp
2 Illumination lamp

BE673B

Fig. BE-69 TEMP-OIL and VOLT-FUEL gauges

Downloaded from www.Manualslib.com manuals search engine

5. Pulling gauge out backward, disconnect each connector. Gauge can then be taken out.

Note: TEMP-OIL gauge has a connector with six terminals. VOLT-FUEL gauge has two connectors: a larger one and a smaller one.

Bulb replacement

Illumination bulb can be taken out easily by pulling socket with bulb at back of each gauge.

Extract bulb from socket and install new bulb in reverse sequence of removal.

Bulb wattage:
Illumination bulb 3.4W

OIL PRESSURE AND WATER TEMPERATURE INDICATING SYSTEM

DESCRIPTION

The oil pressure gauge consists of a bimetal meter unit, a variable resistance sensing unit (incorporating a diaphragm) and a voltage regulator.

As oil pressure varies, the diaphragm moves accordingly, causing the sliding contact to move along the resistance. This changes the amount of current that can flow in the circuit and actuates the bimetal.

The water temperature gauge consists of a meter and thermal transmitter located in the engine block. The thermal transmitter is equipped with a thermistor element which converts cooling water temperature variation to a resistance, thereby controlling current flowing to the gauge.

The oil pressure gauge and water temperature gauge are equipped with a bimetal arm and heater coil.

When the ignition switch is set to "ON", current flows to the heater coil, and the heater coil is heated. With this heat, the bimetal arm is bent, thus causing the pointer connected to the bimetal arm to move. The characteristics of both gauges are the same.

If both the oil pressure and water temperature gauges become faulty at the same time, the fault may lie in the voltage regulator.

REPLACEMENT

OIL-TEMP gauge

Refer to previous section "Meter and Gauge Replacement".

Oil pressure gauge unit

The oil pressure gauge unit is located on cylinder block beside oil element. The switch can be removed by unscrewing it. Be sure to apply conductive sealer to threads prior to installing new unit.

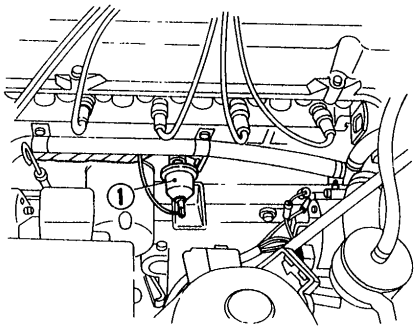

1 Oil pressure sensor

BE674B

Fig. BE-73 Oil pressure gauge unit

Thermal transmitter

To replace thermal transmitter, disconnect lead wire from its terminal and unscrew thermal transmitter from oil filter bracket.

Be sure to apply conductive sealer to threads prior to installing new thermal transmitter.

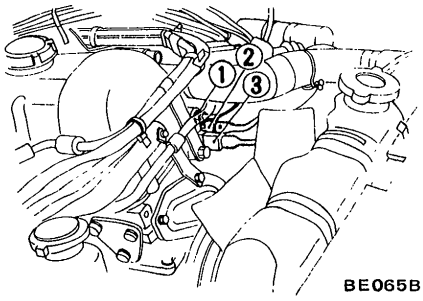

BE065B

1 Thermal transmitter
2 Water temperature sensor (For Electronic Fuel Injection System)
3 Thermotime switch (For Electronic Fuel Injection System)

Fig. BE-74 Thermal transmitter

INSPECTION

Check each unit for proper operation.

Test continuity of oil pressure and water temperature indicating system with test lamp or ohmmeter. See Figure BE-53.

VOLTMETER AND FUEL LEVEL INDICATING SYSTEM

DESCRIPTION

The fuel level indicating system consists of a tank unit and a fuel level gauge. The tank unit consists of a float which moves up and down in the fuel tank with changes in fuel level, and a sliding contact that slides back and forth on a resistance when the float moves. This changes the amount of electric resistance offered by the tank unit and controls the current flowing to the fuel level gauge. The gauge moves with the changes in current flow.

The fuel gauge is equipped with a bimetal arm and heat coil. When the ignition switch is turned "ON", current flows to the heater coil, and the heater coil is heated. With this heat, the bimetal arm is bent, thus causing the pointer connected to the bimetal arm to move.

The voltmeter monitors the condition of electrical system and battery. It is in good order if it registers more than 11 volts before and during engine starting, and 6 to 8 volts during engine cranking. If it registers more than 15.5 volts during engine running, voltage regulator is out of order.

REPLACEMENT

VOLT-FUEL gauge

Refer to previous section Meter and Gauge Replacement.

Downloaded from www.Manualslib.com manuals search engine

Fuel tank gauge unit

Refer to Section FE (Fuel and Exhaust system) for Replacement.

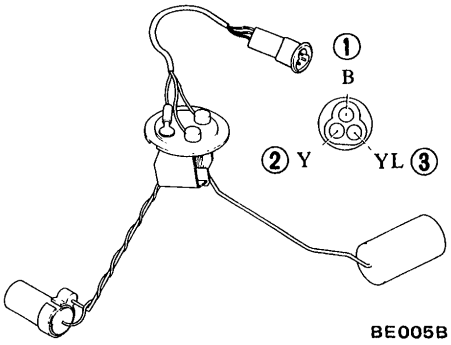

Fig. BE-75 Fuel tank gauge unit

Fuel warning lamp bulb

1. Remove four screws retaining instrument finisher to instrument panel.
2. Pull instrument finisher forward slightly, and disconnect lead wires at three connectors. Instrument finisher can then be removed from instrument panel.

Note: Three connectors are for map lamp, floor temperature warning lamp (California models) and fuel warning lamp.

3. Pull out socket and bulb from back of lamp body and extract bulb from socket.
4. Install new bulb. Installation is in the reverse sequence of removal.

Bulb wattage:
Fuel warning lamp 3.4W

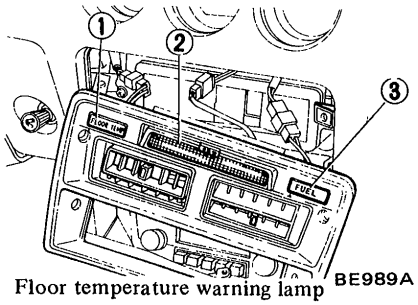

1 Floor temperature warning lamp (California models)
2 Map lamp
3 Fuel warning lamp

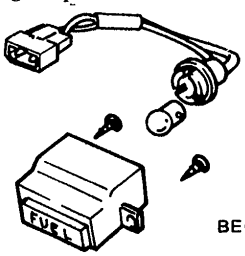

Fig. BE-76 Fuel warning lamp

Lamp body

1. Remove four screws retaining instrument finisher to instrument panel.
2. Pull instrument finisher forward slightly, and disconnect lead wires at connectors. Instrument finisher can then be removed from instrument panel.

Note: Three connectors are for map lamp, floor temperature warning lamp (California models) and fuel warning lamp.

3. Remove two screws retaining warning lamp body to instrument finisher. Lamp body can then be taken out.
4. Installation is in the reverse sequence of removal.

INSPECTION

Test continuity of voltmeter and fuel level indicating system with test lamp or ohmmeter. See Figure BE-54.

CHARGE WARNING SYSTEM

DESCRIPTION

The charge warning system consists primarily of a charge warning lamp and a voltage regulator.

The charge warning lamp glows when the ignition switch is turned "ON" with the engine shut down, or when alternator fails to charge when engine is operating.

When the ignition switch is turned "ON", charge warning circuit is closed and current flows from the ignition relay to the warning lamp and grounds through the regulator. When the engine is started and the alternator comes into operation, the alternator output current (N) opposes the current flowing from the warning lamp; as the current (N) increases, the solenoid is energized and the warning lamp relay contacts are opened–in effect it breaking the warning circuit ground connection–and the lamp goes out.

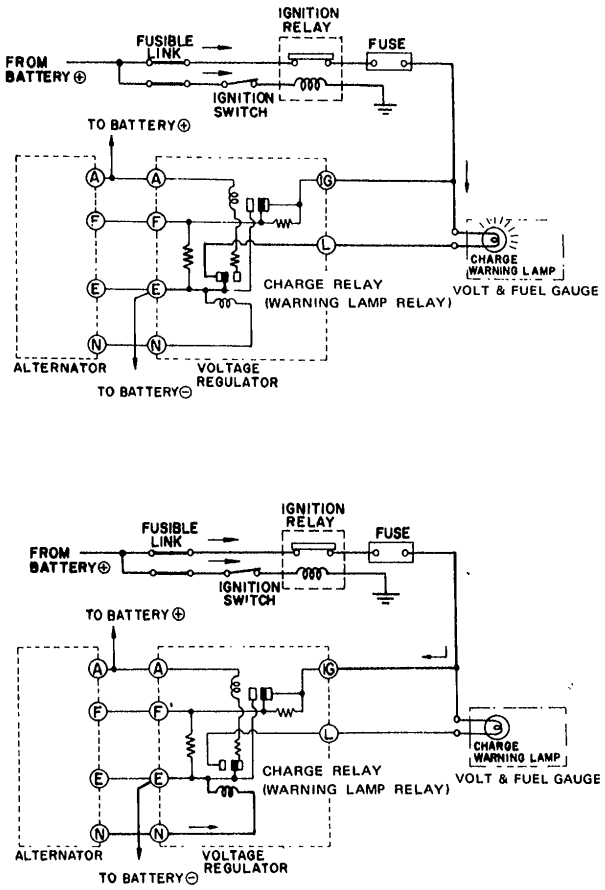

Fig. BE-77 Voltage regulator and associated circuits

Downloaded from www.Manualslib.com manuals search engine

REPLACEMENT

Charge warning lamp bulb

The charge warning lamp is built into the voltmeter.

1. Remove four screws retaining instrument finisher to instrument panel.
2. Pull instrument finisher forward slightly and disconnect lead wires at three connectors. Instrument finisher can then be removed from instrument panel.

Note: Three connectors are for map lamp, floor temperature warning lamp (California models) and fuel warning lamp.

3. Pull out socket and bulb from back of voltmeter and extract bulb from socket.
4. Install new bulb. Installation is in the reverse sequence of removal.

Bulb wattage:
Charge warning lamp 3.4W

Voltage regulator

The voltage regulator is installed on the relay bracket in the engine compartment.

1. Disconnect battery ground cable.
2. Remove four screws attaching relay bracket to hoodledge panel and remove relay bracket.
3. Remove two screws retaining voltage regulator assembly to relay bracket. Voltage regulator can then be taken out.
4. Disconnect lead wires from voltage regulator at connector.

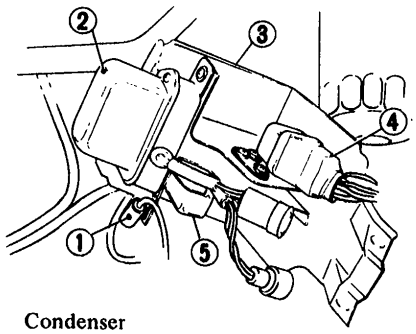

1 Condenser
2 Voltage regulator
3 Relay bracket
4 Seat belt relay (Starter relay) (A/T only)
5 Air conditioner relay (Compressor relay)

BE556B

Fig. BE-78 Removing voltage regulator

INSPECTION

Remove two screws retaining cover to voltage regulator body and take out cover. Connect voltage regulator lead wires to engine room harness at connector.

Check for operation of charge relay indicated in following figure.

- When engine is stopped
  → Contact points must be closed.
- While engine is running
  → Contact points must be opened.

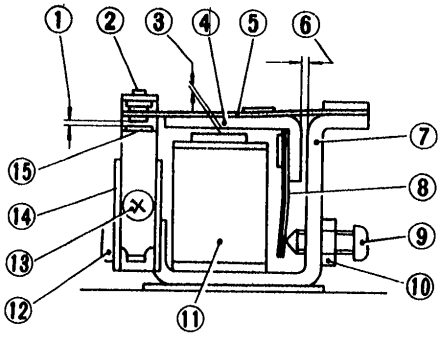

BE008B

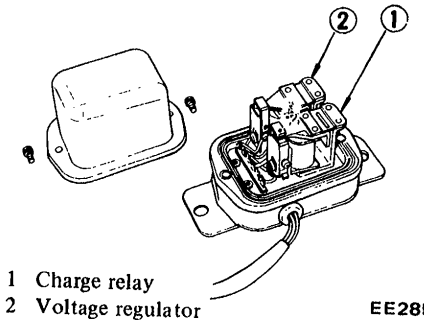

1 Charge relay
2 Voltage regulator

EE285

1 Point gap
2 Charge relay contact
3 Core gap
4 Armature
5 Connecting spring
6 Yoke gap
7 Yoke
8 Adjusting spring
9 Adjusting screw
10 Lock nut
11 Coil
12 4 mm (0.157 in) dia. screw
13 3 mm (0.118 in) dia. screw
14 Contact set
15 Voltage regulator contacts

Fig. BE-79 Voltage regulator

BRAKE WARNING SYSTEM

DESCRIPTION

The brake warning system consists of a warning lamp, a parking brake switch and a brake line pressure differential warning switch. The whole circuit is shown in Figure BE-55.

The brake warning lamp comes on when the parking brake is applied.

When the ignition switch is set to "ON", the ignition relay contacts are closed and current flows from the ignition relay to the warning lamp. When the parking brake is applied, parking brake warning switch is closed and warning lamp comes on.

The brake line pressure differential warning switch causes warning lamp to come on when problem occurs in brake lines. For information on brake line pressure differential warning switch, refer to Section BR for Warning Switch.

The warning lamp also comes on when the ignition switch is turned "ON" with the engine shut down, permitting inspection of the lamp condition.

The brake warning lamp checking system consists of a warning lamp, a check relay and an alternator. The whole circuit is shown in Figure BE-56.

When the ignition switch is turned "ON", the ignition relay contacts are closed and current flows from the ignition relay to the warning lamp. When the engine is shut down, the brake warning lamp check relay contacts are closed and warning lamp comes on.

When the engine is started, current from terminal N of the alternator flows through the winding of the check relay, causing relay contacts to open. The lamp will go out when the parking brake is released and the brake line pressure differential warning switch is in "OFF".

Downloaded from www.Manualslib.com manuals search engine

REPLACEMENT

Parking brake switch

The parking brake switch is mounted on parking brake stem support bracket on lever support bracket.

To replace parking brake switch, disconnect lead wire at connector plug and pull switch assembly out of bracket.

When plunger is pressed into switch assembly, parking brake switch contacts are open. Contacts are closed when plunger is projected.

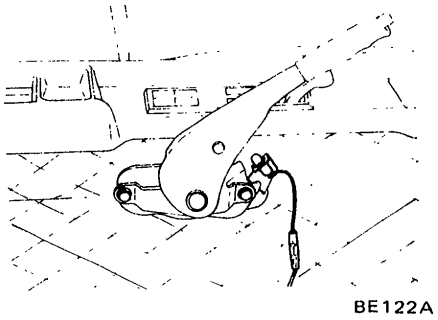

Fig. BE-80 Parking brake switch

Brake line pressure differential warning switch

The warning switch is located at left side of engine compartment. To replace warning switch, remove brake tubes and disconnect a lead wire at connector.

Then, remove a retaining bolt.

Installation is in the reverse sequence of removal.

Note: In installing warning switch, refer to Section BR for instructions.

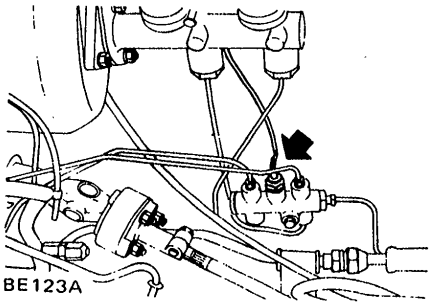

Fig. BE-81 Brake warning switch

Brake warning lamp check relay

The relay is attached to the floor under the front passenger seat.

1. Disconnect battery ground cable.
2. Remove four bolts securing front passenger seat in place, and remove seat.
3. Disconnect lead wires from relay at connector.
4. Remove two screws retaining relay. Relay can then be taken out.
5. Installation is in the reverse sequence of removal.

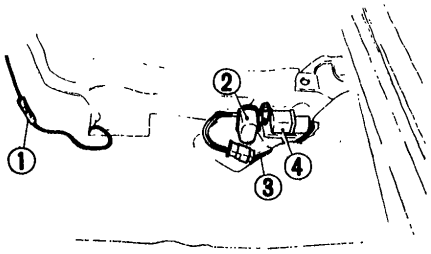

1 To parking brake switch
2 Brake warning lamp check relay
3 To dash harness
4 Floor temperature relay BE675B

Fig. BE-82 Brake warning lamp check relay

INSPECTION

Check each switch for proper operation and test continuity of wiring system with ohmmeter or test lamp. Take care that each connection is correctly secured.

TROUBLE DIAGNOSES AND CORRECTIONS

SPEEDOMETER

Condition	Probable cause	Corrective action
Speedometer pointer and odometer do not operate.	Loose speedometer cable union nut.	Retighten.
	Broken speedometer cable.	Replace.
	Damaged speedometer drive pinion gear (Transmission side).	Replace.
	Faulty speedometer.	Replace.
Unstable speedometer pointer.	Improperly tightened or loose speedometer cable union nut.	Retighten.
	Faulty speedometer cable.	Replace.
	Faulty speedometer.	Replace.
Unusual sound occurs in when driving speed is increased.	Excessively bent or twisted speedometer cable inner wire or lack of lubrication.	Replace or lubricate.
	Faulty speedometer.	Replace.

Downloaded from www.Manualslib.com manuals search engine

Condition	Probable cause	Corrective action
Inaccurate speedometer indication.	Faulty speedometer.	Replace.
Inaccurate odometer operation.	Improperly meshed second and third gear or worn gears.	Replace speedometer.
	Faulty feeding due to deformed odometer and pinion carrier.	Replace speedometer.

WATER TEMPERATURE AND OIL PRESSURE GAUGES

Condition	Probable cause	Corrective action
Both water temperature and oil pressure gauges do not operate.	Burnt fuse.	Correct cause and replace fuse.
	Faulty ignition relay.	Check for operation of circuits (i.e., fuel gauge and turn signal lamp) electrically connected to ignition relay. If they do not function, replace ignition relay.
	Faulty gauge voltage regulator.	Replace water temperature gauge.
Both water temperature and oil pressure gauges indicate inaccurately.	Faulty gauge voltage regulator (Gauge pointer fluctuates excessively).	Replace water temperature gauge.
	Loose or poor connection (Gauge pointer fluctuates slightly).	Correct connector contact.
Water temperature gauge Water temperature gauge does not operate.	Faulty thermal transmitter or loose terminal connection. (When thermal transmitter yellow/white wire is grounded, gauge pointer fluctuates.)	Replace thermal transmitter or correct terminal connection.
	Faulty water temperature gauge.	Replace water temperature gauge.
	Open circuit.	
Gauge indicates only maximum temperature.	Faulty thermal transmitter. (Gauge pointer returns to original position when ignition switch is turned off.)	Replace thermal transmitter.
	Faulty water temperature gauge. (Gauge pointer indicates maximum temperature even after ignition switch is turned off.)	Replace water temperature gauge.
Water temperature gauge does not operate accurately.	Faulty water temperature gauge.	[Connect a 116Ω resistance between thermal transmitter yellow/white wire and ground. When gauge indicates approximately 50°C (122°F), gauge is serviceable].
	Loose or poor connection.	Correct connector terminal contact.
Oil pressure gauge Oil pressure gauge does not operate.	Faulty oil pressure gauge unit or loose terminal connection.	Replace gauge unit or correct terminal connection.
	Open circuit.	Repair or replace.

Downloaded from www.Manualslib.com manuals search engine

Condition	Probable cause	Corrective action
Gauge indicates only maximum pressure.	Faulty oil pressure gauge unit. (Gauge pointer returns to original position when ignition switch is turned off.)	Replace.
	Faulty oil pressure gauge. (Gauge pointer indicates maximum pressure even after ignition switch is turned off.)	Replace.

FUEL GAUGE

Condition	Probable cause	Corrective action
Fuel gauge does not operate.	Burnt fuse.	Correct cause and replace fuse.
	Faulty ignition relay.	Check for operation of circuits (i.e., water temperature, oil pressure gauge and turn signal lamp) electrically connected to ignition relay. If they do not function, replace ignition relay.
	Faulty tank unit or loose unit terminal connection. (Pointer deflects when tank unit yellow wire is grounded.)	Replace tank unit or correct terminal connection.
	Faulty fuel gauge.	Replace fuel gauge.
	Open circuit.	
Pointer indicates only "F" position.	Faulty tank unit. (Pointer drops below "E" mark when ignition switch is turned off.)	Replace tank unit.
	Faulty fuel gauge. (Pointer still indicates "F" position when ignition switch is turned off.)	Replace fuel gauge.
Fuel gauge does not operate accurately.	Faulty tank unit. (Pointer indicates a half level when a 32Ω resistor is connected between tank unit yellow wire and ground.)	Replace tank unit.
	Faulty fuel gauge.	Replace fuel gauge.
	Poor or loose connection.	Correct connector terminal contact.

Downloaded from www.Manualslib.com manuals search engine

ELECTRICAL ACCESSORY

CONTENTS

HEATER BE-46
DESCRIPTION BE-46
AIR FLOW BE-47
REMOVAL AND INSTALLATION BE-49
DISASSEMBLY AND ASSEMBLY BE-51
HEATER ILLUMINATION BULB REPLACEMENT BE-52
ADJUSTMENT BE-52
INSPECTION BE-53
TROUBLE DIAGNOSES AND CORRECTIONS BE-56
HORN BE-57
DESCRIPTION BE-57
REMOVAL AND INSTALLATION BE-57
INSPECTION BE-57
TROUBLE DIAGNOSES AND CORRECTIONS BE-58
WINDSHIELD WIPER AND WASHER BE-60
DESCRIPTION BE-60
ADJUSTMENT BE-61
REMOVAL AND INSTALLATION BE-61
INSPECTION BE-62
TROUBLE DIAGNOSES AND CORRECTIONS BE-63
CIGARETTE LIGHTER BE-69
DESCRIPTION BE-69
ILLUMINATION BULB REPLACEMENT BE-69
REMOVAL AND INSTALLATION BE-69
INSPECTION BE-69
CLOCK BE-70
DESCRIPTION BE-70
REPLACEMENT BE-70
INSPECTION BE-70
ELECTRIC REAR WINDOW DEFOGGER BE-71
DESCRIPTION BE-71
REMOVAL AND INSTALLATION BE-71
WARNING LAMP BULB REPLACEMENT BE-72
INSPECTION BE-72
FILAMENT MAINTENANCE BE-73
RADIO BE-75
DESCRIPTION BE-75
REMOVAL AND INSTALLATION BE-75
ANTENNA TRIMMER ADJUSTMENT BE-76
INSPECTION BE-76
TROUBLE DIAGNOSES AND CORRECTIONS BE-77
THEFT PROTECTION SYSTEM BE-79
DESCRIPTION BE-79
REMOVAL AND INSTALLATION BE-79
INSPECTION BE-80
SEAT BELT WARNING SYSTEM BE-82
DESCRIPTION BE-82
REMOVAL AND INSTALLATION BE-82
WARNING LAMP BULB REPLACEMENT BE-83
INSPECTION BE-83
KICKDOWN SYSTEM (For automatic transmission models only) BE-86
DESCRIPTION BE-86
REPLACEMENT BE-86
INSPECTION BE-86
STARTING SYSTEM (For automatic transmission models only) BE-88
DESCRIPTION BE-88
REPLACEMENT BE-88
INSPECTION BE-88

HEATER

DESCRIPTION

The heater unit combines heating and ventilating functions. It is located in the lower part of the instrument panel, to the front of the center console.

Outside air enters the cowl top grille by the blower through the air intake case. As air is passed through the heater core, heat is picked up from the core. When the air is not passed through the core, the heater unit serves as a ventilating unit.

The heater electrical system consists of fan motor, ignition relay, control illumination lamp, resistor and fan switch.

The fan switch controls the three speed fan motor through a resistor located in the fan unit.

A heater control illumination lamp is located behind the control finisher; its brightness is controlled by an illumination control resistor. Ventilation air duct hoses are installed behind the instrument panel.

Downloaded from www.Manualslib.com manuals search engine

AIR FLOW

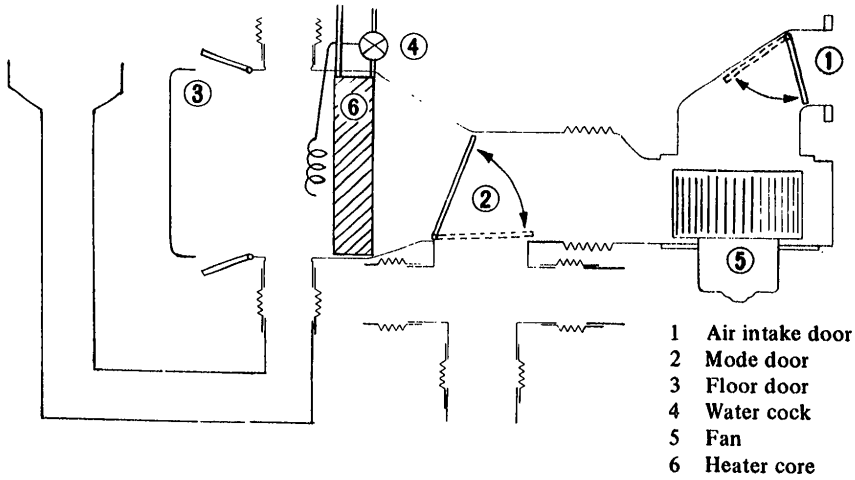

Fig. BE-83 Sectional view of heater

Air intake door

The air intake door controls the flow of outside air into the heater unit. Outside air is drawn from the cowl top grille. This door is controlled by AIR lever on heater control.

Mode door

The mode door controls air flowing through heater core and directs fresh cool air flowing from center ventilator and instrument side ventilator. This door is controlled by AIR lever.

Floor door

The floor door controls air flow discharged from heater unit. When the door is open, air is discharged to floor area with a small amount going to the defroster nozzle. When the door is closed, all air is discharged through the defroster nozzle.

AIR lever

The AIR lever controls air flow with the aid of air intake door, mode door and floor door. These three doors can be controlled with a lever. When the AIR lever is set in the VENT position, all air from the blower is discharged through the center and side vents. When the AIR lever is in the HEAT position, all air passes through the heater core and flows to the DEF nozzle and floor area.

TEMP lever

The TEMP lever controls the water cock. The water cock controls the water flowing into heater core and temperature of discharged air.

This heater cock, a flow control type, adequately controls the temperature of the discharged air according to the position of the TEMP lever.

FAN lever

The FAN lever controls fan motor with aid of a resistor located in fan unit. The fan motor controls amount of discharged air.

Ventilating

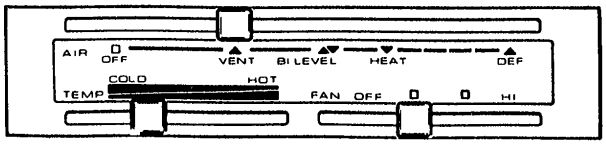

AIR lever is in VENT position. TEMP lever is in any position. Amount of discharged air is controlled by FAN lever. During high speed driving, FAN lever may be useless.

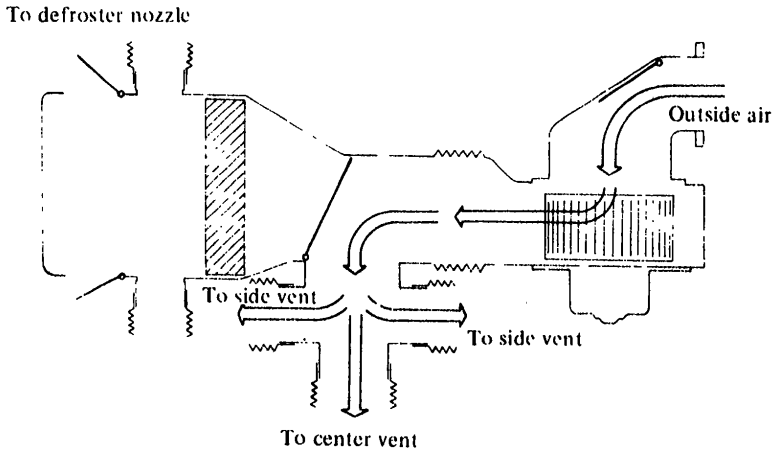

Downloaded from www.Manualslib.com manuals search engine

BI-LEVEL

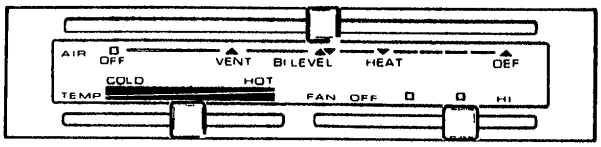

AIR lever is in BI-LEVEL position. TEMP lever controls the temperature of heat air discharged to floor or defroster nozzle. FAN lever controls amount of air discharged.

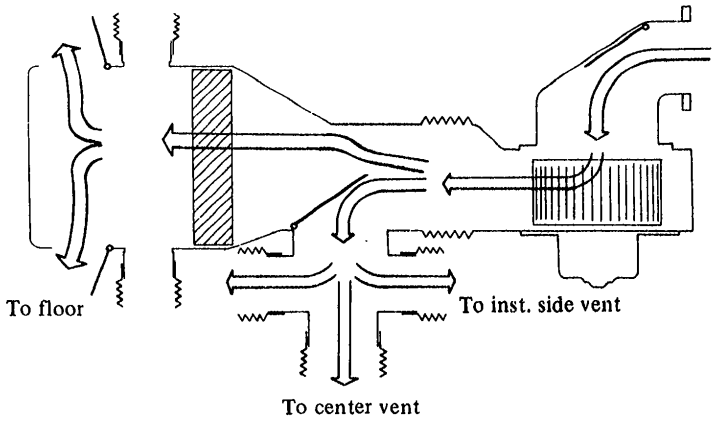

Heating

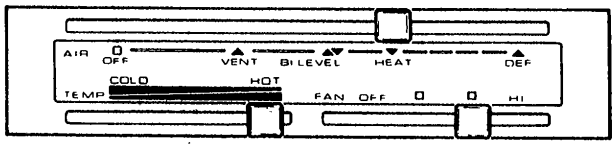

AIR lever is in HEAT position. TEMP lever controls temperature of discharged air.

FAN lever controls amount of air discharged.

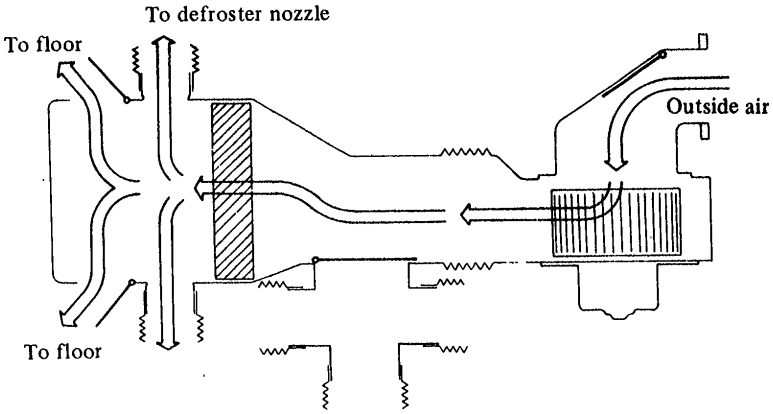

Defrosting

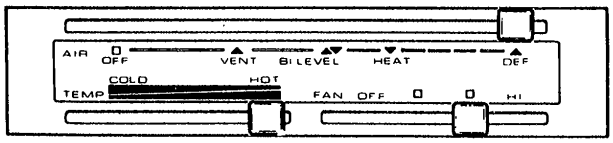

AIR lever is in DEF position. TEMP lever controls the temperature of discharged air.

FAN lever controls amount of air discharged.

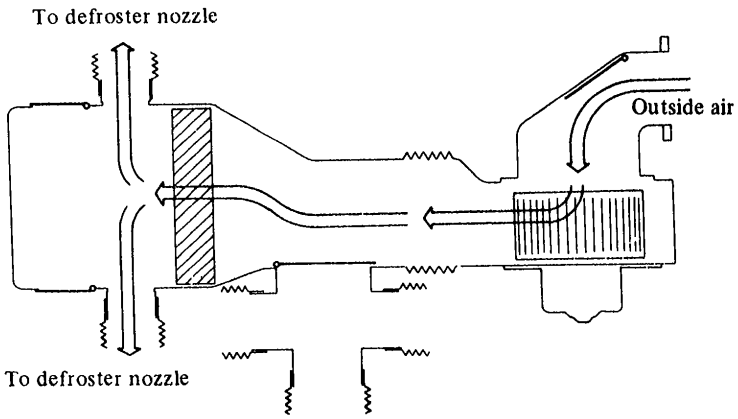

Not in use

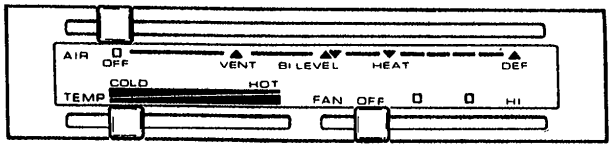

AIR lever is in OFF position.
TEMP lever is in COLD position.
FAN lever is in OFF position.

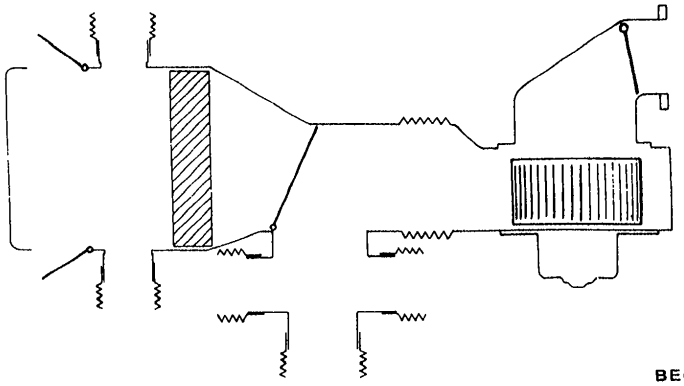

BE676B

Fig. BE-84 Air flow

Downloaded from www.Manualslib.com manuals search engine

REMOVAL AND INSTALLATION

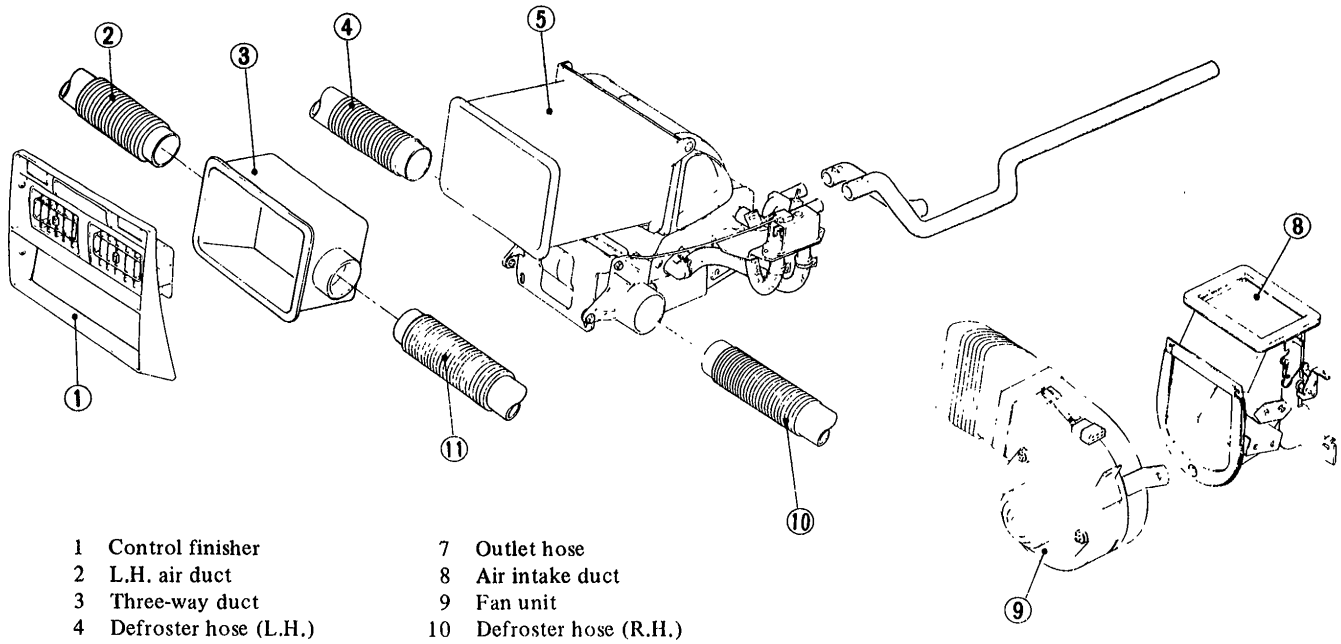

1 Control finisher
2 L.H. air duct
3 Three-way duct
4 Defroster hose (L.H.)
5 Heater unit
6 Inlet hose
7 Outlet hose
8 Air intake duct
9 Fan unit
10 Defroster hose (R.H.)
11 R.H. air duct

BE010E

Fig. BE-85 Exploded view of heate

Heater control

1. Disconnect battery ground cable and drain engine coolant.
2. Remove console box, referring to Section BF.
3. Remove four screws retaining finisher and take out by moving forward. Disconnect lead wires at two (three for California models) connectors and finisher can then be taken out easily.

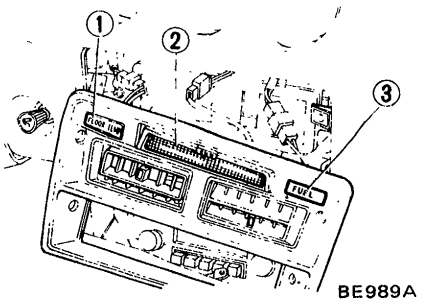

BE989A

1 Floor temperature warning lamp (California models)
2 Map lamp
3 Fuel warning lamp

Fig. BE-86 Removing finisher

4. Remove control cables at air intake duct, water cock, and floor door and disconnect mode door control rod.

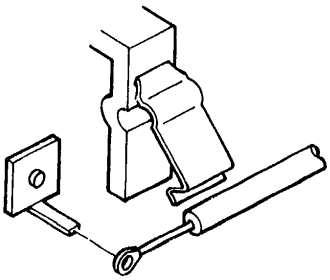

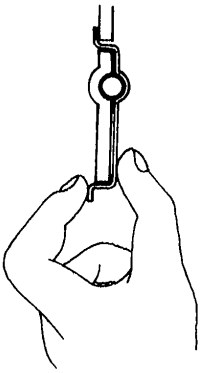

BE565

Fig. BE-87 Removing clips

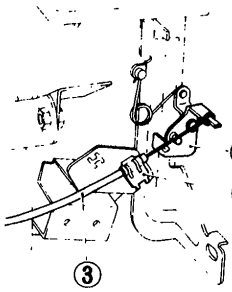

BE011B

1 Leve
2 Clam
3 Cabl

Fig. BE-88 Disconnecting intake doc control cab.

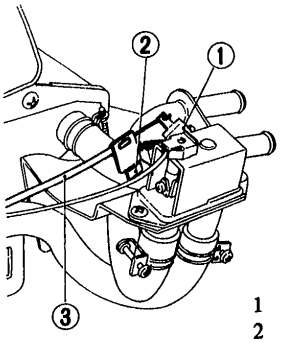

BE012B

1 Lever
2 Clamp
3 Cable

Fig. BE-89 Disconnecting heater coc. control cabl

Downloaded from www.Manualslib.com manuals search engine

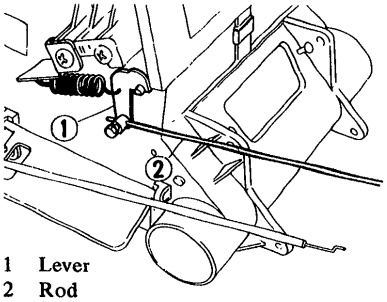

1 Lever
2 Rod

BE013B

Fig. BE-90 Disconnecting mode door control rod

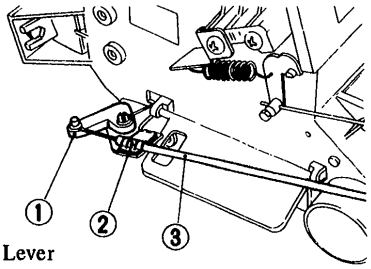

1 Lever
2 Clamp
3 Cable

BE014B

Fig. BE-91 Disconnecting floor door control cable

5. Disconnect lead wires from heater control to heater sub-harness at two connectors.
6. Remove two screws retaining control assembly to instrument panel reinforcement.

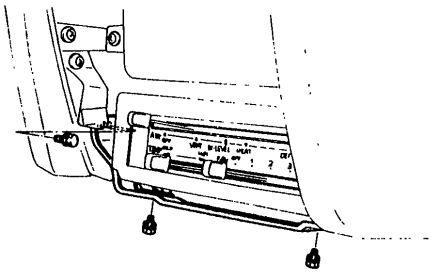

BE015B

Fig. BE-92 Removing retaining screws

7. Remove screw retaining reinforcement to instrument panel and remove reinforcement.
8. Remove two screws retaining heater control to heater unit. Heater control and bracket can then be removed.

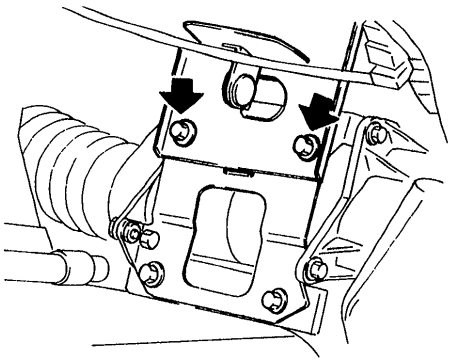

Fig. BE-93 Removing retaining screws

9. Installation is in the reverse sequence of removal. Refer to Adjustment.

Note: When installing control assembly, be careful not to twist or bend control cables.

Heater unit

1. Disconnect battery ground cable and drain engine coolant.
2. Remove console box, referring to Section BF.
3. Remove four screws retaining finisher and take out by moving forward. Disconnect lead wires at three (California models) or two (Non-California models) connectors. Finisher can then be taken out easily. See Figure BE-86.
4. Remove two screws retaining three-way venti-duct to instrument finisher bracket and four screws retaining brackets. Then remove instrument finisher brackets. Disconnect ventilator duct hose from three-way venti-duct and take out three-way venti-duct. See Figure BE-71.
5. Remove heater control as previously described.
6. Disconnect defroster ducts from heater unit and disconnect two heater hoses from inlet and outlet tubes of heater unit by removing clamps.
7. Remove two screws retaining venti-duct adapter to heater unit.
8. Remove two nuts and two screws retaining heater unit to body panel.

Two nuts and two screws can be removed from engine compartment side. Other two screws are located under the heater control location.

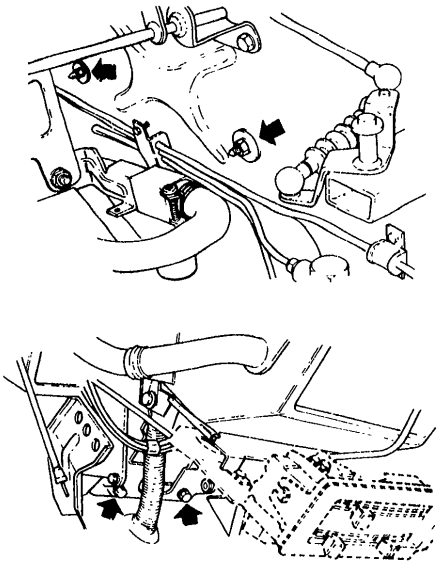

BE127A

Fig. BE-94 Removing heater unit

9. Pull heater unit out slightly and turn to left 90°. Heater unit can then be removed from center of instrument panel.
10. Installation is in the reverse sequence of removal. Refer to Adjustment.

Fan unit

1. Disconnect battery ground cable.
2. Disconnect control cable for air intake box by removing clamp at air intake duct. See Figure BE-88.
3. Disconnect lead wires for fan and resistor at connectors. Fan unit can then be taken out easily by removing retaining screws.

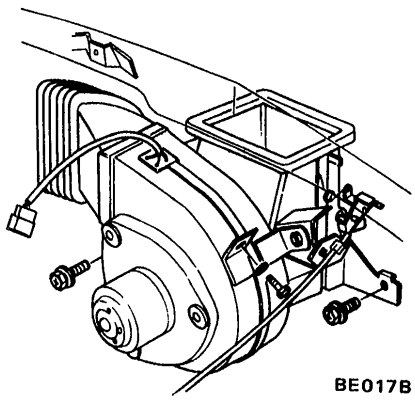

BE017B

Fig. BE-95 Removing fan unit

Downloaded from www.Manualslib.com manuals search engine

4. Installation is in the reverse sequence of removal.

DISASSEMBLY AND ASSEMBLY

Fan switch

1. Remove heater control. For removal procedure, refer to the previous section.
2. Remove nut securing gear to fan switch and take out gear.
3. Remove two screws retaining fan switch to heater control. Fan switch can then be taken out easily.
4. Assembly is in the reverse sequence of disassembly.

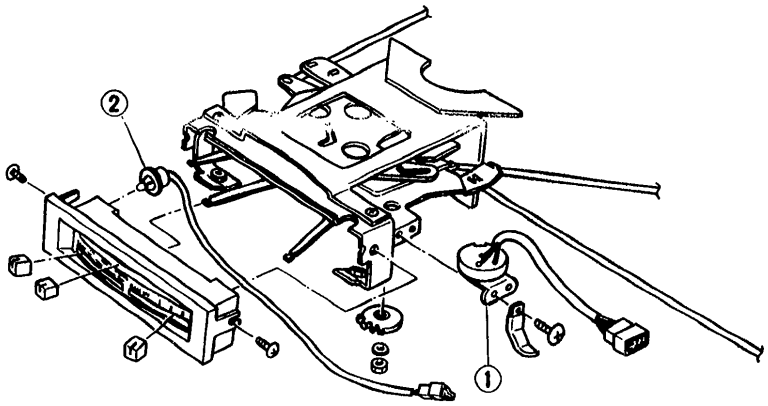

1 Fan switch
2 Illumination lamp

BE018B

Fig. BE-96 Disassembling fan switch

Heater cock and core

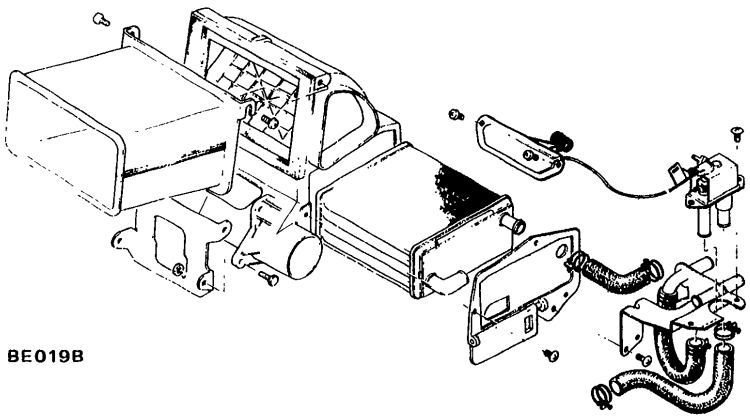

BE019B

Fig. BE-97 Removing heater cock and core

1. Remove heater unit. For removal procedure, refer to the previous section.
2. Loosen hose clamps on heater cock side and disconnect hoses from heater cock.
3. Remove two screws retaining heater cock to heater cock bracket.
4. Remove four screws retaining heater bracket to heater unit and remove heater bracket.
5. Remove two screws retaining capillary tube bracket to heater unit and then take out capillary tube from heater unit. Heater cock can then be taken out.

Notes:

a. **Make sure that capillary tube is neither twisted nor excessively bent.**
b. **When bending capillary tube, ensure that heater cock is fully open so as to prevent change in heater cock operation.**

6. Remove screws retaining heater cock bracket to heater unit and hose connector to heater unit.
7. Loosen hose clamps on heater core side and disconnect hoses from heater core. Heater cock bracket and hose connector can then be taken out.
8. Disconnect floor door operating rod from floor door.

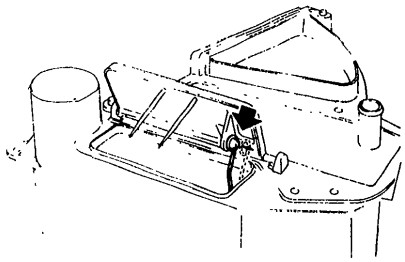

BE020B

Fig. BE-98 Disconnecting floor door rod

9. Remove screws retaining side cover to heater unit and detach side cover.
10. Pull heater core out.

Note: Be sure to detach heater core with floor door opened. Failure to do so may scratch heater core.

11. Assembly is in the reverse sequence of disassembly.

Downloaded from www.Manualslib.com manuals search engine

Fan unit

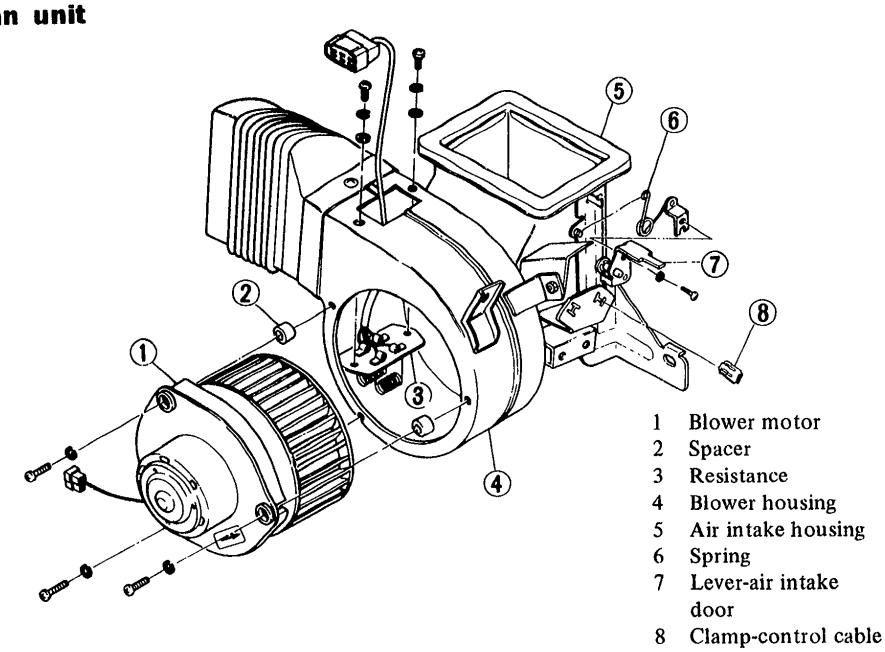

Fig. BE-99 Disassembling fan unit

1. Remove fan unit, referring to previous section.
2. Remove screw retaining air intake duct hose to blower housing and take out duct hose.
3. Remove three screws retaining fan motor to blower housing. Fan motor can then be taken out.
4. Remove two screws retaining resistor to blower housing. Resistor with harness can then be taken out through the hole in which fan motor is installed.
5. Remove four screws retaining intake duct to blower housing. Intake duct can then be taken out.
6. Assembly is in the reverse sequence of disassembly.

HEATER ILLUMINATION BULB REPLACEMENT

1. Remove heater control. For removal procedure, refer to the previous section.
2. Take out socket with bulb from behind heater control and remove bulb from socket.
3. Install new bulb and then assemble in the reverse sequence of removal. See Figure BE-96.

Bulb wattage:
Heater control illumination bulb 3.4W

ADJUSTMENT

When a new or reconditioned heater unit is installed, observe the following.

Notes:

a. **Make sure that cables are neither twisted nor excessively bent.**
b. **Be careful not to bend wires when inserting into pin.**
c. **Be sure to secure cable outer after it is pushed toward heater control.**
d. **Tighten clamps and clips securely and make sure that control lever functions properly.**

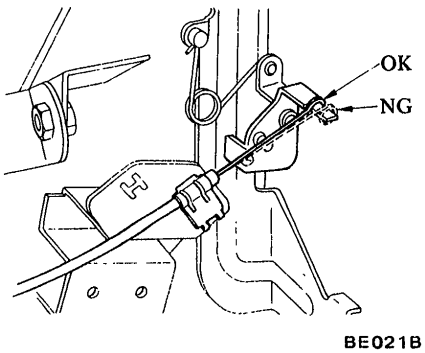

Fig. BE-100 Inserting wire into pin

Air intake door

1. Set AIR lever in OFF position.
2. Close air intake door and fasten cable outer with clamp.

Note: Make sure that the tip end of cable outer is not exposed beyond 10 mm (0.394 in) at clamp location.

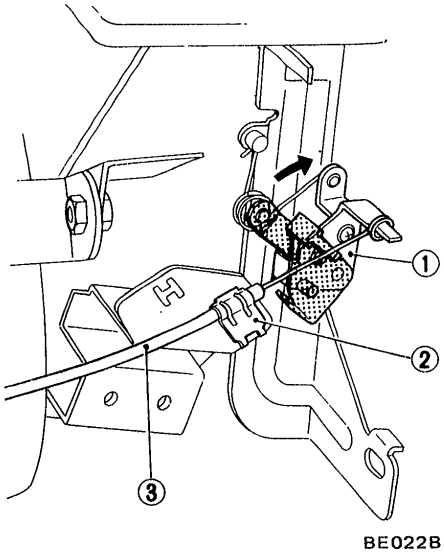

1 Air intake door lever
2 Clamp
3 Cable

Fig. BE-101 Adjusting air intake door

Mode door

1. Place AIR lever in HEAT position.
2. With mode door lever moved toward the dash panel side, fasten control rod with screw.

Note: Make sure that AIR lever and mode door lever are in HEAT position.

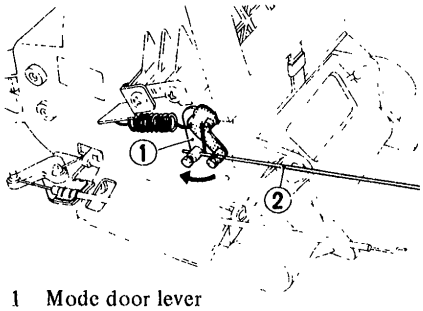

1 Mode door lever
2 Mode door rod

Fig. BE-102 Adjusting mode door

Downloaded from www.Manualslib.com manuals search engine

Floor door

1. Place AIR lever in DEF position.
2. Move floor door lever to DEF position, and set lead wire at door lever.
3. Fasten cable outer with clamp with the tip end of the cable outer exposed 2 mm (0.118 in) beyond clamp.

Notes:

a. **Make sure that AIR lever and floor door lever are moved to DEF position.**
b. **Make sure that doors are closed when connecting cables.**

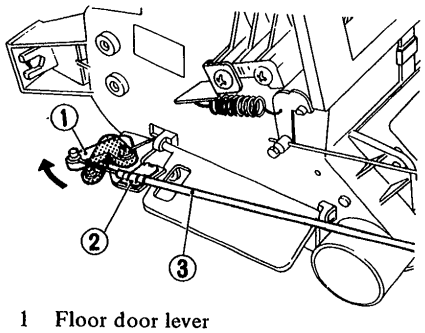

1 Floor door lever
2 Clamp
3 Cable

BE024B

Fig. BE-103 Adjusting floor door

Heater cock

1. Place TEMP lever in HOT position.
2. Pull heater cock lever toward you (HOT), and set cable wire at cock lever.
3. Fasten cable outer with clip.

Notes:

a. **Make sure that TEMP lever and heater cock lever are in HOT position.**
b. **If heater cock is not set properly, warm air may flow into the compartment when not desired.**

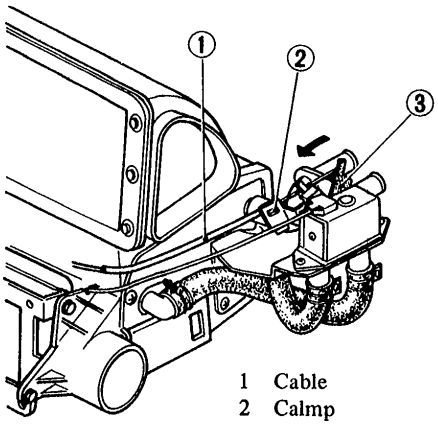

1 Cable
2 Calmp
3 Heter cock lever

BE025B

Fig. BE-104 Adjusting heater cock

INSPECTION

Inspect all parts of heater box for damage. Refer to Trouble Diagnoses and Corrections. For electrical system, check wiring, fan switch resistor and fan motor for continuity.

If fan motor fails to rotate check following items.

1. Fuse and fusible link.
2. To check for burned out fuse, follow same procedure as for ordinary fuses using a circuit tester or test lamp.
3. Loose wire connection.

Fan motor power supply

1. Disconnect lead wires at connector.
2. Move ignition switch to ON position.
3. Connect test lamp lead wire to "LY" color wire terminal in connector plug on dash harness side and other to ground.
4. Make sure test lamp comes on.

Fan motor

1. Disconnect lead wires at connector.
2. Move ignition switch to ON position.
3. Connect test lead to positive side of fuse block power supply and other to terminal in connector plug on fan motor side. Another terminal for fan motor, must be connected to earth (body earth).
4. Make sure fan motor operates at each fan lever position.

Fan switch

Test continuity through the switch at each step with test lamp or ohmmeter.

Refer to following continuity diagram for fan switch.

Wiring system

Test system continuity with ohmmeter or test lamp. Refer to following wiring diagram for heater and illumination lamp.

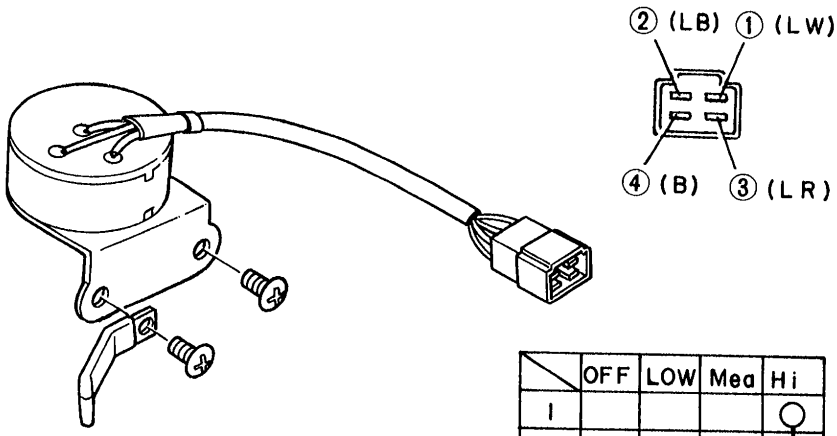

	OFF	LOW	Mea	Hi
1				○
2			○	
3		○		
4		○	○	○

BE026B

Fig. BE-105 Fan switch

Downloaded from www.Manualslib.com manuals search engine

Heater

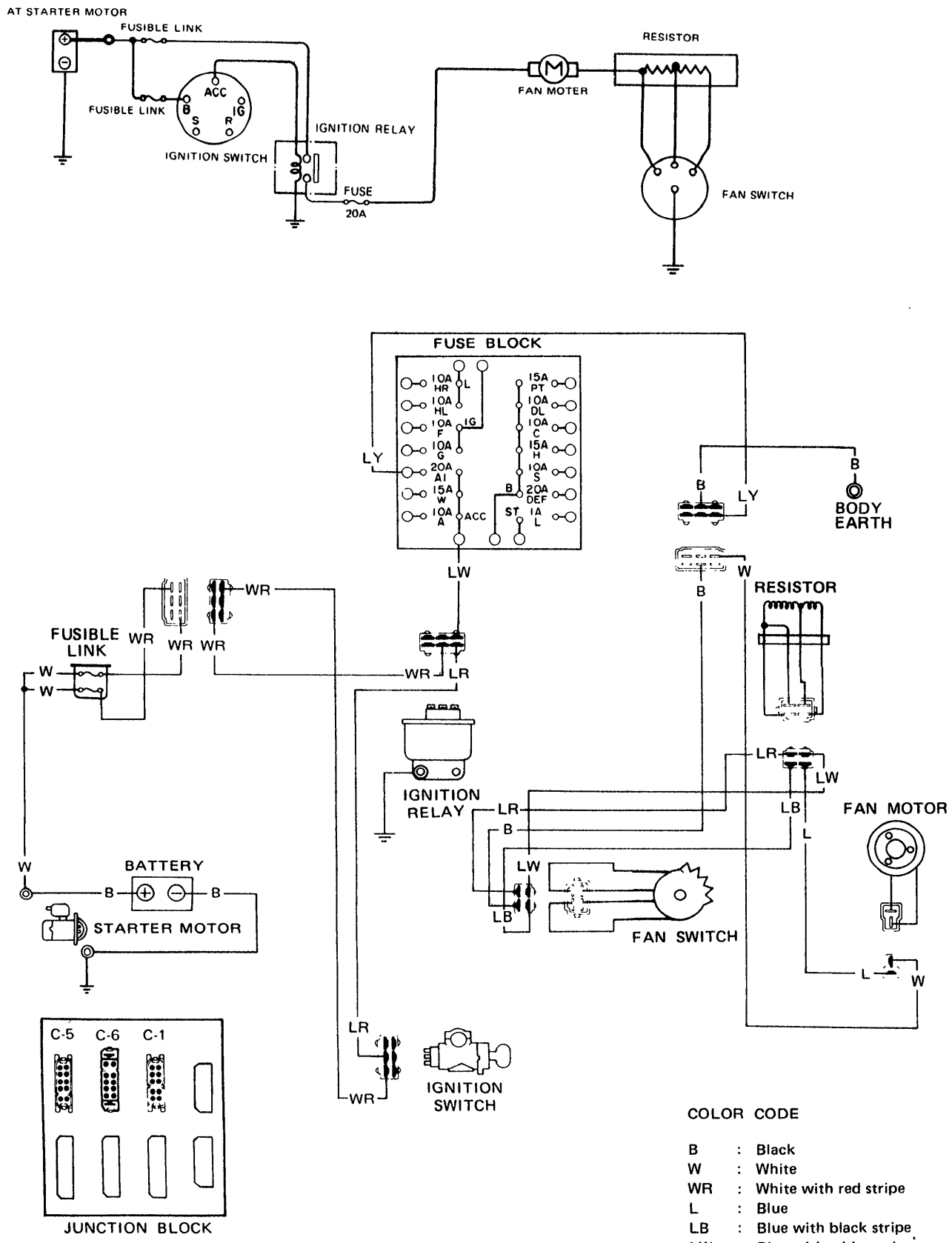

COLOR CODE

B	:	Black
W	:	White
WR	:	White with red stripe
L	:	Blue
LB	:	Blue with black stripe
LW	:	Blue with white stripe
LR	:	Blue with red stripe
LY	:	Blue with yellow stripe

BE677B

Fig. BE-106 Circuit diagram for heater

Downloaded from www.Manualslib.com manuals search engine

Heater illumination

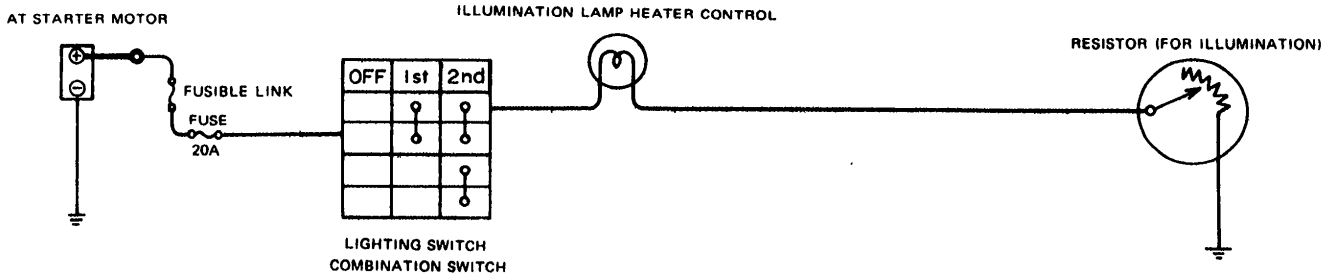

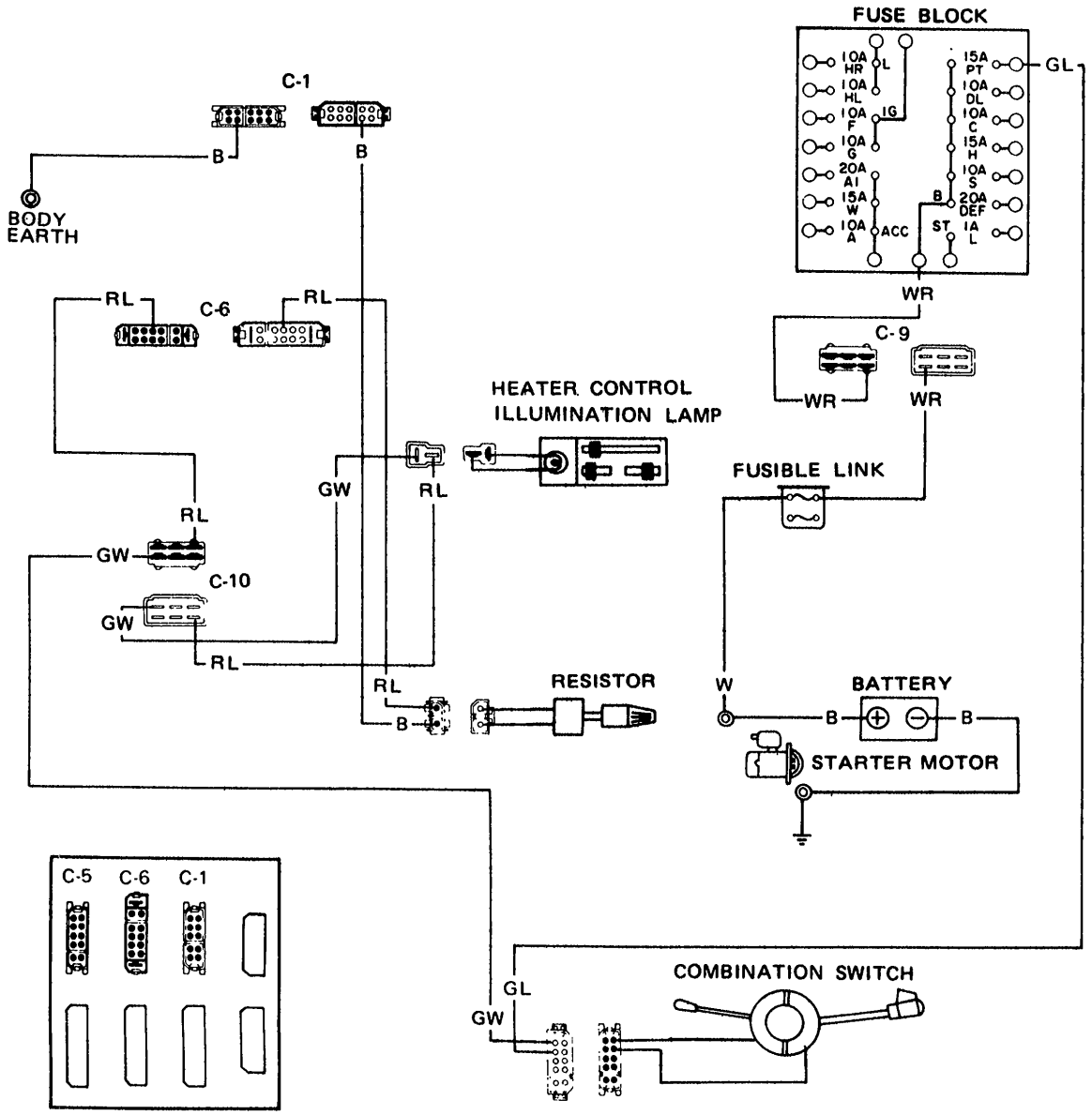

CONNECTOR		COLOR CODE		
C- 1	: Blue	B	:	Black
C- 6	: Black	W	:	White
C- 9	: White	WR	:	White with red stripe
C-10	: White	RL	:	Red with blue stripe
		GW	:	Green with white stripe
		GL	:	Green with blue stripe

BE678B

Fig. BE-107 Circuit diagram for heater illumination

Downloaded from www.Manualslib.com manuals search engine

TROUBLE DIAGNOSES AND CORRECTIONS

Condition	Probable cause	Corrective action
Insufficient heating performance.		
No heated air discharged.	Cooling water temperature too low.	Check thermostat. Replace as necessary.
	Heater core plugged.	Clean.
	Insufficient cooling water level.	Refill.
	Water cock not operating properly.	Adjust control cable.
	Mode door not operating properly.	Adjust control cable.
Insufficient air flow to floor.	Fan motor speed too low.	Check motor terminal voltage. Repair poor connection and discontinuity. Replace motor if necessary.
	Floor door and mode door not operating properly.	Adjust control cable.
Insufficient defrosting performance.		
Cold air discharged.	Refer to "No heated air discharged".	
Insufficient air flow to defroster.	Floor door and mode door not operating properly (or seal damaged).	Adjust control cable.
	Defroster nozzle plugged.	Clean.
	Leak at defroster duct-to-nozzle connection.	Correct.
Heated air discharged with lever in VENT.	Water cock not operating properly.	Adjust control cable.
	Mode door not operating properly (or seal damaged).	Adjust control cable.
Failure of fan to run.	Fuse melted.	Replace.
	Motor wire connector disconnected.	Correct.
	Switch damaged.	Replace.
	Motor damaged.	Check and correct.
Control lever drags.	Inner wire rubbing against outer case end.	Adjust control cable.
	Control cable bent excessively.	Correct.
	Doors, door levers, etc. not operating properly.	Check and correct.
Outside air comes in with fan in OFF.	Air intake door not operating properly.	Repair or replace.
	Control cable out of adjustment.	Adjust control cable.
Noise from fan motor.	Unusual noise from fan motor.	Check and tighten loose bolts.

Downloaded from www.Manualslib.com manuals search engine

HORN

DESCRIPTION

The horn electrical system consists of a horn switch, a horn relay, two horns and lead wires connecting these parts to each other. Horn is dual type; one is for low tone and the other for high tone. They can be distinguished by the letter L or R printed on their body. Horn relay is installed on relay bracket.

REMOVAL AND INSTALLATION

Horn

A pair of horns are installed in front of radiator.

1. Disconnect horn lead wire at connector.
2. Loosen a screw retaining horn to bracket.
3. Installation is in the reverse sequence of removal.

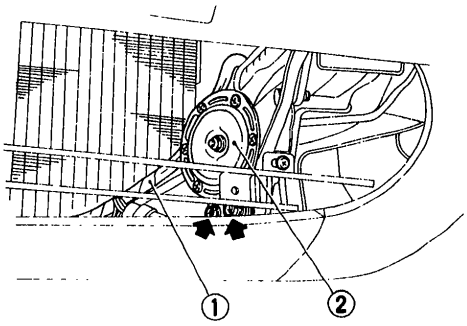

1 Engine room harness
2 Horn

BE595A

Fig. BE-108 Removing horn

Horn switch

The horn switch is an integral part of steering column.

The combination switch has a lead wire for horn, so refer to Figure BE-41 for combination switch.

Horn relay

The horn relay is installed on relay bracket.

1. Disconnect battery ground cable.
2. Disconnect three lead wires for horn relay at connectors.
3. Remove screw retaining horn relay to relay bracket. Horn relay can then be taken out.
4. Installation is in the reverse sequence of removal.

INSPECTION

Test system continuity and each unit with test lamp or ohmmeter. Refer to Figure BE-109 for horn relay and BE-110 for horn system. In testing horn relay, there must be continuity between ①–②. When 12V direct current is given to ①–②, there must be continuity between ①–③.

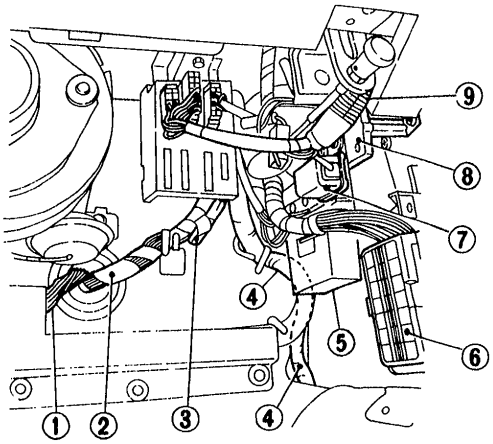

1 Dash harness
2 Engine room harness
3 Resistor for tachometer
4 Dash harness
5 Transistor ignition unit
6 Fuse block
7 Timer unit
8 Relay bracket
9 Instrument harness

BE438B

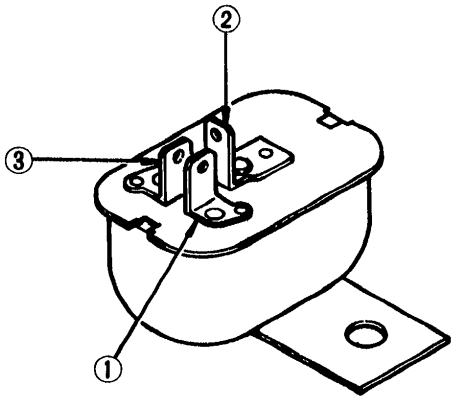

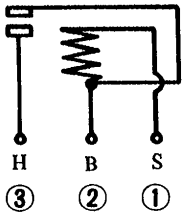

BE569A

Fig. BE-109 Horn relay

Downloaded from www.Manualslib.com manuals search engine

TROUBLE DIAGNOSES AND CORRECTIONS

Condition	Probable cause	Corrective action
Horn does not operate.	Discharged battery. (Measure specific gravity of electrolyte.)	Recharge or replace battery.
	Burnt fuse.	Correct cause and replace fuse.
	Faulty horn button contact. [Horn sounds when horn relay terminal ① is grounded.]	Repair horn button.
	Faulty horn relay. [Horn sounds when ② and ③ horn relay terminals are connected with a test lead.]	Replace horn relay.
	Faulty horn or loose horn terminal connection.	Correct horn terminal connection or replace horn.
Horn sounds continuously.	Short-circuited horn button and/or horn button lead wire. [When black lead wire is disconnected from horn relay terminal①, horn stops sounding.]	Repair horn button or its wiring.
	Faulty horn relay.	Replace horn relay.
Reduced volume and/ or tone quality.	Loose or poor connector contact. (Fuse, relay, horn and/or horn button.)	Repair.
	Faulty horn.	Replace.

Downloaded from www.Manualslib.com manuals search engine

Horn

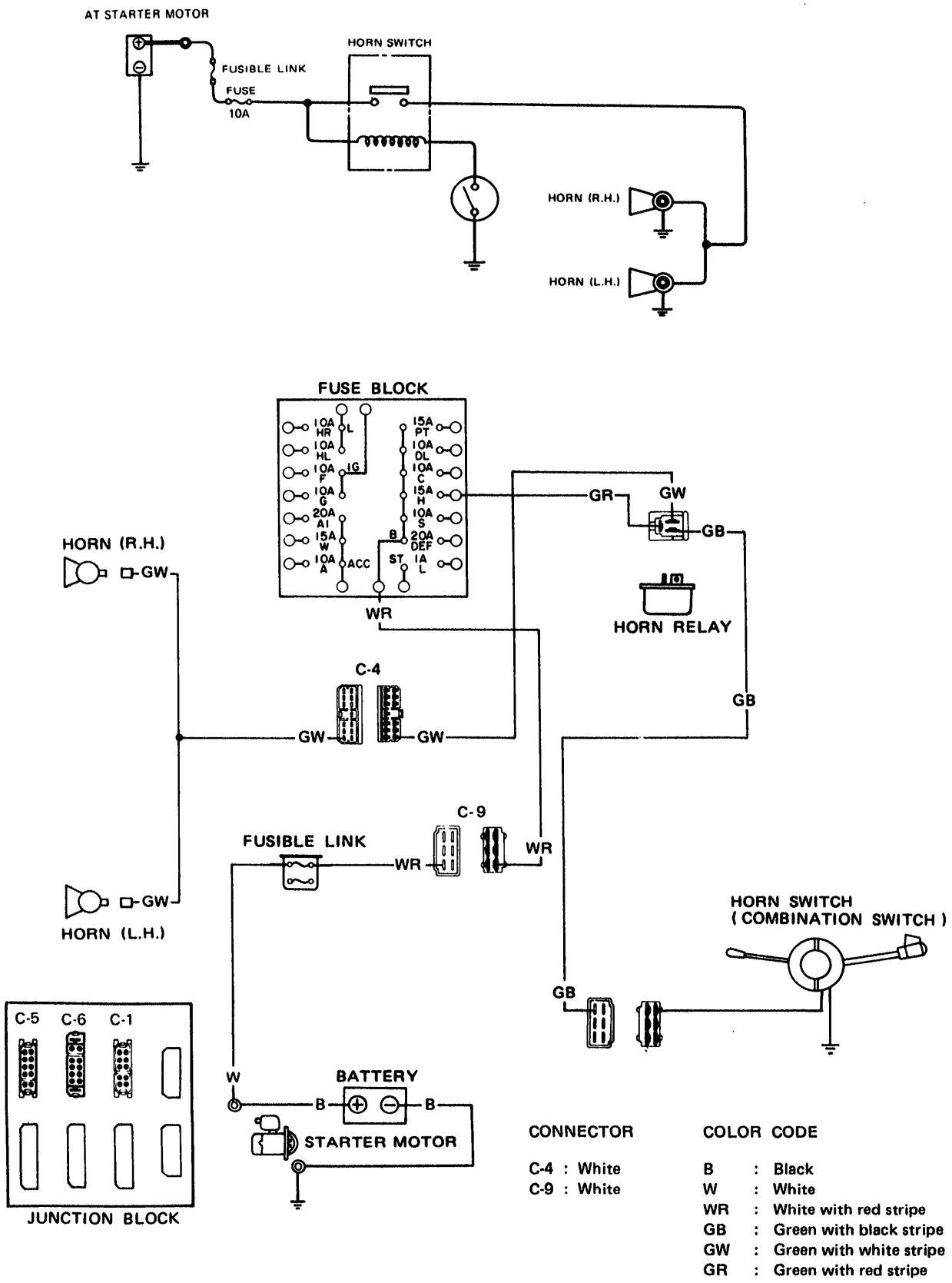

BE679B

Fig. BE-110 Circuit diagram for horn

Downloaded from www.Manualslib.com manuals search engine

WINDSHIELD WIPER AND WASHER

DESCRIPTION

The windshield wiper and washer system consists of a wiper motor, wiper links and arms, washer nozzles, a washer tank, a washer motor, an intermittent amplifier and a wiper switch. The wiper switch is an integral part of combination switch. Washer motor operates when the knob at the top end of combination switch lever is pressued into the lever. The wiper system also has an intermittent amplifier.

This wiper system is equipped with a rise-up mechanism. Wiper motor revolves reversely for one turn at the end of use with the aid of relay. Then, wiper linkage varies in length and stops wiper blades at lower position than normal wiping area.

Both the wiper motor and the intermittent amplifier have contacts. Refer to Figure BE-122. The motor contacts are controlled by the wiper switch, while amplifier contacts are controlled by an integrated circuit in the amplifier, that is, electric current flowing through the coil (RL) is not powerful enough to switch the contacts in the amplifier.

When the condenser (C_2) is charged with electric current flowing through the coil (RL), however, the transistors (Tr_1 and Tr_2) switch on and electric current increases. The contacts are then changed.

Amplifier contacts are for by-passing the auto-stop mechanism in the wiper motor. Consequently, when the amplifier contacts change, the motor begins to rotate. The condenser (C_2) discharges electric current as the wiper link rotates one turn and the contacts revert to their original position. Wiper motor then stops with the aid of the auto-stop mechanism.

When the condenser is re-charged, the motor starts again. Wiper motor contacts are for changing rotating direction; normal rotation or reverse rotation. When the wiper switch is turned off, the motor contacts change. Consequently as soon as the switch is turned off, the motor begins to rotate reversely and stops. If a washer is in use, condensers (C_1 and C_2) are charged with electric current through washer motor circuit and change contacts in amplifier; wiper motor thus rotates without auto-stop mechanism.

If washer motor is stopped, condensers (C_1 and C_2) begin to discharge electric current. The amplifier contacts revert back to their original positions and the wiper motor stops with the aid of auto-stop mechanism.

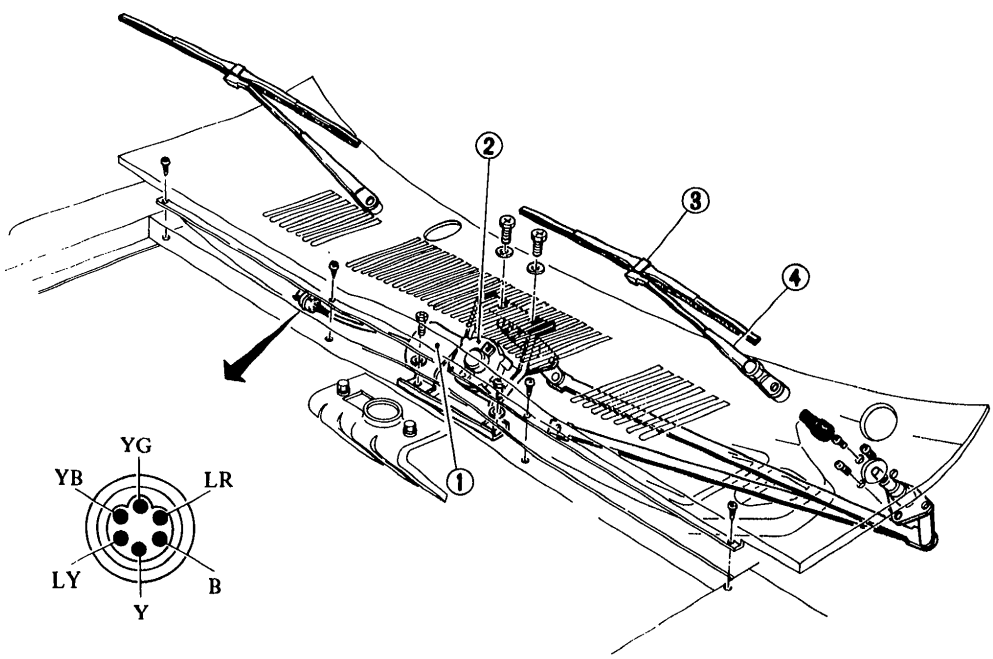

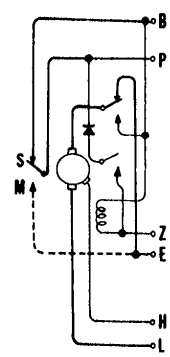

1 Windshield wiper motor assembly
2 Auto-stop mechanism
3 Windshield wiper blade
4 Windshield wiper arm

BE680B

Fig. BE-111 Windshield wiper and washer system

Downloaded from www.Manualslib.com manuals search engine

ADJUSTMENT

Wiping area

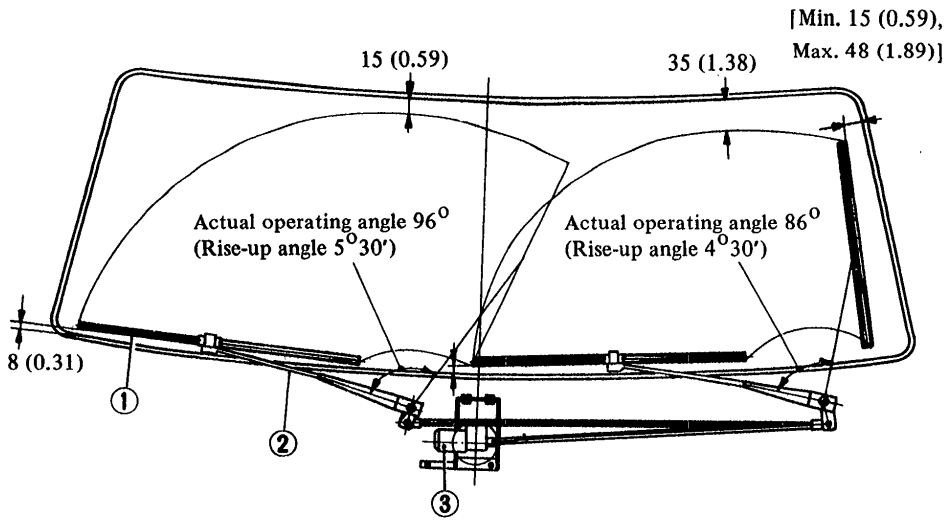

1 Windshield wiper blade
2 Windshield wiper arm
3 Windshield wiper motor

BE637B

Unit: mm (in)

Fig. BE-112 Wiping area

To adjust wiping area, loosen arm set nut and adjust blade to correct installation angle to obtain correct sweeping zone as sketched in figure above.

Then, secure nut at specified tightening torque.

Tightening torque:
Wiper blade arm lock nut:
0.8 to 1.0 kg-m
(5.8 to 7.2 ft-lb)

Nozzle direction

Adjust nozzle direction so that fluid is sprayed in proper range by bending nozzle with screwdriver. This adjustment can be carried out through cowl top grille.

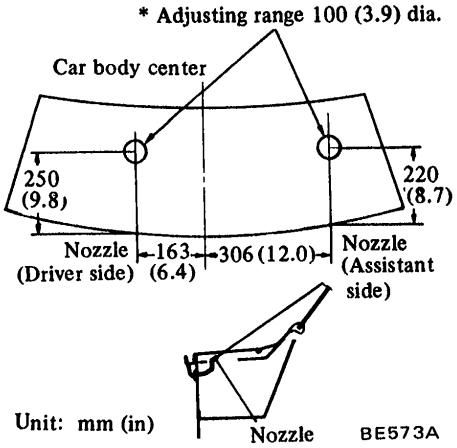

Unit: mm (in)

Fig. BE-113 Nozzle direction

REMOVAL AND INSTALLATION

Wiper arm and wiper blade

Remove arm and blade assembly from pivot in this sequence.

1. Raise wiper blade from windshield glass.
2. Unscrew arm set nut. Arm can then be pulled off pivot.
3. Install in reverse sequence of removal.

Note: Be sure to install arm and blade assembly in correct peak position. Position of blade can be adjusted when pushing it onto pivot.

Tightening torque:
Arm set nut:
0.8 to 1.0 kg-m
(5.8 to 7.2 ft-lb)

To remove blade, raise tab to unlatch blade lock and pull blade off top end of arm.

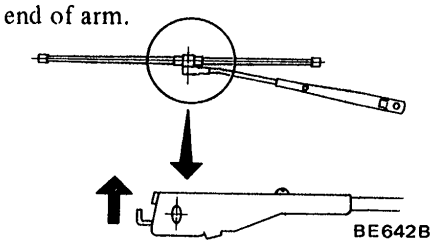

Fig. BE-114 Removing wiper blade

Wiper motor and linkage

1. Remove wiper arm, referring to previous section.
2. Open hood, and disconnect wiper motor connector.

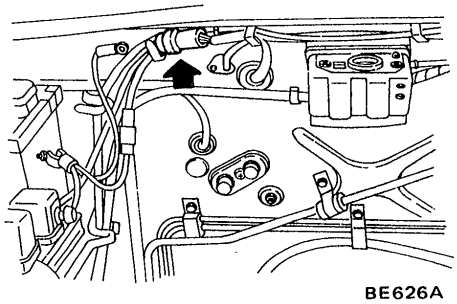

Fig. BE-115 Connector for wiper mortor

3. Remove cowl top grille by removing cowl top retaining screws.

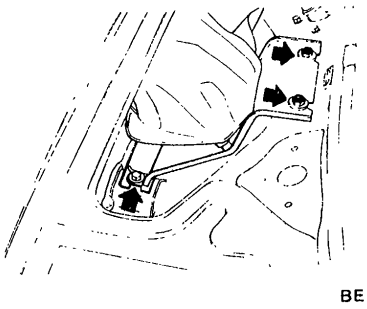

Fig. BE-116 Wiper motor

4. Remove four screws retaining wiper motor bracket.

The bracket with wiper motor can then be taken out. Refer to Figure BE116.

5. Remove three screws retaining pivot.
6. The linkage can then be taken out easily. Refer to Figure BE-117.

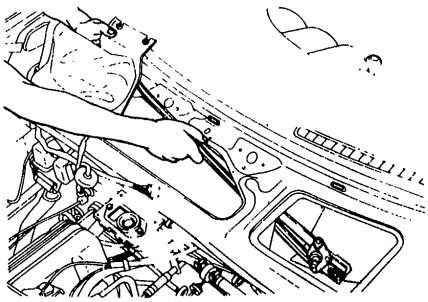

Fig. BE-117 Removing link assembly

Downloaded from www.Manualslib.com manuals search engine

Washer nozzle

1. Remove washer nozzle fixing screws from cowl top panel.
2. Take out washer nozzle with tube.
3. Install in reverse sequence of removal.

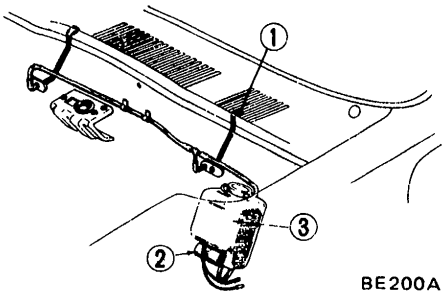

1 Nozzle
2 Windshield washer motor
3 Windshield washer tank

Fig. BE-118 Washer nozzle

Washer pump and tank

The washer pump is installed at bottom of washer tank.

1. Remove washer tank with washer motor from tank bracket in engine room.
2. Disconnect two washer pump lead wires at connectors.
3. Remove hoses from washer pump and drain washer fluid.
4. Separate washer pump from washer tank.
5. Install washer tank and motor assembly in reverse sequence of removal.

Note: In assembling washer motor and washer tank, it is recommended that soapy water be used to facilitate the operation.

Caution for windshield washer operation

1. Be sure to use only washing solution.

Never mix soap powder or detergent with solution.

2. Do not operate windshield washer continuously for more than 30 seconds or without washer fluid. This often causes improper windshield washer operation. Normally, windshield washer should be operated 10 seconds or less at one time.

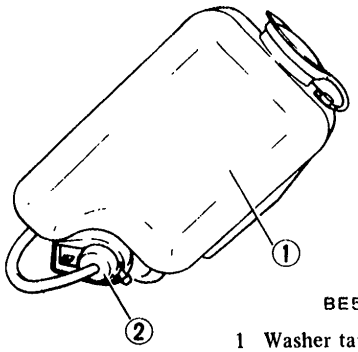

1 Washer tank
2 Washer pump

Fig. BE-119 Washer pump and tank

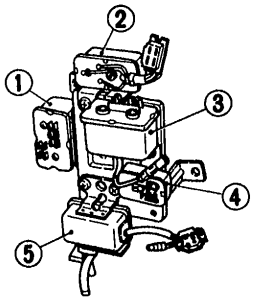

1 Intermittent wiper amplifier
2 Rear defogger relay
3 Ignition relay
4 Horn relay
5 Timer unit

BE439B

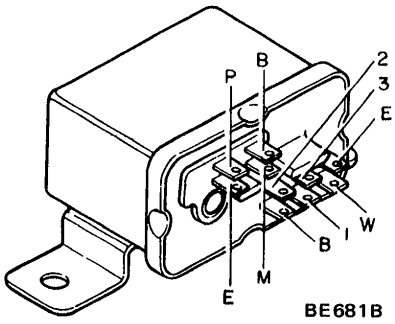

Wiper switch

Wiper switch and washer switch are integral parts of combination switch, so, refer to page BE-24 for Removal of Combination Switch.

Intermittent wiper amplifier

The intermittent wiper amplifier is installed on relay bracket.

1. Disconnect to connectors for intermittent wiper amplifier.
2. Remove intermittent wiper amplifier retaining screws.

Then, intermittent wiper amplifier can be taken out of bracket.

3. Installation is in the reverse sequence of removal.

INSPECTION

Check operation of each part of wiper system and test continuity of system with ohmmeter or test lamp.

For electrical wiring, refer to Figure BE-121 and BE-122 for windshield wiper circuit diagram.

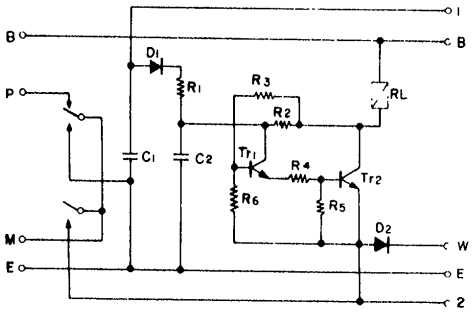

BE146A

Fig. BE-120 Intermittent wiper amplifier

Downloaded from www.Manualslib.com manuals search engine

TROUBLE DIAGNOSES AND CORRECTIONS

Condition		Probable cause		Corrective action
Windshield wiper does not operate.		Motor	No current flows to motor due to:	
			Broken armature.	Replace motor.
			Worn motor brush.	Replace motor.
			Motor is overheated due to seized motor shaft.	Replace motor.
			Windshield wiper fuse (20A) is easily fused due to short-circuit, rate short-circuit, or inside motor component burnt.	Replace motor or repair short-circuited part.
		Power supply and cable	Blown fuse due to problem in other part of windshield wiper circuit.	Check other part for operation and correct problem.
			Loose, open or broken wiring.	Check wiring near motor and connector for proper connection. Correct if necessary.
			Erroneous wiring.	Check each wire for color code, and correct if necessary.
			Improper grounding.	Correct.
		Switch	Improper switch contact.	Correct.
		Link	Foreign materials interrupt movement of windshield wiper circuit.	Correct.
			Disconnected link rod.	Correct.
			Seized or rusted arm shaft.	Lubricate or replace arm shaft.
		Windshield wiper blade	Windshield wiper blade sticks on windshield glass.	Raise arm and operate windshield wiper without applying load. Clean windshield glass and/or replace wiper blade.
Windshield wiper speed cannot be adjusted correctly.		Motor	Low or high speed motor brush is worn.	Replace motor.
Windshield wiper does not stop correctly.	Stops anywhere.	Motor	Contaminated auto-stop relay contacts or improper contact due to foreign matter.	Remove auto-stop device cover, and clean contacts carefully so as not to deform relay plate.
		Cable and switch	Improper connection between 1st and 2nd switch steps.	Remove switch, and make sure that 1st and 2nd steps are not connected at "OFF" position. If connected, replace switch.
	Does not stop.	Motor	Incomplete auto-stop operation (Contact is not interrupted.).	Remove auto-stop device cover, and correct relay plate bending.

Downloaded from www.Manualslib.com manuals search engine

Condition	Probable cause		Corrective action
Windshield wiper operating speed is too slow.	Motor	With arm raised, excessive current still flows due to layer short-circuit of motor armature.	Replace motor.
		Windshield wiper stops when lightly held with hand due to worn motor brush.	Replace motor.
		With arm raised, excessive current still flows (3 to 5A) due to seized motor shaft.	Replace motor or lubricate bearing with engine oil.
	Power supply and cable	Low source voltage.	Measure voltage, check other electrical parts for operation, and take corrective action for power supply if necessary.
	Link	Humming occurs on motor in arm operating cycle due to seized arm shaft.	Lubricate or replace.
	Switch	Improper switch contact.	Conduct continuity test, and replace if necessary.

Downloaded from www.Manualslib.com manuals search engine

Windshield washer

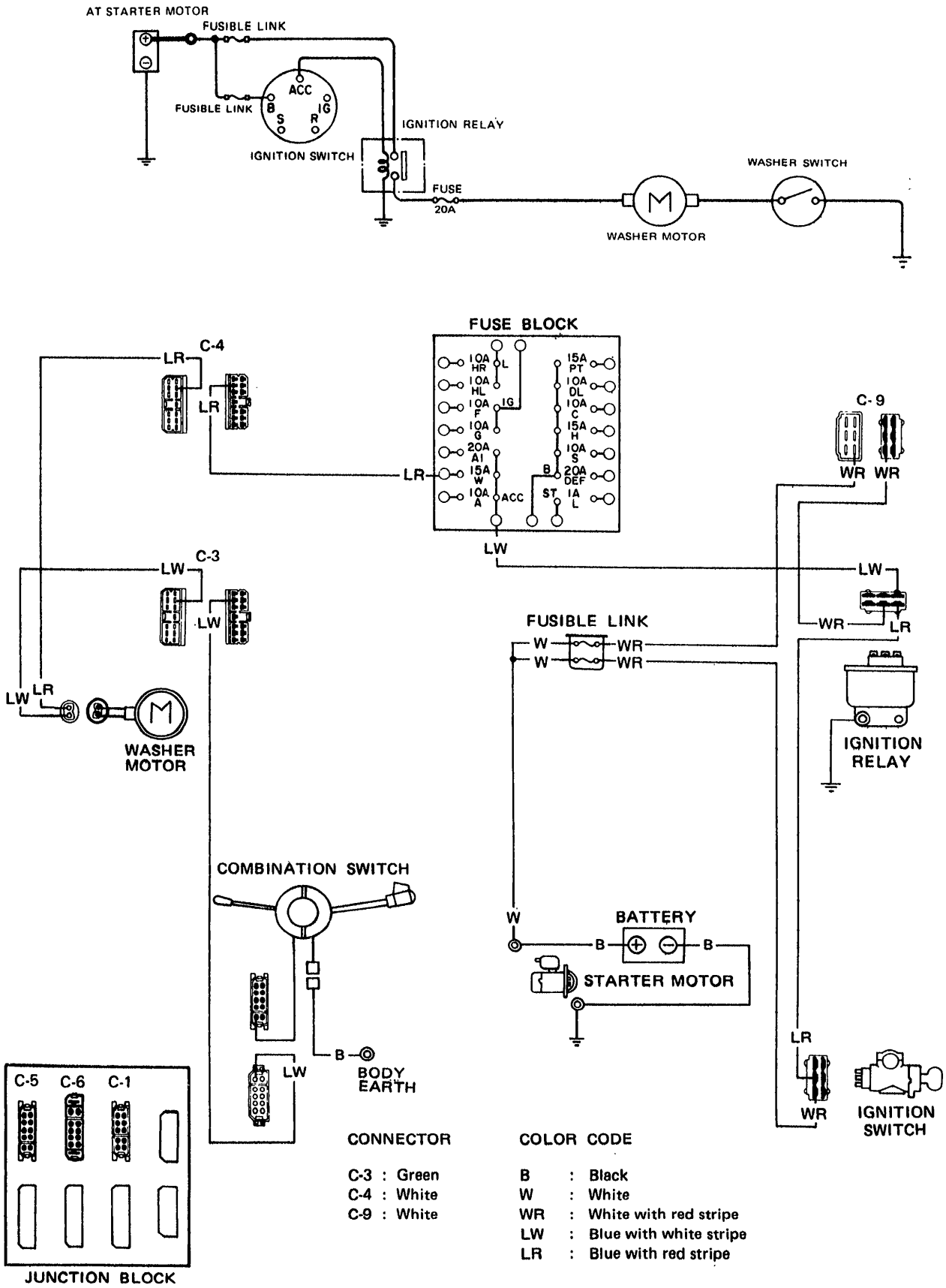

Fig. BE-121 Circuit diagram for windshield washer

Downloaded from www.Manualslib.com manuals search engine

Wiper

"OFF" position

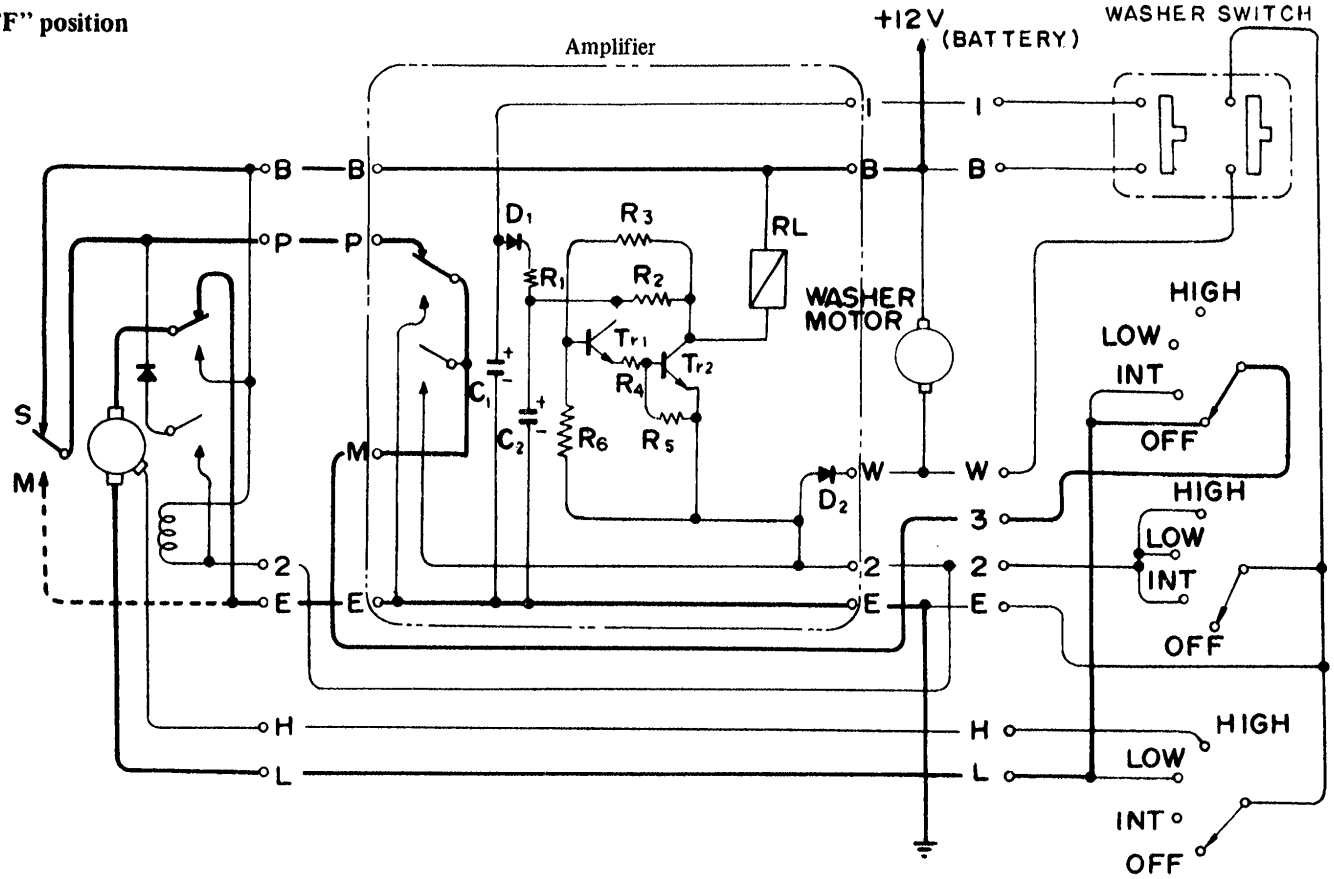

"Int" position

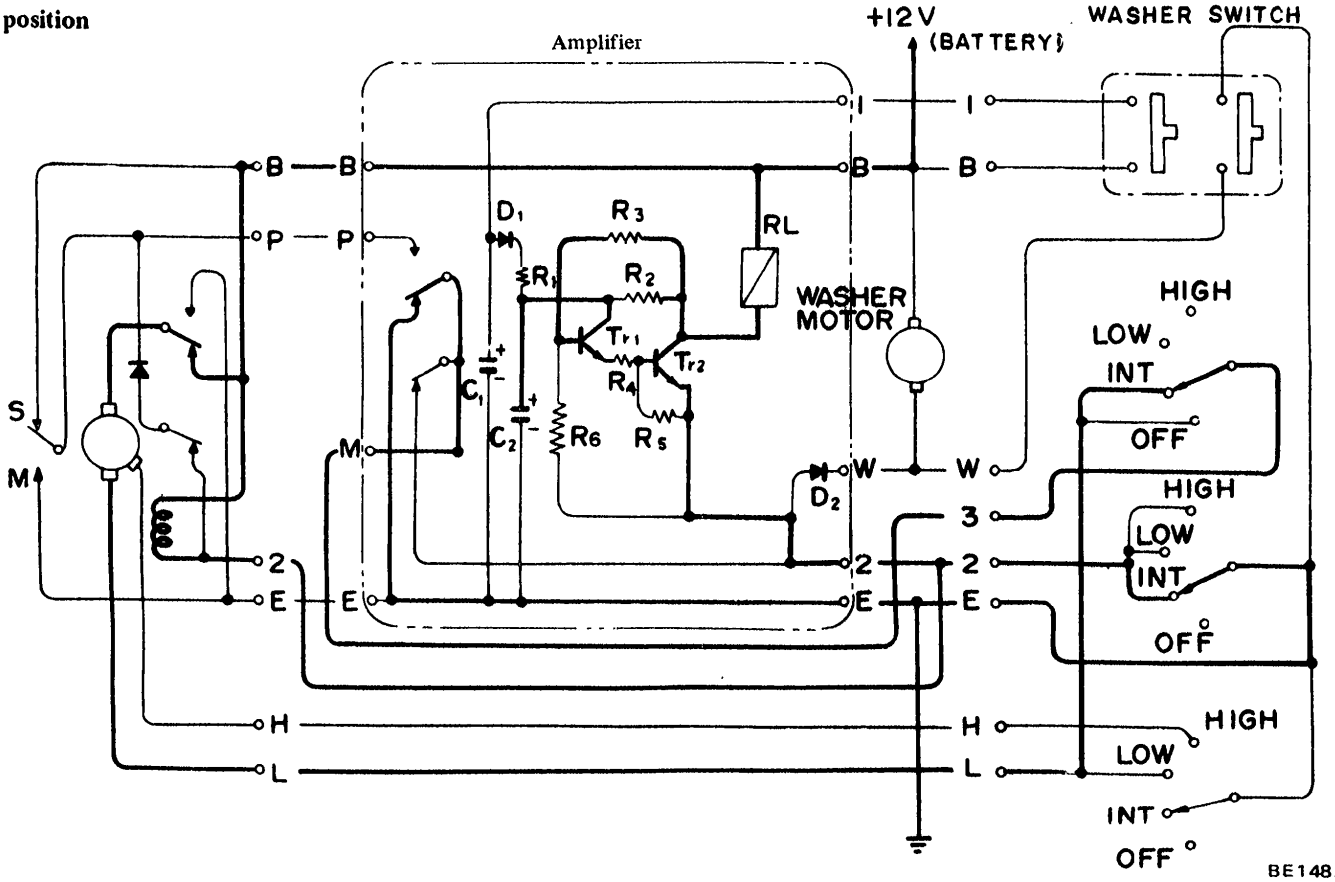

Fig. BE-122-1 Circuit diagram for windshield wiper

Downloaded from www.Manualslib.com manuals search engine

"High" position

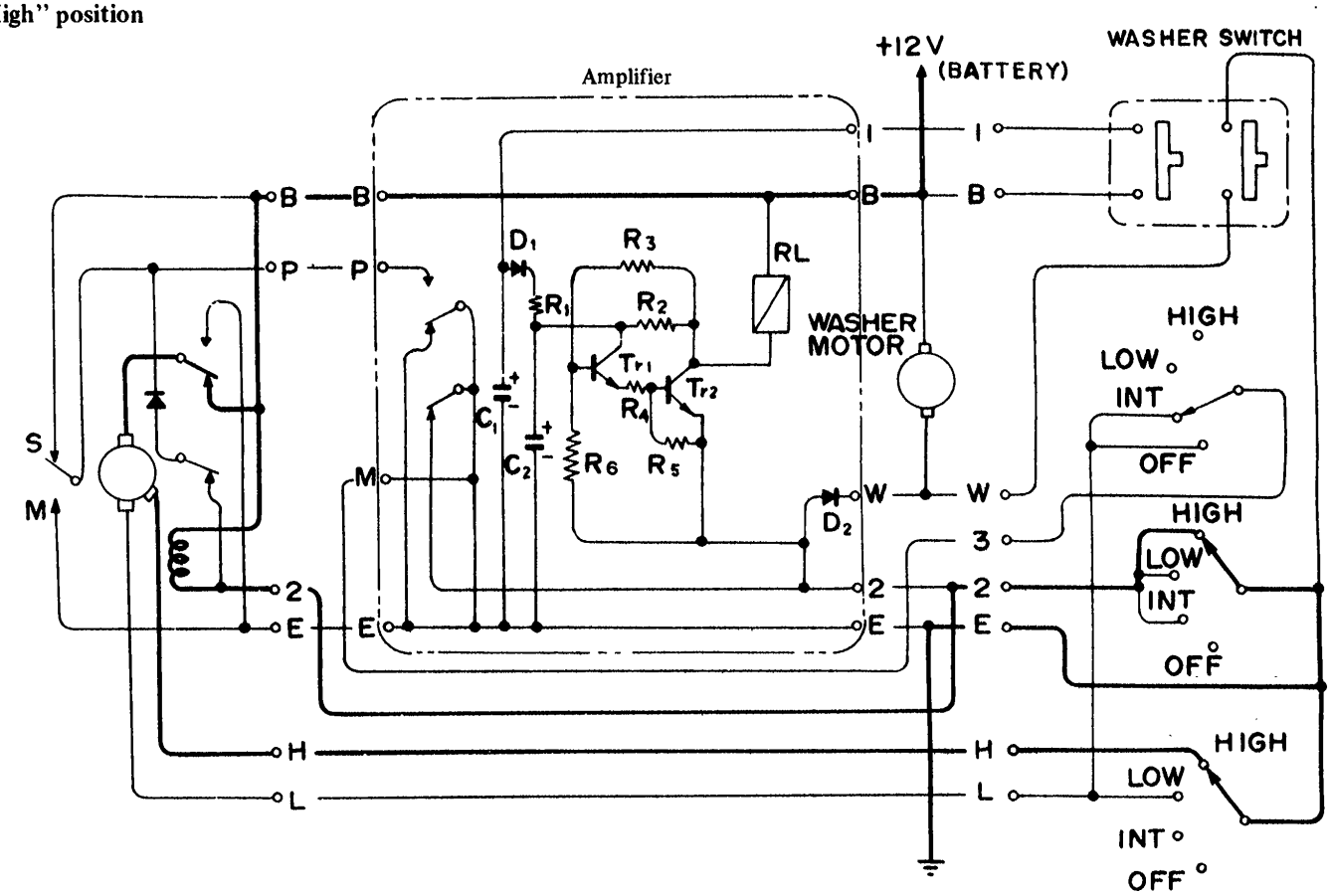

"Low" position

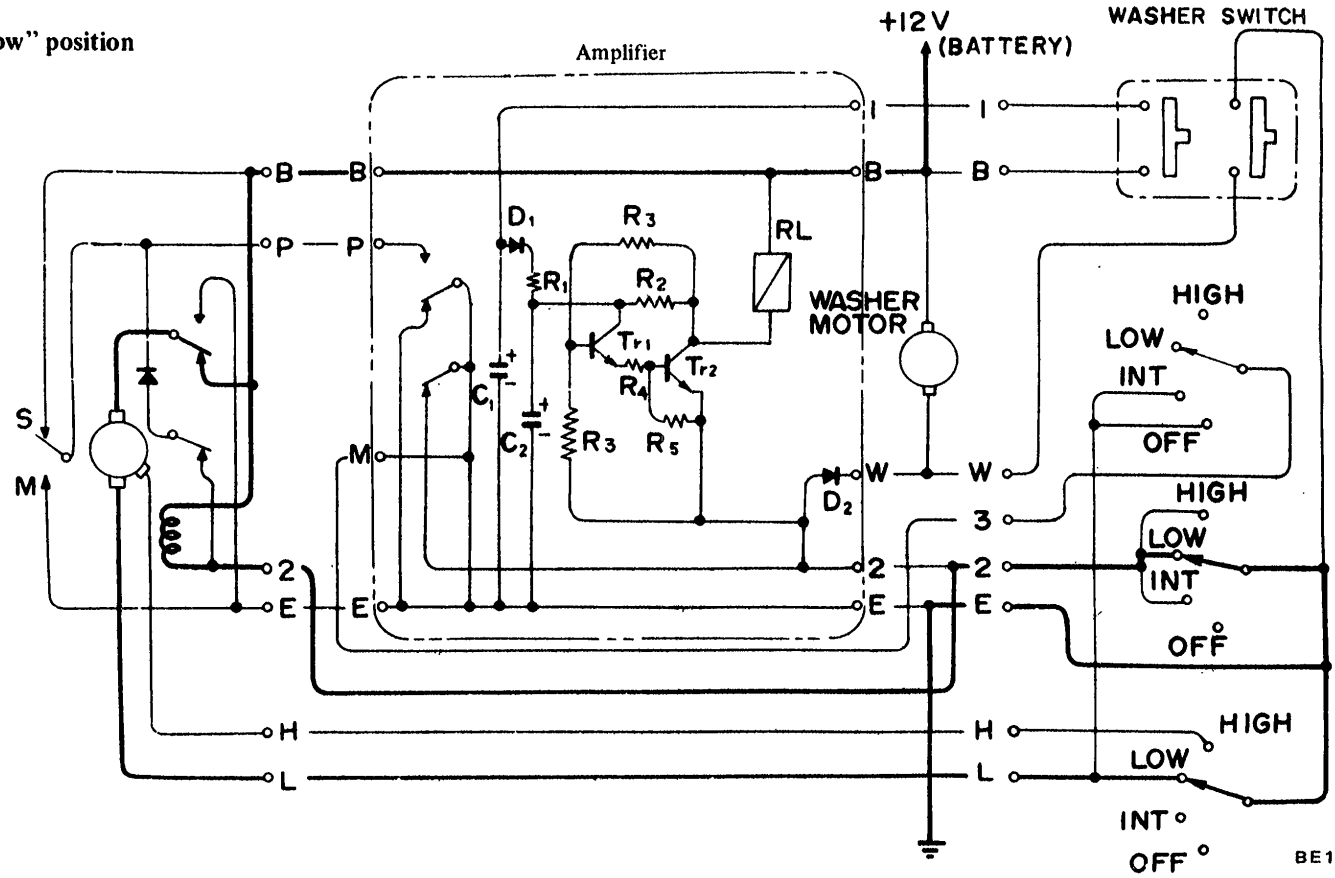

Fig. BE-122-2 Circuit diagram for windshield wiper

Downloaded from www.Manualslib.com manuals search engine

Wiper

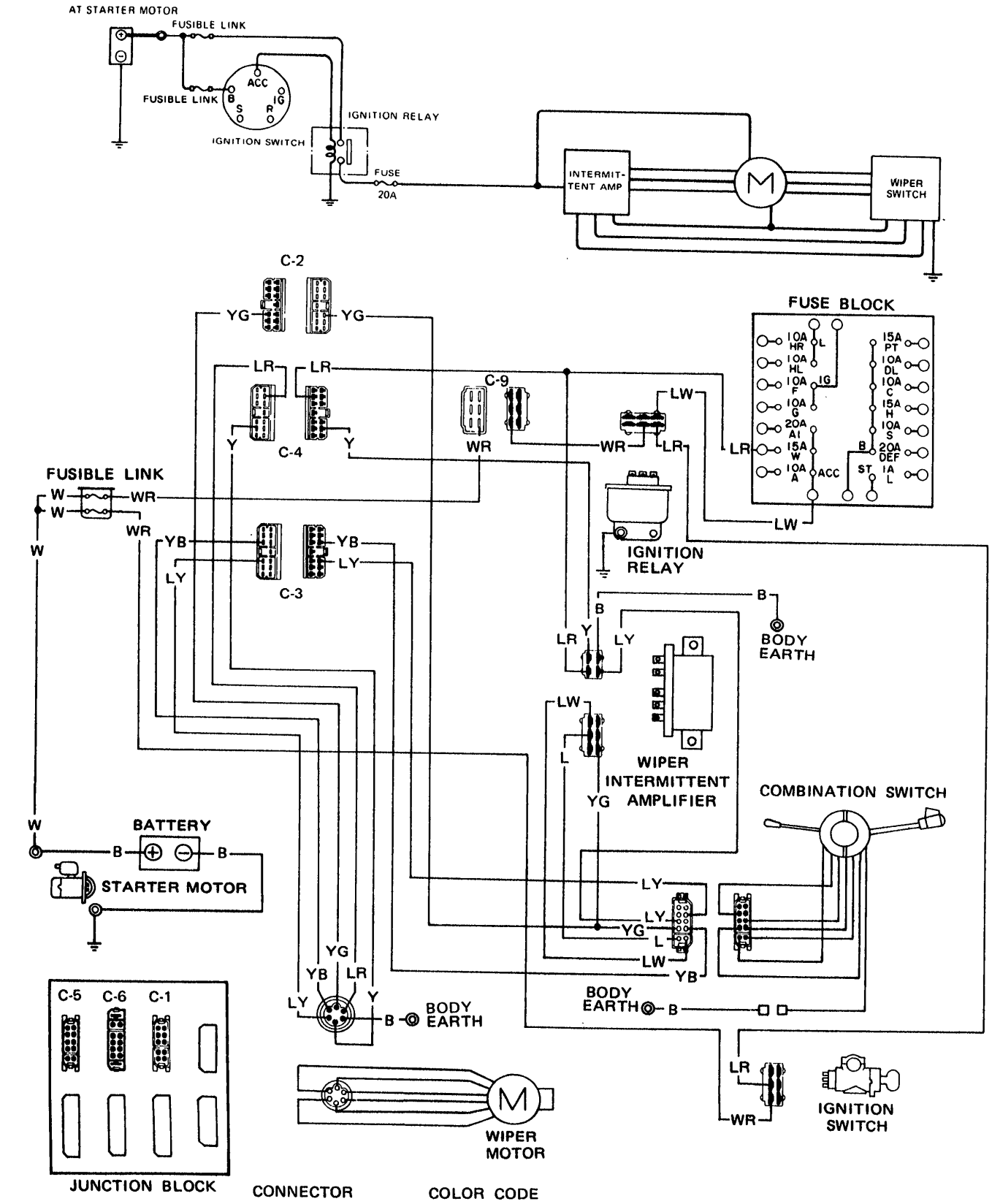

CONNECTOR		COLOR CODE					
C-2	: Black	B	:	Black	YG	:	Yellow with green stripe
C-3	: Green	W	:	White	L	:	Blue
C-4	: White	WR	:	White with red stripe	LW	:	Blue with white stripe
C-9	: White	Y	:	Yellow	LR	:	Blue with red stripe
		YB	:	Yellow with black stripe	LY	:	Blue with yellow stripe

BE644B

Fig. BE-122-3 Circuit diagram for windshield wiper

Downloaded from www.Manualslib.com manuals search engine

CIGARETTE LIGHTER

DESCRIPTION

The cigarette lighter consists of a lighter, a housing, a housing cover, and an illumination lamp.

The housing is secured on instrument panel by housing cover. A fuse is added at the bottom of housing. When pushed into housing, lighter is retained by nails in housing and gets continuity through heater coil at end of lighter.

When heater is warmed enough, the bi-metal nail frees lighter. Lighter then pops out by spring back, and breaks its continuity.

ILLUMINATION BULB REPLACEMENT

1. Remove tachometer, referring to page BE-37 for Removal.
2. Disconnect illumination lamp lead wire at connector.
3. Straighten nails of cover and pull bulb out of socket.
4. Install new bulb in the reverse sequence of removal.

Bulb wattage:

Cigarette lighter illumination bulb 1.7W

REMOVAL AND INSTALLATION

1. Remove battery ground cable.
2. Remove lighter from housing.
3. Remove horn pad.
4. Remove tachometer. Refer to page BE-37 for Removal.
5. Disconnect three cigarette lighter lead wires at connectors through hole in which tachometer is installed.
6. Remove retaining nut at bottom of cigarette lighter.

Housing and housing cover can then be taken out from instrument panel.

7. Installation is in the reverse sequence of removal.

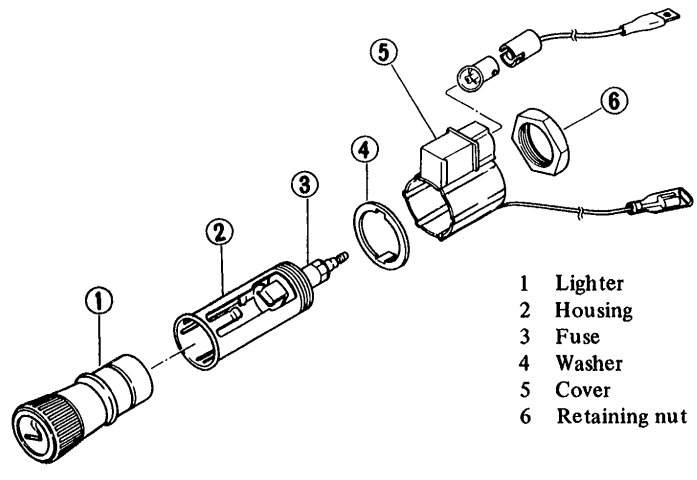

1 Lighter
2 Housing
3 Fuse
4 Washer
5 Cover
6 Retaining nut

Fig. BE-123 Exploded view of cigarette lighter

INSPECTION

Test continuity of the entire system with test lamp or ohmmeter. Refer to cigarette lighter circuit diagram as a guide.

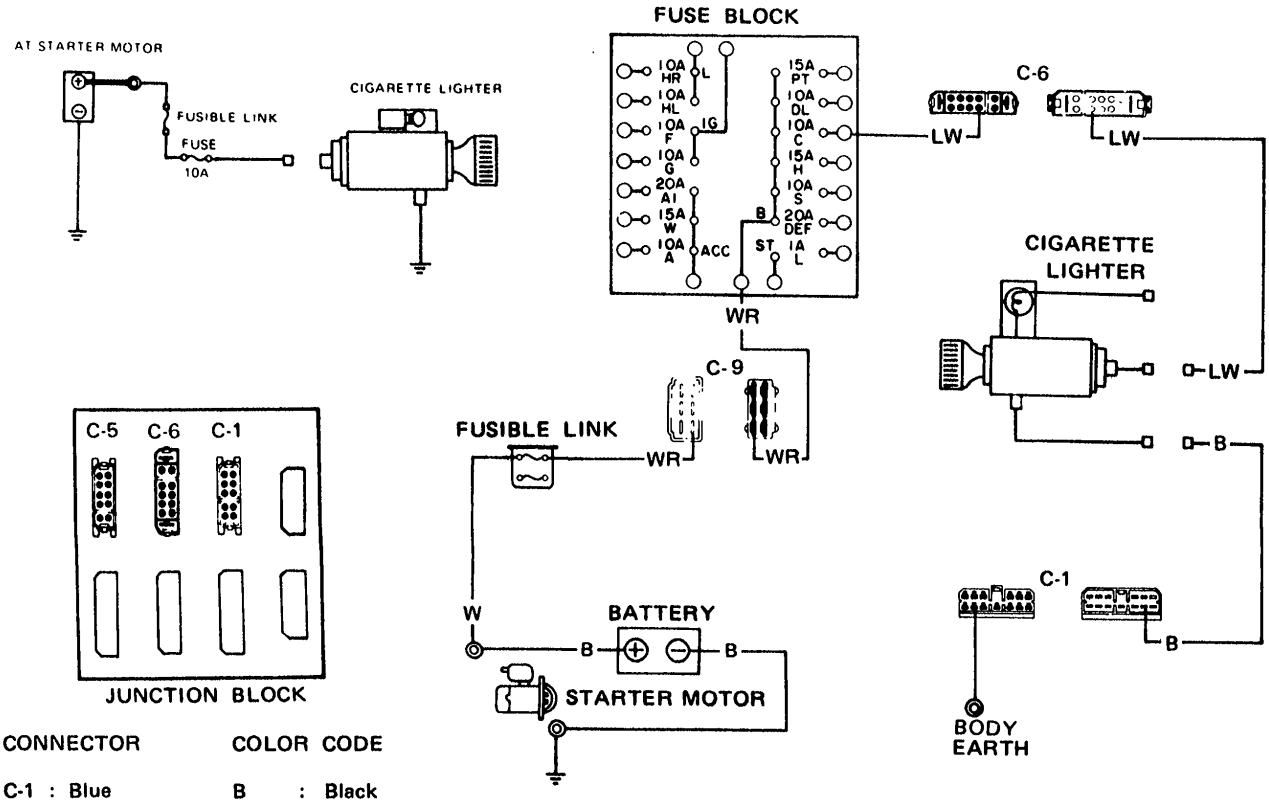

CONNECTOR	COLOR CODE	
C-1 : Blue	B	: Black
C-6 : Black	W	: White
C-9 : White	WR	: White with red stripe
	LW	: Blue with white stripe

Fig. BE-124 Circuit diagram for cigarette lighter

Downloaded from www.Manualslib.com manuals search engine

CLOCK

DESCRIPTION

The clock is installed on instrument panel; removal procedure is the same as for the other two gauges. It has a connector with four terminals. The illumination bulb can be easily taken out by pulling socket from back of clock.

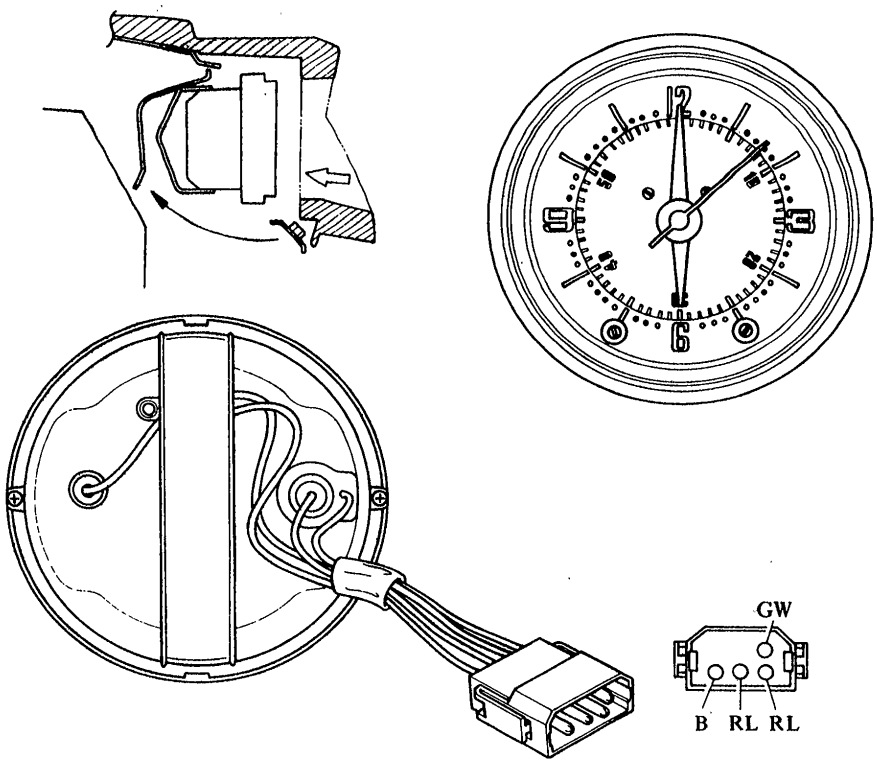

BE646B

Fig. BE-125 Clock

REPLACEMENT

Clock

1. Remove four screws retaining instrument finisher to instrument panel. Take out instrument finisher a little and disconnect two connectors Instrument finisher can then be taken out. See Figure BE-86.
2. Remove six screws retaining three-way venti-duct to instrument panel.
3. Disconnect duct hoses from three-way duct and take out three-way duct.
4. Remove screw retaining clock to instrument panel.

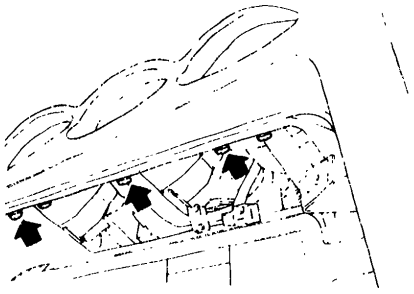

BE117A

Fig. BE-126 Removing clock retaining screw

5. Take out clock backward and disconnect lead wires at connector. Clock can then be taken out.

Bulb replacement

The illumination bulb can be easily taken out by pulling socket with bulb at back of clock.

Remove bulb from socket and install new bulb.

Assemble in reverse sequence of removal.

Bulb wattage:

Clock illumination bulb . . 3.4W

INSPECTION

Test continuity and operation of each unit with ohmmeter or test lamp. Refer to Figure BE-127 for circuit diagram of clock.

Downloaded from www.Manualslib.com manuals search engine

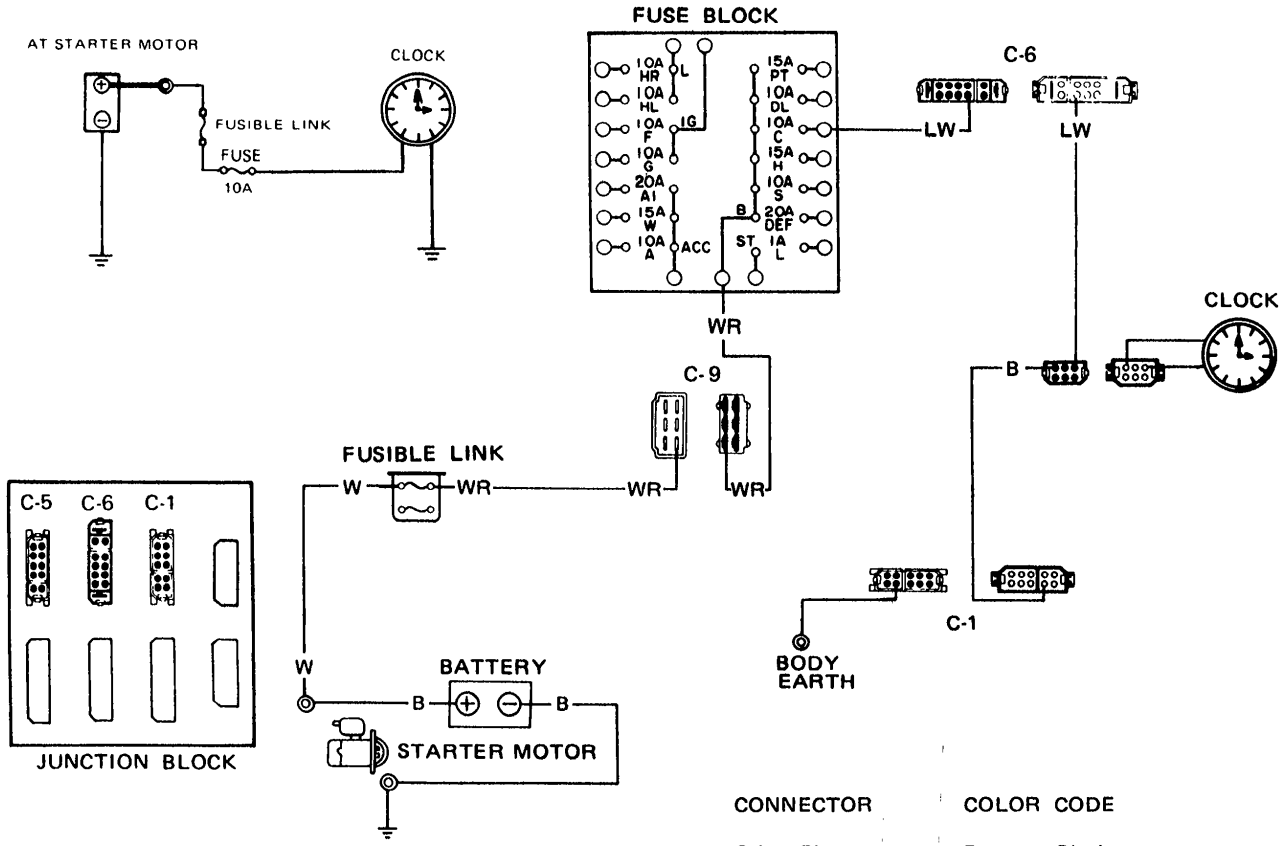

Fig. BE-127 Circuit diagram for clock

ELECTRIC REAR WINDOW DEFOGGER

DESCRIPTION

The electric rear window defogger system consists of a defogger switch, a defogger relay, a defogger warning lamp and a filament in the rear window glass.

The filament is attached inside rear window. Heat from filament keeps rear window free of fog and frost.

Defogger relay is located on relay bracket.

Defogger switch and warning lamp are installed on console box.

REMOVAL AND INSTALLATION

Defogger switch, warning lamp

Defogger switch is held against console box by spring pressure.

1. Disconnect battery ground cable.
2. Remove console box, referring to Section BF.
3. From behind console box, grasp nail of switch body and push it out of console box.
4. Disconnect lead wires at a connector.
5. Installation is in the reverse sequence of removal.

Note: In installing, switch body can be installed on console box only by pressing it in.

Defogger relay

Defogger relay is located on relay bracket.

1. Remove battery ground cable.
2. Disconnect lead wires for defogger relay at a connector.
3. Remove two screws retaining relay to relay bracket.

Relay can then be taken out easily.

4. Installation is in the reverse sequence of removal.

Downloaded from www.Manualslib.com manuals search engine

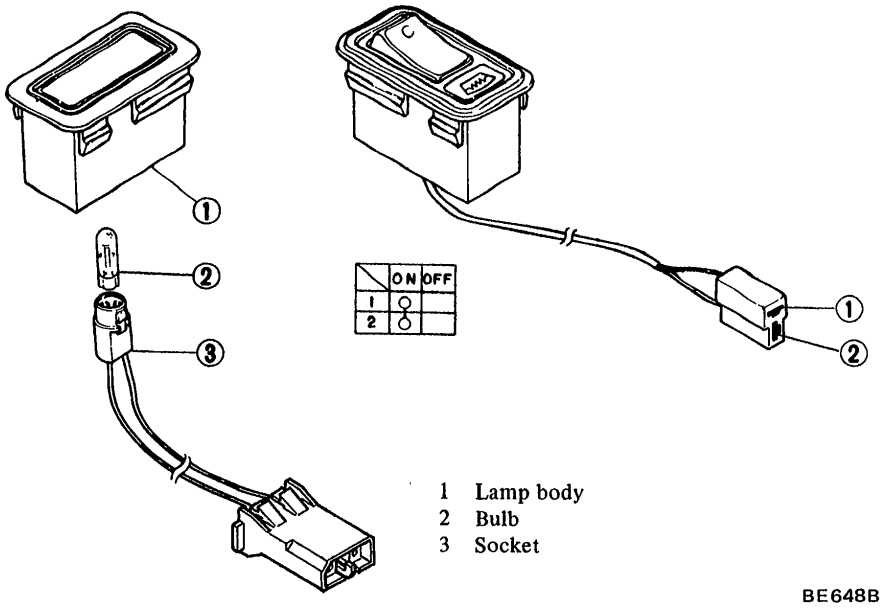

Fig. BE-128 Defogger switch and warning lamp

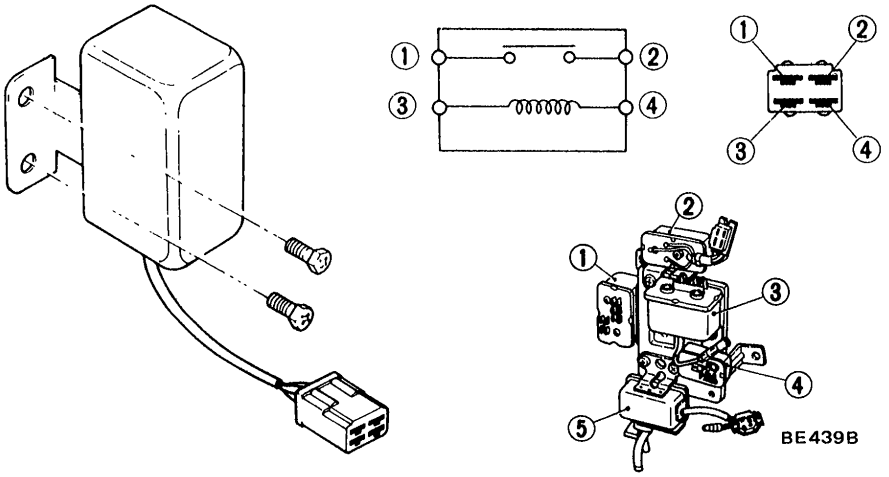

Fig. BE-129 Defogger relay

WARNING LAMP BULB REPLACEMENT

1. Remove console box, referring to Section BF.
2. Push socket with bulb behind warning lamp body and twist it counterclockwise.

   Socket with bulb can then be taken out.
3. Remove bulb from socket.
4. Install new bulb. Assembly is in the reverse sequence of removal.

Bulb wattage:

Rear window defogger warning lamp 1.4W

INSPECTION

Defogger switch

Test continuity of switch by using test lamp or ohmmeter. Test must be carried out with switch at both ON and OFF. Refer to Figure BE-128 for continuity diagram of defogger switch.

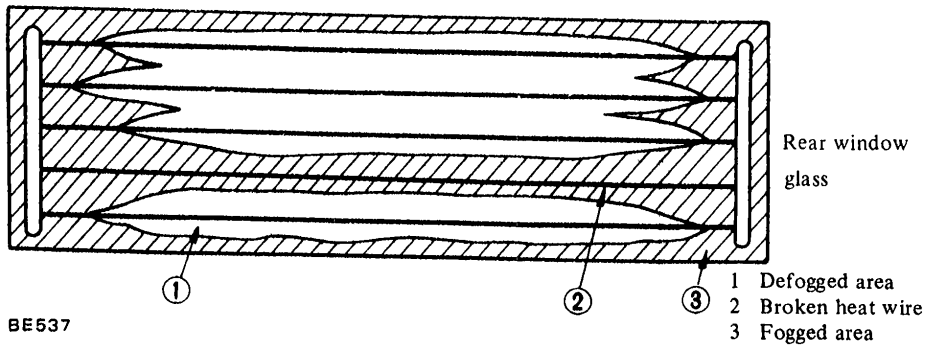

Fig. BE-130 Broken filament

Downloaded from www.Manualslib.com manuals search engine

Defogger relay

Test continuity of relay with ohmmeter or test lamp. Refer to Figure BE-129 for defogger relay. In testing relay, there must be continuity between ③-④. When 12V direct current is applied to ③-④, there must be continuity between ①-②.

Rear window filaments

Rear window defogger filament can be inspected for circuit breaks by one of three methods.

Method 1:

Start engine and turn on window defroster system. If area around a specific filament is not defogged, that line is broken.

Method 2:

Start engine and turn on window defroster system. With a direct-current voltmeter setup shown in Figure BE-131, check each heat wire for discontinuity. If meter indicates 12 volts or 0 on a specific wire, that line is broken. (Normal indication: 6 volts)

Break in that line can then be detected by moving positive lead of meter along line until an abrupt variation in meter indication is encountered.

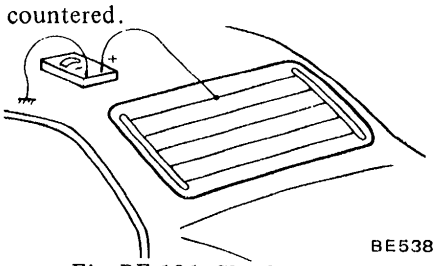

Fig. BE-131 Checking for broken filament with d—c voltmeter

Method 3:

With an ohmmeter setup shown in Figure BE132, place one lead at one end of a heat wire and other in middle section of that wire. If meter registers, on a specific grind line, a value twice as much as on any other line, that line is broken.

Break in that line can then be located by an abrupt variation in meter indication as test lead moves along broken heat wire.

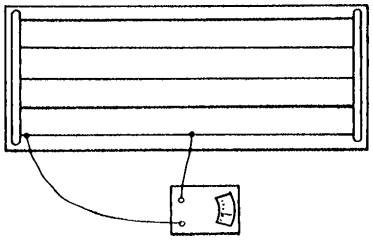

Fig. BE-132 Checking for broken filament with ohmmeter

FILAMENT MAINTENANCE

Repair equipment

1. Conductive silver composition (Dupont No. 4817)
2. Ruler, 30 cm (12 in) long
3. Drawing pen
4. Heat gun
5. Alcohol
6. Cloth

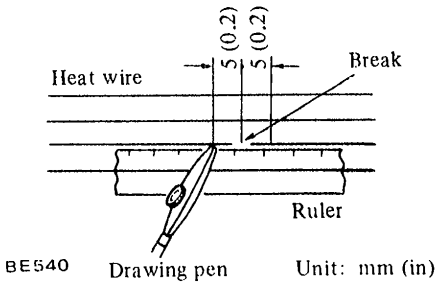

Fig. BE-133 Locating ruler in position

Repair procedure

1. Wipe broken heat wire and its surrounding area clean with a cloth dampened in alcohol.
2. Apply a small amount of conductive silver composition to tip of drawing pen.

Note: Shake silver composition container before use.

3. Place ruler on glass along broken line to be repaired as shown in Figure BE-133. Deposit conductive silver composition on break with drawing pen. Slightly overlap existing heat wire on both sides [5 mm (0.197 in) preferably] of the break.
4. Wipe clean silver composition from tip of drawing pen.
5. After repair has been completed, check repaired wire for continuity. This check should be conducted 10 minutes after silver composition is deposited.

Note: Do not touch repaired area while test is being conducted.

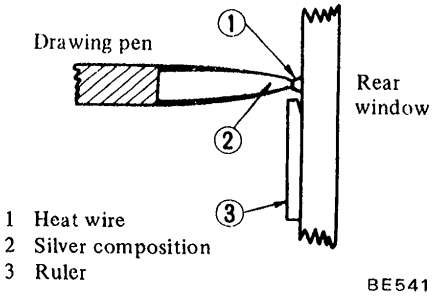

Fig. BE-134 Depositing silver composition in place

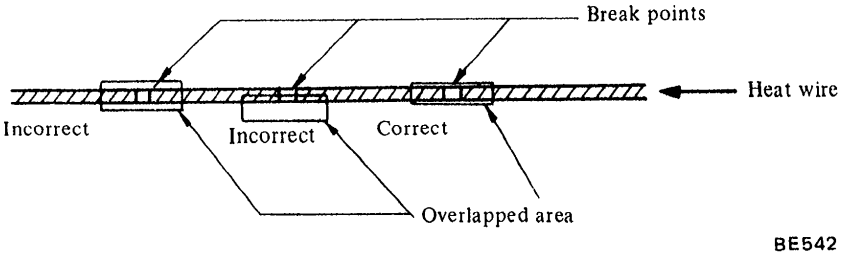

Fig. BE-135 Incorrect and correct deposition of silver composition

6. Apply a constant stream of hot air directly to the repaired area for approximately 20 minutes with a heat gun. A minimum distance of 3 cm (1.18 in) should be kept between repaired area and hot air outlet. If a heat gun is not available, leave the repaired area unattended for 24 hours.

Instruction after repair

Wiper repaired area clean with a soft, clean cloth.

Note: Do not use a cleaning solvent containing much soapy water.

Downloaded from www.Manualslib.com manuals search engine

Rear window defogger

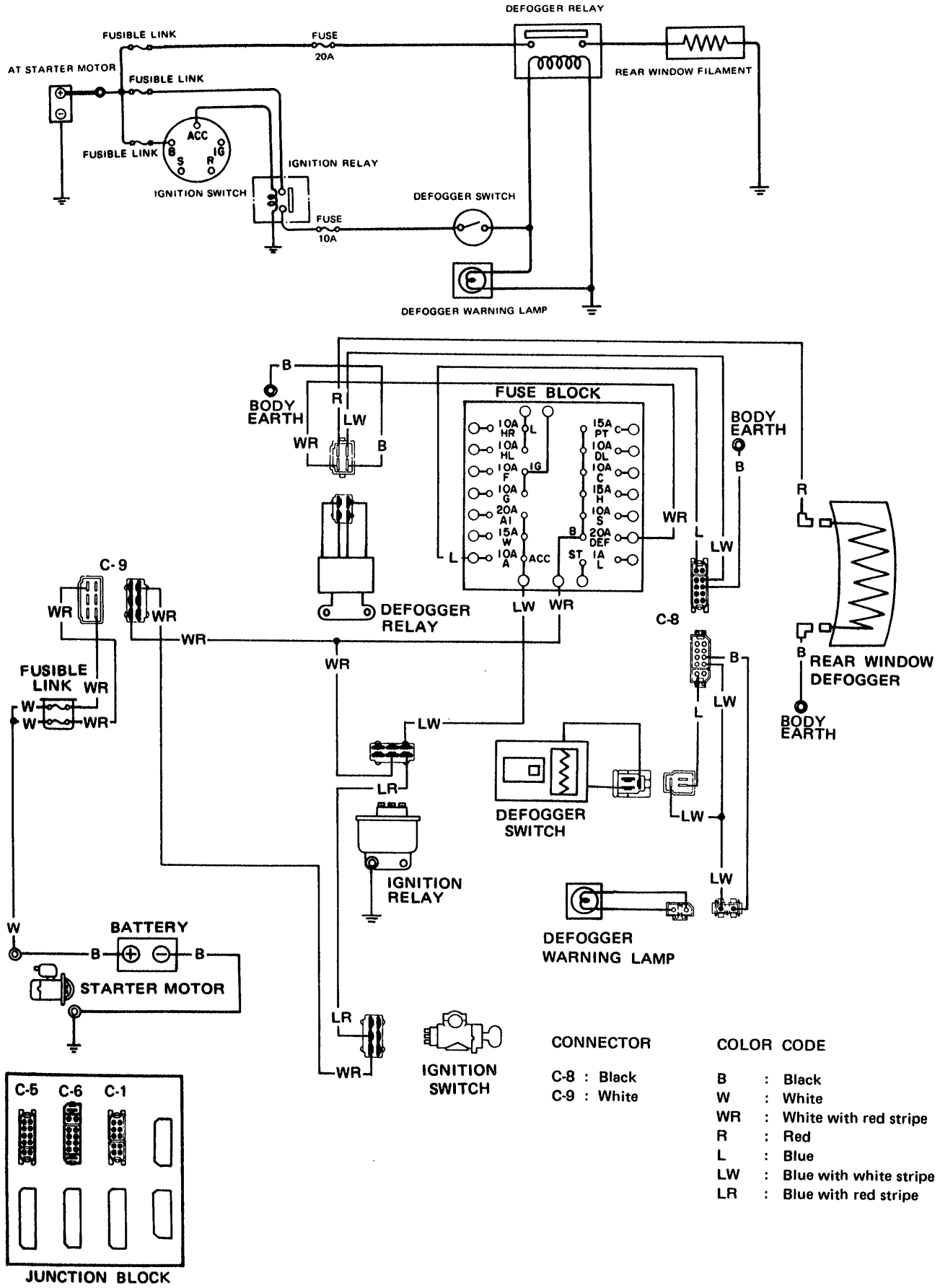

Fig. BE-136 Circuit diagram for rear window defogger

Downloaded from www.Manualslib.com manuals search engine

RADIO

DESCRIPTION

The radio system consists of an antenna, a speaker, a radio receiver and an antenna switch.

Antenna is connected to radio receiver with feeder cable. Speaker is connected to radio receiver with pair of speaker harnesses. Radio receiver is installed on console box.

Speaker is installed on body side.

Antenna trimmer adjustment is required for best radio performance.

Antenna trimmer adjustment is required for best radio performance.

A fuse is added on harness midway from ignition switch.

Antenna switch is installed on radio receiver.

1 Knob
2 Escutcheon
3 Radio receiver
4 Antenna feeder cable
5 Fuse
6 Auto antenna switch

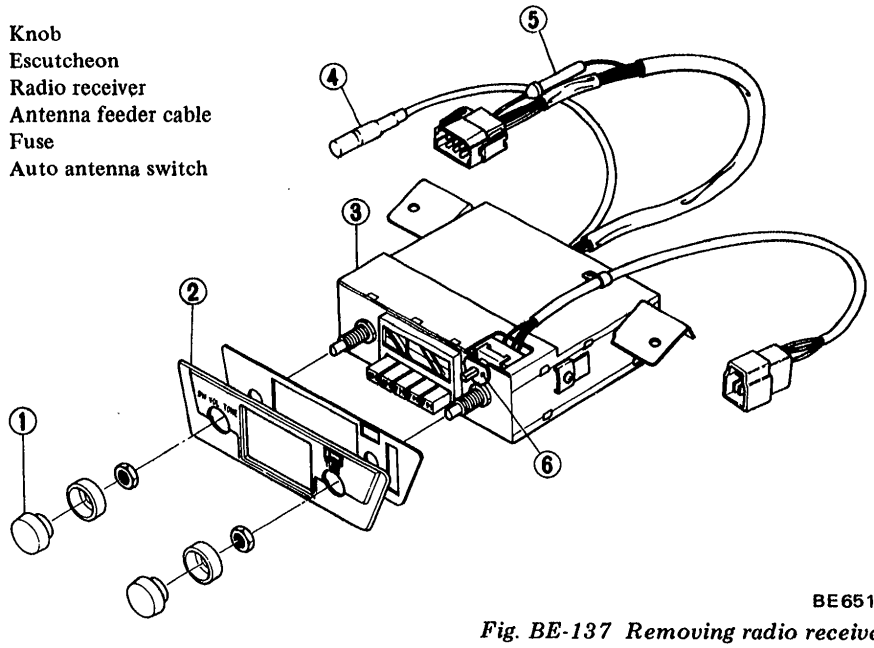

BE651B

Fig. BE-137 Removing radio receiver

REMOVAL AND INSTALLATION

Radio receiver

1. Remove console box, referring to Section BF.
2. Disconnect lead wires for radio and antenna switch at two connectors. Feeder cable is also removed.
3. Pull out dials on radio receiver and remove two nuts retaining escutcheon to radio receiver.
4. Remove two screws retaining radio receiver to console box. Radio receiver can then be taken out.
5. Installation is in the reverse sequence of removal.

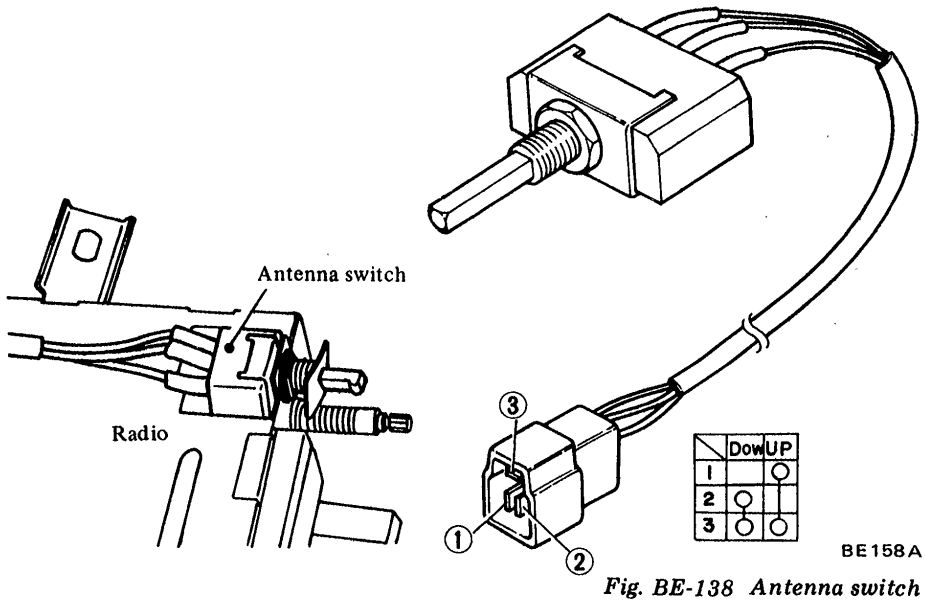

BE158A

Fig. BE-138 Antenna switch

Antenna switch

1. Remove console box and escutcheon as previously described.
2. Remove antenna switch retaining screw and switch can then be taken out from radio receiver.
3. Installation is in the reverse sequence of removal.

Antenna

1. Remove body side rear trim and disconnect lead wires at connectors.
2. Remove antenna upper retaining nut and remove retainer from outside of rear fender.

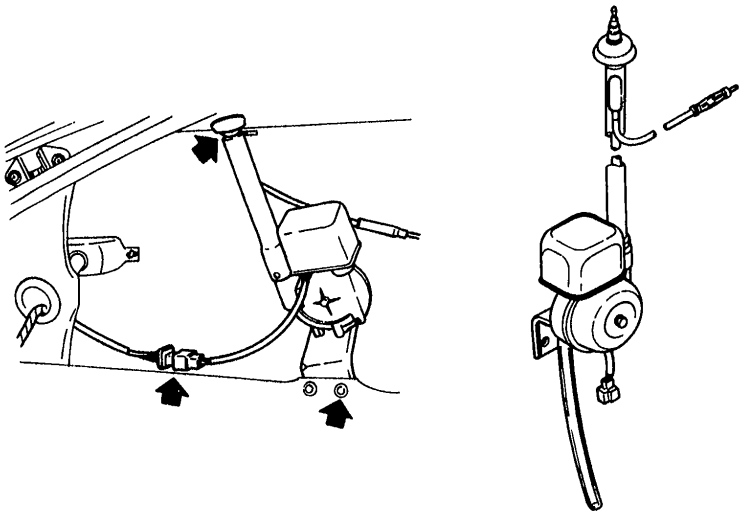

BE652B

Fig. BE-139 Auto antenna

Downloaded from www.Manualslib.com manuals search engine

3. Remove bolt retaining antenna bracket to body panel. Antenna can then be taken out.
4. Installation is in the reverse order of removal.

Speaker

1. Remove body side trim and disconnect lead wires at connectors.
2. Remove four mounting screws retaining speaker.
3. Take out speaker.
4. Installation is in the reverse sequence of removal.

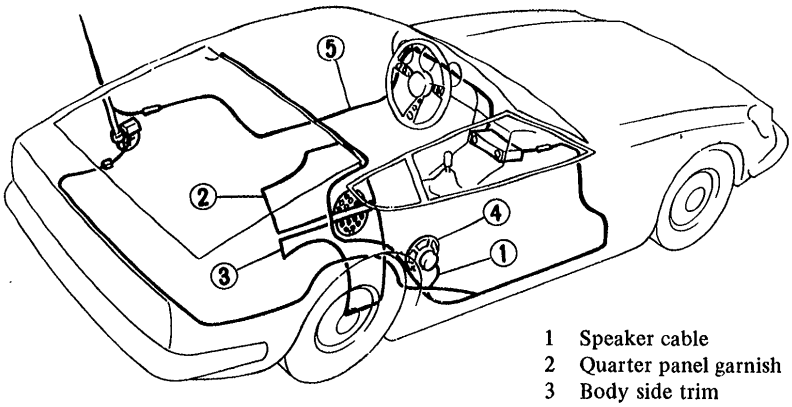

1 Speaker cable
2 Quarter panel garnish
3 Body side trim
4 Speaker
5 Antenna feeder cable

BE653B

Fig. BE-140 Removing speaker

ANTENNA TRIMMER ADJUSTMENT

When a new radio receiver, antenna or antenna feeder cable is installed, antenna trimmer should be adjusted.

1. Extend antenna completely.
2. Tune in weakest station between 12 and 16 (1,200 to 1,600 Hz) on dial.

Note: Noise may be generated but disregard it.

3. Turn antenna trimmer to right and left slowly with screwdriver and set it where receiving sensitivity is best.

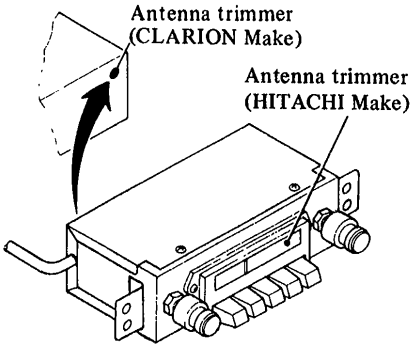

BE572

Fig. BE-141 Trimmer adjust screw

INSPECTION

If radio does not work, test continuity through the system with ohmmeter or test lamp. When testing, refer to Figure BE-138 for continuity diagram of antenna switch and Figure BE-142 for wiring diagram of radio system.

If noise is generated, refer to Noise Prevention Chart.

Notes:

When installing wireless telegraph, pay attention to the following items.

a. Be sure to separate antenna cable more than 2 inches (50.8 mm) from electronic fuel injection control unit and transistor ignition unit.

b. Make sure that radio interference does not cause engine malfunction.

Downloaded from www.Manualslib.com manuals search engine

TROUBLE DIAGNOSES AND CORRECTIONS

Noise prevention chart

Position car in an open area away from steel buildings, run engine, extend antenna to its maximum length, set volume control to maximum and set dial at a medium point without catching broadcasting wave.

Condition	Probable cause	Corrective action
Ignition system		
Noise occurs when engine is operated.	High tension cable	Install new high tension cable.
	Ignition coil.	Install a 0.5μF capacitor to primary side + terminal of ignition coil. **Note: Be careful not to install capacitor to secondary or primary breaker side, otherwise engine operation becomes improper.**
Charging system.		
Sound of alternating current present.	Alternator.	Install a 0.5μF capacitor to charging terminal A. **Note: Do not use a larger capacitor.** **If capacitor is installed to terminal F, alternator coil will be damaged.**
When accelerator pedal is depressed or released, noise occurs.	Regulator.	Install a 0.5μF capacitor to "IGN" terminal of voltage regulator.
Fuel system		
When ignition switch is set to "ON", noise occurs.	Electric fuel pump.	Install a 0.5μF capacitor to power lead connector plug of electric fuel pump.

Notes:

a. Be sure to locate capacitor as close to noise source as possible and connect in parallel.

b. Cut lead wire as short as possible.

c. Ground wire should be attached securely to body.

d. Make installation and connections securely.

e. Carefully identify "+", "–", "IN" or "OUT" marks.

Downloaded from www.Manualslib.com manuals search engine

Radio system

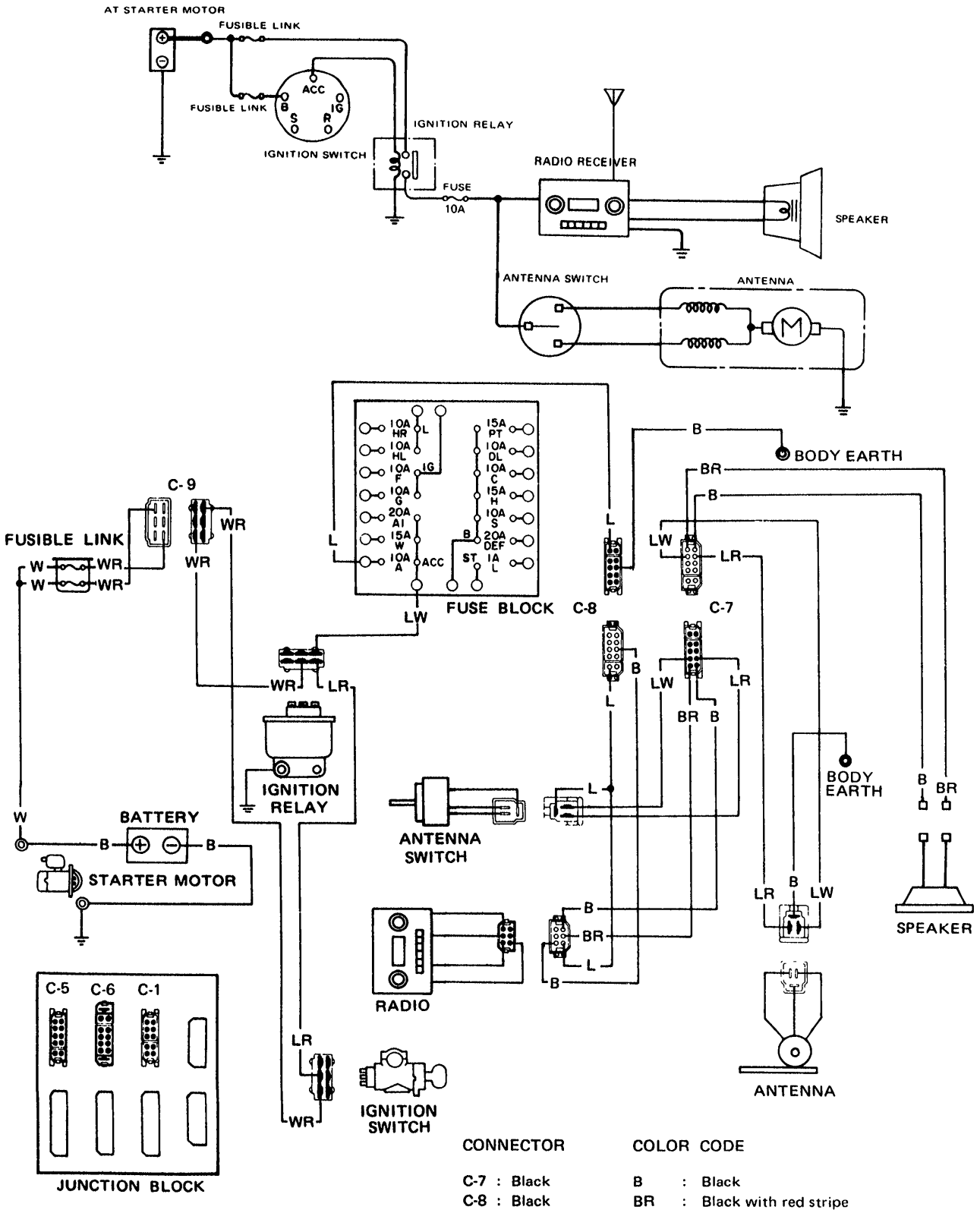

CONNECTOR		COLOR CODE		
C-7	: Black	B	:	Black
C-8	: Black	BR	:	Black with red stripe
C-9	: White	W	:	White
		WR	:	White with red stripe
		L	:	Blue
		LW	:	Blue with white stripe
		LR	:	Blue with red stripe

BE654B

Fig. BE-142 Circuit diagram for radio and antenna

Downloaded from www.Manualslib.com manuals search engine

THEFT PROTECTION SYSTEM

DESCRIPTION

This system consists of an ignition switch, a door switch and a buzzer and is designed to prevent driver from leaving car without taking key. When L.H. door is opened with ignition key still in ignition switch, buzzer sounds.

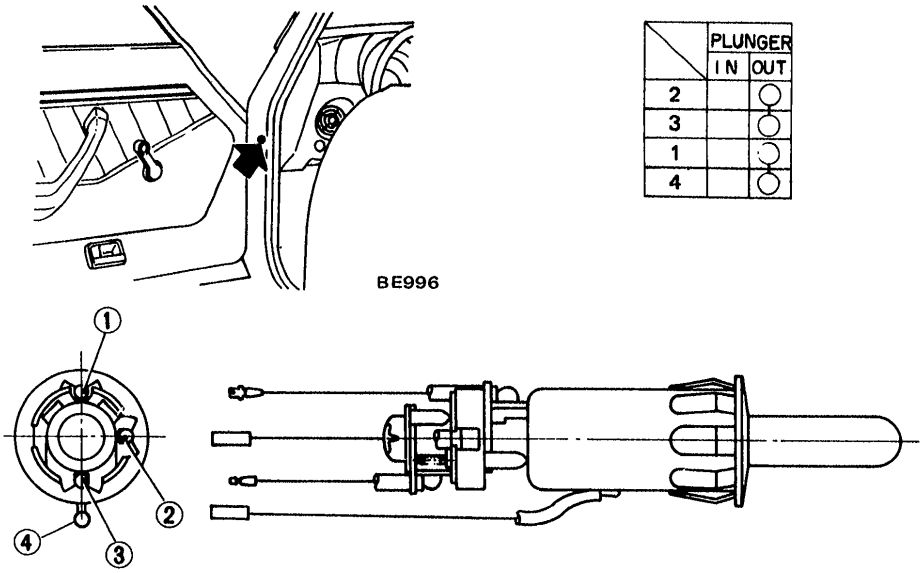

Fig. BE-143 Door switch

REMOVAL AND INSTALLATION

Door switch

Door switch is located on L.H. front door pillar.

1. Withdraw switch and wire assembly from front pillar.
2. Disconnect lead wire at connectors, switch can then be taken out.
3. Installation is in the reverse sequence of removal.

Ignition switch

To make switch tamper-proof, self-shear type screws are used. Their heads are sheared off when installed so that the steering lock system cannot be easily removed.

When required, replace the steering lock in accordance with the following instructions.

Break self-shear type screws with a drill or other proper tool, then remove the steering lock from the steering lock clamp.

When installing a new steering lock, be sure to tighten new self-shear type screws until their heads shear off.

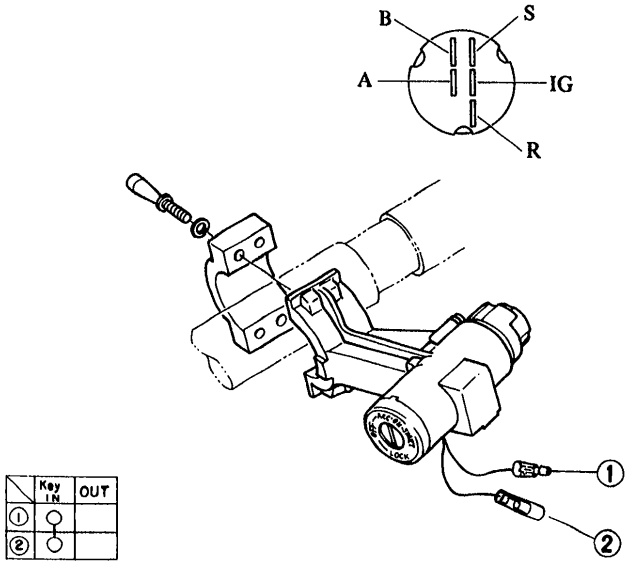

Fig. BE-144 Ignition switch

Warning buzzer

The warning buzzer is installed behind speedometer on bracket from instrument panel.

1. Disconnect battery ground cable.
2. Remove speedometer as described in page BE-37 for Meter and Gauge Replacement.
3. Disconnect buzzer lead wires at a connector.
4. Remove screw retaining buzzer assembly to bracket through the hole in which speedometer is installed.
5. Buzzer assembly can then be taken out.
6. Installation is in the reverse sequence of removal.

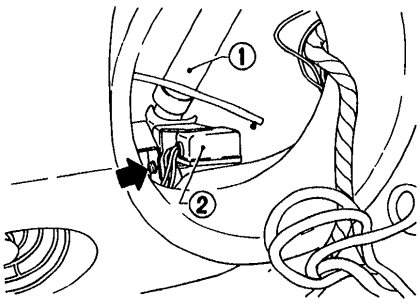

1 Instrument harness
2 Warning buzzer

BE163A

Fig. BE-145 Removing buzzer

Downloaded from www.Manualslib.com manuals search engine

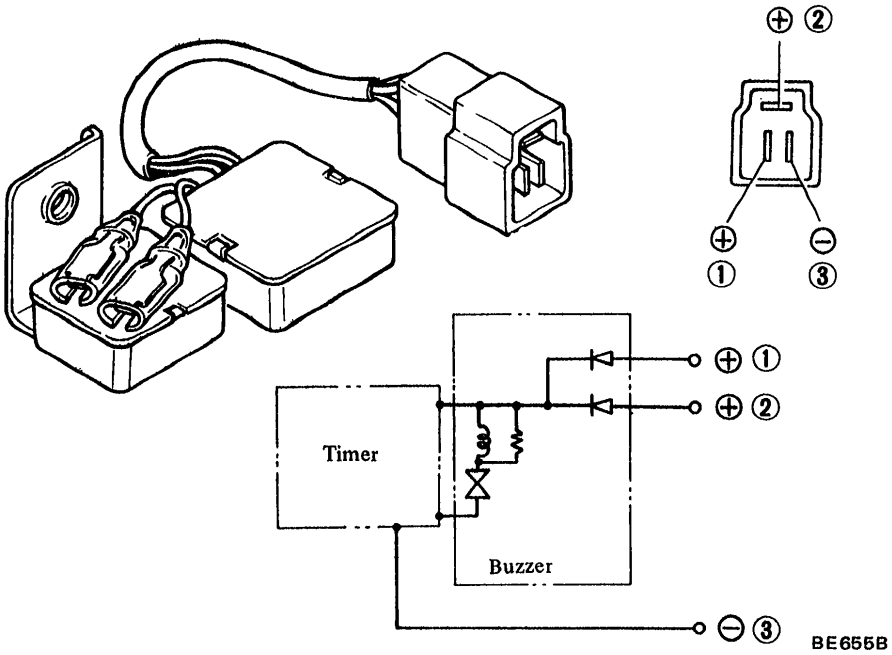

Fig. BE-146 Buzzer

INSPECTION

Door switch

There are three lead wires from door switch. Two are for warning buzzer and other is for room lamp.

Inspect continuity through door switch with test lamp or ohmmeter. When plunger is pressed into switch assembly, door switch contacts are opened. Contacts are closed when plunger is projected. See Figure BE-143 for door switch.

Warning buzzer

Apply 12V direct current between ①–③ or ②–③ and check whether buzzer sounds or not. The buzzer must sound when ①–③ and ②–③ are connected to power circuit. See Figure BE-146 for warning buzzer.

Note: Make sure that ⊖ negative terminal of power circuit is always connected to ③ terminal.

Ignition switch

Test continuity between two harnesses ①–② indicated in Figure BE-144. There must be continuity when key is inserted into switch. On the other hand, continuity must be broken, when key is removed from ignition switch.

Circuit

Test continuity through the circuit with ohmmeter or test lamp. The whole circuit is described below in detail.

Downloaded from www.Manualslib.com manuals search engine

Theft protection system

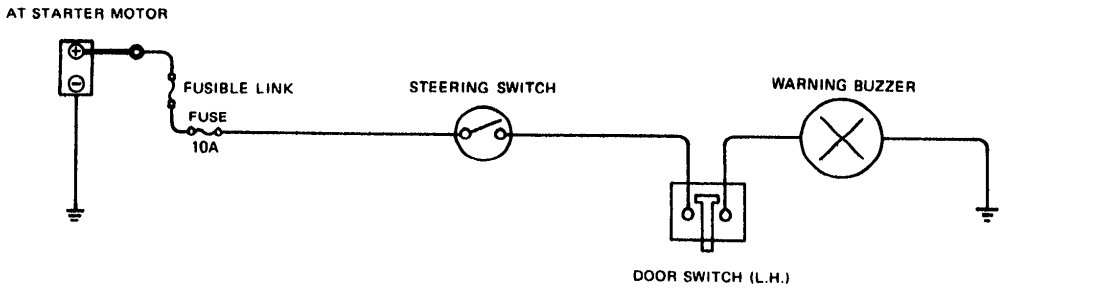

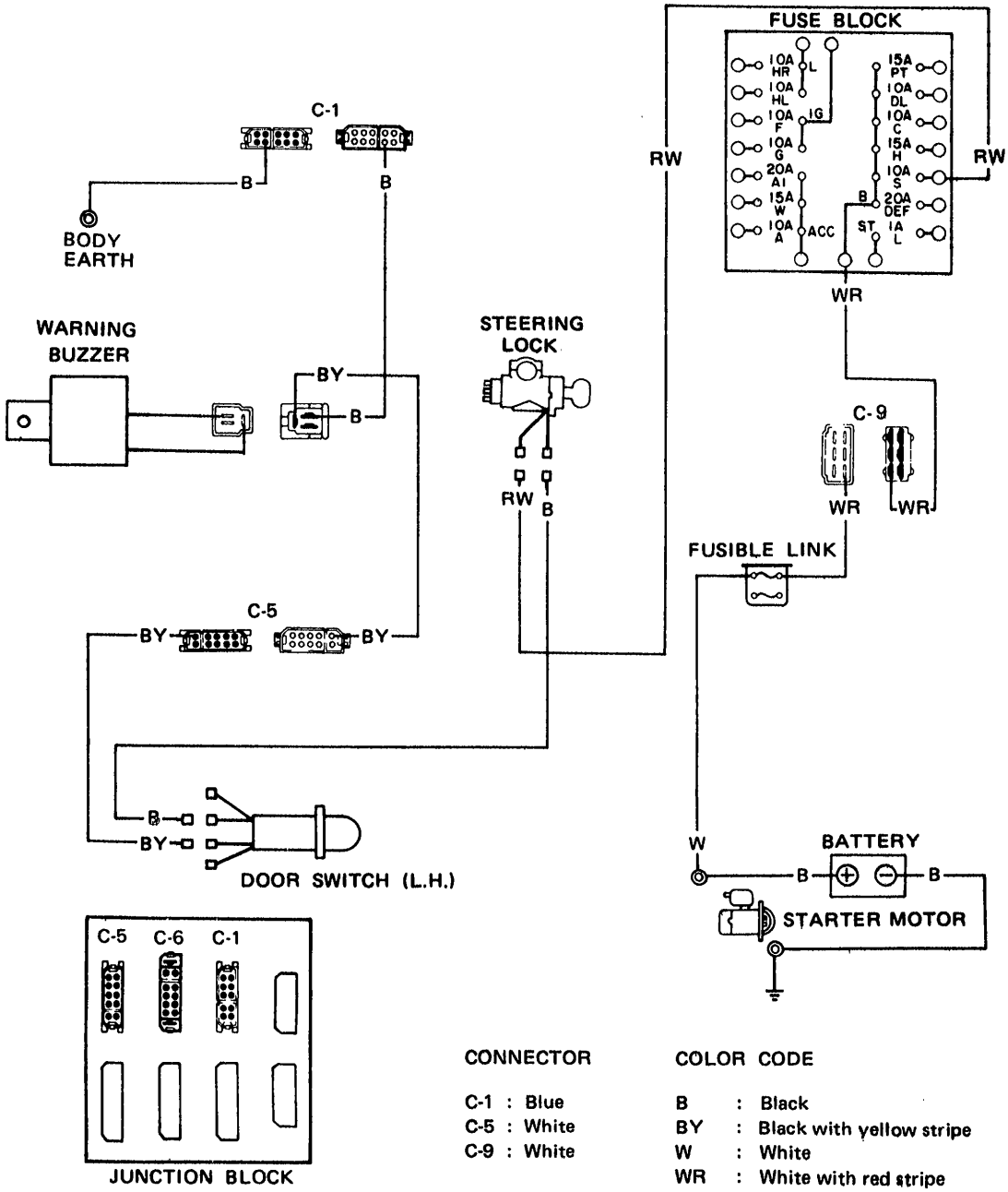

CONNECTOR		COLOR CODE		
C-1	: Blue	B	:	Black
C-5	: White	BY	:	Black with yellow stripe
C-9	: White	W	:	White
		WR	:	White with red stripe
		RW	:	Red with white stripe

BE656B

Fig. BE-147 Circuit diagram for theft protection system

Downloaded from www.Manualslib.com manuals search engine

SEAT BELT WARNING SYSTEM

DESCRIPTION

Except Canada

This system consists of an ignition switch, a timer unit, a warning light, a driver's belt switch and a buzzer, and is designed to remind the driver to buckle his seat belt.

When the ignition switch is turned to the "ON" position, the warning light comes on and remains on for 4 to 8 seconds. At the same time, the warning buzzer sounds for 4 to 8 seconds intermittently if the driver's seat belt is not fastened properly. The buzzer is also used as a theft warning buzzer.

For Canada

This system consists of an ignition switch, a driver's belt switch, a warning light and a buzzer. If the ignition switch is turned to the "ON" position and when the driver's seat belt is not fastened securely, the warning light remains on and buzzer sounds. When the driver's seat belt is fastened securely, the warning light and buzzer go out.

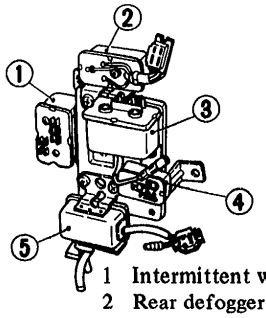

1 Intermittent wiper amplifier
2 Rear defogger relay
3 Ignition relay
4 Horn relay
5 Timer unit

BE439B

Fig. BE-148 Timer unit

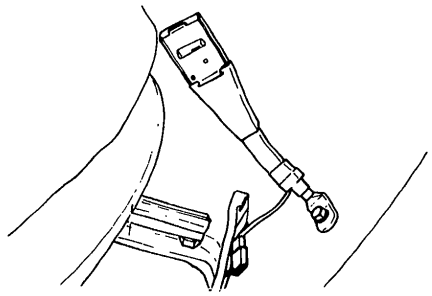

BE657B

Fig. BE-149 Seat belt switch

Driver's seat belt switch

The belt switch is an integral part of the inner lap belt so the switch and seat belt must be replaced as an assembly.

1. Slide seat all the way forward.
2. Remove seat belt securing bolt.
3. Disconnect lead wires at connector.
4. Seat belt can then be taken out.
5. Installation is in the reverse sequence of removal.

Warning lamp body

1. Remove console box. Refer to Section BF.
2. From behind console box, grasp nail of lamp body and push it out of console box.
3. Disconnect lead wires at connector.
4. Installation is in the reverse sequence of removal.

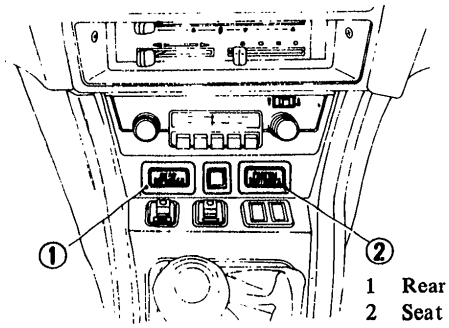

BE039B

1 Rear defogger warning lamp
2 Seat belt warning lamp

REMOVAL AND INSTALLATION

Ignition switch and warning buzzer

Refer to pages BE-26 and BE-79 for Removal and Installation.

Timer unit

1. Disconnect all connectors from junction block and remove junction block from bracket.

Disconnect lead wires for timer unit at a connector.

2. Remove two screws retaining timer unit.

Timer unit can then be taken out easily.

3. Installation is in the reverse sequence of removal.

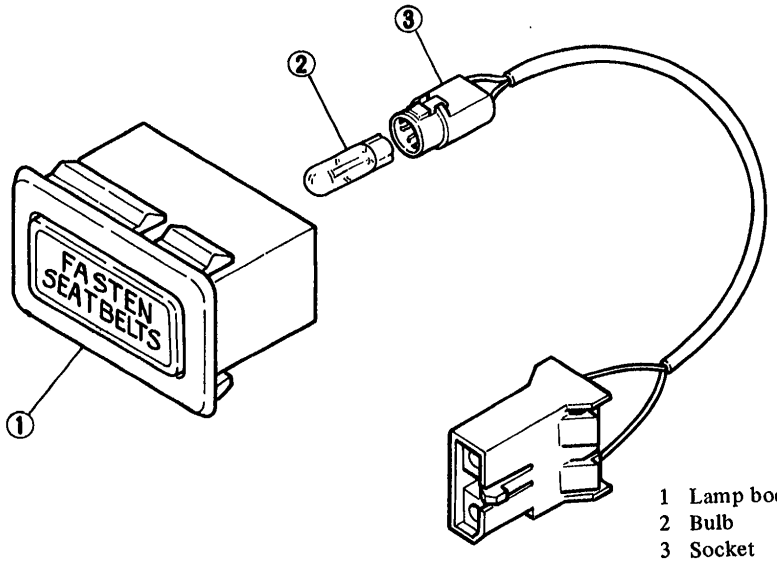

1 Lamp body
2 Bulb
3 Socket

BE658B

Fig. BE-150 Seat belt warning lamp

Downloaded from www.Manualslib.com manuals search engine

WARNING LAMP BULB REPLACEMENT

1. Remove console box. Refer to Section BF.
2. Push socket and bulb behind warning lamp body and twist it counterclockwise. Socket and bulb can then be taken out as an assembly.
3. Remove bulb from socket.
4. Install new bulb in the reverse sequence of removal.

Bulb wattage:
Seat belt warning lamp 1.4W

INSPECTION

Warning buzzer

Refer to page BE-80 for Warning Buzzer Inspection.

Timer unit

1. Connect terminal ① to positive terminal of battery, and terminal ③ to negative terminal.
2. Connect test lamp between terminal ② and negative terminal of battery.
3. Contact terminal ④ to positive terminal of battery, and then detach it.
4. Test lamp should remain on for 4 to 8 seconds and then go out.

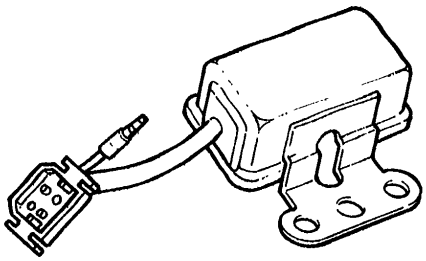

BE659B

Fig. BE-151 Inspecting timer unit

Belt switch

Test continuity between two lead wires from seat belt switch with ohmmeter or test lamp.

Downloaded from www.Manualslib.com manuals search engine

Seat belt warning system (Except Canada)

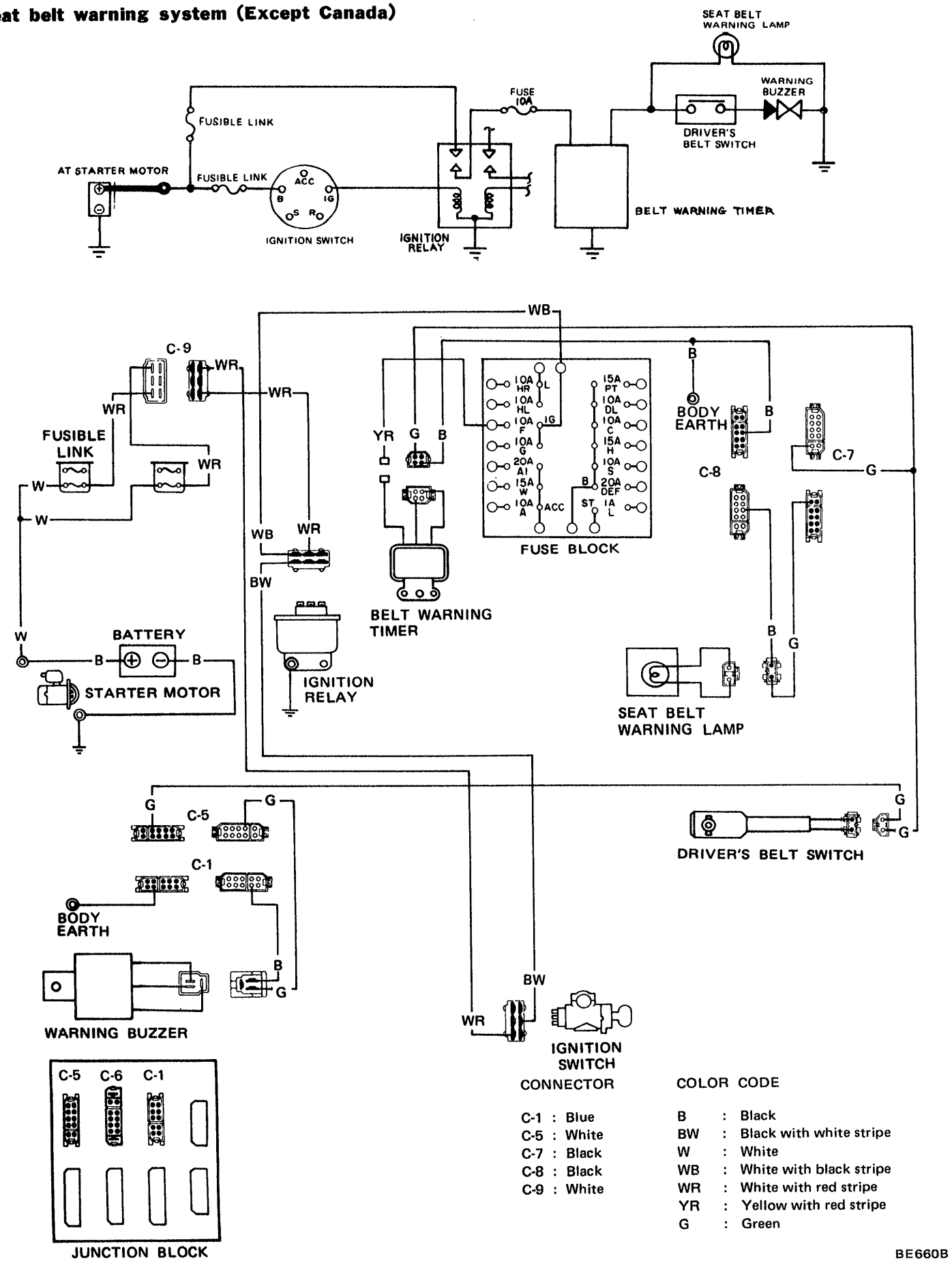

CONNECTOR

C-1	:	Blue
C-5	:	White
C-7	:	Black
C-8	:	Black
C-9	:	White

COLOR CODE

B	:	Black
BW	:	Black with white stripe
W	:	White
WB	:	White with black stripe
WR	:	White with red stripe
YR	:	Yellow with red stripe
G	:	Green

BE660B

Fig. BE-152 Circuit diagram for seat belt warning system (except Canada)

Downloaded from www.Manualslib.com manuals search engine

Seat belt warning system (Canada)

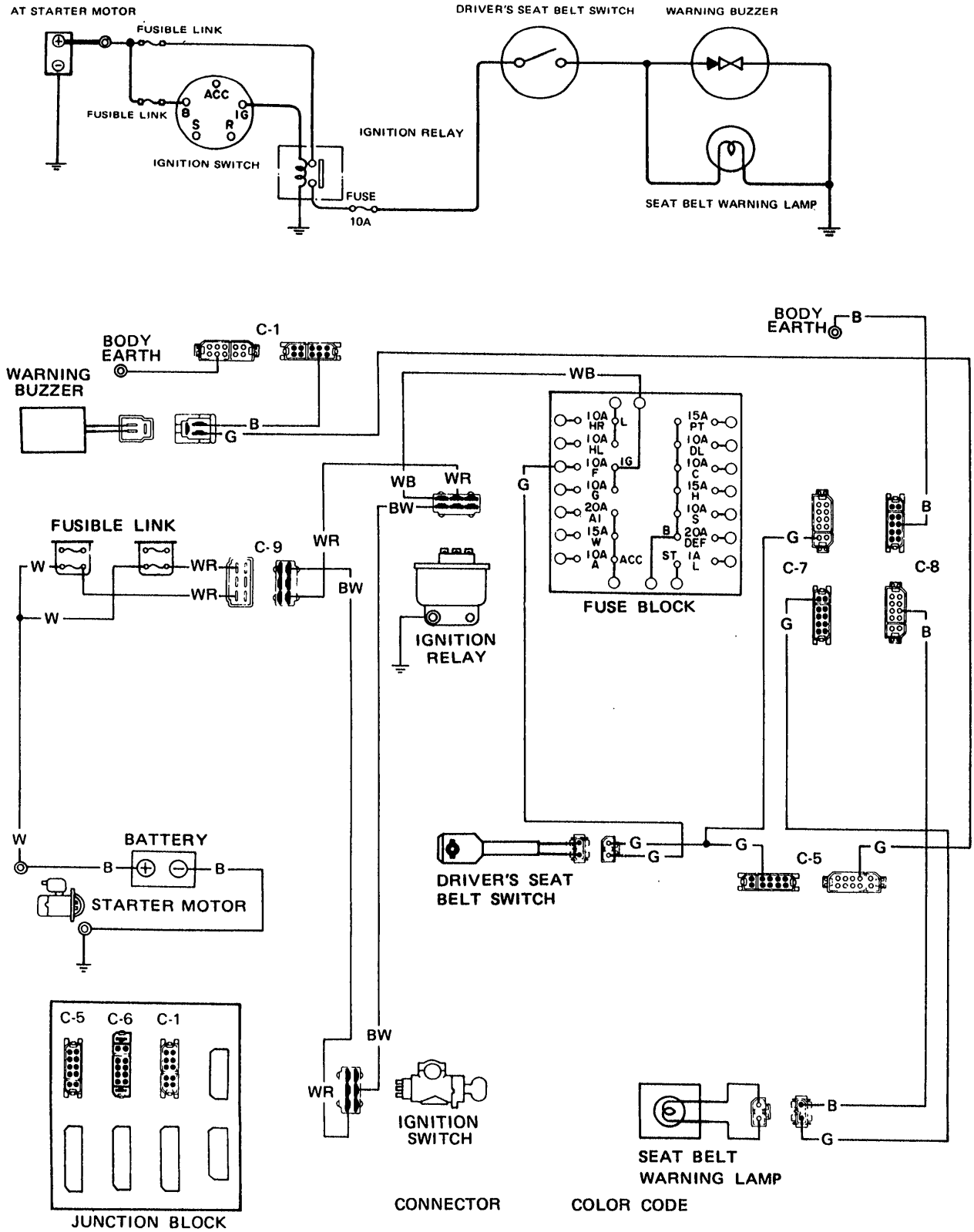

CONNECTOR		COLOR CODE	
C-1	: Blue	B	: Black
C-5	: White	BW	: Black with white stripe
C-7	: Black	W	: White
C-8	: Black	WB	: White with black stripe
C-9	: White	WR	: White with red stripe
		G	: Green

BE661B

Fig. BE-153 Circuit diagram for seat belt warning system for Canada

Downloaded from www.Manualslib.com manuals search engine

KICKDOWN SYSTEM (For automatic transmission models only)

DESCRIPTION

The kickdown system consists of a kickdown switch and a kickdown solenoid. Kickdown switch is located on the accelerator pedal. Kickdown solenoid is located on left side of automatic transmission. They are connected to each other. For details on automatic transmission, refer to section Automatic Transmission.

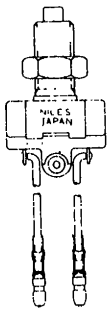

BE776

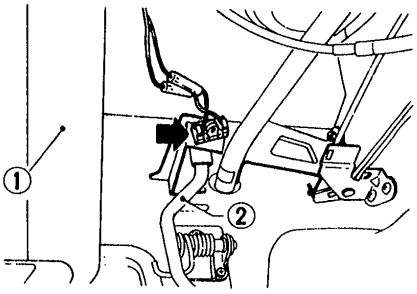

1 Steering column
2 Accelerator pedal rod

BE116A

Fig. BE-154 Kickdown switch

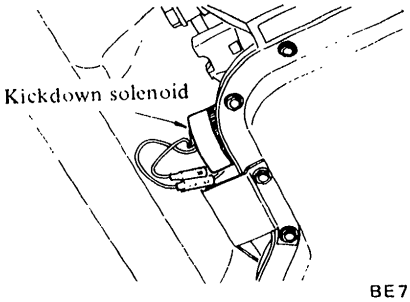

BE777

Fig. BE-155 Kickdown solenoid

REPLACEMENT

Kickdown switch

1. Disconnect pair of lead wires.
2. Loosen lock nut on switch body.
3. Remove kickdown switch by rotating switch body.
4. Install in reverse sequence of removal.

Kickdown solenoid

Refer to Section AT for Removal of Kickdown Solenoid.

INSPECTION

Kickdown switch

The switch plunger is controlled by accelerator pedal. When plunger is pressed into switch assembly, contacts are closed.

Therefore there must be continuity only when plunger is pressed into switch body.

Kickdown solenoid

Refer to Section AT for Inspection of Kickdown Solenoid.

Wiring

Referring to following circuit diagram, test continuity with ohmmeter or test lamp.

Downloaded from www.Manualslib.com manuals search engine

Kickdown system

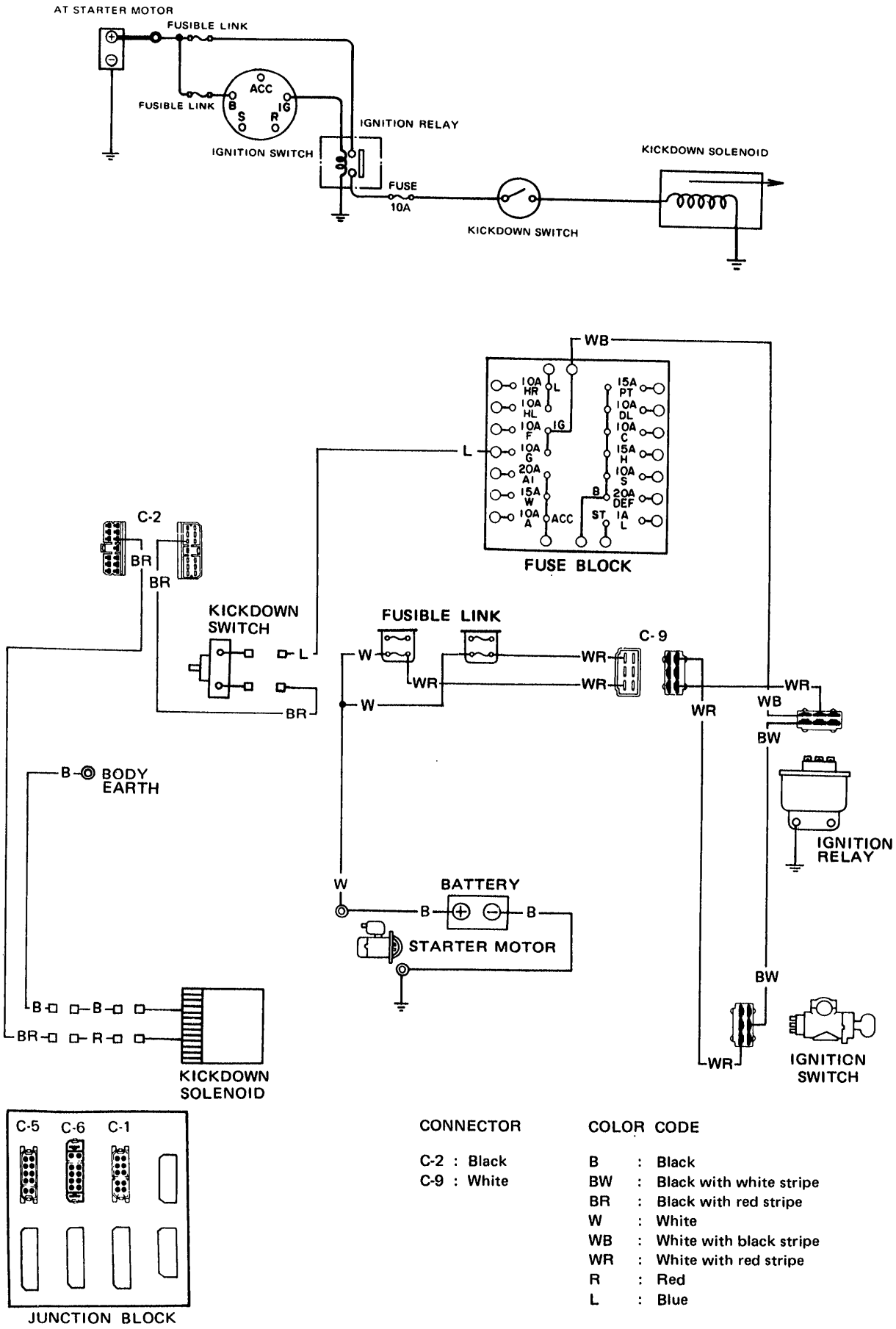

CONNECTOR	
C-2	: Black
C-9	: White

COLOR CODE		
B	:	Black
BW	:	Black with white stripe
BR	:	Black with red stripe
W	:	White
WB	:	White with black stripe
WR	:	White with red stripe
R	:	Red
L	:	Blue

BE662B

Fig. BE-156 Circuit diagram for kickdown system

Downloaded from www.Manualslib.com manuals search engine

STARTING SYSTEM (For automatic transmission models only)

DESCRIPTION

The starting system consists of an ignition relay, an inhibitor switch and a seat belt relay (starter relay).

The inhibitor switch is located on right side of automatic transmission case. The seat belt relay is located on the engine compartment relay bracket.

REPLACEMENT

Inhibitor switch

Refer to Section AT.

Seat belt relay (Starter relay)

1. Disconnect battery ground cable.
2. Disconnect lead wires from relay at a connector.
3. Remove four screws retaining relay bracket to hoodledge panel and remove relay bracket.
4. Remove two screws retaining relay to relay bracket. Relay can then be taken out.
5. Installation is in the reverse sequence of removal.

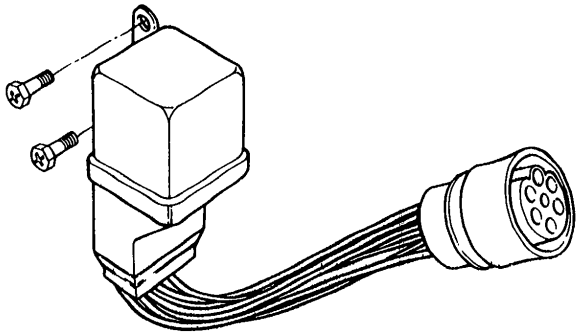

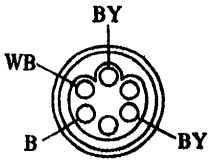

BE663B

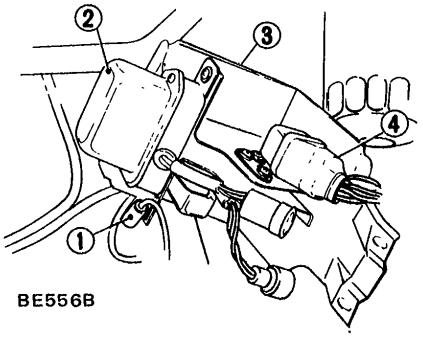

BE556B

1 Condenser
2 Voltage regulator
3 Relay bracket
4 Seat belt relay (Starter relay) (A/T only)
5 Air conditioner relay (Compressor relay)

Fig. BE-157 Seat belt relay (Starter relay)

INSPECTION

Ignition relay

Check for operation of circuits (i.e., meters, gauges and turn signal lamp) electrically connected to ignition relay. If they do not function, replace ignition relay.

Inhibitor switch

Refer to Section AT.

Seat belt relay (Starter relay)

Test continuity through relay with ohmmeter or test lamp. Under normal conditions, there must be continuity between ⑤-⑥ and there must not be continuity between ①-③. When 12V direct current is applied across ⑤-⑥, there must be continuity between ①-③.

Downloaded from www.Manualslib.com manuals search engine

Starting system

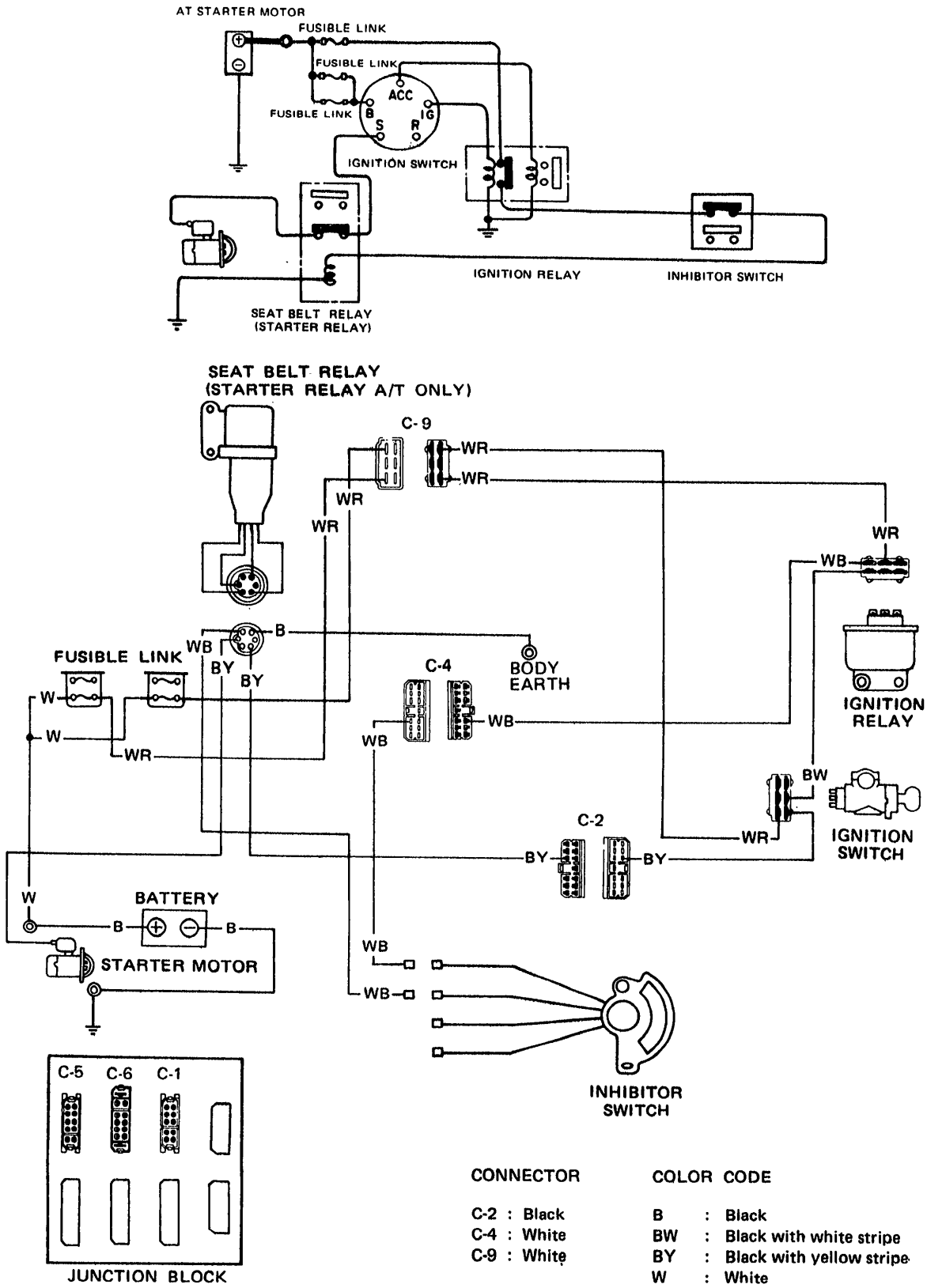

CONNECTOR	COLOR CODE	
C-2 : Black	B	: Black
C-4 : White	BW	: Black with white stripe
C-9 : White	BY	: Black with yellow stripe
	W	: White
	WB	: White with black stripe
	WR	: White with red stripe

BE664B

Fig. BE-158 Circuit diagram for starting system

Downloaded from www.ManualsLib.com manuals search engine

Engine room harness

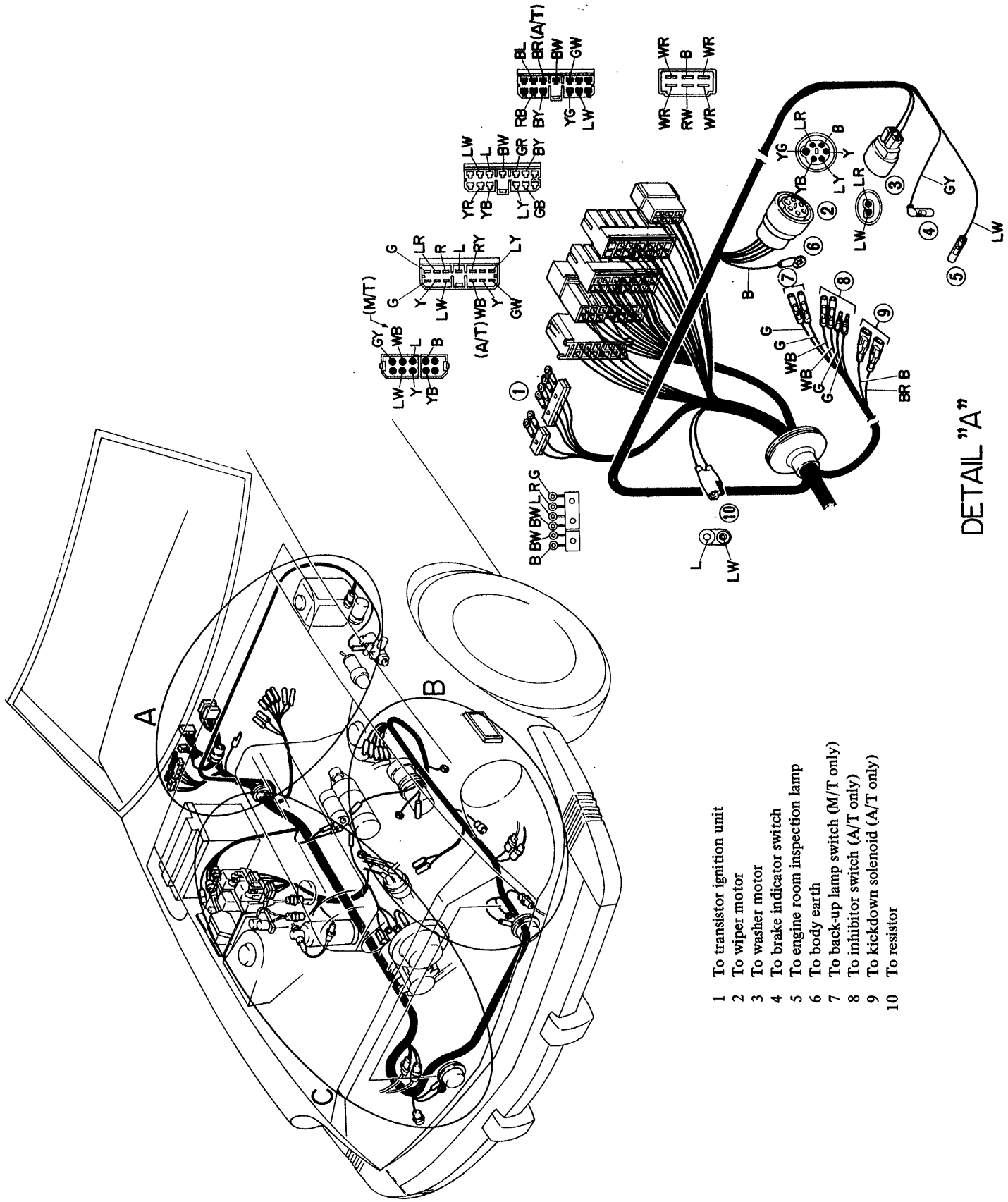

Downloaded from www.Manualslib.com manuals search engine

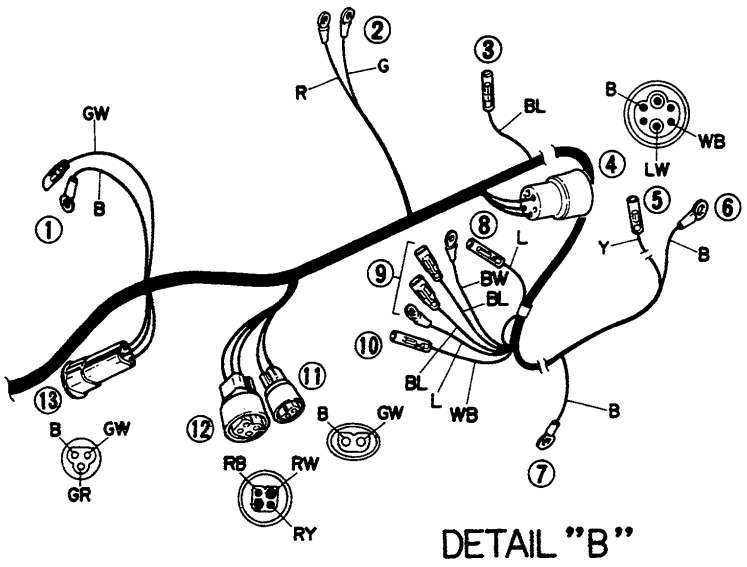

DETAIL "B"

1 To horn
2 To distributor
3 To condenser
4 To check connector
5 To thermal transmitter
6 To engine earth
7 To body earth
8 To magnet clutch (For air conditioner)
9 To ignition coil and resistor
10 To B.C.D.D. cut solenoid
11 To side marker light (L.H.)
12 To head light (L.H.)
13 To parking and turn signal light (L.H.)

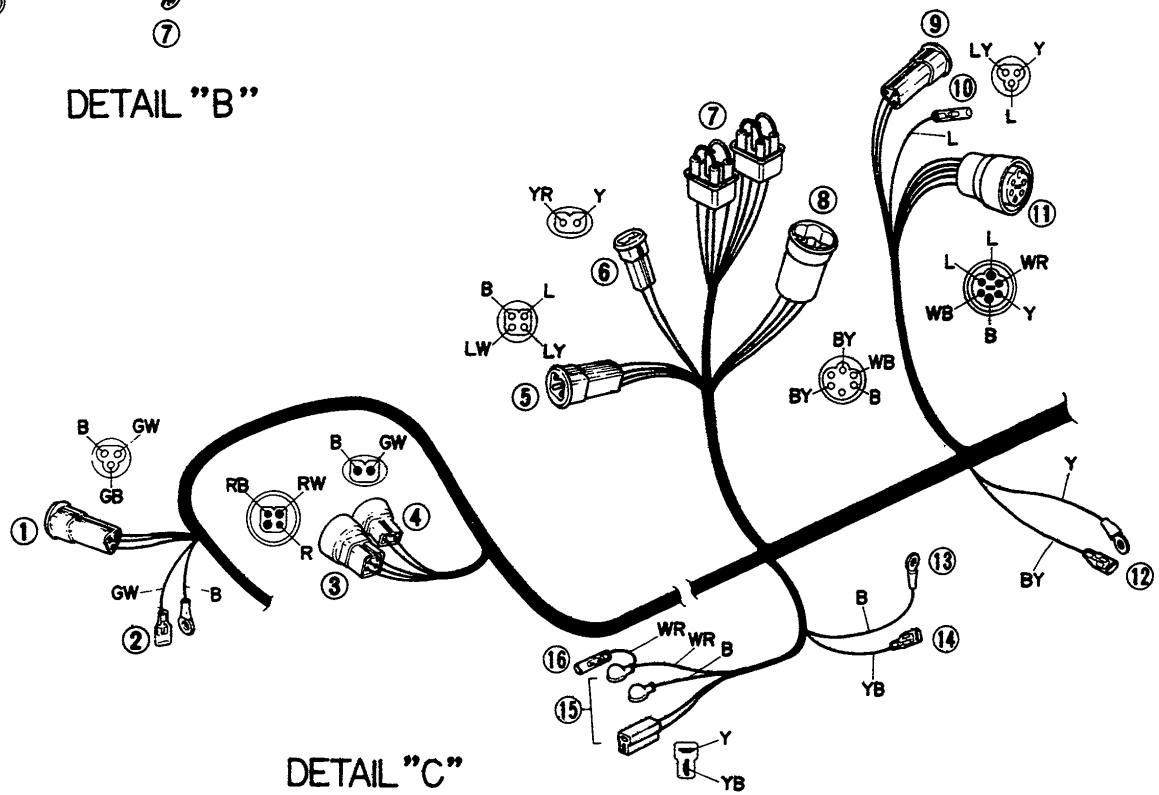

DETAIL "C"

1 To parking and turn signal lamp (R.H.)
2 To horn
3 To headlamp (R.H.)
4 To side marker lamp (R.H.)
5 To magnet valve F.I.C.D. and magnet valve vacuum source (For air conditioner)
6 To pressure switch (For air conditioner)
7 To fusible link box
8 To seat belt relay (starter relay) (A/T only)
9 To compressor relay (For air conditioner)
10 To condenser
11 To voltage regulator
12 To starter motor
13 To engine earth
14 To oil pressure switch
15 To alternator
16 To condenser

Fig. BE-159 Wiring harness-Engine room

BE665B

Downloaded from www.Manualslib.com manuals search engine

Instrument harness

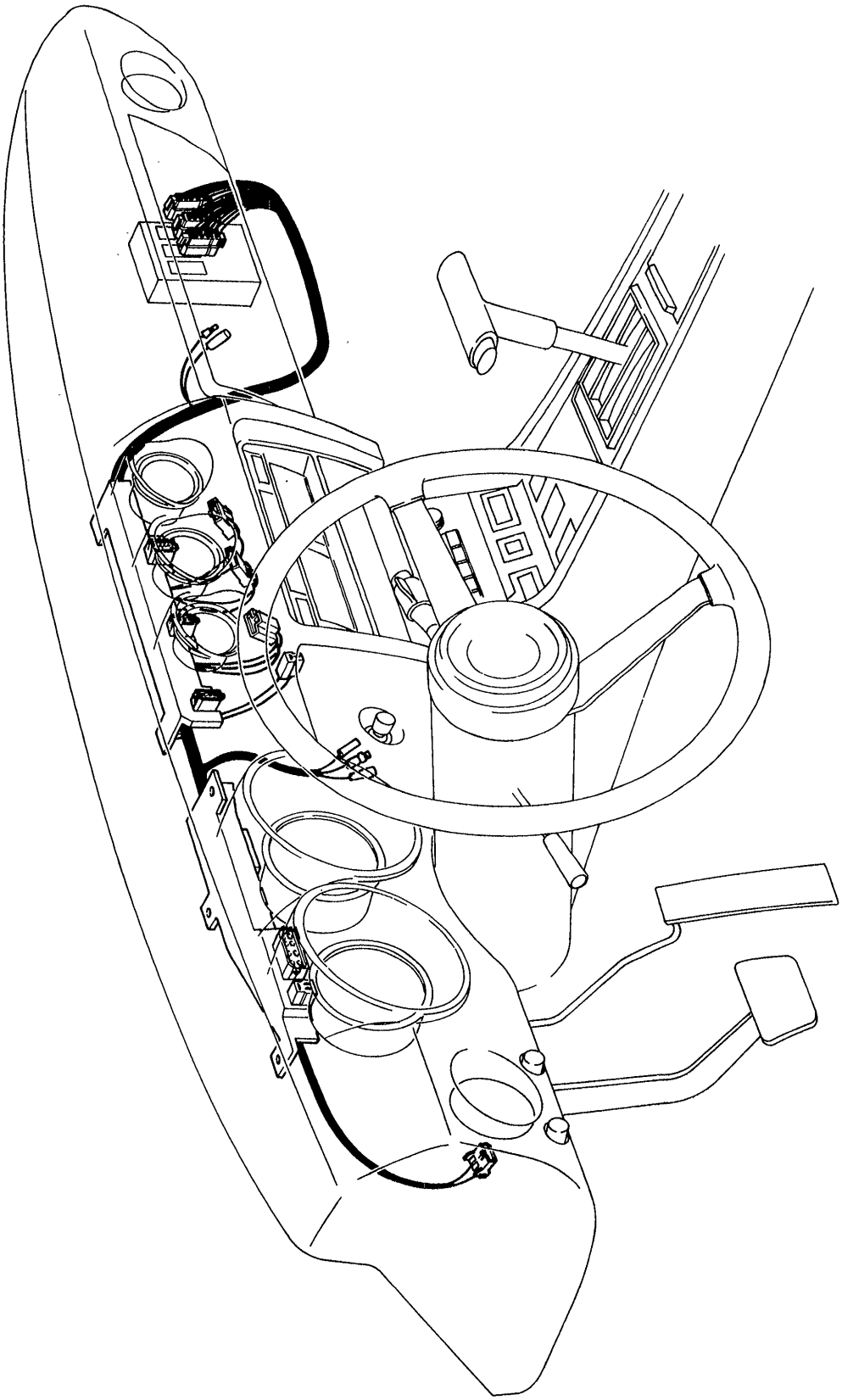

Downloaded from www.Manualslib.com manuals search engine

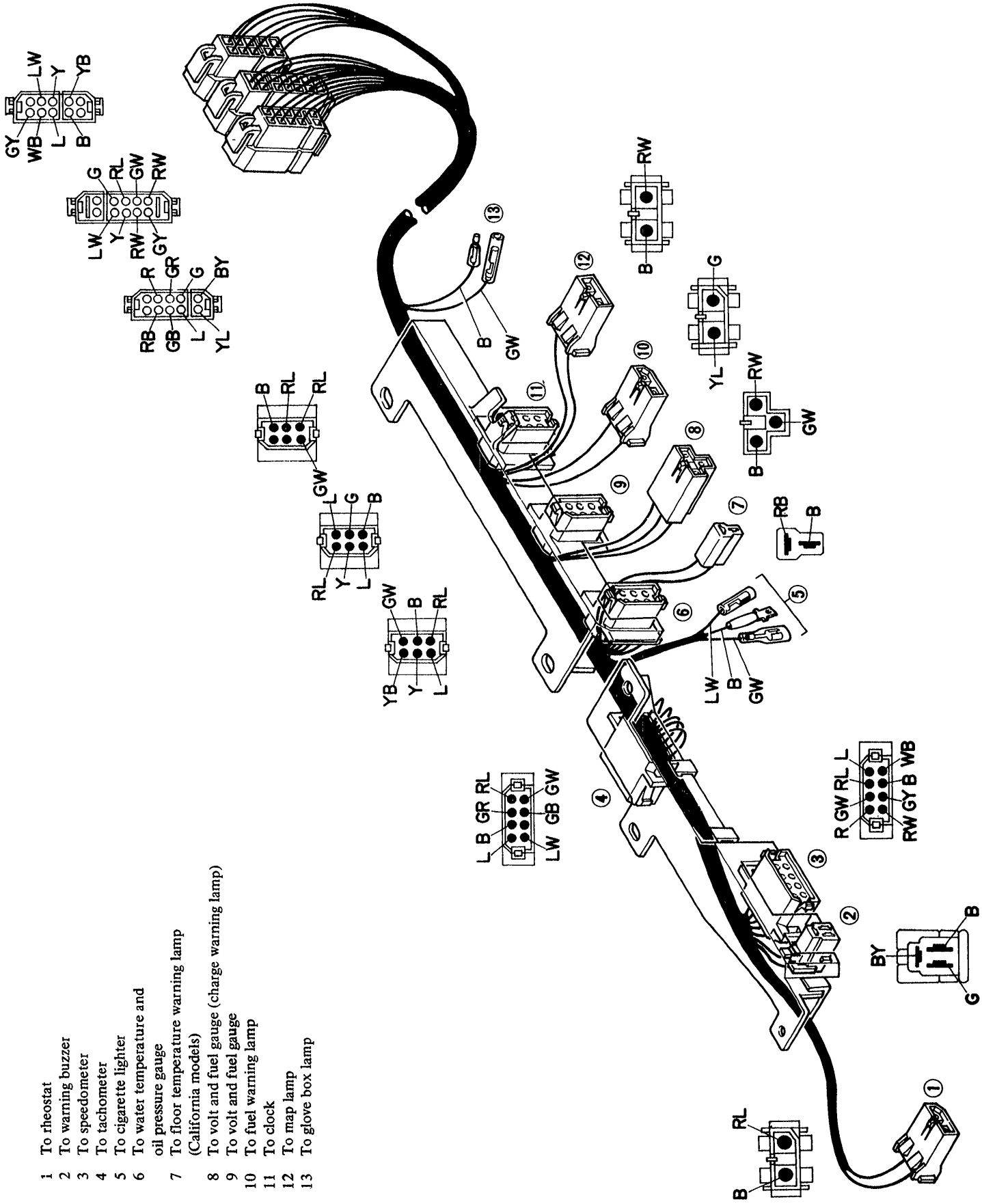

Fig. BE-160 Wiring harness-Instrument

Downloaded from www.Manualslib.com manuals search engine

Dash harness

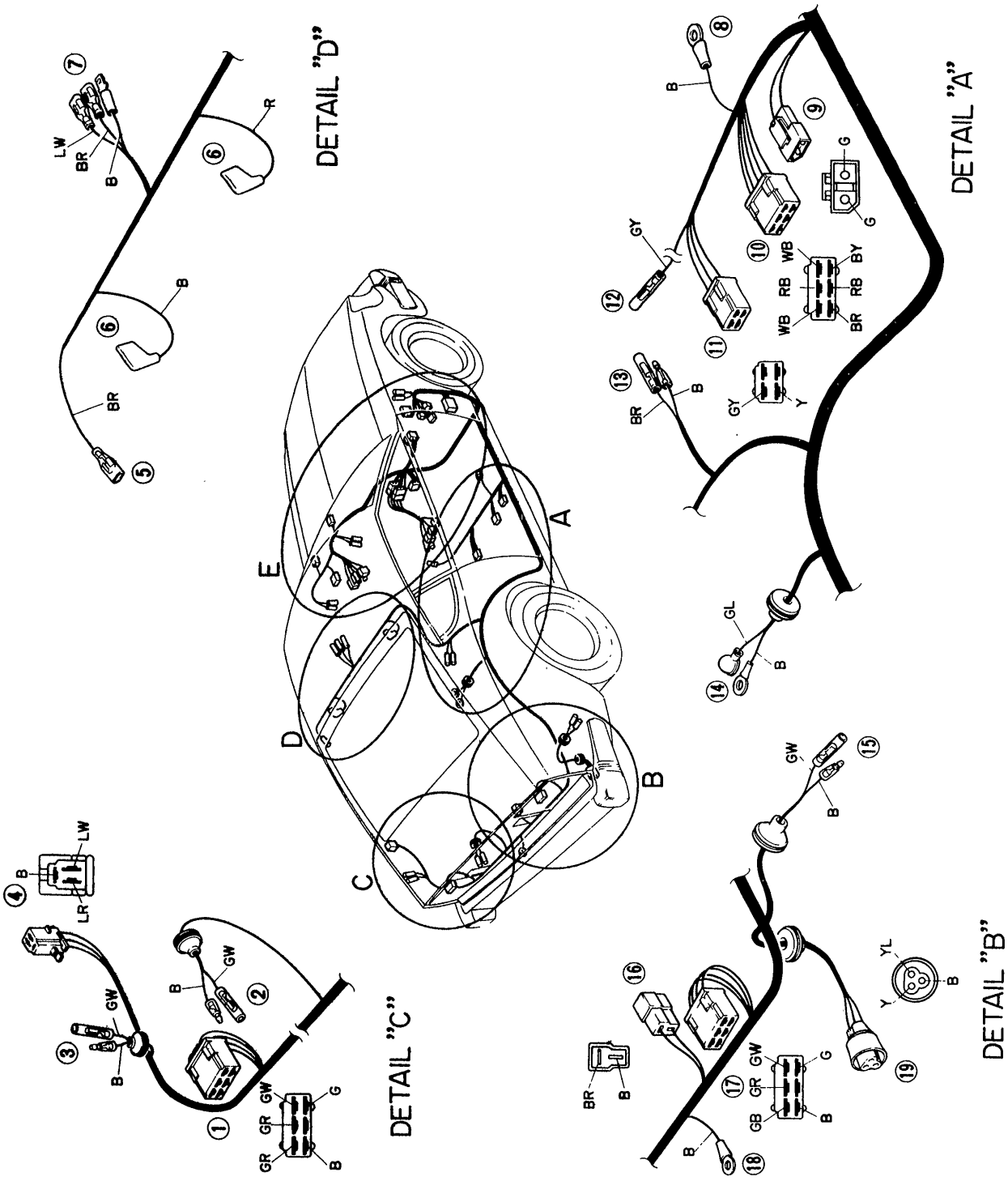

1 To rear combination lamp (L.H.)
2 To license lamp
3 To rear side marker lamp (L.H.)
4 To radio auto antenna
5 To tail gate switch (2 + 2 seater)
6 To rear window defogger
7 To room lamp
8 To body earth
9 To driver's seat belt switch
10 To floor temperature relay (California models)
11 To brake warning lamp check relay
12 To parking brake switch
13 To rear speaker
14 To fuel pump
15 To rear side marker lamp (R.H.)
16 To floor sensor (California models)
17 To rear combination lamp (R.H.)
18 To body earth
19 To fuel tank gauge

Downloaded from www.Manualslib.com manuals search engine

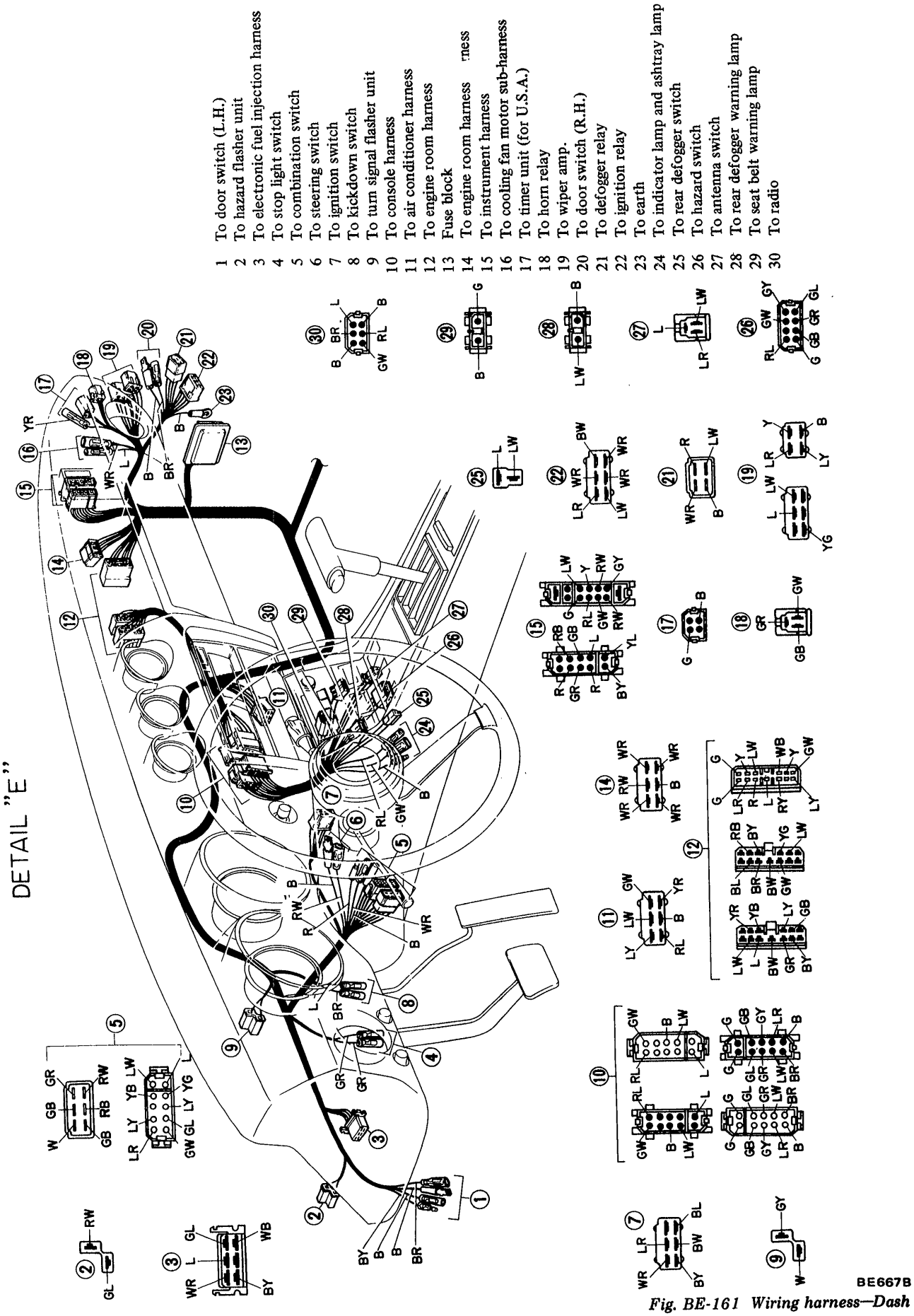

Fig. BE-161 Wiring harness—Dash

Downloaded from www.Manualslib.com manuals search engine

EMISSION WARNING SYSTEM (For California)

CONTENTS

FLOOR TEMPERATURE WARNING SYSTEM (For California) BE-96
WARNING LAMP BE-96
TROUBLE SHOOTING GUIDE BE-98

FLOOR TEMPERATURE WARNING SYSTEM (For California)

The floor temperature warning system consists of a floor temperature sensing switch installed on the car's floor, a floor temperature relay, a floor temperature warning lamp and harnesses.

When the floor temperature rises to an abnormal level, the warning lamp will come on to call the attention of the driver.

The warning lamp also comes on during operation of the starter motor, permitting inspection of the lamp's condition. The lamp goes out after the engine starts.

Refer to Section EC for details.

WARNING LAMP

Bulb replacement

1. Pull heater control knobs off.
2. Remove four screws retaining instrument finisher to instrument panel.
3. Pull instrument finisher forward slightly, and disconnect lead wires at three connectors. Instrument finisher can then be removed from instrument panel.

Note: Three connectors are for map lamp, fuel warning lamp and floor temperature warning lamp (California models).

4. Twist socket behind warning lamp and take out socket with bulb.
5. Installation is in the reverse sequence of removal.

Bulb wattage:

Floor temperature warning lamp 1.4W

Lamp body replacement

1. Pull heater control knobs off.
2. Remove four screws retaining instrument finisher to instrument panel.
3. Pull instrument finisher forward slightly, and disconnect lead wires at three connectors. Instrument finisher can then be removed from instrument panel.

Note: Three connectors are for map lamp, fuel warning lamp and floor temperature warning lamp (California models).

4. Remove two screws retaining warning lamp body to instrument finisher. Lamp body can then be taken out.
5. Installation is in the reverse sequence of removal.

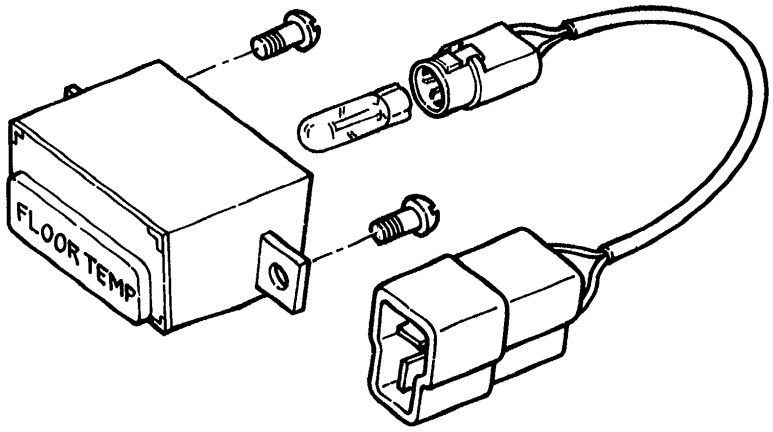

BE656A

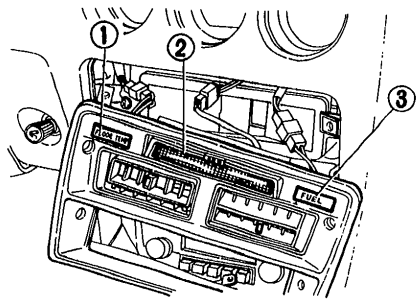

1 Floor temperature warning lamp
2 Map lamp
3 Fuel warning lamp

BE989A

Fig. BE-162 Floor temperature warning lamp

Downloaded from www.Manualslib.com manuals search engine

TROUBLE DIAGNOSES AND CORRECTIONS

Condition	Probable cause	Corrective action
Warning lamp does not light in "START" position of ignition switch.	Burnt or loose bulb.	Replace bulb or correct bulb socket.
	Faulty floor temperature relay.	Conduct continuity test and repair or replace. Refer to "EC" section.
	Loose connection or open circuit.	Check wiring and/or repair if necessary.

Floor temperature warning system

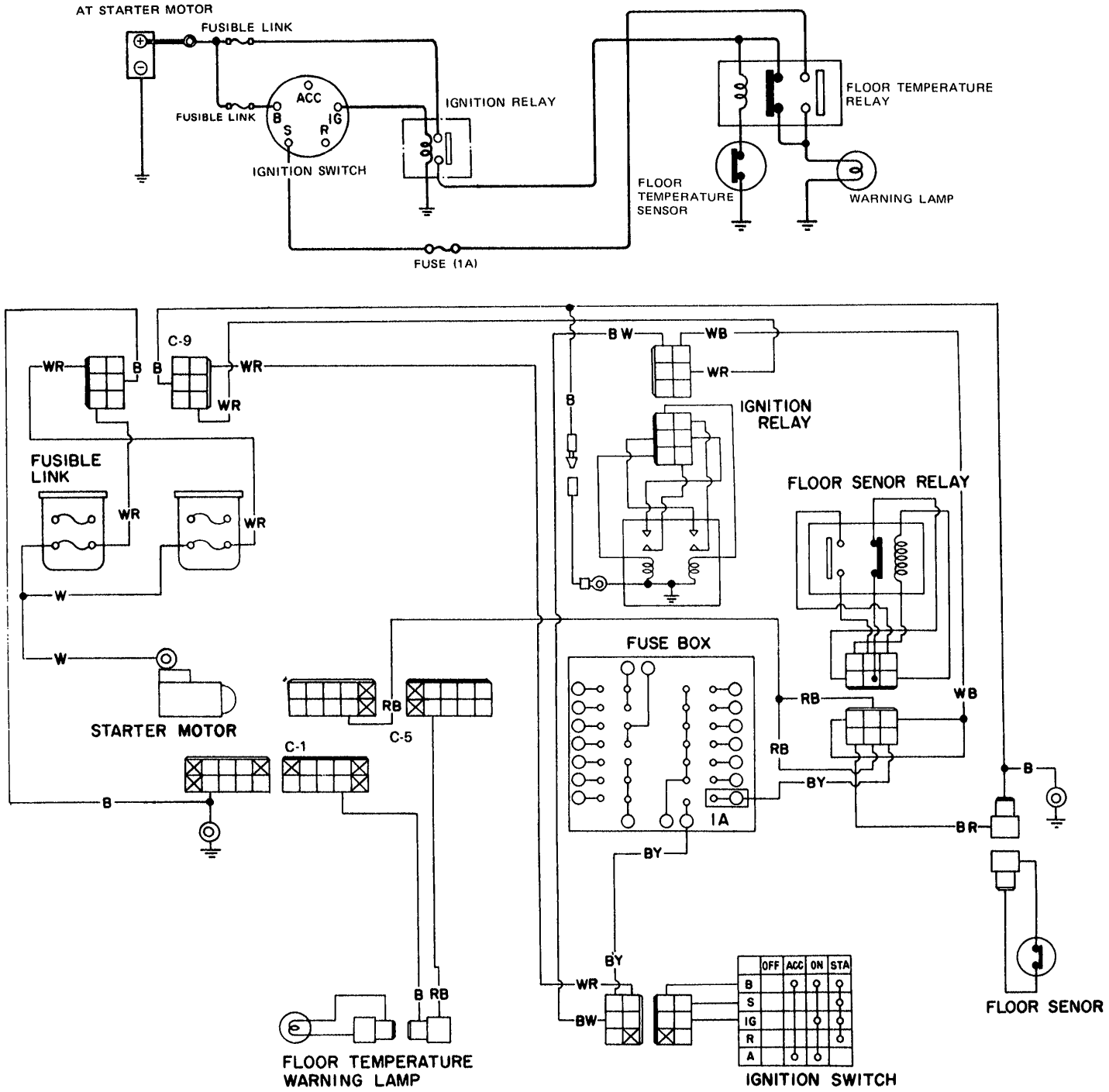

Fig. BE-163 Circuit diagram for floor temperature warning system

Downloaded from www.Manualslib.com manuals search engine

SERVICE MANUAL

DATSUN 280Z
MODEL S30 SERIES

NISSAN

NISSAN MOTOR CO., LTD.
TOKYO, JAPAN

SECTION AC

AIR CONDITIONING

DESCRIPTION ..... AC- 2
GENERAL SERVICE AC-16
REMOVAL AND INSTALLATION AC-27
TROUBLE DIAGNOSES AND CORRECTIONS AC-40
HOW TO INSTALL AIR CONDITIONER AC-58
COMPRESSOR AC-64
SPECIAL SERVICE TOOLS AC-74

AC

Downloaded from www.Manualslib.com manuals search engine

DESCRIPTION

CONTENTS

OUTLINE OF AIR CONDITIONER AC-2
FEATURES AC-2
REFRIGERATION SYSTEM AC-4
EVAPORATOR AC-4
COMPRESSOR AC-4
CONDENSER AC-4
RECEIVER DRIER AC-5
EXPANSION VALVE AC-5
AIR FLOW AND VACUUM SYSTEM AC-6
AIR FLOW AC-6
VACUUM SYSTEM AC-13
ELECTRICAL CIRCUIT AC-15
BLOWER MOTOR OPERATION AC-15
COMPRESSOR OPERATION AC-15
MAGNET VALVE (VACUUM SOURCE) OPERATION AC-15

OUTLINE OF AIR CONDITIONER

The air conditioner is a combined unit of an evaporator, heater and blower and provides heating and cooling functions. In addition, it has bi-level and ventilation functions, enabling comfortable air conditioning at all seasons. Its control system consists of a mechanical system using cables and engine vacuum and electric system.

All units are housed in the dash panel, thereby assuring driving comfort.

The functional principle of this system is as shown in Figure AC-1.

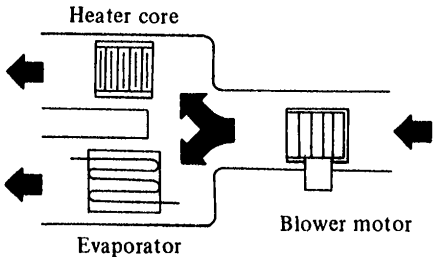

AC227

Fig. AC-1 Principle of air flow

The component units of the air conditioner are installed in the engine room and passenger compartment; the compressor and condenser in the former and the unit comprising the evaporator, heater and blower and its control in the latter. The units in the passenger compartment are summarized as below:

Air intake housing

This housing is internally provided with an air intake door that takes in outside air.

Blower housing

The housing contains a blower motor, by which the air is blown to the heater and evaporator.

Evaporator housing

An evaporator is contained in this housing, which cools air passing through the fins with refrigerant circulating in the system.

Heater unit

A heater core is housed in this unit, in which hot water from the engine runs to warm the air passing through the fins.

FEATURES

1. When the AIR lever is set in BI-LEVEL position, the mode door is set halfway between the full open and full close positions. Fresh air is blown out from the outlets in the instrument panel and warm air from underfoot, thus providing ventilation and heating functions at the same time.
2. The mode door to divert air flow and the air intake door are opened and closed by means of the vacuum actuator.
3. The control of hot water flowing to the heater is carried out by the vacuum-operating water cock and the water cock that controls the amount of hot water.
4. When the air conditioner is in A/C, the temperature is adjusted by automatically switching the compressor on or off by means of the thermostat.
5. The air conditioner can be operated with the fast idle control device during idling.

Downloaded from www.Manualslib.com manuals search engine

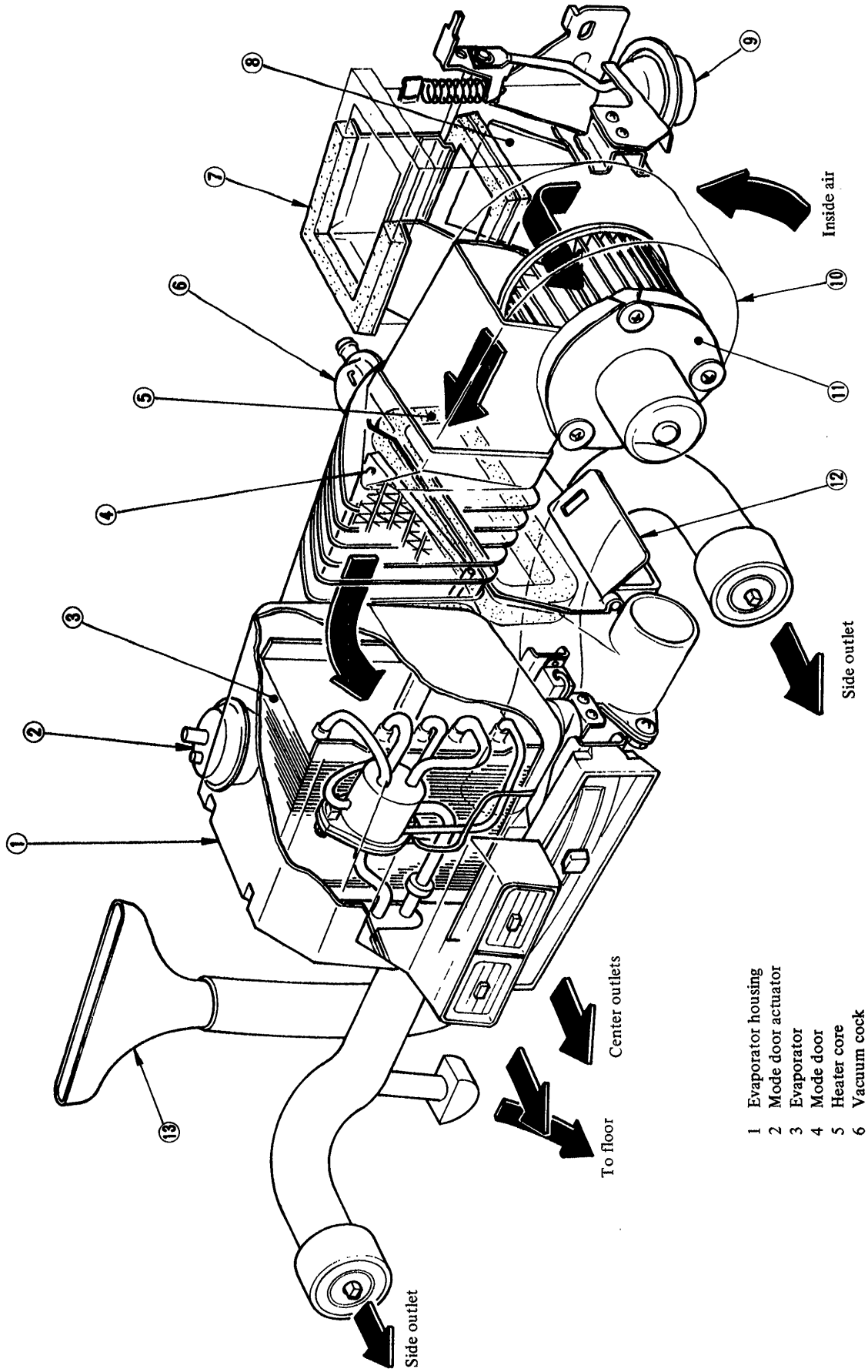

1 Evaporator housing
2 Mode door actuator
3 Evaporator
4 Mode door
5 Heater core
6 Vacuum cock
7 Air intake housing
8 Air intake door
9 Air intake door actuator
10 Blower housing
11 Blower motor
12 Heater door
13 Defroster nozzle

AC779

Fig. AC-2 Sectional view of air conditioner

Downloaded from www.Manualslib.com manuals search engine

REFRIGERATION SYSTEM

If you were to paint your finger with alcohol, your finger would feel cold. This is because the liquid alcohol takes heat away from your finger while it evaporates. If an quickly evaporating liquid such as alcohol is placed in a container inside a box, the temperature inside the box will drop. This is because the alcohol is evaporated absorbing the heat from the air inside the box. If the gaseous alcohol is collected and cooled with cold water, it will be changed back into a liquid by absorption of its heat by the cold water.

The cooler operates on this principle. The liquid used is the refrigerant R-12. The heat inside the passenger compartment is absorbed by changing the refrigerant from a liquid to a gas and then dissipated to the outside by changing the refrigerant from a gas back to a liquid.

The refrigeration system is shown in Figure AC-3.

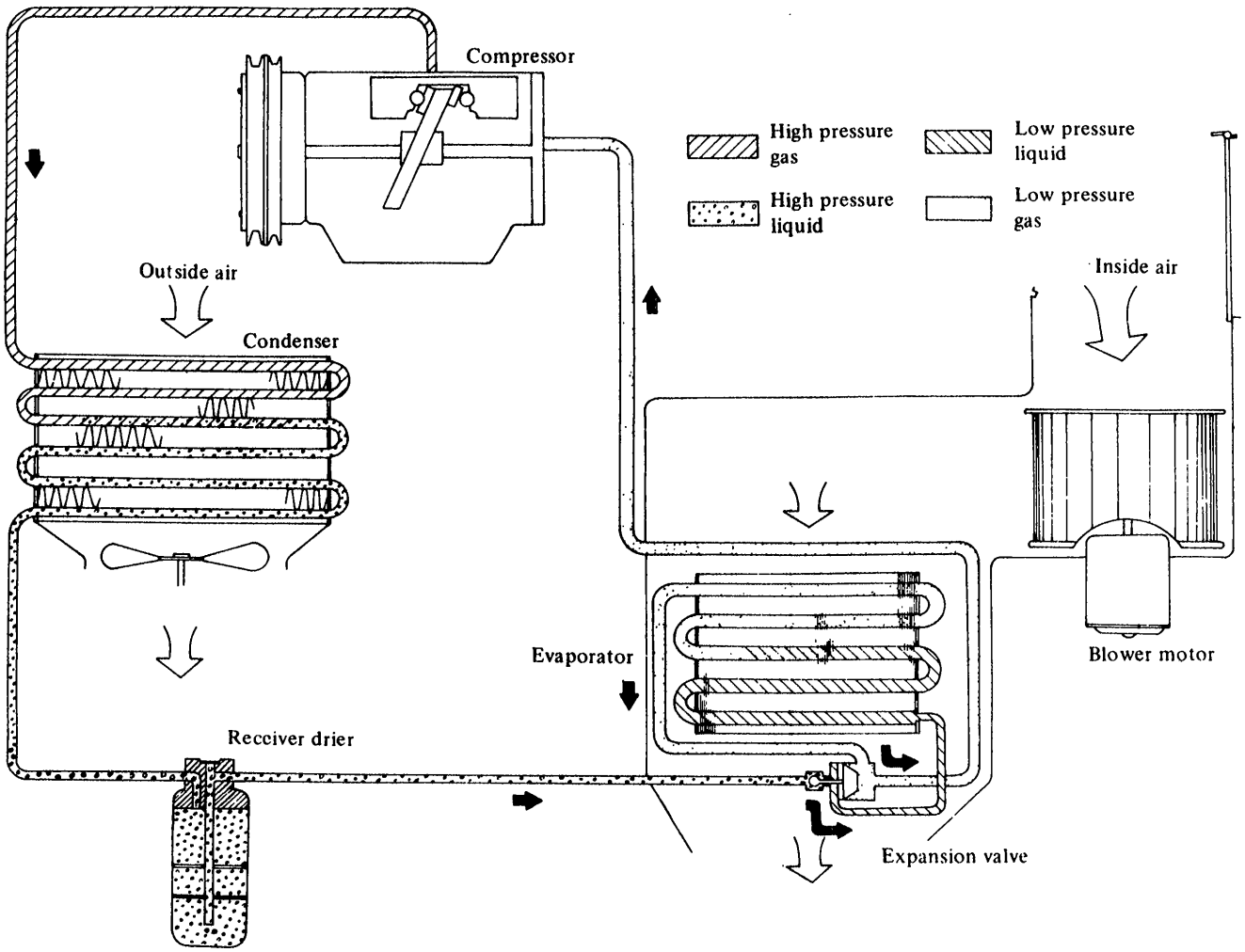

AC780

Fig. AC-3 Refrigeration cycle

The operation of the five devices of the refrigeration system are described below.

EVAPORATOR

The heat of the inside air which is force-circulated by the blower motor is absorbed by vaporizing the liquid refrigerant passed through the evaporator. This cools the air.

COMPRESSOR

The compressor is installed to the side of the engine and is driven by crank pulley through a belt. The refrigerant gas leaving the evaporator is forced out to the condenser by compressor and the low pressure refrigerant gas is compressed to a high pressure and high temperature.

CONDENSER

The condenser is installed to the front of the radiator. The heated and compressed refrigerant gas from the compressor condenses to a liquid by being cooled by air passing between the fins of the condenser.

Downloaded from www.Manualslib.com manuals search engine

RECEIVER DRIER

The receiver drier serves the purpose of storing the liquid refrigerant. The amount of the liquid refrigerant flowing through the system varies with the operating condition of the air conditioner. To be accurate, the receiver drier stores excess amount of refrigerant when the heat load is lowered. It also releases stored refrigerant when additional cooling is needed, thus maintaining the optimum flow of refrigerant within the system.

The receiver drier includes a strainer and desiccant. They have the job of removing moisture and foreign particles as the refrigerant circulates within the system.

The pressure switch is installed beside sight glass of receiver drier. The purpose of the switch is to stop the compressor operation in the event an excessive system pressure builds up on the high pressure lines.

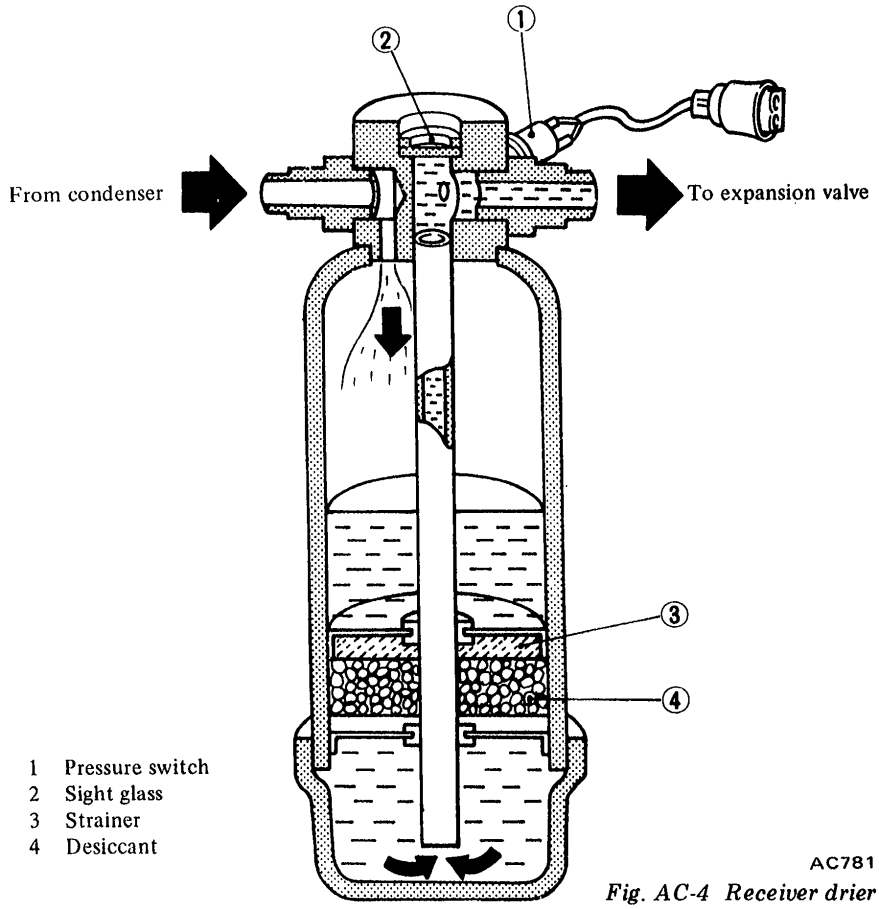

Fig. AC-4 Receiver drier

EXPANSION VALVE

The expansion valve restricts the flow of liquid refrigerant as it passes through it and delivers sprayed refrigerant to the evaporator for facilitating refrigerant evaporation.

The refrigerant within the thermo bulb changes in pressure through the super heat condition of vaporized refrigerant gas which comes out of the evaporator, causing the deflection of the diaphragm. The lift of the ball valve attached to the diaphragm is changed by the deflection of the diaphragm, thus controlling the amount of refrigerant passing the orifice.

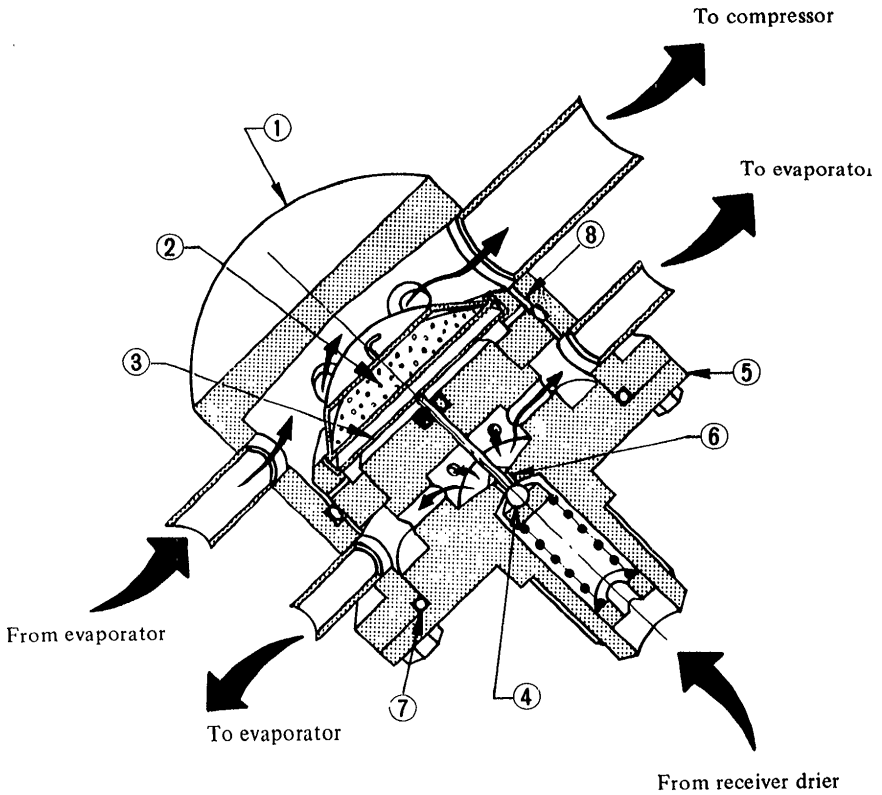

Fig. AC-5 Expansion valve

Downloaded from www.Manualslib.com manuals search engine

AIR FLOW AND VACUUM SYSTEM

AIR FLOW

OFF position

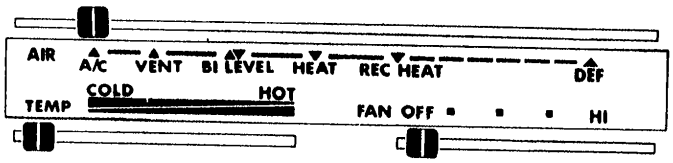

AIR lever: In any position
FAN lever: OFF position
TEMP lever: In any position

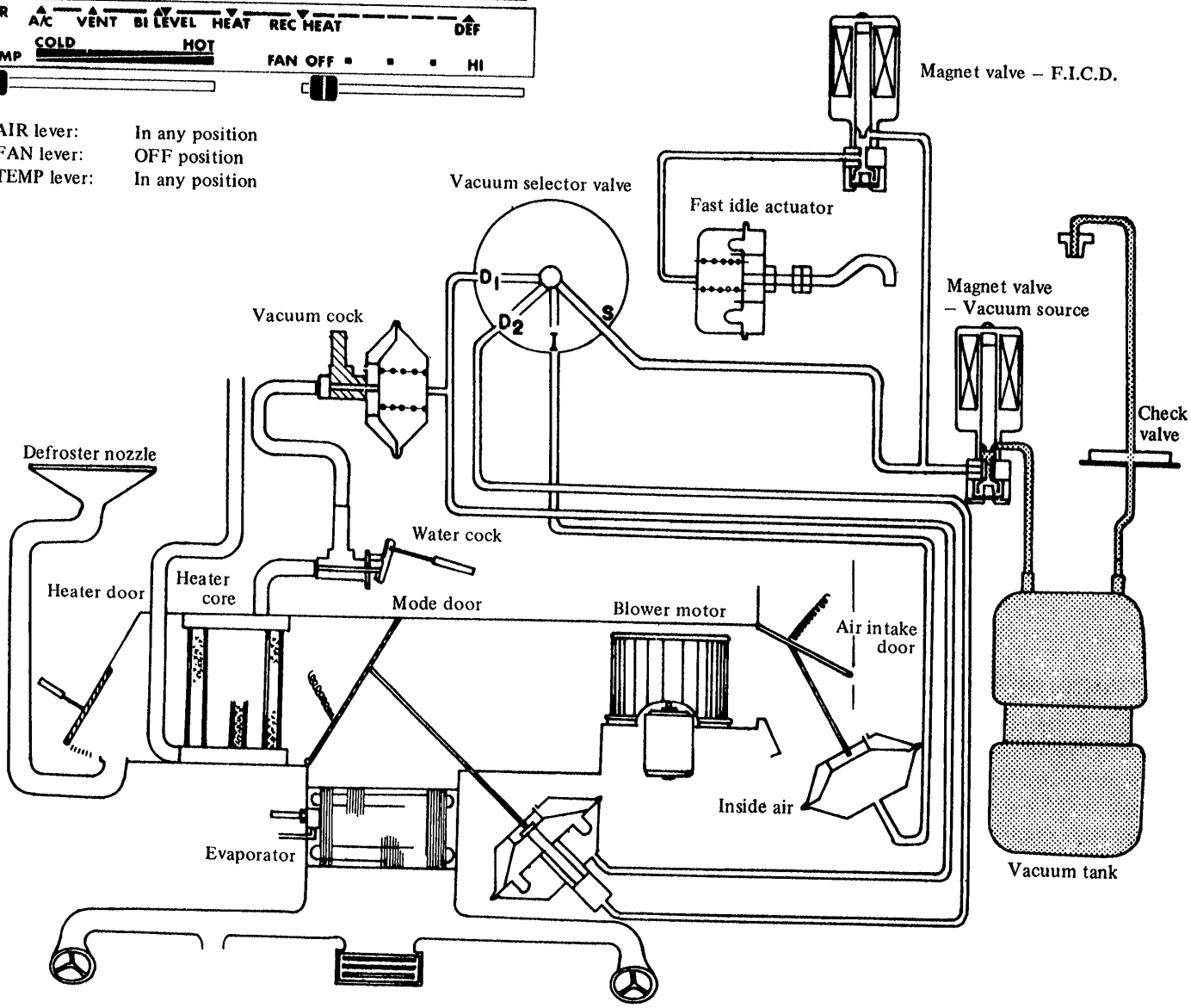

AC782

Fig. AC-6 Air flow - OFF position

Downloaded from www.Manualslib.com manuals search engine

A/C (Air conditioner) position

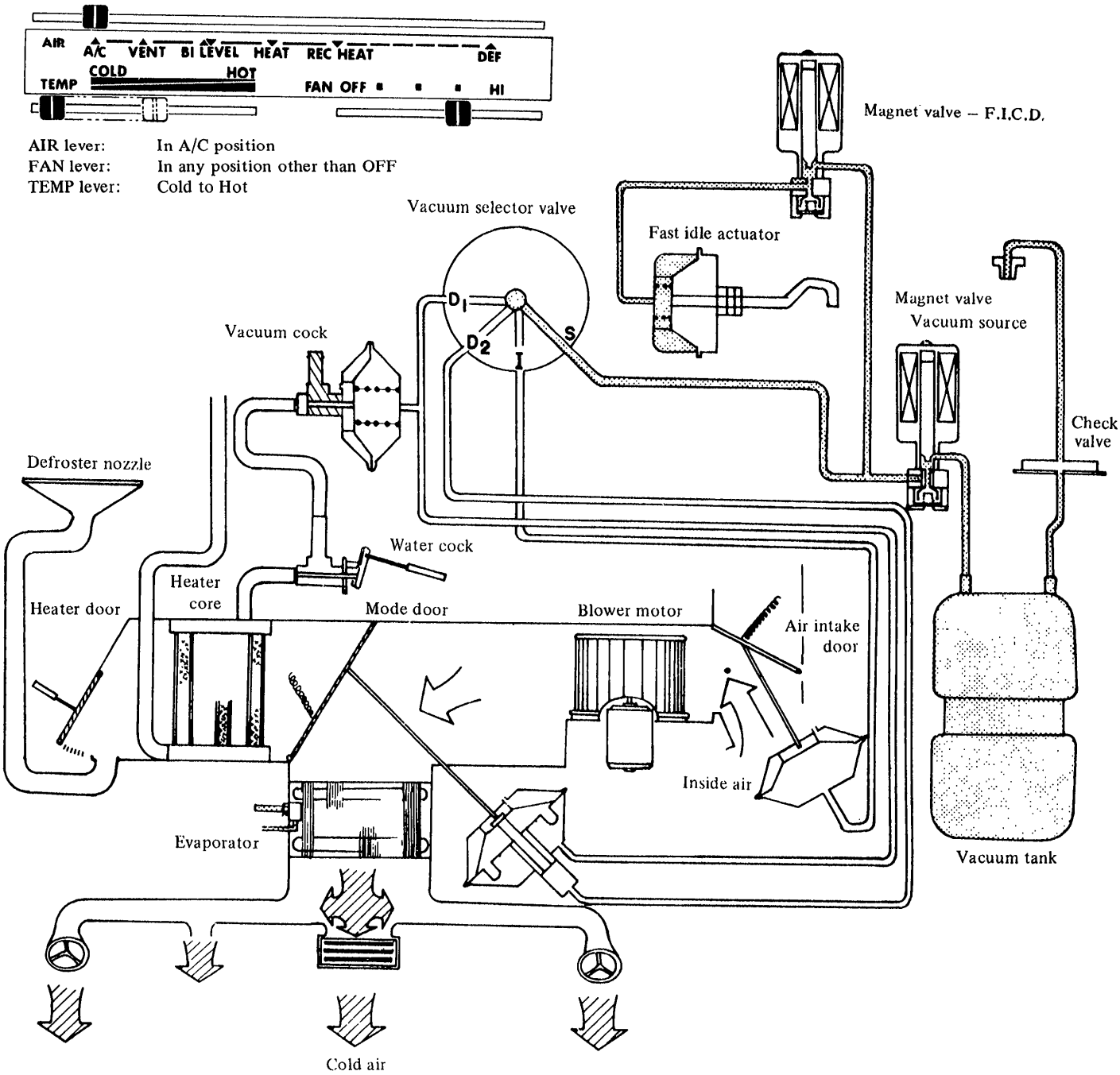

AC783

Fig. AC-7 Air flow - A/C (Air Conditioner) position

When the AIR lever is set to the A/C position, vacuum and air flows are as shown in the schematic layout above.

1. Air intake door . . . The air intake door is in the closed position, shutting off outside air. Air is circulating inside the passenger compartment.
2. Mode door . . . The mode door is in the closed position. All the air introduced from the air intake is cooled in the evaporator and then directed to the outlets located on the instrument panel.
3. Heater door . . . The heater door, connected by a control cable from the AIR lever, is in the open position.
4. Vacuum cock . . . The vacuum cock is in the shut position.
5. Fast idle actuator . . . With passage to the magnet valve open, the vacuum introduced down to the fast idle actuator moves the actuator diaphragm to pull its operating lever. As a result, the throttle valve is moved to open a little wider, thus increasing the idling rpm.

Downloaded from www.Manualslib.com manuals search engine

VENT (Ventilation) position

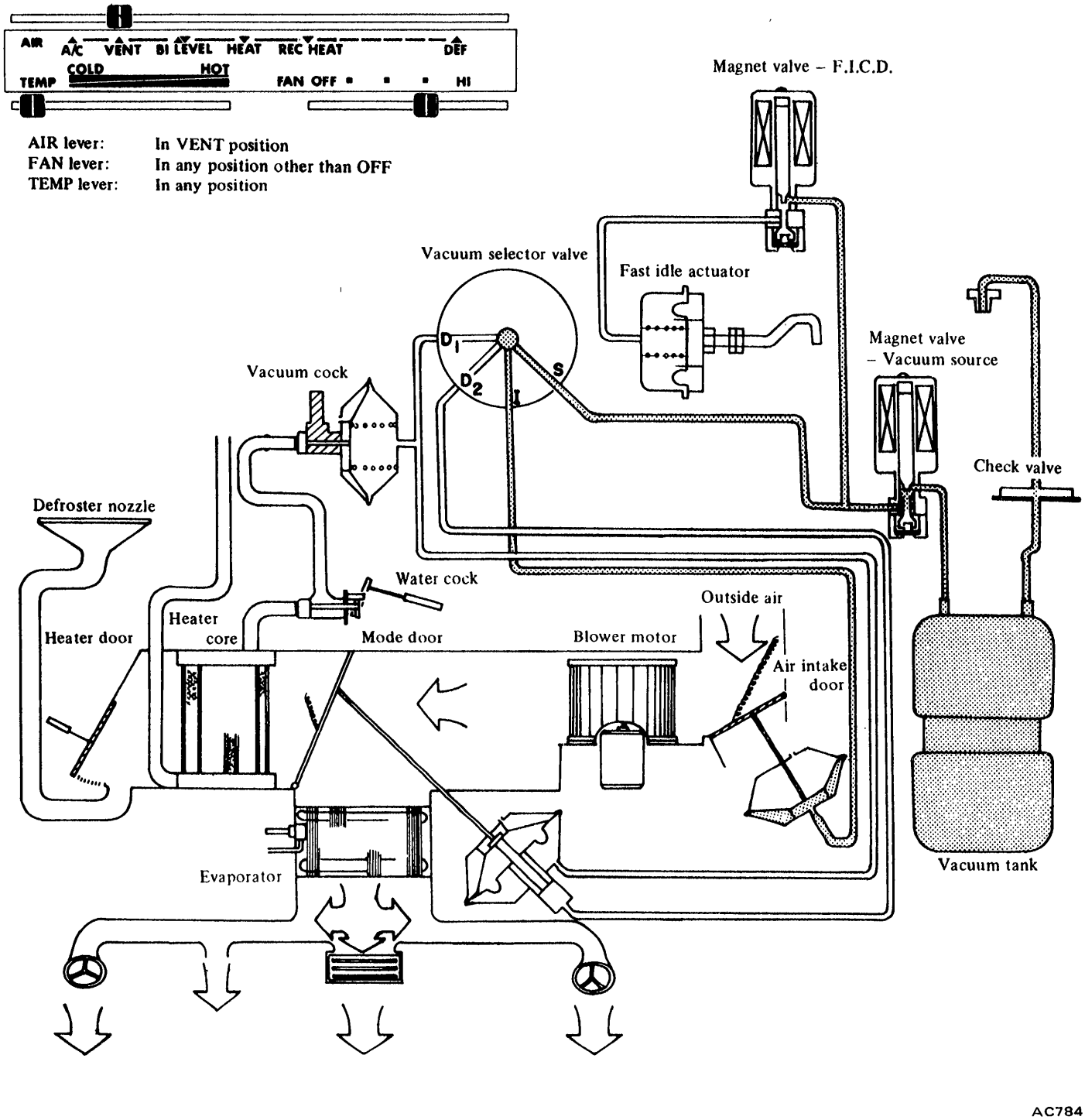

Fig. AC-8 Air flow - VENT (Ventilation) position

1. Air intake door . . . Vacuum is introduced to the actuator of the air intake door and causes an actuator movement to open the door.

Thus it admits outside air into the air conditioner unit.

2. Mode door . . . The mode door is in the closed position. Outside air is directed to the outlets located on the instrument panel.

3. Heater door . . . The heater door is in the open position.

4. Vacuum cock . . . The vacuum cock is in the closed position, shutting off the hot water at the cock.

5. Fast idle actuator . . . The vacuum flowing into the fast idle actuator is interrupted by the magnet valve. The actuator then stops its operation and the operating lever returns to its original position.

Downloaded from www.Manualslib.com manuals search engine

BI-LEVEL position

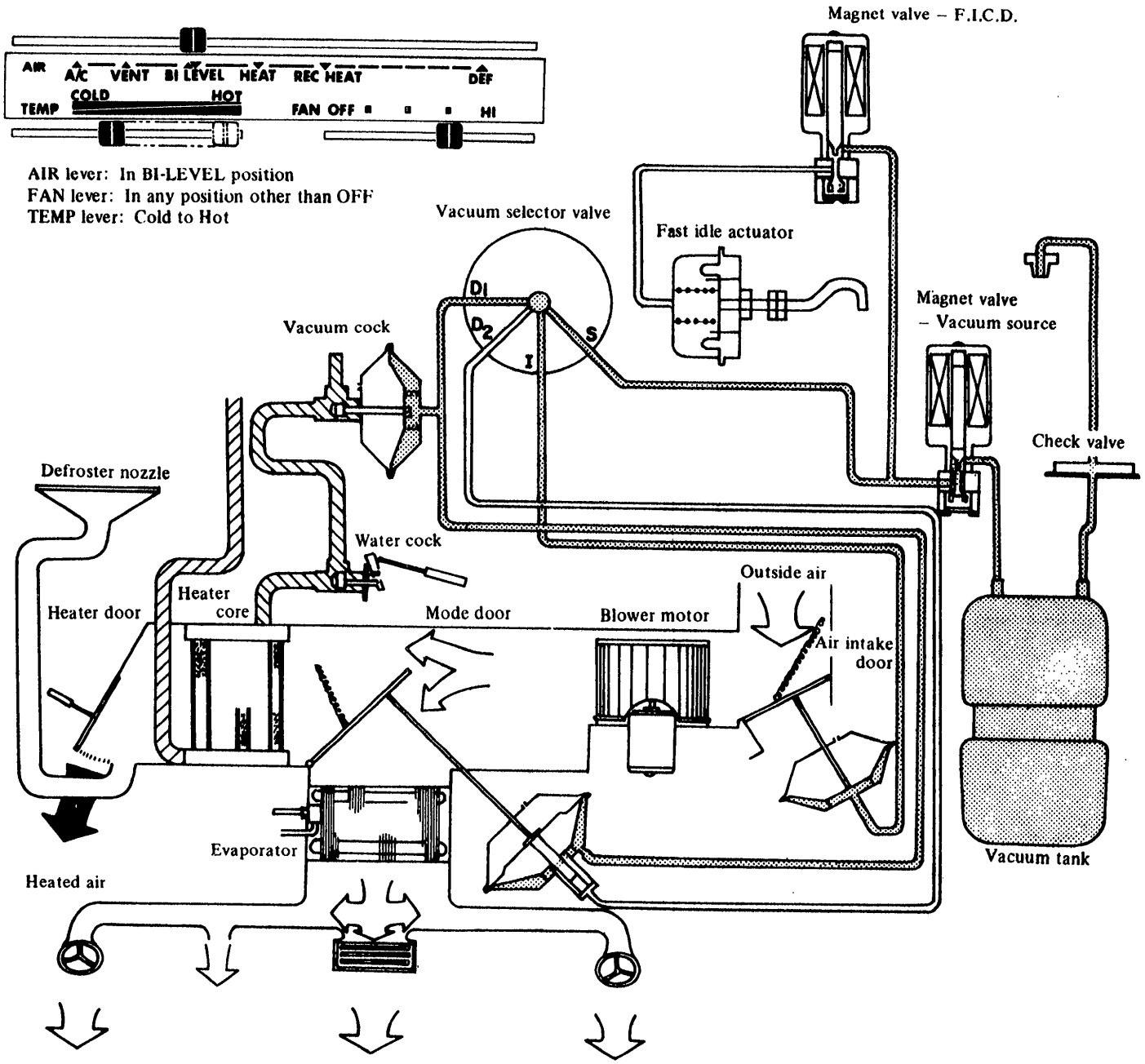

AC785

Fig. AC-9 Air flow - BI-LEVEL position

1. Air intake door . . . Vacuum is imposed on the actuator of the air intake door and the door is in the open position.
2. Mode door . . . Vacuum is introduced only to D_1 of the double-action actuator and the door is allowed to open in its first-stage position. Outside air admitted from the air intake door thus flows both into the heater core and the evaporator.
3. Heater door . . . The heater door is in the open position. Warm air heated by the core is directed toward occupant's feet in the passenger compartment.
4. Vacuum cock . . . Vacuum is imposed on the actuator, causing the cock to open. Hot water now circulates in the heater core.
5. Fast idle actuator . . . The actuator is not in operation.

Under the BI-LEVEL position, fresh outside air is discharged from the instrument air outlets while, from the heater outlets on the floor, warm air is produced.

Downloaded from www.Manualslib.com manuals search engine

HEAT position

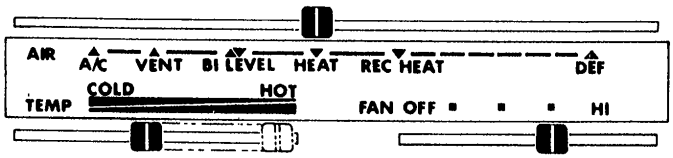

AIR lever: In HEAT position
FAN lever: In any position other than OFF
TEMP lever: Cold to Hot

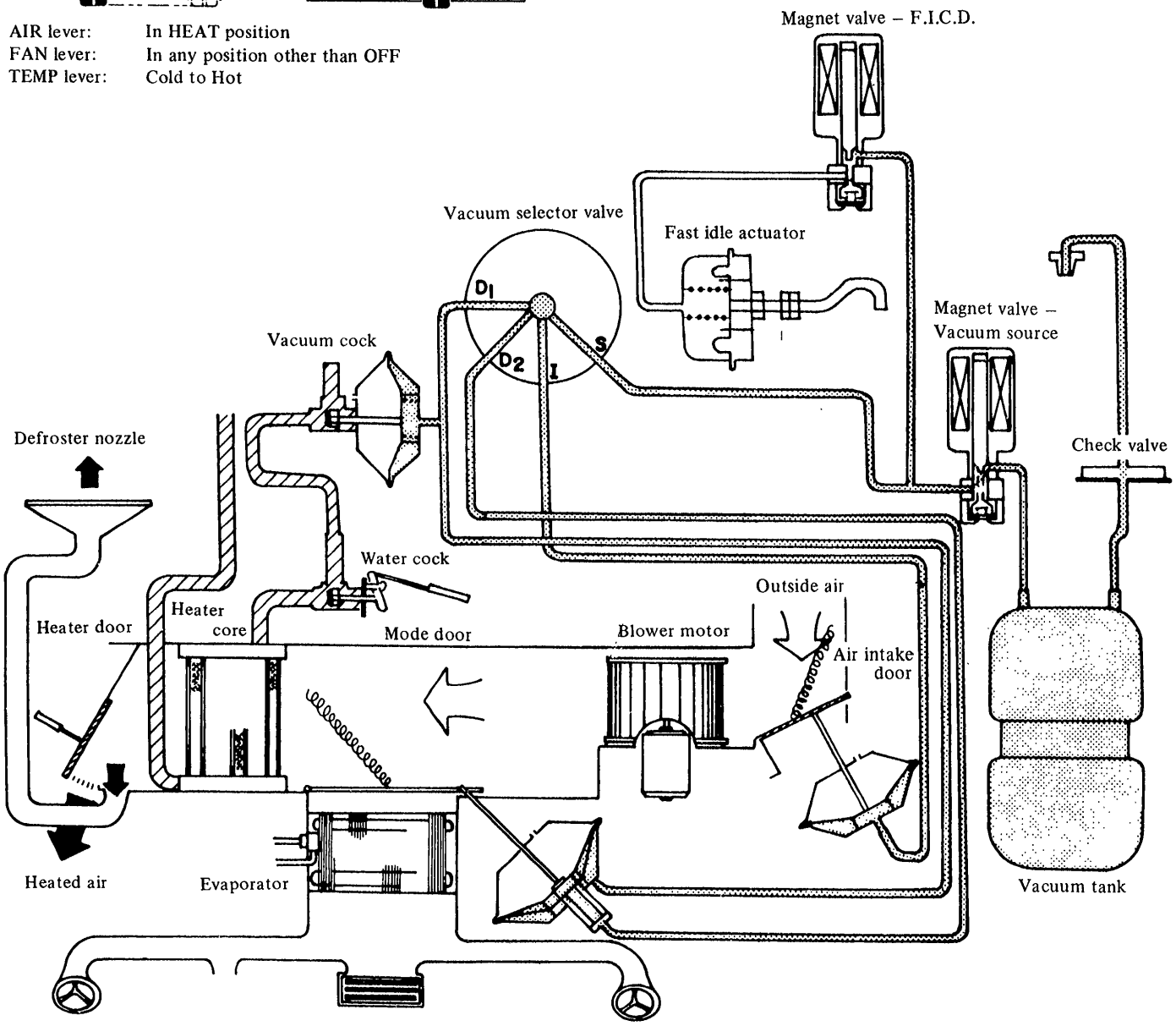

AC786

Fig. AC-10 Air flow - HEAT position

1. Air intake door . . . Vacuum is imposed on the actuator of the air intake door and the door is in the open position.
2. Mode door . . . Vacuum is introduced both to D_1 and D_2 of the double-action actuator and the mode door is in its fully open position. All the outside air thus flows into the heater core.
3. Heater door . . . The heater door is in the open position. Warm air heated by the core is discharged from the opening located above occupant's feet. A small portion of it goes to the defroster nozzles.
4. Vacuum cock . . . Vacuum is imposed on the actuator, causing the vacuum cock to open.
5. Fast idle actuator . . . The actuator is not in operation.

Temperature of the discharge air varies with the amount of water flowing into the heater core via the water cock. The water cock is controlled by a control cable from the TEMP lever.

Downloaded from www.Manualslib.com manuals search engine

REC HEAT position

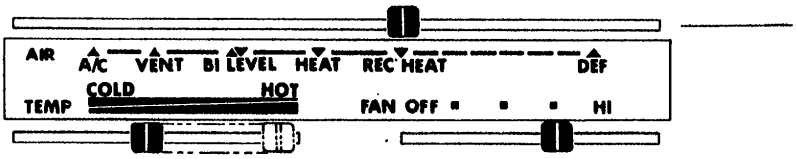

AIR lever: In REC HEAT position
FAN lever: In any position other than OFF
TEMP lever: Cold to Hot

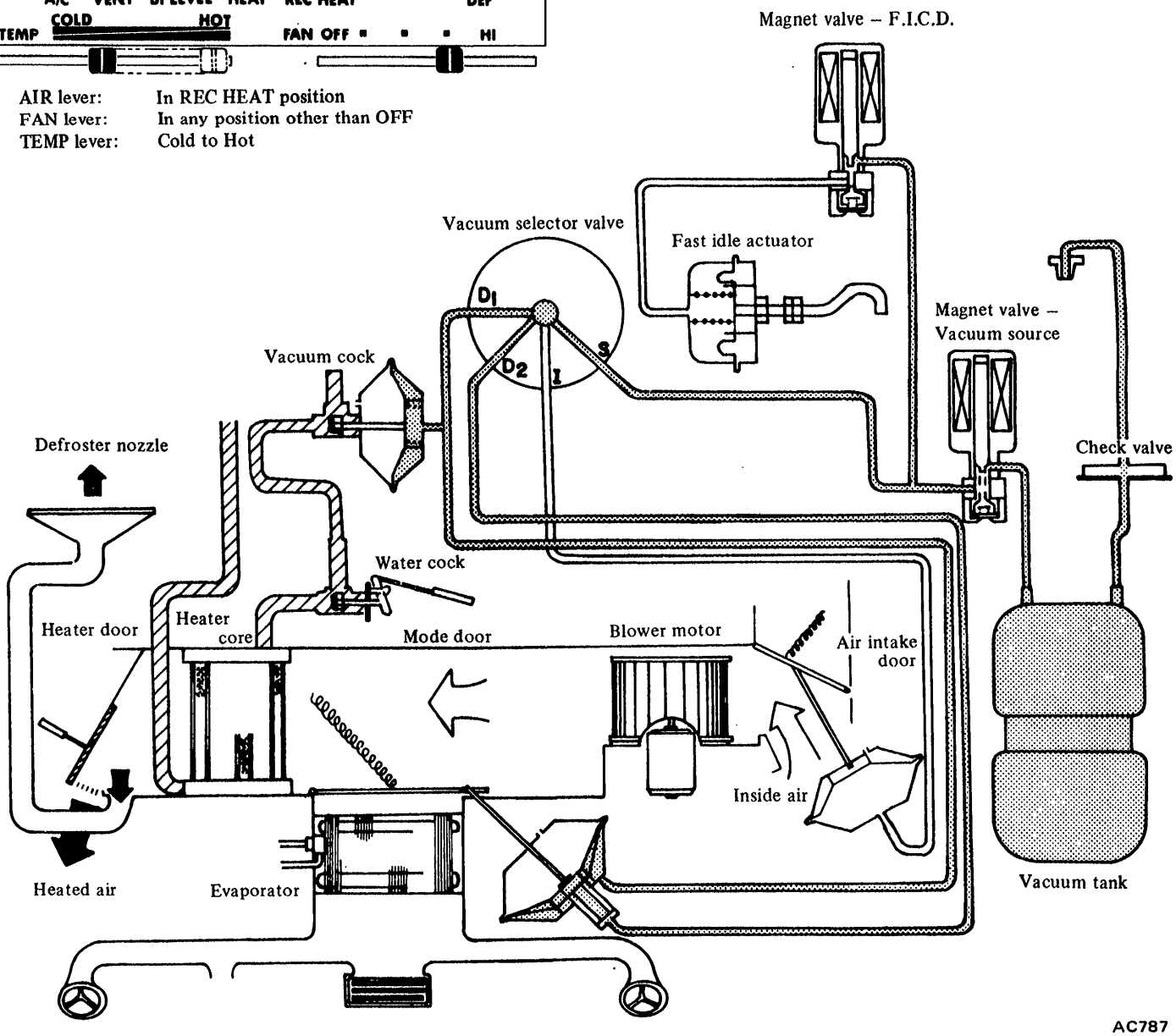

AC787

Fig. AC-11 Air flow - REC HEAT position

1. Air intake door . . . The air intake door is in the closed position, shutting off outside air. Air is circulating inside the passenger compartment.
2. Mode door . . . Vacuum is introduced both to D_1 and D_2 of the double-action actuator and the mode door is in its fully open position. All the outside air thus flows into the heater core.
3. Heater door . . . The heater door is in the open position. Warm air heated by the core is discharged from the opening located above occupant's feet. A small portion of it goes to the defroster nozzles.
4. Vacuum cock . . . Vacuum is imposed on the actuator, causing the vacuum cock to open.
5. Fast idle actuator . . . The actuator is not in operation.

Temperature of the discharge air varies with the amount of water flowing into the heater core via the water cock. The water cock is controlled by a control cable from the TEMP lever.

Downloaded from www.Manualslib.com manuals search engine

DEF (Defrost) position

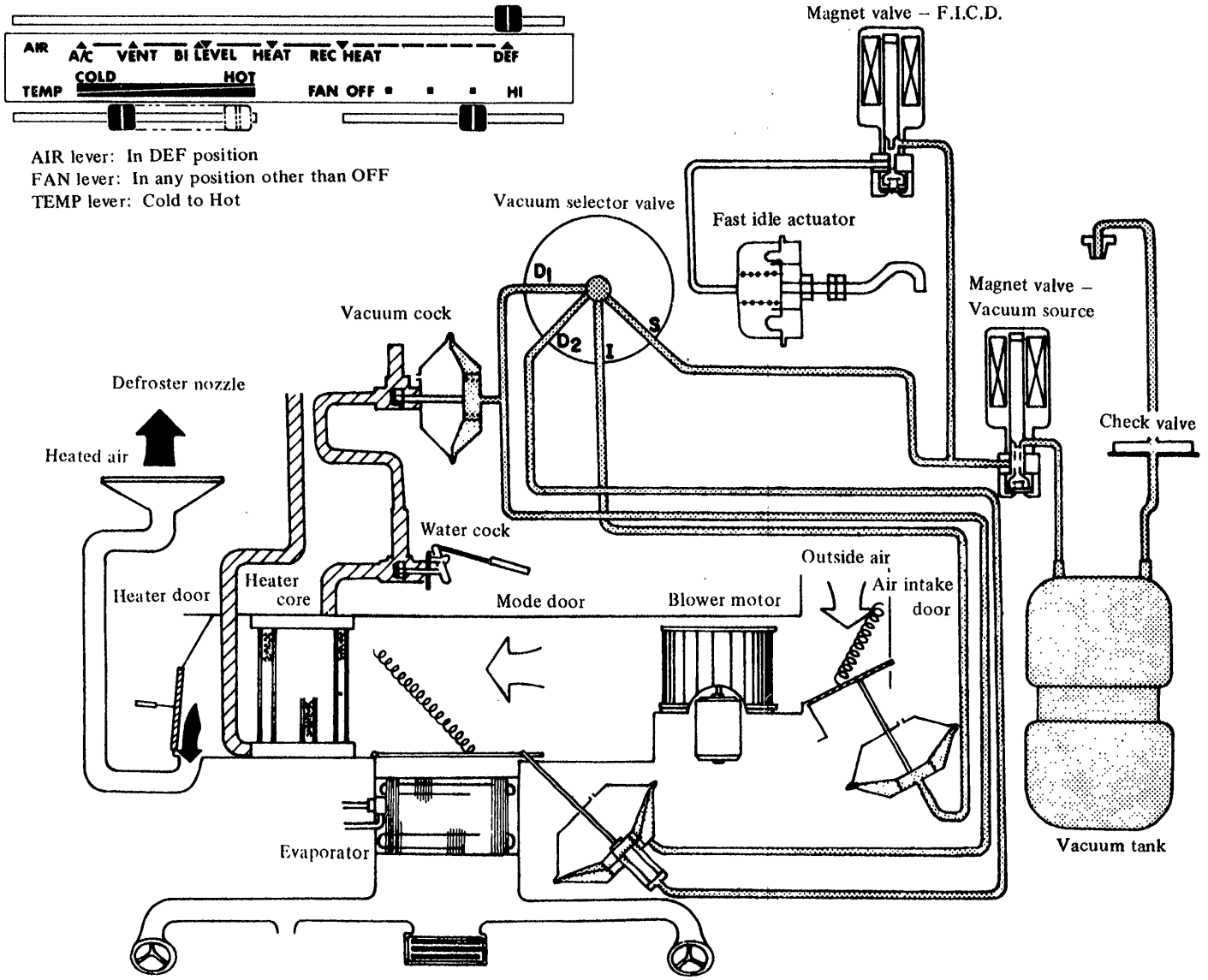

Fig. AC-12 Air flow - DEF (Defrost) position

1. Air intake door . . . Vacuum is imposed on the actuator of the air intake door and the door is in the open position.
2. Mode door . . . Vacuum is introduced both to D_1 and D_2 of the double-action actuator and the mode door is in its fully open position.
3. Heater door . . . The control cable of the heater door is connected to the AIR lever and holds the door in the closed position.

Warm air heated by the core goes to the defroster nozzles.

4. Vacuum cock . . . Vacuum is imposed on the actuator of the vacuum cock and the cock is in the open position.
5. Fast idle actuator . . . The actuator is not in operation.

Downloaded from www.Manualslib.com manuals search engine

VACUUM SYSTEM

Vacuum tank

It is necessary to control the amount of vacuum that the engine intake manifold produces. This is important since the amount of vacuum varies with speed and load of the engine. The vacuum tank stores the vacuum to help maintain a constant supply of vacuum to the system.

Check valve

The check valve is located between the engine intake manifold and the vacuum tank. Its valve opens at a negative pressure on the engine side 20 mm Hg (4/5 in Hg) higher than that on the vacuum tank side.

The valve closes when the manifold pressure is higher than that in the vacuum tank to prevent the flow of pressure from the manifold to the tank.

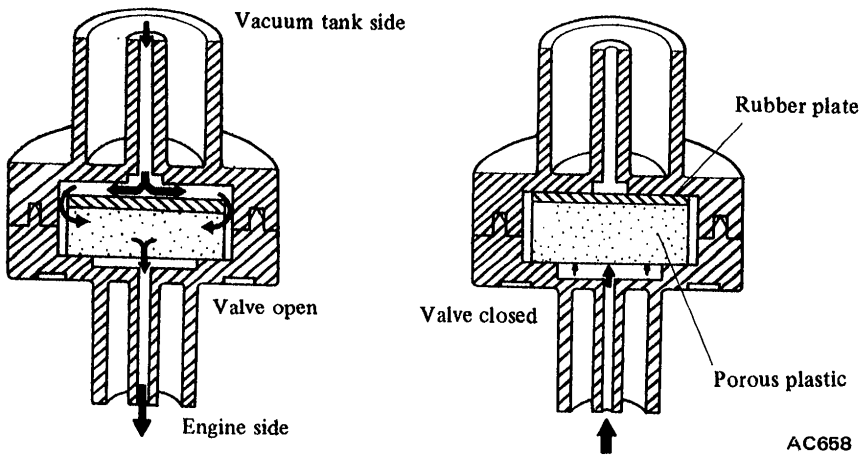

Fig. AC-13 Check valve

Vacuum selector valve

Vacuum distribution is controlled by the vacuum selector valve. The AIR lever directly actuates the vacuum selector valve. This valve consists of two plates which are facing each other. The plates have their mating faces grooved for the transmission of vacuum to the individual vacuum actuators. Moving the AIR lever changes the relative position between these grooves, causing the vacuum actuators to operate depending on the AIR lever setting.

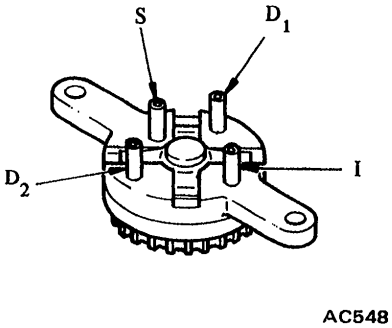

Fig. AC-15 Vacuum selector valve

Magnet valve

While the magnet valve's coil is energized by an electric current, it holds the valve needle in the raised position and vacuum is imposed on the selector side.

When current to the coil is interrupted, passage on the vacuum tank side closes, leaving the selector side line open to the atmosphere.

There are two magnet valves in the system. One is located between the vacuum tank and the vacuum selector valve. The other is provided for the fast idle actuator.

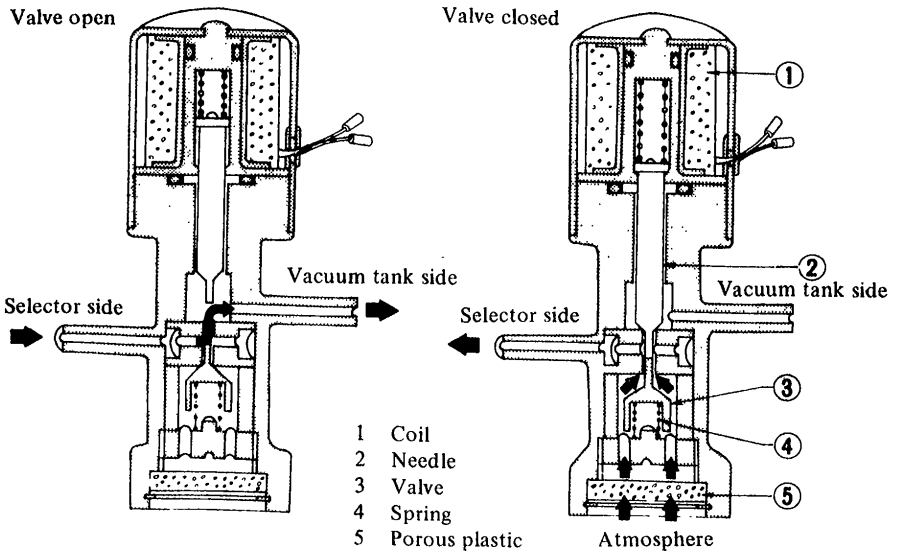

Fig. AC-14 Magnet valve

Vacuum actuator

Single-action and double-action actuators are used. Operation is the same. When vacuum is imposed on the diaphragm, it deflects moving the operating lever connected to it. The actuators operate at a vacuum of 200 mm Hg (8 in Hg).

Fast idle control device (F.I.C.D.)

The fast idle control device increases engine idle speed so that the air conditioner continues to cool the passenger compartment even when the car is at a stand still.

Vacuum water cock

This cock, too, has a vacuum actuator, by which two-stage operations of opening and closing the cock are performed. This cock opens and closes the passage of the cooling water which flows into the heater core.

Downloaded from www.Manualslib.com manuals search engine

OFF POSITION

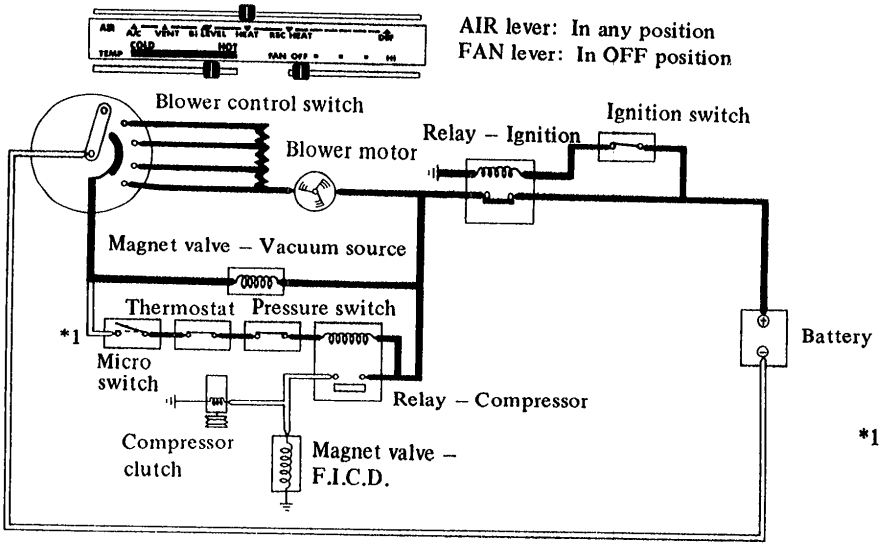

*1 – (When AIR lever is in A/C position, micro switch is ON.)

A/C POSITION

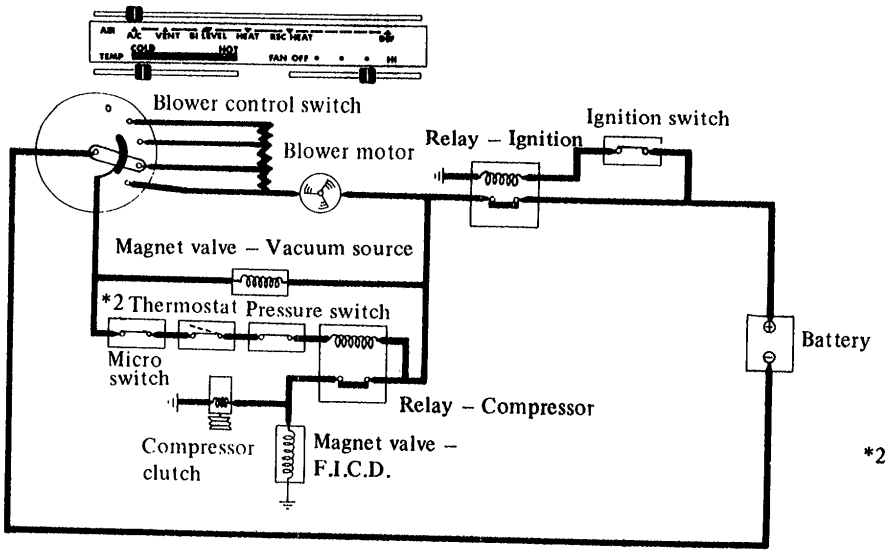

*2 – (May be on or off by switching thermostat on or off)

VENT
BI-LEVEL
HEAT
REC HEAT
DEF
POSITION

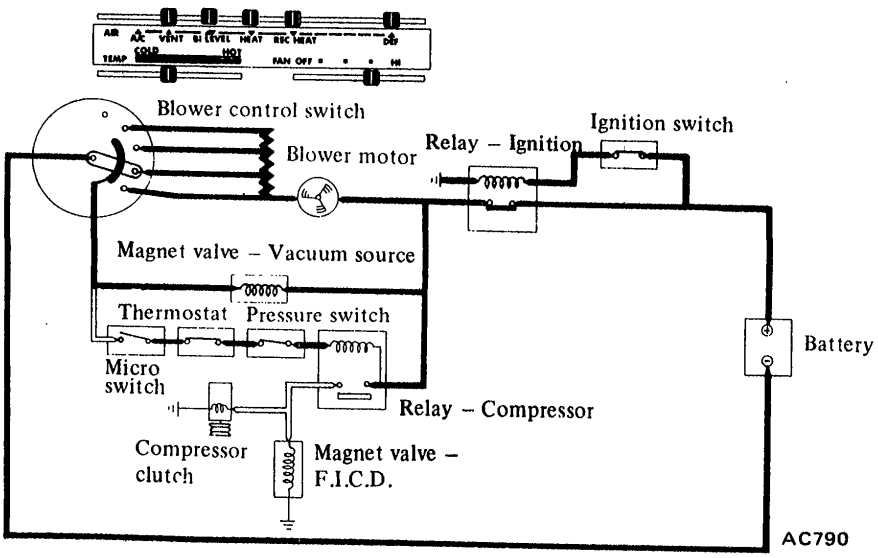

Fig. AC-16 Electrical circuit

Downloaded from www.Manualslib.com manuals search engine

ELECTRICAL CIRCUIT

The electrical system of the air conditioner is designed to control the ground circuit. In the following paragraphs are described the operations of the blower motor, compressor and magnet valves.

BLOWER MOTOR OPERATION

As the ignition switch is turned on, a power relay for the air conditioner closes, allowing the current from the battery to the blower motor, resistor and blower speed switch. When the blower speed switch is turned on, a ground circuit is completed and thus the blower motor begins to rotate.

COMPRESSOR OPERATION

The compressor circuit contains a compressor relay. The solenoid energizing circuit of the relay includes the blower speed switch, a micro switch, the thermostat and a pressure switch, all connected in series. On-off operations in these devices control current to the compressor clutch. This circuit also controls the magnet valve for the fast idle actuator.

MAGNET VALVE (VACUUM SOURCE) OPERATION

The vacuum source magnet valve is operated in conjunction with the on-off of the blower speed switch. This valve controls vacuum supply to the vacuum-operated system.

Relay

Two relays are used. One is in the line between the blower motor and the battery. When the ignition switch is set at ON, the current flows through the solenoid to the ground, that is, the relay solenoid is energized so that the relay contacts are closed and the current flows to the blower motor.

The other relay is located in the line on the way to compressor clutch. The pressure switch, thermostat, micro switch and blower speed switch are in series connection in the line where the solenoid branches off. The current passes through the blower speed switch to the same ground circuit as the blower motor.

Blower speed switch

The blower speed switch is directly actuated by the FAN lever. The current passes through the resistor to the blower motor; then it passes through the blower speed switch to the ground. The speed of the blower motor is changed to four speeds with the FAN lever's position.

Magnet valve

This valve is opened and closed electrically by its electric solenoid.

Pressure switch

Installed in the receiver drier, the pressure switch interrupts current to the compressor clutch and stops the compressor operation whenever system pressure on the high pressure lines builds up abnormally. See Figure AC-4.

Micro switch

The micro switch is actuated by the AIR lever. This switch is on only when the AIR lever is set at A/C position.

Thermostat

The thermostat has one sensor, which is located in the center of the evaporator core of the evaporator housing and which senses the temperature of air forced out of the evaporator. In the thermostat, the contact is switched to ON and OFF according to the change in the temperature sensed by the sensor; in other words, the current which is sent to the compressor clutch is cut so as to stop the compressor's operation and to maintain steady the temperature of air forced out. One of the control cables from the TEMP lever changes the temperature setting for operation of the thermostat.

Compressor clutch

The compressor clutch engages and disengages the clutch disc electrically by the electric solenoid, and transmits the engine speed to the shaft of the compressor.

Downloaded from www.Manualslib.com manuals search engine

GENERAL SERVICE

CONTENTS

REFRIGERANT R-12 ..... AC-16
COMPRESSOR OIL AC-16
MAINTENANCE AC-16
PERIODIC MAINTENANCE AND SEASON-IN INSPECTION AC-16
GENERAL SERVICE INSTRUCTIONS AC-16
SAFETY PRECAUTIONS AC-17
EVACUATING AND CHARGING SYSTEM ... AC-17
HANDLING MANIFOLD GAUGE AC-17
HANDLING SERVICE VALVE AC-18
HANDLING CAN TAP AC-19
DISCHARGING SYSTEM AC-20
EVACUATING SYSTEM AC-20
CHARGING REFRIGERANT AC-21
CHECKING FOR LEAKS AC-23
HALIDE LEAK DETECTOR AC-23
ELECTRIC LEAK DETECTOR AC-24
REFRIGERANT LEVEL CHECK AC-24
SIGHT GLASS AC-24
PERFORMANCE TEST AC-25
COMPRESSOR OIL LEVEL CHECK AC-25
PERFORMANCE TEST AC-25
REFRIGERANT LEAKS AC-25

REFRIGERANT R-12

The refrigerant used in the air conditioner is generally called "Refrigerant-12 (R-12)". No other refrigerant than the above refrigerant should be used.

This refrigerant is usually available in a small can or a cylinder. In either case, it is liquefied under high pressure in the container.

Refrigerant evaporates easily (has a low evaporation point) and, moreover, since the latent heat of the refrigerant is large, it can absorb a large amount of heat when evaporating. Extreme care must be exercised when handling the refrigerant.

COMPRESSOR OIL

The "SUNISO 5GS" refrigeration lubricant should be used to assure the successful compressor operation. Use of oils other than recommended or mixing of the oil with other oils would cause chemical reaction or lead to lowered viscosity or deficient lubrication.

The oil absorbs moisture as it contacts the air. This points out the need for care not to expose it to atmosphere for an extended period of time.

MAINTENANCE

PERIODIC MAINTENANCE AND SEASON-IN INSPECTION

Both periodic maintenance and season-in inspection are most essential to enable the air conditioner to give full performance.

Perform the following checks.

1. Start engine and check refrigerant level through sight glass on receiver drier. For details, refer to relative topics under "Refrigerant Level Check".
2. Check the entire system for sign of refrigerant leaks. Refer to relative topics under "Checking for Leaks" and "Refrigerant Leaks".

If any trace of oil is noted at and around connection fittings, it is a sure indication that refrigerant is leaking. This condition can be corrected easily by retightening the joints. If any joint on line is suspected of small amount of leakage, use a leak detector to locate leaking points.

3. Check compressor drive belts for proper deflection.

Season-off

Observe the following maintenance tips to allow the air conditioner to operate normally in the next season.

1. Keep the entire system free from refrigerant leakage by periodically checking for refrigerant gas leak even out of season.
2. Turn the compressor for 10 minutes at least once a month by running the engine at 1,500 rpm.

GENERAL SERVICE INSTRUCTIONS

The servicing of the air conditioner should be carried out only by well-trained servicemen. This chapter describes essential points of servicing.

- If a large amount of dirt and sand enter the system, they will be carried with refrigerant and may clog the system or scratch rotating parts. This points out the need for care in servicing the system. That is, disconnecting joints should be carried out in a clean place.
- Water should not be allowed to get inside the system. The refrigerant does not readily mix with water. However, the presence of even a minute amount of water will cause a chemical reaction at high temperature which will in turn produce hydrochloric acid (HCl). Since hydrochloric acid is highly corrosive to metals, the aluminum and copper piping, etc. will become corroded and the refrigeration system will become clogged.

Downloaded from www.Manualslib.com manuals search engine

- Water in the system will ice the orifice when the high pressure refrigerant is changed to low pressure refrigerant by expansion valve, etc., and will obstruct the refrigerant flow.

The following are general instructions to be closely observed in servicing the system.

1. When a system line is disconnected, plug the opening immediately. This is especially necessary to prevent moisture condensation from forming in the line and to keep out dirt and dust. It is also necessary to keep the line at and above surrounding air temperatures at all times. When connecting system lines, do not attempt to remove the plug from the opening until ready for immediate use.
2. Always keep the working place clean and dry and free from dirt and dust. Wipe clean water that comes into contact with the pipe joint before disconnecting.
3. Have all necessary tools in preparation beforehand and have tools clean and dry.
4. The compressor oil will easily absorb moisture when exposed to air. Immediately close the opening of the container after use. It is also necessary to observe the following notes:

Notes:

a. **The oil should not be transfused from a container into another, as the failure will possibly cause moisture to mix with the oil.**
b. **The used oil should not be returned into a container.**
c. **The oil should not be used if its state of preservation is not clear enough.**

5. When connecting or disconnecting pipes from the refrigeration system, use two wrenches. One wrench is used for holding the fixing nut in place while the other for turning the mating flare nut. Failure to do so may result in a twisted tube or may damage connection.
6. Also use care not to give scratches to the seating surface at connections. A small scratch on the seating surface may be the cause of gas leakage. Before connecting pipes, be sure to give coating of compressor oil to the seating surfaces.

SAFETY PRECAUTIONS

1. Since direct contact of the liquid refrigerant with your skin will cause frostbite, always be careful when handling the refrigerant. **Wear gloves or wrap a piece of cloth around service valve to protect your fingers against frostbite by refrigerant.** If any of the refrigerant should get into your eyes when charging the refrigerant, splash your eyes with cool water to raise the temperature gradually. Apply a protective film to the eye to avoid infection. Do not rub your eyes. Consult an eye specialist. **Always wear goggles or glasses to protect your eyes when working around the system. Should refrigerant strikes your body, splash on cool water and apply a protective film.**
2. The refrigerant service container has a safe strength. However, if handled incorrectly, it will explode. Therefore, **always follow the instructions on the label. In particular, never store it in a hot location [above 52°C (126°F)] or drop it from a high height.**
3. The refrigerant gas is odorless and colorless and breathing may become difficult due to the lack of oxygen. Since the refrigerant gas is heavier than air and will lay close to the floor, be especially careful when handling it in small, confined spaces.
4. The refrigerant itself is nonflammable. **However, a toxic gas (phosgene gas) is produced when it contacts fire and special care is therefore required when checking for leaks in the system with a halide torch.**
5. Do not steam clean on the system, especially condenser since excessively high pressure will build up in the system, resulting in explosion of the system.

The above precautions are essential in handling of Refrigerant-12, and their strict observation requires sufficient training. Therefore, it is of first importance that any other personnel than a well-trained serviceman should not be allowed to handle the refrigerant.

EVACUATING AND CHARGING SYSTEM

During servicing, use caution to keep air from getting into refrigerant. When air enters the system, all refrigerant must be evacuated from system prior to charging new refrigerant. Air in refrigerant has the following deleterious effects:

1. Since the condensation temperature of the air is extremely low, the air will not be condensed when refrigerant gas is condensed in the condenser, and the air will thus remain in gaseous form. Consequently, the effective thermal transmission area of condenser for refrigerant gas will be reduced and refrigerant gas to be condensed will be reduced. The pressure rise will become proportional to the volume of the air in system.
2. When air and refrigerant are mixed in system, a chemical reaction will be produced and hydrochloric acid which will adversely affect the aluminum, copper, iron, and other materials in system may be generated.

HANDLING MANIFOLD GAUGE

The pressure at the high- and low-sides of system should be measured when evacuating and charging refrigerant and when diagnosing trouble in the system. The manifold gauge is used for these purposes. A manifold gauge has two pressure gauges; a low pressure gauge and a high pressure gauge. These gauges are connected to the high- and low-side service valves of system through flexible charging hoses. The construction of manifold gauge is shown in Figure AC-17.

When valve stem is fully screwed, the valve is front-seated and valve path and the center path are blocked. When valve stem is backed off, the paths are opened.

Downloaded from www.Manualslib.com manuals search engine

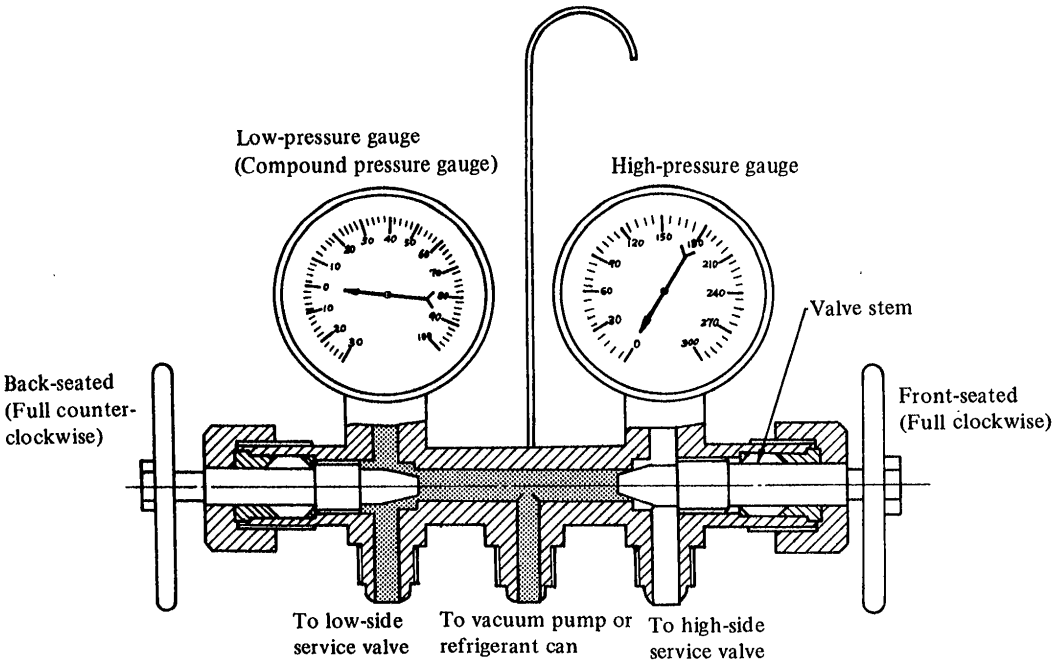

Fig. AC-17 Manifold gauge

Connection to service valve

1. Fully close both valves of manifold gauge. Connect high- and low-pressure charging hoses to manifold gauge.

2. Remove caps from service valves. Connect high- and low-pressure charging hoses to service valves in system. The refrigerant gas will be discharged since check valve is open when pressing charging hose onto service valve.

3. Next, loosen the connection fitting of charging hose at manifold gauge side for 2 to 3 seconds to purge any air inside charging hose by the pressurized gas in system.

HANDLING SERVICE VALVE

An automatic check valve is built into service valve. When this valve presses against the connection fitting, that is, when charging hose is connected to service valve, the valve is open. When charging hose is disconnected, the valve is closed automatically. Always observe the following usage precautions:

1. Always install valve cap after using service valve.

When high speed operation is performed without valve cap, a negative pressure will gradually build up at the low pressure side of system and air may be sucked in. In addition, dirt and dust will easily enter the valve resulting in foreign matter entering the system.

2. Check valve will be half opened during connection and disconnection of charging hoses and refrigerant will be forcefully discharged. Therefore, connect and disconnect charging hoses quickly while pressing flare nut of charging hose against service valve.

Caution: Work with fingers protected with cloth against frostbite by refrigerant.

3. Since close contact between the thread of valve cap and the thread of service valve will prevent gas leakage, keep these sections clean and free of scratches and damage.

4. Since packing of charging hose will be lost during long use, always check packing prior to installing charging hose.

Disconnection from service valve

1. Fully close both valves of manifold gauge.

2. Disconnect two charging hoses from service valves. At this time, the gas will be discharged until check valve is closed. Therefore, disconnect hose quickly.

Caution: Work with fingers protected with cloth against frostbite by refrigerant.

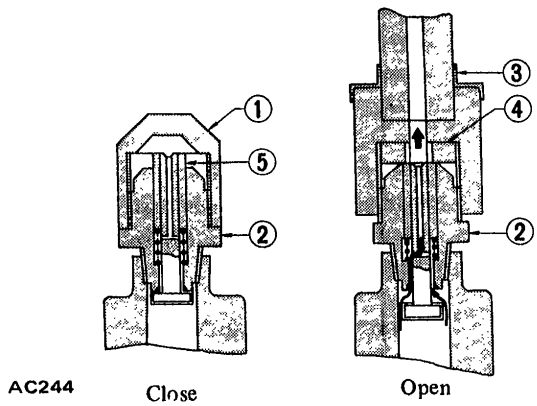

1 Cap
2 Service valve
3 Charging hose
4 Packing
5 Check valve

Fig. AC-18 Service valve

Downloaded from www.Manualslib.com manuals search engine

HANDLING CAN TAP

A wide variety of can taps are available. The following procedures apply to conventional can taps.

For the correct usage, refer to the manufacturer's instructions.

Caution: Use can tap of good quality.

1. Connect charging hose to the center fitting of manifold gauge. At this time, confirm that both stems are fully turned in (front-seated).
2. Turn can tap handle fully counterclockwise so that the needle is pulled up.
3. Attach can tap to refrigerant can firmly.
4. Turn can tap handle fully clockwise to make a hole in refrigerant can.
5. Turn the handle fully counterclockwise to raise the needle. Refrigerant gas will flow up to the center fitting of manifold gauge.
6. Loosen the connection at the center fitting of manifold gauge for a few seconds to purge air inside charging hose. See Figure AC-20.

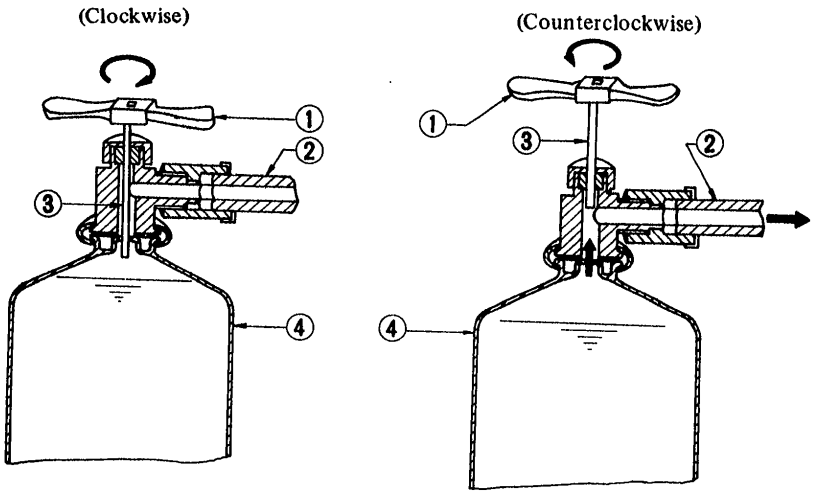

1 Can tap handle
2 Charging hose
3 Needle
4 Refrigerant can

AC246

Fig. AC-19 Can tap

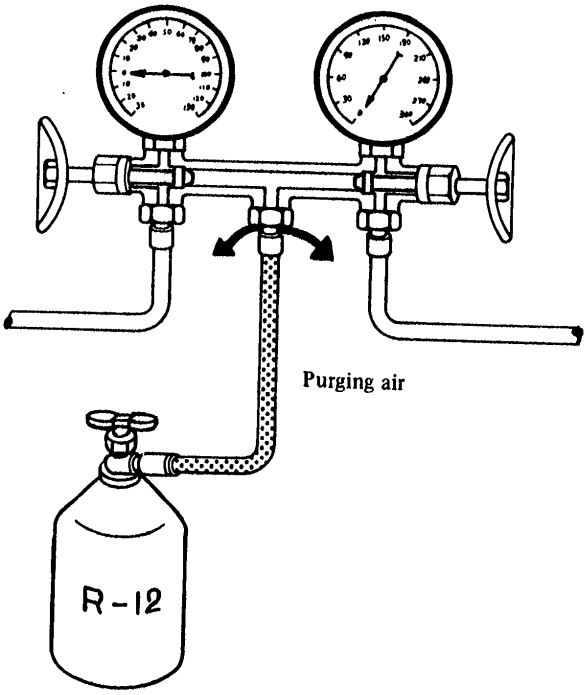

AC247

Fig. AC-20 Purging air

Downloaded from www.Manualslib.com manuals search engine

DISCHARGING SYSTEM

The pressurized refrigerant gas inside system must be discharged to a pressure approaching atmospheric pressure prior to evacuating refrigerant inside system. This operation should be made to permit safe removal when replacing system components.

1. Close high- and low-pressure valves of manifold gauge fully.
2. Connect two charging hoses of manifold gauge to their respective service valves.
3. Open both manifold gauge valves slightly and slowly discharge refrigerant from system. See Figure AC-21.

Note: Do not allow refrigerant to rush out. Otherwise, compressor oil will be discharged along with refrigerant.

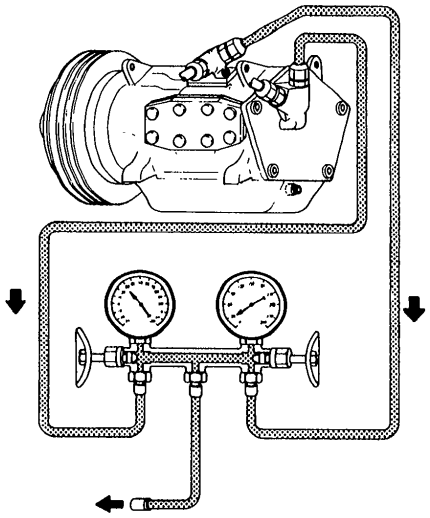

AC248

Fig. AC-21 Discharging system

Caution: Protect fingers with cloth against frostbite by refrigerant when connecting the charging hose to the service valve or disconnecting it therefrom.

EVACUATING SYSTEM

1. Connect high- and low-pressure charging hoses of manifold gauge to their respective service valves of system and discharge refrigerant from system. Refer to "Discharge System".
2. When refrigerant has been discharged to a pressure approaching atmospheric pressure, connect center charging hose to a vacuum pump.
3. Close both valves of manifold gauge fully. Then start vacuum pump.
4. Open low-pressure valve and suck old refrigerant from system. See Figure AC-22.
5. When low-pressure gauge reading has reached to approximately 500 mm Hg (20 in Hg), slowly open high-pressure valve. See Figure AC-23.
6. When pressure inside system has dropped to 710 mm Hg (28 in Hg), fully close both of valves of manifold gauge and stop vacuum pump. Let stand it for 5 to 10 minutes in this state and confirm that the reading does not rise.

Notes:

a. **The low-pressure gauge reads lower by 25 mm Hg (1 in Hg) per a 300 m (1,000 ft) elevation. Perform evacuation according to the following table.**

Elevation m (ft)	Vacuum of system mm Hg (in Hg)
0 (0)	710 (28)
300 (1,000)	685 (27)
600 (2,000)	660 (26)
900 (3,000)	635 (25)

Note: Values show readings of the low-pressure gauge.

b. **The rate of ascension of the low-pressure gauge should be less than 25 mm Hg (1 in Hg) in five minutes.**

If the pressure rises or the specified negative pressure can not be obtained, there is a leak in the system. In this case, immediately charge system with refrigerant and repair the leak described in the followings.

(1) Confirm that both valves of manifold gauge are fully closed and then disconnect center charging hose from vacuum pump.

(2) Connect center hose to can tap in place of vacuum pump. Attach refrigerant can to can tap and pass refrigerant to manifold gauge.

(3) Loosen the connection of center fitting of manifold gauge to purge air from center hose.

(4) Open low-pressure valve of manifold gauge and charge refrigerant into system. After one can [about 0.4 kg (1 lb)] of refrigerant has been charged into system, close low-pressure valve.

(5) Check for refrigerant leakage with a leak detector. Repair any leakages found. Refer to "Checking for Leaks" and "Refrigerant Leaks".

(6) Confirm that both valves of manifold gauge are fully closed and then change center charging hose from can tap to vacuum pump.

(7) Open high- and low-pressure valves and operate vacuum pump to such refrigerant from system. When the pressure in system has dropped to 710 mm Hg (28 in Hg), fully close both valves of manifold gauge.

7. The above operation completes evacuation of system. Next, charge refrigerant. Refer to "Charging Refrigerant".

Downloaded from www.Manualslib.com manuals search engine

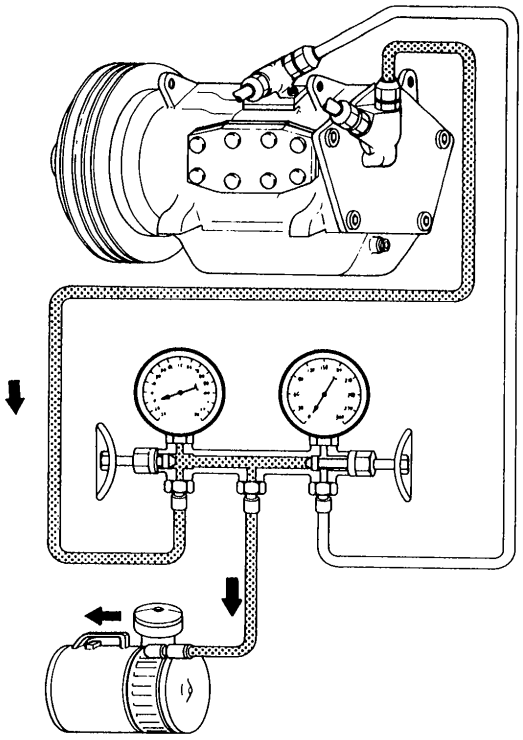

AC249

Fig. AC-22 Evacuating system - First step

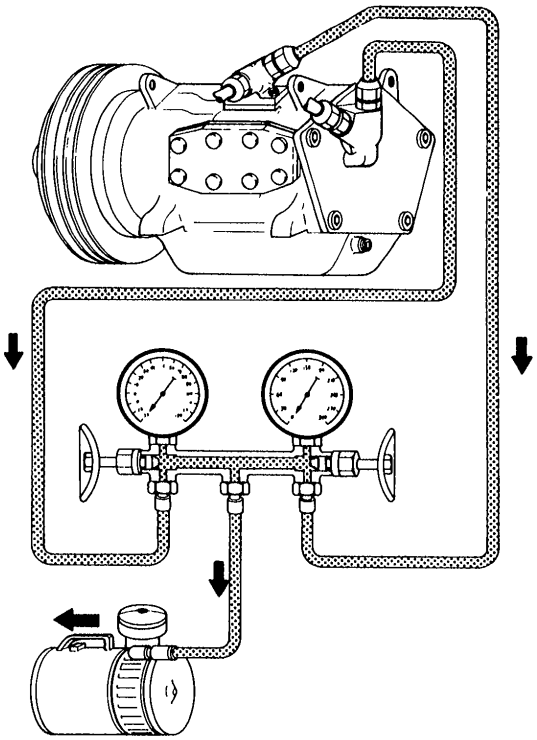

AC250

Fig. AC-23 Evacuating system - Second step

CHARGING REFRIGERANT

1. Install manifold gauge to system. Refer to "Handling Manifold Gauge".

Notes:

a. **Be sure to purge air from the high- and low-pressure charging hoses.**

b. **If air is mixed with refrigerant gas in system, evacuation of system should be performed. Refer to "Evacuating System".**

2. Attacn center charging hose of manifold gauge to refrigerant can through can tap. Break seal of refrigerant can to allow refrigerant to enter manifold gauge. Loosen charging hose at the center fitting of manifold gauge and purge air from inside charging hose. Refer to "Handling Can Tap".

3. Open high- and low-pressure valves of manifold gauge and charge refrigerant into system. See Figure AC-24.

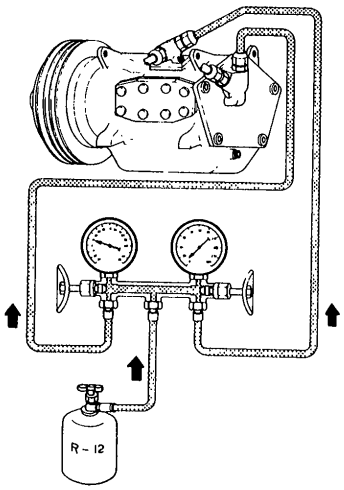

AC251

Fig. AC-24 Charging refrigerant

Notes:

a. **When refrigerant charging speed is slow, immerse refrigerant can in water heated to a temperature of about 40°C (104°F). However, note that this is dangerous when water is hot. See Figure AC-25.**

Cautions:

a. **Under any circumstances the refrigerant can must not be warmed in water heated to a temperature of over 52°C (126°F).**

b. **A blow torch or stove must never be used to warm up the can.**

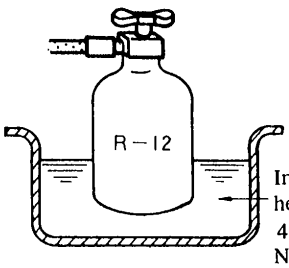

Immerse in water heated to about 40°C (104°F). Note that hot water is dangerous.

AC252

Fig. AC-25 Charging refrigerant

Downloaded from www.Manualslib.com manuals search engine

b. **When charging liquefied refrigerant into the system with the can turned upside down to reduce charging time, charge it only through high pressure valve, but not through low-pressure valve.**
After completion of charging, the compressor should always be turned several times manually. See Figure AC-26.

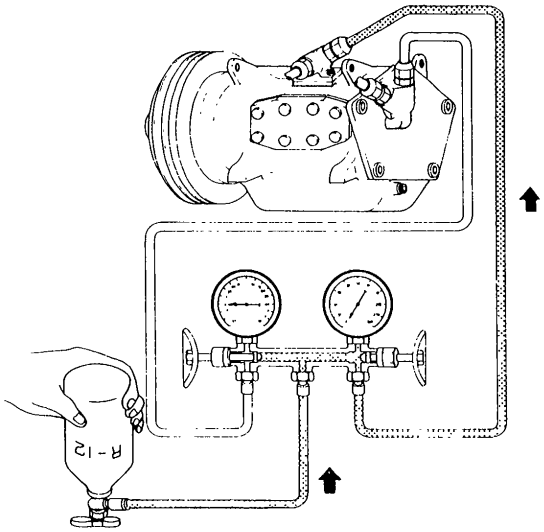

AC253
Fig. AC-26 Charging refrigerant

4. If refrigerant charging speed slows down, charge it while running the compressor for ease of charging. After having taken the steps up to (3) above, proceed with charging in the following order.
(1) Shut off high pressure valve of manifold gauge.

Caution: Never charge refrigerant through high pressure side of system since this will force refrigerant back into refrigerant can and can may explode.

(2) Run the engine at idling speeds below 1,500 rpm.
(3) Set the TEMP lever and FAN switch at maximum cool and maximum speed respectively.
(4) Charge refrigerant while controlling low-pressure gauge reading at 2.8 kg/cm² (40 psi) or less by turning in or out low-pressure valve of manifold gauge. See Figure AC-27.

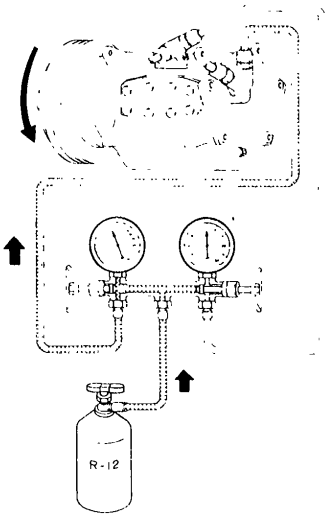

AC254
Fig. AC-27 Charging refrigerant

5. When refrigerant can is empty, fully close both valves of manifold gauge and replace refrigerant can with a new one.
Before opening manifold gauge valve to charge refrigerant from new can, be sure to purge air from inside charging hose.
6. Charge the specified amount of refrigerant into system by weighing charged refrigerant with scale. Overcharging will cause discharge pressure to rise. See Figure AC-28.

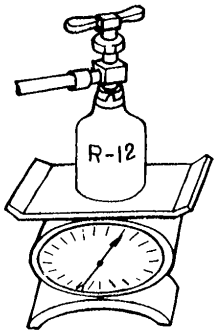

Measure the amount of charged refrigerant with a scale.
Make a note of the amount charged from can.

AC255
Fig. AC-28 Charging refrigerant

Refrigerant capacity

Unit: kg (lb)

Refrigerant	Minimum	Maximum
R-12	0.6 (1.3)	0.9 (2.0)

Note: The presence of bubbles in sight glass of receiver drier is an unsuitable method of checking the amount of refrigerant charged in system. The state of the bubbles in sight glass should only be used for checking whether the amount of charged refrigerant is small or not. The amount of charged refrigerant can be correctly judged by means of discharge pressure. Refer to "Refrigerant Level Check".

Downloaded from www.Manualslib.com manuals search engine

7. After the specified amount of refrigerant has been charged into system, close manifold gauge valves. Then detach charging hoses from service valves of system. Be sure to install valve cap to service valve.

8. Confirm that there are no leaks in system by checking with a leak detector.

Refer to "Checking for Leaks".

Note: Conducting a performance test prior to removing manifold gauge is a good service operation. Refer to "Performance Test".

CHECKING FOR LEAKS

Conduct a leak test whenever leakage of refrigerant is suspected and when conducting service operations which are accompanied by disassembly or loosening of connection fittings.

Refrigerant is a colorless, odorless gas and leakage from system is difficult to detect. Accordingly, the use of a leak detector facilitates check for leaks. Two methods of checking are available; one employs a halide leak detector which burns propane gas or butane gas and the other is an electric type leak detector.

HALIDE LEAK DETECTOR

Since the propane leak detector and butane leak detector are the same in respect to their operation, this section describes the operation of the propane leak detector.

The copper screen is heated by the burning of propane. Refrigerant gas decomposes to color the flame when it contacts the heated screen. The gas to be checked is drawn into the sampling tube and sent out to the burner. A refrigerant leak can clearly be detected by variations in the color of the flame.

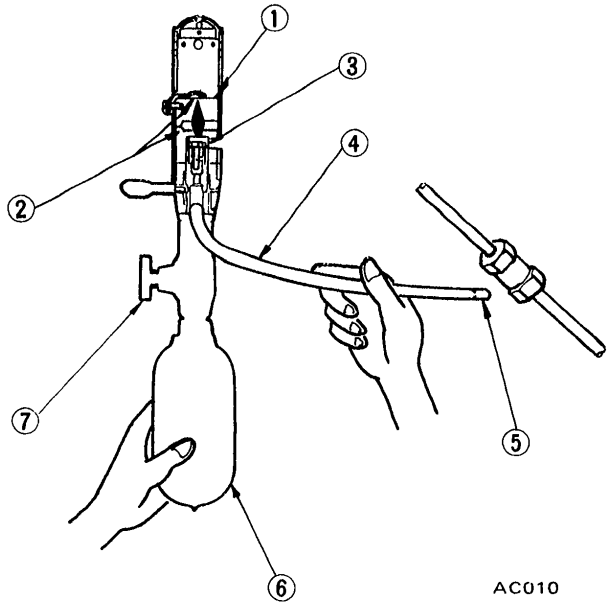

1 Copper reaction plate
2 Flame adjusting lines
3 Burner
4 Sampling tube
5 Strainer
6 Gas bomb
7 Flame adjuster

Fig. AC-29 Checking for leaks

	Propane type	Butane type
NO LEAK	Greenish blue	Pale blue
SMALL LEAK	Yellow	Bright blue
LARGE LEAK	Purple	Vivid green

1. Discharge refrigerant in one or two seconds to ascertain that system has a sufficient pressure needed for leak detection. Charge with 0.4 kg (1 lb) of refrigerant, if necessary.

2. Light leak detector. Adjust the height of the flame between flame adjusting lines at the top and bottom of combustion tube. A reaction plate will immediately become red hot.

3. Place the end of sampling tube near the point of the suspected leak in system.

Notes:

a. **Since refrigerant gas is heavier than air, small leaks can be easily detected by placing sampling tube directly below the check point.**

b. **Suitable ventilation is required. If refrigerant gas is mixed with the surrounding air, leak detector will always indicate a response and detection of the actual leak will be difficult.**

c. **Never hold leak detector at an angle.**

Cautions:

a. **Never inhale the fumes produced by combustion of refrigerant gas since they are toxic.**

b. **Never use halide torch in a place where combustible or explosive gas is present.**

4. The flame will be almost colorless when there is no refrigerant gas being burned. When there is a small refrigerant gas leak, the flame will be green or yellowgreen. When refrigerant gas leakage is large, the flame will be brilliant blue or purple. Since the color of the flame will be yellow when dust is being burned or there is aging scale on copper reaction plate, always keep the strainer of sampling tube and reaction plate clean.

5. Major check points

(1) Compressor

- Compressor shaft seal (rotate the compressor by hand)
- Oil filler plug
- Flexible hose connections
- Rear cover and side cover gaskets.
- Service valve

(2) Condenser

- Condenser pipe fitting
- Condenser inlet and outlet pipe connections

Downloaded from www.Manualslib.com manuals search engine

(3) Piping
- Flared section of high pressure and low pressure flexible hose.
- Pipe connections
- Service valve

(4) Evaporator housing
- Inlet and outlet pipe connections
- Expansion valve

ELECTRIC LEAK DETECTOR

For the operational procedures, refer to the instructions furnished with each electric leak detector.

REFRIGERANT LEVEL CHECK

SIGHT GLASS

Sight glass is provided at the top of receiver drier. One guide for whether there is enough refrigerant in system is given by observing refrigerant flow through sight glass. However, this method is unsuitable for judging the amount of refrigerant. The correct refrigerant level can be judged by measuring the system pressures in accordance with the procedures as described "Performance Test".

1. Start the engine and hold engine speed at 1,500 rpm.
2. Set AIR lever to A/C position.
3. Set blower to maximum speed.
4. Check sight glass after the lapse of about five minutes. Judge according to the following table.

Check item \ Amount of refrigerant	Almost no refrigerant	Insufficient	Suitable	Too much refrigerant
Temperature of high pressure and low pressure pipes.	Almost no difference between high pressure and low pressure side temperature.	High pressure side is warm and low pressure side is fairly cold.	High pressure side is hot and low pressure side is cold.	High pressure side is abnormally hot.
State in sight glass.	Bubbles flow continuously. **Bubbles will disappear and something like mist will flow when refrigerant is nearly gone.** 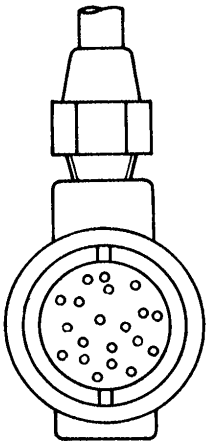 AC256	The bubbles are seen at intervals of 1 - 2 seconds. 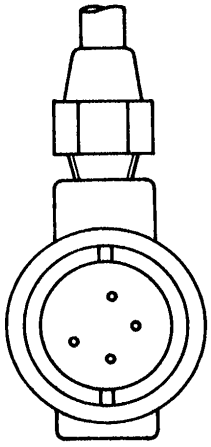 AC257	Almost transparent. Bubbles may appear when engine speed is raised and lowered. **No clear difference exists between these two conditions.** 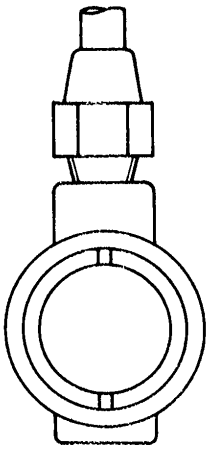 AC258	No bubbles can be seen.
Pressure of system.	High pressure side is abnormally low.	Both pressures on high and low pressure sides are slightly low.	Both pressures on high and low pressure sides are normal.	Both pressures on high and low pressure sides are abnormally high.
Repair.	Stop compressor and conduct an overall check.	Check for gas leakage, repair as required, replenish and charge system.		Discharge refrigerant from service valve of low pressure side.

Downloaded from www.Manualslib.com manuals search engine

Notes:

a. **The bubbles seen through the sight glass are influenced by the ambient temperature. Since the bubbles are hard to show up in comparatively low temperatures below 20°C (68° F), it is possible that a slightly larger amount of refrigerant would be filled, if supplied according to the sight glass. Be sure to recheck the amount when it exceeds 20°C (68°F). In higher temperature the bubbles are easy to show up.**

b. **When the screen in the receiver drier is clogged, the bubbles will appear even if the amount of refrigerant is normal. In this case, the outlet side pipe of the receiver drier becomes considerably cold.**

PERFORMANCE TEST

Check for the amount of refrigerant in the system can be made by measuring pressure on discharge side.

The correct amount of refrigerant is in the system, if pressure on the discharge side is within the specified range. For details, refer to "Performance Test" described later.

Overcharging will show up in higher pressure on discharge side.

COMPRESSOR OIL LEVEL CHECK

The oil used to lubricate compressor circulates into system from the oil sump while compressor is operating. Therefore, to correctly measure compressor oil, the amount of oil flowing to system must be considered. If a considerable amount of leakage of refrigerant gas happens, the leakage of compressor oil is also considered. There will be no compressor oil leakage from a completely sealed system. When system operates under satisfying condition, the compressor oil level check is unnecessary.

When checking the level of compressor oil or when replacing any component part of the system, use the following service procedure. This facilitates to return oil to compressor.

1. Operate compressor at engine idling speed (1,000 rpm or below) with controls set for maximum cooling and high blower speed for 10 to 15 minutes in order to return compressor oil to compressor.
2. Stop the engine and discharge refrigerant of system and then remove compressor from the car.
3. Remove compressor drain plug. Drain compressor oil from compressor oil sump and measure the amount.
4. Compressor oil is satisfactory if the following amount of oil remains in the compressor.

   Residual oil:
   85 to 128 gr (3 to 4 ½ oz)

5. Check the cleanliness of the oil. If the oil contains chips or other foreign material, clean oil sump with new oil.
6. Discard the used oil and fill with the same amount of new oil. Add oil if found less than above amount.

If compressor is inoperative due to defective compressor or heavy loss of refrigerant, remove compressor and repair as necessary. Then pour oil up to correct level and install on engine. After above steps have been completed, recheck oil level; drain oil to correct level if level is excessively high.

PERFORMANCE TEST

The cooling performance of the air conditioner changes considerably with changes in surrounding conditions. Testing must be performed using the correct method. This test is used to judge whether system is operating correctly and can also be used as a guide in checking for problems.

1. Park the car indoors or in the shade.
2. Open all the windows of the car fully. However, close the doors.
3. Open the hood.
4. Connect manifold gauge to high- and low-side service valves of the system. Refer to "Handling Manifold Gauge".
5. Set AIR lever to A/C position.
6. Set TEMP lever to max. cool position.
7. Set blower to its highest speed.
8. Start the engine and hold engine speed at 1,500 rpm.
9. After the air conditioner has been operated for about 10 minutes, measure system pressures at high-pressure (discharge) side and low-pressure (suction) side.
10. Measure the temperature of discharge air at outlet grille.
11. Measure the temperature and humidity of the ambient air at a point 1 m (3.3 ft) front of condenser. However, a dry bulb and wet bulb must not be placed in direct sunlight.
12. Check for any abnormalities by comparing the test results with standard pressure in "Performance Chart".

Notes:

a. **The pressure will change in the following manner with changes in conditions:**
   - **When blower speed is low, discharge pressure will drop.**
   - **When the relative humidity of intake air is low, discharge pressure will drop.**

b. **The temperature will change in the following manner with changes in conditions:**
   When the ambient air temperature is low, the outlet air temperature will become low.

If the test reveals that there is any abnormality in system pressure, isolate the cause and repair by reference to the "Trouble Diagnoses and Corrections".

REFRIGERANT LEAKS

If leaks are noticeable, leaky parts should be repaired. Then system should be filled with refrigerant. **Do not operate compressor with refrigerant level excessively low.**

If this caution is neglected, a burnt compressor will result since heavy loss of refrigerant usually indicates heavy loss of compressor oil.

Downloaded from www.Manualslib.com manuals search engine

If system has been exposed to atmosphere for an extended period of time, receiver drier must be replaced. If leaks are slight and no air is present in system, add refrigerant as necessary.

To detect leaks, refer to relative topics under "Checking for Leaks". Here is how leaks are stopped.

1. Check torque on the connection fitting and, if too loose, tighten to the proper torque. Check for gas leakage with a leak detector.
2. If leakage continues even after the fitting has been retightened, discharge refrigerant from system, disconnect the fittings, and check its seating face for damage. Always replace even if damage is slight.
3. Check compressor oil and add oil if required.
4. Charge refrigerant and recheck for gas leaks. If no leaks are found, evacuate and charge system.

Downloaded from www.Manualslib.com manuals search engine

REMOVAL AND INSTALLATION

CONTENTS

COMPRESSOR AC-27
REMOVAL AC-27
INSTALLATION AC-27
IDLER PULLEY AND COMPRESSOR DRIVE BELT AC-28
ADJUSTMENT OF BELT TENSION AC-28
CONDENSER AC-28
REMOVAL AC-28
INSPECTION AC-28
INSTALLATION AC-28
RECEIVER DRIER AC-29
REMOVAL AND INSTALLATION AC-29
PIPING AC-29
FAST IDLE ACTUATOR AC-30
ADJUSTMENT OF IDLE SPEED AC-30
BLOWER MOTOR AC-30
REMOVAL AND INSTALLATION AC-30
AIR INTAKE DOOR ACTUATOR AC-30
REMOVAL AND INSTALLATION AC-30
BLOWER HOUSING AC-30
REMOVAL AND INSTALLATION AC-30
VACUUM WATER COCK AC-31
REMOVAL AND INSTALLATION AC-31
HEATER CORE AC-31
REMOVAL AND INSTALLATION AC-31
MODE DOOR ACTUATOR AC-31
REMOVAL AND INSTALLATION AC-31
CONTROL ASSEMBLY AC-31
REMOVAL AND INSTALLATION AC-31
DISASSEMBLY AND ASSEMBLY AC-32
ADJUSTMENT OF CONTROL CABLE AC-32
HEATER COCK AC-32
REMOVAL AND INSTALLATION AC-32
THERMOSTAT AC-32
REMOVAL AND INSTALLATION AC-32
EXPANSION VALVE AC-32
REMOVAL AC-32
INSTALLATION AC-33
EVAPORATOR HOUSING AC-33
REMOVAL AC-33
DISASSEMBLY AND ASSEMBLY AC-34
INSPECTION AC-34
INSTALLATION AC-34
HEATER UNIT AC-34
REMOVAL AC-34
INSTALLATION AC-35
VACUUM HOSE DIAGRAM AC-36
WIRING HARNESS DIAGRAM AC-37

COMPRESSOR

REMOVAL

1. Disconnect battery ground cable.
2. Remove air flow meter with air ducts.
3. Remove under cover.
4. Remove F.I.C.D. and move body harness downward at left hoodledge.

Note: This is to secure space for removal of compressor.

5. Loosen tension adjust bolt of idler pulley and remove compressor drive belt.
6. Disconnect compressor clutch wire at connector.
7. Discharge system. Refer to Section of "General Service" for "Discharging System".
8. Remove high and low flexible hoses from compressor.

Notes:

a. **Use wrench to fix joint nut on compressor side, and then loosen flare nut of flexible hose with another wrench.**
b. **Be sure to immediately put plugs in flexible hose opening and in compressor connection.**

9. Jack up front of car, and remove bolts mounting compressor's lower side.
10. Lower car, and remove two bolts mounting compressor's top side. While doing this, hold compressor by hand to prevent it from falling down.
11. Holding compressor with both hands, horizontally move it toward rear of car and lift it out with clutch facing down.
12. In the same manner as described in "Compressor Oil Level Check" of "General Service", check amount and quality of oil in compressor.

Notes:

a. **Do not attempt to operate the compressor on its side or upside down for more than 10 minutes, as the compressor oil will enter the low pressure chambers. If, under that condition, compressor should be operated suddenly, internal damages would result. To expel oil from chambers, hand-crank compressor several times in its installed condition.**
b. **When storing a compressor, be sure to fill it with refrigerant through low pressure service valve and purge air from high pressure side service valve.**

INSTALLATION

Installation of compressor is to be done in reverse sequence of removal, with attention paid to the following points:

1. Oil in compressor to be installed should be equal in amount to what remained in compressor removed. New compressor contains prescribed amount of oil; before its installation, drain the excessive amount of oil.
2. Check tightening torque of bolt holding compressor bracket. Retighten bolt if necessary. See Figure AC-30.
3. Compressor plugs and flexible hose plugs should be kept in place until preparation of piping is completed.
4. Upon installation of compressor, turn compressor by hand a few turns.
5. As to tightening torque on piping connection, refer to "Piping".
6. As to compressor drive belt tension, refer to "Idler Pulley and Com-

Downloaded from www.Manualslib.com manuals search engine

pressor Drive Belt". Make sure that air pump drive belt and cooling fan belt have the specified deflection.

7. Evacuate and recharge system. Refer to "General Service" for "Evacuating and Charging System".

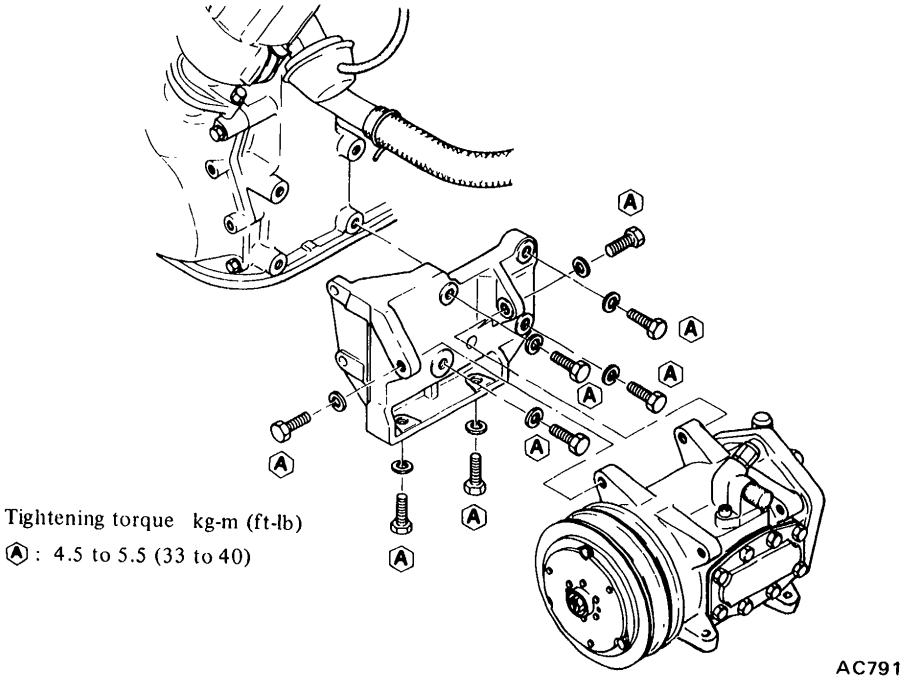

Fig. AC-30 Compressor

8. Conduct leak test and make sure that there is no leak from connection.
9. Check air pump for operation. Make sure that hose piping of air pump is correctly connected.
10. Check engine idle speed.
11. Check "CO" percent at idle speed.

IDLER PULLEY AND COMPRESSOR DRIVE BELT

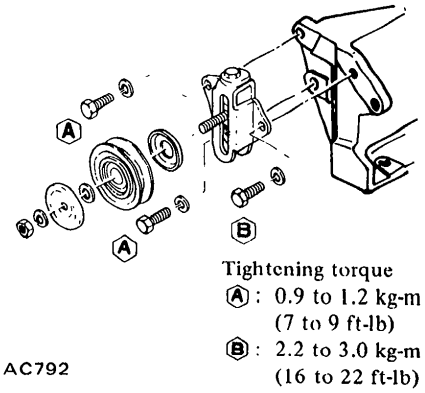

Fig. AC-31 Idler pulley

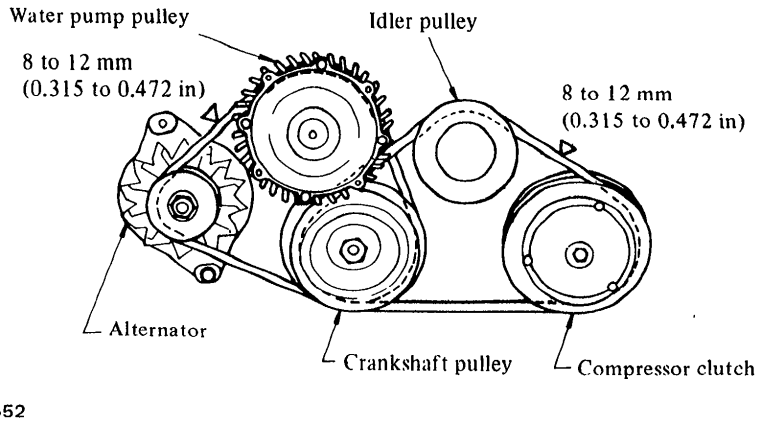

Fig. AC-32 Belt tension

ADJUSTMENT OF BELT TENSION

Normal compressor drive belt deflection is 8 to 12 mm (0.315 to 0.472 in) when moderate thumb pressure is applied midway between pulleys. Move idler pulley up or down by turning adjusting bolt to correct belt deflection.

CONDENSER

REMOVAL

1. Disconnect battery ground cable.
2. Remove engine hood.
3. Discharge system.
4. Disconnect inlet and outlet refrigerant lines from condenser.

Note: Plug up all pipe openings to prevent entrance of dirt and moisture.

5. Remove four mounting bolts, then remove condenser from the car.

Radiator, which is bolted together with condenser, is also removed in this work process. See Figure AC-33.

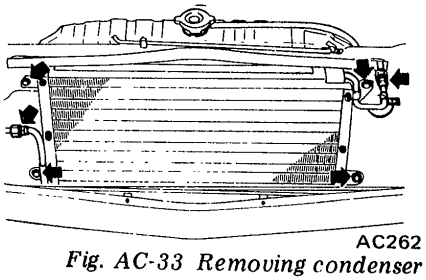

Fig. AC-33 Removing condenser

INSPECTION

Inspect joints of inlet and outlet pipes for cracks and scratches. Upon finding any problem which may cause gas to leak, repair or replace condenser.

Condenser fins or air passages clogged with dirt, insects or leaves will reduce cooling efficiency of condenser. In such a case, clean fins or air passages with compressed air.

Note: Condenser of the system completed should not be cleaned with steam for fear that system should burst by excessively high pressure created therein. Be sure to use cold water or compressed air.

INSTALLATION

Installation of condenser is to be

Downloaded from www.Manualslib.com manuals search engine

done in reverse sequence of removal, with notice paid to the following points:

1. When new condenser is used as replacement, be sure to add 28 g (1 oz) of new oil thereto.
2. Keep piping plug in place until immediately before piping work is started.
3. As to tightening torque on piping connection, refer to "Piping".
4. As to evacuating and charging system, refer to "General Service".
5. Conduct leak test and make sure that there is no leak from connection.

RECEIVER DRIER

REMOVAL AND INSTALLATION

1. Disconnect battery ground cable.
2. Discharge system. Refer to Section "General Service for Discharging System".
3. Disconnect pressure switch wires at connector.
4. Disconnect refrigerant lines from receiver drier.

Note: Plug all pipe openings to prevent entrance of dirt and moisture.

5. Remove receiver drier mounting screws and then remove receiver drier.
6. When replacing receiver drier with a new one, charge system with 28 g (1 oz) of compressor oil.
7. Installation is to be done in reverse order of removal. With plugs taken off immediately before piping work is started, connect piping and receiver drier. As to tightening torque on piping, refer to "Piping".
8. As to evacuating and charging system, refer to "General Service".
9. Conduct leak test, and make sure that there is no leak from connection.

PIPING

Refrigerant system piping is as shown in Figure AC-35.

In replacing flexible hose and tube, be attentive to following points:

1. Before starting work, be sure to discharge system.
2. In disconnecting tubes, be sure to use two wrenches on both tubes.
3. Upon disconnecting tubes, plug all pipe openings immediately to prevent entrance of dirt and moisture.
4. Compressed air must never be used to clean dirty piping. Clean with refrigerant gas.
5. In connecting tubes, be sure to apply compressor oil to seating surface and then tighten tubes by prescribed tightening torque. See Figure AC-34.

Be sure to use two wrenches when tightening a flare nut of tube.

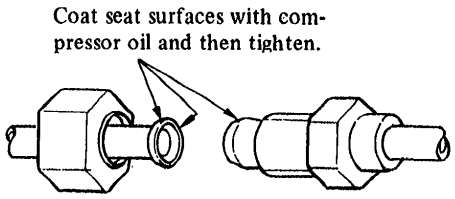

AC263

Fig. AC-34 Pipe connection

6. Make sure of proper clamping. Start engine and raise engine speed to inspect if there is vibration or unusual noise.
7. Conduct leak test and make sure that there is no leak from connection.
8. As to evacuating and charging system, refer to "General Service" for "Evacuating and Charging System".

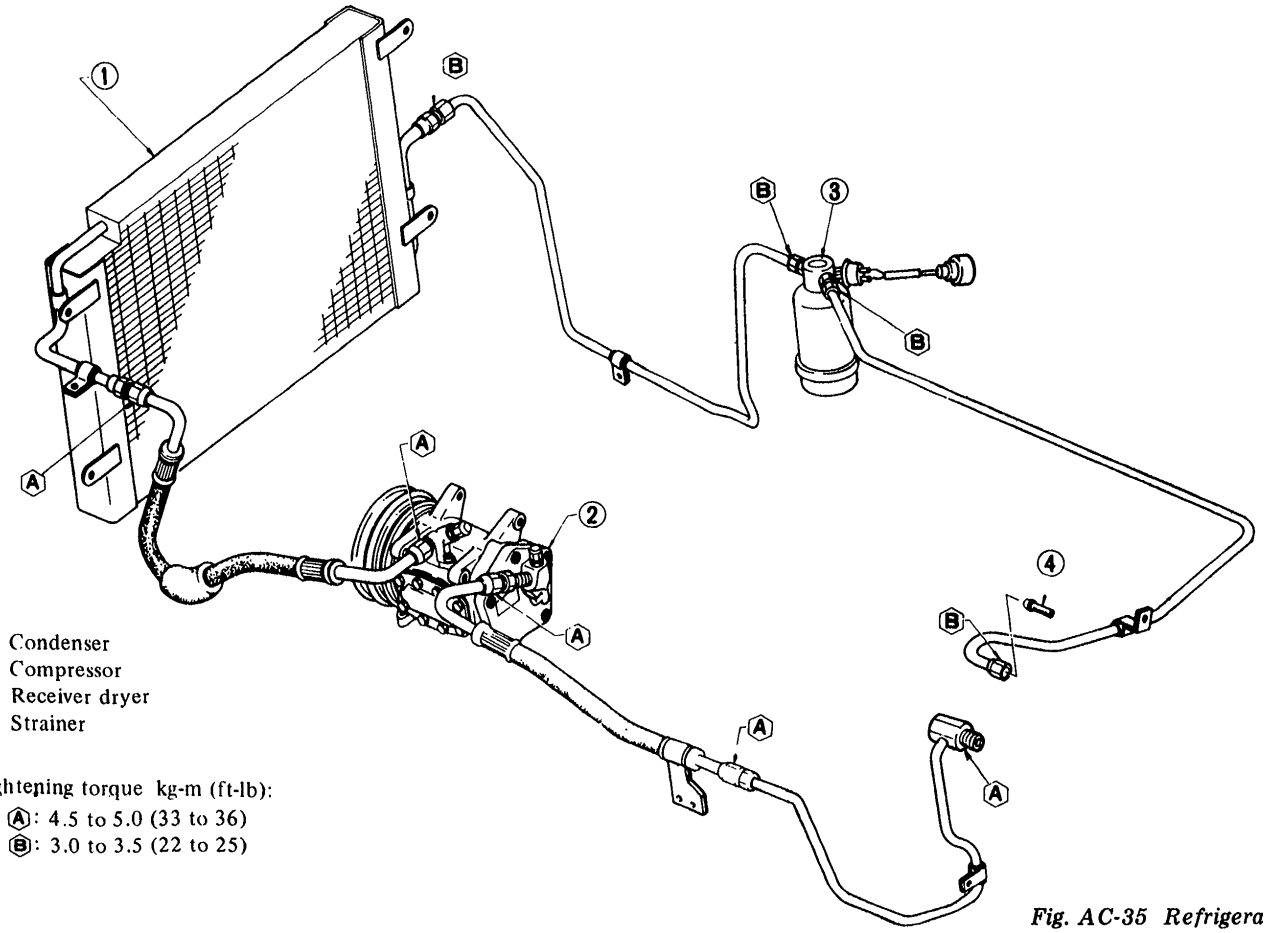

1 Condenser
2 Compressor
3 Receiver dryer
4 Strainer

Tightening torque kg-m (ft-lb):
Ⓐ: 4.5 to 5.0 (33 to 36)
Ⓑ: 3.0 to 3.5 (22 to 25)

AC793

Fig. AC-35 Refrigeration line

Downloaded from www.Manualslib.com manuals search engine

FAST IDLE ACTUATOR

ADJUSTMENT OF IDLE SPEED

Engine model	Transmission	When A/C is OFF	When F.I.C.D. is actuated
L28	Manual	800 rpm	800 rpm
	Automatic	700 rpm at "D" range	800 rpm at "N" range

The fast idle control device is used on car equipped with air conditioner to raise the idle speed automatically.

Use the following procedures when adjusting.

1. Run the engine until it reaches operating temperature.
2. With air conditioner in OFF (when compressor is not operated), make sure that engine is at correct idle speed.
3. With air conditioner in ON (when F.I.C.D. is actuated), set the engine speed to 800 rpm using the following procedures as a guide.

(1) Adjust the F.I.C.D. lever stroke by means of length of lever until engine speed is 800 rpm.

On cars equipped with automatic transmission, make this adjustment with the shift control lever in the "N" position.

(2) Depress and release the accelerator pedal several times, and make sure that the engine speed reduces to 800 rpm as the pedal is released.

If correct adjustment is not made, repeat steps (1) and (2) above until the engine speed is 800 rpm at idling.

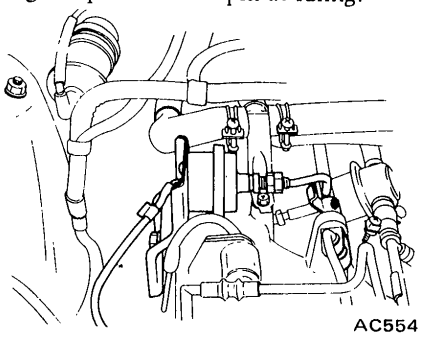

Fig. AC-36 Fast idle actuator

BLOWER MOTOR

REMOVAL AND INSTALLATION

1. Disconnect battery ground cable.
2. Remove glove box.
3. Remove defroster duct on the side of assistant's seat.
4. Remove wiring connector of blower motor.
5. Remove three screws mounting blower motor, and take out motor from blower housing.

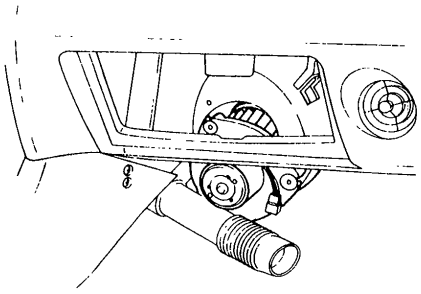

Fig. AC-37 Removing blower motor

Notes:

a. **Between blower motor and blower housing are three spacers inserted. Be careful not to lose them.**

b. **In removing blower motor, remember its direction carefully so that it is reinstalled properly.**

6. Installation is to be done in reverse sequence of removal.

AIR INTAKE DOOR ACTUATOR

REMOVAL AND INSTALLATION

1. Disconnect battery ground cable.
2. Remove snap ring from top of actuator lever.
3. Remove two mounting screws and actuator from air intake housing.
4. Disconnect vacuum hose from actuator, and remove actuator.
5. Installation is to be done in reverse order of removal.

Note: Make sure that air intake door shuts off the outside air completely.

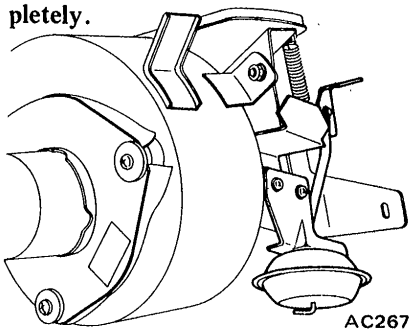

Fig. AC-38 Air intake door actuator

BLOWER HOUSING

REMOVAL AND INSTALLATION

1. Disconnect battery ground cable.
2. Disconnect vacuum hose from air intake door actuator.
3. Remove defroster duct located on the side of assistant's seat.
4. Remove two wiring connectors (one for blower motor, and the other for resistor).
5. Remove three bolts mounting housing assembly, one installed on upper side and two on lower side.
6. Remove blower housing with air intake housing.

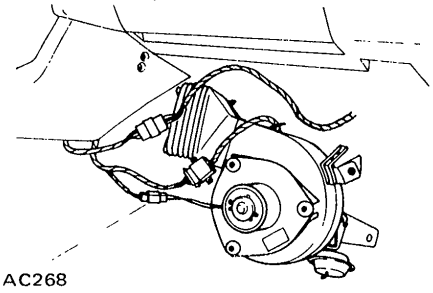

Fig. AC-39 Removing blower housing

7. Installation is to be done in reverse sequence of removal.

Downloaded from www.Manualslib.com manuals search engine

VACUUM WATER COCK

REMOVAL AND INSTALLATION

1. Disconnect battery ground cable.
2. Drain engine coolant.
3. From engine compartment, remove inlet and outlet heater hoses by loosening clamps.
4. Remove blower housing as described under "Blower Housing".
5. Move "TEMP" control lever fully to "HOT" position.
6. Remove two hoses from heater cock by loosening clamps.
7. Remove two screws retaining heater cock to heater cock bracket, and remove heater cock.

Note: Make sure that capillary tube is neither twisted nor excessively bent.

8. Remove, at vacuum water cock, heater hose between heater core outlet and vacuum water cock.
9. Remove two screws from vacuum water cock and two screws from heater cock bracket.
10. Remove vacuum hose, and remove vacuum water cock and heater cock bracket as an assembly. Loosen screw securing vacuum water cock to heater cock bracket, and separate them.

Remove heater hose from vacuum water cock.

11. Installation is in reverse order of removal.

HEATER CORE

REMOVAL AND INSTALLATION

1. Disconnect battery ground cable.
2. Drain engine coolant.
3. From engine compartment, remove inlet and outlet heater hoses by loosening clamps.
4. Remove blower housing as described under "Blower Housing".
5. Remove vacuum water cock as described under "Vacuum Water Cock".
6. Disengage control cable from heater door and remove heater door rod from heater door. See Figure AC-40.

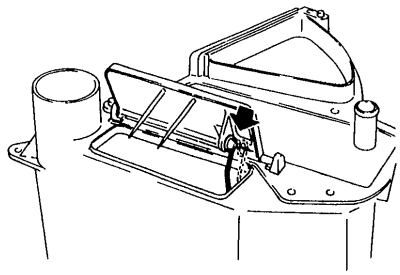

BE020B

Fig. AC-40 Removing heater door rod

7. Remove two screws from heater core side cover, and pull heater core out.

Note: When removing or installing core, keep heater door open; otherwise core will be damaged.

8. Unfasten clamps and remove heater hoses from heater core. Remove heater core side cover from core.
9. Installation is in reverse order of removal.

MODE DOOR ACTUATOR

REMOVAL AND INSTALLATION

1. Disconnect battery ground cable.
2. Remove two vacuum hoses from mode door actuator.
3. Remove snap ring from tip of actuator lever.
4. Remove two actuator mounting screws, and take out actuator.
5. Installation is in reverse sequence of removal.

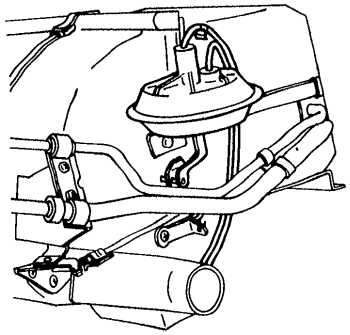

AC272

Fig. AC-41 Mode door actuator

CONTROL ASSEMBLY

REMOVAL AND INSTALLATION

1. Disconnect battery ground cable.
2. Remove console box.
3. Remove four screws retaining finisher, and pull out finisher forward. Disconnect wires at three (California models) or two (Non-California models) connectors, then remove finisher from instrument panel. See Figure AC-42.

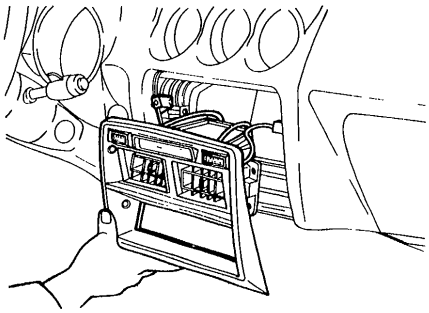

AC273

Fig. AC-42 Removing finisher

4. Remove control cables from heater door and water cock.
5. Remove thermostat control rod from thermostat.
6. Remove four vacuum hoses from vacuum selector valve.
7. Remove three wire connectors of control assembly. (These connectors are for control panel illumination lamp, micro switch and fan speed switch.)
8. Remove two screws that retain control assembly to instrument panel reinforcement.
9. Remove four screws securing instrument panel reinforcement, and remove reinforcement.
10. Remove control assembly by removing two screws (upper side), "E"-ring (lower side). See Figure AC-43.

Downloaded from www.Manualslib.com manuals search engine

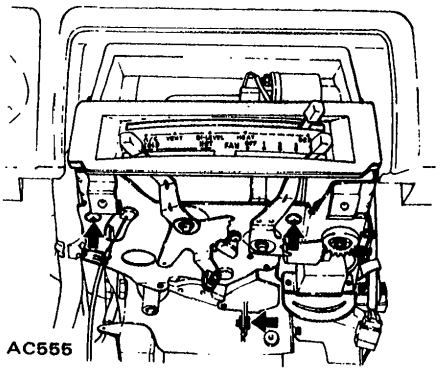

Fig. AC-43 Removing control assembly

11. In the reverse sequence of removal, reinstall control assembly.

As to adjustment of cable, refer to "Adjustment of Control Cable".

- As to connection of wiring harness, refer to "Wiring Harness Diagram".
- As to connection of vacuum hose, refer to "Vacuum Hose Diagram".

DISASSEMBLY AND ASSEMBLY

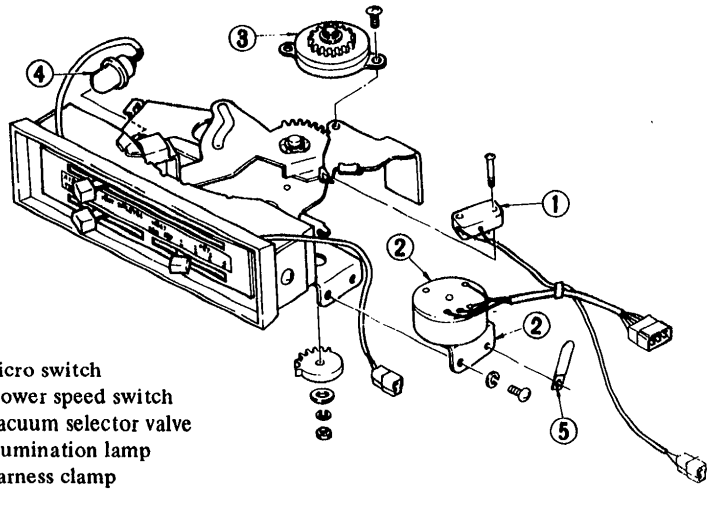

1 Micro switch
2 Blower speed switch
3 Vacuum selector valve
4 Illumination lamp
5 Harness clamp

Fig. AC-44 Exploded view of control assembly

ADJUSTMENT OF CONTROL CABLE

Heater door

Set AIR lever in DEF position. Hook control cable on heater door and fix cable with clamp so as to close heater door perfectly.

Water cock

Set TEMP lever in COLD position. Hook control cable on water cock and fix cable with clamp so as to get water cock closed completely.

Thermostat

Set TEMP lever in COLD position. Install thermostat control rod so that thermostat is in full cold position.

HEATER COCK

REMOVAL AND INSTALLATION

1. Disconnect battery ground cable.
2. Drain engine coolant.
3. Remove blower housing as described under "Blower Housing".
4. Remove control assembly as described under "Control Assembly".
5. Remove four screws securing heater bracket to heater unit, and remove bracket.
6. Remove two screws securing capillary tube bracket to heater unit, and remove capillary tube.

Notes:

a. **Make sure that capillary tube is neither twisted nor excessively bent.**

b. **When bending capillary tube, ensure that heater cock is fully open so as to prevent change in heater cock operation.**

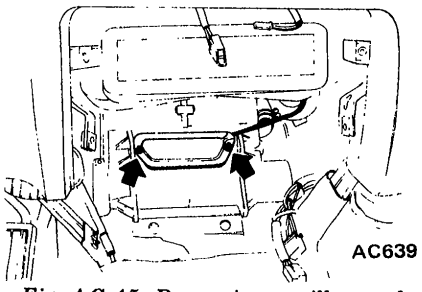

Fig. AC-45 Removing capillary tube

7. Remove heater hoses from heater cock by loosening clamps.
8. Remove two screws securing heater cock. Heater cock can then be taken out.
9. Installation is in reverse order of removal.

THERMOSTAT

REMOVAL AND INSTALLATION

1. Disconnect battery ground cable.
2. Remove console box.
3. Remove finisher. See Figure AC-42.
4. Remove finisher brackets and 3-way air duct.
5. Remove control rod of thermostat.
6. From evaporator housing, remove thermostat together with bracket by taking off two mounting screws.
7. Remove thermostat wiring at connector.
8. Pull out capillary tube from evaporator core and then take out thermostat.

Note: Capillary tube should not be bent too sharp.

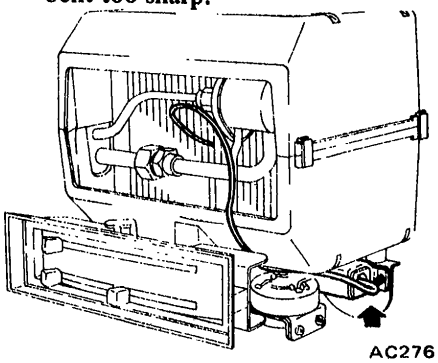

Fig. AC-46 Thermostat

Downloaded from www.Manualslib.com manuals search engine

9. Installation is in reverse order of removal.

Capillary tube should be inserted by prescribed length in original position. Length to be inserted is 50 to 70 mm (1.97 to 2.76 in).

EXPANSION VALVE

REMOVAL

1. Disconnect battery ground cable.
2. Discharge system.
3. Remove finisher. See Figure AC-42.
4. Remove finisher brackets and 3-way air duct.
5. Remove tube from expansion valve by removing flare nut.
6. Remove two mounting nuts, and pull out valve from expansion valve case. See Figure AC-47.

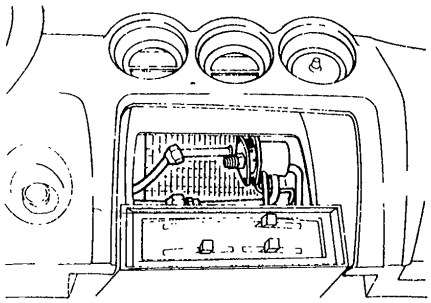

AC277

Fig. AC-47 Removing expansion valve

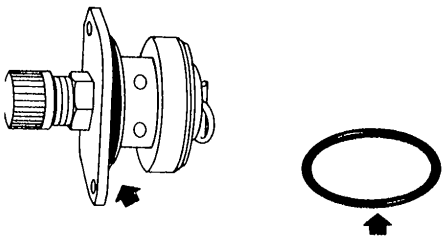

AC278

Fig. AC-48 O-ring

INSTALLATION

1. Replace two O-rings with new ones.
2. Apply adequate compressor oil to new O-rings, and install them on expansion valve.
3. Fit expansion valve to case, and install bolts and nuts thereon.

Note: In inserting valve into case, be sure to insert it parallelly to case without turning it. Never twist valve in the case, otherwise O-ring will be caused to twist.

4. Tighten two mounting nuts horizontally.
5. Connect tube to expansion valve.
6. Work that follows is to be done in reverse order of removal.
7. Lastly, evacuate and recharge system. As to evacuating and charging system, refer to "Evacuating and Charging System".
8. Conduct leak test and ensure that there is no leak from connection.

EVAPORATOR HOUSING

REMOVAL

1. Disconnect battery ground cable.
2. Discharge system.
3. Remove console box.
4. Remove finisher. See Figure AC-42.
5. Remove two retaining screws of 3-way air duct.
6. Remove finisher brackets and instrument panel reinforcement. See Figure AC-49.

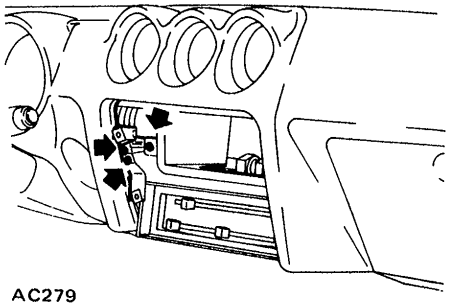

AC279

Fig. AC-49 Removing finisher brackets

7. From 3-way air duct, remove air ducts, then pull out 3-way air duct.
8. Disconnect both inlet and outlet tubes of evaporator.

Note: Upon disconnection of tubes, put plugs in their openings to keep dust and moisture out.

9. Remove retaining screw, grommet cover and grommet from tubes of evaporator.
10. Remove defroster ducts.
11. Remove instrument panel center stays. See Figure AC-50.

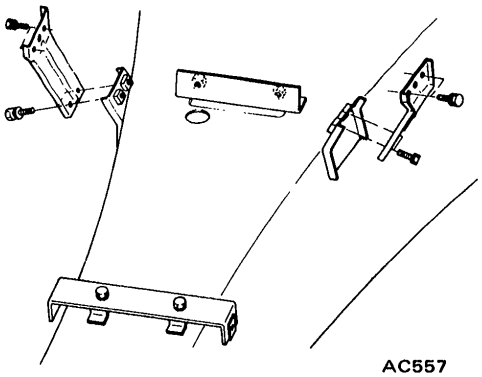

AC557

Fig. AC-50 Removing instrument panel center stays

12. Remove drain hose.
13. Remove brackets, installed on heater unit, of evaporator inlet and outlet tubes by removing two attaching screws.
14. Remove control cables from heater door and heater cock.
15. Remove four vacuum hoses from vacuum selector valve.
16. Remove four wiring connectors (for control panel illumination lamp, micro switch, fan speed switch and thermostat respectively).
17. Remove two attaching bolts installed on lower side of evaporator housing, and let evaporator housing fall down. See Figure AC-51.
18. Pull out evaporator housing when it has come off bracket installed on heater unit.

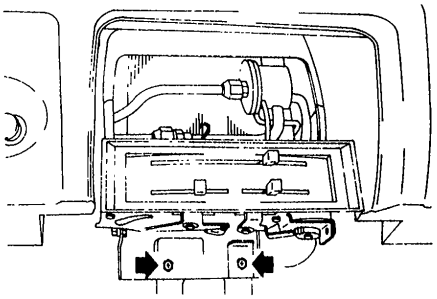

AC281

Fig. AC-51 Removing evaporator housing

19. Separate control assembly from evaporator housing.

Downloaded from www.Manualslib.com manuals search engine

DISASSEMBLY AND ASSEMBLY

1. Remove four fixing clips of upper and lower cases.
2. Pull up upper case and separate it from lower case.
3. Cut off sealing packing with knife at the conjunction of cases.
4. Pull out thermostat capillary tube from evaporator core.
5. Pull out evaporator core from lower case.

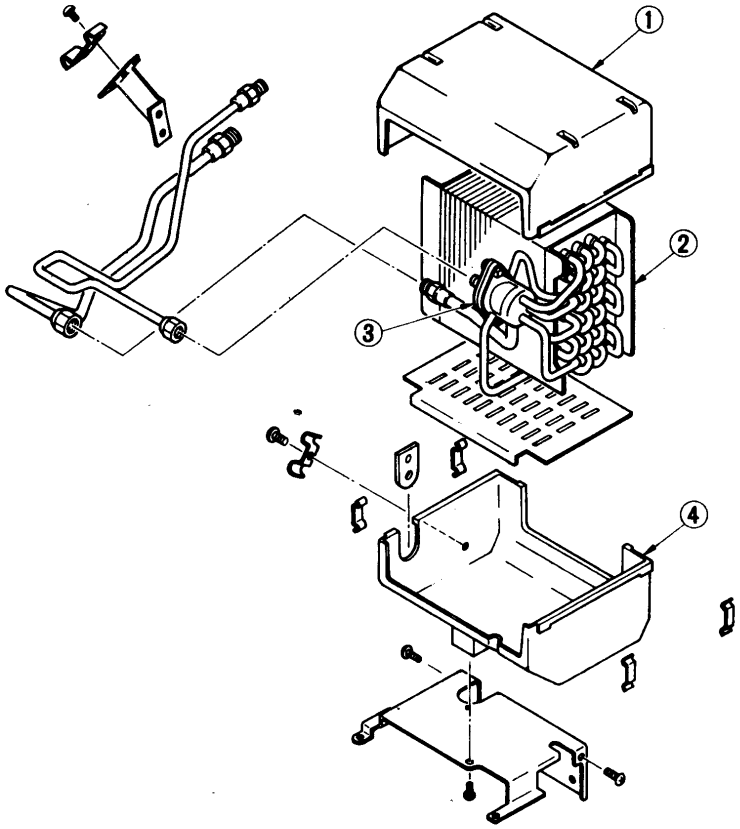

AC282

1 Upper case
2 Evaporator core
3 Expansion valve
4 Lower case

Fig. AC-52 Exploded view of evaporator housing

INSPECTION

In case evaporator core or expansion valve have gas leaking, repair or replace it with a new one as necessary.

Dirt and nicotine accumulation on evaporator housing will go bad and smell. This means that you have to remove them from time to time to assure healthful fresh air inside car.

INSTALLATION

Installation should be done in reverse order of removal, with attention paid to following points:

1. When replacing evaporator with a new one, add 28 g (1 oz) of new compressor oil to new evaporator.
2. As to adjustment of cable, refer to "Adjustment of Control Cable" in "Control Assembly".
3. As to wiring harness connection, refer to "Wiring Harness Diagram".
4. As to vacuum hose connection, refer to "Vacuum Hose Diagram".
5. As to evacuating and charging system, refer to section concerned in "General Service".
6. Conduct leak test and ensure that there is no gas leak from connection.

HEATER UNIT

REMOVAL

1. Disconnect battery ground cable.
2. Drain engine coolant.
3. Discharge system.
4. Remove hose clamp and disconnect heater hose from inlet and outlet tubes of heater unit.
5. Remove screw, grommet cover and grommet from tubes of heater unit.
6. Disconnect evaporator's inlet and outlet tubes.
7. Remove retaining screw, grommet cover, and grommet from tubes of evaporator.
8. Remove console box.
9. Remove finisher. See Figure AC-42.
10. Remove instrument panel reinforcement and finisher brackets.
11. Remove 3-way air duct. See Figure AC-49.
12. Remove glove box.
13. Remove blower housing as described in "Blower Housing".
14. Remove evaporator housing as described in "Evaporator Housing".
15. In engine compartment, remove two mounting nuts of heater unit.
16. In passenger compartment, remove heater unit mounting bolts (two each on upper and lower sides). See Figure AC-53.
17. Remove brackets on upper side of heater unit.

Slide heater unit out slightly, and turn it until heater cock faces toward engine. Heater unit will then be removed from instrument panel.

Downloaded from www.Manualslib.com manuals search engine

INSTALLATION

1. Slightly insert heater unit into opening in instrument panel with heater cock facing toward engine, and turn it 90° until piping holes align properly. Be sure to remove upper brackets when inserting heater unit.
2. Tilting heater unit, fix upper bracket on side of driver's seat, and then that on side of assistant's seat.
3. Insert two vacuum hoses in mode door actuator.
4. Insert heater unit mounting bolts in dash panel, and temporarily put nuts on them from side of engine compartment.
5. On side of passenger compartment temporarily tighten two upper attaching bolts.
6. Tighten two lower attaching bolts. Then tighten up other bolts and nuts which have been temporarily installed.
7. Install evaporator housing with control assembly.
8. Install blower housing.
9. Remaining work is to be done in reverse sequence of removal.
10. As to adjustment of cable, refer to "Adjustment of Control Cable" in "Control Assembly".
11. As to wiring harness connection, refer to "Wiring Harness Diagram".
12. As to vacuum hose connection, refer to "Vacuum Hose Diagram".
13. As to evacuating and charging system, refer to section concerned in "General Service".
14. Conduct leak test and insure that there is no gas leak from connection.

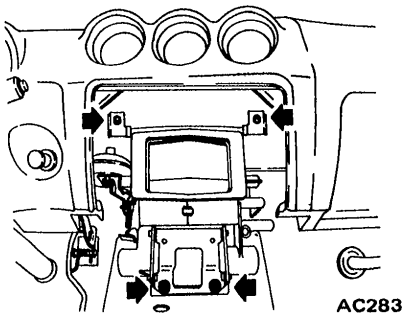

Fig. AC-53 Removing heater unit

Downloaded from www.Manualslib.com manuals search engine

VACUUM HOSE DIAGRAM

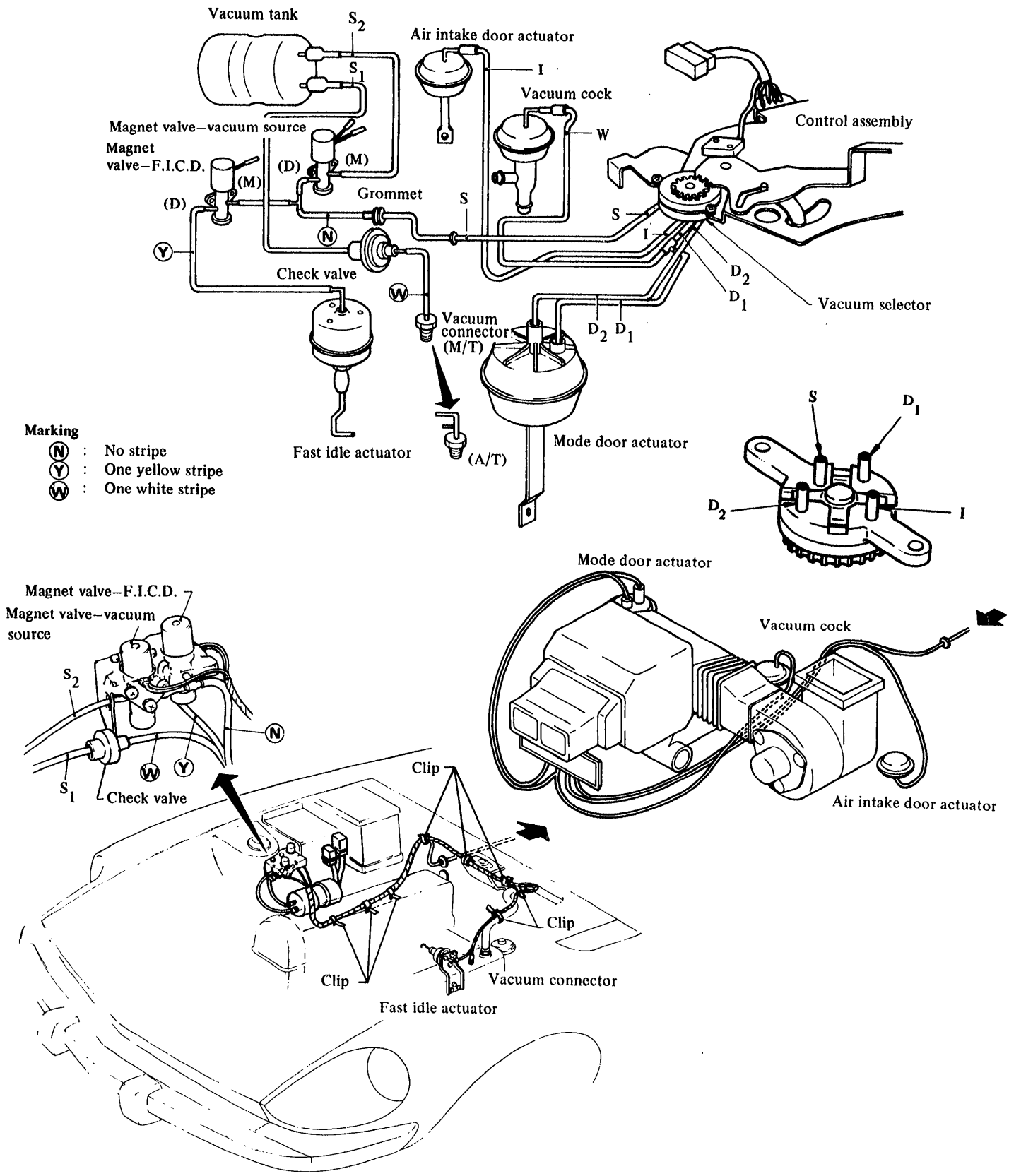

AC794

Fig. AC-54 Vacuum hose diagram

Downloaded from www.Manualslib.com manuals search engine

WIRING HARNESS DIAGRAM

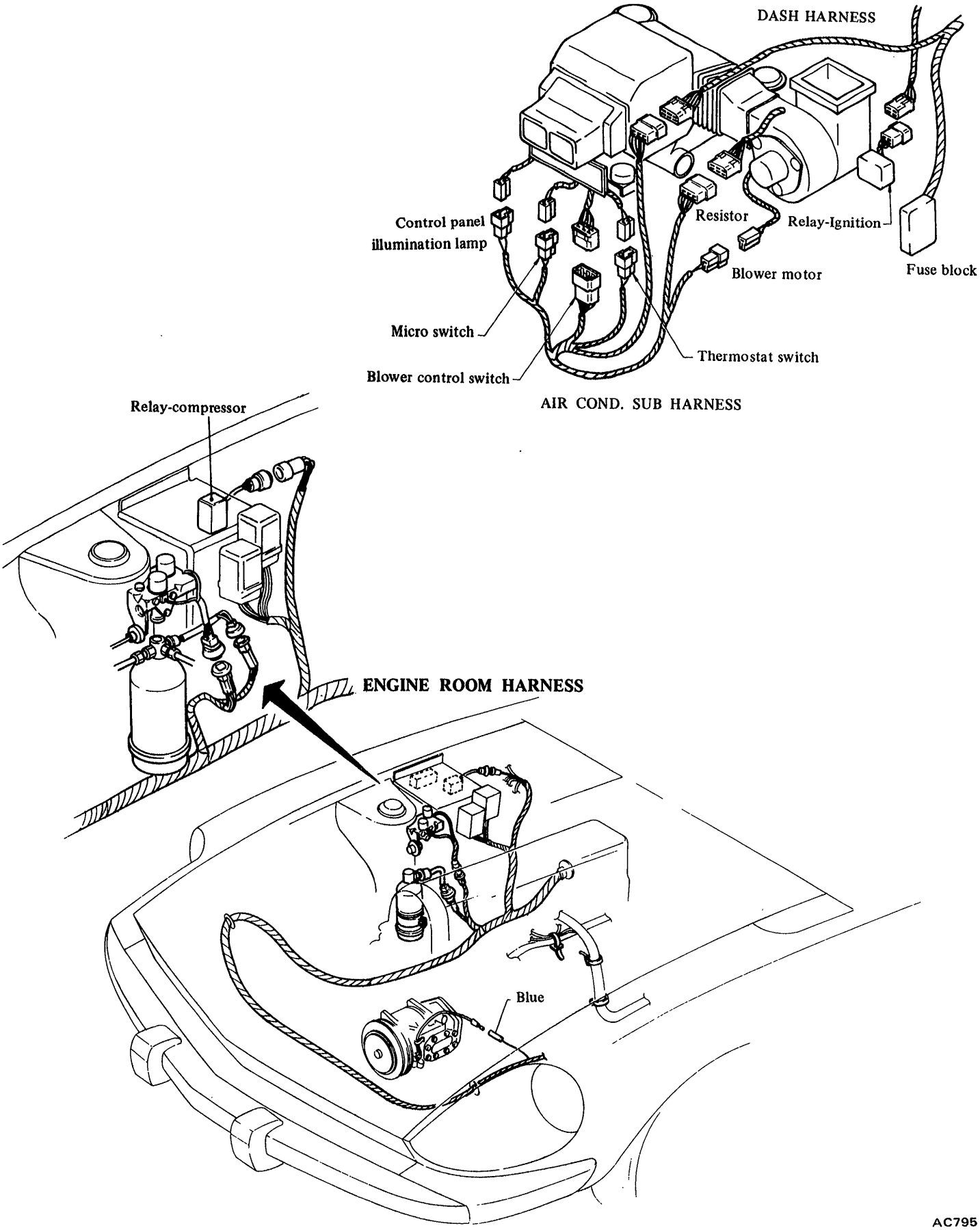

Fig. AC-55 Wiring harness diagram

Downloaded from www.Manualslib.com manuals search engine

CIRCUIT DIAGRAM FOR AIR CONDITIONER

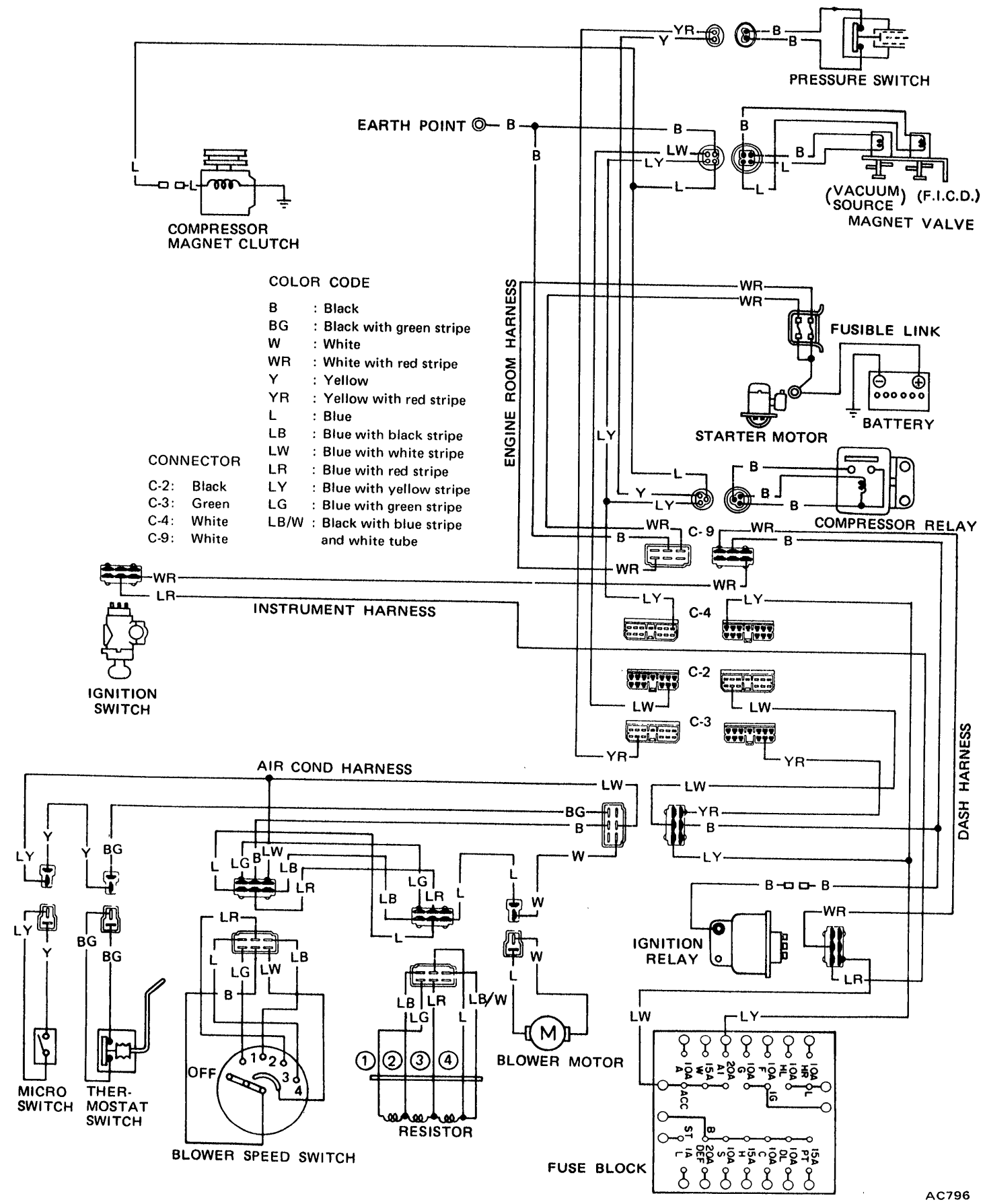

Fig. AC-56 Circuit diagram for air conditioner

Downloaded from www.Manualslib.com manuals search engine

CIRCUIT DIAGRAM FOR ILLUMINATION LAMP

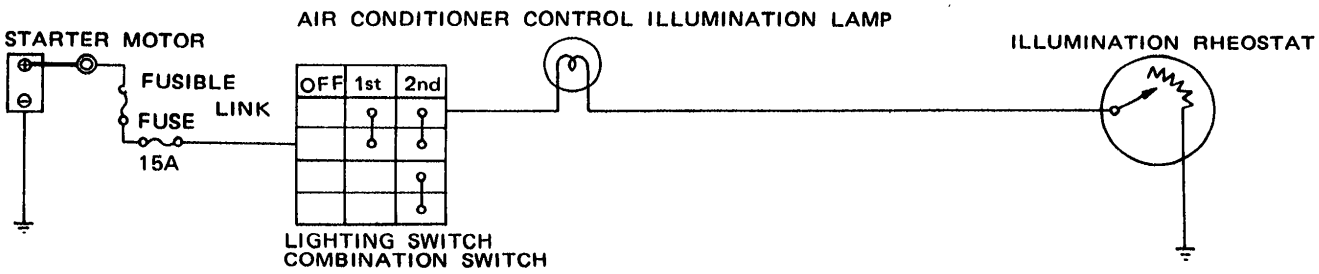

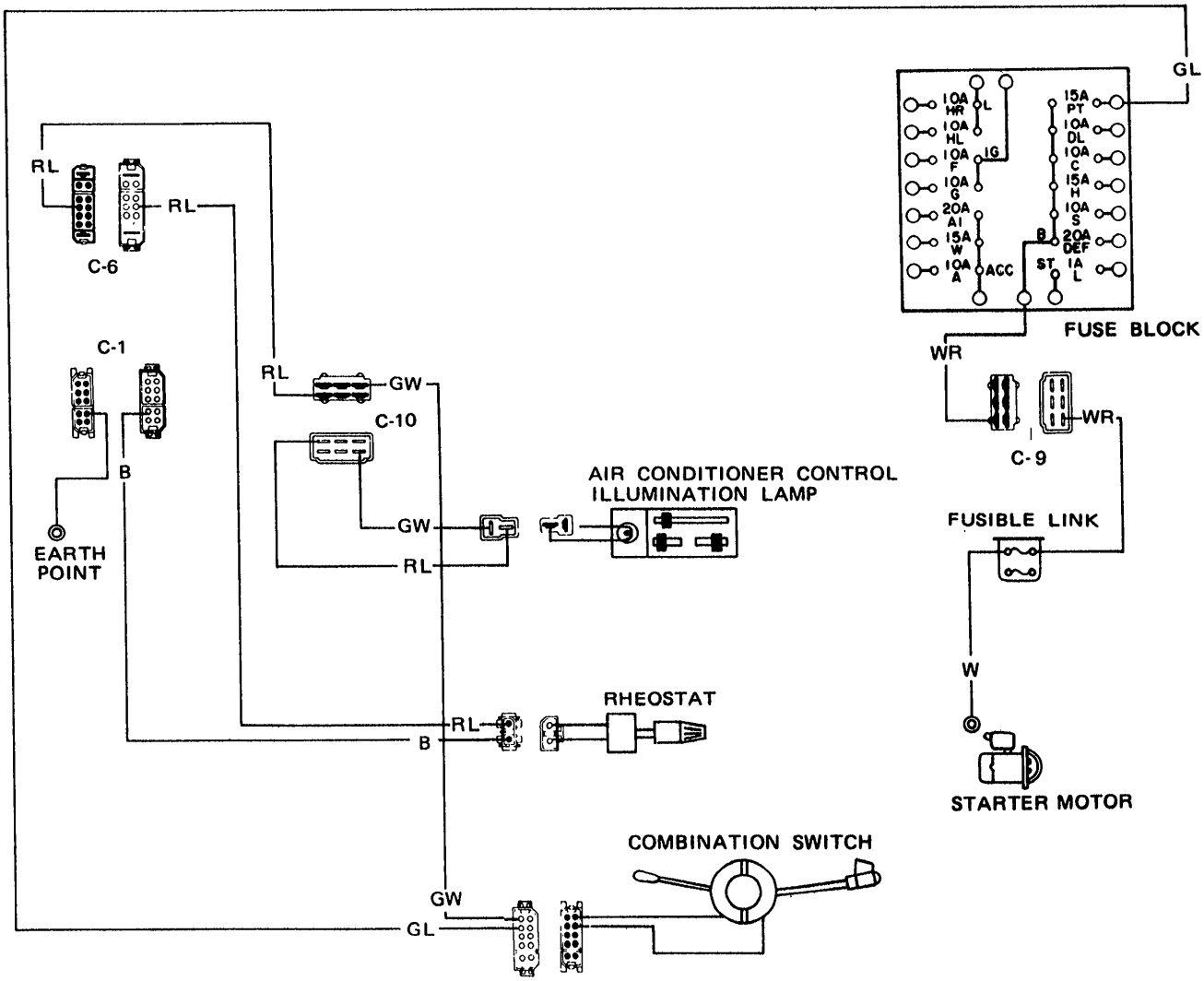

CONNECTOR	
C- 1:	Blue
C- 6:	Black
C- 9:	White
C-10:	White

COLOR CODE

B	:	Black
W	:	White
WR	:	White with red stripe
RL	:	Red with blue stripe
GW	:	Green with white stripe
GL	:	Green with blue stripe

AC797

Fig. AC-57 Circuit diagram for illumination lamp

Downloaded from www.Manualslib.com manuals search engine

TROUBLE DIAGNOSES AND CORRECTIONS

AIR CONDITIONER DIAGNOSES

- **Noisy**
  - **Compressor OFF**
    - Blower makes noise. Repair or replace blower.
      - Bearings of compressor clutch or idler pulley make noise. Repair.
  - **Compressor ON**
    - Compressor itself makes noise. Repair or replace compressor.
      - Belt is loose. Adjust belt.
    - When engine rpm is changed, there are resonant sounds. Retighten compressor bracket bolts. Piping is resonating. Add cramp.
- **Insufficient cooling**
  - **Bubbles in sight glass**
    - Check refrigeration line for gas leaks, and repair leaks if any. Charge refrigerant to correct level. In case of too many leaks, stop compressor, discharge the system, evacuate and recharge the system. As necessary, replace receiver drier.

      Air in system may cause bubbles in sight glass.
  - **No bubbles in sight glass**
    - With manifold gauge, check system pressures. Measure temperature of discharge air. Refer to "Performance Test".

Temperature of outside air °F	70	80	90	100
Suction pressure psi	20 to 28	23 to 33	28 to 38	37 to 48
Head pressure psi	138 to 168	152 to 185	175 to 209	201 to 235
Temperature difference (Outside air - discharge air) °F	18 to 24	19 to 26	23 to 30	27 to 35

- Engine speed: 1,500 rpm
- FAN lever: 4
- AIR lever: A/C
- TEMP lever: Max. cold

    - **System pressure and temperature of discharge air are abnormal. Refer to "Performance Test Diagnoses" for detail.**
      - **Suction pressure is low.**
        - Strainer in pipe line is restricted. Replace strainer.

          Pipe at receiver drier outlet has low temperature. Receiver drier is restricted. Replace receiver drier.
        - Fin and tube of evaporator have some dents. Replace or repair evaporator.
        - Expansion valve is close excessively, or gas leakage from thermo bulb. Replace expansion valve.
      - **Suction pressure is high.**
        - Expansion valve is open excessively, or expansion O-ring is damaged. Replace expansion valve.
      - **Head pressure is high.**
        - Overcharge of refrigerant. Discharge some of refrigerant to correct level.

          Air is mixed in. Discharge system, and replace drier. Evacuate and recharge system.

          Condenser's fin is dented or clogged with dust. Clean exterior surface with water.
      - **Suction pressure is high, while head is low.**
        - Valve or gasket of compressor is damaged. Repair or replace compressor.
    - **Temperature of discharge air is abnormal, but system pressure is normal.**
      - Check air flow system. Refer to "Air Conditioner Operation Chart".
      - Check grommets on car's dash panel for air leaks; check other seals of car.
- **Blower does not rotate.**
  - Refer to "Blower Motor Diagnoses".
- **Compressor does not run.**
  - Refer to "Compressor Diagnoses".

Downloaded from www.Manualslib.com manuals search engine

PERFORMANCE TEST DIAGNOSES

Of various conditions caused to the air conditioning system, the characteristics revealed on manifold gauge reading are shown in the following.

As to the method of a performance test, refer to the item of "Performance Test".

Each shaded area on the following tables indicates a reading of the normal system when the temperature of outside air is 32.5°C (90°F).

Condition		Probable cause	Corrective action
INSUFFICIENT REFRIGERANT CHARGE			
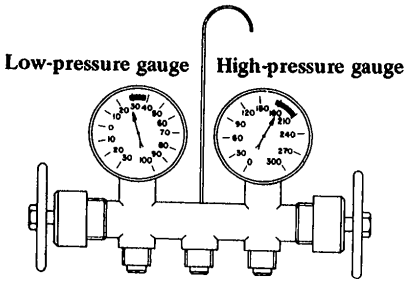 AC287	Insufficient cooling. Bubbles appear in sight glass.	Refrigerant is small, or leaking a little.	1. Leak test. 2. Repair leak. 3. Charge system. **Note: Evacuate, as necessary, and recharge system.**
ALMOST NO REFRIGERANT			**Stop compressor immediately.**
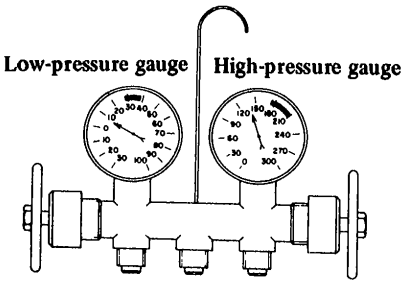 AC288	No cooling action. In sight glass appear a lot of bubbles or something like mist.	Serious refrigerant leak.	1. Leak test. 2. Discharge system. 3. Repair leak(s). 4. Replace receiver drier if necessary. 5. Check oil level. 6. Evacuate and recharge system.
FAULTY EXPANSION VALVE			
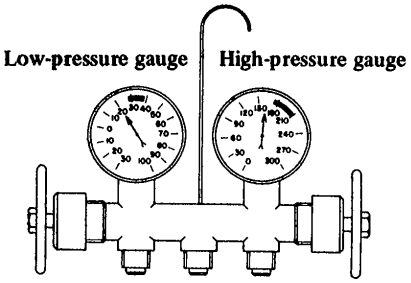 AC289	Slight cooling. Sweating or frosted expansion valve inlet.	Expansion valve restricts refrigerant flow. • Expansion valve is clogged. • Expansion valve is inoperative. Valve stuck closed. Thermal bulb has lost charge.	If valve inlet reveals sweat or frost: 1. Discharge system. 2. Remove valve and clean it. Replace it if necessary. 3. Evacuate system. 4. Charge system. If valve does not operate: 1. Discharge system. 2. Replace valve. 3. Evacuate and charge system.

Downloaded from www.Manualslib.com manuals search engine

Condition		Probable cause	Corrective action
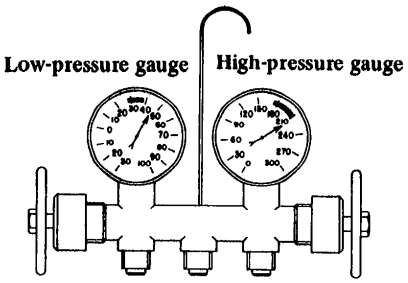 AC290	Insufficient cooling. Sweated suction line.	Expansion valve allows too much refrigerant through evaporator.	Check valve for operation. If suction side does not show a pressure decrease, replace valve.
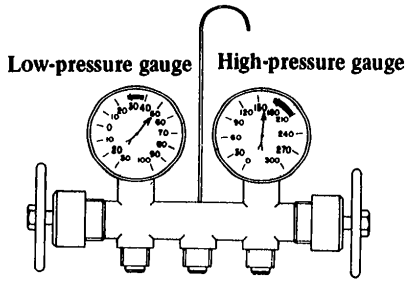 AC291	No cooling. Sweating or frosted suction line.	Faulty seal of O-ring in expansion valve.	1. Discharge system. 2. Remove expansion valve and replace O-ring. 3. Evacuate and replace system.
AIR IN SYSTEM			
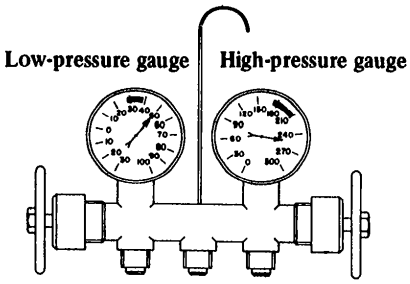 AC292	Insufficient cooling. Sight glass shows occasional bubbles.	Air mixed with refrigerant in system.	1. Discharge system. 2. Replace receiver drier. 3. Evacuate and charge system.
MOISTURE IN SYSTEM			
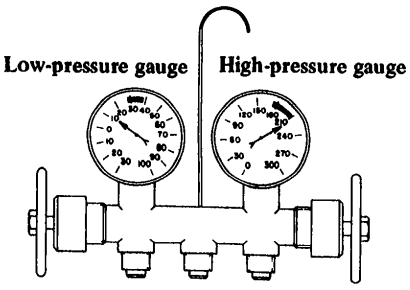 AC293	After operation for a while, pressure on suction side may show vacuum pressure reading. During this condition, discharge air will be warm. As warning of this, reading shows 0.4 kg/cm² (5 lb/in²) vibration.	Drier is saturated with moisture. Moisture has frozen at expansion valve. Refrigerant flow is restricted.	1. Discharge system. 2. Replace receiver drier (twice if necessary). 3. Evacuate system completely. (Repeat 30-minute evacuating three times.) 4. Recharge system.

Downloaded from www.Manualslib.com manuals search engine

Condition		Probable cause	Corrective action
FAULTY CONDENSER			
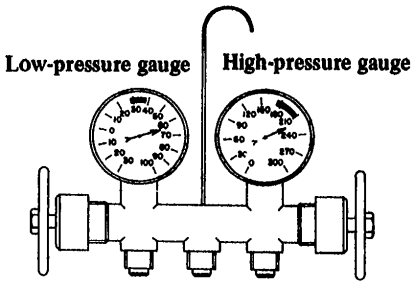 AC294	No cooling action: engine may overheat. Bubbles appear in sight glass of drier. Suction line is very hot.	Condenser is often found not functioning well.	• Check fan belt and fluid coupling. • Check condenser for dirt accumulation. • Check engine cooling system for overheat. • Check for refrigerant overcharge. **Note: If pressure remains high in spite of all above actions taken, remove and inspect the condenser for possible oil clogging.**
HIGH PRESSURE LINE BLOCKED			
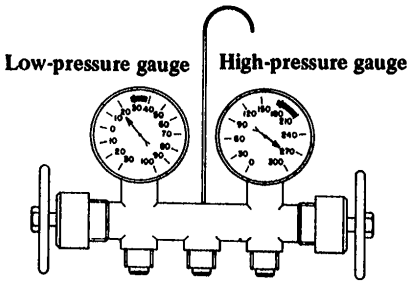 AC295	Insufficient cooling. Frosted high pressure liquid line.	Drier clogged, or restriction in high pressure line.	1. Discharge system. 2. Remove receiver drier or strainer and replace it. 3. Evacuate and charge system.
FAULTY COMPRESSOR			
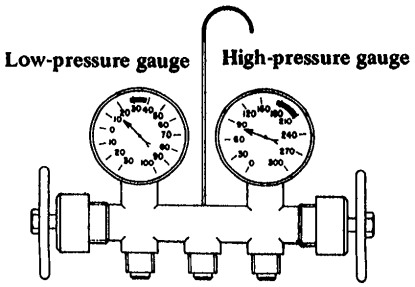 AC296	Insufficient cooling.	Internal problem in compressor, or damaged gasket and valve.	1. Discharge system. 2. Remove and check compressor. 3. Repair or replace compressor. 4. Check oil level. 5. Replace receiver drier. 6. Evacuate and charge system.

Downloaded from www.Manualslib.com manuals search engine

BLOWER MOTOR DIAGNOSES

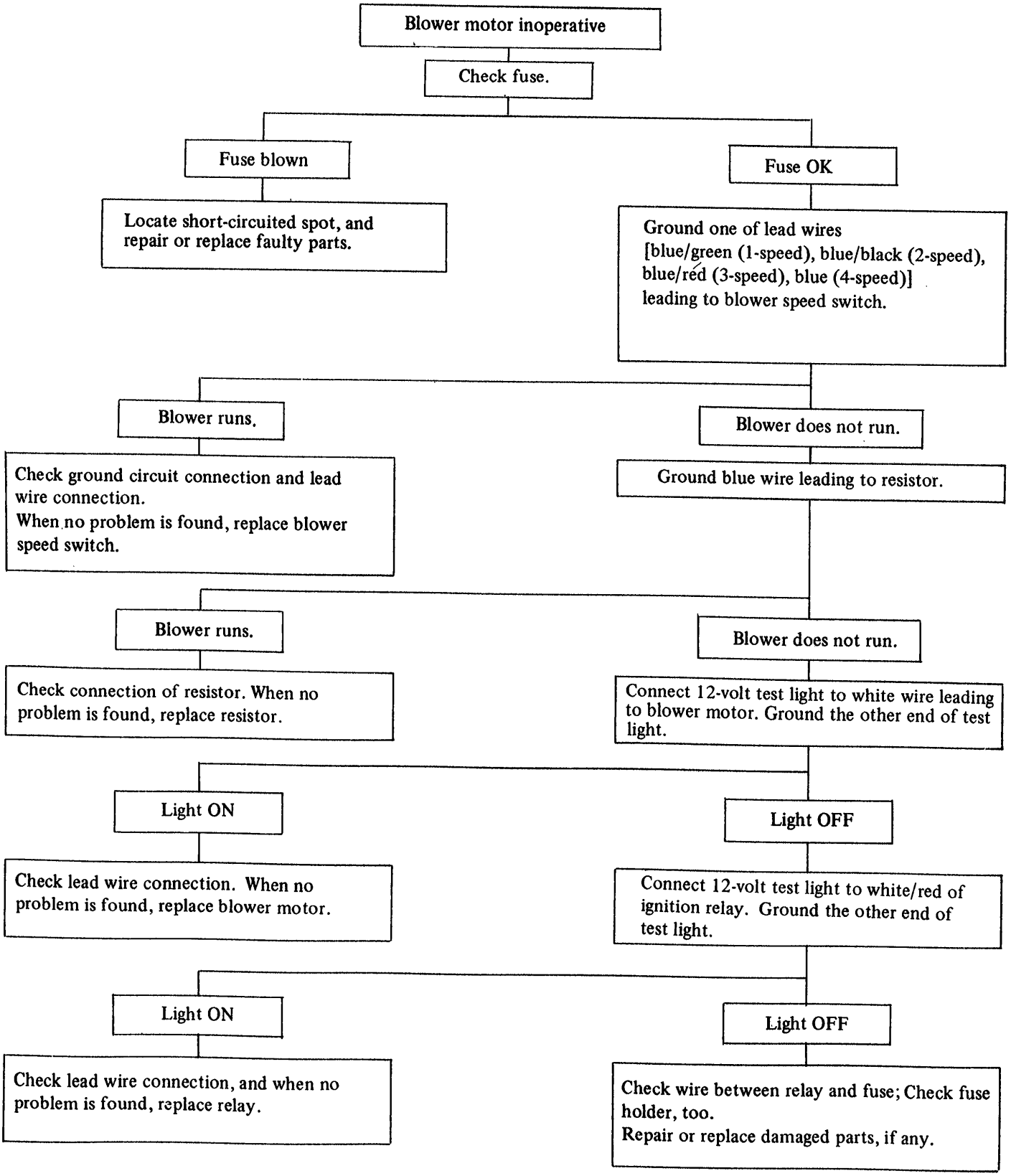

Downloaded from www.Manualslib.com manuals search engine

COMPRESSOR DIAGNOSES

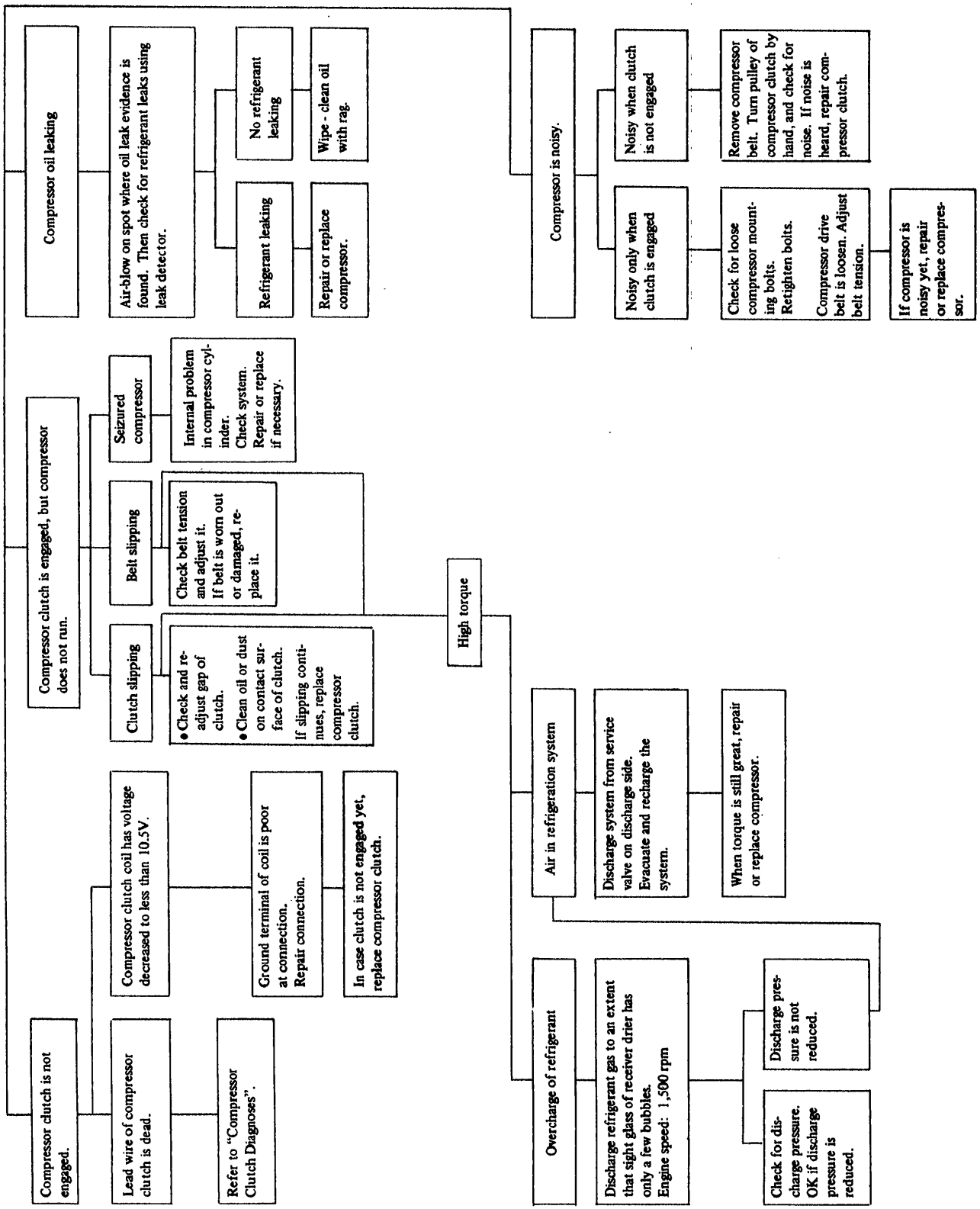

Downloaded from www.Manualslib.com manuals search engine

COMPRESSOR CLUTCH DIAGNOSES

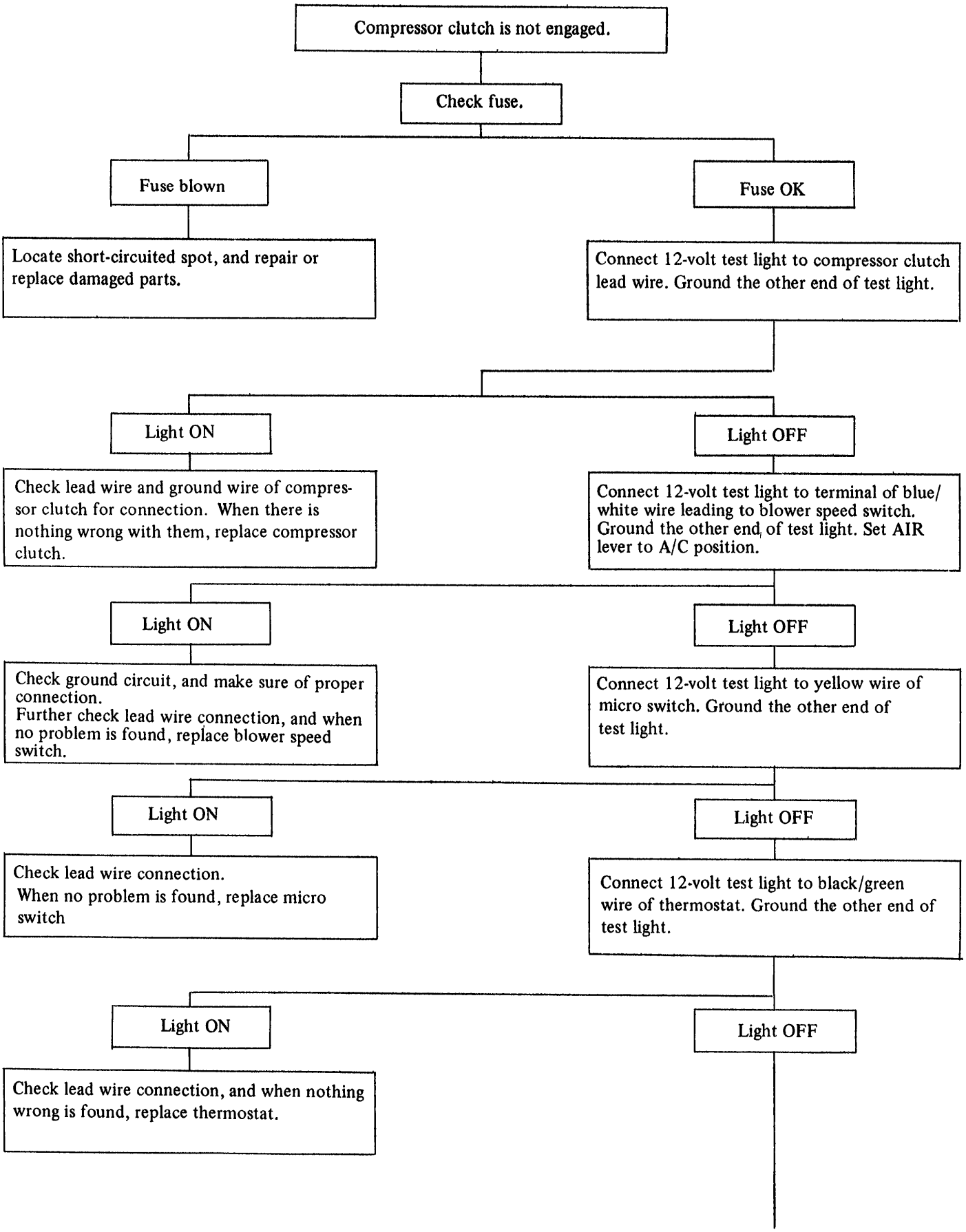

Downloaded from www.Manualslib.com manuals search engine

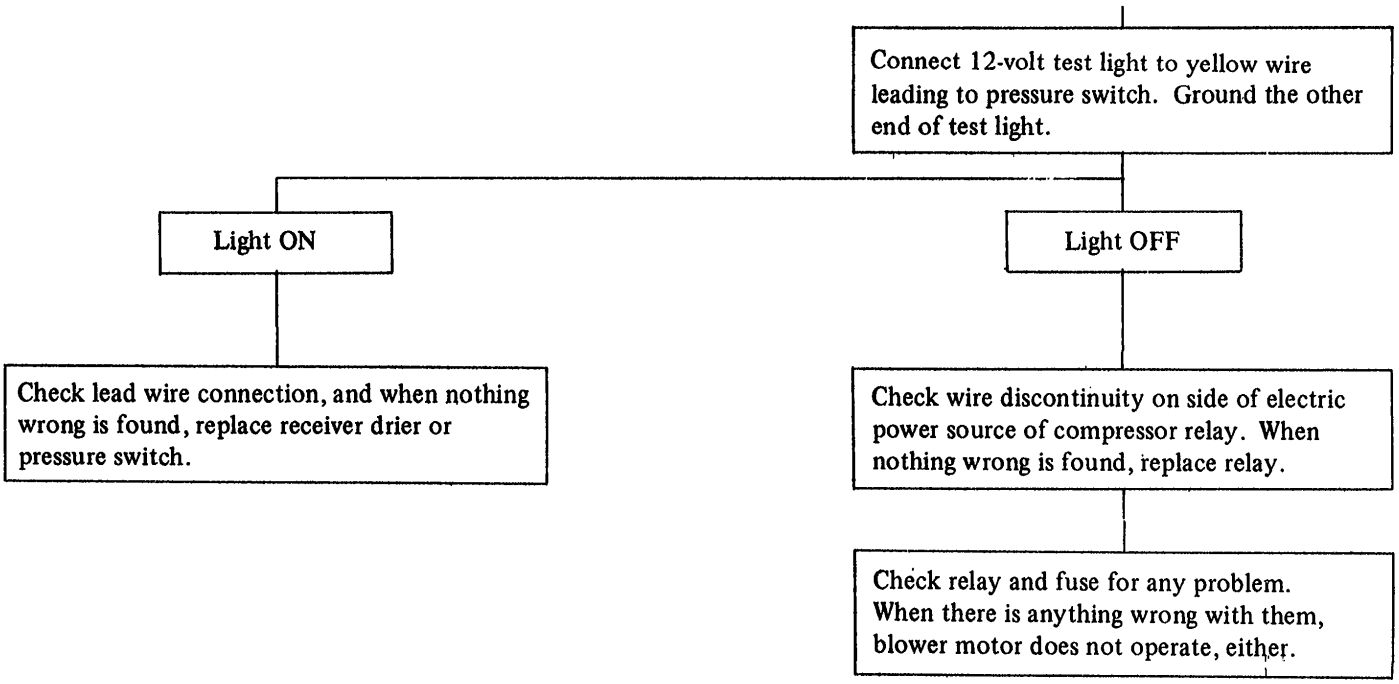

Downloaded from www.Manualslib.com manuals search engine

AIR CONDITIONER OPERATION CHART

Control lever position			Operation	
AIR lever	FAN lever	TEMP lever	Item	Correct action
A/C Engine at idle	1 to 4	Cold	Discharge air Air intake door Mode door Air temperature Vacuum cock FICD Magnet valve Compressor Magnet clutch	Instrument – 100% Vacuum – OFF (Position of isolating outside air) Vacuum – OFF Cold Vacuum – OFF Vacuum – ON *1 Current – ON *1 ON *1 Current – ON *1 *1 – (May be on or off by switching thermostat on or off)
	OFF	Cold	Blower motor FICD Magnet valve Compressor Magnet clutch	OFF Vacuum – OFF Current – OFF OFF Current – OFF
VENT Engine at idle	1 to 4	At any position	Discharge air Air intake door Mode door Air temperature Vacuum cock Magnet valve	Instrument – 100% Vacuum – ON (Position of admitting outside air) Vacuum – OFF Same as outside air Vacuum – OFF Current – ON
BI-LEVEL Engine at idle	1 to 4	Hot ↓ Cold	Discharge air Air intake door Mode door Air temperature Vacuum cock Water cock Magnet valve	Floor & Instrument Vacuum – ON (Position of admitting outside air) Vacuum – ON (1 step) Floor – warm→cool Instrument – same as outside air Vacuum – ON Open→closed Current – ON

Downloaded from www.Manualslib.com manuals search engine

Control lever position			Operation	
AIR lever	FAN lever	TEMP lever	Item	Correct action
HEAT Engine at idle	1 to 4	Hot ↓ Cold	Discharge air Air intake door Mode door Air temperature Vacuum cock Water cock Magnet valve	Floor & defroster nozzle Vacuum – ON (Position of admitting outside air) Vacuum – ON (2 steps) Warm → cool Vacuum – ON Open → closed Current – ON
REC HEAT Engine at idle	1 to 4	Hot ↓ Cold	Discharge air Air intake door Mode door Air temperature Vacuum cock Water cock Magnet valve	Floor & defroster nozzle Vacuum – OFF (Position of isolating outside air) Vacuum – ON (2 steps) Warm → cool Vacuum – ON Open → closed Current – ON
DEF Engine at idle	1 to 4	Hot ↓ Cold	Discharge air Air intake door Mode door Heater door Air temperature Vacuum cock Water cock Magnet valve	Defroster nozzle Vacuum – ON (Position of admitting outside air) Vacuum – ON (2 steps) Open Warm Vacuum – ON Open → closed Current – ON

Downloaded from www.Manualslib.com manuals search engine

VACUUM SYSTEM DIAGNOSES

VACUUM SYSTEM DIAGNOSES -A/C POSITION

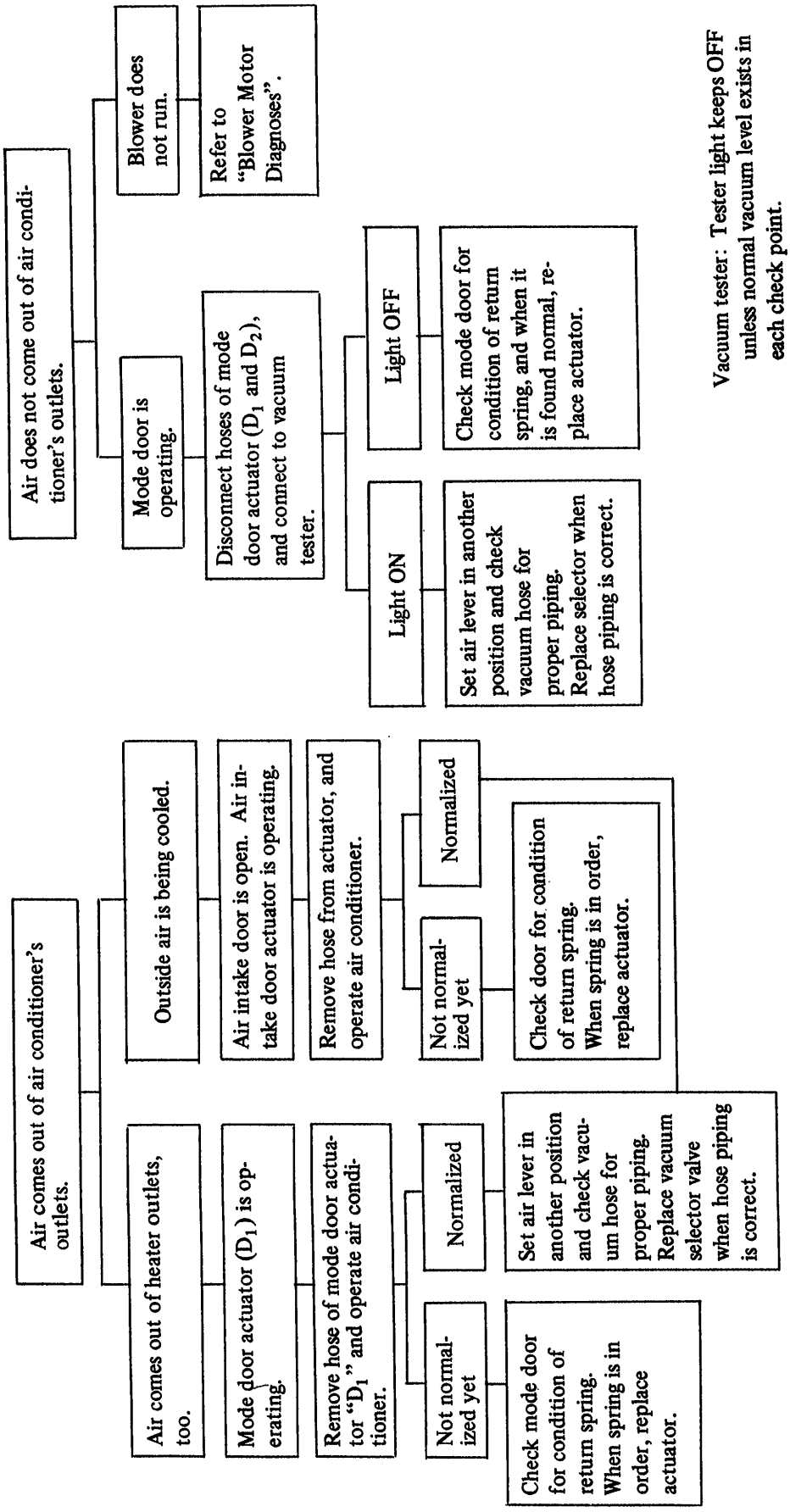

Downloaded from www.Manualslib.com manuals search engine

FAST IDLE CONTROL DEVICE DIAGNOSES (FICD)

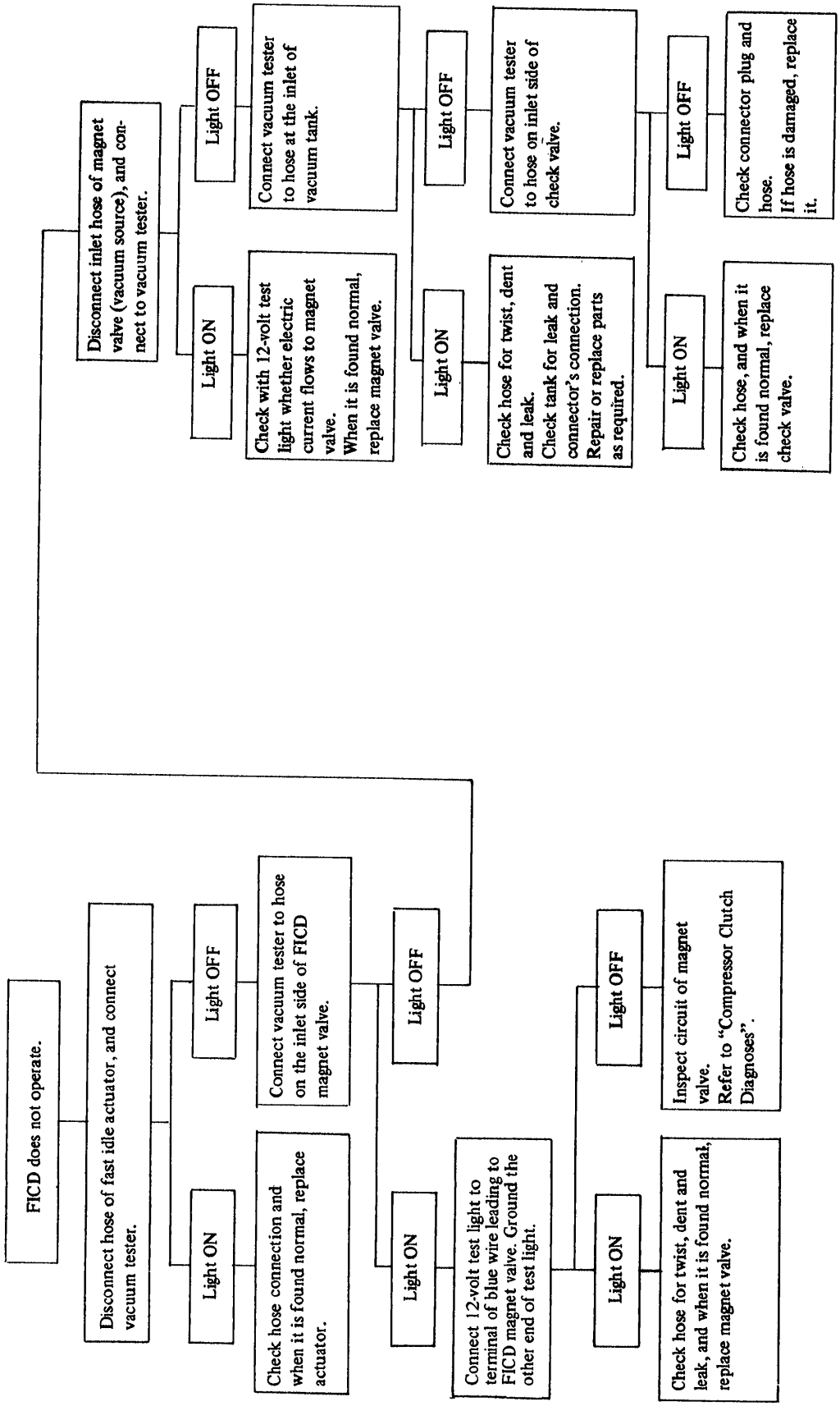

Vacuum tester: Tester light keeps OFF unless normal vacuum level exists in each check point.

Downloaded from www.Manualslib.com manuals search engine

VACUUM SYSTEM DIAGNOSES-VENT POSITION

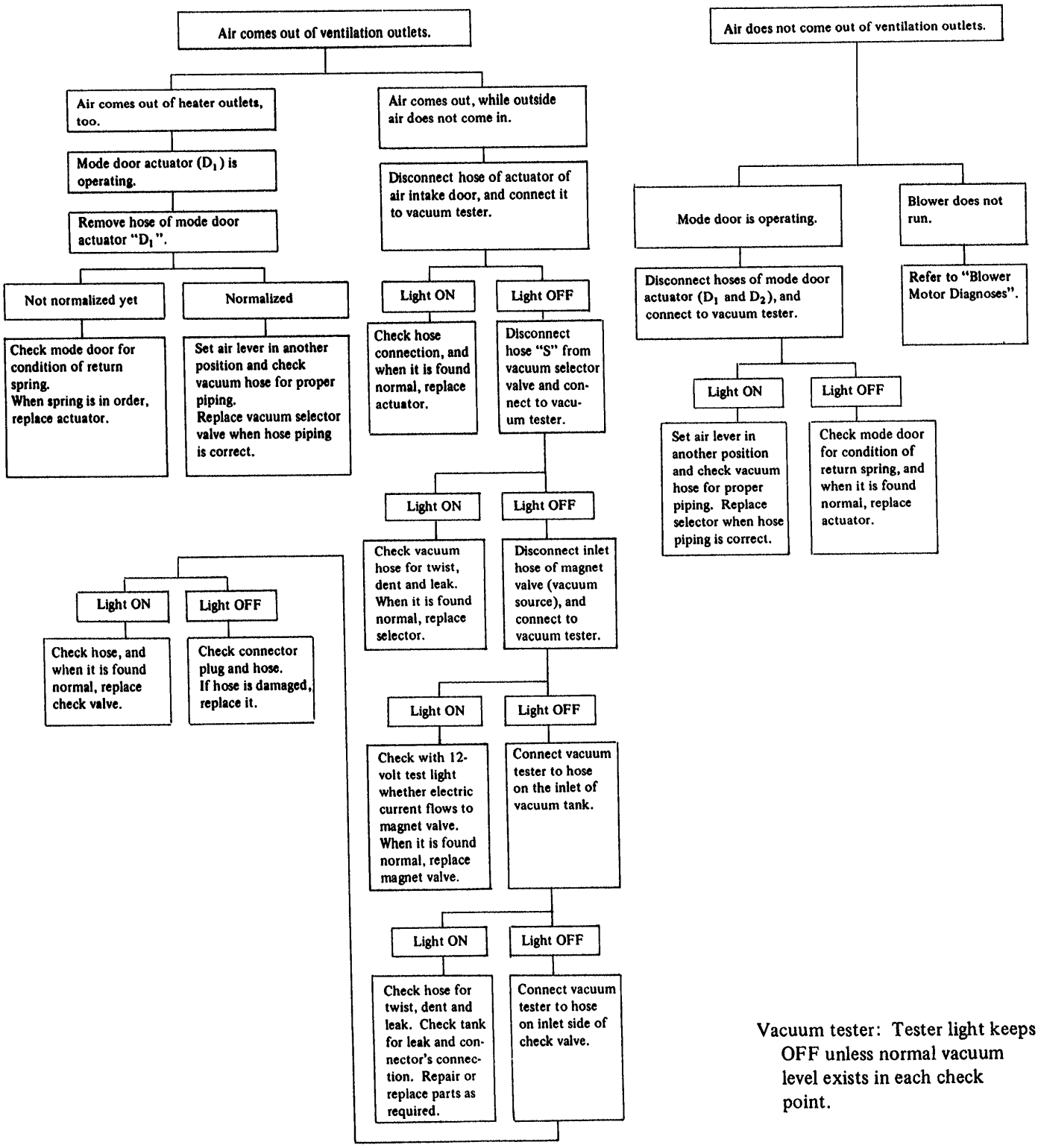

Vacuum tester: Tester light keeps OFF unless normal vacuum level exists in each check point.

Downloaded from www.Manualslib.com manuals search engine

VACUUM SYSTEM DIAGNOSES - BI-LEVEL POSITION

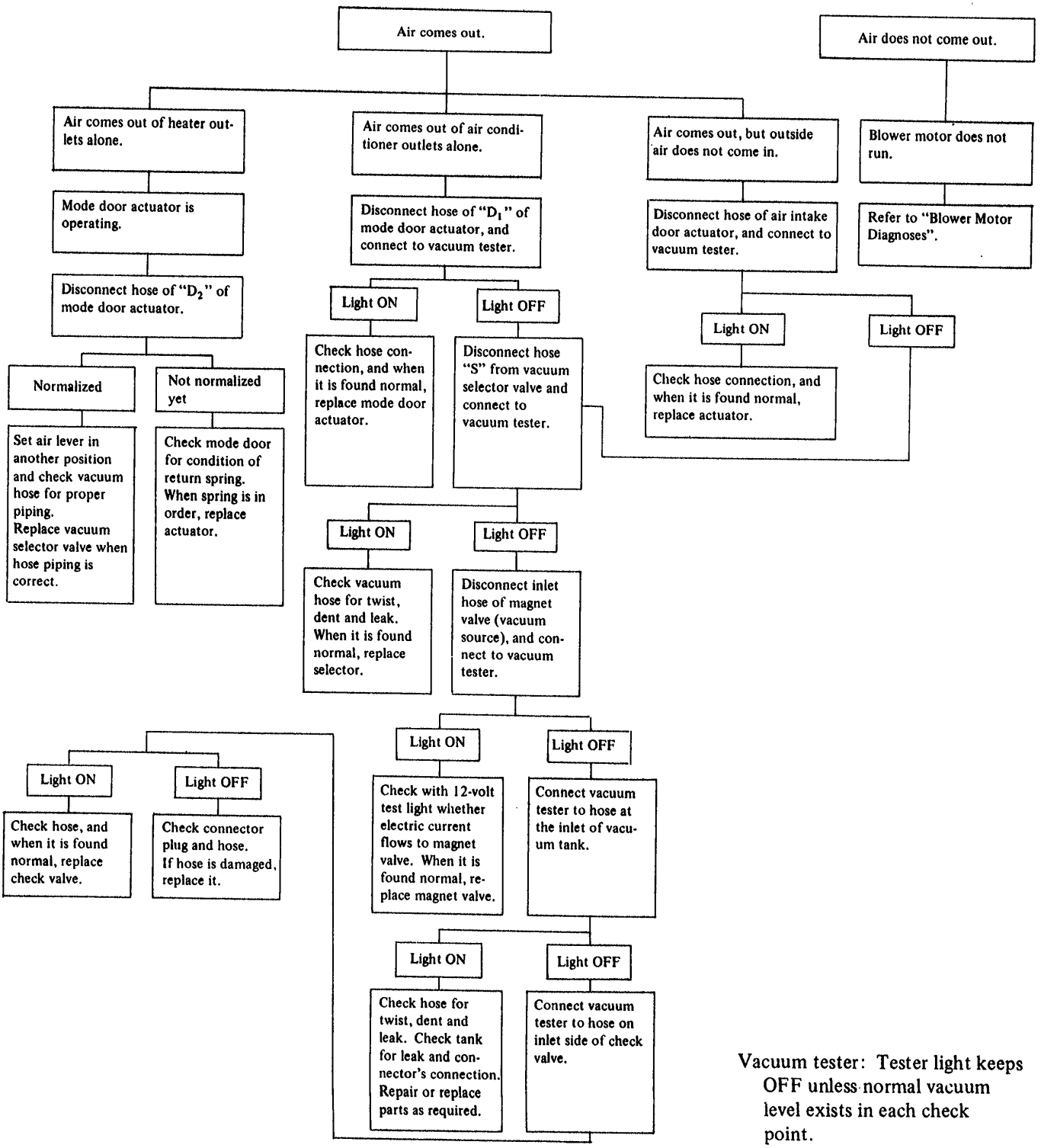

Vacuum tester: Tester light keeps OFF unless normal vacuum level exists in each check point.

Downloaded from www.Manualslib.com manuals search engine

VACUUM SYSTEM DIAGNOSES - HEAT POSITION

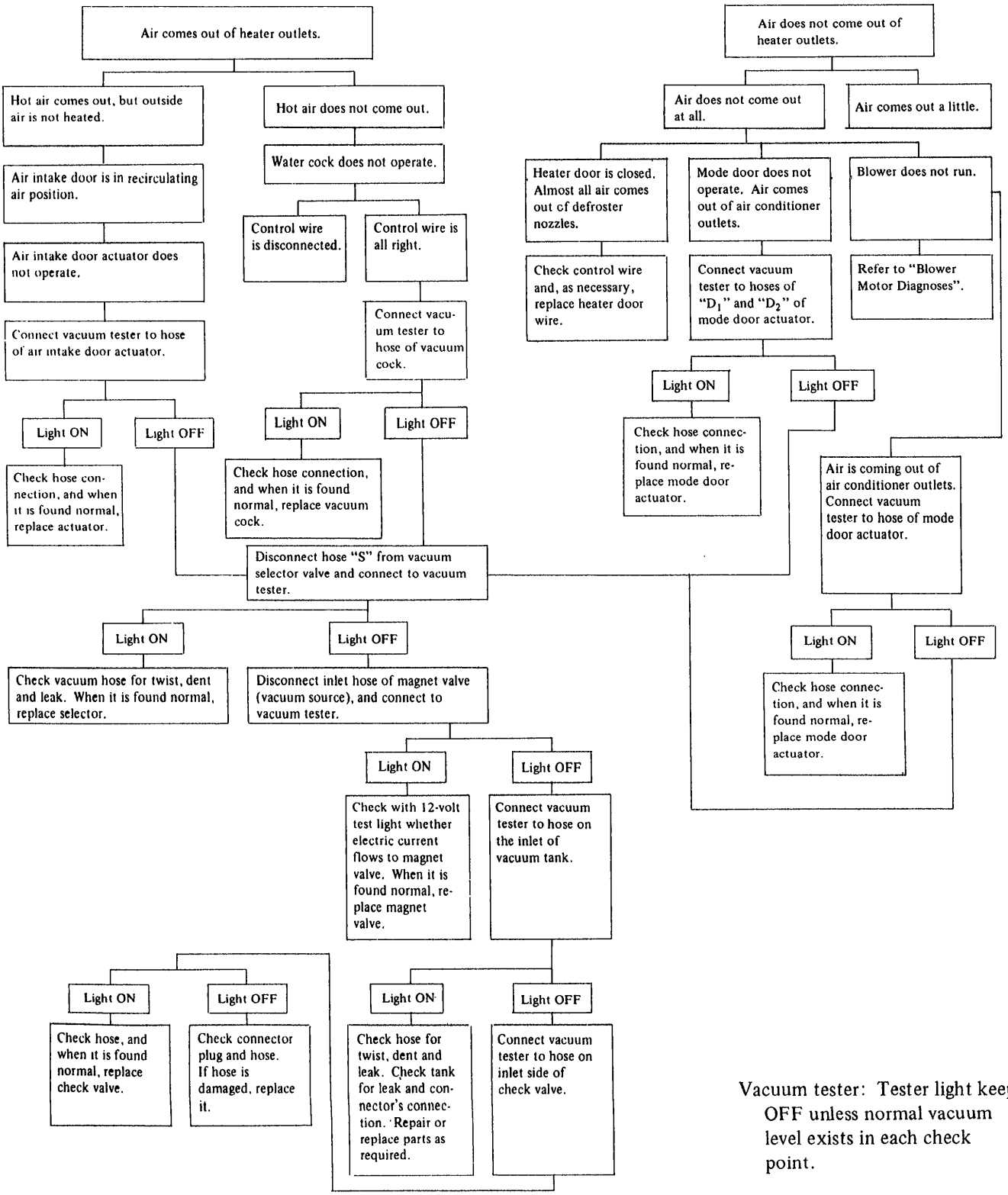

Vacuum tester: Tester light keeps OFF unless normal vacuum level exists in each check point.

Downloaded from www.Manualslib.com manuals search engine

VACUUM SYSTEM DIAGNOSES - REC HEAT POSITION

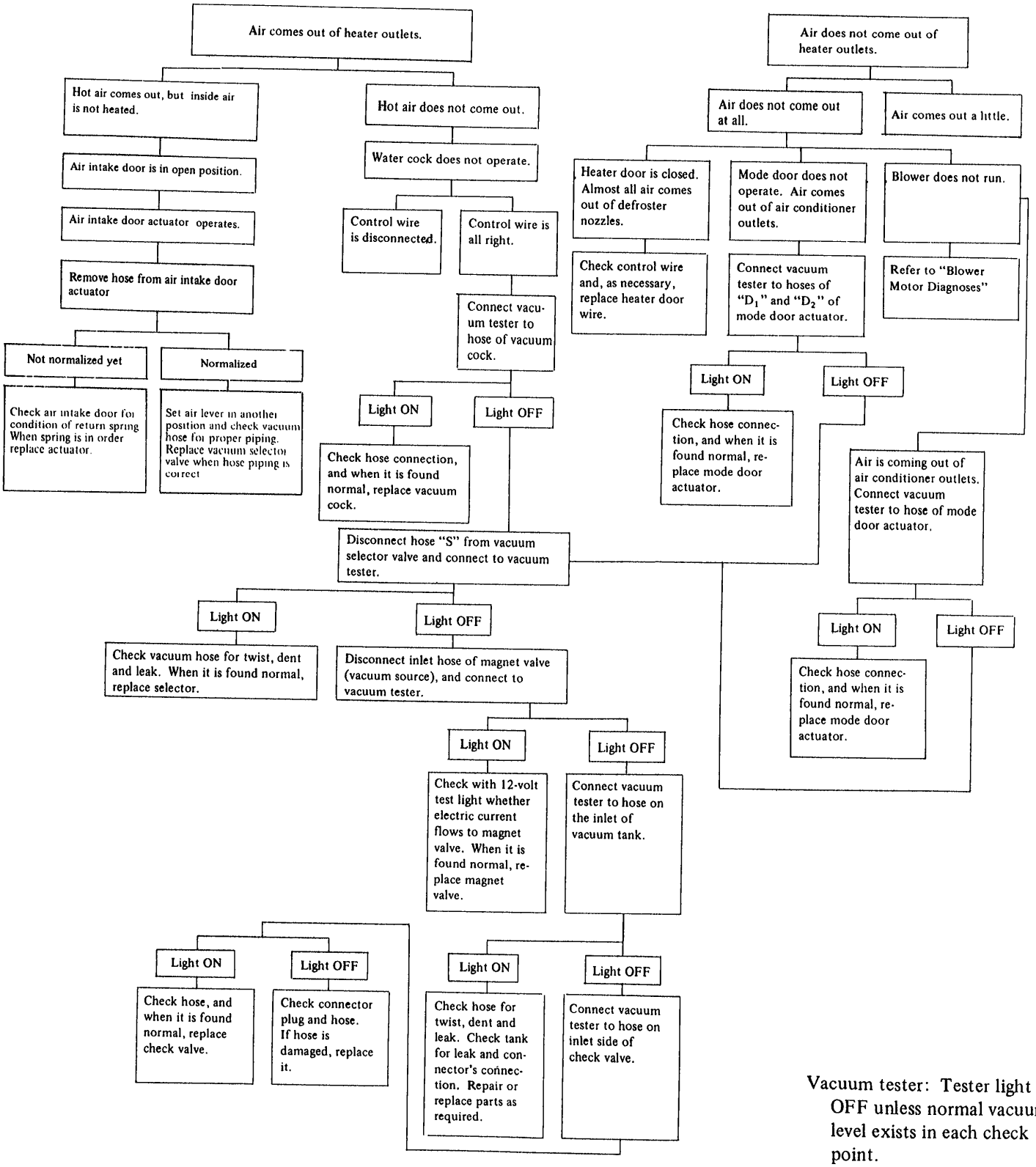

Vacuum tester: Tester light keeps OFF unless normal vacuum level exists in each check point.

Downloaded from www.Manualslib.com manuals search engine

VACUUM SYSTEM DIAGNOSES -DEFROST POSITION

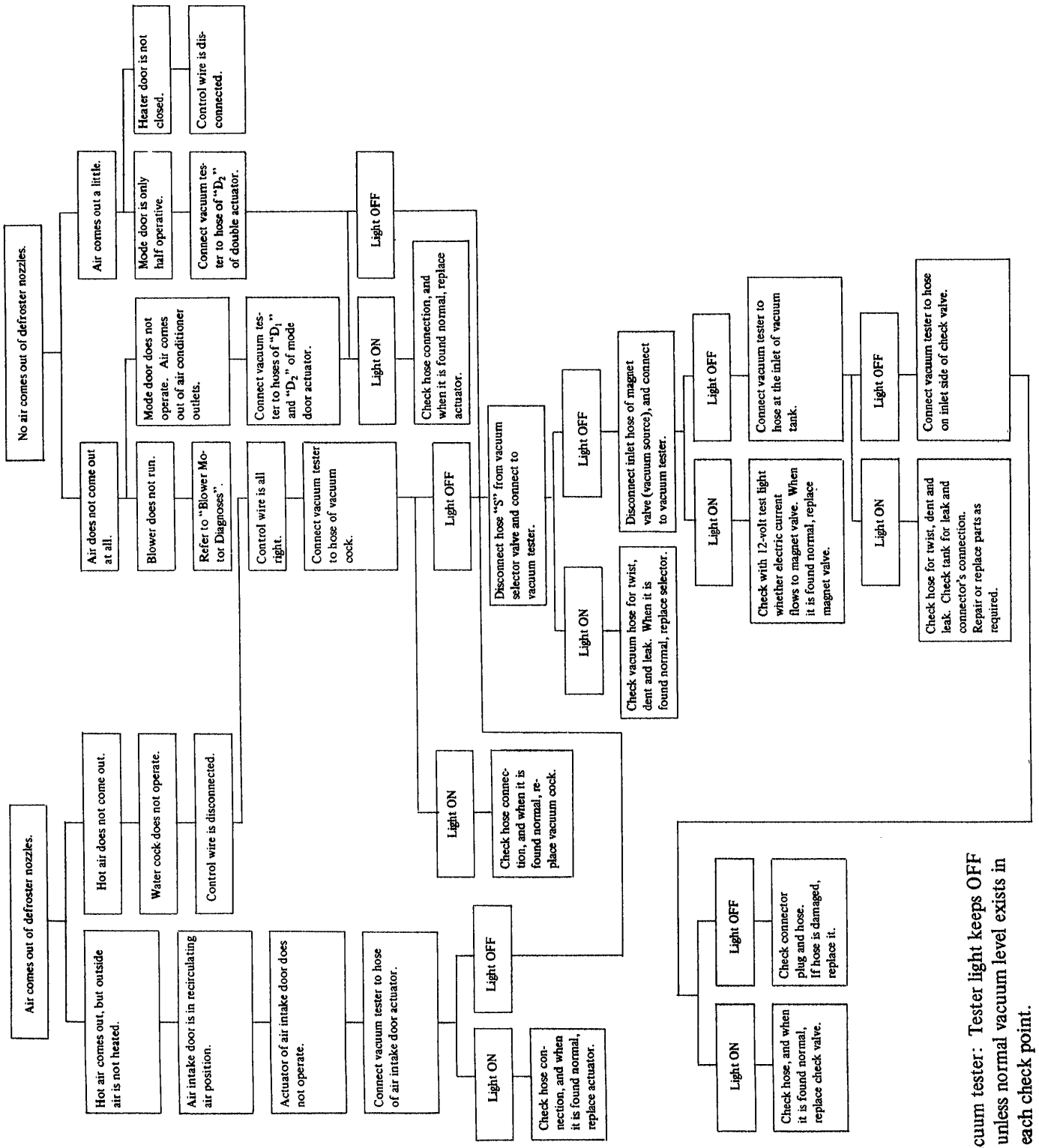

Vacuum tester: Tester light keeps OFF unless normal vacuum level exists in each check point.

Downloaded from www.Manualslib.com manuals search engine

RERFORMANCE CHART

Engine speed : 1,500 rpm
FAN lever : 4
AIR lever : A/C
TEMP lever : Max. cold

Ambient air		Discharge air temperature °F (°C)	Pressure High (Discharge side) psi (kg/cm²)	Pressure Low (Suction side) psi (kg/cm²)
Relative humidity	Air temperature °F (°C)			
80	70 (21.0)	52.0 to 57.0 (11.0 to 14.0)	168 to 198 (11.8 to 13.9)	28 to 36 (2.0 to 2.5)
	80 (26.5)	61.0 to 68.0 (16.0 to 20.0)	185 to 218 (13.0 to 15.3)	33 to 40 (2.3 to 2.8)
	90 (32.5)	67.0 to 76.0 (19.5 to 24.5)	208 to 246 (14.6 to 17.3)	38 to 48 (2.7 to 3.4)
	100 (38.0)	73.0 to 82.5 (23.0 to 27.5)	235 to 273 (16.5 to 19.2)	48 to 55 (3.4 to 3.9)
	110 (43.5)	79.0 to 90.0 (26.0 to 32.0)	266 to 303 (18.7 to 21.3)	61 to 68 (4.3 to 4.8)
70	70 (21.0)	49.0 to 55.0 (9.5 to 13.0)	154 to 182 (10.8 to 12.8)	24 to 33 (1.7 to 2.3)
	80 (26.5)	57.0 to 64.0 (14.0 to 18.0)	168 to 202 (11.8 to 14.2)	28 to 37 (2.0 to 2.6)
	90 (32.5)	63.5 to 71.5 (17.5 to 22.0)	192 to 228 (13.5 to 16.0)	34 to 43 (2.4 to 3.0)
	100 (38.0)	70.0 to 78.0 (21.0 to 25.5)	219 to 255 (15.4 to 17.9)	43 to 51 (3.0 to 3.6)
	110 (43.5)	75.0 to 84.0 (24.0 to 29.0)	249 to 285 (17.5 to 20.0)	55 to 64 (3.9 to 4.5)
60	70 (21.0)	46.0 to 52.0 (7.5 to 11.0)	138 to 168 (9.7 to 11.8)	20 to 28 (1.4 to 2.0)
	80 (26.5)	54.0 to 61.0 (12.0 to 16.0)	152 to 185 (10.7 to 13.0)	23 to 33 (1.6 to 2.3)
	90 (32.5)	60.0 to 67.0 (15.5 to 19.5)	175 to 209 (12.3 to 14.7)	28 to 38 (2.0 to 2.7)
	100 (38.0)	65.0 to 73.0 (18.5 to 23.0)	201 to 235 (14.1 to 16.5)	37 to 48 (2.6 to 3.4)
	110 (43.5)	70.5 to 79.0 (21.5 to 26.0)	230 to 267 (16.2 to 18.8)	48 to 61 (3.4 to 4.3)
50	70 (21.0)	43.0 to 49.0 (6.0 to 9.5)	124 to 154 (8.7 to 10.8)	16 to 24 (1.1 to 1.7)
	80 (26.5)	50.0 to 57.0 (10.0 to 14.0)	137 to 168 (9.6 to 11.8)	18 to 28 (1.3 to 2.0)
	90 (32.5)	56.0 to 63.5 (13.5 to 17.5)	156 to 192 (11.0 to 13.5)	23 to 34 (1.6 to 2.4)
	100 (38.0)	61.0 to 70.0 (16.0 to 21.0)	182 to 219 (12.8 to 15.4)	31 to 43 (2.2 to 3.0)
	110 (43.5)	66.0 to 75.0 (19.0 to 24.0)	213 to 249 (15.0 to 17.5)	44 to 55 (3.1 to 3.9)
40	70 (21.0)	39.0 to 45.5 (4.0 to 7.5)	108 to 137 (7.6 to 9.7)	11 to 20 (0.8 to 1.4)
	80 (26.5)	46.0 to 54.0 (8.0 to 12.0)	119 to 152 (8.4 to 10.7)	14 to 23 (1.0 to 1.6)
	90 (32.5)	53.0 to 60.0 (11.5 to 15.5)	139 to 175 (9.8 to 12.3)	18 to 28 (1.3 to 2.0)
	100 (38.0)	57.0 to 65.0 (14.0 to 18.5)	162 to 201 (11.4 to 14.1)	27 to 37 (1.9 to 2.6)
	110 (43.5)	62.0 to 71.0 (16.5 to 21.5)	195 to 230 (13.7 to 16.2)	40 to 48 (2.8 to 3.4)
30	70 (21.0)	36.5 to 43.0 (2.5 to 6.0)	94 to 124 (6.6 to 8.7)	7 to 16 (0.5 to 1.1)
	80 (26.5)	43.0 to 50.0 (6.0 to 10.0)	102 to 137 (7.2 to 9.6)	10 to 18 (0.7 to 1.3)
	90 (32.5)	48.0 to 56.0 (9.0 to 13.5)	121 to 156 (8.5 to 11.0)	14 to 23 (1.0 to 1.6)
	100 (38.0)	54.0 to 61.0 (12.0 to 16.0)	147 to 182 (10.3 to 12.8)	23 to 31 (1.6 to 2.2)
	110 (43.5)	58.0 to 66.0 (14.5 to 19.0)	176 to 213 (12.4 to 15.0)	37 to 44 (2.6 to 3.1)

Note: These data are based on the results when air conditioner has been in operation approximately for 10 minutes.

Downloaded from www.Manualslib.com manuals search engine

HOW TO INSTALL AIR CONDITIONER

I. First, remove the heater unit from the center of the instrument panel. Prior to removal prepare the engine compartment by:

1) Removing battery negative cable
2) Draining engine coolant
3) Removing engine hood
4) Disconnecting inlet and outlet heater hoses and removing grommet that seals the clearance between tube and dash panel

Note: Take care not to damage the heater unit during removal because, once removed the heater unit can be used, after suitable modifications, as a component of the air conditioner.

1. Remove console box.
2. Remove instrument finisher from the center of the instrument panel. See Figure AC-42.
3. Remove defroster ducts.
4. Remove two finisher brackets.
5. Remove 3-way air duct. See Figure AC-49.
6. Remove blower housing by removing three mounting bolts. In removing blower housing, disconnect control cable for air intake door and two wiring connectors for blower motor and resistor.
7. Remove three control cables from the heater unit.
8. Disconnect wiring connectors of heater sub harness from heater control assembly and dash harness. Discard heater sub harness.
9. Remove heater air duct with heater control assembly as an assembly from the heater unit by removing four attaching screws. See Figure AC-58.

Since it is useless as a component of air conditioner, discard the removed assembly.

10. Remove two instrument panel center stays. See Figure AC-50.
11. Remove heater unit by removing two nuts from the engine compartment side and then two bolts from the passenger compartment side.

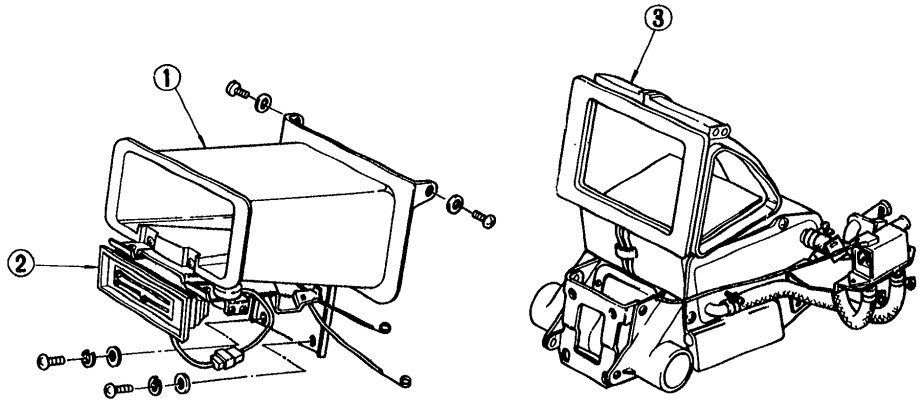

1 Heater air duct
2 Heater control assembly
3 Heater unit

AC642

Fig. AC-58 Removing heater air duct

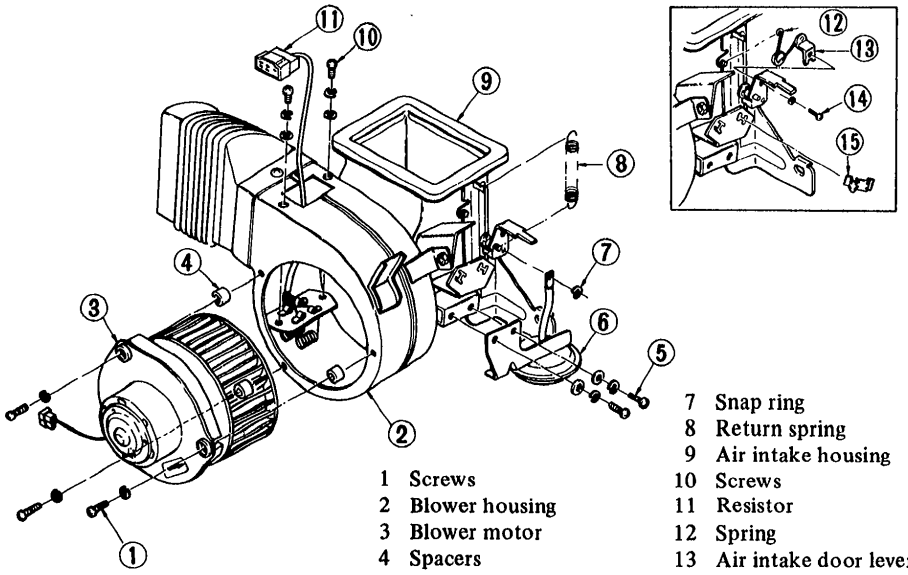

1 Screws
2 Blower housing
3 Blower motor
4 Spacers
5 Screws
6 Air intake door actuator
7 Snap ring
8 Return spring
9 Air intake housing
10 Screws
11 Resistor
12 Spring
13 Air intake door lever
14 Screw
15 Control cable clamp

AC643

Fig. AC-59 Air intake housing and blower motor

II. Modify the heater component parts for use as the component parts of the air conditioner according to the following procedure

AIR INTAKE HOUSING AND BLOWER MOTOR

See Figure AC-59.

1. Remove two screws ⑩ attaching resistor to blower housing, and take out resistor ⑪. Replace resistor with a new one for air conditioner.

Downloaded from www.Manualslib.com manuals search engine

2. Remove air intake door lever ⑬ and spring ⑫. Newly assemble vacuum actuator ⑥, using two screws ⑤ and snap ring ⑦. Replace return spring with one ⑧ designed for air conditioner.

HEATER UNIT

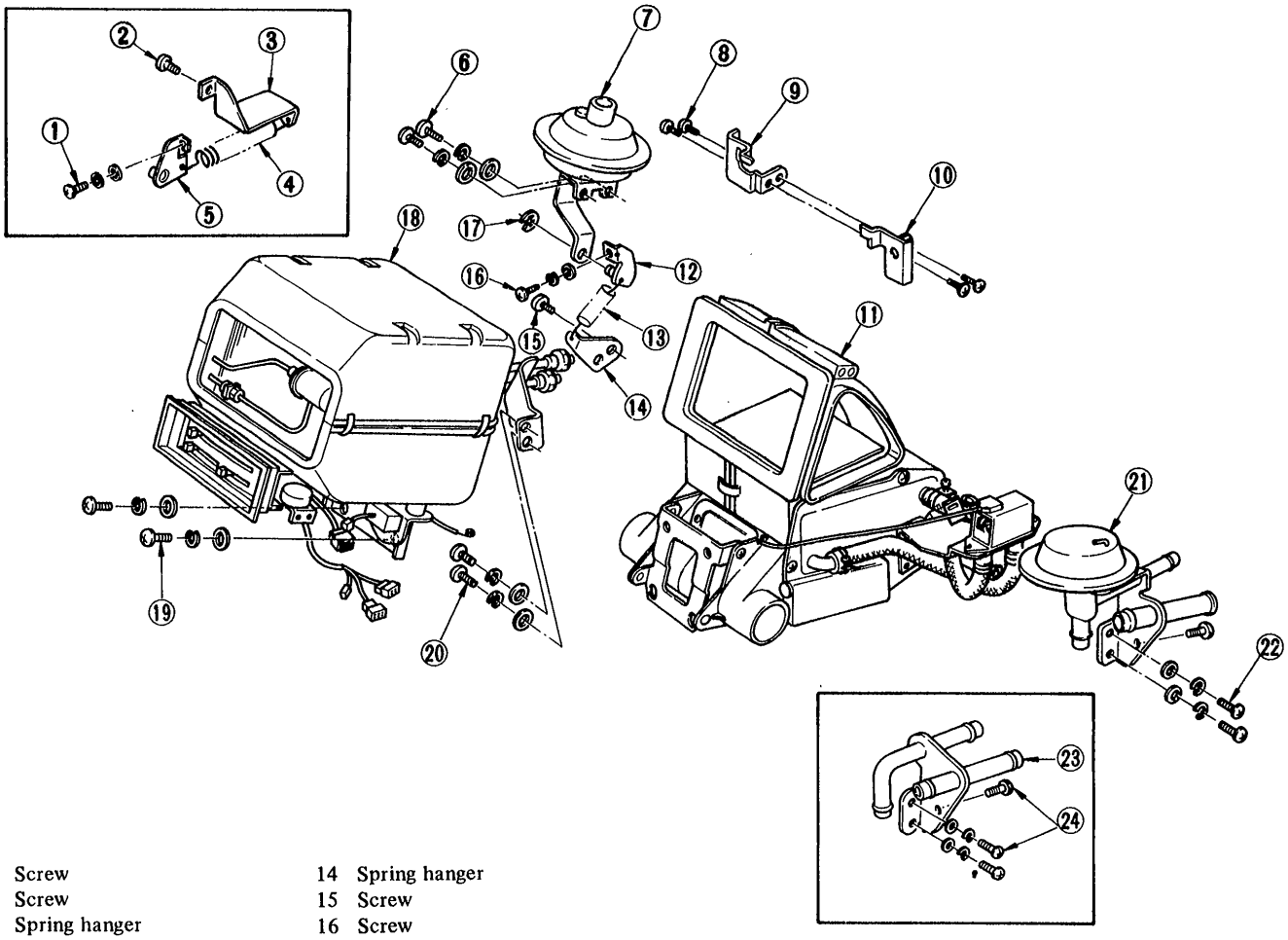

1 Screw
2 Screw
3 Spring hanger
4 Spring
5 Mode door lever
6 Screws
7 Mode door actuator
8 Screws
9 Heater unit bracket
10 Heater unit bracket
11 Heater unit
12 Mode door lever
13 Spring return
14 Spring hanger
15 Screw
16 Screw
17 Snap ring
18 Evaporator housing and control assembly
19 Screws
20 Screws
21 Vacuum water cock
22 Screws
23 Hose connector
24 Screws

AC648

Fig. AC-60 Heater unit

1. Loosen two water hose clamps, take off three screws ㉔, then remove hose connector ㉓ from heater unit ⑪. Newly install vacuum water cock ㉑.

2. Remove spring ④ and spring hanger ③, then remove mode door lever ⑤.

Install mode door lever ⑫, spring hanger ⑭ and spring ⑬.

Then assemble mode door actuator ⑦ using two screws ⑥ and snap ring ⑰.

3. Temporarily install heater unit brackets ⑨ and ⑩ to the heater unit body.

4. Install two vacuum hoses to mode door actuator referring to Figure AC-54.

Downloaded from www.Manualslib.com manuals search engine

III. Install air conditioner component parts in the passenger compartment in the following manner:

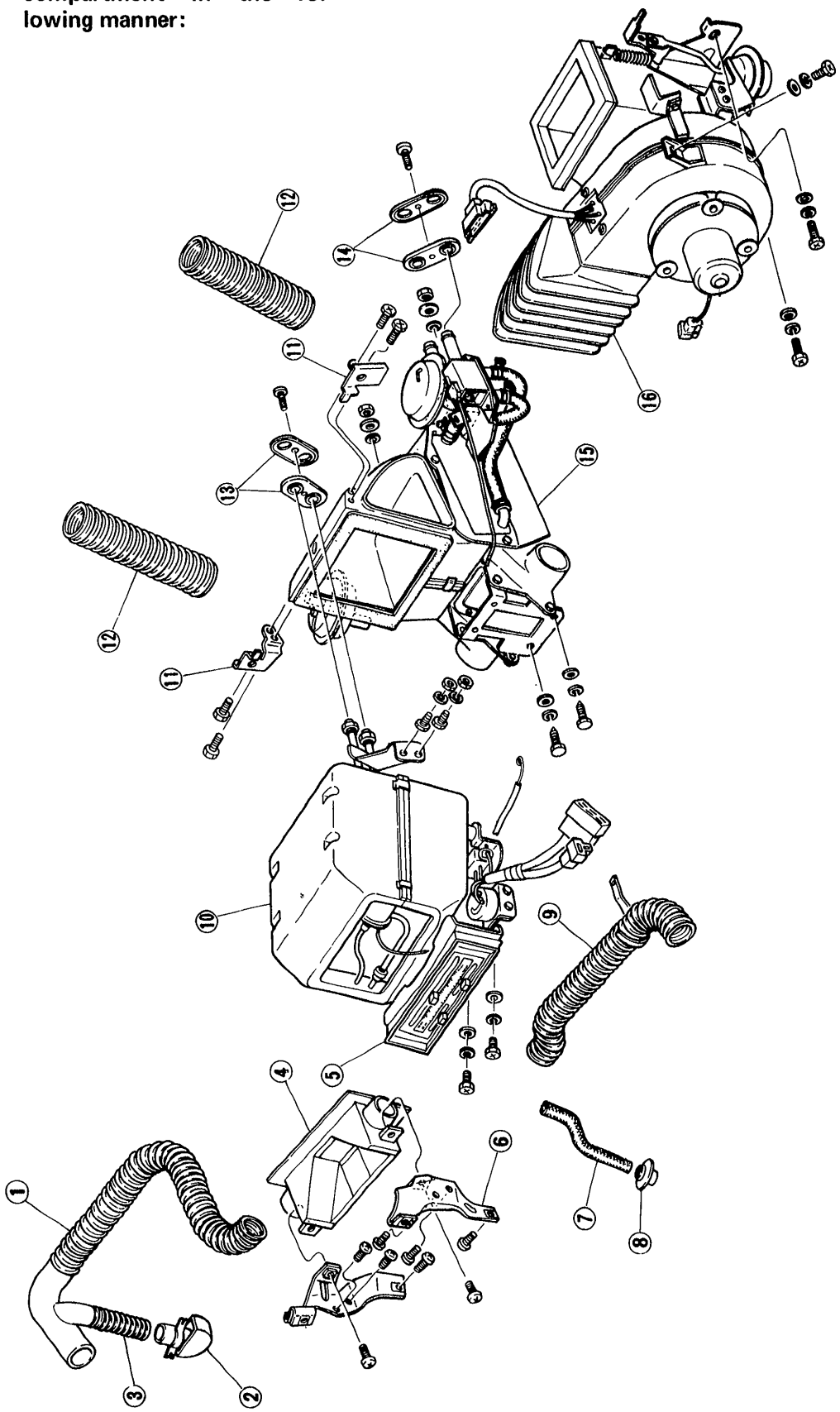

1 Air duct-L.H.
2 Floor grille
3 Floor air duct
4 3-way ventilator duct
5 Control assembly
6 Finisher bracket
7 Drain hose
8 Drain hose grommet
9 Air duct-R.H.
10 Evaporator housing
11 Heater unit bracket
12 Defroster hose
13 Grommet and grommet cover
14 Grommet and grommet cover
15 Heater unit
16 Blower housing and air intake

AC798

Fig. AC-61 Air conditioner component parts in the passenger compartment

Downloaded from www.Manualslib.com manuals search engine

1. Drill holes in dash panel for hoses and tubes.

(1) Remove grommet cover and grommet for refrigeration piping. See Figure AC-62.

Discard grommet, saving grommet cover for future use.

Remove blind grommet for vacuum hose. See Figure AC-62.

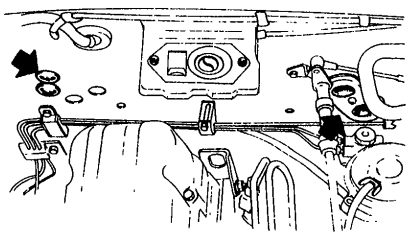

AC562

Fig. AC-62 Grommet

(2) Drill holes in dash panel insulator from the passenger compartment side. Remove the round cutout from the insulator. See Figure AC-63.

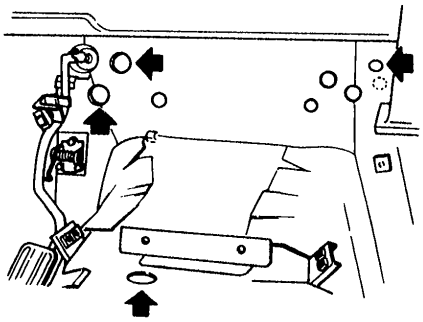

AC563

Fig. AC-63 Dash insulator

(3) Remove blind grommet for drain hose.

2. Installation of heater unit

(1) From passenger seat side set heater unit modified for use with air conditioner in place below instrument panel. Fit it securely in place by tightening two nuts from the engine compartment side and four bolts from the passenger compartment side. See Figure AC-53

(2) From the engine compartment side seal the pass-through holes using grommet and grommet cover. Connect two heater hoses to the connectors protruding inside the engine room.

3. Installation of evaporator housing

(1) Install evaporator housing and control assembly, which have been previously assembled in a unit, onto the heater unit. To do this, hook a heater unit upper bracket to the dimple in evaporator housing and securely tighten the two bolts at the lower side of evaporator housing. See Figure AC-51.

(2) Connect wiring connectors of air conditioner sub harness to those of control assembly (4 connectors), and to dash harness at one connector. Two connectors, one for blower motor and the other for resistor, may be left unconnected. See Figure AC-55.

(3) Connect control cables (heater door cable and water cock cable) to the respective levers on heater unit. Refer to "Adjustment of Control Cable" in "Control Assembly".

(4) Arrange vacuum hose piping

Install all hoses leading to vacuum water cock, on heater unit and to vacuum selector on control assembly, referring to Figure AC-54.

Also install a hose leading from vacuum source into engine compartment through panel.

Secure vacuum hoses and air conditioner sub-harness to water cock control cable with clip.

(5) Install a fixture bracket to fix two tubes leading to the inlet and outlet of evaporator onto the side of heater unit, and secure it with two bolts. Seal the clearance between tube and dash panel using grommet and grommet cover.

Note: Do not remove the blind plug from the opening of evaporator tube until ready for piping in the engine compartment.

(6) Install drain hose on the bottom of evaporator housing and direct its end under the car through floor panel. Seal the clearance between hose and floor panel with grommet.

(7) Install two instrument panel center stays.

4. Installation of blower housing

(1) Install blower housing previously modified for use with air conditioner onto dash panel with three bolts.

(2) Install vacuum hose to air intake door actuator. See Figure AC-54.

(3) Connect two wiring connectors, one for blower motor and the other for resistor, with those on air conditioner sub harness. See Figure AC-55.

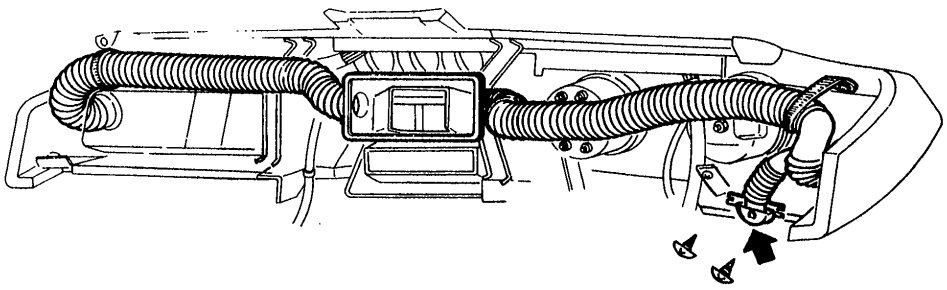

AC799

Fig. AC-64 Floor grille and duct

Downloaded from www.Manualslib.com manuals search engine

5. Installation of air duct

(1) Attach floor grille to instrument lower cover on driver's side.

(2) Remove plug from air duct leading to side ventilator. Install a special air duct for delivering the air to the floor. See Figure AC-64.

(3) Install air duct to floor grille.

(4) Install 3-way ventilator duct at the center of instrument panel and then install instrument finisher.

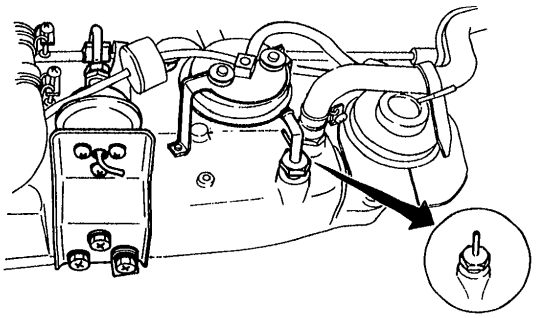

For manual transmission AC800

Fig. AC-65 Vacuum hose connector and F.I.C.D.

IV. Succeeding works should be conducted in the engine compartment to make necessary modification of engine.

1. Remove air flow meter with air ducts.
2. Remove engine under cover.
3. Remove radiator.
4. Remove air cleaner.
5. Newly install compressor bracket to cylinder block. See Figure AC-30.
6. Assemble idler pulley to idler pulley bracket.

Then, install the assembly to compressor bracket. See Figure AC-31.

7. Install compressor to compressor bracket. See Figure AC-30. Install adjusting shims between bracket and compressor if necessary.
8. Reinstall fan belt and adjust its tension. See Figure AC-32.
9. Newly install compressor drive belt and adjust its tension. See Figure AC-31.
10. Replace vacuum hose connector on intake manifold with one provided with air conditioner. See Figure AC-65.
11. Newly install F.I.C.D. actuator to intake manifold. See Figure AC-65.

V. After completion of engine modification, install all the necessary component parts in the engine compartment according to the following procedure:

1. Set down radiator and condenser onto the rear and front sides, respectively, of radiator core support. Install them in place by tightening together with four bolts.
2. Newly install upper and lower radiator shrouds.
3. Reinstall radiator upper and lower hoses.
4. Newly install receiver drier. See Figure AC-66.

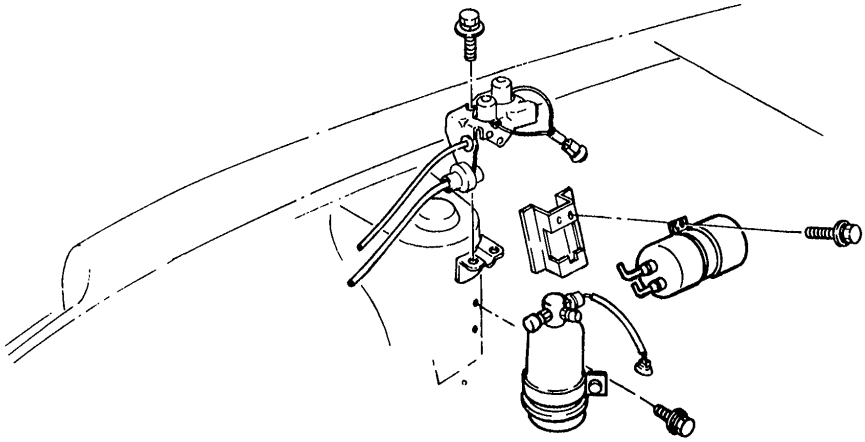

AC801

Fig. AC-66 Receiver drier, vacuum tank and valve assembly

5. Arrange piping of refrigeration tubes. See Figure AC-35.

Notes:

a. When connecting system lines, do not attempt to remove the blind plug from the opening until ready for immediate use.
b. In connecting tubes, be sure to apply compressor oil to seating surface and then tighten tubes to prescribed tightening torque.
Be sure to use two wrenches when tightening a flare nut of tube.
c. Use care not to give scratches to the seating surface at connections.
d. Connect refrigeration tubes to receiver drier after all other connections have been made.
e. Take care to tighten securely piping clamps so unusual noise or vibration can be prevented.

Downloaded from www.Manualslib.com manuals search engine

6. Newly install vacuum tank and valve assembly with bracket to the hood ledge panel. See Figure AC-66.
7. Arrange vacuum hose piping. See Figure AC-54.
8. Remove relay bracket from the hood ledge panel. Newly install air conditioner relay (compressor relay) to relay bracket. See Figure AC-67.

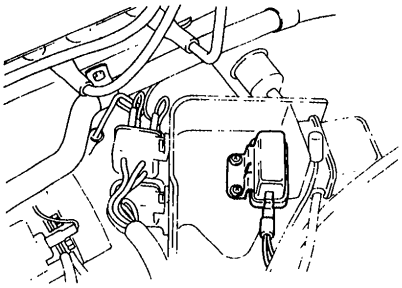

AC645
Fig. AC-67 Air conditioner relay (compressor relay)

Reinstall relay bracket.

9. Arrange wiring harness. See Figure AC-55.

VI. After completion of all the previous works, fill the system with refrigerant and check for the proper functioning as follows:

1. Pour in engine coolant and connect battery ground cable.
2. Evacuate system completely.
3. Charge the specified amount of refrigerant into system.

Refrigerant capacity:
0.6 to 0.9 kg (1.3 to 2.0 lb)

4. Conduct leak test and insure that there is no gas leak from connection.
5. Start up engine and check electric system and vacuum system in the air conditioner for their proper functioning, referring to "AIR CONDITIONER OPERATION CHART".
6. Install all the parts listed below. Then, conduct the performance test of air conditioner system to check for proper functioning of the system.

(1) Air cleaner.
(2) Air flow meter.
(3) Under cover.
(4) Engine hood
(5) Glove box
(6) Console box

7. Adjust F.I.C.D. stroke, referring to "Fast Idle Actuator".
8. Check ignition timing.
9. Check engine idle speed and "CO" percent at idle speed.
10. Check the height of front bumper and, if necessary, adjust. Refer to Section BF.
11. After completion of all the previous steps, conduct the followings:
(1) Attach caution label in place as illustrated.
(2) Attach kit number at the specified position.

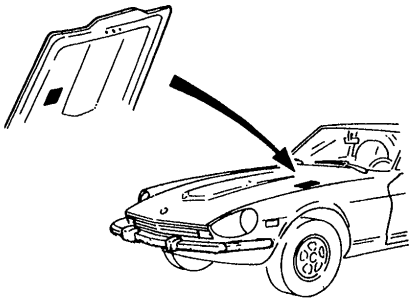

AC325
Fig. AC-68 Caution label

Downloaded from www.Manualslib.com manuals search engine

COMPRESSOR

CONTENTS

DESCRIPTION AC-64
COMPRESSOR CLUTCH AC-66
REMOVAL AC-66
INSPECTION AC-66
INSTALLATION AC-66
SHAFT SEAL AC-67
REMOVAL AC-67
INSPECTION AC-67
INSTALLATION AC-68
DISCHARGE VALVE AC-68
REMOVAL AC-68
INSPECTION AC-68
INSTALLATION AC-68
SIDE COVER AC-69
REMOVAL AC-69
INSPECTION AC-69
INSTALLATION AC-69
REAR END COVER AND REAR CYLINDER HEAD AC-69
DISASSEMBLY AC-69
INSPECTION AC-70
ASSEMBLY AC-70
REPLACEMENT OF CYLINDER AC-70
REMOVAL AC-70
INSTALLATION AC-71
SERVICE DATA AND SPECIFICATIONS AC-72
TROUBLE DIAGNOSES AND CORRECTIONS AC-73

DESCRIPTION

Model SWP123 is a swash plate type compressor. As with conventional crank type compressors, reciprocating pistons compress incoming gas. The principal difference between these two types of compressors lies in the way in which the piston is driven, by crankshaft rotation on the one hand and by swash plate rotation on the other. When the swash plate compressor is used in air conditioning system, the following advantages are obtained. tained.

1. The shape is cylindrical, facilitating installation.
2. Torque changes are minimal since a number of cylinders are used.
3. Complete mechanical balance is possible, limiting vibration and noise and allowing high-speed operation.
4. Discharge per unit of compressor volume is quite high, resulting in high cooling capacity and superb cooling characteristics.

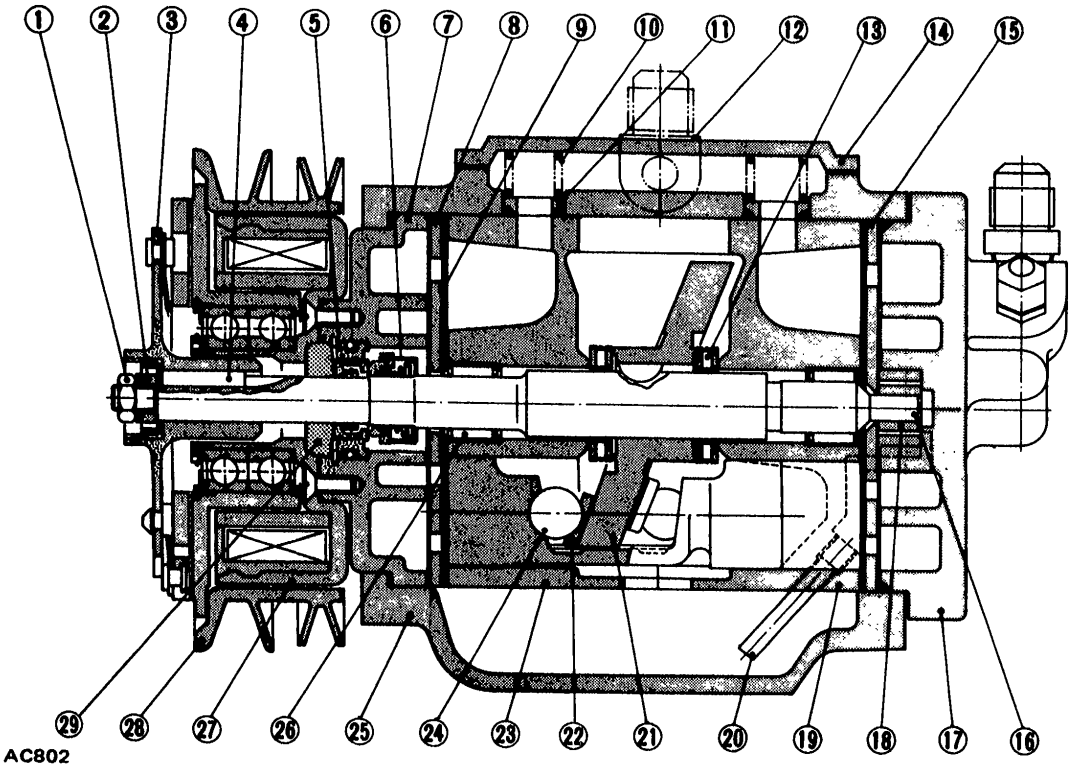

1 Shaft nut
2 Clutch hub nut
3 Clutch hub
4 Key
5 Shaft seal seat
6 Shaft seal
7 Front end cover
8 Front cylinder head
9 Suction valve plate
10 Silencer spring
11 Silencer piece
12 Discharge valve
13 Thrust bearing
14 Side cover
15 Rear cylinder head
16 Compressor shaft
17 Rear end cover
18 Oil pump
19 Rear cylinder
20 Oil pipe
21 Swash plate
22 Shoe disc
23 Front cylinder
24 Drive ball
25 Shell
26 Needle bearing
27 Clutch coil
28 Pulley and bearing assembly
29 Felt

Fig. AC-69 Sectional view

Downloaded from www.Manualslib.com manuals search engine

Downloaded from www.Manualslib.com manuals search engine

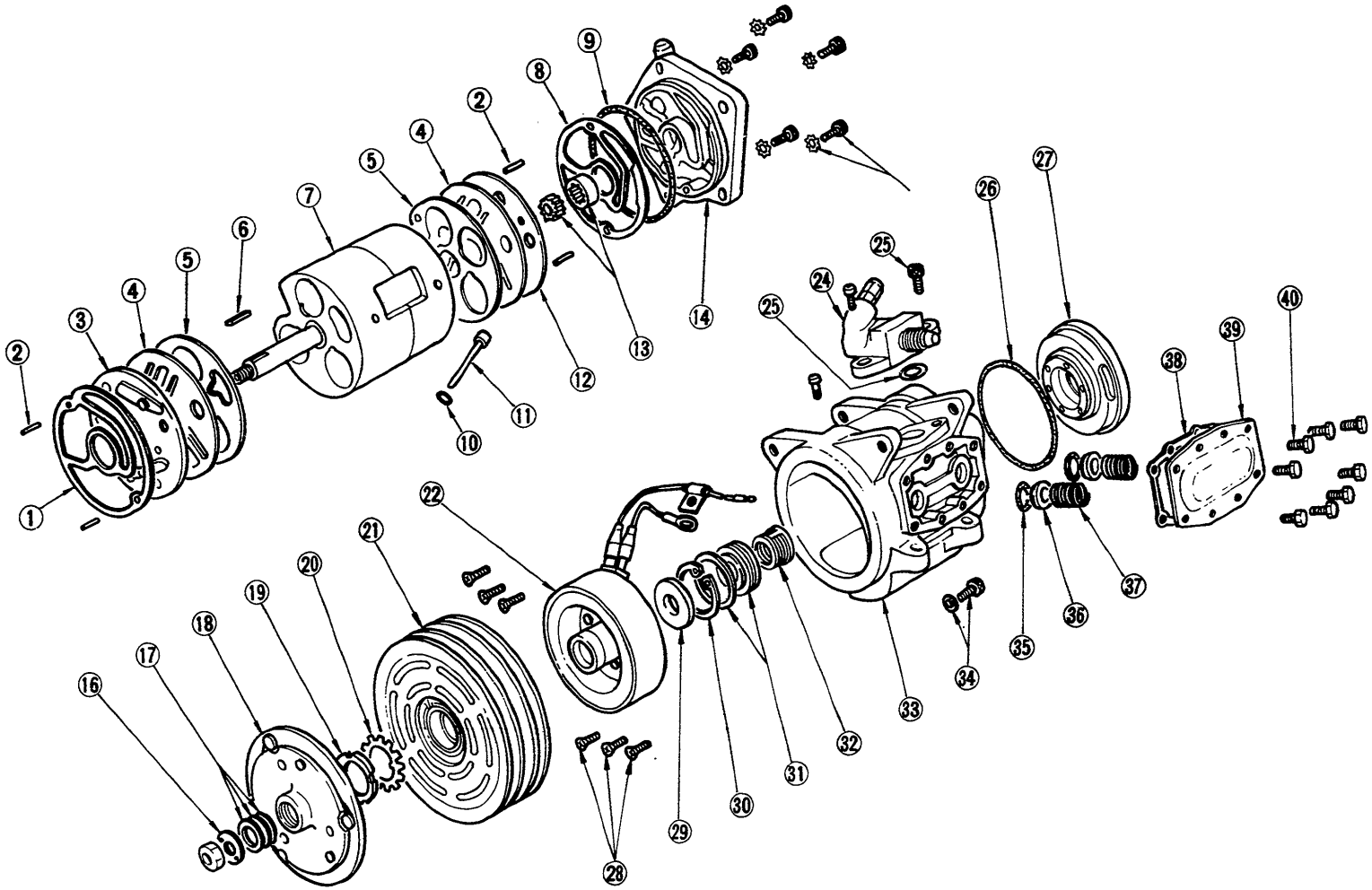

1 Gasket
2 Knock pin
3 Front cylinder head
4 Suction valve plate
5 Gasket
6 Key
7 Compressor cylinder assembly
8 Gasket
9 Rear end cover O-ring
10 Oil pipe O-ring
11 Oil pipe
12 Rear cylinder head
13 Gear pump assembly
14 Rear end cover
15 Rear end cover fixing bolt and washer
16 Hub nut
17 Spacer
18 Clutch hub
19 Lock nut
20 Lock washer
21 Pulley and bearing assembly
22 Coil assembly
23 Discharge valve O-ring
24 Discharge valve assembly
25 Discharge valve fixing bolt
26 Gasket
27 Front end cover
28 Coil mounting screw
29 Felt
30 Retainer ring
31 Shaft seal seat and O-ring
32 Shaft seal
33 Compressor shell
34 Drain plug and gasket
35 Silencer piece O-ring
36 Silencer piece
37 Silencer spring
38 Gasket
39 Side cover
40 Side cover fixing bolt

AC803

Fig. AC-70 Exploded view

COMPRESSOR CLUTCH

The most likely source of problem is clutch slippage. Factors are listed here. Exercise ample care.

1. Clearance between clutch hub and pulley should be 0.5 to 0.8 mm (0.020 to 0.031 in) at all peripheral points.
2. Make sure that there is no oil or dirt on friction surfaces of clutch disc (clutch hub) and pulley. Remove any oil or dirt with a dry rag.
3. Make sure that terminal voltage at magnetic coil is above 10.5V.

REMOVAL

1. Using Clutch Hub Wrench KV99412302, hold clutch hub. With suitable socket wrench, remove shaft nut from shaft.
2. Then, using Hub Nut Socket KV99412305, remove clutch hub nut. Remove spacers.

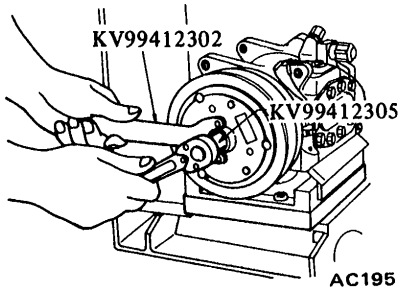

Fig. AC-71 Removing clutch hub nut

3. Using Clutch Hub Puller KV99412306, remove clutch hub. Thread tool into the bore of clutch hub, hold tool with wrench, and then thread in center bolt.

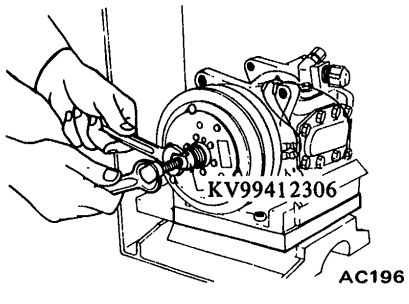

Fig. AC-72 Removing clutch hub

4. With an ordinary screwdriver, flatten lock washer tab.

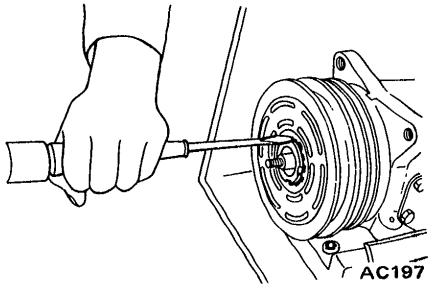

Fig. AC-73 Flattening lock washer tab

5. Using Lock Nut Socket KV99412310, loosen lock nut. Remove lock nut and lock washer.

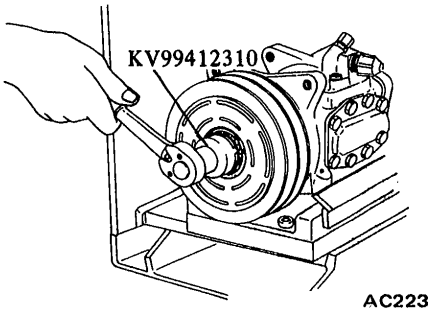

Fig. AC-74 Removing lock nut

6. Remove pulley and bearing assembly. When the assembly can not be removed by hand, use a puller, Puller Adapter KV99412313 and Puller Pilot KV99412312.

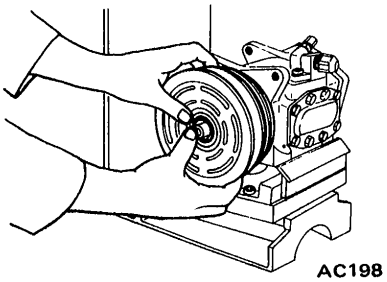

Fig. AC-75 Removing pulley

7. Using an impact tool, loosen six coil mounting screws. Use of the impact tool is advisable as screws have been calked.

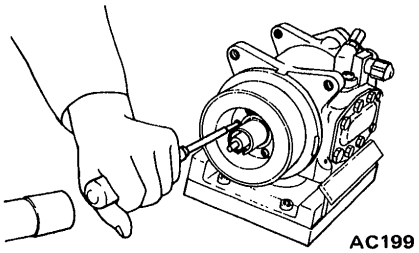

Fig. AC-76 Loosening coil mounting screw

8. Remove coil mounting screws and separate coil assembly.

INSPECTION

1. Check the friction surfaces of the clutch for damage due to excessive heat, or excessive grooving due to slippage. If necessary, replace coil, pulley and bearing assembly, and clutch hub as a set.
2. Oil or dirt on the friction surfaces should be cleaned with a suitable solvent and a dry rag.
3. Check coil for shorted or opened binding leads.
4. When replacing compressor clutch assembly, do not forget break-in operation, accomplished by engaging and disengaging the clutch some thirty times. Break-in operation raises the level of transmitted torque.

INSTALLATION

1. Using a Phillips screwdriver, tighten coil assembly mounting screws in an alternating pattern. After screws have been firmly tightened, punch-lock each at one location to prevent loosening. Correct tightening torque is 0.28 to 0.35 kg-m (2.0 to 2.5 ft-lb).

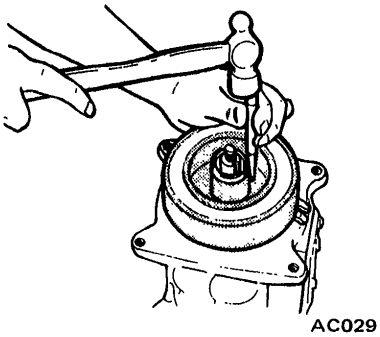

Fig. AC-77 Punch-locking

2. Using a plastic mallet, drive pulley and bearing assembly onto the neck of the installed coil assembly. Turn the pulley, making sure that there is no noise and that rotation is free. Also make sure that there is no pulley play.
3. Position lock washer and lock nut in place. Using Lock Nut Socket KV99412310, tighten lock nut firmly. With lock washer tab and lock nut cutouts matched, bend the tab with the screwdriver. Proceed carefully to avoid bearing cage damage. Correct

Downloaded from www.Manualslib.com manuals search engine

tightening torque is 2.5 to 2.8 kg-m (18.1 to 20.2 ft-lb).

4. Install clutch hub onto shaft with key in place. Select a suitable adjusting spacer to obtain specified clearance between pulley and clutch hub.

Apply a coat of locking agent to hub nut, and tighten nut to 1.8 to 2.1 kg-m (13 to 15 ft-lb).

5. Apply a coat of locking agent to shaft nut, and tighten nut to 1.6 to 1.7 kg-m (11.5 to 12.3 ft-lb).

6. Using a thickness gauge, measure the clutch hub-to-pulley gap. If the gap is 0.5 to 0.8 mm (0.020 to 0.031 in), adjustment is correct.

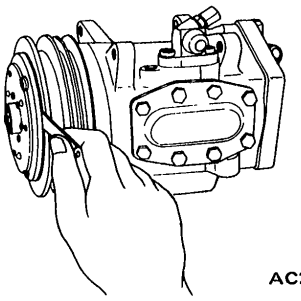

Fig. AC-78 Checking clutch hub-to-pulley clearance

Note: If the specified gap is not obtained, replace adjusting spacer and readjust.

SHAFT SEAL

To prevent refrigerant leakage at the cylinder shaft exit point, tightness must be maintained at friction surfaces between shaft seal and shaft seal seat and at contact surfaces between shaft seal seat and front end cover. Use extreme care in removing or assembling seals not to damage the sealing surfaces. Discard the old seals. Do not re-use them.

REMOVAL

The system must be discharged beforehand. When compressor is removed, do not turn it on its side or upside down without first draining the oil. Remove dirt from the exterior. Clean the workbench to be used, tools and your hands.

1. Remove drain plug, thereby draining the oil.
2. Remove clutch hub, pulley and bearing assembly, and coil assembly. Proceed according to information under "Compressor Clutch".
3. Using snap ring pliers, compress and remove retainer ring.

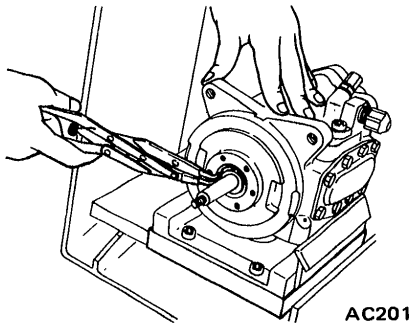

Fig. AC-79 Removing retainer ring

4. Wrap shaft end with rag. Apply refrigerant pressure of 2 to 5 kg/cm^2 through low pressure line of compressor until shaft seal seat is received at rag.

Notes:

a. Do not use air to prevent entry of moisture, dust, etc.

b. If shaft seal seat is not plucked out, install it again and apply refrigerant pressure.

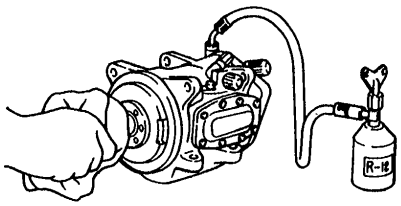

Fig. AC-80 Removing shaft seal seat

5. Insert Shaft Seal Remover & Installer KV99412321 through the open end of front end cover. Depress the carbon seal and hook the tool at the case projection of shaft seal. Slowly pull out the tool, thereby removing shaft seal.

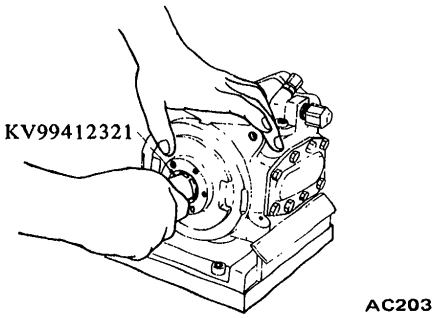

Fig. AC-81 Inserting special tool

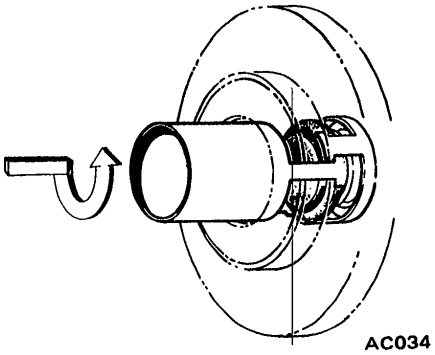

Fig. AC-82 Removing shaft seal

INSPECTION

1. Check the carbon seal surface of shaft seal for damage.

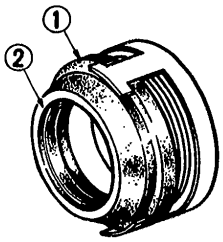

1 Carbon seal
2 Contact surface
AC035

Fig. AC-83 Checking shaft seal

2. Check mating surfaces of O-ring and shaft seal seat for scratches or damage. Make sure that oil seal inside shaft seal seat is properly coated with grease.

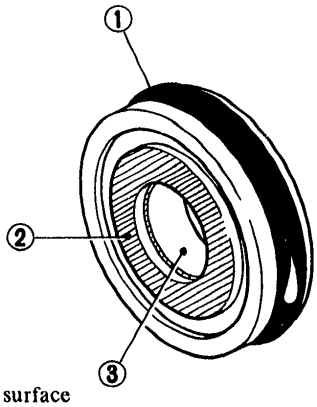

1 O-ring
2 Contact surface
3 Oil seal
AC805

Fig. AC-84 Checking shaft seal seat

Notes:

a. Do not re-use shaft seal seat and shaft seal.

b. In placing a new seal on the workbench, make sure that the contact surface faces upward. Take necessary steps to avoid damage.

Downloaded from www.Manualslib.com manuals search engine

INSTALLATION

1. Make sure that the shaft seal contact surface is free of dirt and amply lubricated with oil.
2. Cap Shaft Seal Pilot KV99412322 to the top end of compressor shaft.
3. Using Shaft Seal Remover & Installer KV99412321, insert shaft seal with shaft seal case and shaft cutout aligned.

Apply force to turn the seal somewhat to the left and right. Insure that shaft seal seats properly in the shaft cutout.

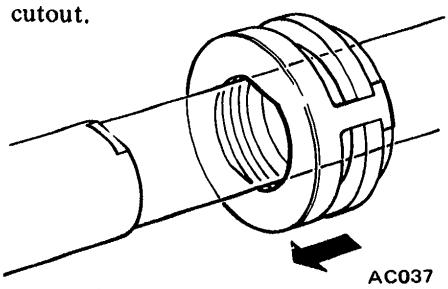

Fig. AC-85 Inserting shaft seal

4. Fit O-ring to the outside groove of shaft seal seat, making sure that it seats properly.
5. Apply a generous coat of oil to contact surface and shaft seal seat so that seat easily slides on inner side of front end cover.

Also apply a thin coat of grease or oil to shaft. Push shaft seal seat into front end cover until it bottoms up to land.

6. Compress retainer ring with pliers, and fit it into recess on front end cover. Wipe shaft clean of excess grease or oil.
7. Then, check for gas leakage as follows:

(1) Plug high- and low-pressure joints on compressor with blind caps.
(2) Connect charging hoses in the lines between manifold gauge and high- and low-pressure service valves.

Connect refrigerant can to the middle hose of manifold gauge.

(3) Open valve of can tap, and charge refrigerant. Loosen oil plug on compressor to purge air out of compressor.
(4) Install Shaft Handle Socket KV99412329 to the shaft of compressor, and turn the shaft 5 to 6 turns in the clockwise direction. Then, confirm that pressure does not decrease on the low pressure gauge. If the gauge indicates a pressure decrease, there is a leak. Conduct a leak test. Under such a condition, remove and then install parts again.

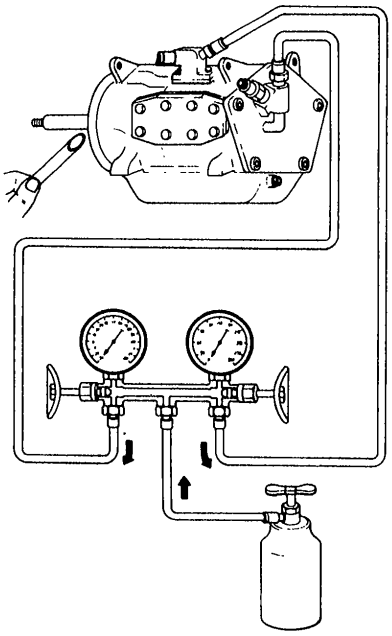

Fig. AC-86 Checking for gas leaks

(5) Install compressor clutch assembly according to information under "Installation" of "Compressor Clutch".
(6) Fill with oil.

DISCHARGE VALVE

REMOVAL

1. Using Allen Socket KV99412324, remove two hex. socket head bolts.

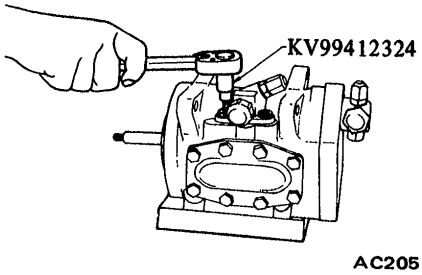

Fig. AC-87 Removing bolts

2. Remove discharge valve.
3. Discard the old O-ring.

INSPECTION

1. Check for scratched seating surface of discharge valve and of shell. Do not re-use the old O-ring.
2. Replace discharge valve which is scratched.
3. If a scratch is found on the groove of shell O-ring, replace shell.

INSTALLATION

1. Apply a coating of compressor oil to the groove of discharge valve and O-ring, and install these parts in their proper positions on shell.
2. Using Allen Socket KV99412324, secure discharge valve to shell with two hex. socket head bolts.

Tightening torque:
1.8 to 2.0 kg-m
(13 to 14.5 ft-lb)

3. Conduct a gas leak test by referring to the topic "Installation" of "Shaft Seal".

Downloaded from www.Manualslib.com manuals search engine

SIDE COVER

REMOVAL

Discharge the system before beginning work. Work may be carried out with compressor mounted. If compressor is to be removed, first drain oil. Unless oil has been drained, do not turn compressor on its side or upside down.

1. Drain oil.
2. Loosen and remove eight side cover mounting bolts in an alternate pattern as shown in Figure AC-88. Note that two silencer springs inside the cover will force up side cover.

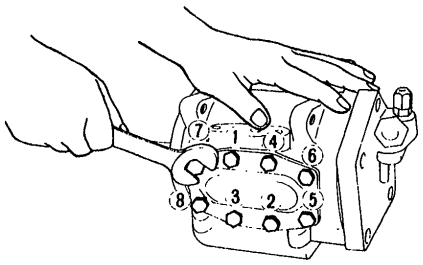

AC206

Fig. AC-88 Loosening cover mounting bolt

3. Remove side cover and side cover gasket. Discard the gasket.
4. Remove silencer springs, pieces, and O-rings. Do not damage O-ring surface of silencer piece during this process. Discard used O-rings.

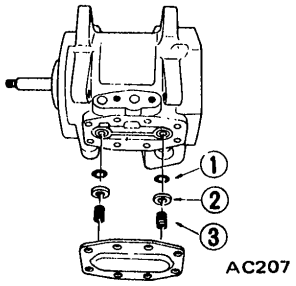

AC207

1 O-ring
2 Piece
3 Silencer spring

Fig. AC-89 Exploded view of silencer spring, pieces and O-ring

INSPECTION

1. Make sure that side cover gasket surface and shell gasket surface are not damaged.
2. Make sure that silencer pieces and shell contact surfaces in contact with O-ring are not damaged.
3. Do not reuse old gasket and O-rings.

INSTALLATION

1. Place the mounting surface of side cover upward.
2. Make sure that holes of cylinder and shell are aligned and install O-rings.
3. Coat O-ring and the area around shell hole with an ample amount of oil. Using O-ring Installer KV99412328, install O-ring into the shell hole. Then install silencer piece with Silencer Piece Installer KV99412327.
4. Coat the gasket surface of shell with oil and position gasket and side cover.
5. Hold side cover in place by hand and thread in eight mounting bolts. Tighten these bolts evenly in an alternating pattern as shown in Figure AC-88. Tightening torque is 1.8 to 2.0 kg-m (13 to 14.5 ft-lb).
6. Fill with oil.
7. Upon completion of the above operations, conduct a gas leak test by referring to the item "Installation" under the topic "Shaft Seal".

REAR END COVER AND REAR CYLINDER HEAD

Before beginning work, remove dirt from the exterior of the detached compressor. Clean the workbench to be used, tools, and your hands.

DISASSEMBLY

1. Drain oil.
2. Using Allen Socket KV99412330, remove five rear end cover mounting bolts. Starting at the top, loosen all bolts one turn in an alternating pattern. Then remove bolts in turn.

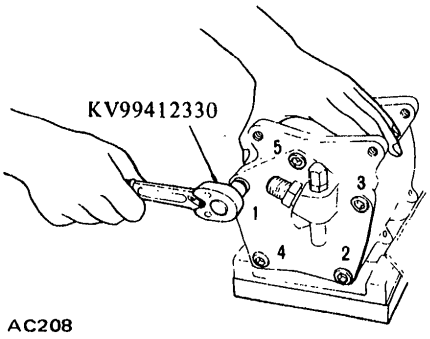

AC208

Fig. AC-90 Loosening bolts

3. Grasp rear end cover and carefully separate it from compressor. Tap the flange lightly and alternately as required with a plastic mallet. Do not tap on the compressor shaft.

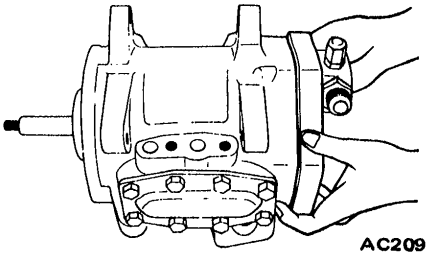

AC209

Fig. AC-91 Removing rear end cover

4. Remove pump gear. Do not allow pump gear to damage the surface.

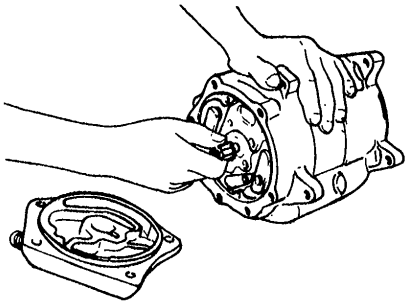

AC042

Fig. AC-92 Removing pump gear

5. Remove O-ring, gasket and two pins. Discard the O-ring and gasket.
6. Remove rear cylinder head, suction valve plate and gasket. Discard the gasket. Carefully remove suction valve plate, avoiding deformation.
7. When removal proves difficult, use Cylinder Head Remover KV99412315. Insert this tool into hole in cylinder head as shown in Figure AC-93. With the nut in firm contact with the back side of cylinder head, tighten the bolt slowly to break loose the head.

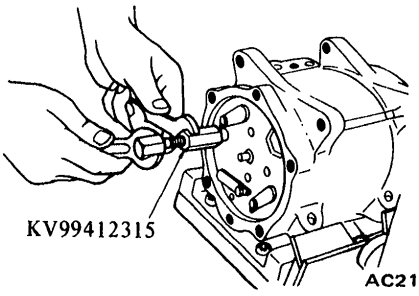

AC210

Fig. AC-93 Removing rear cylinder head

Downloaded from www.Manualslib.com manuals search engine

INSPECTION

1. Do not reuse old gasket and O-ring.
2. Make sure that the gasket contact surface is free of damage.
3. If replacement of rear end cover connector and check valve is necessary, replace rear end cover with a new one.
4. Check suction valve plate and cylinder head for broken valves.
5. Check pump gear for wear and damage.

ASSEMBLY

Using clean oil, remove dirt and other matter from end cover, cylinder head and suction valve plate. Clean the workbench.

1. Using suitable blocks, position compressor with the front face downward and the rear upward.
2. Insert two pins in the rear of cylinder.
3. Coat both surfaces of cylinder head gasket with oil and align gasket with cylinder.
4. Install suction valve plate, making sure that the three valves properly align with cylinders and gasket cutouts.

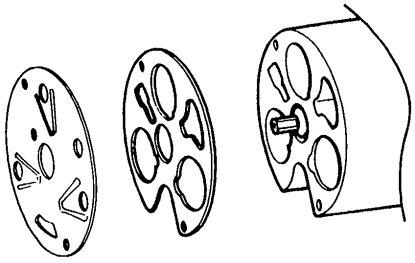

AC224

Fig. AC-94 Cutouts of cylinder and gasket

5. Install cylinder head, gasket, and O-ring in the order listed. Coat gasket and O-ring beforehand with an ample amount of oil.

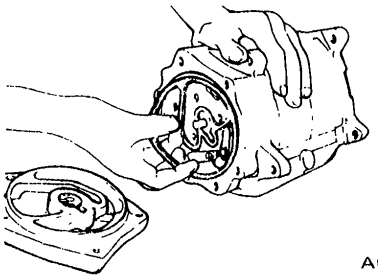

AC045

Fig. AC-95 Installing gasket

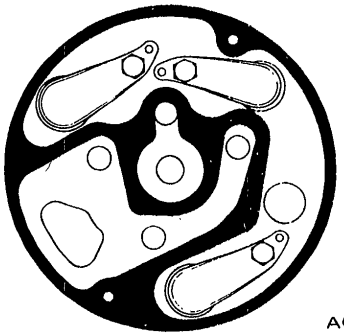

AC046

Fig. AC-96 Cylinder head and gasket

6. Fit pump gear to rear end cover.
7. Carefully fit rear end cover to the rear of compressor.

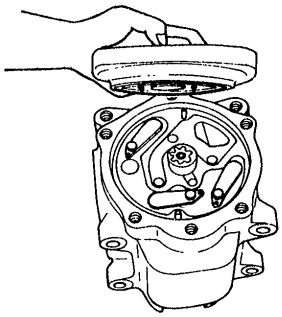

AC211

Fig. AC-97 Installing rear end cover

8. Using Allen Socket KV99412330, tighten up five bolts in an alternating pattern, starting at the top. Do not forget lock washers. Then, using torque wrench, tighten these bolts to 3.0 to 3.5 kg-m (22 to 26 ft-lb) in the same sequence.
9. Fill with oil.
10. Upon completion of the above operation, conduct a leak test by referring to the topic under "Shaft Seal".

REPLACEMENT OF CYLINDER

Before proceeding, remove all dirt and other matter from the detached compressor. Clean the workbench, tools, and your hands. Lay out parts in the order in which they were removed, in space set aside for this purpose. This procedure facilitates reassembly.

REMOVAL

1. Drain oil.
2. Remove compressor clutch assembly. Refer to "Compressor Clutch".
3. Using snap ring pliers, remove shaft seal retainer ring. Then remove shaft seal seat. Refer to "Shaft Seal". Removal of shaft seal is not absolutely necessary. It may be removed when cylinder assembly is removed from front end cover. In fact, this approach facilitates work.
4. Remove side cover. Refer to "Side Cover".
5. Remove rear end cover. Refer to "Rear End Cover and Rear Cylinder Head". Remove O-ring, gasket, two pins, cylinder head, suction valve plate, and gasket in the order listed. This exposes the rear part of cylinder.
6. Using long nose pliers or other suitable tool, pull out oil pipe. Proceed carefully as oil pipe is easily bent. **UNLESS OIL PIPE HAS BEEN REMOVED, DO NOT ATTEMPT THE FOLLOWING STEPS.**

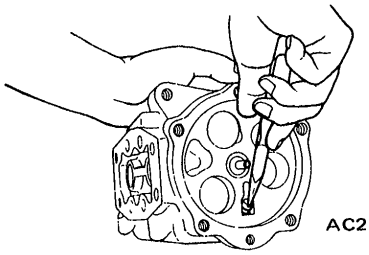

AC212

Fig. AC-98 Pulling out oil pipe

7. With the front facing downward support compressor shell. Using a plastic mallet, tap at the rear end of the shell flange, driving shell straight downward. Discard front end cover gasket.

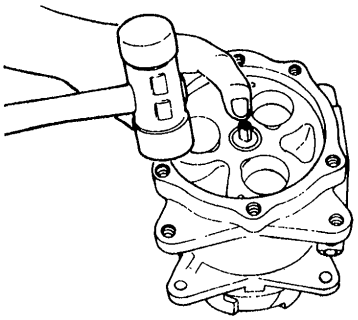

AC213

Fig. AC-99 Removing shell

8. Detach front end cover from cylinder assembly. Using a plastic mallet, drive end cover upward. Refrain from excessive force to avoid cover damage.

Downloaded from www.Manualslib.com manuals search engine

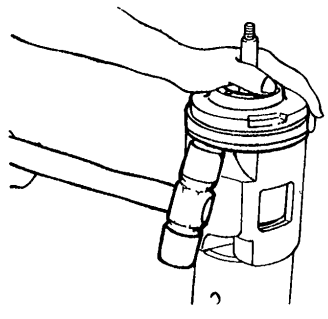

Fig. AC-100 Removing front end cover

9. Remove shaft seal from the shaft.
10. Remove two pins, gasket, cylinder head, suction valve plate, and gasket. In removing two pins, proceed carefully to avoid cylinder head damage. Do not deform suction valve plate in removing suction valve plate. Discard old gasket.

INSTALLATION

1. Using suitable blocks, face cylinder assembly upward. Insert two pins. Position gasket and suction valve plate in the order listed while making sure that three valves of suction valve plate are aligned with the cylinder and gasket cutouts. Coat gasket with oil prior to assembly. Gaskets and suction valve plates are the same for front and rear. The cylinder head with the smaller numbers of holes goes to the front. Do not mix front and rear parts.

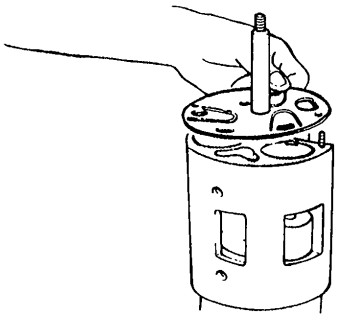

Fig. AC-101 Installing suction valve plate

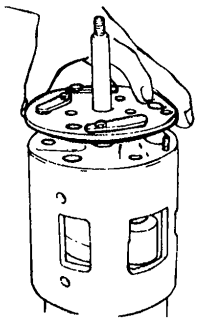

Fig. AC-102 Installing cylinder head

2. Align shaft seal with the shaft cutaway. Firmly seat shaft seal at the shaft land. Attempt to turn shaft seal to the left and right, confirming that it is seated properly.
3. Place gasket on cylinder head and install front end cover. Coat gasket with oil beforehand. Gasket differs for the front and rear. Make sure that the correct gasket is used. After completing this work, gasket protruding from front end cover and cylinder head should be adjusted by hand.

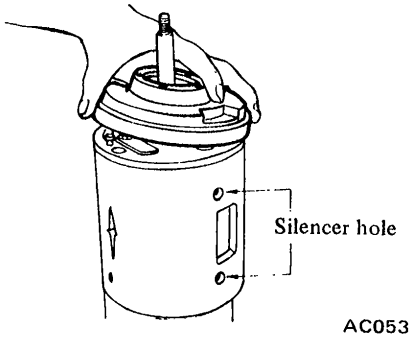

Fig. AC-103 Installing front end cover

4. Fit gasket to front end cover. Then bring the shell into place over the cylinder assembly. At this time, make sure that the two holes of side cover and the cylinder holes are matched. Note that later adjustment will no longer be possible, as inside and outside diameters of these are not perfectly round. Note that moving the shell up and down may cause the gasket to slip out of place.

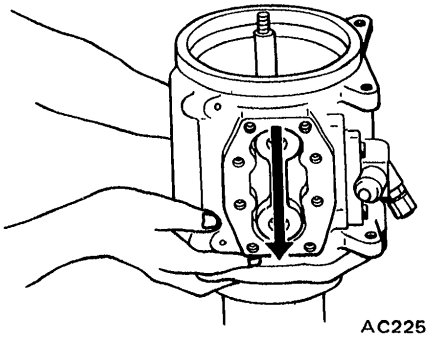

Fig. AC-104 Installing shell

5. Turn over the assembled shell and cylinder assembly, that is, face the front downward.
6. Coat oil pipe and O-ring with an ample amount of oil. Insert oil pipe at the rear of the cylinder. After making sure that the hole lines are matched as specified in step (4), continue with step (6) work.

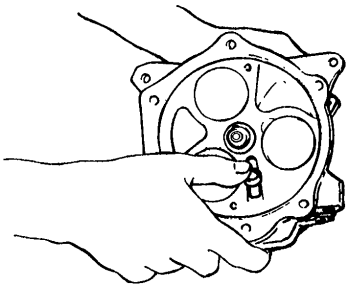

Fig. AC-105 Installing oil pipe

7. Continue with work up to installation of rear end cover, according to "Installation" under "Rear End Cover and Rear Cylinder Head".
8. Continue with work up to installation of side cover, according to "Installation" under "Side Cover".
9. Install shaft seal seat according to instructions in "Installation" under "Shaft Seal".
10. Install and adjust compressor clutch according to instructions in "Installation" under "Compressor Clutch".
11. Charge compressor oil 270 g (9.5 oz), and tighten oil plug with copper gasket in place.

Tightening torque:
1.8 to 2.0 kg-m
(13 to 15 ft-lb)

12. Conduct a leak test by referring to the topic under "Shaft Seal".

Downloaded from www.Manualslib.com manuals search engine

SERVICE DATA AND SPECIFICATIONS

Specifications

Type		Swash plate
Model		SWP123
Displacement	cc (cu in)	123 (7.5)
Cylinder		
bore x stroke	mm (in)	32 x 25.4 (1.26 x 1)
Direction of rotation		Clockwise (viewed from drive end)
Lubricating oil type	cc (cu in)	SUNISO 5GS 270 (16.48)
Refrigerant		R-12
Weight with compressor clutch	approx. kg (lb)	11.6 (25.5)

Tightening torque

	kg-m (ft-lb)
Rear end cover bolt	3.0 to 3.5 (22 to 26)
Side cover bolt	1.8 to 2.0 (13 to 15)
Coil screw	0.28 to 0.35 (2 to 3)
Clutch hub nut	1.8 to 2.1 (13 to 15)
Shaft nut	1.6 to 1.7 (11 to 12)
Oil plug	1.8 to 2.0 (13 to 15)
Discharge valve assembly bolt	1.8 to 2.0 (13 to 15)

Adjustment specifications

Clutch hub to pulley clearance	mm (in)	0.5 to 0.8 (0.020 to 0.031)
Shaft end play	mm (in)	0 to 0.02 (0 to 0.0008)

Downloaded from www.Manualslib.com manuals search engine

TROUBLE DIAGNOSES AND CORRECTIONS

Condition	Probable cause	Corrective action
Noise from compressor	Broken delivery valve.	Replace cylinder head.
	Broken suction valve.	Replace suction valve plate.
	Worn shoe disc.	Replace cylinder assembly.
	Oil level high.	Adjust oil level.
	Broken radial bearing.	Replace cylinder assembly.
	Broken thrust bearing.	Replace cylinder assembly.
	Contact between pulley and clutch hub.	Adjust clearance.
	Loose bracket bolt, cracked or broken bracket.	Tighten bolt or replace bracket.
Rough rotation. (can be sensed by hand)		
Roughness.	Broken radial bearing.	Replace cylinder assembly.
Seizure	Worn shaft, bearing fault.	Replace cylinder assembly.
Erratic operation	Lack of lubrication.	Check and add oil or replace cylinder assembly.
Compressor locked.	Broken piston.	Replace cylinder assembly.
	Burned shoe disc.	Replace cylinder assembly.
Hot compressor.	Ruptured oil pipe O-ring.	Replace O-ring.
	Broken delivery valve.	Replace cylinder head.
	Ruptured gasket.	Replace.
Compressor gas leakage.	Gas leaking from magnetic clutch mounting.	Replace shaft seal and shaft seal seat.
	Gas leaking from check valve.	Replace discharge valve or rear end cover.
	Gas leaking between end cover (R) and shell.	Replace O-ring.
	Gas leaking between end cover (F) and shell.	Replace front end cover gasket.
Compressor clutch does not operate.	Open coil or leads.	Replace compressor clutch or leads.
	Poor terminal contact.	Clean dirt from terminals, etc.

Downloaded from www.Manualslib.com manuals search engine

SPECIAL SERVICE TOOLS

No.	Tool number & tool name	Description	For use on	Reference page or Figure No.
1.	KV99412302 Clutch hub wrench	This tool is used to hold clutch hub. 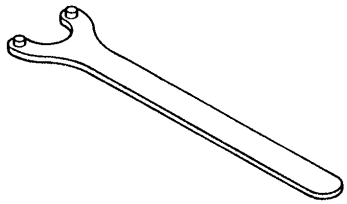 SE353	S30 610 710 B210	Fig. AC-71
2.	KV99412305 Hub nut socket	This tool is used to remove clutch hub nut. 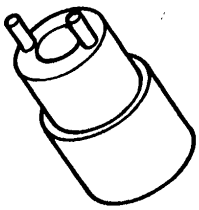 SE354	S30 610 710 B210	Fig. AC-71
3.	KV99412306 Clutch hub puller	This tool is used to remove clutch hub. 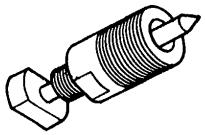 SE355	S30 610 710 B210	Fig. AC-72
4.	KV99412310 Lock nut socket	This tool is used to loosen lock nut. 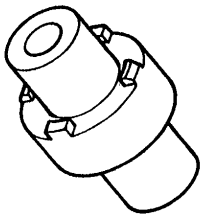 SE356	S30 610 710 B210	Fig. AC-74

Downloaded from www.Manualslib.com manuals search engine

No.	Tool number & tool name	Description	For use on	Reference page or Figure No.
5.	KV99412313 Puller adapter	These tools are used when removing pulley and bearing assembly. 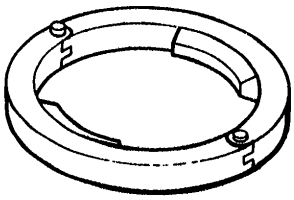 SE357	S30 610 710 B210	Page AC-66
6.	KV99412312 Puller pilot	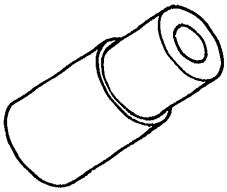 SE358	S30 610 710 B210	
7.	KV99412321 Shaft seal remover and installer	This tool is used to remove or to install shaft seal. 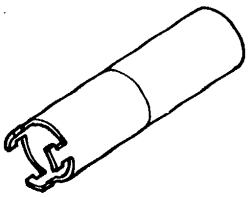 SE360	S30 610 710 B210	Fig. AC-81
8.	KV99412322 Shaft seal pilot	This tool is used when installing shaft seal so as not to damage it. 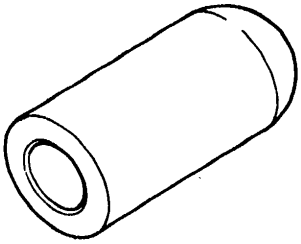 SE361	S30 610 710 B210	Page AC-68

Downloaded from www.Manualslib.com manuals search engine

No.	Tool number & tool name	Description Unit: mm (in)	For use on	Reference page or Figure No.
9.	KV99412329 Shaft handle socket	This tool is used to turn the shaft of compressor. 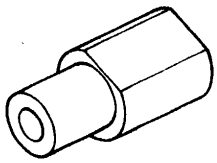 SE362	S30 610 710 B210	Page AC-68
10.	KV99412324 Allen socket	This tool is used to remove discharge valve. 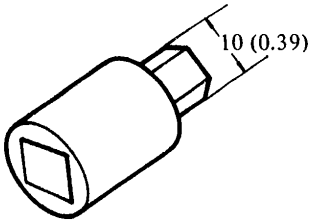 SE363	S30 610 710 B210	Fig. AC-87
11.	KV99412327 Silencer piece installer	This tool is used to install silencer piece. 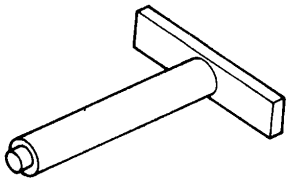 SE364	S30 610 710 B210	Page AC-69
12.	KV99412328 O-ring installer	This tool is used to install silencer piece O-ring. 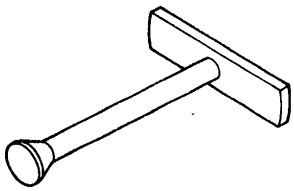 SE365	S30 610 710 B210	Page AC-69

Downloaded from www.Manualslib.com manuals search engine

No.	Tool number & tool name	Description Unit: mm (in)	For use on	Reference page or Figure No.
13.	KV99412330 Allen socket	This tool is used to remove rear end cover. 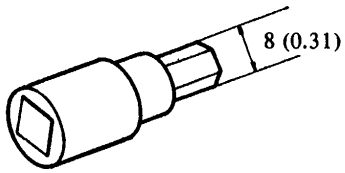 SE366	S30 610 710 B210	Fig. AC-90
14.	KV99412315 Cylinder head remover	This tool is used to remove cylinder head. 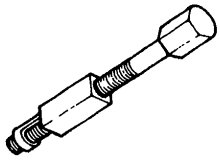 SE367	S30 610 710 B210	Fig. AC-93

Downloaded from www.Manualslib.com manuals search engine

SERVICE MANUAL

DATSUN 280Z
MODEL S30 SERIES

NISSAN

NISSAN MOTOR CO., LTD.
TOKYO, JAPAN

SECTION SE

SERVICE EQUIPMENT

SERVICE EQUIPMENT ..... SE- 2

SE

Downloaded from www.Manualslib.com manuals search engine

SERVICE EQUIPMENT

GENERAL DESCRIPTION

GENERAL SPECIFICATIONS

Special Tools play very important role in the maintenance of cars. These are essential to the safe, accurate and speedy servicing.

The working times listed in the column under FLAT RATE TIME in FLAT RATE SCHEDULE are based on the use of Special Tools. The identification code of maintenance tools is made up of 2 alphabetical letters and 8-digital figures.

The heading two letters roughly classify tools or equipment as:

ST00000000:	Special Tool
KV00000000:	Special Tool
EM00000000:	Engine Overhauling Machine
GG00000000:	General Gauge
HT00000000:	Hand Tool

CLASSIFICATION OF SPECIAL TOOLS

	Classification	
	Important	General
I. Inspection and minor repairs	1	4
II. General disassembly and assembly	2	5
III. Special disassembly and assembly	3	6

A. Important
- a. Exclusive with no alternative
- b. Parts likely will be damaged if repaired without special tool.
- c. Gauges

B. General
To facilitate servicing

I. Inspection and minor repairs
- a. Inspection and maintenance
- b. Unit replacement
- c. Minor unit disassembly

II. General disassembly and assembly
General disassembly such as engine, transmission and differential

III. Special disassembly and assembly
- a. Disassembly of exclusive parts such as automatic transmission and electrical accessories
- b. Special work such as boring and welding
- c. Work very rarely required.

SPECIAL TOOL SETS (See attached tool list)

The special tool sets are classified into two major categories:

SET '77 S30 NA KV00101800

The set '77 S30 NA KV00101800 is available for new and other dealers who must go through initial preparation.

SET 3N71B KV00101000

This set is designed for use on the 3N71B automatic transmission. It consists of the same service tools as those previously available separately.

Downloaded from www.Manualslib.com manuals search engine

TOOL LIST

1. ENGINE

No.	Tool Number	Tool Name	Newly added	Class	Reference
	ENGINE				
	ST19320000	Oil filter wrench		1	All
	ST05340001	Engine attachment		5	L28
	ST0501S000 ST05011000 ST05012000	Engine stand assembly Engine stand Base		5	All
	ST16540000	Puller crank pulley		2	L28
	ST17420001	Chain stopper		2	All L-Series
	ST10120000	Cylinder head bolt wrench		2	All L-Series
	KV101041S0 KV10104110 ST16512001 ST16701001	Crankshaft main bearing cap puller Crankshaft main bearing puller Adapter (For L-Series) Adapter		2	All L-Series
	ST13030001	Piston pin press stand		2	All L-Series
	ST12070000	Valve lifter		5	All
	KV101039S0 ST11081000 ST11032000 ST11320000	Valve guide reamer set Reamer [12.2 mm (0.480 in) dia.] Reamer [8.0 mm (0.315 in) dia.] Drift		3	All
	ST11650001	Cutter set valve seat		3	All L-Series
	ST16610001	Pilot bushing puller		3	All L-Series
	ST15310000	Crankshaft rear oil seal drift		2	All L-Series
	EM03470000	Piston ring compressor		2	All
	ST10640001	Pivot adjuster		1	All L-Series
	ST20660000	Clutch aligning bar		2	S30

Mark X: Available

Downloaded from www.Manualslib.com manuals search engine

2. CHASSIS AND BODY TOOL

No.	Tool Number	Tool Name	Set '77 S30 NA	Newly added	Class	Reference
1.	CLUTCH					
	ST20050100	Distance piece	X		4	B210, 610, 710, S30, 620
	ST20050010	Base plate	X		4	B210, 610, 710, S30, 620
	ST20050051	Set bolt	X		4	B210, 610, 710, S30, 620
	ST20660000	Clutch aligning bar	X		2	610, 710, S30, 620
	ST20050240	Diaphragm adjust wrench	X		4	B210, 610, 710, S30, 620
	ST16610001	Pilot bushing puller	X		4	610, 710, S30, 620
	GG94310000	Flare nut torque wrench	X		2	All
2.	MANUAL TRANSMISSION					
	ST23540000	Fork rod pin punch	X		2	All
	ST22360002	Bearing drift	X		2	F4W71B, FS5W71B, FS5W63A
	ST23800000	Transmission adapter	X		2	F4W71B, FS5W71B, F4W63L
	ST23810001	Setting plate adapter	X		2	F4W71B, FS5W71B
	ST22520000	Wrench [38 mm (1.50 in)]	X		2	F4W71B, FS5W71B, FS5W63A
	ST23860000	Counter gear drift	X		2	F4W71B, FS5W71B
	KV31100400	Transmission press stand	X		2	F4W71B, FS5W71B
	ST30031000	Bearing puller			2	All except F4W60A
	KV32101330	Bearing puller	X	X	2	FS5W71B

Mark X: Available

Downloaded from www.Manualslib.com manuals search engine

No.	Tool Number	Tool Name	Set '77 S30 NA	Newly added	Class	Reference
3	DIFFERENTIAL CARRIER					
	KV38100800	Gear carrier attachment	X		5	R160, R180, R200
	KV31100300	Solid punch	X		2	All except H150
	ST30611000	Drive pinion outer race drift bar	X		2	All
	ST30701000	Drive pinion outer race drift adapter	X		2	Front: H150, H165B, R160, R180 Rear: H150
	ST30613000	Drive pinion outer race drift adapter	X		2	Front: H190, R200 Rear: H165B, R160
	ST30621000	Drive pinion outer race drift adapter	X		2	Rear: H190, R180, R200 Side: R160, R180
	ST3090S000 ST30031000 ST30901000	Drive pinion rear bearing inner race puller set Puller Base	X		2	H190, R180, R200
	ST3127S000 GG91030000 HT62940000 HT62900000	Preload gauge Torque wrench Socket adapter Socket adapter	X		2	All
	ST31530000	Drive pinion flange wrench	X		2	All
	ST3306S001 ST33051001 ST33061000	Diff. side bearing puller set Body Adapter	X		2	R160, R180, R200, H190
	ST33290001	Puller	X		5	R180, R160
	ST3185S000 ST31851000 ST31852000 ST31211000 ST31212000 ST31214000	Drive pinion setting gauge assembly Spacer Stopper Height gauge Dummy shaft Collar	X	X	2	R180

Mark X: Available

Downloaded from www.Manualslib.com manuals search engine

No.	Tool Number	Tool Name	Set '77 S30 NA	Newly added	Class	Reference
	KV381001S0	Drive pinion setting gauge set	X		2	R200
	KV38100110	Dummy shaft				
	KV38100120	Height gauge				
	KV38100130	Collar				
	KV38100140	Stopper				
	ST33270000	Gear carrier oil seal drift	X		2	R180, R160
	KV38100200	Gear carrier side oil seal drift	X		2	R200
	ST3323[illegible]000	Diff. side bearing drift	X		2	R180, H190, R160
	KV38100300	Diff. side bearing drift	X		2	R200
	ST30650001	Pilot bearing drift	X		2	R180, R160
	KV38100401	Pilot bearing drift	X		2	R200
	ST30720000	Gear carrier front oil seal drift	X		2	R180, R160
	KV38100500	Gear carrier front oil seal drift	X		2	R200
	KV38100600	Side bearing spacer drift	X		2	R200
	ST33720000	Gear carrier side retainer guide	X		5	R180, R160
	ST32501000	Master gauge	X		2	All
	KV38101900	Master gauge	X		2	R180, H190, R160
	KV38102000	Master gauge	X		2	R200
	HT72400000	Slide hammer	X		5	R200
4.	FRONT AXLE AND SUSPENSION					
	ST36710000	Transverse link bushing replacer	X		3	S30
	ST36710010	Drift				
	ST36710020	Support base				
	ST35300000	Front wheel bearing drift	X		3	S30, 610, 710, B210
	ST3565S001	Coil spring compressor set	X		2	F10, B210, 610, 710, S30
	ST35651001	Coil spring compressor				
	ST35652000	Clamp				

Mark X: Available

Downloaded from www.Manualslib.com manuals search engine

No.	Tool Number	Tool Name	Set '77 S30 NA	Newly added	Class	Reference
	KV40100800	Gland packing wrench	X		2	S30
	ST35540000	Gland packing guide	X		2	S30
	HT72520000	Ball joint remover	X		2	All
5.	REAR AXLE AND SUSPENSION					
	ST38800000	Transverse link bushing replacer	X		3	S30
	ST33260000	Diff. mounting member insulator drift set	X		2	S30
	ST36230000	Sliding hammer	X		2	All
	KV40101000	Rear axle stand	X		5	All
	ST37780000	Rear axle shaft outer bearing drift	X		5	S30
6.	BRAKE					
	GG94310000	Flare nut torque wrench			2	All
	ST08080000	Master-Vac wrench	X		2	All
	ST08090000	Master-Vac oil seal retainer drift	X		2	For 228.6 mm (9 in) Master-Vac
	ST08060000	Master-Vac oil seal retainer drift	X		2	For 190.5 mm (7.5 in) Master-Vac
7.	STEERING					
	ST27180001	Steering wheel puller	X		2	All
	HT72520000	Ball joint remover			2	All
8.	BODY					
	ST08720000	Door hinge wrench	X		2	610, S30

Mark X: Available

Downloaded from www.Manualslib.com manuals search engine

3. AUTOMATIC TRANSMISSION TOOL

No.	Tool Number	Tool Name	Set 3N71B KV00101000	Newly added	Class	Remarks
	ST07870000	Transmission case stand	X		3	B210, 610, 710, S30, 620
	ST2505S001	Oil pressure gauge	X		1	B210, 610, 710, S30, 620
	ST25160000	Torque driver	X		3	B210, 610, 710, S30, 620
	ST25320001	Snap ring remover	X		3	B210, 610, 710, S30, 620
	ST25420001	Clutch spring compressor	X		3	B210, 610, 710, S30, 620
	ST25490000	Socket extension	X		3	B210, 610, 710, S30, 620
	ST25570001	Hex-head extension	X		3	B210, 610, 710, S30, 620
	ST25580000	Oil pump assembling gauge	X		3	B210, 610, 710, S30, 620
	ST25850000	Sliding hammers	X		3	B210, 610, 710, S30, 620
	GG93010000	Torque wrench	X		3	B210, 610, 710, S30, 620
	HT61000800	Hexagon wrench	X		3	B210, 610, 710, S30, 620
	HT62350000	Spinner handle	X		6	B210, 610, 710, S30, 620
	HT69860000	Snap ring remover	X		3	B210, 610, 710, S30, 620

Mark X:. Available

4. AIR CONDITIONER TOOL

No.	Tool Number	Tool Name	Newly added	Class	Remarks
	KV99412302	Clutch hub wrench		3	610, 710, S30
	KV99412305	Hub nut socket		3	610, 710, S30
	KV99412306	Clutch hub puller		3	610, 710, S30
	KV99412310	Lock nut socket		3	610, 710, S30
	KV99412312	Puller pilot		3	610, 710, S30
	KV99412313	Puller adapter		3	610, 710, S30
	KV99412315	Cylinder head remover		3	610, 710, S30
	KV99412321	Shaft seal remover and installer		3	610, 710, S30
	KV99412322	Shaft seal pilot		3	610, 710, S30
	KV99412324	Allen socket		3	610, 710, S30
	KV99412327	Silencer piece installer		3	610, 710, S30
	KV99412328	O-ring installer		3	610, 710, S30
	KV99412329	Shaft handle socket		3	610, 710, S30
	KV99412330	Allen socket		3	610, 710, S30

Downloaded from www.Manualslib.com manuals search engine

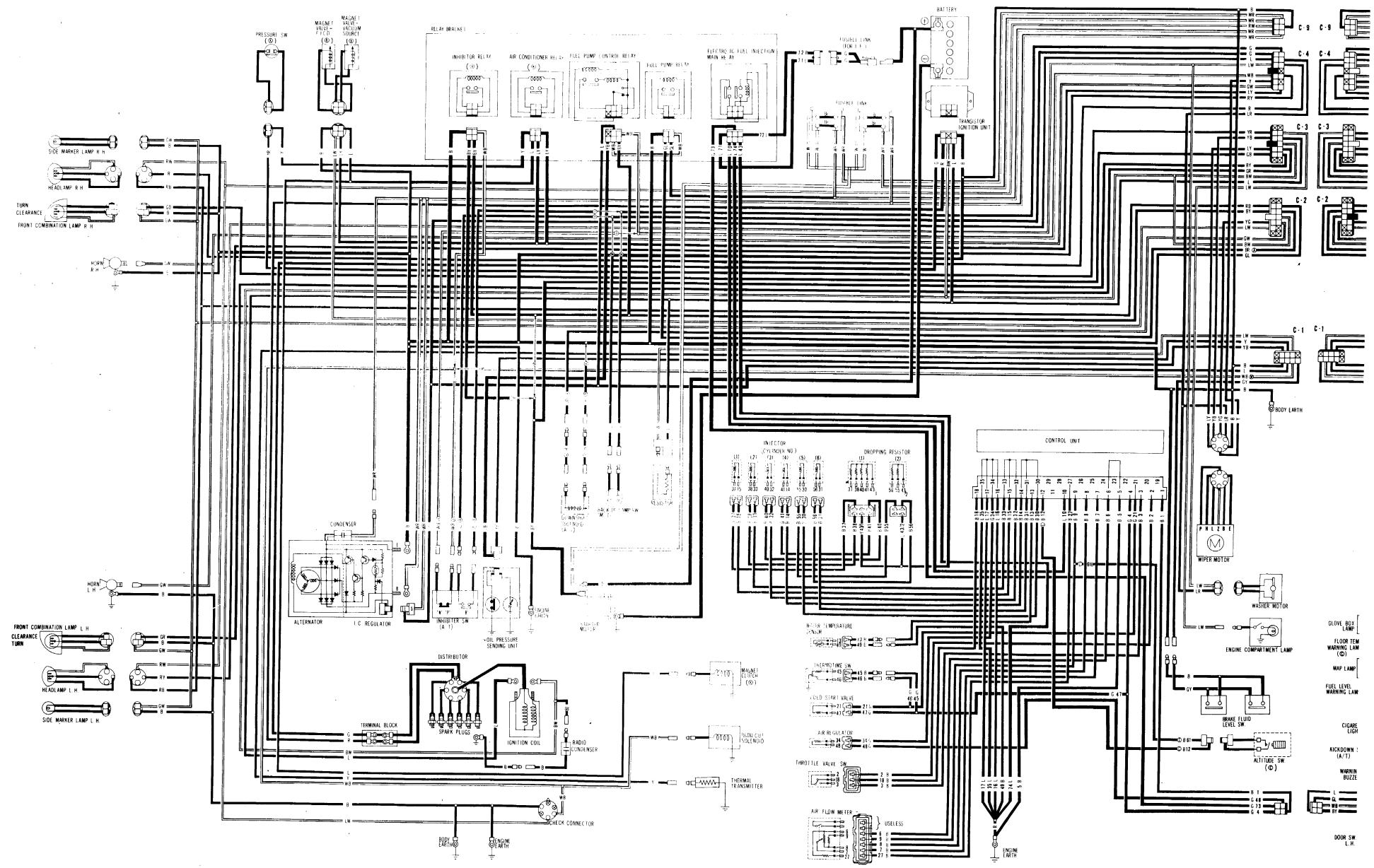

Downloaded from www.Manualslib.com manuals search engine

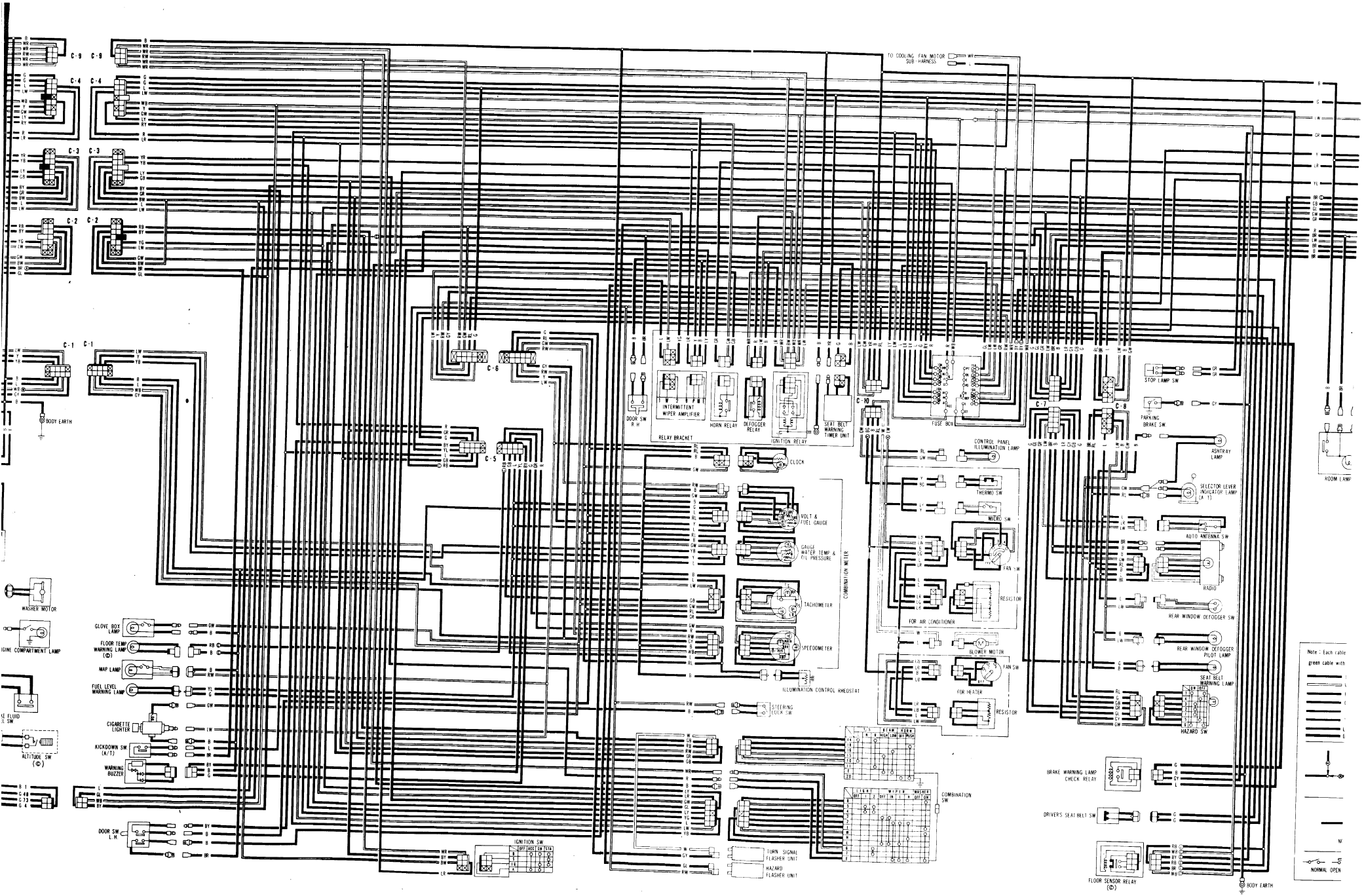

Downloaded from www.Manualslib.com manuals search engine

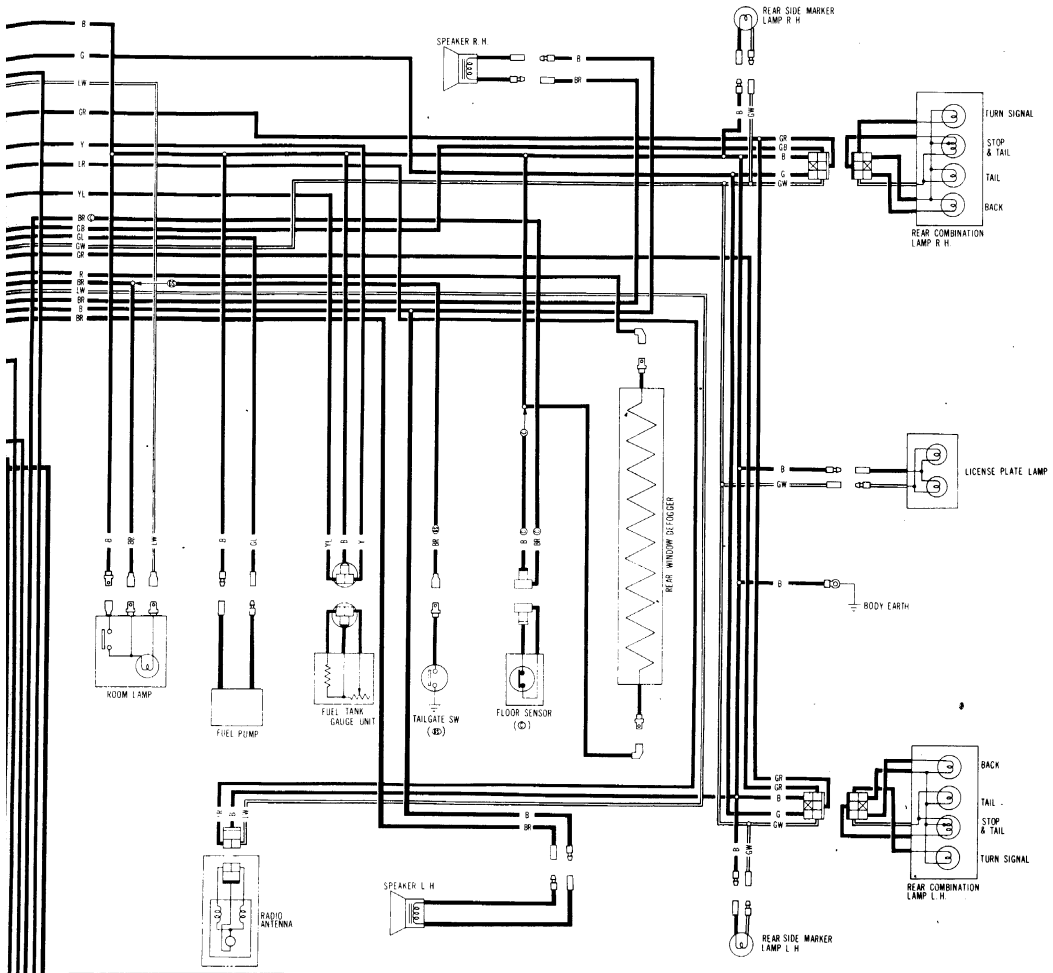

Note : Each cable is colored based on following colors. Two tone colored cables such as GW and BR, mean green cable with a white stripe and black cable with a white stripe, respectively.

B	BLACK
W	WHITE
R	RED
G	GREEN
L	BLUE
Y	YELLOW
LG	LIGHT GREEN
Br	BROWN

CONNECTION

NO CONNECTION

NORMAL OPEN

NORMAL CLOSE

Ⓐ FOR AUTOMATIC TRANSMISSION MODELS
Ⓜ FOR MANUAL TRANSMISSION MODELS
Ⓒ FOR CALIFORNIA MODELS
Ⓢ FOR 2 - 2 SEATER MODELS
Ⓐ FOR AIR CONDITIONER

SWITCH AND RELAY POSITIONS

1 IGNITION SWITCH IN OFF
2 LIGHTING SWITCH, WIPER SWITCH IN OFF
3 DRIVER'S SEAT BELT UNOCCUPIED
4 DOORS CLOSED
5 TRANSMISSION IN NEUTRAL (AUTOMATIC TRANSMISSION : SELECTOR LEVEL IN PARKING)
6 HAND BRAKE PULLED

The right is reserved to make changes in the wiring diagram at any time without prior notice.

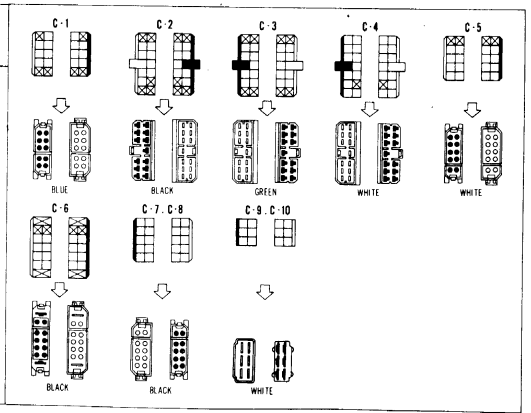

Downloaded from www.Manualslib.com manuals search engine