Workshop Manual

Golf 2004 ➤ , Golf 2009 ➤ , Golf Plus 2005 ➤ , Golf Plus 2009 ➤ , Passat 2006 ➤

5-speed manual gearbox 0A4

Edition 04.2010

List of Workshop Manual Repair GroupsList of Workshop Manual Repair GroupsList of Workshop Manual Repair Groups

Repair Group

00 - Technical data
30 - Clutch
34 - Controls, housing
35 - Gears, shafts
39 - Final drive - differential

Technical information should always be available to the foremen and mechanics, because their careful and constant adherence to the instructions is essential to ensure vehicle road-worthiness and safety. In addition, the normal basic safety precautions for working on motor vehicles must, as a matter of course, be observed.

Contents

00 - Technical data . . . 1

1 Gearbox identification . . . 1
1.1 Location on gearbox . . . 1
1.2 Identification codes, assembly allocation, capacities, Golf 2004 ▸ . . . 2
1.3 Identification codes, assembly allocation, capacities, Golf 2009 ▸ . . . 4
1.4 Identification codes, assembly allocation, capacities, Golf Plus 2005 ▸ . . . 5
1.5 Identification codes, assembly allocation, capacities, Golf Plus 2009 ▸ . . . 6
1.6 Identification codes, assembly allocation and capacities, Passat 2006 ▸ . . . 6

2 Overview - power transmission . . . 9

3 Calculating overall gear ratio “i” . . . 11

4 General repair notes . . . 12
4.1 Components . . . 12

30 - Clutch . . . 15

1 Repairing clutch mechanism . . . 15
1.1 Overview . . . 15
1.2 Assembly overview - pedal cluster . . . 16
1.3 Removing and installing over-centre spring, Golf 2004 ▸ . . . 18
1.4 Removing and installing over-centre spring, Golf 2009 ▸ LHD . . . 22
1.5 Removing and installing over-centre spring, Golf 2009 ▸ RHD . . . 27
1.6 Removing and installing over-centre spring, Golf Plus . . . 32
1.7 Removing and installing over-centre spring, Passat . . . 37
1.8 Removing and installing clutch pedal, Golf 2004 ▸ . . . 38
1.9 Removing and installing clutch pedal, Golf 2009 ▸ LHD . . . 44
1.10 Removing and installing clutch pedal, Golf 2009 ▸ RHD . . . 49
1.11 Removing and installing clutch pedal, Golf Plus . . . 54
1.12 Removing and installing clutch pedal, Passat . . . 59
1.13 Removing and installing mounting bracket, Golf 2004 ▸ . . . 61
1.14 Removing and installing mounting bracket, Golf 2009 ▸ LHD . . . 67
1.15 Removing and installing mounting bracket, Golf 2009 ▸ right-hand drive and Golf Plus right-hand drive . . . 73
1.16 Removing and installing mounting bracket, Golf Plus left-hand drive . . . 79
1.17 Removing and installing mounting bracket, Passat . . . 84
1.18 Removing and installing master cylinder . . . 88
1.19 Removing and installing clutch position sender G476 . . . 90
1.20 Assembly overview - hydraulics (LHD) . . . 94
1.21 Assembly overview - hydraulics (RHD) . . . 96

2 Removing and installing slave cylinder . . . 98
2.1 Removing . . . 98
2.2 Installing . . . 99
2.3 Torque settings . . . 99

3 Bleeding clutch system . . . 101

4 Repairing clutch release mechanism . . . 103

5 Repairing clutch, in conjunction with dual-mass flywheel . . . 105
5.1 Identifying make of clutch, vehicles with 1.9 l - 66 kW turbo diesel engine and vehicles with 1.9 l - 77 kW turbo diesel engine . . . 105
5.2 Removing and installing Sachs clutch . . . 107
5.3 Repairing Sachs clutch . . . 109
5.4 Removing and installing LuK clutch . . . 109
5.5 Repairing LuK clutch . . . 112

6 Repairing clutch, in conjunction with one-piece flywheel . . . 113

34 - Controls, housing . . . 116
1 Repairing selector mechanism . . . 116
1.1 Installation position of selector mechanism . . . 116
1.2 Overview of selector mechanism . . . 117
1.3 Removing and installing gear knob and cover . . . 118
1.4 Removing and installing gaiter with gear knob and noise insulation, Golf . . . 118
1.5 Removing and installing gaiter with gear knob and noise insulation, Golf Plus . . . 120
1.6 Removing and installing gaiter with selector lever knob and noise insulation, Passat . . . 121
1.7 Repairing gear lever and selector housing (through 10.06) . . . 123
1.8 Repairing gear lever and selector housing (from 11.06) . . . 125
1.9 Assembly overview - removing and installing selector cables . . . 131
1.10 Plastic relay lever . . . 134
1.11 Removing and installing selector mechanism . . . 136
1.12 Adjusting selector mechanism . . . 139
2 Removing and installing gearbox, Golf 2004 ▸ . . . 143
2.1 Removing gearbox . . . 144
2.2 Installing gearbox . . . 150
3 Removing and installing gearbox, Golf 2009 ▸ with turbo diesel engine . . . 156
3.1 Removing gearbox . . . 157
3.2 Installing gearbox . . . 163
4 Removing and installing gearbox, Golf 2009 ▸ with petrol engine . . . 171
4.1 Removing gearbox . . . 173
4.2 Installing gearbox . . . 180
5 Removing and installing gearbox, Golf Plus . . . 188
5.1 Removing gearbox . . . 189
5.2 Installing gearbox . . . 196
6 Removing and installing gearbox, Passat . . . 205
6.1 Removing gearbox . . . 207
6.2 Installing gearbox . . . 212
7 Transporting gearbox . . . 219
8 Checking and topping up gear oil . . . 220
8.1 Preparation . . . 220
8.2 Draining gear oil . . . 221
8.3 Fill with gear oil . . . 222
9 Dismantling and assembling gearbox . . . 223
9.1 Overview - gearbox . . . 223
9.2 Assembly overview . . . 224
9.3 Removing and installing cover for gearbox housing and 5th gear . . . 225
9.4 Removing and installing gearbox housing and selector mechanism . . . 226
9.5 Removing and installing input shaft, output shaft, differential and selector forks . . . 227
9.6 Assembly sequence - removing and installing cover for gearbox housing and 5th gear . . . 228
9.7 Assembly sequence - Dismantling and assembling gearbox completely . . . 234
10 Repairing gearbox housing and clutch housing . . . 248
11 Repairing selector unit . . . 255
12 Dismantling and assembling selector forks . . . 258

35 - Gears, shafts . . . 263
1 Input shaft . . . 263
1.1 Dismantling and assembling input shaft . . . 263
1.2 Adjusting input shaft . . . 270
2 Output shaft . . . 275
2.1 Dismantling and assembling output shaft . . . 275
2.2 Adjusting output shaft . . . 287

3 Reverse shaft . . . 291
3.1 Dismantling and assembling reverse shaft . . . 291

39 - Final drive - differential . . . 294
1 Renewing flange shaft oil seals with gearbox installed . . . 294
1.1 Renewing oil seal for left flange shaft . . . 294
1.2 Distinguishing seals for right flange shaft . . . 295
1.3 Renewing seal (two-part seal and sleeve for right flange shaft) . . . 296
1.4 Renewing seal and sleeve together (one-piece seal and sleeve for right flange shaft) . . . 299
2 Adjustment overview . . . 302
3 Differential . . . 303
3.1 Dismantling and assembling differential . . . 303
3.2 Adjusting differential . . . 311

00 – Technical data

1 Gearbox identification

5-speed manual gearbox 0A4 is installed in following vehicles:

Allocation, Golf 2004 ‣ ⇒ page 2

Allocation, Golf 2009 ‣ ⇒ page 4

Allocation, Golf Plus 2005 ‣ ⇒ page 5

Allocation, Golf Plus 2009 ‣ ⇒ page 6

Allocation, Passat 2006 ‣ ⇒ page 6

1.1 Location on gearbox

Codes and production date -arrow 1- manual gearbox 0A4 -arrow 2-

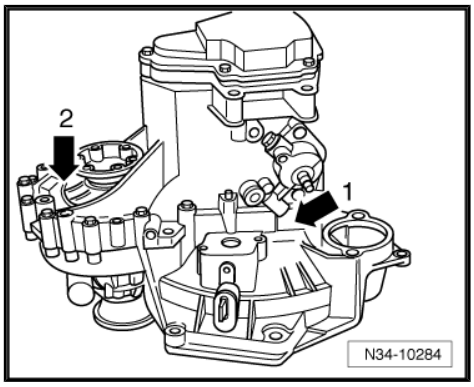

Manual gearbox 0A4 -arrow 2-

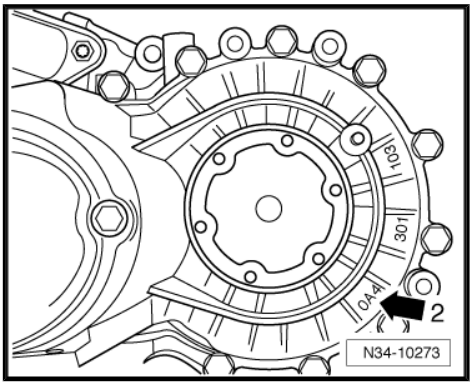

Codes and production date of gearbox

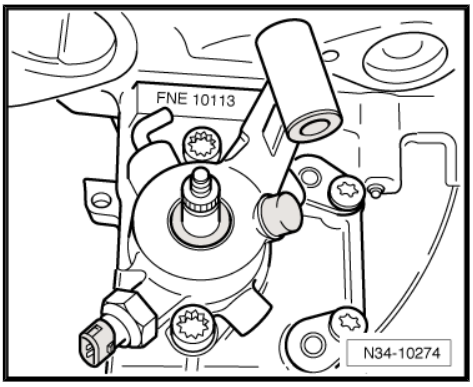

Example:	FNE	10	11	3
	I	I	I	I
	I	I	I	I
	Identification code	Day	Month	Year (2003) of manufacture

Additional data provide information about the production facility.

Note

The gearbox code is also included on the vehicle data stickers.

1.2 Identification codes, assembly allocation, capacities, Golf 2004 ▸

Manual gearbox		5-speed 0A4		
Identification code		**FNE**	**GQQ**	**HGR**
Manufactured	from to	08.03 08.03	08.03 08.06	03.05 08.06
Allocation	Engine	1.9 l - 77 kW turbo diesel	1.9 l - 77 kW turbo diesel	2.5 l - 110 kW
Ratio Z1 : Z2	Final drive	61 : 18 = 3.389	61 : 18 = 3.389	62 : 17 = 3.647
Capacity of manual gearbox (gearbox completely dismantled)		1.9 l	1.9 l	1.9 l
Capacity of manual gearbox ⇒ page 220 (gearbox partially dismantled)		1.7 l	1.7 l	1.7 l
Drive shaft flange ∅		100 mm	100 mm	100 mm

The following data can be found in the ⇒ Electronic parts catalogue “ETKA” .

- Individual gear ratios
- Gear oil
- Clutch allocation

Manual gearbox		5-speed 0A4		
Identification code		**HDR**	**GTB**	**JCT**
Manufactured	from to	01.05 08.06	08.03 03.04	05.06 06.08
Allocation	Engine	2.0 l - 85 kW	2.5 l - 110 kW	2.5 l - 110 kW
Ratio Z1 : Z2	Final drive	62 : 17 = 3.647	62 : 17 = 3.647	62 : 17 = 3.647
Capacity of manual gearbox (gearbox completely dismantled)		1.9 l	1.9 l	1.9 l
Capacity of manual gearbox ⇒ page 220 (gearbox partially dismantled)		1.7 l	1.7 l	1.7 l
Drive shaft flange ∅		100 mm	108 mm	108 mm

The following data can be found in the ⇒ Electronic parts catalogue “ETKA” .

- Individual gear ratios
- Gear oil
- Clutch allocation

Manual gearbox		5-speed 0A4		
Identification code		**JCR**	**JCU**	**JCV**
Manufactured	from to	05.06 06.08	05.06 06.08	05.06 06.08
Allocation	Engine	1.9 l - 66 kW turbo diesel 1.9 l - 77 kW turbo diesel	2.0 l - 85 kW	1.8 l - 110 kW

Volkswagen Technical Site: http://vwts.ru http://vwts.info

Manual gearbox	5-speed 0A4		
Identification code	**JCR**	**JCU**	**JCV**
Ratio Final drive Z1 : Z2	61 : 18 = 3.389	72 : 17 = 4.235	63 : 16 = 3.938
Capacity of manual gearbox (gearbox completely dismantled)	1.9 l	1.9 l	1.9 l
Capacity of manual gearbox ⇒ page 220 (gearbox partially dismantled)	1.7 l	1.7 l	1.7 l
Drive shaft flange ∅	108 mm	100 mm	108 mm

The following data can be found in the ⇒ Electronic parts catalogue “ETKA” .

- Individual gear ratios
- Gear oil
- Clutch allocation

Manual gearbox	5-speed 0A4		
Identification code	**FNC**	**HJK**	**KCL**
Manufactured from to	05.06 12.06	05.06 12.06	12.06 06.08
Allocation Engine	1.9 l - 77 kW turbo diesel	1.8 l - 110 kW	1.9 l - 77 kW turbo diesel
Ratio Final drive Z1 : Z2	61 : 18 = 3.778	63 : 16 = 3.938	61 : 18 = 3.778
Capacity of manual gearbox (gearbox completely dismantled)	1.9 l	1.9 l	1.9 l
Capacity of manual gearbox ⇒ page 220 (gearbox partially dismantled)	1.7 l	1.7 l	1.7 l
Drive shaft flange ∅	100 mm	100 mm	100 mm

The following data can be found in the ⇒ Electronic parts catalogue “ETKA” .

- Individual gear ratios
- Gear oil
- Clutch allocation

Manual gearbox	5-speed 0A4		
Identification code	**KBL**	**KCD**	**JQP**
Manufactured from to	07.07 06.08	05.07 12.07	07.07 06.08
Allocation Engine	1.9 l - 77 kW turbo diesel	2.5 l - 125 kW	1.8 l - 118 kW
Ratio Final drive Z1 : Z2	61 : 18 = 3.778	62 : 17 = 3.647	62 : 17 = 3.647
Capacity of manual gearbox (gearbox completely dismantled)	1.9 l	1.9 l	1.9 l
Capacity of manual gearbox ⇒ page 220 (gearbox partially dismantled)	1.7 l	1.7 l	1.7 l
Drive shaft flange ∅	100 mm	100 mm	100 mm

The following data can be found in the ⇒ Electronic parts catalogue “ETKA” .

- Individual gear ratios
- Gear oil
- Clutch allocation

Manual gearbox	5-speed 0A4		
Identification code	**KPF**	**LHW**	
Manufactured from to	07.07 06.08	04.08 06.08	
Allocation Engine	2.5 l - 125 kW	1.9 l - 77 kW turbo diesel	
Ratio Final drive Z1 : Z2	61 : 18 = 3.778	62 : 17 = 3.647	
Capacity of manual gearbox (gearbox completely dismantled)	1.9 l	1.9 l	
Capacity of manual gearbox ⇒ page 220 (gearbox partially dismantled)	1.7 l	1.7 l	
Drive shaft flange ∅	100 mm	100 mm	

The following data can be found in the ⇒ Electronic parts catalogue “ETKA” .

- Individual gear ratios
- Gear oil
- Clutch allocation

1.3 Identification codes, assembly allocation, capacities, Golf 2009 ▸

Manual gearbox	5-speed 0A4		
Identification code	**KQM**	**LLL**	**LHW**
Manufactured from to	06.08 05.09	08.08	05.09
Allocation Engine	1.9 l - 81 kW turbo diesel	2.0 l - 81 kW turbo diesel	1.6 l - 66 kW turbo diesel 1.6 l - 77 kW turbo diesel
Ratio Final drive Z1 : Z2	61 : 18 = 3.778	61 : 18 = 3.778	62 : 17 = 3.647
Capacity of manual gearbox (gearbox completely dismantled)	1.9 l	1.9 l	1.9 l
Capacity of manual gearbox ⇒ page 220 (gearbox partially dismantled)	1.7 l	1.7 l	1.7 l
Drive shaft flange ∅	100 mm	100 mm	100 mm

The following data can be found in the ⇒ Electronic parts catalogue “ETKA” .

- Individual gear ratios
- Gear oil

- Clutch allocation

Manual gearbox		5-speed 0A4		
Identification code		**LUB**	**KCD**	**KPF**
Manufac-tured	from to	05.09	08.09 09.09	08.09 05.10
Allocation	Engine	1.9 l - 77 kW turbo diesel	2.5 l - 125 kW	2.5 l - 125 kW
Ratio Z1 : Z2	Final drive	62 : 17 = 3.647	62 : 17 = 3.647	61 : 18 = 3.778
Capacity of manual gear-box (gearbox completely dismantled)		1.9 l	1.9 l	1.9 l
Capacity of manual gear-box ⇒ page 220 (gearbox partially dismantled)		1.7 l	1.7 l	1.7 l
Drive shaft flange ∅		100 mm	100 mm	100 mm

The following data can be found in the ⇒ Electronic parts cata-logue “ETKA” .

- Individual gear ratios
- Gear oil
- Clutch allocation

Manual gearbox		5-speed 0A4		
Identification code		**MDZ**	**LEA**	
Manufac-tured	from to	11.09	05.10 08.10	
Allocation	Engine	1.9 l - 77 kW turbo diesel	2.5 l - 125 kW	
Ratio Z1 : Z2	Final drive	61 : 18 = 3.778	61 : 18 = 3.778	
Capacity of manual gear-box (gearbox completely dismantled)		1.9 l	1.9 l	
Capacity of manual gear-box ⇒ page 220 (gearbox partially dismantled)		1.7 l	1.7 l	
Drive shaft flange ∅		100 mm	100 mm	

The following data can be found in the ⇒ Electronic parts cata-logue “ETKA” .

- Individual gear ratios
- Gear oil
- Clutch allocation

1.4 Identification codes, assembly allocation, capacities, Golf Plus 2005 ▸

Manual gearbox		5-speed 0A4		
Identification code		**HNV**	**JCX**	**KBL**
Manufactured	from to	11.04 05.06	05.06 01.09	11.07 01.09

Manual gearbox		5-speed 0A4		
Identification code		**HNV**	**JCX**	**KBL**
Allocation	Engine	1.9 l - 66 kW turbo diesel 1.9 l - 77 kW turbo diesel	1.9 l - 66 kW turbo diesel 1.9 l - 77 kW turbo diesel	1.9 l - 77 kW turbo diesel
Ratio Z1 : Z2	Final drive	62 : 17 = 3.647	62 : 17 = 3.647	61 : 18 = 3.778
Capacity of manual gearbox		1.9 l	1.9 l	1.9 l
Capacity of manual gearbox ⇒ page 220 (gearbox partially dismantled)		1.7 l	1.7 l	1.7 l
Drive shaft flange ∅		100 mm	100 mm	100 mm

The following data can be found in the ⇒ Electronic parts catalogue “ETKA” .

- Individual gear ratios
- Gear oil
- Clutch allocation

1.5 Identification codes, assembly allocation, capacities, Golf Plus 2009 ▸

Manual gearbox		5-speed 0A4		
Identification code		**KQM**	**LHW**	**LUB**
Manufactured	from to	01.09	02.09	05.09
Allocation	Engine	2.0 l - 81 kW turbo diesel	1.6 l - 66 kW turbo diesel 1.6 l - 77 kW turbo diesel	1.9 l - 77 kW turbo diesel
Ratio Z1 : Z2	Final drive	61 : 18 = 3.778	62 : 17 = 3.647	62 : 17 = 3.647
Capacity of manual gearbox		1.9 l	1.9 l	1.9 l
Capacity of manual gearbox ⇒ page 220 (gearbox partially dismantled)		1.7 l	1.7 l	1.7 l
Drive shaft flange ∅		100 mm	100 mm	100 mm

The following data can be found in the ⇒ Electronic parts catalogue “ETKA” .

- Individual gear ratios
- Gear oil
- Clutch allocation

1.6 Identification codes, assembly allocation and capacities, Passat 2006 ▸

Manual gearbox		5-speed 0A4		
Identification code		**HNV**	**JCX**	**JQP**
Manufactured	from to	01.05 05.06	05.06 11.08	05.07 11.08

Manual gearbox	5-speed 0A4		
Identification code	**HNV**	**JCX**	**JQP**
Allocation Engine	1.9 l - 77 kW turbo diesel	1.9 l - 66 kW turbo diesel 1.9 l - 77 kW turbo diesel	1.8 l - 118 kW
Ratio Final drive Z1 : Z2	62 : 17 = 3.647	62 : 17 = 3.647	62 : 17 = 3.647
Capacity of manual gearbox (gearbox completely dismantled)	1.9 l	1.9 l	1.9 l
Capacity of manual gearbox ⇒ page 220 (gearbox partially dismantled)	1.7 l	1.7 l	1.7 l
Drive shaft flange ∅	100 mm	100 mm	107 mm

The following data can be found in the ⇒ Electronic parts catalogue “ETKA” .

- Individual gear ratios
- Gear oil
- Clutch allocation

Manual gearbox	5-speed 0A4		
Identification code	**JVF**	**KBM**	**KJF**
Manufactured from to	03.07 11.08	05.07 11.08	12.07
Allocation Engine	2.0 l - 85 kW	1.9 l - 77 kW turbo diesel	2.0 l - 85 kW turbo diesel
Ratio Final drive Z1 : Z2	72 : 17 = 4.235	62 : 17 = 3.647	62 : 17 = 3.647
Capacity of manual gearbox (gearbox completely dismantled)	1.9 l	1.9 l	1.9 l
Capacity of manual gearbox ⇒ page 220 (gearbox partially dismantled)	1.7 l	1.7 l	1.7 l
Drive shaft flange ∅	100 mm	100 mm	100 mm

The following data can be found in the ⇒ Electronic parts catalogue “ETKA” .

- Individual gear ratios
- Gear oil
- Clutch allocation

Manual gearbox	5-speed 0A4		
Identification code	**KBL**	**LHP**	**MDM**
Manufactured from to	01.08	11.08 08.09	08.09
Allocation Engine	1.9 l - 77 kW turbo diesel	2.0 l - 81 kW turbo diesel 1.6 l - 77 kW turbo diesel	2.0 l - 81 kW turbo diesel 1.6 l - 77 kW turbo diesel

Manual gearbox	5-speed 0A4		
Identification code	**KBL**	**LHP**	**MDM**
Ratio Z1 : Z2 Final drive	61 : 18 = 3.778	62 : 17 = 3.647	62 : 17 = 3.647
Capacity of manual gearbox (gearbox completely dismantled)	1.9 l	1.9 l	1.9 l
Capacity of manual gearbox ⇒ page 220 (gearbox partially dismantled)	1.7 l	1.7 l	1.7 l
Drive shaft flange ∅	100 mm	100 mm	100 mm

The following data can be found in the ⇒ Electronic parts catalogue “ETKA” .

- Individual gear ratios
- Gear oil
- Clutch allocation

2 Overview - power transmission

Designation

-Arrows- indicate direction of travel.

1 - Engine

2 - Clutch

3 - Manual gearbox

4 - Input shaft

5 - Output shaft

6 - Differential

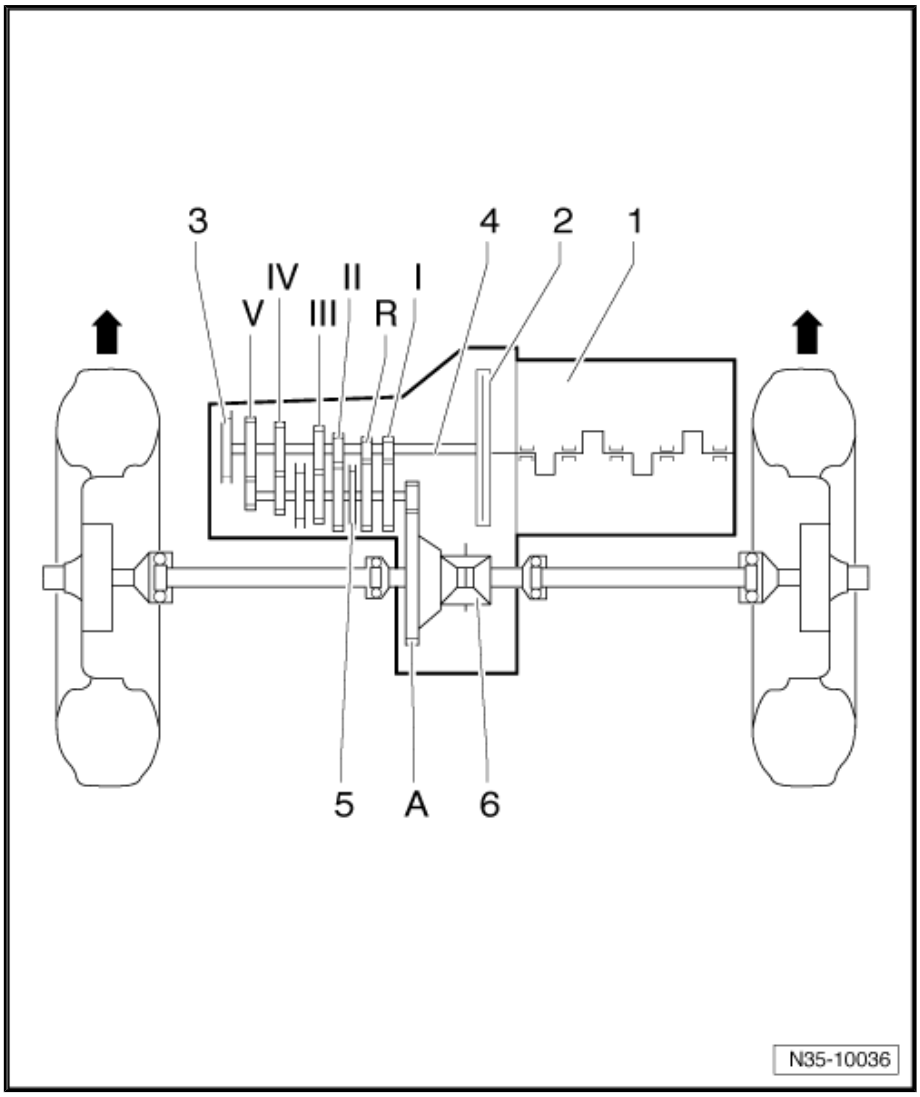

Gears

-Arrows- indicate direction of travel.

I - 1st gear

II - 2nd gear

III - 3rd gear

IV - 4th gear

V - 5th gear

R - Reverse gear

A - Final drive

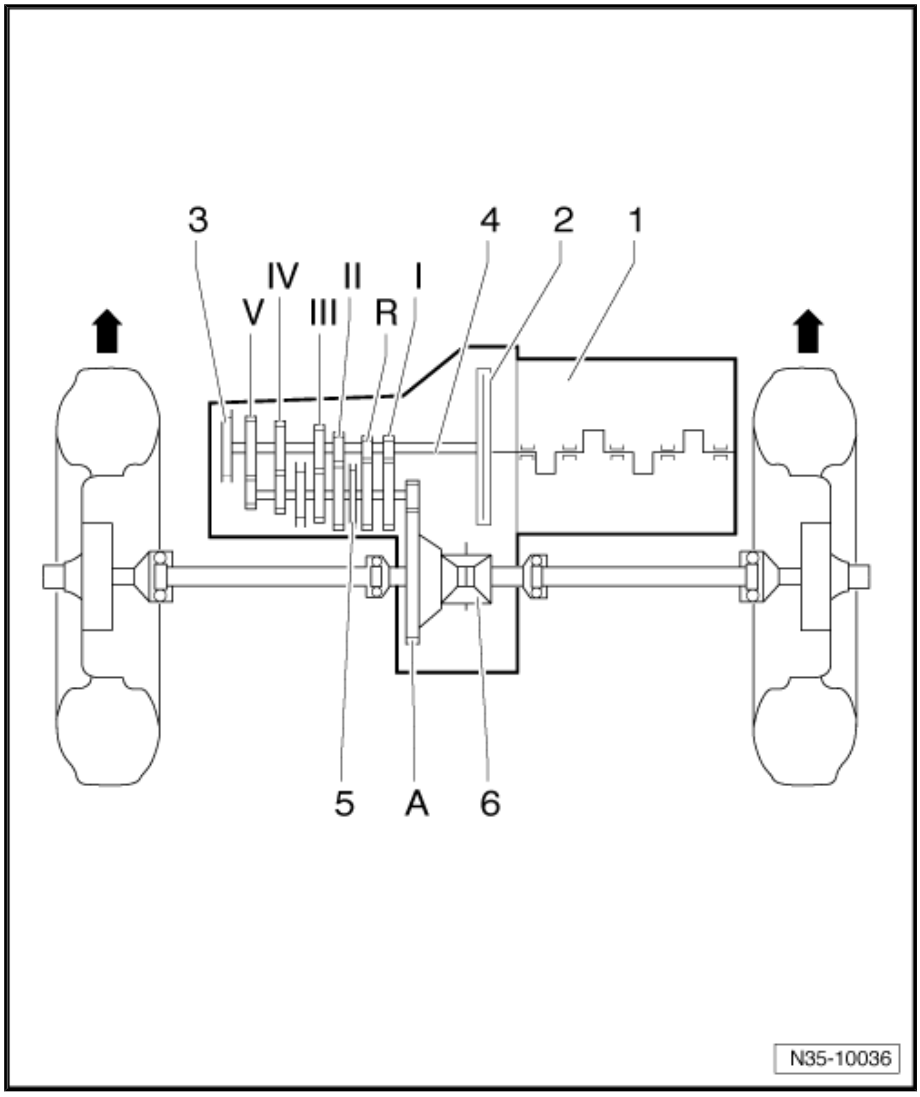

3 Calculating overall gear ratio “i”

Example:

	5th gear	Final drive
Drive gear	$ZG_1 = 39$	$ZA_1 = 18$
Driven gear	$ZG_2 = 29$	$ZA_2 = 61$

$i = Z_2 : Z_1$ [1)]

i_G = Gear ratio = $ZG_2 : ZG_1 = 29 : 39 = 0.744$

i_A = Final drive ratio = $ZA_2 : ZA_1 = 61 : 18 = 3.389$

Overall ratio = total ratio = $i_G \times i_A = 0.744 \times 3.389 = 2.521$

1) Z_1 = No. of teeth on driving gear, Z_2 = No. of teeth on driven gear

4 General repair notes

To ensure flawless and successful gearbox repairs, the greatest care and cleanliness as well as the use of good and proper tools are essential. Of course, the basic rules for safety also apply during repair work.

A number of instructions generally applicable to the various repair procedures - which were previously repeated a number of times at various places in the workshop manual are summarised under the topic “components” ⇒ page 12 . They apply to this workshop manual.

4.1 Components

4.1.1 Gearbox

- When installing the manual gearbox, ensure that the dowel sleeves between the engine and gearbox are correctly seated.
- When installing mounting brackets or waxed components, clean the contact surfaces. Contact surfaces must be free of wax and grease.
- Allocate bolts and other components using ⇒ Electronic parts catalogue “ETKA” .
- If the gearbox is repaired, fill with gear oil.

Capacity, gearbox completely dismantled	Capacity, gearbox partially dismantled ⇒ page 220
1.9 l	1.7 l

4.1.2 Seals and sealing rings

- Before installing oil seal, half-fill space between sealing lips with sealing grease -G 052 128 A1- -arrow-.
- The open side of the oil seal faces the side with fluid filling.
- After installing, check oil level ⇒ page 220 .
- Lightly oil O-rings before installing; this prevents the rings being crushed when inserted.
- Thoroughly clean parting surfaces and apply sealant -AMV 188 200 03- .
- Apply sealant uniformly but not too thick.

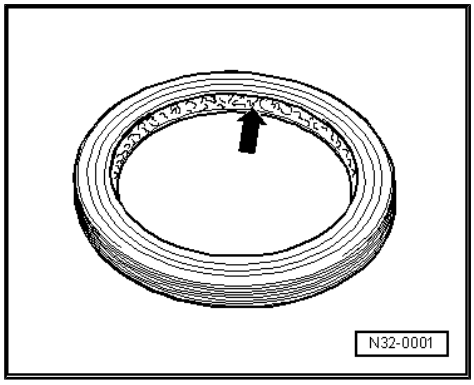

4.1.3 Sealant

- Thoroughly clean housing joint surfaces before applying sealing paste.
- Evenly apply a thin coat of sealing paste -AMV 188 200 03- .
- Breather holes must remain free of sealing paste.

4.1.4 Locking devices

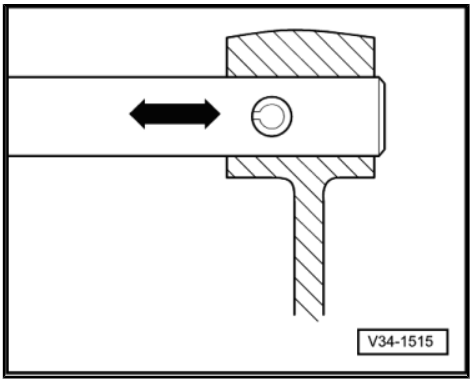

- Renew retaining rings.
- Do not overstretch retaining rings.
- Retaining rings must locate properly in grooves.
- Renew spring pins. Installation position: slot must be in line with direction of force.

4.1.5 Nuts and bolts

- Loosen and tighten securing bolts and nuts for covers and housings diagonally.
- Do not cant especially delicate parts, such as clutch pressure plates. Loosen and tighten bolts and nuts in stages in a diagonal sequence.
- Torque settings are specified for unoiled bolts and nuts.
- Always renew self-locking bolts and nuts.
- Ensure with threaded connections that contact surfaces as well as nuts and bolts are rewaxed only after assembly, if necessary.
- Use a thread chaser to clear residual locking fluid from all threaded holes into which self-locking bolts are to be screwed. Otherwise there is a danger of bolts shearing when subsequently being removed.

4.1.6 Bearings

- Install new tapered roller bearings as supplied and do not lubricate additionally.
- Install needle bearings with lettered side (thicker metal) towards fitting tool.
- Tapered roller bearings fitted to one shaft must be renewed as a set. Use same make of bearings.
- Heat inner races to about 100 °C with the inductive heater - VAS 6414- before installing.
- Do not interchange outer or inner races of bearings of the same size. The bearings are matched in pairs.

4.1.7 Shims

- Measure shims at several points with a micrometer. The various thicknesses make it possible to achieve the exact shim thickness required.
- Check for burrs and damage.
- Install only flawless shims.

4.1.8 Synchro-rings

- Do not interchange. When reusing synchro-rings, always fit to the same synchromeshed gear.
- Check for wear and renew if necessary.
- Check grooves -arrow 1- of synchro-ring -A- and inner ring for flat spots (worn grooves).
- If synchro-rings are coated, coating must not be damaged.
- If an intermediate ring -B- is installed, check the outer friction surface -arrow 2- and inner friction surface -arrow 3- of this intermediate ring for “scoring”, “signs of abnormal wear” and “blue discolouration (due to overheating)”.
- Check cone of synchromeshed gear for “scoring” and “signs of abnormal wear”.
- Moisten synchromesh mechanism with gear oil before installing.

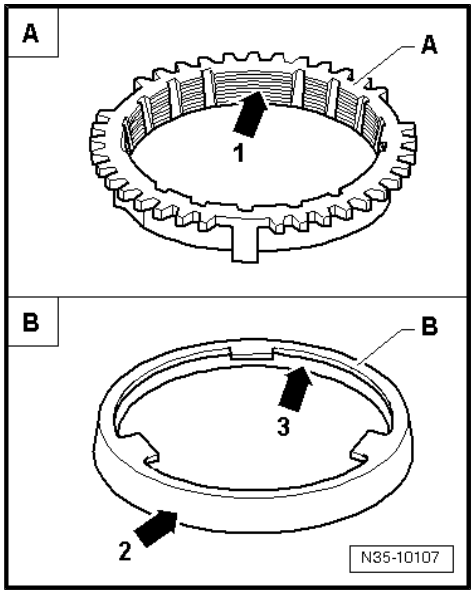

4.1.9 Gear wheels

- Before installing, clean and heat with the inductive heater - VAS 6414- to maximum 100° C.

4.1.10 Synchromeshed gears

- After assembly, check synchromeshed gears for slight play, or for freedom of movement.

4.1.11 Clutch

- Ensure that the pressure plate does not cant: loosen and tighten bolts diagonally and in several gradual stages.
- If the clutch has burnt out, thoroughly clean the clutch housing as well as the friction surface of flywheel with a cloth to reduce the smell of burnt linings.

30 – Clutch

1 Repairing clutch mechanism

1.1 Overview

Note

- *Before disconnecting battery, obtain code for radio having anti-theft coding.*
- *With ignition switched off, disconnect battery ⇒ Electrical system; Rep. Gr. 27 ; Disconnecting and connecting battery .*
- *When reconnecting battery, refer to ⇒ Electrical system; Rep. Gr. 27 ; Disconnecting and connecting battery .*
- *Grease all bearing points and contact surfaces.*
- *Allocate grease using ⇒ Electronic parts catalogue (ETKA) .*

I - Assembly overview - pedal cluster ⇒ page 16

II - Assembly overview - hydraulics (LHD) ⇒ page 94

III - Assembly overview - hydraulics (RHD) ⇒ page 96

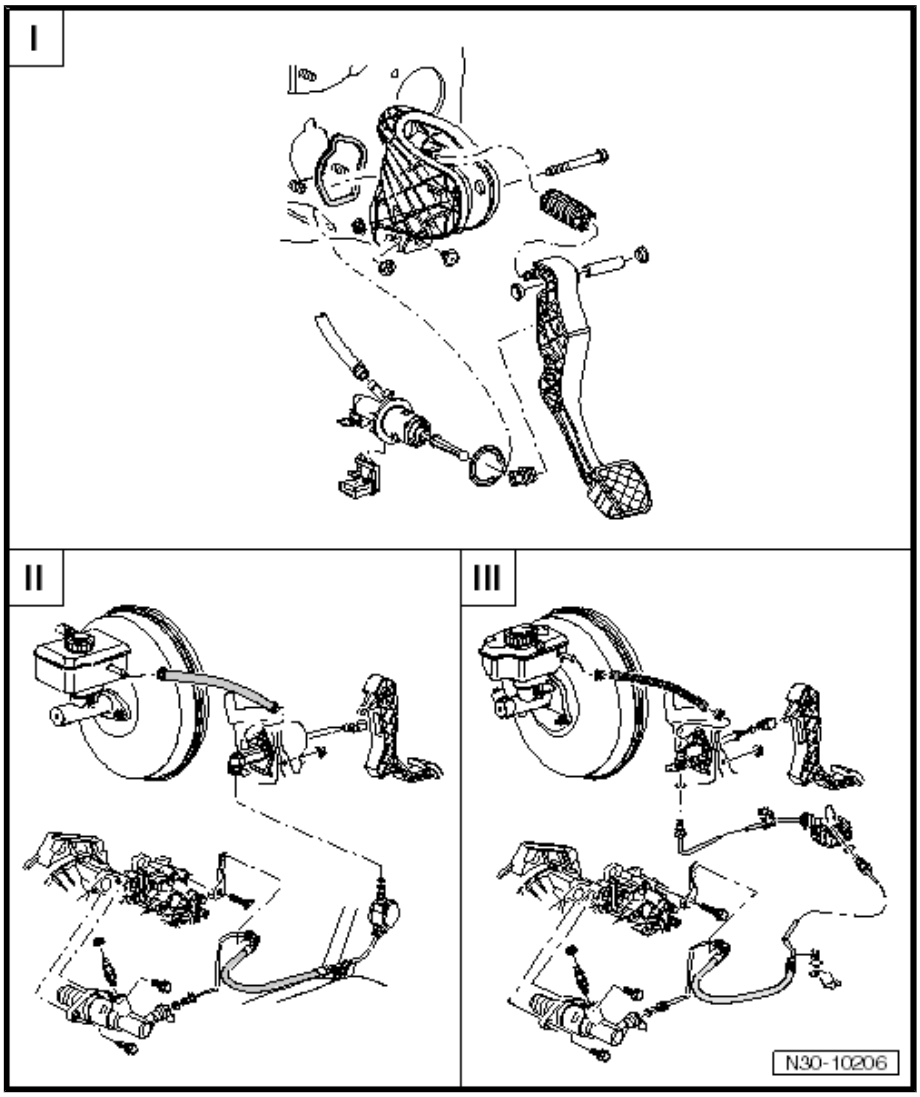

1.2 Assembly overview - pedal cluster

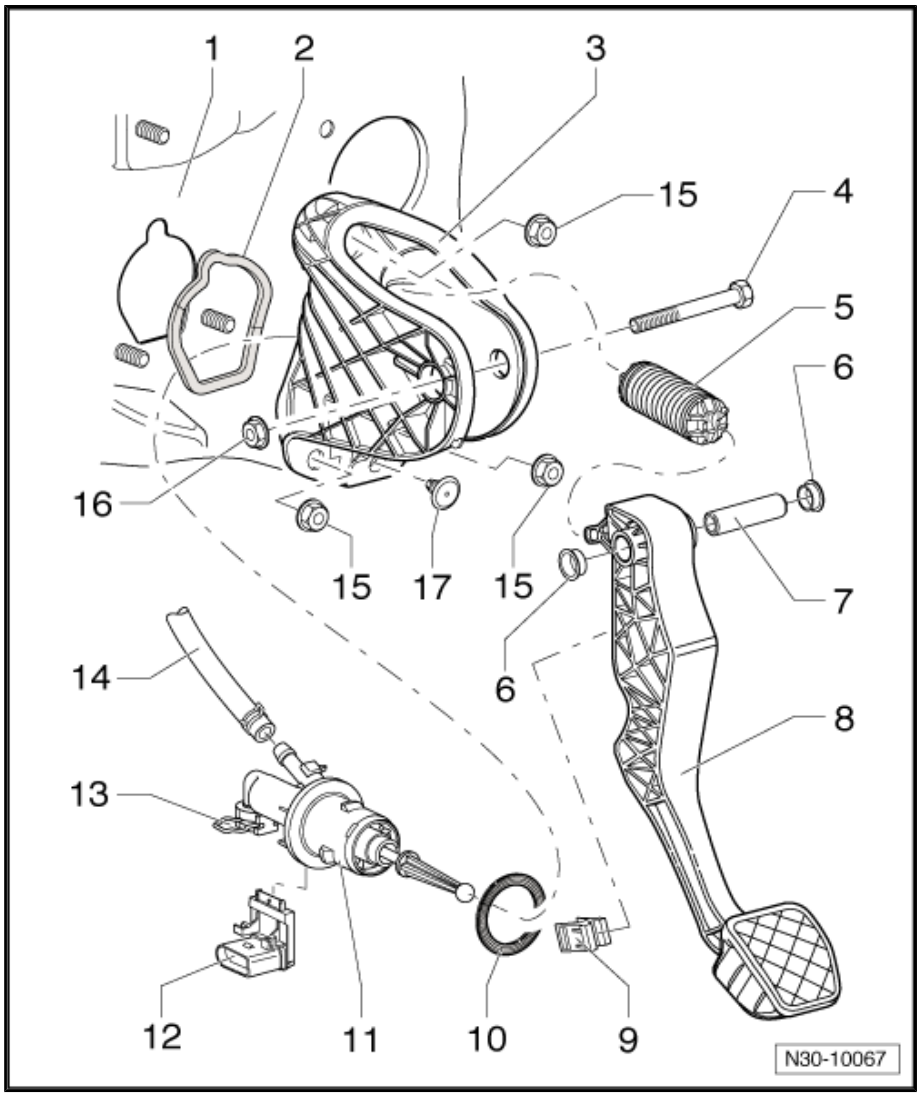

1 - Bulkhead

- ❑ With support for mounting bracket

2 - Seal

- ❑ Always renew
- ❑ Between mounting bracket and bulkhead
- ❑ Self-adhesive
- ❑ Bond to mounting bracket

3 - Mounting bracket

- ❑ For mounting clutch pedal
- ❑ Is provided with damping in some equipment variants ⇒ page 17
- ❑ Removing and installing, Golf 2004 ‣ ⇒ page 61
- ❑ Removing and installing, Golf 2009 ‣ LHD ⇒ page 67
- ❑ Removing and installing, Golf 2009 ‣ right-hand drive, and Golf Plus right-hand drive ⇒ page 73
- ❑ Removing and installing, Golf Plus left-hand drive ⇒ page 79
- ❑ Removing and installing, Passat ⇒ page 84

4 - Bolt

5 - Over-centre spring

- ❑ Removing and installing, Golf 2004 ‣ ⇒ page 18
- ❑ Removing and installing, Golf 2009 ‣ LHD ⇒ page 22
- ❑ Removing and installing, Golf 2009 ‣ RHD ⇒ page 27
- ❑ Removing and installing, Golf Plus ⇒ page 32
- ❑ Removing and installing, Passat ⇒ page 37

6 - Bearing bush

7 - Pivot pin

8 - Clutch pedal

- ❑ Removing and installing, Golf 2004 ‣ ⇒ page 38
- ❑ Removing and installing, Golf 2009 ‣ LHD ⇒ page 44
- ❑ Removing and installing, Golf 2009 ‣ RHD ⇒ page 49
- ❑ Removing and installing, Golf Plus ⇒ page 54
- ❑ Removing and installing, Passat ⇒ page 59

9 - Retainer

- ❑ To remove and install, separate master cylinder from clutch pedal (⇒ Removing and installing clutch pedal)

- ❑ Golf 2004 ‣ ⇒ page 38
- ❑ Golf 2009 ‣ LHD ⇒ page 44
- ❑ Golf 2009 ‣ RHD ⇒ page 49
- ❑ Golf Plus ⇒ page 54 .
- ❑ Passat ⇒ page 59

10 - Seal

- ❑ Always renew
- ❑ Between master cylinder and mounting bracket

11 - Master cylinder

- ❑ Removing and installing after removal of mounting bracket ⇒ page 88

12 - Clutch position sender -G476-

- ❑ Removing and installing ⇒ page 90
- ❑ Can be checked in “guided fault finding” of vehicle diagnosis, testing and information system -VAS 5051- .
- ❑ The clutch position sender -G476- is identified as clutch pedal switch -F36- in “guided fault finding”.

13 - Clip

- ❑ Pull out clip to stop to remove and install pipe/hose line

14 - Supply hose

- ❑ Rubber
- ❑ From 12. 05, plastic ⇒ page 95
- ❑ Golf 2009 ‣ and Golf Plus 2009 ‣ plastic ⇒ page 95

15 - Self-locking hexagon nut, 25 Nm

- ❑ Qty. 3
- ❑ For mounting bracket to bulkhead
- ❑ Always renew

16 - Hexagon nut, 25 Nm

- ❑ Always renew

17 - Stop

- ❑ For clutch pedal

Mounting bracket with damping -arrows-

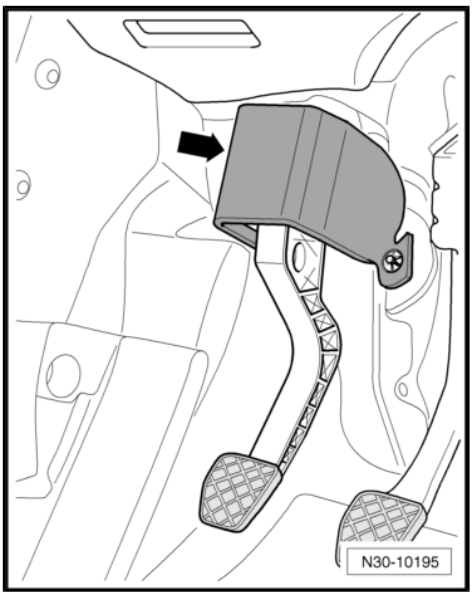

1.3 Removing and installing over-centre spring, Golf 2004 ▸

Special tools and workshop equipment required

♦ Release tool -T10178-

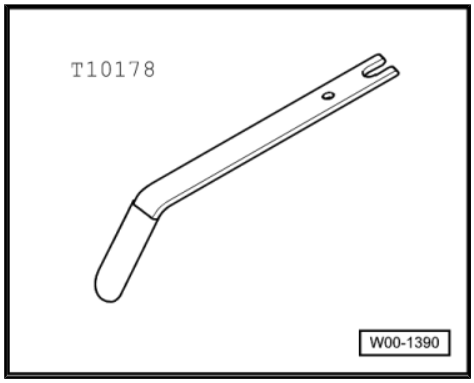

♦ Torque wrench -V.A.G 1331-

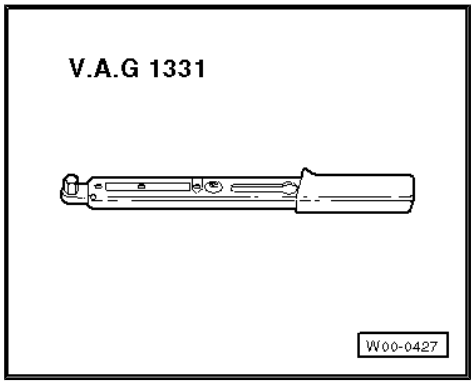

1.3.1 Removing

– Push driver seat as far back as possible and put steering wheel in highest position.

– Remove trim and cover below trim on drive side ⇒ General body repairs, interior; Rep. Gr. 68 .

– Remove cable guide -2- from steering column.

– Remove footwell vent -3-.⇒ Heating, air conditioning; Rep. Gr. 80 ; Repairing heating

The crash bar -1- in front of clutch pedal -2- may be secured in different ways.

Attachment with 2 bolts

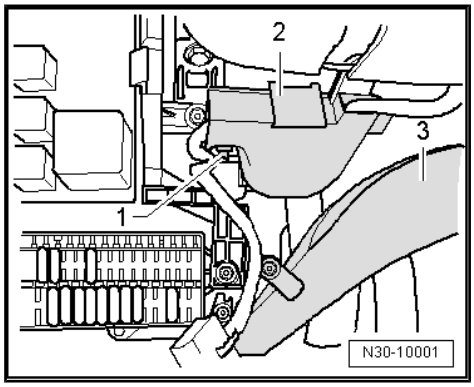

– Remove crash bar -1- (2 bolts).

Attachment with 1 bolt

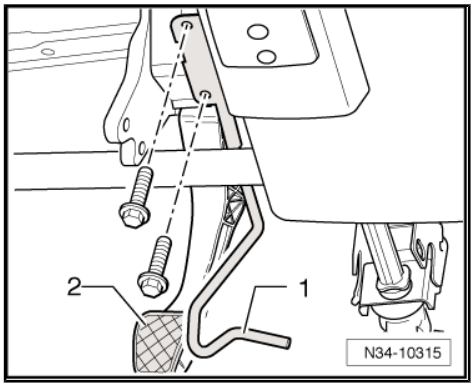

– Remove crash bar -1- (1 bolt -2-).

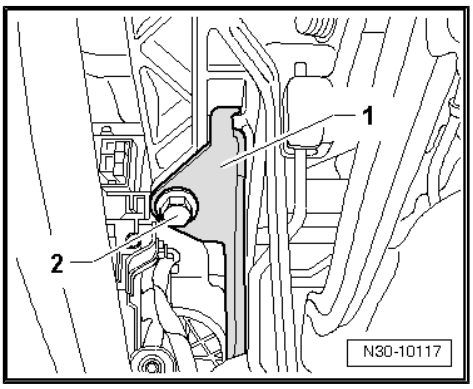

If fitted, remove damping -arrow- from lower area of clutch pedal mounting bracket.

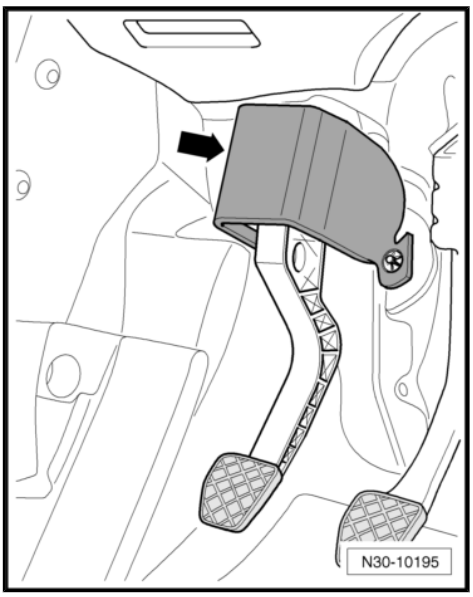

– To do this, remove lock washers -A- for damping.
– Pull off damping.

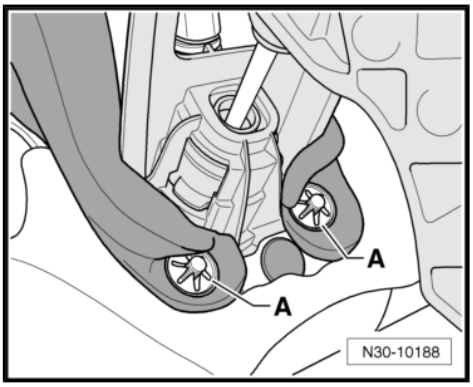

– Push damping upwards in area of upper securing nut -1- above clutch pedal -A- in -direction of arrow-.

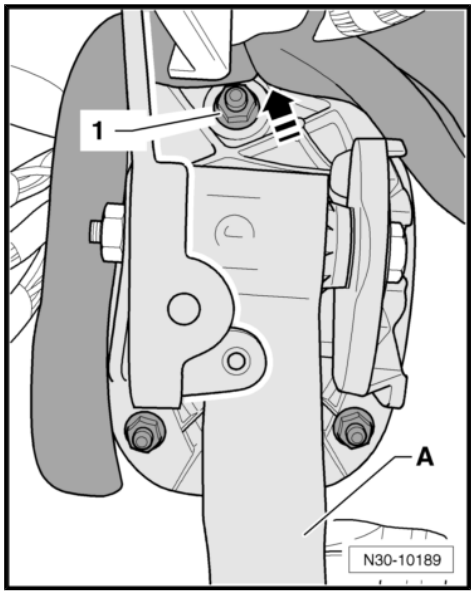

– Unbolt clutch pedal -1- from mounting bracket -3- by removing nut -2- and pulling out bolt -5-.

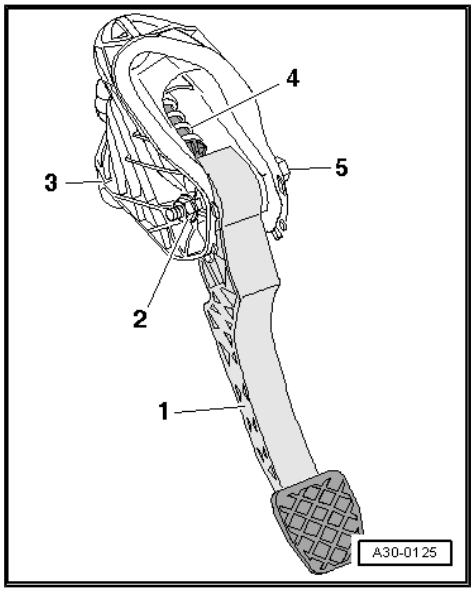

Note

The clutch pedal remains hooked to operating rod of master cylinder.

– Swing clutch pedal down slightly and remove over-centre spring -4- from mounting bracket.

1.3.2 Installing

Install in the reverse order of removal, observing the following:

Note

Renew self-locking nuts.

– Insert over-centre spring -2- in mounting bracket from above while holding end of spring with assembly tool -T10178- in installation position.

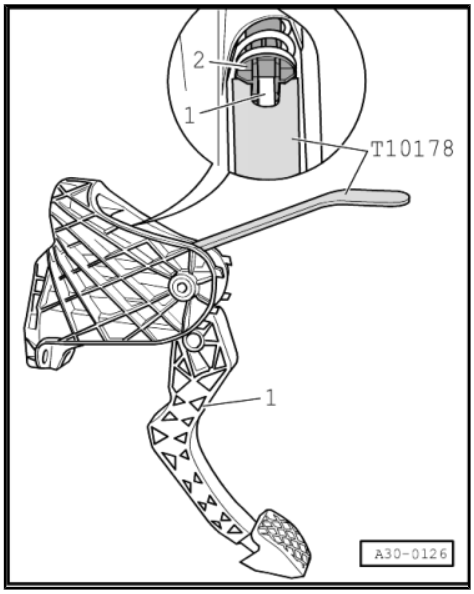

– Receptacle -arrow- for tip -A- of clutch pedal must stand vertically.
– Insert tip of clutch pedal in bearing recess of over-centre spring.
– Depress clutch pedal slightly, push bolt through and tighten self-locking nut to specified torque ⇒ page 22 .

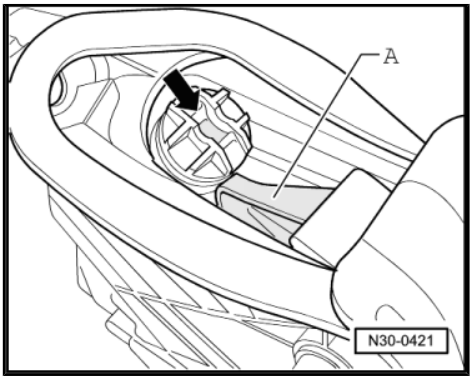

Some cars have damping -arrow- on the clutch pedal mounting bracket.

– Return it to installation position.

The crash bar -1- in front of clutch pedal -2- may be secured in different ways.

Attachment with 2 bolts

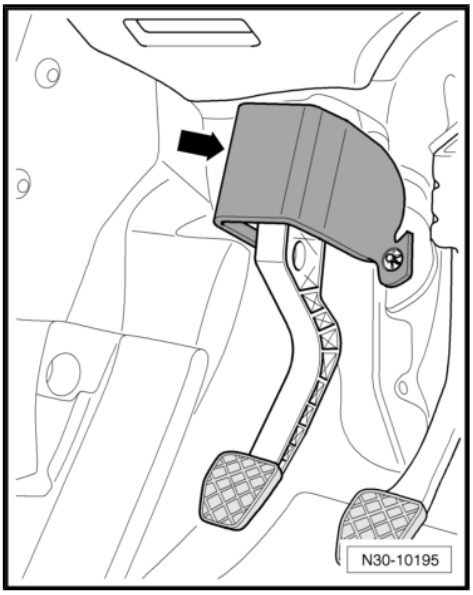

– Install crash bar -1- and tighten the 2 bolts to specified torque ⇒ page 22 .

Attachment with 1 bolt

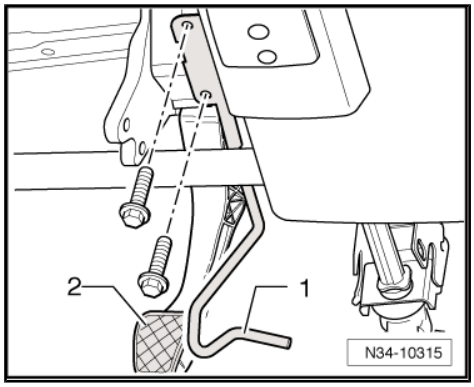

– Install crash bar -1- and tighten bolt -2- to specified torque ⇒ page 22 .

– Install trim and cover below trim on drive side ⇒ General body repairs, interior; Rep. Gr. 68 .

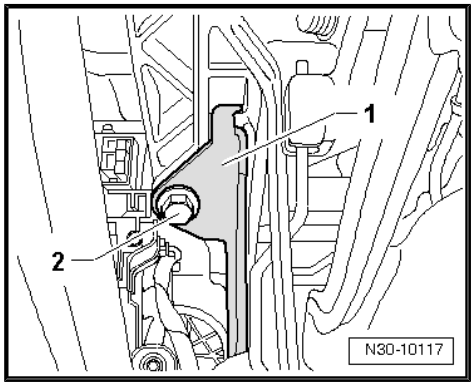

1.3.3 Torque settings

Component	Nm
Clutch pedal to mounting bracket ♦ Renew self-locking nuts.	25
Crash bar to steering column mounting bracket (attachment with 2 bolts)	10
Crash bar to steering column mounting bracket (attachment with 1 bolt)	20
♦ Renew bolts for crash bar	

1.4 Removing and installing over-centre spring, Golf 2009 ▸ LHD

Special tools and workshop equipment required

♦ Release tool -T10178-

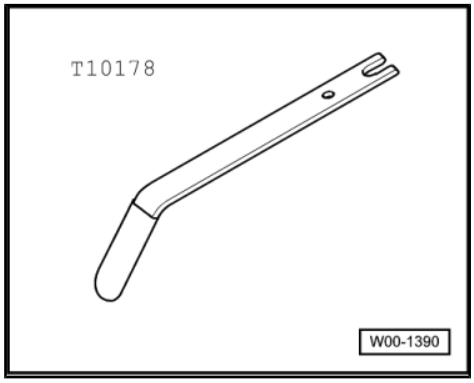

♦ Torque wrench -V.A.G 1331-

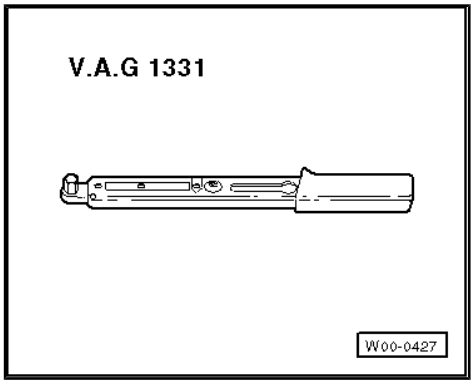

1.4.1 Removing

Vehicles with knee airbag

Note

The installation location of the knee airbag is above the pedal cluster.

– First check whether a coded radio is fitted. If so, obtain anti-theft code.

– With ignition switched off, disconnect battery ⇒ Electrical system; Rep. Gr. 27 ; Disconnecting and connecting battery .

Continuation for all

– Push driver seat as far back as possible and put steering wheel in highest position.

– Remove trim and cover below trim on drive side ⇒ General body repairs, interior; Rep. Gr. 68 .

Vehicles with knee airbag

– Remove bracket for knee airbag together with crash bar ⇒ Interior equipment; Rep. Gr. 69 ; Airbag; Removing and installing knee airbag bracket (Golf 2009 ▸) .

Continuation for all

– Remove cable guide -2- from steering column.

– Remove footwell vent -3-.⇒ Heating, air conditioning; Rep. Gr. 80 ; Repairing heating

Vehicles without knee airbag

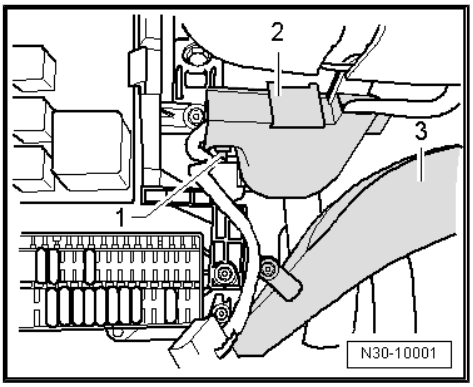

– Remove crash bar -1- (bolt -2-).

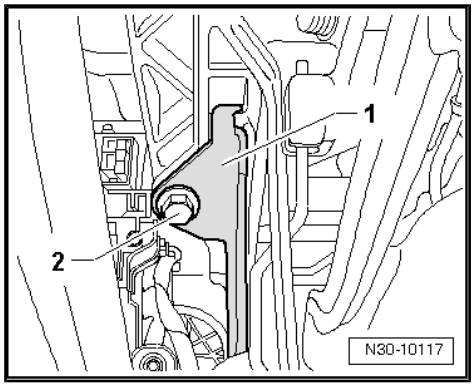

Continuation for all

If fitted, remove damping -arrow- from lower area of clutch pedal mounting bracket.

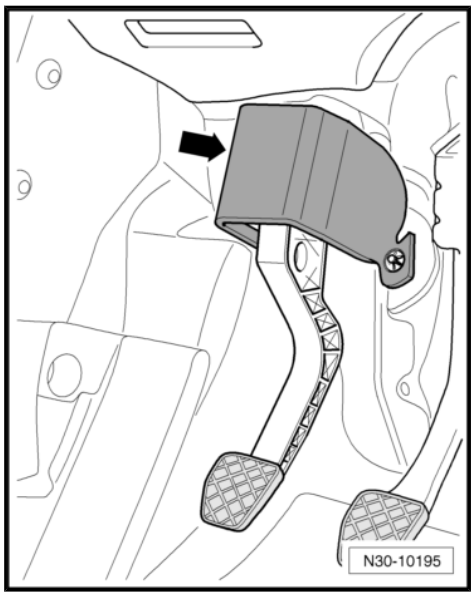

– To do this, remove lock washers -A- for damping.
– Pull off damping.

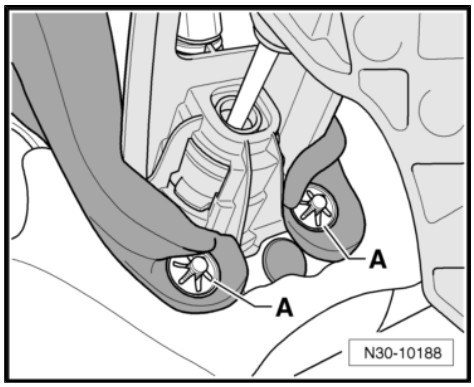

– Push damping upwards in area of upper securing nut -1- above clutch pedal -A- in -direction of arrow-.

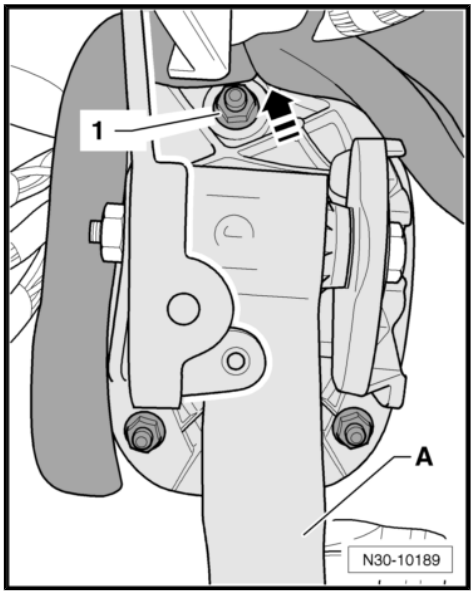

– Unbolt clutch pedal -1- from mounting bracket -3- by removing nut -2- and pulling out bolt -5-.

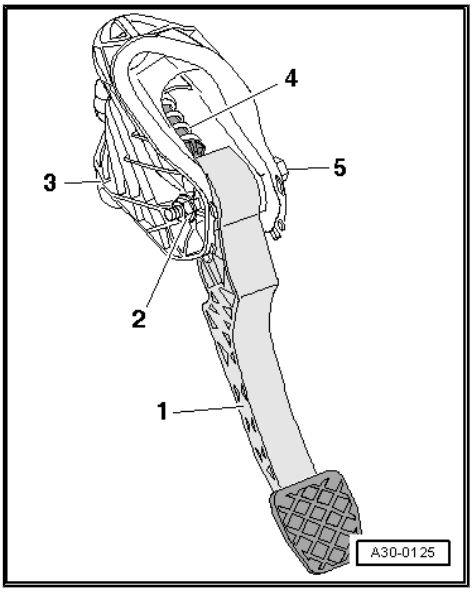

Note

The clutch pedal remains hooked to operating rod of master cylinder.

– Swing clutch pedal down slightly and remove over-centre spring -4- from mounting bracket.

1.4.2 Installing

Install in the reverse order of removal, observing the following:

Note

Renew self-locking nuts.

– Insert over-centre spring -2- in mounting bracket from above while holding end of spring with assembly tool -T10178- in installation position.

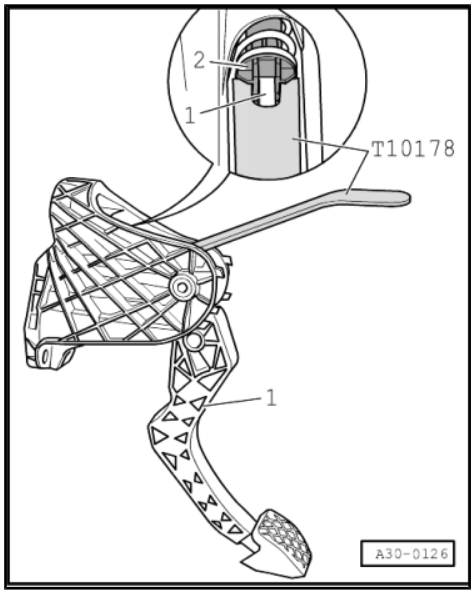

– Receptacle -arrow- for tip -A- of clutch pedal must stand vertically.
– Insert tip of clutch pedal -1- in bearing recess of over-centre spring.
– Depress clutch pedal slightly, push bolt through and tighten self-locking nut to specified torque ⇒ page 27 .

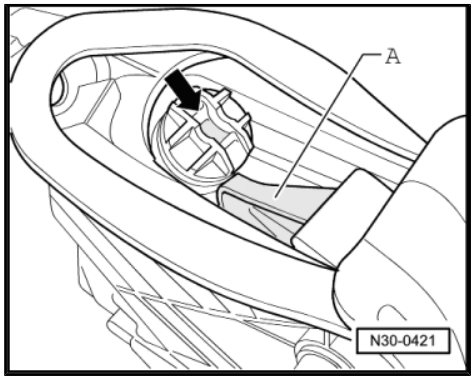

Some cars have damping -arrow- on the clutch pedal mounting bracket.

– Return it to installation position.

Vehicles without knee airbag

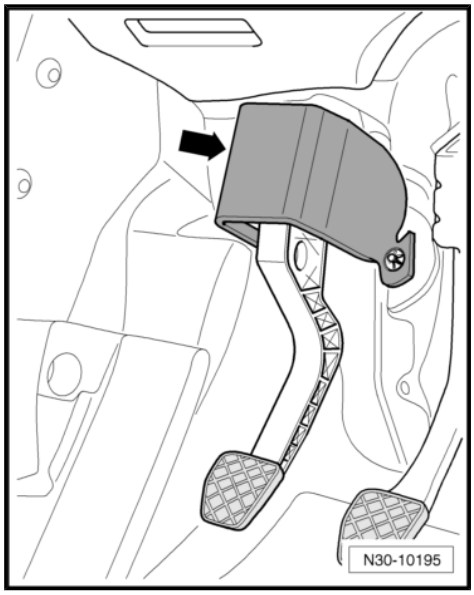

– Install crash bar -1- and tighten bolt -2- to specified torque ⇒ page 27 .

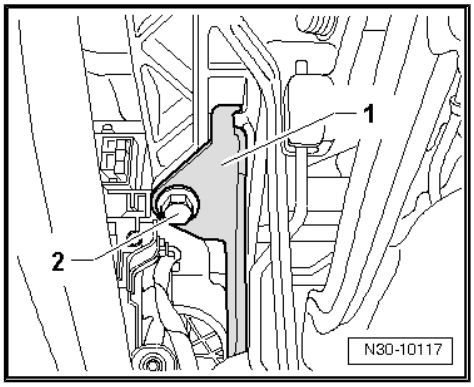

Continuation for all

– Mount cable guide -2- on steering column.

– Install foot well vent -3-.⇒ Rep. Gr. 80

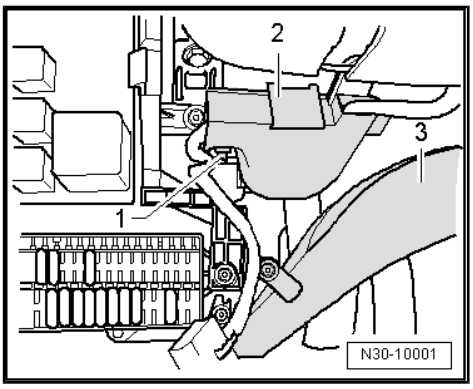

Vehicles with knee airbag

– Install bracket for knee airbag together with crash bar ⇒ Interior equipment; Rep. Gr. 69 ; Airbag; Removing and installing knee airbag bracket (Golf 2009 ▸) .

Continuation for all

– Install trim and cover below trim on drive side ⇒ General body repairs, interior; Rep. Gr. 68 .

– If disconnected, connect battery ⇒ Electrical system; Rep. Gr. 27 ; Removing and installing battery .

1.4.3 Torque settings

Component	Nm
Clutch pedal to mounting bracket ♦ Renew self-locking nuts.	25
Crash bar to steering column mounting bracket	20
♦ Renew bolt for crash bar	

1.5 Removing and installing over-centre spring, Golf 2009 ▸ RHD

Special tools and workshop equipment required

♦ Pliers -T10005-

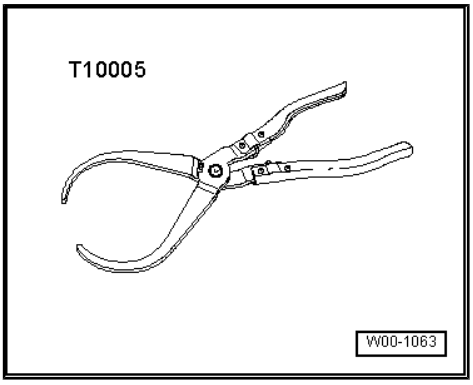

♦ Release tool -T10178-

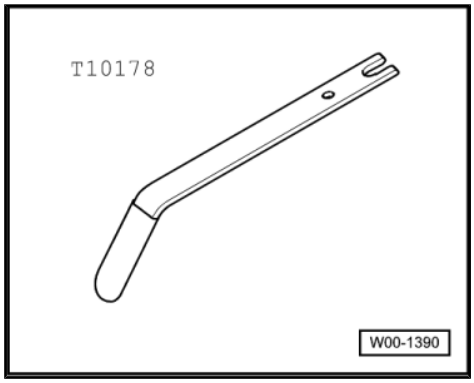

♦ Torque wrench -V.A.G 1331-

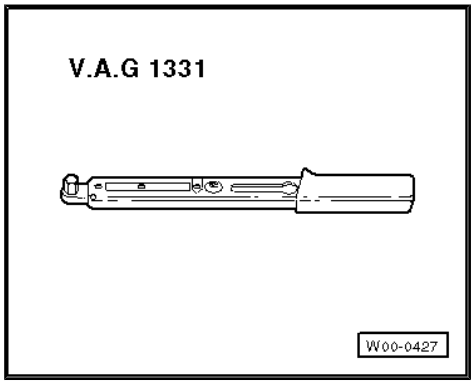

1.5.1 Removing

– First check whether a coded radio is fitted. If so, obtain anti-theft code.

– With ignition switched off, disconnect battery ⇒ Electrical system; Rep. Gr. 27 ; Disconnecting and connecting battery .

– Push driver seat as far back as possible and put steering wheel in highest position.

– Remove trim and cover below trim on driver side ⇒ Body Repairs; Rep. Gr. 68 .

– Remove bracket for knee airbag ⇒ Interior equipment; Rep. Gr. 69 ; Airbag; Removing and installing knee airbag bracket (Golf 2009 ▸) .

– Remove footwell vent -3-.⇒ Heating, air conditioning; Rep. Gr. 80 ; Repairing heating

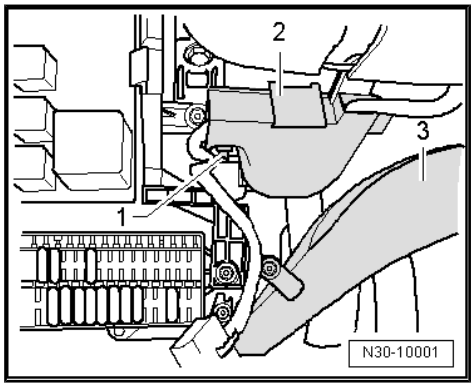

– Remove cable guide -2- from steering column.
– Remove crash bar -1- (bolt -2-).

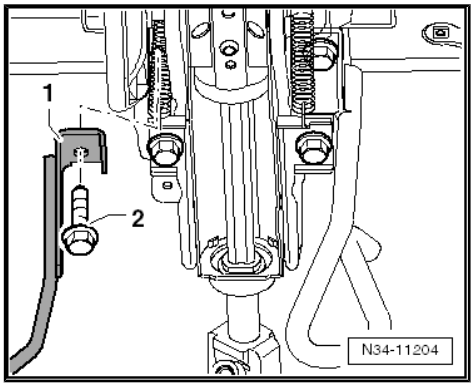

If fitted, remove damping -arrow- from lower area of clutch pedal mounting bracket.

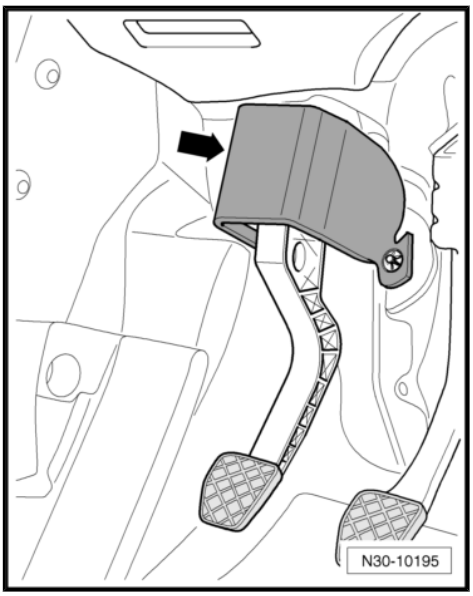

– To do this, remove lock washers -A- for damping.
– Pull off damping.

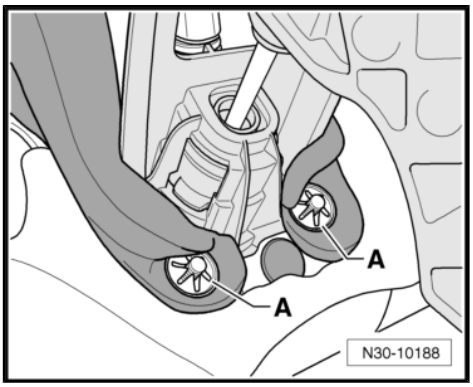

– Push damping upwards in area of upper securing nut -1- above clutch pedal -A- in -direction of arrow-.

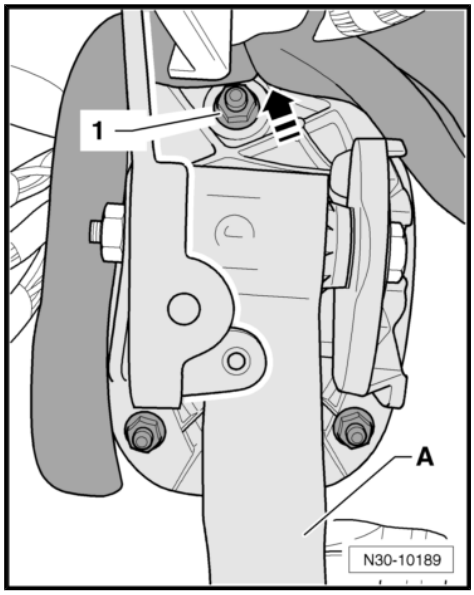

– Unbolt clutch pedal -1- from mounting bracket -3- by removing nut -2- and pulling out bolt -5-.

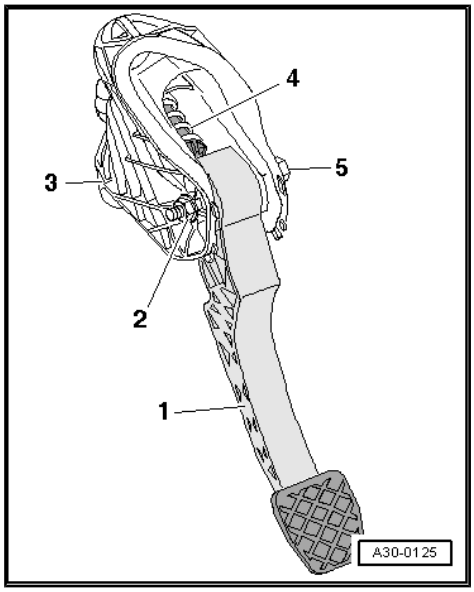

Note

The clutch pedal remains hooked to operating rod of master cylinder.

– Swing clutch pedal down slightly and remove over-centre spring -4- from mounting bracket.

1.5.2 Installing

Install in the reverse order of removal, observing the following:

Note

Renew self-locking nuts.

– Insert over-centre spring -2- in mounting bracket from above while holding end of spring with assembly tool -T10178- in installation position.

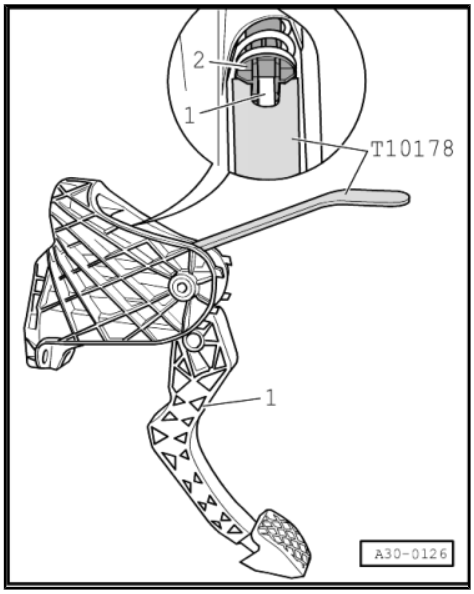

– Receptacle -arrow- for tip -A- of clutch pedal must stand vertically.
– Insert tip of clutch pedal -1- in bearing recess of over-centre spring.
– Depress clutch pedal slightly, push bolt through and tighten self-locking nut to specified torque ⇒ page 32 .

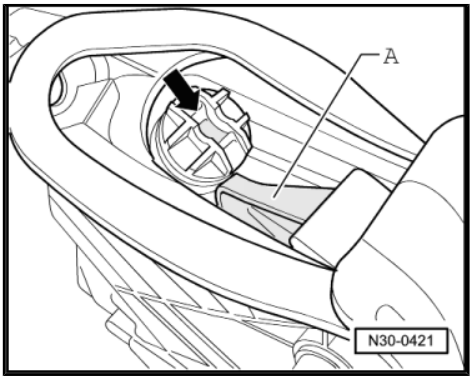

Some cars have damping -arrow- on the clutch pedal mounting bracket.

– Return it to installation position.

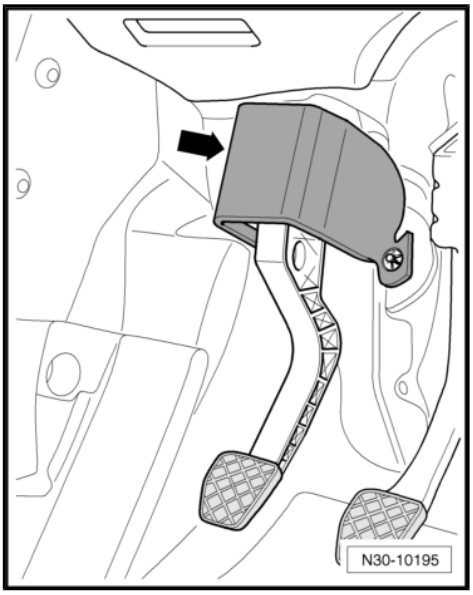

– Install crash bar -1- and tighten bolt -2- to specified torque ⇒ page 32 .

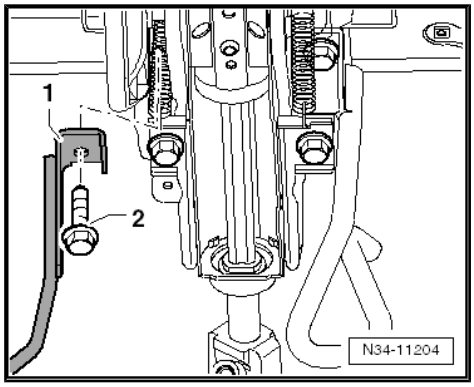

– Mount cable guide -2- on steering column.
– Install foot well vent -3-.⇒ Rep. Gr. 80
– Install bracket for knee airbag ⇒ Interior equipment; Rep. Gr. 69 ; Airbag; Removing and installing knee airbag bracket (Golf 2009 ▸) .
– Install trim and cover below trim on drive side ⇒ General body repairs, interior; Rep. Gr. 68 .
– If disconnected, connect battery ⇒ Electrical system; Rep. Gr. 27 ; Removing and installing battery .

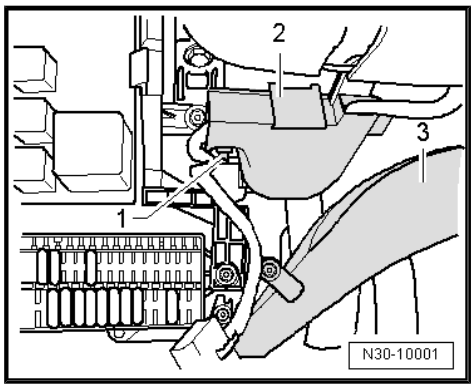

1.5.3 Torque settings

Component	Nm
Clutch pedal to mounting bracket ♦ Renew self-locking nuts	25
Crash bar to steering column mounting bracket	20
♦ Renew bolt for crash bar	

1.6 Removing and installing over-centre spring, Golf Plus

Special tools and workshop equipment required

♦ Torque wrench -V.A.G 1331-

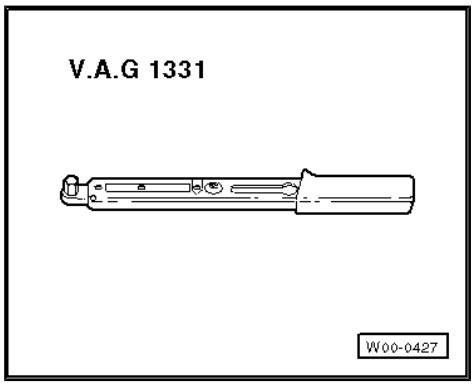

1.6.1 Removing

– Push driver seat as far back as possible and put steering wheel in highest position.

– Remove trim and cover below trim on drive side ⇒ General body repairs, interior; Rep. Gr. 68 .

– Carefully cut through cable tie -1-.

– Remove cable guide -2- from steering column.

– Remove footwell vent -3-.⇒ Heating, air conditioning; Rep. Gr. 80 ; Repairing heating

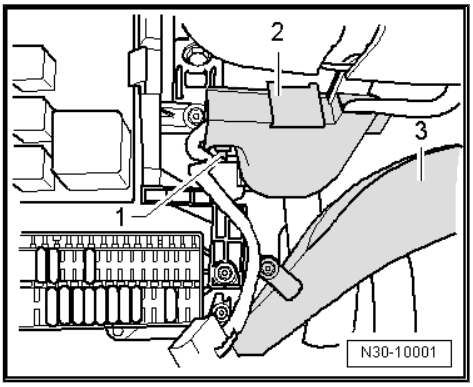

– Now remove crash bar -A- from in front of clutch pedal by removing bolt -B-.

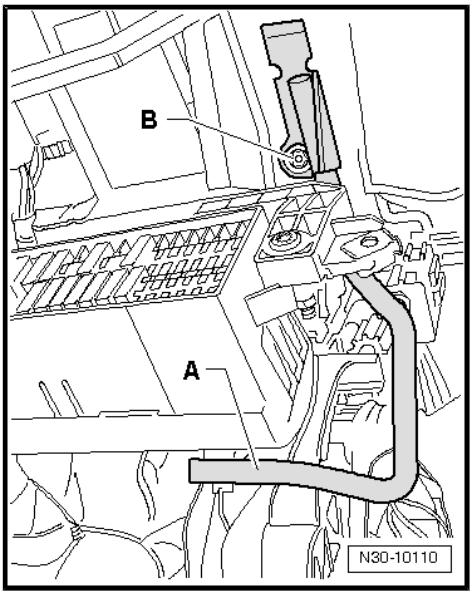

– Remove footwell trim by removing nuts -arrows-.

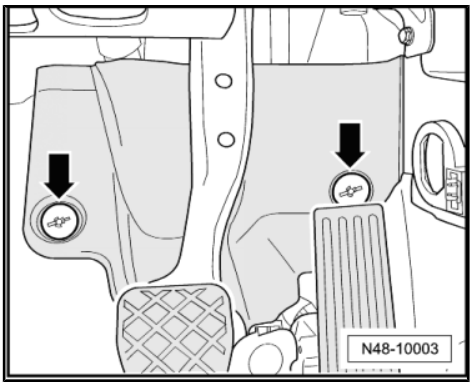

– Remove bolt -1- and pull universal joint -2- from steering box.

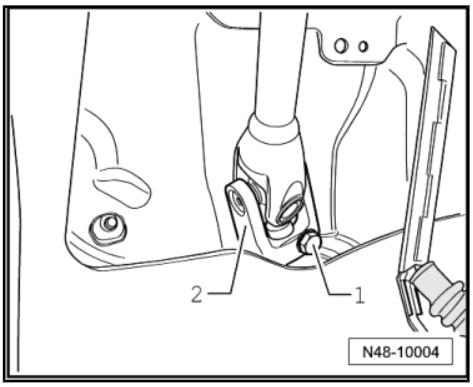

If fitted, remove damping -arrow- from lower area of clutch pedal mounting bracket.

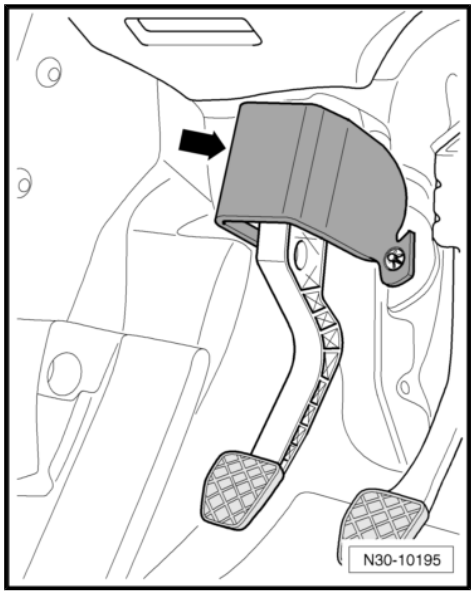

– To do this, remove lock washers -A- for damping.
– Pull off damping.

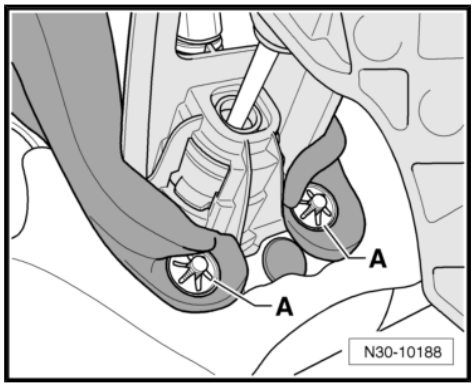

– Push damping upwards in area of upper securing nut -1- above clutch pedal -A- in -direction of arrow-.

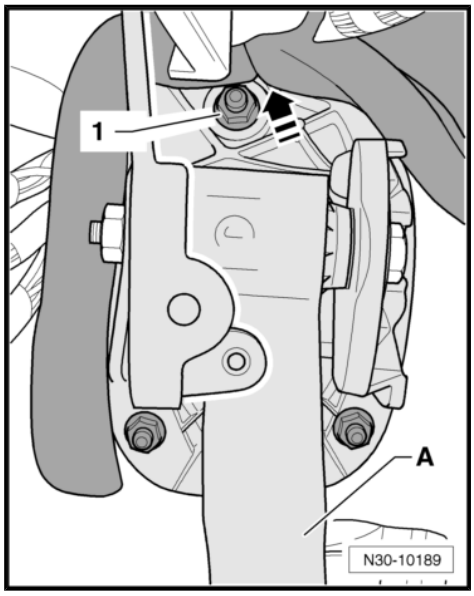

– Unbolt clutch pedal -1- from mounting bracket -3- by removing nut -2- and pulling out bolt -5-.

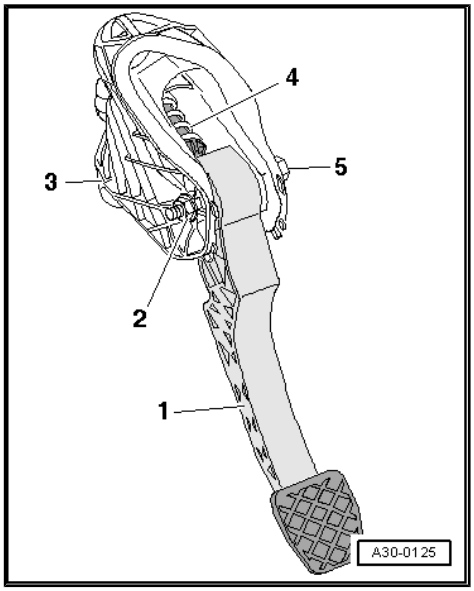

Note

The clutch pedal remains hooked to operating rod of master cylinder.

– Swing clutch pedal down slightly and remove over-centre spring -4- from mounting bracket.

1.6.2 Installing

Install in the reverse order of removal, observing the following:

Note

Renew self-locking nuts.

– Insert over-centre spring in mounting bracket from above.
– Receptacle -arrow- for tip -A- of clutch pedal must be vertical.
– Insert tip of clutch pedal in bearing recess of over-centre spring.
– Depress clutch pedal slightly, push bolt through and tighten self-locking nut to specified torque ⇒ page 36 .

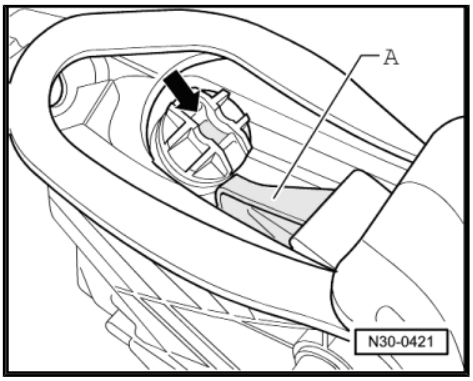

Some cars have damping -arrow- on the clutch pedal mounting bracket.

– Return it to installation position.

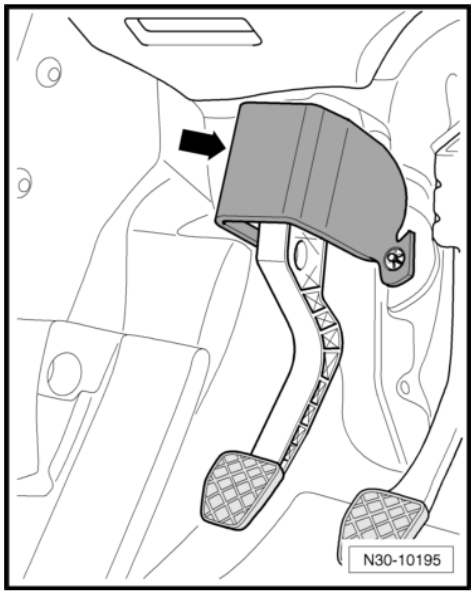

– Install crash bar -A-, tightening bolt -B- ⇒ page 36 .

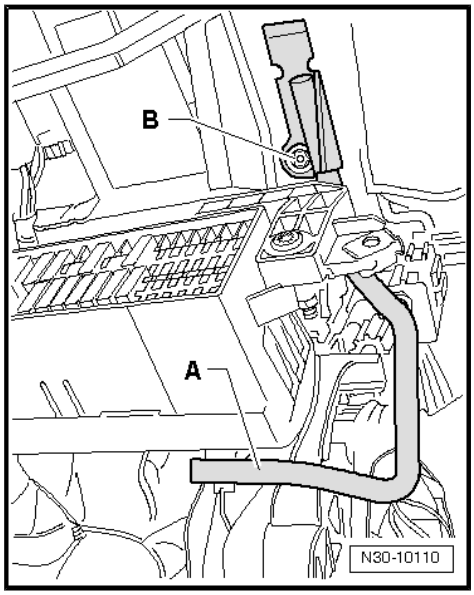

– Fit universal joint -2- to steering box and screw in new bolt -1- ⇒ Running gear, axles, steering; Rep. Gr. 48 ; Assembly overview - Steering .

– Carry out basic setting for steering angle sender -G85- with vehicle diagnosis, testing and information system -VAS 5051- .

– Install trim and cover below trim on drive side ⇒ General body repairs, interior; Rep. Gr. 68 .

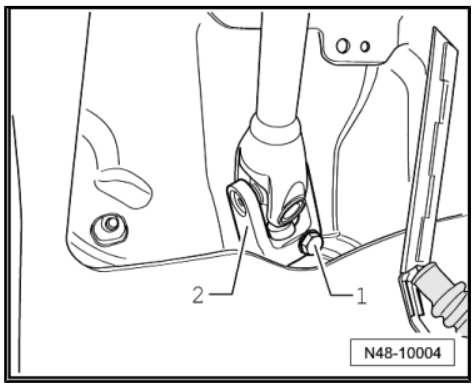

1.6.3 Torque settings

Component	Nm
Clutch pedal to mounting bracket ♦ Renew self-locking nuts	25
Crash bar to steering column mounting bracket	Bolt M6 = 5

Component	Nm
Crash bar to steering column mounting bracket	Bolt M8 = 20
♦ Renew bolts for crash bar	

1.7 Removing and installing over-centre spring, Passat

Special tools and workshop equipment required

♦ Release tool -T10178-

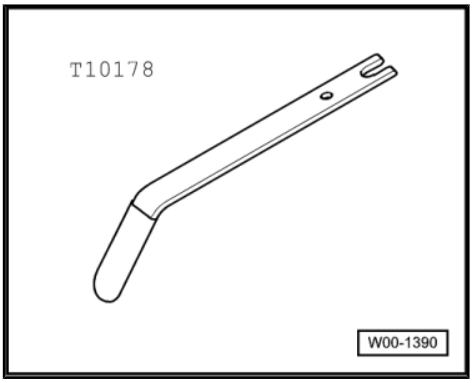

1.7.1 Removing

– Remove mounting bracket ⇒ page 84 .

– Carefully clamp lower section of clutch pedal in vice having protective jaw pads.

– Separate clutch pedal from master cylinder ⇒ page 59 .

– Press over-centre spring from clutch pedal -arrow 1- while swinging mounting bracket in -direction of arrow 2-.

– Carefully release tension from over-centre spring.

– Swing mounting bracket back to starting position and remove over-centre spring.

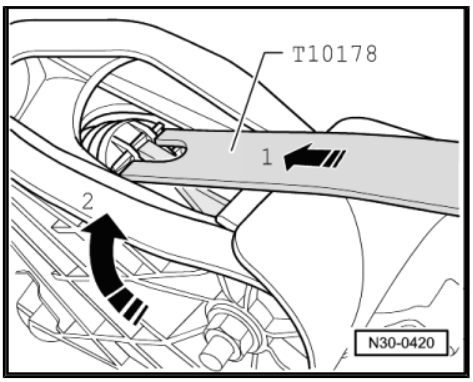

1.7.2 Installing

• Clutch pedal is separated from master cylinder.

– Carefully clamp lower section of clutch pedal in vice having protective jaw pads.

– Insert over-centre spring in mounting bracket.

– Receptacle -arrow- for tip -A- of clutch pedal must stand vertically.
– Apply release tool -T10178- to middle of over-centre spring and swing up mounting bracket.

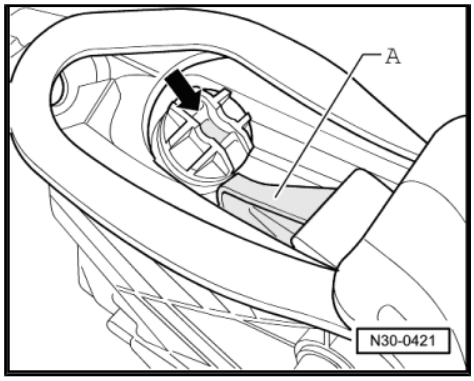

– Compress over-centre spring -arrow 1-.
– At the same time, move mounting bracket downwards -arrow 2- until over-centre spring can be pressed onto locating lug -A- of clutch pedal.

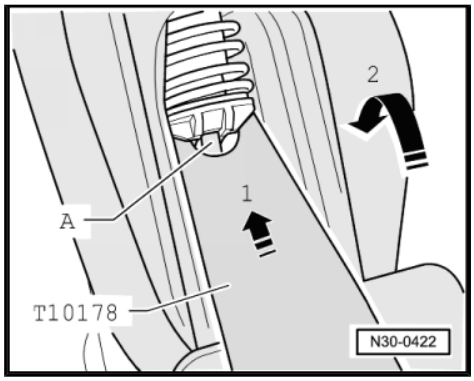

> ⚠ WARNING
>
> *If over-centre spring is improperly installed, it will jump uncontrolled out of mounting bracket.*
>
> *Place a cloth over over-centre spring.*
>
> *Check operation of over-centre spring.*
>
> *Do this by moving mounting bracket up and down a few times.*

– Connect clutch pedal to master cylinder ⇒ page 59 .
– Install mounting bracket, Passat ⇒ page 84 .

1.8 Removing and installing clutch pedal, Golf 2004 ▸

Special tools and workshop equipment required

♦ Pliers -T10005-

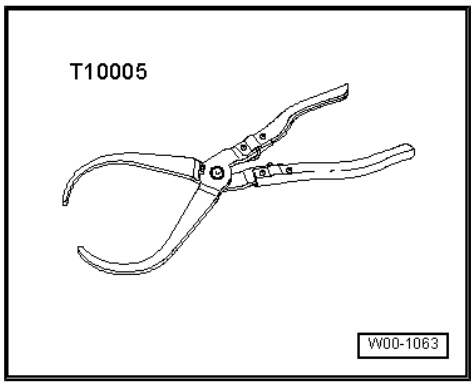

♦ Release tool -T10178-

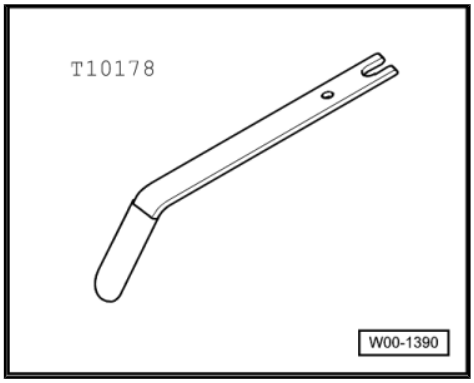

♦ Torque wrench -V.A.G 1331-

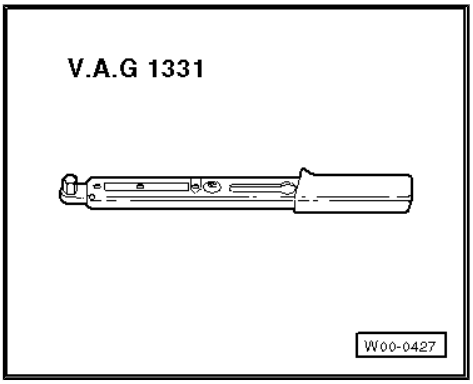

1.8.1 Removing

– Push driver seat as far back as possible and put steering wheel in highest position.

– Remove trim and cover below trim on drive side ⇒ General body repairs, interior; Rep. Gr. 68 .

– Remove cable guide -2- from steering column.

– Remove footwell vent -3-.⇒ Heating, air conditioning; Rep. Gr. 80 ; Repairing heating

The crash bar -1- in front of clutch pedal -2- may be secured in different ways.

Attachment with 2 bolts

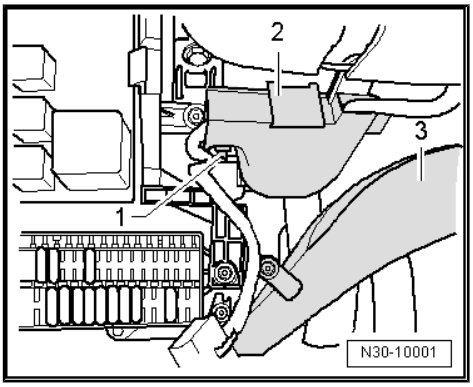

– Remove crash bar -1- (2 bolts).

Attachment with 1 bolt

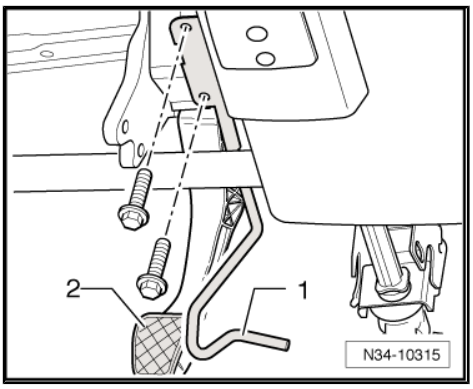

– Remove crash bar -1- (1 bolt -2-).

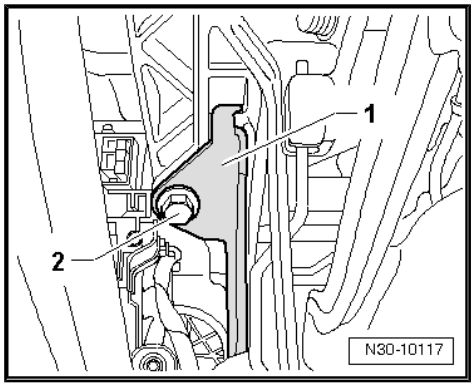

If fitted, remove damping -arrow- from lower area of clutch pedal mounting bracket.

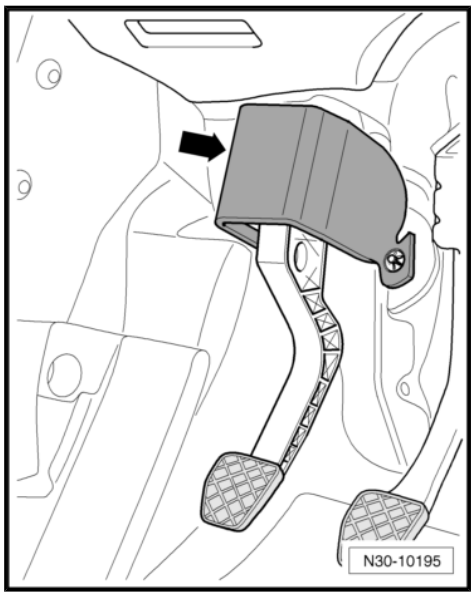

– To do this, remove lock washers -A- for damping.
– Pull off damping.

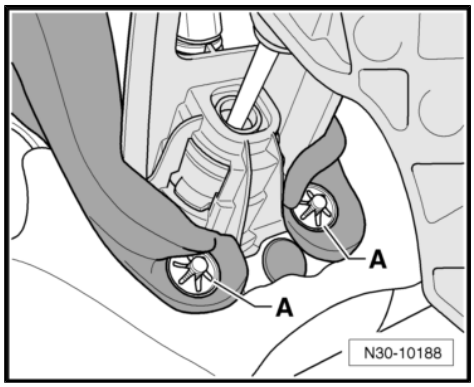

– Push damping upwards in area of upper securing nut -1- above clutch pedal -A- in -direction of arrow-.

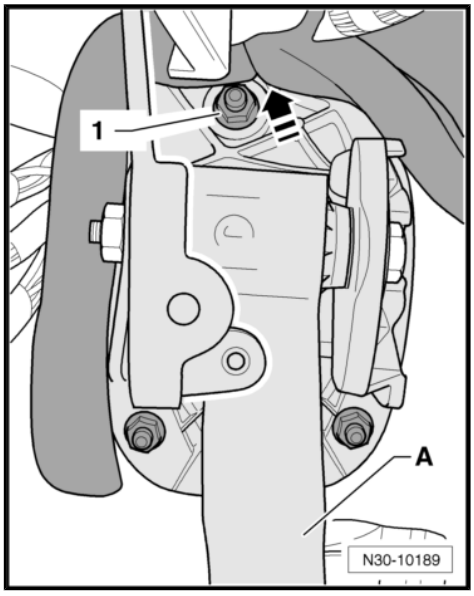

– Unbolt clutch pedal -1- from mounting bracket -3- by removing nut -2- and pulling out bolt -5-.
– Swing clutch pedal forward slightly and remove over-centre spring -4- from mounting bracket.

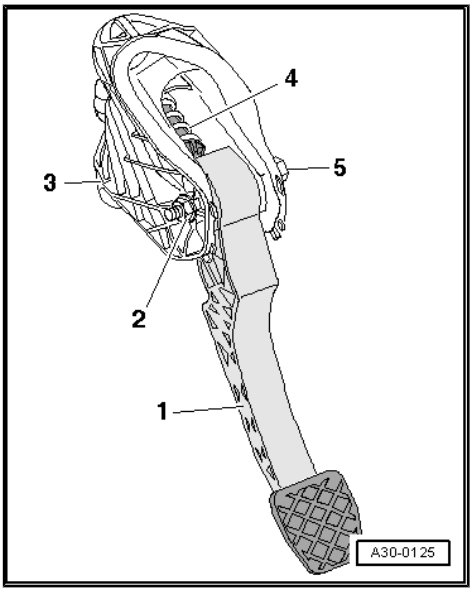

– Release clutch pedal from master cylinder with pliers - T10005- .
– Remove clutch pedal.

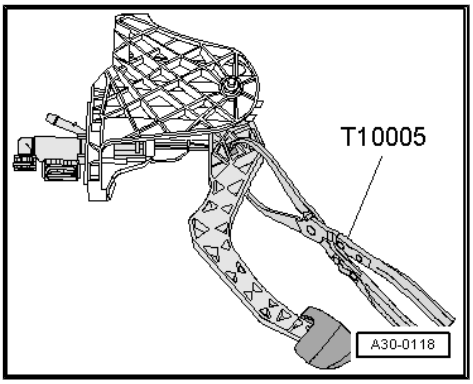

1.8.2 Installing

Install in the reverse order of removal, observing the following:

Note

Renew self-locking nuts.

– Attach retainer -2- to master cylinder operating rod -1-.
– Press retainer into notch in clutch pedal -3- until it can be heard to engage.

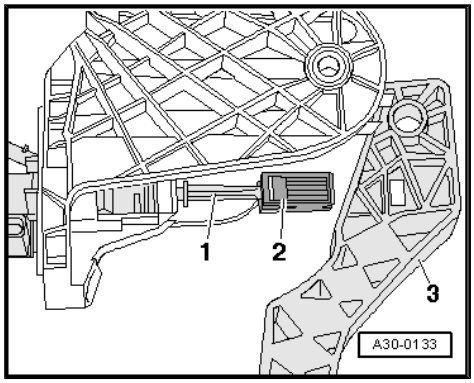

– Insert over-centre spring -2- in mounting bracket from above while holding end of spring with assembly tool -T10178- in installation position.

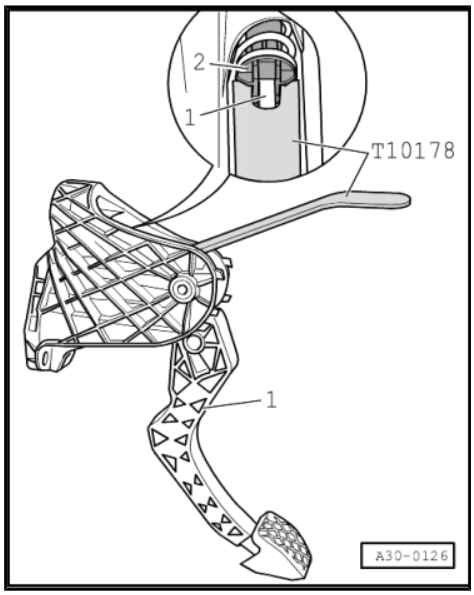

– Receptacle -arrow- for tip -A- of clutch pedal -1- must be vertical.
– Insert tip -A- of clutch pedal in bearing recess of over-centre spring.
– Depress clutch pedal slightly, push bolt through and tighten self-locking nut to specified torque ⇒ page 43 .

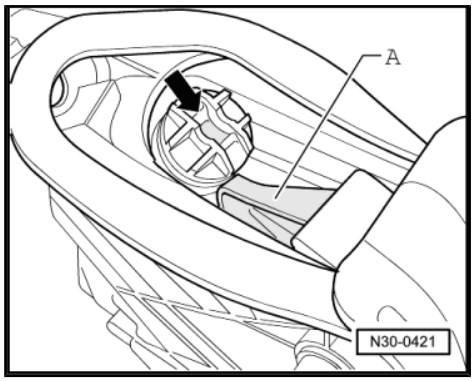

Some cars have damping -arrow- on the clutch pedal mounting bracket.

– Return it to installation position.

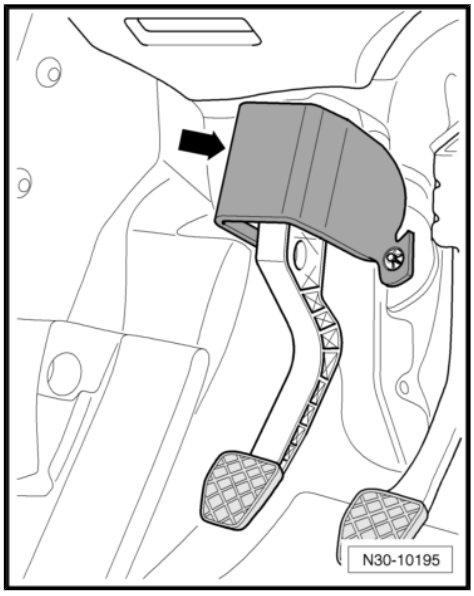

The crash bar -1- in front of clutch pedal -2- may be secured in different ways.

Attachment with 2 bolts

– Install crash bar -1- and tighten the 2 bolts to specified torque ⇒ page 43 .

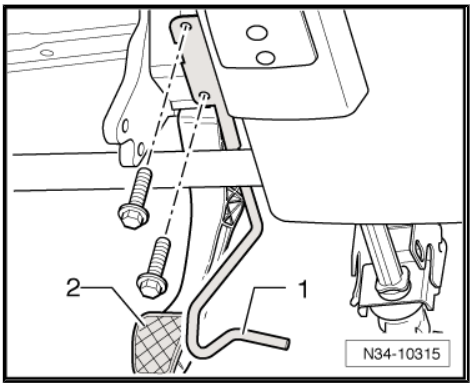

Attachment with 1 bolt

– Install crash bar -1- and tighten bolt -2- to specified torque ⇒ page 43 .

– Install trim and cover below trim on drive side ⇒ General body repairs, interior; Rep. Gr. 68 .

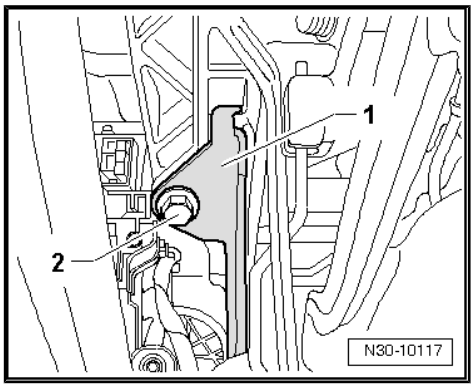

1.8.3 Torque settings

Component	Nm
Clutch pedal to mounting bracket ♦ Renew self-locking nuts.	25
Crash bar to steering column mounting bracket (attachment with 2 bolts)	10
Crash bar to steering column mounting bracket (attachment with 1 bolts)	20
♦ Renew bolts for crash bar	

1.9 Removing and installing clutch pedal, Golf 2009 ▸ LHD

Special tools and workshop equipment required

- Pliers -T10005-

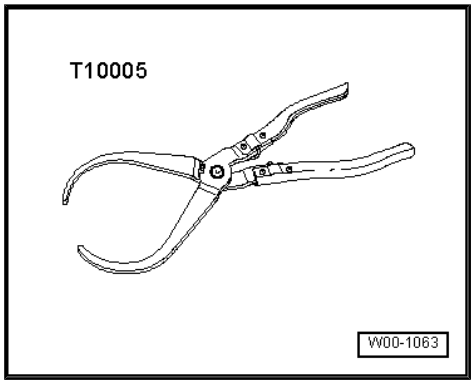

- Release tool -T10178-

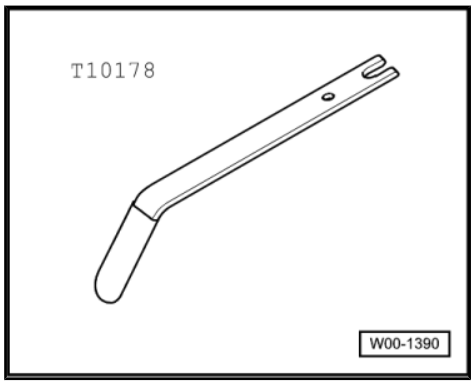

- Torque wrench -V.A.G 1331-

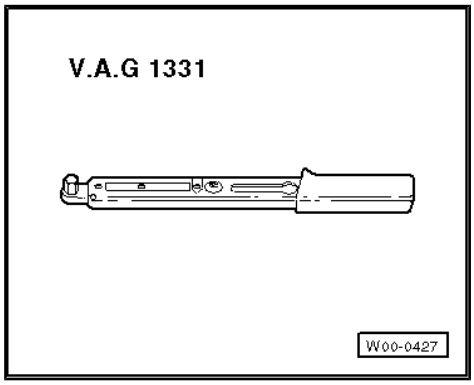

1.9.1 Removing

Vehicles with knee airbag

Note

The installation location of the knee airbag is above the pedal cluster.

– First check whether a coded radio is fitted. If so, obtain anti-theft code.

– With ignition switched off, disconnect battery ⇒ Electrical system; Rep. Gr. 27 ; Disconnecting and connecting battery .

Continuation for all

– Push driver seat as far back as possible and put steering wheel in highest position.

– Remove trim and cover below trim on drive side ⇒ General body repairs, interior; Rep. Gr. 68 .

Vehicles with knee airbag

– Remove bracket for knee airbag together with crash bar ⇒ Interior equipment; Rep. Gr. 69 ; Airbag; Removing and installing knee airbag bracket (Golf 2009 ▸) .

Continuation for all

– Remove cable guide -2- from steering column.

– Remove footwell vent -3-.⇒ Heating, air conditioning; Rep. Gr. 80 ; Repairing heating

Vehicles without knee airbag

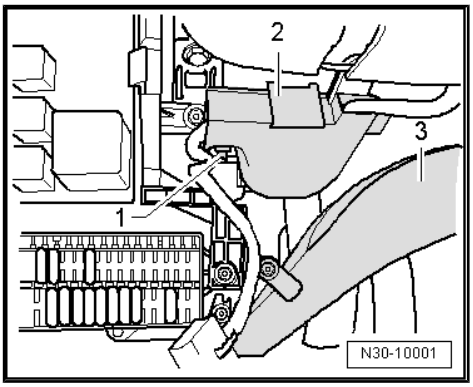

– Remove crash bar -1- (bolt -2-).

Continuation for all

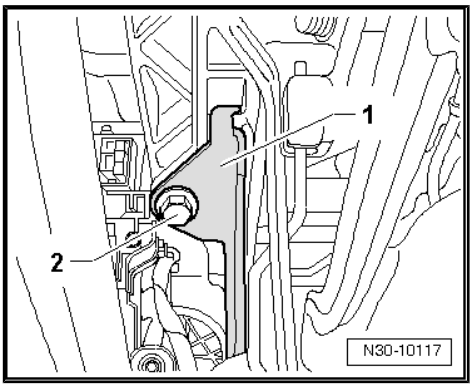

If fitted, remove damping -arrow- from lower area of clutch pedal mounting bracket.

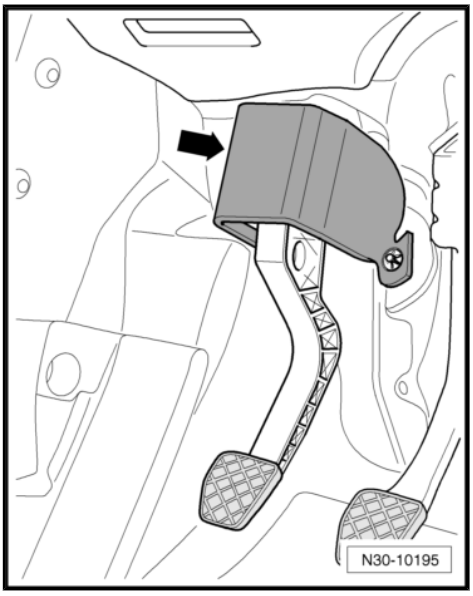

– To do this, remove lock washers -A- for damping.
– Pull off damping.

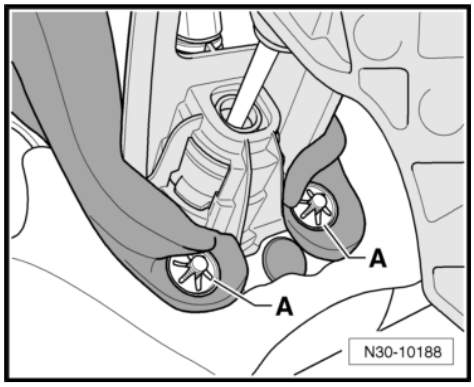

– Push damping upwards in area of upper securing nut -1- above clutch pedal -A- in -direction of arrow-.

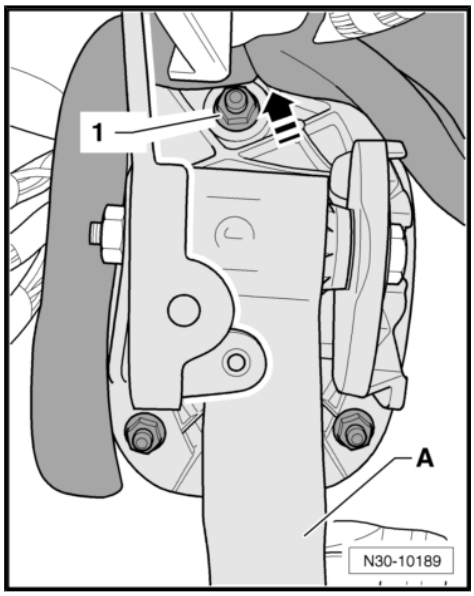

– Unbolt clutch pedal -1- from mounting bracket -3- by removing nut -2- and pulling out bolt -5-.
– Swing clutch pedal forward slightly and remove over-centre spring -4- from mounting bracket.

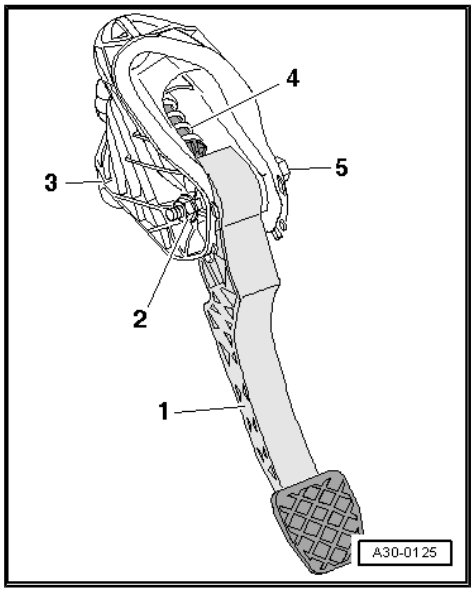

– Release clutch pedal from master cylinder with pliers - T10005- .
– Remove clutch pedal.

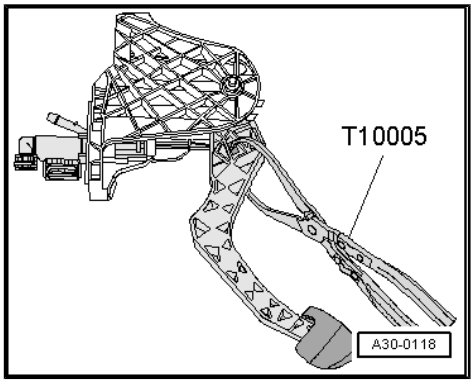

1.9.2 Installing

Install in the reverse order of removal, observing the following:

Note

Renew self-locking nuts.

– Attach retainer -2- to master cylinder operating rod -1-.
– Press retainer into notch in clutch pedal -3- until it can be heard to engage.

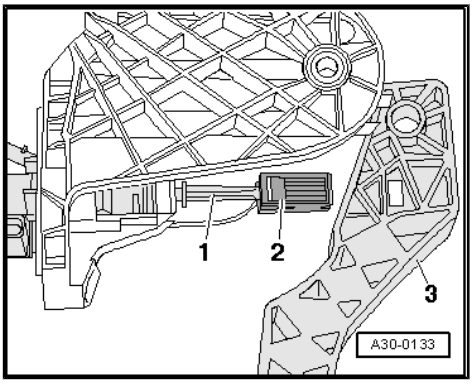

– Insert over-centre spring -2- in mounting bracket from above while holding end of spring with assembly tool -T10178- in installation position.

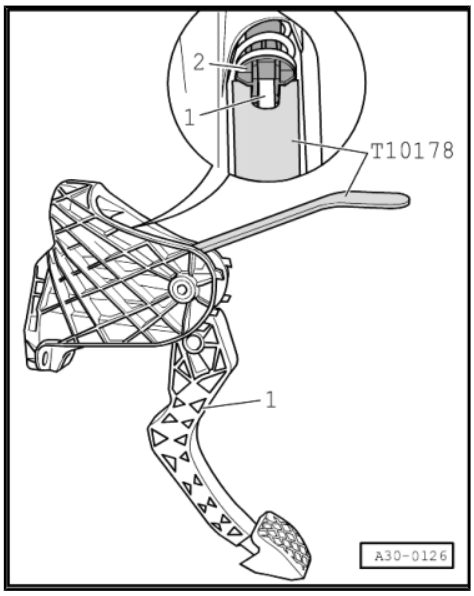

– Receptacle -arrow- for tip -A- of clutch pedal -1- must be vertical.
– Insert tip -A- of clutch pedal in bearing recess of over-centre spring.
– Depress clutch pedal slightly, push bolt through and tighten self-locking nut to specified torque ⇒ page 49 .

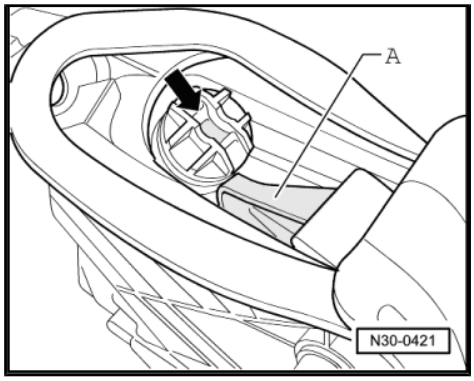

Some cars have damping -arrow- on the clutch pedal mounting bracket.

– Return it to installation position.

Vehicles without knee airbag

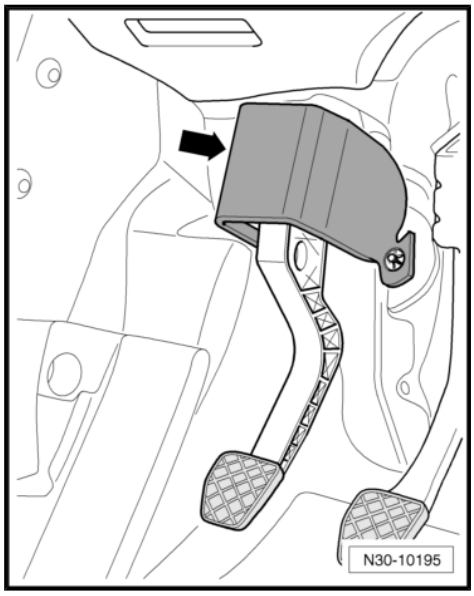

– Install crash bar -1- and tighten bolt -2- to specified torque ⇒ page 49 .

Continuation for all

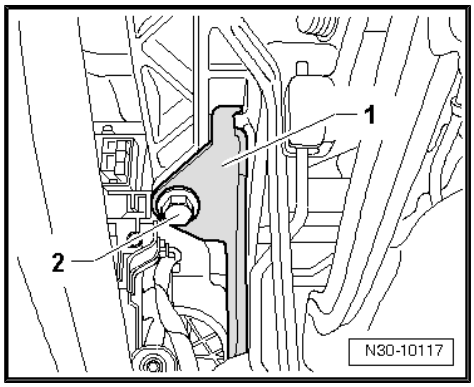

– Mount cable guide -2- on steering column.
– Install foot well vent -3-.⇒ Rep. Gr. 80

Vehicles with knee airbag

– Install bracket for knee airbag together with crash bar ⇒ Interior equipment; Rep. Gr. 69 ; Airbag; Removing and installing knee airbag bracket (Golf 2009 ▸) .

Continuation for all

– Install trim and cover below trim on drive side ⇒ General body repairs, interior; Rep. Gr. 68 .
– If disconnected, connect battery ⇒ Electrical system; Rep. Gr. 27 ; Removing and installing battery .

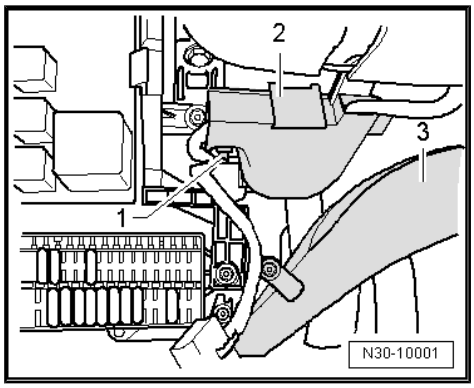

1.9.3 Torque settings

Component	Nm
Clutch pedal to mounting bracket ♦ Renew self-locking nuts	25
Crash bar to steering column mounting bracket	20
♦ Renew bolt for crash bar	

1.10 Removing and installing clutch pedal, Golf 2009 ▸ RHD

Special tools and workshop equipment required

♦ Pliers -T10005-

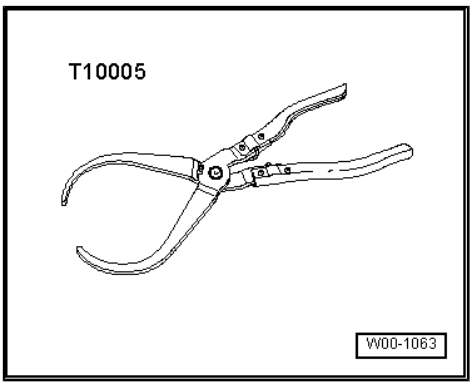

♦ Release tool -T10178-

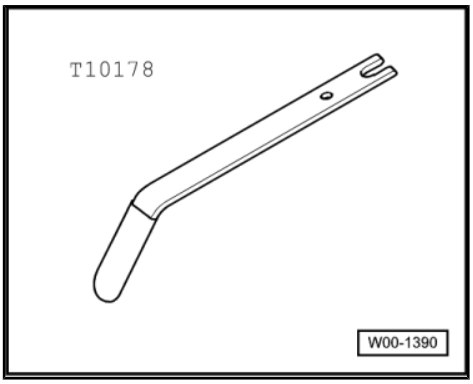

Torque wrench -V.A.G 1331-

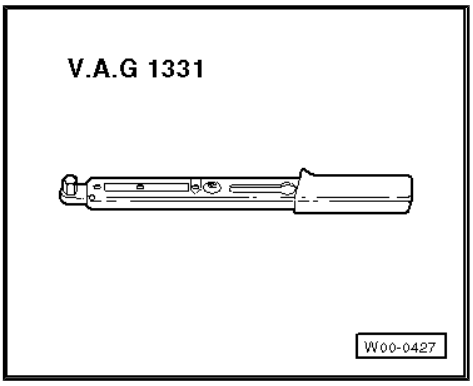

1.10.1 Removing

– First check whether a coded radio is fitted. If so, obtain anti-theft code.

– With ignition switched off, disconnect battery ⇒ Electrical system; Rep. Gr. 27 ; Disconnecting and connecting battery .
– Push driver seat as far back as possible and put steering wheel in highest position.
– Remove trim and cover below trim on drive side ⇒ General body repairs, interior; Rep. Gr. 68 .
– Remove bracket for knee airbag ⇒ Interior equipment; Rep. Gr. 69 ; Airbag; Removing and installing knee airbag bracket (Golf 2009 ▸) .
– Remove cable guide -2- from steering column.

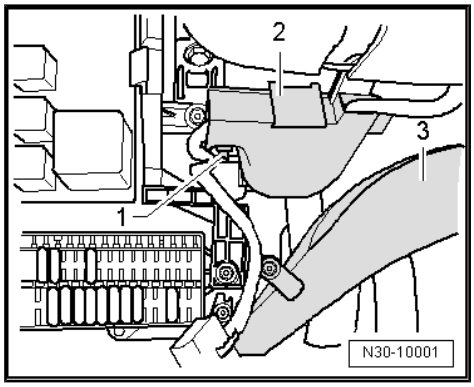

– Remove footwell vent -3-.⇒ Heating, air conditioning; Rep. Gr. 80 ; Repairing heating
– Remove crash bar -1- (bolt -2-).

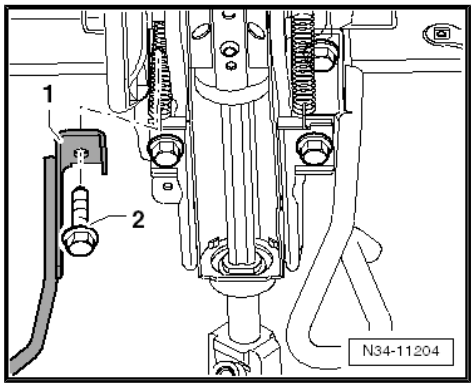

If fitted, remove damping -arrow- from lower area of clutch pedal mounting bracket.

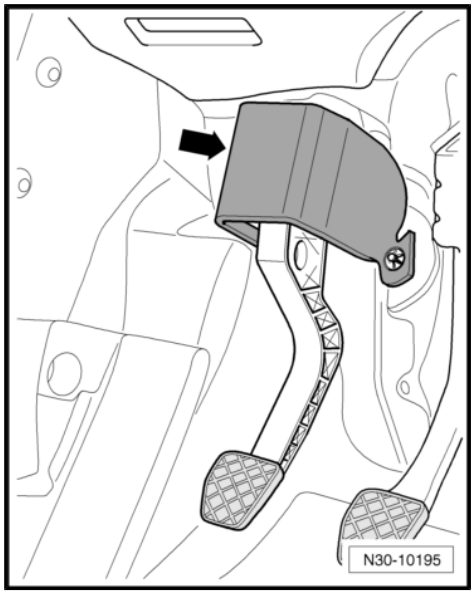

– To do this, remove lock washers -A- for damping.
– Pull off damping.

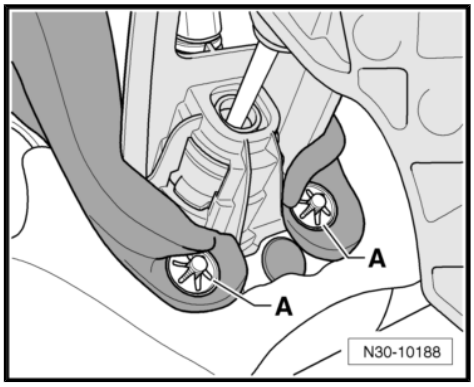

– Push damping upwards in area of upper securing nut -1- above clutch pedal -A- in -direction of arrow-.

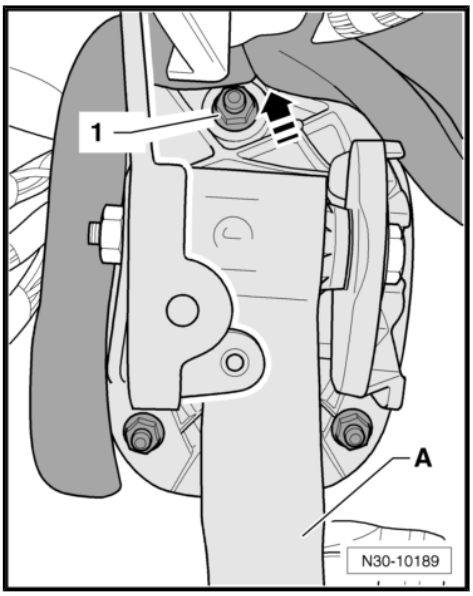

– Unbolt clutch pedal -1- from mounting bracket -3- by removing nut -2- and pulling out bolt -5-.
– Swing clutch pedal forward slightly and remove over-centre spring -4- from mounting bracket.

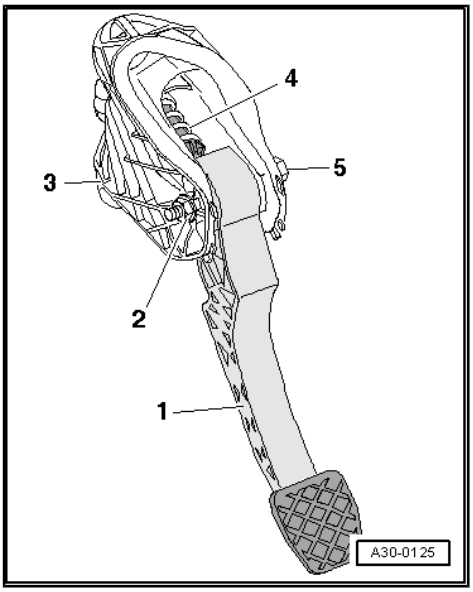

– Release clutch pedal from master cylinder with pliers - T10005- .
– Remove clutch pedal.

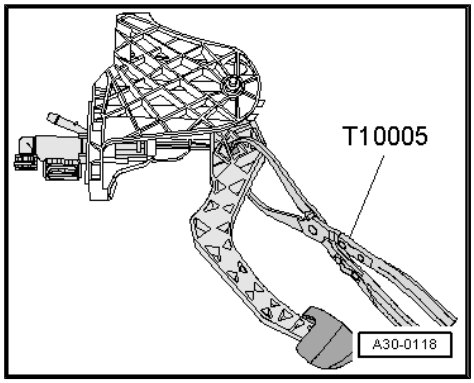

1.10.2 Installing

Install in the reverse order of removal, observing the following:

Note

Renew self-locking nuts.

– Attach retainer -2- to master cylinder operating rod -1-.
– Press retainer into notch in clutch pedal until it can be heard to engage.

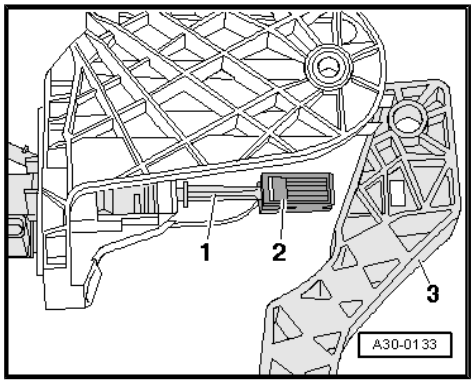

– Insert over-centre spring -2- in mounting bracket from above while holding end of spring with assembly tool -T10178- in installation position.

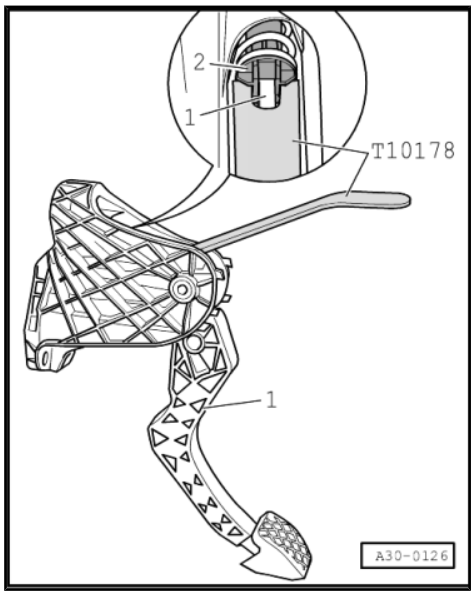

– Receptacle -arrow- for tip -A- of clutch pedal must stand vertically.
– Insert tip of clutch pedal -1- in bearing recess of over-centre spring.
– Depress clutch pedal slightly, push bolt through and tighten self-locking nut to specified torque ⇒ page 54 .

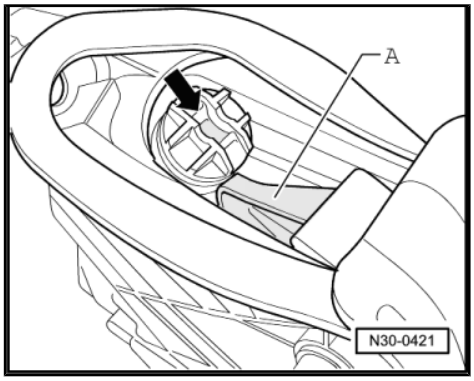

Some cars have damping -arrow- on the clutch pedal mounting bracket.

– Return it to installation position.

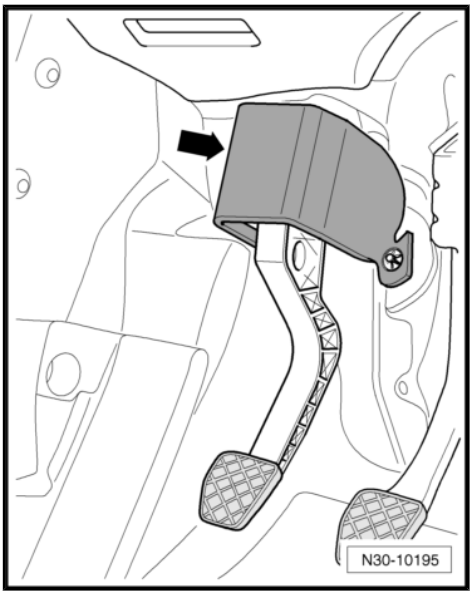

– Install crash bar -1- and tighten bolt -2- to specified torque ⇒ page 54 .

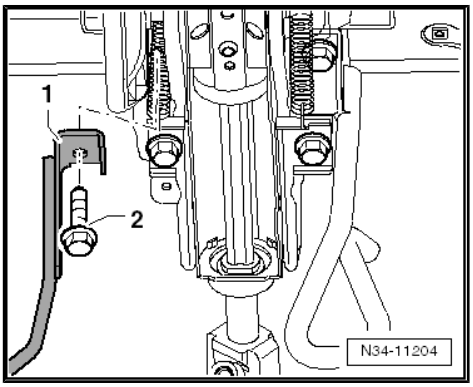

– Mount cable guide -2- on steering column.
– Install foot well vent -3-.⇒ Rep. Gr. 80
– Install bracket for knee airbag ⇒ Interior equipment; Rep. Gr. 69 ; Airbag; Removing and installing knee airbag bracket (Golf 2009 ▸) .
– Install trim and cover below trim on drive side ⇒ General body repairs, interior; Rep. Gr. 68 .

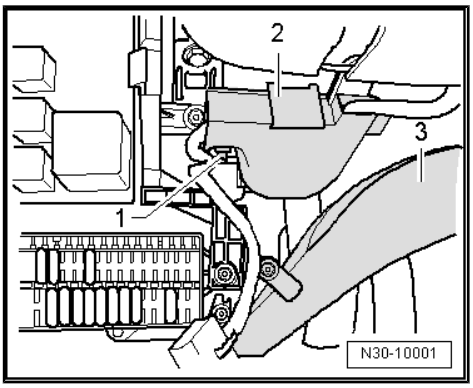

1.10.3 Torque settings

Component	Nm
Clutch pedal to mounting bracket ♦ Renew self-locking nuts	25
Crash bar to steering column mounting bracket	20
♦ Renew bolt for crash bar	

1.11 Removing and installing clutch pedal, Golf Plus

Special tools and workshop equipment required

♦ Pliers -T10005-

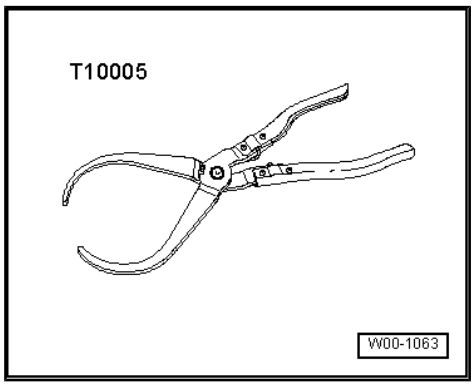

♦ Torque wrench -V.A.G 1331-

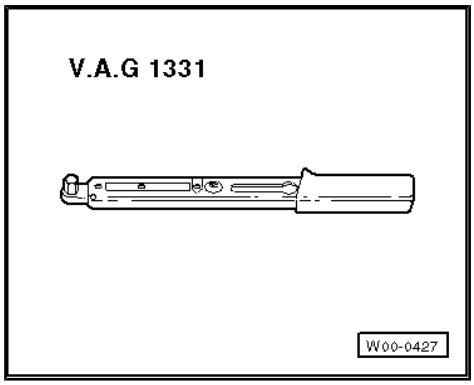

1.11.1 Removing

– Push driver seat as far back as possible and put steering wheel in highest position.

– Remove trim and cover below trim on drive side ⇒ General body repairs, interior; Rep. Gr. 68 .

– Remove cable guide -2- from steering column.

– Remove footwell vent -3-.⇒ Heating, air conditioning; Rep. Gr. 80 ; Repairing heating

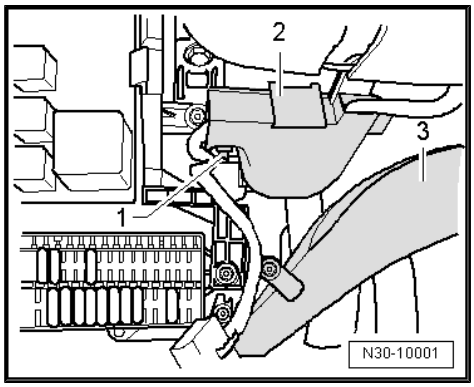

– Now remove crash bar -A- from in front of clutch pedal by removing bolt -B-.

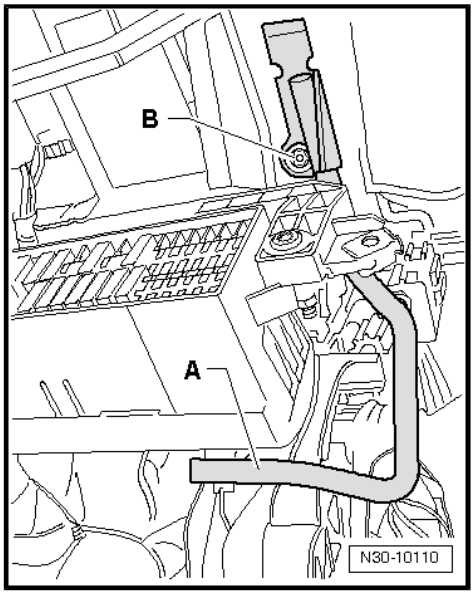

– Remove footwell trim by removing nuts -arrows-.

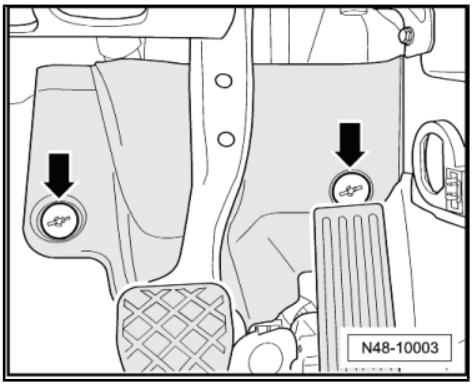

– Remove bolt -1- and pull universal joint -2- from steering box.

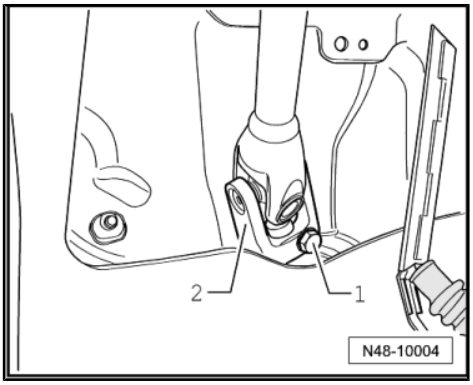

If fitted, remove damping -arrow- from lower area of clutch pedal mounting bracket.

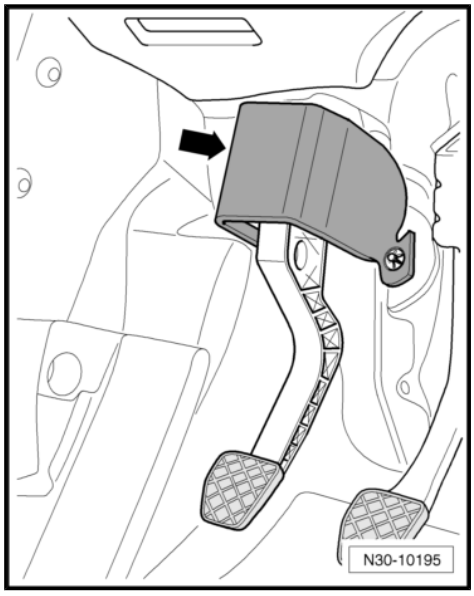

– To do this, remove lock washers -A- for damping.
– Pull off damping.

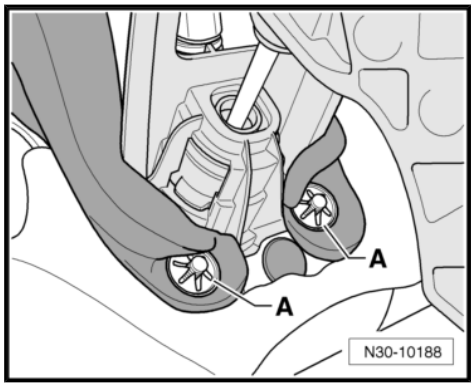

– Push damping upwards in area of upper securing nut -1- above clutch pedal -A- in -direction of arrow-.

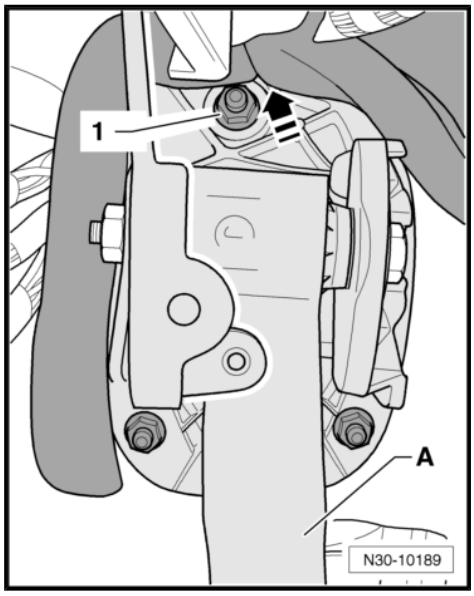

– Unbolt clutch pedal -1- from mounting bracket -3- by removing nut -2- and pulling out bolt -5-.
– Swing clutch pedal forward slightly and remove over-centre spring -4- from mounting bracket.

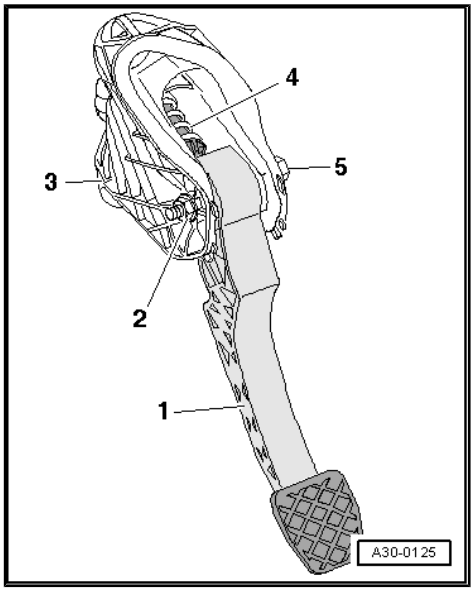

– Release clutch pedal from master cylinder with pliers - T10005- .
– Remove clutch pedal.

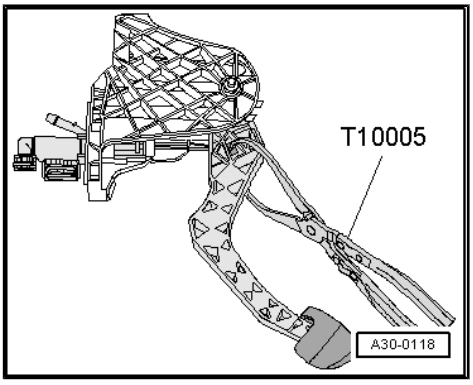

1.11.2 Installing

Note

Renew self-locking nuts.

– Attach retainer -2- to master cylinder operating rod -1-.
– Press retainer into notch in clutch pedal until it can be heard to engage.
– Insert over-centre spring in mounting bracket from above.

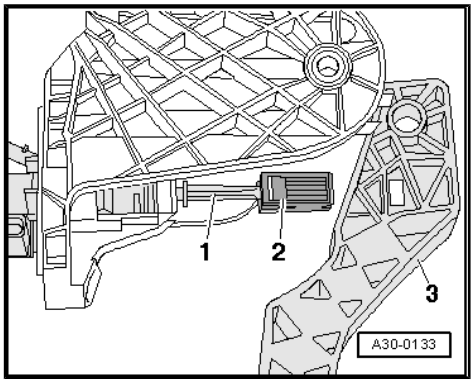

– Receptacle -arrow- for tip -A- of clutch pedal must be vertical.
– Insert tip of clutch pedal in bearing recess of over-centre spring.
– Depress clutch pedal slightly, push bolt through and tighten self-locking nut to specified torque ⇒ page 59 .

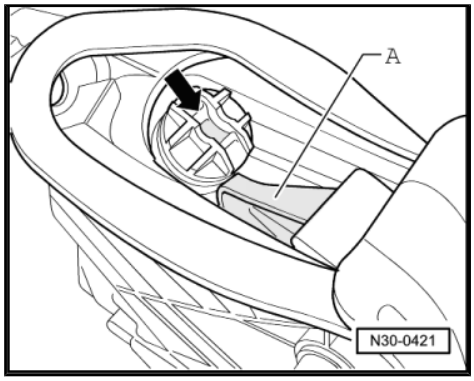

Some cars have damping -arrow- on the clutch pedal mounting bracket.

– Return it to installation position.

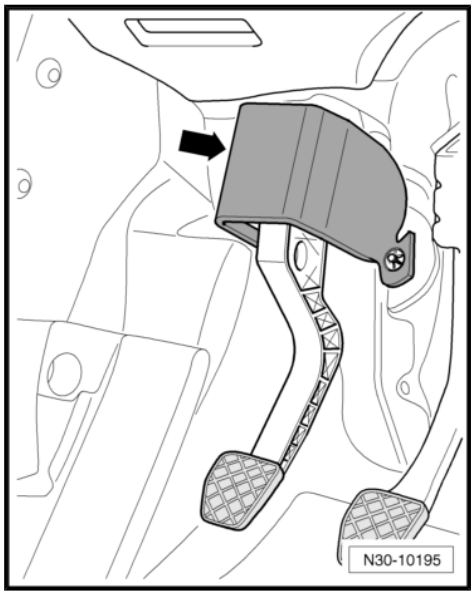

– Install crash bar -A-, tightening bolt -B- to specified torque ⇒ page 59 .

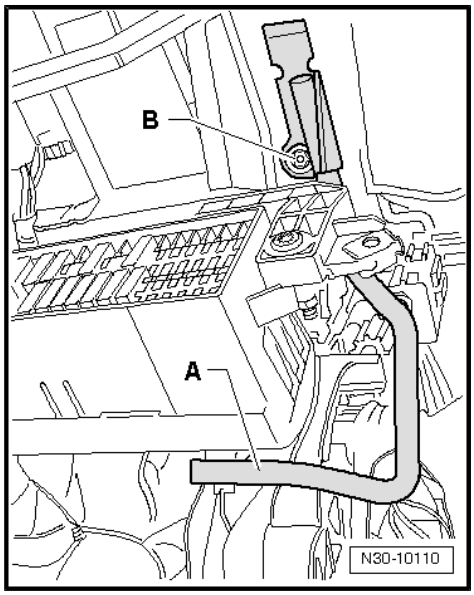

– Fit universal joint -2- to steering box and screw in new bolt -1- ⇒ Running gear, axles, steering; Rep. Gr. 48 ; Assembly overview - Steering .
– Carry out basic setting for steering angle sender -G85- with vehicle diagnosis, testing and information system -VAS 5051- .
– Install trim and cover below trim on drive side ⇒ General body repairs, interior; Rep. Gr. 68 .

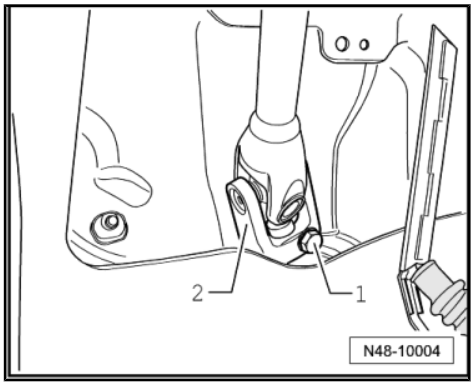

1.11.3 Torque settings

Component	Nm
Clutch pedal to mounting bracket ♦ Renew self-locking nuts	25
Crash bar to steering column mounting bracket	Bolt M6 = 5
Crash bar to steering column mounting bracket	Bolt M8 = 20
♦ Renew bolts for crash bar	

1.12 Removing and installing clutch pedal, Passat

Special tools and workshop equipment required

♦ Pliers -T10005-

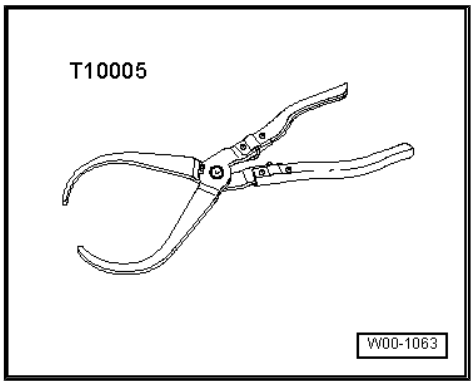

♦ Release tool -T10178-

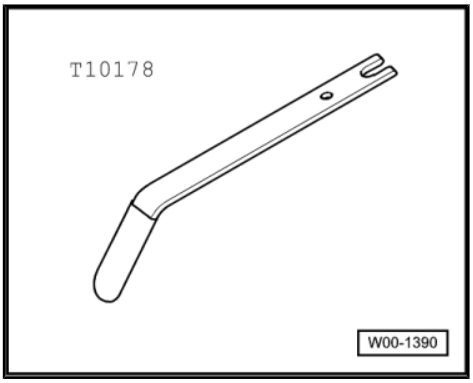

- Torque wrench -V.A.G 1331-

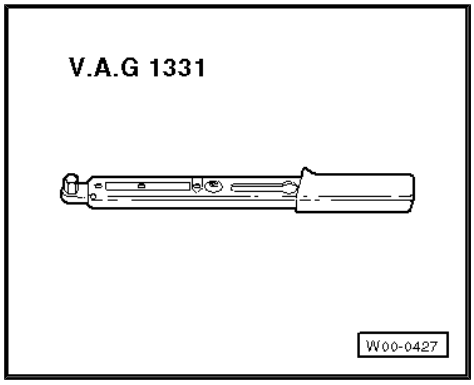

1.12.1 Removing

– Remove mounting bracket ⇒ page 84 .

– Carefully clamp mounting bracket in vice having protective jaw pads.

– Unbolt clutch pedal -1- from mounting bracket -3- by removing nut -2- and pulling out bolt -5-.

– Swing clutch pedal forward slightly and remove over-centre spring -4- from mounting bracket.

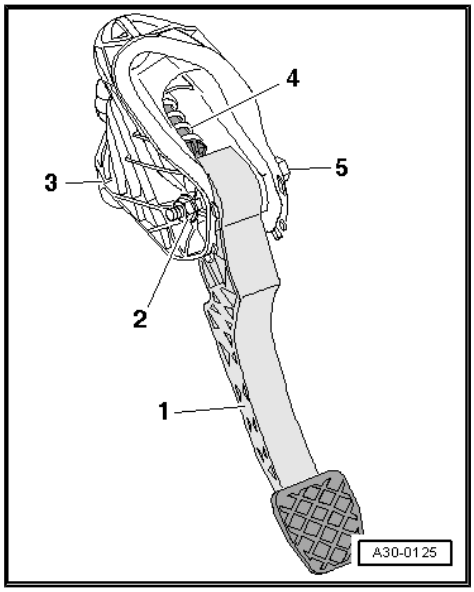

– Release clutch pedal from master cylinder with pliers - T10005- .

– Remove clutch pedal.

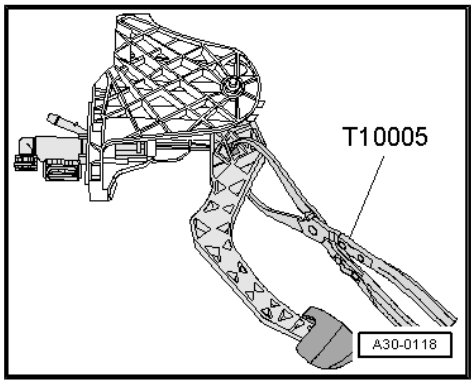

1.12.2 Installing

Install in the reverse order of removal, observing the following:

Note

Renew self-locking nuts.

– Attach retainer -2- to master cylinder operating rod -1-.
– Press retainer into notch in clutch pedal -3- until it can be heard to engage.

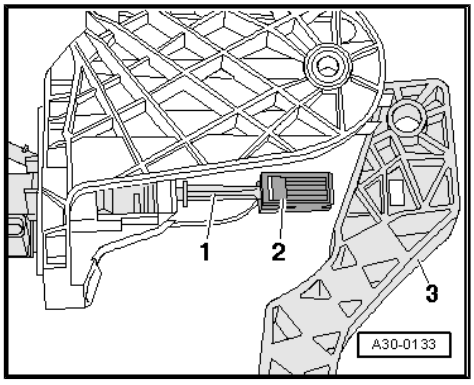

– Insert over-centre spring -2- in mounting bracket from above while holding end of spring with assembly tool -T10178- in installation position.
– Insert tip of clutch pedal -1- in bearing recess of over-centre spring.
– Depress clutch pedal slightly, push bolt through and tighten self-locking nut.
– Install mounting bracket ⇒ page 84 .

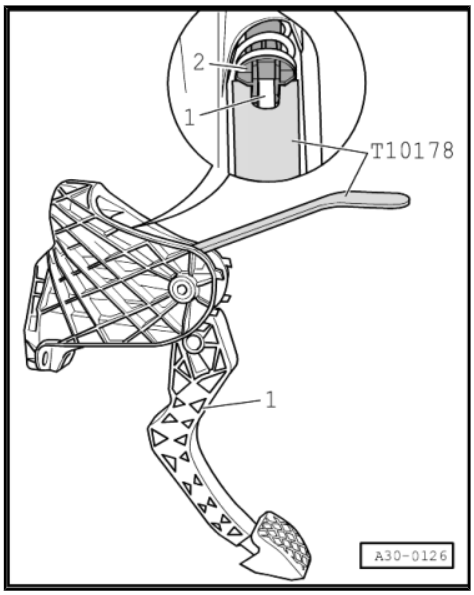

1.12.3 Torque setting

Component	Nm
Clutch pedal to mounting bracket ♦ Renew self-locking nuts	25

1.13 Removing and installing mounting bracket, Golf 2004 ▸

Special tools and workshop equipment required

♦ Hose clamps to 25 mm -3094-

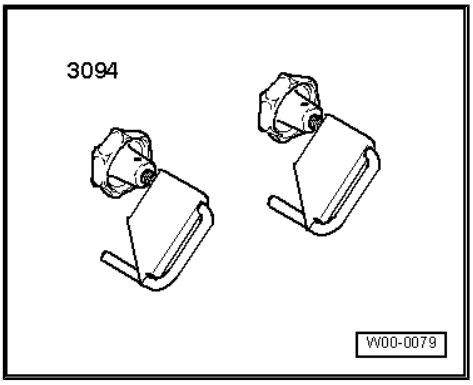

♦ Torque wrench -V.A.G 1331-

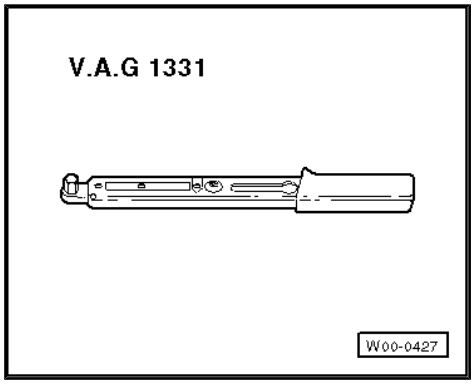

♦ Spring-type clip pliers -VAS 5024 A-

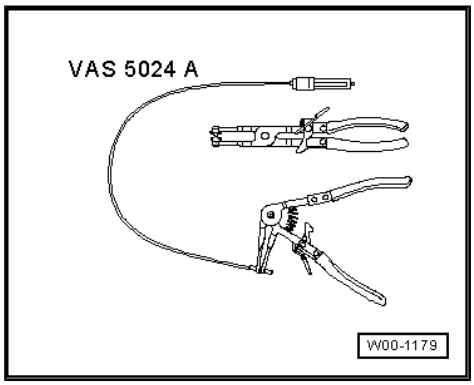

♦ Sealing tool -T10249-

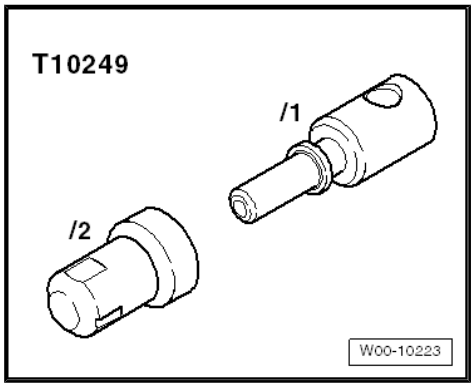

1.13.1 Removing

LHD

– First check whether a coded radio is fitted. If so, obtain anti-theft code.

– With ignition switched off, disconnect battery ⇒ Electrical system; Rep. Gr. 27 ; Disconnecting and connecting battery .

– Remove complete air filter housing if it is near battery ⇒ Rep. Gr. 23 ; Repairing diesel direct injection system or ⇒ Rep. Gr. 24 ; Repairing injection system .

– Remove battery and battery tray ⇒ Electrical system; Rep. Gr. 27 ; Battery; Removing and installing battery .

Continuation for all

Note

- *During the following work, ensure that no brake fluid lands on longitudinal member or gearbox. If this does happen, clean the affected areas thoroughly.*
- *Place a lint-free cloth under the master cylinder.*

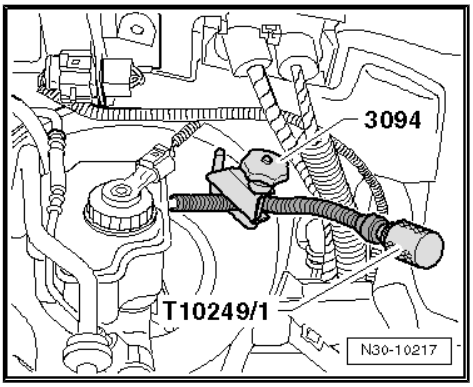

– Clamp off supply hose to master cylinder using hose clamp -3094- .
– If necessary, loosen spring-type clip -3- with assembly tool -VAS 5024- and pull supply hose off master cylinder.
– In addition, for disconnecting, you can close it with the sealing tool -T10249/1- (⇒ figure above).
– Release securing clip -2- using screwdriver or a pointed object and pull pipe/hose line -1- off master cylinder.
– Unclip clutch position sender -G476- from master cylinder -arrow- and remove with electrical connector attached -4-.

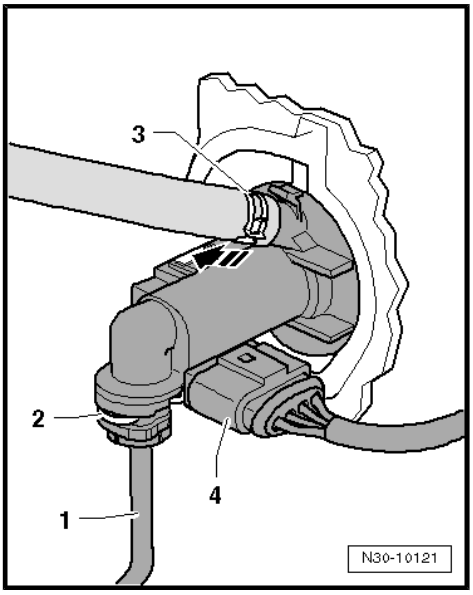

Note

When performing work in the footwell, put cloths on the carpet to protect it from possible brake fluid spills.

– Remove trim and cover below trim on drive side ⇒ General body repairs, interior; Rep. Gr. 68 .
– Remove cable guide -2- from steering column.
– Remove footwell vent -3-.⇒ Heating, air conditioning; Rep. Gr. 80 ; Repairing heating

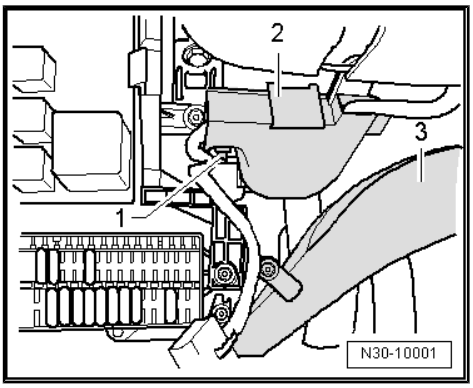

The crash bar -1- in front of clutch pedal -2- may be secured in different ways.

Attachment with 2 bolts

– Unbolt crash bar (2 bolts).

Attachment with 1 bolt

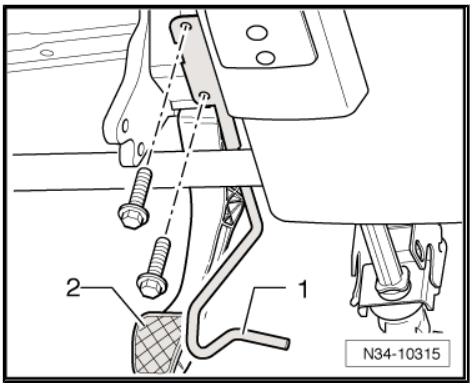

– Remove crash bar -1- (1 bolt -2-).

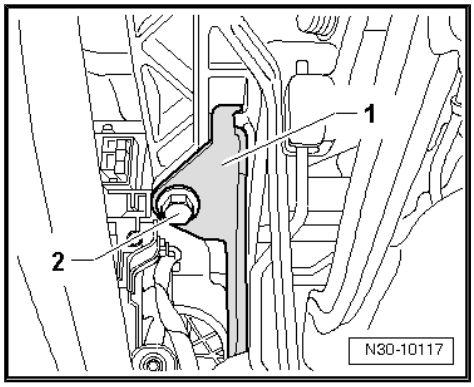

If fitted, remove damping -arrow- from lower area of clutch pedal mounting bracket.

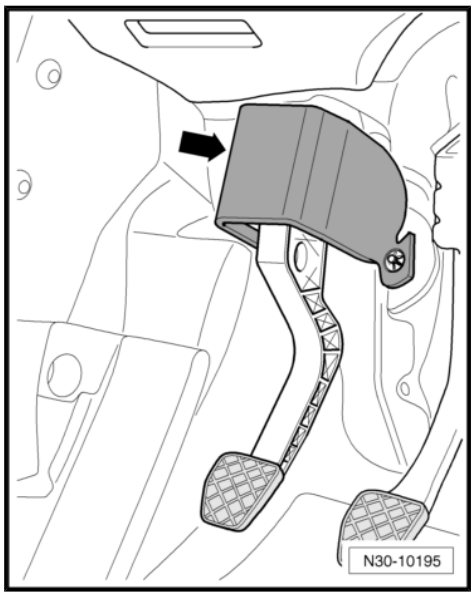

– To do this, remove lock washers -A- for damping.
– Pull off damping.

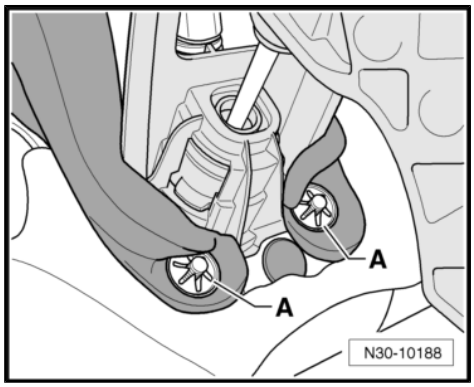

– Push damping upwards in area of upper securing nut -1- above clutch pedal -A- in -direction of arrow-.

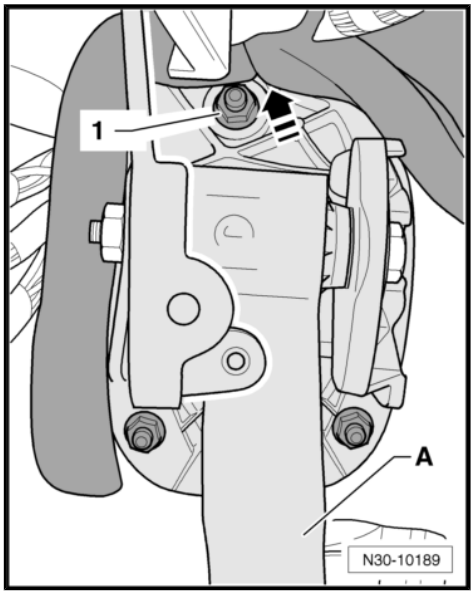

– Remove securing nuts -1- and -2-.

The upper securing nut -1- is accessible between the relay carrier and the steering column trim.

– Remove mounting bracket -3-.

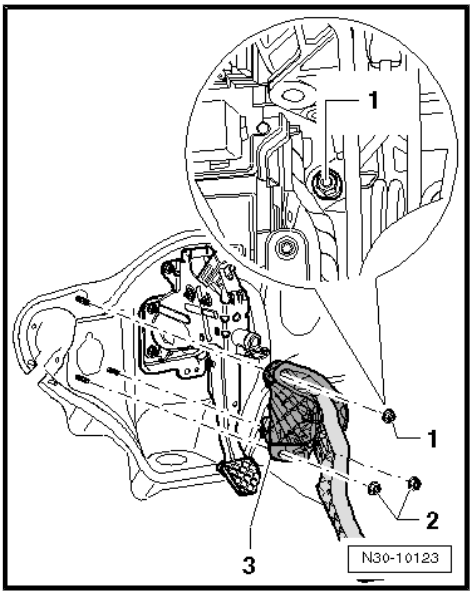

1.13.2 Installing

Install in the reverse order of removal, observing the following:

Some cars have damping -arrow- on the clutch pedal mounting bracket.

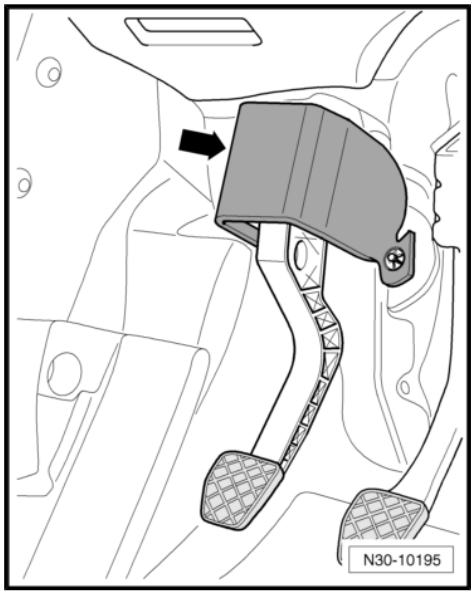

Note

- *Renew self-locking nuts.*
- *Renew hose clips.*
- *Allocate all components according to ⇒ Electronic parts catalogue "ETKA".*

The crash bar -1- in front of clutch pedal -2- may be secured in different ways.

Attachment with 2 bolts

– Install crash bar -1- and tighten the 2 bolts to specified torque ⇒ page 67 .

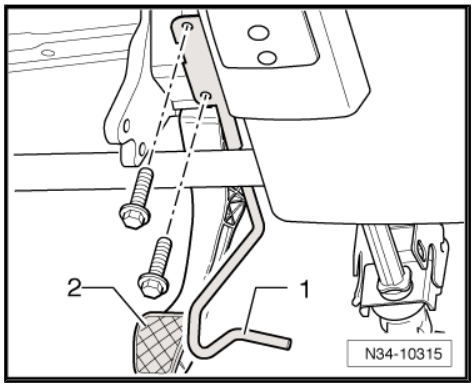

Attachment with 1 bolt

– Install crash bar -1- and tighten bolt -2- to specified torque ⇒ page 67 .

– Install trim and cover below trim on drive side ⇒ General body repairs, interior; Rep. Gr. 68 .

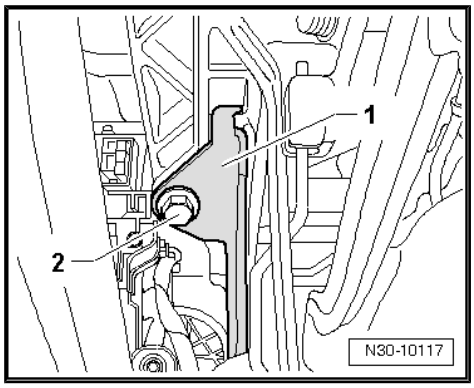

– Push pipe/hose line -1- with seal -2- onto connection of master cylinder -4- until securing clip -3- engages audibly.
– Test pipe/hose line by tugging on it.
– After removing hose clamp -3094- , return supply hose to its original position, if necessary.
– Bleed clutch system ⇒ page 101 .

LHD

– Install battery ⇒ Electrical system; Rep. Gr. 27 ; Removing and installing battery .
– Remove complete air filter housing if it is near battery ⇒ Rep. Gr. 23 ; Repairing diesel direct injection system or ⇒ Rep. Gr. 24 ; Repairing injection system .

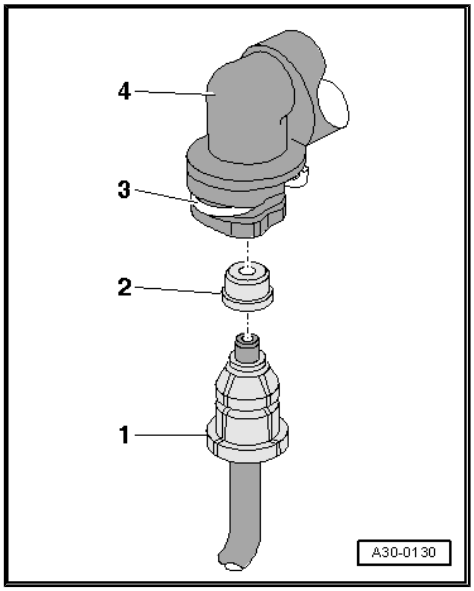

1.13.3 Torque settings

Component	Nm
Mounting bracket to bulkhead ♦ Renew self-locking nuts.	25
Crash bar to steering column mounting bracket (attachment with 2 bolts)	10
Crash bar to steering column mounting bracket (attachment with 1 bolt)	20
♦ Renew bolts for crash bar	

1.14 Removing and installing mounting bracket, Golf 2009 ▸ LHD

Special tools and workshop equipment required

♦ Hose clamps to 25 mm -3094-

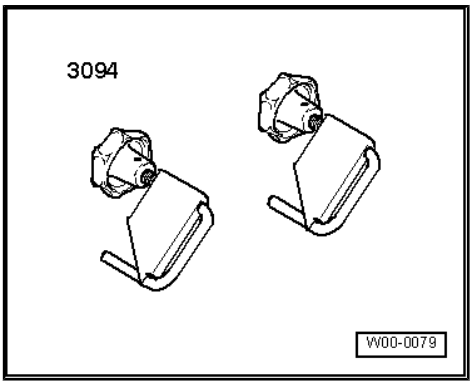

♦ Torque wrench -V.A.G 1331-

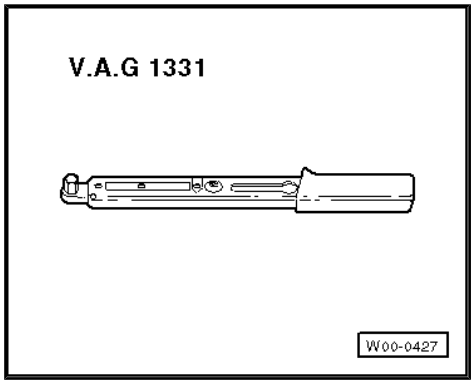

♦ Sealing tool -T10249-

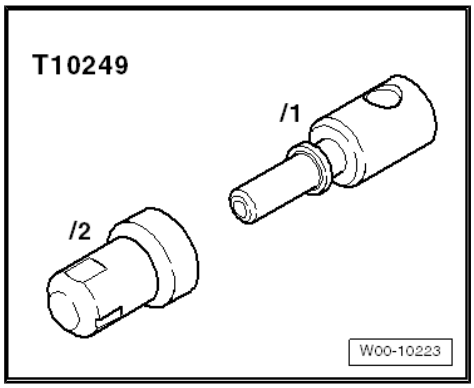

1.14.1 Removing

– First check whether a coded radio is fitted. If so, obtain anti-theft code.

– With ignition switched off, disconnect battery ⇒ Electrical system; Rep. Gr. 27 ; Disconnecting and connecting battery .

– Remove complete air filter housing if it is near battery ⇒ Rep. Gr. 23 ; Repairing diesel direct injection system or ⇒ Rep. Gr. 24 ; Repairing injection system .

– Remove battery and battery tray ⇒ Electrical system; Rep. Gr. 27 ; Removing and installing battery .

Note

♦ *During the following work, ensure that no brake fluid lands on longitudinal member or gearbox. If this does happen, clean the affected areas thoroughly.*

♦ *Place a lint-free cloth under the master cylinder.*

– Clamp off supply hose to master cylinder using hose clamp -3094- .

– Pull supply hose -1- off master cylinder.

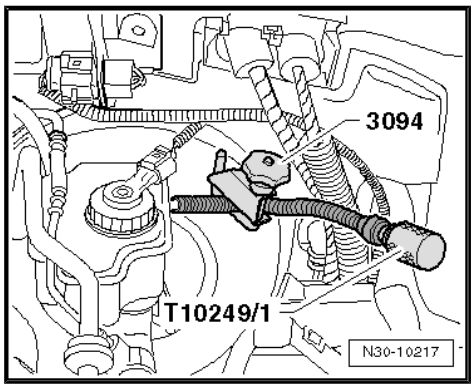

– In addition, for disconnecting, you can close it with the sealing tool -T10249/1- (⇒ figure above).
– Release securing clip -2- using screwdriver or a pointed object and pull pipe/hose line or plastic line -3- off master cylinder.
– Unclip clutch position sender -G476- from master cylinder -arrow- and remove with electrical connector attached -4-.

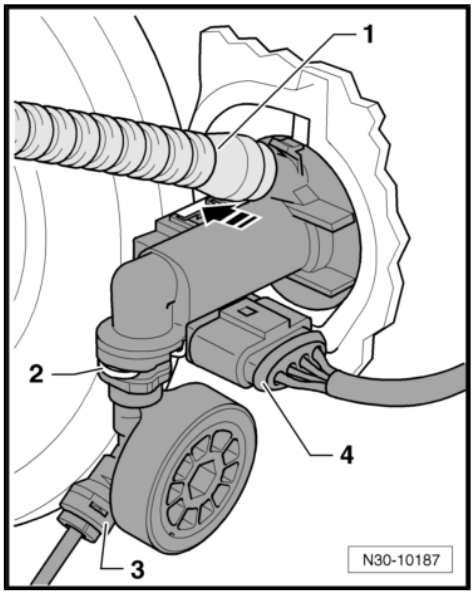

Note

When performing work in the footwell, put cloths on the carpet to protect it from possible brake fluid spills.

– Remove trim and cover below trim on drive side ⇒ General body repairs, interior; Rep. Gr. 68 .

Vehicles with knee airbag

Note

The installation location of the knee airbag is above the pedal cluster.

– Remove bracket for knee airbag together with crash bar ⇒ Interior equipment; Rep. Gr. 69 ; Airbag; Removing and installing knee airbag bracket (Golf 2009 ▸) .
– Remove cable guide -2- from steering column.
– Remove footwell vent -3-.⇒ Heating, air conditioning; Rep. Gr. 80 ; Repairing heating

Vehicles without knee airbag

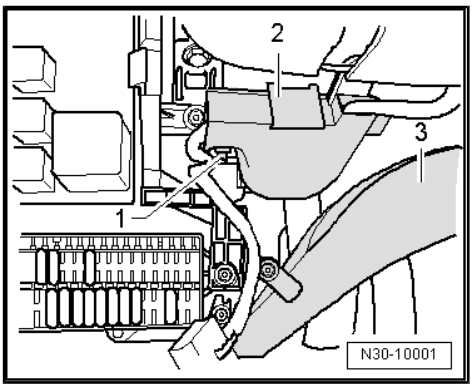

– Remove crash bar -1- (bolt -2-).

Continuation for all

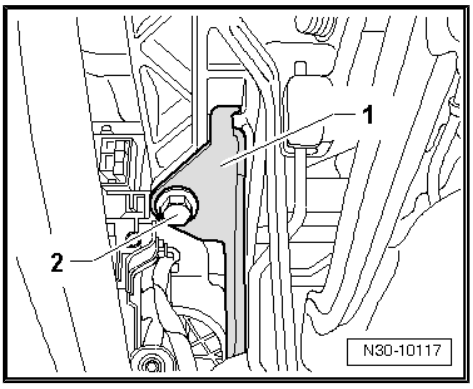

If fitted, remove damping -arrow- from lower area of clutch pedal mounting bracket.

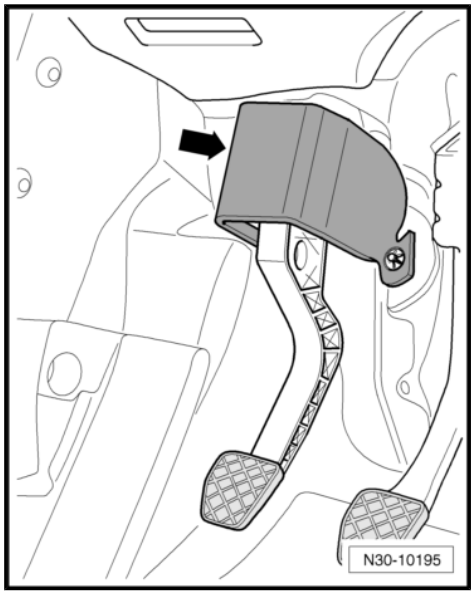

– To do this, remove lock washers -A- for damping.
– Pull off damping.

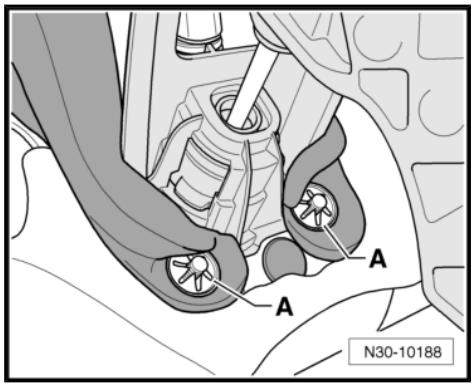

– Push damping upwards in area of upper securing nut -1- above clutch pedal -A- in -direction of arrow-.

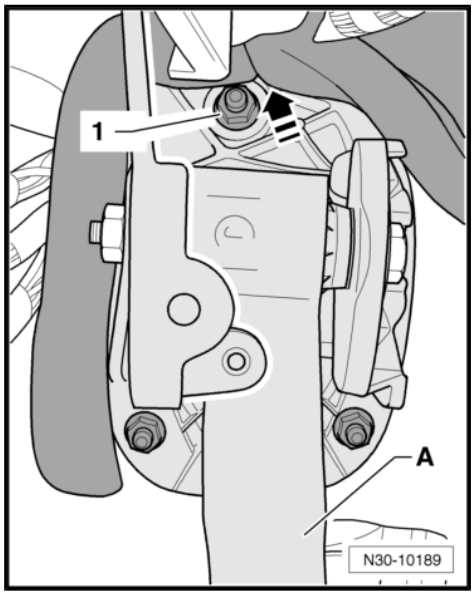

– Remove securing nuts -1- and -2-.

The upper securing nut -1- is accessible between the relay carrier and the steering column trim.

– Remove mounting bracket -3-.

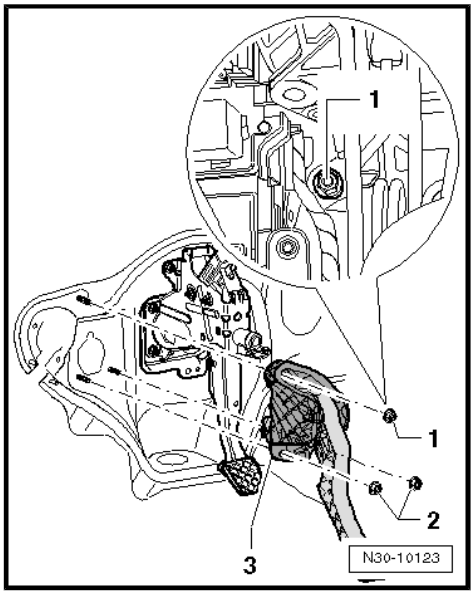

1.14.2 Installing

Install in the reverse order of removal, observing the following:

Note

Renew self-locking nuts.

Some cars have damping -arrow- on the clutch pedal mounting bracket.

Vehicles without knee airbag

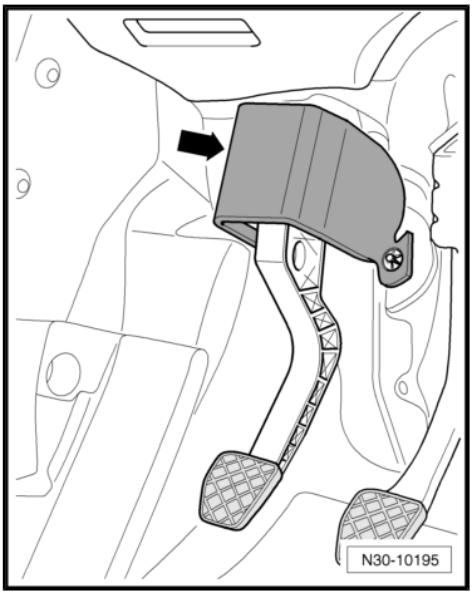

– Install crash bar -1- and tighten bolt -2- to specified torque ⇒ page 72 .

Continuation for all

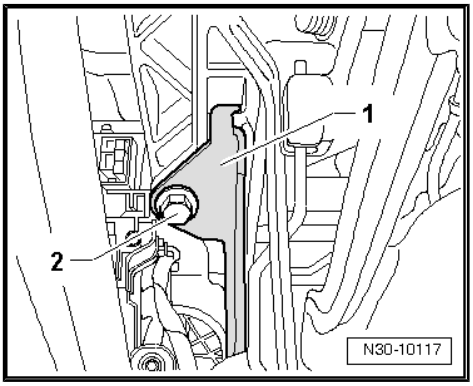

– Mount cable guide -2- on steering column.

– Install footwell vent -3-. ⇒ Heating, Air conditioning; Rep. Gr. 80 ; Repairing heating; Removing and installing left footwell vent

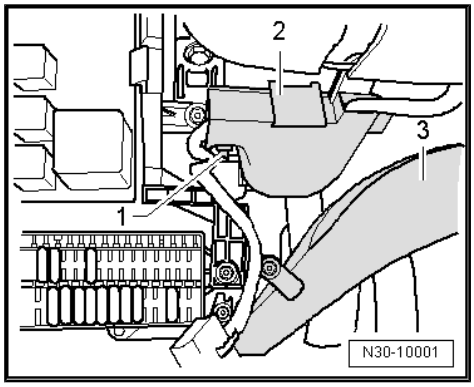

Vehicles with knee airbag

– Install bracket for knee airbag together with crash bar ⇒ Interior equipment; Rep. Gr. 69 ; Airbag; Removing and installing knee airbag bracket (Golf 2009 ▸) .

Continuation for all

– Install trim and cover below trim on drive side ⇒ General body repairs, interior; Rep. Gr. 68 .

– Push pipe/hose line or plastic line -1- with seal -2- onto connection of master cylinder -4- until securing clip -3- engages audibly.

– Test line by tugging on it.

– After removing hose clamp -3094- , return supply hose to its original position, if necessary.

– Bleed clutch system ⇒ page 101 .

– Install battery ⇒ Electrical system; Rep. Gr. 27 ; Removing and installing battery .

– If removed, install complete air filter housing ⇒ Rep. Gr. 23 ; Repairing diesel direct injection system or ⇒ Rep. Gr. 24 ; Repairing injection system

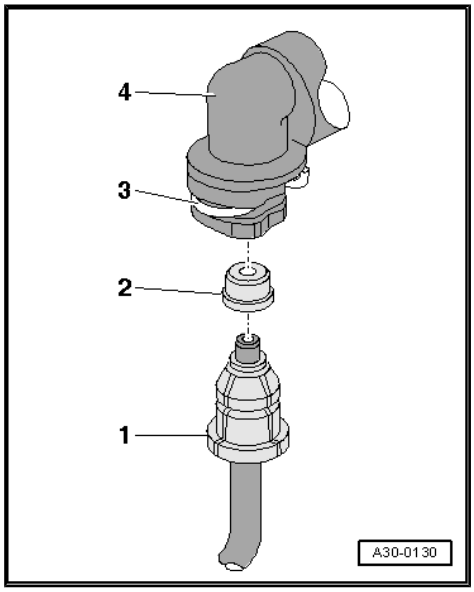

1.14.3 Torque settings

Component	Nm
Mounting bracket to bulkhead ♦ Renew self-locking nuts.	25
Crash bar to steering column mounting bracket	20
♦ Renew bolt for crash bar	

1.15 Removing and installing mounting bracket, Golf 2009 ▸ right-hand drive and Golf Plus right-hand drive

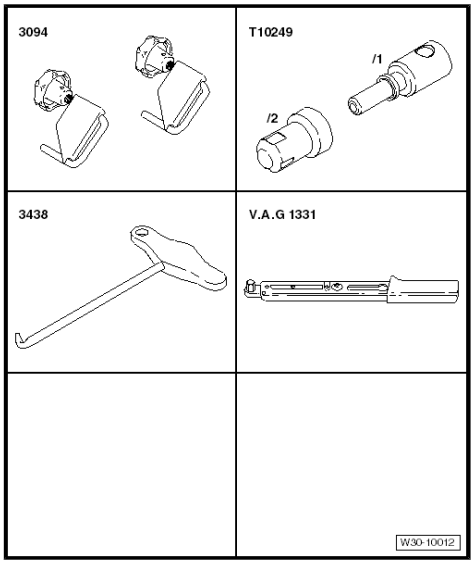

Special tools and workshop equipment required

- Hose clamps to 25 mm -3094-
- Sealing tool -T10249-
- Hook -3438-
- Torque wrench -V.A.G 1331-

1.15.1 Removing

Vehicles with knee airbag

– First check whether a coded radio is fitted. If so, obtain anti-theft code.

– With ignition switched off, disconnect battery ⇒ Electrical system; Rep. Gr. 27 ; Disconnecting and connecting battery .

Vehicles with turbo diesel engine and particle filter

– Remove shielding -A- from particle filter ⇒ Rep. Gr. 26 ; Parts of exhaust system; Assembly overview - front exhaust pipe with particle filter .

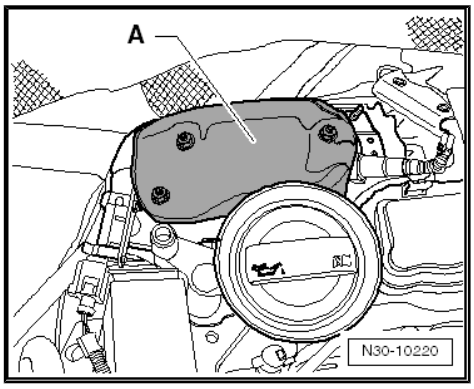

Continuation for all

A heat shield is installed in conjunction with some engines. Appearance may be different from that illustrated.

– Remove heat shield from pipe/hose line -arrows-.

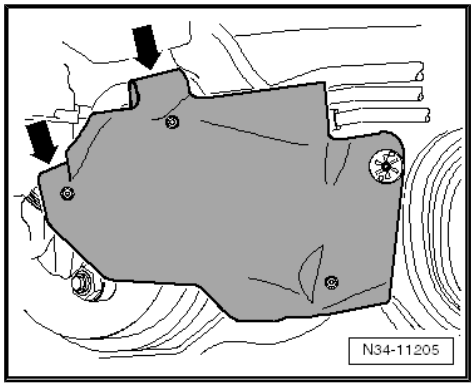

Note

- *During the following work, ensure that no brake fluid lands on longitudinal member or gearbox. If this does happen, clean the affected areas thoroughly.*
- *Place a lint-free cloth under the master cylinder.*

– Clamp off supply hose to master cylinder using hose clamp -3094- .

– Pull supply hose 3 off master cylinder.

– In addition, for disconnecting, you can seal supply hose with sealing tool -T10249/1- .

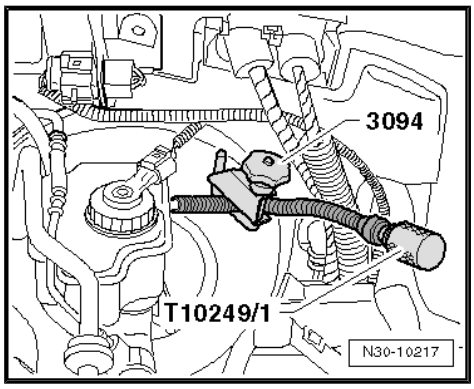

Release securing clip -1- with a screwdriver or pointed object

– Pull pipe/hose line -2- off master cylinder.

– Unclip clutch position sender -G476- from master cylinder -arrow- and remove with electrical connector attached -3-.

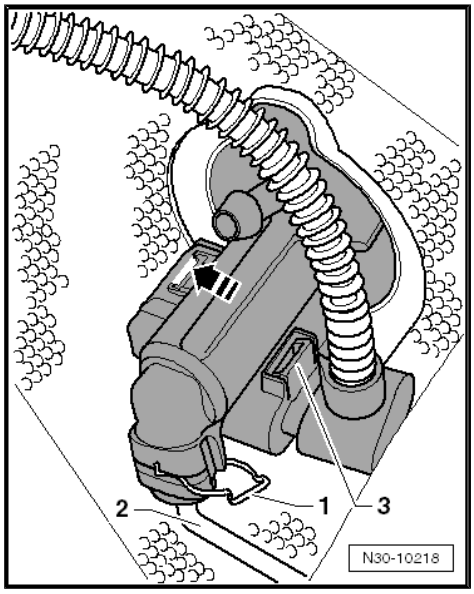

Note

When performing work in the footwell, put cloths on the carpet to protect it from possible brake fluid spills.

– Remove trim and cover below trim on drive side ⇒ General body repairs, interior; Rep. Gr. 68 .

Golf

– Remove bracket for knee airbag ⇒ Interior equipment; Rep. Gr. 69 ; Airbag; Removing and installing knee airbag bracket (Golf 2009 ▸) .

Note

The installation location of the knee airbag is above the pedal cluster.

Continuation for all

– Remove cable guide -2- from steering column by cutting cable tie -1- if necessary.

– Remove footwell vent -3-.⇒ Heating, air conditioning; Rep. Gr. 80 ; Repairing heating

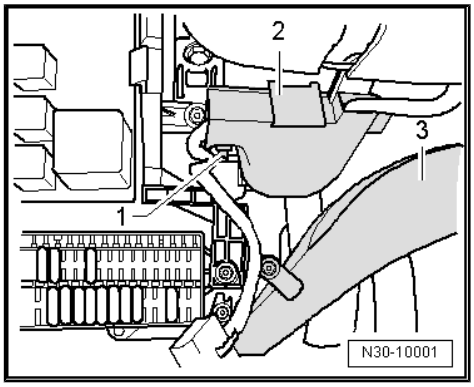

– Remove crash bar -1- (bolt -2-).

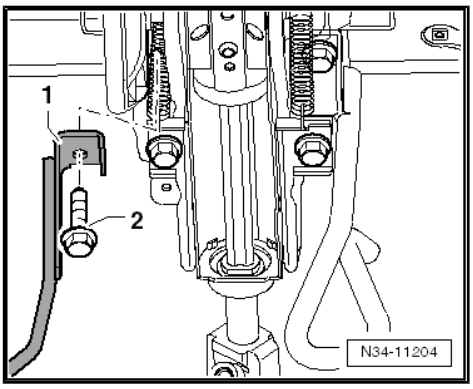

If fitted, remove damping -arrow- from lower area of clutch pedal mounting bracket.

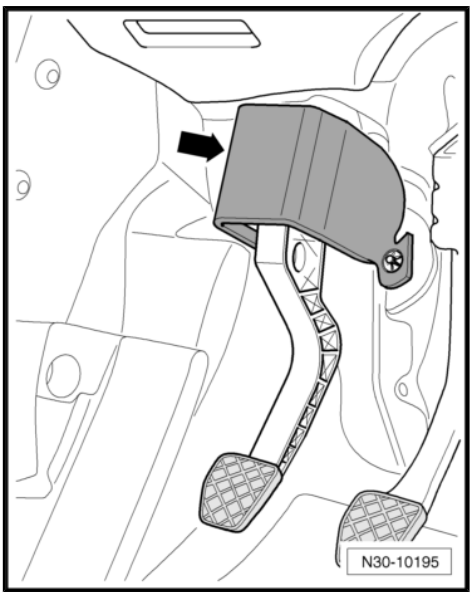

– To do this, remove lock washers -A- for damping.

– Pull off damping.

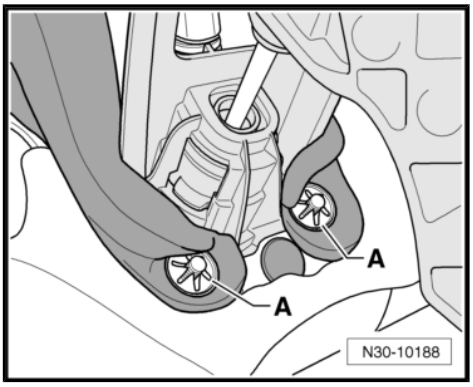

– Push damping upwards in area of upper securing nut -1- above clutch pedal -A- in -direction of arrow-.

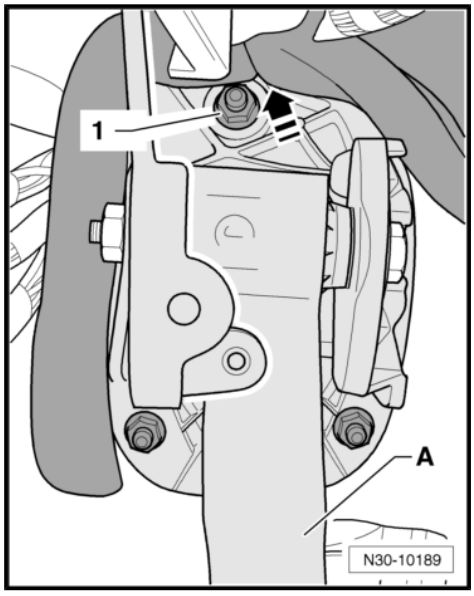

– Remove securing nuts -1- and -2-.

The upper securing nut -1- is accessible between the relay carrier and the steering column trim.

– Remove mounting bracket -3-.

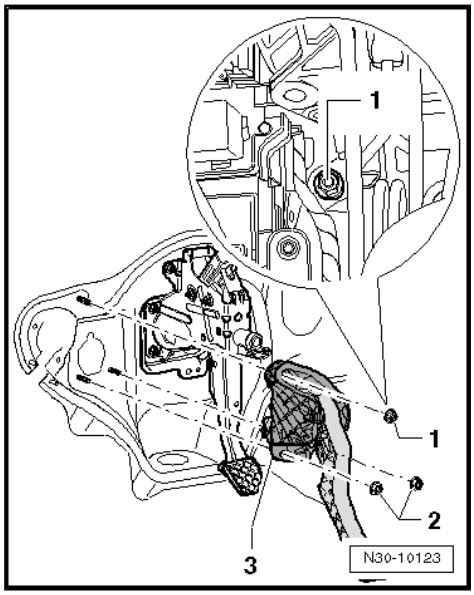

1.15.2 Installing

Install in the reverse order of removal, observing the following:

Note

Renew self-locking nuts.

Some cars have damping -arrow- on the clutch pedal mounting bracket.

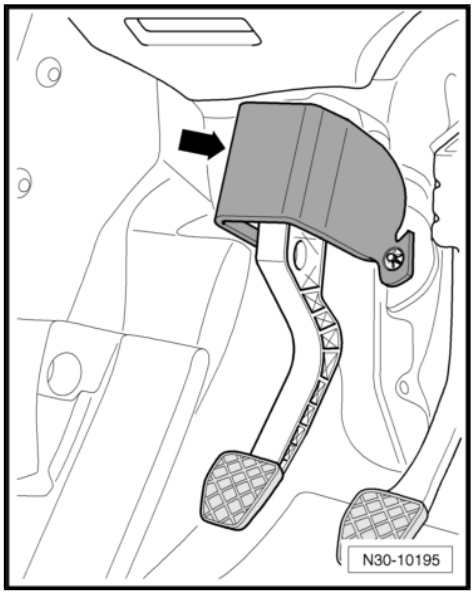

– Install crash bar -1- and tighten bolt -2- to specified torque ⇒ page 78 .

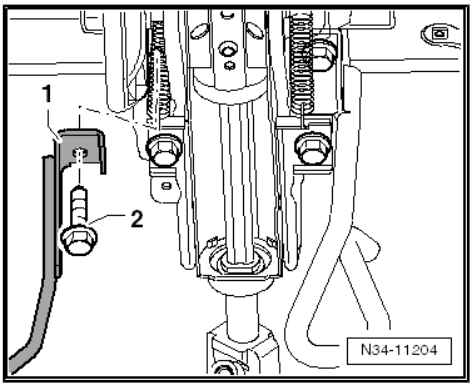

– Fit cable guide -2- onto steering column, secure with cable tie -1- if necessary.

– Install footwell vent -3-.⇒ Heating, air conditioning; Rep. Gr. 80 ; Repairing heating

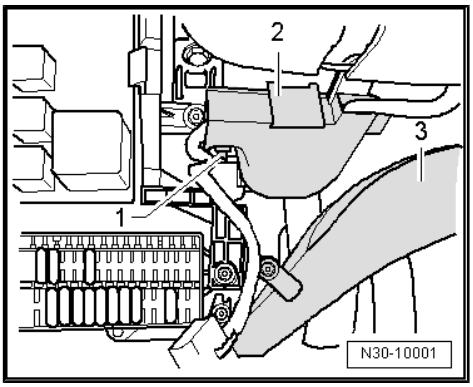

Golf

– Install bracket for knee airbag ⇒ Interior equipment; Rep. Gr. 69 ; Airbag; Removing and installing knee airbag bracket (Golf 2009 ▸) .

Continuation for all

– Install trim and cover below trim on drive side ⇒ General body repairs, interior; Rep. Gr. 68 .

– Press pipe/hose line -2- with seal into connection of master cylinder.

– Clip in securing clip -1-.

– Test line by tugging on it.

– Clip clutch position sender -G476- into master cylinder with electrical connector -3- attached -arrow-.

Hook -3438- can be used for installing pipe/hose line -2- and clutch position sender -3-.

– After removing hose clamp -3094- , return supply hose to its original position, if necessary.

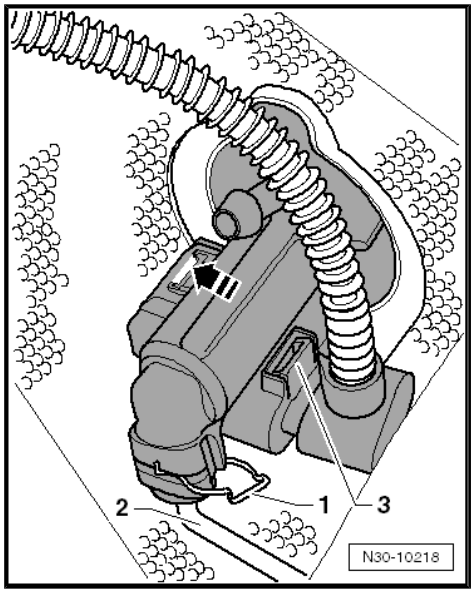

– If present, fold heat shield around the pipe/hose line -arrows-.

Vehicles with particle filter

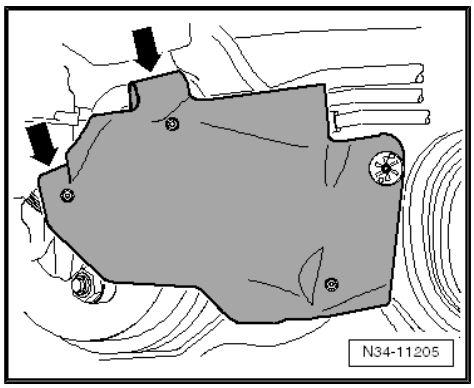

– Install shielding -A- onto particle filter ⇒ Rep. Gr. 26 ; Parts of exhaust system; Assembly overview - front exhaust pipe with particle filter .

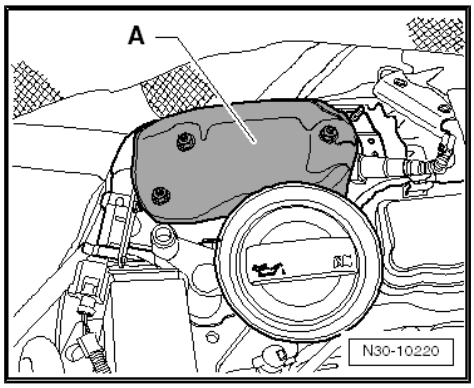

Continuation for all

– Bleed clutch system ⇒ page 101 .

– If disconnected, connect battery ⇒ Electrical system; Rep. Gr. 27 ; Removing and installing battery .

1.15.3 Torque settings

Component	Nm
Mounting bracket to bulkhead ♦ Renew self-locking nuts	25
Crash bar to steering column mounting bracket	20
♦ Renew bolt for crash bar	

1.16 Removing and installing mounting bracket, Golf Plus left-hand drive

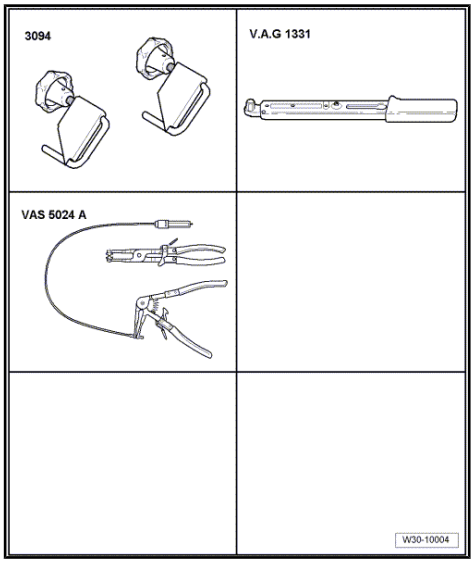

Special tools and workshop equipment required

- Hose clamps -3094-
- Torque wrench -V.A.G 1331-
- Spring-type clip pliers -VAS 5024 A-
- Hose clamp -3094-

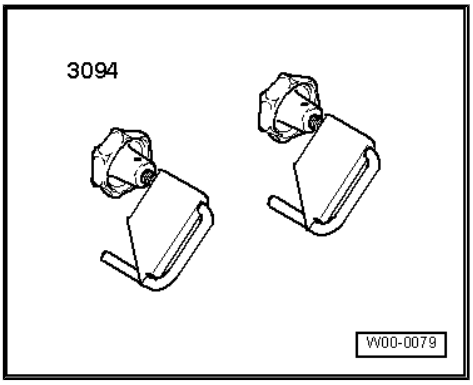

Sealing tool -T10249-

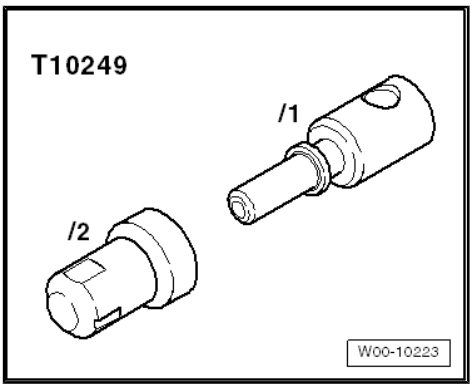

1.16.1 Removing

– First check whether a coded radio is fitted. If so, obtain anti-theft code.

– With ignition switched off, disconnect battery ⇒ Electrical system; Rep. Gr. 27 ; Disconnecting and connecting battery .

– Remove complete air filter housing if it is near battery ⇒ Rep. Gr. 23 ; Repairing diesel direct injection system or ⇒ Rep. Gr. 24 ; Repairing injection system .

– Remove battery, battery cover and battery tray ⇒ Electrical system; Rep. Gr. 27 ; Removing and installing battery .

Note

- *During the following work, ensure that no brake fluid lands on longitudinal member or gearbox. If this does happen, clean the affected areas thoroughly.*
- *Place a lint-free cloth under the master cylinder.*

– Clamp off supply hose to master cylinder using hose clamp -3094- .

– If necessary, loosen spring clip -3- using assembly tool -VAS 5024- .

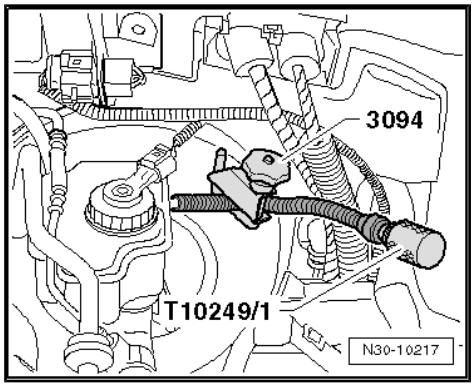

– In addition, for disconnecting, you can close it with the sealing tool -T10249/1- (⇒ figure above).

– Pull off supply hose.

– Pull clip -2- for pipe/hose line out of master cylinder to stop.

– Pull pipe/hose line -1- out from master cylinder and seal hose.

– Unclip clutch position sender -G476- from master cylinder -arrow- and remove with electrical connector attached -4-.

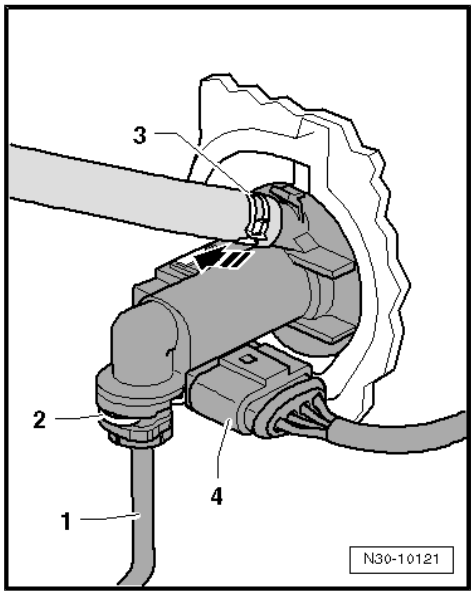

Note

When performing work in the footwell, put cloths on the carpet to protect it from possible brake fluid spills.

– Push driver seat as far back as possible and put steering wheel in highest position.

– Remove driver side compartment and cover ⇒ General body repairs, interior; Rep. Gr. 68 ; Compartments, covers and trim panels .

– Carefully cut through cable tie -1-.

– Remove cable guide -2- from steering column.

– Remove footwell vent -3-.⇒ Heating, air conditioning; Rep. Gr. 80 ; Repairing heating

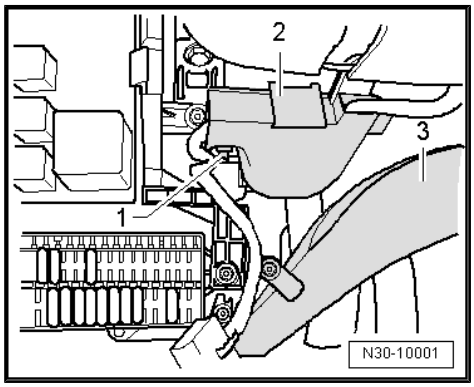

– Remove crash bar -A- by removing bolt -B-.

– Unbolt fuse holder beneath dash panel on left and lay to side ⇒ Electrical system; Rep. Gr. 97 ; Removing and installing fuse holder .

– Unhook relay carrier beneath dash panel on left and lay to side ⇒ Electrical system; Rep. Gr. 97 ; Removing and installing relay carrier .

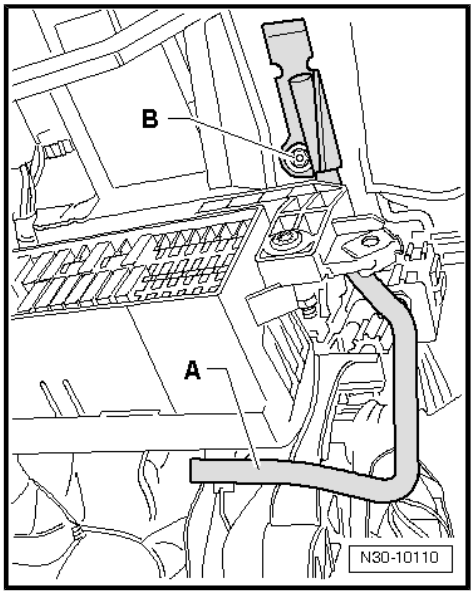

If fitted, remove damping -arrow- from lower area of clutch pedal mounting bracket.

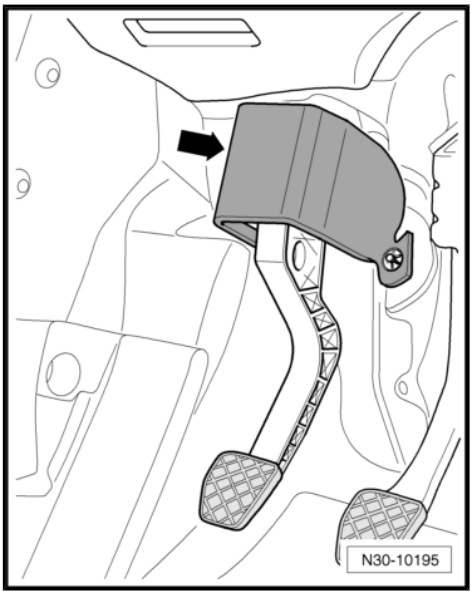

– To do this, remove lock washers -A- for damping.

– Pull off damping.

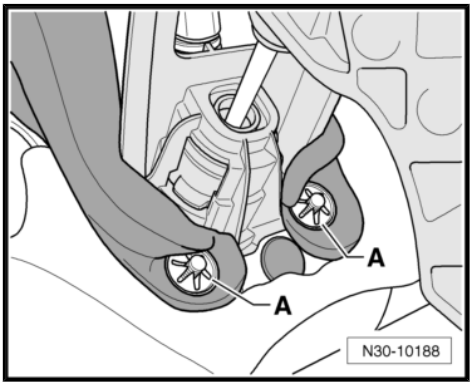

– Push damping upwards in area of upper securing nut -1- above clutch pedal -A- in -direction of arrow-.

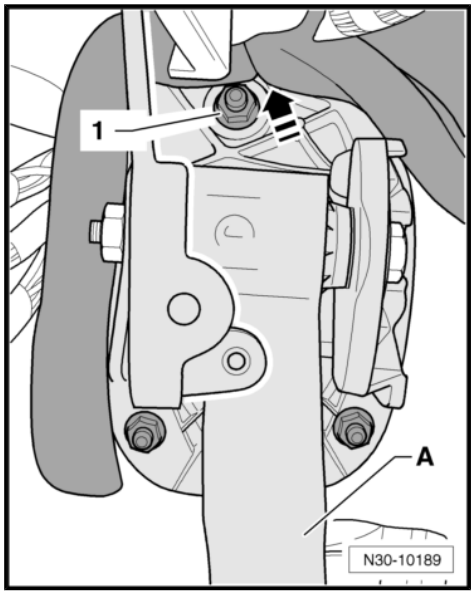

Remove mounting bracket securing nuts -arrows- as follows:

– Wrap tape around universal joint from socket set -V.A.G 1835- .

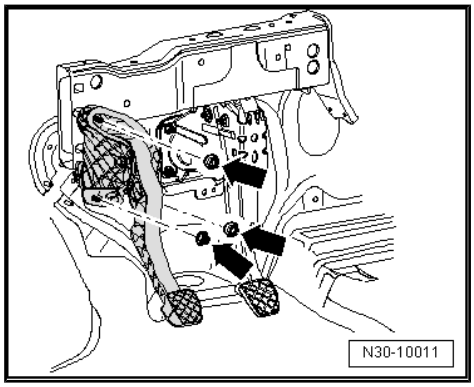

– Press wiring harness -1- upwards and left -arrow- using extension -2- from -V.A.G 1835- .
– While doing this, unbolt upper securing nut for mounting bracket.
– Then unbolt both lower securing nuts for mounting bracket and remove mounting bracket.

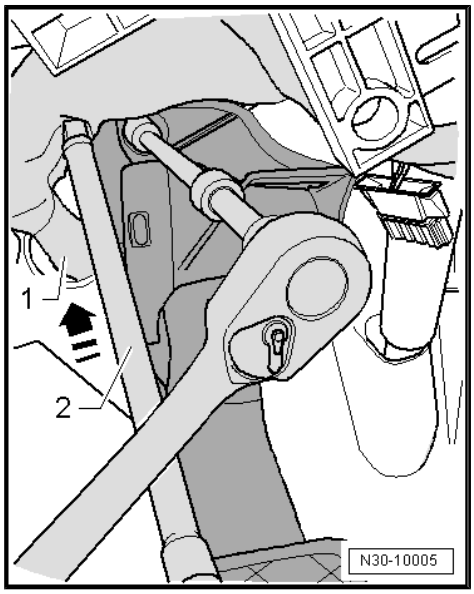

1.16.2 Installing

Install in reverse order of removal. During this step, observe the following:

Some cars have damping -arrow- on the clutch pedal mounting bracket.

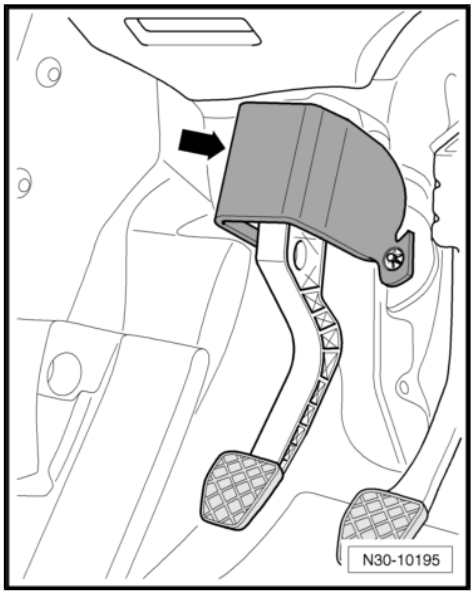

- Install relay carrier beneath dash panel on left ⇒ Electrical system; Rep. Gr. 97 ; Removing and installing relay carrier .
- Install fuse holder beneath dash panel on left ⇒ Electrical system; Rep. Gr. 97 ; Removing and installing fuse holder .

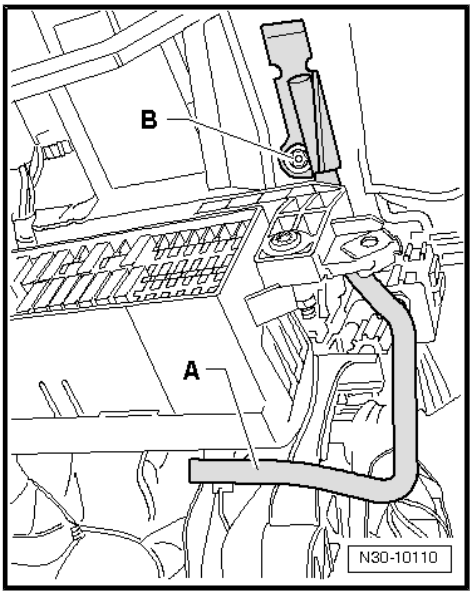

- Install crash bar -A-, tightening bolt -B- to specified torque ⇒ page 84 .
- Install footwell vent, cable guide, cover and compartment on driver side ⇒ General body repairs, interior; Rep. Gr. 68 ; Compartments, covers and trim panels .
- Renew cut cable ties.

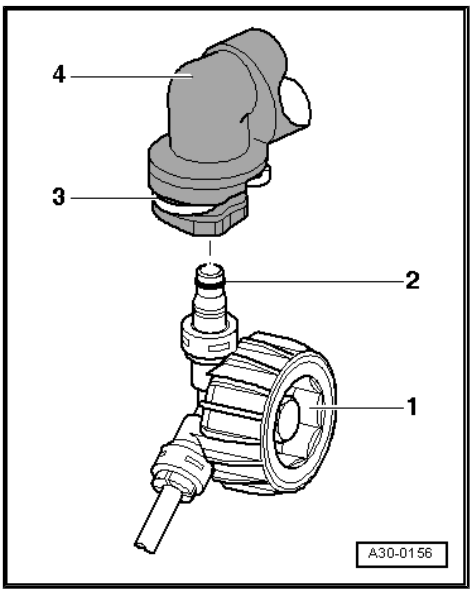

- Push pipe/hose line -1- with seal -2- onto connection of master cylinder -4- until securing clip -3- engages audibly.
- Test pipe/hose line by tugging on it.
- After removing hose clamp -3094- , return supply hose to its original shape, if necessary.
- Bleed clutch system ⇒ page 101 .
- Install battery tray, battery cover and battery ⇒ Electrical system; Rep. Gr. 27 ; Removing and installing battery .
- If removed, install complete air filter housing ⇒ Rep. Gr. 23 ; Repairing diesel direct injection system or ⇒ Rep. Gr. 24 ; Repairing injection system

1.16.3 Torque settings

Component	Nm
Mounting bracket to bulkhead ♦ Renew self-locking nuts	25
Crash bar to steering column mounting bracket	Bolt M6 = 5
Crash bar to steering column mounting bracket	Bolt M8 = 20
♦ Renew bolts for crash bar	

1.17 Removing and installing mounting bracket, Passat

Special tools and workshop equipment required

♦ Hose clamps to 25 mm -3094-

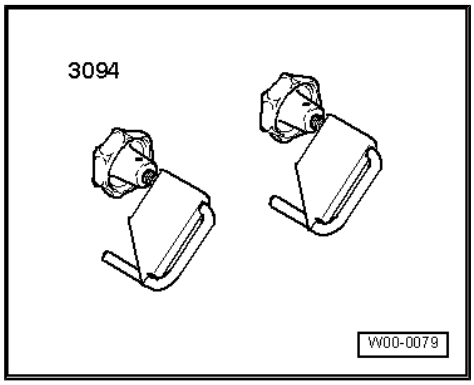

♦ Torque wrench -V.A.G 1331-

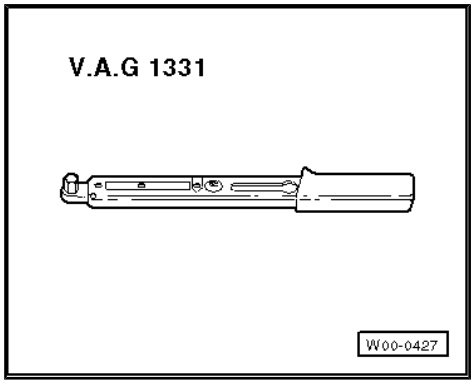

♦ Spring-type clip pliers -VAS 5024 A-

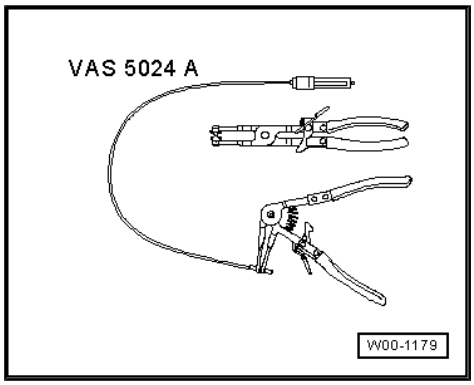

♦ Sealing tool -T10249-

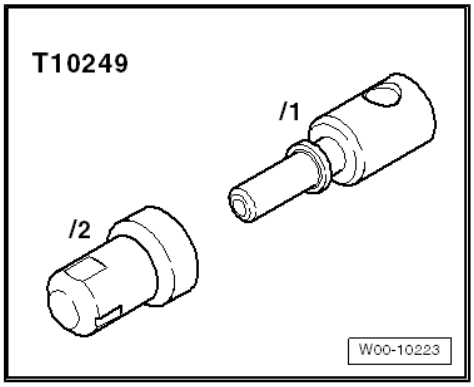

1.17.1 Removing

LHD

– First check whether a coded radio is fitted. If so, obtain anti-theft code.

– Remove lower steering column trim ⇒ General body repairs, interior; Rep. Gr. 68 ; Compartments, covers and trim panels .

– With ignition switched off, disconnect battery ⇒ Electrical system; Rep. Gr. 27 ; Disconnecting and connecting battery .

– Remove complete air filter housing if it is near battery ⇒ Rep. Gr. 23 ; Repairing diesel direct injection system or ⇒ Rep. Gr. 24 ; Repairing injection system .

– Remove battery and battery tray ⇒ Electrical system; Rep. Gr. 27 ; Battery; Removing and installing battery .

Continuation for all

Note

♦ *During the following work, ensure that no brake fluid lands on longitudinal member or gearbox. If this does happen, clean the affected areas thoroughly.*

♦ *Place a lint-free cloth under the master cylinder.*

– Clamp off supply hose to master cylinder using hose clamp -3094- .

– If necessary, loosen spring-type clip -3- with assembly tool -VAS 5024- and pull supply hose off master cylinder.

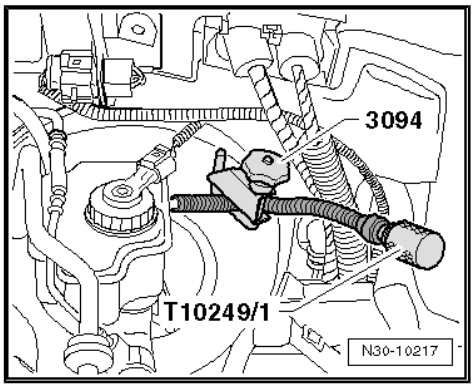

– In addition, for disconnecting, you can close it with the sealing tool -T10249/1- (⇒ figure above).
– Release securing clip -2- with a screwdriver or a pointed object and pull out of master cylinder to stop.
– Pull pipe/hose line -1- out from master cylinder and seal hose.
– Separate electrical connector -4- at clutch position sender -G476- .
– Remove driver side footwell cover ⇒ General body repairs, interior; Rep. Gr. 68 ; Compartments, covers and trim panels .

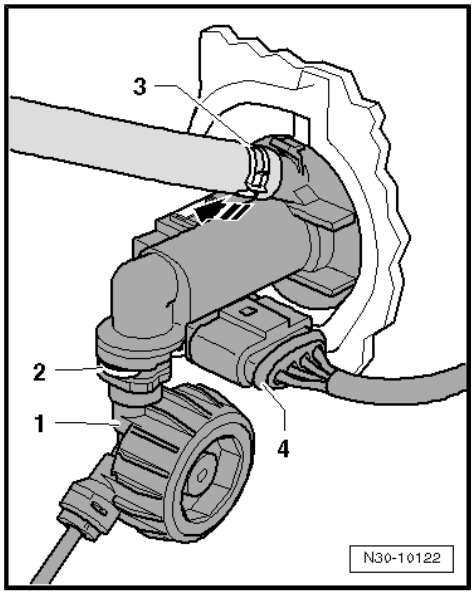

– Remove crash bar -1- by removing bolt -2-.

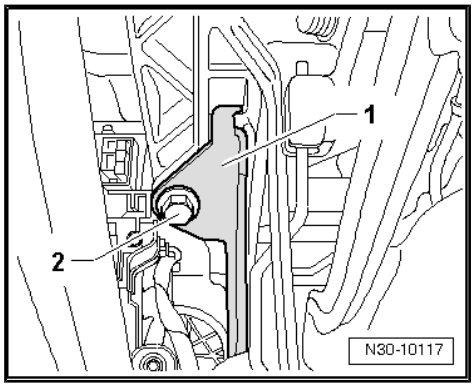

– If present, remove retaining clip -1- and swing front parking aid warning buzzer -H22- -2- in -direction of arrow-.

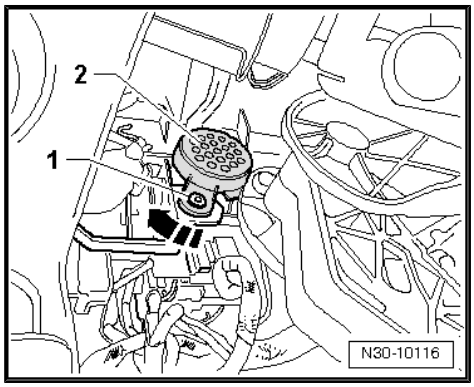

– Pull off damping if lower securing bolt for mounting bracket is covered, -arrows-.

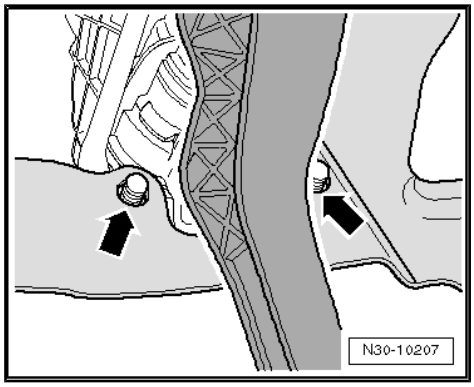

– Remove securing nuts -1- and -2-.

The upper securing nut -1- is accessible through the opening in the lower steering column trim.

– Pull mounting bracket -3- off studs on body.

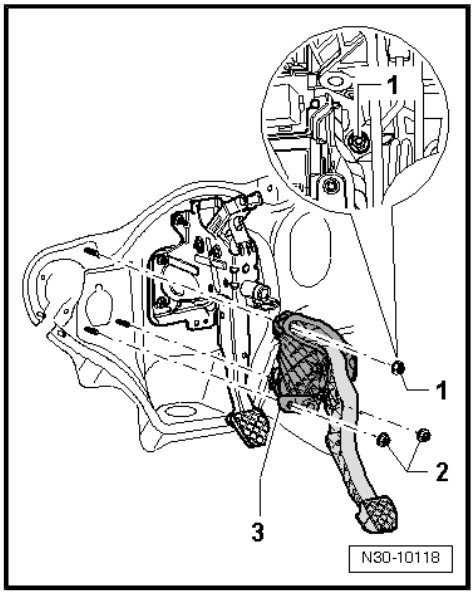

1.17.2 Installing

Install in reverse order of removal. During this step, observe the following:

Note

- *Renew self-locking nuts.*
- *Renew hose clips.*
- *Allocate all components according to ⇒ Electronic parts catalogue "ETKA".*

– If present, install retaining clip for front parking aid warning buzzer -H22- ⇒ Electrical system; Rep. Gr. 94 ; Parking aid .

– Install crash bar -1- and tighten bolt -2- to specified torque ⇒ page 88 .

– Install lower steering column trim ⇒ General body repairs, interior; Rep. Gr. 68 ; Compartments, covers and trim panels .

– Install driver side footwell cover ⇒ General body repairs, interior; Rep. Gr. 68 ; Compartments, covers and trim panels .

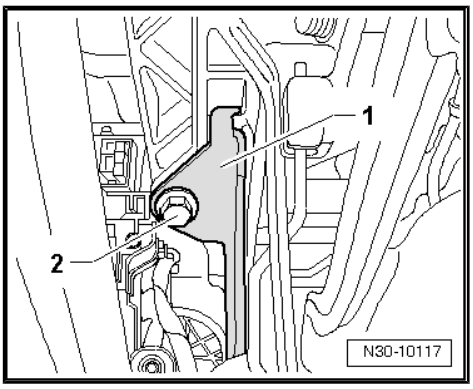

– Push pipe/hose line -1- with seal -2- onto connection of master cylinder -4- until securing clip -3- engages audibly.

– Test line by tugging on it.

– After removing hose clamp -3094- , return supply hose to its original shape, if necessary.

– Bleed clutch system ⇒ page 101 .

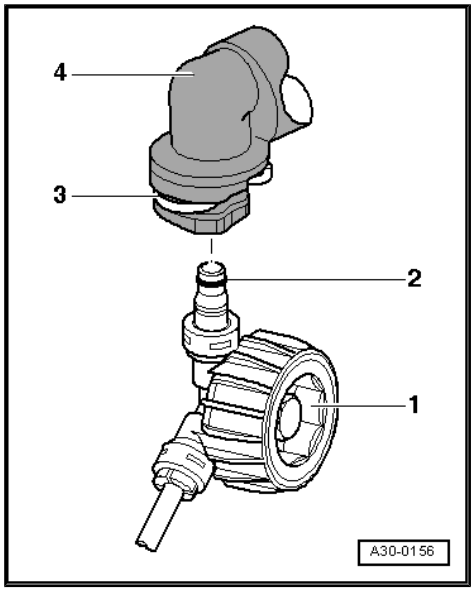

LHD

– Install battery tray, battery cover and battery ⇒ Electrical system; Rep. Gr. 27 ; Removing and installing battery .

– If removed, install complete air filter housing ⇒ Rep. Gr. 23 ; Repairing diesel direct injection system or ⇒ Rep. Gr. 24 ; Repairing injection system

– Reconnect battery and perform work required after connecting battery ⇒ Electrical system; Rep. Gr. 27 ; Disconnecting and connecting battery .

1.17.3 Torque settings

Component	Nm
Mounting bracket to bulkhead ♦ Renew self-locking nuts.	25
Crash bar ♦ Renew bolt for crash bar	20

1.18 Removing and installing master cylinder

Special tools and workshop equipment required

♦ Pliers -T10005-

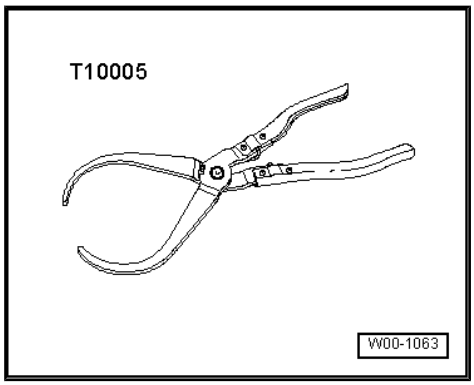

1.18.1 Removing

– Remove mounting bracket, Golf 2004 ‣ ⇒ page 61 .

– Remove mounting bracket, Golf 2009 ‣ LHD ⇒ page 67 .

– Remove mounting bracket, Golf 2009 ‣ right-hand drive and Golf Plus right-hand drive ⇒ page 73 .

– Remove mounting bracket, Golf Plus left-hand drive ⇒ page 79 .

– Remove mounting bracket, Passat ⇒ page 84

– Release retainer for master cylinder operating rod using pliers -T10005- .

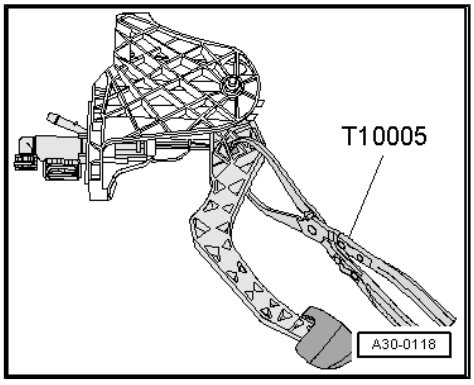

– Insert spacer -A- between clutch pedal and stop and press clutch pedal to spacer.

♦ Length of spacer = about 40 mm (e.g. 1/2 socket).

– Release securing bar -B- and pull master cylinder out of mounting bracket -arrow 1- and -arrow 2-.

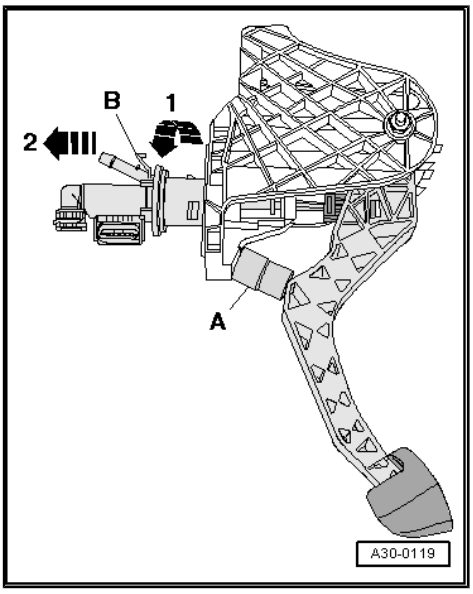

1.18.2 Installing

• Move clutch pedal to rest position at stop.

– Attach retainer -2- to master cylinder operating rod -1-.

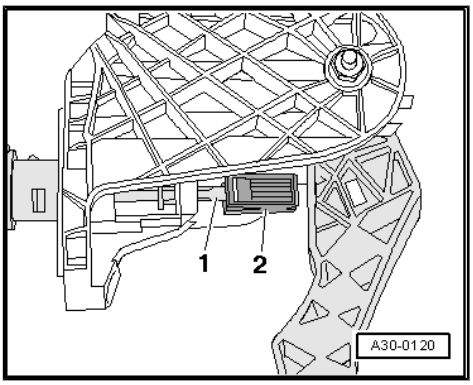

– Insert spacer -A- between clutch pedal and stop and press clutch pedal to spacer.

◆ Length of spacer = about 40 mm (e.g. 1/2 socket).

– Engage master cylinder in mounting bracket -arrow 1- and -arrow 2-.

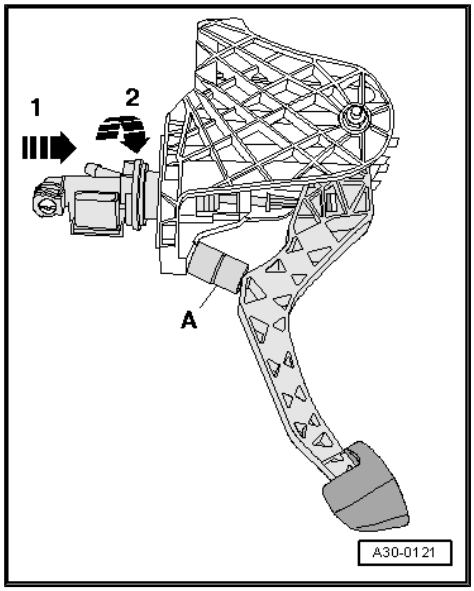

– Press master cylinder operating rod -1- in direction of arrow until retainer -2- engages audibly in clutch pedal.

– Install mounting bracket, Golf 2004 ‣ ⇒ page 61 .

– Install mounting bracket, Golf 2009 ‣ LHD ⇒ page 67 .

– Install mounting bracket, Golf 2009 ‣ right-hand drive and Golf Plus right-hand drive ⇒ page 73 .

– Install mounting bracket, Golf Plus left-hand drive ⇒ page 79 .

– Install mounting bracket, Passat ⇒ page 84

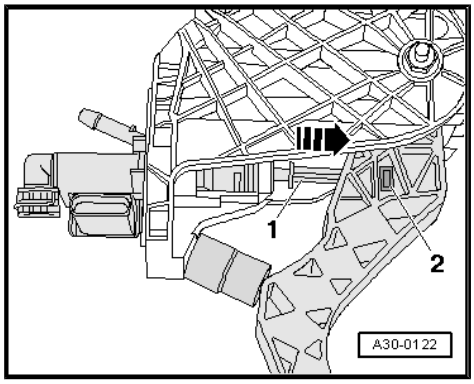

1.19 Removing and installing clutch position sender -G476-

Special tools and workshop equipment required

◆ Hose clamps -3094-

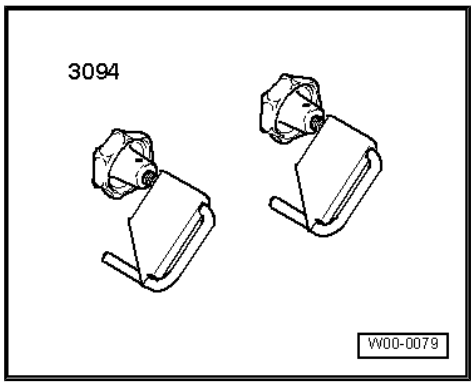

1.19.1 Removing

LHD

– First check whether a coded radio is fitted. If so, obtain anti-theft code.

– With ignition switched off, disconnect battery ⇒ Electrical system; Rep. Gr. 27 ; Disconnecting and connecting battery .

– Remove complete air filter housing if it is near battery ⇒ Rep. Gr. 23 ; Repairing diesel direct injection system or ⇒ Rep. Gr. 24 ; Repairing injection system .

– Remove battery and battery tray ⇒ Electrical system; Rep. Gr. 27 ; Battery; Removing and installing battery .

RHD

– In vehicles with particle filter, remove shielding -A- from particle filter ⇒ Rep. Gr. 26 ; Parts of exhaust system; Assembly overview - front exhaust pipe with particle filter .

An insulation mat is installed in conjunction with some engines. Appearance may be different from that illustrated.

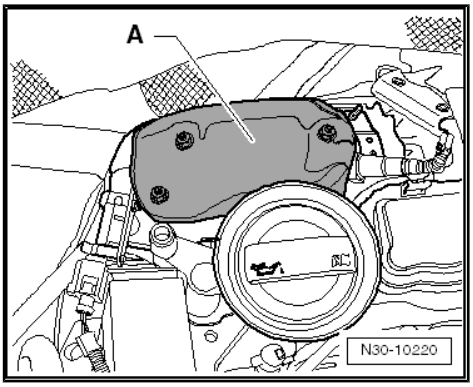

– Remove heat shield from pipe/hose line -arrows-.

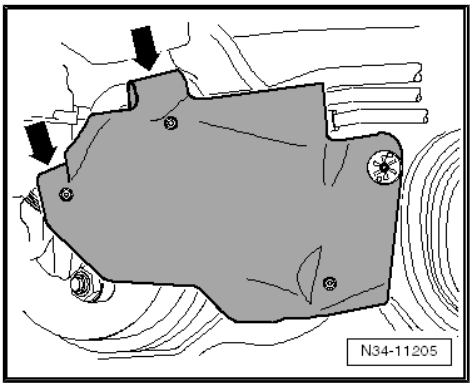

Continuation for all

If a pipe/hose line -1- with a round component is installed directly beneath the master cylinder, the pipe/hose line must be removed.

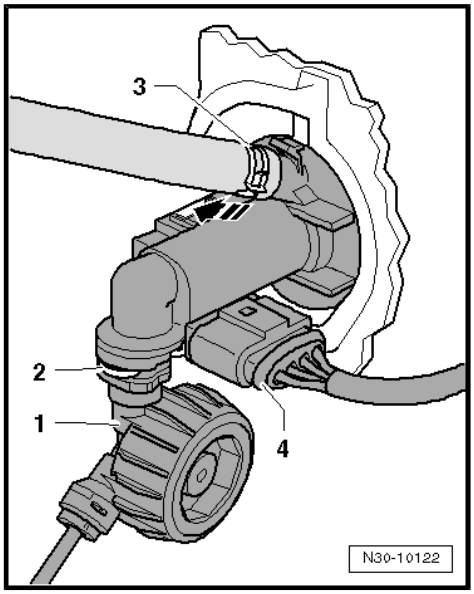

Note

- *During the following work, ensure that no brake fluid lands on longitudinal member or gearbox. If this does happen, clean the affected areas thoroughly.*
- *Place a lint-free cloth under the master cylinder.*

– Clamp off supply hose to master cylinder using hose clamp -3094- .

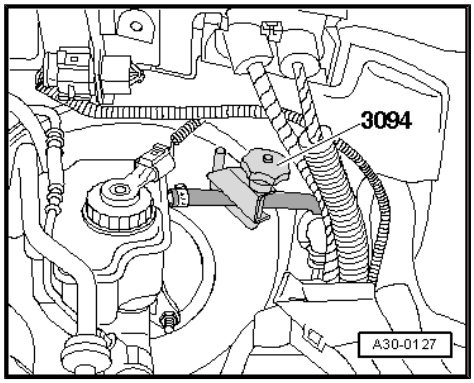

– Release securing clip -2- with a screwdriver or a pointed object and pull out of master cylinder to stop.
– Pull pipe/hose line -1- out from master cylinder and seal hose.
– Disconnect electrical connector -4-.
– Unclip clutch position sender -G476- from master cylinder -arrow- and remove.

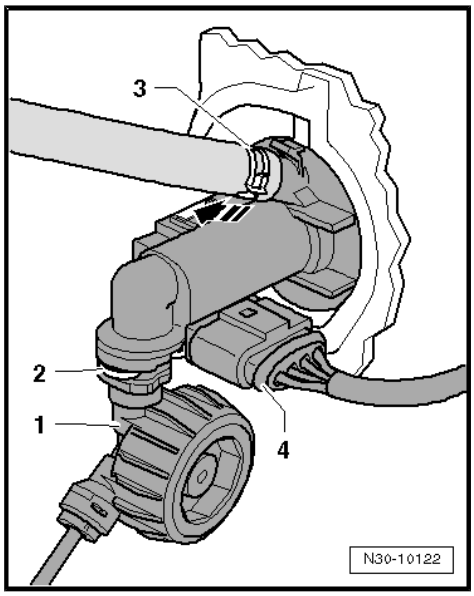

1.19.2 Installing

Install in reverse order of removal. During this step, observe the following:

Note

- *Renew hose clips.*
- *Allocate all components according to ⇒ Electronic parts catalogue "ETKA" .*

If the pipe/hose line was removed

- Push pipe/hose line -1- with seal -2- onto connection of master cylinder -4- until securing clip -3- engages audibly.
- Test pipe/hose line by tugging on it.
- After removing hose clamp -3094- , return supply hose to its original position, if necessary.
- Bleed clutch system ⇒ page 101 .

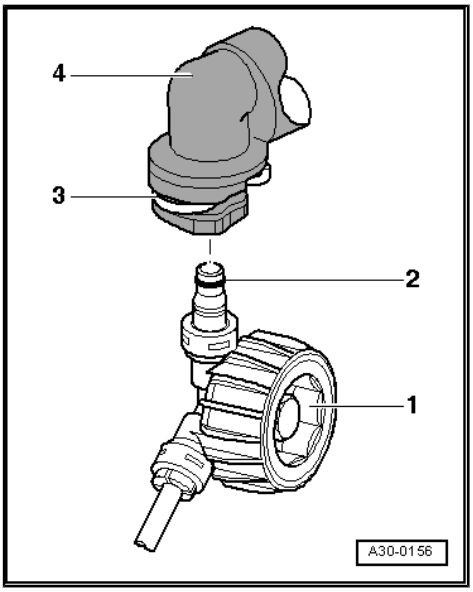

Right-hand drive

- In vehicles with particle filter, install shielding -A- on particle filter ⇒ Rep. Gr. 26 ; Parts of exhaust system; Assembly overview - front exhaust pipe with particle filter .

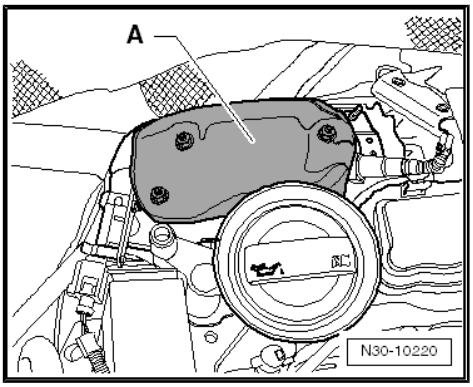

LHD

- Install battery tray and battery⇒ Electrical system; Rep. Gr. 27 ; Removing and installing battery .
- If removed, install complete air filter housing ⇒ Rep. Gr. 23 ; Repairing diesel direct injection system or ⇒ Rep. Gr. 24 ; Repairing injection system
- Reconnect battery and perform work required after connecting battery ⇒ Electrical system; Rep. Gr. 27 ; Disconnecting and connecting battery .

1.20 Assembly overview - hydraulics (LHD)

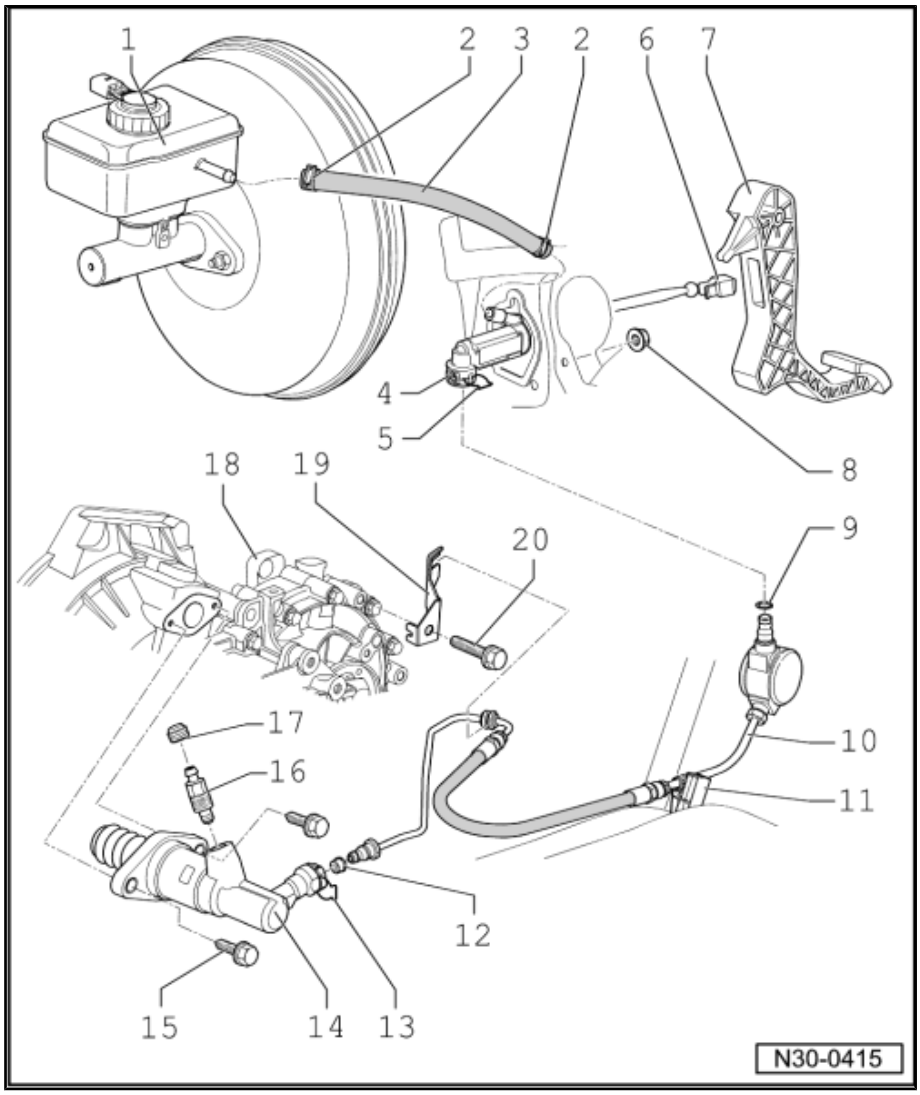

1 - Brake fluid reservoir

2 - Spring-type clip

- ❑ Not fitted in all vehicles

3 - Supply hose

- ❑ Rubber
- ❑ From 12. 05, plastic ⇒ page 95
- ❑ Golf 2009 ‣ and Golf Plus 2009 ‣ plastic ⇒ page 95

4 - Master cylinder

- ❑ Removing and installing ⇒ page 88

5 - Clip

- ❑ Pull out clip to stop to remove and install pipe/ hose line

6 - Retainer

- ❑ To remove and install, separate master cylinder from clutch pedal, Golf 2004 ‣ ⇒ page 38 , Golf 2009 ‣ ⇒ page 44 , Golf Plus ⇒ page 54 , Passat ⇒ page 59

7 - Clutch pedal

- ❑ Removing and installing, Golf 2004 ‣ ⇒ page 38
- ❑ Removing and installing, Golf 2009 ‣ ⇒ page 44
- ❑ Removing and installing, Golf Plus ⇒ page 54
- ❑ Removing and installing, Passat ⇒ page 59

8 - Hexagon nut, ⇒ Item 15 (page 17)

9 - Seal / O-ring

- ❑ Pull onto line connection
- ❑ Insert with brake fluid
- ❑ Seals/O-rings are adapted to configuration of line connection ⇒ page 95
- ❑ Allocation ⇒ Electronic parts catalogue “ETKA”

10 - Pipe/hose line

- ❑ Allocation ⇒ Electronic parts catalogue “ETKA”
- ❑ To remove, remove battery and battery tray ⇒ Electrical system; Rep. Gr. 27 ; Removing and installing battery .

11 - Retainer

- ❑ Secured to body

12 - Seal / O-ring

- ❑ Pull onto line connection
- ❑ Insert with brake fluid.

Volkswagen Technical Site: http://vwts.ru http://vwts.info

- ❑ Seals/O-rings are adapted to configuration of line connection ⇒ page 95
- ❑ Allocation ⇒ Electronic parts catalogue “ETKA”

13 - Clip

- ❑ Pull out clip to stop to remove and install pipe/hose line

14 - Slave cylinder

- ❑ Removing and installing ⇒ page 98

15 - Hexagon bolt ⇒ Item 9 (page 104)

16 - Bleeder valve

- ❑ Bleeding clutch system ⇒ page 101

17 - Dust cap

18 - Gearbox

19 - Retainer

20 - Hexagon bolt, 20 Nm

Seals and O-rings for pipe and hose lines

Item	Material of line connection
1	Line connection with circumferential groove -arrow 1-
2	Line connection with shoulder -arrow 2-
3	Line connection with shoulder -arrow 2- and circumferential groove -arrow 3-

- For line connection having circumferential groove -arrow 1- and -arrow 3-, a seal or O-ring must be set there.

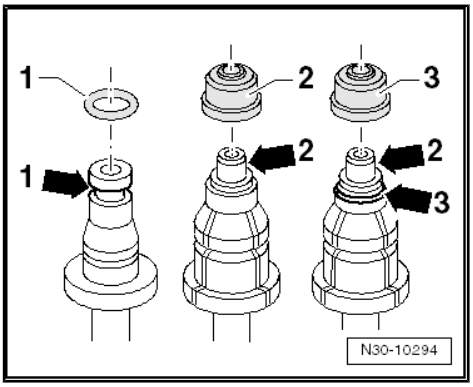

Supply hose -1- of plastic

- The seals -2- must be located in supply hose.

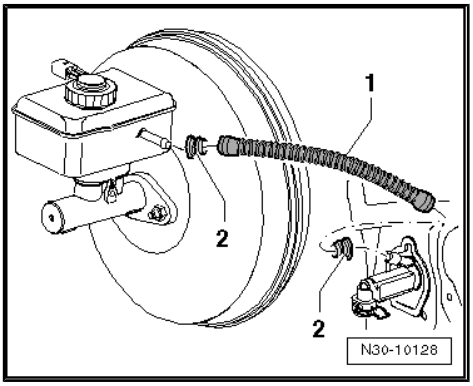

1.21 Assembly overview - hydraulics (RHD)

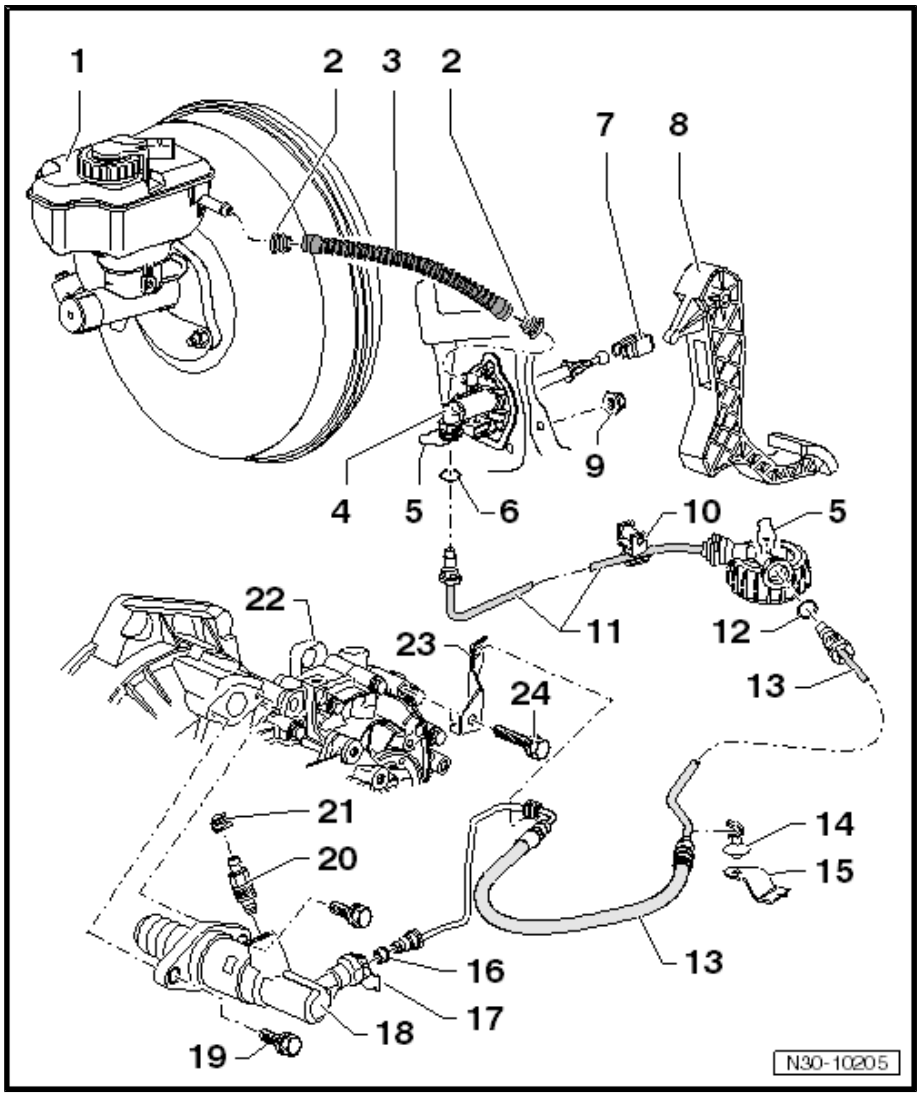

1 - Brake fluid reservoir

2 - Seal

- ❑ For plastic supply hose
- ❑ The seals must be located in supply hose

3 - Supply hose

- ❑ Made of plastic
- ❑ May be made of rubber ⇒ Item 3 (page 94)

4 - Master cylinder

- ❑ Removing and installing ⇒ page 88

5 - Clip

- ❑ Pull clip out to stop to remove or install pipe
- ❑ Is also pulled out to side in some master cylinders.

6 - Seal / O-ring

- ❑ Pull onto line connection
- ❑ Insert with brake fluid.
- ❑ Seals/O-rings are adapted to configuration of line connection ⇒ page 95
- ❑ Allocation ⇒ Electronic parts catalogue “ETKA”

7 - Retainer

- ❑ To remove and install, separate master cylinder from clutch pedal (⇒ Removing and installing clutch pedal)
- ❑ Golf 2004 ‣ ⇒ page 38
- ❑ Golf 2009 ‣ ⇒ page 49
- ❑ Golf Plus ⇒ page 54
- ❑ Passat ⇒ page 59

8 - Clutch pedal

- ❑ Removing and installing, Golf 2004 ‣ ⇒ page 38
- ❑ Removing and installing, Golf 2009 ‣ ⇒ page 49
- ❑ Removing and installing, Golf Plus ⇒ page 54
- ❑ Removing and installing, Passat ⇒ page 59

9 - Hexagon nut, ⇒ Item 15 (page 17)

10 - Retainer

- ❑ Secured to body

11 - Pipe line

- ❑ Pipe and hose/pipe line ⇒ Item 13 (page 97) may be in one piece
- ❑ Allocation ⇒ Electronic parts catalogue “ETKA”

- ❑ To remove, remove battery and battery tray ⇒ Electrical system; Rep. Gr. 27 ; Removing and installing battery .

12 - Seal / O-ring

- ❑ Pipe ⇒ Item 11 (page 96) and hose/pipe line may be in one piece
- ❑ Pull onto line connection
- ❑ Insert with brake fluid
- ❑ Seals/O-rings are adapted to configuration of line connection ⇒ page 95
- ❑ Allocation ⇒ Electronic parts catalogue “ETKA”

13 - Pipe/hose line

- ❑ Pipe ⇒ Item 11 (page 96) and hose/pipe line may be in one piece
- ❑ Allocation ⇒ Electronic parts catalogue “ETKA”
- ❑ To remove, remove battery and battery tray ⇒ Electrical system; Rep. Gr. 27 ; Removing and installing battery .

14 - Retainer

- ❑ Secured to retainer for ABS/EDL

15 - Retainer

- ❑ For ABS/EDL

16 - Seal / O-ring

- ❑ Pull onto line connection
- ❑ Insert with brake fluid.
- ❑ Seals/O-rings are adapted to configuration of line connection ⇒ page 95
- ❑ Allocation ⇒ Electronic parts catalogue “ETKA”

17 - Clip

- ❑ Pull out clip to stop to remove and install pipe/hose line

18 - Slave cylinder

- ❑ Removing and installing ⇒ page 98

19 - Hexagon bolt ⇒ Item 9 (page 104)

20 - Bleeder valve

- ❑ Bleeding clutch system ⇒ page 101

21 - Dust cap

22 - Gearbox

23 - Retainer

24 - Hexagon bolt, 20 Nm

2 Removing and installing slave cylinder

Special tools and workshop equipment required

♦ Torque wrench -V.A.G 1331-

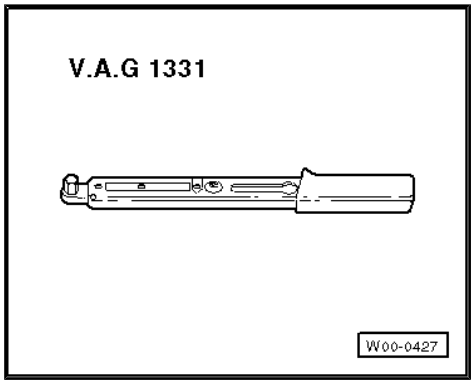

2.1 Removing

– First check whether a coded radio is fitted. If so, obtain anti-theft code.

– With ignition switched off, disconnect battery ⇒ Electrical system; Rep. Gr. 27 ; Disconnecting and connecting battery .

– Remove complete air filter housing if it hinders access to slave cylinder ⇒ Rep. Gr. 23 ; Repairing diesel direct injection system or ⇒ Rep. Gr. 24 ; Repairing injection system .

– Remove securing clip -arrow 1- for gear selector cable from gearbox selector lever -A-.

– Pull gear selector cable off pin.

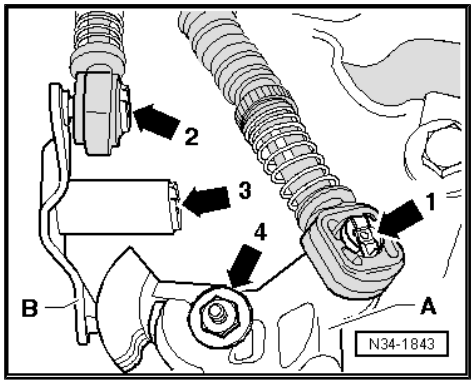

Metal relay lever

– Remove securing clip -arrow 2- for gate selector cable from relay lever -B-.

– Pull gate selector cable from pin.

– Pull securing clip -arrow 3- off relay lever -B- and remove relay lever.

Plastic relay lever

– Remove relay lever together with cable end-piece from gearbox ⇒ page 134 .

Continuation for all

– Remove gearbox selector lever -A- by removing nut -arrow 4-.

– Remove cable support bracket from gearbox -arrows-.
– Then raise and secure gear selector cable and gate selector cable.
– Remove bracket -B- from gearbox and pull it off pipe/hose line -A-.

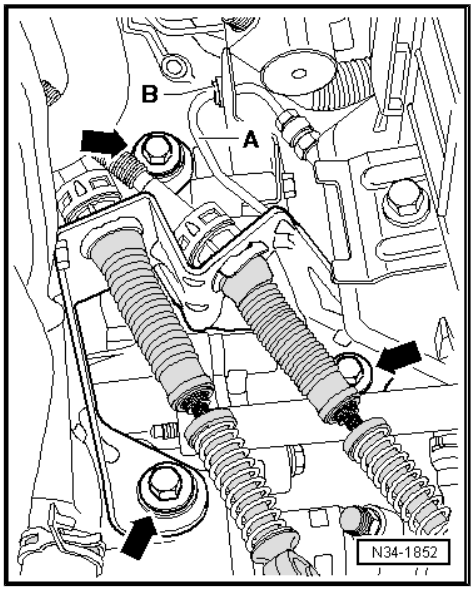

– Then remove gearbox support -arrow A-.
– Place a lint-free cloth under slave cylinder.
– Pull clip for pipe/hose line out of slave cylinder to stop.
– Pull pipe/hose line out of slave cylinder and seal opening.
– Remove slave cylinder -arrows B-.

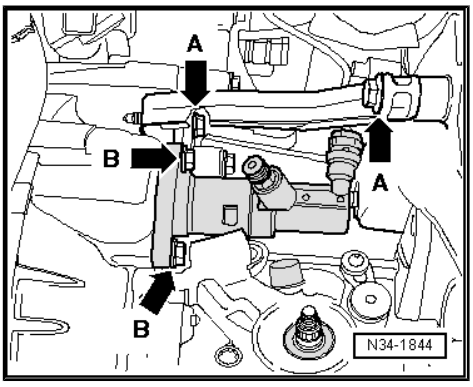

> ⚠ **Caution**
>
> *Do not operate clutch pedal any more.*

2.2 Installing

Install in the reverse order of removal, observing the following:

– Install slave cylinder and tighten bolts -arrows B- to specified torque.
– Insert pipe/hose line into slave cylinder to stop.
– Test pipe/hose line by tugging on it.
– Push retaining clip into pipe/hose line to stop.
– Then install gearbox support -arrows A-.
– Bleed clutch system after installing slave cylinder ⇒ page 101 .

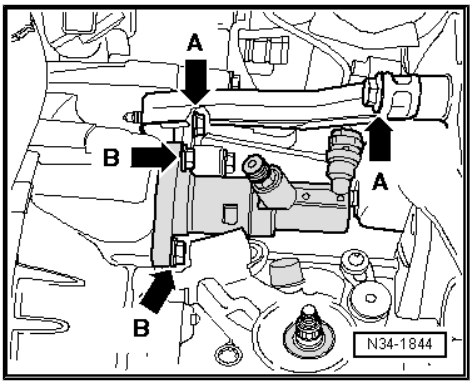

Assembling selector mechanism ⇒ page 131 .

Adjusting selector mechanism ⇒ page 139 .

– If removed, install complete air filter housing ⇒ Rep. Gr. 23 ; Repairing diesel direct injection system or ⇒ Rep. Gr. 24 ; Repairing injection system
– Connect battery earth ⇒ Electrical system; Rep. Gr. 27 ; Battery; Disconnecting and connecting battery .

2.3 Torque settings

Slave cylinder to gearbox ⇒ Item 9 (page 104)

Gearbox support to gearbox bracket and gearbox

– Renew bolts.
– Screw in all bolts hand-tight.
– Tighten bolts to specified torque.

Bolts -arrows-	20 Nm + 90°

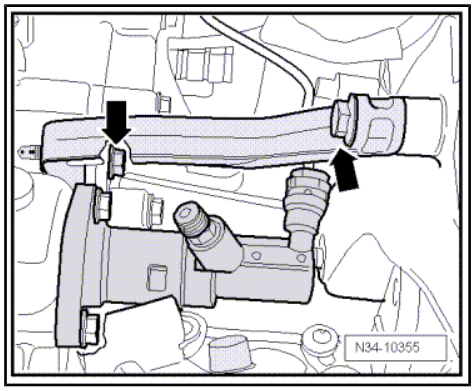

3 Bleeding clutch system

Special tools and workshop equipment required

- Brake filling and bleeding equipment -VAS 5234- or

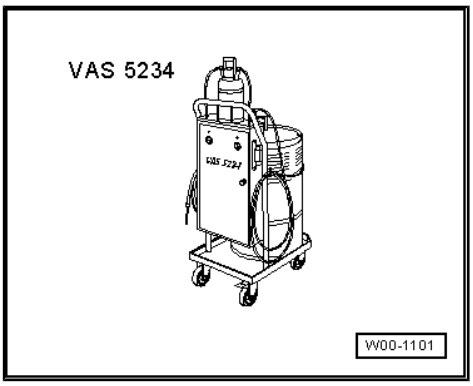

- Brake filling and bleeding equipment -V.A.G 1869-

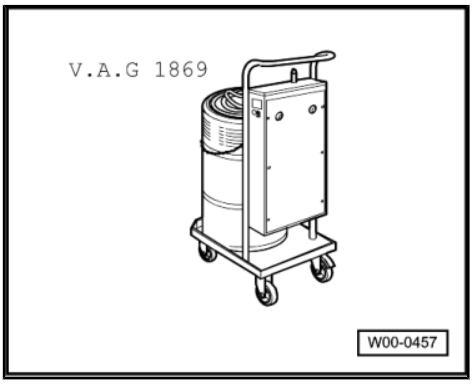

Note

Prefilling system is not necessary!

Specifications for brake fluid ⇒ Brake systems; Rep. Gr. 47 ; Bleeding brake system .

– Remove complete air filter housing if it blocks access to bleeder connection (-arrow-, figure below) ⇒ Rep. Gr. 23 ; Repairing diesel direct injection system or ⇒ Rep. Gr. 24 ; Repairing injection system

– Connect brake filling and bleeding equipment -VAS 5234- or -V.A.G 1869- .

To bleed system, use 670 mm bleeder hose -V.A.G 1238/B3- if necessary.

– Connect bleeder hose to collector bottle of brake bleeding equipment.

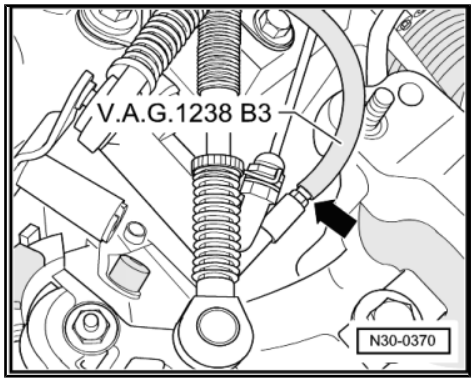

- Connect bleeder hose to bleeder -arrow-.
- Pressurise system to 2 bar.
- Open bleeder valve.
- Bleed off about 100 cm^3 brake fluid.
- Close bleeder valve.
- Rapidly operate pedal from stop to stop 10 to 15 times.
- Open bleeder valve.
- Bleed off an additional 50 cm^3 brake fluid.
- Close bleeder valve.
- Depress clutch pedal several times after completion of bleeding process.
- If removed, install complete air filter housing ⇒ Rep. Gr. 23 ; Repairing diesel direct injection system or ⇒ Rep. Gr. 24 ; Repairing injection system

4 Repairing clutch release mechanism

Special tools and workshop equipment required

- Torque wrench -V.A.G 1331-

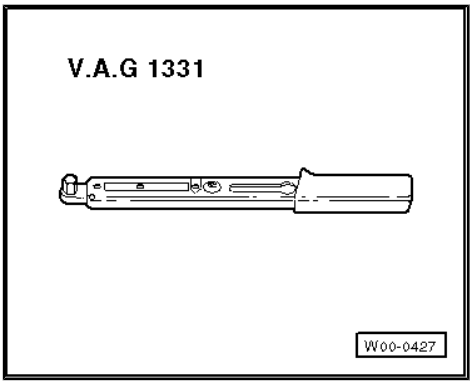

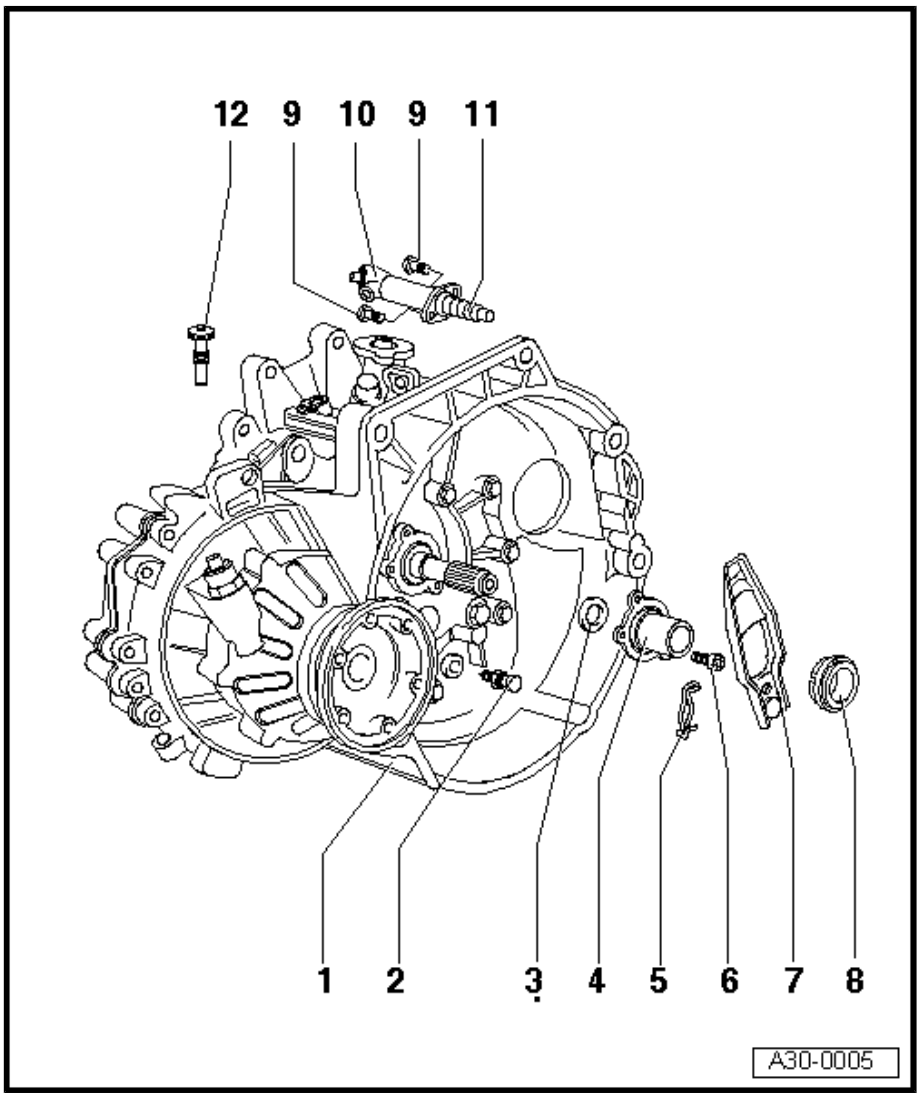

1 - Gearbox

2 - Ball stud, 25 Nm

- ❑ To remove and install, remove gearbox
- ❑ Remove old grease from contact surface of clutch release lever
- ❑ Lubricate with grease - G 000 100-

3 - Input shaft seal

- ❑ To remove and install, remove gearbox
- ❑ Renewing ⇒ Item 12 (page 251)

4 - Guide sleeve

- ❑ To remove and install, remove gearbox
- ❑ With vulcanised O-ring
- ❑ If O-ring is damaged, renew guide sleeve and O-ring together

5 - Retaining spring

- ❑ To remove and install, remove gearbox
- ❑ Secure to clutch release lever

6 - Socket head bolt, 20 Nm

7 - Clutch release lever

- ❑ To remove and install, remove gearbox
- ❑ Remove and install together with release bearing ⇒ page 104
- ❑ Remove old grease

8 - Release bearing

- ❑ To remove and install, remove gearbox
- ❑ Do not wash out bearing; wipe only

- ❑ Renew noisy bearings
- ❑ Removing from and inserting in clutch release lever ⇒ page 104
- ❑ Lubricate contact surface of release lever with MoS_2 grease

9 - Hexagon bolt, 20 Nm

10 - Slave cylinder

- ❑ Removing and installing ⇒ page 98

11 - Plunger

12 - Assembly bolt

- ❑ Secures clutch release lever when gearbox is installed.
- ❑ Remove after gearbox has been installed

Note

Removing and installing release lever together with release bearing

– Unhook spring -arrow 1-.

– Pull off release lever -arrow 2- and release bearing.

– Install in reverse order of removal.

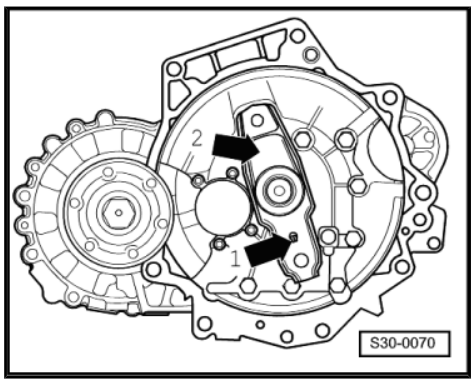

Removing and installing release bearing

– Press together retaining hooks -arrows- on back of clutch release lever and remove release bearing -A- from clutch release lever.

– To install, press release bearing -A- into clutch release lever until retaining hooks -arrows- engage.

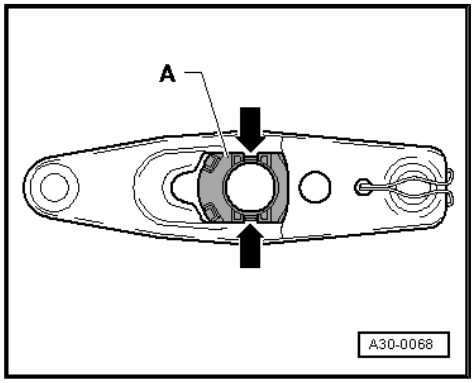

5 Repairing clutch, in conjunction with dual-mass flywheel

Special tools and workshop equipment required

- Counterhold -3067-
- Centring mandrel -3190 A-
- Torque wrench -V.A.G 1331-
- Grease for clutch plate splines -G 000 100-

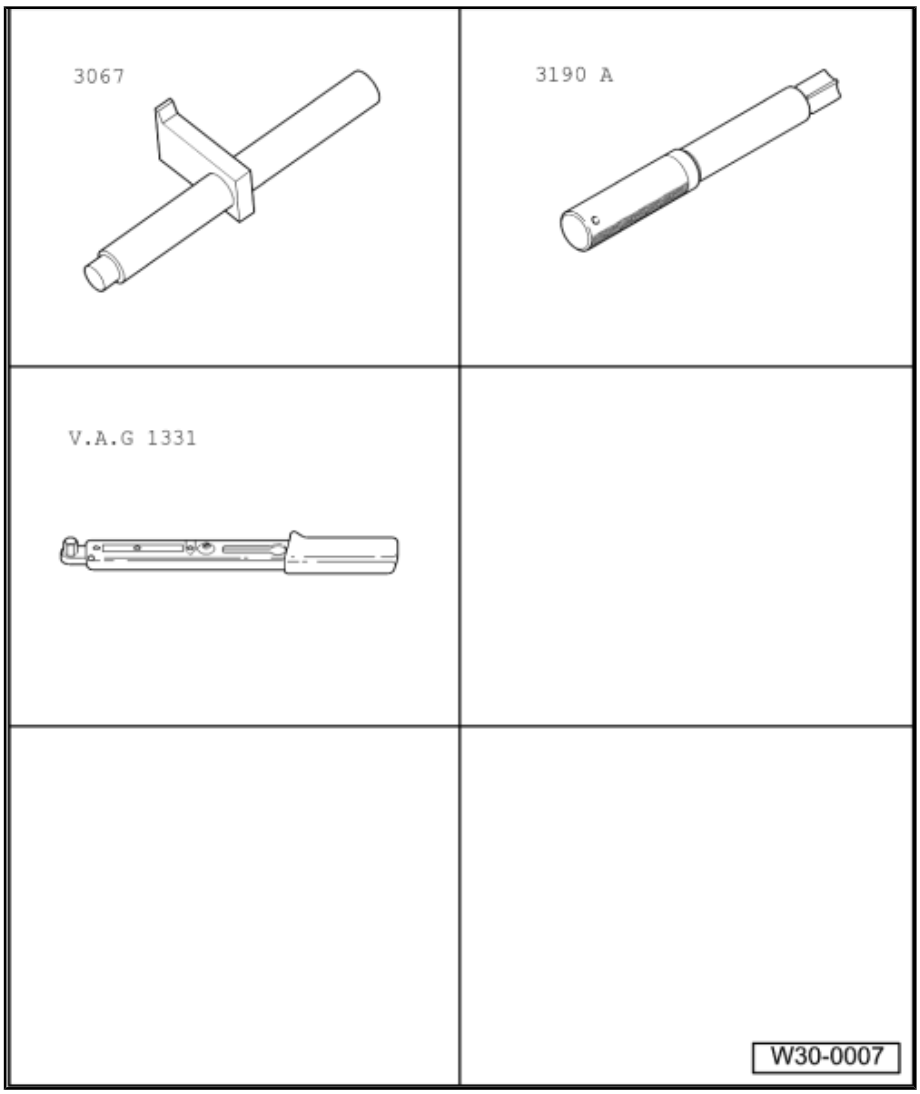

5.1 Identifying make of clutch, vehicles with 1.9 l - 66 kW turbo diesel engine and vehicles with 1.9 l - 77 kW turbo diesel engine

The make of the clutch can be determined as follows with the clutch installed:

– Remove noise insulation ⇒ General body repairs, exterior; Rep. Gr. 50 ; Noise insulation .

Some notches -arrows- are located in lower region of sump between engine -A- and gearbox -B-.

– Check outer contour of flywheel through these notches.

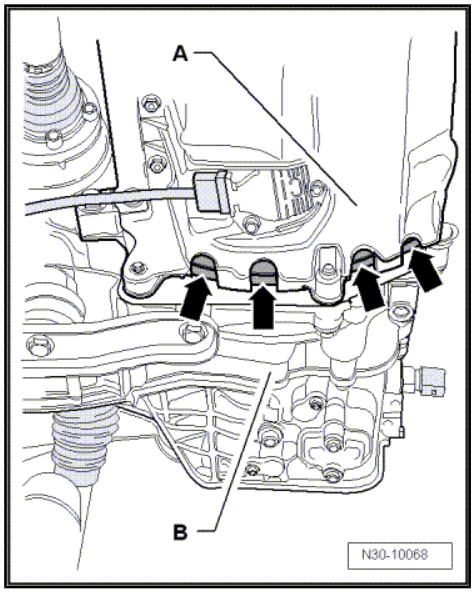

– In addition, a small cover plate -A- can be removed to enable inspection of flywheel's outer contour.

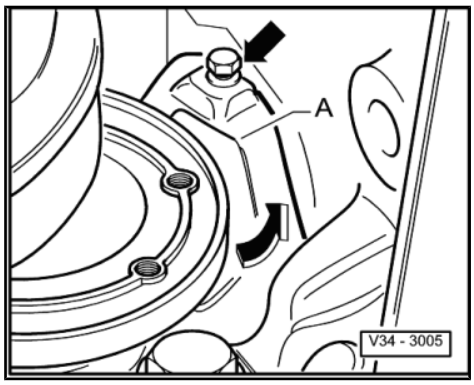

Round outer contour -arrows- = Sachs clutch = -A-

– Removing and installing Sachs clutch ⇒ page 107 .

– Repairing Sachs clutch ⇒ page 109 .

Outer contour with edges -arrows 1- and, in addition, a circumferential crease -arrow 2- = LuK clutch = -B-

or

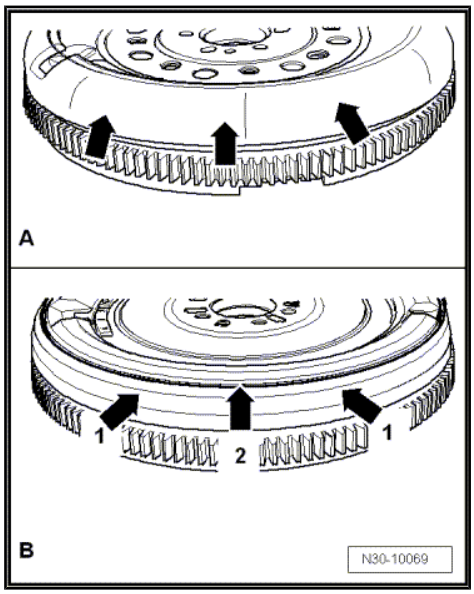

Rounded outer contour -arrows 1- and a circumferential crease -arrow 2- = LuK clutch = -B-

– Removing and installing LuK clutch ⇒ page 109 .

– Repairing LuK clutch ⇒ page 112 .

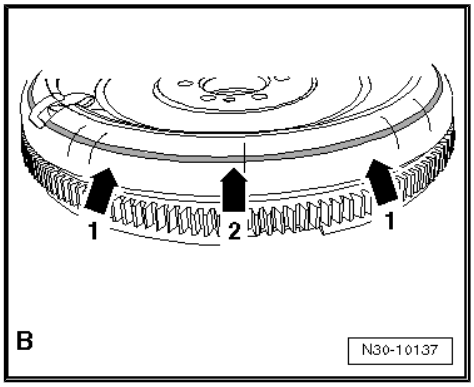

5.2 Removing and installing Sachs clutch

5.2.1 Removing

- Remove gearbox.

– Use counterhold -3067- to loosen bolts.

– Loosen bolts in small steps and diagonally.

- As bolts are removed, stop -2- with pin -1- must loosen.

– If stop does not loosen, press pin towards dual-mass flywheel.

– Remove pressure plate and clutch plate.

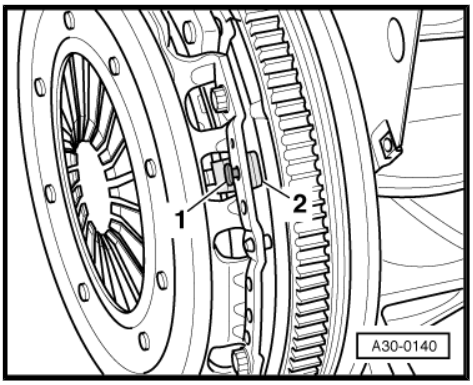

5.2.2 Installing

Install in the reverse order of removal, observing the following:

Note

♦ *Renew pressure plate and clutch plate together only. Select clutch plate and pressure plate according to engine code and ⇒ Electronic parts catalogue "ETKA".*

♦ *Check whether dowel sleeves for aligning engine and gearbox are fitted in cylinder block and install if necessary.*

♦ *If dowel sleeves are not fitted, difficulties shifting gears, clutch problems and possible noises from the gearbox (rattling of gears which are not engaged) could occur.*

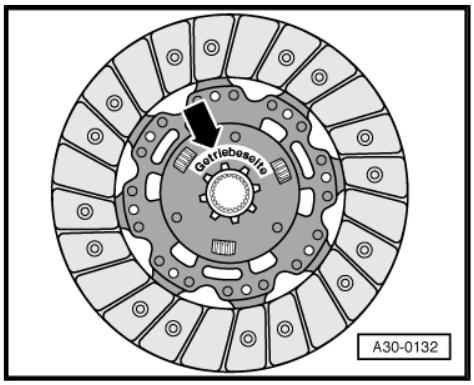

Installation position of clutch plate

- Lettering "Getriebeseite" (gearbox side) faces gearbox.

Checking ends of diaphragm spring

- Wear to half the thickness of the diaphragm spring -arrows- is permitted.

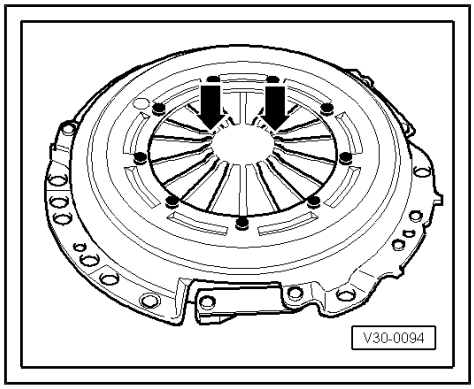

Checking spring connections and riveted connections

– Check spring connections between pressure plate and cover for cracks as well as rivet connections for secure seating.

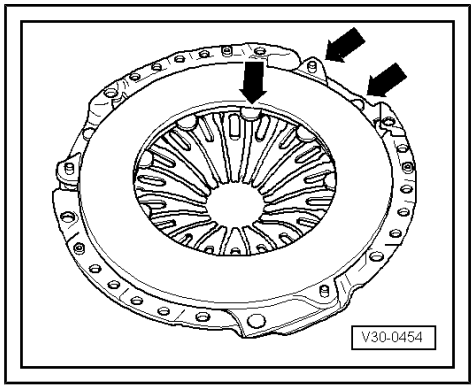

Note

- *Renew clutch plates and pressure plates with damaged or loose rivet connections.*
- *Always renew pressure plate and clutch plate together.*
- *Select clutch plate and pressure plate according to engine code and ⇒ Electronic Parts Catalogue (ETKA) .*
- *If clutch has burnt out, thoroughly clean clutch housing, flywheel and parts of engine facing gearbox to reduce smell of burnt linings.*
- *Clean input shaft splines and, on used clutch plates, clean hub splines; remove corrosion and apply only a very thin coat of clutch plate spline grease -G 000 100- to splines. Then move clutch plate to and fro on input shaft until hub moves freely on shaft. Remove excessive grease.*
- *Pressure plates are protected against corrosion and greased. Clean contact surface only. Otherwise, the service life of the clutch will be considerably reduced.*
- *Pressure plate contact surface and clutch plate lining must make full contact with flywheel. Only then insert securing bolts.*

– Reverse counterhold tool -3067- for installation.

– Push pressure plate onto dowel pins.

– To centre clutch plate, use centring mandrel -3190 A- .

– Tighten all bolts evenly by hand until bolt heads contact pressure plate.

– Tighten bolts in small steps diagonally in order not to damage centring holes of pressure plate and centring pins of dual-mass flywheel.

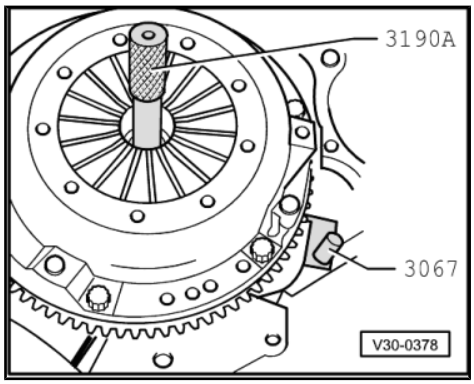

Torque setting ⇒ Item 4 (page 109)

- Install gearbox.

5.3 Repairing Sachs clutch

1 - Dual-mass flywheel

- ❑ Removing and installing ⇒ Rep. Gr. 13
- ❑ Ensure that centring pins fit tightly
- ❑ Contact surface for clutch lining must be free of grooves, oil and grease

2 - Clutch plate

- ❑ Allocation ⇒ Electronic parts catalogue “ETKA”
- ❑ Removing and installing ⇒ page 107
- ❑ Renew only together with pressure plate
- ❑ Installation position ⇒ page 107

3 - Pressure plate

- ❑ Allocation ⇒ Electronic parts catalogue “ETKA”
- ❑ With adjusting mechanism
- ❑ Removing and installing ⇒ page 107
- ❑ Check ends of diaphragm spring ⇒ page 108
- ❑ Checking spring connections and riveted connections ⇒ page 108
- ❑ Renew only together with clutch plate

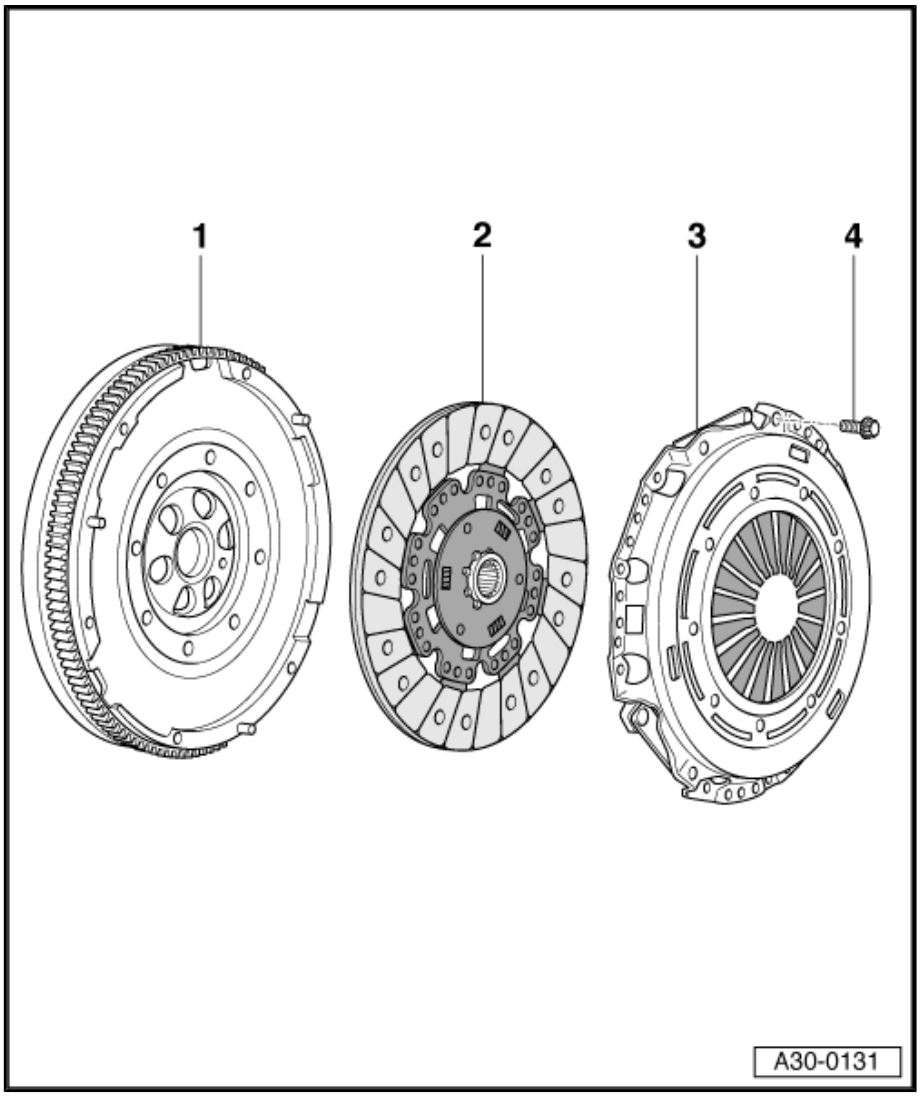

4 - M6 bolt, 13 Nm, M7 bolt, 20 Nm

- ❑ Loosen or tighten diagonally in small steps

5.4 Removing and installing LuK clutch

5.4.1 Removing

- Remove gearbox.

– Use counterhold -3067- to loosen bolts.

– Loosen bolts in small steps and diagonally.

– Remove pressure plate and clutch plate.

5.4.2 Installing

Install in the reverse order of removal, observing the following:

Note

- *Renew pressure plate and clutch plate together only. Select clutch plate and pressure plate according to engine code and ⇒ Electronic parts catalogue "ETKA".*
- *Check whether dowel sleeves for aligning engine and gearbox are fitted in cylinder block and install if necessary.*
- *If dowel sleeves are not fitted, difficulties shifting gears, clutch problems and possible noises from the gearbox (rattling of gears which are not engaged) could occur.*

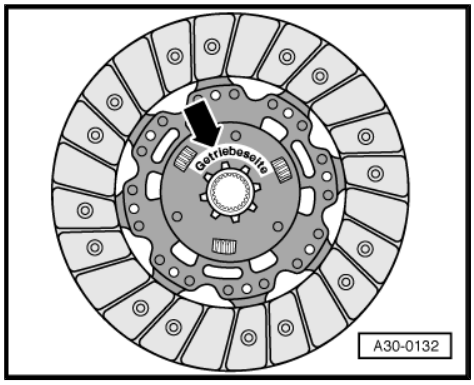

Installation position of clutch plate

- Lettering "Getriebeseite" (gearbox side) faces gearbox.

Checking ends of diaphragm spring

- Wear to half the thickness of the diaphragm spring -arrows- is permitted.

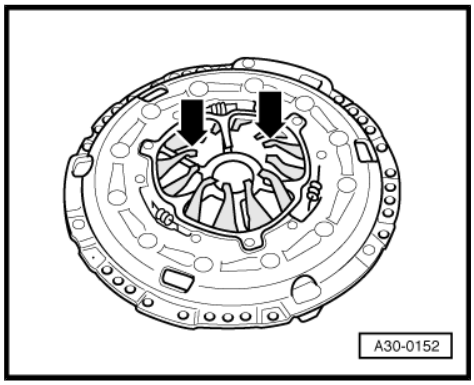

Checking spring connections and riveted connections

– Check spring connections -arrows A- for damage and riveted connections -arrows B- for secure seating.

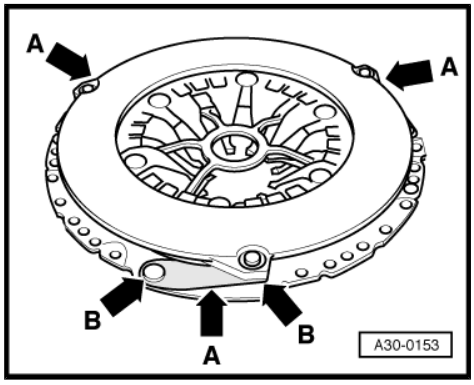

Checking position of adjusting mechanism with new pressure plates only

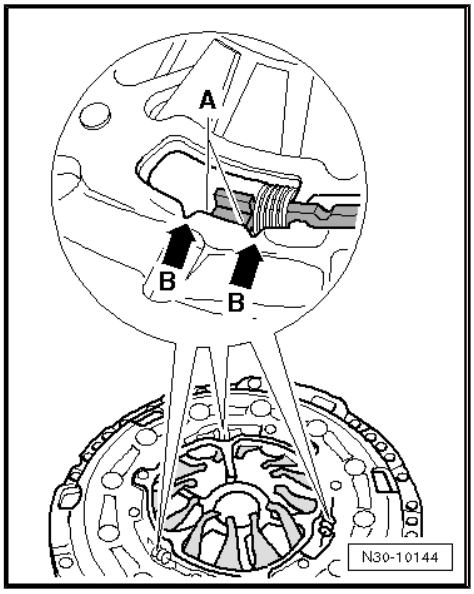

- Both edges -A- of the adjuster ring must be located between the two notches -arrows B-.
- If the adjuster ring takes up a different position in new pressure plates, the pressure plate and clutch plate are not allowed to be installed.
- The adjuster ring may take up a position outside the notches in used clutches.

Note

- *Renew clutch plates and pressure plates with damaged or loose rivet connections.*
- *Renew pressure plate and clutch plate together only.*
- *Select clutch plate and pressure plate according to engine code and ⇒ Electronic parts catalogue "ETKA".*
- *If clutch has burnt out, thoroughly clean clutch housing, flywheel and parts of engine facing gearbox to reduce smell of burnt linings.*
- *Clean input shaft splines and, on used clutch plates, clean hub splines; remove corrosion and apply only a very thin coat of clutch plate spline grease -G 000 100- to splines. Then move clutch plate to and fro on input shaft until hub moves freely on shaft. Remove excessive grease.*
- *Pressure plates are protected against corrosion and greased. Clean contact surface only. Otherwise, the service life of the clutch will be considerably reduced.*
- *Pressure plate contact surface and clutch plate lining must make full contact with flywheel. Only then insert securing bolts.*

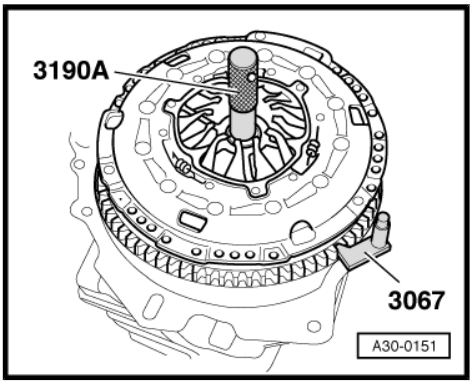

– Reverse counterhold tool -3067- for installation.
– Push pressure plate onto dowel pins.
– To centre clutch plate, use centring mandrel -3190 A- .
– Tighten all bolts evenly by hand until bolt heads contact pressure plate.
– Tighten bolts in small steps diagonally in order not to damage centring holes of pressure plate and centring pins of dual-mass flywheel.

Torque setting ⇒ Item 4 (page 112)

- Install gearbox.

5.5 Repairing LuK clutch

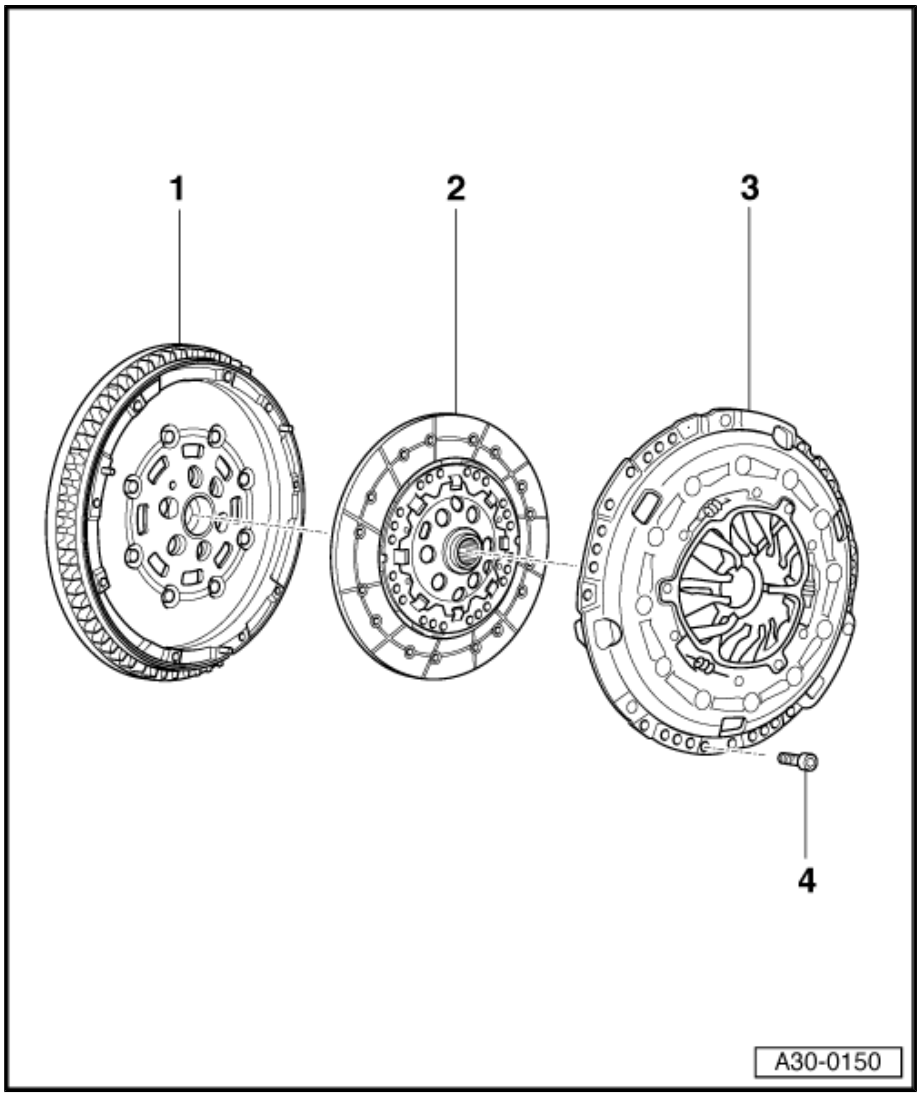

1 - Dual-mass flywheel

- ❑ Removing and installing ⇒ Rep. Gr. 13
- ❑ Ensure that centring pins fit tightly
- ❑ Contact surface for clutch lining must be free of grooves, oil and grease

2 - Clutch plate

- ❑ Allocation ⇒ Electronic parts catalogue “ETKA”
- ❑ Removing and installing ⇒ page 109
- ❑ Renew only together with SAC pressure plate
- ❑ Installation position: ⇒ page 110

3 - SAC pressure plate

- ❑ SAC means “self-adjusting clutch”
- ❑ Renew only together with clutch plate
- ❑ Allocation ⇒ Electronic parts catalogue “ETKA”
- ❑ Removing and installing ⇒ page 109
- ❑ Check ends of diaphragm spring ⇒ page 110
- ❑ Checking spring connections and riveted connections ⇒ page 110
- ❑ Checking position of adjusting mechanism with new pressure plates only ⇒ page 111

4 - M6 bolt, 13 Nm, M7 bolt, 20 Nm

- ❑ Loosen or tighten diagonally in small steps

6 Repairing clutch, in conjunction with one-piece flywheel

Special tools and workshop equipment required

- Counterhold -3067-
- Centring mandrel -3190 A-
- Torque wrench - V.A.G 1331-
- Grease for clutch plate splines -G 000 100-

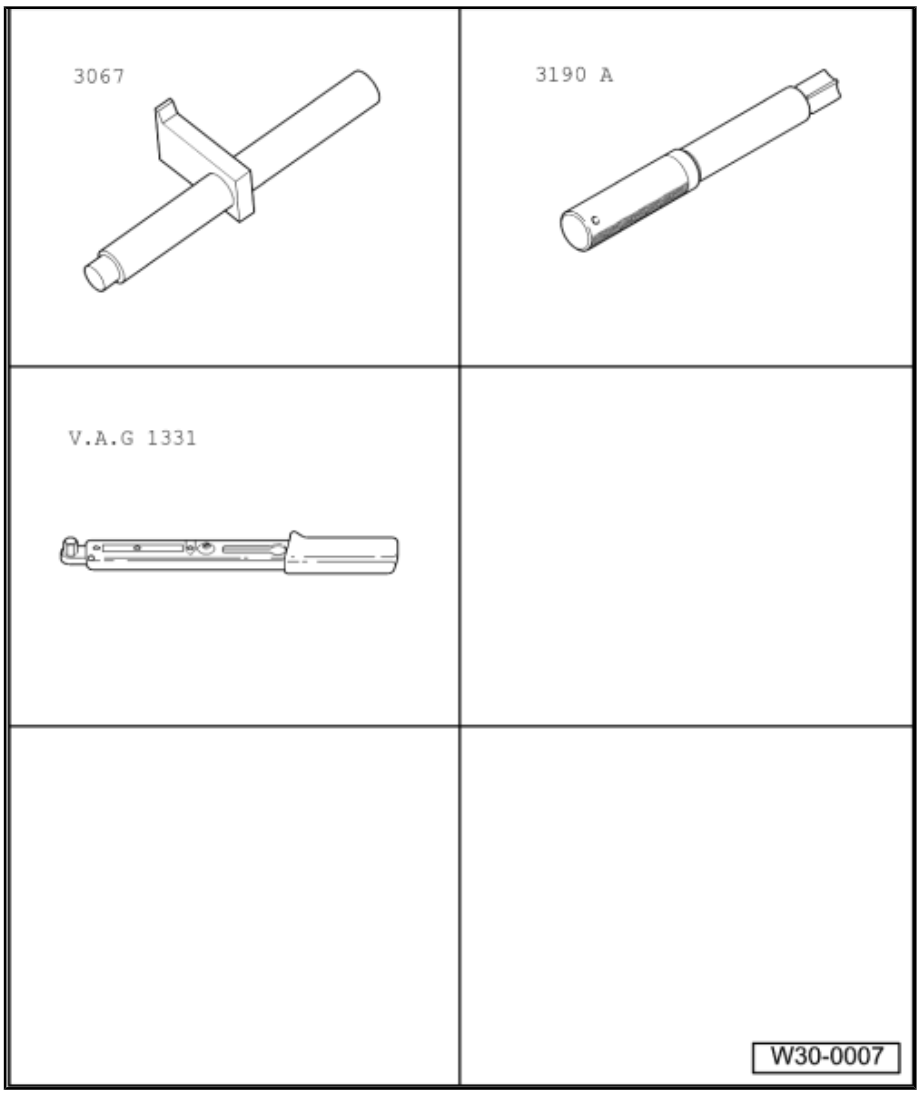

- Remove gearbox.

Note

- *Renew clutch plates and pressure plates with damaged or loose rivets.*
- *Select clutch plate and pressure plate according to ⇒ Electronic parts catalogue (ETKA) and engine code.*
- *Check whether dowel sleeves for aligning engine and gearbox are fitted in cylinder block and install if necessary.*
- *If dowel sleeves are not fitted, difficulties shifting gears, clutch problems and possible noises from the gearbox (rattling of gears which are not engaged) could occur.*

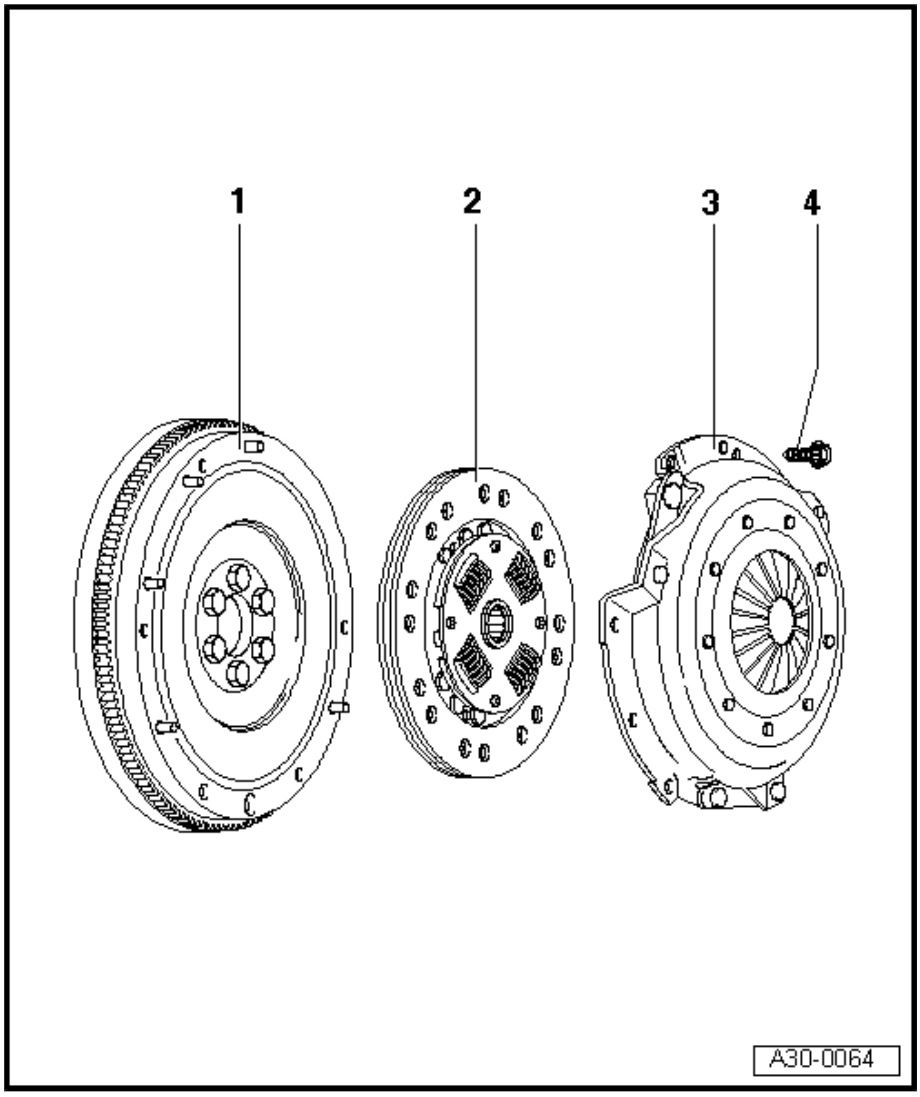

1 - Flywheel

- ❑ Removing and installing ⇒ Rep. Gr. 13
- ❑ Ensure that centring pins fit tightly
- ❑ Keep contact surface for clutch lining free of grooves, oil and grease.

2 - Clutch plate

- ❑ Allocation ⇒ Electronic parts catalogue (ETKA)
- ❑ Installation position: spring cage faces pressure plate
- ❑ Centring ⇒ page 114
- ❑ Lightly grease splines

Note

3 - Pressure plate

- ❑ Removing and installing ⇒ page 114
- ❑ Check ends of diaphragm spring ⇒ page 115
- ❑ Checking spring connections and riveted connections ⇒ page 115

Note

4 - M6 bolt, 13 Nm, M7 bolt, 20 Nm

- ❑ Determine according to ⇒ Electronic parts catalogue (ETKA)
- ❑ Loosen or tighten diagonally and in steps

Centring clutch plate and removing and installing pressure plate

– Loosen or tighten bolts diagonally in stages.

– Reverse position of counterhold -3067- when removing.

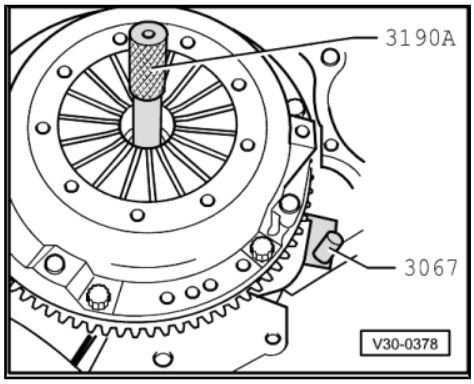

Note

Pressure plate contact surface and clutch plate lining must make full contact with flywheel. Tighten securing bolts diagonally and evenly to prevent damage to the pressure plate centring hole and the flywheel centring pins.

Checking ends of diaphragm spring

- Wear up to half the thickness of the diaphragm spring is permitted.

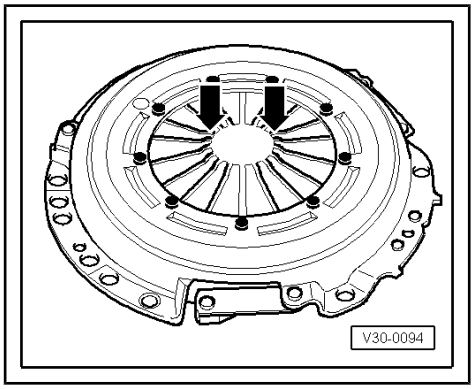

Checking spring connections and riveted connections

– Check spring connections between pressure plate and cover for cracks as well as rivet connections for secure seating.

- A pressure plate with damaged spring connections or with loose rivet connections -arrows- must be renewed.

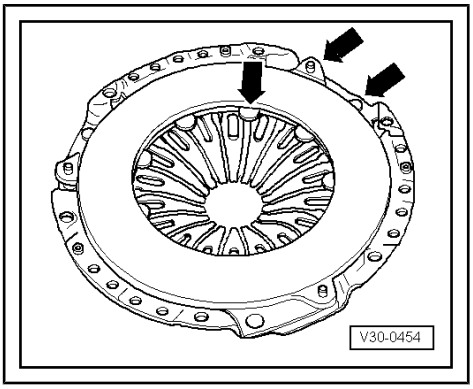

34 – Controls, housing

1 Repairing selector mechanism

1.1 Installation position of selector mechanism

-Arrow A- Gear selection movement

-Arrow B- Gate selection movement

A - Gear selector cable

B - Gate selector cable

C - Heat shield

- ❑ Remove before removing gear selector mechanism

1 - Gearbox selector lever

2 - Relay lever

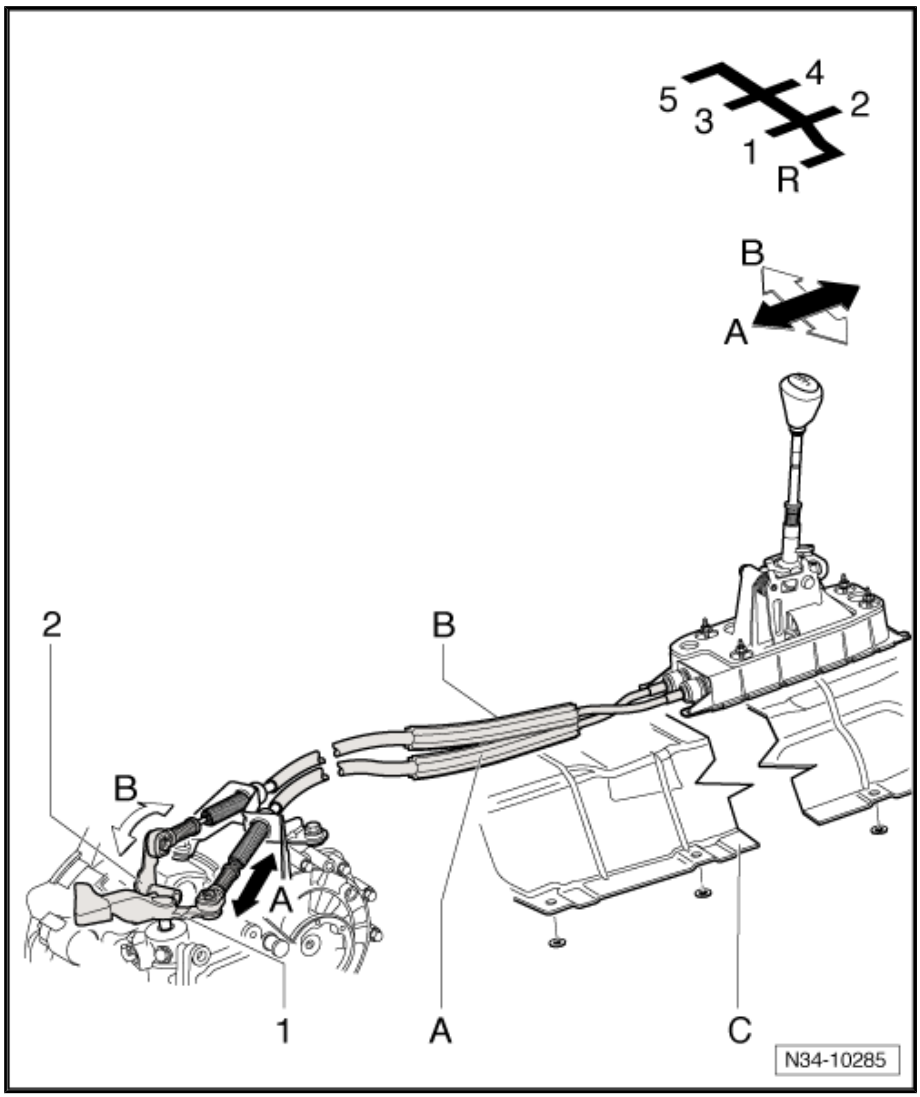

1.2 Overview of selector mechanism

Note

- *Note radio code for vehicles with coded radio.*
- *Before working on selector mechanism in engine compartment, disconnect earth strap from battery ⇒ Electrical system; Rep. Gr. 27 ; Disconnecting and connecting battery .*
- *When reconnecting battery, perform work required after connecting battery ⇒ Electrical system; Rep. Gr. 27 ; Disconnecting and connecting battery .*
- *To work on selector mechanism in engine compartment, remove complete air filter housing if it is located over selector mechanism ⇒ Rep. Gr. 23 ; Repairing diesel direct injection system or ⇒ Rep. Gr. 24 ; Repairing injection system .*
- *Remove selector mechanism to renew selector cables ⇒ page 136 .*
- *Do not kink selector cables.*

I - Removing and installing gear knob and cover ⇒ page 118

II - Repairing gear lever and selector housing (through 10.06) ⇒ page 123

II - Repairing gear lever and selector housing (from 11.06) ⇒ page 125

III - Assembly overview - removing and installing selector cables ⇒ page 131

Removing and installing selector mechanism ⇒ page 136

Adjusting selector mechanism ⇒ page 139 .

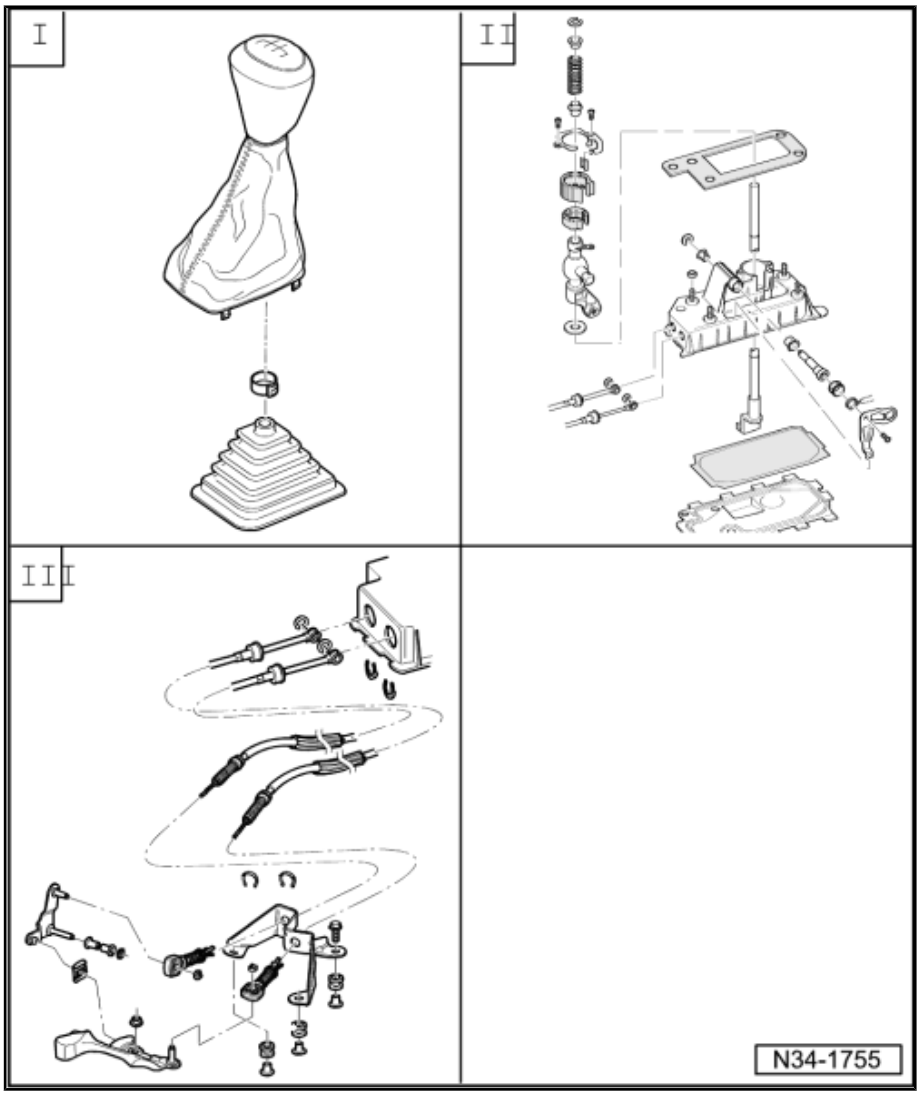

1.3 Removing and installing gear knob and cover

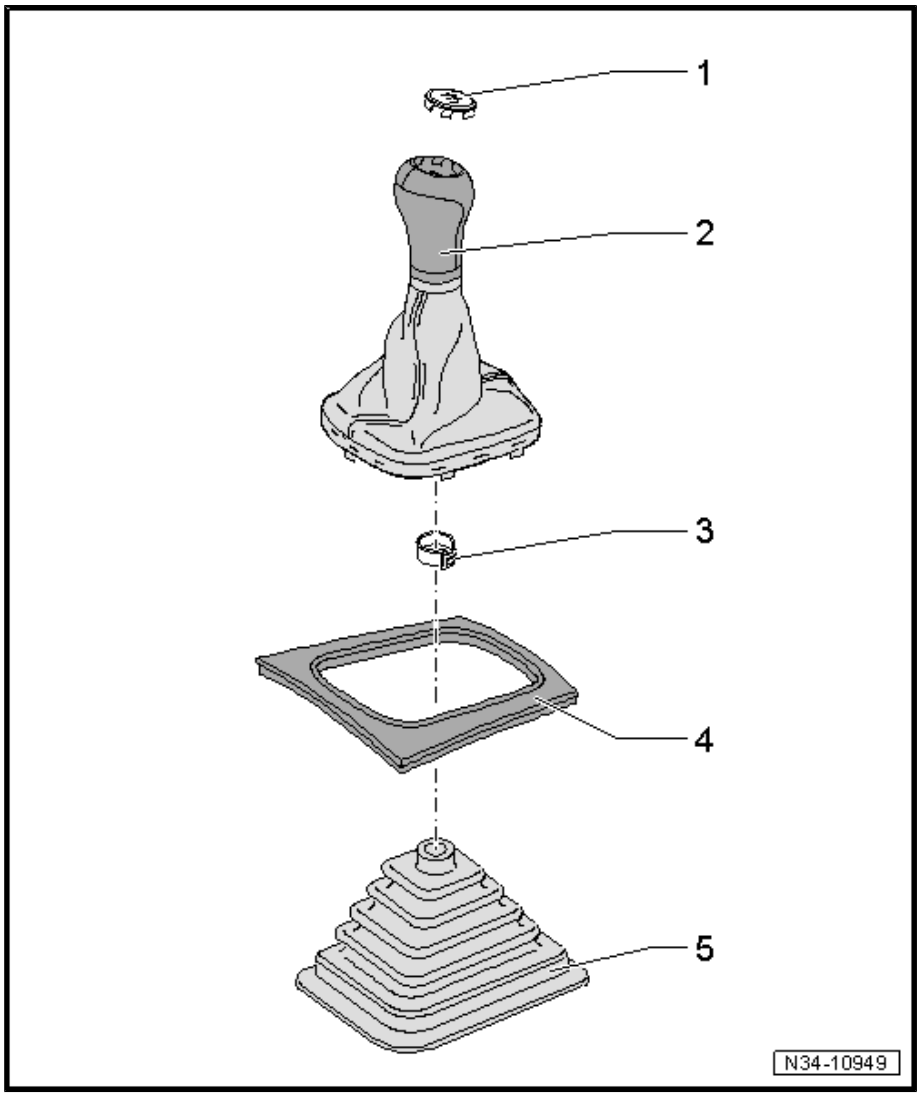

1 - Emblem

- ❑ Can be carefully levered off gear knob of plastic or leather

2 - Gear knob

- ❑ With gaiter
- ❑ Gear knob and gaiter cannot be separated from one another
- ❑ Always renew together
- ❑ Removing and installing, Golf ⇒ page 118
- ❑ Removing and installing, Golf Plus ⇒ page 120
- ❑ Removing and installing, Passat ⇒ page 121

3 - Clamp

- ❑ For securing gear knob to gear lever
- ❑ Secure to gear knob ⇒ Item 2 (page 118) using hose clip pliers - V.A.G 1275-
- ❑ Always renew

4 - Centre console cover

- ❑ In some equipment versions, forms one part together with centre console

5 - Noise insulation

- ❑ Not fitted in all vehicles
- ❑ Arrow on noise insulation points in direction of travel
- ❑ Locking lugs are arranged at varying intervals
- ❑ Therefore it can be installed in only one position

1.4 Removing and installing gaiter with gear knob and noise insulation, Golf

Special tools and workshop equipment required

♦ Hose clip pliers -V.A.G 1275-

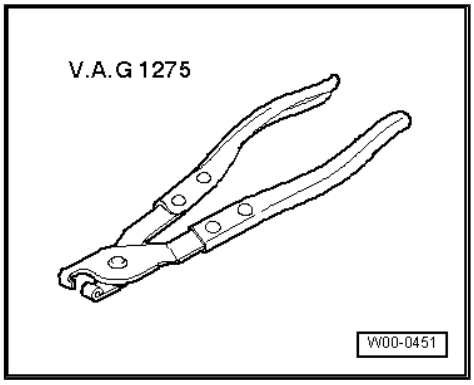

Removing

– Pull or carefully lever gaiter upwards out of centre console frame -arrows-.

With some equipment variations, the gaiter must be levered off along the front section.

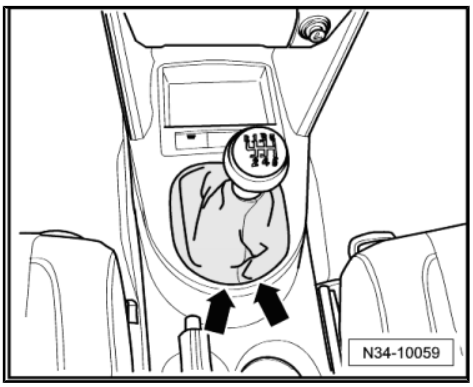

– Pull gaiter upwards, inside out over gear knob.

– Open clamp -arrow- and pull off gear knob together with gaiter.

In some versions, the centre console frame remains in the centre console.

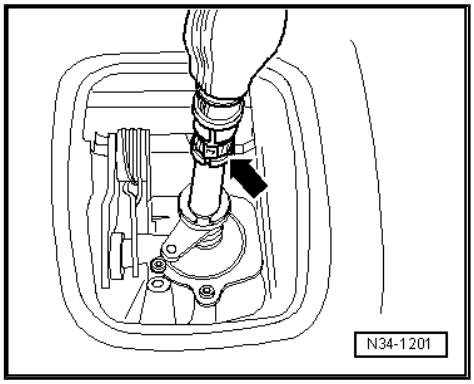

– Then pull off, or carefully lever off, centre console frame -arrow 1-.

– Pull off noise insulation -arrow 2-.

Installing

– First set noise insulation in place.

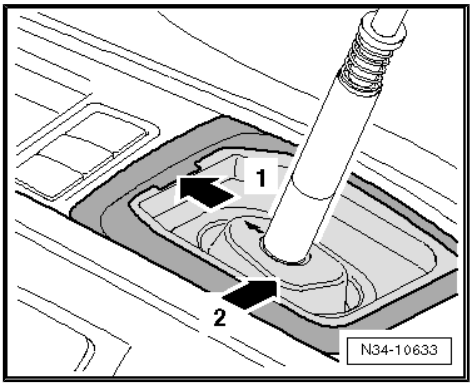

Installation position of noise insulation:

-Arrow A- points in direction of travel.

Catches -arrows B- must engage in centre console.

– Then press frame into centre console.

– Then turn gaiter inside out.

The gear knob must be pressed to stop.

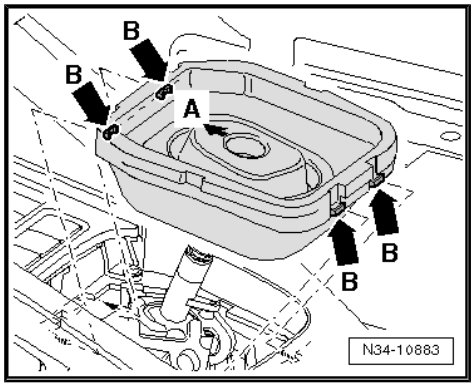

– Install gear knob and gaiter and squeeze new clamp -arrow- together.

– Then press gaiter into frame of centre console.

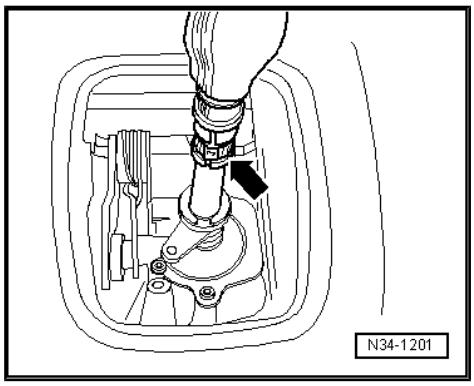

1.5 Removing and installing gaiter with gear knob and noise insulation, Golf Plus

Special tools and workshop equipment required

♦ Hose clip pliers -V.A.G 1275-

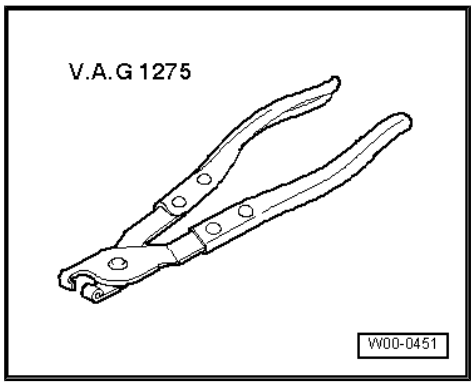

Removing

– Pull or carefully lever gaiter upwards out of centre console frame -arrows-.

With some equipment variations, the gaiter must be levered off along the front section.

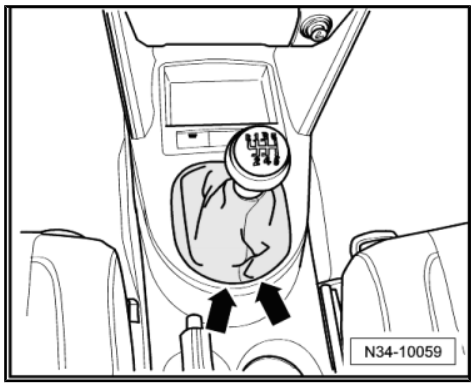

– Pull gaiter upwards, inside out over gear knob.
– Open clamp -arrow- and pull off gear knob together with gaiter.
– Pull off noise insulation.

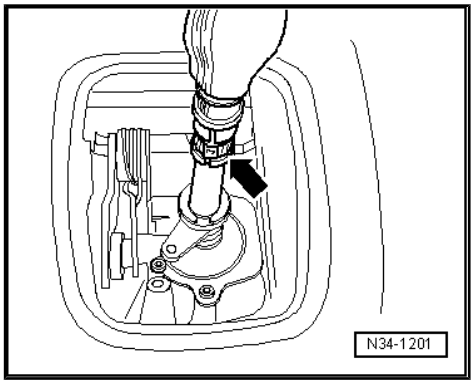

Installing

– First set noise insulation in place.

Installation position of noise insulation:

-Arrow A- points in direction of travel.

Catches -arrows B- must engage in centre console.

– Turn gaiter inside out.

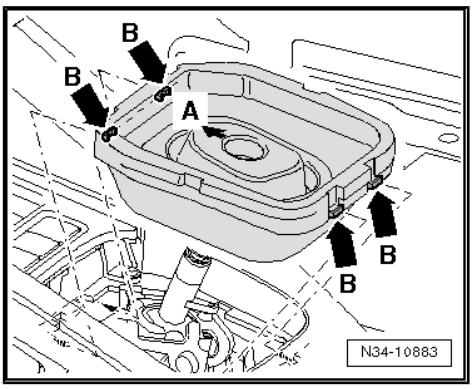

– Install gear knob and gaiter and squeeze new clamp -arrow- together.

When gear knob is pushed on, it must engage in circumferential groove in gear lever.

– Then press gaiter into centre console.

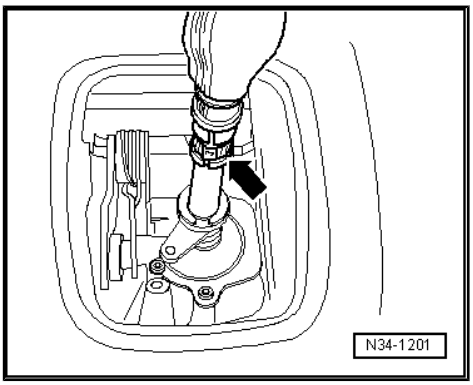

1.6 Removing and installing gaiter with selector lever knob and noise insulation, Passat

Special tools and workshop equipment required

♦ Hose clip pliers -V.A.G 1275-

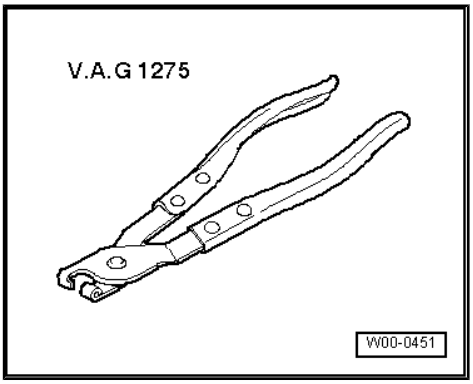

♦ Front-end hooks -3370-

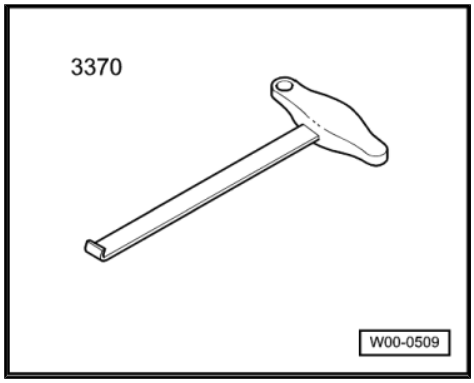

Removing

– Open ashtray.
– Pull gaiter with plastic frame out of centre console frame -1- -arrow-.
– Hold centre console frame securely -1-.

It must not be pulled along.

Connections for various switches may be accidentally pulled apart.

– Pull gaiter upwards, inside out over gear knob.

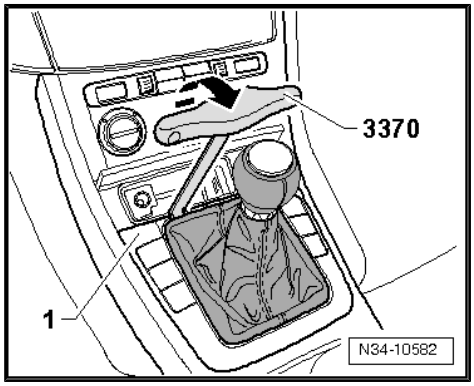

– Open clamp -arrow- and pull off gear knob together with gaiter.
– Pull off noise insulation.

Installing

– First set noise insulation in place.

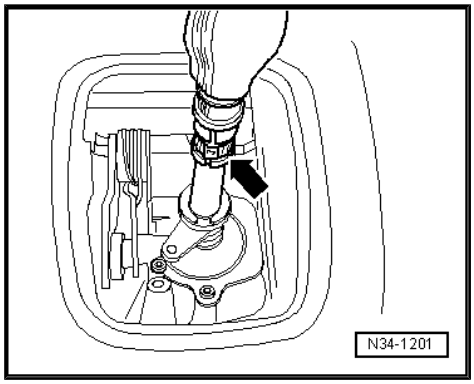

Installation position of noise insulation

-Arrow A- points in direction of travel.

Catches -arrows B- must engage in centre console.

– Turn gaiter inside out.

The gear knob must be pressed to stop.

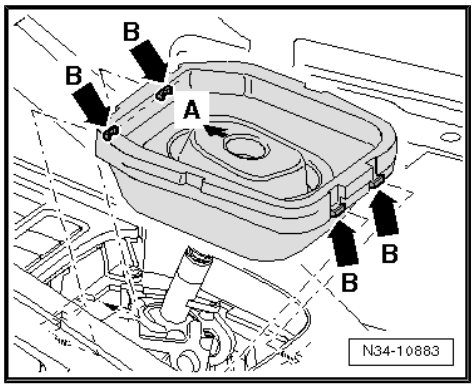

– Install gear knob and gaiter and squeeze new clamp -arrow- together.
– Insert back of gaiter with plastic frame first.

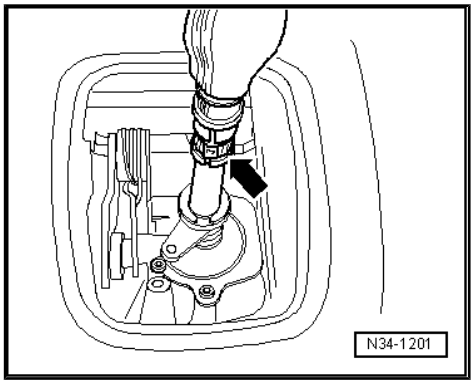

1.7 Repairing gear lever and selector housing (through 10.06)

Note

- *Lubricate bearing positions and sliding surfaces.*
- *Allocate grease using ⇒ Electronic parts catalogue (ETKA) .*

1 - Securing clip
- ❑ Removing and installing ⇒ page 126

2 - Bush

3 - Compression spring

4 - Bush

5 - Torx bolt, 5 Nm

6 - Cover

7 - Damping

8 - Damping

9 - Ball socket

10 - Gear lever guide

11 - Damping washer

12 - Seal
- ❑ Between selector housing and underbody
- ❑ Self-adhesive
- ❑ Bond to selector housing

13 - Gear lever

14 - Selector housing

15 - Bearing bush

16 - Pivot pin

17 - Guide bush

18 - Compression spring
- ❑ Installing ⇒ page 124

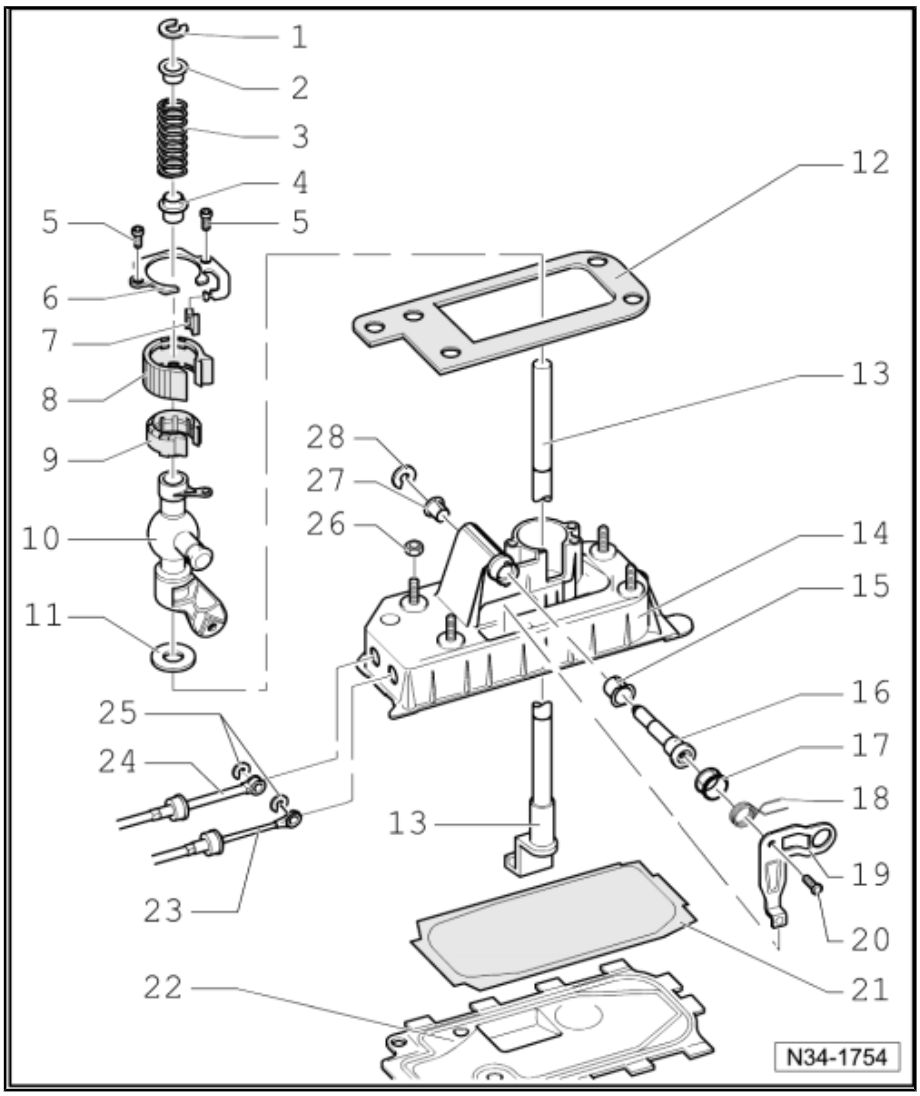

19 - Gate selector lever

20 - Torx bolt, 5 Nm

21 - Seal

- ❑ Always renew

22 - Base plate

- ❑ Bend open tabs to remove
- ❑ Always renew

23 - Gate selector cable

- ❑ On gate selector lever
- ❑ Removing and installing ⇒ page 124

24 - Gear selector cable

- ❑ Removing from and attaching to gear lever guide ⇒ page 124

25 - Securing clip

- ❑ Always renew

26 - Hexagon nut M8, 25 Nm, hexagon nut M 6, 8 Nm

- ❑ Qty. 4

27 - Bearing bush

- ❑ Fits in one position only

28 - Securing clip

- ❑ Always renew

Removing and installing gate and gear selector cables

– Remove securing clip from gear selector cable -A- and gate selector cable -B-.

To do this, raise tab using screwdriver -arrow 1- and press off securing clip -arrow 2-.

– Remove gear selector cable -A- from gear lever retainer.

– Remove gate selector cable -B- from retainer of gate selector lever.

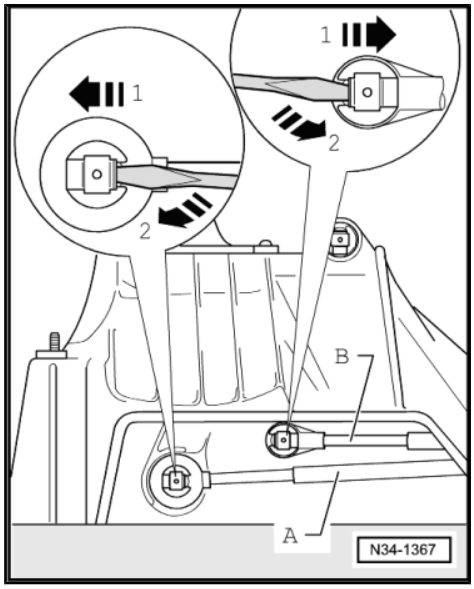

Installing compression spring

– Insert compression spring so that extension -A- lies on top of pin -arrow-.

– Then pull extension -B- down so that it sits below pin -arrow-.

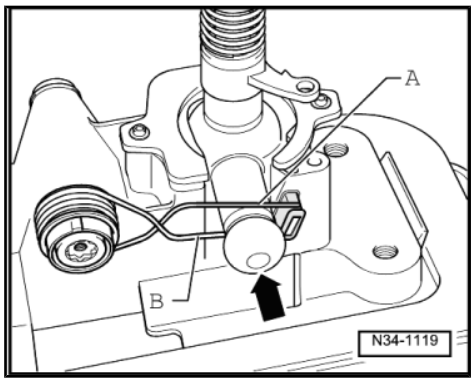

1.8 Repairing gear lever and selector housing (from 11.06)

Note

- *Lubricate bearing positions and sliding surfaces.*
- *Allocate grease using ⇒ Electronic parts catalogue (ETKA) .*
- *Dismantling and assembling selector mechanism ⇒ page 126 .*

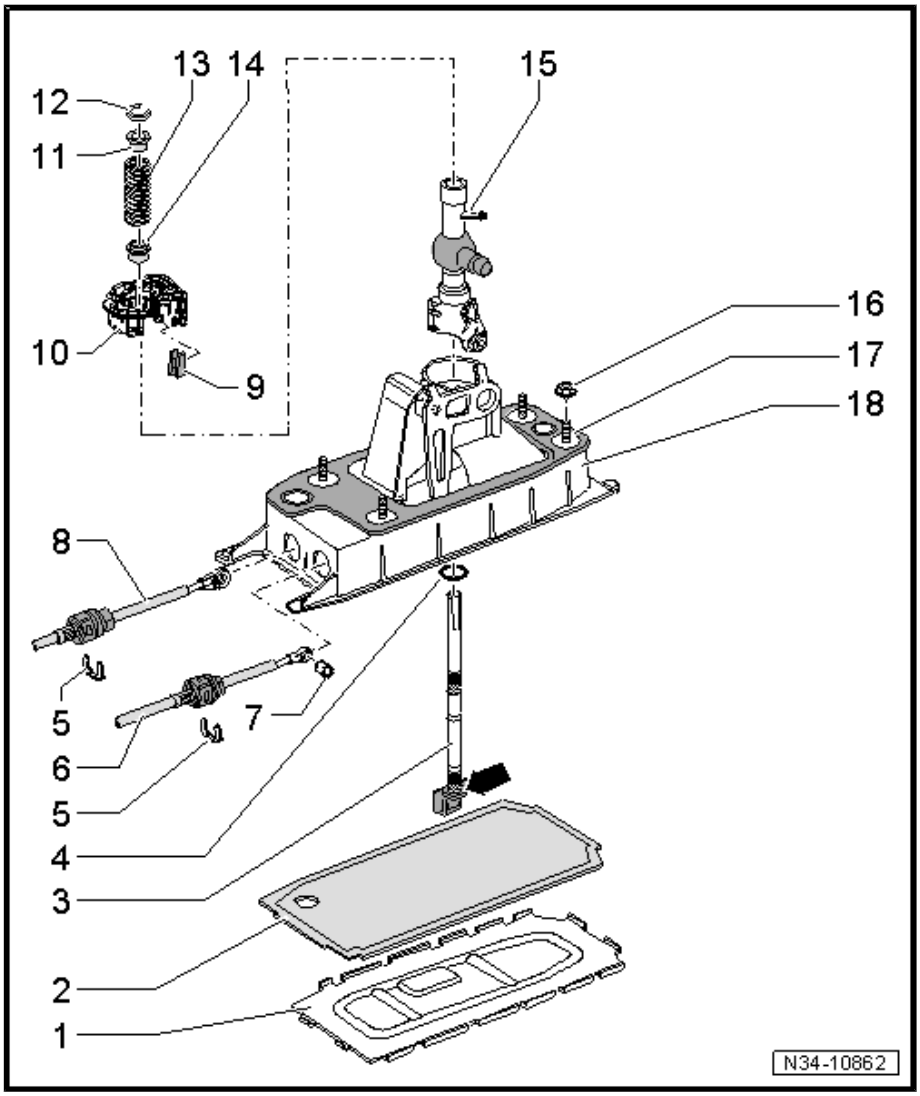

1 - Base plate
- ❑ Bend open tabs to remove
- ❑ Always renew

2 - Seal
- ❑ Always renew

3 - Gear lever
- ❑ Can be removed and installed with gear lever guide ⇒ Item 15 (page 126) installed

4 - Damping washer
- ❑ Push onto gear lever up to stop -arrow-

5 - Securing clip
- ❑ Do not damage cables when removing
- ❑ Always renew

6 - Gate selector cable
- ❑ Lever off gate selector lever
- ❑ Press onto gate selector lever inside selector mechanism
- ❑ Installation position ⇒ page 116

7 - Bush

8 - Gear selector cable
- ❑ Lever off gear lever guide
- ❑ Press onto gear lever guide inside selector mechanism
- ❑ Installation position ⇒ page 116

9 - Damping

10 - Ball socket
- ❑ Will be damaged when removed.
- ❑ Always renew

11 - Bush

12 - Securing clip
- ❑ Removing and installing ⇒ page 126

13 - Compression spring

14 - Bush

15 - Gear lever guide

16 - Hexagon nut M8, 25 Nm, hexagon nut M 6, 8 Nm

- ❑ Qty. 4

17 - Seal

- ❑ Between selector housing and underbody
- ❑ Self-adhesive
- ❑ Bond to selector housing

18 - Selector housing

- ❑ With compression spring and gate selector lever
- ❑ Compression spring and gate selector lever cannot be removed

Removing and installing securing clip

– To remove or install securing clip -arrow A-, press spacer bush -arrow B- to stop in direction of arrow -arrow C- using screw-driver and pull off securing clip.

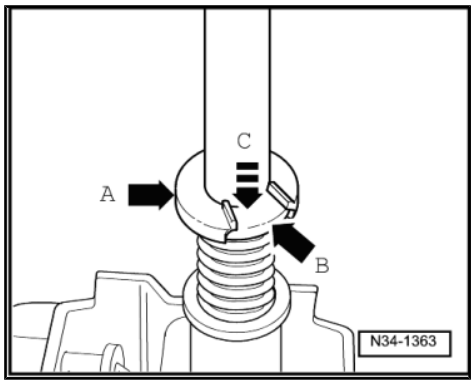

Note

- ♦ *Do not cant spacer bush when pushing down.*
- ♦ *Slot in gear lever for securing clip must be visible.*
- ♦ *Carefully release tension from spring.*

1.8.1 Dismantling and assembling selector mechanism

Special tools and workshop equipment required

♦

Thrust piece -T10083-

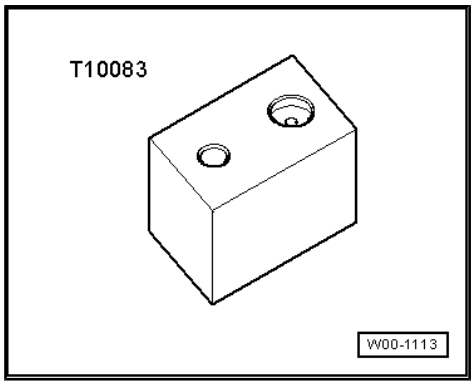

Dismantling

– Remove selector mechanism ⇒ page 136 .

– Bend open tabs -arrows- of base plate for selector mechanism using screwdriver and remove base plate; (tabs in front area of base plate are not illustrated).

– Remove seal from selector housing.

– Remove gear and gate selector cables from selector housing ⇒ page 125 .

– Lift upper end -A- of compression spring over tab of gate selector lever.

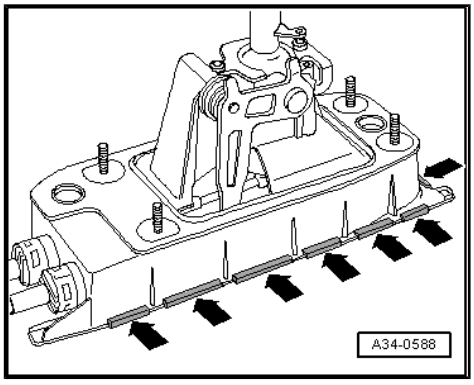

– Use screwdriver to press catches -arrows- of ball socket towards bearing ball of gear lever guide; break off catches if necessary.

– Lever ball socket -A- with gear lever guide -B- out of selector housing.

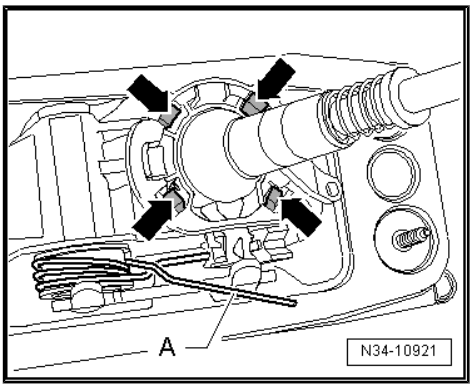

– Then press ball socket off bearing ball of gear lever guide and remove it.

• Please pay attention to guides -A- during the further procedure.

• They must not be broken off.

– Lever lower end -arrow 1- of compression spring onto shoulder on gate selector lever as far as stop.

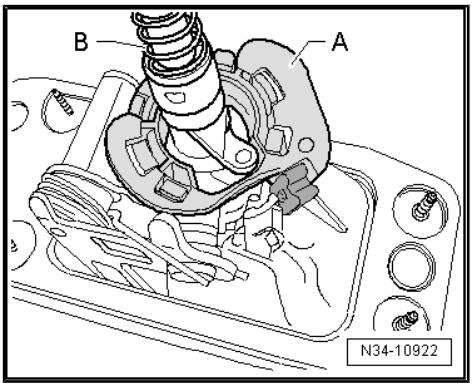

– Now pull gear lever guide up to stop and pull ball stud out of gate selector lever -arrow 2-.

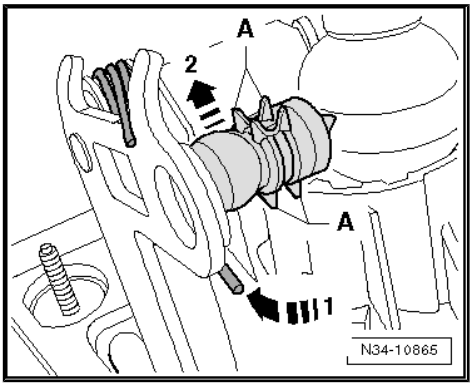

– Then turn gear lever guide in -direction of arrow 1-.

• Pin -arrow 2- must be in notch in selector housing

– Then swing out gear lever guide with gear lever in -direction of arrow 3-.

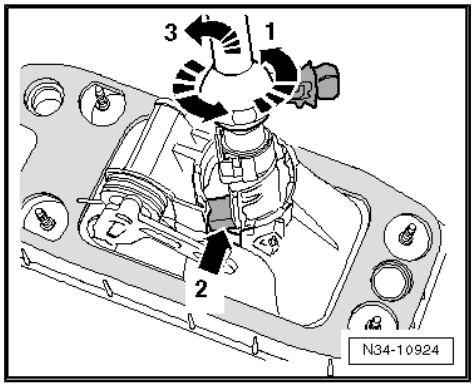

Assembling

> ⚠ Caution
>
> *The lower end of the compression spring (-arrow 1- ⇒ figure above) can snap off the shoulder of the gate selector lever out of control during the further procedure.*

– Therefore, carefully press it down off shoulder of gate selector lever.

The ends of the compression spring then become tensioned “diagonally” with a loud noise.

– Slacken ends -A- and -B- by turning both round to right.

• Ends -A- and -B- must point in opposite directions.

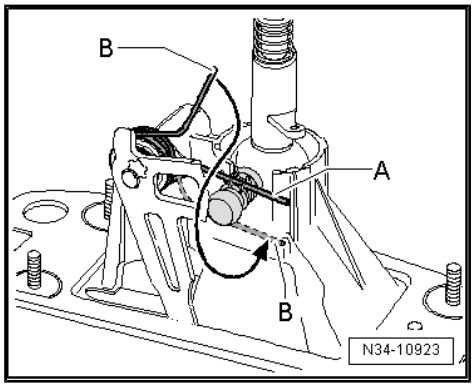

– Fit gear lever guide in selector housing.

• Pin -arrow 1- is still located in notch in selector housing.

– Turn gear lever guide in -direction of arrow 2- until ball stud -A- is located in notch in selector housing.

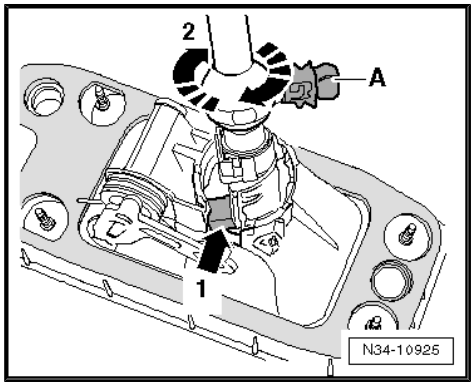

– Place selector housing with gear lever guide into larger recess -arrow- in thrust piece -T10083- .

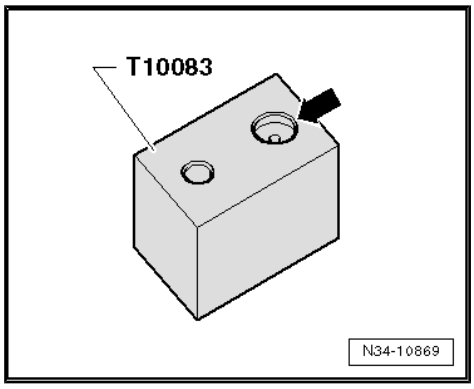

- The gear lever guide must project from the selector housing up to the stop.

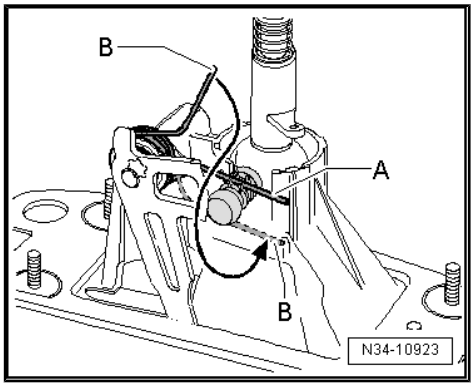

Note

For clarity of illustration, only part of the gate selector lever is shown.

– Insert end -A- of compression spring into guide from above.

– Pull end -B- of compression spring downwards and insert it next to guide (in direction of ball joint).

- Please pay attention to guides (⇒ figure above) during the further procedure.
- They must not be broken off.

– Carefully remove selector housing with gear lever guide from thrust piece -T10083- .

– Move gate selector lever back to stop (opposite from mounting holes for gear and gate selector cable) -arrow 1-.

– Grease ball stud.

– Press ball stud into gate selector lever -arrow 2-.

- Guides -A- and tabs -B- are not allowed to be damaged.

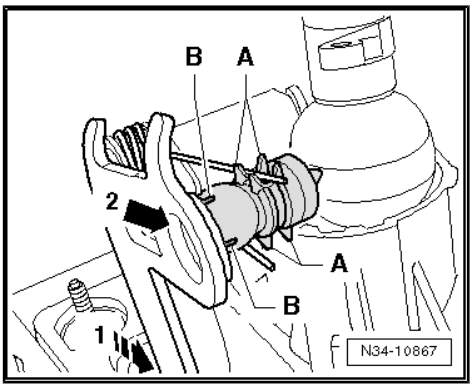

– Place selector housing with gear lever guide into larger recess -arrow- in thrust piece -T10083- .

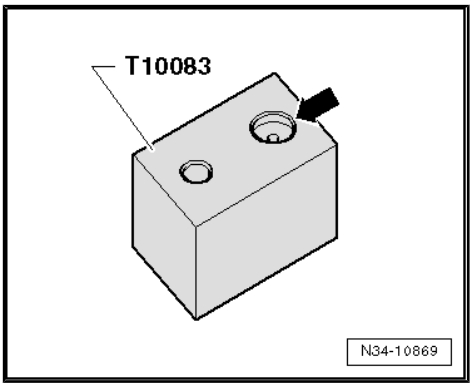

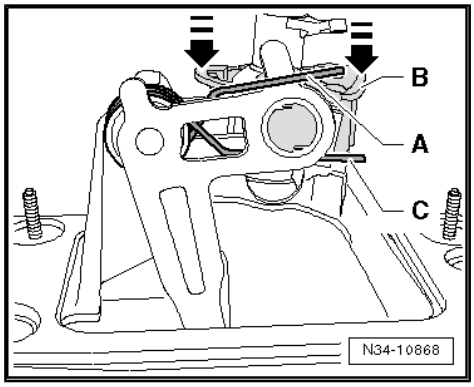

- The gear lever guide must project from the selector housing up to the stop.

– Lift upper end -A- of compression spring over pin of gate selector lever.

- Use a new ball socket -B-.

– Grease ball socket and bearing ball of gear lever guide.

– Press ball socket onto bearing ball of gear lever guide up to stop.

– Remove selector housing from thrust piece -T10083- .

– Insert lower end -C- of compression spring into guide.

– Lift upper end -A- of compression spring over pin of gate selector lever into guide.

– Press ball socket into selector housing -arrows-.

- All 4 locking lugs must engage.

– Fit gear lever, gear selector cable, gate selector cable and base plate ⇒ page 125 .

– Install selector mechanism ⇒ page 136 .

1.9 Assembly overview - removing and installing selector cables

Note

- *Lubricate bearing positions and sliding surfaces.*
- *Allocate grease using ⇒ Electronic parts catalogue (ETKA) .*

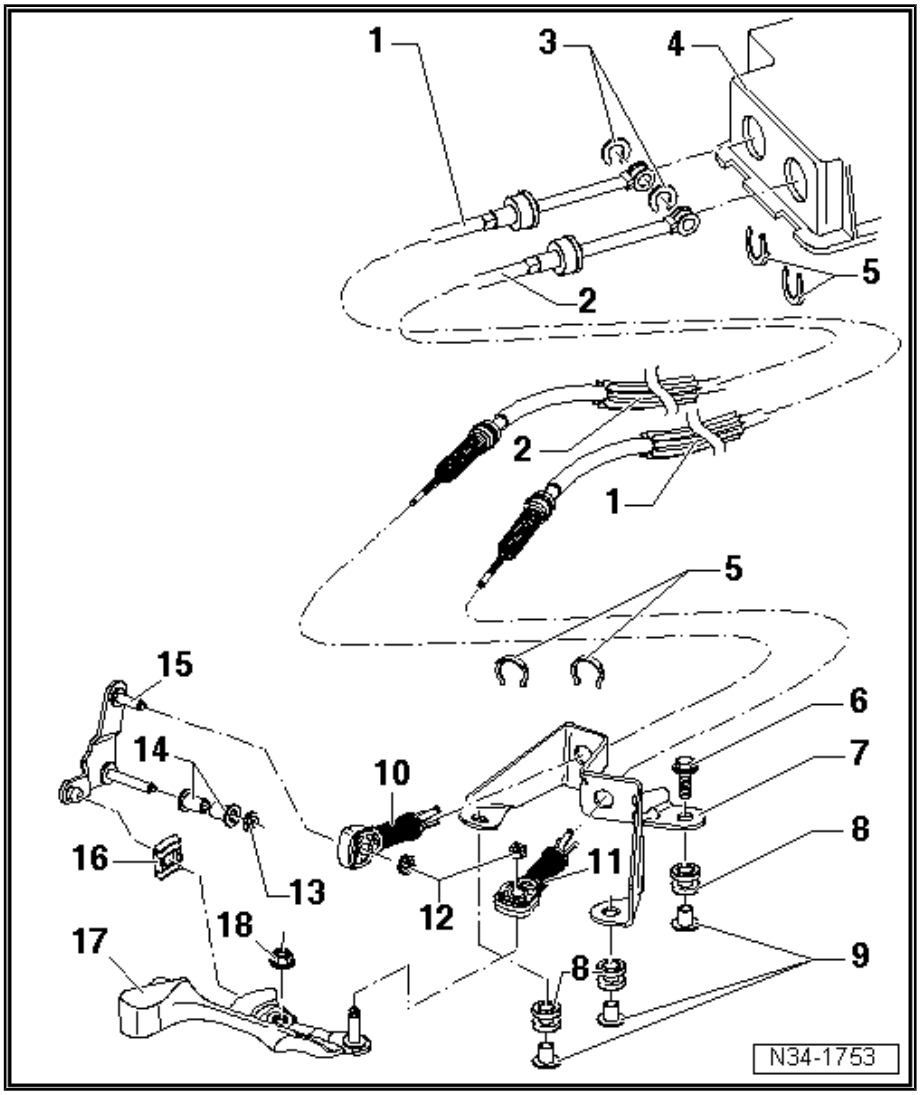

1 - Gear selector cable

- ❑ Connect to cable end-piece
  ⇒ Item 11 (page 132)
- ❑ Installation position
  ⇒ page 116
- ❑ Use cable tie to fix onto gate selector cable
  ⇒ page 134
- ❑ From 11.06, modified attachment to gear lever inside selector mechanism
  ⇒ Item 8 (page 125)

2 - Gate selector cable

- ❑ Connect to cable end-piece
  ⇒ Item 10 (page 131)
- ❑ Installation position
  ⇒ page 116
- ❑ Use cable tie to fix onto gear selector cable
  ⇒ page 134
- ❑ From 11.06, modified attachment to gate selector lever inside selector mechanism
  ⇒ Item 6 (page 125)

3 - Securing clip

- ❑ Always renew
- ❑ Discontinued in selector mechanisms from 11.06
  ⇒ page 125

4 - Selector housing

5 - Securing clip

- ❑ Always renew
- ❑ Do not damage cables when removing

6 - Hexagon bolt, 20 Nm

- ❑ Qty. 3
- ❑ For cable support bracket

7 - Cable support bracket

- ❑ May be made from plastic or metal

8 - Grommet

- ❑ Cable support bracket mounting on gearbox

9 - Spacer

10 - Cable end-piece

- After installing, adjust selector mechanism ⇒ page 139
- For gate selector cable to relay lever
- Do not interchange; cable end-pieces for gate selector cable to relay lever and gear selector cable to gearbox selector lever are different
- For metal relay lever, secured with securing clip ⇒ Item 12 (page 132)
- From 05.07, fitted in conjunction with plastic relay lever ⇒ page 134
- Removing from plastic relay lever ⇒ page 134
- Pressing onto plastic relay lever ⇒ page 134
- Allocation ⇒ page 133

11 - Cable end-piece

- After installing, adjust selector mechanism ⇒ page 139
- For gear selector cable to gearbox selector lever
- Do not interchange; cable end-pieces for gate selector cable to relay lever and gear selector cable to gearbox selector lever are different
- Allocation ⇒ page 133

12 - Securing clip

- Always renew
- Not required for plastic relay lever

13 - Securing clip

- Always renew
- Not required for plastic relay lever

14 - Bearing bush

- Not required for plastic relay lever

15 - Relay lever

- Installation position ⇒ page 134
- After installing, adjust selector mechanism ⇒ page 139
- May be made from plastic or metal
- Metal relay lever is mounted in bearing bush ⇒ Item 14 (page 132) and secured with securing clip ⇒ Item 13 (page 132)
- From 05.07, plastic relay lever
- Remove and install plastic relay lever together with cable end-piece ⇒ page 134
- Bearing bushes and securing clip not required for plastic relay lever

16 - Shoe

17 - Gearbox selector lever

- Installing ⇒ page 133
- Installation position ⇒ page 134
- After installing, adjust selector mechanism ⇒ page 139
- From 06.06, smaller diameter of support pin for cable end-piece ⇒ page 133

18 - Self-locking hexagon nut, 23 Nm

- Always renew

Allocation of cable end-pieces

The holes in the cable end-pieces have different diameters.

Cable end-piece for	Dimension “a”
1 - Gear selector cable to gearbox selector lever from 06.06	8.5 mm
2 - Gear selector cable to gearbox selector lever through 05.06	10 mm
2. - Gate selector cable to metal relay lever	8 mm
2. - Gate selector cable to plastic relay lever ⇒ page 134	10 mm

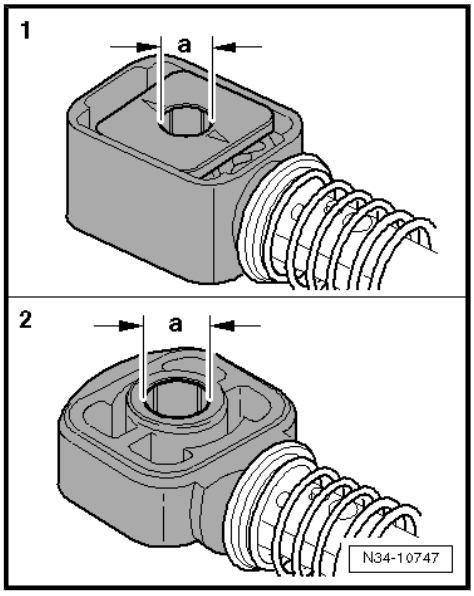

From 06.06, smaller diameter of support pin for gear selector cable end-piece

Support pin for gear selector cable end-piece	Dimension “a”
Through 05.06	10 mm
From 06.06	8.5 mm

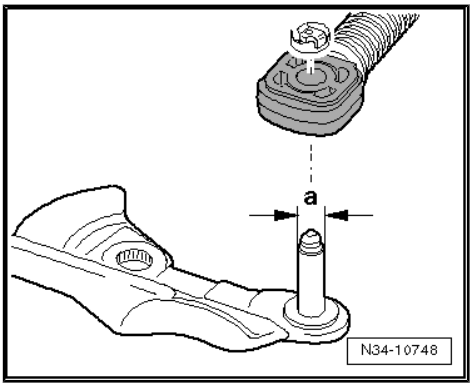

Installing gearbox selector lever

– When setting gearbox selector lever in place, ensure that gap in teeth -arrow A- is over the partial tooth on the selector shaft -arrow B-

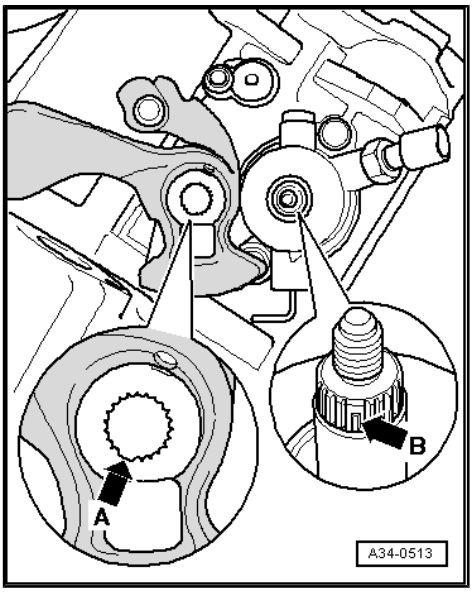

Installation position of gearbox selector lever and relay lever

1 - Gearbox selector lever

2 - Relay lever engages in guide rail of gearbox selector lever via shoe -arrow-.

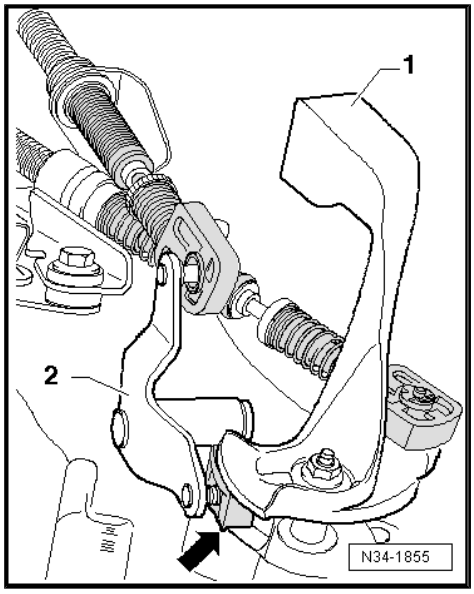

Fitting position of cable tie for cables

– Wind cable tie -arrow- around the selector cables in a figure eight and secure them as shown in figure.

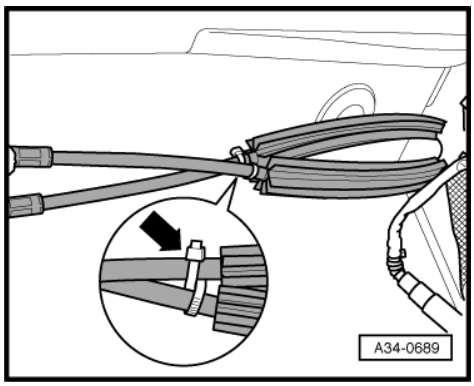

1.10 Plastic relay lever

From 05.07, plastic relay lever

- To remove relay lever, first separate cable end-piece from gate selector cable.

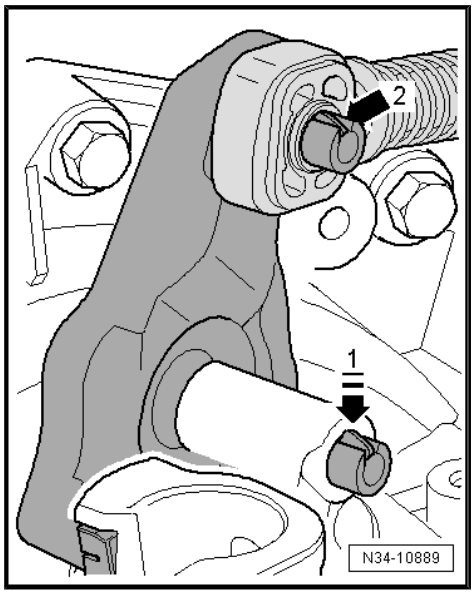

This will avoid damage to the gate selector cable

– Pull locking mechanism forward to stop in -direction of arrow 1- and then lock by turning to left in -direction of arrow 2-.

– Then push relay lever forwards (-in direction of arrow 3-).

Relay lever with catch -arrow 1- (⇒ previous figure)

– Press catch -arrow 1- (⇒ previous figure) down to stop and remove relay lever together with cable end-piece. In the process, swing it in direction of operation.

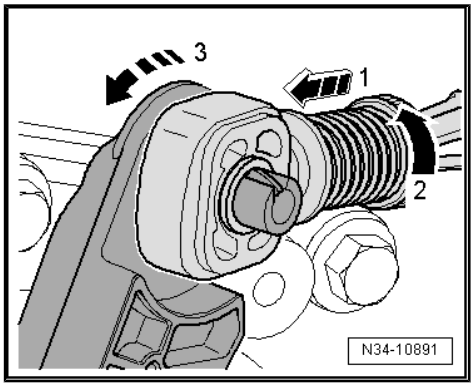

Relay lever with clip -arrow 1-

– Pull clip -arrow 1- off and remove relay lever together with cable end-piece.

Continuation for all

Cable end-piece must be located behind catch -arrow 2-.

• The cable end-piece can be removed only with the relay lever removed ⇒ page 135 .

Note

♦ *When installing, lubricate bearing positions and sliding surfaces.*

♦ *Allocate grease using ⇒ Electronic parts catalogue (ETKA) .*

– Press cable end-piece onto relay lever ⇒ page 136 .

– Install relay lever together with cable end-piece to stop.

• Fastener -arrow 1- secures relay lever (⇒ previous figure).

• Ensure proper engagement.

• Cable end-piece must be located behind catch -arrow 2- (⇒ previous figure).

Levering gate selector cable end-piece off plastic relay lever

• Relay lever has been removed

– Insert a flat-blade screwdriver -A- between bush -B- and relay lever.

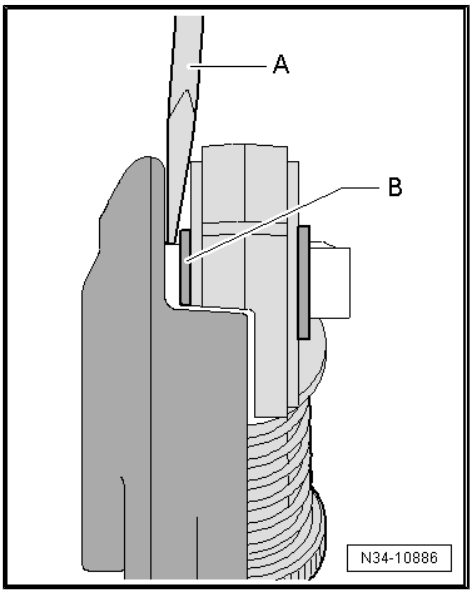

Pressing on cable end-piece

- Relay lever has been removed
- Cable end-piece may be pressed only onto bush -arrow-.
- Cable end-piece must move freely on relay lever.
- It must be located behind catch -arrow 2- ⇒ page 134 .

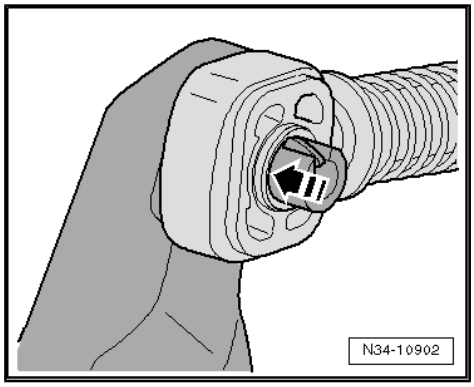

1.11 Removing and installing selector mechanism

1.11.1 Removing

Special tools and workshop equipment required

♦ Torque wrench -V.A.G 1331-

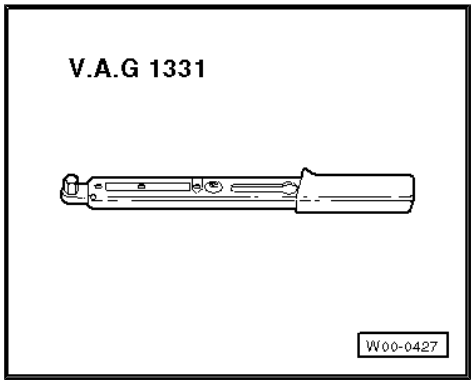

– First check whether a coded radio is fitted. If so, obtain anti-theft code.

– With ignition switched off, disconnect battery earth strap ⇒ Electrical system; Rep. Gr. 27 ; Removing and installing battery .

– Install gaiter with gear knob and noise insulation. Golf ⇒ page 118 , Golf Plus ⇒ page 120 , Passat ⇒ page 121

Golf 2004 ▸

– Remove securing bracket for centre console, remove footwell trim from centre console and ashtray or storage compartment for this ⇒ General body repairs, interior; Rep. Gr. 68 ; Compartments, covers and trims; Removing and installing centre console .

Golf 2009 ▸

– Remove ashtray or storage compartment and securing bracket for centre console ⇒ General body repairs, interior; Rep. Gr. 68 ; Compartments, covers and trims; Removing and installing centre console .

– Remove rear footwell ducts, if fitted ⇒ Heater; Rep. Gr. 80 , remove centre console for this ⇒ General body repairs, interior; Rep. Gr. 68 ; Compartments, covers and trims; Removing and installing centre console .

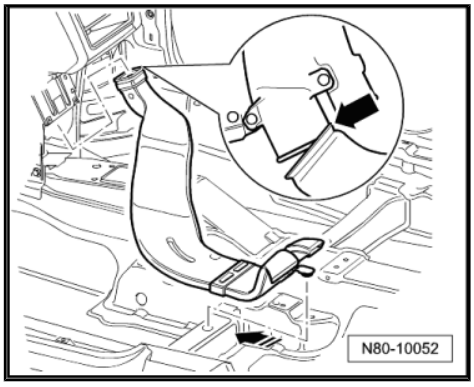

Golf Plus

– Remove upper parts and, if necessary, securing brackets for centre console ⇒ General body repairs, interior; Rep. Gr. 68 ; Compartments, covers and trims; Removing and installing centre console

Vehicles where centre console securing brackets cannot be removed as a separate component:

– Remove centre console, ⇒ General body repairs, interior; Rep. Gr. 68 ; Compartments, covers and trims .

Continuation for all

– Remove selector housing nuts -arrows-.

– Remove complete air filter housing if it is over selector mechanism ⇒ Rep. Gr. 23 ; Repairing diesel direct injection system or ⇒ Rep. Gr. 24 ; Repairing injection system .

– Remove securing clip -3- for gear selector cable from gearbox selector lever -1-.

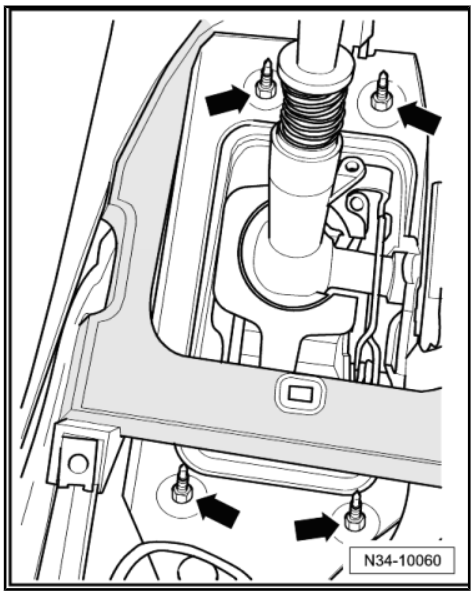

– Pull gear selector cable off pin.

Metal relay lever

– Remove securing clip -4- for gate selector cable from relay lever -2-.

– Pull gate selector cable from pin.

Plastic relay lever

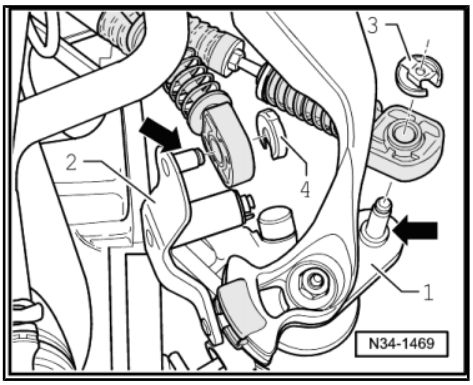

Releasing cable end-piece from gate selector cable

– Pull locking mechanism forward to stop in -direction of arrow 1- and then lock by turning to left in -direction of arrow 2-.

– Then push relay lever forwards (-in direction of arrow 3-).

– Remove relay lever together with cable end-piece ⇒ page 134 .

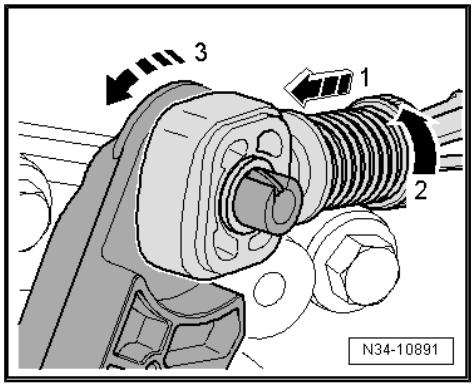

Continued for all selector mechanisms

– Remove cable support bracket from gearbox -arrows-; if necessary, unclip hose -A- from bracket -B- first.

– Remove noise insulation ⇒ General body repairs, exterior; Rep. Gr. 50 ; Noise insulation .

– Remove tunnel cross member ⇒ Rep. Gr. 26 ; Removing and installing parts of exhaust system .

– Separate front exhaust system at double clamp and detach from subframe ⇒ Rep. Gr. 26 ; Removing and installing parts of exhaust system .

– Unhook exhaust system ⇒ Rep. Gr. 26 ; Removing and installing parts of exhaust system .

– Remove underbody panels ⇒ General body repairs, exterior; Rep. Gr. 50 .

– Swing selector housing down and remove with selector cables.

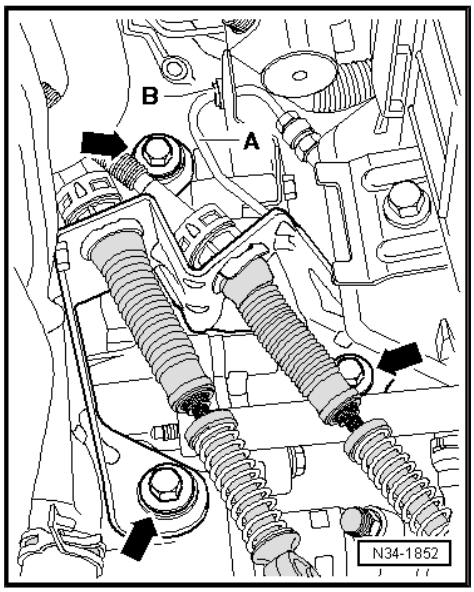

1.11.2 Installing

Install in the reverse order of removal, observing the following:

– Align selector housing parallel to body.

• Distance to body must be same on both sides.

Secure selector housing ⇒ Item 26 (page 124) or ⇒ Item 16 (page 126) .

– Route cables -1- from selector mechanism -2- to gearbox as follows:

♦ After cables cross over -arrow-, they must be routed parallel to one another as far as cable support bracket on gearbox.

♦ Make sure that cable tie -arrow- for securing cables is installed correctly. Installation position ⇒ page 134 .

♦ Cables must be laid in the intended indentation in heat shield -3-.

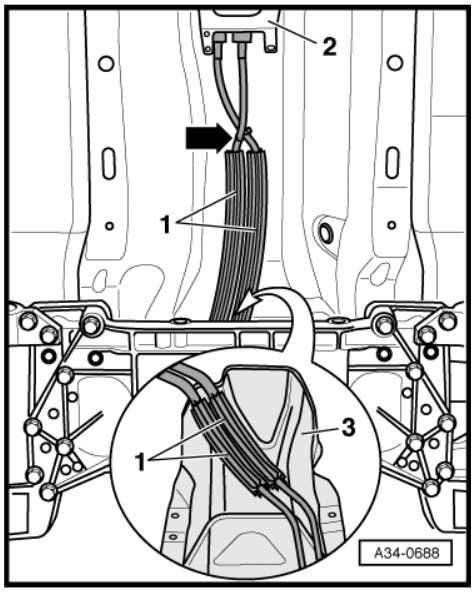

Note

In the close-up, the heat shield is shown from above.

Clip -A- holds cables and heat shield together in position.

The holes in the cable end-pieces have different diameters.

Allocation of cable end-pieces ⇒ page 133

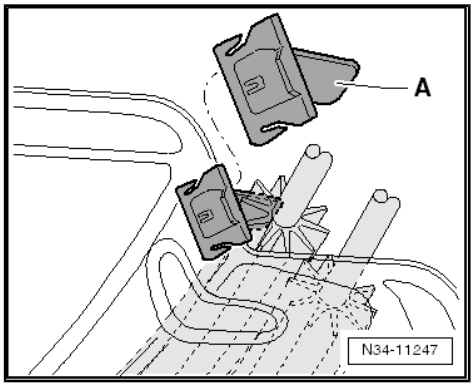

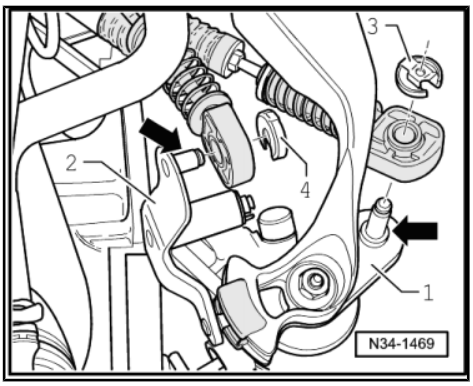

– Spread a small quantity of grease on pins -arrows- of gearbox selector lever -1- and relay lever -2-.

• Allocate grease using ⇒ Electronic parts catalogue (ETKA) .

– Renew securing clip -3- and, for metal relay lever, securing clip -4- each time they are removed.

– Secure gear selector cable with securing clip -3- and gate selector cable with securing clip -4-.

Cable end-piece to plastic relay lever

– Fit relay lever and cable end-piece together ⇒ page 134 .

– Insert gate selector cable in cable end-piece.

Continued for all selector mechanisms

– Install centre console ⇒ General body repairs, interior; Rep. Gr. 68 ; Compartments, covers and trims .

– Install gaiter with gear knob and noise insulation. Golf ⇒ page 118 , Golf Plus ⇒ page 120 , Passat ⇒ page 121

– Install underbody panels ⇒ General body repairs, exterior; Rep. Gr. 50 .

– Assemble exhaust system free of tension and attach tunnel cross member ⇒ Rep. Gr. 26 ; Removing and installing parts of exhaust system .

Adjusting selector mechanism ⇒ page 139 .

– If removed, install complete air filter housing ⇒ Rep. Gr. 23 ; Repairing diesel direct injection system or ⇒ Rep. Gr. 24 ; Repairing injection system

– Follow procedure after connecting battery ⇒ Electrical system; Rep. Gr. 27 ; Battery; Disconnecting and connecting battery .

1.11.3 Torque settings

Component
Selector lever housing to body ⇒ Item 26 (page 124) or ⇒ Item 16 (page 126)
Selector cables support bracket to gearbox ⇒ Item 6 (page 131)

1.12 Adjusting selector mechanism

Special tools and workshop equipment required

Volkswagen Technical Site: http://vwts.ru http://vwts.info

♦ Locking pin -T10027 A-

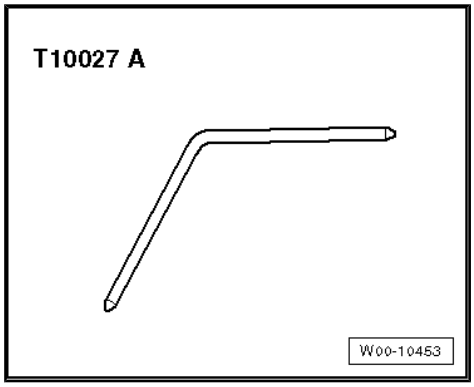

Note

♦ *The following points are essential to ensure correct adjustment of selector mechanism:*

♦ *Moving parts of operating elements and elements transferring force must be in proper condition.*

♦ *Selector mechanism must move freely.*

♦ *Gearbox, clutch and clutch mechanism must also be in proper condition.*

• Gearbox must be in neutral.

– Remove air filter housing if bracket -A- and securing mechanism for gear selector cable and gate selector cable are not accessible ⇒ Rep. Gr. 23 ; Repairing diesel direct injection system or ⇒ Rep. Gr. 24 ; Repairing injection system .

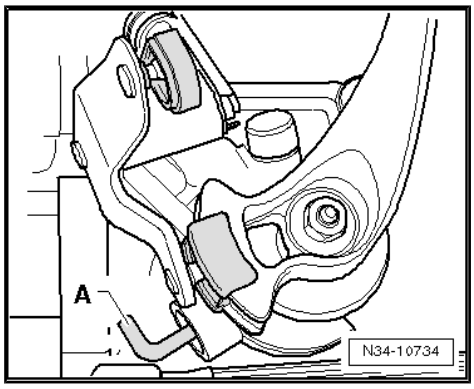

– Pull locking mechanisms on gate selector cable and gear selector cable end-pieces forward to stop -direction of arrow 1- and then turn to left to lock -direction of arrow 2-.

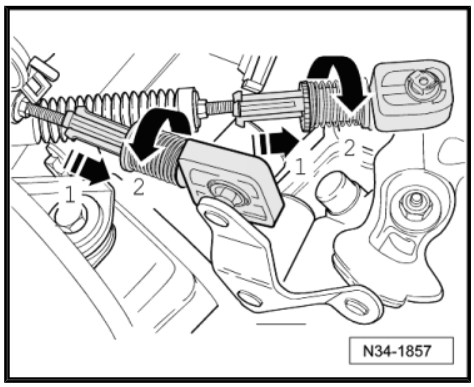

Secure selector shaft as follows:

– Press selector shaft down -direction of arrow 1-.

– While pressing down selector shaft, turn angled rod -A- in -direction of arrow 2- upwards and at the same time press it in until it engages in selector shaft.

– Install gaiter with gear knob and noise insulation. Golf ⇒ page 118 , Golf Plus ⇒ page 120 , Passat ⇒ page 121

– If noise insulation is present, remove it.

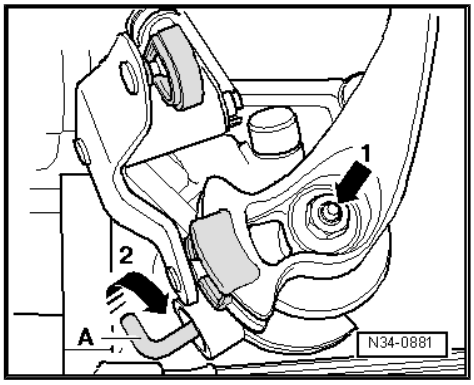

Now secure gear lever as follows:

– Select neutral using gear lever.

– Guide locking pin -T10027 A- through hole -A- into hole -B-.

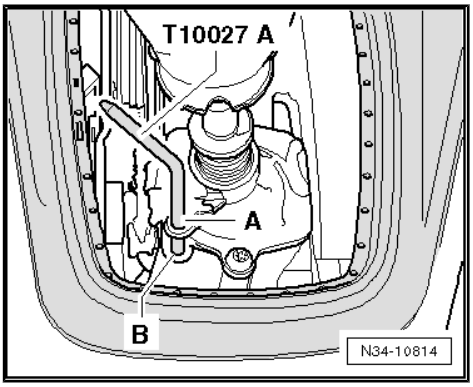

– Now turn locking mechanisms on gear selector cable and gate selector cable end-pieces clockwise to stop -direction of arrow-.

Spring presses locking mechanism into original position.

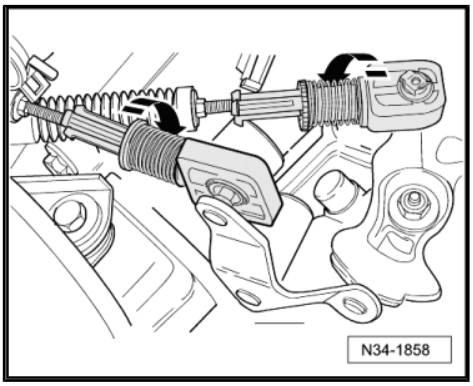

– Now turn angled rod -A- back to original position -direction of arrow-.

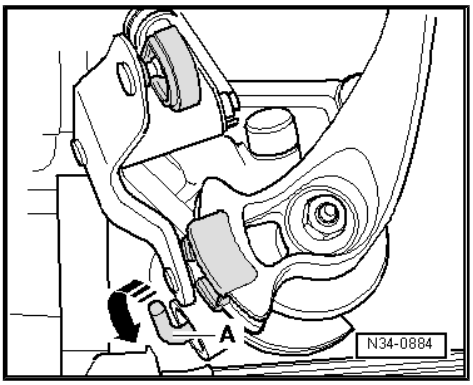

Note

The angled rod -A- must be pressed out of selector housing to stop and point to rear.

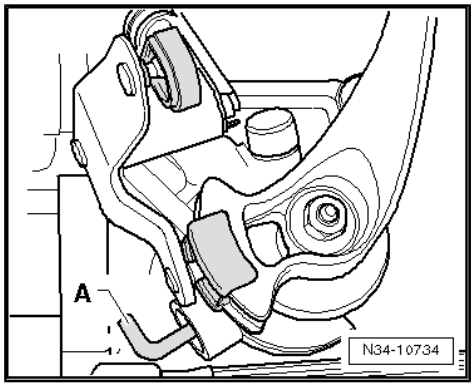

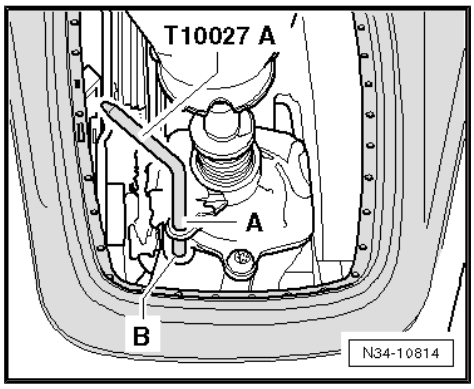

- Pull locking pin out of holes -A- and -B-.
- If noise insulation was present, install it.
- Install gaiter with gear knob and noise insulation. Golf ⇒ page 118 , Golf Plus ⇒ page 120 , Passat ⇒ page 121
- Check that selector shaft moves freely.
- If necessary, install complete air filter housing ⇒ Rep. Gr. 23 or ⇒ Rep. Gr. 24

1.12.1 Functional check

- With gearbox in neutral, selector lever must rest in gate for 3rd and 4th gear.
- Operate clutch.
- Select all gears several times. Pay particular attention to operation of reverse gear lock.
- If it continues to be difficult to engage a gear after repeated attempts, repeat adjustment procedure of selector mechanism ⇒ page 139 .

2 Removing and installing gearbox, Golf 2004 ▸

Special tools and workshop equipment required

- Support bracket -10 - 222 A-
- Adapter -10 - 222 A / 8-
- Hook - 10 - 222 A /2-
- Adapter -10 - 222 A /3-
- Adapter -10 - 222 A /16-
- Gearbox support -3282-
- Rear left engine support eye points towards side ⇒ page 146 shackle -10-222 A /12-

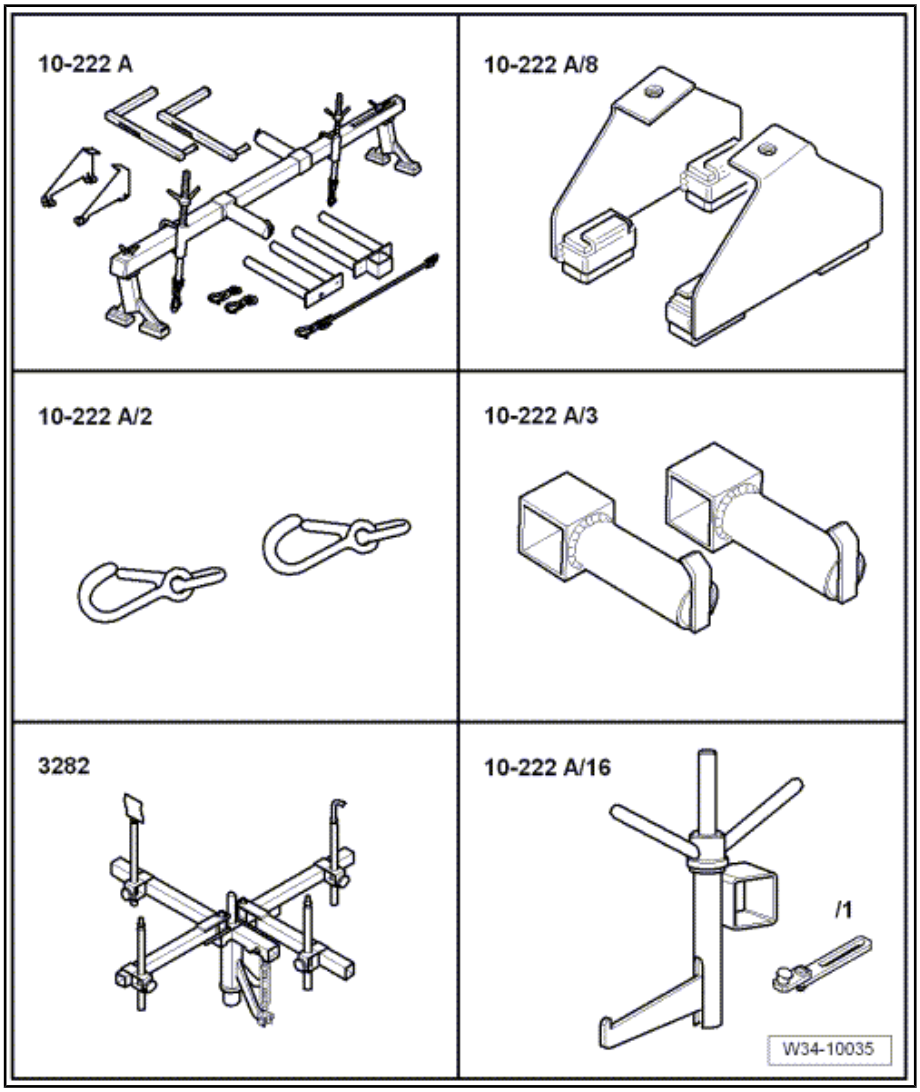

- Adjustment plate -3282/39-
- Support elements for gearbox (determine when setting adjustment plate on gearbox support)
- Engine and gearbox jack -V.A.G 1383A-
- Torque wrench -V.A.G 1331-
- Torque wrench -V.A.G 1332-
- Gearbox lifting tackle -3336- for transporting gearbox
- Grease for clutch plate splines -G 000 100-
- Allocate grease using ⇒ Electronic parts catalogue (ETKA) .

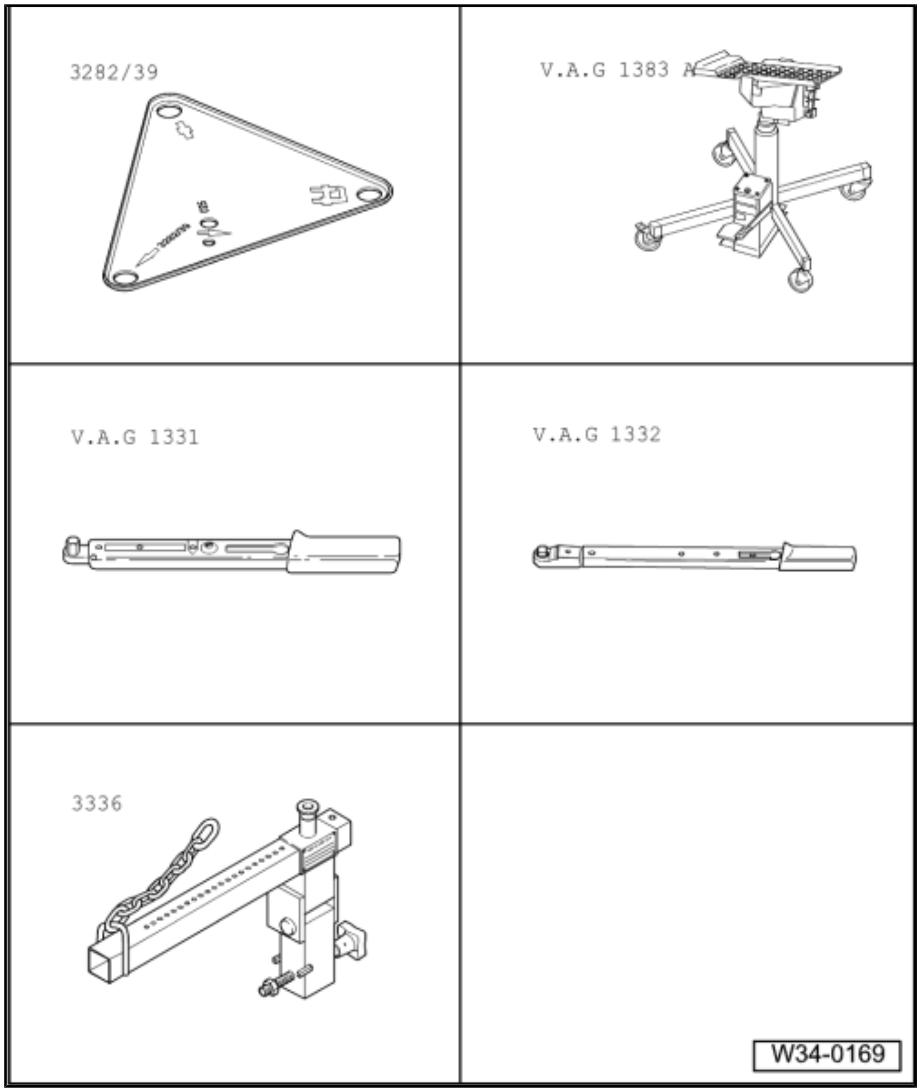

2.1 Removing gearbox

– First check whether a coded radio is fitted. If so, obtain anti-theft code.

– With ignition switched off, disconnect battery ⇒ Electrical system; Rep. Gr. 27 ; Disconnecting and connecting battery .

– If the lifting eyes of the engine for support bracket -10 - 222 A- are covered by a component, for example the air filter, it must be removed now. ⇒ Rep. Gr. 23 ; Repairing diesel direct injection system or ⇒ Rep. Gr. 24 ; Repairing injection system

– Remove complete air filter housing if it is near battery ⇒ Rep. Gr. 23 ; Repairing diesel direct injection system or ⇒ Rep. Gr. 24 ; Repairing injection system .

– Remove battery and battery tray ⇒ Electrical system; Rep. Gr. 27 ; Removing and installing battery .

– Remove securing clip -arrow 1- for gear selector cable from gearbox selector lever -A-.

– Pull gear selector cable off pin.

Metal relay lever

– Remove securing clip -arrow 2- for gate selector cable from relay lever -B-.

– Pull gate selector cable from pin.

– Pull securing clip -arrow 3- off relay lever -B- and remove relay lever.

Plastic relay lever

– Remove relay lever together with cable end-piece ⇒ page 134 .

Continuation for all

– Remove gearbox selector lever -A- by removing nut -arrow 4-.

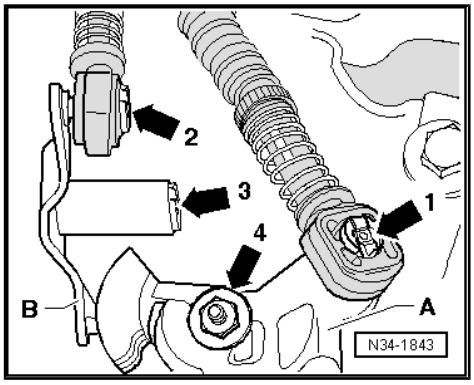

– Remove cable support bracket from gearbox -arrows-.

– Then raise and secure gear selector cable and gate selector cable.

– Remove bracket -B- from gearbox and pull it off pipe/hose line -A-.

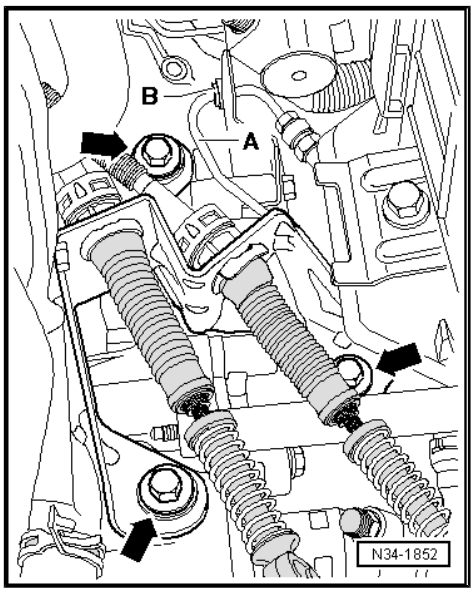

– Then remove gearbox support -arrow A-.

– Remove slave cylinder -arrow B-, lay to side and secure with wire. Do not disconnect pipes.

> ⚠ **Caution**
>
> *Do not operate clutch pedal any more.*

– Remove earth strap at upper engine/gearbox connecting bolt.

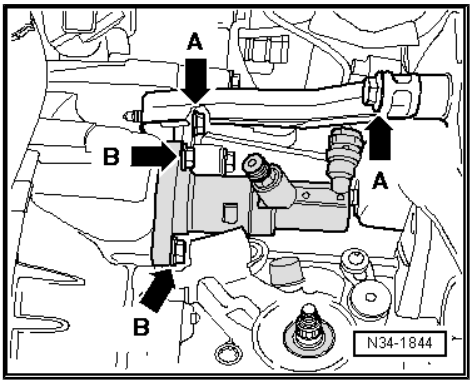

– Pull connector -arrow 1- off reversing light switch -F4- .
– Now remove connector -arrow 2- and wire -arrow 3- from starter.
– Then remove upper securing bolt on starter.
– Remove upper engine/gearbox connecting bolts.
– If there are hose and cable connections in area of engine support eye for support bracket -10 - 222 A- , remove these now.

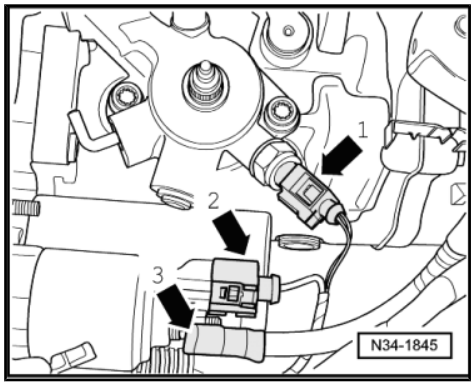

– Set up support bracket -10 - 222 A- together with adapters -10 - 222 A /8- , adapter -10 - 222 A /3- and adapter -10 - 222 A / 16- before support for bonnet.
– Attach hook -10 - 222 A /10- at front right of engine.

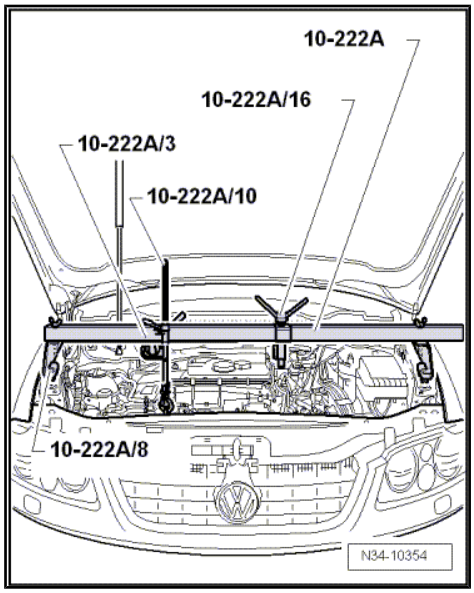

Rear left engine support eye points towards side -arrow-

– Attach shackle -10-222 A /12- at rear left of engine -arrow-.
– Attach hook - 10-222 A /2- in shackle -10-222 A /12- .
– Then connect hook -10-222 A /2- using adapter -10-222 A / 16- .

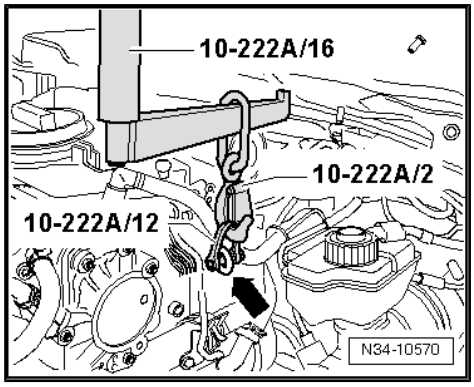

Rear left engine support eye points upwards -arrow-:

– Insert hook - 10-222 A /2- .

– Then connect hook -10-222 A /2- using adapter -10-222 A / 16- .

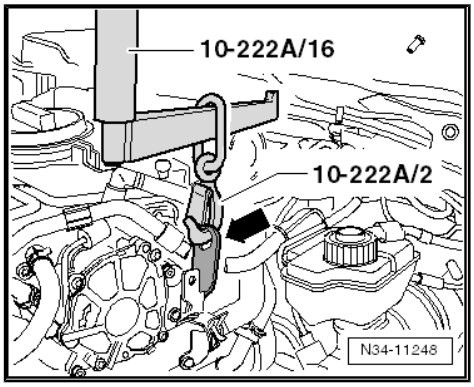

Continuation for all

– Take up weight of engine/gearbox assembly on spindles.

– Raise vehicle.

– Remove noise insulation ⇒ General body repairs, exterior; Rep. Gr. 50 ; Noise insulation .

– Remove lower part of front left wheel housing liner ⇒ General body repairs, exterior; Rep. Gr. 66 ; Wheel housing liner .

– Then remove all lines from gearbox.

– Remove drive shaft heat shield, if present -arrows- ⇒ Running gear, axles, steering; Rep. Gr. 40 ; Repairing drive shafts; Removing and installing drive shafts .

– Separate exhaust system at double clamp and unbolt exhaust pipe bracket from subframe ⇒ Rep. Gr. 26 ; Exhaust system .

– Disconnect drive shafts from flange shafts and tie up as high as possible, being careful not to damage surface protection.

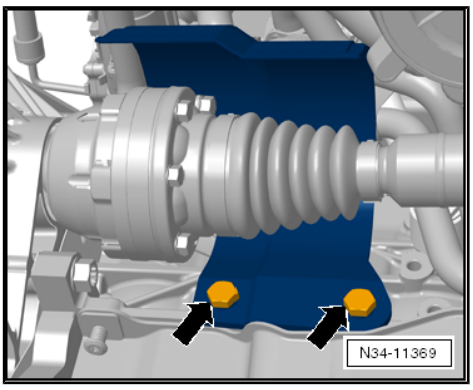

– Remove pendulum support -arrows A-, -B- and -C-.

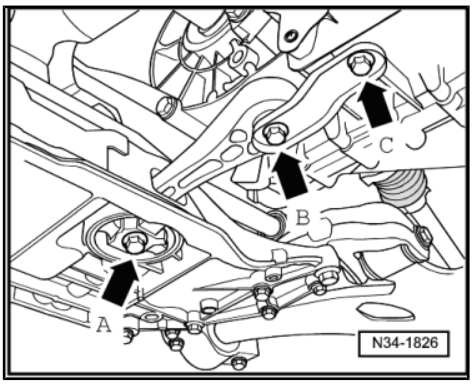

– Remove hexagon bolts -arrows- for left assembly mounting from gearbox mounting.

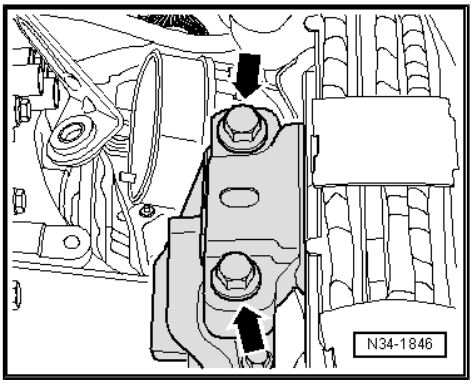

– Tilt engine/gearbox assembly by lowering it via spindles of support bracket -10 - 222 A- .

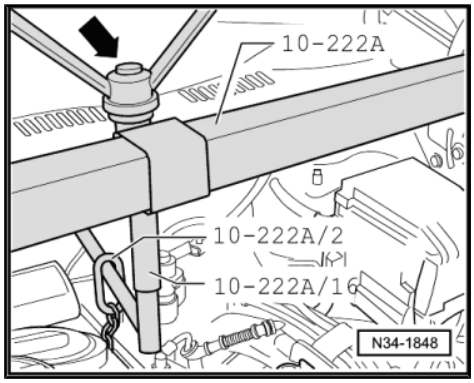

Note

- *Lower threaded spindle of adapter -10 - 222 A /16- using winged nut, but not more than until spindle is flush with nut -arrow-.*
- *Be careful of all lines when lowering gearbox.*

- Securing bolts -arrows- for gearbox bracket -A- must be accessible.

– Remove gearbox bracket -A- -arrows-.

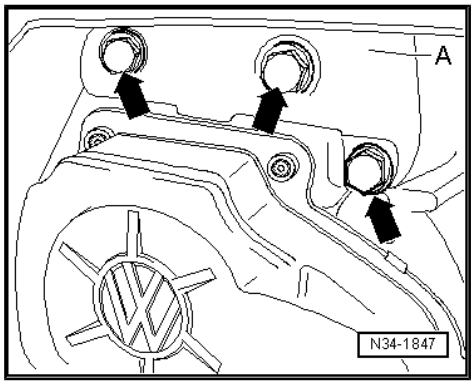

– If small cover plate -A- for flywheel behind the right flange shaft -arrows- is installed, remove it.

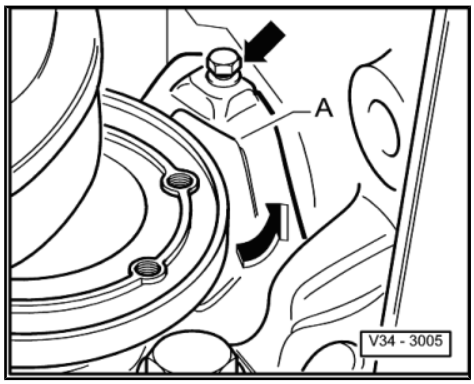

– Remove exhaust system strut -1- from gearbox -arrow-.

– Remove starter ⇒ Electrical system; Rep. Gr. 27 ; Starter .

To remove gearbox “0A4”, set up gearbox support -3282- with adjustment plate -3282/39- .

– Insert gearbox support -3282- in engine and gearbox jack - V.A.G 1383A- .

– Align arms of gearbox support according to holes in adjustment plate .

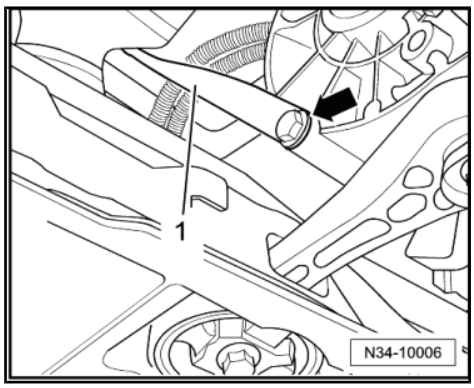

– Screw in support elements -A - and -C- on adjustment plate as shown.
– Position engine and gearbox jack under vehicle. Arrow -B- on adjustment plate points in direction of vehicle travel.

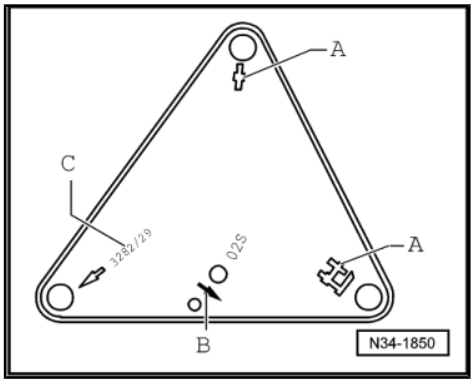

– Align adjustment plate parallel to gearbox and lock safety support on gearbox.
– Then screw pin -3282/29- into hole on gearbox for securing bolt of pendulum support.
– Remove lower engine/gearbox connecting bolts.
– Separate exhaust system if lower bolts -arrows- cannot be removed.

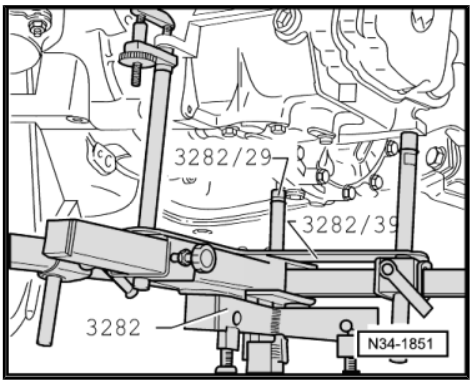

⇒ Rep. Gr. 26 ; Removing and installing parts of the exhaust system

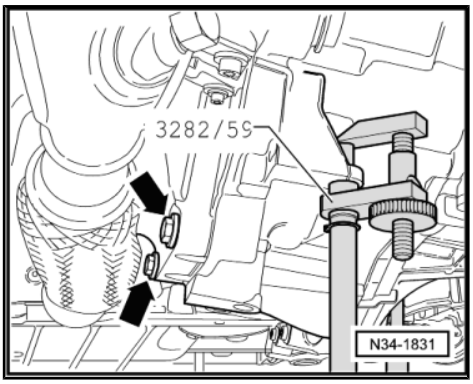

– Press gearbox off dowel sleeves and carefully swing towards subframe.
– Turn gearbox downwards in vicinity of differential.
– Have a second mechanic push engine forwards slightly.

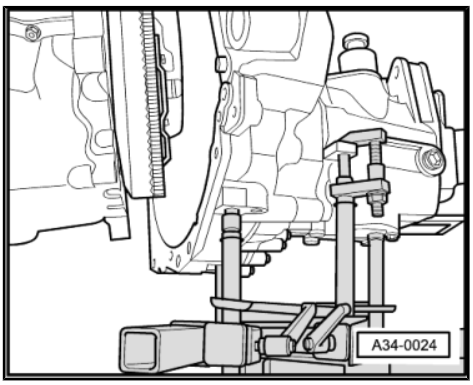

– Carefully lower gearbox, guiding right-hand flange shaft -A- past intermediate plate and flywheel as shown.

– When lowering gearbox, change position of gearbox using spindles of gearbox support -3282- .

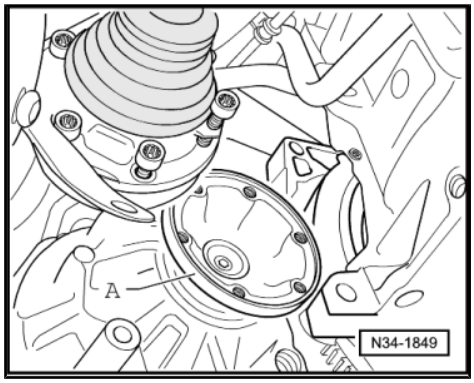

Note

Be careful of all lines when lowering gearbox.

2.2 Installing gearbox

Note

Refer to procedure "Removing gearbox" for required special tools *⇒ page 143* .

Observe the following table on the subject of "checking and topping up gear oil".

"Checking and topping up gear oil"				
		"No"	"Yes"	"Yes"
Gearbox	Original part	X		
	No oil loss	X		
	Completely dismantled		X before installation ⇒ Item 3 (page 250) oil capacity ⇒ page 2	
	Partially dismantled • (Gearbox housing and clutch housing were not separated.)			X after installation ⇒ page 220

– All threaded holes into which self-locking bolts are to be screwed must be cleaned of residual locking fluid carefully with a thread tap.

– Always renew self-locking bolts and nuts.

– Check whether dowel sleeves for aligning engine and gearbox are fitted in cylinder block and install if necessary.

If dowel sleeves are not fitted, difficulties shifting gears, clutch problems and possible noises from the gearbox (rattling of gears which are not engaged) could occur.

– Ensure that intermediate plate is correctly seated on engine.

– Clean input shaft splines and apply thin coat of grease for clutch plate splines -G 000 100- .

The clutch plate must slide easily to and fro on the input shaft.

To install gearbox “0A4”, set up gearbox support -3282- with adjustment plate -3282/39- .

– Align arms of gearbox support according to holes in adjustment plate .
– Screw in support elements -A - and -C- (pin -3282/29-) on adjustment plate as shown.
– Place gearbox on engine and gearbox jack .
– Align adjustment plate and gearbox parallel to one another.

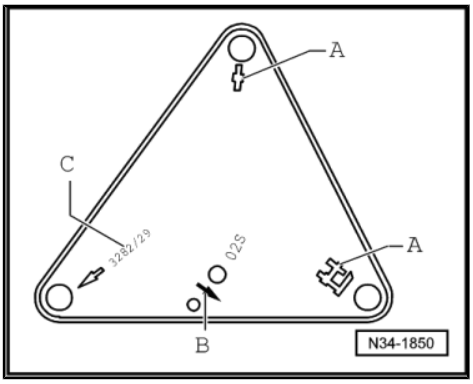

– Screw pin -3282/29- into hole on gearbox for securing bolt of pendulum support.
– Position engine and gearbox jack under vehicle. -Arrow B- on adjustment plate points in direction of vehicle travel.
– Using spindles of gearbox support -3282- , tilt gearbox downwards in vicinity of differential.

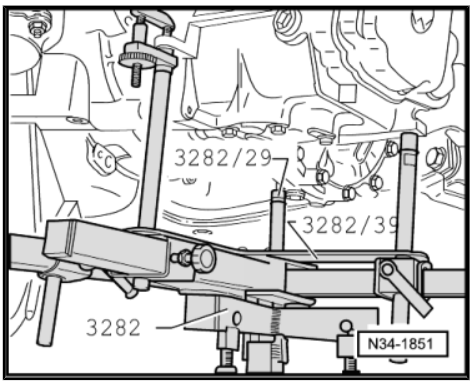

– Then carefully raise gearbox, guiding with right flange shaft -A- past flywheel and intermediate plate as shown.
– Using spindles of gearbox support -3282- , tilt gearbox upwards in vicinity of differential.
– Raise gearbox to engine.
– Have a second mechanic push engine forwards slightly.
– Align gearbox to engine and join.
– Screw in lower engine/gearbox securing bolts and tighten to specified torque ⇒ page 154 .
– After gearbox has been bolted to engine, remove engine and gearbox jack from gearbox.

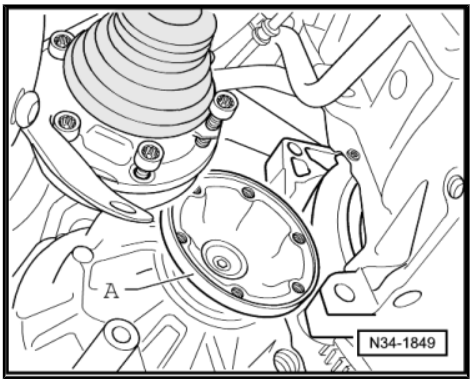

– If small cover plate had been installed behind the right-hand flange shaft -A-, install it -arrows-.
– Screw in upper engine/gearbox securing bolts and tighten to specified torque ⇒ page 154 .

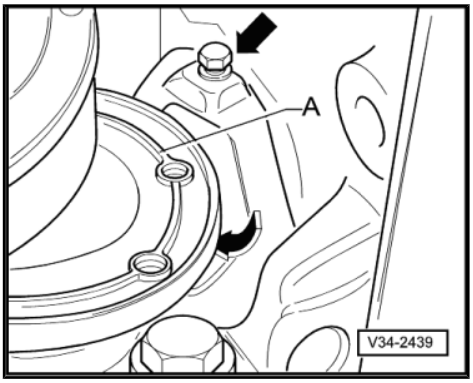

– Install bracket -A- on gearbox using new hexagonal bolts -arrows- and tighten to specified torque ⇒ page 154 .

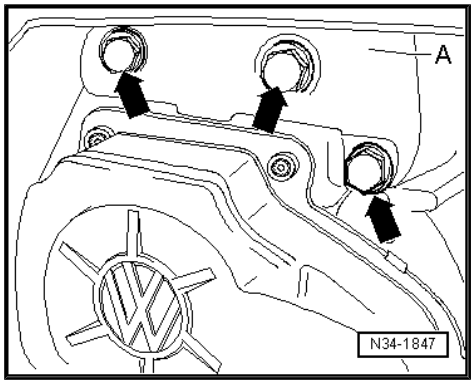

– Align engine and gearbox in installation position using both spindles of support bracket -10 - 222 A- .
– Install new bolts -arrows- for left assembly mounting in gearbox mounting and tighten to specified torque ⇒ page 154 .

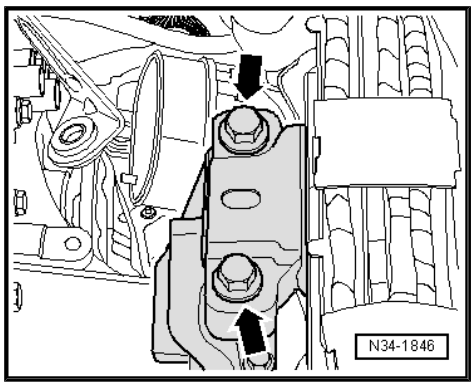

> ⚠ **WARNING**
>
> ***Do not remove support bracket -10 - 222 A- until the bolts securing the left and right assembly mountings have been tightened to specified torque.***

Note

Install engine and gearbox mounting free of tension ⇒ Rep. Gr. 10 ; Removing and installing engine .

– Install slave cylinder and tighten bolts -arrows B- to specified torque ⇒ Item 9 (page 104) .
– Then install gearbox support -arrow A- and tighten to specified torque ⇒ page 154 .
– Attach drive shafts to gearbox ⇒ Running gear, axles, steering; Rep. Gr. 40 ; Repairing front suspension .

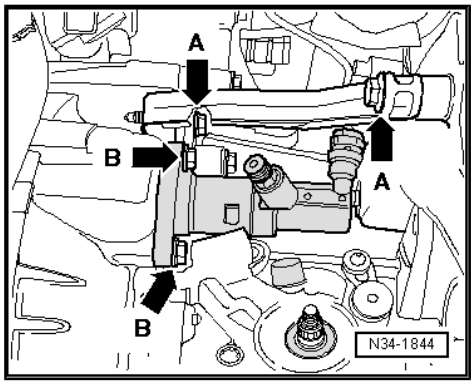

– Install drive shaft heat shield, if present -arrows- ⇒ Running gear, axles, steering; Rep. Gr. 40 ; Repairing drive shafts; Removing and installing drive shafts .

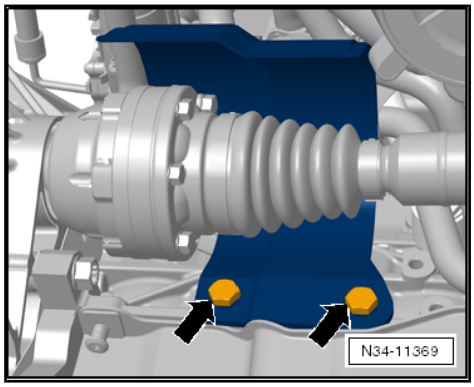

– Install pendulum support with new bolts -arrows A-, -B- and -C- ⇒ Running gear, axles, steering ; Rep. Gr. 40 ; Repairing front suspension .

– Assemble exhaust system and attach exhaust system bracket to subframe ⇒ Rep. Gr. 26 ; Exhaust system .

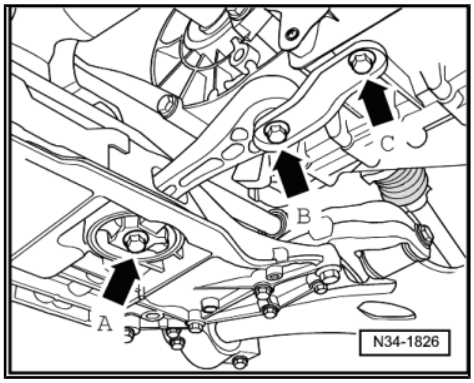

– Bolt exhaust system strut -1- onto gearbox and tighten bolt -arrow- to specified torque ⇒ Rep. Gr. 26 ; Exhaust system .

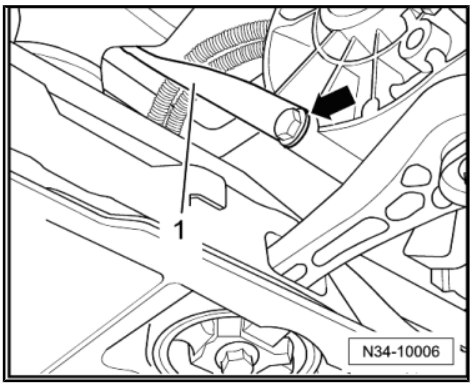

– Push connector -1- onto reversing light switch -F4- .

– Install starter, push on connector -arrow 2- and bolt on wire -arrow 3- ⇒ Electrical system; Rep. Gr. 27 ; Starter .

– Install earth strap at upper engine/gearbox connecting bolt.

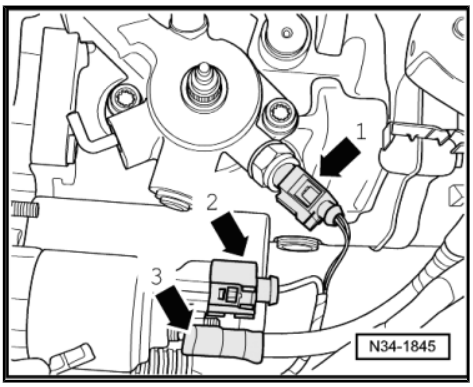

– Attach support -B- to gearbox.

– Press pipe/hose line -A- into retainer -B- on gearbox.

– Install cable support bracket on gearbox and tighten bolts -arrows- to specified torque ⇒ Item 6 (page 131) .

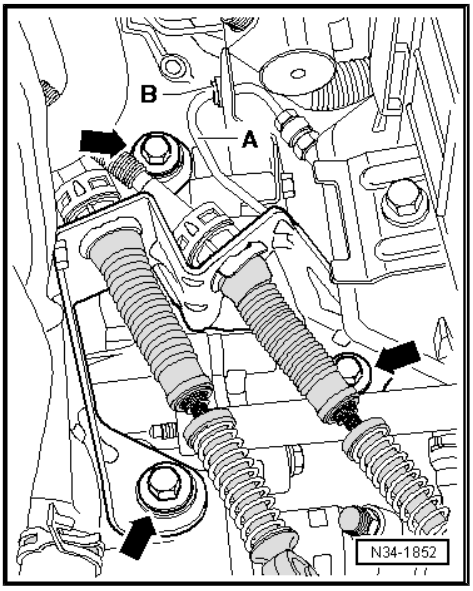

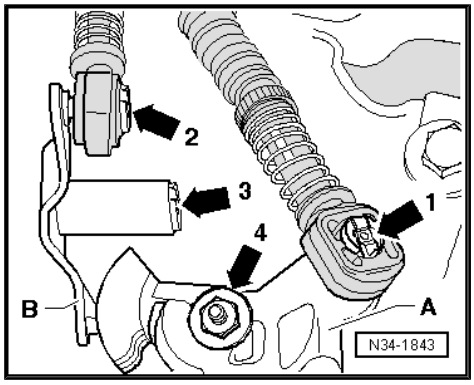

– Install gearbox selector lever -A-.

– Tighten hexagon nut -arrow 4- to specified torque ⇒ Item 18 (page 132) .

– Spread a small amount of grease on pin of gearbox selector lever -A-.

Allocate grease using ⇒ Electronic parts catalogue (ETKA) .

– Connect gear selector cable to gearbox selector lever -arrow 1-.

Metal relay lever

– Install relay lever -B- and secure with securing clip -arrow 3-.

– Spread a small amount of grease on pin of relay lever -B-.

Allocate grease using ⇒ Electronic parts catalogue (ETKA) .

– Connect gate selector cable to relay lever -arrow 2-.

Plastic relay lever

– Install relay lever together with cable end-piece ⇒ page 134 .

Continuation for all

– Adjust selector mechanism ⇒ page 139 .

– Install battery tray, battery cover and battery ⇒ Electrical system; Rep. Gr. 27 ; Removing and installing battery .

– Install engine cover and air filter housing ⇒ Rep. Gr. 23 or ⇒ Rep. Gr. 24

– Reconnect battery and perform work required after connecting battery ⇒ Electrical system; Rep. Gr. 27 ; Disconnecting and connecting battery .

– Install lower part of front left wheel housing liner ⇒ General body repairs, exterior; Rep. Gr. 66 ; Wheel housing liner .

– Install noise insulation ⇒ General body repairs, exterior; Rep. Gr. 50 ; Noise insulation .

2.2.1 Torque settings

Gearbox to petrol engine

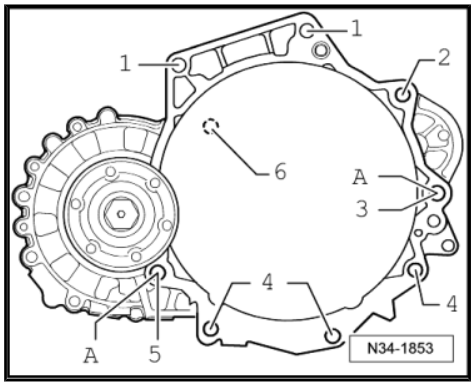

Item	Bolt	Quantity	Nm
1	M 12 x 65	2	80
2	M 12 x 150 ♦ Additionally, starter to gearbox	1	80
3	M 12 x 165 ♦ Additionally, starter to gearbox	1	80
4	M 10 x 50	3	40
5	M 12 x 85	1	80
6	M 6 x 8 ♦ Small cover plate for flywheel	1	10

Item -A- dowel sleeves for centring

Gearbox to diesel engine

Item	Bolt	Quantity	Nm
1	M 12 x 55	2	80
2	M 12 x 150 ♦ Additionally, starter to gearbox	2	80
3	M10 x 50	3	40
4	M12 x 60	1	80
5	M6 x 8 ♦ Small flywheel cover plate	1	10

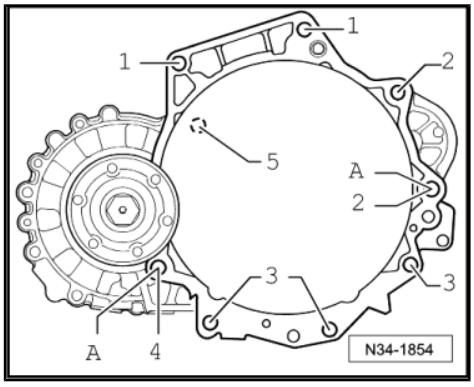

Item -A- dowel sleeves for centring

Gearbox bracket to gearbox

– Renew bolts.
– Screw in all bolts hand-tight.
– Tighten bolts to specified torque.

Bolts -arrows- 40 Nm + 90°

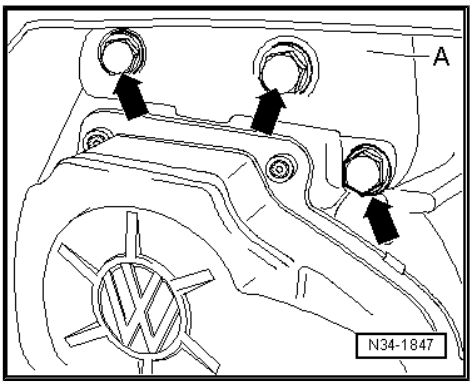

Gearbox mounting to body

– Renew bolts.
– Screw in all bolts hand-tight.
– Tighten bolts to specified torque.

Bolts -arrows- 60 Nm + 90°

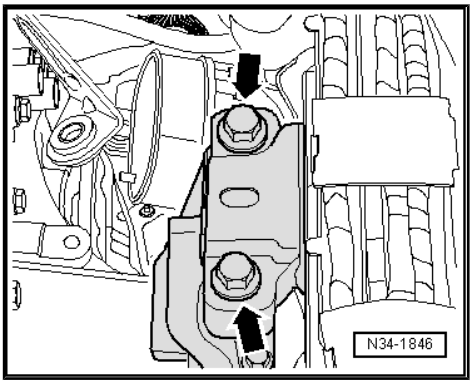

Gearbox support to gearbox bracket and gearbox

– Renew bolts.
– Screw in all bolts hand-tight.
– Tighten bolts to specified torque.

Bolts -arrows- 20 Nm + 90°

Drive shaft to flange shaft ⇒ Running gear, axles, steering; Rep. Gr. 40 ; Repairing drive shaft; Removing and installing drive shafts .

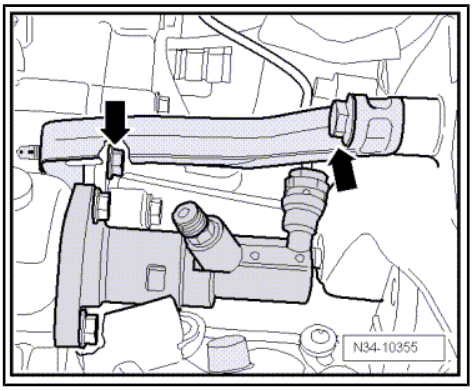

3 Removing and installing gearbox, Golf 2009 ▸ with turbo diesel engine

Special tools and workshop equipment required

- Support bracket -10 - 222 A-
- Adapter -10-222 A /8-
- Adapter -10 - 222 A /18-
- Adjustment plate -3282/39-
- Support elements for gearbox (determine when setting adjustment plate on gearbox support)
- Gearbox support -3282-

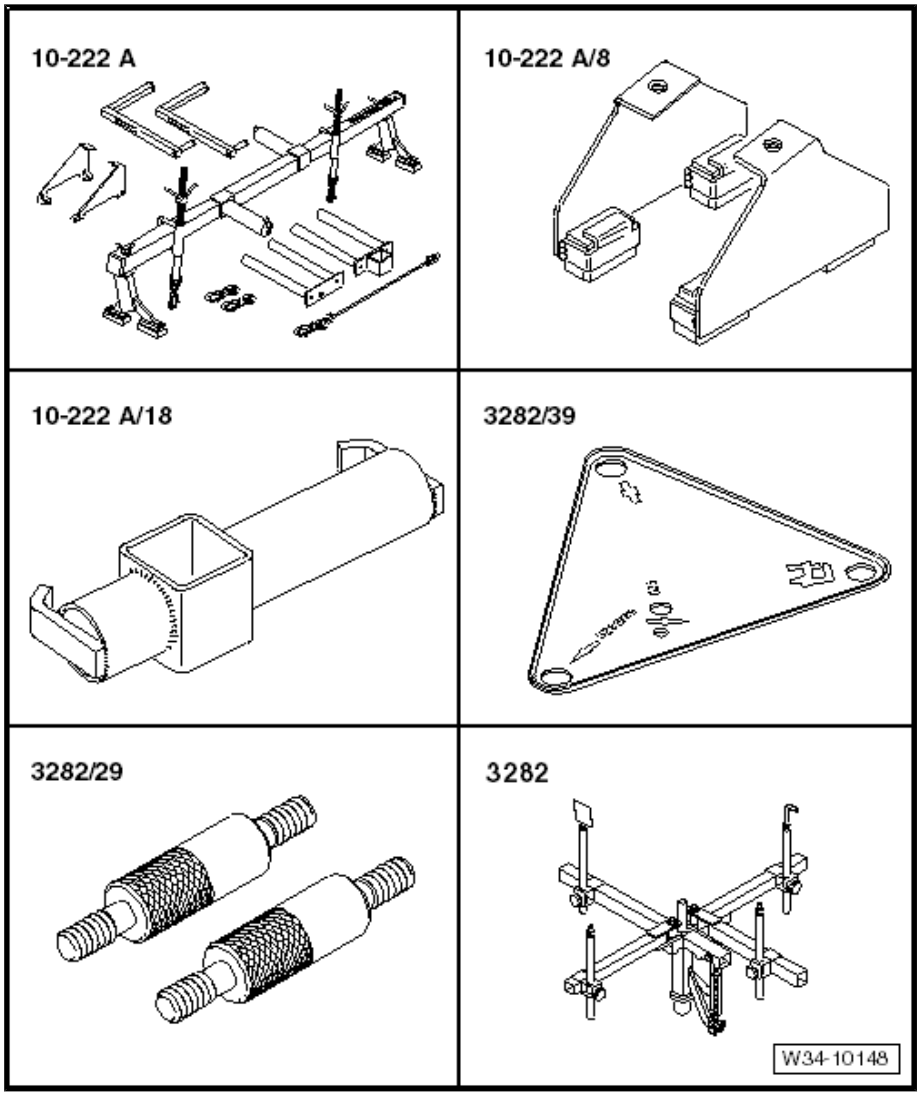

- Adapter -10-222 A /3-

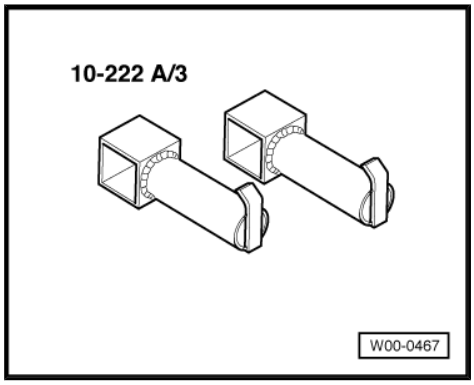

- Engine and gearbox jack -V.A.G 1383A-
- Retainer -T10346-
- Engine support -3300 A-
- Torque wrench -V.A.G 1331-
- Torque wrench -V.A.G 1332-
- Gearbox lifting tackle -3336- for transporting gearbox
- Grease for clutch plate splines -G 000 100-
- Flange bolt M6 x 20
- Flange bolt M6 x 80

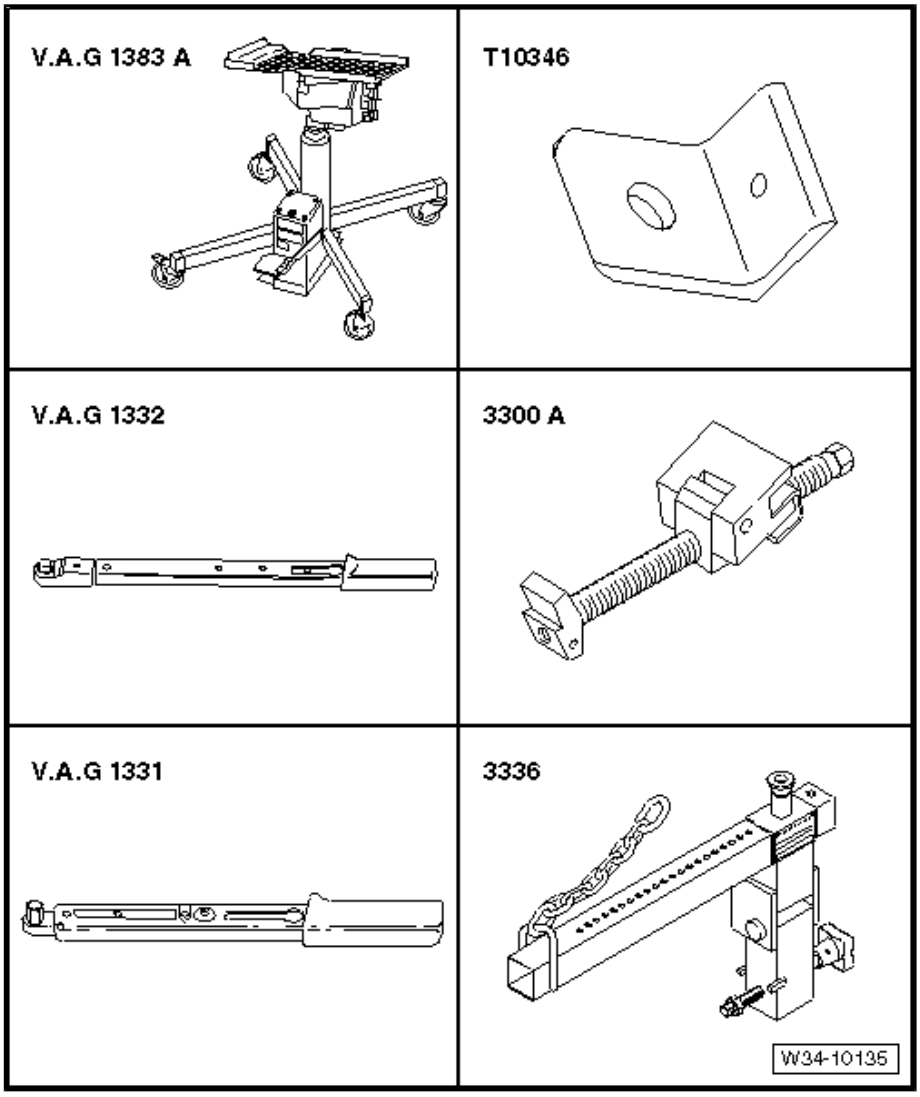

At a later point, support bracket -10-222 A- will be put onto longitudinal members with adapters -10 - 222 A /8- .

- To prevent damage to edges of wings, cover bottom area of both adapters -10 - 222 A /8- with self-adhesive fabric tape -arrow- ⇒ Electronic parts catalogue (ETKA chemical substances) .

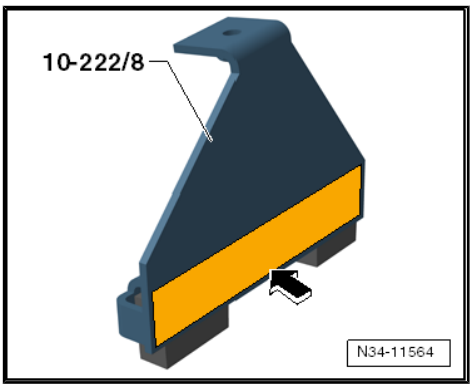

3.1 Removing gearbox

– First check whether a coded radio is fitted. If so, obtain anti-theft code.

– With ignition switched off, disconnect battery ⇒ Electrical system; Rep. Gr. 27 ; Disconnecting and connecting battery .

– If the lifting eyes of the engine for support bracket -10 - 222 A- are covered by a component, for example the air filter, it must

be removed now. ⇒ Rep. Gr. 23 ; Repairing diesel direct injection system or ⇒ Rep. Gr. 24 ; Repairing injection system

– Remove complete air filter housing if it is near battery ⇒ Rep. Gr. 23 ; Repairing diesel direct injection system or ⇒ Rep. Gr. 24 ; Repairing injection system .

– Remove battery and battery tray ⇒ Electrical system; Rep. Gr. 27 ; Removing and installing battery .

– Remove securing clip -arrow 1- for gear selector cable from gearbox selector lever -A-.

– Pull gear selector cable off pin.

– Release end-piece from gate selector cable ⇒ page 138 .

– Press catch -arrow 2- down to stop and remove relay lever together with cable end-piece. In the process, swing it in direction of operation.

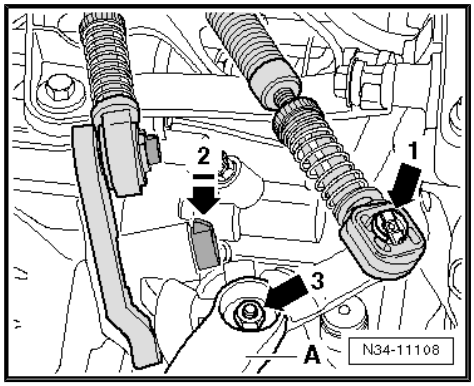

Note

The relay lever was secured with a clip shortly after start of production ⇒ page 135 .

– Remove gearbox selector lever -A- by removing nut -arrow 3-.

– Remove cable support bracket from gearbox -arrows-.

– Then raise and secure gear selector cable and gate selector cable.

– Remove bracket -B- from gearbox and pull it off pipe/hose line -A-.

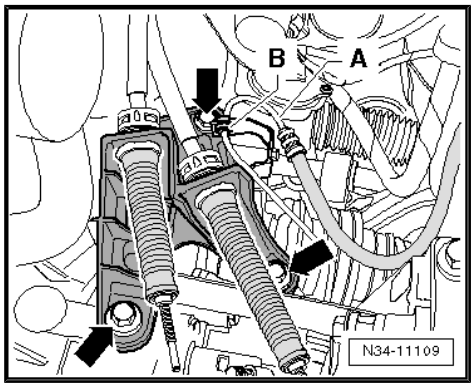

– Then remove gearbox support -arrow A-.

– Remove slave cylinder -arrow B-, lay to side and secure with wire. Do not disconnect pipes.

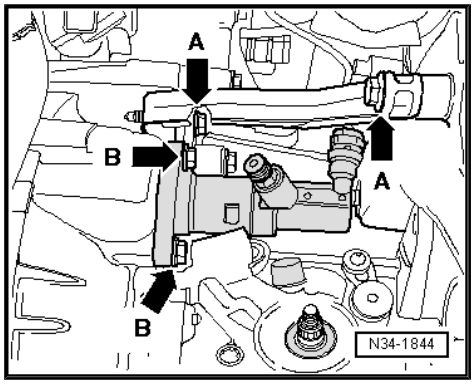

Caution

Do not operate clutch pedal any more.

– Pull connector -arrow 1- off reversing light switch -F4- .
– Now remove connector -arrow 2- and wire -arrow 3- from starter.
– Remove earth strap at upper engine/gearbox connecting bolt.
– Then remove upper securing bolt on starter.
– Remove upper engine/gearbox connecting bolts.

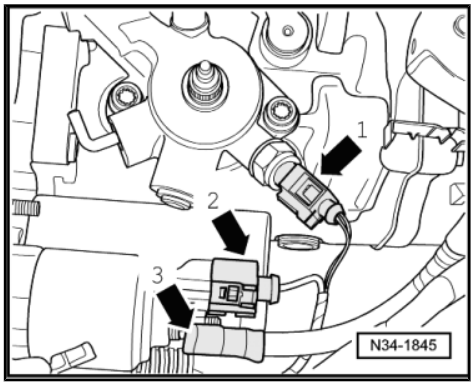

– Bolt bracket -T10346- to rear of the three mounting holes for battery tray.
– To do this, use a collar bolt M 6 x 80 or a securing bolt for battery tray.
– If there are hose and cable connections in area of engine support eye for support bracket -10 - 222 A- , remove these now.

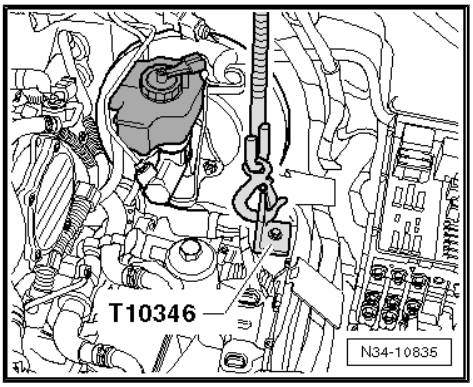

– Set up support bracket -10-222 A- in front of bonnet support.
– Use:
♦ Adapter -10-222 A /3-
♦ Adapter -10-222 A /8-
♦ Adapter -10-222 A /18-
– Position adapter -10-222 A /8- :
• On upper longitudinal carrier, directly before the elevation (-arrow 1-) next to bolt (-arrow 2-)
– Connect bracket -T10346- to support bracket .
– Attach spindles in left engine support eyes.
– Take up weight of engine/gearbox assembly and support bracket on spindles.
– Raise vehicle.
– Remove noise insulation ⇒ General body repairs, exterior; Rep. Gr. 50 ; Noise insulation .
– Remove lower part of front left wheel housing liner ⇒ General body repairs, exterior; Rep. Gr. 66 ; Wheel housing liner .
– Then remove all lines from gearbox.

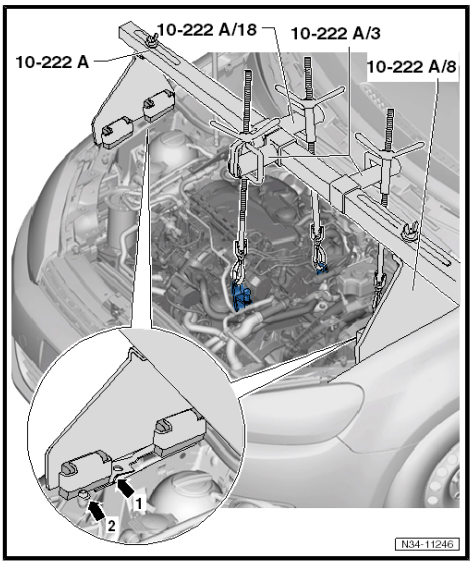

– Gearboxes for vehicles with start-stop system: pull connector -arrow- from gearbox neutral position sender -G701- .

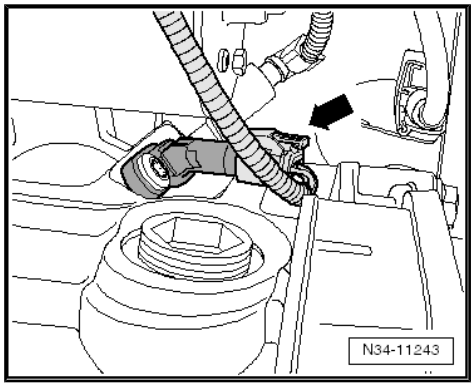

– Remove starter ⇒ Electrical system; Rep. Gr. 27 ; Starter .

– If front vehicle level sender -G78- is present, unbolt it from transverse link ⇒ Rep. Gr. 40 ; Removing and installing front vehicle level sender -G78- .

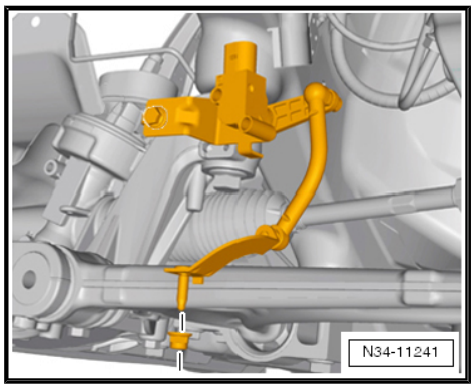

– Remove drive shaft heat shield, if present -arrows- ⇒ Running gear, axles, steering; Rep. Gr. 40 ; Repairing drive shafts; Removing and installing drive shafts .

– Remove drive shafts from flange shafts, raise as high as possible and secure. Do not damage the surface protection ⇒ Running gear, axles, steering; Rep. Gr. 40 ; Removing and installing drive shafts .

– Separate exhaust system at double clamp and unbolt exhaust pipe bracket from subframe ⇒ Rep. Gr. 26 ; Exhaust system .

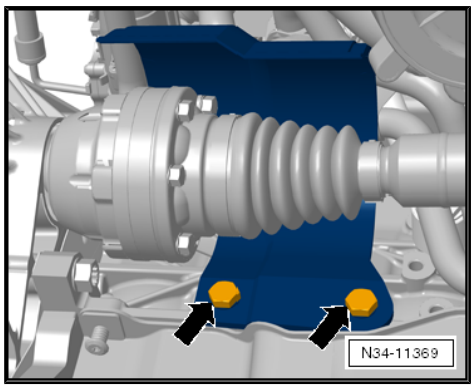

– Remove pendulum support.

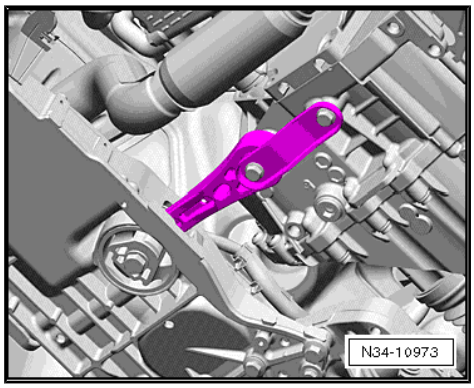

Volkswagen Technical Site: http://vwts.ru http://vwts.info

– Remove hexagon bolts -arrows- for left assembly mounting from gearbox mounting.

– Tilt engine/gearbox assembly by lowering it via spindles of support bracket -10 - 222 A- .

• Securing bolts -arrows- for gearbox bracket -A- must be accessible.

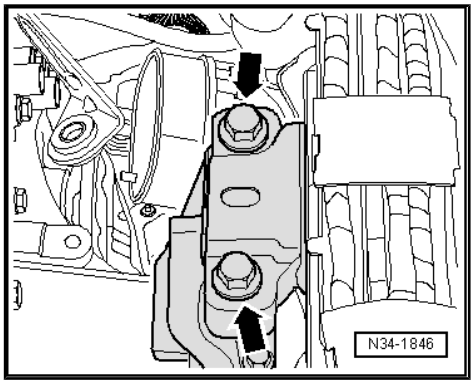

– Remove gearbox bracket -A- -arrows-.

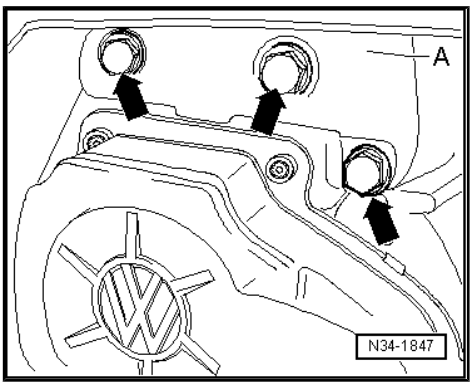

– If small cover plate -A- for flywheel behind the right flange shaft -arrows- is installed, remove it.

– Attach bracket -T10346- with bolt -1- to left threaded hole in subframe.

-1- = Flange bolt M6 x 20.

– Secure engine support -3300 A- to bracket -T10346- .

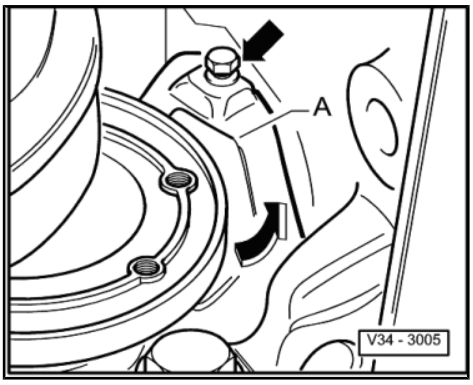

– Place a cloth between engine support -3300 A- and oil pan.

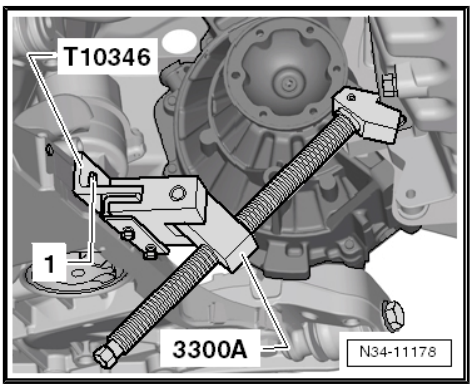

– Press engine forwards using spindle of engine support -3300 A- . In the process, observe the following points in particular:

• The air conditioning compressor -2- must not contact -arrow- the refrigerant line -1-

• The alternator must not contact the refrigerant line.

• The pressure pipe must not contact the radiator.

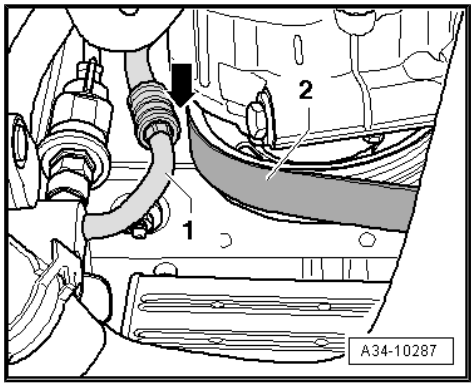

To remove gearbox “0A4”, set up gearbox support -3282- with adjustment plate -3282/39- .

– Insert gearbox support -3282- in engine and gearbox jack -V.A.G 1383A- .

– Align arms of gearbox support according to holes in adjustment plate .

– Screw in support elements -A - and -C- on adjustment plate as shown.

– Position engine and gearbox jack under vehicle. Arrow -B- on adjustment plate points in direction of vehicle travel.

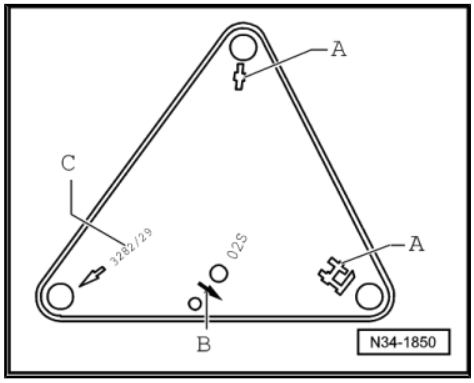

– Align adjustment plate parallel to gearbox and lock safety support on gearbox.

– Then screw pin -3282/29- into hole on gearbox for securing bolt of pendulum support.

– Remove lower engine/gearbox connecting bolts.

– Separate exhaust system if lower bolts -arrows- cannot be removed.

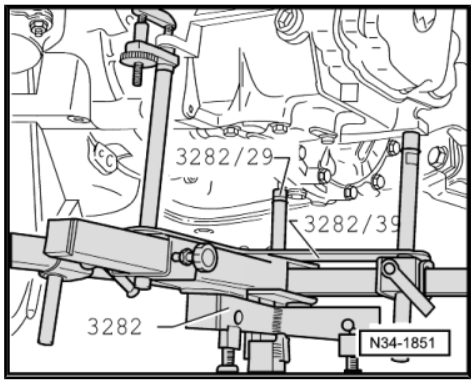

⇒ Rep. Gr. 26 ; Removing and installing parts of the exhaust system

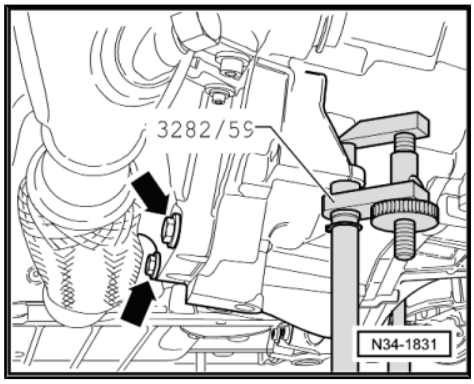

– Press gearbox off dowel sleeves and carefully swing towards subframe.
– Turn gearbox downwards in vicinity of differential.

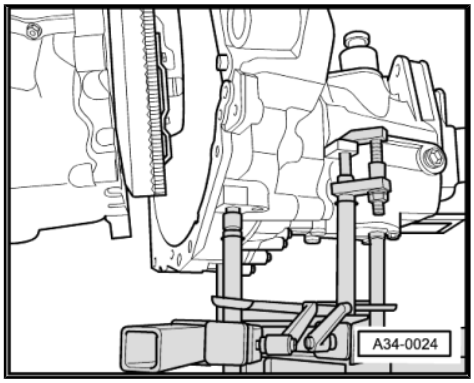

– Carefully lower gearbox, guiding right-hand flange shaft -A- past dowel sleeve -arrow- in cylinder block as shown.

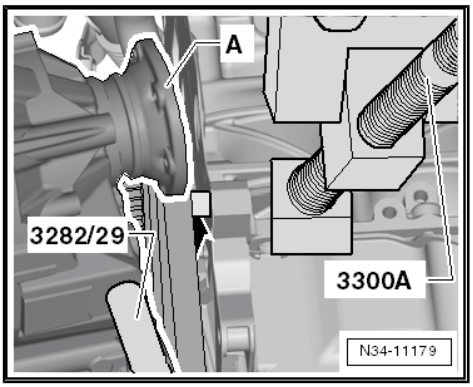

– Guide left flange shaft -B- past subframe bracket -arrow- as shown.
– When lowering gearbox, change position of gearbox using spindles of gearbox support -3282- .

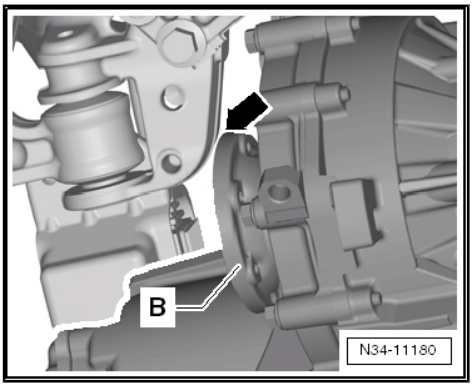

Note

Be careful of all lines when lowering gearbox.

3.2 Installing gearbox

Note

Refer to procedure "Removing gearbox" for required special tools *⇒ page 157* .

Observe the following table on the subject of "checking and topping up gear oil".

"Checking and topping up gear oil"			
	"No"	"Yes"	"Yes"

"Checking and topping up gear oil"				
Gearbox	Original part	X		
	No oil loss	X		
	Completely dismantled		X Before installation ⇒ Item 3 (page 250) Oil capacity ⇒ page 2	
	Partially dismantled • (Gearbox housing and clutch housing were not separated.)			X After installation ⇒ page 220

– All threaded holes into which self-locking bolts are to be screwed must be cleaned of residual locking fluid carefully with a thread tap.

– Always renew self-locking bolts and nuts.

– Check whether dowel sleeves for aligning engine and gearbox are fitted in cylinder block and install if necessary.

If dowel sleeves are not fitted, difficulties shifting gears, clutch problems and possible noises from the gearbox (rattling of gears which are not engaged) could occur.

– Ensure that intermediate plate is correctly seated on engine.

– Clean input shaft splines and apply thin coat of grease for clutch plate splines -G 000 100- .

The clutch plate must slide easily to and fro on the input shaft.

– Attach bracket -T10346- with bolt -1- to left threaded hole in subframe.

– In the process, position bracket -T10346- at the same angle as the engine.

-1- = Flange bolt M6 x 20.

– Secure engine support -3300 A- to bracket -T10346- .

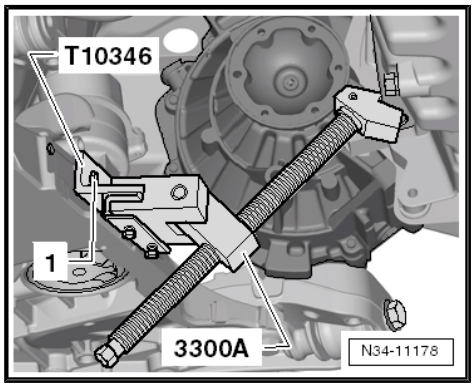

– Press engine forwards using spindle of engine support -3300 A- . In the process, observe the following points in particular:

• The air conditioning compressor -2- must not contact -arrow- the refrigerant line -1-

• The alternator must not contact the refrigerant line.

• The pressure pipe must not contact the radiator.

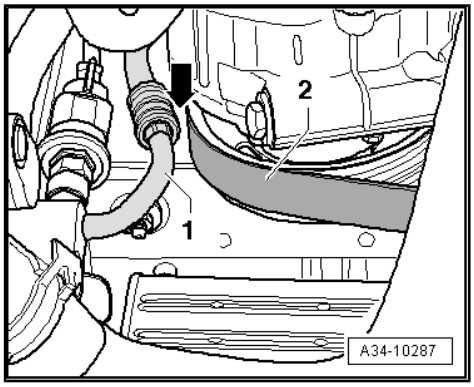

To install gearbox “0A4”, set up gearbox support -3282- with adjustment plate -3282/39- .

– Align arms of gearbox support according to holes in adjustment plate .

– Screw in support elements -A - and -C- (pin -3282/29-) on adjustment plate as shown.

– Place gearbox on engine and gearbox jack .

– Align adjustment plate and gearbox parallel to one another.

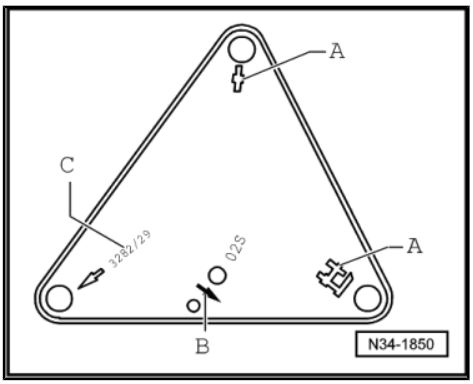

– Screw pin -3282/29- into hole on gearbox for securing bolt of pendulum support.

– Position engine and gearbox jack under vehicle. -Arrow B- on adjustment plate points in direction of vehicle travel.

– Using spindles of gearbox support -3282- , tilt gearbox downwards in vicinity of differential.

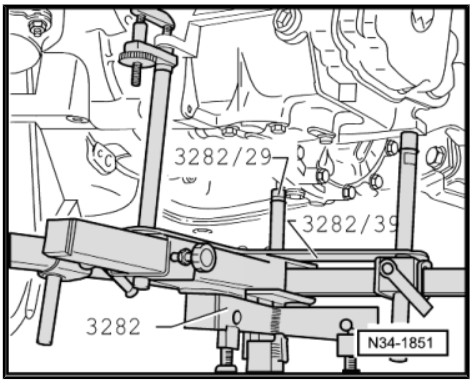

– Carefully lift gearbox, guiding right-hand flange shaft -A- past dowel sleeve in cylinder block -arrow- as shown.

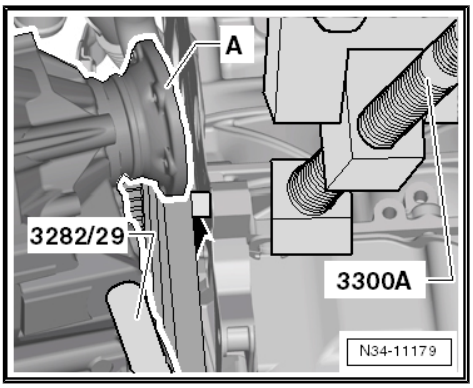

– Guide left flange shaft -B- past subframe bracket -arrow- as shown.
– Using spindles of gearbox support -3282- , tilt gearbox upwards in vicinity of differential.
– Raise gearbox to engine.
– Align gearbox to engine and join.
– Screw in lower engine/gearbox securing bolts and tighten to specified torque ⇒ page 169 .
– After gearbox has been bolted to engine, remove engine and gearbox jack from gearbox.
– Remove engine support -3300 A- and bracket -T10346- .

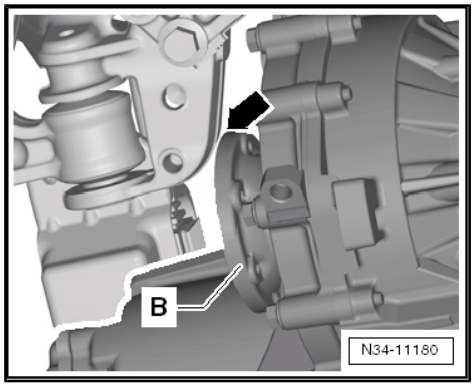

– If small cover plate had been installed behind the right-hand flange shaft -A-, install it -arrows-.
– Screw in upper engine/gearbox securing bolts and tighten to specified torque ⇒ page 169 .

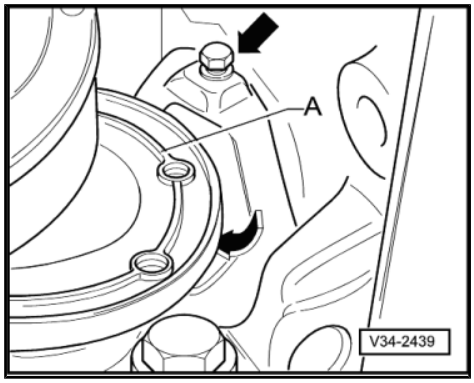

– Install bracket -A- on gearbox using new hexagonal bolts -arrows- and tighten to specified torque ⇒ page 169 .

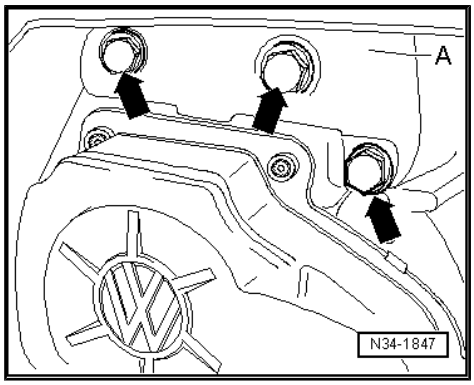

– Align engine and gearbox in installation position using both spindles of support bracket -10 - 222 A- .

– Install new bolts -arrows- for left assembly mounting in gearbox mounting and tighten to specified torque ⇒ page 169 .

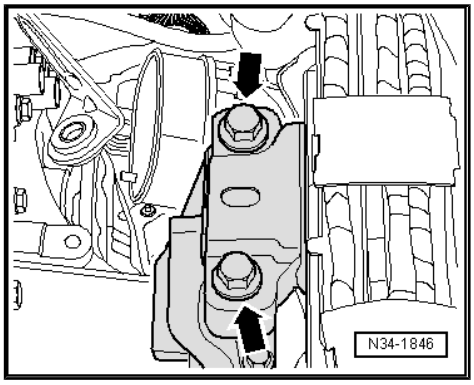

WARNING

Do not remove support bracket -10 - 222 A- until the bolts securing the left and right assembly mountings have been tightened to specified torque.

Note

Install engine and gearbox mounting free of tension ⇒ Rep. Gr. 10 ; Removing and installing engine .

– Then install drive shafts ⇒ Running gear, axles, steering; Rep. Gr. 40 ; Removing and installing drive shafts .

– Install drive shaft heat shield, if present -arrows- ⇒ Running gear, axles, steering; Rep. Gr. 40 ; Repairing drive shafts; Removing and installing drive shafts .

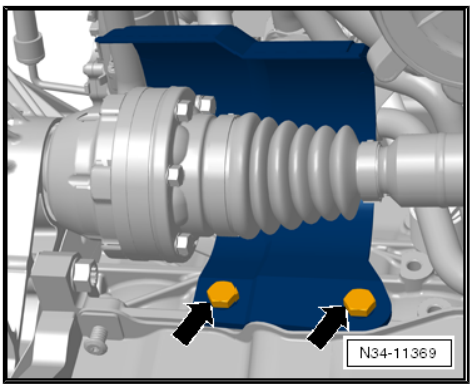

– Install pendulum support ⇒ Running gear, axles, steering; Rep. Gr. 40 ; Repairing front suspension .

– Assemble exhaust system and attach exhaust system bracket to subframe ⇒ Rep. Gr. 26 ; Exhaust system .

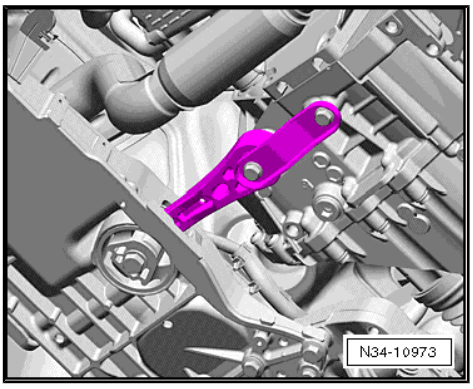

– If front vehicle level sender -G78- -arrows- is present, install it ⇒ Rep. Gr. 40 ; Removing and installing front vehicle level sender -G78- .

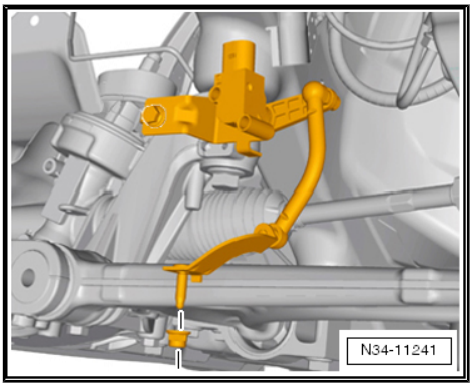

– Gearboxes for vehicles with start-stop system: join connector -arrow- to gearbox neutral position sender -G701- .

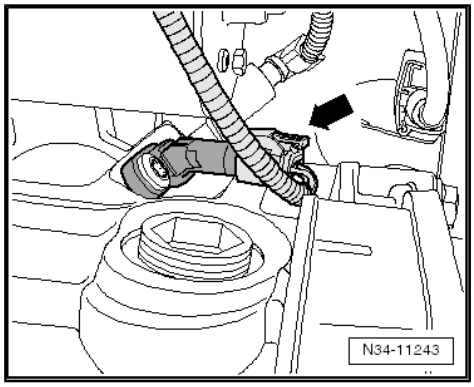

– Install slave cylinder and tighten bolts -arrows B- to specified torque ⇒ Item 9 (page 104) .

– Then install gearbox support -arrow A- and tighten to specified torque ⇒ page 169 .

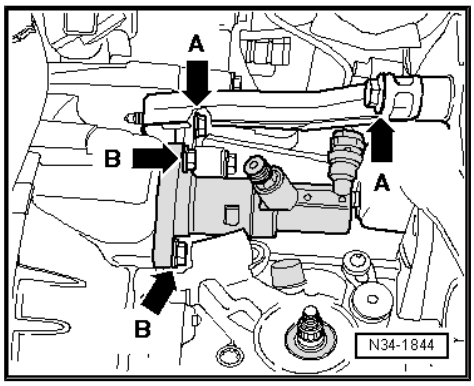

– Push connector -1- onto reversing light switch -F4- .

– Install starter, push on connector -arrow 2- and bolt on wire -arrow 3- ⇒ Electrical system; Rep. Gr. 27 ; Starter .

– Install earth strap at upper engine/gearbox connecting bolt.

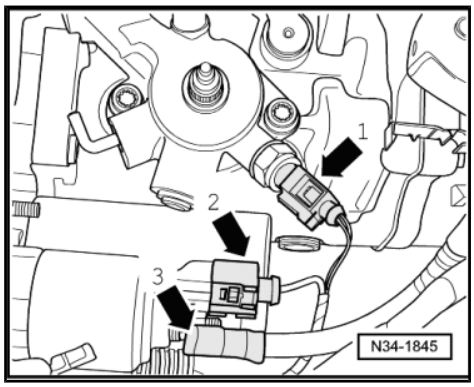

– Attach support -B- to gearbox.

– Press pipe/hose line -A- into retainer -B- on gearbox.

– Install cable support bracket on gearbox and tighten bolts -arrows- to specified torque ⇒ Item 6 (page 131) .

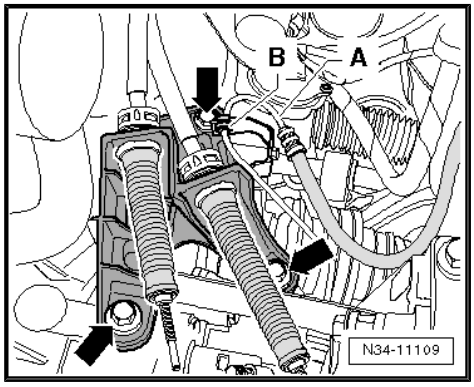

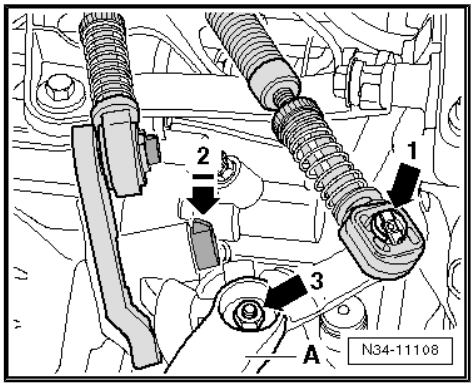

– Install gearbox selector lever -A- ⇒ page 133 .

– Tighten hexagon nut -arrow 3- to specified torque ⇒ Item 18 (page 132) .

– Spread a small amount of grease on pin of gearbox selector lever -A-.

Allocate grease using ⇒ Electronic parts catalogue (ETKA) .

– Connect gear selector cable to gearbox selector lever -arrow 1-.

– Install relay lever together with cable end-piece ⇒ page 134 .

– Adjusting selector mechanism ⇒ page 139 .

– Install battery tray, battery cover and battery ⇒ Electrical system; Rep. Gr. 27 ; Removing and installing battery .

– Install engine cover and air filter housing ⇒ Rep. Gr. 23 or ⇒ Rep. Gr. 24

– Reconnect battery and perform work required after connecting battery ⇒ Electrical system; Rep. Gr. 27 ; Disconnecting and connecting battery .

– Install lower part of front left wheel housing liner ⇒ General body repairs, exterior; Rep. Gr. 66 ; Wheel housing liner .

– Install noise insulation ⇒ General body repairs, exterior; Rep. Gr. 50 ; Noise insulation .

– For vehicles with front vehicle level sender -G78- , check headlight adjustment ⇒ Electrical system; Rep. Gr. 94 ; Lights, lamps, switches - exterior .

3.2.1 Torque settings

Gearbox to engine

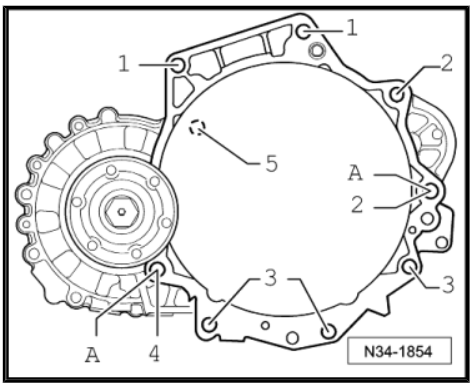

Item	Bolt	Quantity	Nm
1	M 12 x 50	2	80
2	M 12 x 150 ♦ Additionally, starter to gearbox	2	80
3	M10 x 50	3	40
4	M12 x 60	1	80
5	M6 x 8 ♦ Small flywheel cover plate	1	10

Item -A- dowel sleeves for centring

Gearbox bracket to gearbox

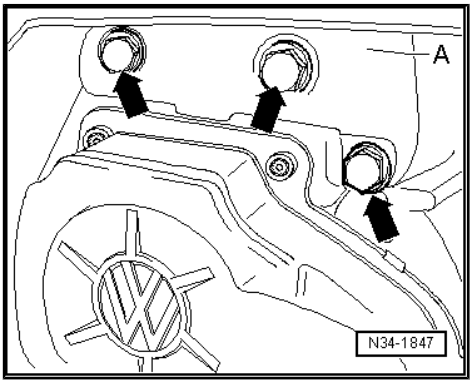

– Renew bolts.

– Screw in all bolts hand-tight.

– Tighten bolts to specified torque.

Bolts -arrows- 40 Nm + 90°

Gearbox mounting to body

– Renew bolts.
– Screw in all bolts hand-tight.
– Tighten bolts to specified torque.

Bolts -arrows-	60 Nm + 90°

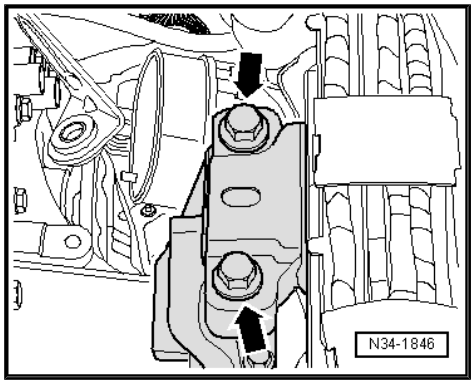

Gearbox support to gearbox bracket and gearbox

– Renew bolts.
– Screw in all bolts hand-tight.
– Tighten bolts to specified torque.

Bolts -arrows-	20 Nm + 90°

Drive shaft to flange shaft ⇒ Running gear, axles, steering; Rep. Gr. 40 ; Repairing drive shaft; Removing and installing drive shafts .

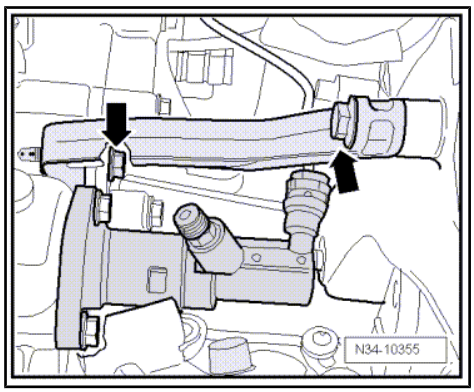

4 Removing and installing gearbox, Golf 2009 ▸ with petrol engine

Special tools and workshop equipment required

- Support bracket -10 - 222 A-
- Adapter -10-222 A /8-
- Adapter -10 - 222 A /18-
- Adjustment plate -3282/39-
- Support elements for gearbox (determine when setting adjustment plate on gearbox support)
- Gearbox support -3282-

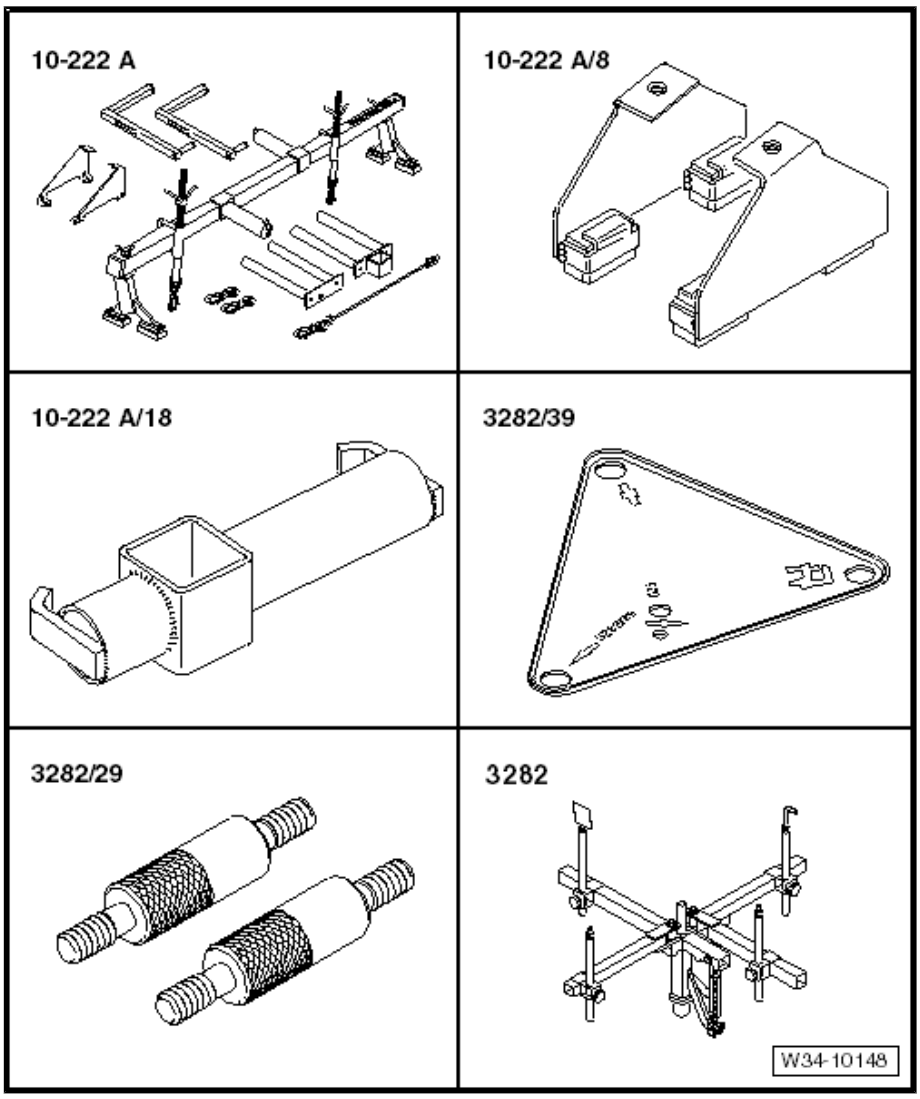

- Shackle -T10419-

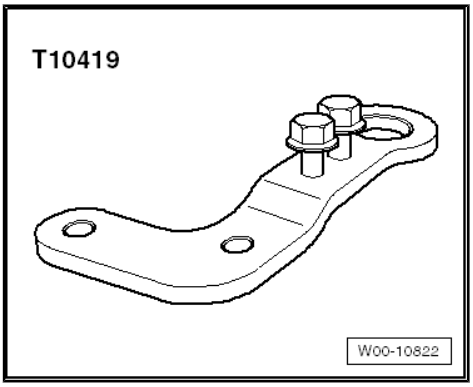

- Shackle -10-222 A /12-

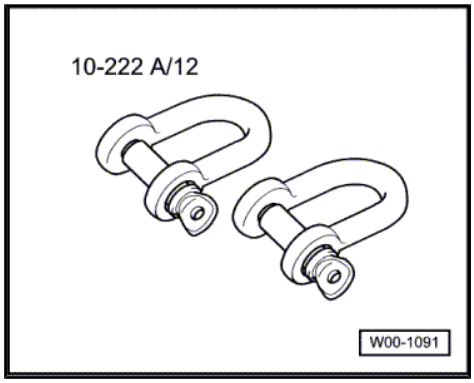

- Engine and gearbox jack -V.A.G 1383A-
- Engine support -3300 A-
- Torque wrench -V.A.G 1331-
- Torque wrench -V.A.G 1332-
- Gearbox lifting tackle -3336- for transporting gearbox
- Grease for clutch plate splines -G 000 100-
- Allocate grease using ⇒ Electronic parts catalogue (ETKA) .
- 2 x hexagon socket head bolt M 6 × 20
- Flange bolt M6 x 80
- Support -T10036 A-
- or support -T10036-

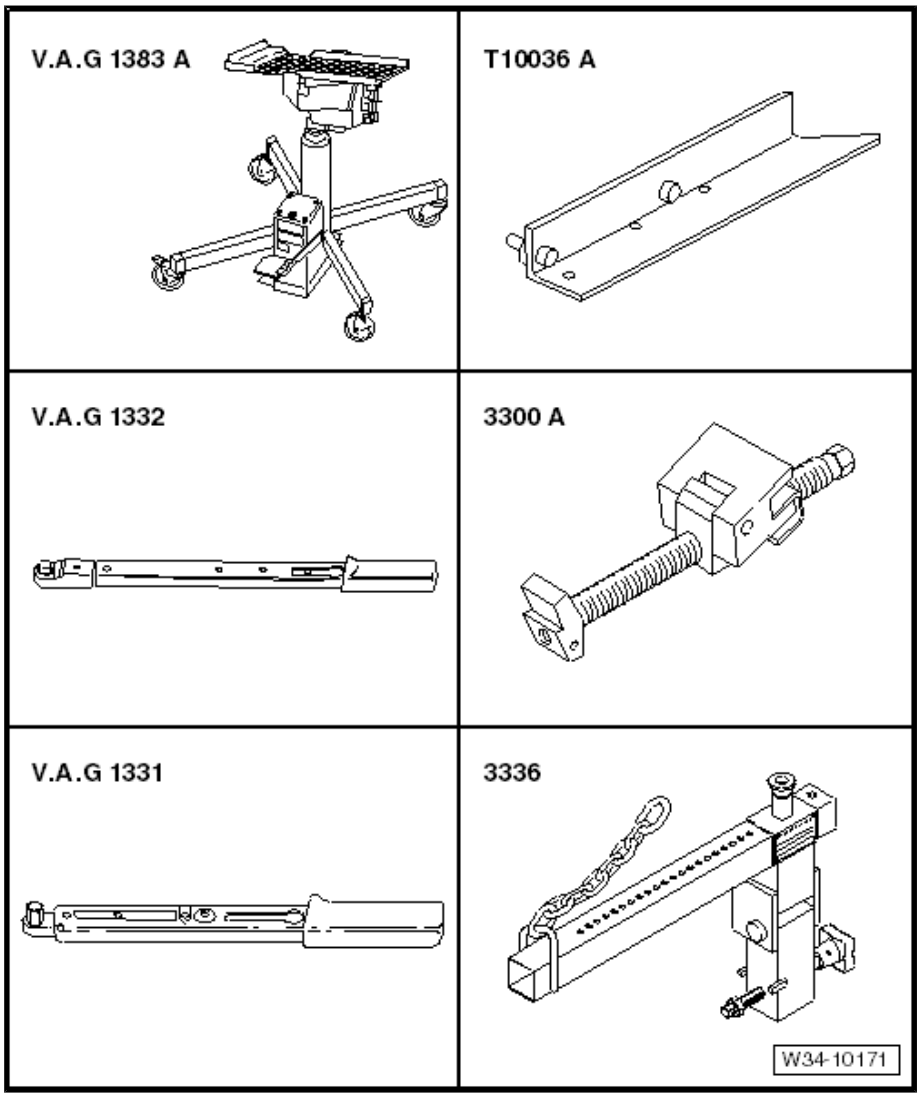

– If you are using support -T10036- , apply 2 holes ∅ 7 mm as shown in illustration.

- Dimension -a- = 11 mm
- Dimension -b- = 98 mm
- Dimension -c- = 70 mm

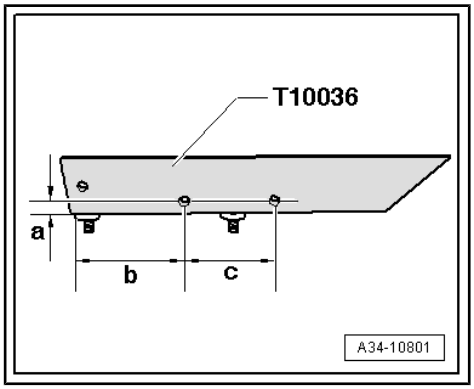

At a later point, support bracket -10-222 A- will be put onto longitudinal members with adapters -10 - 222 A /8- .

- To prevent damage to edges of wings, cover bottom area of both adapters -10 - 222 A /8- with self-adhesive fabric tape -arrow- ⇒ Electronic parts catalogue (ETKA chemical substances) .

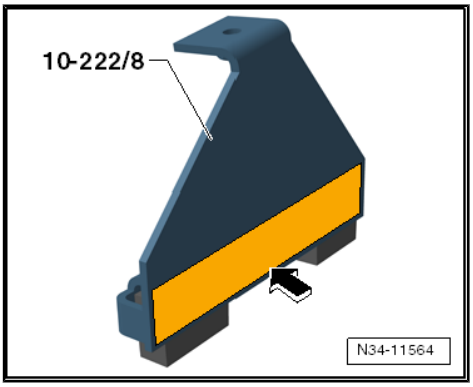

4.1 Removing gearbox

– First check whether a coded radio is fitted. If so, obtain anti-theft code.

– With ignition switched off, disconnect battery ⇒ Electrical system; Rep. Gr. 27 ; Disconnecting and connecting battery .

– Then remove engine cover with air filter ⇒ Rep. Gr. 24 ; Repairing injection system .

– Remove battery and battery tray ⇒ Electrical system; Rep. Gr. 27 ; Removing and installing battery .

– Release end-piece from gate selector cable ⇒ page 134 .

– Pull clip -arrow 1- off and remove relay lever together with cable end-piece.

– Remove securing clip -arrow 2- for gear selector cable from gearbox selector lever -A-.

– Pull gear selector cable off pin.

– Remove gearbox selector lever -A- by removing nut -arrow 3-.

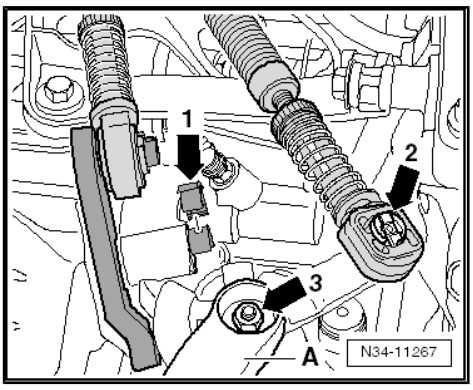

– Remove cable support bracket from gearbox -arrows-.
– Then raise and secure gear selector cable and gate selector cable.
– Remove bracket -B- from gearbox and pull it off pipe/hose line -A-.

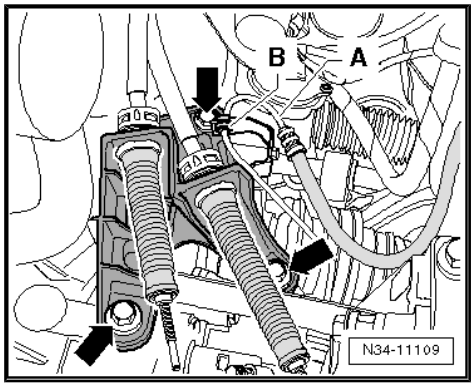

– Then remove gearbox support -arrow A-.
– Remove slave cylinder -arrow B-, lay to side and secure with wire. Do not disconnect pipes.

> ⚠ **Caution**
>
> *Do not operate clutch pedal any more.*

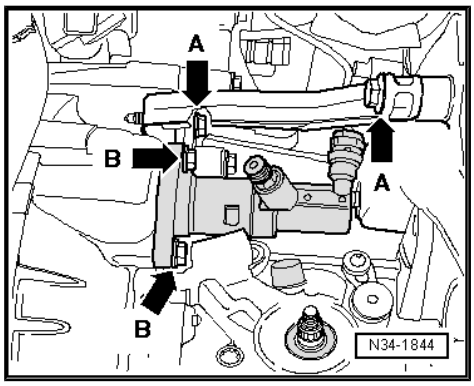

– Pull connector -arrow 1- off reversing light switch -F4- .
– Now remove connector -arrow 2- and wire -arrow 3- from starter.
– Remove earth strap at upper engine/gearbox connecting bolt.
– Then remove upper securing bolt on starter.
– Remove upper engine/gearbox connecting bolts.

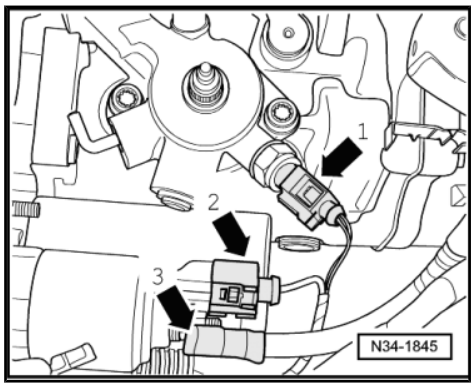

– To prevent damage to vacuum hose from brake servo to engine, it must be removed from engine -arrow- ⇒ Rep. Gr. 47 .

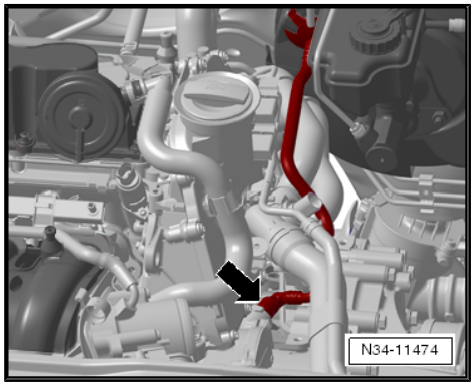

Note

- *At a later point, support bracket -10-222 A- is connected to engine to lower engine/gearbox.*
- *Some engines have a secondary air inlet valve -N112- on the back -arrow-.*

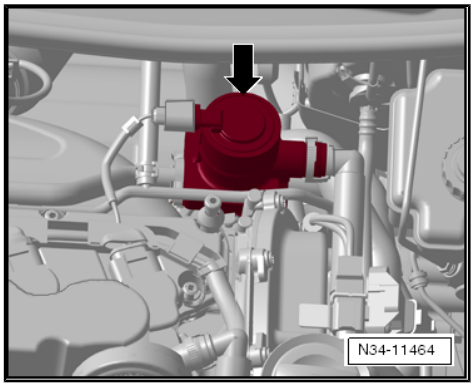

- Both upper threaded holes for securing bolts of secondary air inlet valve are needed for attaching engine to support bracket -10-222 A- ⇒ -arrows- in figure below.
- Therefore, secondary air inlet valve must be removed ⇒ Rep. Gr. 26 ; Secondary air system .

– Attach lug -T10419- to rear of engine -direction of arrow-.

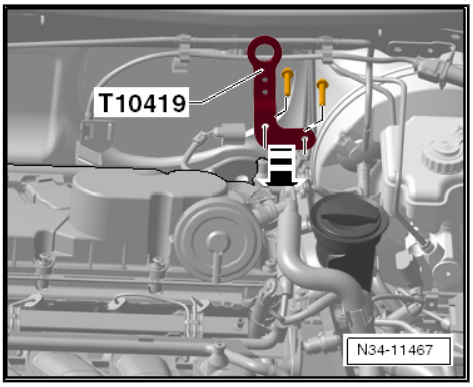

– Screw lug tightly into threaded holes, -arrows-.

Torque setting: 10 Nm

> WARNING
>
> *Always tighten bolts to specified torque.*

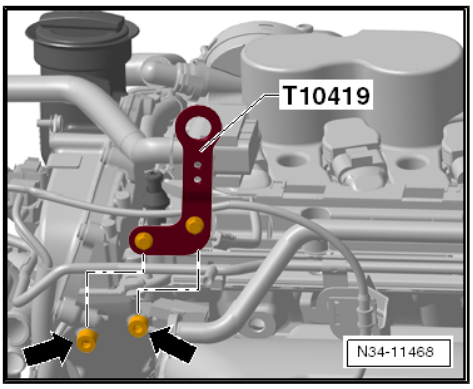

In addition, retaining eye -arrow A-, at front of engine, is needed for catching engine.

– Remove transport eye -arrow B- and remove it from retaining eye -arrow A-, without disconnecting line connections ⇒ Rep. Gr. 15 ; Cylinder head, valve gear .

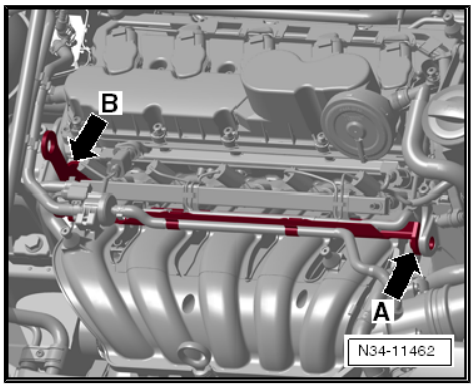

– Set up support bracket -10-222 A- in front of bonnet support.

– Use:

♦ Adapter -10-222 A /8-

♦ Adapter -10-222 A /18-

– Position adapter -10-222 A /8- :

• On upper longitudinal carrier, directly before the elevation (-arrow 1-) next to bolt (-arrow 2-)

– Attach shackle -10-222 A /12- at front left of engine.

– Connect lug -T10419- and shackle -10-222 A /12- to support bracket .

– Take up weight of engine/gearbox assembly on spindles.

– Raise vehicle.

– Remove noise insulation ⇒ General body repairs, exterior; Rep. Gr. 50 ; Noise insulation .

– Remove lower part of front left wheel housing liner ⇒ General body repairs, exterior; Rep. Gr. 66 ; Wheel housing liner .

– Then remove all lines from gearbox.

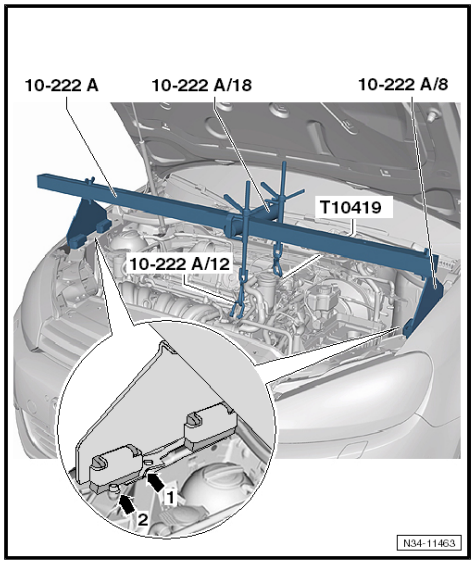

– Remove starter ⇒ Electrical system; Rep. Gr. 27 ; Starter .

– If front vehicle level sender -G78- is present, unbolt it from transverse link ⇒ Rep. Gr. 40 ; Removing and installing front vehicle level sender -G78- .

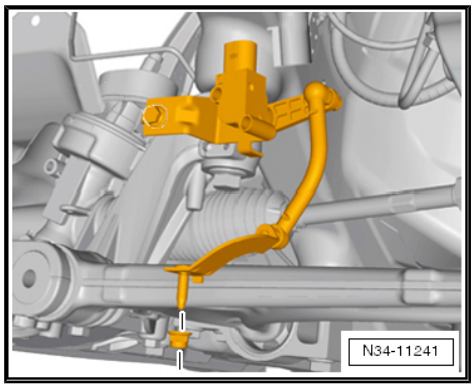

– Remove drive shaft heat shield, if present -arrows- ⇒ Running gear, axles, steering; Rep. Gr. 40 ; Repairing drive shafts; Removing and installing drive shafts .

– Remove drive shafts from flange shafts, raise as high as possible and secure. Do not damage the surface protection ⇒ Running gear, axles, steering; Rep. Gr. 40 ; Removing and installing drive shafts .

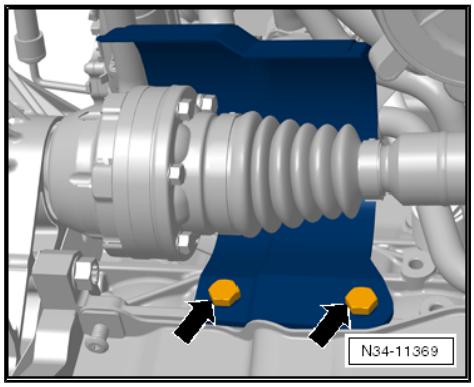

– Remove front exhaust pipe -1- from manifold by removing 4 nuts -2- and bolts -3- ⇒ Rep. Gr. 26 ; Exhaust system .

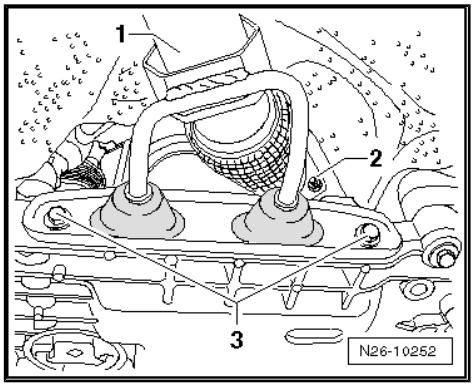

– Remove pendulum support.

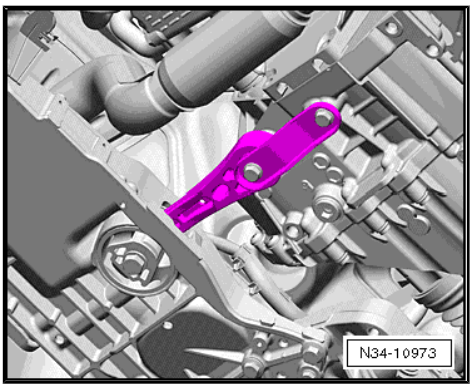

– Remove hexagon bolts -arrows- for left assembly mounting from gearbox mounting.
– Tilt engine/gearbox assembly by lowering it via spindles of support bracket -10 - 222 A- .
• Securing bolts -arrows- for gearbox bracket -A- must be accessible.

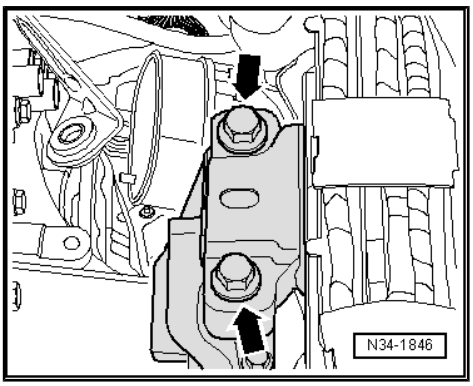

– Remove gearbox bracket -A- -arrows-.

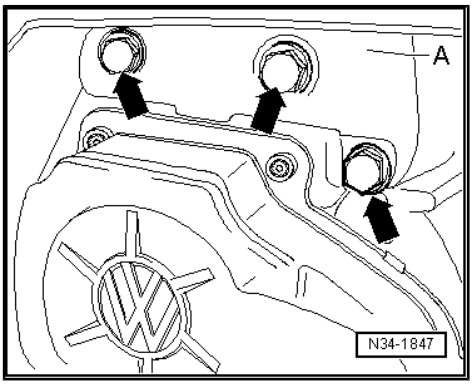

– If heat shield is installed, remove it from subframe -arrows-.

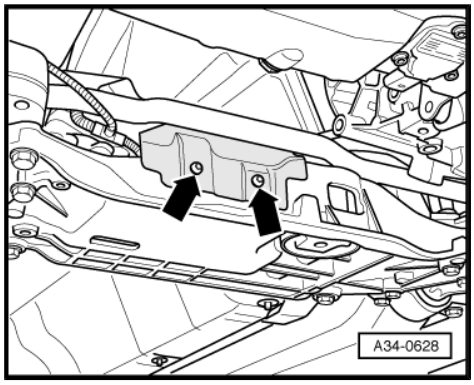

– Screw support -T10036- or support -T10036 A- tightly onto subframe using 2 hexagon socket head bolts M6 × 20 -arrows-.

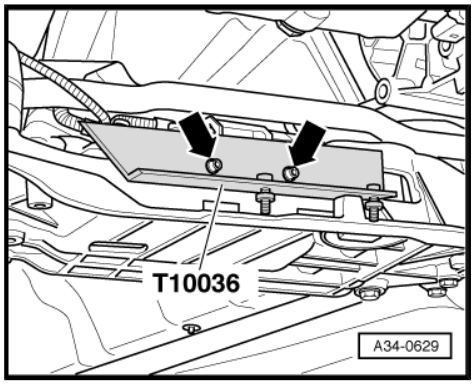

– Secure engine support -3300 A- onto support -A-.

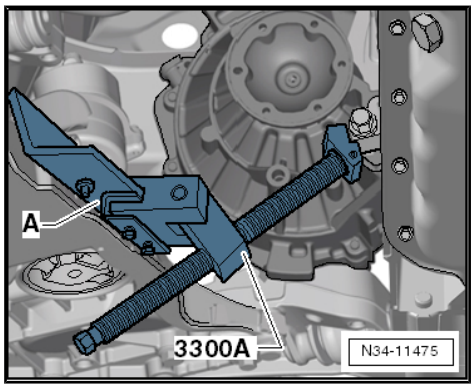

– Press engine forwards using spindle of engine support -3300 A- . In the process, observe the following points in particular:

- The air conditioning compressor -2- must not contact -arrow- the refrigerant line -1-.
- The alternator must not contact the refrigerant line.
- The pressure pipe must not contact the radiator.

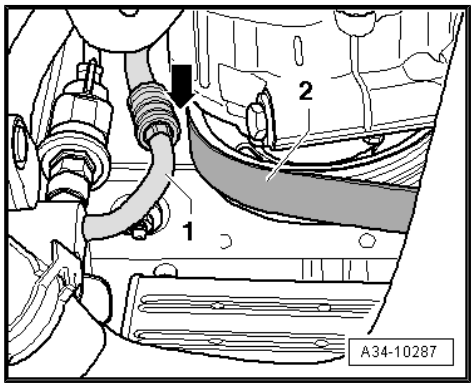

To remove gearbox “0A4”, set up gearbox support -3282- with adjustment plate -3282/39- .

– Insert gearbox support -3282- in engine and gearbox jack -V.A.G 1383A- .

– Align arms of gearbox support according to holes in adjustment plate .

– Screw in support elements -A - and -C- on adjustment plate as shown.
– Position engine and gearbox jack under vehicle. Arrow -B- on adjustment plate points in direction of vehicle travel.

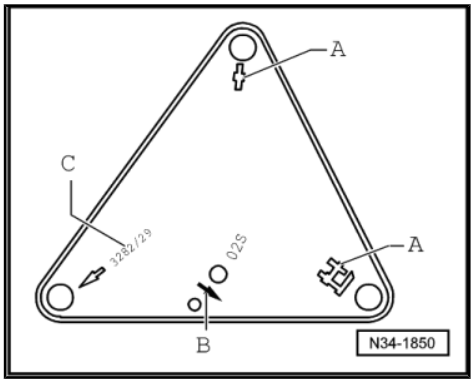

– Align adjustment plate parallel to gearbox and lock safety support on gearbox.
– Then screw pin -3282/29- into hole on gearbox for securing bolt of pendulum support.
– Remove lower engine/gearbox connecting bolts.

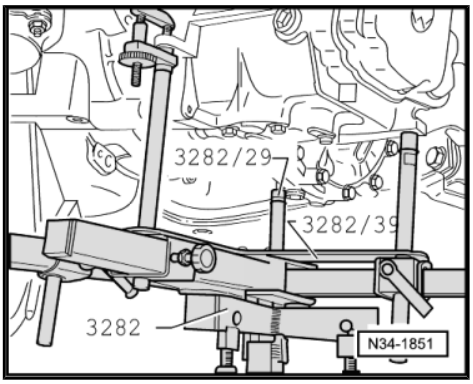

– Press gearbox off dowel sleeves and carefully swing towards subframe.

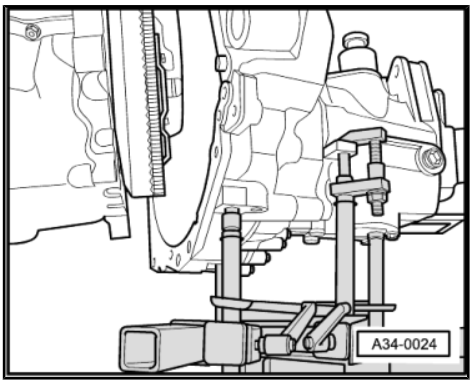

– Then guide right flange shaft past recess -arrow 1-.
– Lower gearbox carefully.
– Guide right flange shaft past flywheel -arrow 2- (⇒ figure above).

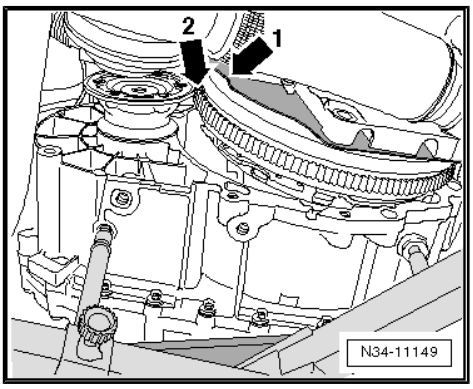

– Guide left flange shaft -B- past subframe bracket -arrow- as shown.

– When lowering gearbox, change position of gearbox using spindles of gearbox support -3282- .

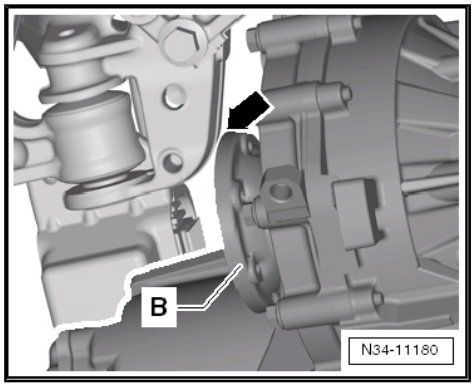

Note

Be careful of all lines when lowering gearbox.

4.2 Installing gearbox

Note

Refer to procedure "Removing gearbox" for required special tools *⇒ page 173* .

Observe the following table on the subject of "checking and topping up gear oil".

"Checking and topping up gear oil"				
		"No"	"Yes"	"Yes"
Gearbox	Original part	X		
	No oil loss	X		
	Completely dismantled		X Before installation ⇒ Item 3 (page 250) Oil capacity ⇒ page 2	
	Partially dismantled • (Gearbox housing and clutch housing were not separated.)			X After installation ⇒ page 220

– All threaded holes into which self-locking bolts are to be screwed must be cleaned of residual locking fluid carefully with a thread tap.

– Always renew self-locking bolts and nuts.

– Check whether dowel sleeves for aligning engine and gearbox are fitted in cylinder block and install if necessary.

If dowel sleeves are not fitted, difficulties shifting gears, clutch problems and possible noises from the gearbox (rattling of gears which are not engaged) could occur.

– Ensure that intermediate plate is correctly seated on engine.

– Clean input shaft splines and apply thin coat of grease for clutch plate splines -G 000 100- .

The clutch plate must slide easily to and fro on the input shaft.

– If heat shield is installed, remove it from subframe -arrows-.

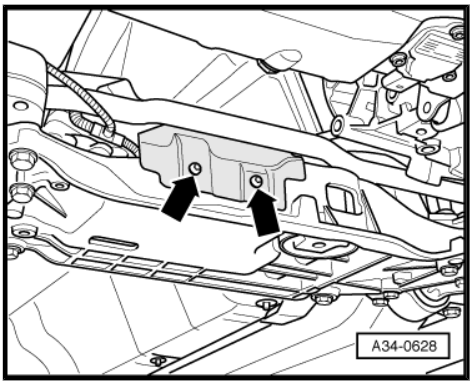

– Screw support -T10036- or support -T10036 A- tightly onto subframe using 2 hexagon socket head bolts M6 × 20 -arrows-.

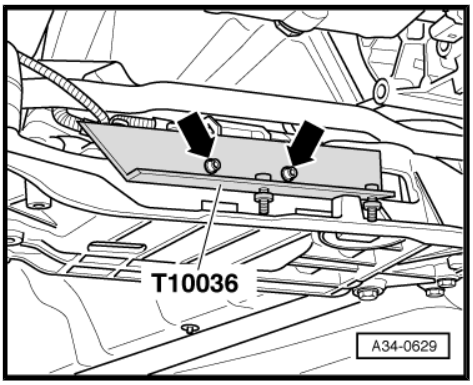

– Secure engine support -3300 A- onto support -A-.

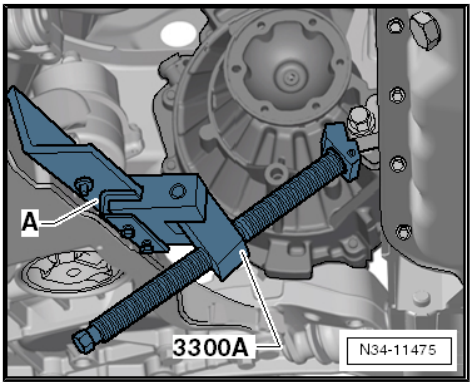

– Press engine forwards using spindle of engine support -3300 A- . In the process, observe the following points in particular:

- The air conditioning compressor -2- must not contact -arrow- the refrigerant line -1-.
- The alternator must not contact the refrigerant line.
- The pressure pipe must not contact the radiator.

To install gearbox “0A4”, set up gearbox support -3282- with adjustment plate -3282/39- .

– Align arms of gearbox support according to holes in adjustment plate .

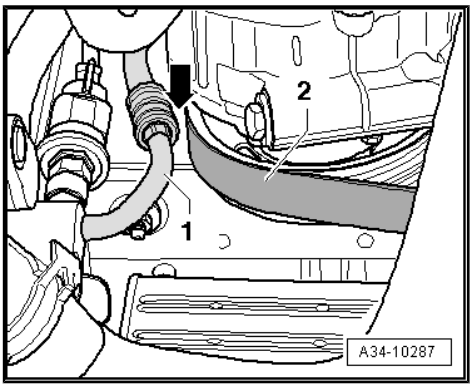

– Screw in support elements -A - and -C- (pin -3282/29-) on adjustment plate as shown.
– Place gearbox on engine and gearbox jack .
– Align adjustment plate and gearbox parallel to one another.

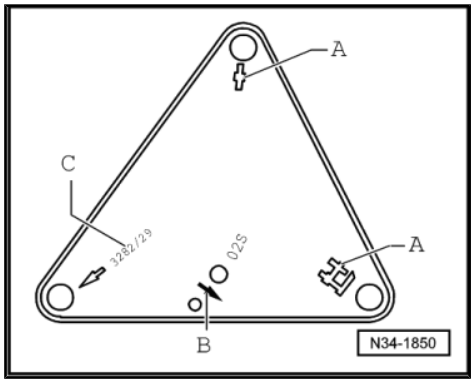

– Screw pin -3282/29- into hole on gearbox for securing bolt of pendulum support.
– Position engine and gearbox jack under vehicle. -Arrow B- on adjustment plate points in direction of vehicle travel.
– Raise gearbox carefully.

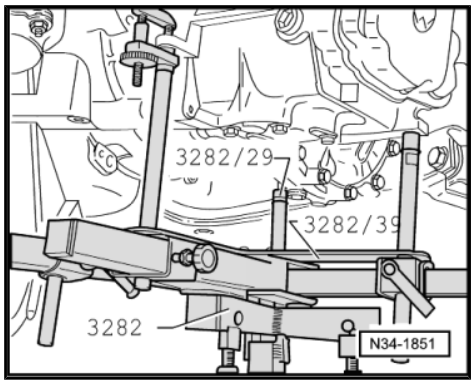

– Guide right flange shaft past flywheel -arrow 2-.

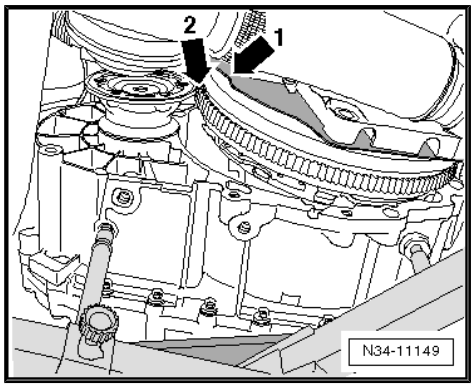

– Guide left flange shaft -B- past subframe bracket -arrow- as shown.
– Then guide right flange shaft past recess -arrow 1- ⇒ previous figure.
– Raise gearbox to engine.
– Align gearbox to engine and join.
– Screw in lower engine/gearbox securing bolts and tighten to specified torque ⇒ page 186 .
– After gearbox has been bolted to engine, remove engine and gearbox jack from gearbox.
– Remove engine support -3300 A- and support .

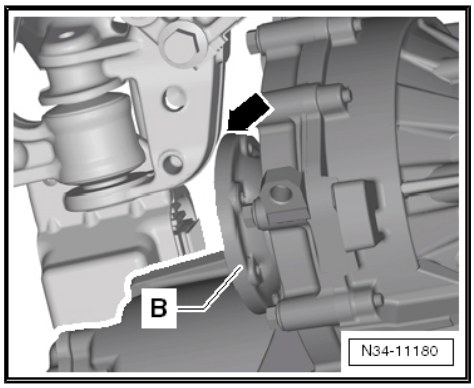

– If heat shield was removed, bolt it onto subframe, -arrows-.

– Screw in upper engine/gearbox securing bolts and tighten to specified torque ⇒ page 186 .

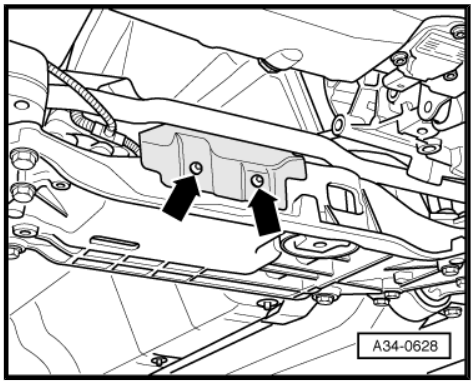

– Install bracket -A- on gearbox using new hexagonal bolts -arrows- and tighten to specified torque ⇒ page 186 .

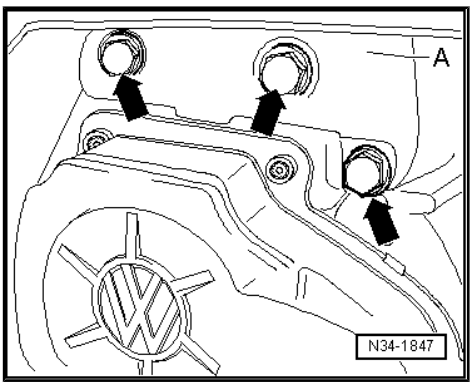

– Align engine and gearbox in installation position using both spindles of support bracket -10 - 222 A- .

– Install new bolts -arrows- for left assembly mounting in gearbox mounting and tighten to specified torque ⇒ page 186 .

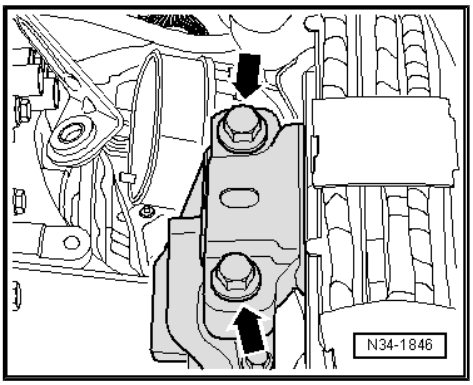

WARNING

Do not remove support bracket -10 - 222 A- until the bolts securing the left and right assembly mountings have been tightened to specified torque.

Note

Install engine and gearbox mounting free of tension ⇒ Rep. Gr. 10 ; Removing and installing engine .

– Then install drive shafts ⇒ Running gear, axles, steering; Rep. Gr. 40 ; Removing and installing drive shafts .

– Install drive shaft heat shield, if present -arrows- ⇒ Running gear, axles, steering; Rep. Gr. 40 ; Repairing drive shafts; Removing and installing drive shafts .

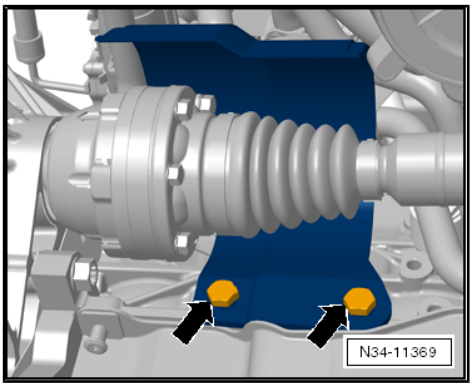

– Install pendulum support ⇒ Running gear, axles, steering; Rep. Gr. 40 ; Repairing front suspension .

– Assemble exhaust system and attach exhaust system bracket to subframe ⇒ Rep. Gr. 26 ; Exhaust system .

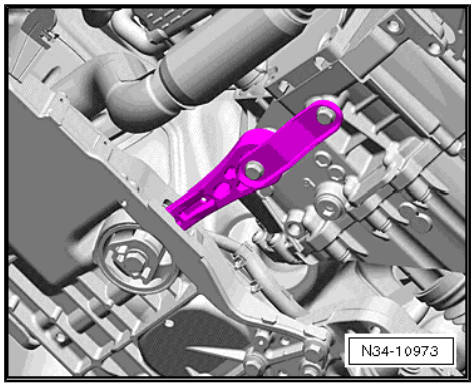

– If front vehicle level sender -G78- -arrows- is present, install it ⇒ Rep. Gr. 40 ; Removing and installing front vehicle level sender -G78- .

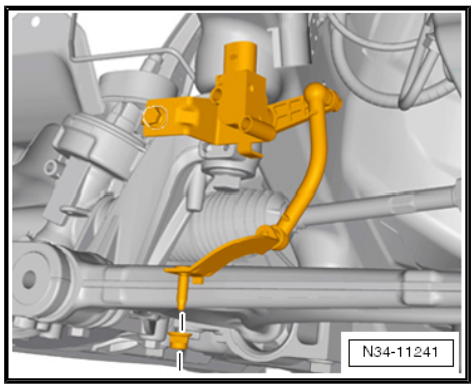

– Install vacuum hose -arrow- ⇒ Rep. Gr. 47 .

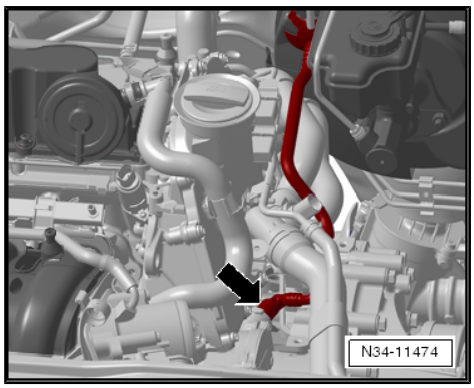

– Install slave cylinder and tighten bolts -arrows B- to specified torque ⇒ Item 9 (page 104) .

– Then install gearbox support -arrow A- and tighten to specified torque ⇒ page 186 .

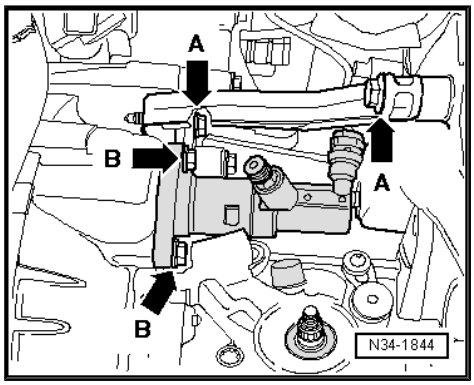

– Push connector -1- onto reversing light switch -F4- .

– Install starter, push on connector -arrow 2- and bolt on wire -arrow 3- ⇒ Electrical system; Rep. Gr. 27 ; Starter .

– Install earth strap at upper engine/gearbox connecting bolt.

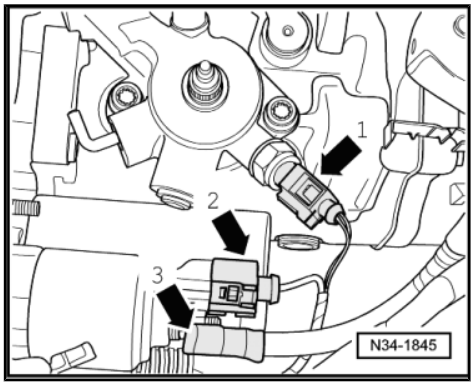

– Attach support -B- to gearbox.

– Press pipe/hose line -A- into retainer -B- on gearbox.

– Install cable support bracket on gearbox and tighten bolts -arrows- to specified torque ⇒ Item 6 (page 131) .

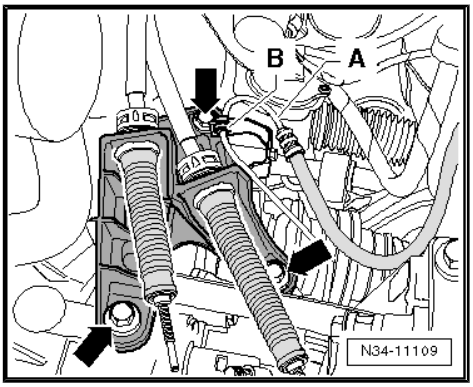

– Install gearbox selector lever -A- ⇒ page 133 .

– Tighten hexagon nut -arrow 3- to specified torque ⇒ Item 18 (page 132) .

– Spread a small amount of grease on pin of gearbox selector lever -A-.

Allocate grease using ⇒ Electronic parts catalogue (ETKA) .

– Connect gear selector cable to gearbox selector lever.

– Renew securing clip -arrow 2- each time it is removed.

– Install relay lever together with cable end-piece ⇒ page 134 .

• Clip -arrow 1- secures relay lever

• Ensure proper engagement of clip.

– Connect gate selector cable to cable end-piece.

– Adjust selector mechanism ⇒ page 139 .

– Remove shackle -10-222 A /12- from engine.

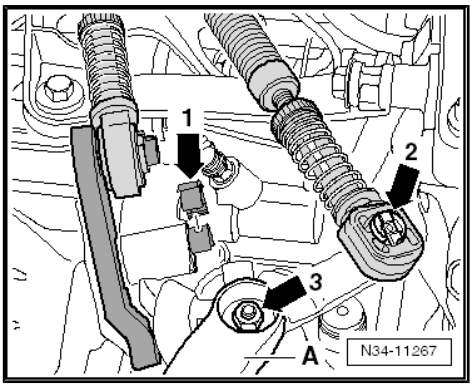

– Insert transport eye into retaining eye of engine -arrow A- and screw it tight -arrow B- ⇒ Rep. Gr. 15 ; Cylinder head, valve gear .

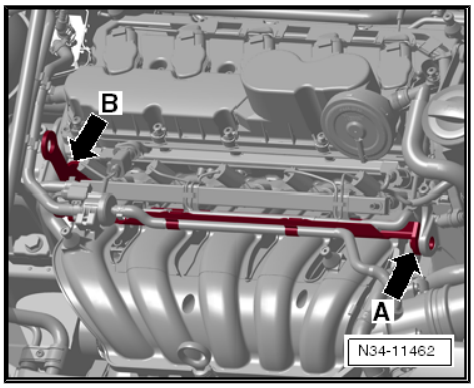

– Remove lug -T10419- from back of engine.

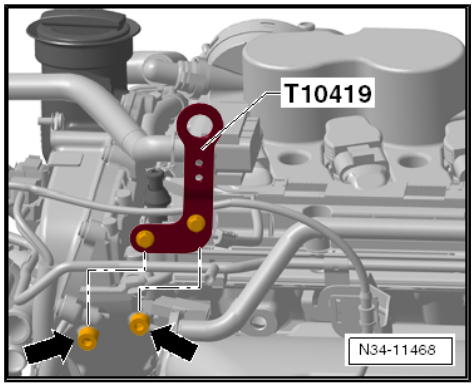

– If secondary air inlet valve -N112- -arrow- was removed, install it on engine ⇒ Rep. Gr. 26 ; Secondary air system .

– Install battery tray, battery cover and battery ⇒ Electrical system; Rep. Gr. 27 ; Removing and installing battery .

– Then remove engine cover with air filter ⇒ Rep. Gr. 24 ; Repairing injection system .

– Reconnect battery and perform work required after connecting battery ⇒ Electrical system; Rep. Gr. 27 ; Disconnecting and connecting battery .

– Install lower part of front left wheel housing liner ⇒ General body repairs, exterior; Rep. Gr. 66 ; Wheel housing liner .

– Install noise insulation ⇒ General body repairs, exterior; Rep. Gr. 50 ; Noise insulation .

– For vehicles with front vehicle level sender -G78- , check headlight adjustment ⇒ Electrical system; Rep. Gr. 94 ; Lights, lamps, switches - exterior .

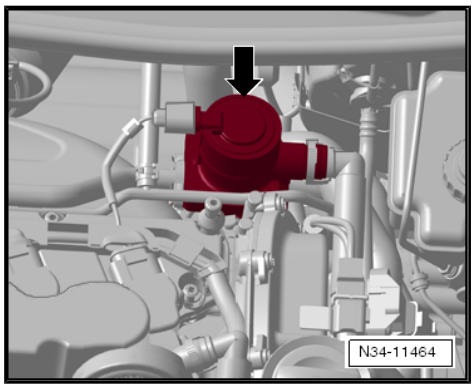

4.2.1 Torque settings

Gearbox to engine

Item	Bolt	Quantity	Nm
1	M12 x 65	2	80
2	M12 x 170 ♦ Additionally, starter to gearbox	1	80
3	M12 x 170 ♦ Additionally, starter to gearbox	1	80
4	M10 x 65	3	40
5	M12 x 95	1	80
6	M6 x 8 ♦ Small flywheel cover plate (not present here)	1	10

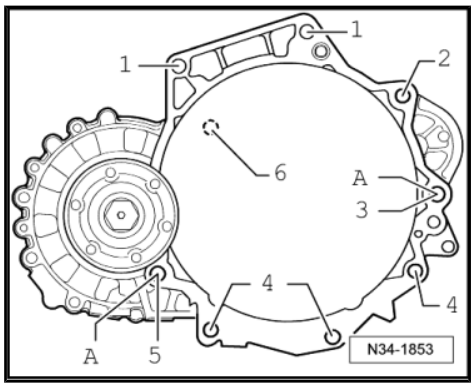

Item -A- dowel sleeves for centring

Gearbox bracket to gearbox

– Renew bolts.
– Screw in all bolts hand-tight.
– Tighten bolts to specified torque.

Bolts -arrows-	40 Nm + 90°

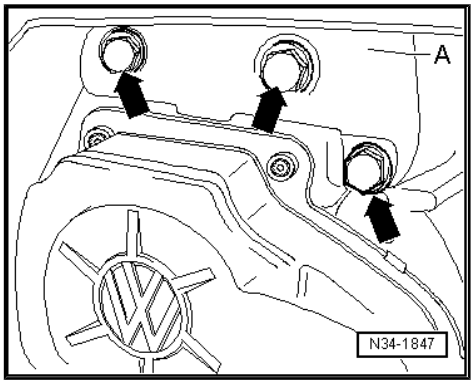

Gearbox mounting to body

– Renew bolts.
– Screw in all bolts hand-tight.
– Tighten bolts to specified torque.

Bolts -arrows-	60 Nm + 90°

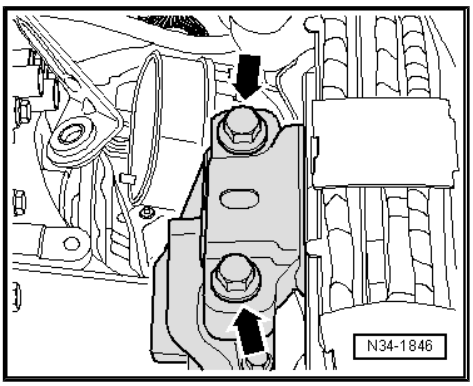

Gearbox support to gearbox bracket and gearbox

– Renew bolts.
– Screw in all bolts hand-tight.
– Tighten bolts to specified torque.

Bolts -arrows-	20 Nm + 90°

Drive shaft to flange shaft ⇒ Running gear, axles, steering; Rep. Gr. 40 ; Repairing drive shaft; Removing and installing drive shafts .

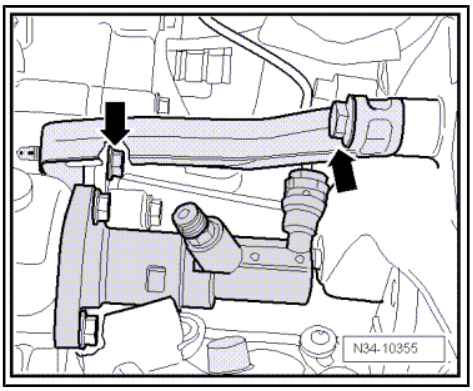

5 Removing and installing gearbox, Golf Plus

Special tools and workshop equipment required

- Support bracket -10 - 222 A-
- Adapter -10 - 222 A / 8-
- Hook - 10 - 222 A /2-
- Adapter -10 - 222 A /3-
- Adapter -10 - 222 A /16-
- Gearbox support -3282-
- Rear left engine support eye points towards side ⇒ page 192 shackle -10-222 A /12-

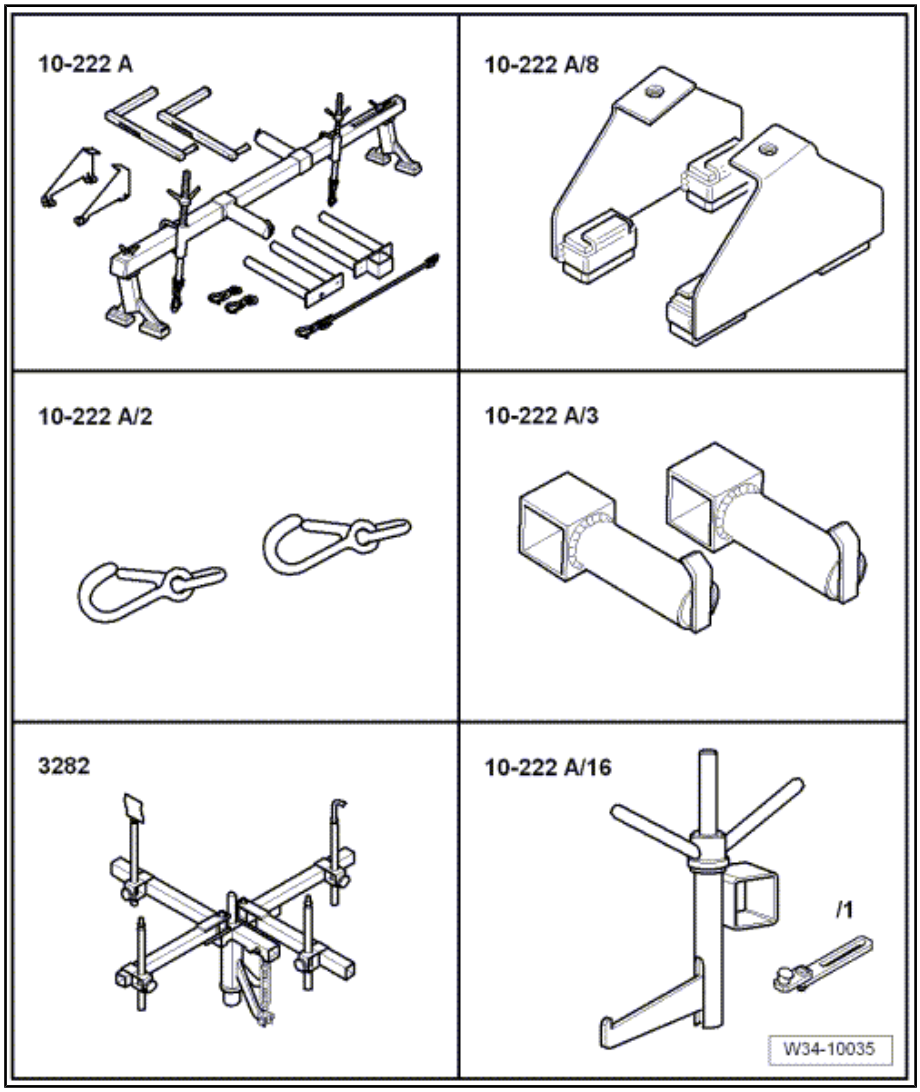

- Adjustment plate -3282/39-
- Support elements for gearbox (determine when setting adjustment plate on gearbox support)
- Engine and gearbox jack -V.A.G 1383A-
- Retainer -T10346-
- Engine support -3300 A-
- Wing supports -T10311-
- Torque wrench -V.A.G 1332-
- Grease for clutch plate splines -G 000 100-
- Allocate grease using ⇒ Electronic parts catalogue (ETKA) .
- Flange bolt M6 x 20

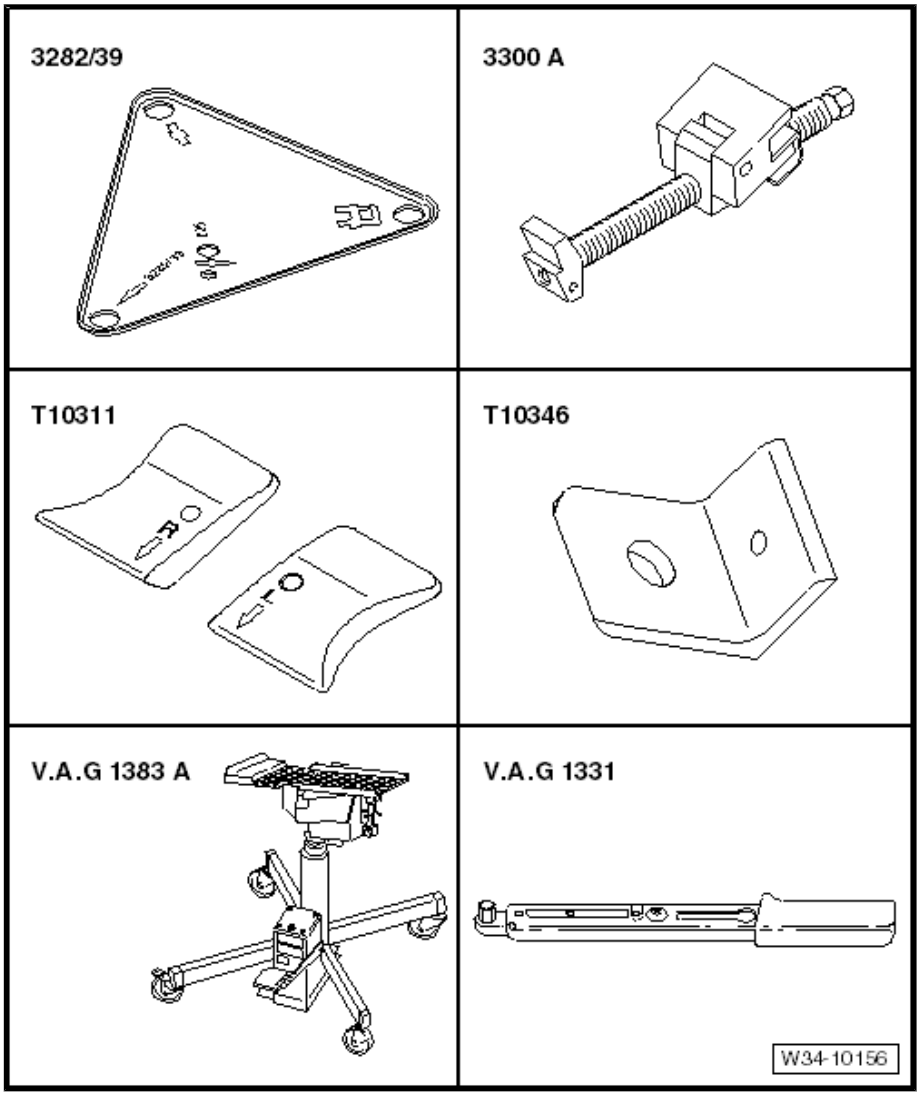

5.1 Removing gearbox

– Check whether a coded radio is fitted. If so, obtain anti-theft code.

– With ignition switched off, disconnect battery ⇒ Electrical system; Rep. Gr. 27 ; Disconnecting and connecting battery .

– Remove cover from engine.

– Remove complete air filter housing -1- with intake hose -2- ⇒ Rep. Gr. 23 ; Repairing diesel direct injection .

– Remove battery -3-, battery cover and battery tray ⇒ Electrical system; Rep. Gr. 27 ; Removing and installing battery .

– Remove bolt -arrow- and valve block -4- from front wall of plenum chamber.

– Remove noise insulation -5- from front wall of plenum chamber.

– Remove front wall of plenum chamber ⇒ General body repairs, exterior; Rep. Gr. 50 ; Noise insulation .

– Remove securing clip -arrow 1- for gear selector cable from gearbox selector lever -A-.

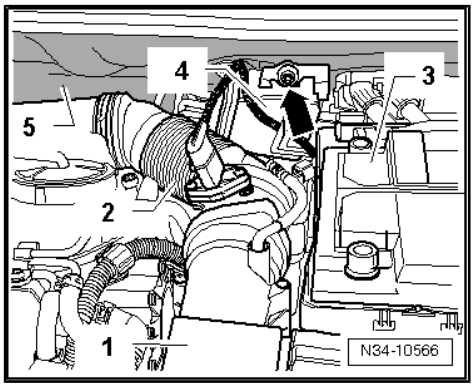

– Pull gear selector cable off pin.

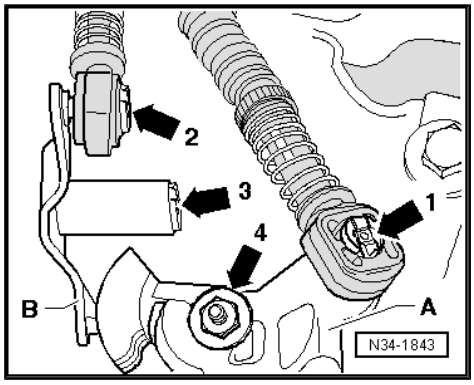

Metal relay lever

– Remove securing clip -arrow 2- for gate selector cable from relay lever -B-.

– Pull gate selector cable from pin.

– Pull securing clip -arrow 3- off relay lever -B- and remove relay lever.

Plastic relay lever

– Remove relay lever together with cable end-piece ⇒ page 134 .

Continuation for all

– Remove gearbox selector lever -A- by removing nut -arrow 4-.

– Remove cable support bracket from gearbox -arrows-.

– Then raise and secure gear selector cable and gate selector cable.

– Remove bracket -B- from gearbox and pull it off pipe/hose line -A-.

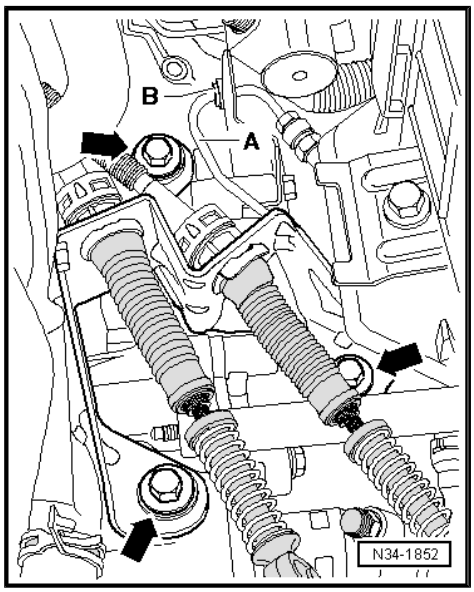

– Then remove gearbox support -arrow A-.

– Remove slave cylinder -arrow B-, lay to side and secure with wire. Do not disconnect pipes.

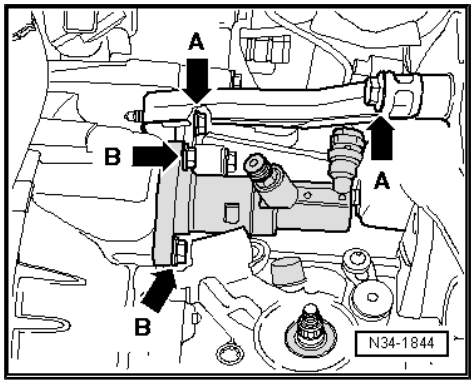

> ⚠ **Caution**
>
> *Do not operate clutch pedal any more.*

– Remove earth strap at upper engine/gearbox connecting bolt.

– Pull off reversing light connector -arrow 1-.
– Now remove connector -arrow 2- and wire -arrow 3- from starter.
– Then remove upper securing bolt on starter.
– Remove upper engine/gearbox connecting bolts.
– If there are hose and cable connections in area of engine support eye for support bracket -10 - 222 A- , remove these now.

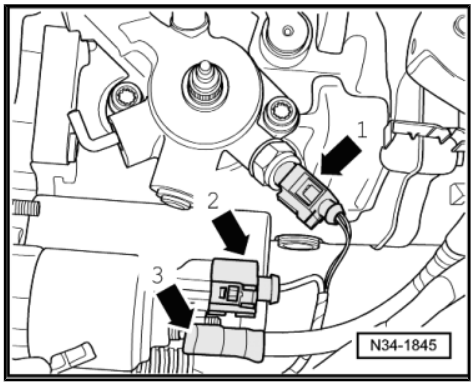

– Insert wing supports -T10311- between wing flange and mounting plate for wing on both sides of vehicle.
♦ Installation position:

“R” (-1-) means right side of vehicle.

“L” is not illustrated, but means left side of vehicle.

Arrow -2- points in direction of travel.

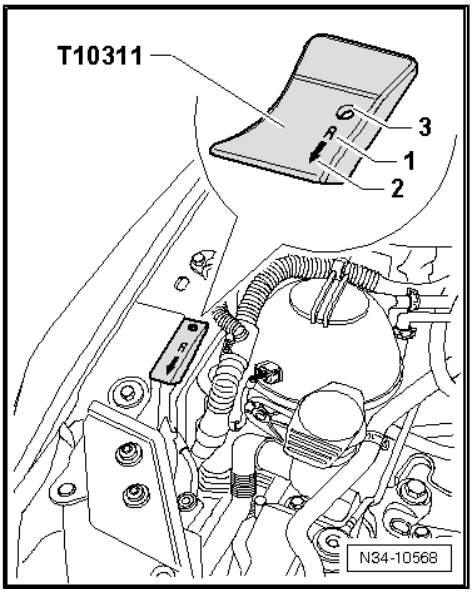

Note

Hole -3- can be used to pull out wing supports .

– Set up support bracket -10 - 222 A- in front of bonnet support.
– Use:
♦ Adapter -10-222 A /3-
♦ Adapter -10-222 A /8-
♦ Adapter -10-222 A /16-
– Then attach spindle in right engine support eye.

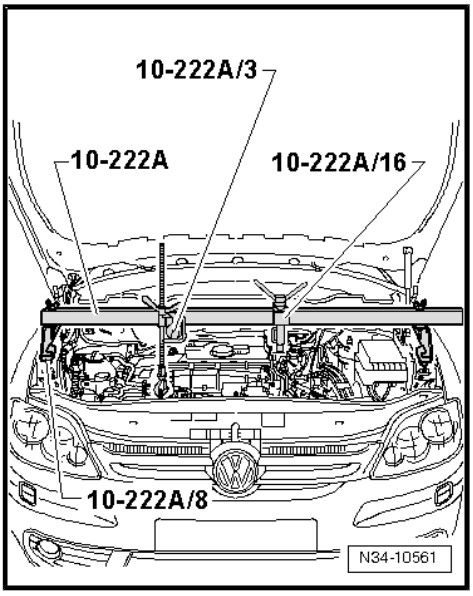

Rear left engine support eye points towards side -arrow-

– Attach shackle -10-222 A /12- at rear left of engine -arrow-.
– Attach hook - 10-222 A /2- in shackle -10-222 A /12- .
– Then connect hook -10-222 A /2- using adapter -10-222 A / 16- .

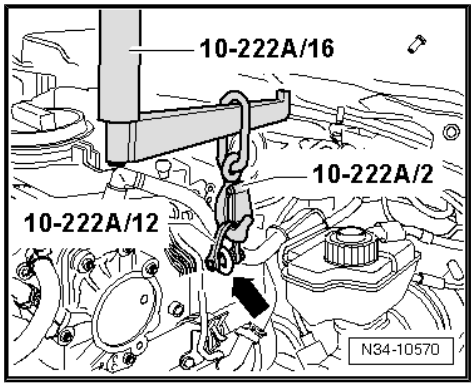

Rear left engine support eye points upwards -arrow-:

– Insert hook - 10-222 A /2- .
– Then connect hook -10-222 A /2- using adapter -10-222 A / 16- .

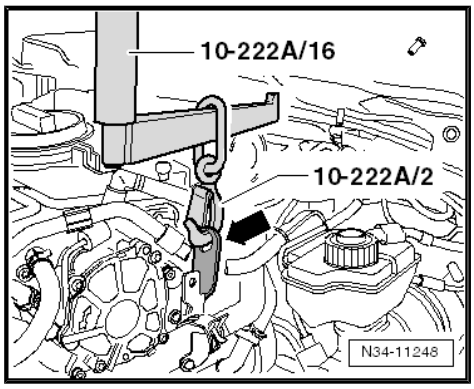

Continuation for all

– Take up weight of engine/gearbox assembly on spindles.
– Raise vehicle.
– Remove noise insulation ⇒ General body repairs, exterior; Rep. Gr. 50 ; Noise insulation .
– Remove lower part of front left wheel housing liner ⇒ General body repairs, exterior; Rep. Gr. 66 ; Wheel housing liner .
– Then remove all lines from gearbox.

– Gearboxes for vehicles with start-stop system: pull connector -arrow- from gearbox neutral position sender -G701- .

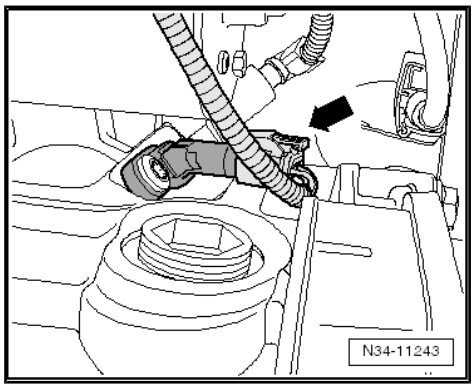

– Separate connection -arrow 1- or -arrow 2- on charge air hose ⇒ Rep. Gr. 21 ; Charge air system with turbocharger .

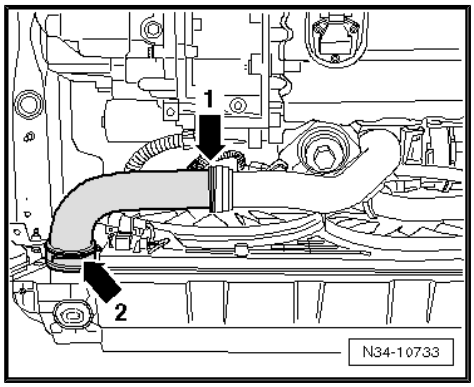

– Remove drive shaft heat shield, if present -arrows- ⇒ Running gear, axles, steering; Rep. Gr. 40 ; Repairing drive shafts; Removing and installing drive shafts .

– Remove drive shafts from flange shafts, raise as high as possible and secure. Do not damage the surface protection ⇒ Running gear, axles, steering; Rep. Gr. 40 ; Removing and installing drive shafts .

– Separate exhaust system at double clamp and remove exhaust pipe bracket from subframe ⇒ Rep. Gr. 26 ; Removing and installing parts of exhaust system .

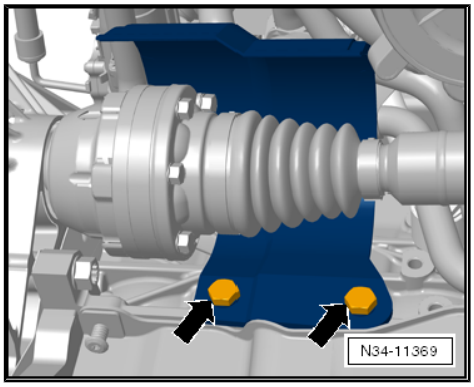

– Remove pendulum support.

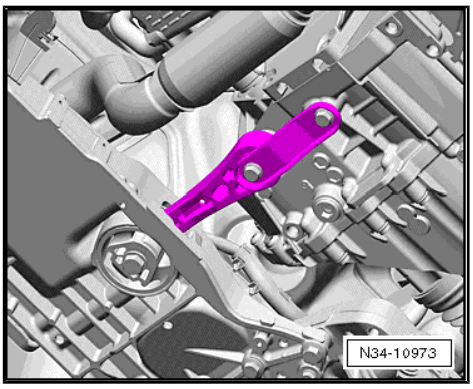

– Remove hexagon bolts -arrows- for left assembly mounting from gearbox mounting.

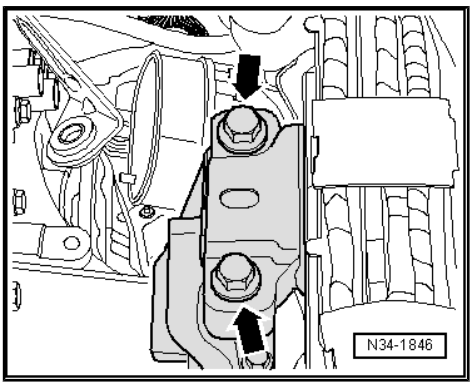

– Tilt engine/gearbox assembly by lowering it via spindles of support bracket -10 - 222 A- .

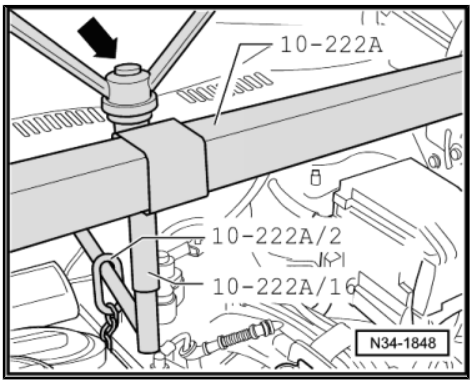

Note

- *Lower threaded spindle of adapter -10 - 222 A /16- using winged nut, but not more than until spindle is flush with nut -arrow-.*
- *Be careful of all lines when lowering gearbox.*

- Securing bolts -arrows- for gearbox bracket -A- must be accessible.

– Remove gearbox bracket -A- -arrows-.

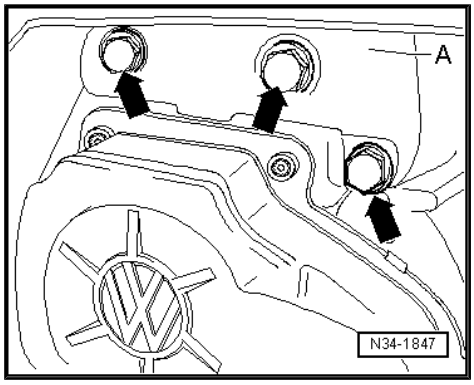

– If small cover plate -A- for flywheel behind the right flange shaft -arrows- is installed, remove it.

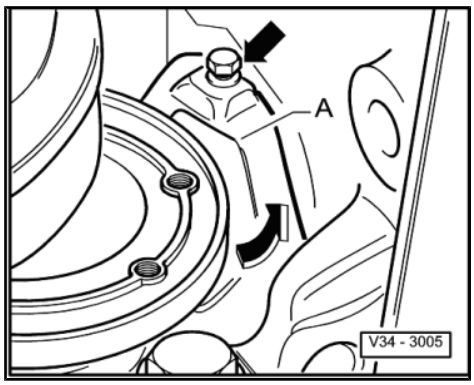

– If exhaust system strut -1- is fitted, remove it from gearbox -arrow-.

– Remove starter ⇒ Electrical system; Rep. Gr. 27 ; Starter .

– Attach bracket -T10346- with bolt -1- to left threaded hole in subframe.

-1- = Flange bolt M6 x 20.

– Secure engine support -3300 A- to bracket -T10346- .

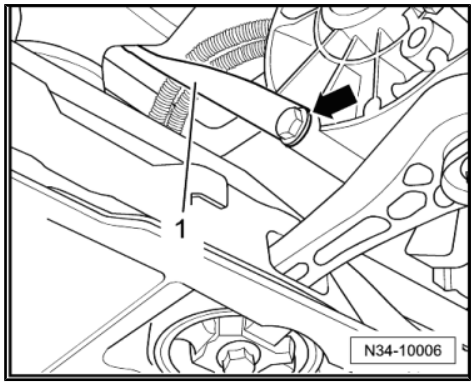

– Place a cloth between engine support -3300 A- and oil pan.

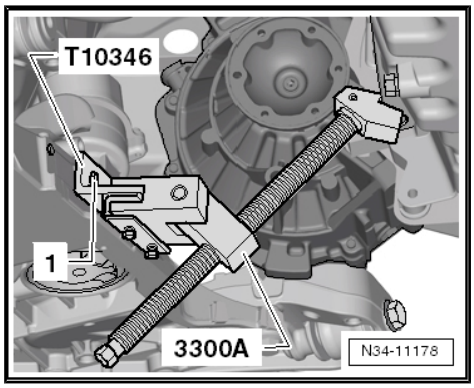

– Press engine forwards using spindle of engine support -3300 A- . In the process, observe the following points in particular:

• The air conditioning compressor -2- must not contact -arrow- the refrigerant line -1-.

• The alternator must not contact the refrigerant line.

• The pressure pipe must not contact the radiator.

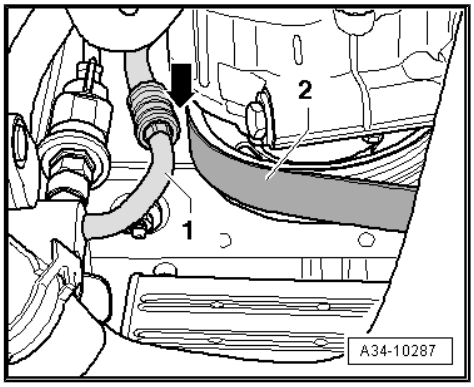

Note

♦ *Check that adapters -10 - 222 A /8- are completely located on longitudinal members -arrows-.*

♦ *If necessary, correct position of adapters using front spindle of support bracket -10-222 A- .*

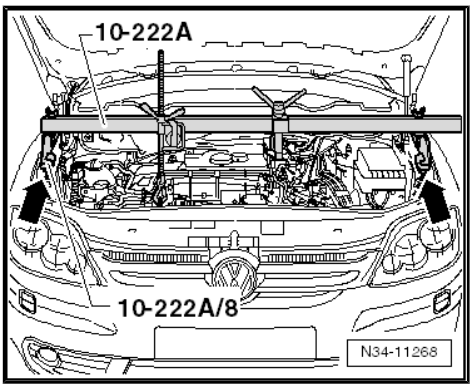

To remove gearbox “0A4”, set up gearbox support -3282- with adjustment plate -3282/39- .

– Insert gearbox support -3282- in engine and gearbox jack -V.A.G 1383A- .

– Align arms of gearbox support according to holes in adjustment plate .

– Screw in support elements -A - and -C- on adjustment plate as shown.

– Position engine and gearbox jack under vehicle. Arrow -B- on adjustment plate points in direction of vehicle travel.

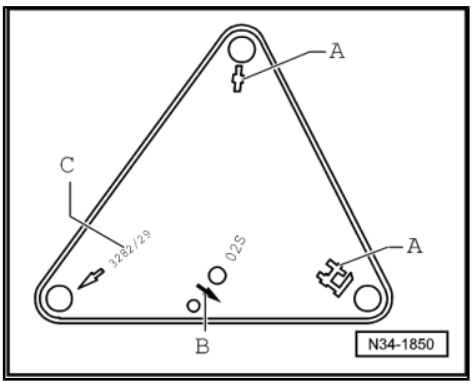

– Align adjustment plate parallel to gearbox and lock safety support on gearbox.

– Then screw pin -3282/29- into hole on gearbox for securing bolt of pendulum support.

– Remove lower engine/gearbox connecting bolts.

– Separate exhaust system if lower bolts -arrows- cannot be removed.

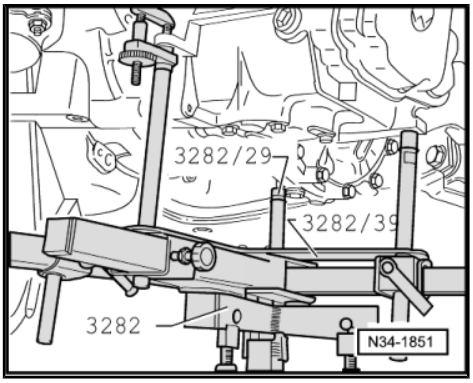

⇒ Rep. Gr. 26 ; Removing and installing parts of the exhaust system

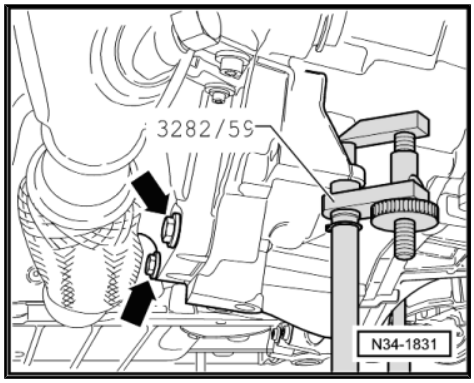

– Press gearbox off dowel sleeves and carefully swing towards subframe.
– Turn gearbox downwards in vicinity of differential.

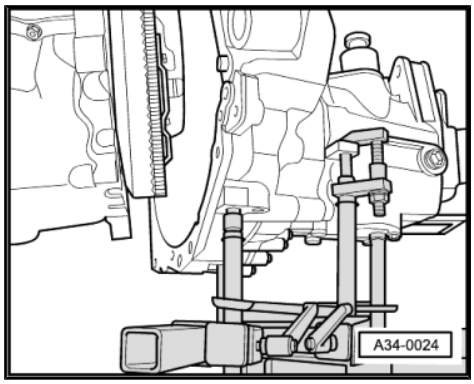

– Carefully lower gearbox, guiding right-hand flange shaft -A- past dowel sleeve -arrow- in cylinder block as shown.

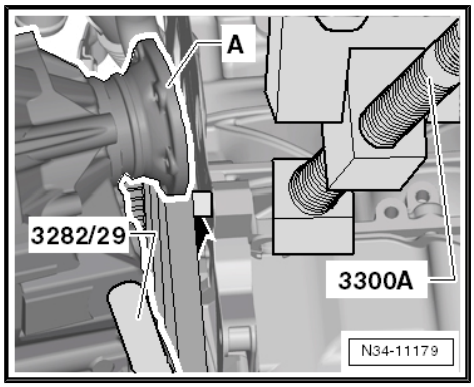

– Guide left flange shaft -B- past subframe bracket -arrow- as shown.
– When lowering gearbox, change position of gearbox using spindles of gearbox support -3282- .

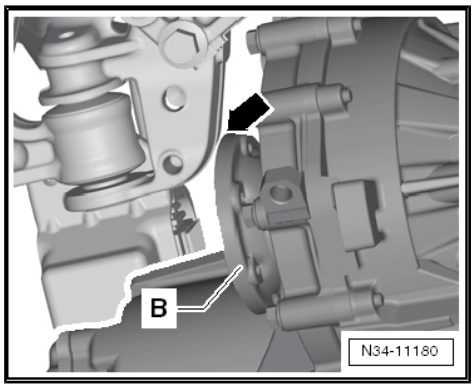

Note

Be careful of all lines when lowering gearbox.

5.2 Installing gearbox

Note

Refer to procedure "Removing gearbox" for required special tools *⇒ page 189* .

Observe the following table on the subject of “checking and topping up gear oil”.

“Checking and topping up gear oil”				
		“No”	“Yes”	“Yes”
Gearbox	Original part	X		
	No oil loss	X		
	Completely dismantled		X Before installation ⇒ Item 3 (page 250) Oil capacity ⇒ page 5	
	Partially dismantled • (Gearbox housing and clutch housing were not separated.)			X After installation ⇒ page 220

– All threaded holes into which self-locking bolts are to be screwed must be cleaned of residual locking fluid carefully with a thread tap.

– Always renew self-locking bolts and nuts.

– Check whether dowel sleeves for aligning engine and gearbox are fitted in cylinder block and install if necessary.

If dowel sleeves are not fitted, difficulties shifting gears, clutch problems and possible noises from the gearbox (rattling of gears which are not engaged) could occur.

– Ensure that intermediate plate is correctly seated on engine.

– Clean input shaft splines and apply thin coat of grease for clutch plate splines -G 000 100- .

The clutch plate must slide easily to and fro on the input shaft.

– Attach bracket -T10346- with bolt -1- to left threaded hole in subframe.

– In the process, position bracket -T10346- at the same angle as the engine.

-1- = Flange bolt M6 x 20.

– Secure engine support -3300 A- to bracket -T10346- .

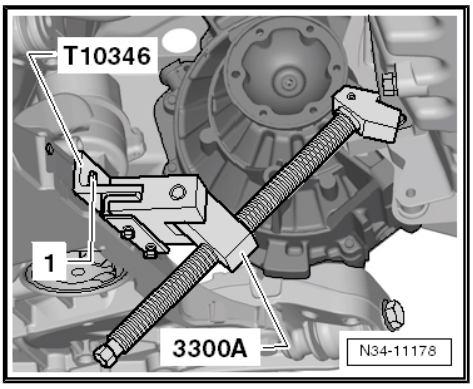

– Press engine forwards using spindle of engine support -3300 A- . In the process, observe the following points in particular:

• The air conditioning compressor -2- must not contact -arrow- the refrigerant line -1-.

• The alternator must not contact the refrigerant line.

• The pressure pipe must not contact the radiator.

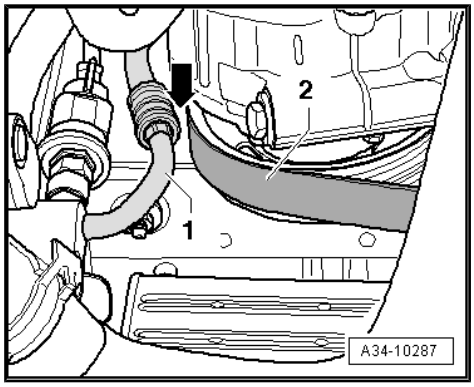

Note

♦ *Check that adapters -10 - 222 A /8- are completely located on longitudinal members -arrows-.*

♦ *If necessary, correct position of adapters using front spindle of support bracket -10-222 A- .*

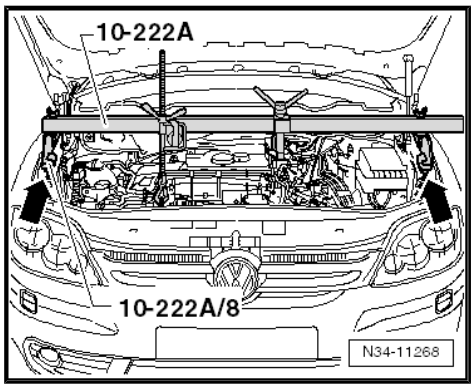

To install gearbox “0A4”, set up gearbox support -3282- with adjustment plate -3282/39- .

– Align arms of gearbox support according to holes in adjustment plate .

– Screw in support elements -A - and -C- (pin -3282/29-) on adjustment plate as shown.

– Place gearbox on engine and gearbox jack .

– Align adjustment plate and gearbox parallel to one another.

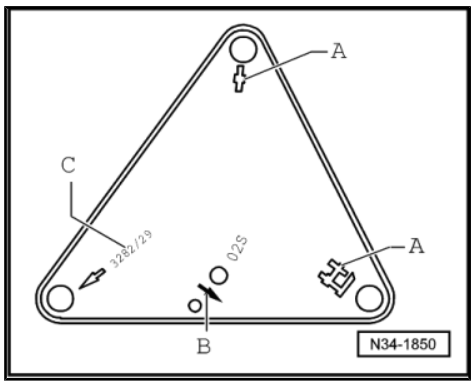

– Screw pin -3282/29- into hole on gearbox for securing bolt of pendulum support.

– Position engine and gearbox jack under vehicle. -Arrow B- on adjustment plate points in direction of vehicle travel.

– Using spindles of gearbox support -3282- , tilt gearbox downwards in vicinity of differential.

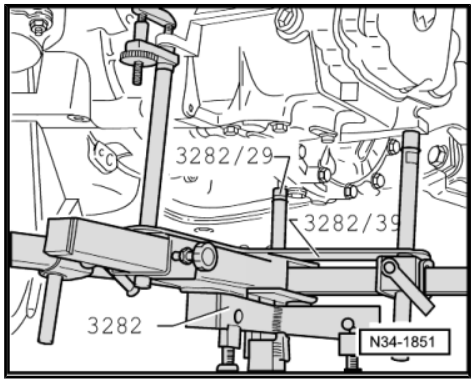

– Carefully lift gearbox, guiding right-hand flange shaft -A- past dowel sleeve in cylinder block -arrow- as shown.

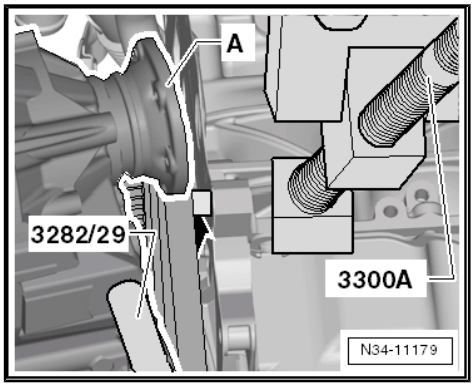

– Guide left flange shaft -B- past subframe bracket -arrow- as shown.
– Using spindles of gearbox support -3282- , tilt gearbox upwards in vicinity of differential.
– Raise gearbox to engine.
– Align gearbox to engine and join.
– Screw in lower engine/gearbox securing bolts and tighten to specified torque ⇒ page 203 .
– After gearbox has been bolted to engine, remove engine and gearbox jack from gearbox.
– Remove engine support -3300 A- and bracket -T10346- .

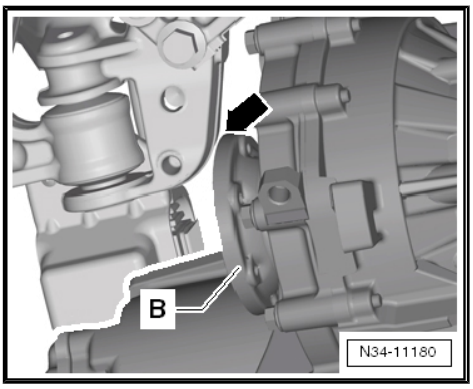

– If small cover plate had been installed behind the right-hand flange shaft -A-, install it -arrows-.
– Screw in upper engine/gearbox securing bolts and tighten to specified torque ⇒ page 203 .

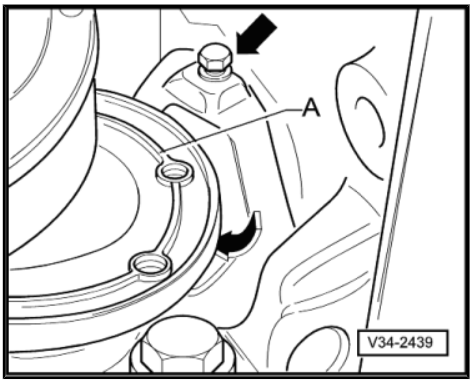

– Install bracket -A- on gearbox using new hexagonal bolts -arrows- and tighten to specified torque ⇒ page 203 .

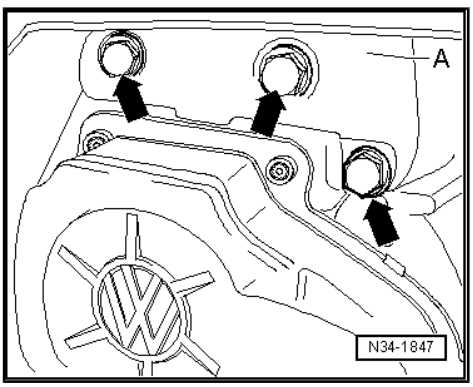

– Align engine and gearbox in installation position using both spindles of support bracket -10 - 222 A- .

– Install new bolts -arrows- for left assembly mounting in gearbox mounting and tighten to specified torque ⇒ page 203 .

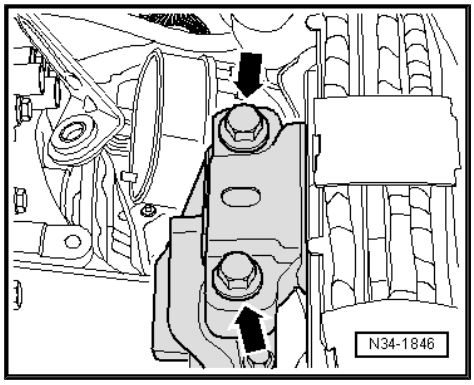

WARNING

Do not remove support bracket -10 - 222 A- until the bolts securing the left and right assembly mountings have been tightened to specified torque.

Note

Install engine and gearbox mounting free of tension ⇒ Rep. Gr. 10 ; Removing and installing engine .

– Install slave cylinder and tighten bolts -arrows B- to specified torque ⇒ Item 9 (page 104) .

– Then install gearbox support -arrow A- and tighten to specified torque ⇒ page 203 .

– Then install drive shafts ⇒ Running gear, axles, steering; Rep. Gr. 40 ; Removing and installing drive shafts .

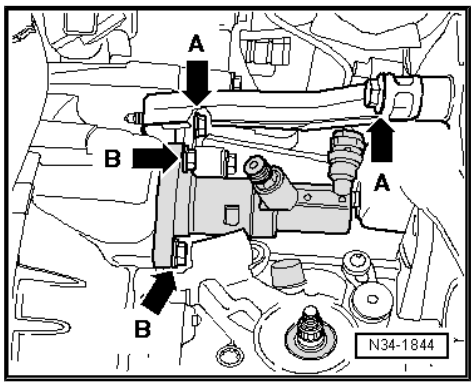

– Install drive shaft heat shield, if present -arrows- ⇒ Running gear, axles, steering; Rep. Gr. 40 ; Repairing drive shafts; Removing and installing drive shafts .

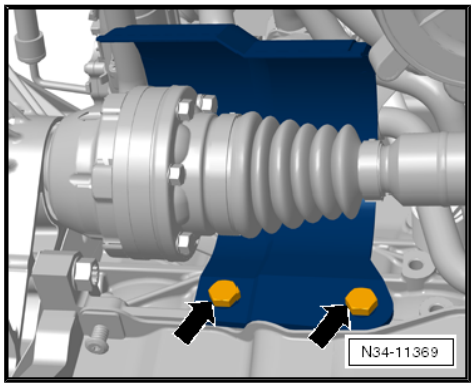

– Install pendulum support ⇒ Running gear, axles, steering; Rep. Gr. 40 ; Repairing front suspension .

– Assemble exhaust system and attach exhaust system bracket to subframe ⇒ Rep. Gr. 26 ; Removing and installing parts of exhaust system .

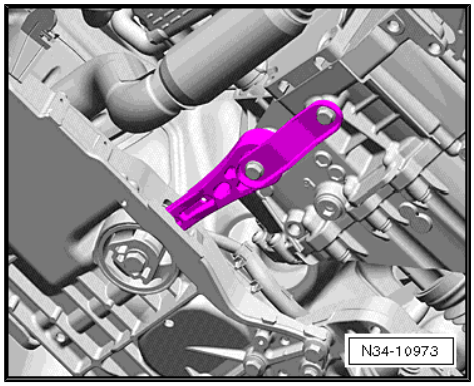

– If exhaust system strut -1- was removed, bolt it onto gearbox and tighten bolt -arrow- to specified torque ⇒ Rep. Gr. 26 ; Exhaust system .

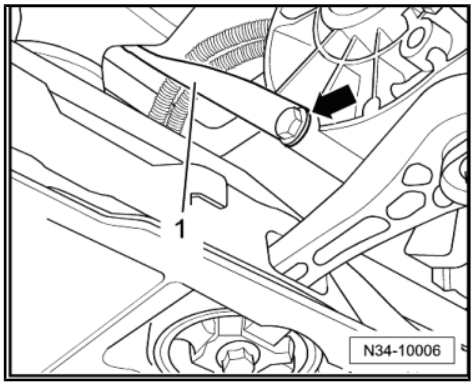

– Install charge air hose -arrow 1- or -arrow 2- ⇒ Rep. Gr. 21 ; Charge air system with turbocharger .

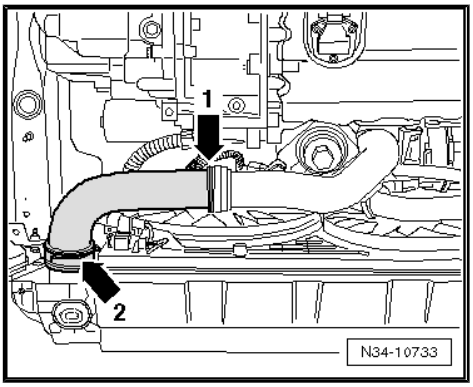

– Gearboxes for vehicles with start-stop system: join connector -arrow- to gearbox neutral position sender -G701- .

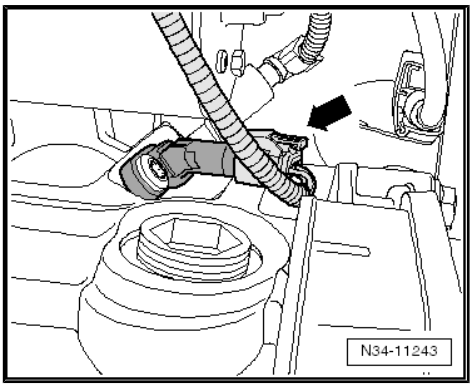

– Reconnect reversing light connector -arrow 1-.
– Install starter, push on connector -arrow 2- and bolt on wire -arrow 3- ⇒ Electrical system; Rep. Gr. 27 ; Starter .
– Install earth strap at upper engine/gearbox connecting bolt.

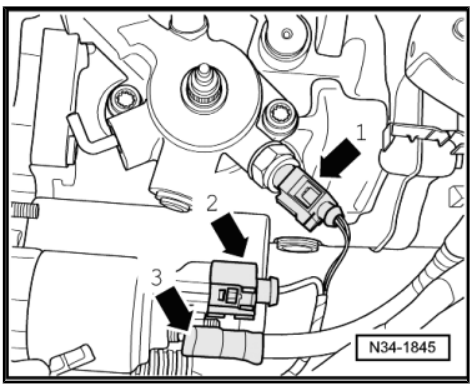

– Attach support -B- to gearbox.

– Press pipe/hose line -A- into retainer -B- on gearbox.

– Install cable support bracket on gearbox and tighten bolts -arrows- to specified torque ⇒ Item 6 (page 131) .

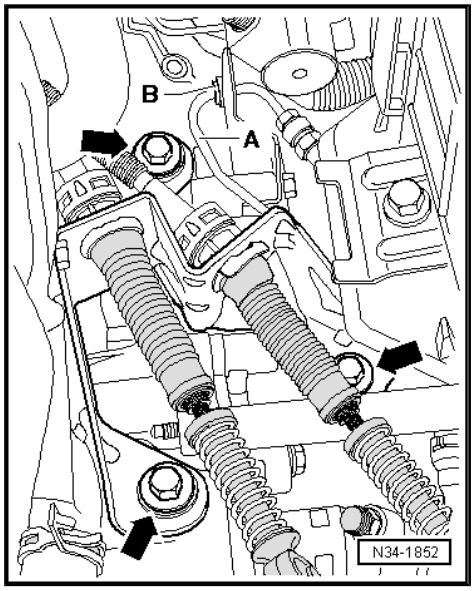

– Install gearbox selector lever -A-.

– Tighten hexagon nut -arrow 4- to specified torque ⇒ Item 18 (page 132) .

– Spread a small amount of grease on pin of gearbox selector lever -A-.

Allocate grease using ⇒ Electronic parts catalogue (ETKA) .

– Connect gear selector cable to gearbox selector lever -arrow 1-.

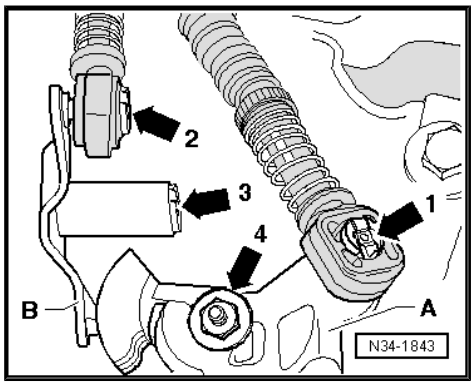

Metal relay lever

– Install relay lever -B- and secure with securing clip -arrow 3-.

– Spread a small amount of grease on pin of relay lever -B-.

Allocate grease using ⇒ Electronic parts catalogue (ETKA) .

– Connect gate selector cable to relay lever -arrow 2-.

Plastic relay lever

– Install relay lever together with cable end-piece ⇒ page 134 .

Continuation for all

– Adjust selector mechanism ⇒ page 139 .

– Install front wall of plenum chamber ⇒ General body repairs, exterior; Rep. Gr. 50 ; Noise insulation .

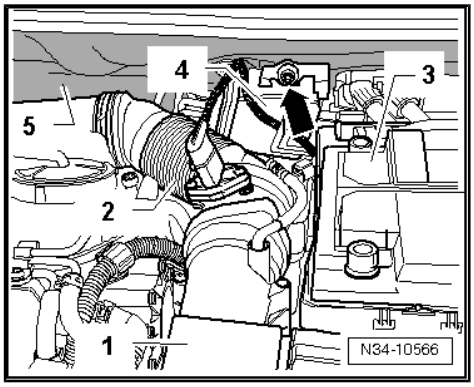

– Install noise insulation -5- on front wall of plenum chamber.
– Install valve block -4- on front wall of plenum chamber -arrow-.
– Install battery tray, battery cover and battery -3- ⇒ Electrical system; Rep. Gr. 27 ; Removing and installing battery .
– Install complete air filter housing -1- with intake hose -2- ⇒ Rep. Gr. 23 .
– Install engine cover.
– Reconnect battery and perform work required after connecting battery ⇒ Electrical system; Rep. Gr. 27 ; Disconnecting and connecting battery .
– Install lower part of front left wheel housing liner ⇒ General body repairs, exterior; Rep. Gr. 66 ; Wheel housing liner .
– Install noise insulation ⇒ General body repairs, exterior; Rep. Gr. 50 ; Noise insulation .

5.2.1 Torque settings

Gearbox to engine

Item	Bolt	Quantity	Nm
1	M 12 x 55	2	80
2	M 12 x 150 ♦ Additionally, starter to gearbox	2	80
3	M10 x 50	3	40
4	M12 x 60	1	80
5	M6 x 8 ♦ Small flywheel cover plate	1	10

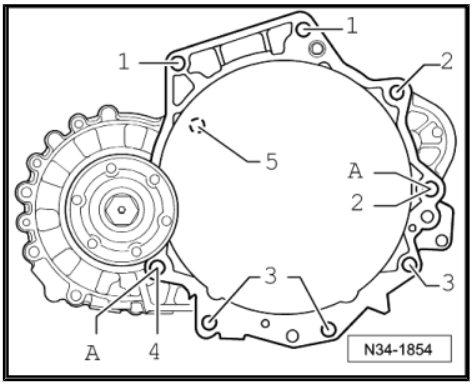

Item -A- dowel sleeves for centring

Gearbox bracket to gearbox

– Renew bolts.
– Screw in all bolts hand-tight.
– Tighten bolts to specified torque.

Bolts -arrows- 40 Nm + 90°

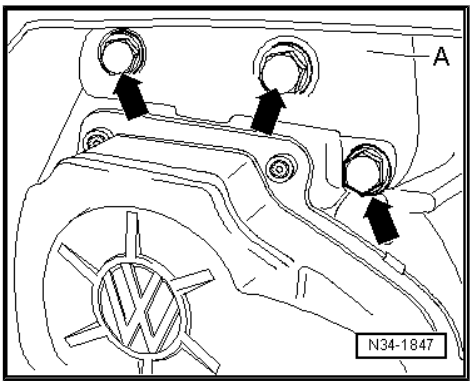

Gearbox mounting to body

– Renew bolts.
– Screw in all bolts hand-tight.
– Tighten bolts to specified torque.

Bolts -arrows-	60 Nm + 90°

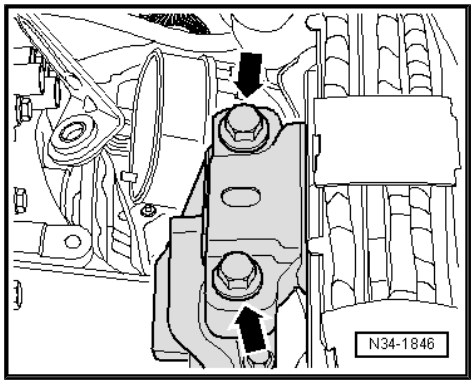

Gearbox support to gearbox bracket and gearbox

– Renew bolts.
– Screw in all bolts hand-tight.
– Tighten bolts to specified torque.

Bolts -arrows-	20 Nm + 90°

Drive shaft to flange shaft ⇒ Running gear, axles, steering; Rep. Gr. 40 ; Repairing drive shaft; Removing and installing drive shafts .

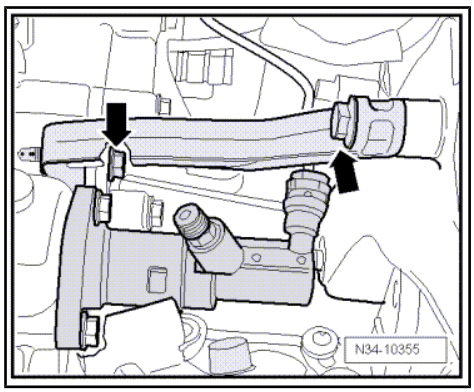

6 Removing and installing gearbox, Passat

Special tools and workshop equipment required

- Support bracket -10 - 222 A-
- Adapter -10 - 222 A /8-
- Gearbox support -3282-

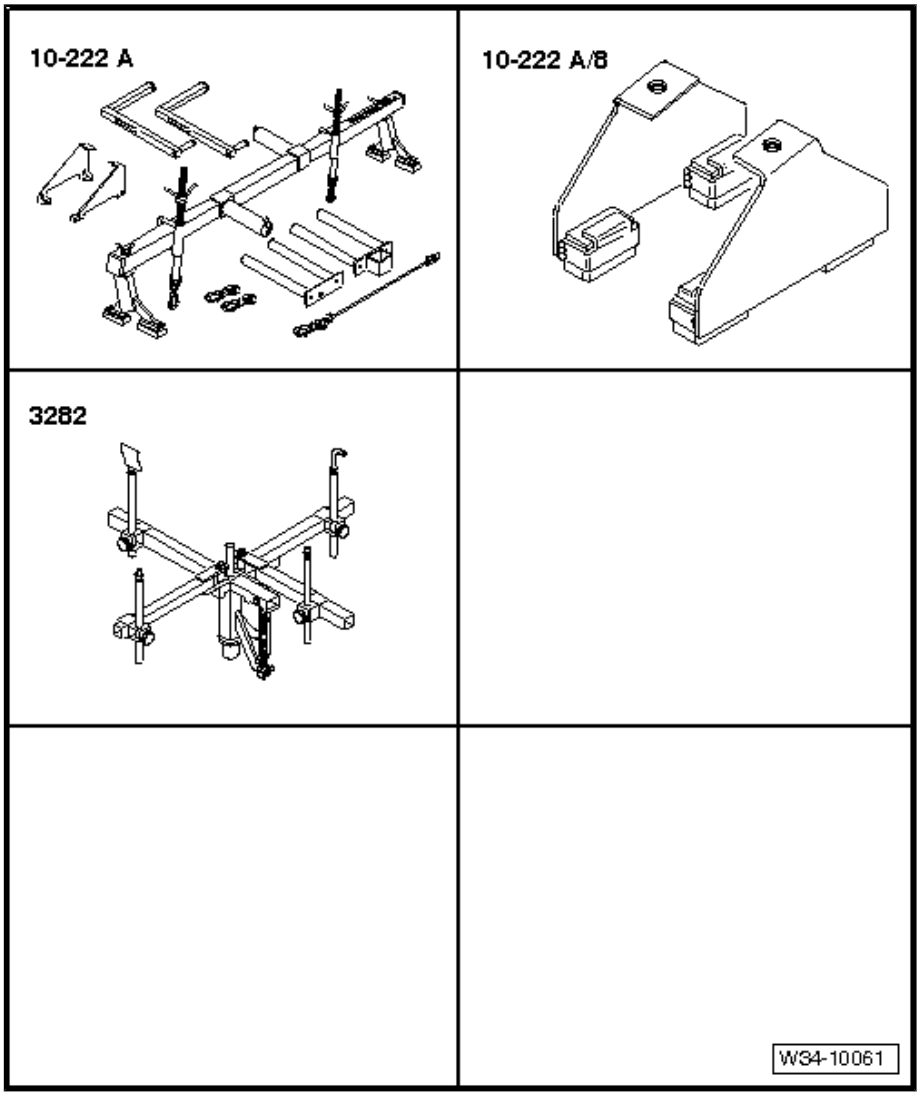

- Adapter -10 - 222 A /3-

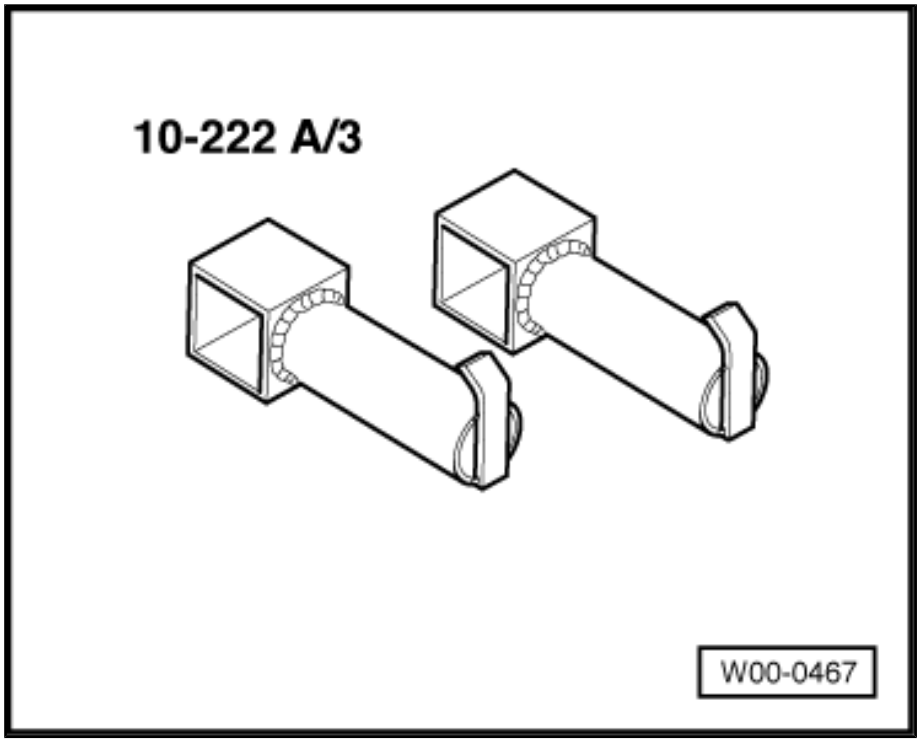

- Adjustment plate -3282/39-
- Support elements for gearbox (determine when setting adjustment plate on gearbox support)
- Engine and gearbox jack -V.A.G 1383A-
- Torque wrench -V.A.G 1331-
- Torque wrench -V.A.G 1332-
- Gearbox lifting tackle -3336- for transporting gearbox
- Grease for clutch plate splines -G 000 100-
- Allocate grease using ⇒ Electronic parts catalogue (ETKA) .

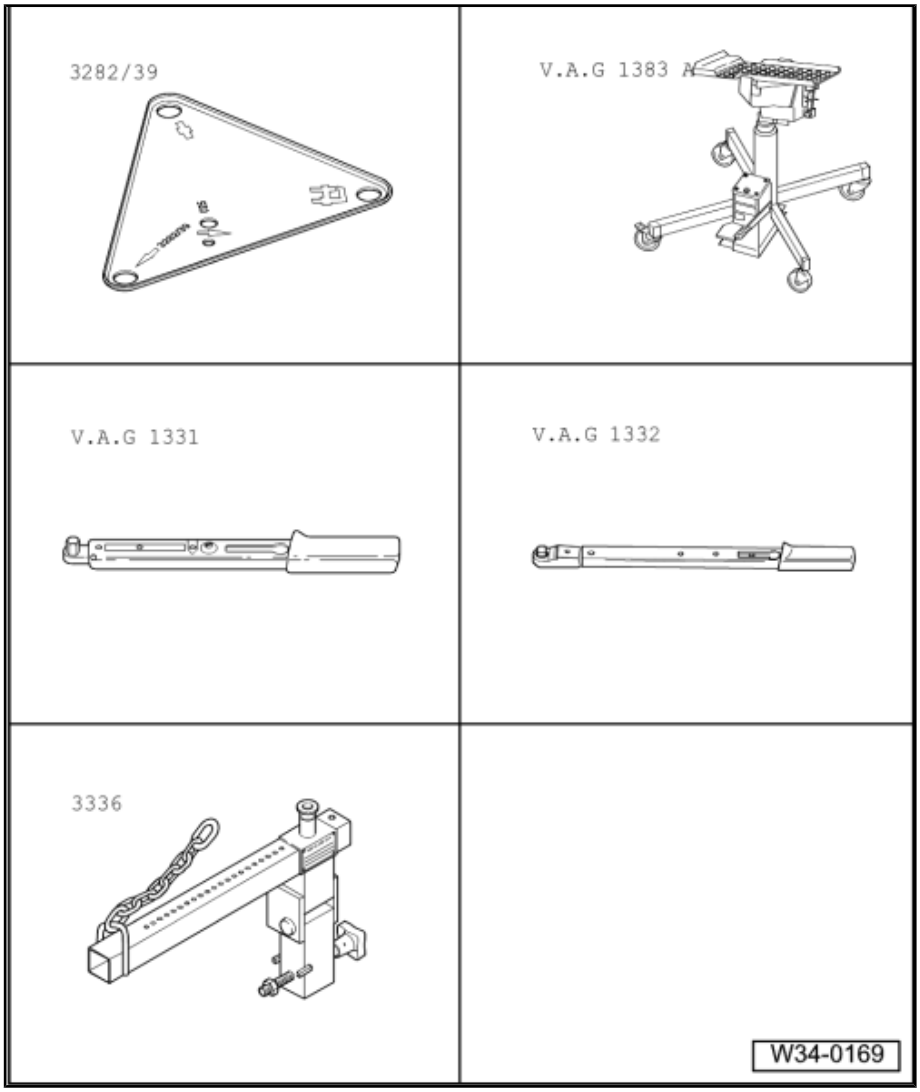

6.1 Removing gearbox

– First check whether a coded radio is fitted. If so, obtain anti-theft code.

– With ignition switched off, disconnect battery ⇒ Electrical system; Rep. Gr. 27 ; Disconnecting and connecting battery .

– If the lifting eyes of the engine for support bracket -10 - 222 A- are covered by a component, for example the air filter, it must be removed now. ⇒ Rep. Gr. 23 ; Repairing diesel direct injection system or ⇒ Rep. Gr. 24 ; Repairing injection system

– Then remove complete air filter housing ⇒ Rep. Gr. 23 or ⇒ Rep. Gr. 24 .

– Remove battery, battery cover and battery tray ⇒ Electrical system; Rep. Gr. 27 ; Removing and installing battery .

– Remove securing clip -arrow 1- for gear selector cable from gearbox selector lever -A-.

– Pull gear selector cable off pin.

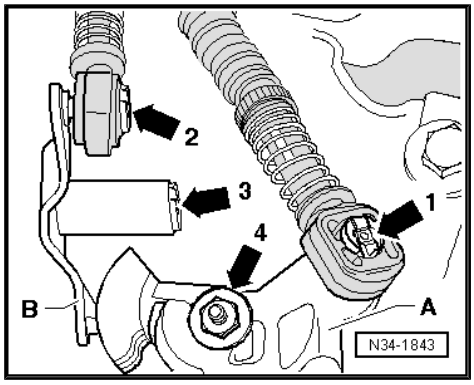

Metal relay lever

– Remove securing clip -arrow 2- for gate selector cable from relay lever -B-.

– Pull gate selector cable from pin.

– Pull securing clip -arrow 3- off relay lever -B- and remove relay lever.

Plastic relay lever

– Remove relay lever together with cable end-piece ⇒ page 134 .

Continuation for all

– Remove gearbox selector lever -A- by removing nut -arrow 4-.

– Remove cable support bracket from gearbox -arrows-.

– Then raise and secure gear selector cable and gate selector cable.

– Remove bracket -B- from gearbox and pull it off pipe/hose line -A-.

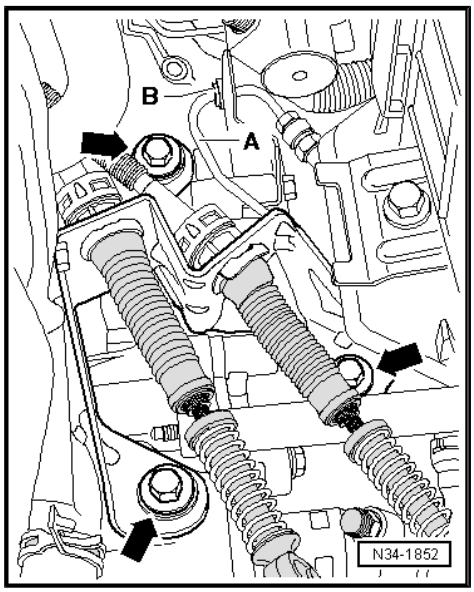

– Then remove gearbox support -arrow A-.

– Remove slave cylinder -arrow B-, lay to side and secure with wire. Do not disconnect pipes.

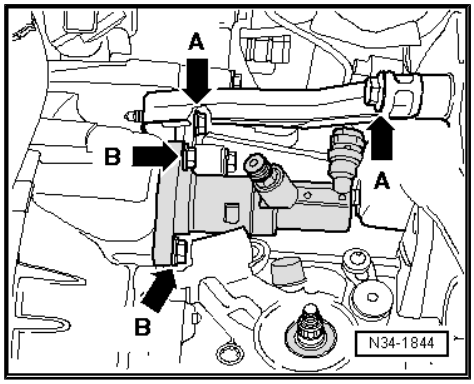

> ⚠ **Caution**
>
> *Do not operate clutch pedal any more.*

– Remove earth strap at upper engine/gearbox connecting bolt.

– Pull off reversing light connector -arrow 1-.
– Now remove connector -arrow 2- and wire -arrow 3- from starter.
– Then remove upper securing bolt on starter.
– Remove upper engine/gearbox connecting bolts.
– If there are hose and cable connections in area of engine support eye for support bracket -10 - 222 A- , remove these now.

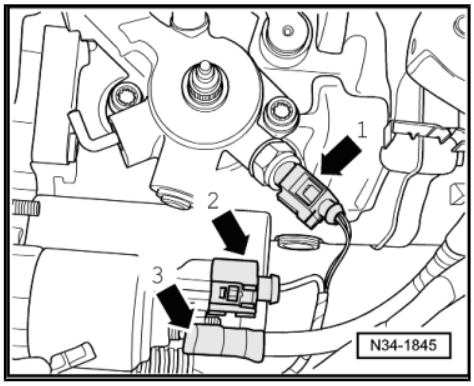

– Set up support bracket -10 - 222 A- together with adapters -10 - 222 A /3- and adapters -10 - 222 A /8- in front of bonnet struts.
– Take up weight of engine/gearbox assembly on spindles.
– Raise vehicle.
– Remove noise insulation ⇒ General body repairs, exterior; Rep. Gr. 50 ; Noise insulation .
– Remove lower part of front left wheel housing liner ⇒ General body repairs, exterior; Rep. Gr. 66 ; Wheel housing liner .
– Then remove all lines from gearbox.

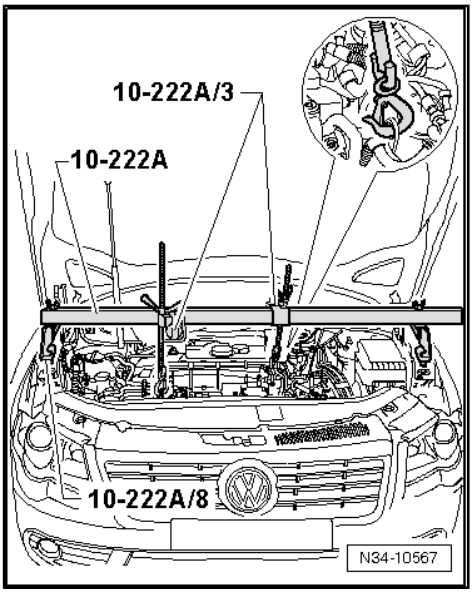

– Gearboxes for vehicles with start-stop system: pull connector -arrow- from gearbox neutral position sender -G701- .

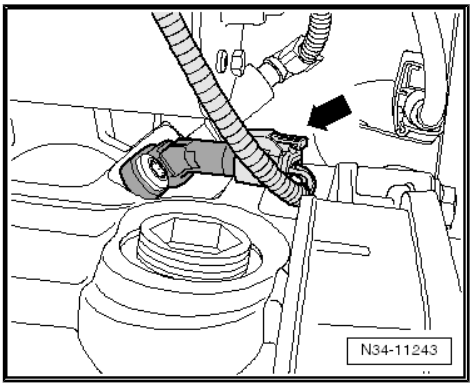

– Remove drive shaft heat shield, if present -arrows- ⇒ Running gear, axles, steering; Rep. Gr. 40 ; Repairing drive shafts; Removing and installing drive shafts .
– Disconnect drive shafts from flange shafts and tie up as high as possible, being careful not to damage surface protection.
– Separate exhaust system at double clamp and remove exhaust pipe bracket from subframe ⇒ Rep. Gr. 26 ; Removing and installing parts of exhaust system .

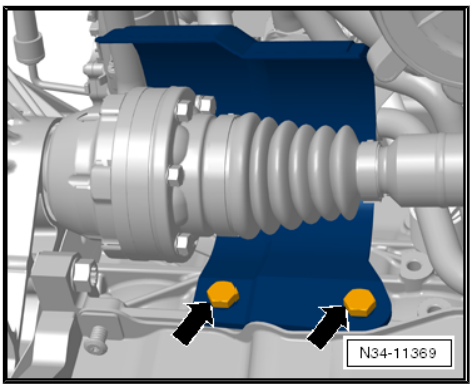

– If front vehicle level sender -G78- -arrows- is present, remove it ⇒ Rep. Gr. 40 ; Removing and installing front left vehicle level sender -G78- .

– Remove left and right coupling rods from anti-roll bar.

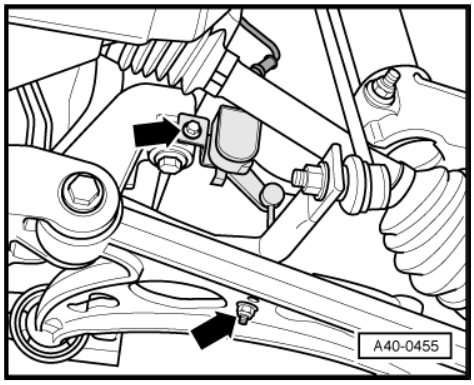

– Unscrew nuts -arrows- for swivel joint and suspension links.

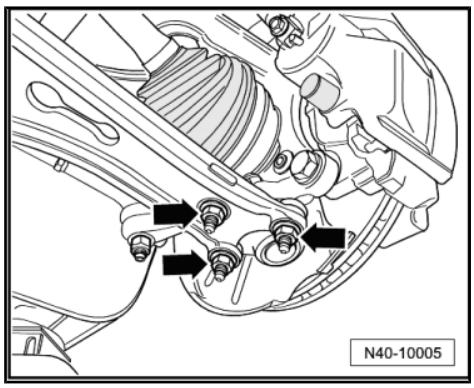

– Remove pendulum support from gearbox, bolt -2- and bolt -3-.

– Remove steering box from subframe raise and tie.

– Fix position of subframe prior to removal ⇒ Running gear, axles, steering; Rep. Gr. 40 ; Assembly overview - subframe, anti-roll bar, suspension links; Fixing position of subframe and brackets .

– Remove subframe with pendulum support, anti-roll bar and suspension links ⇒ Running gear, axles, steering; Rep. Gr. 40 ; Assembly overview - subframe, anti-roll bar, suspension links .

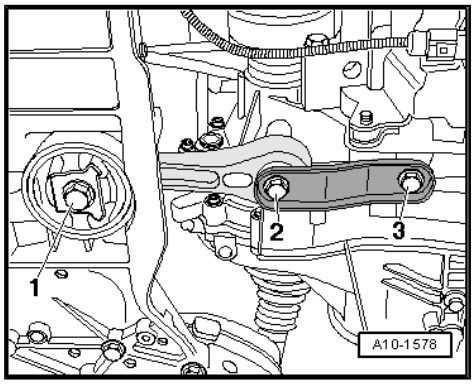

– Remove hexagon bolts -arrows- for left assembly mounting from gearbox mounting.

– Tilt engine/gearbox assembly by lowering it via spindles of support bracket -10 - 222 A- .

• Securing bolts -arrows- for gearbox bracket -A- must be accessible.

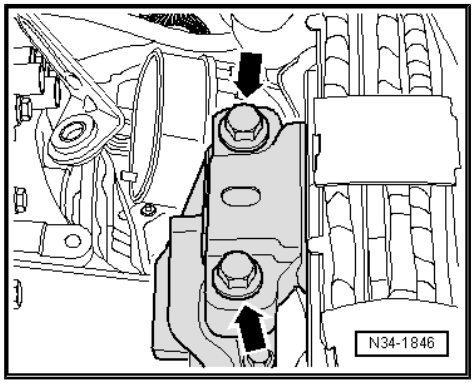

– Remove gearbox bracket -A- -arrows-.

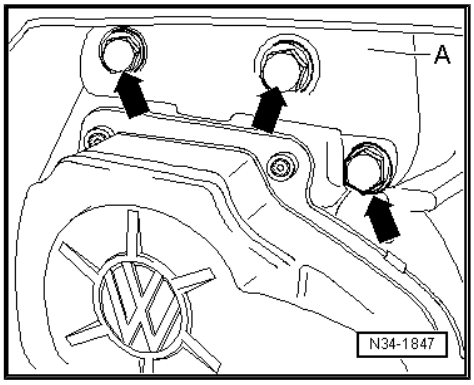

– If small cover plate -A- for flywheel behind the right flange shaft -arrows- is installed, remove it.

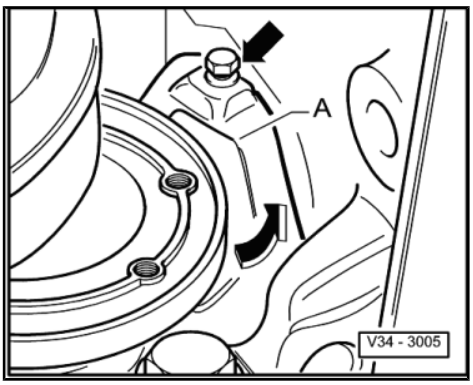

– Remove exhaust system strut -1-, if present, from gearbox and, as necessary, from exhaust system -arrow- (attachment to exhaust system is not visible in figure).

– Remove starter ⇒ Electrical system; Rep. Gr. 27 ; Starter .

To remove gearbox “0A4”, set up gearbox support -3282- with adjustment plate -3282/39- .

– Insert gearbox support -3282- in engine and gearbox jack -V.A.G 1383A- .

– Align arms of gearbox support according to holes in adjustment plate .

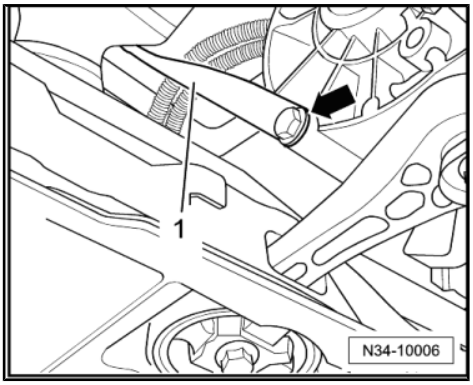

– Screw in support elements -A - and -C- on adjustment plate as shown.

– Position engine and gearbox jack under vehicle. Arrow -B- on adjustment plate points in direction of vehicle travel.

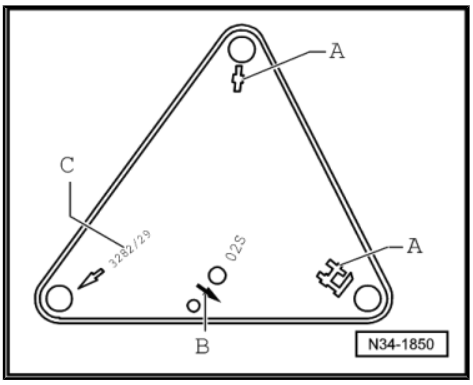

– Align adjustment plate parallel to gearbox and lock safety support on gearbox.
– Then screw pin -3282/29- into hole on gearbox for securing bolt of pendulum support.
– Remove lower engine/gearbox connecting bolts.
– Separate exhaust system if lower bolts -arrows- cannot be removed.

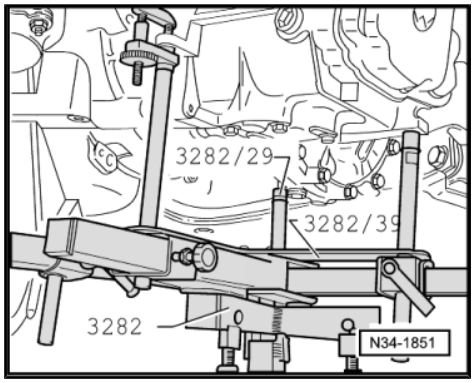

⇒ Rep. Gr. 26 ; Removing and installing parts of the exhaust system

– Press gearbox off dowel sleeves and carefully lower.
– When lowering gearbox, change position of gearbox using spindles of gearbox support -3282- .

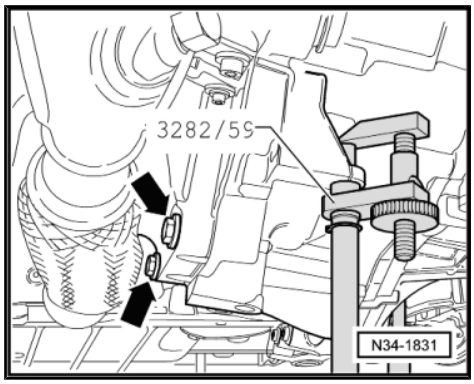

Note

Be careful of all lines when lowering gearbox.

6.2 Installing gearbox

Note

Refer to procedure "Removing gearbox" for required special tools *⇒ page 207* *.*

Observe the following table on the subject of "checking and topping up gear oil"

.

"Checking and topping up gear oil"				
		"No"	"Yes"	"Yes"
Gearbox	Original part	X		
	No oil loss	X		
	Completely dismantled		X Before installation ⇒ Item 3 (page 250) Oil capacity ⇒ page 6	
	Partially dismantled • (Gearbox housing and clutch housing were not separated.)			X After installation ⇒ page 220

– All threaded holes into which self-locking bolts are to be screwed must be cleaned of residual locking fluid carefully with a thread tap.

– Always renew self-locking bolts and nuts.

– Check whether dowel sleeves for aligning engine and gearbox are fitted in cylinder block and install if necessary.

If dowel sleeves are not fitted, difficulties shifting gears, clutch problems and possible noises from the gearbox (rattling of gears which are not engaged) could occur.

– Ensure that intermediate plate is correctly seated on engine.

– Clean input shaft splines and apply thin coat of grease for clutch plate splines -G 000 100- .

The clutch plate must slide easily to and fro on the input shaft.

To install gearbox “0A4”, set up gearbox support -3282- with adjustment plate -3282/39- .

– Align arms of gearbox support according to holes in adjustment plate .

– Screw in support elements -A - and -C- (pin -3282/29-) on adjustment plate as shown.

– Place gearbox on engine and gearbox jack .

– Align adjustment plate and gearbox parallel to one another.

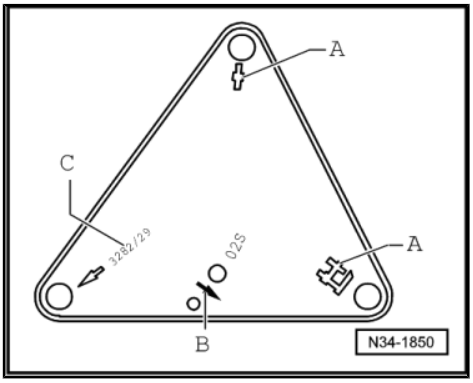

– Screw pin -3282/29- into hole on gearbox for securing bolt of pendulum support.

– Position engine and gearbox jack under vehicle. -Arrow B- on adjustment plate points in direction of vehicle travel.

– Raise gearbox to engine.

– Have a second mechanic push engine forwards slightly.

– Align gearbox to engine and join.

– Screw in lower engine/gearbox securing bolts and tighten to specified torque ⇒ page 217 .

– After gearbox has been bolted to engine, remove engine and gearbox jack from gearbox.

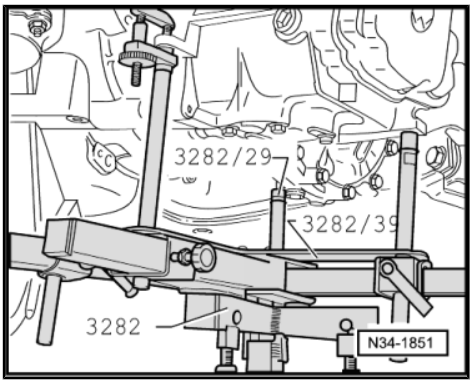

– If small cover plate -A- had been installed behind the right flange shaft -arrows-, install it.

– Screw in upper engine/gearbox securing bolts and tighten to specified torque ⇒ page 217 .

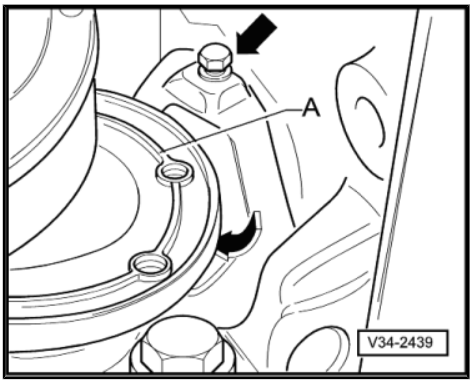

– Install bracket -A- on gearbox using new hexagonal bolts -arrows- and tighten to specified torque ⇒ page 217 .

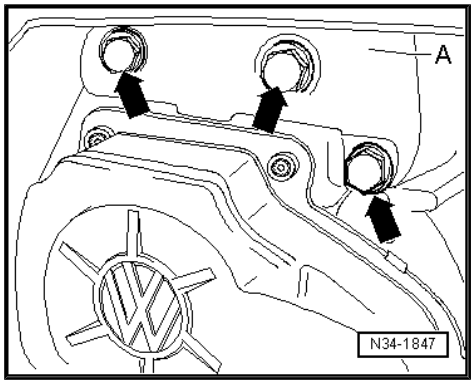

– Align engine and gearbox in installation position using both spindles of support bracket -10 - 222 A- .

– Install new bolts -arrows- for left assembly mounting in gearbox mounting and tighten to specified torque ⇒ page 217 .

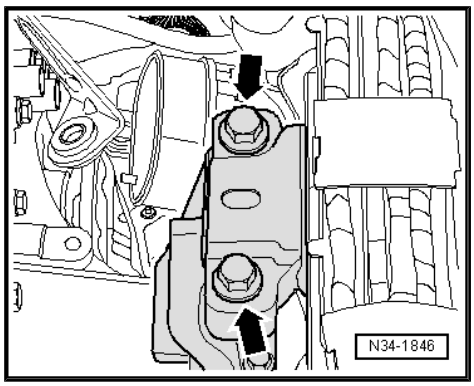

WARNING

Do not remove support bar -10-222 A- until all bolts securing the left and right assembly mountings have been tightened to specified torque.

Note

Install engine and gearbox mounting free of tension ⇒ Rep. Gr. 10 ; Removing and installing engine .

– Attach drive shafts to gearbox ⇒ Running gear, axles, steering; Rep. Gr. 40 ; Repairing front suspension .

– Install drive shaft heat shield, if present -arrows- ⇒ Running gear, axles, steering; Rep. Gr. 40 ; Repairing drive shafts; Removing and installing drive shafts .

– Install subframe and suspension links with pendulum support ⇒ Running gear, axles, steering; Rep. Gr. 40 ; Assembly overview - subframe, anti-roll bar, suspension links .

– Attach steering box to subframe ⇒ Running gear - front and four-wheel drive; Rep. Gr. 48 .

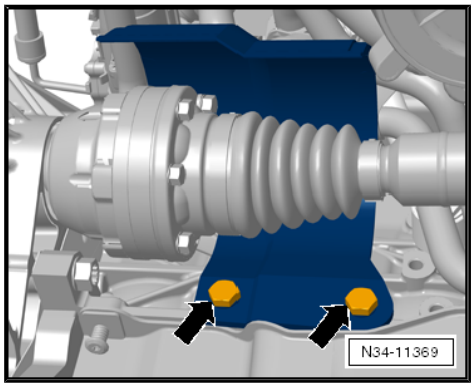

– Attach pendulum support to gearbox bolt -2- and bolt -3- ⇒ Running gear, axles, steering; Rep. Gr. 40 ; Repairing front wheel suspension .

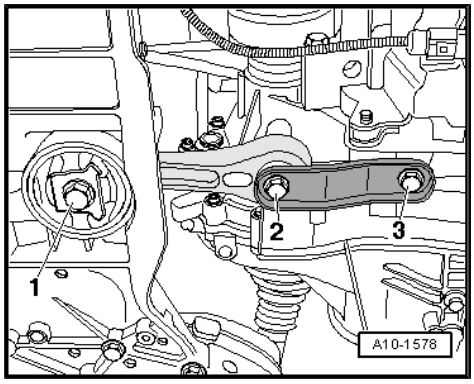

– If front vehicle level sender -G78- -arrows- is present, install it ⇒ Rep. Gr. 40 ; Removing and installing front left vehicle level sender -G78- .

– Assemble exhaust system and attach exhaust system bracket to subframe ⇒ Rep. Gr. 26 ; Removing and installing parts of exhaust system .

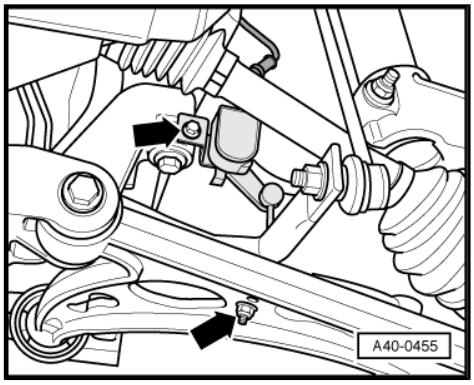

– Attach exhaust system strut -1-, if present, to gearbox and exhaust system and tighten bolts -arrow- to specified torque (attachment to exhaust system is not visible in figure). ⇒ Rep. Gr. 26 ; Removing and installing parts of exhaust system .

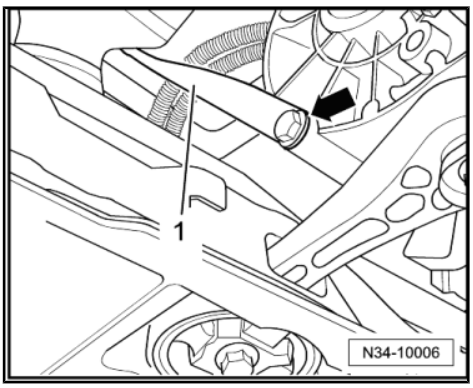

– Gearboxes for vehicles with start-stop system: join connector -arrow- to gearbox neutral position sender -G701- .

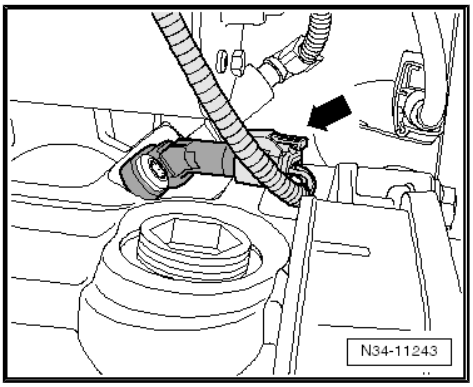

– Install slave cylinder and tighten bolts -arrows B- to specified torque ⇒ Item 9 (page 104) .

– Then install gearbox support -arrow A- and tighten to specified torque ⇒ page 217 .

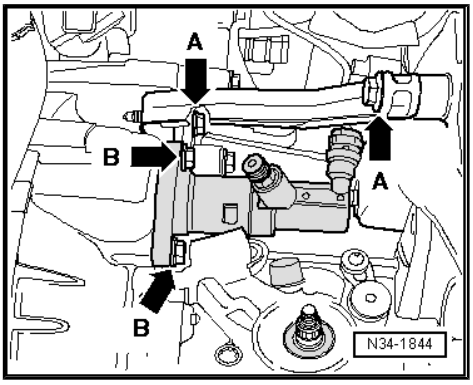

– Reconnect reversing light connector -arrow 1-.
– Install starter, push on connector -arrow 2- and bolt on wire -arrow 3- ⇒ Electrical system; Rep. Gr. 27 ; Starter .
– Install earth strap at upper engine/gearbox connecting bolt.

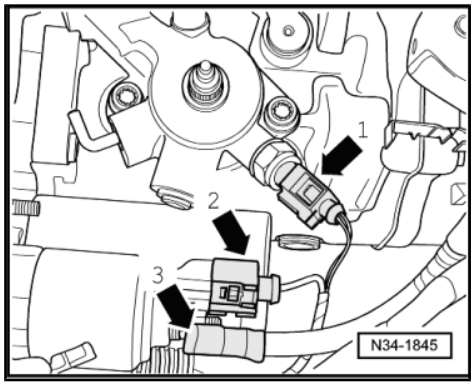

– Attach support -B- to gearbox.
– Press pipe/hose line -A- into retainer -B- on gearbox.
– Install cable support bracket on gearbox and tighten bolts -arrows- to specified torque ⇒ Item 6 (page 131) .

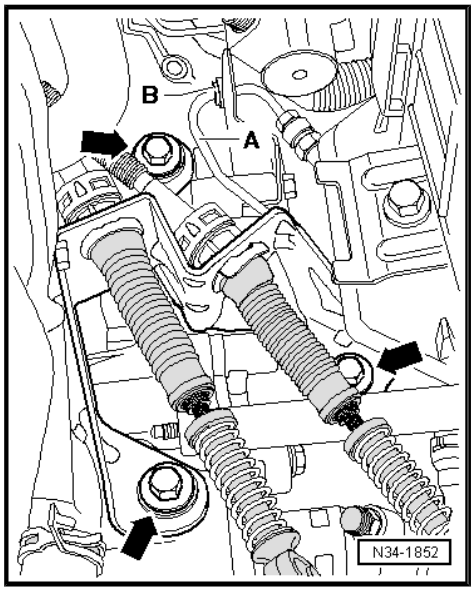

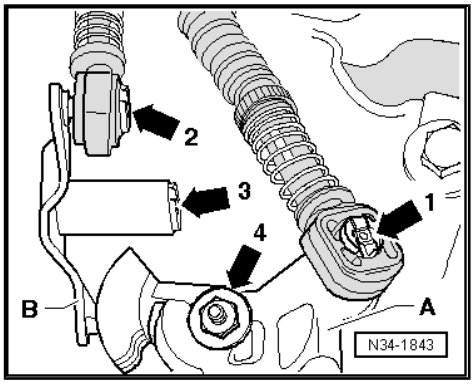

– Install gearbox selector lever -A-.

– Tighten hexagon nut -arrow 4- to specified torque ⇒ Item 18 (page 132) .

– Spread a small amount of grease on pin of gearbox selector lever -A-.

Allocate grease using ⇒ Electronic parts catalogue (ETKA) .

– Connect gear selector cable to gearbox selector lever -arrow 1-.

Metal relay lever

– Install relay lever -B- and secure with securing clip -arrow 3-.

– Spread a small amount of grease on pin of relay lever -B-.

Allocate grease using ⇒ Electronic parts catalogue (ETKA) .

– Connect gate selector cable to relay lever -arrow 2-.

Plastic relay lever

– Install relay lever together with cable end-piece ⇒ page 134 .

Continuation for all

– Adjust selector mechanism ⇒ page 139 .

– Install battery tray, battery cover and battery ⇒ Electrical system; Rep. Gr. 27 ; Removing and installing battery .

– Install complete air filter housing ⇒ Rep. Gr. 23 or ⇒ Rep. Gr. 24

– Install engine cover.

– Reconnect battery and perform work required after connecting battery ⇒ Electrical system; Rep. Gr. 27 ; Disconnecting and connecting battery .

– Install lower part of front left wheel housing liner ⇒ General body repairs, exterior; Rep. Gr. 66 ; Wheel housing liner .

– Install noise insulation ⇒ General body repairs, exterior; Rep. Gr. 50 ; Noise insulation .

– For vehicles with front vehicle level sender -G78- , check headlight adjustment ⇒ Electrical system; Rep. Gr. 94 ; Lights, lamps, switches - exterior .

6.2.1 Torque settings

Gearbox to engine

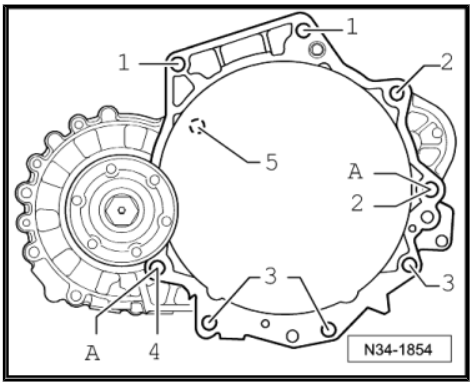

Item	Bolt	Quantity	Nm
1	M 12 x 55	2	80
2	M 12 x 150 ♦ Additionally, starter to gearbox	2	80
3	M10 x 50	3	40
4	M12 x 60	1	80
5	M6 x 8 ♦ Small flywheel cover plate	1	10

Item -A- dowel sleeves for centring

Gearbox bracket to gearbox

– Renew bolts.
– Screw in all bolts hand-tight.
– Tighten bolts to specified torque.

Bolts -arrows-	40 Nm + 90°

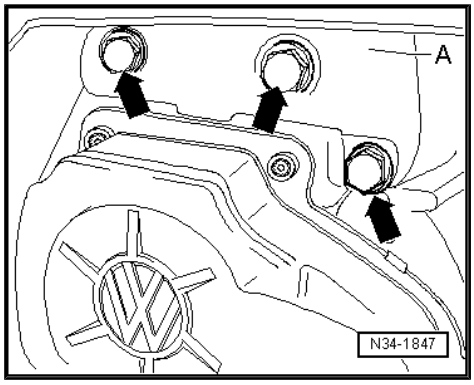

Gearbox mounting to body

– Renew bolts.
– Screw in all bolts hand-tight.
– Tighten bolts to specified torque.

Bolts -arrows-	60 Nm + 90°

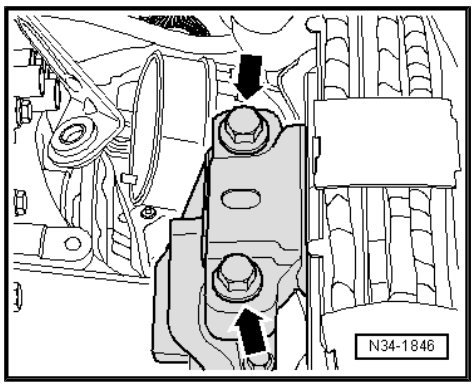

Gearbox support to gearbox bracket and gearbox

– Renew bolts.
– Screw in all bolts hand-tight.
– Tighten bolts to specified torque.

Bolts -arrows-	20 Nm + 90°

Drive shaft to flange shaft ⇒ Running gear, axles, steering; Rep. Gr. 40 ; Repairing drive shaft; Removing and installing drive shafts .

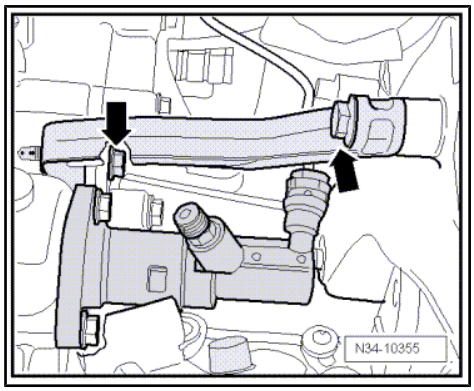

7 Transporting gearbox

Special tools and workshop equipment required

♦ Gearbox mounting support -3336-

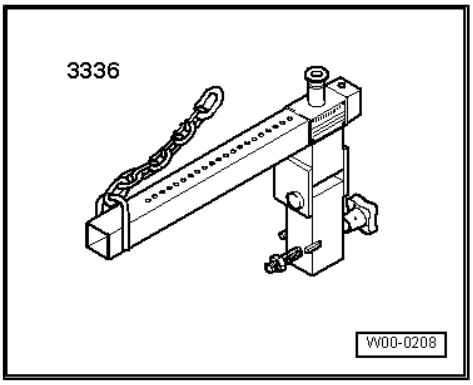

– Bolt gearbox lifting tackle -3336- to clutch housing.

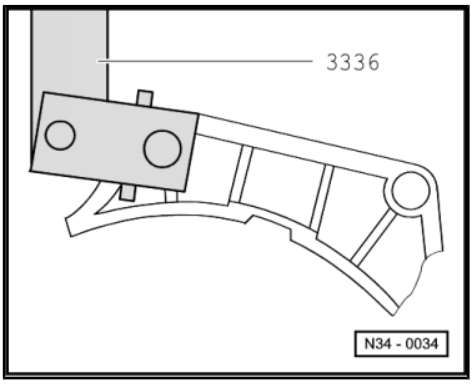

– Adjust support beam on sliding piece using locking pin -arrow-.

Number of holes visible = 5.

– Raise gearbox using workshop crane and gearbox lifting tackle -3336- .

– Set gearbox aside, for example in a transport container.

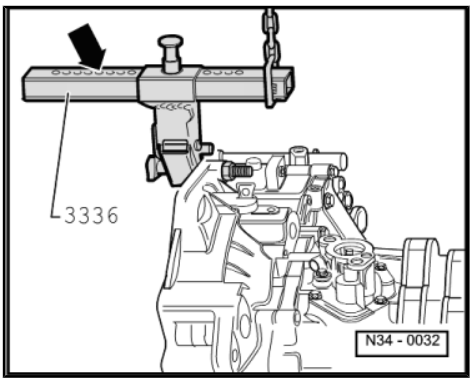

8 Checking and topping up gear oil

It is not possible to check the gear oil level by unscrewing the oil filler plug.

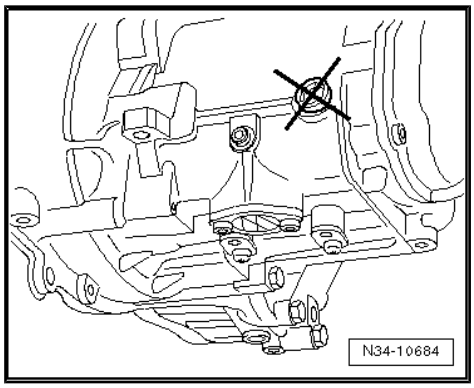

The angle of the engine/gearbox unit means the lower edge of the fill hole -arrow 1- is below the oil level -arrow 2-.

The oil level in the gearbox can only be checked by completely draining the gear oil and then refilling:

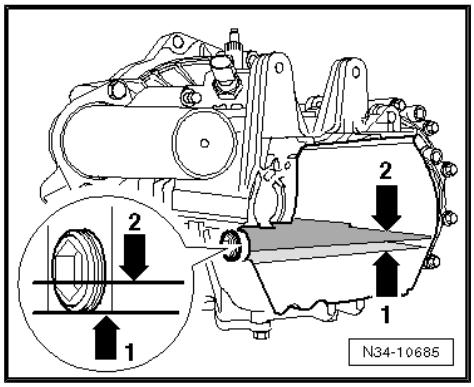

Special tools and workshop equipment required

- Torque wrench -V.A.G 1331-

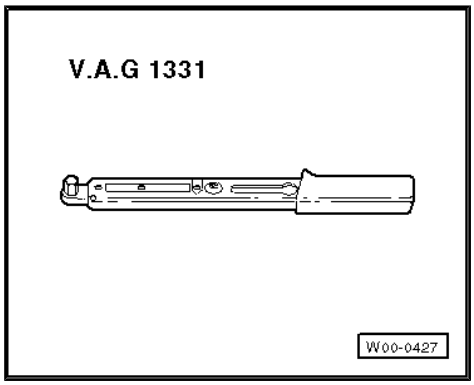

- Hose (approx. 600 mm long, external diameter 10 mm) with funnel, commercially available.

8.1 Preparation

Gear oil specification for manual gearboxes ⇒ Electronic parts catalogue “ETKA” .

– Remove complete air filter housing ⇒ Rep. Gr. 23 or ⇒ Rep. Gr. 24 .

– Remove noise insulation ⇒ General body repairs, exterior; Rep. Gr. 50 ; Noise insulation .

Clean gearbox.

> ⚠ **Caution**
>
> *To drain gear oil, a pivot pin for the selector forks in the gearbox must be removed.*
>
> *To prevent the positions of the selector forks from being changed, e.g. due to accidental operation of the selector mechanism, the selector shaft must be locked in position.*

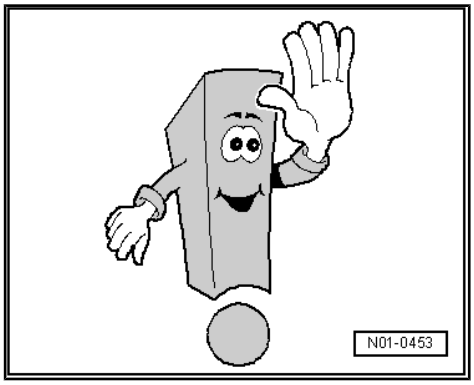

Secure selector shaft as follows:

- Press selector shaft down -direction of arrow 1-.
- While pressing down selector shaft, turn angled rod -A- in -direction of arrow 2- upwards and at the same time press it in until it engages in selector shaft.

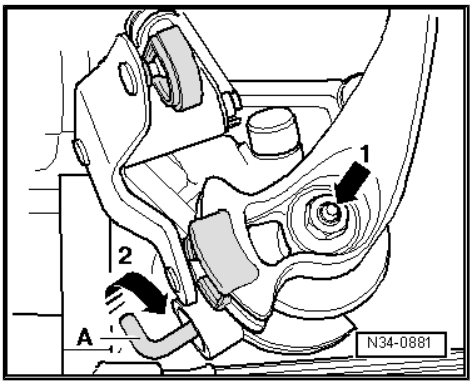

8.2 Draining gear oil

Use a clean container with a scale and a 3-litre capacity to catch the oil which runs out.

- Selector shaft is locked in place ⇒ page 221
- Drain gear oil by removing oil drain plug -arrow 1- and then pivot pin -arrow 2-.
- Install pivot pin -arrow 2- with a new O-ring ⇒ Item 7 (page 226) .

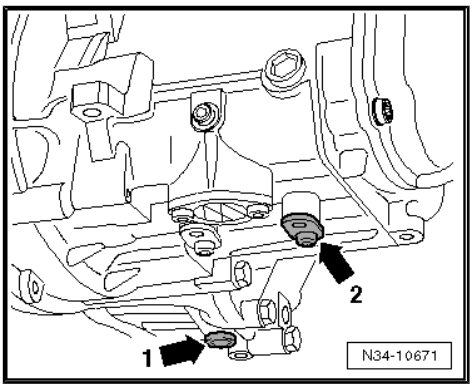

- Screw in oil drain plug -arrow 1- ⇒ Item 17 (page 251) .
- Now turn angled rod -A- back to original position -direction of arrow- so that selector shaft can move again.

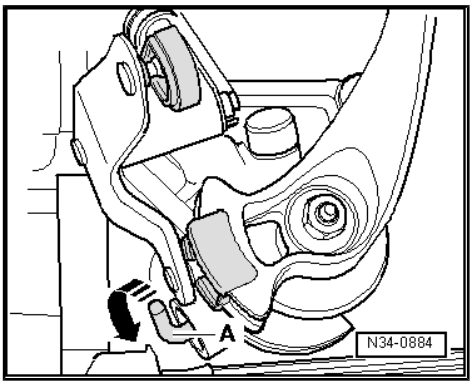

8.3 Fill with gear oil

Top up oil in container to 1.7 litres.

Gear oil specification for manual gearboxes ⇒ Electronic parts catalogue “ETKA” .

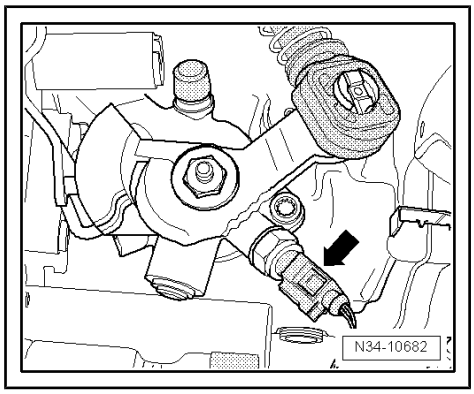

- Remove reversing light switch -F4- -arrow-.
- Connect hose (approx. 600 mm long, external diameter 10 mm) to commercially available funnel.
- Insert hose in fitting hole for reversing light switch (2nd mechanic) and fill gear oil.
- Install reversing light switch -F4- -arrow- ⇒ Item 2 (page 256) .
- Check operation of selector mechanism ⇒ page 142 .
- Install complete air filter housing ⇒ Rep. Gr. 23 or ⇒ Rep. Gr. 24
- Install noise insulation ⇒ General body repairs, exterior; Rep. Gr. 50 ; Noise insulation .

9 Dismantling and assembling gearbox

9.1 Overview - gearbox

1 - 1st gear
2 - 2nd gear
3 - 3rd gear
4 - 4th gear
5 - 5th gear
6 - Gearbox housing cover
7 - Gearbox housing
8 - Selector mechanism
❑ (Selector forks)
9 - Reverse gear
10 - Clutch housing
11 - Input shaft
12 - Output shaft
13 - Differential

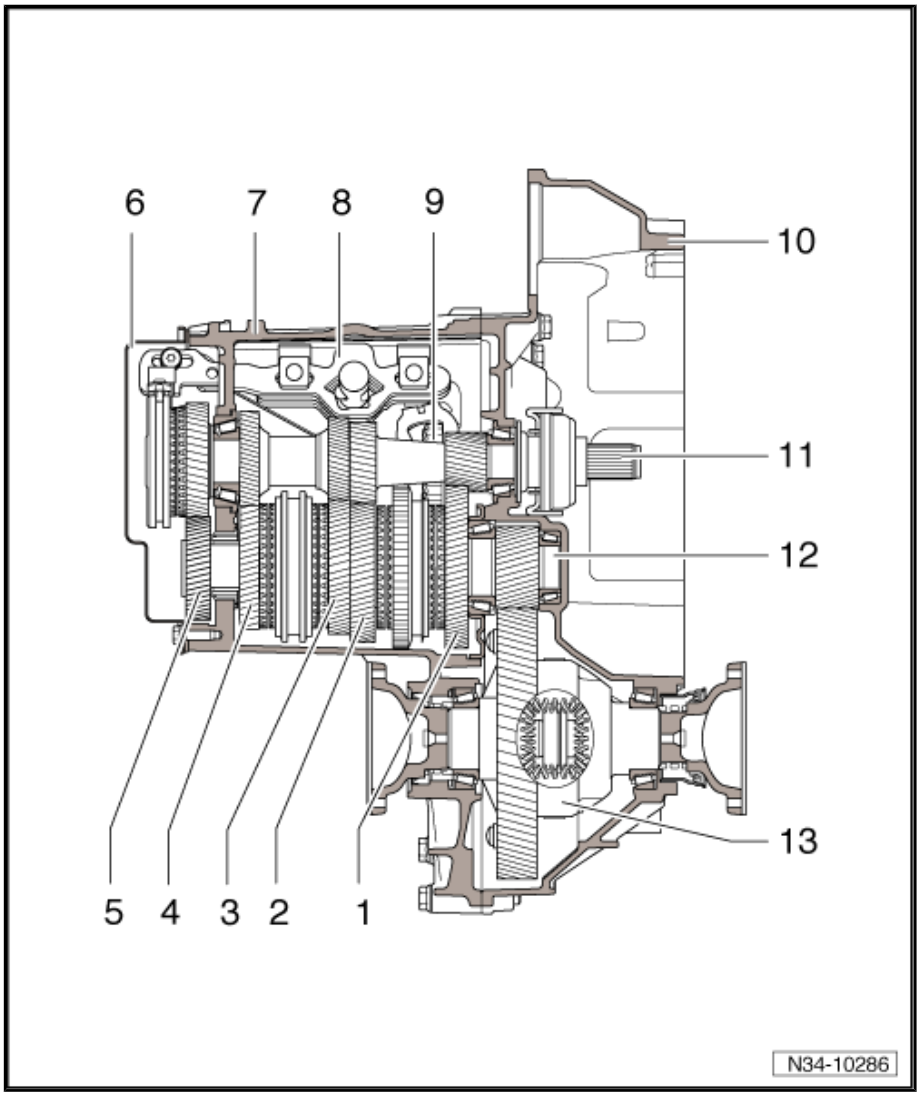

9.2 Assembly overview

Dismantling and assembling procedure ⇒ page 234

I - Removing and installing cover for gearbox housing and 5th gear ⇒ page 225 .

II - Removing and installing gearbox housing and selector mechanism ⇒ page 226

III - Removing and installing input shaft, output shaft, differential and selector forks ⇒ page 227

Assembly sequence - removing and installing cover for gearbox housing and 5th gear ⇒ page 228 .

Assembly sequence - Dismantling and assembling gearbox completely ⇒ page 234 .

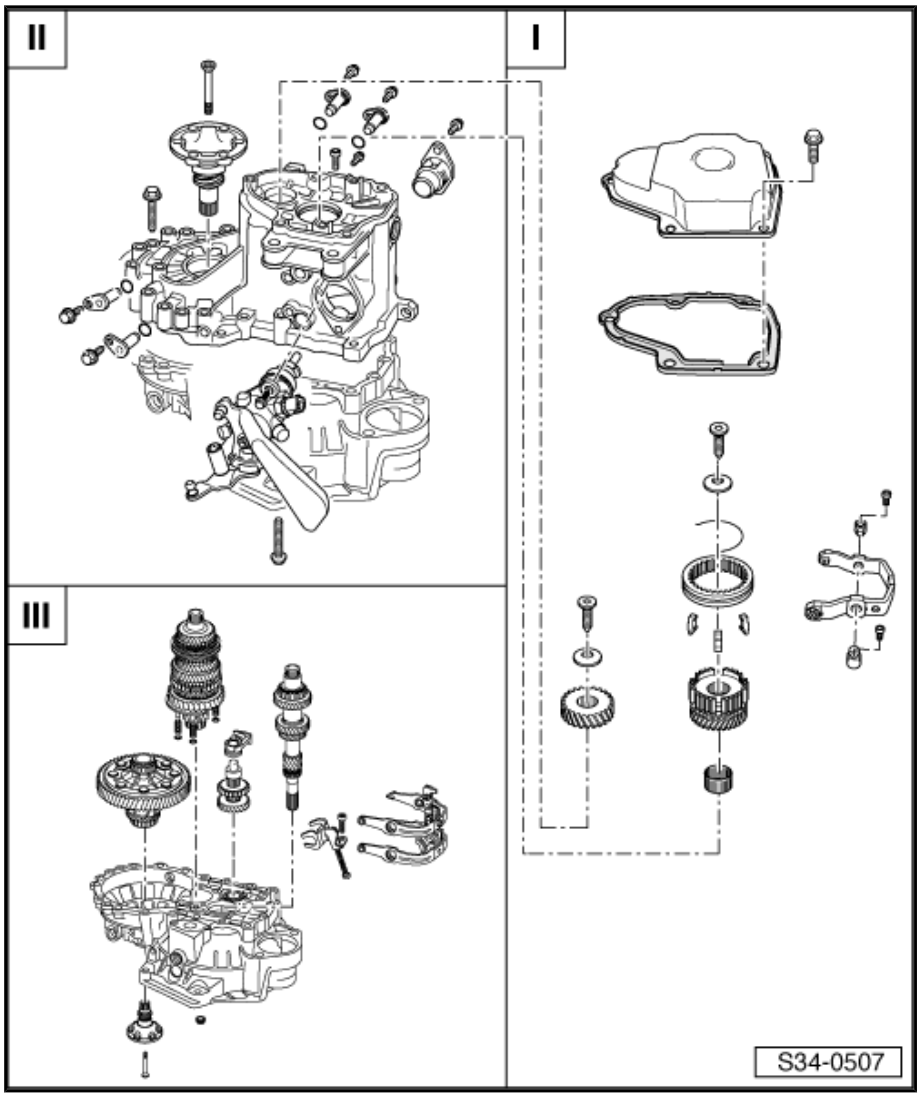

9.3 Removing and installing cover for gearbox housing and 5th gear

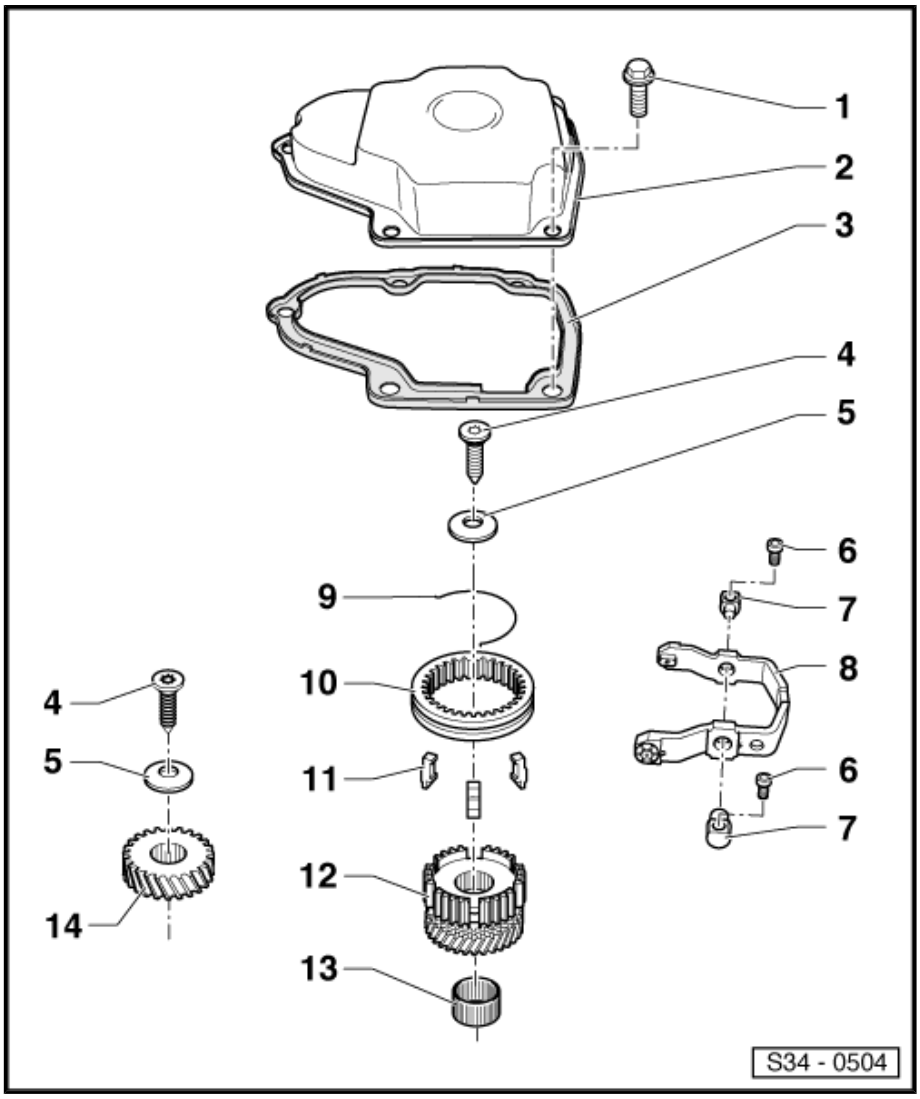

1 - Bolt, 18 Nm

- For gearbox housing cover.

2 - Gearbox housing cover

Note

3 - Seal

4 - Bolt, 80 Nm + turn 90° further

- Always renew
- Fitted section of bolt head holds dished spring washer in position
- Clean residual locking fluid from threaded holes for synchro-hub securing bolts and 5th gear wheel with a thread chaser. Otherwise the bolts may shear.

5 - Dished washer

- Installing ⇒ page 246

6 - Socket head bolt, 25 Nm

- For pivot pin to gearbox housing

7 - Pivot pin

8 - 5th gear selector fork

- Dismantling and assembling ⇒ page 258
- Adjusting ⇒ page 247

9 - Spring

- Version with bent ends.
- Installing ⇒ page 270

10 - Locking collar for 5th gear

- Installation position ⇒ page 269
- Adjusting ⇒ page 247

11 - Locking pieces (Qty. 3)

- Installation position ⇒ page 269

12 - Synchro-hub with synchromeshed gear and synchronizing ring for 5th gear

- Pull off together with gearbox housing ⇒ page 234
- Pull off individually ⇒ page 228
- Dismantling and assembling ⇒ page 269

13 - Needle bearing

14 - Gear wheel for 5th gear

- Pull off together with gearbox housing ⇒ page 234
- Pull off individually ⇒ page 228

- ❑ Installation position ⇒ page 245

9.4 Removing and installing gearbox housing and selector mechanism

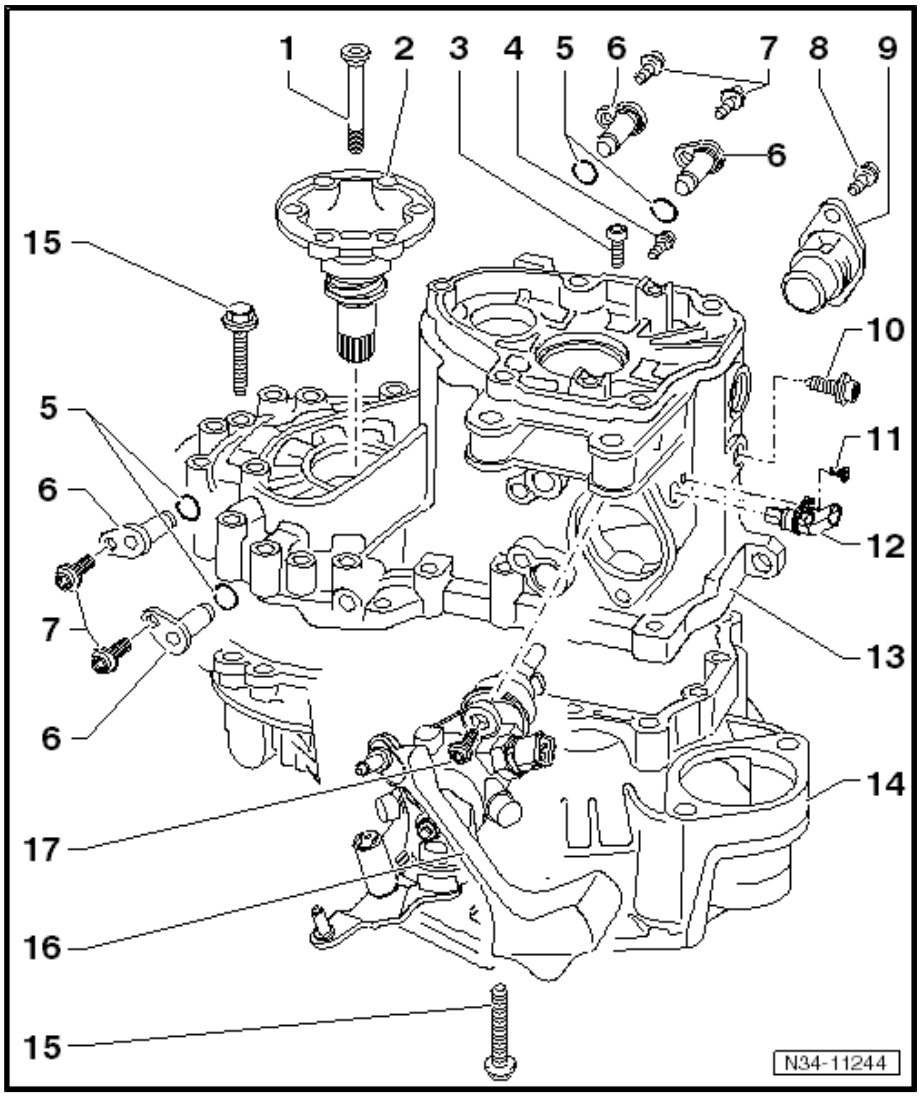

1 - Countersunk bolt, 25 Nm

2 - Flange shaft with compression spring
- ❑ Removing and installing ⇒ page 294
- ❑ Assembling ⇒ page 303

3 - Torx socket head bolt, 25 Nm
- ❑ For reverse shaft support.
- ❑ Self-locking
- ❑ Always renew

4 - Torx socket head bolt, 30 Nm
- ❑ For reverse shaft support
- ❑ Self-locking
- ❑ Always renew

5 - O-ring
- ❑ Always renew

6 - Pivot pin

7 - Bolt, 25 Nm

8 - Bolt, 25 Nm

9 - Cover plate

10 - Multi-point socket head bolt 25 Nm
- ❑ For reverse shaft support.
- ❑ Always renew

11 - Bolt, 5 Nm

12 - Gearbox neutral position sender -G701-
- ❑ for vehicles with start/stop system

13 - Gearbox housing
- ❑ Pull off together with 5th gear ⇒ page 234
- ❑ Repairing ⇒ page 248

14 - Clutch housing
- ❑ Repairing ⇒ page 248

15 - Hexagon bolt, 25 Nm and turn 90° further
- ❑ Always renew

16 - Selector shaft with selector shaft cover
- ❑ (Selector unit)
- ❑ Repairing ⇒ page 255

17 - Multi-point socket head bolt 25 Nm

9.5 Removing and installing input shaft, output shaft, differential and selector forks

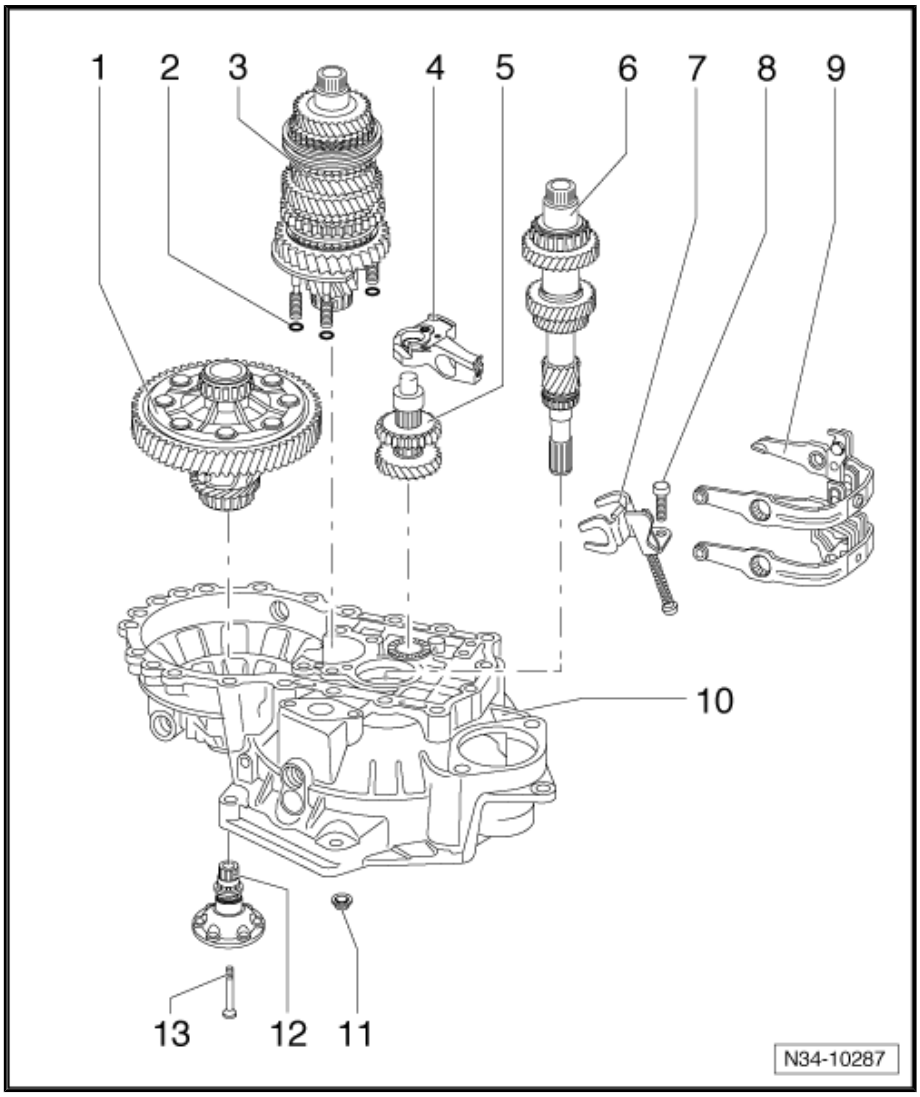

1 - Differential

- ❑ Dismantling and assembling ⇒ page 303

2 - Seal

- ❑ Qty. 4
- ❑ Always renew

3 - Output shaft

- ❑ Dismantling and assembling ⇒ page 275

4 - Reverse shaft support

- ❑ Dismantling and assembling ⇒ page 291

5 - Reverse shaft

- ❑ Dismantling and assembling ⇒ page 291

6 - Input shaft

- ❑ Dismantling and assembling ⇒ page 263

7 - Selector fork for reverse gear

- ❑ Dismantling and assembling ⇒ page 258
- ❑ Installation position ⇒ page 241

8 - Torx socket head bolt, 25 Nm

9 - Selector mechanism

- ❑ (Selector forks)
- ❑ Dismantling and assembling ⇒ page 258

10 - Clutch housing

- ❑ Repairing ⇒ page 248

11 - Hexagon nut, 25 Nm and then turn 90° further

- ❑ 4 nuts for bearing support.
- ❑ Always renew

12 - Flange shaft with compression spring

- ❑ Removing and installing ⇒ page 294
- ❑ Assembling ⇒ page 303

13 - Countersunk bolt, 25 Nm

9.6 Assembly sequence - removing and installing cover for gearbox housing and 5th gear

Note

- *Follow the working procedure described below if only the 5th gear has to be removed:*
- *If the gearbox housing has to be removed, follow the working procedure: Dismantling and assembling gearbox completely* *⇒ page 234* .

Special tools and workshop equipment required

- Support plate -VW 309-
- Gearbox support -VW 353-
- Drift -VW 295-
- Drift sleeve -VW 244 B-
- Hot air blower -V.A.G 1416-
- Torque wrench -V.A.G 1331-
- -Zweiarmabzieher Kukko 210.1-
- -Stehbolzen M 8 x 100 mm-

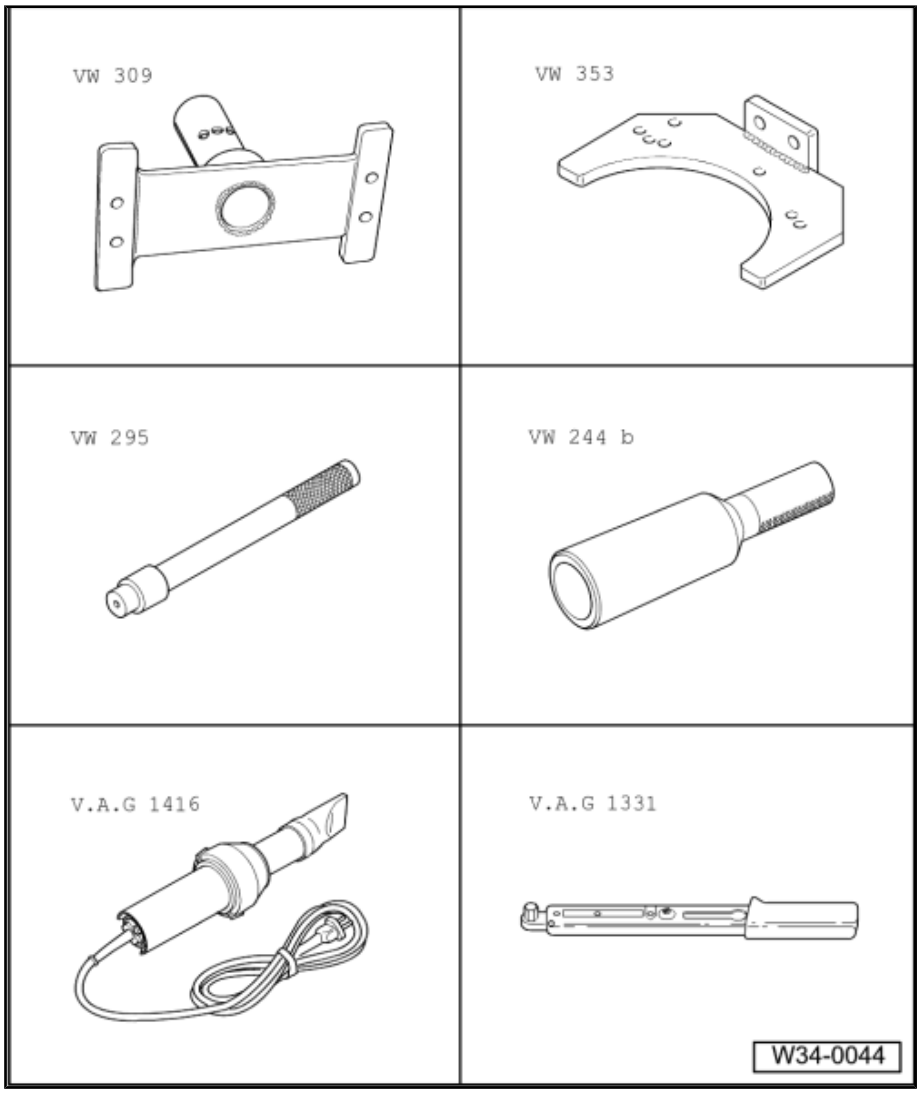

- Support bridge -30-211A-
- Thrust piece -32 - 111-
- Thrust piece from assembly tool -T10030/4-
- Tube -VW 416 B-
- Puller -T10309-
- Two arm puller -T10040-
- With puller hooks - T10040/2A-
- Thrust piece -T10040/3-

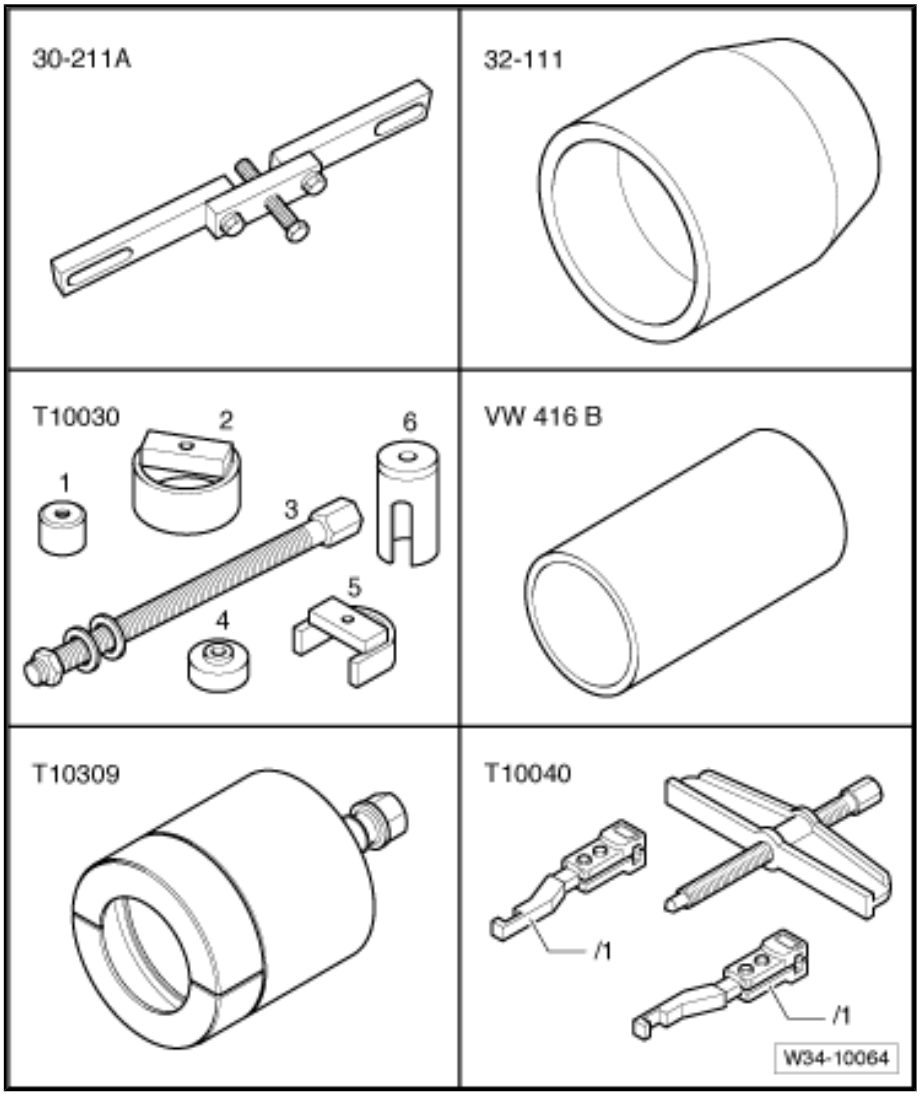

- Support device -T10323-
- Assembly tool -3253/7-
- Thrust piece -VW 433-
- Thrust plate -40 - 105-
- Torque wrench -V.A.G 1332-

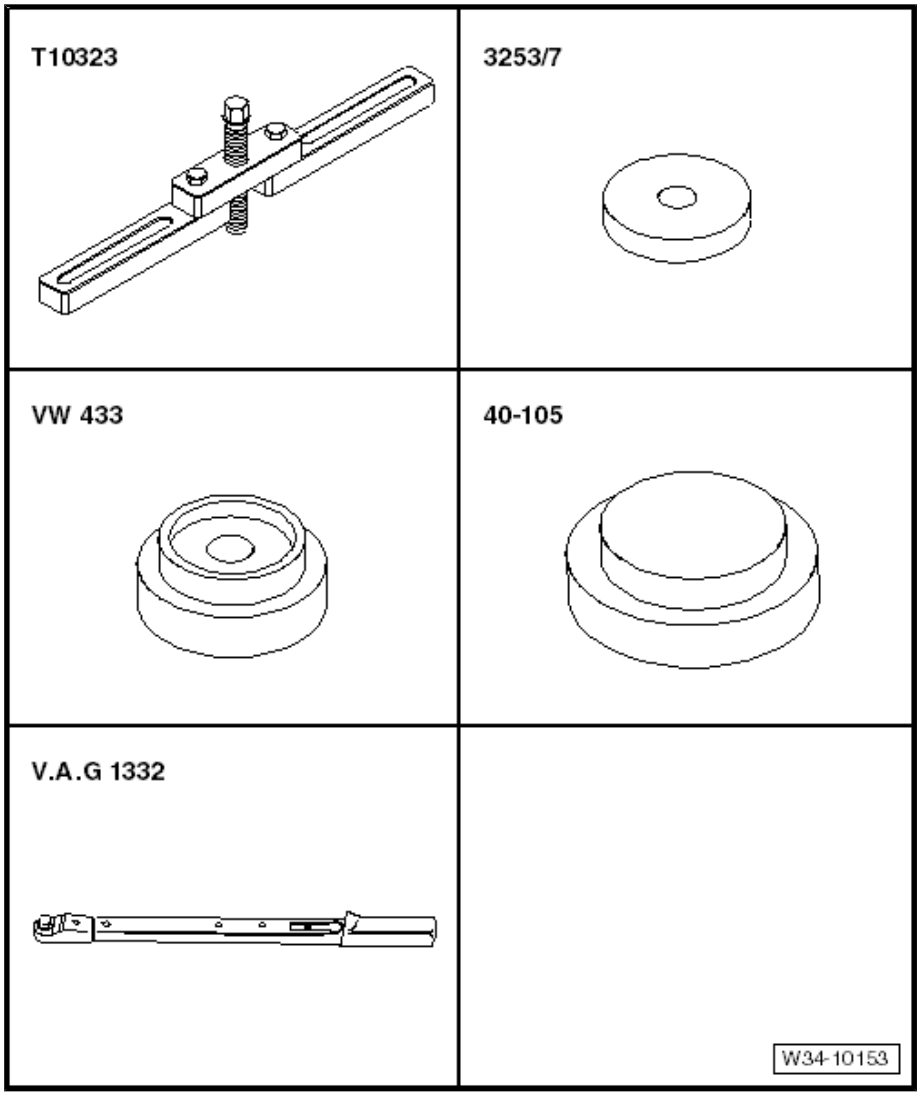

9.6.1 Removing

– Remove clutch release lever and release bearing ⇒ page 103 .

- Bearings of input shaft and output shaft must not be damaged when 5th gear is removed and installed.
- Therefore, following tools must be mounted for support at this stage during attachment of gearbox to gearbox support -VW 353- :

Underneath input shaft:

- ♦ Support bridge -30-211A-
- ♦ Thrust piece -32 - 111-
- ♦ Thrust piece -T10030/4-
- The input shaft can be supported by the thrust piece -32 - 111- only at a later point.

Underneath bearing support for output shaft:

- ♦ Support device -T10323-
- ♦ Assembly tool -3253/7-
- ♦ Thrust piece -VW 433-

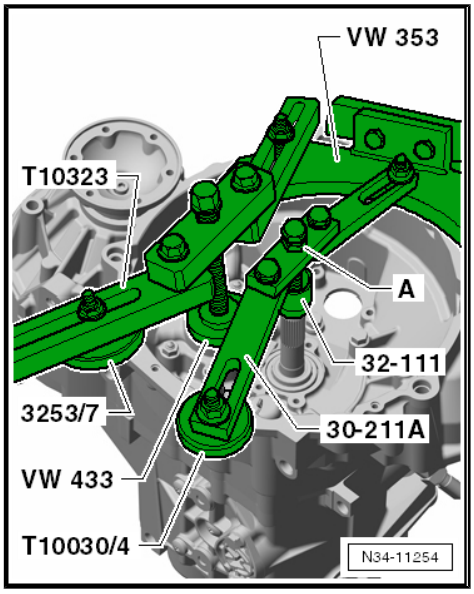

– Secure gearbox on gearbox support -VW 353- .

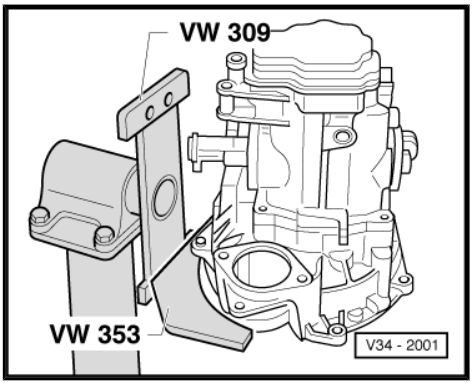

– Remove gearbox housing cover -arrow-.

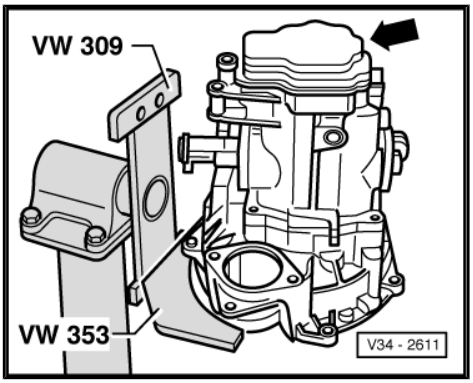

– Check whether puller hooks -T10040/2A- can be inserted correctly under 5th gear wheel.

Puller hooks -T10040/2A- cannot be inserted correctly.	
-A- Puller hooks -T10040/2A- make contact too soon with: ♦ gearbox housing wall ♦ ribs in gearbox housing under gear wheel	Removal of “synchro-hub for 5th gear”, “gear wheel for 5th gear” and “gearbox housing” “together” ⇒ page 234
-B- Puller hooks -T10040/2A- come into contact with ribs in gearbox housing below gear wheel.	

Puller hooks -T10040/2A- cannot be inserted correctly.
5th gear can be removed separately, ⇒ from ⇒ page 232

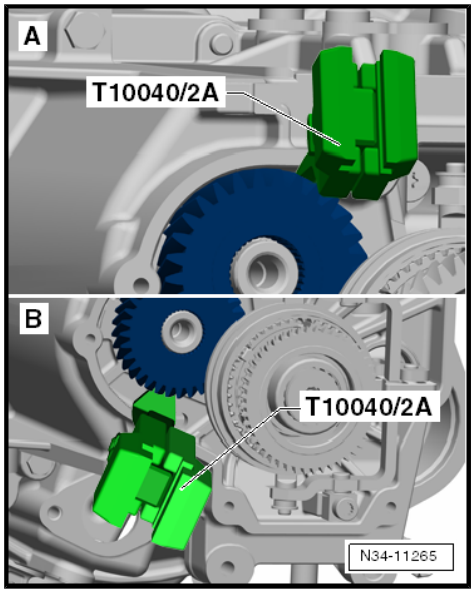

Removing 5th gear separately

– Cover openings with a cloth.

– Move selector fork -1- to neutral position.

– Remove bolt -2- with selector fork for 5th gear.

– Then remove both bolts -arrows- for pivot pins.

– Pull out pivot pins.

– Remove selector fork.

– Spring -3- and locking collar -4- do not need to be removed.

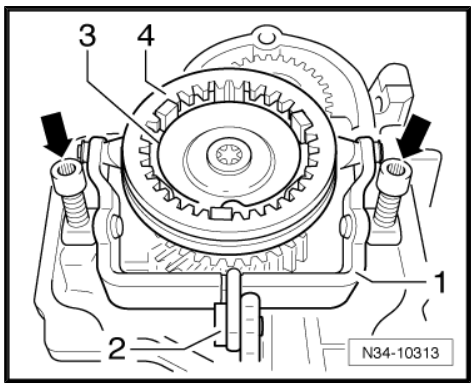

– Remove bolts -A- for synchro-hub and gear wheel for 5th gear. To do this, engage 5th gear -arrow 1- and 1st gear -arrows 2- and -3-
.

– After both gears are engaged, the input shaft and output shaft are locked. The synchro-hub and gear wheel cannot turn. Both bolts can now be loosened.

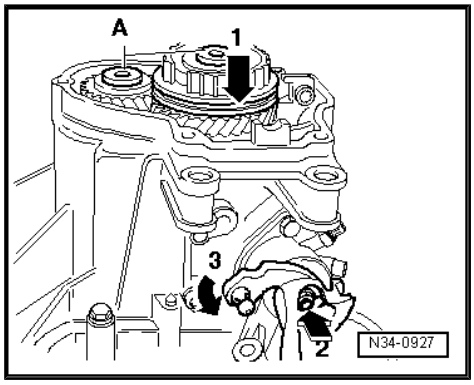

Note

If shafts are not to be renewed, carefully clean residual locking material out of threaded holes using a thread chaser.

Pull off synchro-hub for 5th gear together with locking collar and locking pieces.

Use puller -T10309- .

– First set half sleeve -T10309/1- between 5th gear wheel -A- and support for selector fork for 5th gear -B-.

- The half sleeve -T10309/1- must be positioned beneath the synchro-ring.
- If necessary, half sleeve must be pressed to end position.
- Then turn half sleeve -T10309/1- to opposite side -direction of arrow-.

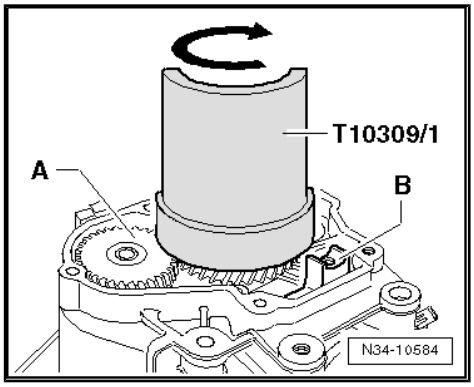

- Set threaded insert -T10309/3- in half shell .
- Now fit second half shell -T10309/1- and set tube -T10309/2- over assembly.
- After parts are pulled off, check synchro-hub for damage.
- Renew synchro-ring.
- Remove 5th gear synchromeshed gear with needle bearing.

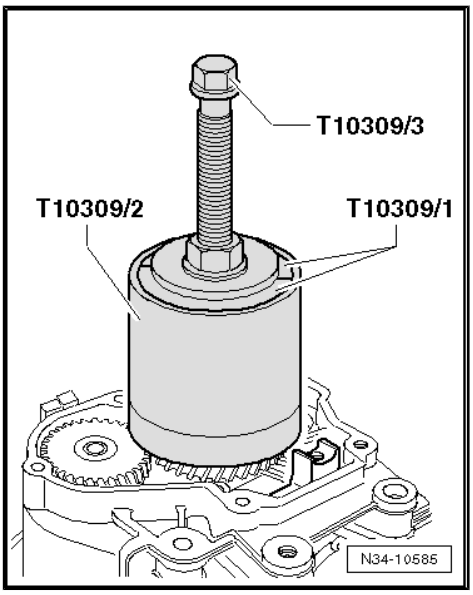

- Pull off gear wheel for 5th gear. (Shown here on another gearbox.)
- First set up puller hooks -A-.

B - Thrust plate -40 - 105-

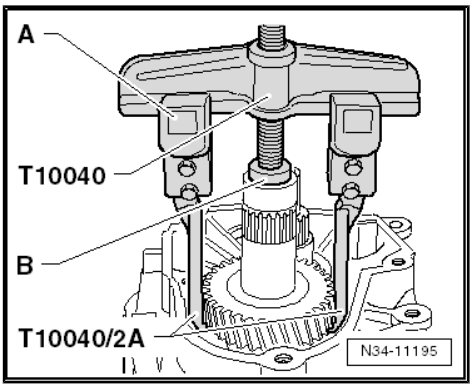

Note

When pulling off gear wheel, ensure that hooks do not bend outwards. After pulling off gear wheel for 5th gear, examine for damage.

9.6.2 Installing

Install 5th gear ⇒ page 244 .

- Apply sealant -AMV 188 200 03- evenly to sealing surface of gearbox cover.
- Install gearbox housing cover ⇒ page 225 .
- Fit clutch release lever and release bearing ⇒ page 103 .
- Top up gear oil ⇒ page 150 .

9.7 Assembly sequence - Dismantling and assembling gearbox completely

Removing and installing gearbox housing cover, gearbox housing, selector shaft with selector mechanism cover, input shaft, output shaft, differential and selector mechanism.

Special tools and workshop equipment required

- Support plate -VW 309-
- Gearbox support -VW 353-
- Drift -VW 295-
- Drift sleeve -VW 244 B-
- Hot air blower -V.A.G 1416-
- Torque wrench - V.A.G 1331-
- -Stehbolzen M 8 x 100 mm-

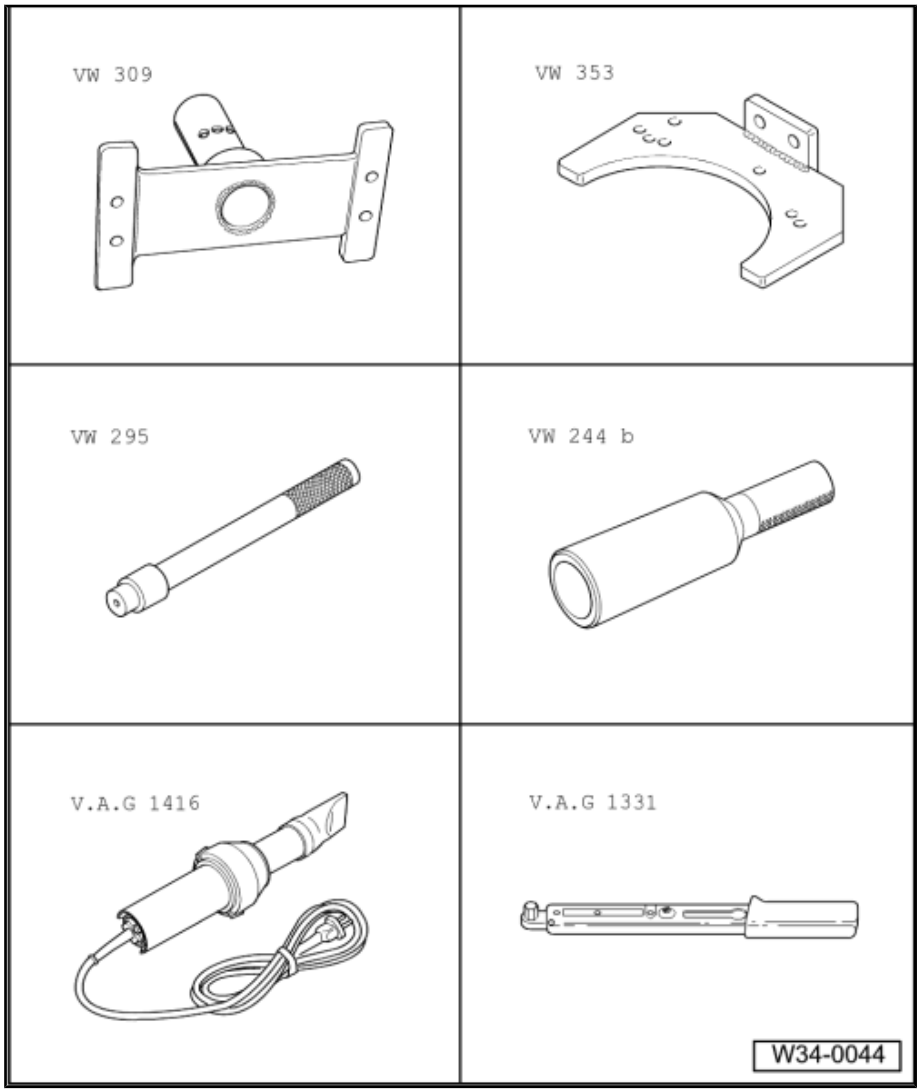

- Support bridge -30-211A-
- Thrust piece -32 - 111-
- Thrust piece from assembly tool -T10030/4-
- Tube -VW 416 B-
- Puller plate -T10408-
- Thrust pieces -T10408/2-
- Grips -T10408/3-
- Hexagon bolts M7 x 35 with washers
- Puller - 2 Kukko 18/1-

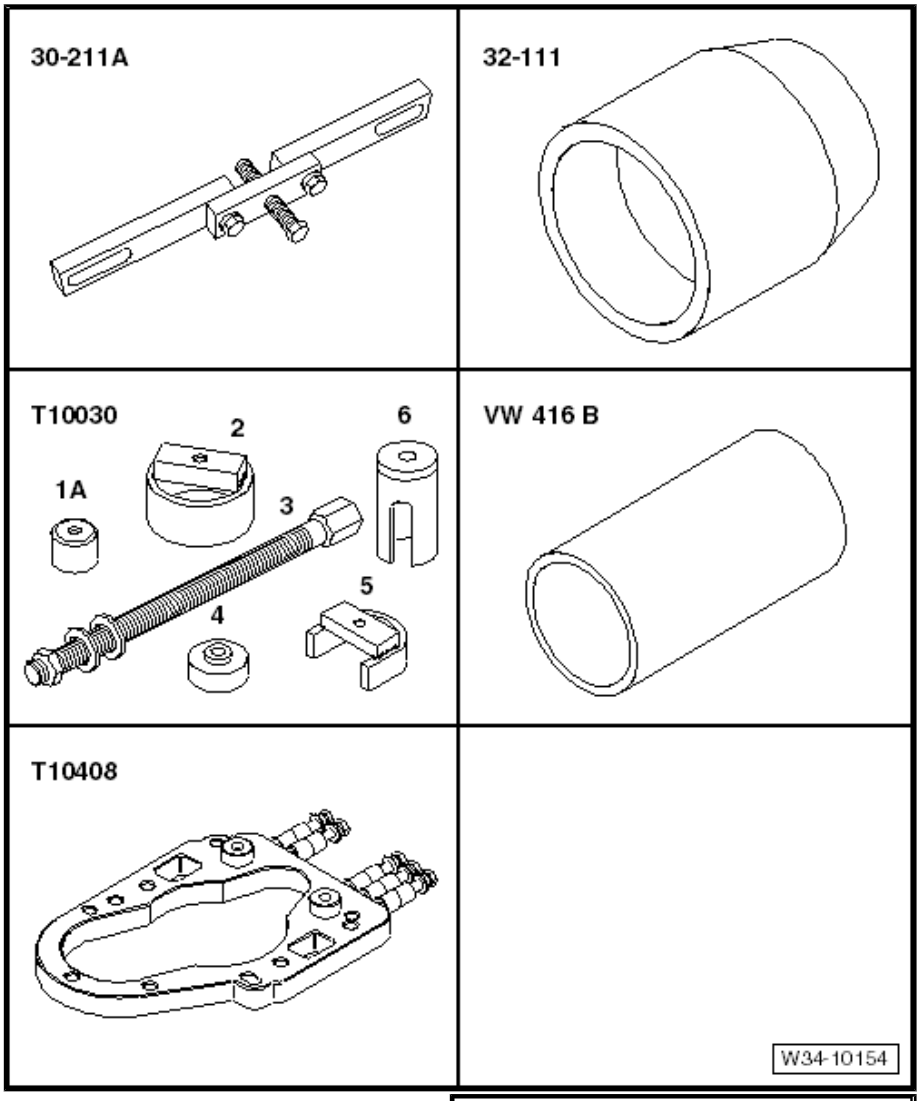

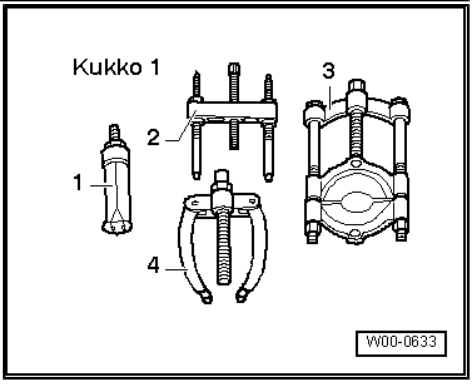

- Support device -T10323-
- Assembly tool -3253/7-
- Thrust piece -VW 433-
- Torque wrench -V.A.G 1332-

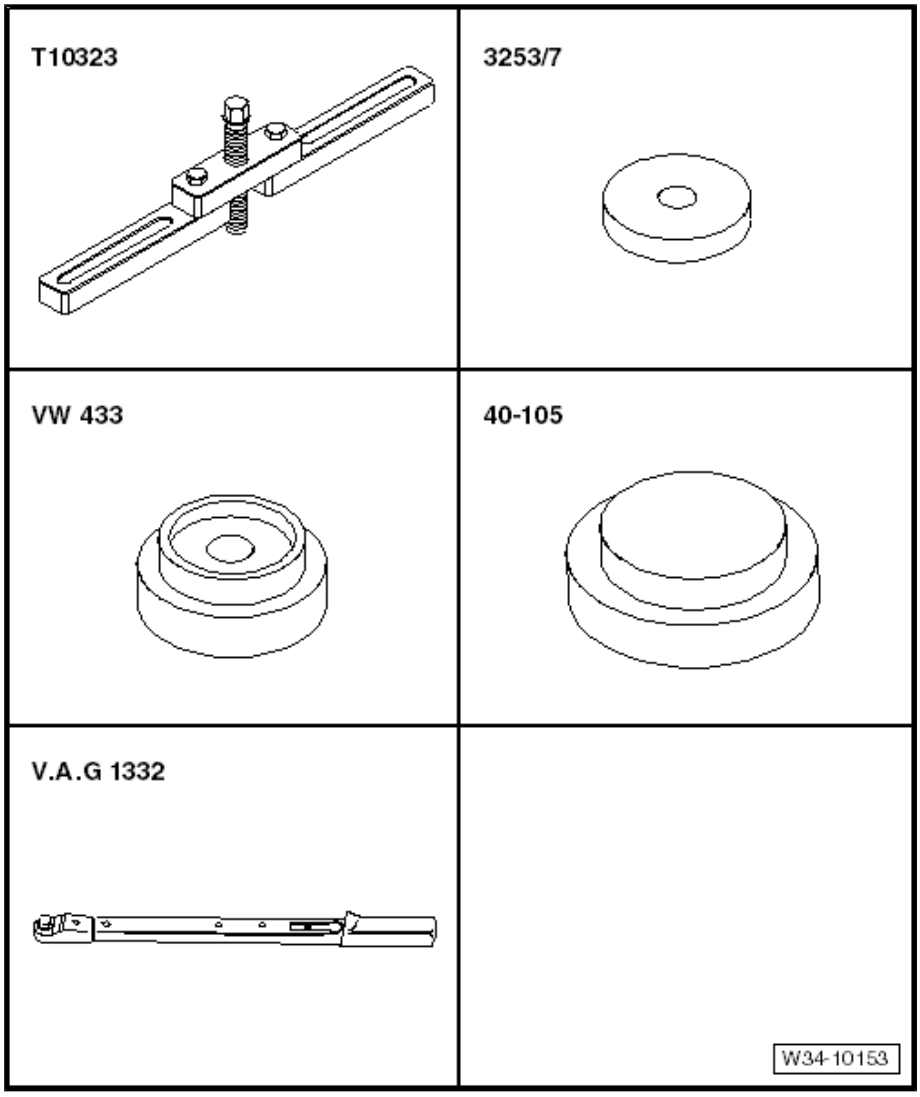

9.7.1 Removing

– Remove clutch release lever, release bearing and guide sleeve ⇒ page 103 .

- Bearings of input shaft and output shaft must not be damaged when 5th gear is removed and installed.
- Therefore, following tools must be mounted for support at this stage during attachment of gearbox to gearbox support -VW 353- :

Underneath input shaft:

- Support bridge -30-211A-
- Thrust piece -32 - 111-
- Thrust piece -T10030/4-

– Lock bolt of support bridge -30-211A- with nut -A-.

Underneath bearing support for output shaft:

- Support device -T10323-
- Assembly tool -3253/7-
- Thrust piece -VW 433-

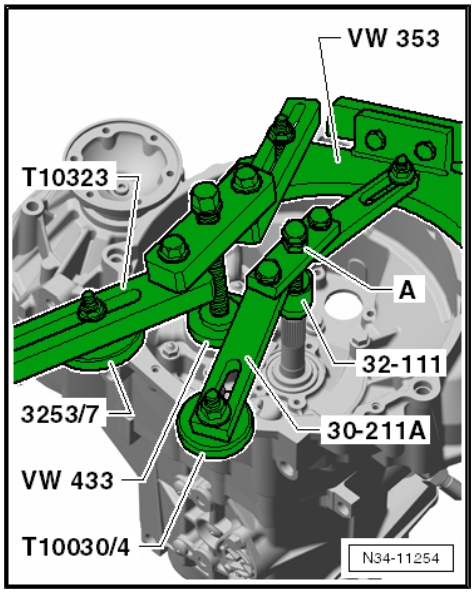

– Secure gearbox on gearbox support -VW 353- .
– Place drip tray -V.A.G 1306- underneath.
– Remove oil filler plug and oil drain plug.
– Drain gear oil.

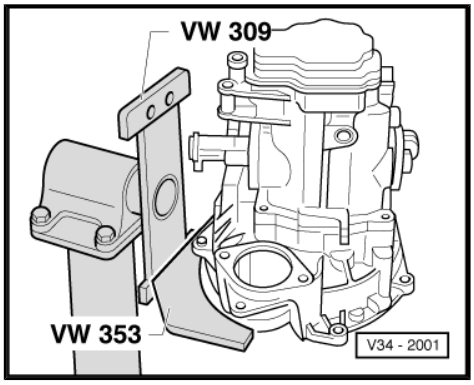

– Remove gearbox housing cover -arrow-.

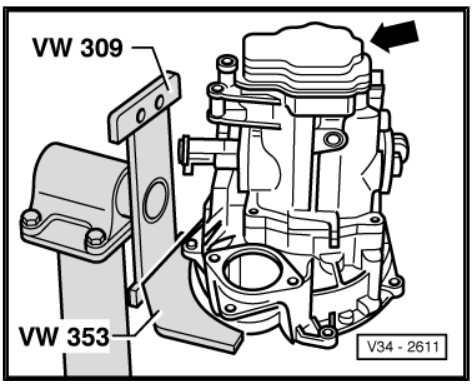

Remove selector fork for 5th gear as follows:
– Cover openings with a cloth.
– Move selector fork -1- to neutral position.
– Remove bolt -2- with selector fork for 5th gear.
– Then remove both bolts -arrows- for pivot pins.
– Pull out pivot pins.
– Remove selector fork.
– Spring -3- and locking collar -4- do not need to be removed.

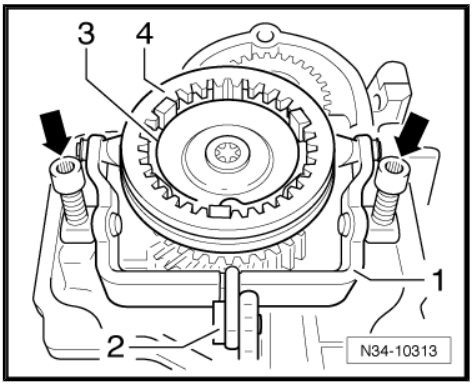

– Remove bolts -A- for synchro-hub and gear wheel for 5th gear. To do this, engage 5th gear -arrow 1- and 1st gear -arrows 2- and -3-.
– After both gears are engaged, the input shaft and output shaft are locked. The synchro-hub and gear wheel cannot turn. Both bolts can now be loosened.

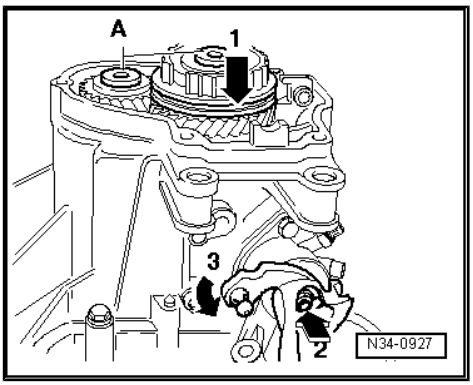

Note

If shafts are not to be renewed, carefully clean residual locking material out of threaded holes using a thread chaser.

– Remove both bolts -arrows- for reverse shaft support bracket.

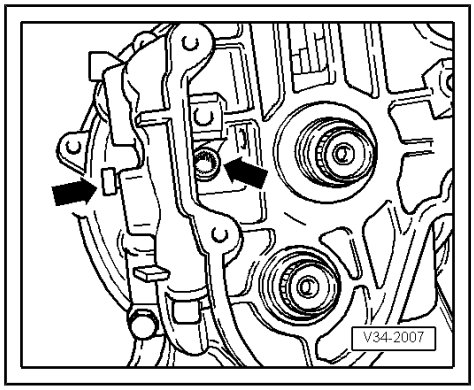

– Now remove 3rd bolt -arrow- for reverse shaft support bracket.

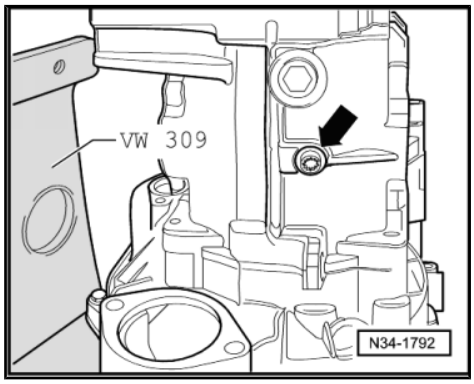

– Gearboxes for vehicles with start-stop system: remove gearbox neutral position sender -G701- -arrow-.

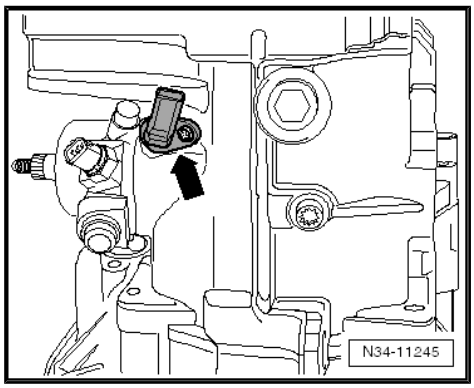

– Remove selector shaft with selector mechanism cover, placing selector shaft in neutral position. Then remove bolts -arrows- and pull selector shaft out of gearbox housing.

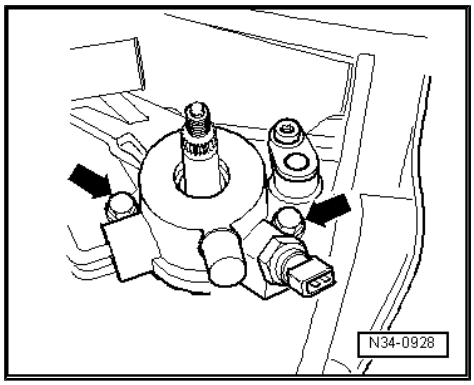

– Remove cover plate -A- and pivot pins -B- from underside of gearbox.

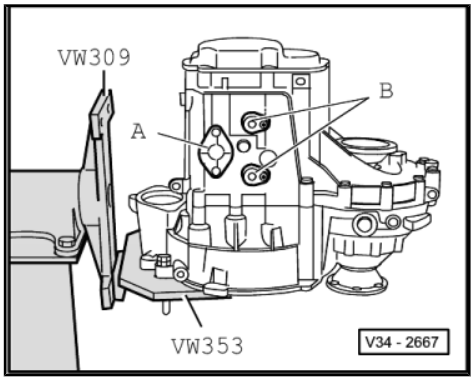

– Remove pivot pins -A- on top side of gearbox and securing bolts -B- for gearbox housing to clutch housing in area of differential.

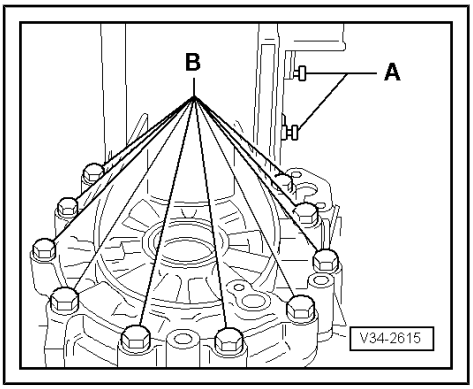

– Remove bolts -A- from clutch housing side for securing clutch housing to gearbox housing.

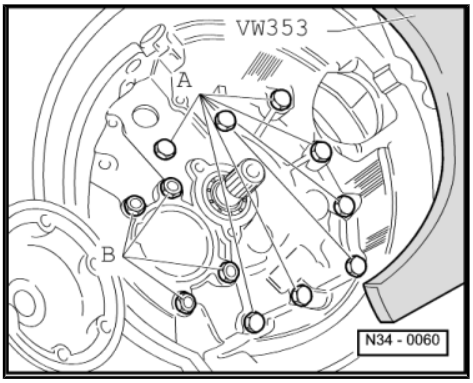

Note

Do not remove nuts -B- for output shaft bearing support.

– Remove both flange shafts.

– Remove flange shafts together with springs, thrust washers and tapered rings.

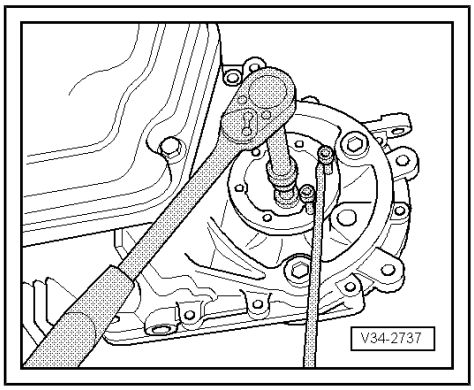

Pull off following components together with gearbox housing:

- ♦ Synchro-hub for 5th gear
- ♦ Gear wheel for 5th gear
- • Both grips -T10408/3- must be secured on gear wheel for 5th gear.
- • The grips must always be positioned above the two housing ribs, which are located opposite each other -arrows-.

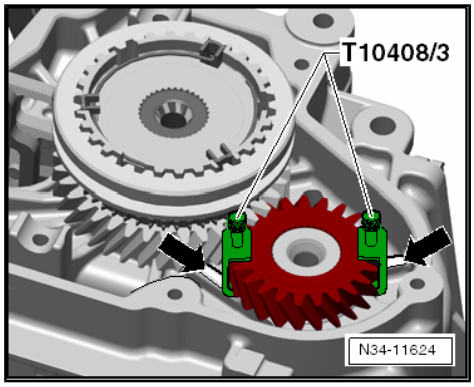

Note

- ♦ *There is a needle bearing beneath the gear wheel for 5th gear.*
- ♦ *Secure the grips so that the bearing does not come in contact with the gear wheel for 5th gear when the gearbox housing is pulled off.*

Use puller plate -T10408- in conjunction with following special tools:

- ♦ Thrust pieces -T10408/2-
- ♦ Grips -T10408/3-
- ♦ Puller Kukko 18/1

– Screw puller plate -T10408- firmly into threaded holes for gearbox housing cover.

A - Hexagon bolts M7 x 35 with washers

Torque setting 18 Nm

– Place thrust pieces -T10408/2- on shafts.

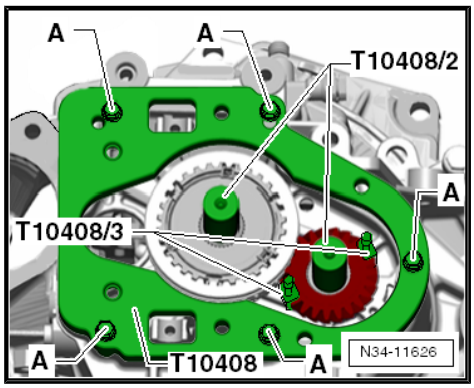

– Install pullers Kukko 18/1 -A-.

– Pull off 5th gear synchro-hub, gear wheel for 5th gear and gearbox housing by alternately tightening spindles -A- approx. 12 turn.

– Heat gear wheel for 5th gear slightly with hot air blower -V.A.G 1416- if necessary.

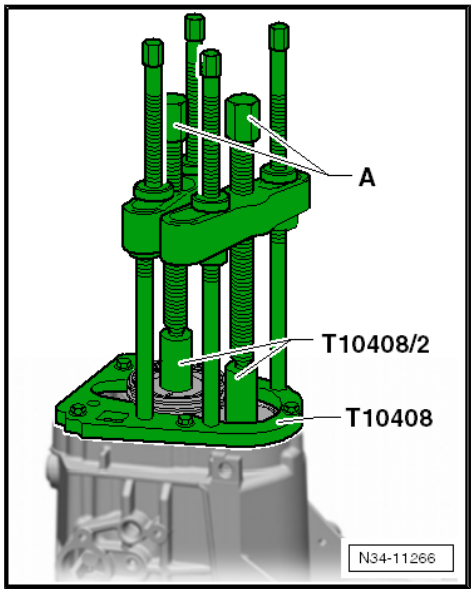

– Remove selector forks -A- together with selector plates.
– Unbolt reverse gear selector mechanism -B-.

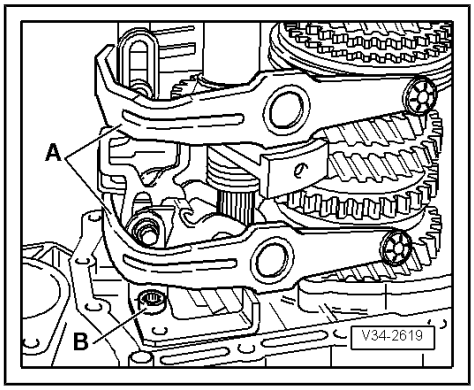

– Remove nuts -B- for output shaft bearing support.

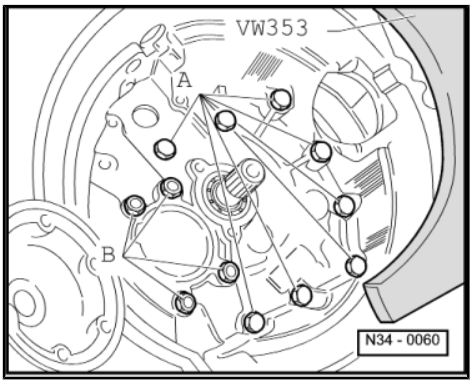

– Remove reverse gear -A-, input shaft -B- and output shaft -C- one after the other from clutch housing.
– Remove differential.

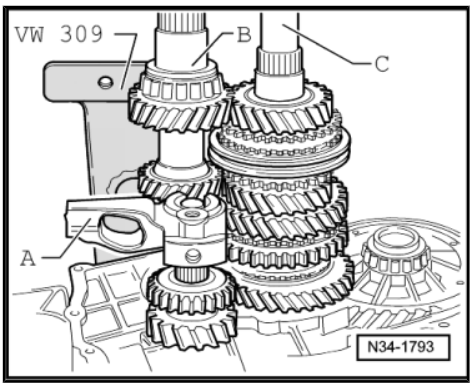

9.7.2 Installing

– Install differential.
– Always renew sealing rings -arrows- for output shaft bearing support.

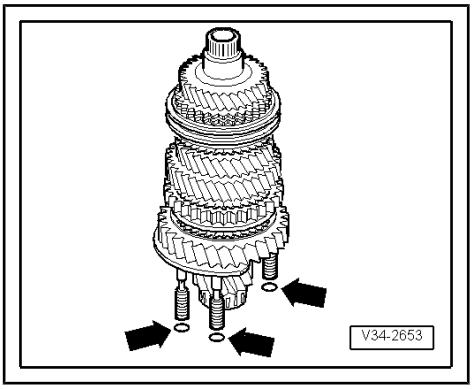

Note

The figure shows only 3 of the 4 sealing rings.

– Insert input shaft -1- and output shaft -2- together.

– Tighten nuts for output shaft bearing support to specified torque ⇒ Item 11 (page 227) .

– Set reverse gear wheel -3- on needle bearing in clutch housing.

The shoulder -arrow- faces away from the clutch housing.

– Ensure that reverse shaft -4- is complete ⇒ page 291 ; do not yet fit reverse shaft support to reverse shaft.

– Fit reverse shaft into clutch housing.

– Clean locking fluid from all threaded holes in reverse shaft support; a thread chaser may be used.

– Install reverse shaft support.

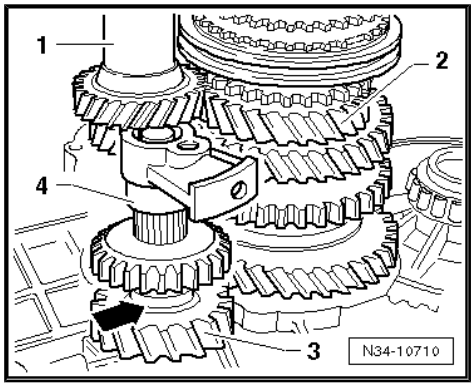

– Attach reverse gear selector fork -1- with support for reverse gear selector fork -2-, spring -3- and sliding piece -4-.

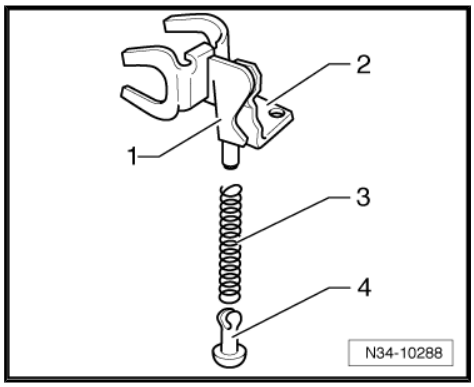

Installation position, reverse gear

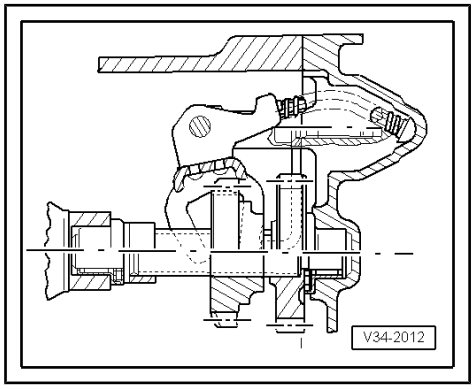

– Bolt on reverse gear selector mechanism -A-.

– Install selector forks -B- together with selector plates.

Reverse gear support -C- is located in front of selector plates.

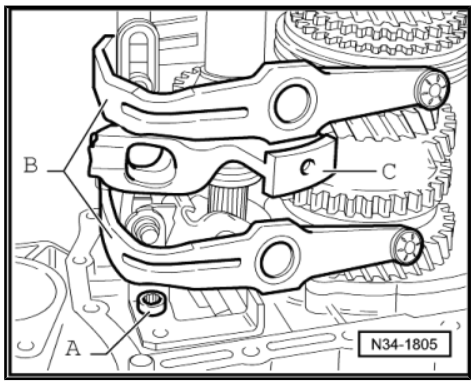

– Screw M 8 x 100 mm studs -A- into reverse shaft support so that shaft is aligned after gearbox housing is fitted.

– Align selector plates.

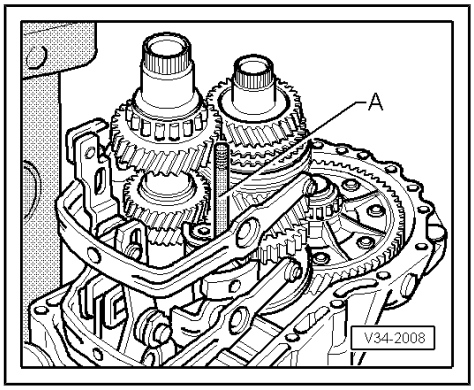

Note

The selector segments must be positioned in the grooves on the locking collars.

– Apply sealant -AMV 188 200 03- evenly to sealing surface of clutch housing.

– Fit gearbox housing.

Install reverse shaft support bolts -arrow- as follows:

– Install bolt -a-.

– Remove stud -A- (⇒ figure above).

– Install bolt -c-.

Tightening sequence:

– Tighten bolt -a- to 30 Nm.

– Tighten bolt -b- (⇒ figure below) to 25 Nm.

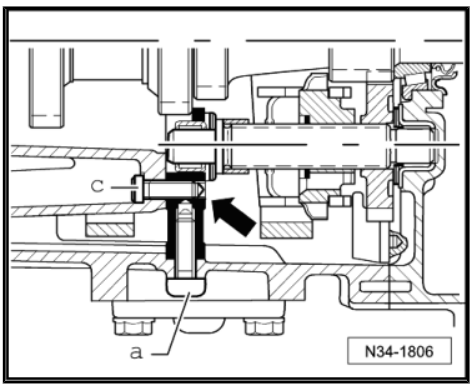

– Tighten bolt -c- to 25 Nm.

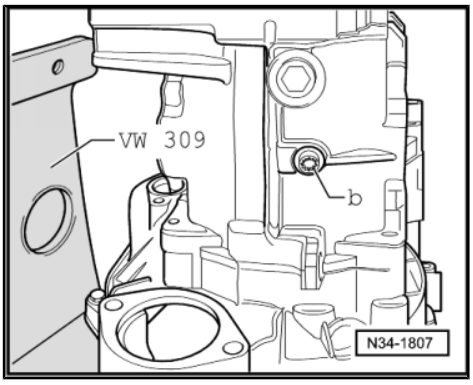

– Install pivot pin -arrow- for selector forks. Do this by aligning selector mechanism with a screwdriver so that respective pivot pin can be installed.

– Apply sealant -AMV 188 200 03- evenly to sealing surface of cover plate.

– Fit selector shaft cover plate.

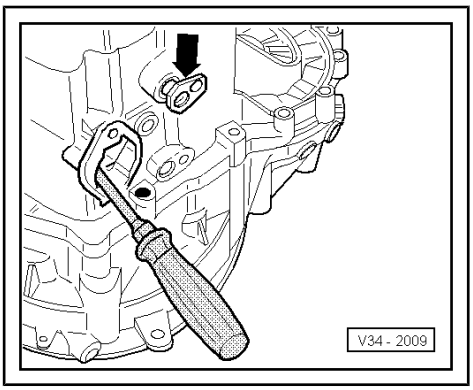

Install selector shaft with selector shaft cover plate as follows:

– Place selector plates in neutral.

– Apply sealant -AMV 188 200 03- evenly to sealing surface of selector shaft cover.

– Move selector shaft to neutral.

– Position selector shaft so that selector finger -arrow- is inserted in selector plates.

– Bolt on selector shaft cover to specified torque ⇒ Item 17 (page 226) .

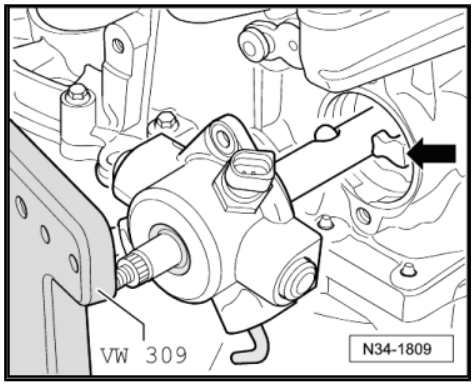

– Gearboxes for vehicles with start-stop system: fit gearbox neutral position sender -G701- -arrow- and tighten securing bolt to specified torque ⇒ Item 11 (page 226) .

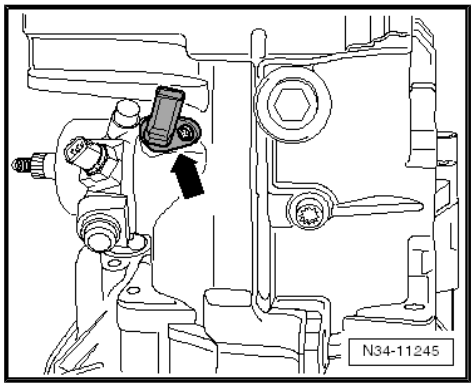

– Install both flange shafts with springs, thrust washers and tapered rings ⇒ page 224 .

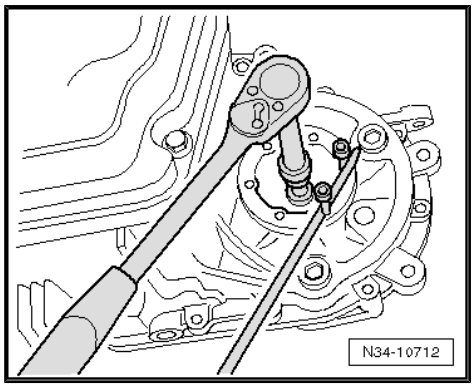

9.7.3 Installing 5th gear

• Ensure that support bridge -30-211A- and support device -T10323- are attached.

– Lock bolt of support bridge -30-211A- with nut -A-.

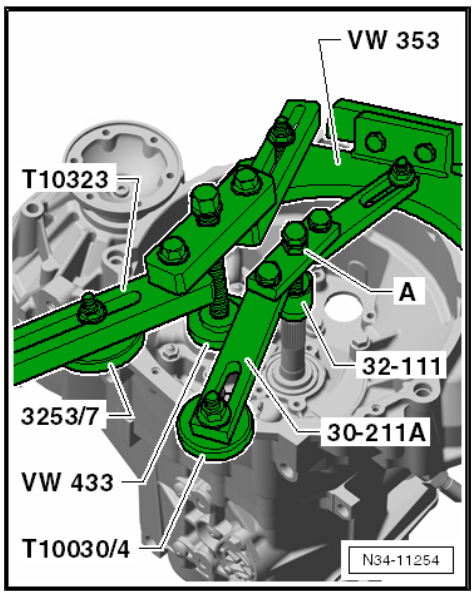

Installation position, gear wheel for 5th gear

The circumferential groove -arrow- faces gearbox housing.

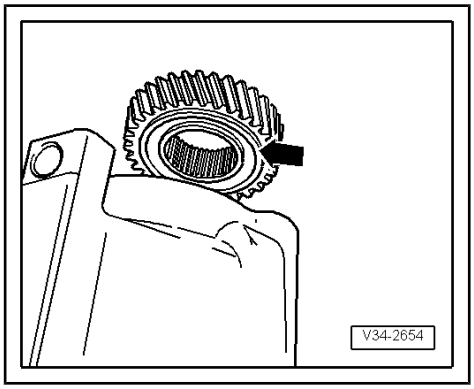

– Drive on gear wheel for 5th gear.

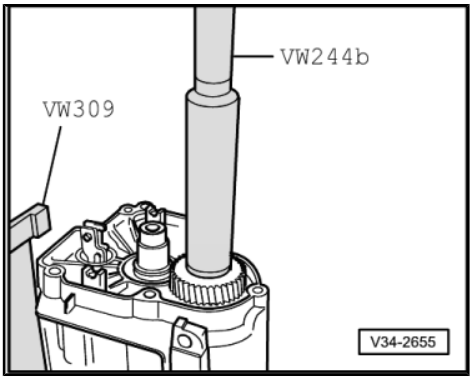

Checking 5th gear synchro-ring

– Before installing synchromeshed gear and synchro-ring for 5th gear, press synchro-ring onto cone of synchromeshed gear and measure gap -a- with a feeler gauge.

Gap -a-	Installation (new) dimension	Wear limit
5th gear	1.1 … 1.7 mm	0.5 mm

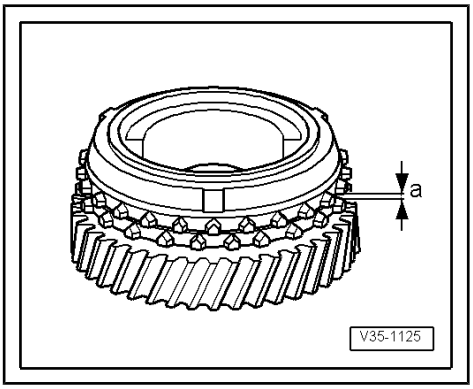

– Install 5th gear synchromeshed gear with needle bearing.
– Place 5th gear synchro-ring on synchromeshed gear.
– If synchro-hub and locking collar for 5th gear are dismantled, assemble before installing ⇒ page 269 .

Installation position 5th gear synchro-hub and locking collar

The pointed teeth of the locking collar -arrow 1- and the high shoulder of the synchro-hub -arrow 2- face the gearbox housing.

The synchro-hub supports -arrow 3- align with the cast locking pieces of the 5th gear synchro-ring (⇒ page 246 , bottom).

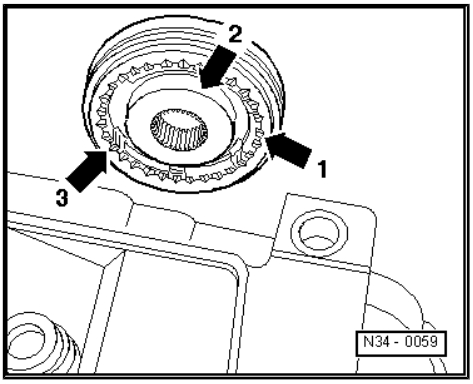

5th gear synchro-ring with cast locking pieces

– Cover all openings in gearbox housing with a cloth to prevent foreign bodies from entering gearbox.

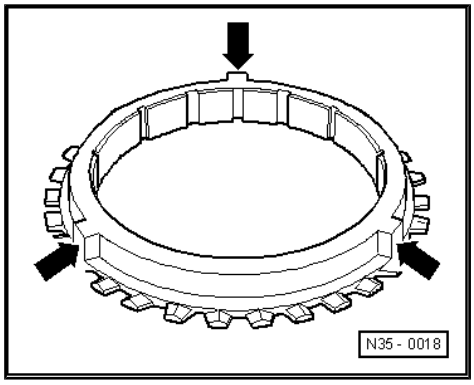

– Drive on 5th gear synchro-hub.

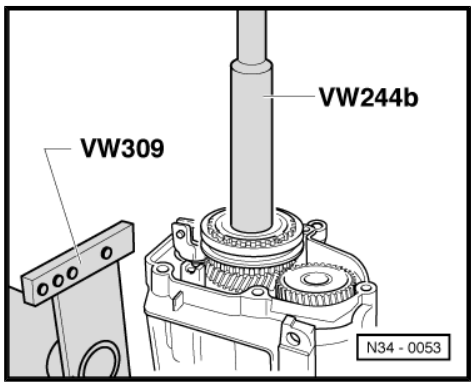

Note

When driving on synchro-ring, ensure that it moves freely.

– Loosen support for input shaft.

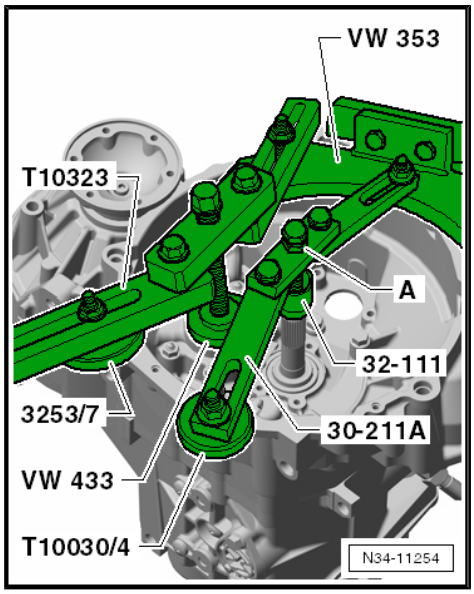

WARNING

Wear protective gloves!

– Clean residual locking fluid from threaded holes for synchro-hub securing bolts and 5th gear wheel with a thread chaser.

Otherwise the bolts may shear.

– Screw in securing bolts for synchro-hub and gear wheel for 5th gear.

Installation position of dished springs for securing bolts for gear wheel and synchro-hub for 5th gear

The outer circumference -arrows- faces 5th gear.

– Tighten securing bolts for synchro-hub and gear wheel for 5th gear to specified torque. ⇒ page 225

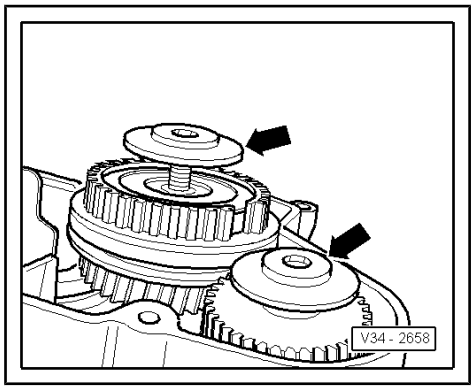

– Tighten bolts -A- for synchro-hub and 5th gear wheel to specified torque ⇒ Item 4 (page 225) . To do this, engage 5th gear -arrow 1- and 1st gear -arrows 2- and -3-.

– After both gears are engaged, the input shaft and output shaft are locked. The synchro-hub and gear wheel cannot turn. Now both bolts can be tightened.

– Install 5th gear selector fork.

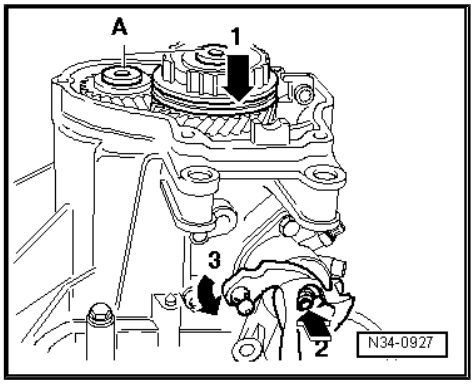

Adjusting 5th gear

– Engage 5th gear. Loosen bolt -1-. Push locking collar and selector jaw in direction of arrow and then tighten bolt -1- to 25 Nm.

• Check measurement: It must not be possible to slide a 0.2 mm feeler gauge between locking collar and gear wheel. If necessary, repeat adjustment.

– Disengage 5th gear. Locking collar must now be in the neutral position. Synchro-ring must move freely.

– Shift through all gears.

– Install gearbox housing cover ⇒ page 225 .

– Fit release bearing guide sleeve ⇒ page 103 .

– Fit clutch release lever and release bearing ⇒ page 103 .

– Top up gear oil, Golf 2004 ‣ ⇒ page 150

– Top up gear oil, Golf 2009 ‣ with turbo diesel engine ⇒ page 163

– Top up gear oil, Golf 2009 ‣ with petrol engine ⇒ page 180

– Top up gear oil, Golf Plus ⇒ page 197 .

– Top up gear oil, Passat ⇒ page 212 .

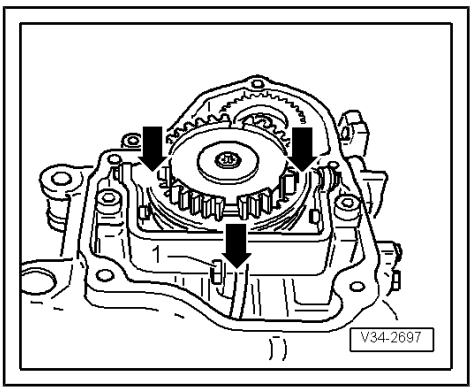

10 Repairing gearbox housing and clutch housing

Special tools and workshop equipment required

- Drift -VW 295-
- Adapter -VW 295 A-
- Thrust pad -VW 447 H-
- Thrust pad -VW 512-
- Tube -2040-
- Thrust piece -VW 454-

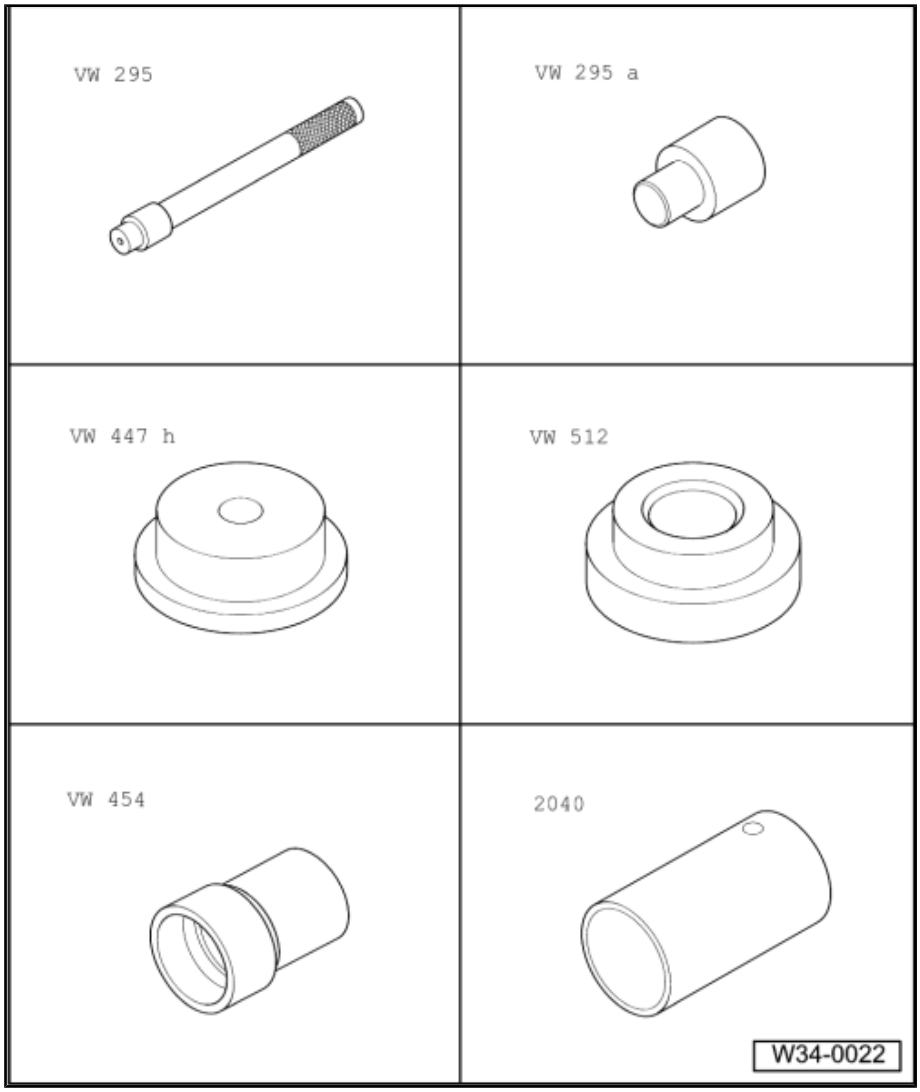

- Puller -VW 228 B- (is not required for this gearbox)
- Drift -VW 222 A- (not required with this gearbox)
- Assembly device -3066- (Spindle from assembly device)
- Thrust piece -3124- (for two-part seal and sleeve)
- Multipurpose tool -VW 771- (for one-piece seal and sleeve)
- Extractor hooks - VW 771/37- (for one-piece seal and sleeve)

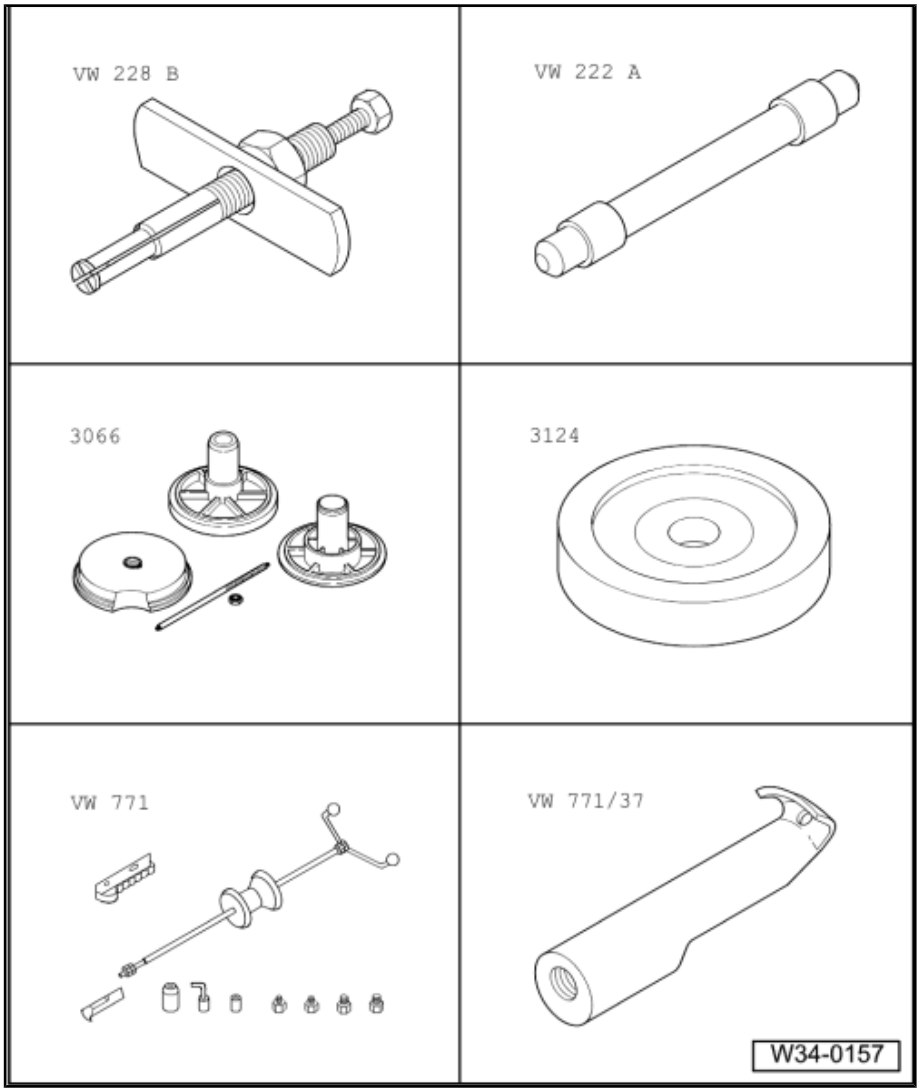

- Multipurpose tool -T10148- (for one-piece seal and sleeve)

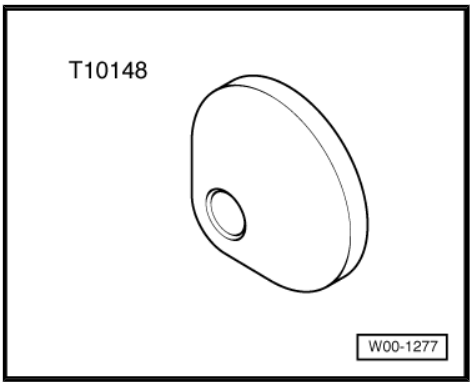

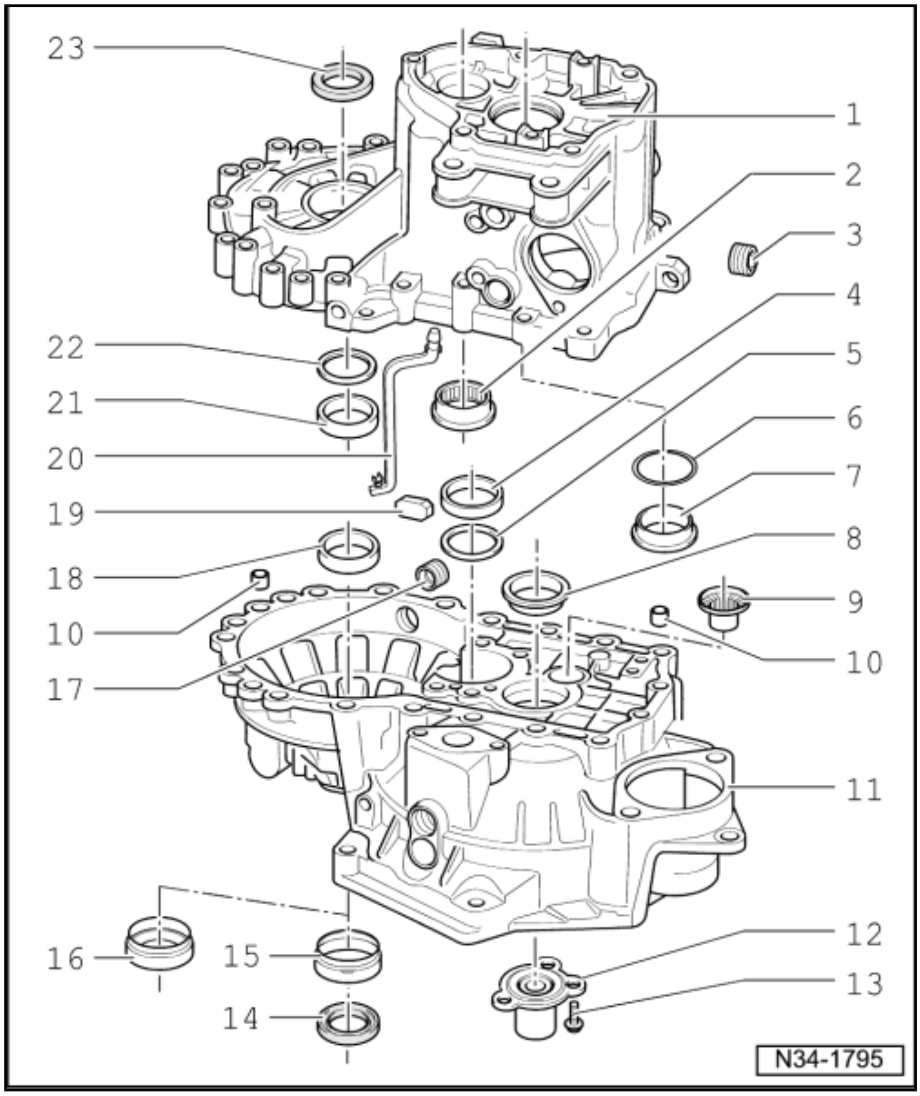

1 - Gearbox housing

- ❑ If renewed: adjust output shaft and differential ⇒ page 302

2 - Needle bearing

- ❑ For output shaft
- ❑ Removing ⇒ page 252
- ❑ Installing and securing ⇒ page 252 .

3 - Oil filler plug, 35 Nm

- ❑ The oil level cannot be checked by removing the oil filler plug
- ❑ If the gearbox was dismantled, it must be filled prior to installation

Capacities, Golf 2004 ‣ ⇒ page 2

Capacities, Golf 2009 ‣ ⇒ page 4

Capacities, Golf Plus 2005 ‣ ⇒ page 5

Capacities, Golf Plus 2009 ‣ ⇒ page 6 ⇒ page 5

Capacities, Passat ⇒ page 6

4 - Tapered roller bearing outer race

- ❑ For output shaft
- ❑ Removing and installing ⇒ page 275
- ❑ If replaced: adjust output shaft ⇒ page 287

5 - Shim

- ❑ For output shaft
- ❑ Adjustment overview ⇒ page 302

6 - Shim

- ❑ For input shaft
- ❑ Adjustment overview ⇒ page 270

7 - Tapered roller bearing outer race

- ❑ For input shaft
- ❑ Removing and installing ⇒ page 263
- ❑ If renewed: adjust input shaft ⇒ page 270

8 - Tapered roller bearing outer race

- ❑ For input shaft
- ❑ Removing and installing ⇒ page 263
- ❑ If renewed: adjust input shaft ⇒ page 270

9 - Needle bearing

- ❑ Removing and installing ⇒ page 291

10 - Dowel sleeve

- ❑ Qty. 2

Volkswagen Technical Site: http://vwts.ru http://vwts.info

11 - Clutch housing

- ❑ When renewing, ⇒ adjustment overview ⇒ page 302

12 - Guide sleeve

- ❑ With input shaft seal and vulcanised O-ring
- ❑ Driving out oil seal ⇒ page 252
- ❑ Driving in oil seal ⇒ page 252
- ❑ Remove guide sleeve to change oil seal
- ❑ If O-ring is damaged, renew guide sleeve and O-ring together

13 - Socket head bolt

- ❑ Removing and installing ⇒ Item 6 (page 103)

14 - Seal

- ❑ Renewing ⇒ page 296

15 - Sleeve

- ❑ For seal ⇒ Item 14 (page 251)
- ❑ Removing ⇒ page 253
- ❑ Installing ⇒ page 253

16 - One-piece seal and sleeve

- ❑ If seal is damaged, renew seal and sleeve together
- ❑ Removing ⇒ page 253
- ❑ Installing ⇒ page 253

17 - Oil drain plug, 35 Nm

18 - Tapered roller bearing outer race

- ❑ For differential
- ❑ Removing and installing ⇒ page 303
- ❑ If renewed, adjust differential ⇒ page 311

19 - Magnet

- ❑ Held in place by housing joint surface

20 - Oil collector

- ❑ Installing oil collector in gearbox housing ⇒ page 254

21 - Tapered roller bearing outer race

- ❑ For differential
- ❑ Removing and installing ⇒ page 303
- ❑ If renewed, adjust differential

⇒ page 311

22 - Shim

- ❑ For differential
- ❑ Adjustment overview ⇒ page 302

23 - Seal

- ❑ Renewing ⇒ page 294

Driving out needle roller bearing

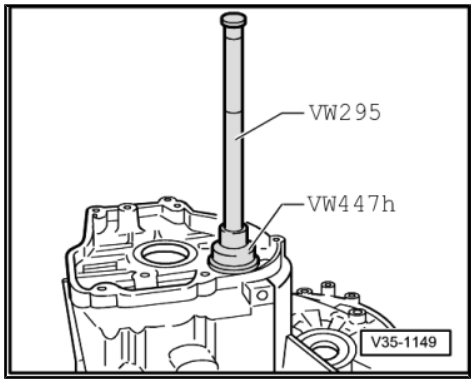

Driving needle bearing in to stop

– Secure needle bearing in gearbox housing at three points (120° offset) using a punch.

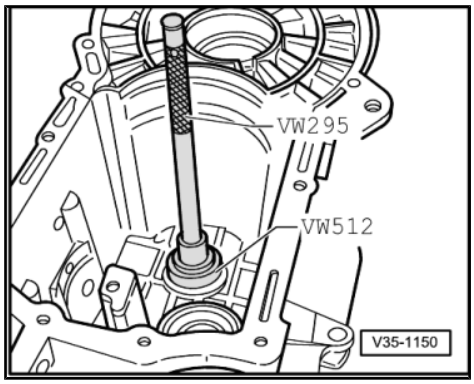

Driving oil seal out of guide sleeve

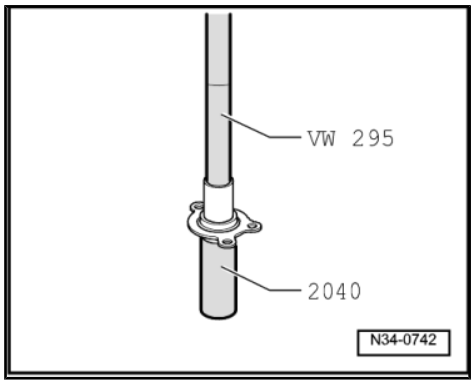

Driving oil seal into guide sleeve to stop

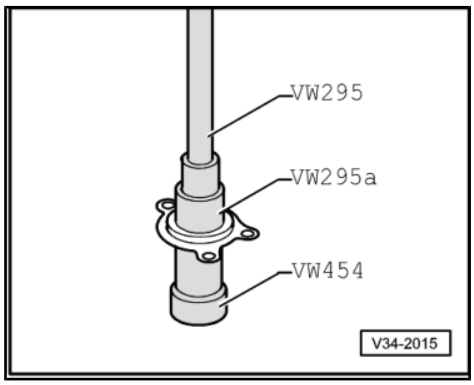

Levering out sleeve -arrow- using screwdriver

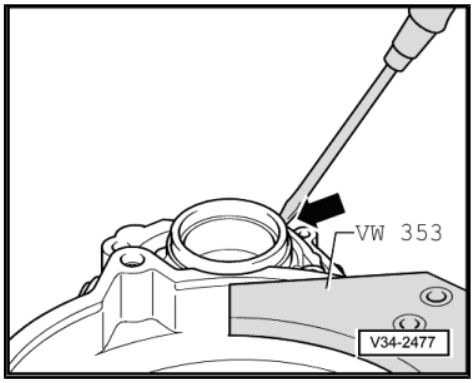

Pulling in sleeve

– Screw spindle -A- of assembly device -3066- into threaded piece of differential.
– Pull sleeve in to stop using thrust piece -3124- by turning nut -B-.

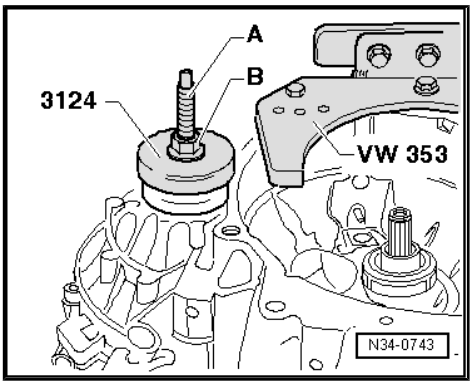

Note

With gearbox dismantled, press sleeve in to stop using thrust piece -3124- .

Pulling out sleeve and seal

There is a shoulder in the inner diameter of the sleeve.

– To pull out seal and sleeve, apply extractor hooks -VW 771/37- behind shoulder in sleeve.
– Press extractor hooks -VW 771/37- forcefully into sleeve while pulling.

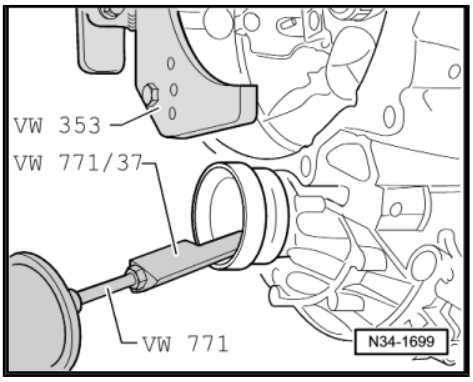

Pulling in sleeve and seal

– Clean seat for seal in gearbox.
– Screw spindle -A- of assembly device -3066- into threaded piece of differential.
– Pull sleeve in to stop using thrust piece -T10148- by turning nut -B-.

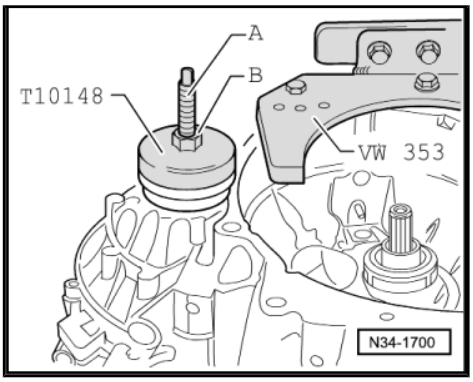

Note

With gearbox dismantled, press sleeve in to stop using thrust piece -T10148- .

Installing oil collector -A- in gearbox housing

– Insert oil collector in hole -arrow 1- and groove -arrow 2- simultaneously.

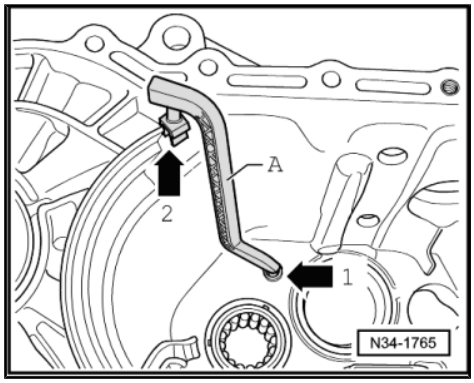

11 Repairing selector unit

Special tools and workshop equipment required

- Tube -T10203-

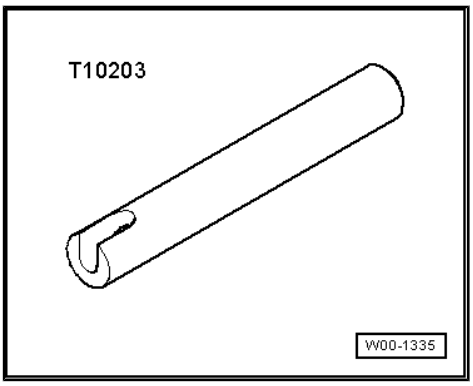

- Tube -VW 423-

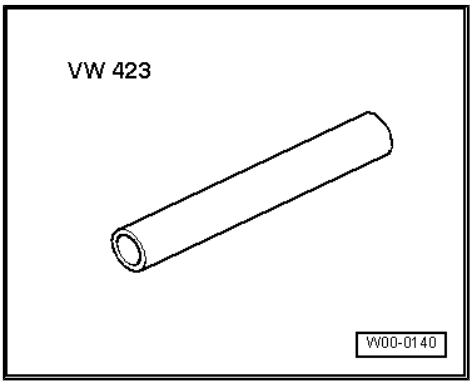

- Torque wrench -V.A.G 1331-

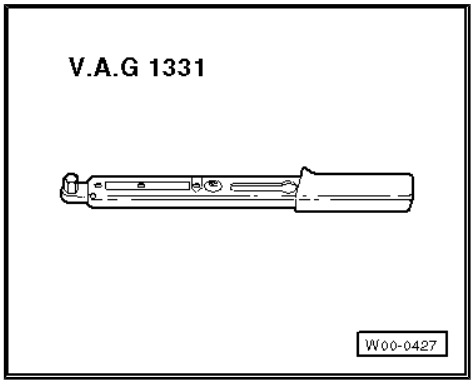

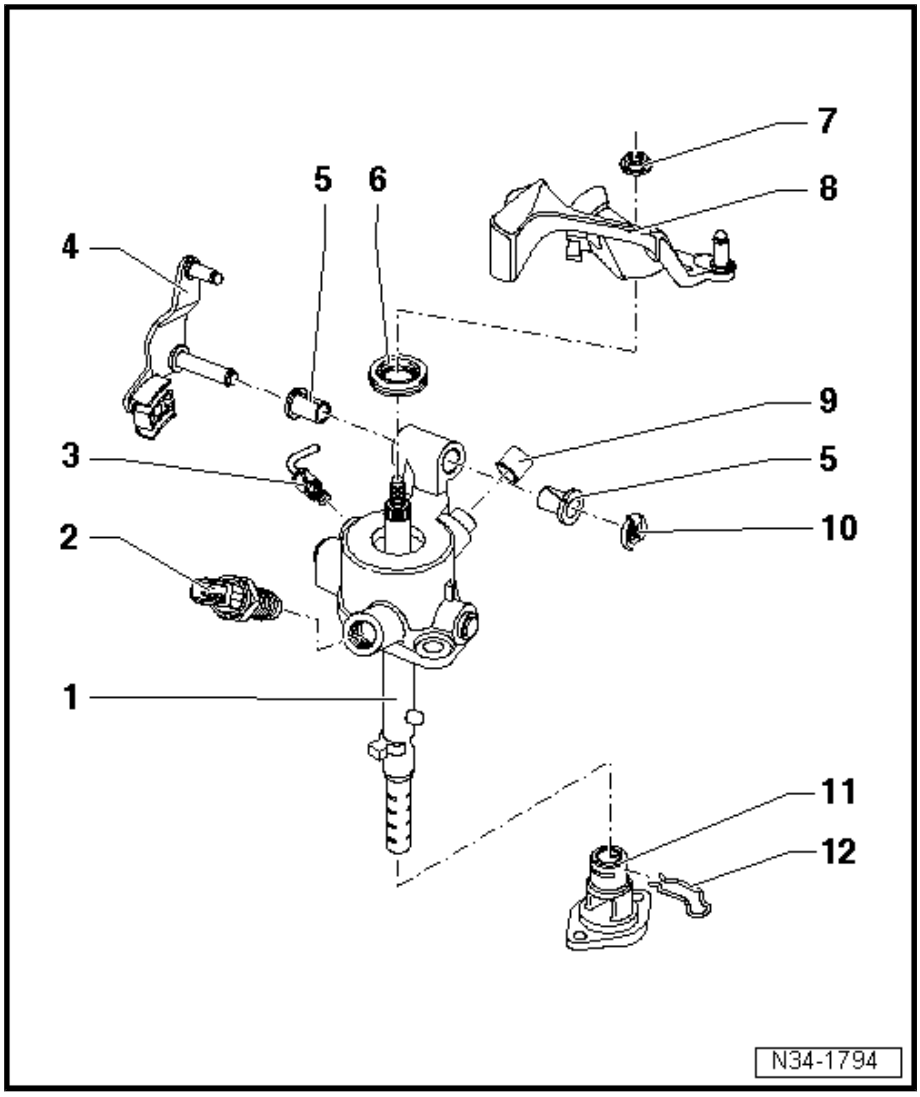

1 - Selector unit

- ❑ Consists of selector shaft and selector shaft cover
- ❑ Components cannot be separated from each other

2 - Reversing light switch -F4-

- ❑ Tighten to 20 Nm
- ❑ Lightly coat lug with MoS_2 grease.

3 - Angled rod

- ❑ For adjusting selector mechanism
- ❑ Removing ⇒ page 257
- ❑ Pressing in ⇒ page 257

4 - Relay lever

- ❑ Installation position ⇒ page 134
- ❑ From 05.07, plastic relay lever ⇒ page 134

5 - Bearing bush

- ❑ Not required for plastic relay lever

6 - Seal

- ❑ Lever out with a screwdriver
- ❑ Installing ⇒ page 257

7 - Hexagon nut, 23 Nm

- ❑ Self-locking
- ❑ Always renew

8 - Gearbox selector lever

- ❑ Install so that master spline aligns with selector shaft
- ❑ Can be renewed with the selector mechanism installed
- ❑ Installation position ⇒ page 134

9 - Cap

- ❑ For gearbox breather

10 - Securing clip

- ❑ Always renew
- ❑ Not required for plastic relay lever

11 - Cover plate

12 - Spring

- ❑ Not installed in all gearboxes.
- ❑ Reinstall if part of original equipment.

Removing angled rod -A- from selector shaft cover

– Remove outer part of angled rod.
– Then carefully lever out angled rod using a screwdriver.

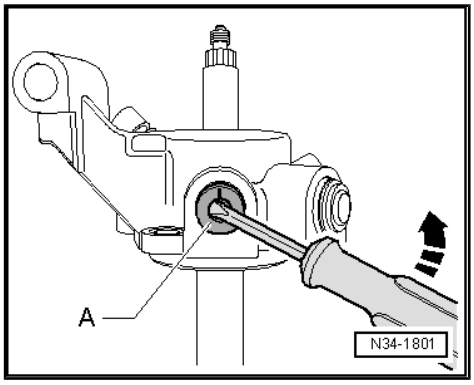

Pressing angled rod -A- into selector shaft cover

Installation position:

Marking -arrow- points to upper part of selector shaft.

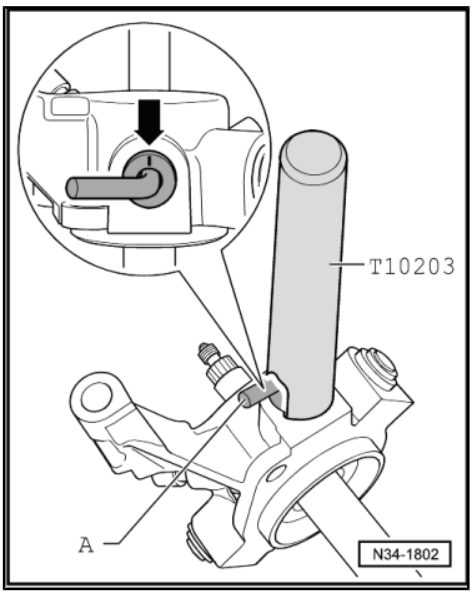

Inserting oil seal to stop

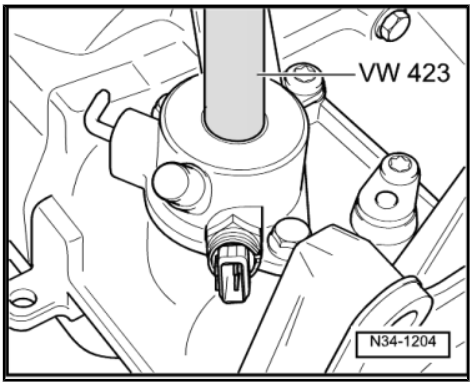

12 Dismantling and assembling selector forks

Special tools and workshop equipment required

- Thrust plate -VW 402-
- Thrust piece -3290/1-
- Assembly tool -3301-
- Thrust piece -VW 431-
- Spacer sleeve -VW 472/2-
- Drift -10 - 206-

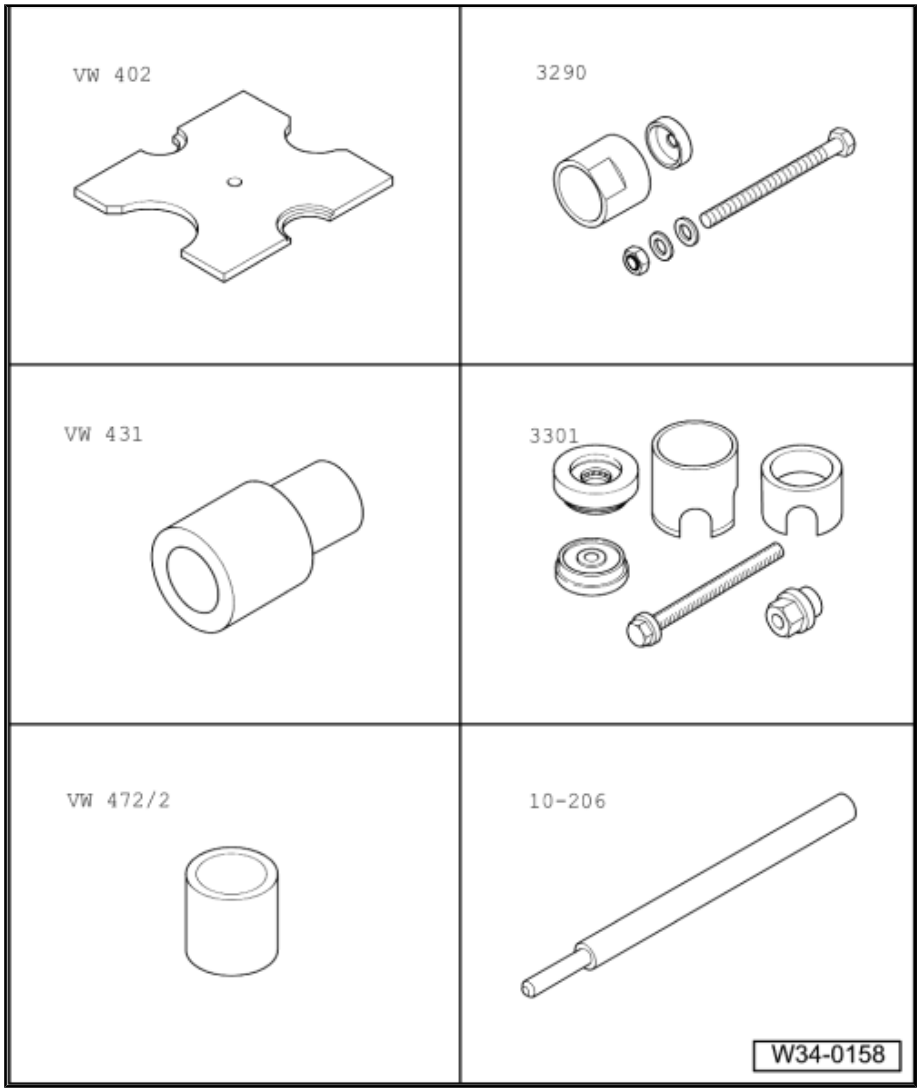

- Removal lever -80–200-

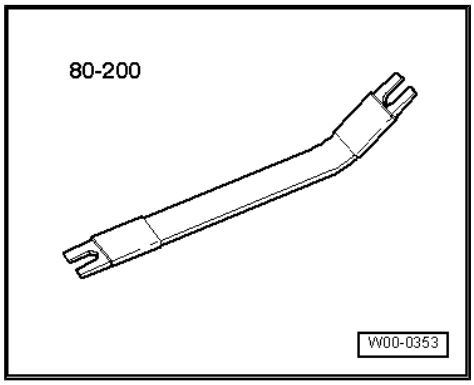

- Drift -10 - 508-

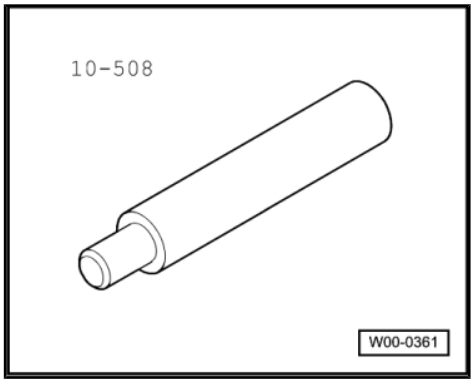

- Clamp -2070-

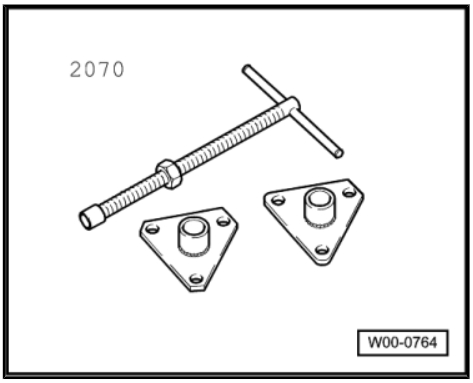

Note

It is not necessary to dismantle the selector fork group (⇒ Item 7 (page 260)) in order to remove and install selector segments, lock washers and angular contact ball bearings.

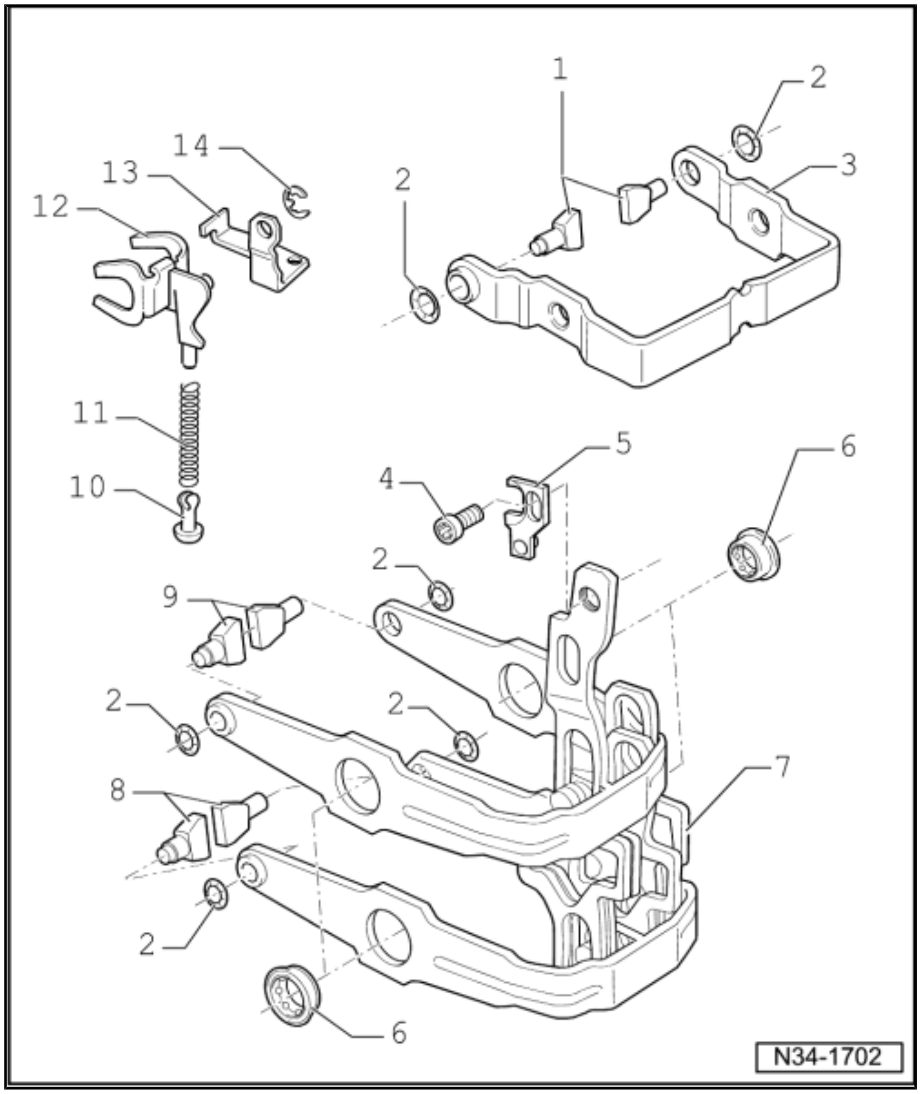

1 - 5th gear selector segment

- ❑ Identification ⇒ page 261
- ❑ After lock washer is installed, selector segment must still rotate freely.

2 - Lock washer

- ❑ Always renew
- ❑ Removing ⇒ page 261
- ❑ Installing ⇒ page 261

3 - 5th gear selector fork

- ❑ Adjusting.

4 - Bolt, 25 Nm

5 - 5th gear selector jaw

6 - Angular contact ball bearing

- ❑ Qty. 4
- ❑ Removing ⇒ page 261
- ❑ Press inner race into outer race ⇒ page 262
- ❑ Installing ⇒ page 262

7 - Selector fork group with selector plate

8 - Selector segment for 1st and 2nd gears

- ❑ Identification ⇒ page 261
- ❑ After lock washer is installed, segment must still rotate freely

9 - Selector segment for 3rd and 4th gears

- ❑ Identification ⇒ page 261
- ❑ After lock washer is installed, segment must still rotate freely

10 - Sliding piece

11 - Spring

12 - Selector fork for reverse gear

13 - Support for reverse gear selector fork

14 - Retaining ring

Identifying selector segments

Dimension -a-

1 - 1st and 2nd gear selector segments = 11.4 mm

2 - 3rd and 4th gear selector segments = 7.7 mm

3 - 5th gear selector segments = 12.1 mm

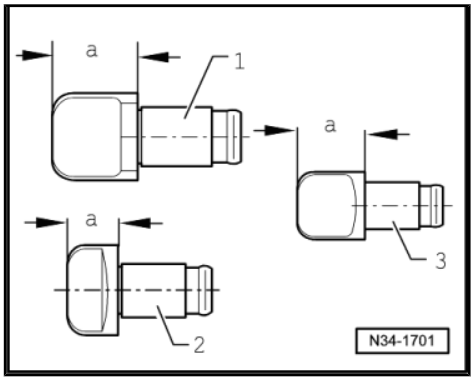

Removing lock washer

– Clamp selector fork in vice with protective jaw covers -B-.
– Lever off lock washer -A- in direction of arrow.

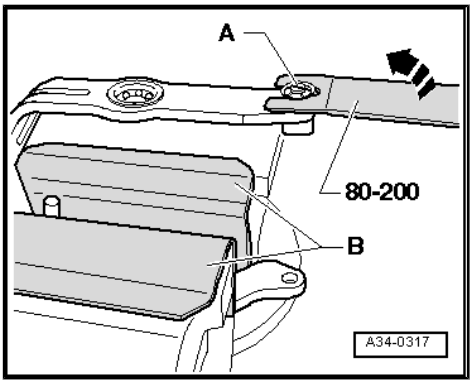

Installing lock washer

– Press lock washer into groove of selector segment using socket and spinner handle.

Note

After lock washer is installed, selector segment must still rotate freely.

A - Spinner handle with 10 mm socket

B - Protective jaw covers

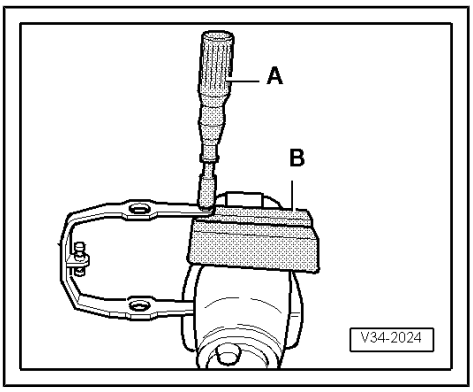

Removing angular contact ball bearing

Note

When removing and installing angular contact ball bearing, do not bend selector forks.

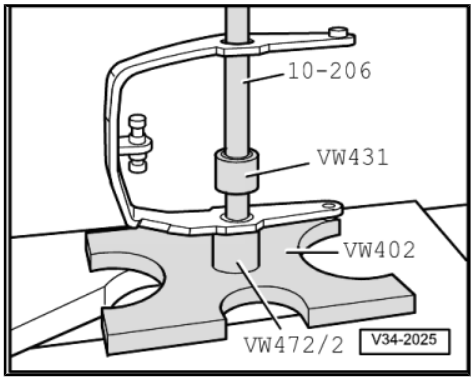

Pressing inner race -A- of angular contact ball bearing into outer race

Inner race must engage in outer race.

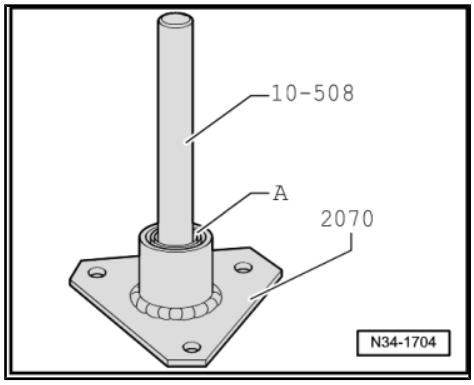

Pulling angular contact ball bearing into selector fork to stop

Depression in thrust piece -3290/1- faces ball bearing.

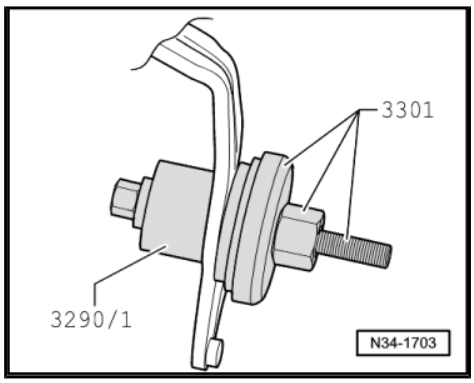

Selector fork with selector segments installed

	Dim. -a- (mm)
1st/2nd gear selector fork	87.2 …87.4
3rd/4th gear selector fork	93.6 …93.8

Selector segment assignment ⇒ page 261

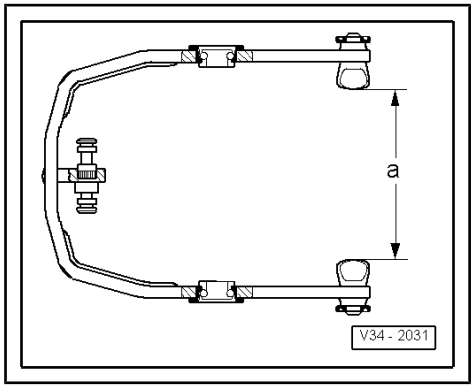

35 – Gears, shafts

1 Input shaft

1.1 Dismantling and assembling input shaft

Special tools and workshop equipment required

- Press tool -VW 407-
- Thrust pad -VW 447 H-
- Press tool -VW 412-
- Tube -VW 422-
- Thrust plate -VW 401-
- Thrust plate -VW 402-
- Press tool -VW 408 A-

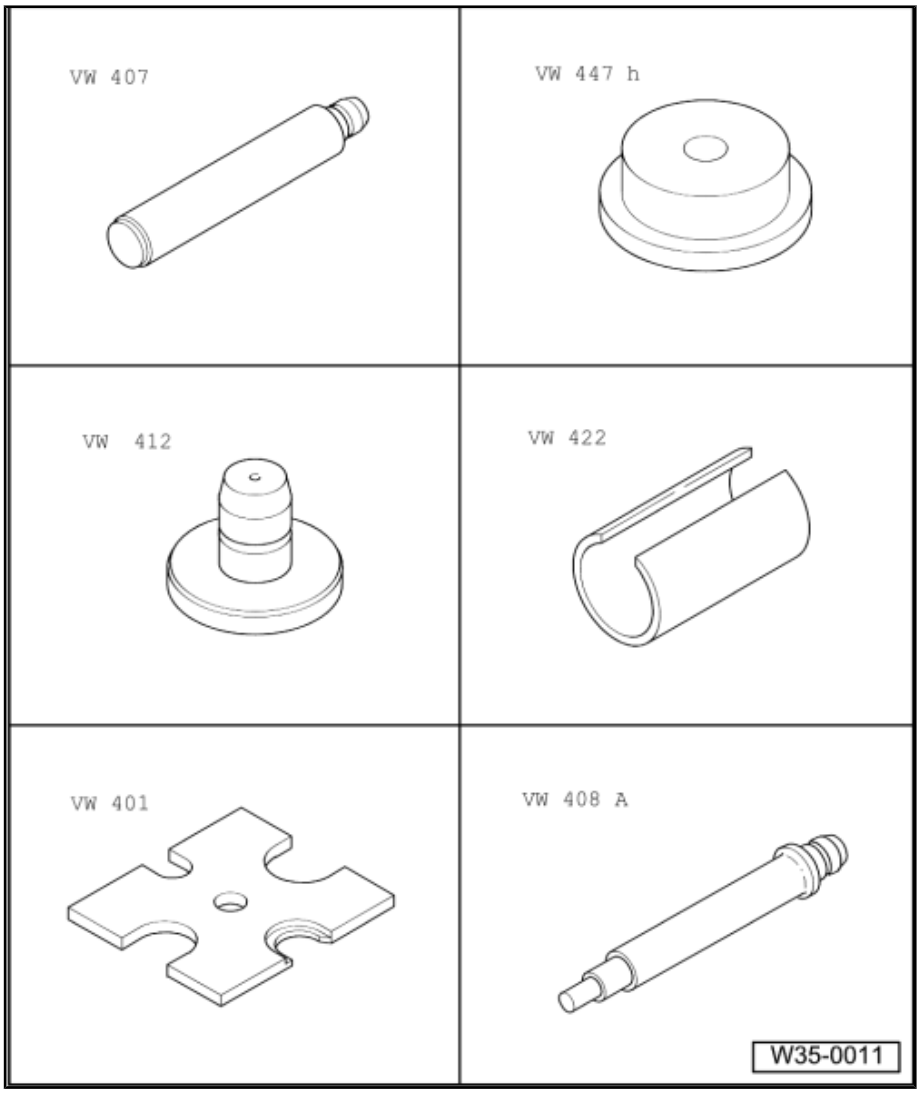

- Tube -VW 421-
- Thrust piece -VW 454-
- Thrust pad -VW 447 i-
- Thrust pad -VW 510-
- Drift sleeve -41-501-
- -3- Splitter -Kukko 17/1-

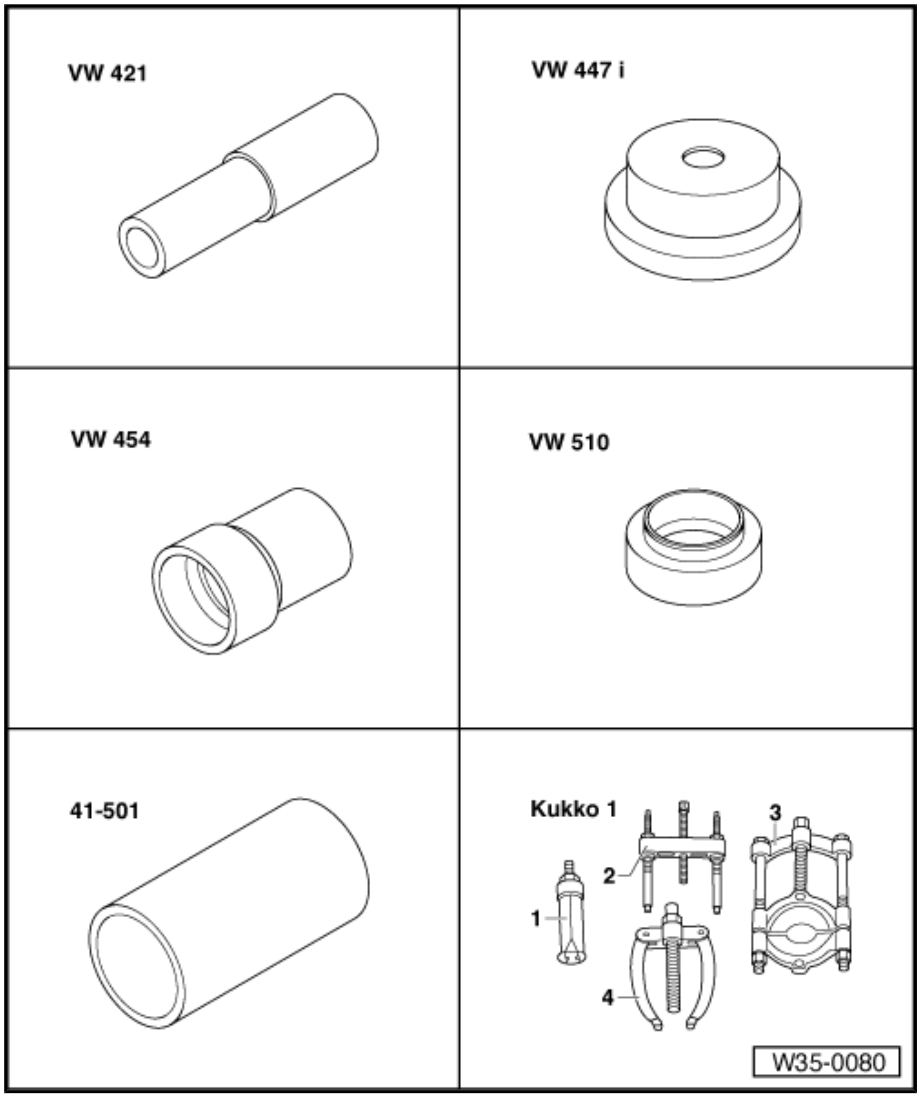

Note

- *When installing new gear wheels or input shaft, consult technical data ⇒ page 2 and ⇒ Electronic parts catalogue "ETKA" .*
- *If the position of the tapered roller bearings is affected when parts are exchanged, the input shaft must be readjusted. See adjustment overview ⇒ page 302 .*

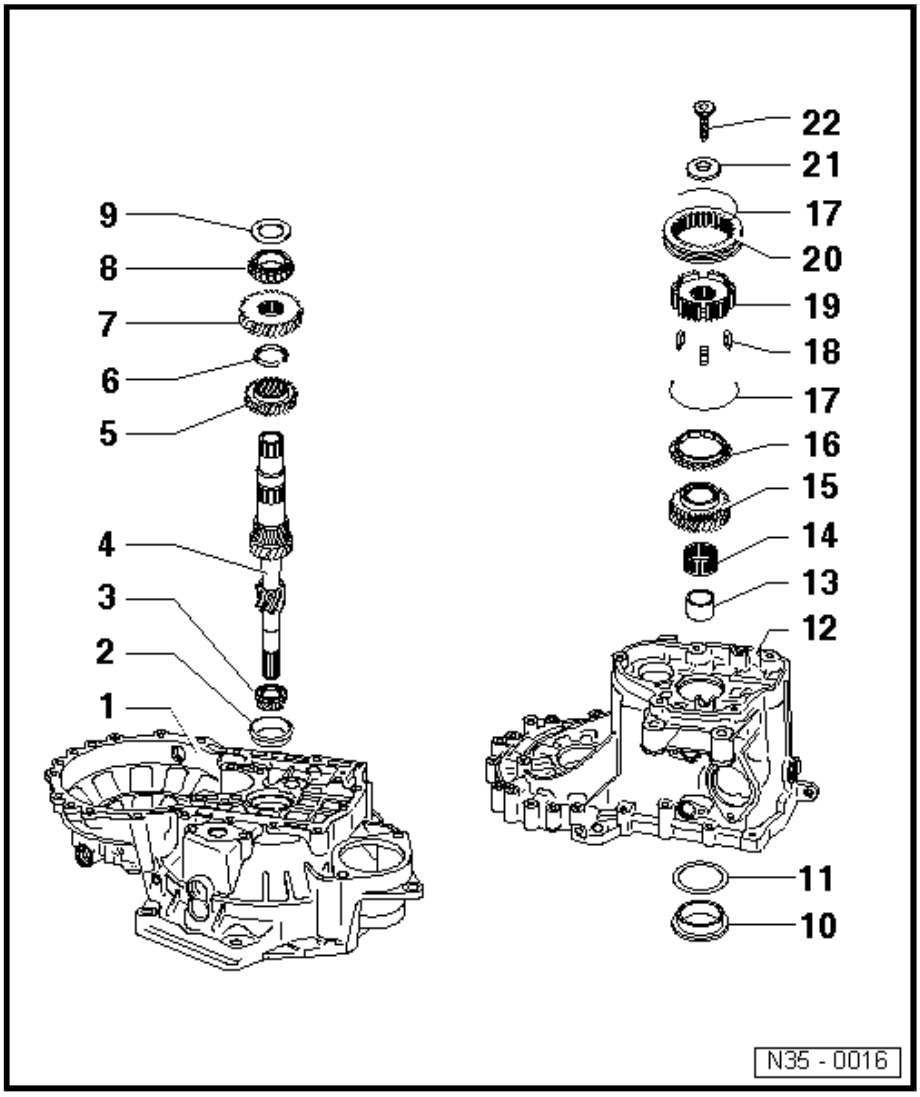

1 - Clutch housing

2 - Tapered roller bearing outer race

- ❑ Pressing out ⇒ page 266
- ❑ Pressing in ⇒ page 266

3 - Tapered roller bearing inner race

- ❑ Pressing off ⇒ page 267
- ❑ Pressing on ⇒ page 267

4 - Input shaft

- ❑ Adjusting ⇒ page 270

5 - Gear wheel for 3rd gear

- ❑ Installation position: shoulder faces 4th gear
- ❑ Pressing off ⇒ page 267
- ❑ Pressing on ⇒ page 268

6 - Retaining ring

- ❑ Always renew

7 - Gear wheel for 4th gear

- ❑ Pressing off with tapered roller bearing outer race and sleeve ⇒ page 267
- ❑ Pressing on ⇒ page 268
- ❑ Collar faces 3rd gear

8 - Tapered roller bearing inner race

- ❑ Pressing off with gear wheel and sleeve for 4th gear ⇒ page 267
- ❑ Pressing on ⇒ page 268

9 - Thrust washer

10 - Tapered roller bearing outer race

- ❑ Pressing out ⇒ page 269
- ❑ Pressing in ⇒ page 269

11 - Shim

- ❑ Determining thickness ⇒ page 270

12 - Gearbox housing

13 - Sleeve

- ❑ For needle bearing
- ❑ Press off with gear wheel for 4th gear and tapered roller bearing inner race ⇒ page 267
- ❑ Pressing on ⇒ page 268
- ❑ Set thrust washer ⇒ Item 9 (page 265) in place before installing

14 - Needle bearing

15 - Synchromeshed gear for 5th gear

16 - Synchro-ring for 5th gear

- With cast locking pieces ⇒ page 246
- Check for wear ⇒ page 245

17 - Spring

- Installation position ⇒ page 269
- After gearbox construction date 05 11 1: Bent ends on springs ⇒ page 270

18 - Locking pieces (Qty. 3)

- Installation position ⇒ page 269

19 - Synchro-hub for 5th gear

- Pulling off, from ⇒ page 234 .

20 - Locking collar for 5th gear

- Pulling off with synchro-hub for 5th gear, from ⇒ page 234 .

21 - Dished washer

- Installation position ⇒ page 246

22 - Bolt ⇒ Item 4 (page 225)

- Always renew
- Fitted section of bolt head holds dished spring in position ⇒ page 246 .

Pressing out tapered roller bearing outer race

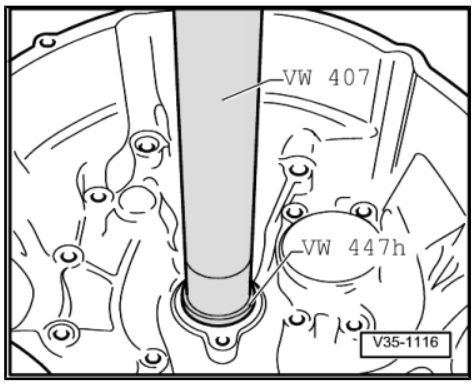

Pressing in tapered roller bearing outer race

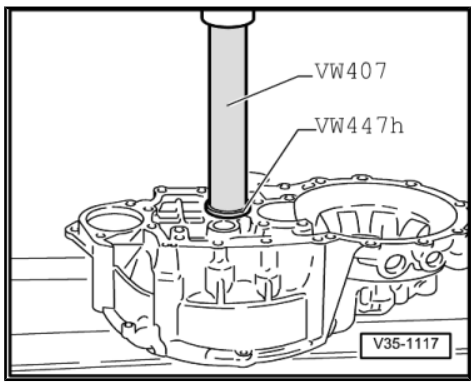

Pressing off tapered roller bearing inner race

A - Splitter -Kukko 17/1-

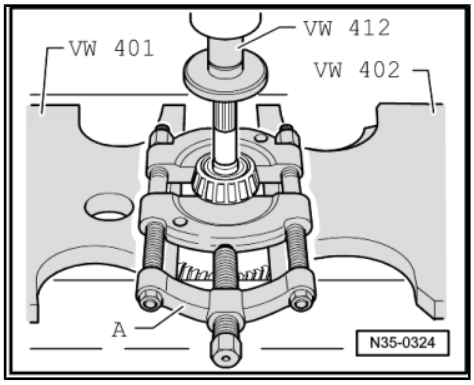

Pressing on tapered roller bearing inner race

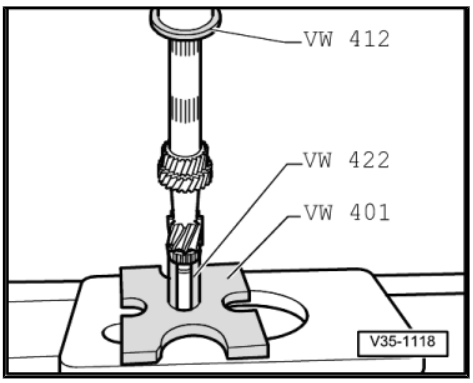

Pressing off gear wheel for 4th gear with tapered roller bearing and sleeve

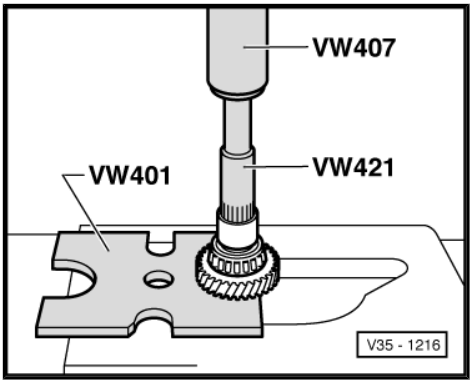

Pressing off gear wheel for 3rd gear

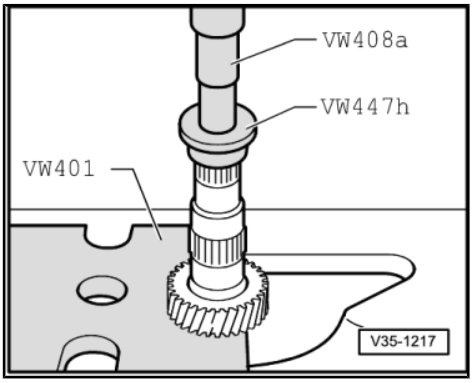

Pressing on gear wheel for 3rd gear

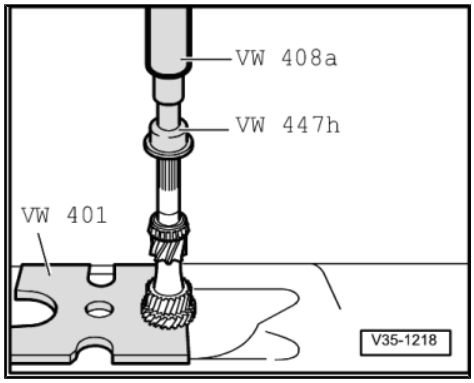

Pressing on gear wheel for 4th gear

Shoulder faces 3rd gear

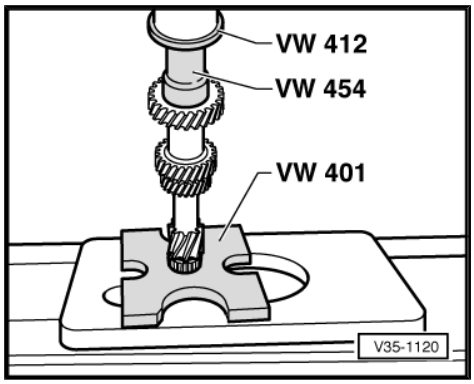

Pressing on tapered roller bearing inner race

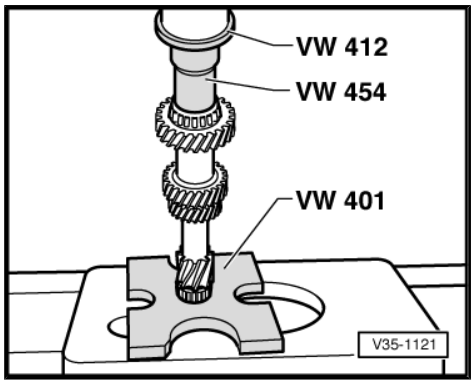

Pressing on sleeve for needle bearing

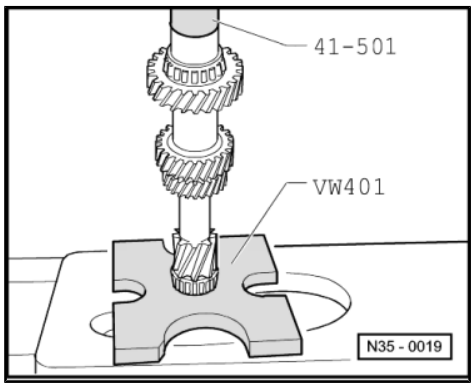

Pressing out tapered roller bearing outer race

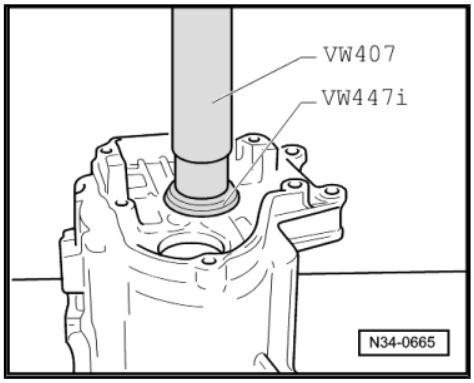

Pressing in tapered roller bearing outer race

– Install with shim after adjusting input shaft.

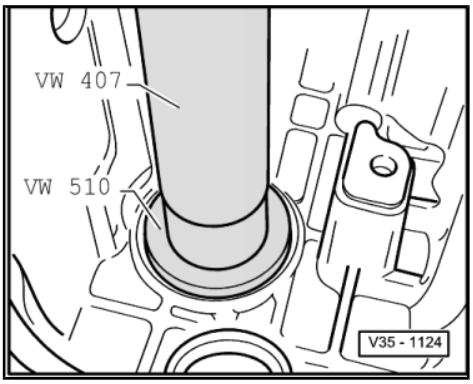

5th gear synchronization

1 - Springs for lock pieces

2 - Locking collar with 3 recesses -arrows A- for the locking pieces -item 4-

3 - Synchro-hub

4 - Locking pieces - installation position: thin extension -arrow B- faces the pointed teeth of the locking collar -2-

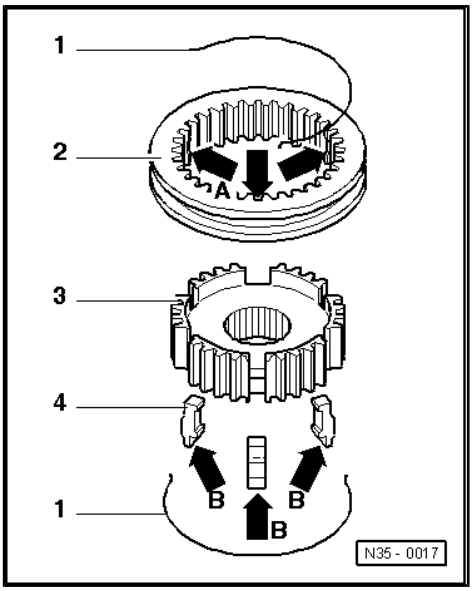

Assembling 5th gear locking collar/synchro-hub

– Slide locking collar over synchro-hub.

Pointed teeth -A- and shoulder -B- of synchro-hub face in same direction. The recesses for the locking pieces in locking collar and synchro-hub must be aligned (⇒ page 269).

– Insert locking pieces (installation position ⇒ page 269).

– Install springs below shoulder -C-, offset 120°. Springs must seat with angled ends in front of locking pieces -arrows-.

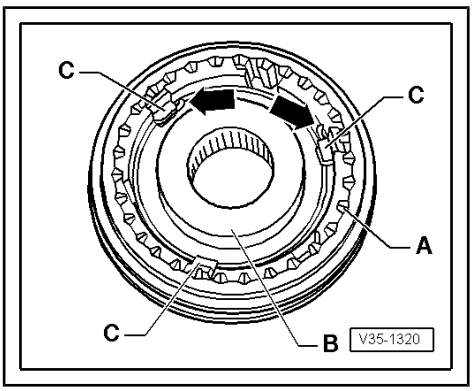

Installing springs with bent ends -A-

These springs are installed on both sides.

– Spring are installed only in conjunction with locking pieces which are hollow on the inner side.

– Insert locking pieces (installation position ⇒ page 269).

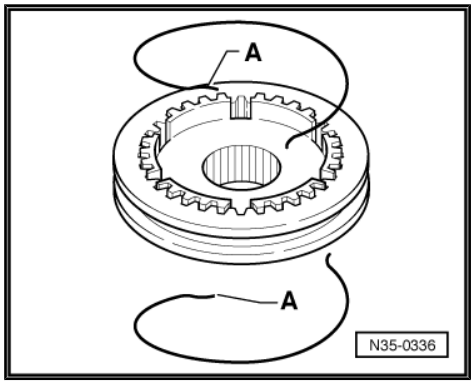

Installation position of springs:

– Install springs offset 120°.

– Angled end -A- of spring must locate in hollow locking piece.

It must be located under shoulder -B- of locking piece.

Bent ends always face away from synchro-hub
-direction of arrow-.

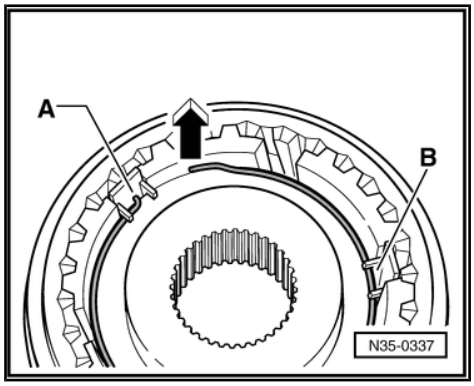

1.2 Adjusting input shaft

(Determining input shaft shim)

Special tools and workshop equipment required

- Universal dial gauge bracket -VW 387-
- End dimension plate -VW 385/17-
- Thrust pad -VW 510-
- Thrust pad -VW 447 i-
- Press tool -VW 407-
- Torque wrench -V.A.G 1331-
- Dial gauge

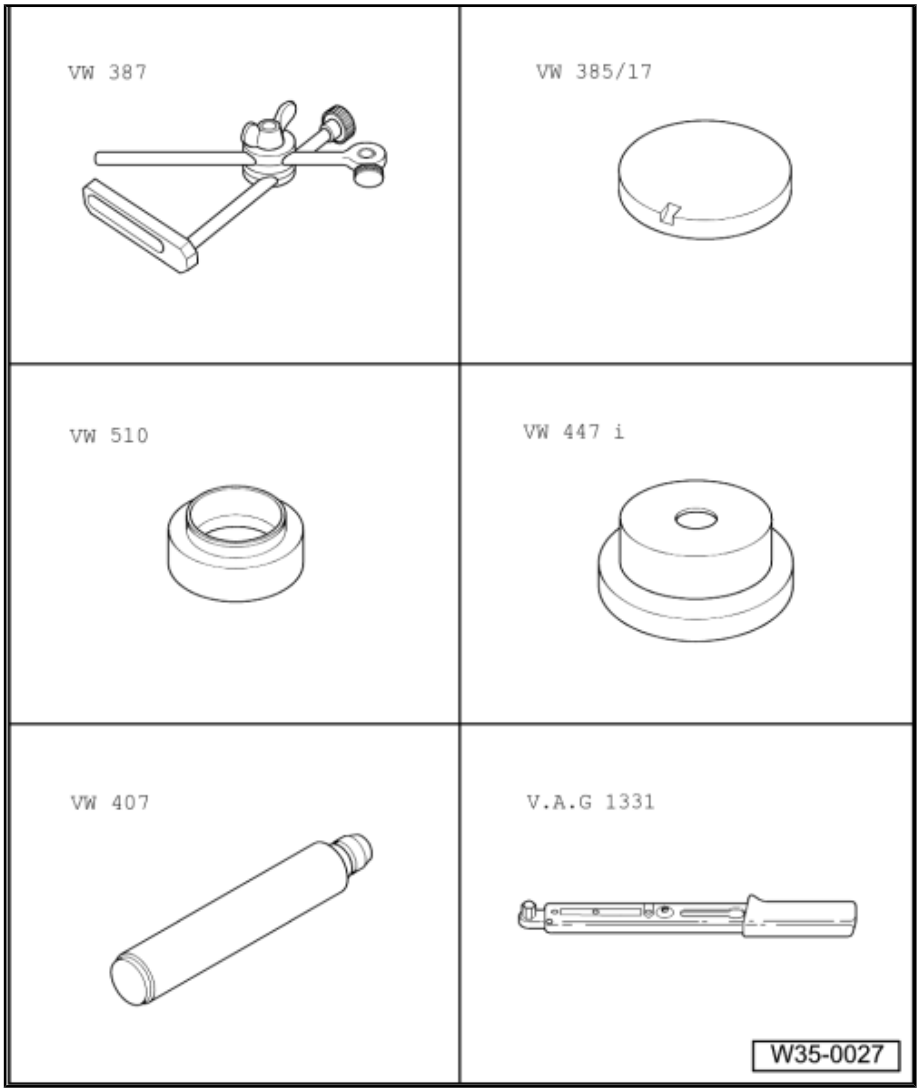

It is necessary to readjust the input shaft only when the following components are renewed:

- Gearbox housing
- Clutch housing
- Input shaft
- Gear wheel for 4th gear

or the

- Tapered roller bearings

Adjustment overview ⇒ page 302

Requirement:

- Sealing surfaces of clutch and gearbox housings must be free of sealant.

– Press tapered roller bearing outer race into gearbox housing to stop.

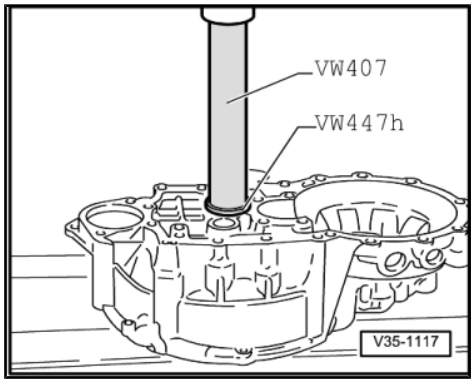

– Press tapered roller bearing outer race without shim into gearbox housing to stop.
– Install input shaft in clutch housing and set gearbox housing in place. Tighten hexagon head bolts to 25 Nm and then turn 90° further.

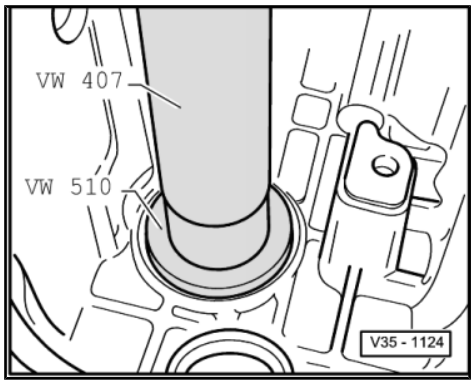

– Fit measuring appliance and dial gauge in clutch housing.
– Before taking any measurements, rotate input shaft to allow bearings to settle. Set dial gauge to “0” with 1 mm preload.

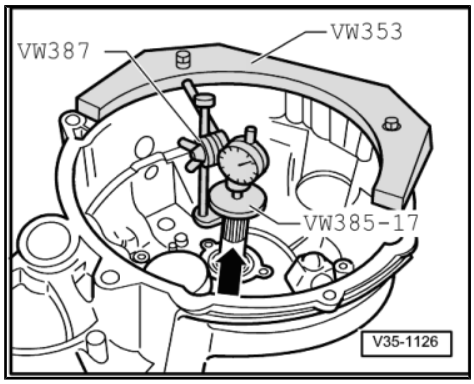

Note

This step must be repeated for each subsequent measurement, or the dial gauge will not return to the starting position.

– Press input shaft in direction of dial gauge -direction of arrow-.
– Read and note play on dial gauge (example: 1.21 mm).

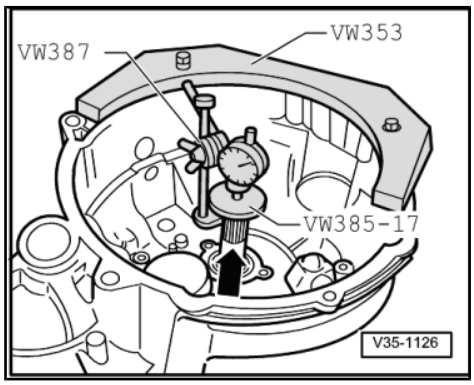

Note

Dial gauge does not return to original position.

1.2.1 Determining thickness of shim

Example:

Bearing play, measured value	Thickness of shim according to table
1.21 mm	1.175 mm

Table of shims

Bearing play	Shim
Measured value (mm)	Thickness (mm)
0.671…0.699	0.650
0.700…0.724	0.675
0.725…0.749	0.700
0.750…0.774	0.725
0.775…0.799	0.750
0.800…0.824	0.775
0.825…0.849	0.800
0.850…0.874	0.825
0.875…0.899	0.850
0.900…0.924	0.875
0.925…0.949	0.900
0.950…0.974	0.925
0.975…0.999	0.950
1.000…1.024	0.975
1.025…1.049	1.000
1.050…1.074	1.025
1.075…1.099	1.050
1.100…1.124	1.075
1.125…1.149	1.100
1.150…1.174	1.125
1175…1.199	1.150
1.200…1.224	1.175
1.225…1.249	1.200
1.250…1.274.	1.225
1.275…1.229	1.250
1.300…1.324	1.275
1.325…1.349	1.300
1.350…1.374	1.325
1.375…1.399	1.350
1.400…1.424	1.375
1.425…1.449	1.400
1.450…1.474	1.425
1.475…1.499	1.450
1.500…1.524	1.475
1.525…1.549	1.500
1.550…1.574	1.525
1.575…1.599	1.550
1.600…1.624	1.575
1.625…1.649	1.600
1.650…1.674	1.625
1.675…1.699	1.650
1.700…1.724	1.675

Note

Allocate shims according to ⇒ Electronic parts catalogue "ETKA".

– Remove input shaft and press outer race of tapered roller bearing out of gearbox housing using thrust plate -VW 447 i- .

– Insert shims of determined thickness, thickest shim first.

If the size of shim required is larger than those listed in the table, insert two shims totalling the correct figure.

– Press outer race of tapered roller bearing together with the shim (1.175 mm in example) into gearbox housing using thrust pad -VW 510- .

– Set gearbox housing in place and tighten hexagon head bolts to 25 Nm and then turn 90° further.

1.2.2 Carrying out check measurement

– Set up measuring appliance and dial gauge.

– Rotate input shaft so that tapered roller bearings settle.

– Press input shaft in -direction of arrow-.

– Bearing play should be min. 0.01 ... max. 0.09 mm.

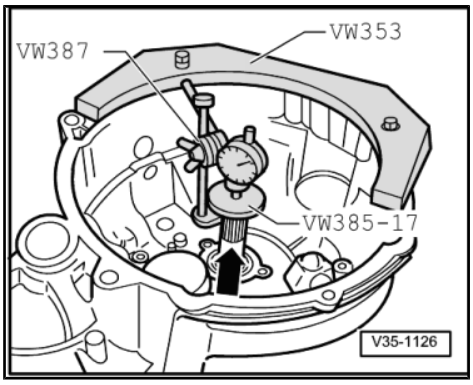

Note

If the bearing play cannot be measured, but input shaft play is perceptible and the input shaft turns freely, the adjustment is acceptable.

2 Output shaft

2.1 Dismantling and assembling output shaft

Special tools and workshop equipment required

- Press tool -VW 407-
- Press tool -VW 412-
- Thrust pad -VW 512-
- Puller -V.A.G 1582-
- Adapter -V.A.G 1582/4-
- Adapter -V.A.G 1582/5-

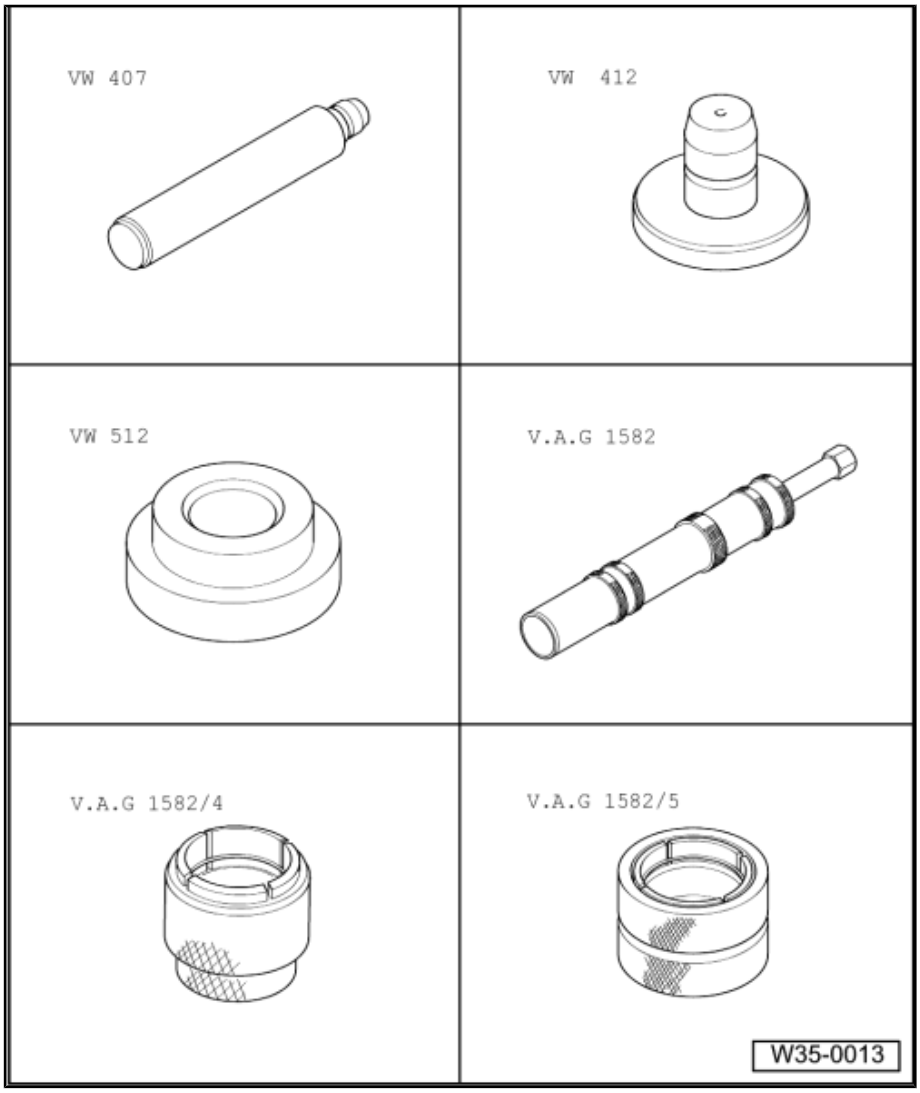

- Thrust plate -VW 402-
- Thrust piece -32 - 111-
- Press tool -VW 408 A-
- Press tool -VW 409-
- Support rails -VW 457-
- Tube -VW 519-

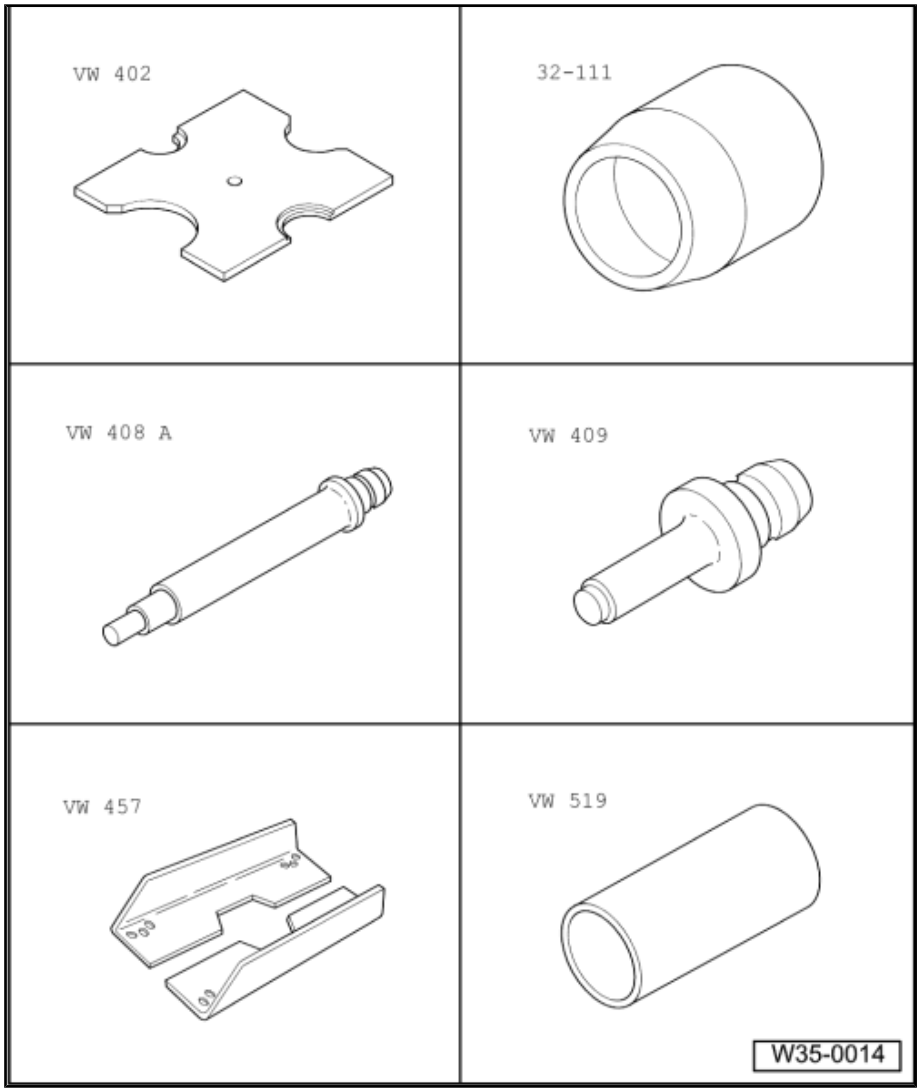

- Thrust ring -VW 429-
- Tube -VW 415 A-
- Thrust pad -VW 447 H-
- Thrust piece -VW 454-
- Installing sleeve -VW 455-
- Drift sleeve -41-501-

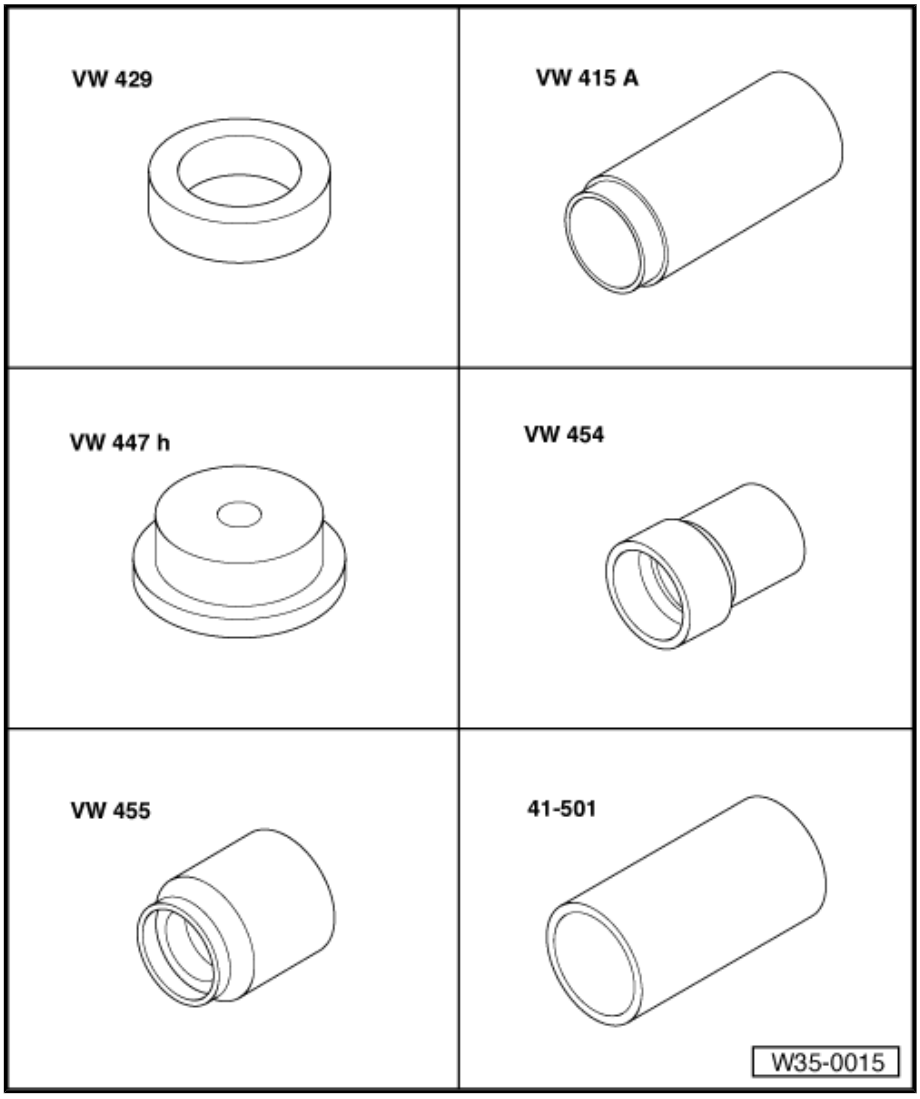

- Internal puller -1-Kukko 21/6-

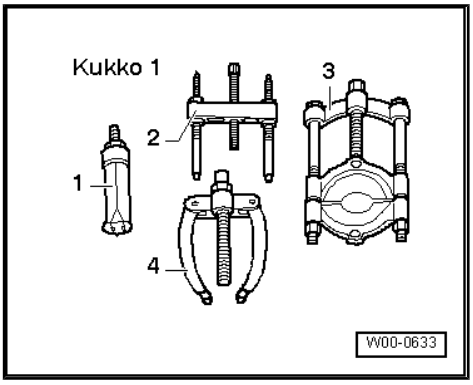

- Counter support -4-Kukko 22/2-
- Splitter -3-Kukko 17/2-

Note

- *The output shaft is dismantled as follows: position separating device under 2nd gear synchromeshed gear ⇒ Item 21 (page 279) and press off as described in ⇒ page 281 . Remove retaining ring ⇒ Item 17 (page 279) . Then press off locking collar with synchro-hub for 1st and 2nd gear as described in ⇒ page 282 .*
- *When installing new gears or new input shaft, refer to ⇒ Electronic parts catalogue "ETKA" and technical data ⇒ page 2 .*
- *Always renew both tapered roller bearings together as a set.*

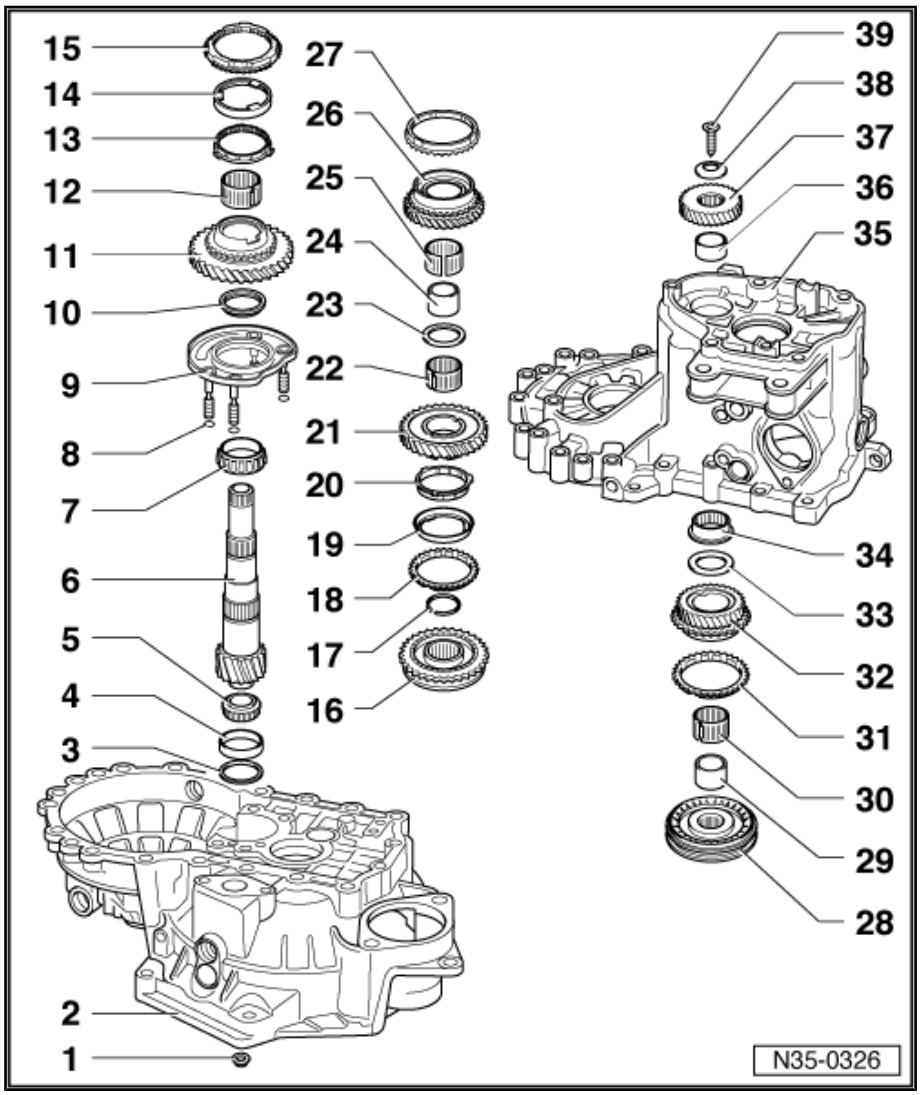

1 - Hexagon nut, 25 Nm and then turn 90° further

- ❑ 4 nuts for bearing support.
- ❑ Always renew

2 - Clutch housing

3 - Shim

- ❑ For output shaft
- ❑ Adjustment overview ⇒ page 302

4 - Small tapered roller bearing outer race

- ❑ Removing ⇒ page 280
- ❑ Pressing in ⇒ page 281

5 - Tapered roller bearing inner race small

- ❑ Pulling off ⇒ page 281
- ❑ Pressing on ⇒ page 281

6 - Output shaft

- ❑ Adjusting ⇒ page 287

7 - Tapered roller bearing inner race large

- ❑ Pulling off ⇒ page 282
- ❑ Pressing on ⇒ page 282

8 - Seal

- ❑ Place sealing rings (Qty. 4) on bearing support bolts

9 - Bearing support

- ❑ With large tapered roller bearing outer race and bolts
- ❑ Change outer race only together with large tapered roller bearing and bearing support

10 - Thrust washer

- ❑ Shoulder of thrust washer faces tapered roller bearing

11 - Synchromeshed gear for 1st gear

12 - Needle bearing

- ❑ For 1st gear

13 - Synchro-ring

- ❑ (Inner ring for 1st gear)
- ❑ Installation position ⇒ page 282
- ❑ Check for wear ⇒ page 283
- ❑ Check lugs for scoring

14 - Outer ring for 1st gear

- ❑ Installation position ⇒ page 282
- ❑ Check for wear ⇒ page 283
- ❑ Renew if scored

15 - Synchro-ring for 1st gear

- ❑ Installation position ⇒ page 282
- ❑ Check for wear ⇒ page 283

16 - Locking collar with synchro-hub for 1st and 2nd gears

- ❑ After removing retaining ring, pull off together with bearing support ⇒ page 282 ⇒ Item 17 (page 279)
- ❑ Dismantling ⇒ page 283
- ❑ Assembling locking collar and synchro-hub ⇒ page 283 , ⇒ page 284 and ⇒ page 284
- ❑ Installation position ⇒ page 284
- ❑ Pressing on ⇒ page 284

17 - Retaining ring

18 - Synchro-ring for 2nd gear

- ❑ Check for wear ⇒ page 283
- ❑ Assemble so that notches engage in locking pieces of locking collar ⇒ Item 16 (page 279)

19 - Outer ring for 2nd gear

- ❑ Insert in synchro-ring ⇒ Item 18 (page 279) .
- ❑ Installation position ⇒ page 285
- ❑ Renew if scored

20 - Synchro-ring

- ❑ (Inner ring for 2nd gear)
- ❑ Check for wear ⇒ page 283
- ❑ Check lugs for scoring
- ❑ Installation position ⇒ page 285

21 - Synchromeshed gear for 2nd gear

- ❑ Installation position ⇒ page 285

22 - Needle bearing

- ❑ For 2nd gear

23 - Thrust washer

24 - Sleeve for 3rd gear needle bearing

- ❑ Pressing off with synchromeshed gear for 2nd gear ⇒ page 281
- ❑ Pressing on ⇒ page 285

25 - Needle bearing

- ❑ For 3rd gear

26 - Synchromeshed gear for 3rd gear

27 - Synchro-ring for 3rd gear

- ❑ Check for wear ⇒ page 286

28 - Locking collar with synchro-hub for 3rd and 4th gears

- ❑ Press off with synchromeshed gears for 2nd gear ⇒ Item 21 (page 279) and 3rd gear ⇒ Item 26 (page 279) ⇒ page 281 .

- ❑ Dismantling ⇒ page 286
- ❑ Assembling locking collar and synchro-hub ⇒ page 286 , ⇒ page 286 and ⇒ page 286
- ❑ Installation position, locking collar and synchro-hub ⇒ page 287
- ❑ Pressing on ⇒ page 287

29 - Sleeve

- ❑ For needle bearing
- ❑ Press off with 3rd and 4th gear ⇒ Item 28 (page 279) locking collar and synchro-hub ⇒ page 281 .
- ❑ Pressing on ⇒ page 287

30 - Needle bearing

- ❑ For 4th gear

31 - Synchro-ring for 4th gear

- ❑ Check for wear ⇒ page 286

32 - Synchromeshed gear for 4th gear

33 - Thrust washer

34 - Needle bearing

- ❑ For output shaft
- ❑ Removing and installing ⇒ page 252

35 - Gearbox housing

36 - Sleeve

- ❑ For output shaft needle bearing
- ❑ Pressing off ⇒ page 281
- ❑ Pressing on ⇒ page 287

37 - Gear wheel for 5th gear

- ❑ Removing and installing ⇒ page 234

38 - Dished washer

- ❑ Installation position ⇒ page 246

39 - Bolt ⇒ Item 4 (page 225)

- ❑ Always renew
- ❑ Removing and installing ⇒ page 234

Pulling out small tapered roller bearing outer race

A - Internal puller, 37...46 mm , e.g. -Kukko 21/6-

B - Counter support , e.g. -Kukko 22/2-

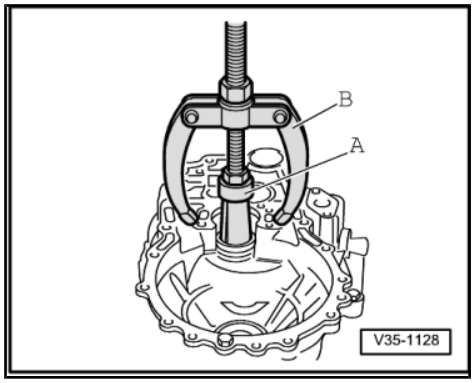

Pressing in small tapered roller bearing outer race

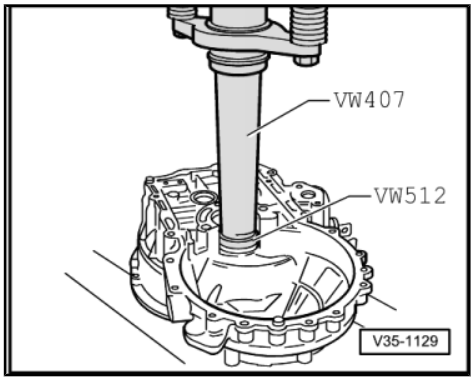

Pulling off small tapered roller bearing inner race

A - Vice with protective jaw covers

– Fit adapter and tighten behind bearing rollers, then turn bearing and retighten gripping device.

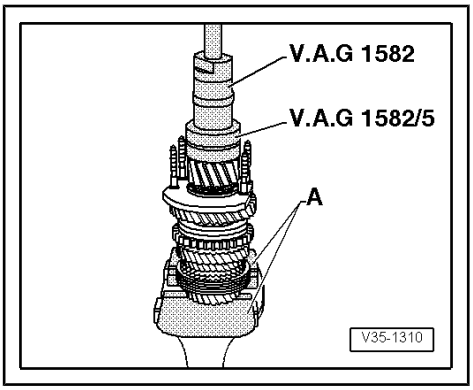

Pressing on small tapered roller bearing inner race

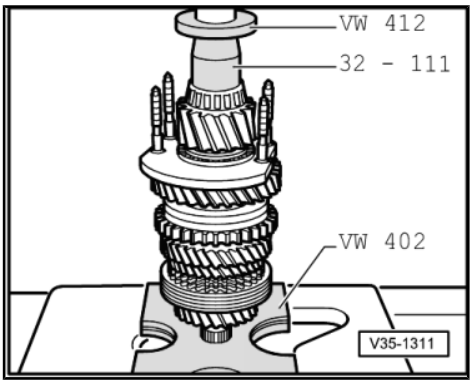

Pressing off 3rd and 4th gear synchro-hub and locking collar, 2nd, 3rd and 4th gear synchromeshed gears with sleeve for gearbox housing needle bearing

A - Splitter, 22...115 mm , e.g. -Kukko 17/2-

B - Hexagon bolt M10 x 20, 17 mm AF

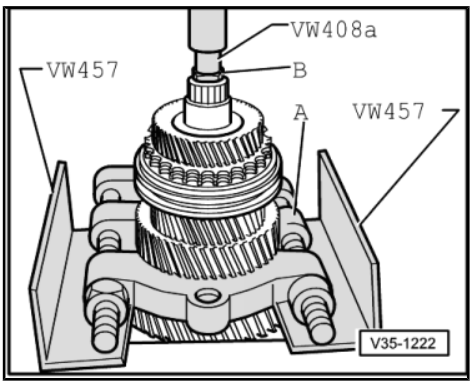

Note

Support splitter so that the 1st and 2nd gear locking collar is not pulled off at the same time.

Pressing off locking collar with synchro-hub and bearing support

– First remove retaining ring -arrow-.

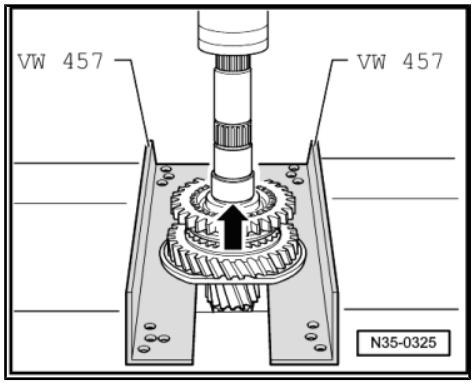

Pulling off large tapered roller bearing inner race

A - Protective jaws

– Before fitting puller, insert a M 10 x 20 hexagon bolt in the output shaft drilling.

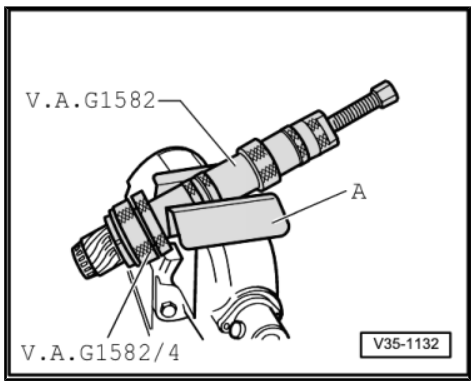

Pressing on large tapered roller bearing inner race

-A- Thrust washer

– Fit thrust washer before pressing on inner race. Shoulder faces inner race.

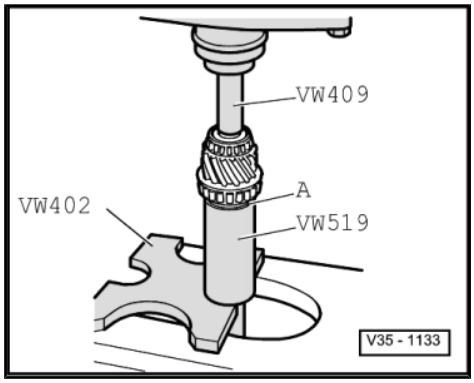

Installation position of outer ring, inner ring and synchro-ring for 1st gear

– Place inner ring -A- on synchromeshed gear for 1st gear.

Angled lugs -arrow 1- face outer ring -B-.

– Fit outer ring -B-.

Lugs -arrow 2- engage in notches -arrow 3- of synchromeshed gear.

– Fit synchro-ring -C-.

Notches -arrow 4- engage in lugs -arrow 1- of inner ring -A-.

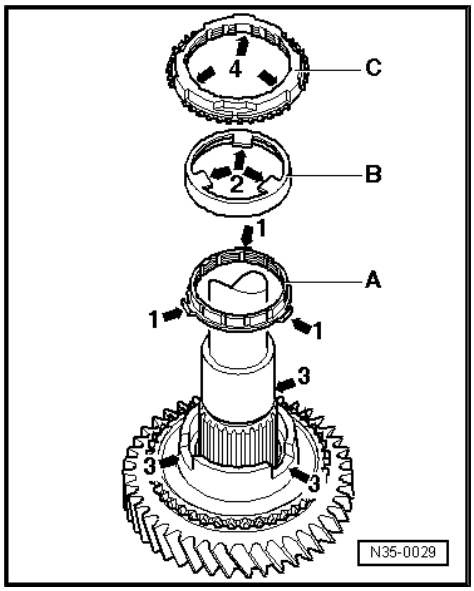

Note

If components are to be reused, ensure that they are matched with their original gears.

Checking 1st and 2nd gear inner ring for wear

– Press inner ring onto cone of synchromeshed gear and measure gap -a- using a feeler gauge.

Gap -a-	Installation (new) dimension	Wear limit
1st and 2nd gears	0.75 … 1.25 mm	0.3 mm

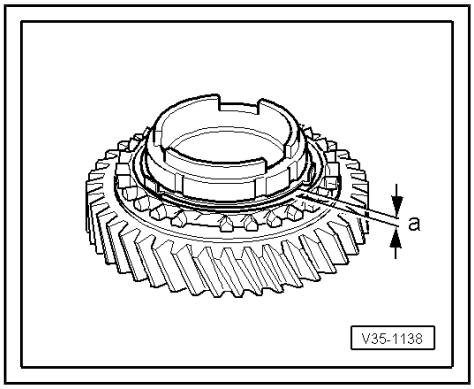

Checking 1st and 2nd gear synchro-ring for wear

– Press synchro-ring, outer ring and inner ring onto cone of synchromeshed gear and measure gap -a- using a feeler gauge.

Gap -a-	Installation (new) dimension	Wear limit
1st and 2nd gears	1.2 … 1.8 mm	0.5 mm

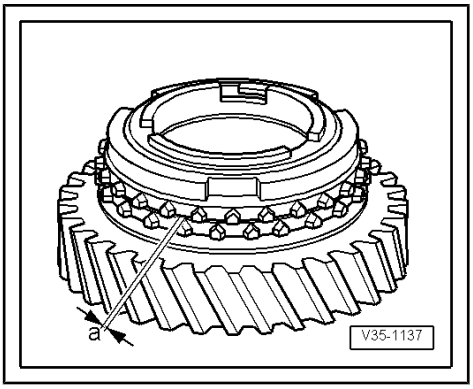

Dismantling and assembling locking collar and synchro-hub for 1st and 2nd gears

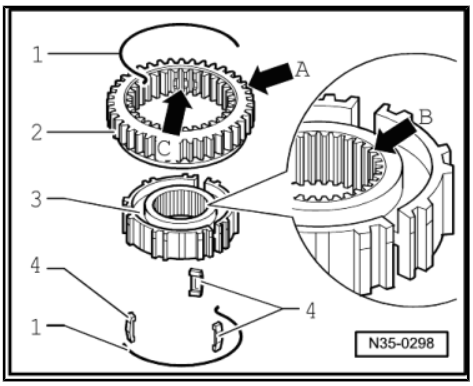

1 - Spring

Allocate springs according to ⇒ Electronic parts catalogue “ETKA” .

Installation with hollow locking pieces ⇒ page 284 .

Installation with solid locking pieces ⇒ page 284 .

2 - Locking collar

3 - Synchro-hub

4 - Locking piece

Allocate locking pieces according to ⇒ Electronic parts catalogue “ETKA” .

Collar is equally wide on both sides of synchro-hub.

Collar has chamfer on one side -arrow B-.

Chamfer on collar of synchro-hub and outer teeth of locking collar -arrow A- face in same direction after assembly.

Notches -arrow C- in synchro-hub and sliding collar for locking pieces must align.

Assembly of 1st and 2nd gear locking collar and synchro-hub with hollow locking pieces

- Locking collar has been pushed over synchro-hub.

– Insert locking pieces and install springs offset 120°. Angled end of spring must locate in hollow locking piece.

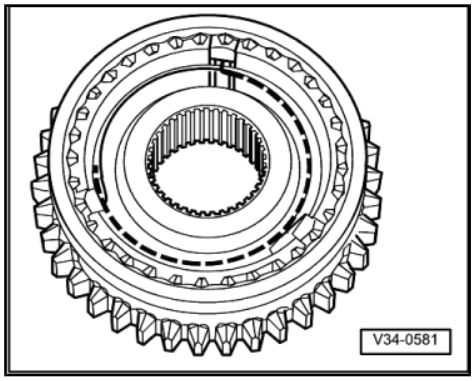

Assembly of 1st and 2nd gear locking collar and synchro-hub with solid locking pieces

- Locking collar has been pushed over synchro-hub.

– Insert locking pieces and install springs offset 120°. Springs must seat with angled ends in front of locking pieces -arrows-.

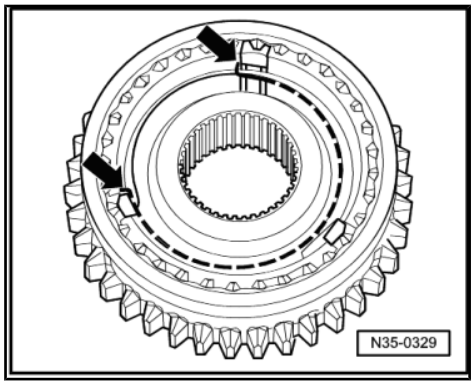

Installation position of locking collar with synchro-hub for 1st and 2nd gears

Teeth of locking collar -arrow- face splines for 3rd and 4th gear synchro-hub -A-.

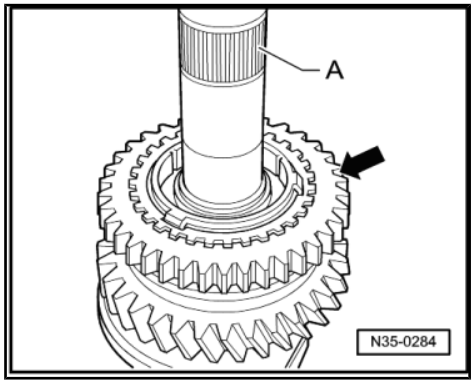

Pressing on locking collar and synchro-hub for 1st and 2nd gears

Turn synchro-ring so that grooves align with locking pieces.

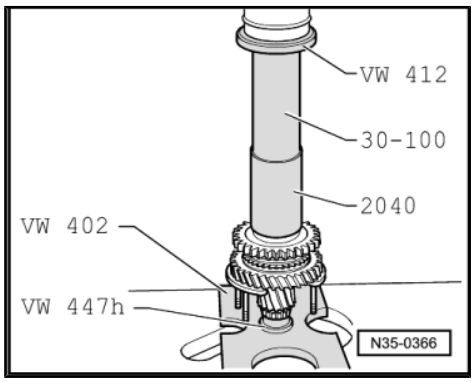

Installation position of 2nd gear outer ring

Lugs -arrows- face 1st gear -A-.

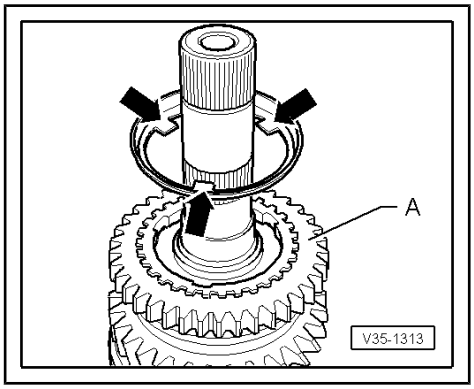

Installation position of synchro-ring (2nd gear inner ring) -A-

Lugs -arrow 1- engage in notches -arrow 2- in synchro-ring -B-.

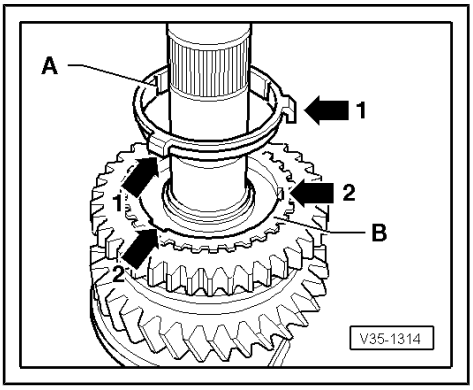

Installation position of synchromeshed gear for 2nd gear

Higher shoulder -A- faces 1st gear -B-. Notches in shoulder -arrows- engage in lugs of outer ring ⇒ page 285 .

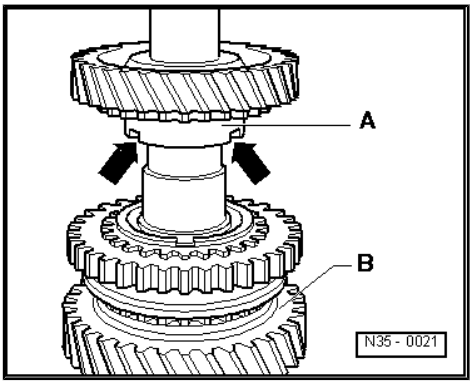

Pressing on sleeve for 3rd gear needle bearing

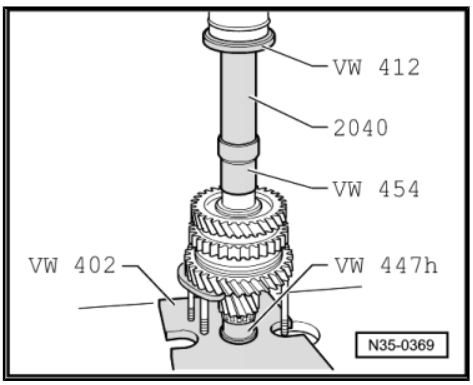

Checking synchro-rings for 3rd and 4th gear for wear

– Press synchro-ring onto cone of synchromeshed gear and measure gap -a- using feeler gauge.

Gap -a-	Installation (new) dimension	Wear limit
1st gear 3rd gear 4th gear	1.0 ... 1.7 mm 1.0 ... 1.7 mm 1.0 ... 1.7 mm	0.5 mm

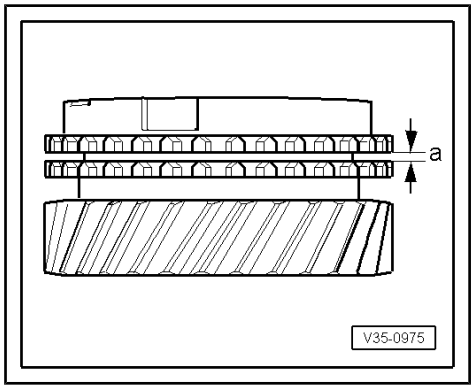

Dismantling and assembling 3rd and 4th gear locking collar and synchro-hub

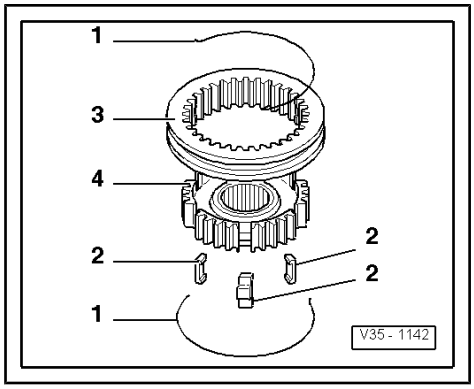

1 - Spring

Allocate springs according to ⇒ Electronic parts catalogue “ETKA” .

Installation with hollow locking pieces ⇒ page 284 .

Installation with solid locking pieces ⇒ page 284 .

2 - Locking piece

Allocate locking pieces according to ⇒ Electronic parts catalogue “ETKA” .

3 - Locking collar

4 - Synchro-hub

– Slide locking collar over synchro-hub.

Notches for locking pieces in synchro-hub and locking collar must align.

Assembly of 3rd and 4th gear locking collar and synchro-hub with hollow locking pieces

Locking collar has been pushed over synchro-hub.

– Insert locking pieces and install springs offset 120°. Angled end of spring must locate in hollow locking piece.

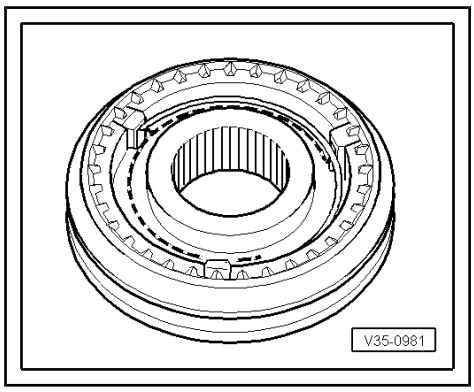

Assembly of 3rd and 4th gear locking collar and synchro-hub with solid locking pieces

• Locking collar has been pushed over synchro-hub.

– Insert locking pieces and install springs offset 120°. Springs must seat with angled ends in front of locking pieces -arrows-.

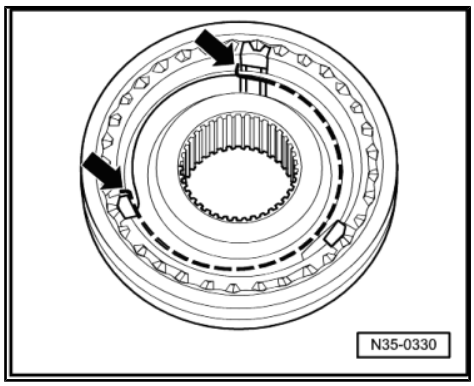

Installation position of locking collar and synchro-hub for 3rd and 4th gears

Chamfer -arrow- faces 4th gear.

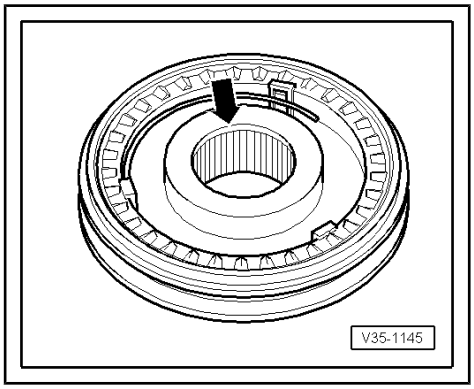

Pressing on synchro-hub with locking collar for 3rd and 4th gears

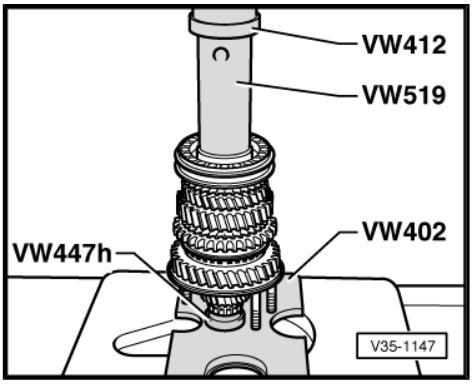

Pressing on sleeve for 4th gear needle bearing

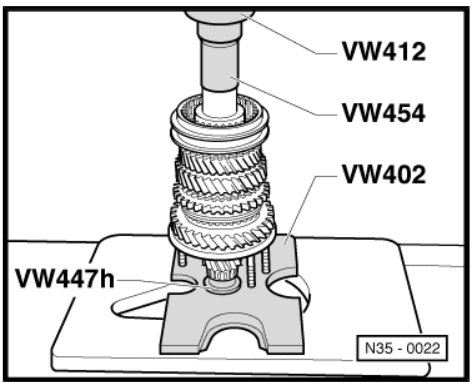

Pressing on sleeve for output shaft needle bearing

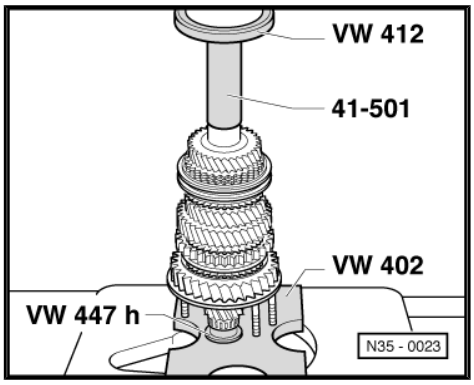

2.2 Adjusting output shaft

(Determining shim for output shaft)

Special tools and workshop equipment required

- Universal dial gauge bracket -VW 387-
- End dimension plate - VW 385/17-
- Thrust pad -VW 512-
- Straightening tool -3114/2-
- Press tool -VW 407-
- Torque wrench - V.A.G 1331-
- Dial gauge

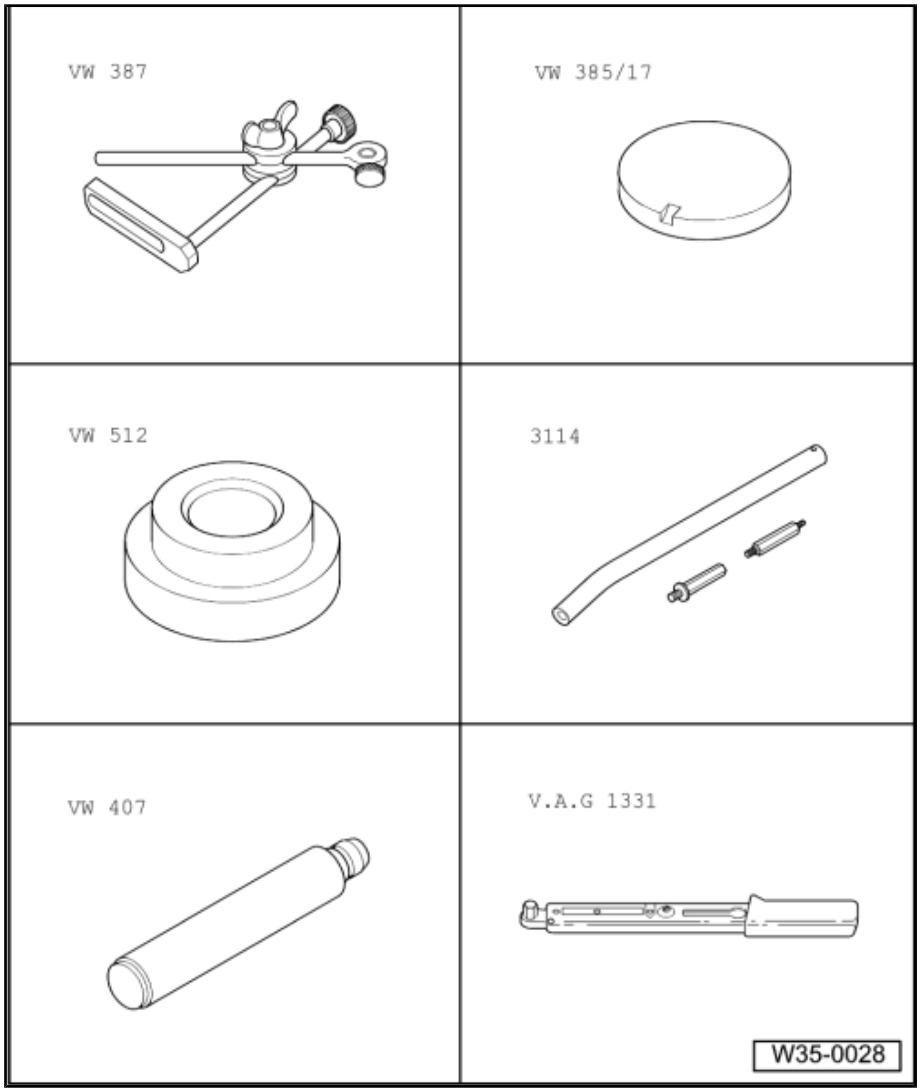

- Internal puller -1-Kukko 21/6-

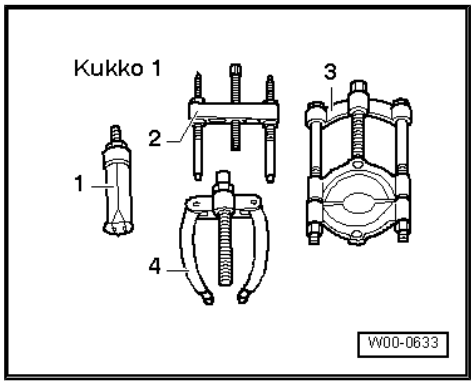

- Counter support -4-Kukko 22/2-

It is necessary to readjust the output shaft when the following components are renewed:

- Output shaft
- Clutch housing

or

- Tapered roller bearings

Adjustment overview ⇒ page 302

Prerequisites:

- Sealing surfaces of clutch and gearbox housings must be free of sealant.

– Press outer ring of small tapered roller bearing to stop with 0.65 mm shim into clutch housing ⇒ page 281 .

– Insert output shaft and tighten nuts for bearing support to 25 Nm, then turn 90° further.

– Turn output shaft 20 to 30 times in one direction.

Note

♦ *The shaft must be turned in one direction so that the rollers of the tapered roller bearing settle in one direction.*

♦ *It is necessary to turn the shaft 20 to 30 times to achieve this.*

♦ *Otherwise the resulting reading will be incorrect.*

– Set up dial gauge (3 mm measuring range) and set to “0”with 1 mm preload.

– Move output shaft up and down. Read and note play indicated on dial gauge.

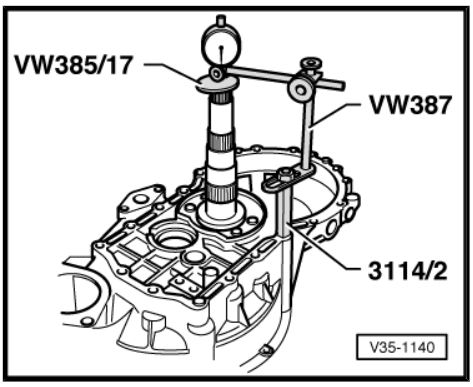

2.2.1 Determining thickness of shim

The specified bearing preload will be attained if the determined measured value is added to the 0.65 mm shim already installed.

Example:

Bearing play = (0.65 mm plus determined measured value)	Thickness of shim according to table
0.740 mm	0.900 mm

Table of shims

Bearing play = (0.65 mm plus determined measured value)	Shim thickness (mm)
0.650	0.750
0.660 … 0.689	0.800
0.690 … 0.739	0.850
0.740 … 0.789	0.900
0.790 … 0.839	0.950
0.840 … 0.889	1.000
0.890 … 0.939	1.050
0.940 … 0.989	1.100

Bearing play = (0.65 mm plus determined measured value)	Shim thickness (mm)
0.990 … 1.039	1.150
1.040 … 1.089	1.200
1.090 … 1.139	1.250
1.140 … 1.189	1.300
1.190 … 1.239	1.350
1.240 … 1.289	1.400
1.290 … 1.339	1.450
1.340 … 1.389	1.500
1.390 … 1.429	1.550

Note

Allocate shims according to ⇒ Electronic parts catalogue "ETKA".

– Remove output shaft and pull out small tapered roller bearing outer race ⇒ page 280 .

– Insert shims of determined thickness, thickest shim first.

• If the previously used 0.65 mm shim is to be reinstalled, check it for damage.

If the size of shim required is larger than those listed in the table, insert two shims totalling the correct figure.

The various thicknesses make it possible to achieve the exact shim thickness required.

– Press in outer race of small tapered roller bearing together with the calculated shim (0.70 mm in example) ⇒ page 281 and install output shaft. Tighten bearing support nuts in clutch housing to 25 Nm and then turn 90° further.

3 Reverse shaft

3.1 Dismantling and assembling reverse shaft

Special tools and workshop equipment required

- Thrust piece -VW 454-
- Thrust pad -VW 447 H-
- Press tool -VW 411-
- Centring mandrel -12 - 551-
- Thrust plate -VW 401-
- Press tool -VW 408 A-

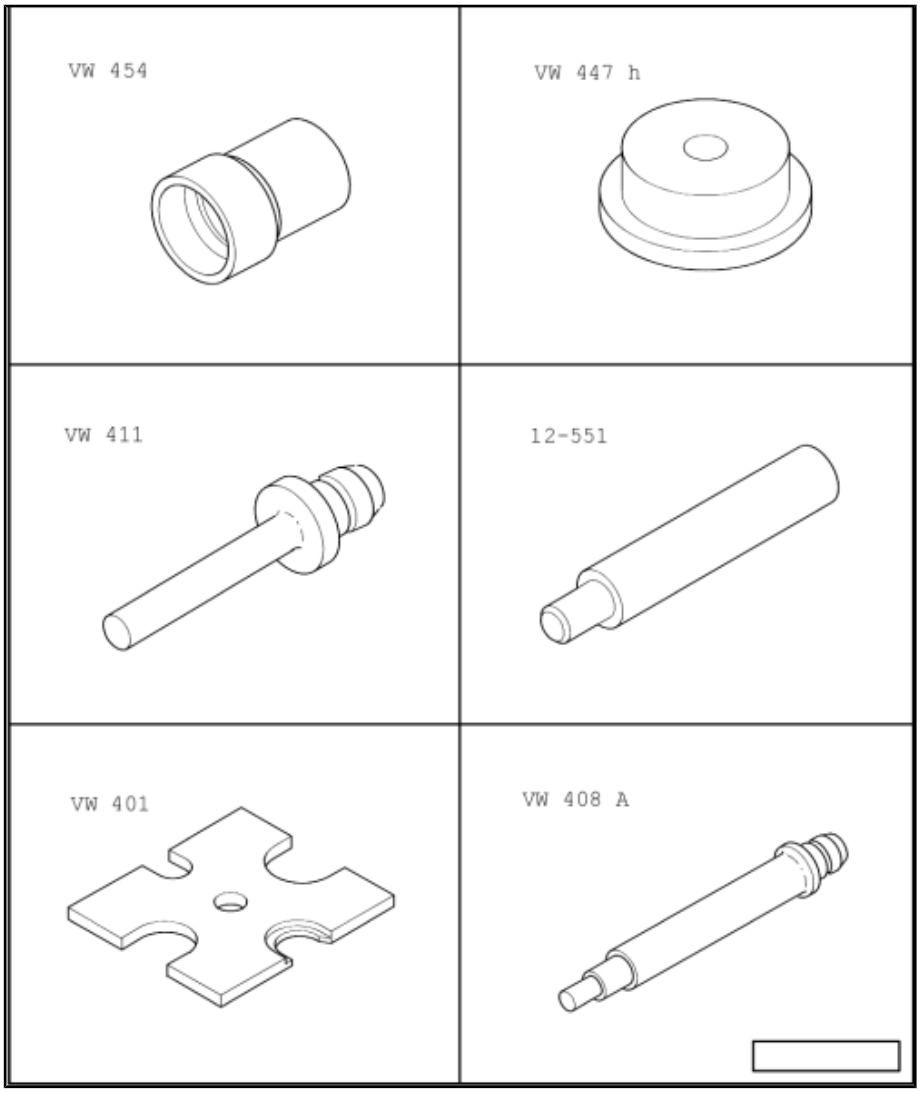

- -1- Internal puller -Kukko 21/2-

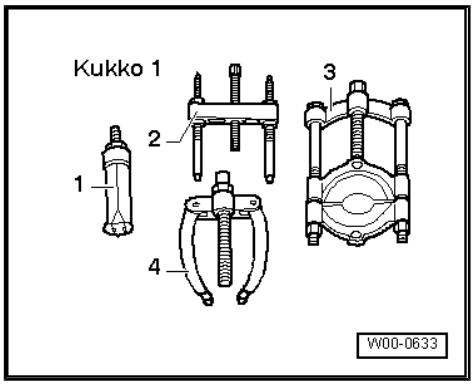

- -4- Counterhold -Kukko 22/1-

Note

After dismantling, always renew needle bearing in clutch housing and reverse shaft support.

1 - Clutch housing

2 - Needle bearing

- ❑ Pulling out ⇒ page 292
- ❑ Pressing in ⇒ page 293

3 - Reverse gear wheel

4 - Retaining ring

- ❑ Always renew after removing

5 - Synchromeshed gear for reverse gear

- ❑ Remove retaining ring before renewing
- ❑ Shoulder faces reverse gear wheel

6 - Reverse shaft

- ❑ Removing ⇒ page 234

7 - Needle bearing

- ❑ Pressing out ⇒ page 293
- ❑ Pressing in ⇒ page 293

8 - Reverse shaft support

- ❑ Removing and installing ⇒ page 234

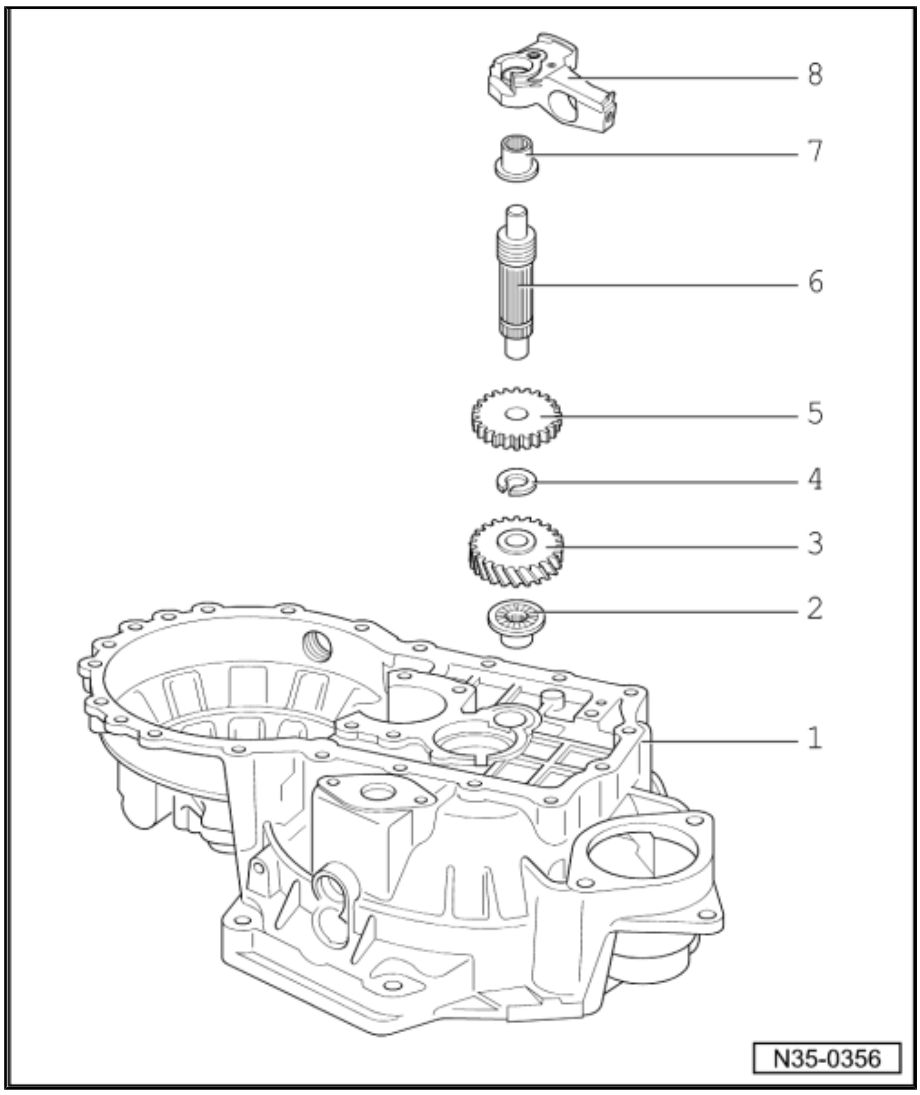

Pulling needle bearing out of clutch housing

A - Counter support , e.g. -Kukko 22/1-

B - Internal puller, 14.5 … 18.5 mm , e.g. -Kukko 21/2-

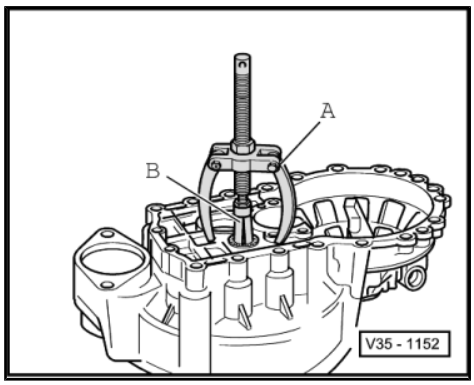

Note

The needle bearing is destroyed during removal and must be renewed.

Pressing needle bearing -A- into clutch housing

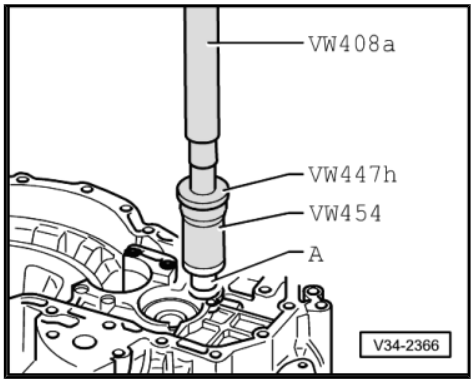

Pressing needle bearing out of reverse shaft support

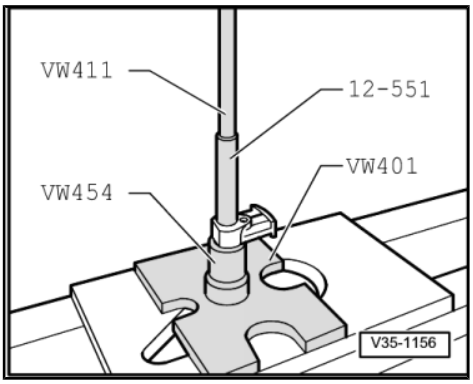

Pressing needle bearing into reverse shaft support

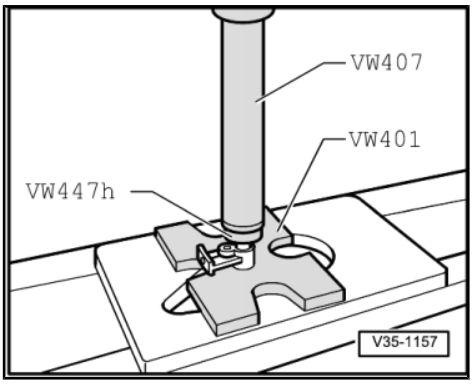

39 – Final drive - differential

1 Renewing flange shaft oil seals with gearbox installed

1.1 Renewing oil seal for left flange shaft

Special tools and workshop equipment required

- Multipurpose tool -VW 771-
- Puller hooks -VW 771/37-
- Thrust piece -T10160-
- Drip tray -V.A.G 1306-
- Torque wrench - V.A.G 1331-

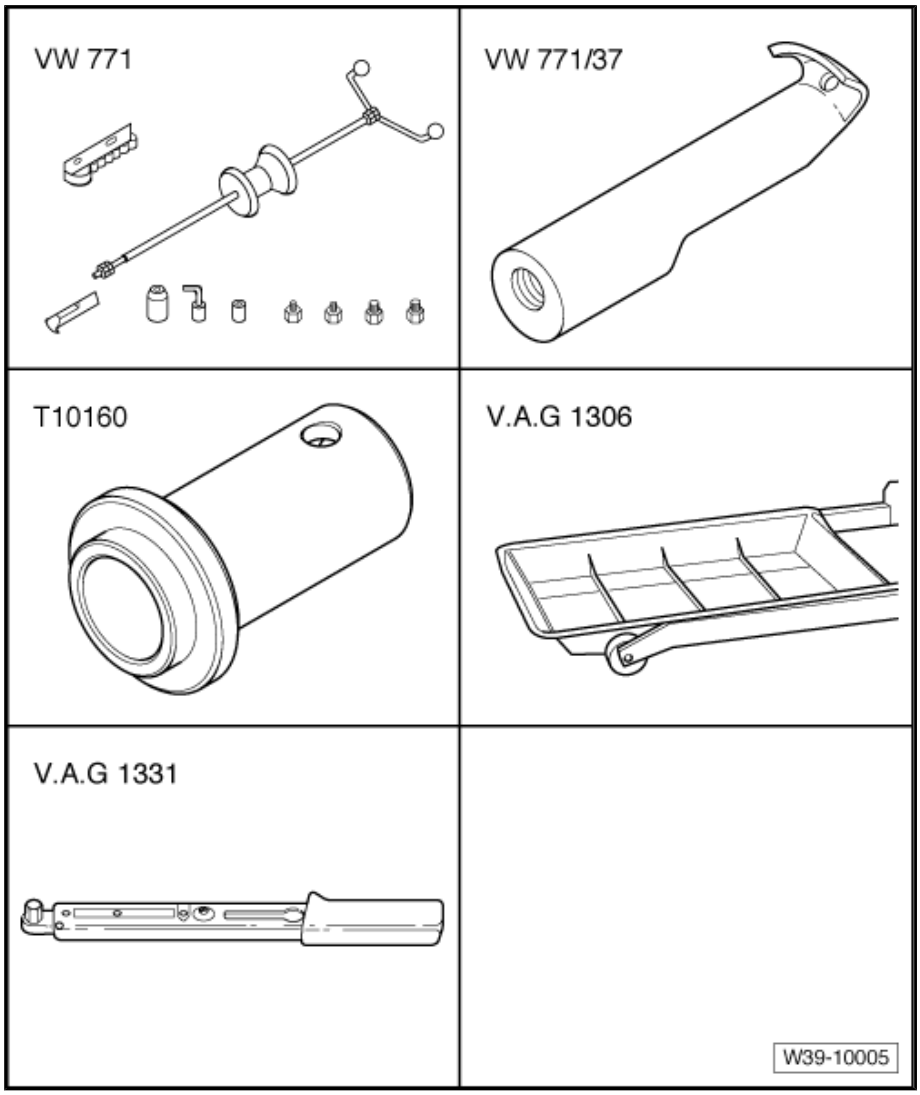

1.1.1 Removing

– Remove left wheel.

– Remove noise insulation ⇒ General body repairs, exterior; Rep. Gr. 50 ; Noise insulation .

– Remove lower part of front left wheel housing liner ⇒ General body repairs, exterior; Rep. Gr. 66 ; Wheel housing liner .

– Turn steering to left lock.

– Disconnect drive shaft from flange shaft ⇒ Running gear, axles, steering; Rep. Gr. 40 ; Repairing drive shaft; Removing and installing drive shafts .

– Raise drive shaft as high as possible and secure. Take care not to damage paint on drive shaft in the process.
– Place drip tray under gearbox.
– Remove flange shaft securing bolt by screwing two bolts into flange and counterholding flange shaft with a lever.
– Pull out flange shaft with compression spring.

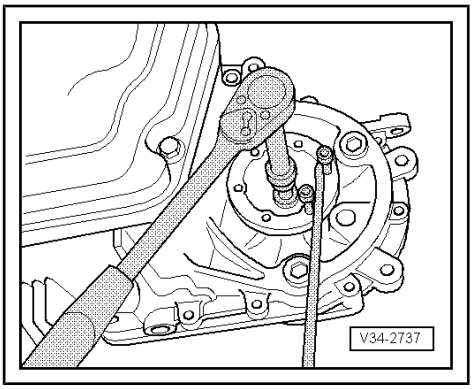

– Pull out flange shaft oil seal using multipurpose tool -VW 771- and puller hooks -VW 771/37- .

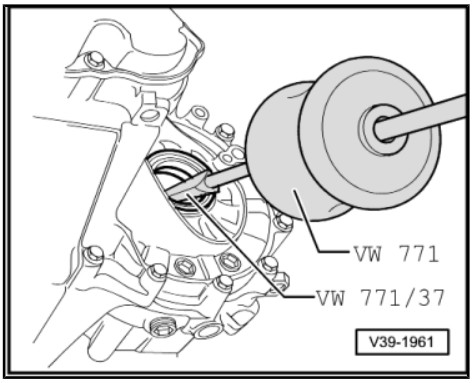

1.1.2 Installing

– Drive in new seal to stop, being careful not to cant seal.
– Half-fill space between sealing lip and dust lip with sealing grease -G 052 128 A1- .
– Insert flange shaft.
– Secure flange shaft with countersunk bolt.
– Attach drive shafts to gearbox ⇒ Running gear, axles, steering; Rep. Gr. 40 ; Repairing drive shaft; Removing and installing drive shafts .
– Check gear oil ⇒ page 220 .
– Install lower part of front left wheel housing liner ⇒ General body repairs, exterior; Rep. Gr. 66 ; Wheel housing liner .
– Install noise insulation ⇒ General body repairs, exterior; Rep. Gr. 50 ; Noise insulation .
– Install wheel ⇒ Running gear, axles, steering; Rep. Gr. 44 ; Torque settings for mounting wheels .

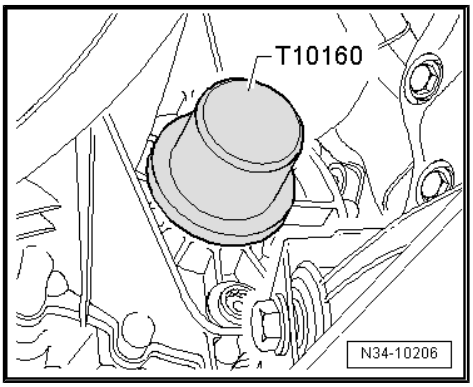

1.1.3 Torque setting

Flange shaft to gearbox (countersunk bolt)
⇒ Item 12 (page 306)

1.2 Distinguishing seals for right flange shaft

The seal -1- for the right flange shaft is located in a sleeve -2-.

There are different versions.

Seal -1- and sleeve -2- are two parts. Identification: notches along circumference of sleeve -arrow-.

Renew seal ⇒ page 296 .

Seal -1- and sleeve -2- are one piece. Identification: no notches in sleeve.

Renew seal and sleeve together ⇒ page 299 .

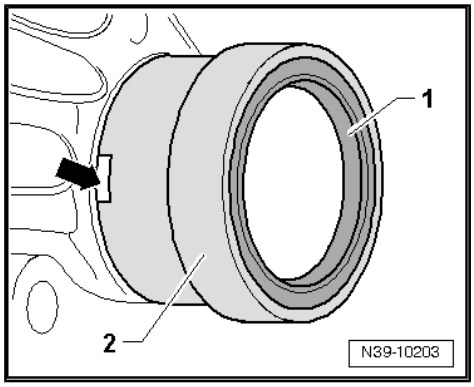

1.3 Renewing seal (two-part seal and sleeve for right flange shaft)

Special tools and workshop equipment required

- Drip tray -V.A.G 1306-

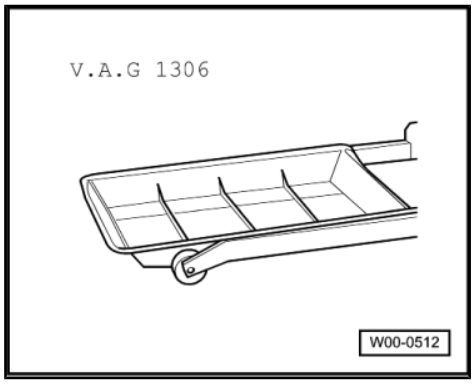

- Thrust piece -T10160-

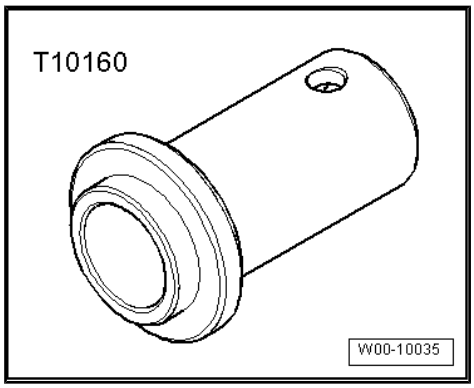

- Assembly tool -3253/2-

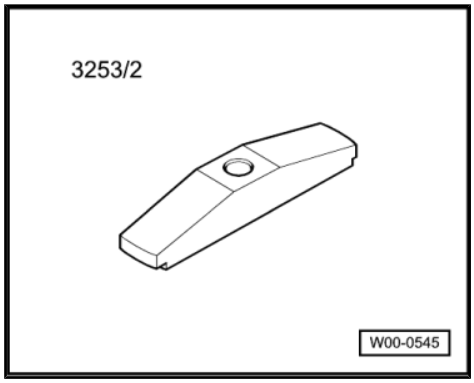

♦ Torque wrench -V.A.G 1331-

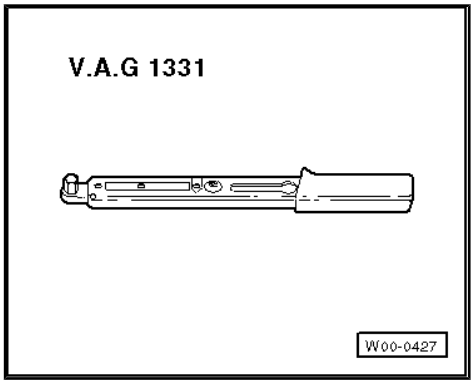

1.3.1 Removing

– Remove noise insulation ⇒ General body repairs, exterior; Rep. Gr. 50 ; Noise insulation .

– Turn steering to right to full lock.

– Remove drive shaft heat shield, if present -arrows- ⇒ Running gear, axles, steering; Rep. Gr. 40 ; Repairing drive shafts; Removing and installing drive shafts .

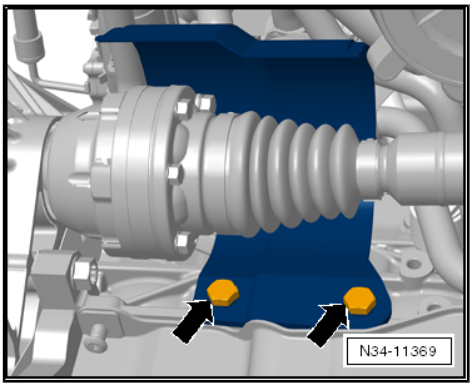

– Disconnect drive shaft -1- from flange shaft.

– Raise drive shaft as high as possible and secure. Take care not to damage paint on drive shaft in the process.

– Place drip tray under gearbox and engine.

– Unbolt turbocharger oil return line from engine -arrow- ⇒ Rep. Gr. 21 ; Charge air system for turbocharger; Removing and installing turbocharger with ancillaries .

– Place drip tray under gearbox.

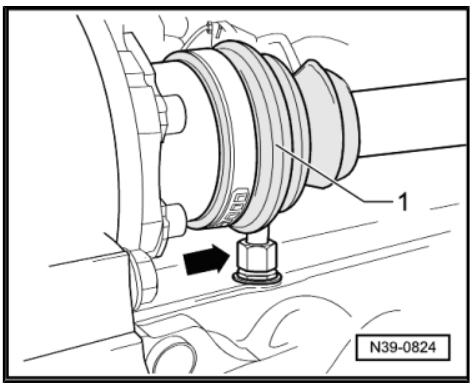

– Remove flange shaft securing bolt by screwing two bolts into flange and counterholding flange shaft with a lever.

– Pull out flange shaft with compression spring.

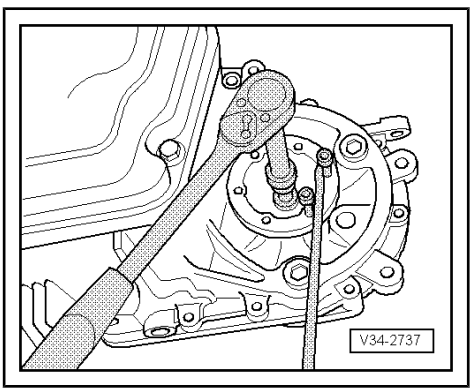

– Lever out seal using screwdriver -A- supporting screwdriver on assembly tool -3253/2- .

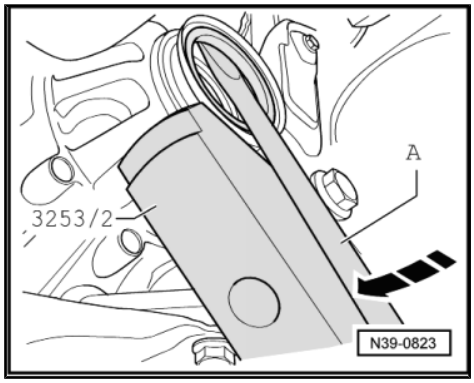

Note

- *Do not damage sleeve. Otherwise, leaks will occur.*
- *Replace sleeve if damaged* ⇒ page 253 .

1.3.2 Installing

– Drive in new seal to stop, being careful not to cant seal.

– Half-fill space between sealing lip and dust lip with sealing grease -G 052 128 A1- .

– Insert flange shaft.

– Secure flange shaft with countersunk bolt.

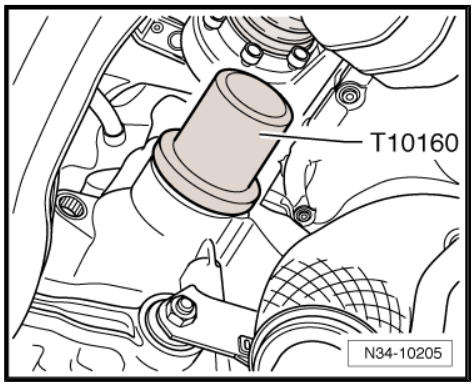

– If turbocharger oil return line was unbolted from engine, bolt it on again now -arrow- ⇒ Rep. Gr. 21 ; Charge air system for turbocharger; Removing and installing turbocharger with ancillaries .

– Bolt drive shaft -1- to flange shaft ⇒ Running gear, axles, steering; Rep. Gr. 40 ; Repairing drive shaft; Removing and installing drive shafts .

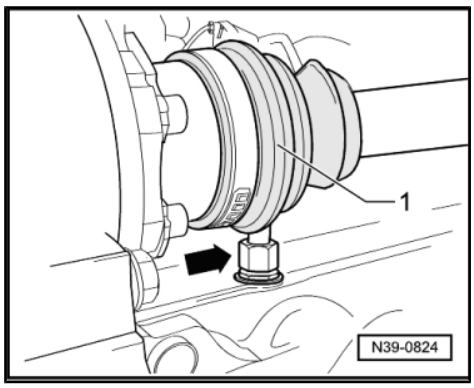

– Install drive shaft heat shield, if present -arrows- ⇒ Running gear, axles, steering; Rep. Gr. 40 ; Repairing drive shafts; Removing and installing drive shafts .

– Check and top up gear oil ⇒ page 220 .

– Install noise insulation ⇒ General body repairs, exterior; Rep. Gr. 50 ; Noise insulation .

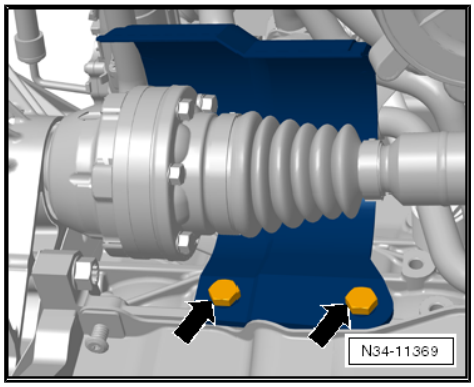

1.3.3 Torque setting

Flange shaft to gearbox (countersunk bolt)
⇒ Item 12 (page 306)

1.4 Renewing seal and sleeve together (one-piece seal and sleeve for right flange shaft)

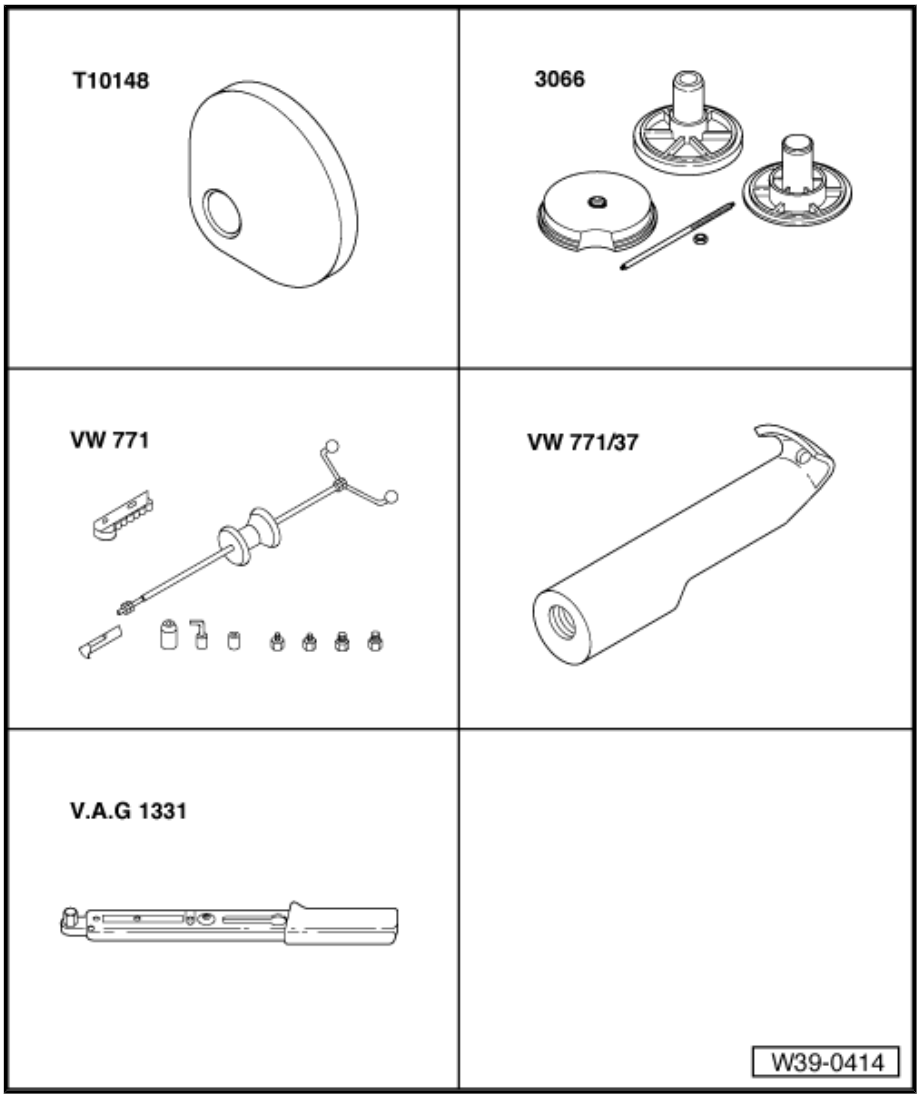

Special tools and workshop equipment required

- Thrust piece -T10148-
- Spindle from assembly tool -3066-
- Multipurpose tool -VW 771-
- Puller hooks -VW 771/37-
- Torque wrench -V.A.G 1331-

♦ Drip tray -V.A.G 1306-

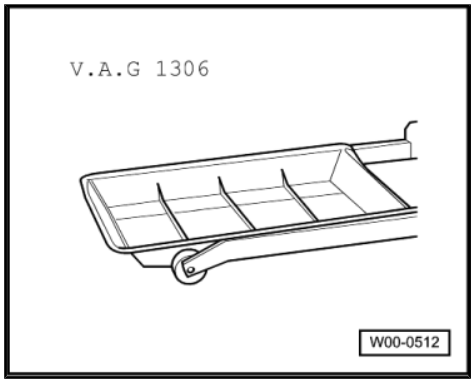

1.4.1 Removing

– Remove noise insulation ⇒ General body repairs, exterior; Rep. Gr. 50 ; Noise insulation .

– Turn steering to right to full lock.

– Remove drive shaft heat shield, if present -arrows- ⇒ Running gear, axles, steering; Rep. Gr. 40 ; Repairing drive shafts; Removing and installing drive shafts .

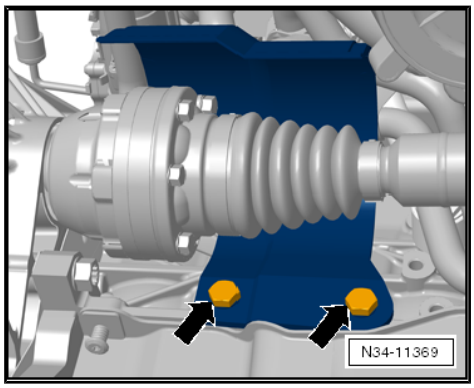

– Disconnect drive shaft -1- from flange shaft.

– Raise drive shaft as high as possible and secure. Take care not to damage paint on drive shaft in the process.

– Place drip tray under gearbox and engine.

– Unbolt turbocharger oil return line from engine -arrow- ⇒ Rep. Gr. 21 ; Charge air system for turbocharger; Removing and installing turbocharger with ancillaries .

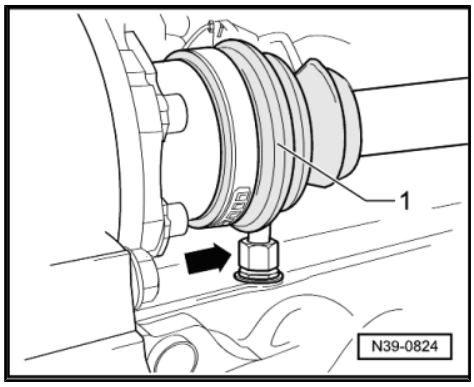

– Remove flange shaft securing bolt by screwing two bolts into flange and counterholding flange shaft with a lever.

– Pull out flange shaft with compression spring.

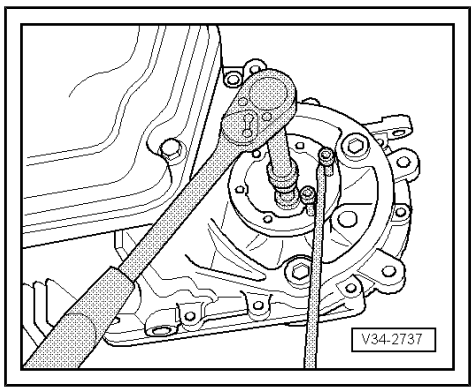

– Pull out seal and sleeve together.

There is a shoulder in the inner diameter of the sleeve.

– Apply puller hooks -VW 771/37- directly behind shoulder in sleeve.

– Press extractor hooks -VW 771/37- forcefully into sleeve while pulling.

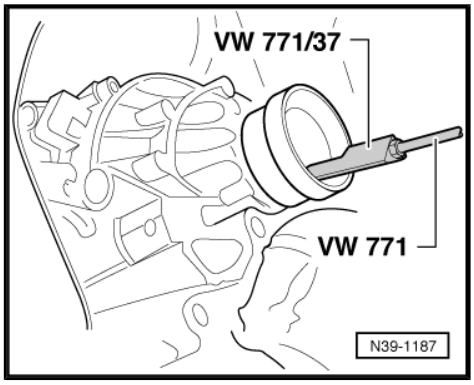

1.4.2 Installing

– Clean seat for seal in gearbox.

– Pull in seal and sleeve together.

A - Screw spindle of assembly tool -3066- into threaded piece of differential.

B - Nut M12

– Pull in seal with sleeve to stop using thrust piece -T10148- by turning nut -B-.

– Half-fill space between sealing lip and dust lip with grease -G 052 128 A1- .

– Insert flange shaft.

– Secure flange shaft with countersunk bolt.

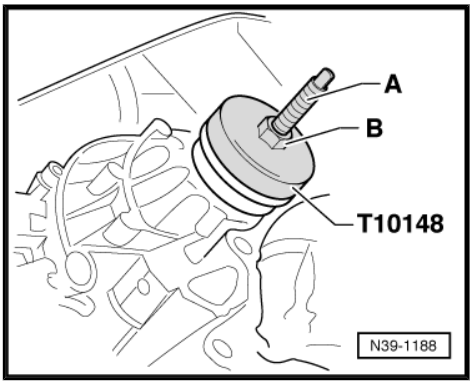

– If turbocharger oil return line was unbolted from engine, bolt it on again now -arrow- ⇒ Rep. Gr. 21 ; Charge air system for turbocharger; Removing and installing turbocharger with ancillaries .

– Bolt drive shaft -1- to flange shaft ⇒ Running gear, axles, steering; Rep. Gr. 40 ; Repairing drive shaft; Removing and installing drive shafts .

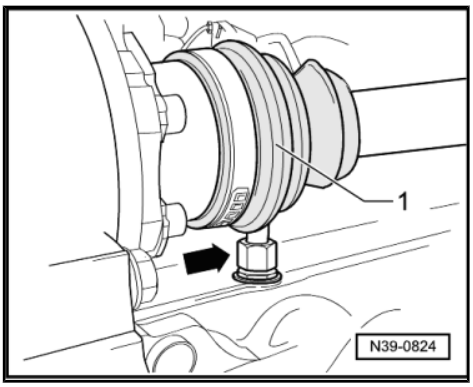

– Install drive shaft heat shield, if present -arrows- ⇒ Running gear, axles, steering; Rep. Gr. 40 ; Repairing drive shafts; Removing and installing drive shafts .

– Check and top up gear oil ⇒ page 220 .

– Install noise insulation ⇒ General body repairs, exterior; Rep. Gr. 50 ; Noise insulation .

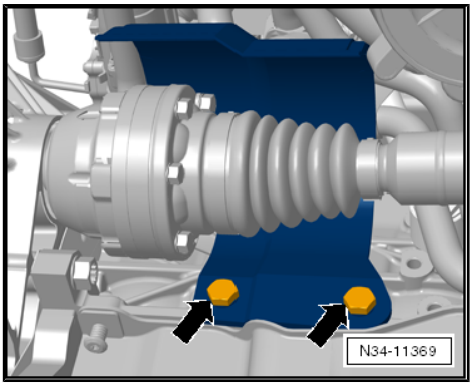

1.4.3 Torque setting

Flange shaft to gearbox (countersunk bolt)
⇒ Item 12 (page 306)

2 Adjustment overview

Note

If repairs have been carried out to the gearbox, it is necessary to adjust the input shaft, output shaft or differential only if components have been renewed which have a direct effect on the adjustment of the gearbox. To prevent unnecessary adjustments, refer to the following table:

		To be adjusted:		
		Input shaft ⇒ page 270	Output shaft ⇒ page 287	Differential ⇒ page 311
Parts renewed:	Gearbox housing	x		x
	Clutch housing	x	x	x
	Input shaft	x		
	Output shaft		x	
	Differential cage			x
	Tapered roller bearings for input shaft	x		
	Tapered roller bearing for output shaft		x	
	Tapered roller bearing for differential			x
	Gear wheel for 4th gear	x		

3 Differential

3.1 Dismantling and assembling differential

Special tools and workshop equipment required

- Tapered roller bearing puller -V.A.G 1582-
- Adapter -V.A.G 1582/3-
- Press tool -VW 412-
- Thrust plate -VW 401-
- Thrust plate -VW 402-

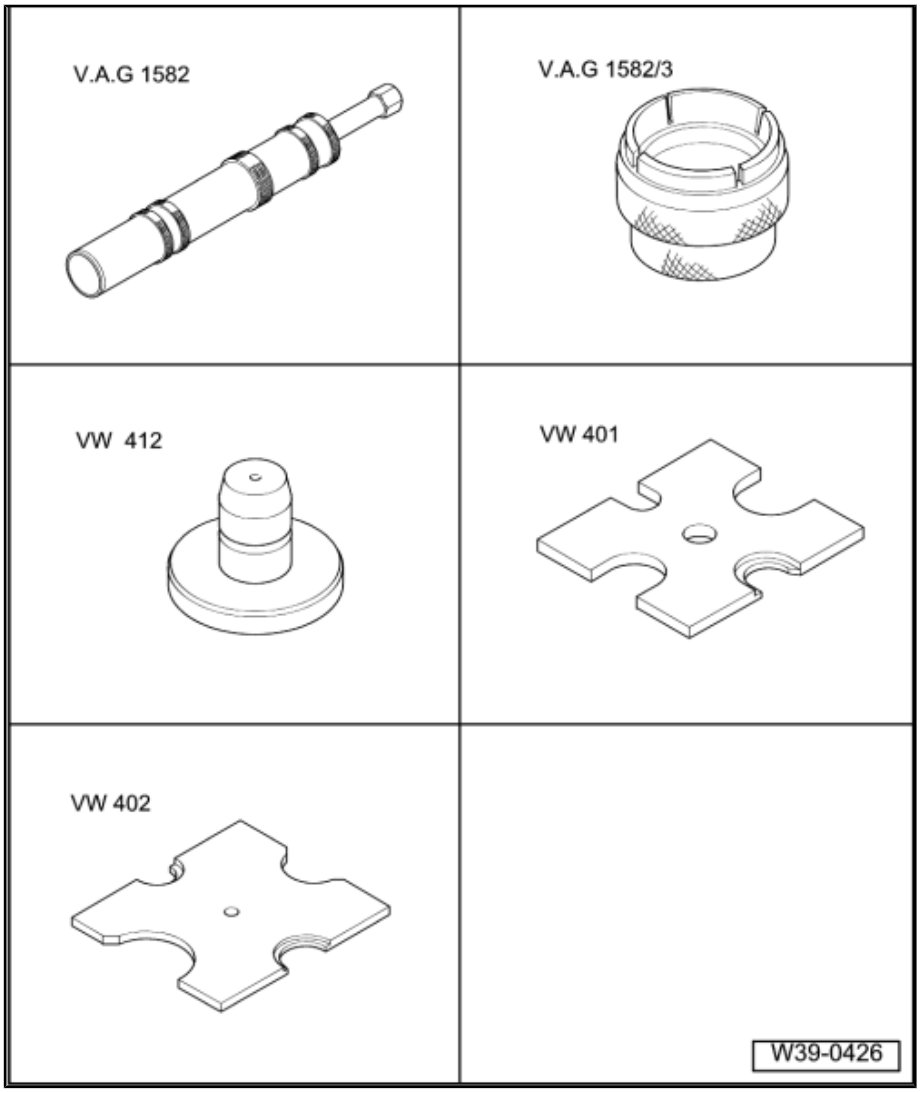

- Press tool -VW 408 A-
- Thrust piece -VW 473-
- Thrust plate -30 - 205-
- Sleeve -3144-
- Thrust piece -2007-
- Torque wrench -V.A.G 1332-

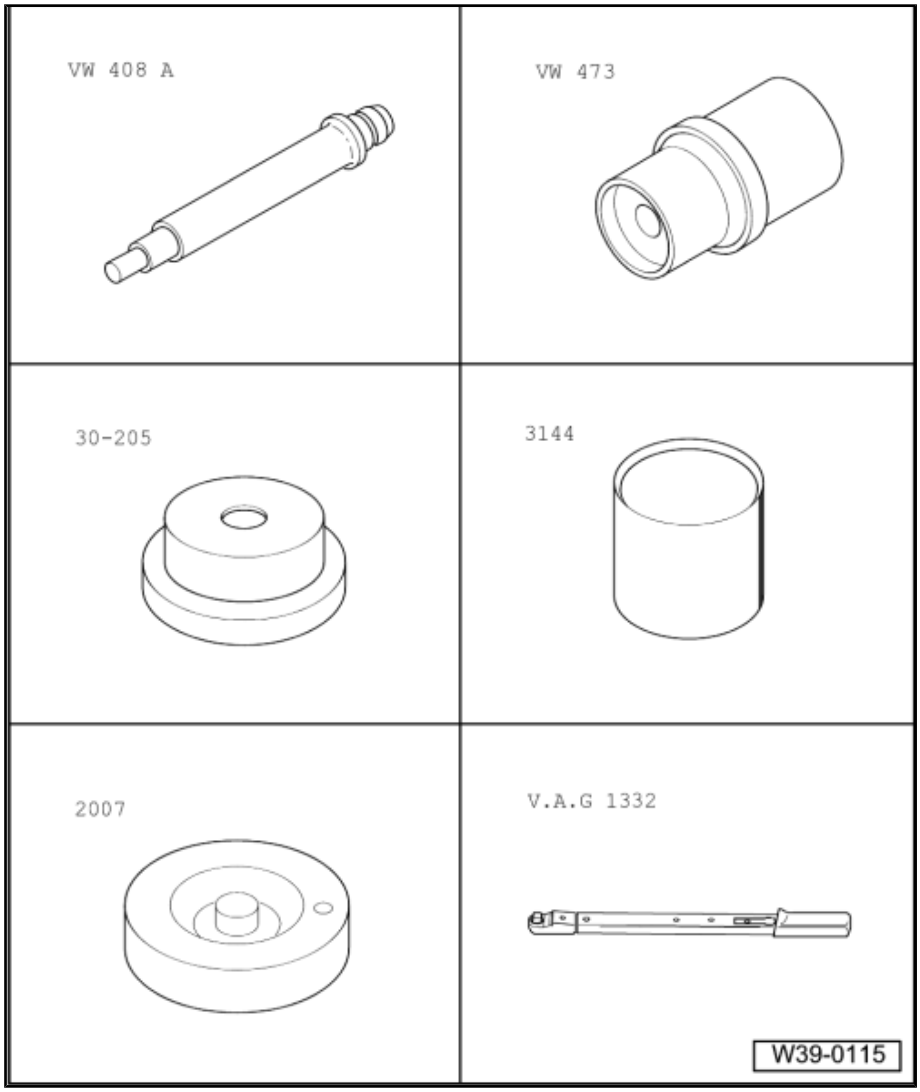

- Internal puller -1-Kukko 21/7-

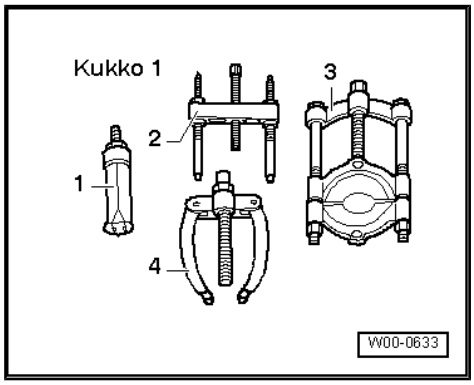

- Counter support -4-Kukko 22/2-

Note

- *Heat tapered roller bearing inner race to 100° C before installing.*
- *Always renew both tapered roller bearings together as a set.*
- *If tapered roller bearings, differential cage, gearbox housing or clutch housing are renewed, adjust differential ⇒ page 302 .*

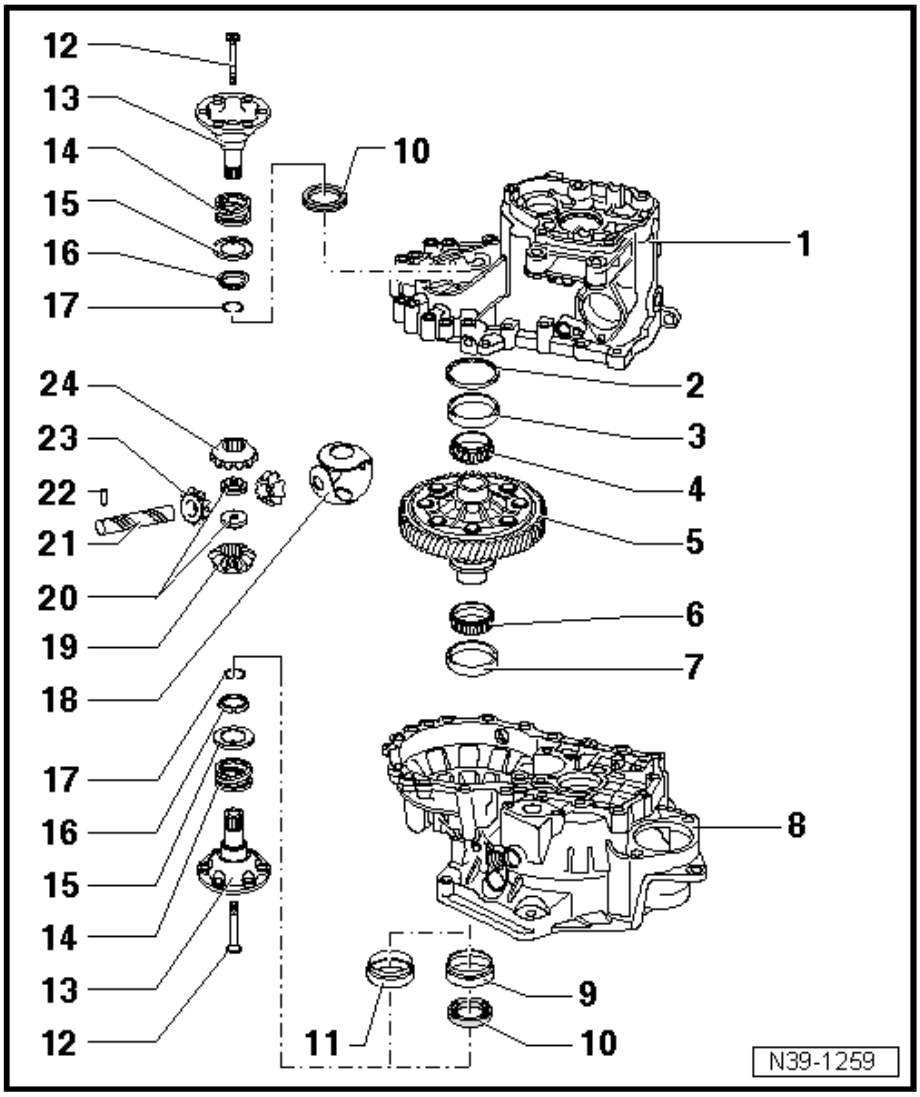

1 - Gearbox housing

2 - Shim

- ❑ For differential
- ❑ Determining thickness ⇒ page 311

3 - Tapered roller bearing outer race

- ❑ Pulling out ⇒ page 308
- ❑ Pressing in ⇒ page 308

4 - Tapered roller bearing inner race

- ❑ Pulling off ⇒ page 307
- ❑ Pressing on ⇒ page 307

5 - Differential cage

- ❑ With final drive gear
- ❑ Differential cage adapted to one-piece thrust washer ⇒ page 309
- ❑ Hole for spring pin adapted to length of spring pin ⇒ page 308
- ❑ Allocate according to ⇒ Electronic parts catalogue “ETKA” .

6 - Tapered roller bearing inner race

- ❑ Pulling off ⇒ page 307
- ❑ Pressing on ⇒ page 307

7 - Tapered roller bearing outer race

- ❑ Pressing out ⇒ page 307
- ❑ Pressing in ⇒ page 307

8 - Clutch housing

9 - Sleeve

- ❑ For seating oil seal ⇒ Item 10 (page 305)
- ❑ Removing and installing ⇒ page 248

10 - Seal

- ❑ Renewing oil seal for left flange shaft with gearbox installed ⇒ page 294
- ❑ Renewing seal for right flange shaft with gearbox installed (two-part seal and sleeve for right flange shaft) ⇒ page 296

11 - One-piece seal and sleeve

- ❑ If seal is damaged, renew seal and sleeve together ⇒ page 299

12 - Countersunk bolt, 25 Nm

- ❑ Screw into threaded piece ⇒ Item 20 (page 306)

13 - Flange shaft

- ❑ Removing and installing ⇒ page 294

14 - Compression spring for flange shaft

- ❑ Installed behind flange shafts

15 - Thrust washer

- ❑ Installation position ⇒ page 310

16 - Tapered ring

- ❑ With grooves to engage in thrust washer
- ❑ Installation position: taper towards differential cage

17 - Retaining ring

- ❑ Holds tapered ring, thrust washer and spring in position when flange shaft is removed

18 - One-piece thrust washer

- ❑ Coat with gear oil when installing
- ❑ One-piece thrust washer has shoulder in some gearboxes ⇒ page 309

19 - Large differential bevel gear

- ❑ Installing ⇒ page 310

20 - Threaded piece

- ❑ Installing ⇒ page 310

21 - Differential pinion pin

- ❑ Removing in conjunction with shorter spring pin ⇒ page 309
- ❑ Removing in conjunction with longer spring pin ⇒ page 309
- ❑ Installing ⇒ page 310

22 - Spring pin

- ❑ For securing differential pinion pin
- ❑ Spring pins of different lengths have been installed
- ❑ Spring pin identification ⇒ page 308
- ❑ Removing and installing short spring pin ⇒ page 309
- ❑ Long spring pin is sheared off when removed ⇒ page 309
- ❑ Installing long spring pin ⇒ page 309

23 - Small differential bevel gear

- ❑ Installing ⇒ page 310

24 - Large differential bevel gear

- ❑ Installing ⇒ page 310

Pressing tapered roller bearing outer race out of clutch housing

– First remove seating sleeve for flange shaft seal.

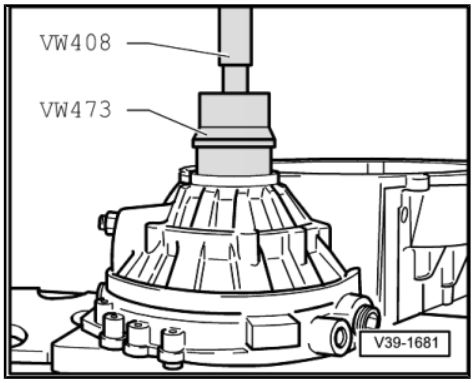

Pressing tapered roller bearing outer race into clutch housing

No shim is installed in the clutch housing end.

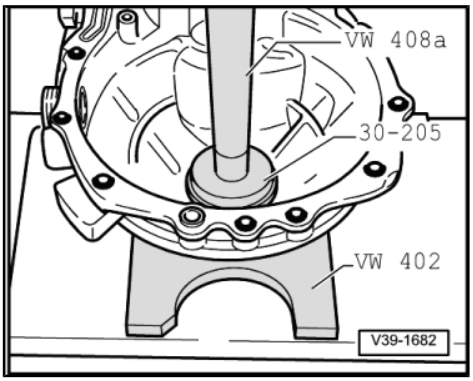

Pulling off tapered roller bearing inner race

– Before fitting extractor, position thrust plate -40 - 105- on differential cage.

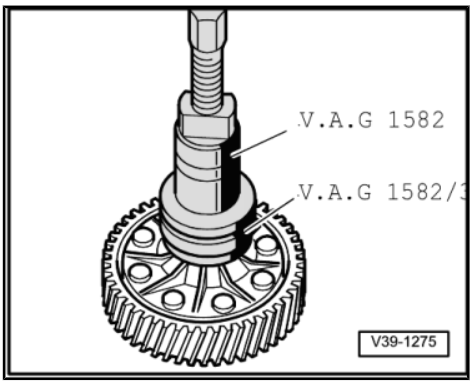

Note

Both tapered roller bearing inner races are pulled off the differential cage in the same way.

Pressing on tapered roller bearing inner race

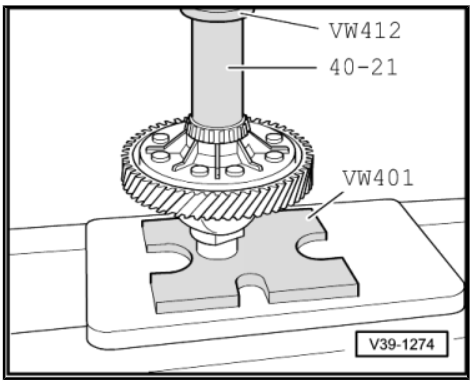

Note

Both tapered roller bearing inner races are pressed onto the differential cage in the same way.

Pulling outer race for tapered roller bearing out of gearbox housing

A - Counter support , e.g. -Kukko 22/2-

B - Internal puller, 46...58 mm , e.g. -Kukko 21/7-

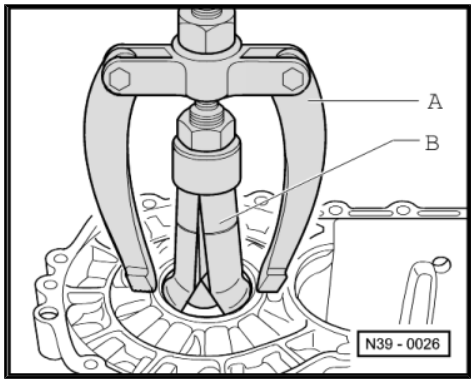

Pressing tapered roller bearing outer race into gearbox housing

– Fit shim under outer race.

– Support gearbox housing directly below bearing mounting using sleeve -3144- .

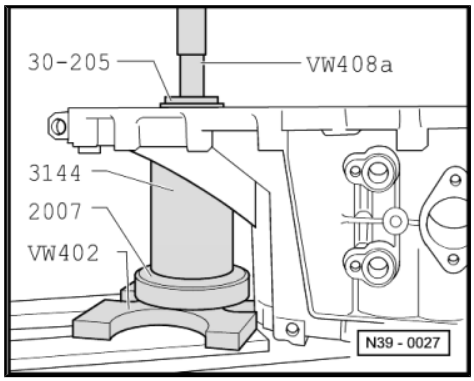

Spring pin identification

Dim. “a” mm	Identification
28.5 (short spring pin) Removing and installing ⇒ page 309	Circumferential groove -arrows-
36.0 (long spring pin), Removing ⇒ page 309 , Installing ⇒ page 309	No circumferential groove

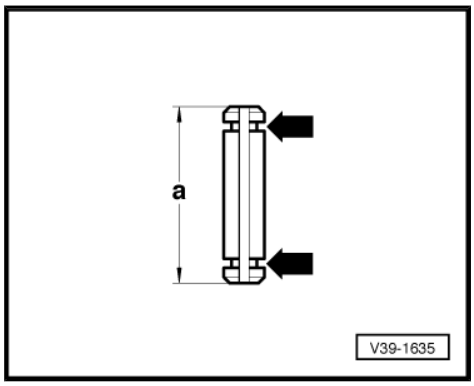

Allocation of differential cages

– Check hole for spring pin in differential cage.

The hole in the differential cage was modified for the longer spring pin.

Hole	Length of spring pin (mm)
-A-	28.5 (short spring pin)
-A- and -B-	36.0 (long spring pin)

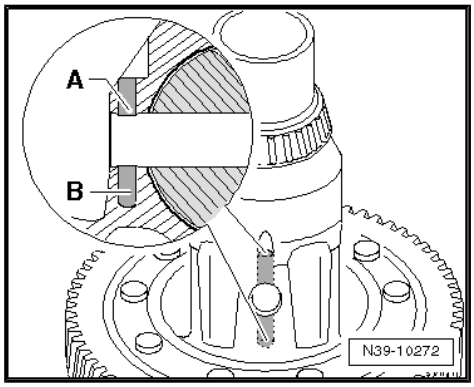

Removing and installing spring pin with circumferential groove (short spring pin)

Removing

– Cover tapered roller bearing inner race and speedometer drive gear to avoid possible damage and ingress of metal particles.

– Drive out spring pin with chisel, inserting chisel into circumferential groove.

Installing

– Drive into differential cage to stop.

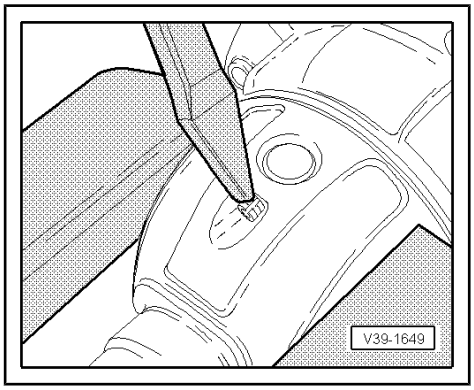

Removing spring pin without circumferential groove (long spring pin): pressing out differential pinion pin

When pressed out, spring pin will be sheared off.

– Drive remainder of spring pin out of differential cage.

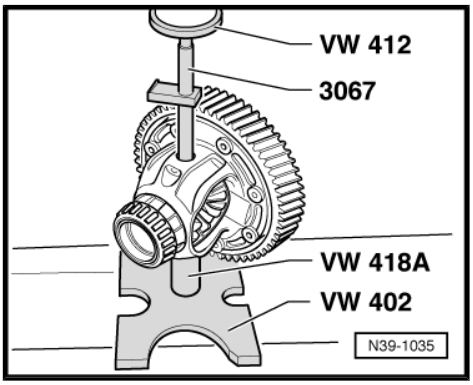

Installing spring pin without circumferential groove (long spring pin)

– Align hole in differential pinion pin with hole in differential cage.

– Drive in new spring pin with drift -1- until dimension -a- = 3.0 mm is attained.

• The spring pin must not come in contact with gears with differential cage installed.

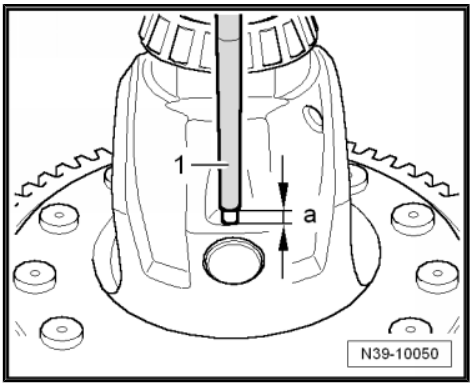

In some gearboxes, the one-piece thrust washer has a shoulder -A- near the holes

In this case, the differential cage has a circumferential groove -B-.

– Lubricate one-piece thrust washer with gear oil and install.

– Install one-piece thrust washer so that it engages in groove -B- in differential cage.

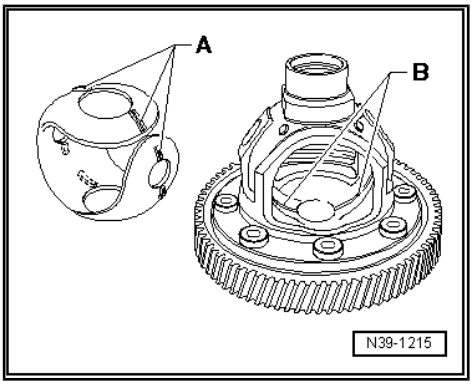

Installing differential bevel gears and differential pinion pin

– Lubricate one-piece thrust washer with gear oil and install.
– Install both sun wheels and secure (e.g. with flange shaft).
– Insert planet pinions offset 180° and pivot into position.
– Press in differential pinion pin (-arrow A-) to first planet pinion.
– Place threaded pieces -arrows B- in sun gears.

Installation position: shoulder to sun gear

– Drive differential pinion pin into final position and secure with spring pin.

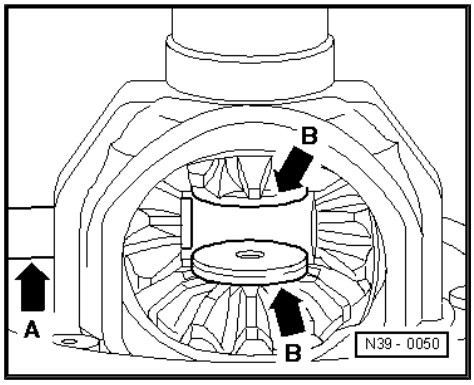

Installation position of thrust washer for tapered ring -1-.

The shoulder -arrow- points towards spring -B-.

Some gearboxes have lugs -A-.

Lugs -A- face tapered ring -1-.

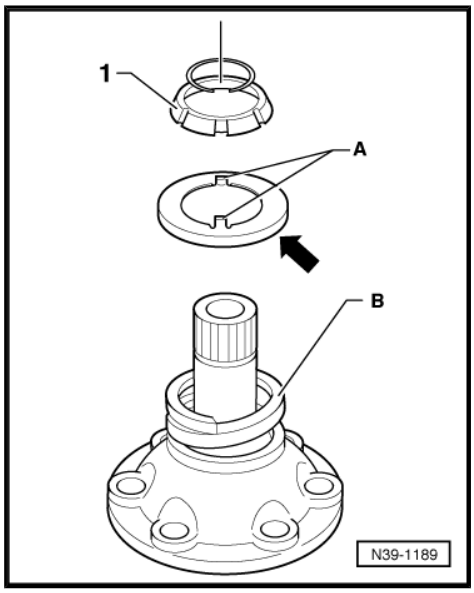

3.2 Adjusting differential

Special tools and workshop equipment required

- Universal dial gauge bracket -VW 387-
- End dimension plate - VW 385/17-
- Press tool -VW 407-
- Thrust plate -30 - 205-
- Torque wrench - V.A.G 1331-
- Internal puller -1 - Kukko 21/7-
- Counter support -4 - Kukko 22/2-
- Dial gauge

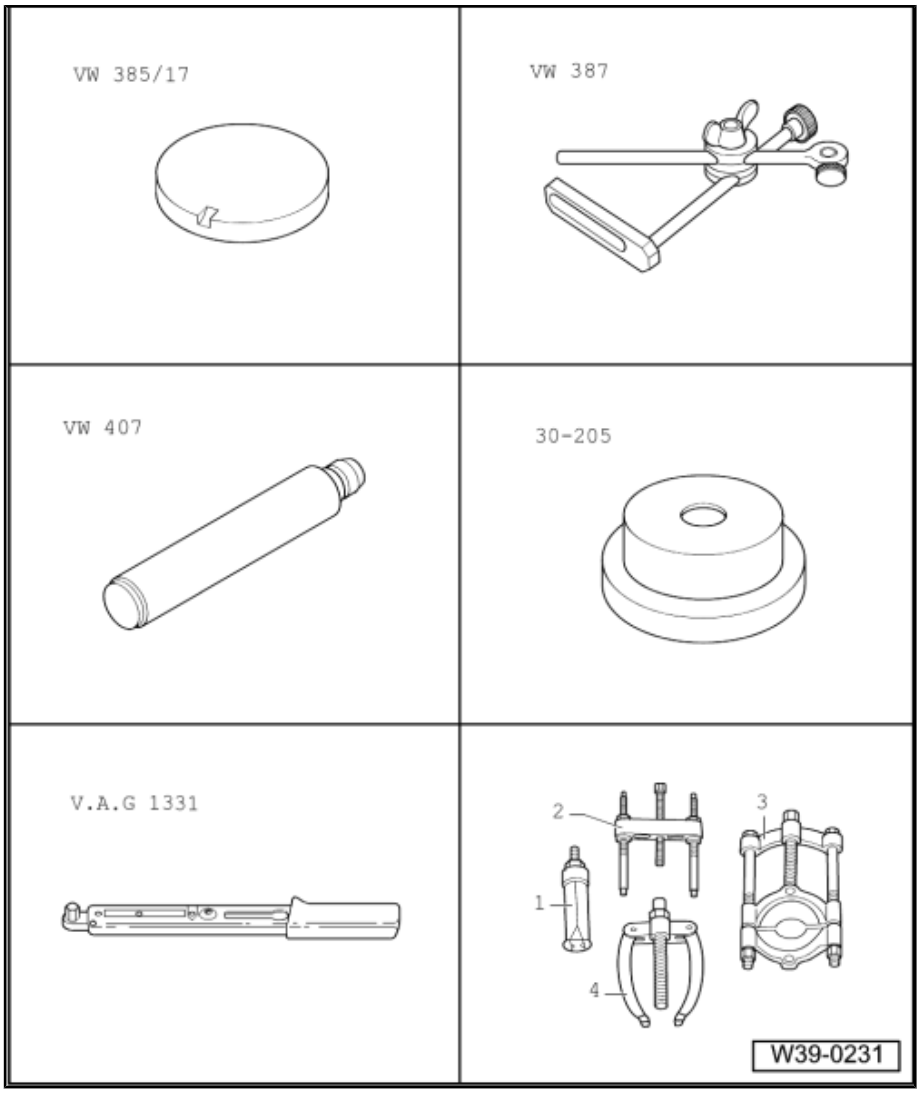

It is necessary to readjust the differential when the following components are renewed:

- Gearbox housing
- Clutch housing
- Differential cage

or the

- tapered roller bearing of differential

Adjustment overview ⇒ page 302 .

– Press outer race of tapered roller bearing without shim into gearbox housing using thrust piece -30 - 205- ⇒ page 308

Note

Inner and outer tapered roller bearing races are paired. Do not interchange!

– Press outer race of tapered roller bearing into clutch housing using thrust plate -30 - 205- ⇒ page 307 .
– Fit differential into clutch housing.
– Set gearbox housing in place and tighten 5 bolts to 25 Nm.
– Attach dial gauge and set to “0” with 1 mm preload.
– Move differential up and down. Read and note play indicated on dial gauge. (Example: 0.70 mm.)

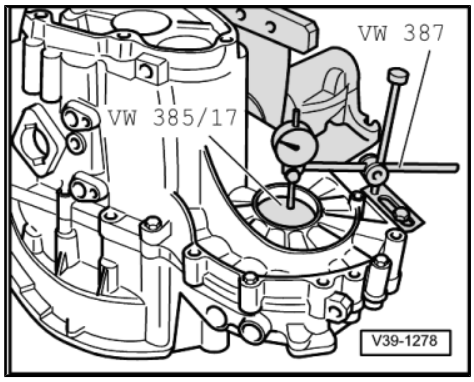

3.2.1 Determining thickness of shim

Example:

Bearing play, measured value	Thickness of shim according to table
0.70 mm	0.95 mm

Table of shims

Bearing play	Shim
Measured value (mm)	Thickness (mm)
0.303 … 0.449	0.650
0.450 … 0.499	0.700
0.500 … 0.549	0.750
0.550 … 0.599	0.800
0.600 … 0.649	0.850
0.650 … 0.699	0.900
0.700 … 0.749	0.950
0.750 … 0.799	1.000
0.800 … 0.849	1.050
0.850 … 0.899	1.100
0.900 … 0.949	1.150
0.950 … 0.999	1.200
1.000 … 1.049	1.250
1.050 … 1.099	1.300
1.100 … 1.149	1.350
1.150 … 1.199	1.400

Note

Allocate shims according to ⇒ Electronic parts catalogue “ETKA”.

– Remove gearbox housing and pull tapered roller bearing outer race from gearbox housing.

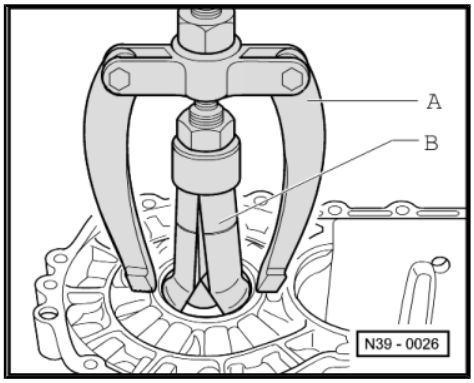

Pulling outer race for tapered roller bearing out of gearbox housing

A - Counter support , e.g. -Kukko 22/2-

B - Internal puller 46 …. 58 mm , e.g. -Kukko 21/7- .

– Insert shims of determined thickness, thickest shim first.

If the size of shim required is larger than those listed in the table, insert two shims totalling the correct figure.

The various thicknesses make it possible to achieve the exact shim thickness required.

– Press in outer race of tapered roller bearing again ⇒ page 308 and bolt gearbox housing tight.