SPECIFICATIONS

FASTENER TIGHTENING SPECIFICATIONS

Fastener Tightening Specifications

Application	Specification	
	Metric	English
Antenna Bracket Retaining Nuts	12 N.m	106 lb in
Backup Lamp and Rear License Assembly Retaining Screws	2 N.m	18 lb in
Front Fog Lamp Mounting Bolt	2 N.m	18 lb in
Front Park/Turn Signal and Sidemarker Lamp to Bracket Retaining Screws	2 N.m	18 lb in
Front Position Lamp Retaining Screw	2 N.m	18 lb in
Front Side Repeater Lamp Retaining Nuts	2 N.m	18 lb in
Front Turn Signal Lamp Bracket Retaining Screws	3 N.m	27 lb in
Headlamp Bezel Retaining Screws	2 N.m	18 lb in
Headlamp Capsule Retaining Screws	4 N.m	35 lb in
Headlamp Intermediate Bracket Screws	2 N.m	18 lb in
Headlamp Mounting Bolts	20 N.m	15 lb ft
Headlamp Mounting Nuts	10 N.m	89 lb in
Headlamp Motor/Actuator Mounting Bolts	7 N.m	62 lb in
Headlamp Motor/Actuator to Pivot Arm Nut	6 N.m	53 lb in
Headlamp Opening Door Screws	2 N.m	18 lb in
High-Mounted Stoplamp Retaining Screws	4 N.m	35 lb in
License Lamp Assembly Retaining Screws	2 N.m	18 lb in
Negative Battery Cable Bolt	15 N.m	11 lb ft
Rear Fog Lamp Bezel Retaining Nut	3 N.m	27 lb in
Rear Sidemarker Lamp Retaining Nuts	2 N.m	18 lb in
Tail/Backup Lamp Retaining Screws	2 N.m	18 lb in
Taillamp Retaining Screws	2 N.m	18 lb in
Tail/Turn Signal Lamp Retaining Screws	2 N.m	18 lb in

SCHEMATIC AND ROUTING DIAGRAMS

LIGHTING SYSTEMS SCHEMATIC ICONS

Lighting Systems Schematic Icons

Icon	Icon Definition
	Resistance wire with a stainless steel core.

	Approximately 6.6 ohm of resistance per meter (21.7 Feet).
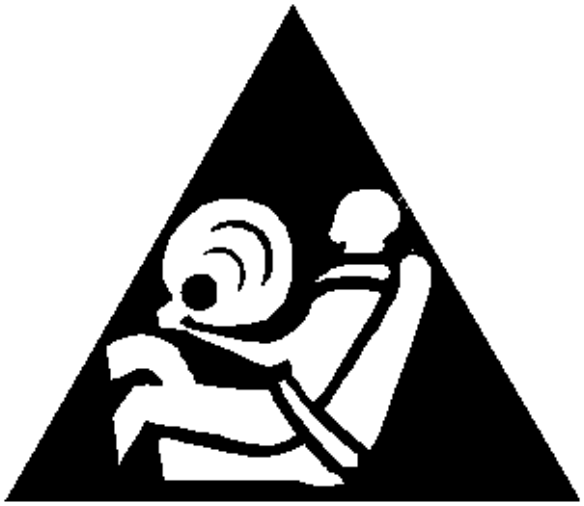	**CAUTION:** **When performing service on or near the SIR components or the SIR wiring, the SIR system must be disabled. Refer to SIR Disabling and Enabling Zones. Failure to observe the correct procedure could cause deployment of the SIR components, personal injury, or unnecessary SIR system repairs.**

HEADLIGHTS/DAYTIME RUNNING LIGHTS (DRL) SCHEMATICS

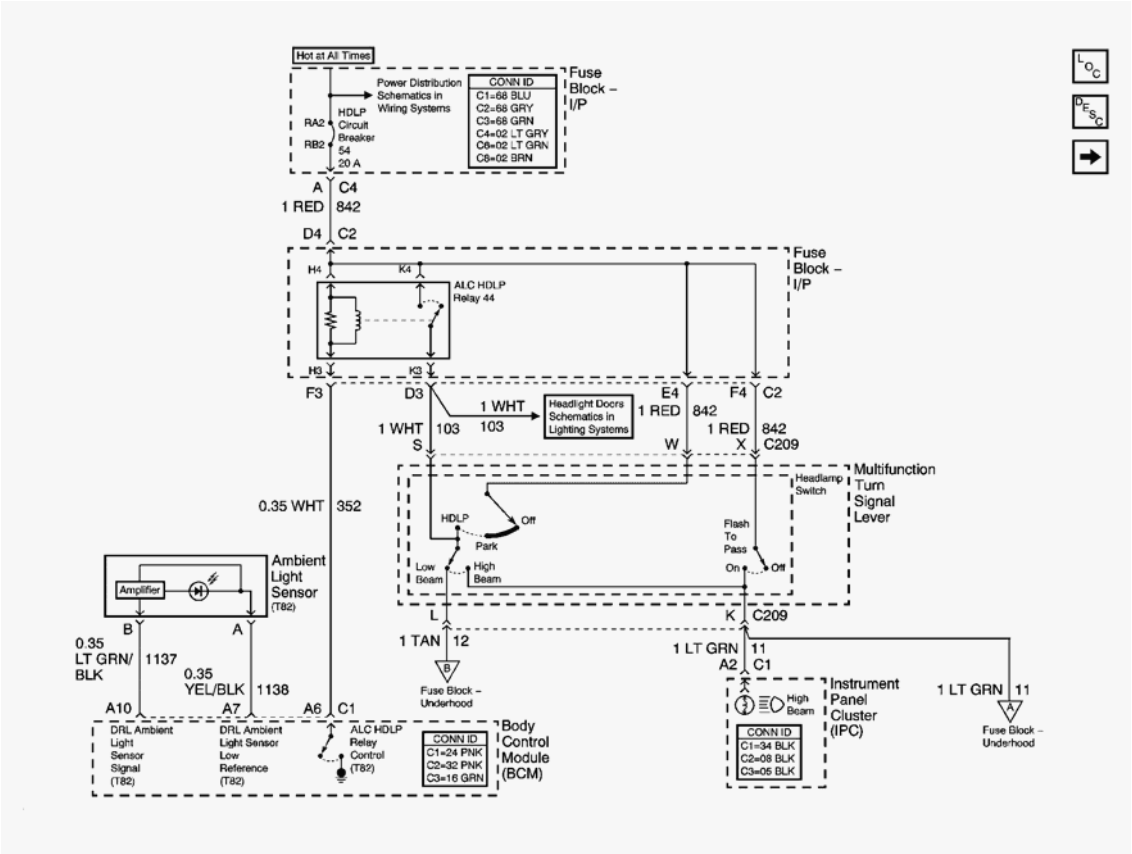

Fig. 1: Headlamp Control Schematics
Courtesy of GENERAL MOTORS CORP.

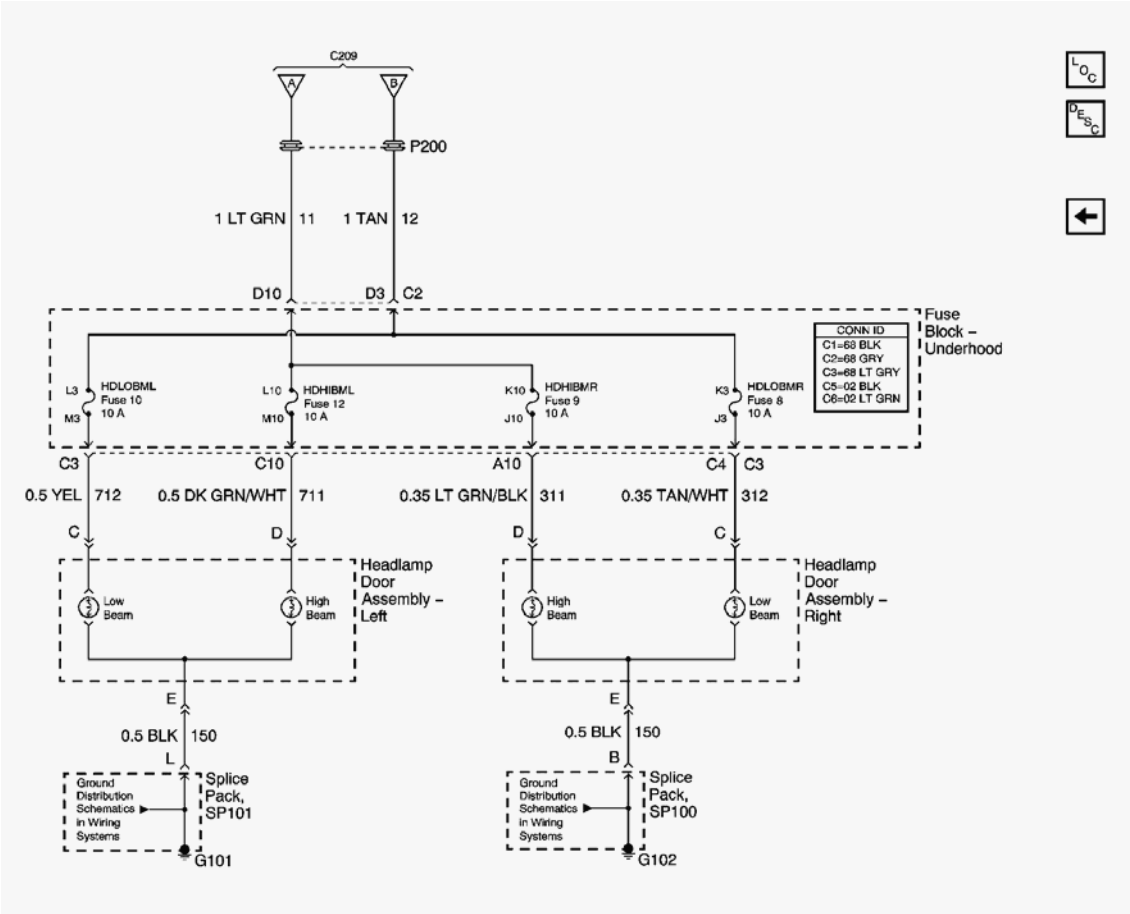

Fig. 2: Headlamps Schematics
Courtesy of GENERAL MOTORS CORP.

FOG LIGHTS SCHEMATICS

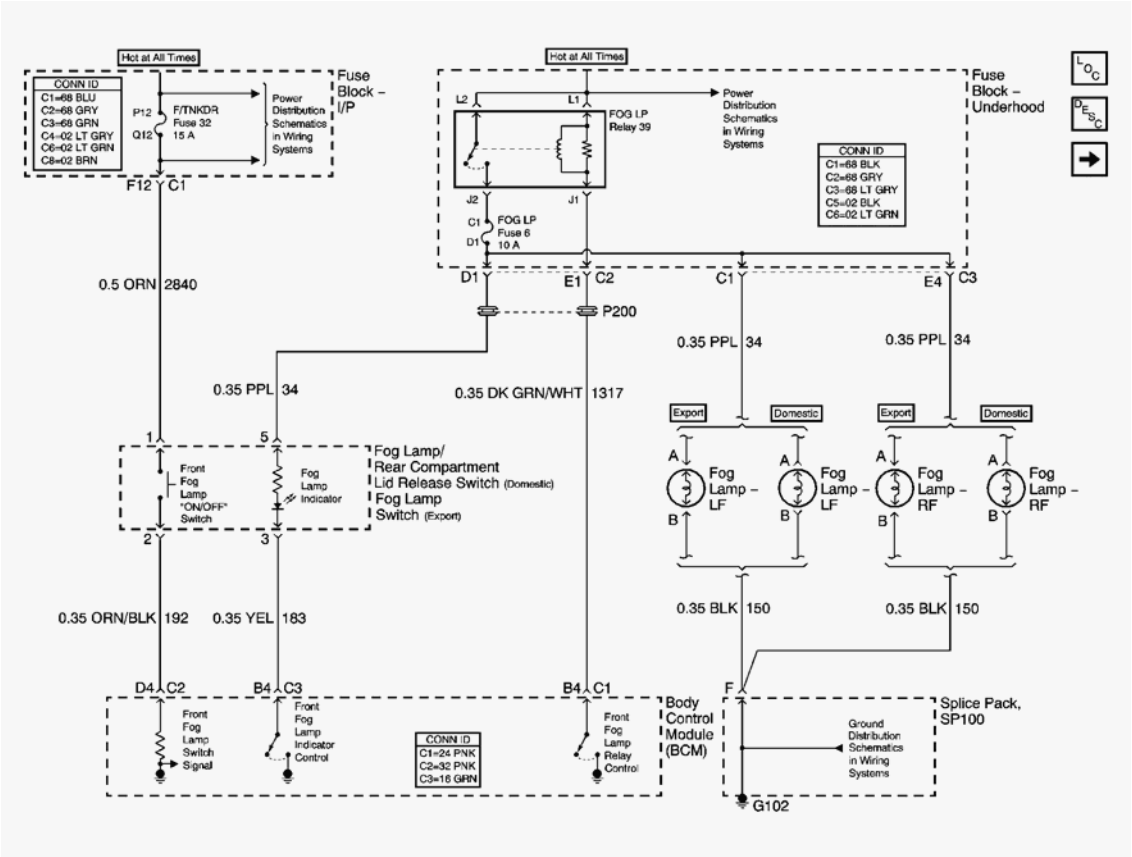

Fig. 3: Front Fog Lamps Schematics
Courtesy of GENERAL MOTORS CORP.

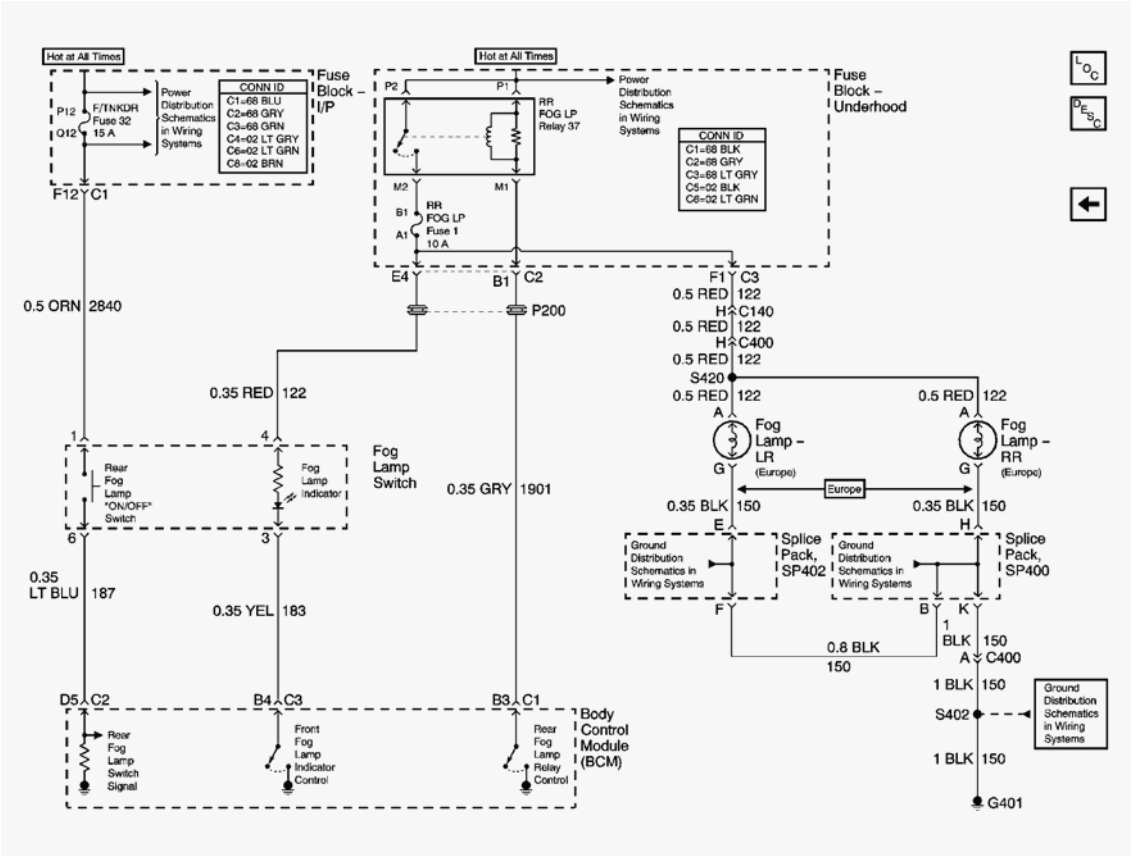

Fig. 4: Rear Fog Lamps Schematics - Europe
Courtesy of GENERAL MOTORS CORP.

HEADLIGHT DOORS SCHEMATICS

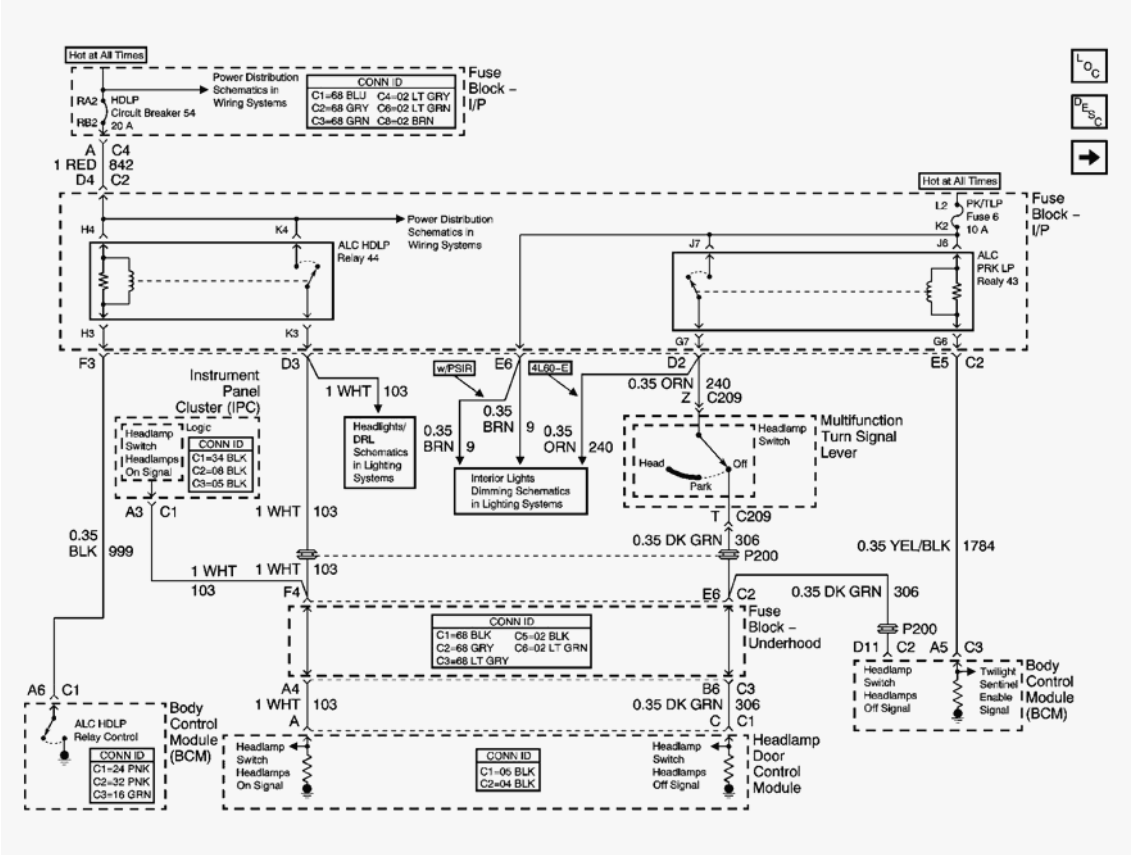

Fig. 5: Headlamp Door Control Module Signals Schematics
Courtesy of GENERAL MOTORS CORP.

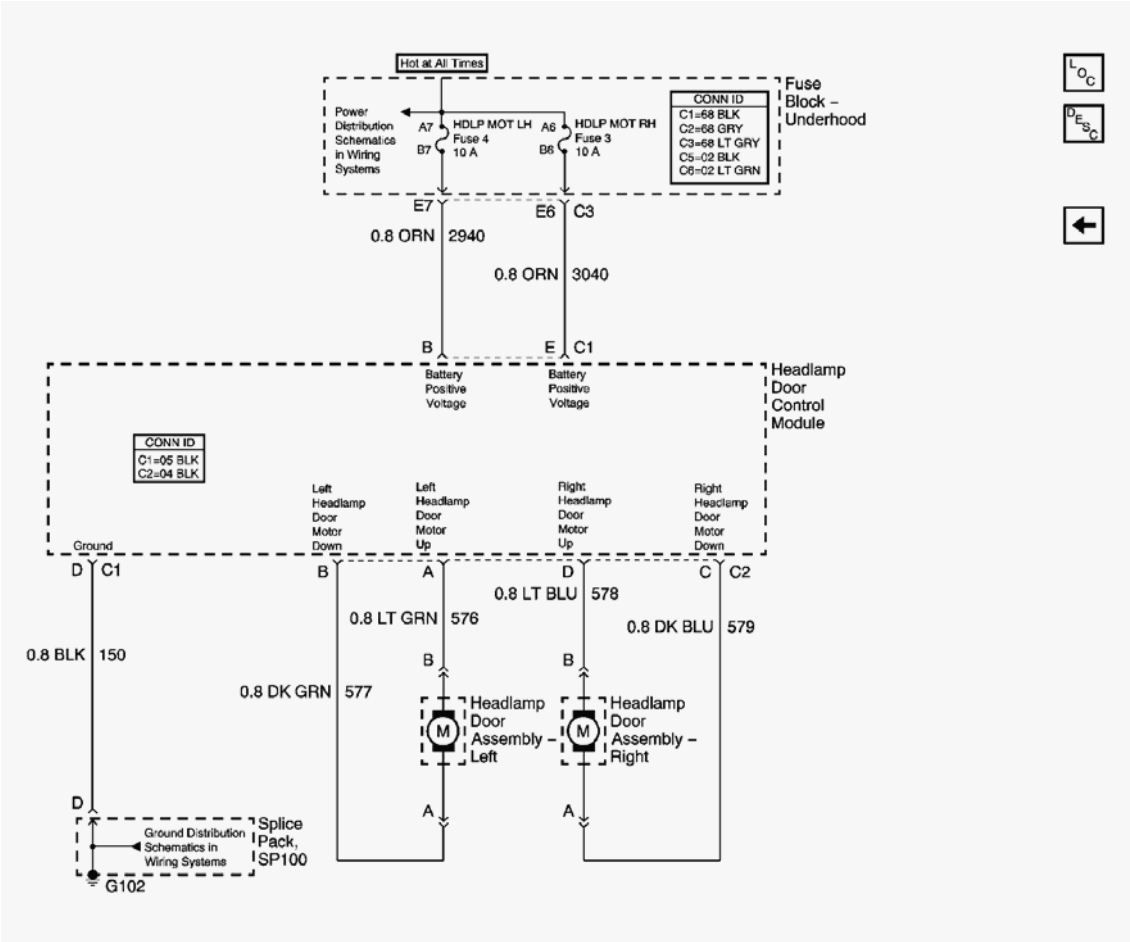

Fig. 6: Headlamp Door Assemblies Schematics
Courtesy of GENERAL MOTORS CORP.

EXTERIOR LIGHTS SCHEMATICS

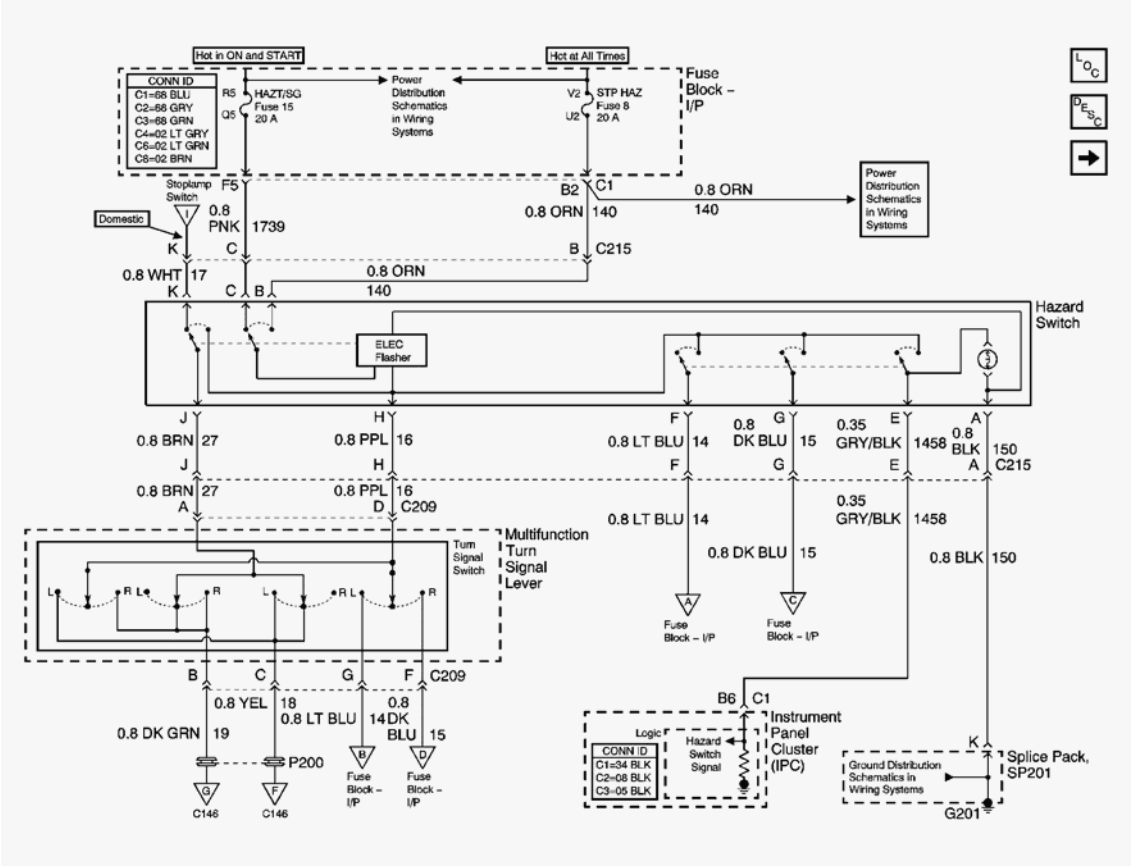

Fig. 7: Hazard Warning Switch And Turn Signal Switch Schematics
Courtesy of GENERAL MOTORS CORP.

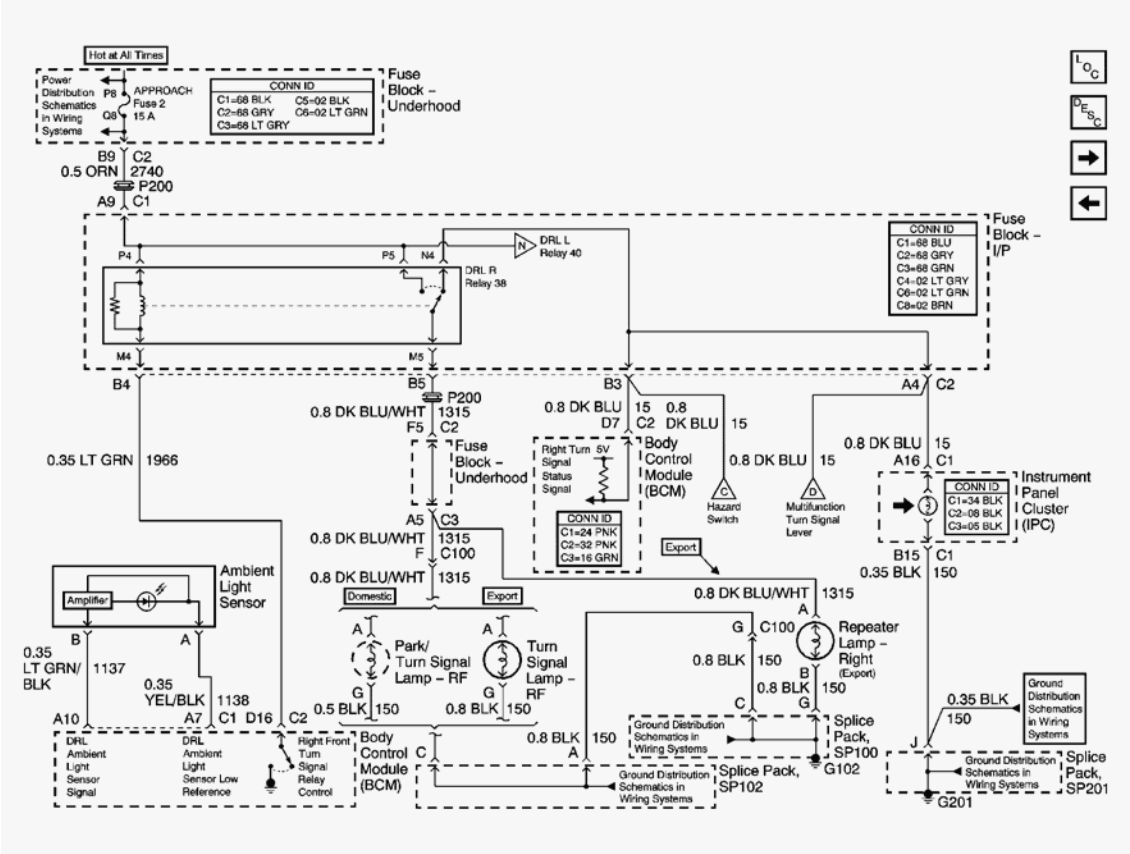

Fig. 8: Ambient Light Sensor And RF Turn Signal Indicators Schematics
Courtesy of GENERAL MOTORS CORP.

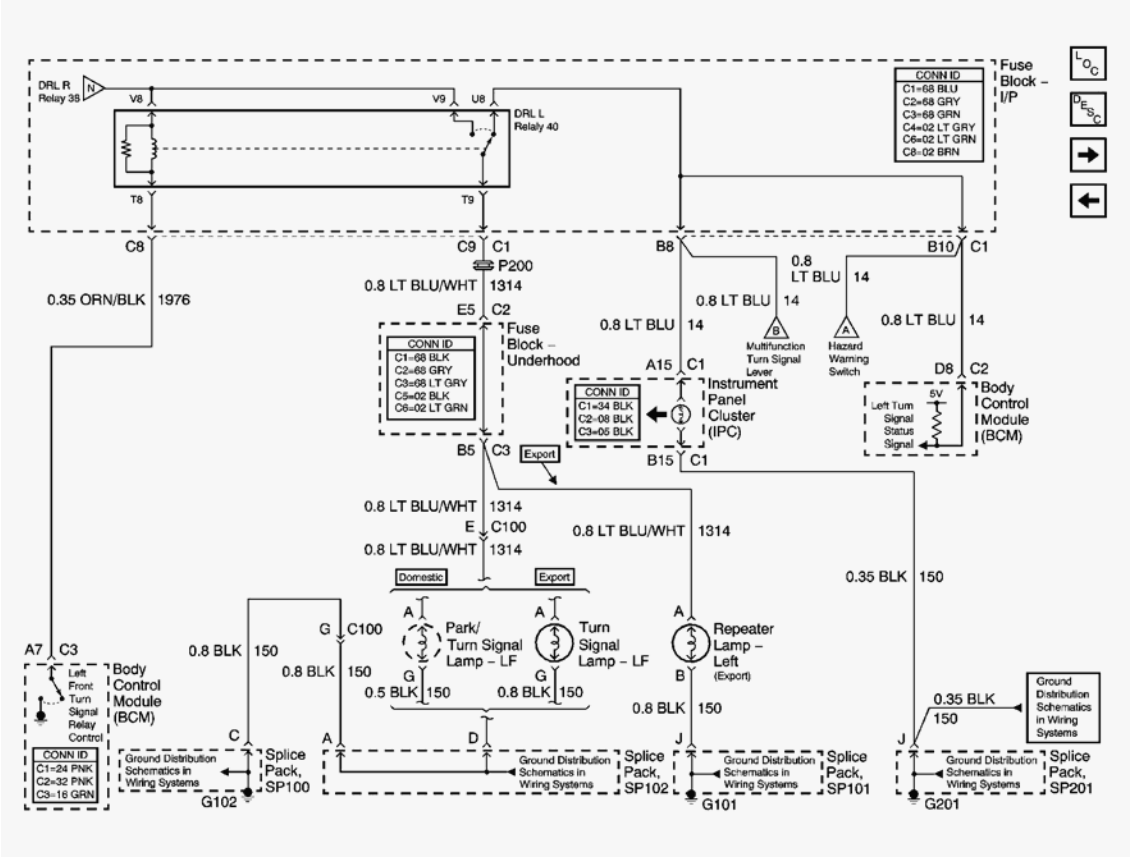

Fig. 9: LF Turn Signal Indicators Schematics
Courtesy of GENERAL MOTORS CORP.

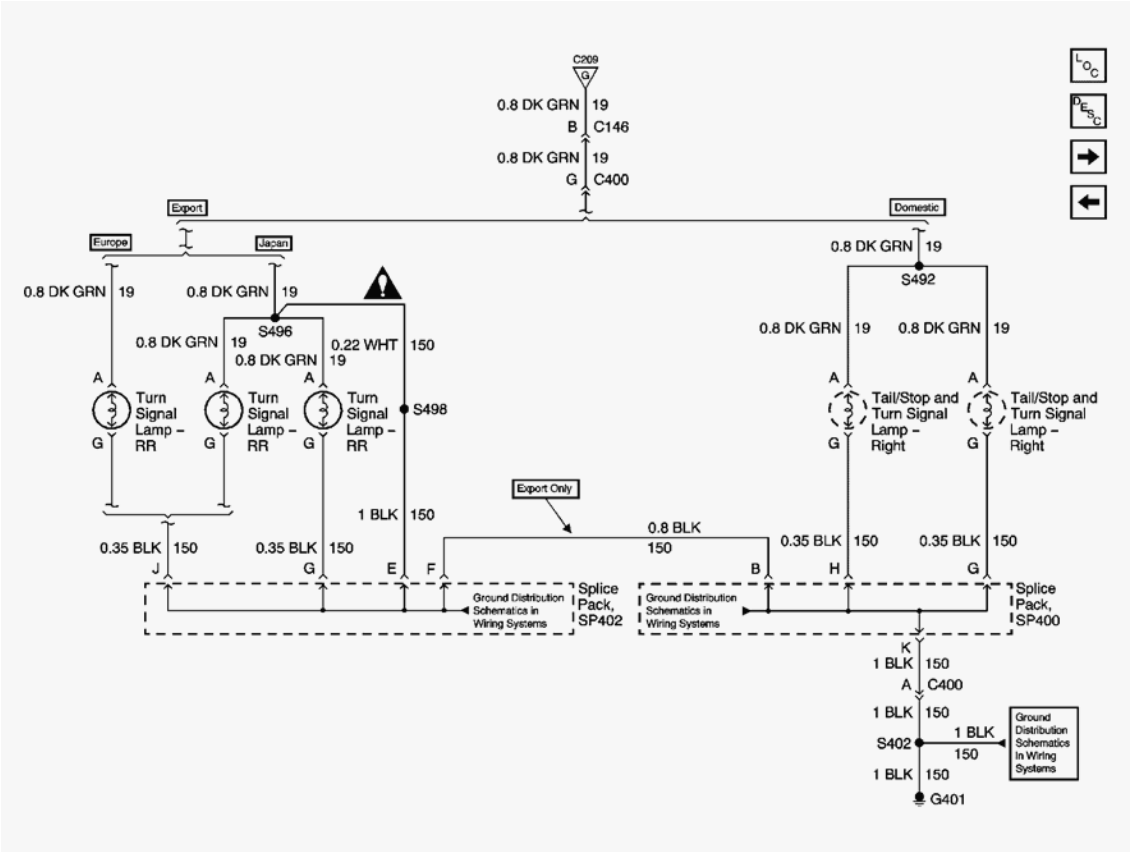

Fig. 10: RR Turn Signal Indicators Schematics
Courtesy of GENERAL MOTORS CORP.

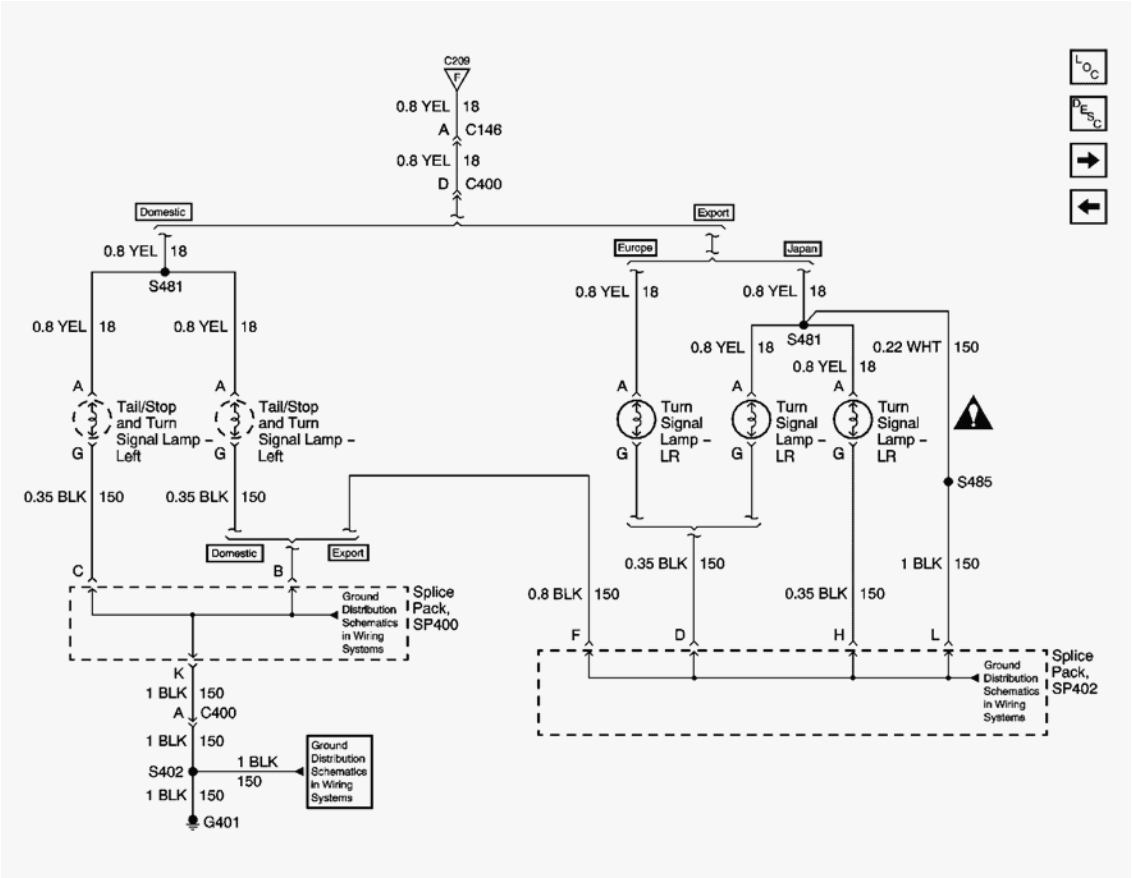

Fig. 11: LR Turn Signal Indicators Schematics
Courtesy of GENERAL MOTORS CORP.

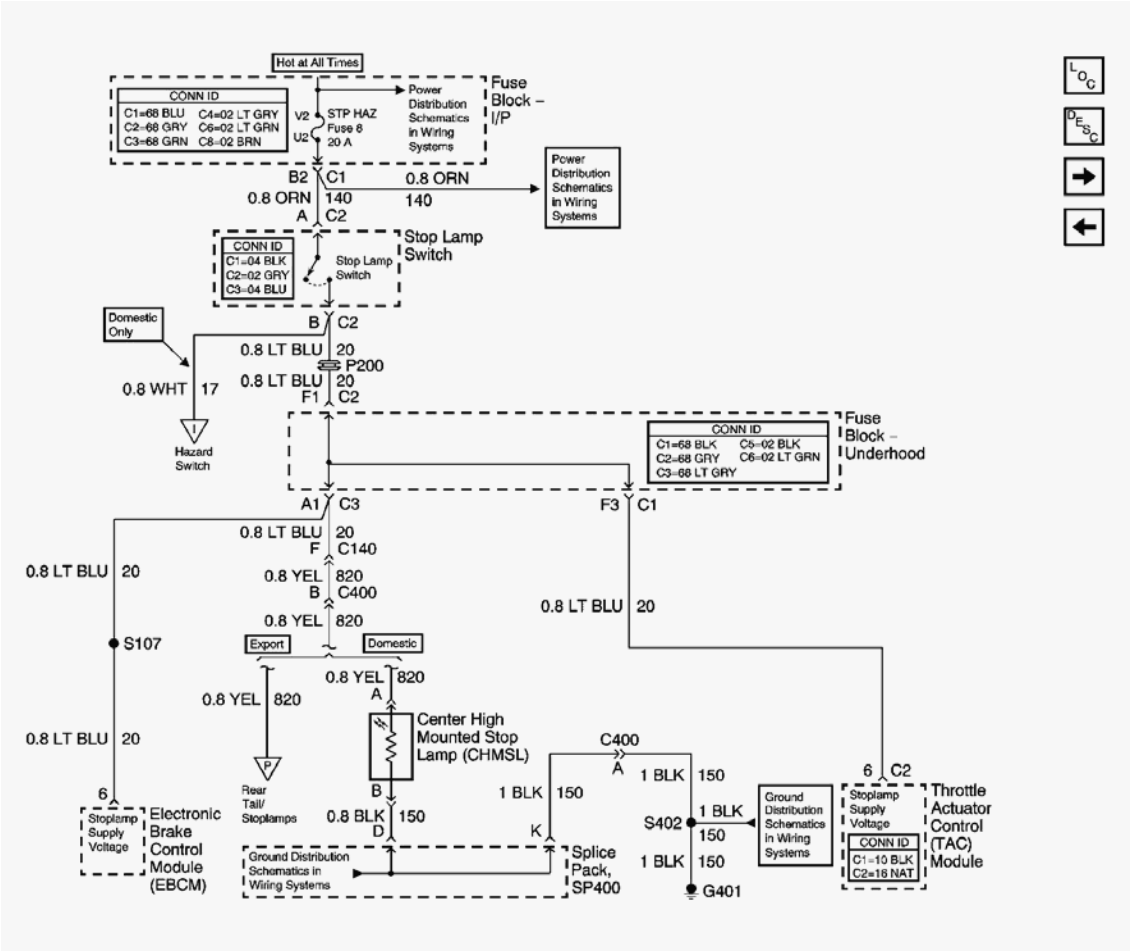

Fig. 12: Stop Lamp Switch And Center High Mount Stop Lamp Schematics (CHMSL)
Courtesy of GENERAL MOTORS CORP.

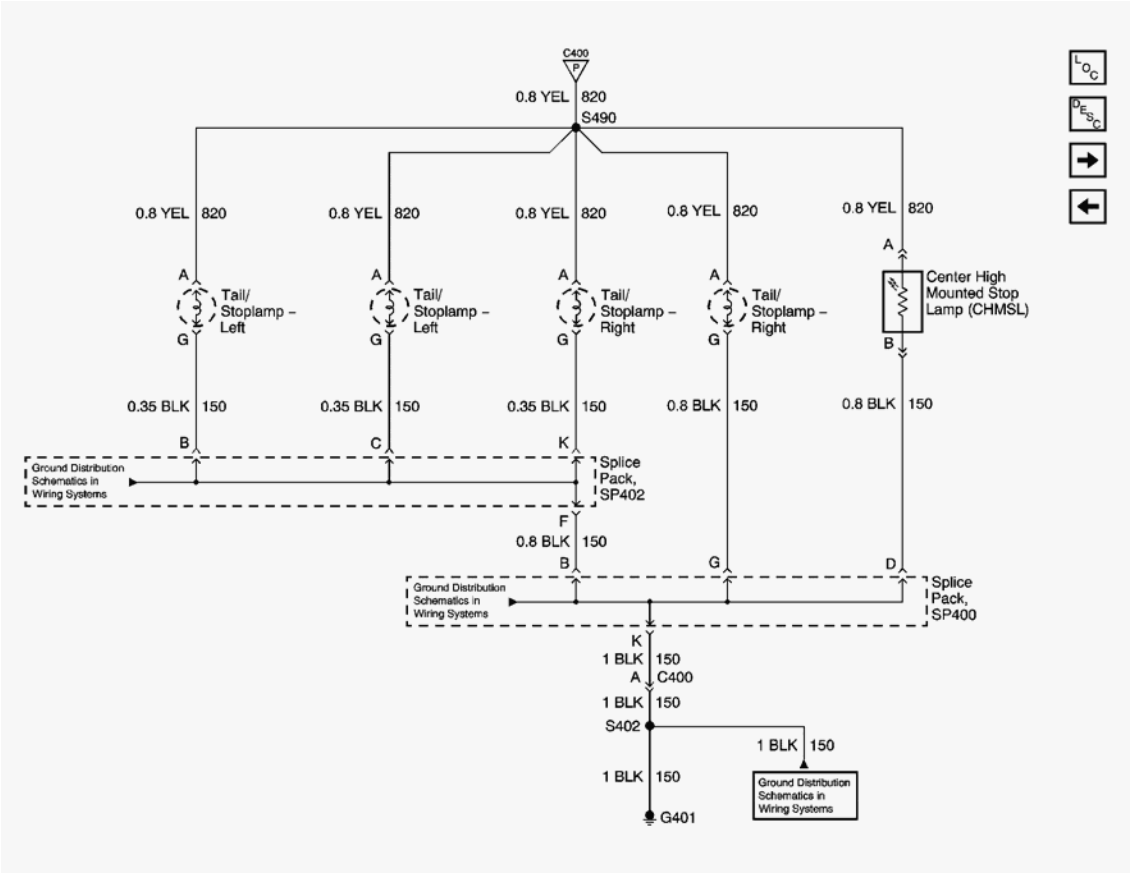

Fig. 13: Stop Lamps Schematics - Export
Courtesy of GENERAL MOTORS CORP.

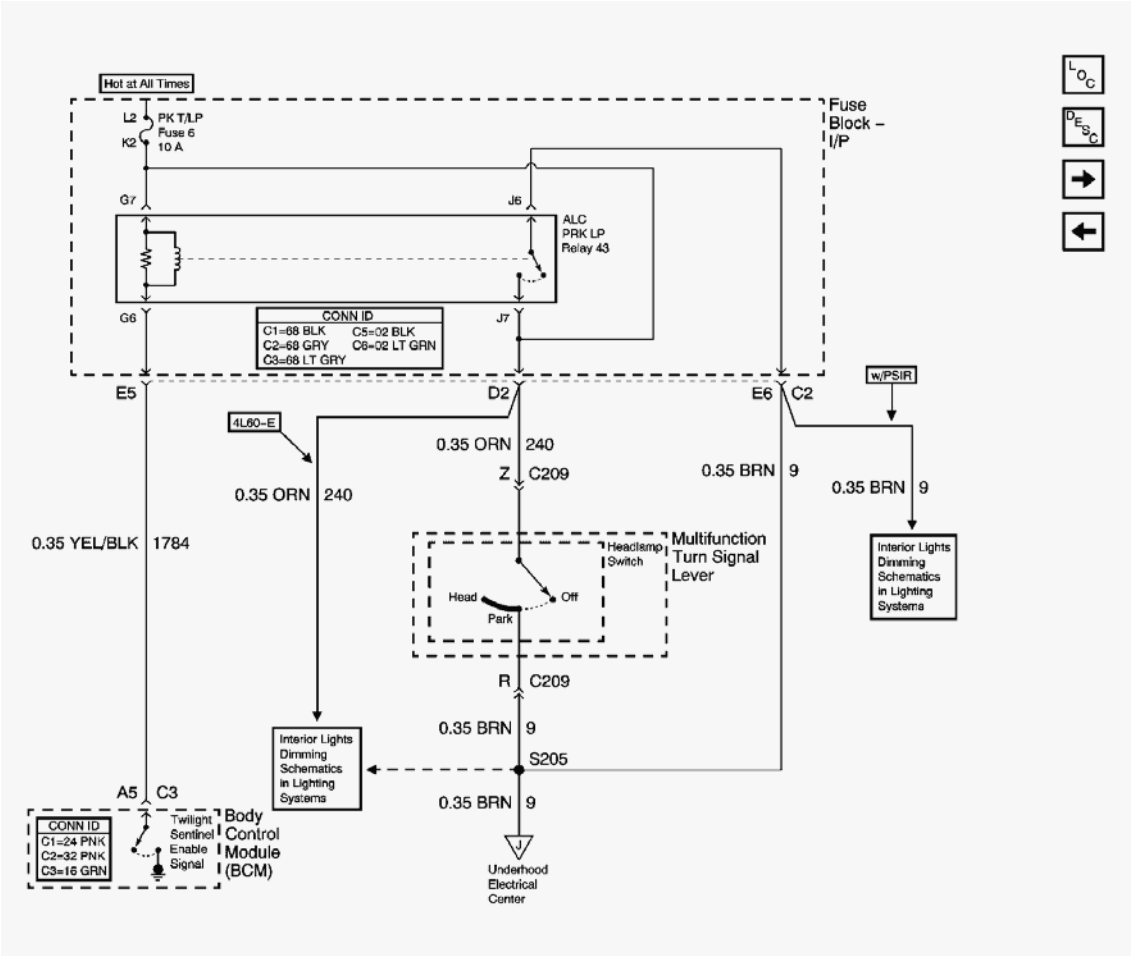

Fig. 14: Park Lamp Control Schematics
Courtesy of GENERAL MOTORS CORP.

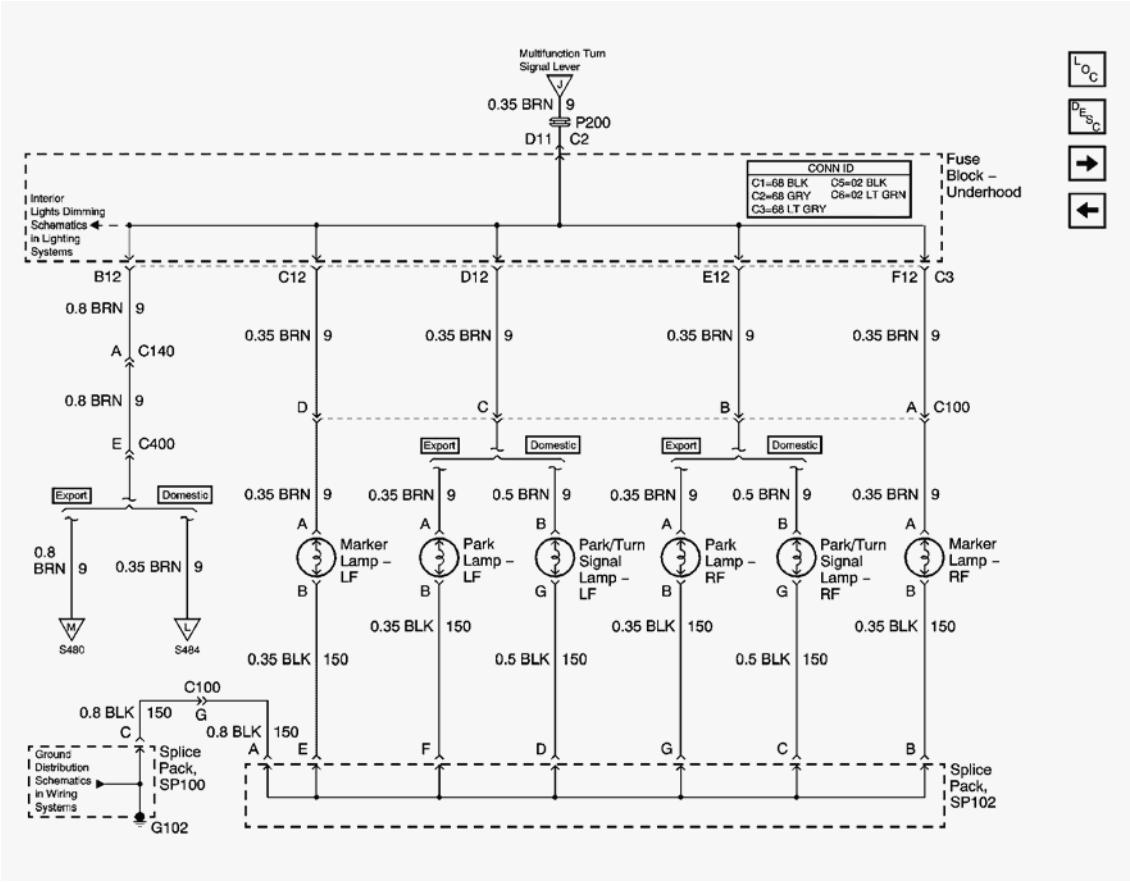

Fig. 15: Front Park Lamps Schematics
Courtesy of GENERAL MOTORS CORP.

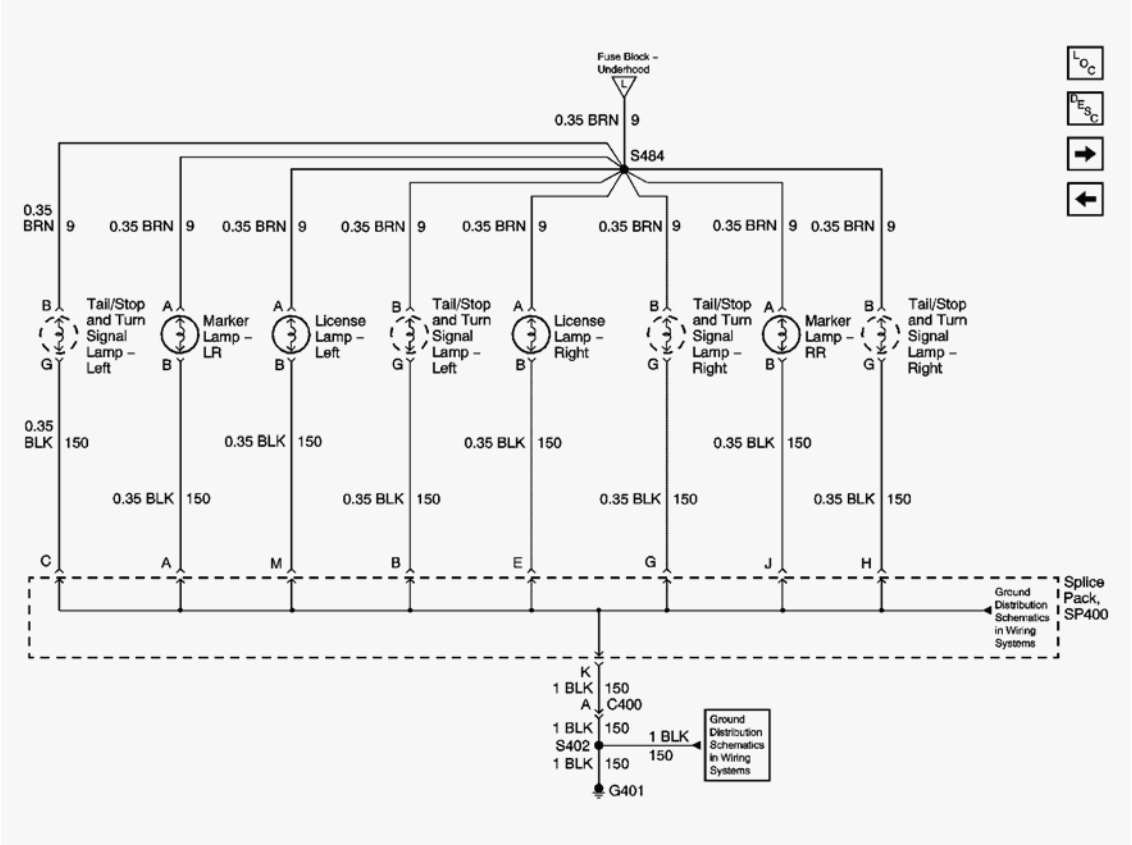

Fig. 16: Rear Park Lamps Schematics - Domestic
Courtesy of GENERAL MOTORS CORP.

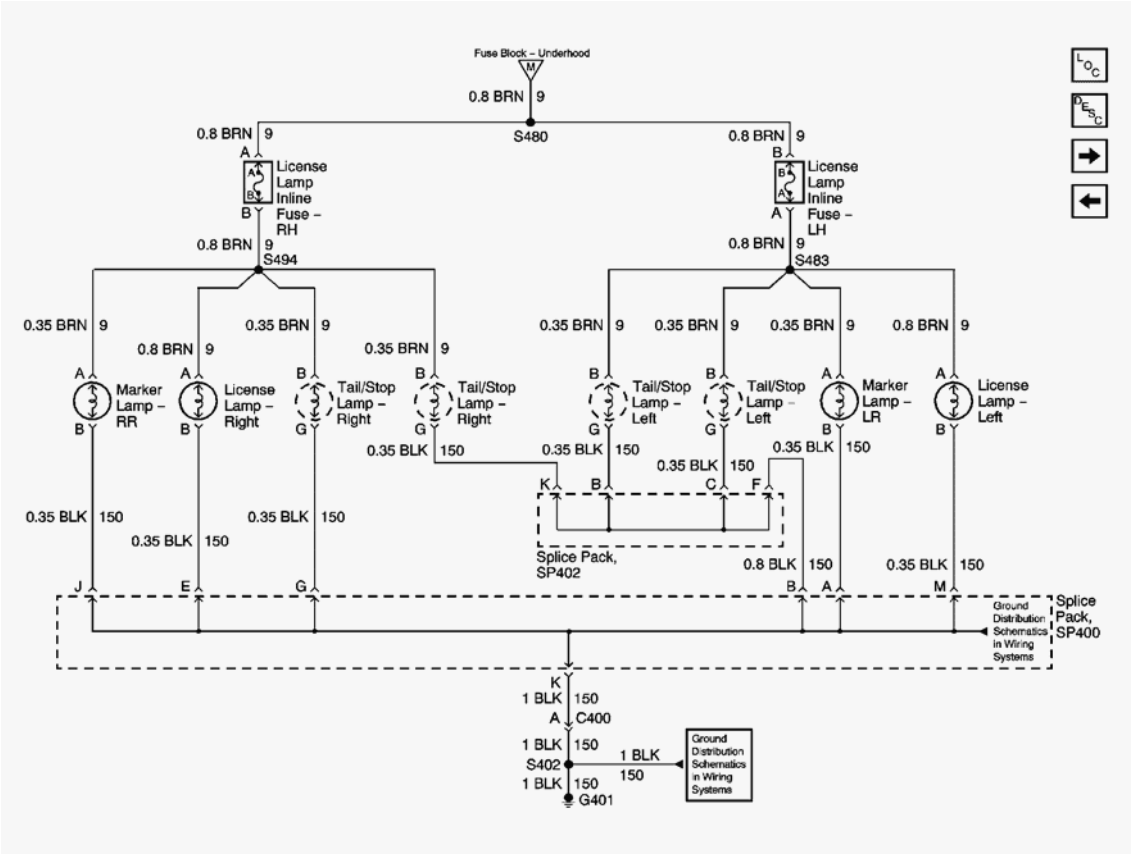

Fig. 17: Rear Park Lamps Schematics - Export
Courtesy of GENERAL MOTORS CORP.

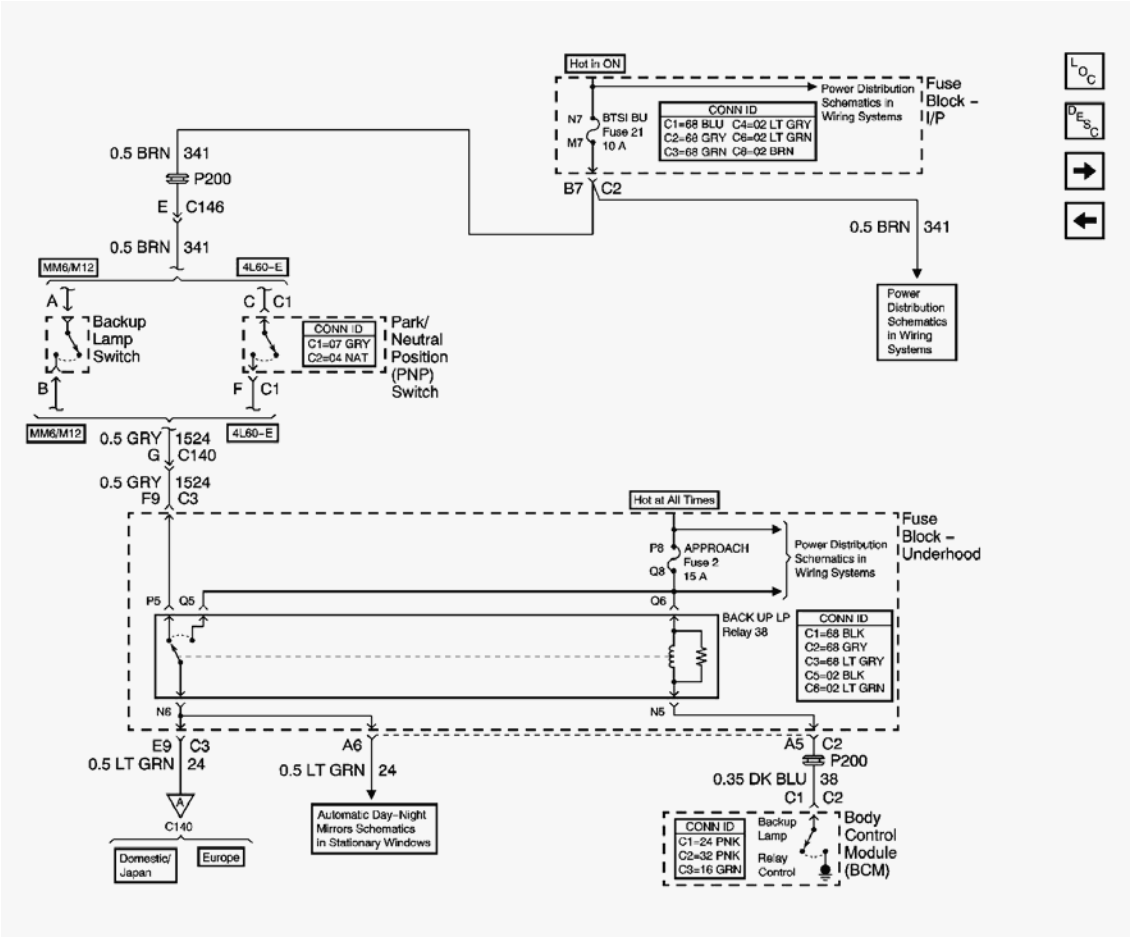

Fig. 18: Backup Lamp Control Schematics
Courtesy of GENERAL MOTORS CORP.

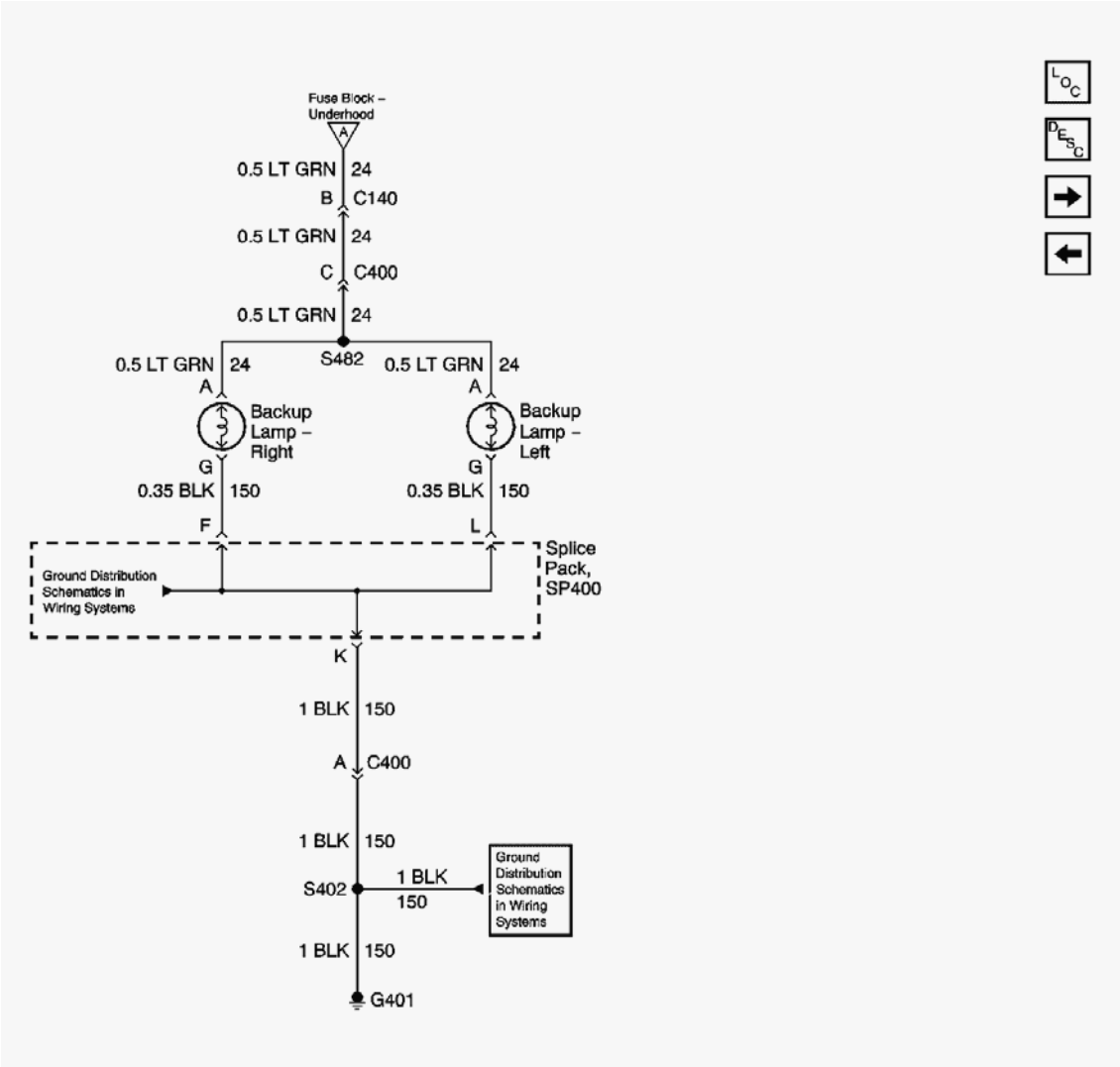

Fig. 19: Backup Lamps Schematics - Domestic/Japan
Courtesy of GENERAL MOTORS CORP.

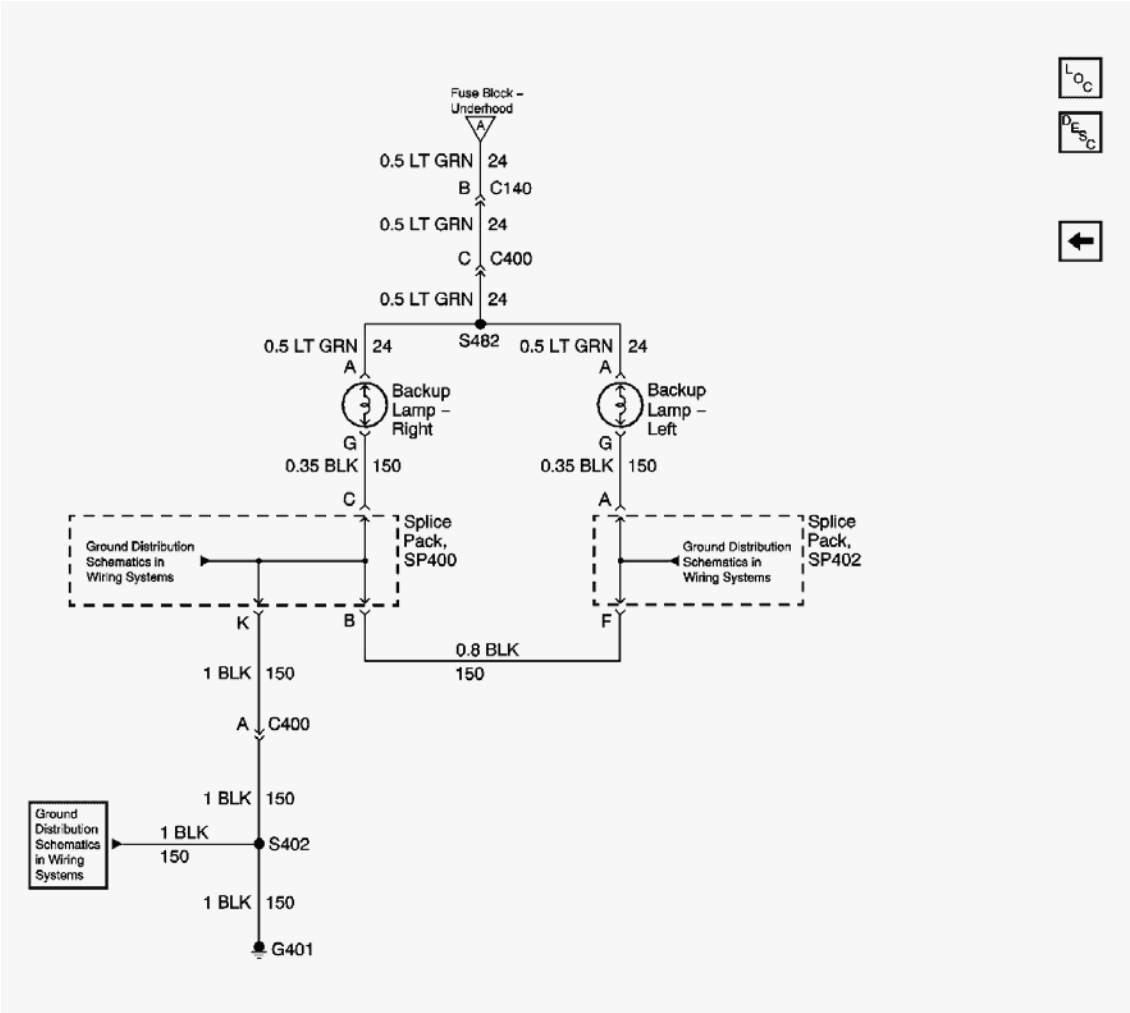

Fig. 20: Backup Lamps Schematics - Europe
Courtesy of GENERAL MOTORS CORP.

INTERIOR LIGHTS SCHEMATICS

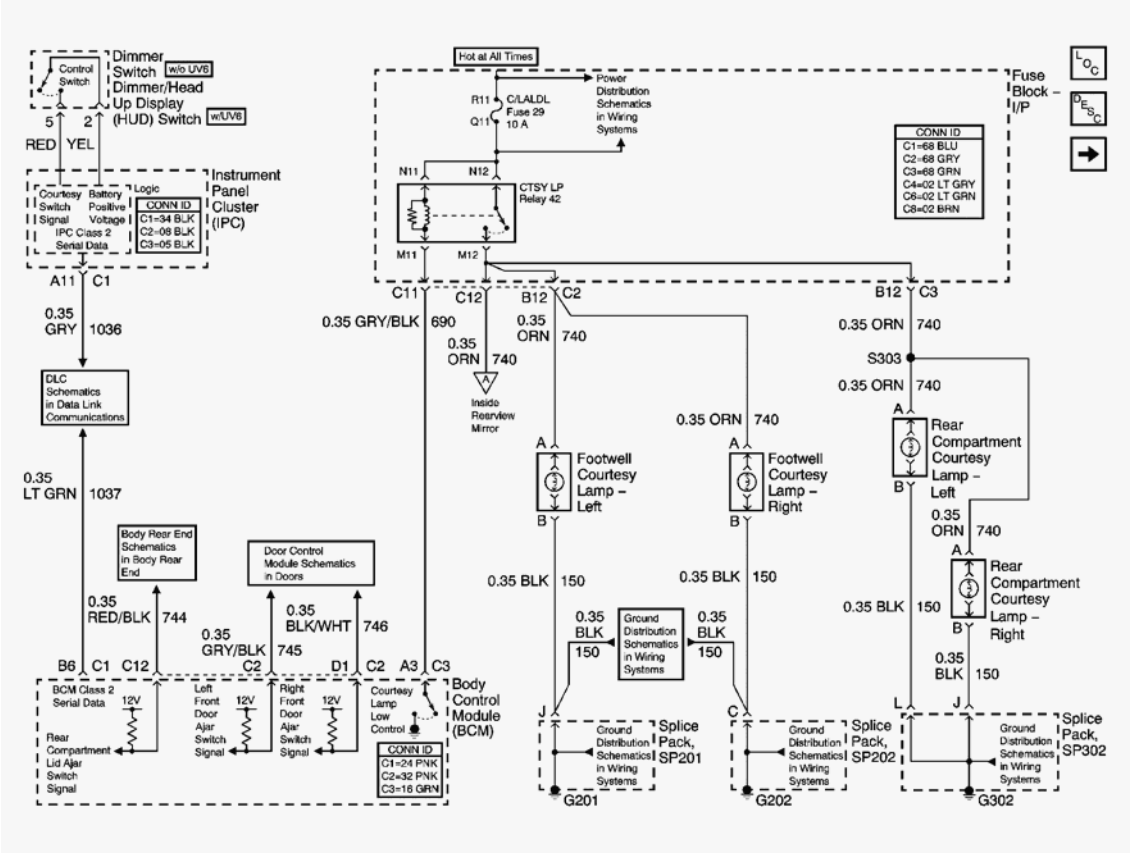

Fig. 21: Courtesy Lamps Schematics
Courtesy of GENERAL MOTORS CORP.

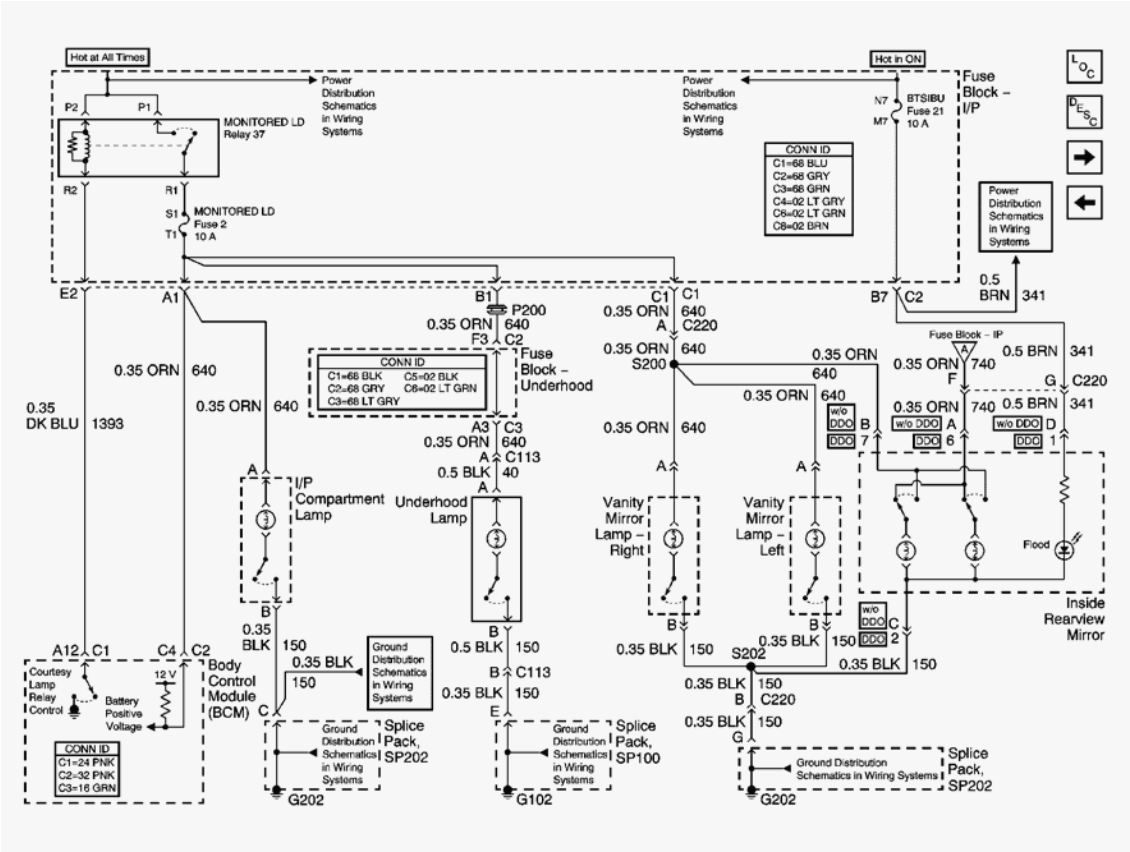

Fig. 22: Vanity Mirror, Inside Rearview Mirror, Underhood And Instrument Panel Compartment Lamps Schematics

Courtesy of GENERAL MOTORS CORP.

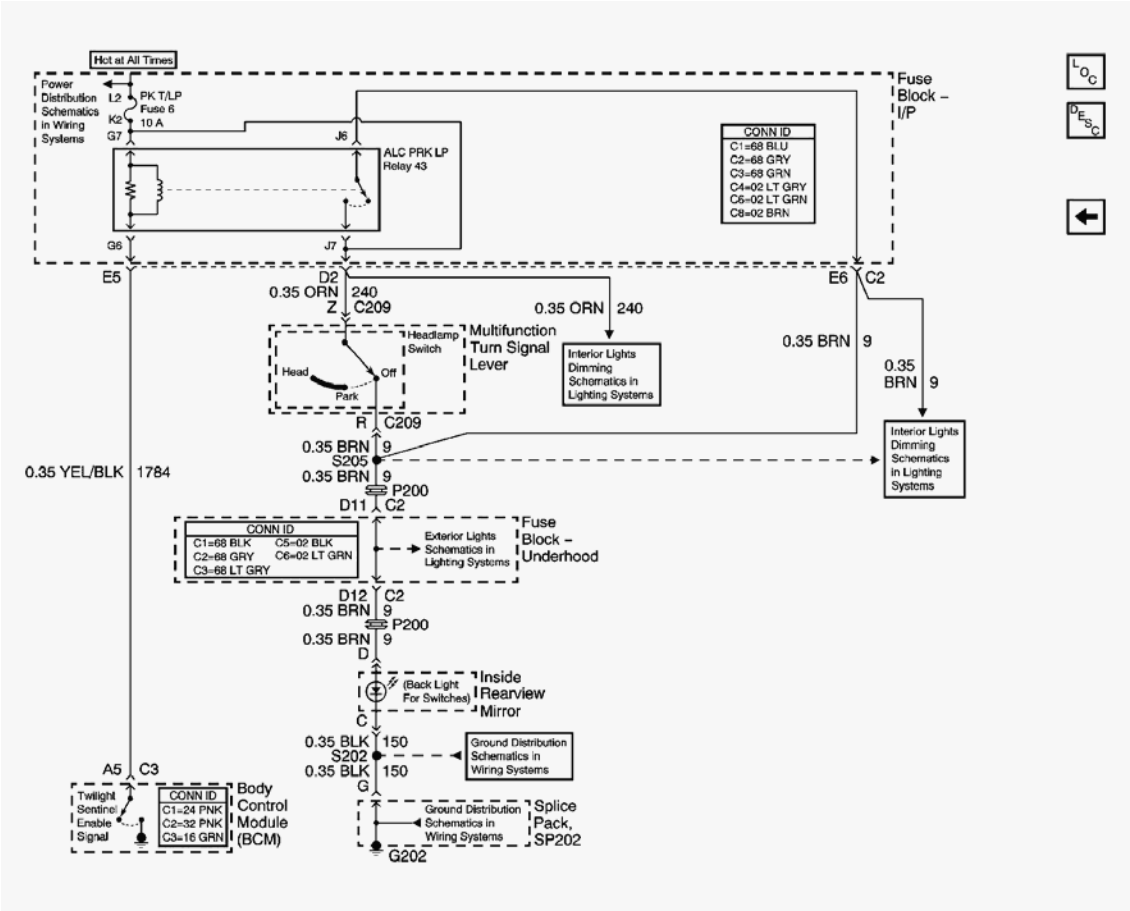

Fig. 23: Inside Rearview Mirror Switch Backlight Schematics
Courtesy of GENERAL MOTORS CORP.

INTERIOR LIGHTS DIMMING SCHEMATICS

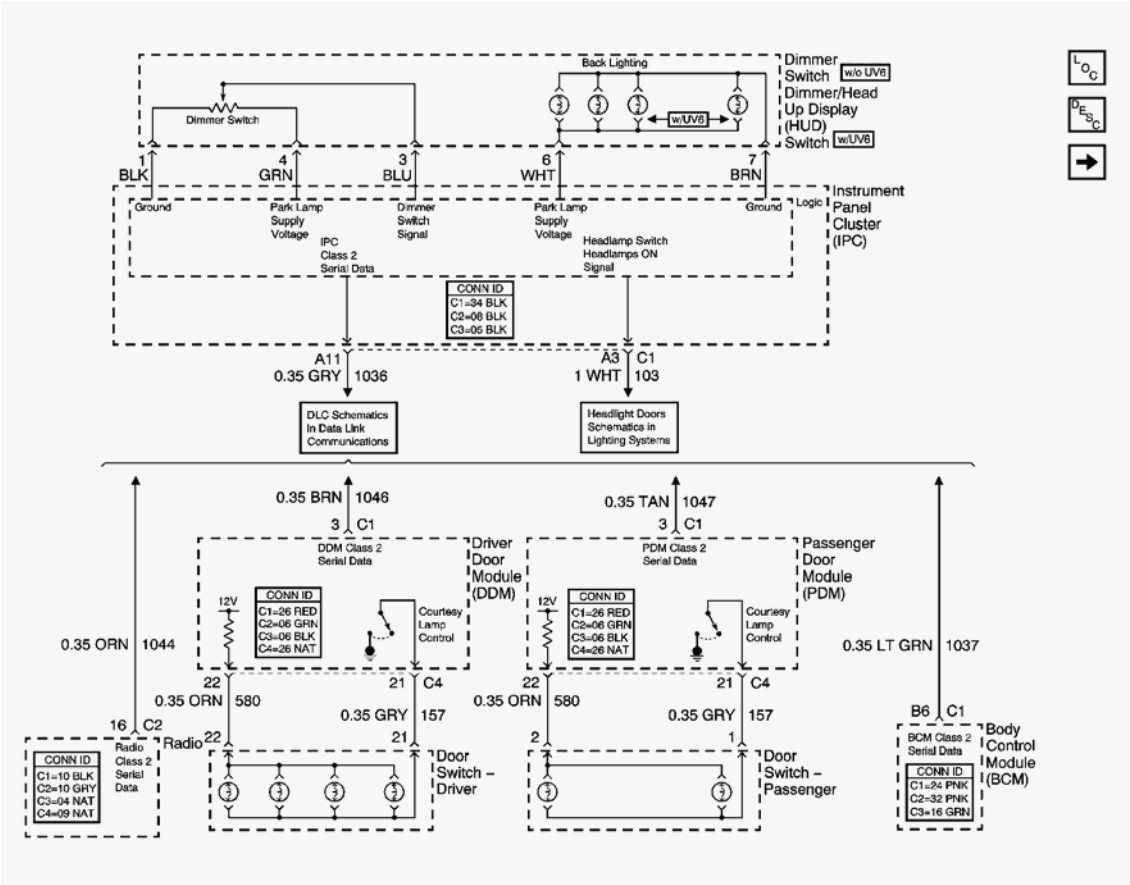

Fig. 24: Door Switches And Radio Schematics
Courtesy of GENERAL MOTORS CORP.

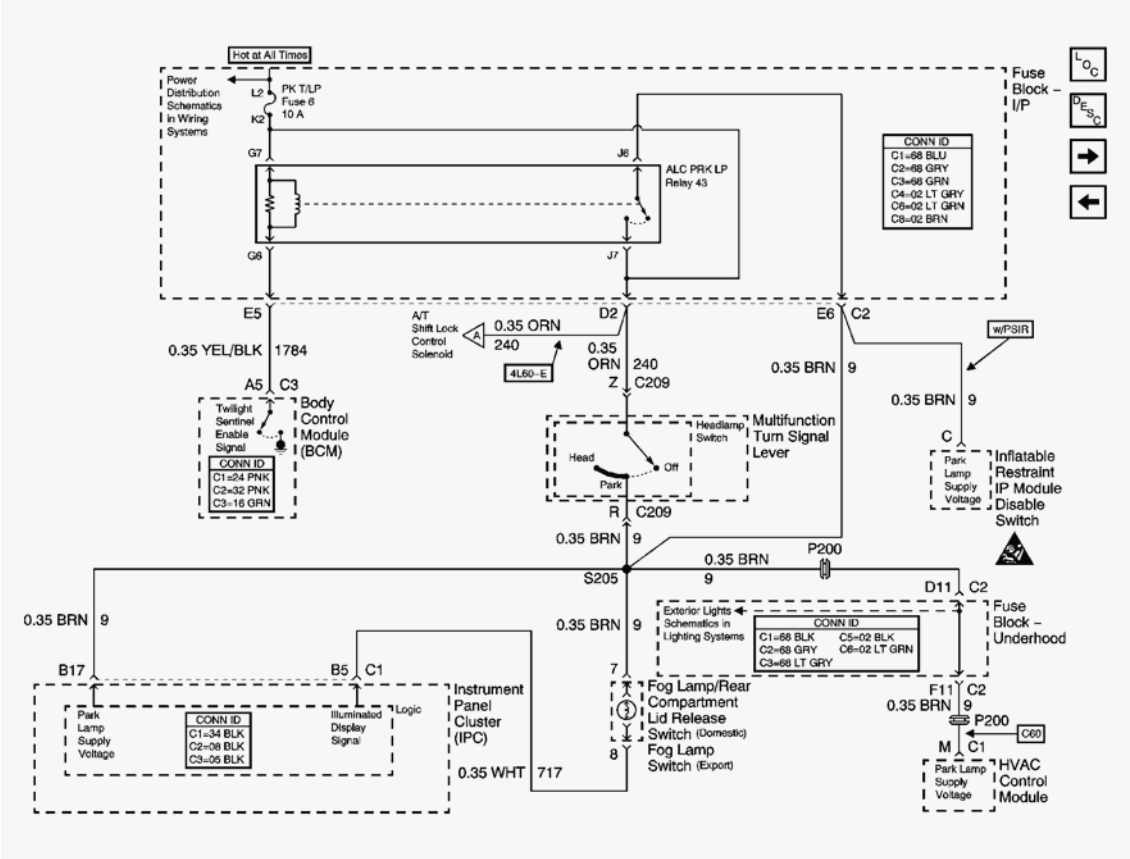

Fig. 25: Fog Lamp Switch Schematics
Courtesy of GENERAL MOTORS CORP.

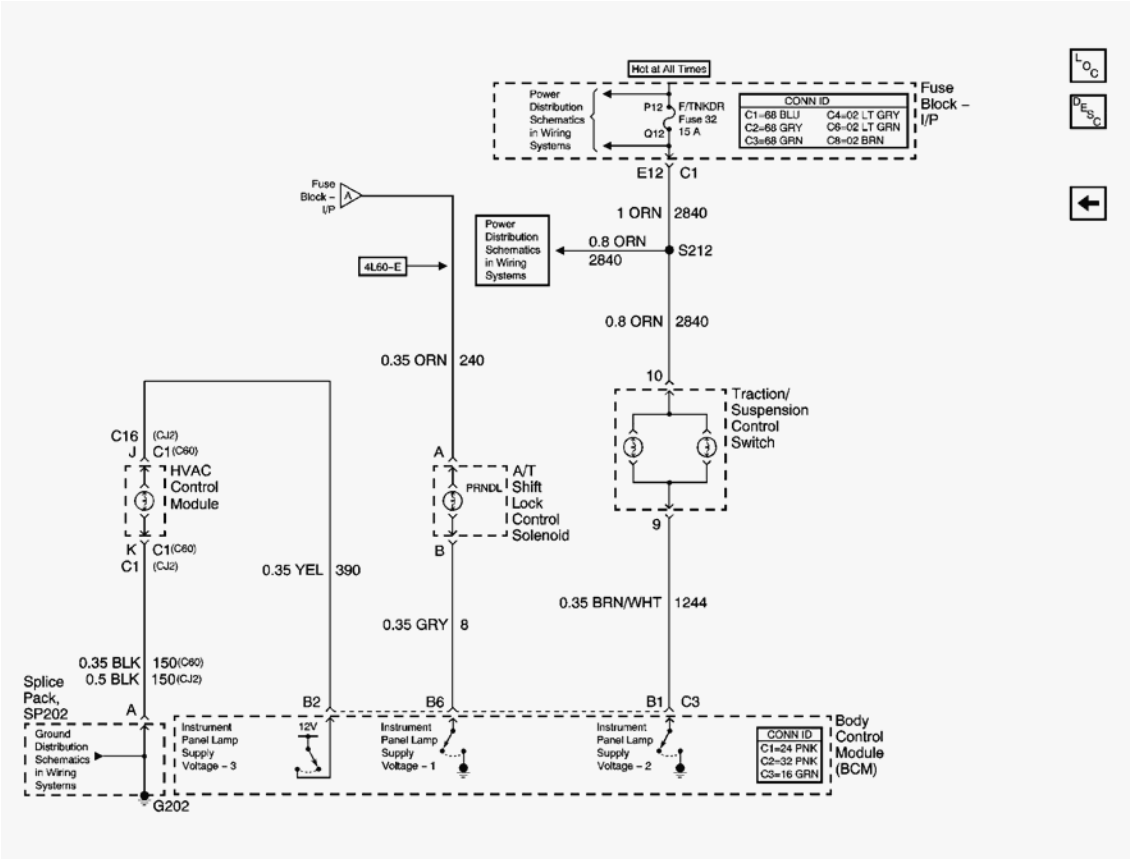

Fig. 26: HVAC Control Assembly, Automatic Transmission Shift Lock Control Actuator And Traction/Suspension Control Switch Schematics
Courtesy of GENERAL MOTORS CORP.

COMPONENT LOCATOR

LIGHTING SYSTEMS COMPONENT VIEWS

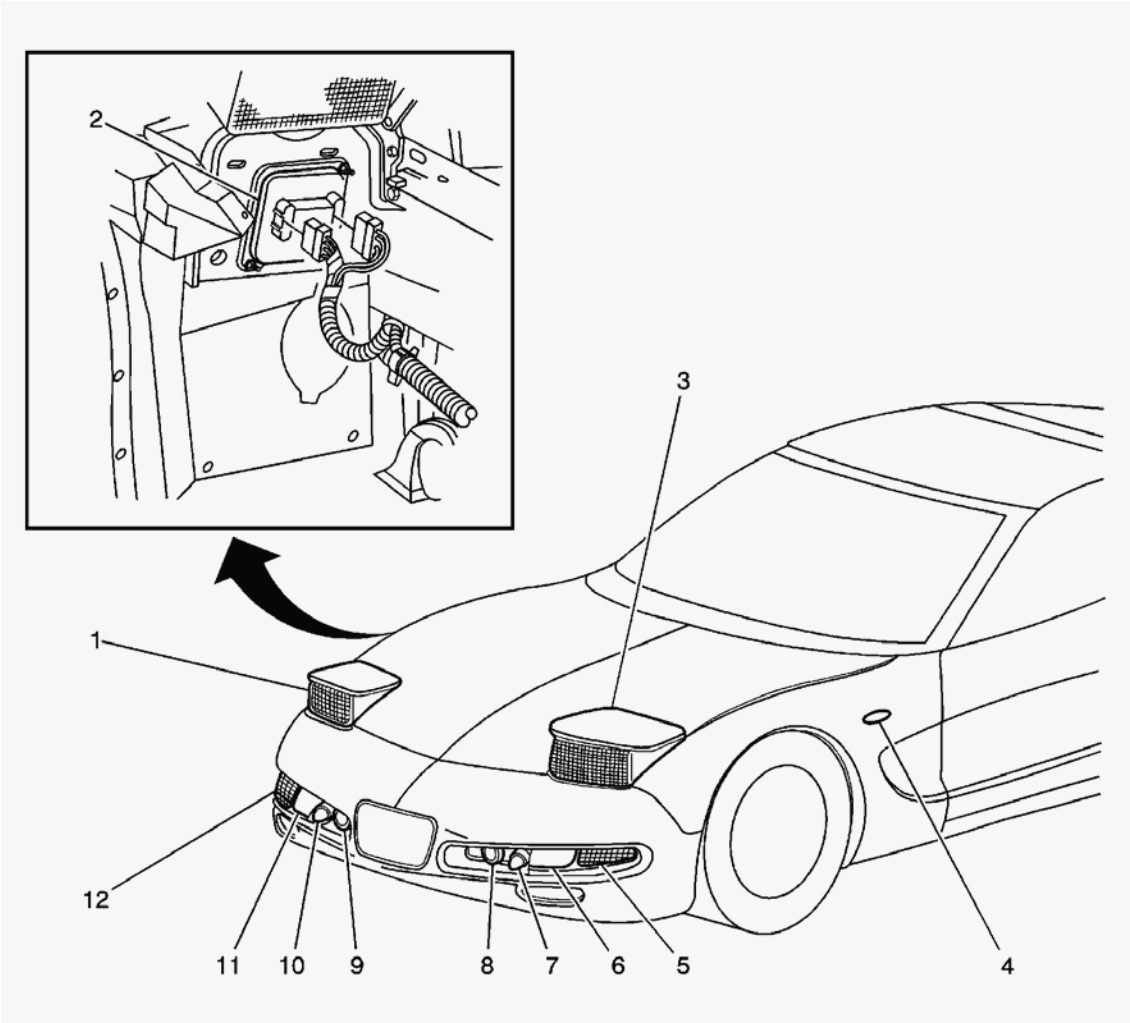

Fig. 27: Outside Front End Of The Vehicle Component View
Courtesy of GENERAL MOTORS CORP.

Callouts For Fig. 27

Callout	Component Name
1	Headlamp Door Assembly-Right
2	Headlamp Door Control Module
3	Headlamp Door Assembly-Left
4	Repeater Lamp-Left, (Right Side Similiar) (Export)
5	Marker Lamp - LF
6	Park/Turn Signal Lamp-LF (Domestic) Turn Signal Lamp-LF (Export)
7	Park Lamp-LF (Export)
8	Fog Lamp-LF
9	Fog Lamp-RF
10	Park Lamp-RF (Export)
11	Park/Turn Signal Lamp-RF (Domestic) Turn Signal Lamp- RF (Export)

12	Marker Lamp - RF

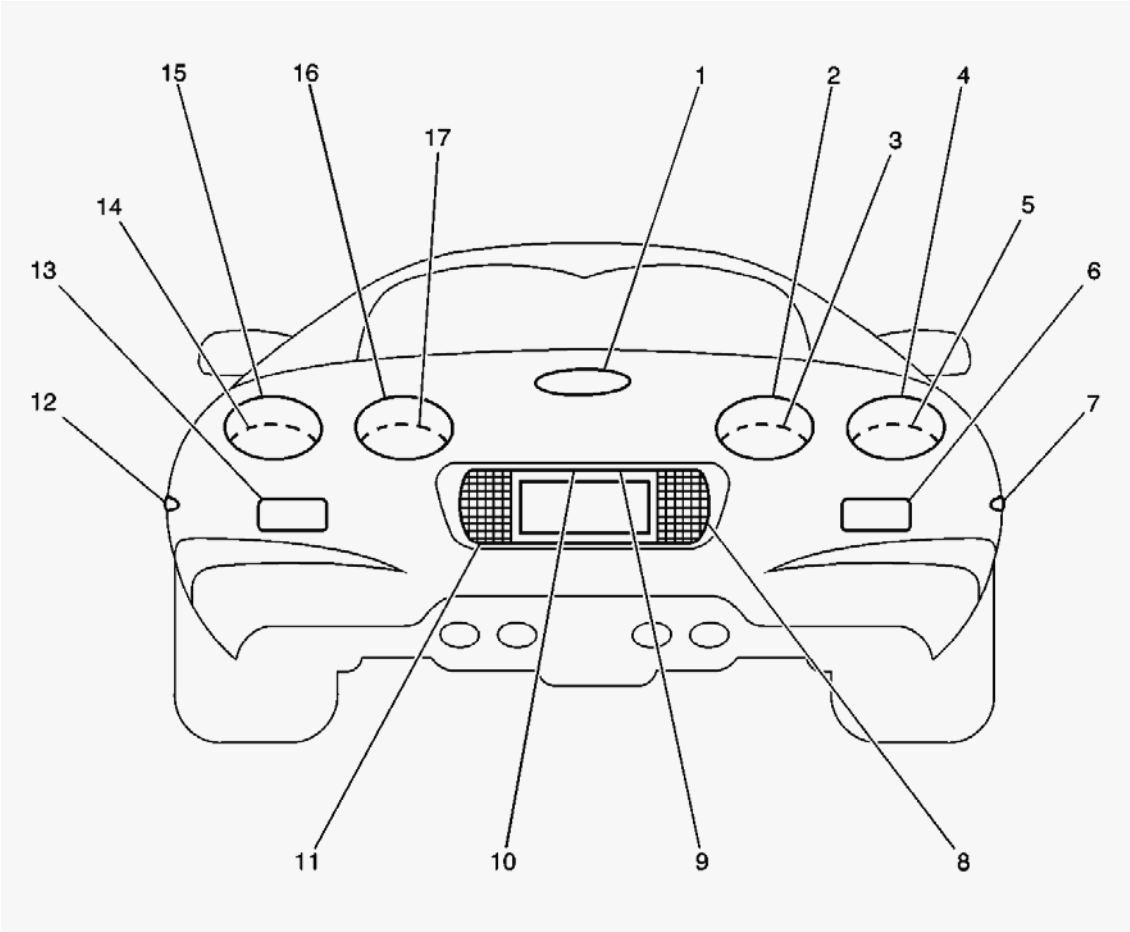

Fig. 28: Outside Rear End Of The Vehicle Component View
Courtesy of GENERAL MOTORS CORP.

Callouts For Fig. 28

Callout	Component Name
1	Center High Mounted Stop Lamp (CHMSL)
2	Tail/Stop and Turn Signal Lamp-Right (Domestic) Tail/Stop Lamp-Right (Export)
3	Turn Signal Lamp-RR (Japan), Backup Lamp-RR (Europe)
4	Tail/Stop and Turn Signal Lamp-Right (Domestic), Tail/Stop Lamp-Right (Export)
5	Turn Signal Lamp-RR (Export)
6	Fog Lamp-RR (Europe)
7	Marker Lamp-RR
8	Backup Lamp-Right (Domestic/Japan)
9	License Lamp-Right
10	License Lamp-Left
11	Backup Lamp-Left (Domestic and Japan)

12	Marker Lamp-LR
13	Fog Lamp-LR (Europe)
14	Turn Signal Lamp-LR (Export)
15	Tail/Stop and Turn Signal Lamp-Left (Domestic), Tail/Stop Lamp-Left (Export)
16	Tail/Stop and Turn Signal Lamp-Left (Domestic) Tail/Stop Lamp-Left (Export)
17	Turn Signal Lamp-LR (Japan), Backup Lamp-Left (Europe)

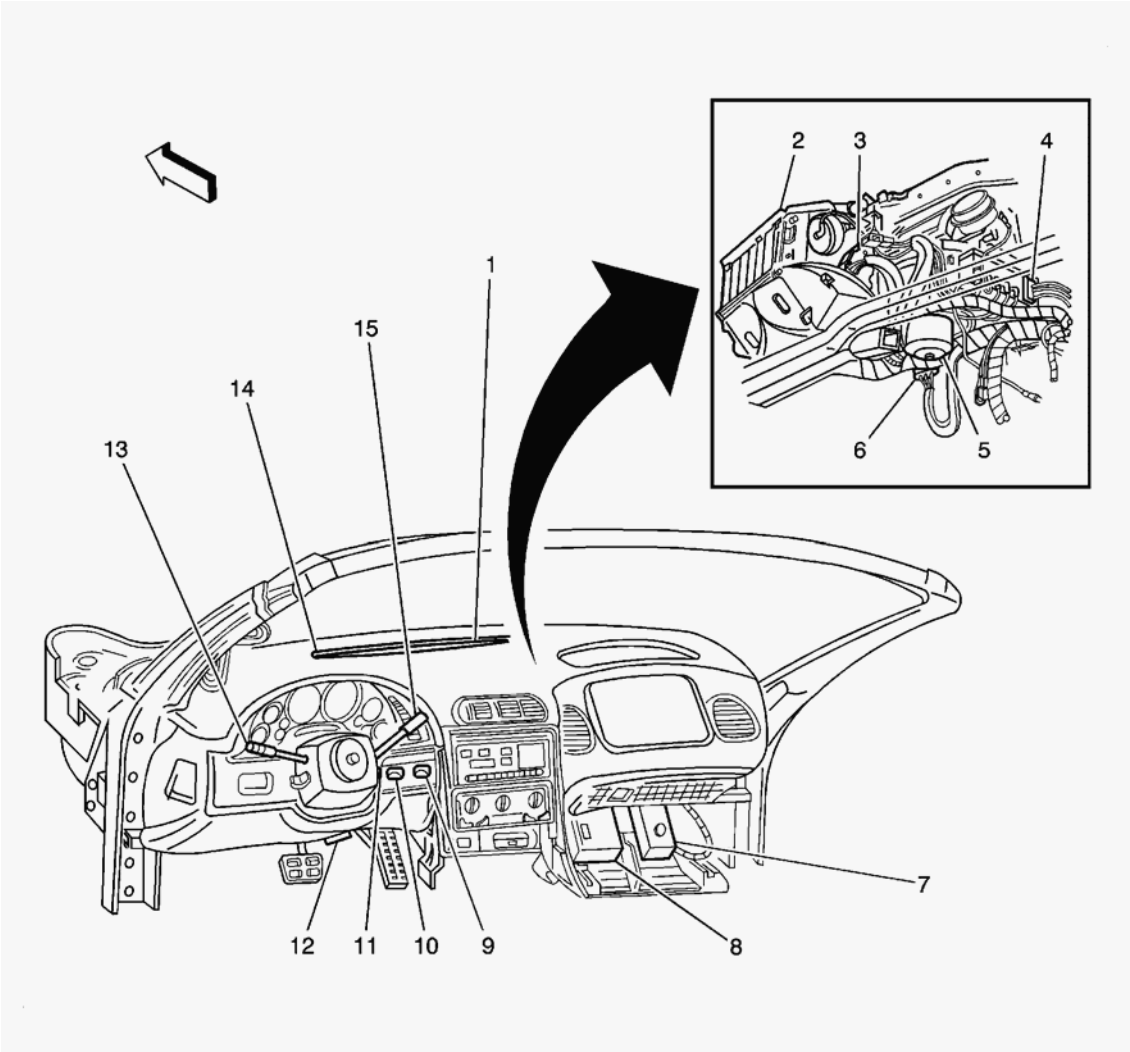

Fig. 29: Instrument Panel Component View
Courtesy of GENERAL MOTORS CORP.

Callouts For Fig. 29

Callout	Component Name
1	Sunload Sensor
2	HVAC Module Assembly
3	Air Temperature Actuator (C60)

4	Vacuum Control Assembly (CJ2)
5	Blower Motor
6	Blower Motor Control Processor
7	Fuse Block-IP
8	Body Control Module (BCM)
9	Ignition Switch
10	Air Temperature Sensor - Inside
11	Telescoping Actuator Switch
12	Data Link Connector (DLC)
13	Multifunction Turn Signal Lever
14	Ambient Light Sensor
15	Windshield Wiper/Washer Switch

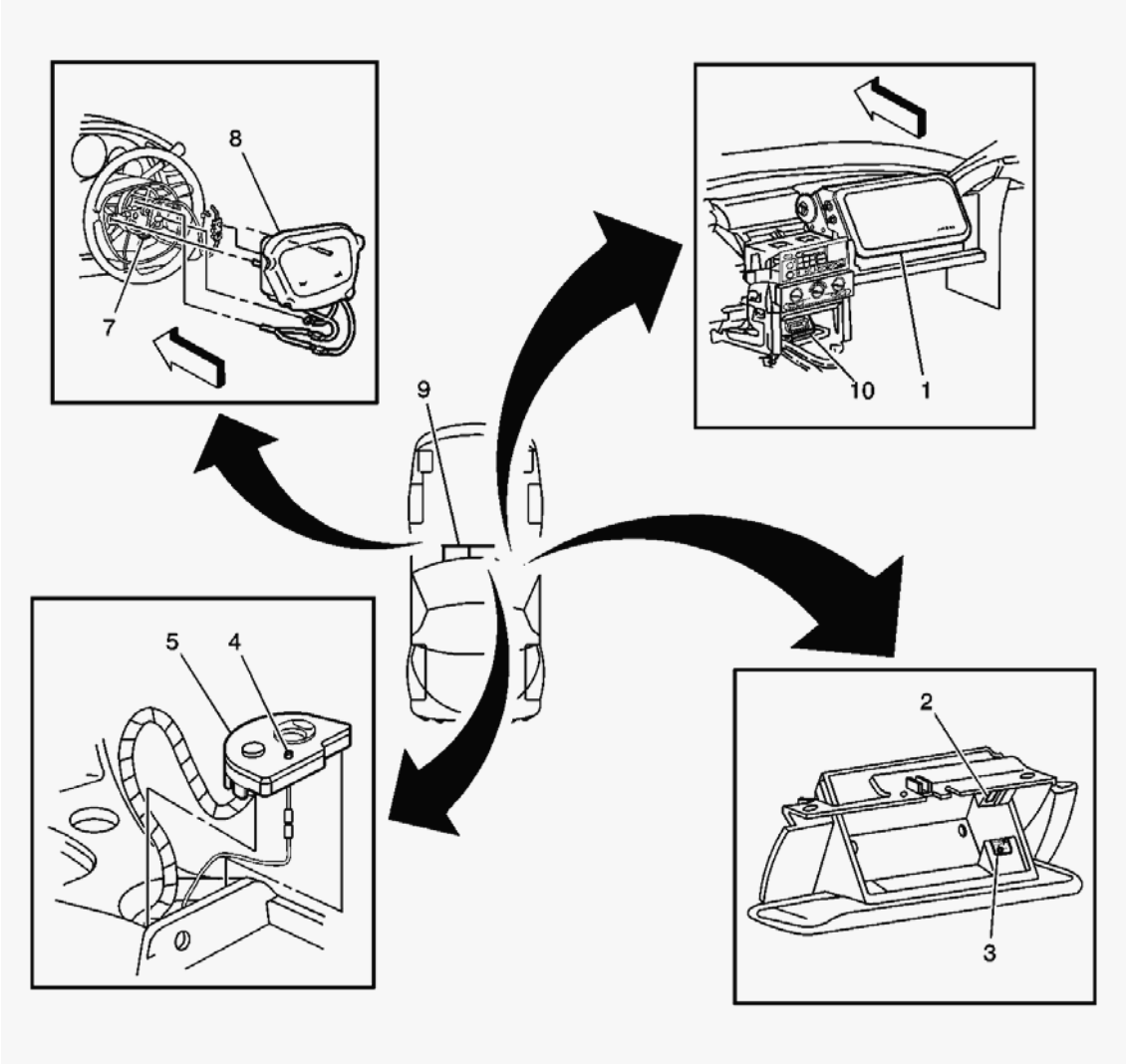

Fig. 30: SIR Components View
Courtesy of GENERAL MOTORS CORP.

Callouts For Fig. 30

Callout	Component Name
1	Inflatable Restraint IP Module
2	IP Compartment Lamp
3	Inflatable Restraint IP Module Disable Switch
4	Inflatable Restraint IP Module Disable Switch LED
5	Traction/Suspension Control Switch
7	Inflatable Restraint Steering Wheel Module Coil
8	Inflatable Restraint Steering Wheel Module
9	SIR Wiring Harness
10	Inflatable Restraint Sensing and Diagnostic Module (SDM)

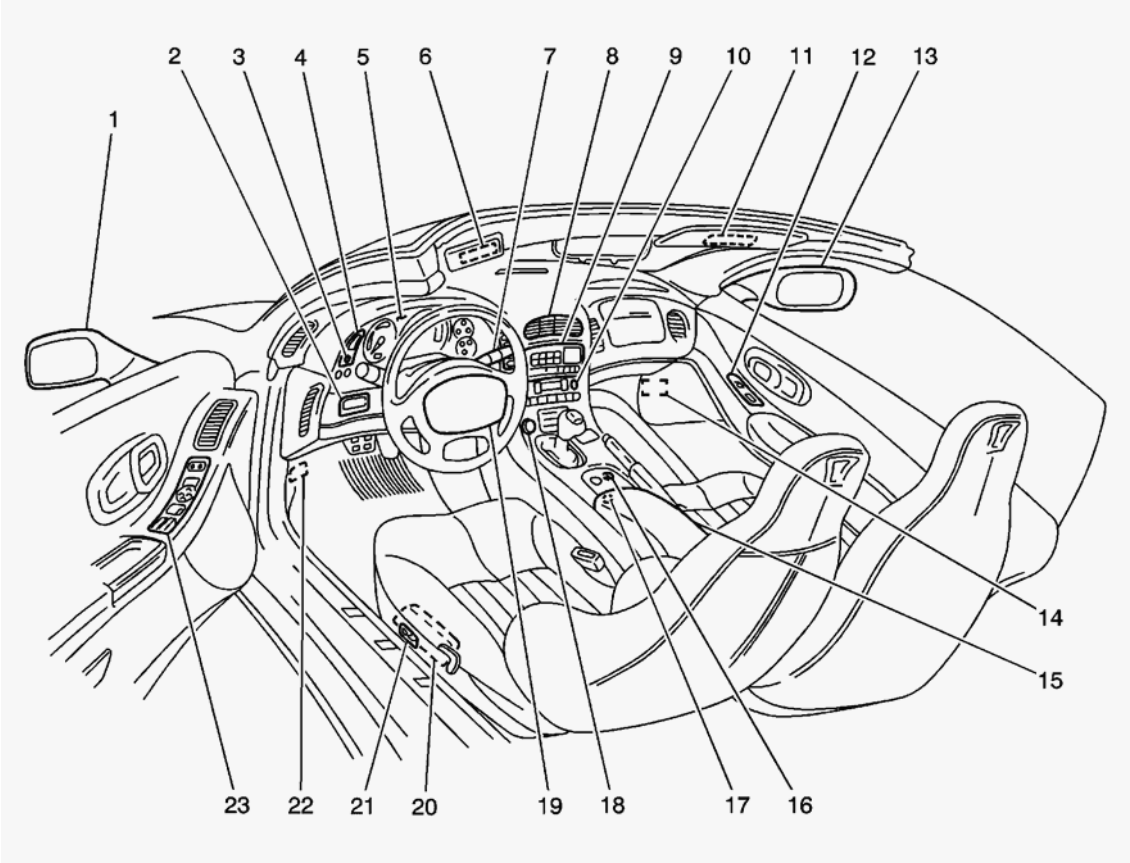

Fig. 31: Cockpit Component View
Courtesy of GENERAL MOTORS CORP.

Callouts For Fig. 31

Callout	Component Name
1	Outside Rearview Mirror-Driver
2	Fog Lamp/Rear Compartment Lid Release Switch (Domestic), Fog Lamp Switch (Export)
3	Dimmer Switch

4	Dimmer/Head Up Display (HUD) Switch
5	Instrument Panel Cluster (IPC)
6	Vanity Mirror Lamp-Left
7	Driver Information Center (DIC) Switch-Right
8	Hazard Switch
9	Radio
10	HVAC Control Module
11	Vanity Mirror Lamp-Right
12	Door Switch-Passenger
13	Outside Rearview Mirror-Passenger
14	Footwell Courtesy Lamp-Right
15	Fuel Door Lock Release Switch (Domestic), Rear Compartment Lid/Fuel Door Lock Release Switch (Export)
16	Traction/Suspension Control Switch
17	Auxiliary Power Outlet Connector
18	Cigar Lighter
19	Horn Switch
20	Seat Control Module (SCM)-Driver (W/Memory Seats), Seat Relay Center-Driver (W/O Memory Seats)
21	Seat Adjuster Switch-Driver
22	Footwell Courtesy Lamp-Left
23	Door Switch-Driver

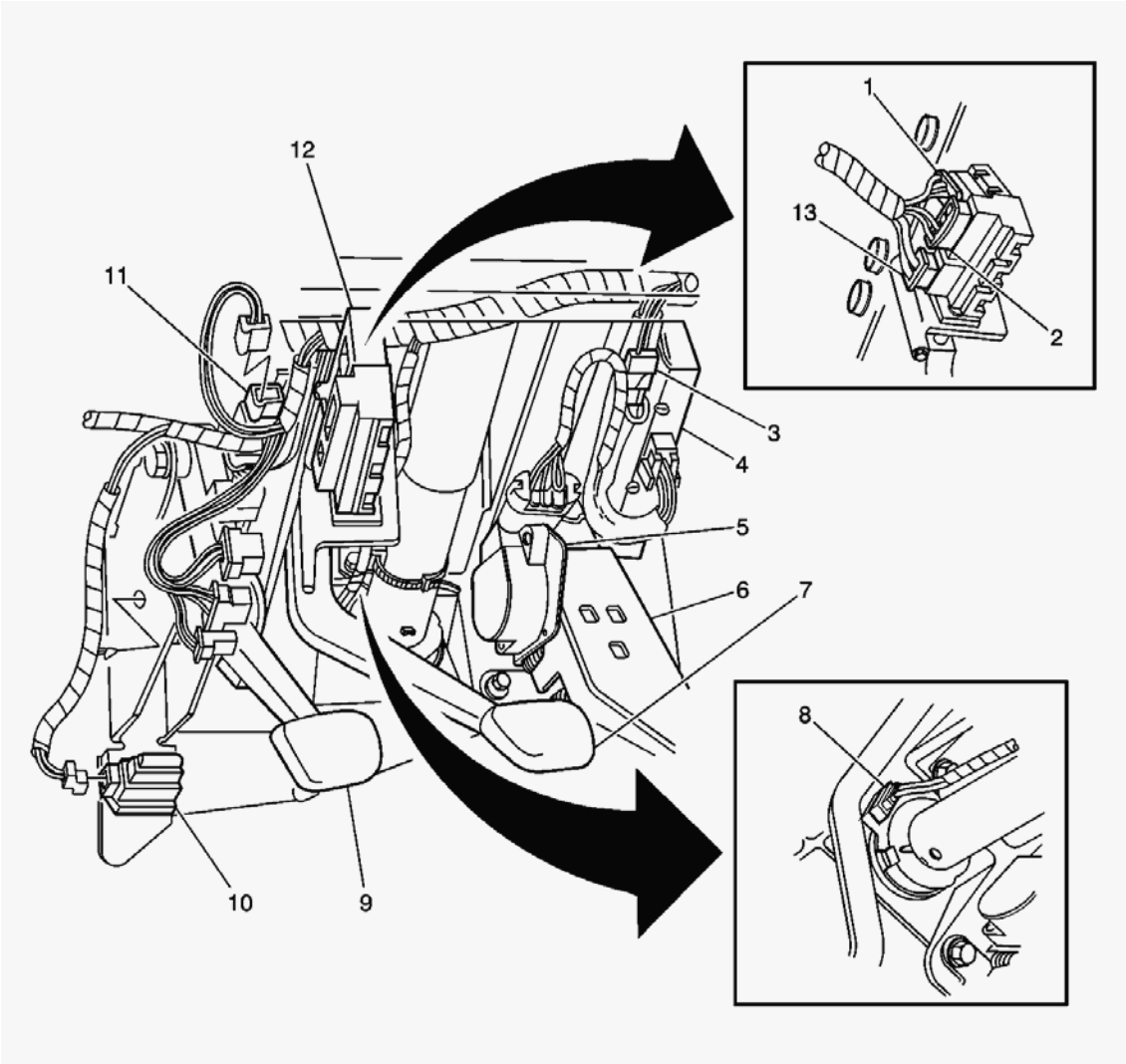

Fig. 32: Under Side of the Dash Component View - Left
Courtesy of GENERAL MOTORS CORP.

Callouts For Fig. 32

Callout	Component Name
1	Stop Lamp Switch C1
2	Stop Lamp Switch C3
3	C213
4	Bose Signal Processor
5	Accelerator Pedal Position (APP) Sensor
6	Accelerator Pedal
7	Brake Pedal
8	Steering Wheel Position Sensor
9	Clutch Pedal
10	Clutch Pedal Start Switch

11	Clutch Pedal Position Switch
12	Stop Lamp Switch
13	Stop Lamp Switch Connector C2

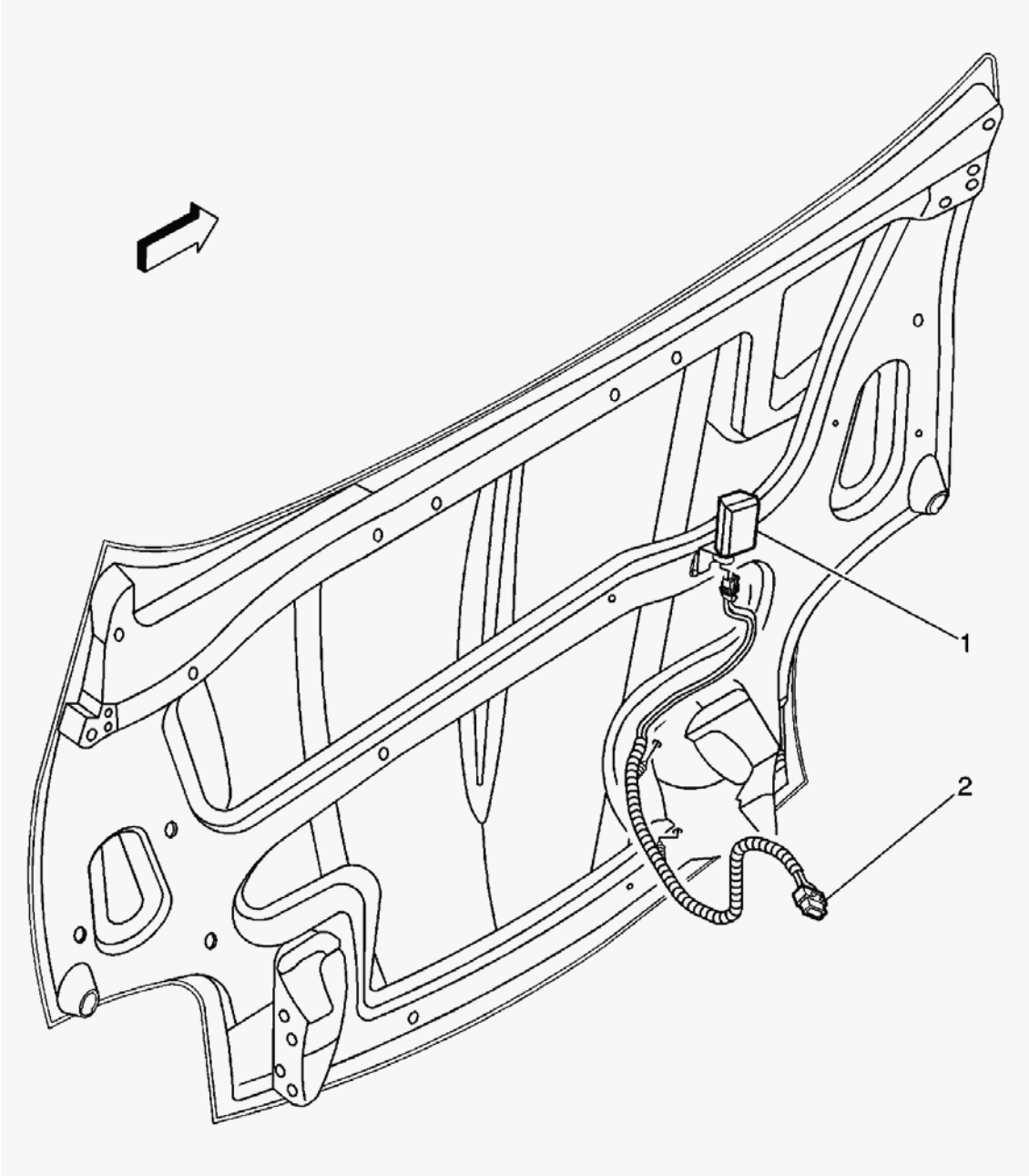

Fig. 33: Underhood Lamp Component View
Courtesy of GENERAL MOTORS CORP.

Callouts For Fig. 33

Callout	Component Name
1	Underhood Lamp

2	C113

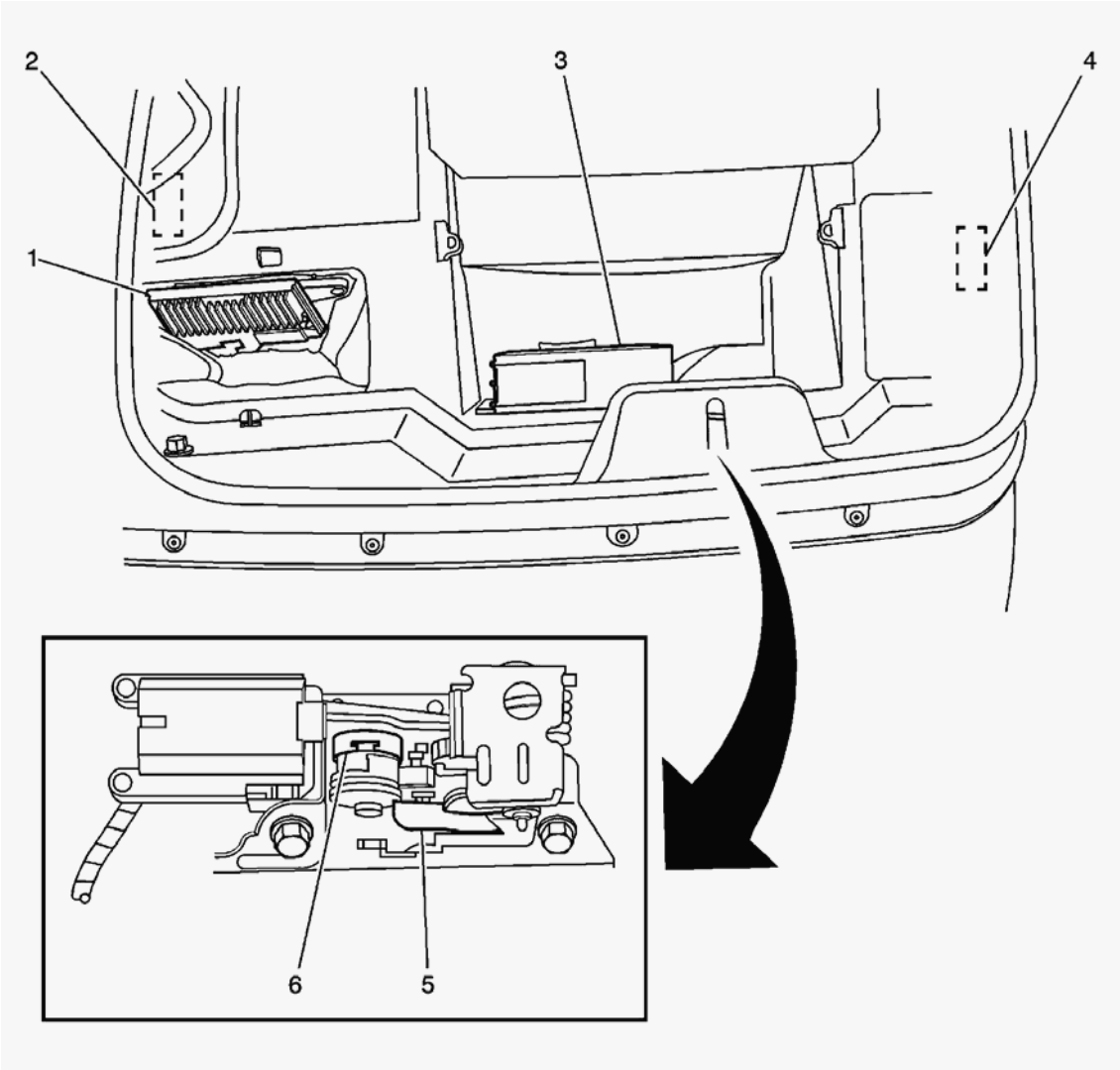

Fig. 34: Luggage Compartment Component View
Courtesy of GENERAL MOTORS CORP.

Callouts For Fig. 34

Callout	Component Name
1	Electronic Suspension Control (ESC) Module
2	Rear Compartment Courtesy Lamp - Left
3	Remote Playback Device - CD Changer
4	Rear Compartment Courtesy Lamp - Right
5	Rear Compartment Lid Ajar Switch
6	Rear Compartment Lid Latch (Hardtop/Convertible)

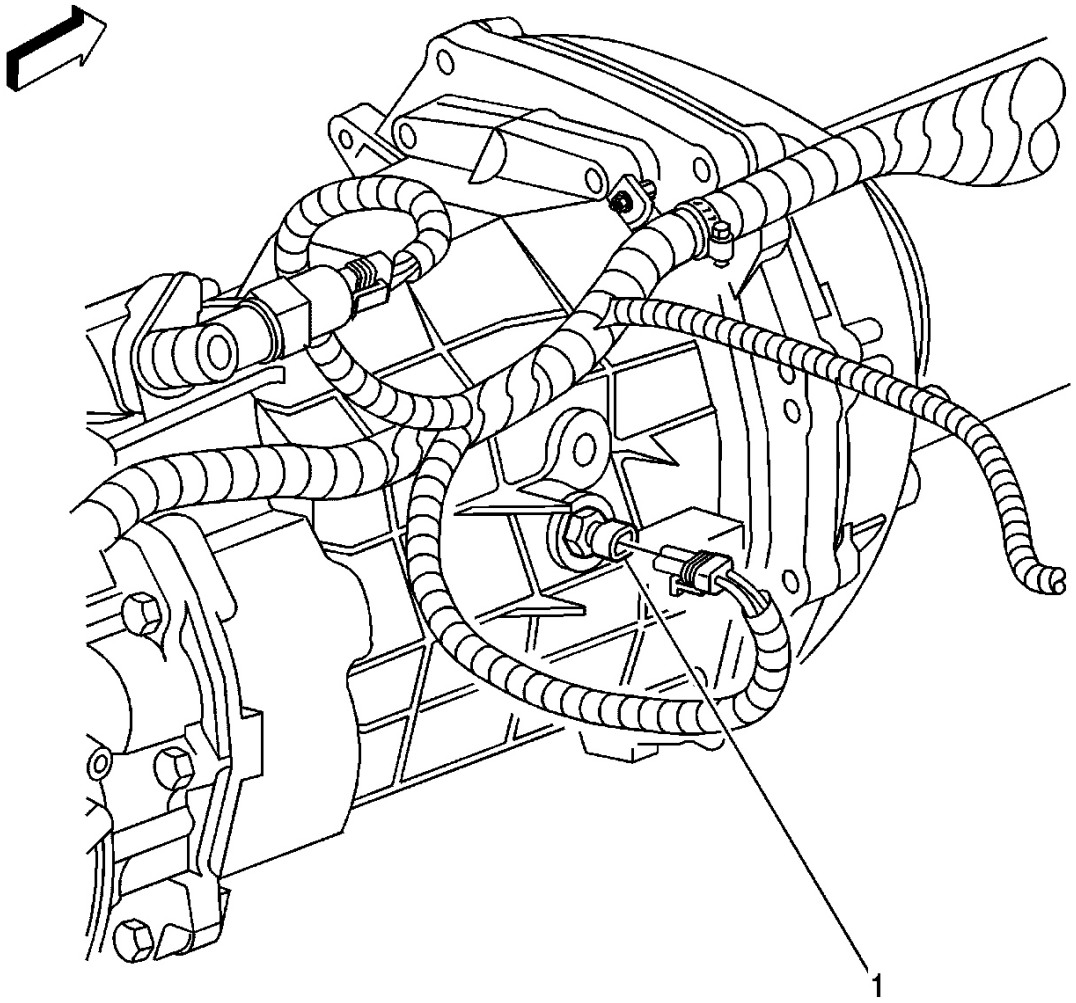

Fig. 35: Right Side Of The Transmission Component View
Courtesy of GENERAL MOTORS CORP.

Callouts For Fig. 35

Callout	Component Name
1	Backup Lamp Switch

LIGHTING SYSTEMS CONNECTOR END VIEWS

Ambient Light Sensor Terminal Identification

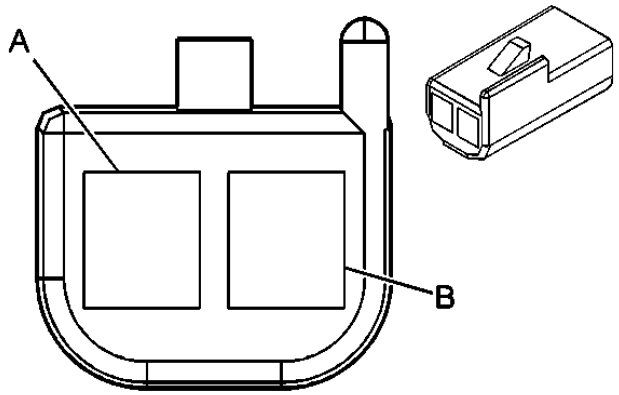

Connector Part Information		• 12047662 • 2-Way F Metri-Pack 150 Series (BLK)	
Pin	**Wire Color**	**Circuit No.**	**Function**
A	YEL/BLK	1138	DRL Ambient Light Sensor Low Reference
B	LT GRN/BLK	1137	DRL Ambient Light Sensor Signal

Backup Lamp Switch Terminal Identification

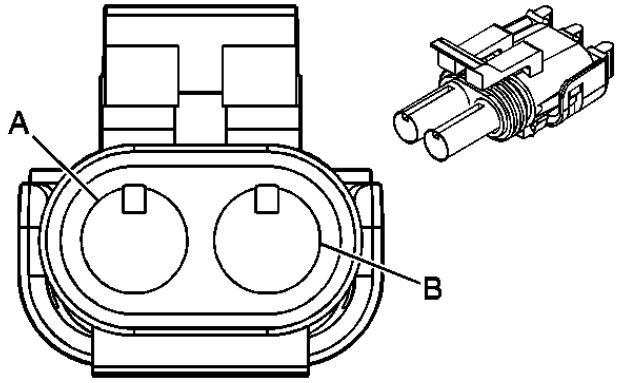

Connector Part Information		• 12103584 • 2-Way M Weather Pack (BRN)	
Pin	**Wire Color**	**Circuit No.**	**Function**
A	BRN	341	Ignition 3 Voltage
B	GRY	1524	Backup Lamp Relay Control

Backup Lamp Terminal Identification - Left (Domestic/Japan)

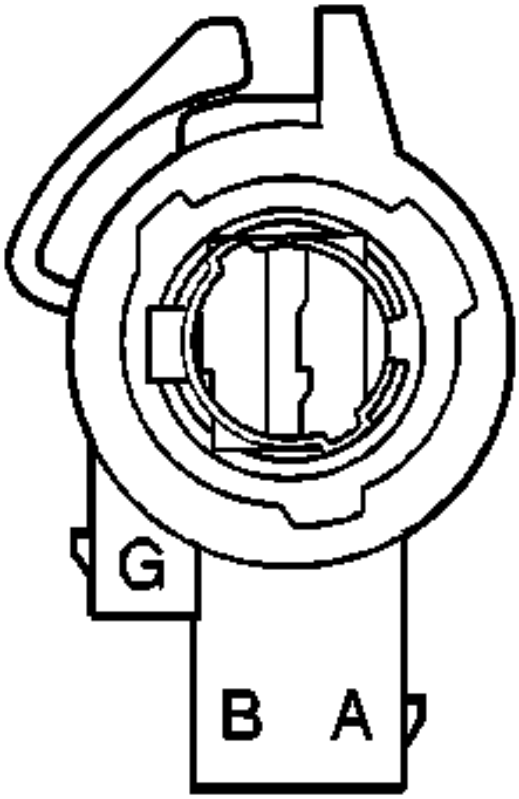

Connector Part Information		• R12160391 • 3-Way Lamp Socket Bulb Bases Type C-2 (MD GRY)	
Pin	**Wire Color**	**Circuit No.**	**Function**
A	LT GRN	24	Backup Lamp Supply Voltage
B	-	-	Not Used
G	BLK	150	Ground

Backup Lamp Terminal Identification - Left (Europe)

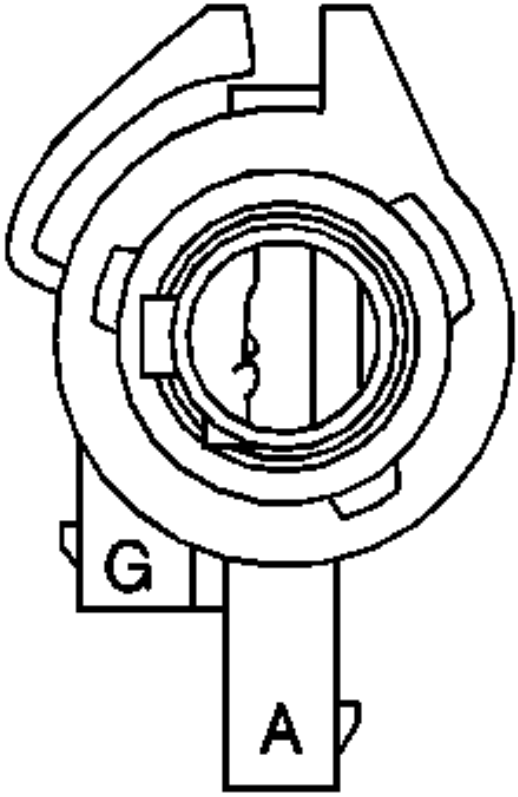

Connector Part Information		• R12160385 • 2-Way Lamp Socket Type B1 Right Angle (LT GRY)	
Pin	**Wire Color**	**Circuit No.**	**Function**
A	LT GRN	24	Backup Lamp Supply Voltage
G	BLK	150	Ground

Backup Lamp Terminal Identification - Right (Domestic/Japan)

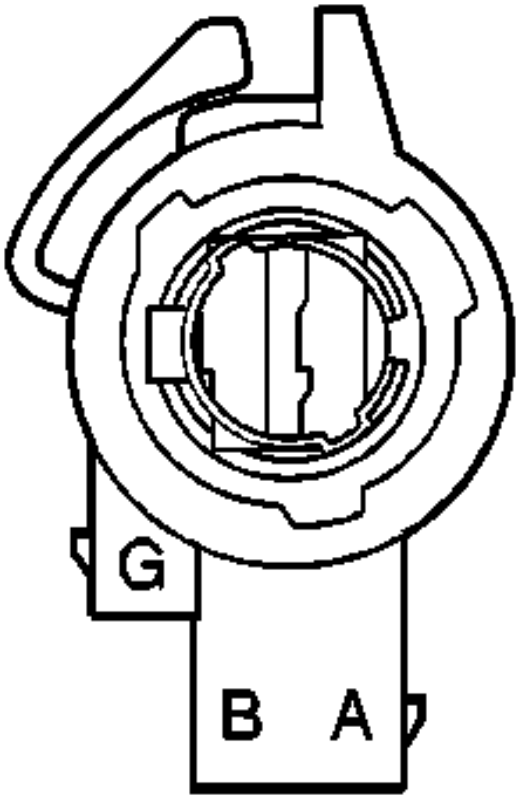

Connector Part Information		• R12160391 • 3-Way Lamp Socket Bulb Bases Type C-2 (MD GRY)	
Pin	**Wire Color**	**Circuit No.**	**Function**
A	LT GRN	24	Backup Lamp Supply Voltage
B	-	-	Not Used
G	BLK	150	Ground

Backup Lamp Terminal Identification - Right (Europe)

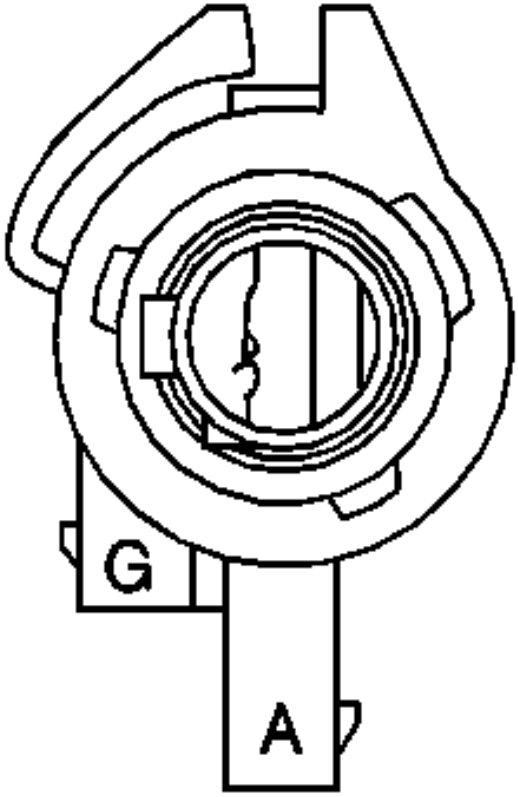

Connector Part Information		• R12160385 • 2-Way Lamp Socket Type B1 Right Angle (LT GRY)	
Pin	**Wire Color**	**Circuit No.**	**Function**
A	LT GRN	24	Backup Lamp Supply Voltage
G	BLK	150	Ground

Center High Mounted Stop Lamp Terminal Identification (CHMSL)

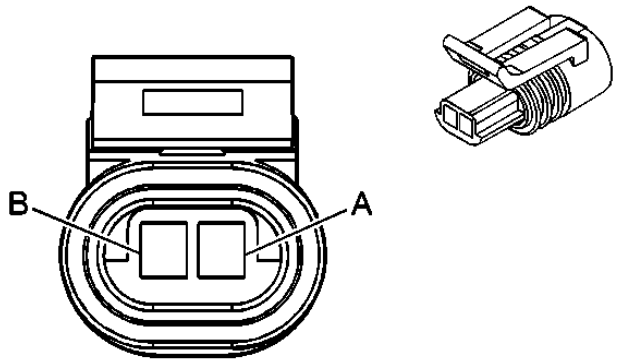

Connector Part Information		• 12162192 • 2-Way F Metri Pack 150.2 Series (BLK)	
Pin	**Wire Color**	**Circuit No.**	**Function**
A	YEL	820	CHMSL Supply Voltage
B	BLK	150	Ground

Fog Lamp/Rear Compartment Lid Release Switch Terminal Identification (Domestic)

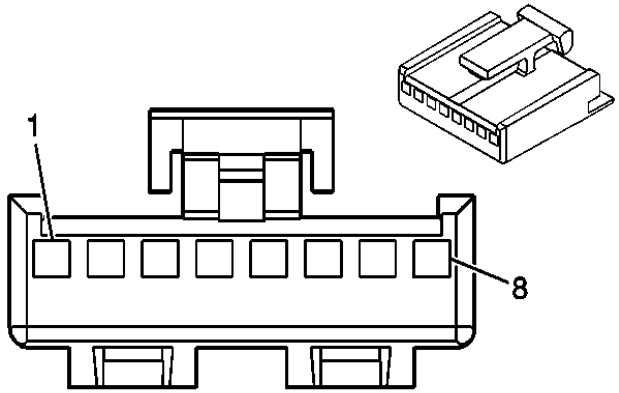

Connector Part Information		• 12052444 • 8-Way F Micro-Pack 100 Series (BLK)	
Pin	**Wire Color**	**Circuit No.**	**Function**
1	ORN	2840	Battery Positive Voltage
2	ORN/BLK	192	Front Fog Lamp Switch Signal
3	YEL	183	Front Fog Lamp Indicator Control
4	-	-	Not Used

5	PPL	34	Fog Lamps Supply Voltage
6	BLK	1576	Trunk Release Switch Signal
7	BRN	9	Park Lamp Supply Voltage
8	WHT	717	Illuminated Display Signal

Fog Lamp Switch Terminal Identification (Export)

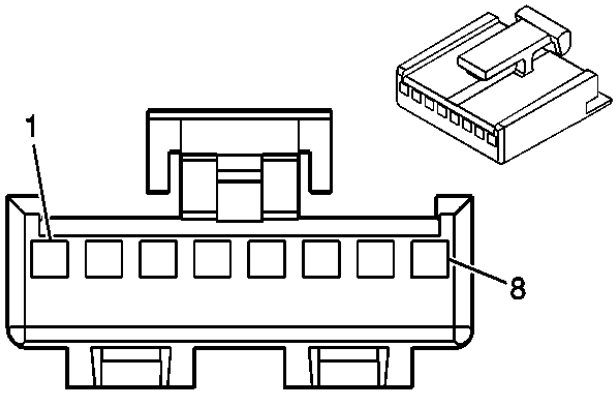

Connector Part Information		• **12052444** • **8-Way F Micro-Pack 100 Series (BLK)**	
Pin	**Wire Color**	**Circuit No.**	**Function**
1	ORN	2840	Battery Positive Voltage
2	ORN/BLK	192	Front Fog Lamp Switch Signal
3	YEL	183	Front Fog Lamp Indicator Control
4	RED	122	Rear Fog Lamp Supply Voltage
5	PPL	34	Fog Lamps Supply Voltage
6	LT BLU	187	Rear Fog Lamp Switch Signal
7	BRN	9	Park Lamp Supply Voltage
8	WHT	717	Illuminated Display Signal

Fog Lamp Terminal Identification - LF (Domestic)

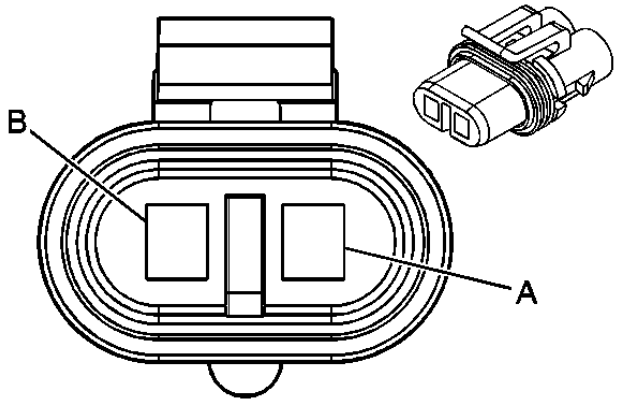

Connector Part Information		• 12020599 • 2-Way F Metri-Pack 280 Series (BLK)	
Pin	**Wire Color**	**Circuit No.**	**Function**
A	PPL	34	Fog Lamps Supply Voltage
B	BLK	150	Ground

Fog Lamp Terminal Identification - LF (Export)

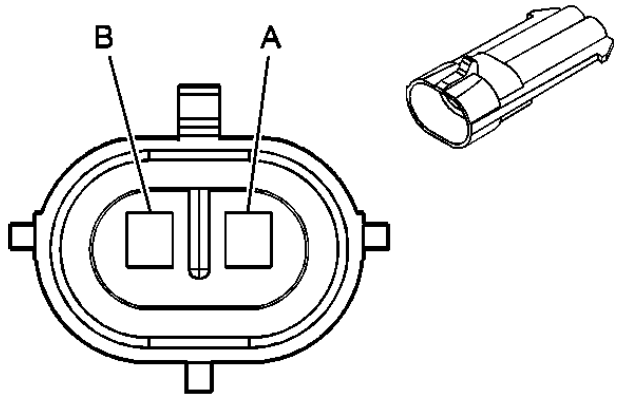

Connector Part Information		• 12162000 • 2-Way M Metri-Pack 150 Series (BLK)	
Pin	**Wire Color**	**Circuit No.**	**Function**
A	PPL	34	Fog Lamps Supply Voltage
B	BLK	150	Ground

Fog Lamp Terminal Identification - RF (Domestic)

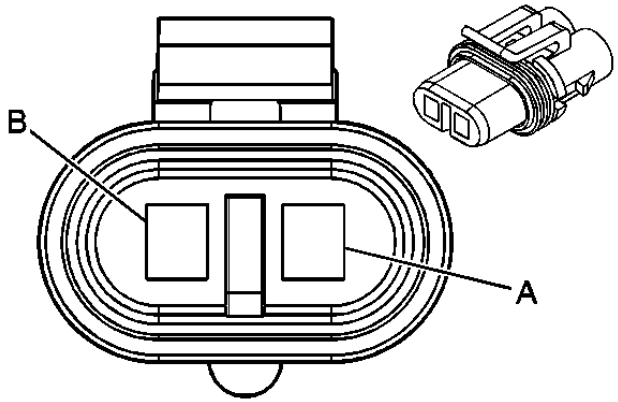

Connector Part Information		• 12020599 • 2-Way F Metri-Pack 280 Series (BLK)	
Pin	**Wire Color**	**Circuit No.**	**Function**
A	PPL	34	Fog Lamp Supply Voltage
B	BLK	150	Ground

Fog Lamp Terminal Identification - RF (Export)

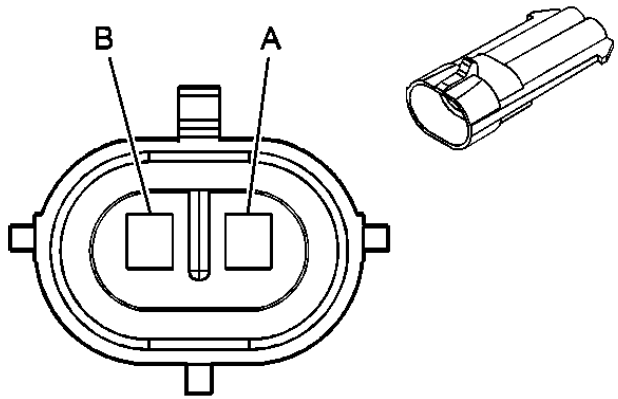

Connector Part Information		• 12162000 • 2-Way M Metri-Pack 150 Series (BLK)	
Pin	**Wire Color**	**Circuit No.**	**Function**
A	PPL	34	Fog Lamp Supply Voltage
B	BLK	150	Ground

Fog Lamp Terminal Identification - LR (Europe)

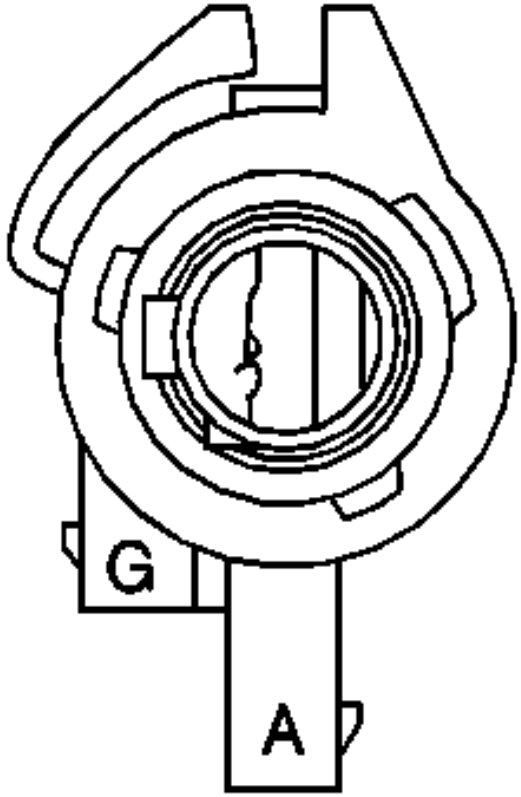

Connector Part Information		• R12160385 • 2-Way Lamp Socket Type B-1 Right Angle (LT GRY)	
Pin	**Wire Color**	**Circuit No.**	**Function**
A	RED	122	Rear Fog Lamp Supply Voltage
G	BLK	150	Ground

Fog LampTerminal Identification - RR (Europe)

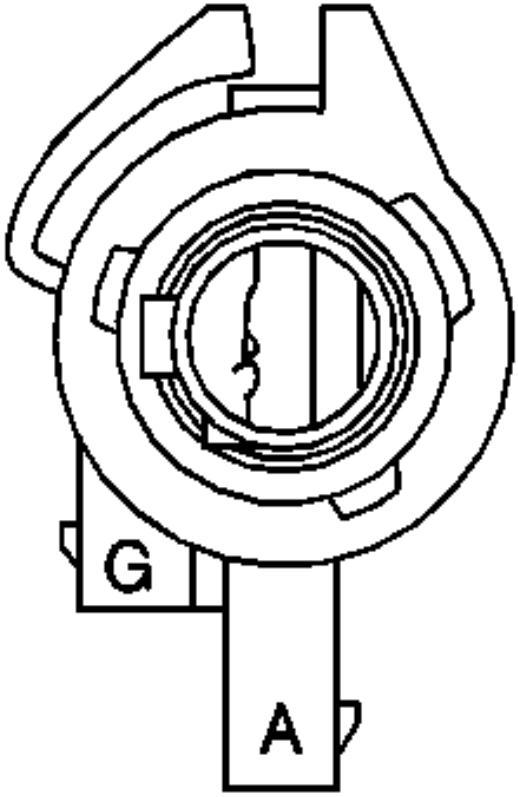

Connector Part Information		• R12160385 • 2-Way Lamp Socket Type B-1 Right Angle (LT GRY)	
Pin	**Wire Color**	**Circuit No.**	**Function**
A	RED	122	Fog Lamp Feed-Rear
G	BLK	150	Ground

Footwell Courtesy Lamp Terminal Identification - Left

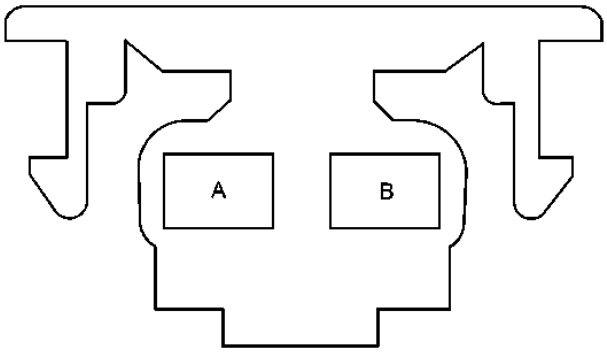

Connector Part Information		• 12162223 • 2-Way Lamp Socket Bulb Bases-Type W-2 (CLR)	
Pin	**Wire Color**	**Circuit No.**	**Function**
A -	ORN	740	Battery Positive Voltage
B	BLK	150	Ground

Footwell Courtesy Lamp Terminal Identification - Right

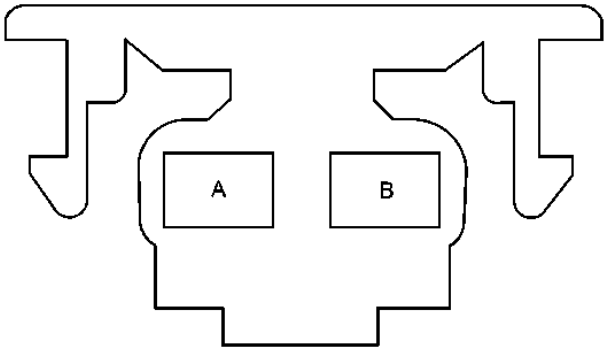

Connector Part Information		• 12162223 • 2-Way Lamp Socket Bulb Bases-Type W-2 (CLR)	
Pin	**Wire Color**	**Circuit No.**	**Function**
A -	ORN	740	Battery Positive Voltage
B	BLK	150	Ground

Hazard Switch Terminal Identification

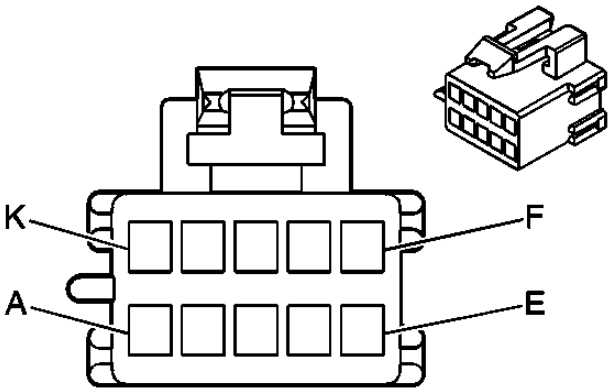

Connector Part Information		• 12064769 • 10-Way F Metri-Pack 150 Series (NAT)	
Pin	**Wire Color**	**Circuit No.**	**Function**
A	BLK	150	Ground
B	ORN	140	Battery Positive Voltage
C	PNK	1739	Ignition 1 Voltage
D	-	-	Not Used
E	GRY/BLK	1458	Instrument Panel Lamp Supply Voltage - 4
F	LT BLU	14	Left Turn Signal Status Signal
G	DK BLU	15	Right Turn Signal Status Signal
H	PPL	16	Turn Signal Flasher Signal
J	BRN	27	Hazard Flasher Signal
K	WHT	17	Stop Lamp Switch Signal (Domestic)

Headlamp Door Assembly Terminal Identification - Left

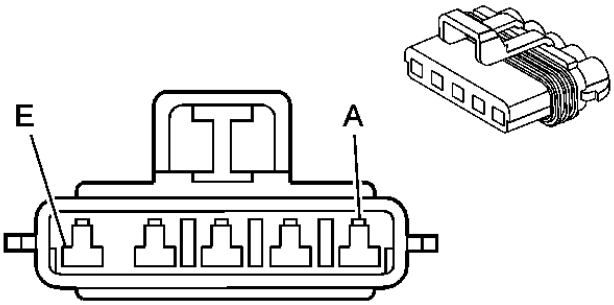

Connector Part Information		• 12084890 • 5-Way F Metri-Pack 280 Series (MD GRY)	
Pin	**Wire Color**	**Circuit No.**	**Function**
A	DK GRN	577	Left Headlamp Door Motor Down
B	LT GRN	576	Left Headlamp Door Motor Up
C	YEL	712	Left Headlamp Low Beam Supply Voltage
D	DK GRN/WHT	711	Left Headlamp High Beam Supply Voltage
E	BLK	150	Ground

Headlamp Door Assembly Terminal Identification - Right

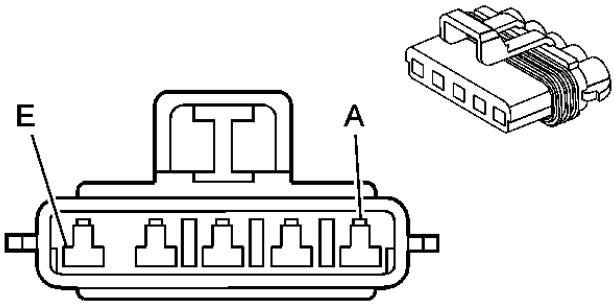

Connector Part Information		• 12084890 • 5-Way F Metri-Pack 280 Series (MD GRY)	
Pin	**Wire Color**	**Circuit No.**	**Function**
A	DK BLU	579	Right Headlamp Door Motor Down
B	LT BLU	578	Right Headlamp Door Motor Up
C	TAN/WHT	312	Right Headlamp Low Beam Supply Voltage
D	LT GRN/BLK	311	Right Headlamp High Beam Supply Voltage
E	BLK	150	Ground

Headlamp Door Control Module Terminal Identification - C1

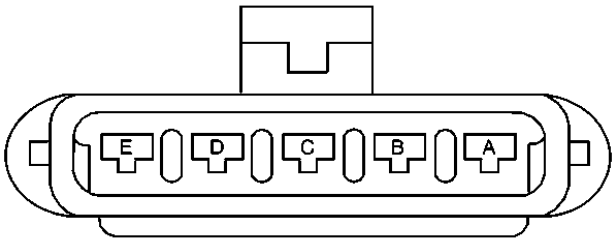

Connector Part Information		• 15300011 • 5-Way F Metri-Pack 280 Series (BLK)	
Pin	**Wire Color**	**Circuit No.**	**Function**
A	WHT	103	Headlamp Switch Headlamps On Signal
B	ORN	2940	Battery Positive Voltage
C	DK GRN	306	Headlamp Switch Headlamps Off Signal
D	BLK	150	Ground
E	ORN	3040	Battery Positive Voltage

Headlamp Door Control Module Terminal Identification - C2

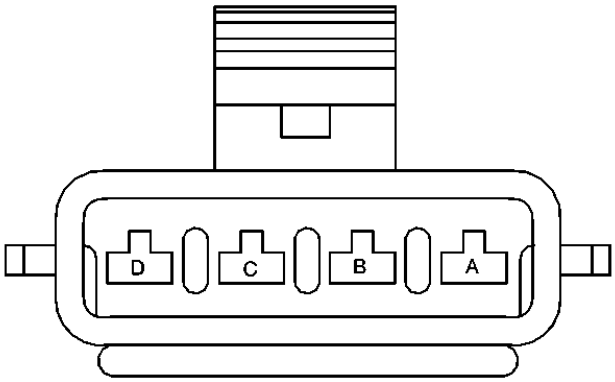

Connector Part Information		• 15300010 • 4-Way F Metri-Pack 280 Series (BLK)	
Pin	**Wire Color**	**Circuit No.**	**Function**
A	LT GRN	576	Left Headlamp Door Motor Up
B	DK GRN	577	Left Headlamp Door Motor Down
C	DK BLU	579	Right Headlamp Door Motor Down
D	LT BLU	578	Right Headlamp Door Motor Up

IP Compartment Lamp Terminal Identification

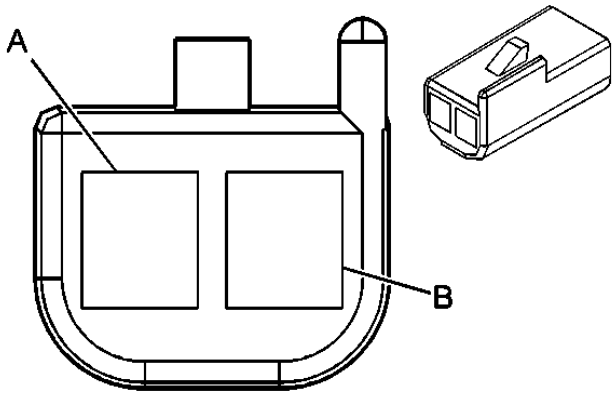

Connector Part Information		• 12047662 • 2-Way F Metri-Pack 150 Series (BLK)	
Pin	**Wire Color**	**Circuit No.**	**Function**
A	ORN	640	Battery Positive Voltage
B	BLK	150	Ground

License Lamp Terminal Identification - Left

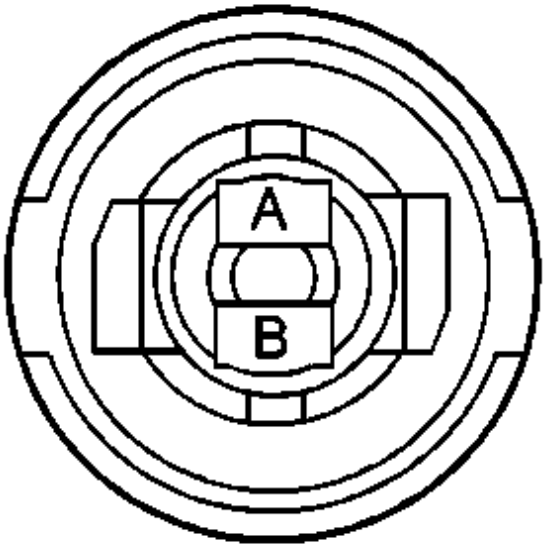

Connector Part Information		• 12146595 • 2-Way Lamp Socket Bulb Bases Type W-2 (LT GRY)	
Pin	**Wire Color**	**Circuit No.**	**Function**
A	BRN	9	Park Lamp Supply Voltage
B	BLK	150	Ground

License Lamp Terminal Identification - Right

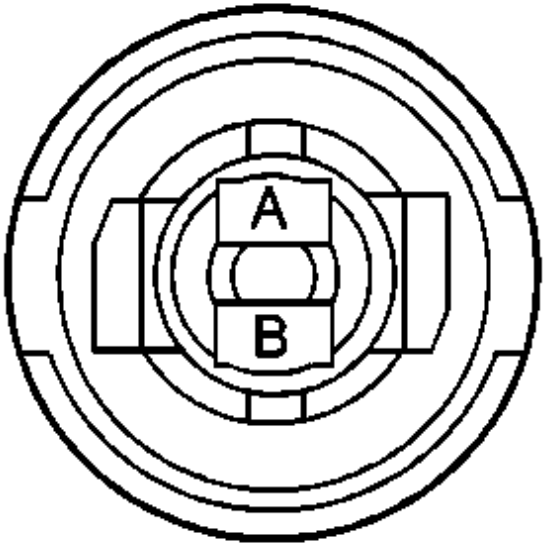

Connector Part Information		• 12146595 • 2-Way Lamp Socket Bulb Bases Type W-2 (LT GRY)	
Pin	**Wire Color**	**Circuit No.**	**Function**
A	BRN	9	Park Lamp Supply Voltage
B	BLK	150	Ground

Marker Lamp Terminal Identification - LF

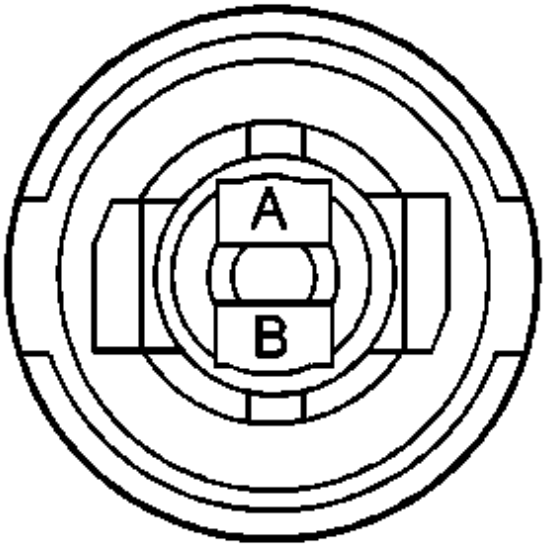

Connector Part Information		• 12146595 • 2-Way Lamp Socket Bulb Bases Type W-2 (LT GRY)	
Pin	**Wire Color**	**Circuit No.**	**Function**
A	BRN	9	Park Lamp Supply Voltage
B	BLK	150	Ground

Marker Lamp Terminal Identification - LR

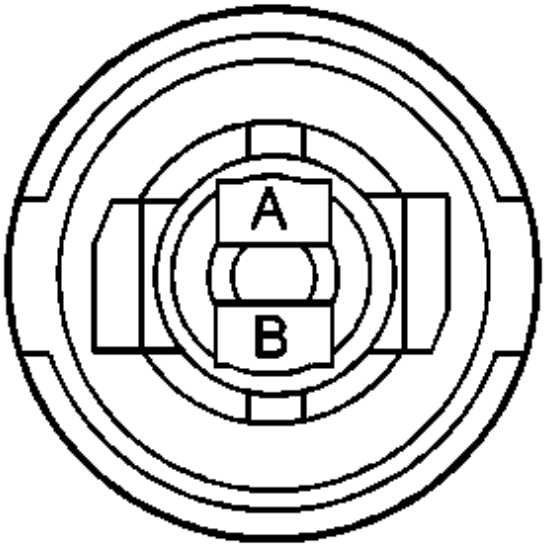

Connector Part Information		• 12146595 • 2-Way Lamp Socket Bulb Bases W-2 (LT GRY)	
Pin	**Wire Color**	**Circuit No.**	**Function**
A	BRN	9	Park Lamp Supply Voltage
B	BLK	150	Ground

Marker Lamp Terminal Identification - RF

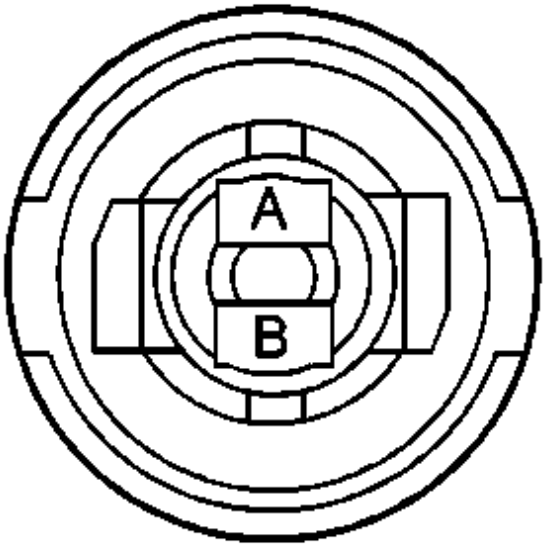

Connector Part Information		• 12146595 • 2-Way Lamp Socket Bulb Bases Type W-2 (LT GRY)	
Pin	**Wire Color**	**Circuit No.**	**Function**
A	BRN	9	Park Lamp Supply Voltage
B	BLK	150	Ground

Marker Lamp Terminal Identification - RR

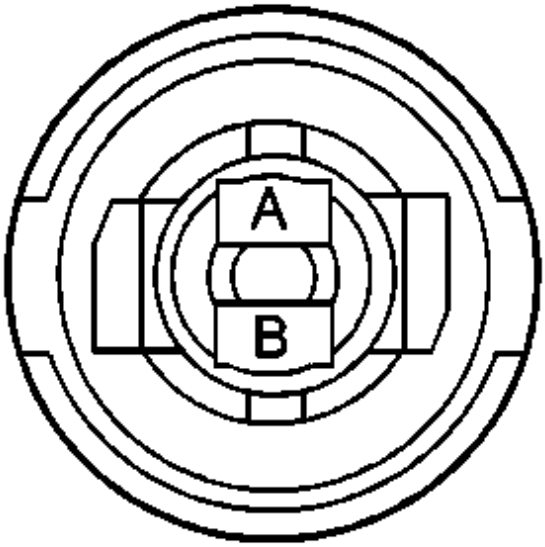

Connector Part Information		• 12146595 • 2-Way Lamp Socket Bulb Bases W-2 (LT GRY)	
Pin	**Wire Color**	**Circuit No.**	**Function**
A	BRN	9	Park Lamp Supply Voltage
B	BLK	150	Ground

Park Lamp Terminal Identification - LF (Export)

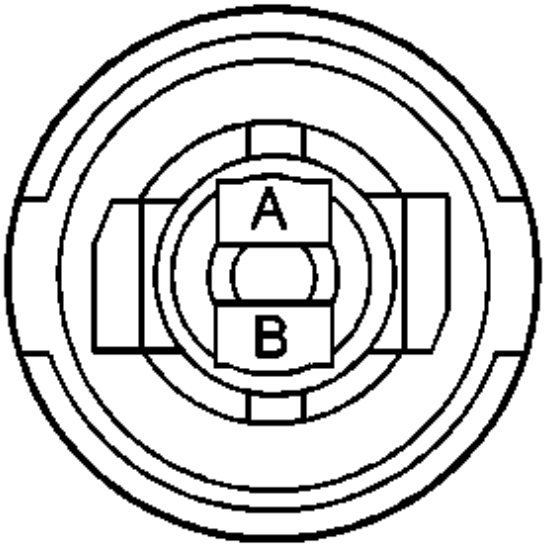

Connector Part Information		• 12146595 • 2-Way Lamp Socket Bulb Bases Type W-2 (LT GRY)	
Pin	**Wire Color**	**Circuit No.**	**Function**
A	BRN	9	Park Lamp Supply Voltage
B	BLK	150	Ground

Park Lamp Terminal Identification - RF (Export)

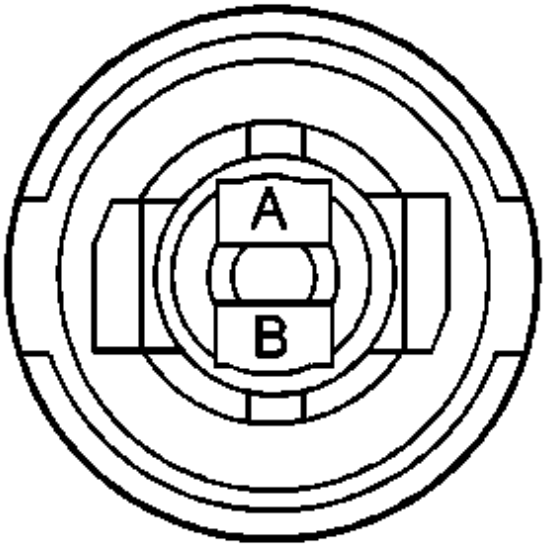

Connector Part Information		• 12146595 • 2-Way Lamp Socket Bulb Bases Type W-2 (LT GRY)	
Pin	**Wire Color**	**Circuit No.**	**Function**
A	BRN	9	Park Lamp Supply Voltage
B	BLK	150	Ground

Park/Turn Signal Lamp Terminal Identification - LF (Domestic)

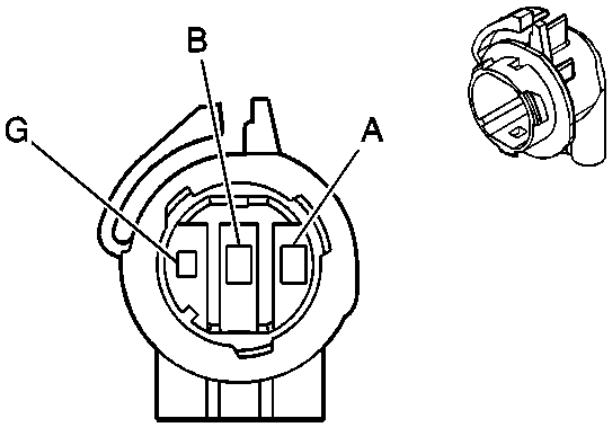

Connector Part Information		• 12160394 • 3-Way Lamp Socket Wedge Base W3 Right Angle (NAT)	
Pin	**Wire Color**	**Circuit No.**	**Function**
A	LT BLU/WHT	1314	Left Front Turn Signal Lamp Supply Voltage
B	BRN	9	Park Lamp Supply Voltage
G	BLK	150	Ground

Park/Turn Signal Lamp Terminal Identification - RF (Domestic)

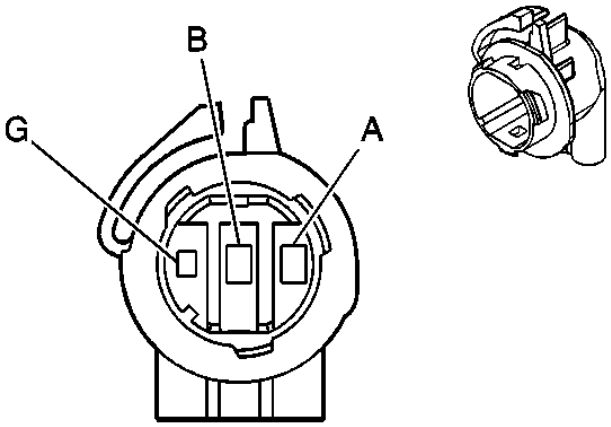

Connector Part Information		• 12160394 • 3-Way Lamp Socket Wedge Base W3 Right Angle (NAT)	
Pin	**Wire Color**	**Circuit No.**	**Function**

A	DK BLU/WHT	1315	Right Front Turn Signal Lamp Supply Voltage
B	BRN	9	Park Lamp Supply Voltage
G	BLK	150	Ground

Repeater Lamp Terminal Identification - Left (Export)

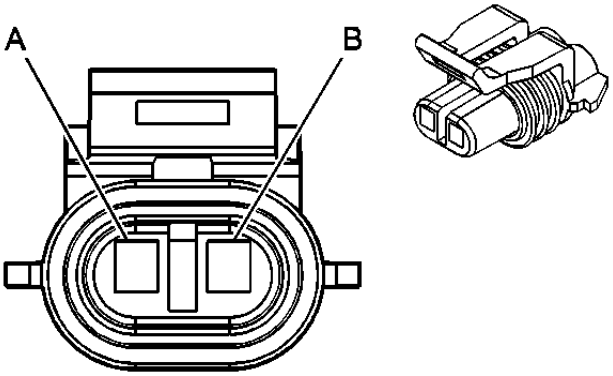

Connector Part Information		• **12052635** • **2-Way F Metri-Pack 150 Series Sealed (BLK)**	
Pin	**Wire Color**	**Circuit No.**	**Function**
A	LT BLU/WHT	1314	Left Front Turn Signal Lamp Supply Voltage
B	BLK	150	Ground

Repeater Lamp Terminal Identification - Right (Export)

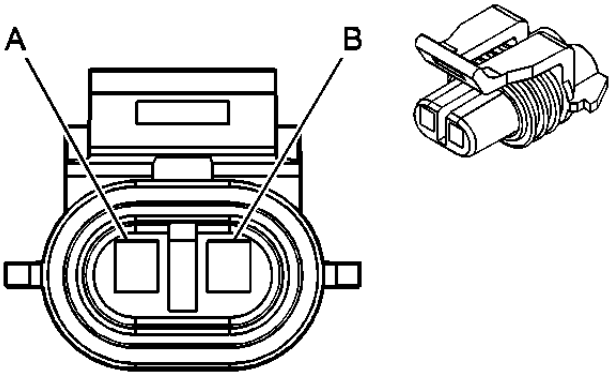

Connector Part Information		• **12052635** • **2-Way F Metri-Pack 150 Series Sealed (BLK)**	

Pin	Wire Color	Circuit No.	Function
A	DK BLU/WHT	1315	Right Front Turn Signal Lamp Supply Voltage
B	BLK	150	Ground

Rear Compartment Courtesy Lamp Terminal Identification - Left

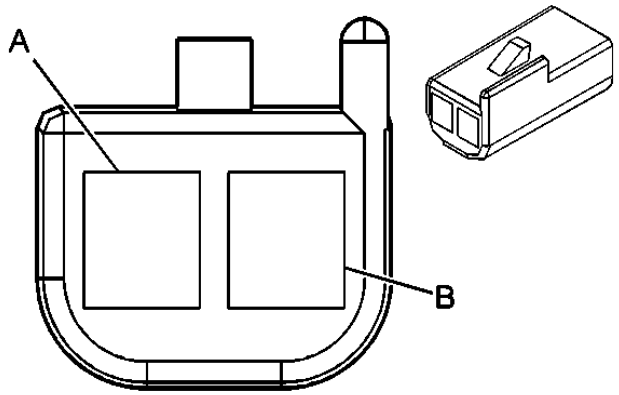

Connector Part Information		• **12047662** • **2-Way F Metri-Pack 150 Series (BLK)**	
Pin	**Wire Color**	**Circuit No.**	**Function**
A	ORN	740	Battery Positive Voltage
B	BLK	150	Ground

Rear Compartment Courtesy Lamp Terminal Identification - Right

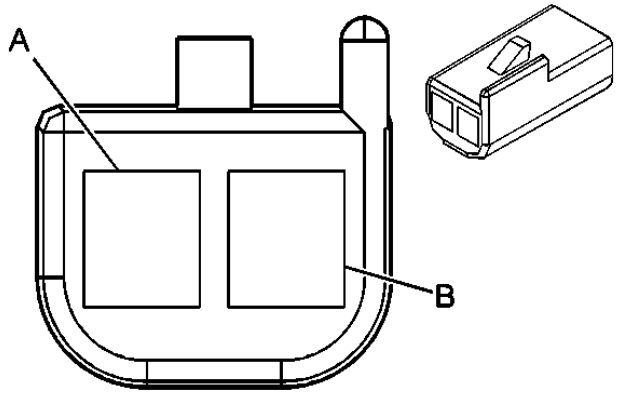

Connector Part Information	• **12047662**

		• 2-Way F Metri-Pack 150 Series (BLK)	
Pin	**Wire Color**	**Circuit No.**	**Function**
A	ORN	740	Battery Positive Voltage
B	BLK	150	Ground

Stop Lamp Switch Terminal Identification C1

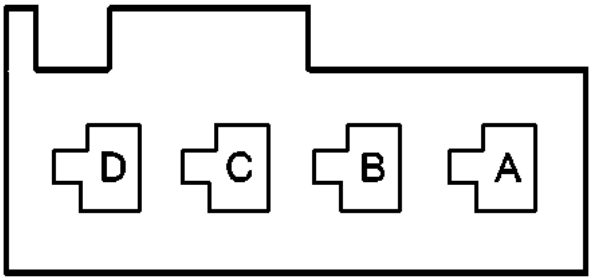

Connector Part Information		• **12033704** • **4-Way F Metri-Pack 280 Series (BLK)**	
Pin	**Wire Color**	**Circuit No.**	**Function**
A	PPL	420	TCC Brake Switch/Cruise Control Release Signal
B	PNK	339	Ignition 1 Voltage
C	GRY	847	Extended Travel Brake Switch Signal
D	PNK	339	Ignition 1 Voltage

Stop Lamp Switch Terminal Identification C2

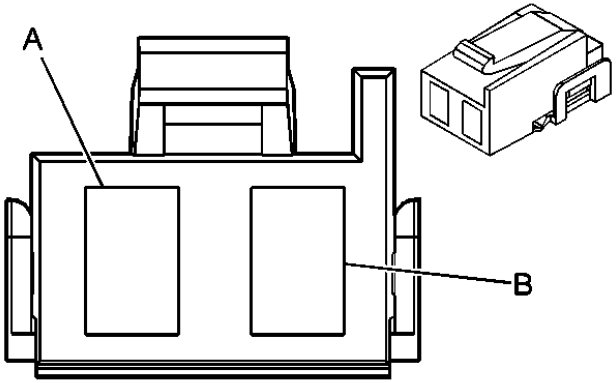

Connector Part Information		• 12033701 • 2-Way F Metri-Pack 480 Series (GRY)	
Pin	**Wire Color**	**Circuit No.**	**Function**
A	ORN	140	Battery Positive Voltage
B	WHT	17	Stop Lamp Switch Signal (Domestic)
	LT BLU	20	Stop Lamp Switch Signal

Stop Lamp Switch Terminal Identification C3

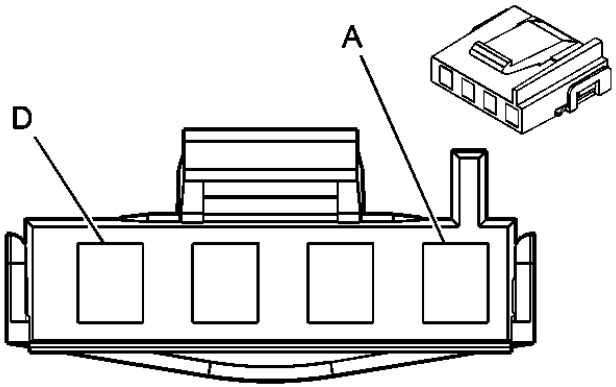

Connector Part Information		• 12033706 • 4-Way F Metri-Pack 280 Series (BLU)	
Pin	**Wire Color**	**Circuit No.**	**Function**
A	ORN/BLK	434	Neutral Safety Switch Signal
B	DK GRN/WHT	1135	A/T Shift Lock Control Solenoid Supply Voltage
C-D	-	-	Not Used

Tail/Stop Lamp Terminal Identification - Left (Export)

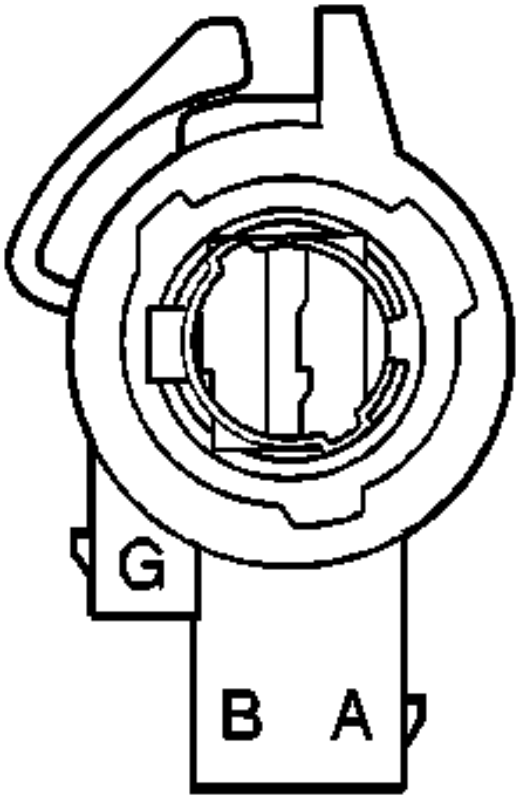

Connector Part Information		• R12160389 • 3-Way Lamp Socket Bulb Bases Type C-2 (NAT)	
Pin	**Wire Color**	**Circuit No.**	**Function**
A	YEL	820	CHMSL Supply Voltage
B	BRN	9	Park Lamp Supply Voltage
G	BLK	150	Ground

Tail/Stop Lamp Terminal Identification - Right (Export)

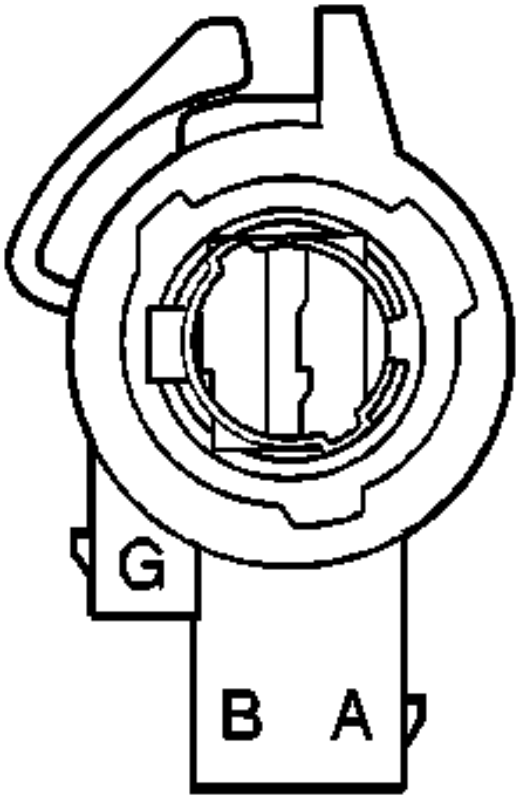

Connector Part Information		• 12160389 • 3-Way Lamp Socket Bulb Bases Type C-2 (NAT)	
Pin	**Wire Color**	**Circuit No.**	**Function**
A	YEL	820	CHMSL Supply Voltage
B	BRN	9	Park Lamp Supply Voltage
G	BLK	150	Ground

Tail/Stop and Turn Signal Lamp Terminal Identification - Left (Domestic)

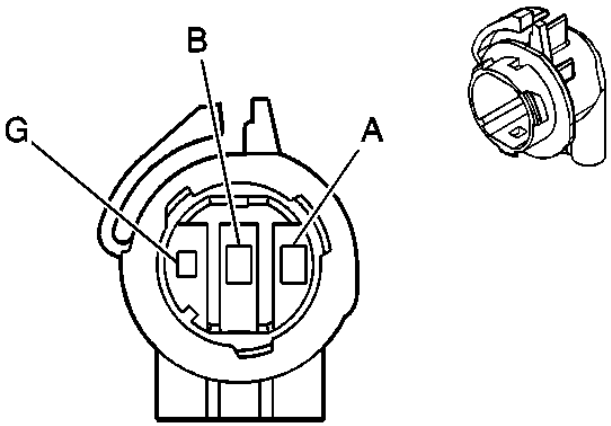

Connector Part Information		• 12160394 • 3-Way Lamp Socket Wedge Base W3 Right Angle (NAT)	
Pin	**Wire Color**	**Circuit No.**	**Function**
A	YEL	18	Left Rear Stop/Turn Lamp Supply Voltage
B	BRN	9	Park Lamp Supply Voltage
G	BLK	150	Ground

Tail/Stop and Turn Signal Lamp Terminal Identification - Right (Domestic)

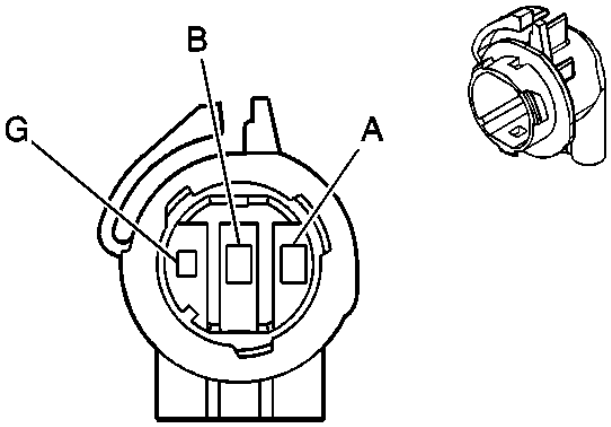

Connector Part Information		• 12160394 • 3-Way Lamp Socket Wedge Base W3 Right Angle (NAT)	
Pin	**Wire Color**	**Circuit No.**	**Function**

A	DK GRN	19	Right Rear Stop/Turn Lamp Supply Voltage
B	BRN	9	Park Lamp Supply Voltage
G	BLK	150	Ground

Turn Signal Lamp Terminal Identification - LF (Export)

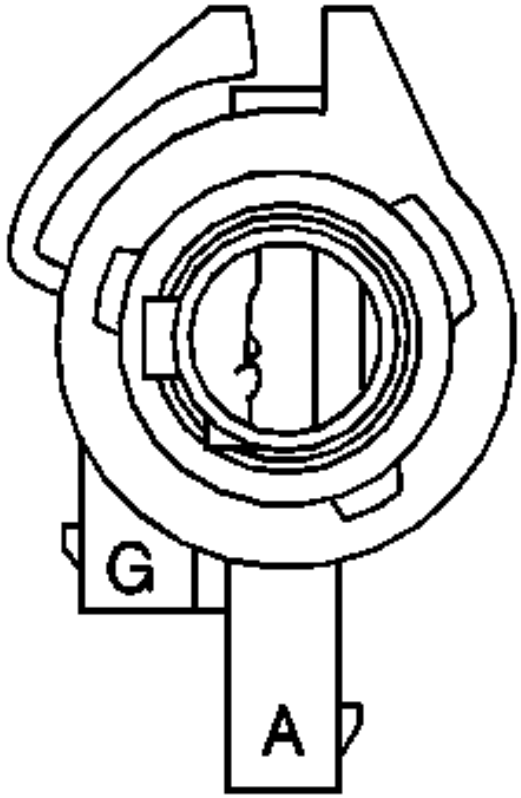

Connector Part Information		• 12160388 • 2-Way F Metri-Pack 150 Series Sealed (BLK)	
Pin	**Wire Color**	**Circuit No.**	**Function**
A	LT BLU/WHT	1314	Left Front Turn Signal Lamp Supply Voltage
G	BLK	150	Ground

Turn Signal Lamp Terminal Identification - RF (Export)

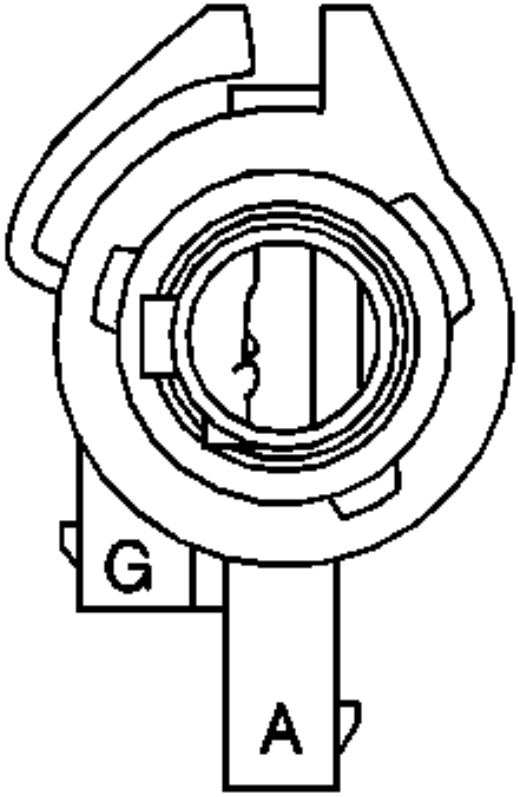

Connector Part Information		• 12160388 • 2-Way Lamp Socket Type B1 Right Angle (BRN)	
Pin	**Wire Color**	**Circuit No.**	**Function**
A	DK BLU/WHT	1315	Right Front Turn Signal Lamp Supply Voltage
G	BLK	150	Ground

Turn Signal Lamp Terminal Identification - RR (Export)

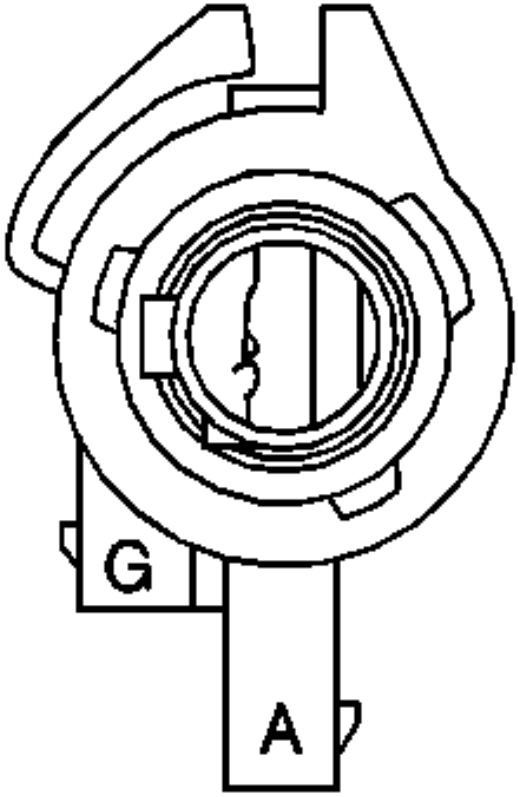

Connector Part Information		• R12160385 • 2-Way Lamp Socket Type B-1 Right Angle (LT GRY)	
Pin	**Wire Color**	**Circuit No.**	**Function**
A	DK GRN	19	Right Rear Stop/Turn Lamp Supply Voltage
G	BLK	150	Ground

Turn Signal Lamp Terminal Identification - LR (Export)

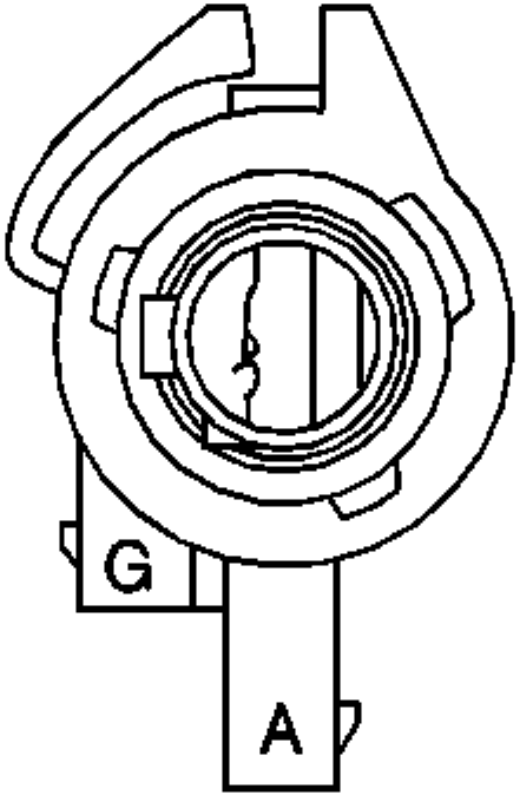

Connector Part Information		• R12160385 • 2-Way Lamp Socket Type B1 Right Angle (LT GRY)	
Pin	**Wire Color**	**Circuit No.**	**Function**
A	YEL	18	Left Rear Stop/Turn Lamp Supply Voltage
G	BLK	150	Ground

Underhood Lamp Terminal Identification

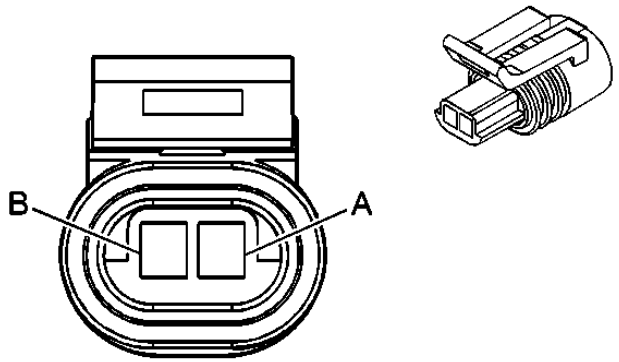

Connector Part Information		• 12162192 • 2-Way F Metri-Pack 150.2 Series (BLK)	
Pin	**Wire Color**	**Circuit No.**	**Function**
A	BLK	40	Battery Positive Voltage
B	BLK	150	Ground

Vanity Mirror Lamp Terminal Identification - Left

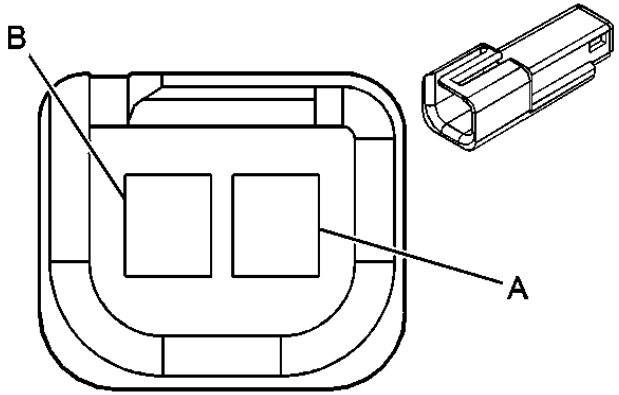

Connector Part Information		• 12047663 • 2-Way M Metri-Pack 150 Series (BLK)	
Pin	**Wire Color**	**Circuit No.**	**Function**
A	ORN	640	Battery Positive Voltage
B	BLK	150	Ground

Vanity Mirror Lamp Terminal Identification - Right

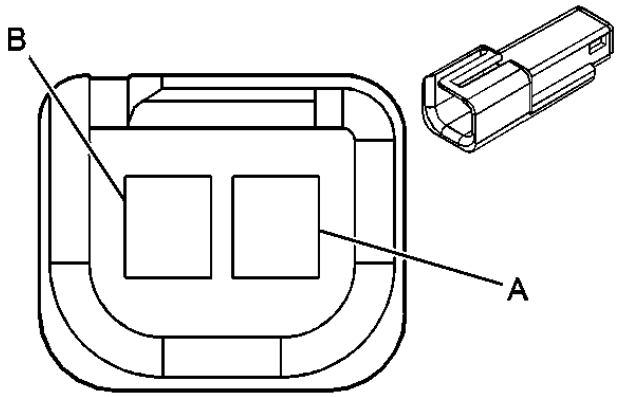

Connector Part Information		• 12047663 • 2-Way M Metri-Pack 150 Series (BLK)	
Pin	**Wire Color**	**Circuit No.**	**Function**
A	ORN	640	Battery Positive Voltage
B	BLK	150	Ground

DIAGNOSTIC INFORMATION AND PROCEDURES

DIAGNOSTIC STARTING POINT - LIGHTING SYSTEMS

Begin the system diagnosis with the **Diagnostic System Check - Lighting Systems** . The Diagnostic System Check will provide the following information:

- The identification of the control module(s) which command the system.
- The ability of the control module(s) to communicate through the serial data circuit.
- The identification of any stored diagnostic trouble codes (DTCs) and their status.

The use of the Diagnostic System Check will identify the correct procedure for diagnosing the system and where the procedure is located.

DIAGNOSTIC SYSTEM CHECK - LIGHTING SYSTEMS

Test Description

The number(s) below refer to the step number(s) on the diagnostic table.

2: Lack of communication may be due to a partial malfunction of the class 2 serial data circuit or due to a total malfunction of the class 2 serial data circuit. The specified procedure will determine the particular condition.

3: Determine if Body Control Module DTCs which may affect Lighting System operation are present.

4: The presence of DTCs which begin with "U" indicate some other module is not communicating. The specified procedure will compile all the available information before tests are performed.

Diagnostic System Check - Lighting Systems

Step	Action	Yes	No
1	Install a scan tool. Does the scan tool power up?	Go to **Step 2**	Go to **Scan Tool Does Not Power Up** in Data Link Communications

2	1. Turn ON the ignition, with the engine OFF.
	2. Attempt to establish communication with the following systems:
	  1. The body control module
	  2. The powertrain control module
	
	Does the scan tool communicate with these systems?
		Go to **Step 3**	Go to **Scan Tool Does Not Communicate with Class 2 Device** in Data Link Communications

3	1. Select the body control module display DTCs function on the scan tool. 2. Select the powertrain control module display DTCs function on the scan tool. Does the scan tool display any DTCs?	Go to **Step 4**	Go to **Symptoms - Lighting Systems**
4	Does the scan tool display any DTCs which begin with a "U"?	Go to **Scan Tool Does Not Communicate with Class 2 Device** in Data Link Communications	Go to **Step 5**
5	Does the scan tool display DTC B0605?	Go to **Diagnostic Starting Point - Body Control System** in Body Control Systems	Go to **Step 6**
6	Does the scan tool display DTC P0562 or P0563?	Go to **Diagnostic System Check - Engine Controls** in Engine Controls- 5.7 (LS1)	Go to **Diagnostic Trouble Code (DTC) List**

SCAN TOOL OUTPUT CONTROLS

Body Control Module (BCM)

Scan Tool Output Control	Additional Menu Selection(s)	Description
Backup Lamps	Light Test	Turns the backup lamps ON until commanded OFF.
Console Switch Lamp	Lamp Dimming	Turns the console lamps full bright to full dim.
DRL Headlamps	Light Test	Turns the automatic headlamps ON until commanded OFF.
DRL park lamps	Light Test	Turns the park lamps ON until commanded OFF.
Fog Lamp Tell Tale	Lamp Dimming	Turns the fog lamp indicator full bright to full dim.
Front Fog Lamps	Light Test	Turns the front fog lamps ON until commanded OFF.
Gear Indicator Lamp	Lamp Dimming	Turns the PRNDL lamps full bright to full dim.
HVAC Bulb Illumination	Lamp Dimming	Turns the HVAC control assembly full bright to full dim.
Left Turn Signal Lamp	Light Test	Turns the left turn signal lamps ON until commanded OFF.
Low IP Courtesy Lamp	Light Test	Turns the IP courtesy lamps ON until commanded OFF.
Rear Fog Lamps	Light Test	Turns the rear fog lamps ON until commanded OFF.
Right Turn Signal Lamp	Light Test	Turns the right turn signal lamps ON until commanded OFF.

SCAN TOOL DATA LIST

BCM Scan Tool Data List

Scan Tool Parameter	Data List	Units Displayed	Typical Data Value
Ignition On and Engine Off/Doors, Hatch or Trunk, and Hood Closed/No Switches On/Vehicle in Park or Neutral			
Console Switch Illumination	Data	0-100%	Varies with Dimming Level
Driver Door Ajar Switch	Input Data 2	Open/Closed	Closed
DRL Ambient Light Sensor	Data	Volts	Varies with Ambient Light Level
Fog Light Switch Illumination	Data	0-100%	Varies with Dimming Level
Front Fog Light Switch	Input Data 1	Active/Inactive	Inactive
Headlamp Off Switch	Input Data 1	Active/Inactive	Active
HVAC Bulb Illumination	Data	0-100%	Varies with Dimming Level
Inadvertent Load Monitor	Input Data 1	Active/Inactive	Active
Left Turn Monitor	Input Data 1	Active/Inactive	Inactive
Passenger Door Ajar Switch	Input Data 2	Open/Closed	Closed
PRNDL Illumination	Data	0-100%	Varies with Dimming Level
Rear Fog Light Switch	Input Data 1	Active/Inactive	Inactive

Right Turn Monitor	Input Data 1	Active/Inactive	Inactive

IPC Scan Tool Data List

Scan Tool Parameter	Data List	Units Displayed	Typical Data Value
Ignition On and Engine Off/Doors, Hatch or Trunk, and Hood Closed/No Switches On/Vehicle in Park or Neutral			
Ambient Light Sensor	Data 2	Counts	0-255
Brake Lamp	Inputs	On/Off	Off
Courtesy Switch	Inputs	Active/Inactive	Inactive
Head Lamp State	Inputs	On/Off	Off
High Beam Lamp	Inputs	On/Off	Off
Left Turn Signal	Inputs	On/Off	Off
Park Brake Switch	Inputs	Active/Inactive	Inactive
Right Turn Signal	Inputs	On/Off	Off
Switch Dimming	Data 2	Counts	0-255

LDCM Scan Tool Data List

Scan Tool Parameter	Data List	Units Displayed	Typical Data Value
Ignition On and Engine Off/Doors, Hatch or Trunk, and Hood Closed/No Switches On/Vehicle in Park or Neutral			
Door Ajar	Inputs	Closed/Ajar	Closed
Door Switch Pad Illumination	Data	0-100%	Varies with Dimming Level

RDCM Scan Tool Data List

Scan Tool Parameter	Data List	Units Displayed	Typical Data Value
Ignition On and Engine Off/Doors, Hatch or Trunk, and Hood Closed/No Switches On/Vehicle in Park or Neutral			
Door Ajar	Inputs	Closed/Ajar	Closed
Door Switch Pad Illumination	Data	0-100%	Varies with Dimming Level

SCAN TOOL DATA DEFINITIONS

BCM Scan Tool Data Definitions

The BCM Scan Tool Data Definitions contains a brief description of all Lighting System related BCM parameters available on the scan tool.

Data

Console Switch Illumination

The scan tool displays 0-100%. The illumination percentage varies based upon the dimming switch information sent by the IPC on the serial data line. When the dimming switch is rotated to bright, the

console switch illumination percentage will increase. When the dimming switch is rotated to dim, console switch illumination percentage will decrease. The headlamps or parklamps must be ON to read console illumination data.

DRL Ambient Light Sensor

The scan tool displays 0-5.0 volts. The voltage level varies based upon the ambient light level at the sensor. When light levels are high (Light), voltage will increase. When light levels are low (Dark), voltage will decrease. The BCM uses this information for automatic headlamp operation.

Fog Light Illumination

The scan tool displays 0-100%. The illumination percentage varies based upon the dimming switch information sent by the IPC on the serial data line. When the dimming switch is rotated to bright, the fog light switch illumination percentage will increase. When the dimming switch is rotated to dim, fog light switch illumination percentage will decrease. The headlamps or parklamps must be ON to read fog light illumination data.

HVAC Bulb Illumination

The scan tool displays 0-100%. The illumination percentage varies based upon the dimming switch information sent by the IPC on the serial data line. When the dimming switch is rotated to bright, the HVAC illumination percentage will increase. When the dimming switch is rotated to dim, HVAC illumination percentage will decrease. The headlamps or parklamps must be ON to read HVAC illumination data.

PRNDL Illumination

The scan tool displays 0-100%. The illumination percentage varies based upon the dimming switch information sent by the IPC on the serial data line. When the dimming switch is rotated to bright, the PRNDL illumination percentage will increase. When the dimming switch is rotated to dim, PRNDL illumination percentage will decrease. The headlamps or parklamps must be ON to read PRNDL illumination data.

Input Data 1

Backup Light Request

The scan tool displays Active or Inactive. When the BCM energizes the backup light relay, the scan tool will display Active. When the BCM de-energizes the backup light relay, the scan tool will display Inactive.

Front Fog Light Switch

The scan tool displays Active or Inactive. When the front fog light switch is pressed, the scan tool will display Active. When the switch is released, the scan tool displays Inactive.

Headlamp Off Switch

The scan tool displays Active or Inactive. When the headlamps are OFF, the scan tool will display Active. When the headlamps are ON, the scan tool displays Inactive.

Inadvertent Load Monitor

The scan tool displays active or inactive. When the BCM energizes the inadvertent load monitor relay the scan tool will display active. When the BCM de-energizes the inadvertent load monitor relay the scan tool will display inactive. The inadvertent load monitor system is used for battery run down protection. The BCM removes battery voltage to accessories that were left on by de-energizing the monitored load relay.

Left Turn Monitor

The scan tool displays Active or Inactive. When the BCM detects the left turn signal is ON, the scan tool will display Active. When the BCM detects the left turn signal is OFF, the scan tool will display Inactive.

Left Turn Signal Relay

The scan tool displays Active or Inactive. When the BCM energizes the left DRL relay, the scan tool will display Active. When the BCM de-energizes the left DRL relay, the scan tool will display Inactive.

Rear Fog Light Switch

The scan tool displays Active or Inactive. When the rear fog light switch is pressed, the scan tool will display Active. When the switch is released, the scan tool displays Inactive.

Right Turn Monitor

The scan tool displays Active or Inactive. When the BCM detects the right turn signal is ON, the scan tool will display Active. When the BCM detects the right turn signal is OFF, the scan tool will display Inactive.

Right Turn Signal Relay

The scan tool displays Active or Inactive. When the BCM energizes the right DRL relay, the scan tool will display Active. When the BCM de-energizes the right DRL relay, the scan tool will display Inactive.

Input Data 2

Driver Door Ajar Switch

The scan tool displays Open or Closed. When the driver door is open, the scan tool will display Open. When the driver door is closed, the scan tool displays Closed.

Passenger Door Ajar Switch

The scan tool displays Open or Closed. When the passenger door is open, the scan tool will display Open. When the passenger door is closed, the scan tool displays Closed.

IPC Scan Tool Data Definitions

The IPC Scan Tool Data Definitions contains a brief description of all Lighting System related IPC parameters available on the scan tool.

Data 2

Ambient Light Sensor

The scan tool displays 0-255 counts. The counts vary based upon the ambient light level at the sensor. When the ambient light level is high the counts will increase. When the ambient light level is low the counts will decrease. The IPC uses this information for interior light dimming operation.

Switch Dimming

The scan tool displays 0-255 counts. The switch dimming counts vary based upon the dimming switch position and ambient light level information. When the dimming switch is rotated to bright, the switch dimming counts will increase. When the dimming switch is rotated to dim, the switch dimming counts will decrease. The headlamps or parklamps must be on to read this data.

Inputs

Brake Lamp

The scan tool displays ON or OFF. When the brake lamps are ON, the scan tool displays ON. When the brake lamps are OFF, the scan tool displays OFF.

Courtesy Switch

The scan tool displays Active or Inactive. When the courtesy light switch is ON, the scan tool displays Active. When the courtesy light switch is OFF, the scan tool displays Inactive.

Head Lamp State

The scan tool displays ON or OFF. When the multifunction switch is turned to headlamps ON the scan tool displays ON. When the multifunction switch is turned to headlamps OFF the scan tool displays OFF.

High Beam Lamp

The scan tool displays ON or OFF. When the multifunction switch is turned to headlamps ON and in the high beam position, the scan tool will display ON. When the high beam lamps or the headlamps are turned OFF, the scan tool displays OFF.

Left Turn Signal

The scan tool displays ON or OFF. When the multifunction switch is turned to the left turn signal position the scan tool displays ON. When the left turn signal is turned OFF the scan tool displays OFF.

Park Brake Switch

The scan tool displays Active or Inactive. When the park brake is applied, the scan tool displays active. When the park brake is OFF, the scan tool displays inactive.

Right Turn Signal

The scan tool displays ON or OFF. When the multifunction switch is turned to the right turn signal position the scan tool displays ON. When the right turn signal is turned OFF the scan tool displays OFF.

LDCM Scan Tool Data Definitions

The LDCM Scan Tool Data Definitions contains a brief description of all Lighting System related LDCM parameters available on the scan tool.

Data

Door Switch Pad Illumination

The scan tool displays 0-100%. The illumination percentage varies based upon the dimming switch information sent by the IPC on the serial data line. When the headlamps or parklamps are ON, and the dimming switch is rotated to bright, the LH door switch illumination percentage will increase. When the dimming switch is rotated to dim the LH door switch illumination percentage will decrease.

Inputs

Door Ajar

The scan tool displays Closed or Ajar. When the driver door is open the scan tool displays Ajar. When the driver door is closed the scan tool displays closed.

RDCM Scan Tool Data Definitions

The RDCM Scan Tool Data Definitions contains a brief description of all Lighting System related RDCM parameters available on the scan tool.

Data

Door Switch Pad Illumination

The scan tool displays 0-100%. The illumination percentage varies based upon the dimming switch information sent by the IPC on the serial data line. When the headlamps or parklamps are ON, and the dimming switch is rotated to bright, the RH door switch illumination percentage will increase. When the dimming switch is rotated to dim the RH door switch illumination percentage will decrease.

Inputs

Door Ajar

The scan tool displays Closed or Ajar. When the passenger door is open the scan tool displays Ajar. When the passenger door is closed the scan tool displays closed.

DIAGNOSTIC TROUBLE CODE (DTC) LIST

Diagnostic Trouble Code (DTC) List

Description	Module
DTC B0502	BCM
DTC B0503	BCM
DTC B0507	BCM
DTC B0508	BCM
DTC B2403	BCM
DTC B2408	BCM
DTC B2482	BCM
DTC B2483	BCM
DTC B2578	BCM
DTC B2583	BCM
DTC B2647	BCM
DTC B2648	BCM
DTC C1294 in Antilock Brakes	EBTCM
DTC C1295 in Antilock Brakes	EBTCM

DTC B0502

Circuit Description

The BCM provides control for the R DRL relay circuit. The BCM grounds the R DRL relay control circuit in order to energize the R DRL relay and turn ON the RF turn signal. This allows the RF turn signal to be used for DRL, UTD, and approach lighting functions. The BCM monitors the voltage level on the R DRL relay control circuit. When the BCM commands the relay ON, the voltage level on the R DRL relay control circuit should be low. When the relay is OFF, the voltage on the R DRL relay control circuit should be high. If the BCM detects a voltage level other than expected, a malfunction is present and a DTC will set.

Conditions for Setting the DTC

- The BCM detects a low voltage level (an open or a short to ground) in the R DRL relay control circuit.
- The BCM can only test for this condition with the R DRL relay de-energized.
- This condition must be present for 2 seconds.

Action Taken When the DTC Sets

Stores a DTC B0502 in the BCM memory.

Conditions for Clearing the DTC

- This DTC requires an ignition cycle in order to change from current to history.
- The BCM no longer detects a low voltage level in the R DRL relay control circuit only with the R DRL relay de-energized.
- A history DTC will clear after 50 consecutive ignition cycles if the condition for the malfunction is no longer present.
- Use the IPC clearing DTCs feature.
- The BCM receives the Clear Code command from the scan tool.

Diagnostic Aids

- The following conditions may cause an intermittent malfunction:
  - There is an intermittent open or short to ground in the R DRL relay control circuit.
  - There is high resistance in the relay coil.
  - There are poor connections at the BCM, the I/P fuse block, or the R DRL relay terminals.
  - The R DRL relay is shorted or open internally.
- If the R DRL relay control circuit is shorted to ground, the R DRL will remain ON at all times and the RH turn signal will not flash. If the R DRL relay control circuit is open, the R DRL will remain OFF at all times, but the RH turn signal will still function normally.
- If the DTC is a history DTC, the problem may be intermittent. Perform the tests shown while moving related wiring and connectors. This can often cause the malfunction to occur. Refer to **Testing for Intermittent Conditions and Poor Connections** in Wiring Systems.

Test Description

The number(s) below refer to the step number(s) on the diagnostic table.

2: Listen for an audible click when the R DRL relay operates. Command both the ON and OFF states. Repeat the commands as necessary.

3: Tests for voltage at the coil side of the R DRL relay. The APPROACH fuse supplies power to the coil side of the R DRL relay.

4: Verifies that the BCM is providing ground to the R DRL relay.

5: Tests if ground is constantly being applied to the R DRL relay.

6: Tests for an open in the R DRL control circuit.

DTC B0502

Step	Action	Yes	No
Schematic Reference:Headlights/Daytime Running Lights (DRL) Schematics **Connector End View Reference:Master Electrical Component List**			
	Did you perform the Lighting Systems Diagnostic System		Go to **Diagnostic**

1	Check?	Go to **Step 2**	**System Check - Lighting Systems**
2	1. Install a scan tool. 2. Turn ON the ignition, with the engine OFF. 3. With a scan tool, command the R DRL relay ON and OFF. Does the R DRL relay turn ON and OFF with each command?	Go to Diagnostic Aids	Go to **Step 3**
3	1. Turn OFF the ignition. 2. Disconnect the R DRL relay. 3. Turn ON the ignition, with the engine OFF. 4. Probe the coil side supply circuit of the R DRL relay with a test lamp that is connected to a ground. Refer to **Power Distribution Schematics** in Wiring Systems for electrical center circuit identification. Does the test lamp illuminate?	Go to **Step 4**	Go to **Step 10**
4	1. Connect a test lamp between the control circuit of the R DRL relay and the coil side supply circuit of the R DRL relay. Refer to **Power Distribution Schematics** in Wiring Systems for electrical center circuit identification. 2. With a scan tool, command the R DRL relay ON and OFF. Does the test lamp turn ON and OFF with each command?	Go to **Step 8**	Go to **Step 5**
5	Does the test lamp remain illuminated with each command?	Go to **Step 7**	Go to **Step 6**
6	Test the control circuit of the R DRL relay for an open. Refer to **Circuit Testing** and **Wiring Repairs** in Wiring Systems. Did you find and correct the condition?	Go to **Step 13**	Go to **Step 9**
7	Test the control circuit of the R DRL relay for a short to ground. Refer to **Circuit Testing** and **Wiring Repairs** in Wiring Systems. Did you find and correct the condition?	Go to **Step 13**	Go to **Step 9**
8	Inspect for poor connections at the R DRL relay. Refer to **Testing for Intermittent Conditions and Poor Connections** and **Connector Repairs** in Wiring Systems. Did you find and correct the condition?	Go to **Step 13**	Go to **Step 11**
9	Inspect for poor connections at the harness connector of the BCM. Refer to **Testing for Intermittent Conditions and Poor Connections** and **Connector Repairs** in Wiring Systems. Did you find and correct the condition?	Go to **Step 13**	Go to **Step 12**
10	Repair the poor connection, an open or short to ground in the coil side supply circuit of the R DRL relay. Refer to **Wiring**		-

	Repairs in Wiring Systems. Did you complete the repair?	Go to **Step 13**	
11	Replace the R DRL relay. Refer to **Relay Replacement (Within an Electrical Center)** or **Relay Replacement (Attached to Wire Harness)** in Wiring Systems. Did you complete the replacement?	Go to **Step 13**	-
12	**IMPORTANT:** **Perform the BCM reprogram procedure. Refer to Body Control Module (BCM) Programming/RPO Configuration in Body Control System.** Replace the BCM. Refer to **Body Control Module Replacement** in Body Control System.Did you complete the replacement?	Go to **Step 13**	-
13	1. Use the scan tool in order to clear the DTCs. 2. Operate the vehicle within the Conditions for Setting the DTC as specified in the supporting text. Does the DTC reset?	Go to **Step 2**	System OK

DTC B0503

Circuit Description

The BCM provides control for the R DRL relay circuit. The BCM grounds the R DRL relay control circuit in order to energize the R DRL relay and turn ON the RF turn signal. This allows the RF turn signal to be used for DRL, UTD, and approach lighting functions. The BCM monitors the voltage level on the R DRL relay control circuit. When the BCM commands the relay ON, the voltage level on the R DRL relay control circuit should be low. When the relay is OFF, the voltage on the R DRL relay control circuit should be high. If the BCM detects a voltage level other than expected, a malfunction is present and a DTC will set.

Conditions for Setting the DTC

- The BCM detects a high voltage level (a short to battery positive voltage or BCM open internally) in the R DRL relay control circuit.
- The BCM can only test for this condition with the R DRL relay energized.
- This condition must be present for 2 seconds.

Action Taken When the DTC Sets

Stores a DTC B0503 in the BCM memory.

Conditions for Clearing the DTC

- This DTC requires an ignition cycle in order to change from current to history.

- The BCM no longer detects a high voltage level in the R DRL relay control circuit only with the R DRL relay energized.
- A history DTC will clear after 50 consecutive ignition cycles if the condition for the malfunction is no longer present.
- Use the IPC clearing DTCs feature.
- The BCM receives the Clear Code command from the scan tool.

Diagnostic Aids

- The following conditions may cause an intermittent malfunction:
  - There is an intermittent open or short to voltage in the R DRL relay control circuit.
  - There is low resistance in the relay coil.
  - There are poor connections at the BCM, the I/P fuse block, or the R DRL relay terminals.
  - The R DRL relay is shorted to voltage internally.
- If the BCM is open internally, or if the R DRL relay control circuit is shorted to voltage, the R DRL will remain OFF at all times, but the RH turn signal will still function normally.
- If the DTC is a history DTC, the problem may be intermittent. Perform the tests shown while moving related wiring and connectors. This can often cause the malfunction to occur. Refer to **Testing for Intermittent Conditions and Poor Connections** in Wiring Systems.

Test Description

The number(s) below refer to the step number(s) on the diagnostic table.

2: Listen for an audible click when the R DRL relay operates. Command both the ON and OFF states. Repeat the commands as necessary.

3: Tests for voltage at the coil side of the R DRL relay. The APPROACH fuse supplies power to the coil side of the R DRL relay.

4: Verifies that the BCM is providing ground to the R DRL relay.

5: Tests if ground is constantly being applied to the R DRL relay.

6: Tests for a short to voltage in the R DRL control circuit.

DTC B0503

Step	Action	Yes	No
Schematic Reference:Headlights/Daytime Running Lights (DRL) Schematics **Connector End View Reference:Master Electrical Component List**			
1	Did you perform the Lighting System Diagnostic System Check?	Go to **Step 2**	Go to **Diagnostic System Check - Lighting Systems**
2	1. Install a scan tool. 2. Turn ON the ignition, with the engine OFF. 3. With a scan tool, command the R DRL relay ON and		

	OFF. Does the R DRL relay turn ON and OFF with each command?	Go to Diagnostic Aids	Go to **Step 3**
3	1. Turn OFF the ignition. 2. Disconnect the R DRL relay. 3. Turn ON the ignition, with the engine OFF. 4. Probe the coil side supply circuit of the R DRL relay with a test lamp that is connected to a good ground. Refer to **Power Distribution Schematics** in Wiring Systems for electrical center circuit identification. Does the test lamp illuminate?	Go to **Step 4**	Go to **Step 10**
4	1. Connect a test lamp between the control circuit of the R DRL relay and the coil side supply circuit of the R DRL relay. Refer to **Power Distribution Schematics** in Wiring Systems for electrical center circuit identification. 2. With a scan tool, command the R DRL relay ON and OFF. Does the test lamp turn ON and OFF with each command?	Go to **Step 8**	Go to **Step 5**
5	Does the test lamp remain illuminated with each command?	Go to **Step 7**	Go to **Step 6**
6	Test the control circuit of the R DRL relay for a short to battery positive voltage. Refer to **Circuit Testing** and **Wiring Repairs** in Wiring Systems. Did you find and correct the condition?	Go to **Step 13**	Go to **Step 9**
7	Test the control circuit of the R DRL relay for a short to ground. Refer to **Circuit Testing** and **Wiring Repairs** in Wiring Systems. Did you find and correct the condition?	Go to **Step 13**	Go to **Step 9**
8	Inspect for poor connections at the R DRL relay. Refer to **Testing for Intermittent Conditions and Poor Connections** and **Connector Repairs** in Wiring Systems. Did you find and correct the condition?	Go to **Step 13**	Go to **Step 11**
9	Inspect for poor connections at the harness connector of the BCM. Refer to **Testing for Intermittent Conditions and Poor Connections** and **Connector Repairs** in Wiring Systems. Did you find and correct the condition?	Go to **Step 13**	Go to **Step 12**
10	Repair the open or poor connection in the coil side supply circuit of the R DRL relay. Refer to **Wiring Repairs** in Wiring Systems. Did you complete the repair?	Go to **Step 13**	-
11	Replace the R DRL relay. Refer to **Relay Replacement (Within an Electrical Center)** or **Relay Replacement (Attached to Wire Harness)** in Wiring Systems.	Go to **Step**	-

	Did you complete the replacement?	**13**	
12	**IMPORTANT:** **Perform the BCM reprogram procedure. Refer to Body Control Module (BCM) Programming/RPO Configuration in Body Control System.** Replace the BCM. Refer to **Body Control Module Replacement** in Body Control System.Did you complete the replacement?	Go to **Step 13**	-
13	1. Use the scan tool in order to clear the DTCs. 2. Operate the vehicle within the Conditions for Setting the DTC as specified in the supporting text. Does the DTC reset?	Go to **Step 2**	System OK

DTC B0507

Circuit Description

The BCM provides control for the L DRL relay circuit. The BCM grounds the L DRL relay control circuit in order to energize the L DRL relay and turn ON the LF turn signal This allows the LF turn signal to be used for DRL, UTD, and approach lighting functions. The BCM monitors the voltage level on the L DRL relay control circuit. When the BCM commands the relay ON, the voltage level on the L DRL relay control circuit should be low. When the relay is OFF, the voltage on the L DRL relay control circuit should be high. If the BCM detects a voltage level other than expected, a malfunction is present and a DTC will set.

Conditions for Setting the DTC

- The BCM detects a low voltage level (an open or a short to ground) in the L DRL relay control circuit.
- The BCM can only test for this condition with the L DRL relay de-energized.
- This condition must be present for 2 seconds.

Action Taken When the DTC Sets

Stores a DTC B0507 in the BCM memory.

Conditions for Clearing the DTC

- This DTC requires an ignition cycle in order to change from current to history.
- The BCM no longer detects a low voltage level in the L DRL relay control circuit only with the L DRL relay de-energized.
- A history DTC will clear after 50 consecutive ignition cycles if the condition for the malfunction is no longer present.
- Use the IPC clearing DTCs feature.

- The BCM receives the Clear Code command from the scan tool.

Diagnostic Aids

- The following conditions may cause an intermittent malfunction:
  - There is an intermittent open or short to ground in the L DRL relay control circuit.
  - There is high resistance in the relay coil.
  - There are poor connections at the BCM, the I/P fuse block, or the L DRL relay terminals.
  - The L DRL relay is shorted or open internally.
- If the L DRL relay control circuit is shorted to ground, the L DRL will remain ON at all times and LH turn signal will not flash. If the L DRL relay control circuit is open, the L DRL will remain OFF at all times, but the LH turn signal will still function normally.
- If the DTC is a history DTC, the problem may be intermittent. Perform the tests shown while moving related wiring and connectors. This can often cause the malfunction to occur. Refer to **Testing for Intermittent Conditions and Poor Connections** in Wiring Systems.

Test Description

The number(s) below refer to the step number(s) on the diagnostic table.

2: Listen for an audible click when the L DRL relay operates. Command both the ON and OFF states. Repeat the commands as necessary.

3: Tests for voltage at the coil side of the L DRL relay. The APPROACH fuse supplies power to the coil side of the L DRL relay.

4: Verifies that the BCM is providing ground to the L DRL relay.

5: Tests if ground is constantly being applied to the L DRL relay.

6: Tests for an open in the L DRL control circuit.

DTC B0507

Step	Action	Yes	No
Schematic Reference:Headlights/Daytime Running Lights (DRL) Schematics **Connector End View Reference:Master Electrical Component List**			
1	Did you perform the Lighting System Diagnostic System Check?	Go to **Step 2**	Go to **Diagnostic System Check - Lighting Systems**
2	1. Install a scan tool. 2. Turn ON the ignition, with the engine OFF. 3. With a scan tool, command the L DRL relay ON and OFF. Does the L DRL relay turn ON and OFF with each command?	Go to Diagnostic Aids	Go to **Step 3**
	1. Turn OFF the ignition.		

3	2. Disconnect the L DRL relay. 3. Turn ON the ignition, with the engine OFF. 4. Probe the coil side supply circuit of the L DRL relay with a test lamp that is connected to a good ground. Refer to **Power Distribution Schematics** in Wiring Systems for electrical center circuit identification. Does the test lamp illuminate?	Go to **Step 4**	Go to **Step 10**
4	1. Connect a test lamp between the control circuit of the L DRL relay and the coil side supply circuit of the L DRL relay. Refer to **Power Distribution Schematics** in Wiring Systems for electrical center circuit identification. 2. With a scan tool, command the L DRL relay ON and OFF. Does the test lamp turn ON and OFF with each command?	Go to **Step 8**	Go to **Step 5**
5	Does the test lamp remain illuminated with each command?	Go to **Step 7**	Go to **Step 6**
6	Test the control circuit of the L DRL relay for an open. Refer to **Circuit Testing** and **Wiring Repairs** in Wiring Systems. Did you find and correct the condition?	Go to **Step 13**	Go to **Step 9**
7	Test the control circuit of the L DRL relay for a short to ground. Refer to **Circuit Testing** and **Wiring Repairs** in Wiring Systems. Did you find and correct the condition?	Go to **Step 13**	Go to **Step 9**
8	Inspect for poor connections at the L DRL relay. Refer to **Testing for Intermittent Conditions and Poor Connections** and **Connector Repairs** in Wiring Systems. Did you find and correct the condition?	Go to **Step 13**	Go to **Step 11**
9	Inspect for poor connections at the harness connector of the BCM. Refer to **Testing for Intermittent Conditions and Poor Connections** and **Connector Repairs** in Wiring Systems. Did you find and correct the condition?	Go to **Step 13**	Go to **Step 12**
10	Repair the coil side supply circuit of the L DRL relay. Refer to **Wiring Repairs** in Wiring Systems. Did you complete the repair?	Go to **Step 13**	-
11	Replace the L DRL relay. Refer to **Relay Replacement (Within an Electrical Center)** or **Relay Replacement (Attached to Wire Harness)** in Wiring Systems. Did you complete the replacement?	Go to **Step 13**	-
12	**IMPORTANT:** **Perform the BCM reprogram procedure. Refer to Body Control Module (BCM) Programming/RPO Configuration in Body Control System.**		-

	Replace the BCM. Refer to **Body Control Module Replacement** in Body Control System.Did you complete the replacement?	Go to **Step 13**	
13	1. Use the scan tool in order to clear the DTCs. 2. Operate the vehicle within the Conditions for Setting the DTC as specified in the supporting text. Does the DTC reset?	Go to **Step 2**	System OK

DTC B0508

Circuit Description

The BCM provides control for the L DRL relay circuit. The BCM grounds the L DRL relay control circuit in order to energize the L DRL relay and turn ON the LF turn signal This allows the LF turn signal to be used for DRL, UTD, and approach lighting functions. The BCM monitors the voltage level on the L DRL relay control circuit. When the BCM commands the relay ON, the voltage level on the L DRL relay control circuit should be low. When the relay is OFF, the voltage on the L DRL relay control circuit should be high. If the BCM detects a voltage level other than expected, a malfunction is present and a DTC will set.

Conditions for Setting the DTC

- The BCM detects a high voltage level (a short to battery positive voltage or BCM open internally) in the L DRL relay control circuit.
- The BCM can only test for this condition with the L DRL relay energized.
- This condition must be present for 2 seconds.

Action Taken When the DTC Sets

Stores a DTC B0508 in the BCM memory.

Conditions for Clearing the DTC

- This DTC requires an ignition cycle in order to change from current to history.
- The BCM no longer detects a high voltage level in the L DRL relay control circuit only with the R DRL relay energized.
- A history DTC will clear after 50 consecutive ignition cycles if the condition for the malfunction is no longer present.
- Use the IPC clearing DTCs feature.
- The BCM receives the Clear Code command from the scan tool.

Diagnostic Aids

- The following conditions may cause an intermittent malfunction:

- There is an intermittent open or short to battery positive voltage in the L DRL relay control circuit.
- There is low resistance in the relay coil.
- There are poor connections at the BCM, the I/P fuse block, or the L DRL relay terminals.
- The L DRL relay is shorted to battery positive voltage internally.

- If the BCM is open internally, or if the L DRL relay control circuit is shorted to voltage, the L DRL will remain OFF at all times, but the LH turn signal will still function normally.
- If the DTC is a history DTC, the problem may be intermittent. Perform the tests shown while moving related wiring and connectors. This can often cause the malfunction to occur. Refer to **Testing for Intermittent Conditions and Poor Connections** in Wiring Systems.

Test Description

The number(s) below refer to the step number(s) on the diagnostic table.

2: Listen for an audible click when the L DRL relay operates. Command both the ON and OFF states. Repeat the commands as necessary.

3: Tests for voltage at the coil side of the L DRL relay. The APPROACH fuse supplies power to the coil side of the L DRL relay.

4: Verifies that the BCM is providing ground to the L DRL relay.

5: Tests if ground is constantly being applied to the L DRL relay.

6: Tests for a short to voltage in the L DRL control circuit.

DTC B0508

Step	Action	Yes	No
Schematic Reference:Headlights/Daytime Running Lights (DRL) Schematics **Connector End View Reference:Master Electrical Component List**			
1	Did you perform the Lighting System Diagnostic System Check?	Go to **Step 2**	Go to **Diagnostic System Check - Lighting Systems**
2	1. Install a scan tool. 2. Turn ON the ignition, with the engine OFF. 3. With a scan tool, command the L DRL relay ON and OFF. Does the L DRL relay turn ON and OFF with each command?	Go to Diagnostic Aids	Go to **Step 3**
3	1. Turn OFF the ignition. 2. Disconnect the L DRL relay. 3. Turn ON the ignition, with the engine OFF. 4. Probe the coil side supply circuit of the L DRL relay with a test lamp that is connected to a good ground. Refer to **Power Distribution Schematics** in Wiring Systems for electrical center circuit identification.		

	Does the test lamp illuminate?	Go to **Step 4**	Go to **Step 10**
4	1. Connect a test lamp between the control circuit of the L DRL relay and the coil side supply circuit of the L DRL relay. Refer to **Power Distribution Schematics** in Wiring Systems for electrical center circuit identification. 2. With a scan tool, command the L DRL relay ON and OFF. Does the test lamp turn ON and OFF with each command?	Go to **Step 8**	Go to **Step 5**
5	Does the test lamp remain illuminated with each command?	Go to **Step 7**	Go to **Step 6**
6	Test the control circuit of the L DRL relay for a short to voltage. Refer to **Circuit Testing** and **Wiring Repairs** in Wiring Systems. Did you find and correct the condition?	Go to **Step 13**	Go to **Step 9**
7	Test the control circuit of the L DRL relay for a short to ground. Refer to **Circuit Testing** and **Wiring Repairs** in Wiring Systems. Did you find and correct the condition?	Go to **Step 13**	Go to **Step 9**
8	Inspect for poor connections at the L DRL relay. Refer to **Testing for Intermittent Conditions and Poor Connections** and **Connector Repairs** in Wiring Systems. Did you find and correct the condition?	Go to **Step 13**	Go to **Step 11**
9	Inspect for poor connections at the harness connector of the BCM. Refer to **Testing for Intermittent Conditions and Poor Connections** and **Connector Repairs** in Wiring Systems. Did you find and correct the condition?	Go to **Step 13**	Go to **Step 12**
10	Repair the coil side supply circuit of the L DRL relay. Refer to **Wiring Repairs** in Wiring Systems. Did you complete the repair?	Go to **Step 13**	-
11	Replace the L DRL relay. Refer to **Relay Replacement (Within an Electrical Center)** or **Relay Replacement (Attached to Wire Harness)** in Wiring Systems. Did you complete the replacement?	Go to **Step 13**	-
12	**IMPORTANT:** **Perform the BCM reprogram procedure. Refer to Body Control Module (BCM) Programming/RPO Configuration in Body Control System.** Replace the BCM. Refer to **Body Control Module Replacement** in Body Control System.Did you complete the replacement?	Go to **Step 13**	-
13	1. Use the scan tool in order to clear the DTCs. 2. Operate the vehicle within the Conditions for Setting the DTC as specified in the supporting text.		

	Does the DTC reset?	Go to **Step 2**	System OK

DTC B2403

Circuit Description

The front fog lamp switch circuit provides a direct battery input to the BCM when the switch is pressed. This input allows the BCM to detect a front fog lamp switch ON or OFF request. If the BCM detects battery voltage on the front fog lamp switch signal circuit when the front fog lamps are OFF, the BCM will turn ON the lamps by energizing the front fog lamp relay. If the BCM detects battery voltage after the front fog lamps ON command, the BCM will turn OFF the lamps. The BCM monitors the front fog lamp switch signal circuit in order to determine how long the voltage has been applied. If the voltage is applied for longer than expected, a malfunction is present and a DTC will set.

Conditions for Setting the DTC

The BCM detects battery positive voltage on the front fog lamp switch signal circuit for longer than 60 seconds.

Action Taken When the DTC Sets

Stores a DTC B2403 in the BCM memory.

Conditions for Clearing the DTC

- The BCM no longer detects battery voltage on the front fog lamp switch signal circuit for longer than 60 seconds.
- A history DTC will clear after 50 consecutive ignition cycles if the condition for the malfunction is no longer present.
- Use the IPC clearing DTCs feature.
- The BCM receives the Clear Code command from the scan tool.

Diagnostic Aids

- The following conditions may cause an intermittent malfunction:
  - There is an intermittent short to voltage in the front fog lamp switch signal circuit.
  - The front fog lamp switch is internally shorted to battery positive voltage or is sticking.
  - The front fog lamp switch is pressed for longer than 60 seconds.
- If the front fog lamp switch signal circuit is shorted to battery positive voltage, the front fog lamps will remain ON or OFF at all times depending on whether the lamps were ON or OFF when the short occurred. If the short occurred when the lamps were ON, the lamps will remain OFF at all times. If the short occurred when the lamps were OFF, the lamps will remain ON at all times. The BCM will remember whether the lamps were ON or OFF even if the ignition is switched OFF.
- If the DTC is a history DTC, the problem may be intermittent. Perform the tests shown while moving related wiring and connectors. This can often cause the malfunction to occur. Refer to **Testing for**

Intermittent Conditions and Poor Connections in Wiring Systems.

Test Description

The number(s) below refer to the step number(s) on the diagnostic table.

2: Tests for the normal state of the front fog light switch using a scan tool. The scan tool will display the normal state as INACTIVE, and ACTIVE when the switch is activated.

3: Tests if the BCM is able to detect a change in front fog light switch state. The scan tool will display the normal state as INACTIVE, and ACTIVE when the switch is activated.

4: Tests for a stuck or shorted front fog light switch. If the front fog light switch is stuck or shorted, the state will change from ACTIVE to INACTIVE when the front fog light switch is disconnected.

5: Tests for a short to battery positive voltage in the front fog light switch signal circuit.

DTC B2403

Step	Action	Yes	No
Schematic Reference:Fog Lights Schematics **Connector End View Reference:Master Electrical Component List**			
1	Did you perform the Lighting System Diagnostic System Check?	Go to **Step 2**	Go to **Diagnostic System Check - Lighting Systems**
2	1. Install a scan tool. 2. Turn ON the ignition, with the engine OFF. 3. With a scan tool, observe the Front Fog Light Switch parameter in the BCM data list. Does the scan tool display INACTIVE?	Go to **Step 3**	Go to **Step 4**
3	1. Activate the front fog light switch. 2. With the scan tool, observe the Front Fog Light Switch parameter. Does the Front Fog Light Switch parameter change state?	Go to Diagnostic Aids	Go to **Step 4**
4	1. Turn OFF the ignition. 2. Disconnect the front fog light switch. 3. Turn ON the ignition, with the engine OFF. 4. With a scan tool, observe the Front Fog Light Switch parameter. Does the scan tool display INACTIVE?	Go to **Step 7**	Go to **Step 5**
5	Test the front fog light switch signal circuit for a short to voltage. Refer to **Circuit Testing** and **Wiring Repairs** in Wiring Systems. Did you find and correct the condition?	Go to **Step 10**	Go to **Step 6**

6	Inspect for poor connections at the harness connector of the BCM. Refer to **Testing for Intermittent Conditions and Poor Connections** and **Connector Repairs** in Wiring Systems. Did you find and correct the condition?	Go to **Step 10**	Go to **Step 8**
7	Inspect for poor connections at the harness connector of the front fog light switch. Refer to **Testing for Intermittent Conditions and Poor Connections** and **Connector Repairs** in Wiring Systems. Did you find and correct the condition?	Go to **Step 10**	Go to **Step 9**
8	**IMPORTANT:** **Perform the BCM reprogram procedure. Refer to Body Control Module (BCM) Programming/RPO Configuration in Body Control System.** Replace the BCM. Refer to **Body Control Module Replacement** in Body Control System.Did you complete the replacement?	Go to **Step 10**	-
9	Replace the front fog light switch. Refer to **Fog Lamp Switch Replacement - Front** . Did you complete the replacement?	Go to **Step 10**	-
10	1. Use the scan tool in order to clear the DTCs. 2. Operate the vehicle within the Conditions for Running the DTC as specified in the supporting text. Does the DTC reset?	Go to **Step 2**	System OK

DTC B2408

Circuit Description

The rear fog lamp switch circuit provides a direct battery input to the BCM when the switch is pressed. This input allows the BCM to detect a rear fog lamps switch ON or OFF request. If the BCM detects battery voltage on the rear fog lamp switch signal circuit when the rear lamps are OFF, the BCM will turn ON the lamps by energizing the rear fog lamp relay. If the BCM detects battery voltage after the rear fog lamps ON command, the BCM will turn OFF the lamps. The BCM monitors the rear fog lamp switch signal circuit in order to determine how long the voltage has been applied. If the voltage is applied for longer than expected, a malfunction is present and a DTC will set.

Conditions for Setting the DTC

The BCM detects battery positive voltage on the rear fog lamp switch signal circuit for longer than 60 seconds.

Action Taken When the DTC Sets

Stores a DTC B2408 in the BCM memory.

Conditions for Clearing the DTC

- The BCM no longer detects battery positive voltage on the rear fog lamp switch signal circuit for longer than 60 seconds.
- A history DTC will clear after 50 consecutive ignition cycles if the condition for the malfunction is no longer present.
- Use the IPC clearing DTCs feature.
- The BCM receives the Clear Code command from the scan tool.

Diagnostic Aids

- The following conditions may cause an intermittent malfunction:
  - There is an intermittent short to battery positive voltage in the rear fog lamp switch signal circuit.
  - The rear fog lamp switch is internally shorted to battery positive voltage or is sticking.
  - The rear fog lamp switch is pressed for longer than 60 seconds.
- If the rear fog lamp switch signal circuit is shorted to battery positive voltage, the rear fog lamps will remain ON or OFF at all times depending on whether the lamps were ON or OFF when the short occurred. If the short occurred when the lamps were ON, the lamps will remain OFF at all times. If the short occurred when the lamps were OFF, the lamps will remain ON at all times. The BCM will remember whether the lamps were ON or OFF even if the ignition is switched OFF.
- If the DTC is a history DTC, the problem may be intermittent. Perform the tests shown while moving related wiring and connectors. This can often cause the malfunction to occur. Refer to **Testing for Intermittent Conditions and Poor Connections** in Wiring Systems.

Test Description

The number(s) below refer to the step number(s) on the diagnostic table.

2: Tests for the normal state of the rear fog light switch using a scan tool. The scan tool will display the normal state as INACTIVE, and ACTIVE when the switch is activated.

3: Tests if the BCM is able to detect a change in rear fog light switch state. The scan tool will display the normal state as INACTIVE, and ACTIVE when the switch is activated.

4: Tests for a stuck or shorted rear fog light switch. If the rear fog light switch is stuck or shorted, the state will change from ACTIVE to INACTIVE when the rear fog light switch is disconnected.

5: Tests for a short to battery positive voltage in the rear fog light switch signal circuit.

DTC B2408

Step	Action	Yes	No
Schematic Reference:Fog Lights Schematics **Connector End View Reference:Master Electrical Component List**			
1	Did you perform the Lighting System Diagnostic System Check?	Go to **Step 2**	Go to **Diagnostic System Check - Lighting Systems**

2	1. Install a scan tool. 2. Turn ON the ignition, with the engine OFF. 3. With a scan tool, observe the Rear Fog Light Switch parameter in the BCM data list. Does the scan tool display INACTIVE?	Go to **Step 3**	Go to **Step 4**
3	1. Activate the rear fog light switch. 2. With the scan tool, observe the Rear Fog Light Switch parameter. Does the Rear Fog Light Switch parameter change state?	Go to Diagnostic Aids	Go to **Step 4**
4	1. Turn OFF the ignition. 2. Disconnect the rear fog light switch. 3. Turn ON the ignition, with the engine OFF. 4. With a scan tool, observe the Rear Fog Light Switch parameter. Does the scan tool display INACTIVE?	Go to **Step 7**	Go to **Step 5**
5	Test the signal circuit of the rear fog light switch for a short to voltage. Refer to **Circuit Testing** and **Wiring Repairs** in Wiring Systems. Did you find and correct the condition?	Go to **Step 10**	Go to **Step 6**
6	Inspect for poor connections at the harness connector of the BCM. Refer to **Testing for Intermittent Conditions and Poor Connections** and **Connector Repairs** in Wiring Systems. Did you find and correct the condition?	Go to **Step 10**	Go to **Step 8**
7	Inspect for poor connections at the harness connector of the rear fog light switch. Refer to **Testing for Intermittent Conditions and Poor Connections** and **Connector Repairs** in Wiring Systems. Did you find and correct the condition?	Go to **Step 10**	Go to **Step 9**
8	**IMPORTANT:** **Perform the BCM reprogram procedure. Refer to Body Control Module (BCM) Programming/RPO Configuration in Body Control System.** Replace the BCM. Refer to **Body Control Module Replacement** in Body Control System.Did you complete the replacement?	Go to **Step 10**	-
9	Replace the rear fog light switch. Refer to **Fog Lamp Switch Replacement - Front** . Did you complete the replacement?	Go to **Step 10**	-

10	1. Use the scan tool in order to clear the DTCs. 2. Operate the vehicle within the Conditions for Running the DTC as specified in the supporting text. Does the DTC reset?	Go to **Step 2**	System OK

DTC B2482

Circuit Description

The backup lamp circuit is part of a standard backup lamp system except for the addition of a relay and the BCM providing a control circuit. The BCM can ground the backup lamp relay control circuit in order to energize the relay and turn ON the backup lamps, allowing the backup lamps to be used for Universal Theft Deterrent (UTD) and approach lighting functions. The BCM monitors the voltage level on the backup lamp control circuit. When the BCM commands the relay ON, the voltage level on the control circuit should be low. When the relay is OFF, the voltage level should be high. If the BCM detects a voltage level other than expected, a malfunction is present and a DTC will set.

Conditions for Setting the DTC

- The BCM detects a low voltage level (an open or a short to ground) in the backup lamp relay control circuit.
- The BCM can only test for this condition with the backup lamp relay de-energized.
- The condition must be present for 2 seconds.

Action Taken When the DTC Sets

Stores a DTC B2482 in the BCM memory.

Conditions for Clearing the DTC

- This DTC requires an ignition cycle in order to change from current to history.
- The BCM no longer detects a high voltage level in the backup lamp relay control circuit only with the backup lamp relay de-energized.
- A history DTC will clear after 50 consecutive ignition cycles if the condition for the malfunction is no longer present.
- Use the IPC clearing DTCs feature.
- The BCM receives the Clear Code command from the scan tool.

Diagnostic Aids

- The following conditions may cause an intermittent malfunction:
  - There is an intermittent open or short to ground in the backup lamp relay control circuit.
  - There is high resistance in the relay coil.

- There are poor connections at the BCM, the underhood fuse block, or the backup lamp relay terminals.
- The backup lamp relay is open or shorted internally.

- If the backup lamp relay control circuit is shorted to ground, the backup lamp will remain ON at all times. If the backup lamp relay control circuit is open, the BCM cannot provide output control for the backup lamps for UTD and approach lighting functions, but standard backup lamp functions will still operate normally.
- If the DTC is a history DTC, the problem may be intermittent. Perform the tests shown while moving related wiring and connectors. This can often cause the malfunction to occur. Refer to **Testing for Intermittent Conditions and Poor Connections** in Wiring Systems.

Test Description

The number(s) below refer to the step number(s) on the diagnostic table.

2: Listen for an audible click when the backup lamp relay operates. Command both the ON and OFF states. Repeat the commands as necessary.

3: Tests for voltage at the coil side of the backup lamp relay. The APPROACH fuse supplies power to the coil side of the backup lamp relay.

4: Verifies that the BCM is providing ground to the backup lamp relay.

5: Tests if ground is constantly being applied to the backup lamp relay.

6: Tests for an open in the Backup Lamp control circuit.

DTC B2482

Step	Action	Yes	No
Schematic Reference:Exterior Lights Schematics **Connector End View Reference:Master Electrical Component List**			
1	Did you perform the Lighting System Diagnostic System Check?	Go to **Step 2**	Go to **Diagnostic System Check - Lighting Systems**
2	1. Install a scan tool. 2. Turn ON the ignition, with the engine OFF. 3. With a scan tool, command the backup lamp relay ON and OFF. Does the backup lamp relay turn ON and OFF with each command?	Go to Diagnostic Aids	Go to **Step 3**
3	1. Turn OFF the ignition. 2. Disconnect the backup lamp relay. 3. Turn ON the ignition, with the engine OFF. 4. Probe the coil side supply circuit of the backup lamp relay with a test lamp that is connected to ground. Refer to		

	Power Distribution Schematics in Wiring Systems for electrical center circuit identification. Does the test lamp illuminate?	Go to **Step 4**	Go to **Step 10**
4	1. Connect a test lamp between the control circuit of the backup lamp relay and the coil side supply circuit of the backup lamp relay. Refer to **Power Distribution Schematics** in Wiring Systems for electrical center circuit identification. 2. With a scan tool, command the backup lamp relay ON and OFF. Does the test lamp turn ON and OFF with each command?	Go to **Step 8**	Go to **Step 5**
5	Does the test lamp remain illuminated with each command?	Go to **Step 7**	Go to **Step 6**
6	Test the control circuit of the backup lamp relay for an open. Refer to **Circuit Testing** and **Wiring Repairs** in Wiring Systems. Did you find and correct the condition?	Go to **Step 13**	Go to **Step 9**
7	Test the control circuit of the backup lamp relay for a short to ground. Refer to **Circuit Testing** and **Wiring Repairs** in Wiring Systems. Did you find and correct the condition?	Go to **Step 13**	Go to **Step 9**
8	Inspect for poor connections at the backup lamp relay. Refer to **Testing for Intermittent Conditions and Poor Connections** and **Connector Repairs** in Wiring Systems. Did you find and correct the condition?	Go to **Step 13**	Go to **Step 11**
9	Inspect for poor connections at the harness connector of the BCM. Refer to **Testing for Intermittent Conditions and Poor Connections** and **Connector Repairs** in Wiring Systems. Did you find and correct the condition?	Go to **Step 13**	Go to **Step 12**
10	Repair the coil side supply circuit of the backup lamp relay. Refer to **Wiring Repairs** in Wiring Systems. Did you complete the repair?	Go to **Step 13**	-
11	Replace the backup lamp relay. Refer to **Relay Replacement (Within an Electrical Center)** or **Relay Replacement (Attached to Wire Harness)** in Wiring Systems. Did you complete the replacement?	Go to **Step 13**	-
12	**IMPORTANT:** **Perform the BCM reprogram procedure. Refer to Body Control Module (BCM) Programming/RPO Configuration in Body Control System.** Replace the BCM. Refer to **Body Control Module Replacement** in Body Control System.Did you complete the replacement?	Go to **Step 13**	-

13	1. Use the scan tool in order to clear the DTCs. 2. Operate the vehicle within the Conditions for Setting the DTC as specified in the supporting text. Does the DTC reset?	Go to **Step 2**	System OK

DTC B2483

Circuit Description

The backup lamp circuit is part of a standard backup lamp system except for the addition of a relay and the BCM providing a control circuit. The BCM can ground the backup lamp relay control circuit in order to energize the relay and turn ON the backup lamps, allowing the lamps to be used for the Universal Theft Deterrent (UTD) and approach lighting functions. The BCM monitors the voltage level on the backup lamp control circuit. When the BCM commands the relay ON, the voltage level on the control circuit should be low. When the relay is OFF, the voltage level should be high. If the BCM detects a voltage level other than expected, a malfunction is present and a DTC will set.

Conditions for Setting the DTC

- The BCM detects a high voltage level (a short to voltage or BCM open internally) in the backup lamp relay control circuit.
- The BCM can only test for this condition with the backup lamp relay energized.
- All conditions must be present for 2 seconds.

Action Taken When the DTC Sets

Stores a DTC B2483 in the BCM memory.

Conditions for Clearing the DTC

- This DTC requires an ignition cycle in order to change from current to history.
- The BCM no longer detects a high voltage level in the backup lamp relay control circuit only with the backup lamp relay energized.
- A history DTC will clear after 50 consecutive ignition cycles if the condition for the malfunction is no longer present.
- Use the IPC clearing DTCs feature.
- The BCM receives the Clear Code command from the scan tool.

Diagnostic Aids

- The following conditions may cause an intermittent malfunction:
  - There is an intermittent short to battery positive voltage in the backup lamp relay control circuit.
  - There is low resistance in the relay coil.

- There are poor connections at the BCM, the underhood fuse center, or the backup lamp relay terminals.
- The backup lamp relay is shorted to battery positive voltage internally.

- If the BCM is open internally, or if the backup lamp relay control circuit is shorted to voltage BCM cannot provide output control for the backup lamps for UTD and approach lighting functions, but standard backup lamp functions will still operate normally.
- If the DTC is a history DTC, the problem may be intermittent. Perform the tests shown while moving related wiring and connectors. This can often cause the malfunction to occur. Refer to **Testing for Intermittent Conditions and Poor Connections** in Wiring Systems.

Test Description

The number(s) below refer to the step number(s) on the diagnostic table.

2: Listen for an audible click when the backup lamp relay operates. Command both the ON and OFF states. Repeat the commands as necessary.

3: Tests for voltage at the coil side of the backup lamp relay. The APPROACH fuse supplies power to the coil side of the backup lamp relay.

4: Verifies that the BCM is providing ground to the backup lamp relay.

5: Tests if ground is constantly being applied to the backup lamp relay.

6: Tests for a short to battery positive voltage in the Backup Lamp control circuit.

DTC B2483

Step	Action	Yes	No
Schematic Reference:Exterior Lights Schematics **Connector End View Reference:Master Electrical Component List**			
1	Did you perform the Lighting System Diagnostic System Check?	Go to **Step 2**	Go to **Diagnostic System Check - Lighting Systems**
2	1. Install a scan tool. 2. Turn ON the ignition, with the engine OFF. 3. With a scan tool, command the backup lamp relay ON and OFF. Does the backup lamp relay turn ON and OFF with each command?	Go to Diagnostic Aids	Go to **Step 3**
3	1. Turn OFF the ignition. 2. Disconnect the backup lamp relay. 3. Turn ON the ignition, with the engine OFF. 4. Probe the coil side supply circuit of the backup lamp relay with a test lamp that is connected to ground. Refer to **Power Distribution Schematics** in Wiring Systems for		

	electrical center circuit identification. Does the test lamp illuminate?	Go to **Step 4**	Go to **Step 10**
4	1. Connect a test lamp between the control circuit of the backup lamp relay and the coil side supply circuit of the backup lamp relay. Refer to **Power Distribution Schematics** in Wiring Systems for electrical center circuit identification. 2. With a scan tool, command the backup lamp relay ON and OFF. Does the test lamp turn ON and OFF with each command?	Go to **Step 8**	Go to **Step 5**
5	Does the test lamp remain illuminated with each command?	Go to **Step 7**	Go to **Step 6**
6	Test the control circuit of the backup lamp relay for a short to battery positive voltage. Refer to **Circuit Testing** and **Wiring Repairs** in Wiring Systems. Did you find and correct the condition?	Go to **Step 13**	Go to **Step 9**
7	Test the control circuit of the backup lamp relay for a short to ground. Refer to **Circuit Testing** and **Wiring Repairs** in Wiring Systems. Did you find and correct the condition?	Go to **Step 13**	Go to **Step 9**
8	Inspect for poor connections at the backup lamp relay. Refer to **Testing for Intermittent Conditions and Poor Connections** and **Connector Repairs** in Wiring Systems. Did you find and correct the condition?	Go to **Step 13**	Go to **Step 11**
9	Inspect for poor connections at the harness connector of the BCM. Refer to **Testing for Intermittent Conditions and Poor Connections** and **Connector Repairs** in Wiring Systems. Did you find and correct the condition?	Go to **Step 13**	Go to **Step 12**
10	Repair the coil side supply circuit of the backup lamp relay. Refer to **Wiring Repairs** in Wiring Systems. Did you complete the repair?	Go to **Step 13**	-
11	Replace the backup lamp relay. Refer to **Relay Replacement (Within an Electrical Center)** or **Relay Replacement (Attached to Wire Harness)** in Wiring Systems. Did you complete the replacement?	Go to **Step 13**	-
12	**IMPORTANT:** **Perform the BCM reprogram procedure. Refer to Body Control Module (BCM) Programming/RPO Configuration in Body Control System.** Replace the BCM. Refer to **Body Control Module Replacement** in Body Control System.Did you complete the replacement?	Go to **Step 13**	-

13	1. Use the scan tool in order to clear the DTCs. 2. Operate the vehicle within the Conditions for Setting the DTC as specified in the supporting text. Does the DTC reset?	Go to **Step 2**	System OK

DTC B2578

Circuit Description

The BCM monitors the RF turn signal circuit in order to determine the status of the turn signal switch. If the BCM detects an oscillating voltage on the RH turn signal monitor circuit, the BCM interprets this as a RF turn signal ON request from the turn signal switch. The BCM will then de-energize the RH DRL relay, which will disable the RF turn signal lamp (which is ON for the DRL), this allows the RF turn signal to flash. If the BCM does not detect an oscillating voltage on the RH turn signal monitor circuit, the BCM interprets this as the RF turn signal being OFF. The BCM will then energize the RH DRL relay and continue normal DRL operation. The BCM monitors the RH turn signal monitor circuit and determines how long voltage is applied. If the voltage is applied for longer than expected, a malfunction is present and a DTC will set.

Conditions for Setting the DTC

- The BCM detects continuous battery positive voltage on the RH turn signal monitor circuit.
- The condition must be present for longer than 5 seconds.

Action Taken When the DTC Sets

Stores a DTC B2578 in the BCM memory.

Conditions for Clearing the DTC

- This DTC requires an ignition cycle in order to change from current to history.
- The BCM no longer detects continuous battery positive voltage on the RH turn signal monitor circuit for longer than 5 seconds.
- A history DTC will clear after 50 consecutive ignition cycles if the condition for the malfunction is no longer present.
- Use the IPC clearing DTCs feature.
- The BCM receives the Clear Code command from the scan tool.

Diagnostic Aids

- The following conditions may cause an intermittent malfunction:
  - There is an intermittent short to battery positive voltage in the RH turn signal monitor circuit.
  - The turn signal switch or the hazard switch is internally shorted or is sticking.
- The BCM needs to detect voltage oscillations on the RH turn signal monitor circuit in order to de-

energize the RH DRL relay. If the BCM detects continuous voltage on the RH turn signal monitor circuit, the BCM interprets this as a short to battery positive voltage. The BCM will continue with normal DRL operation, and the RF turn signal will remain inoperative.

- If the DTC is a history DTC, the problem may be intermittent. Perform the tests shown while moving related wiring and connectors. This can often cause the malfunction to occur. Refer to **Testing for Intermittent Conditions and Poor Connections** in Wiring Systems.

Test Description

The number(s) below refer to the step number(s) on the diagnostic table.

2: Tests if a DTC B2583 is stored in the BCM. If both the RH and LH turn signal monitor DTCs are stored, test the hazard switch and related circuits for a short to voltage.

3: Tests if the BCM is receiving oscillating voltage on the RH turn signal monitor circuit. If the test lamp is ON steady, the BCM will set a DTC B2578.

4: Tests if the BCM is receiving oscillating voltage on the RH turn signal monitor circuit. If the test lamp is ON steady, the BCM will set a DTC B2578.

5: Tests if the turn signal switch or related circuits are shorted to voltage.

6: Tests if the hazard switch or related circuits are shorted to voltage.

7: Tests if the instrument panel cluster turn signal indicator is shorted to voltage.

8: Tests if the body control module is shorted to voltage.

DTC B2578

Step	Action	Yes	No
Schematic Reference:Headlights/Daytime Running Lights (DRL) Schematics **Connector End View Reference:Master Electrical Component List**			
1	Did you perform the Lighting System Diagnostic System Check?	Go to **Step 2**	Go to **Diagnostic System Check - Lighting Systems**
2	1. Install a scan tool. 2. Turn ON the ignition, with the engine OFF. 3. Select the BCM display DTC function on the scan tool. Does the scan tool display DTC B2583?	Go to **Step 10**	Go to **Step 3**
3	1. Turn OFF the ignition. 2. Disconnect the RH DRL relay. 3. Turn ON the ignition, with the engine OFF. 4. Probe the RH turn signal monitor circuit at the RH DRL relay with a test lamp that is connected to a good ground. Refer to **Power Distribution Schematics** in Wiring Systems for electrical center circuit identification. 5. Turn ON the RH turn signals	Go to	

	Does the test lamp turn ON and OFF with the RH turn signals?	**Step 13**	Go to **Step 4**
4	Does the test lamp remain illuminated?	Go to **Step 5**	Go to **Turn Signal Lamps and/or Indicators Inoperative**
5	Disconnect the turn signal switch. Does the test lamp remain illuminated?	Go to **Step 6**	Go to **Step 9**
6	Disconnect the hazard switch. Does the test lamp remain illuminated?	Go to **Step 7**	Go to **Step 10**
7	Disconnect the instrument panel cluster. Does the test lamp remain illuminated?	Go to **Step 8**	Go to **Step 11**
8	Disconnect the body control module. Does the test lamp remain illuminated?	Go to **Step 12**	Go to **Step 14**
9	Repair a short to battery positive voltage in the turn signal switch circuit. Refer to **Wiring Repairs** in Wiring Systems. Did you complete the repair?	Go to **Step 15**	-
10	Repair a short to battery positive voltage in the hazard switch circuit. Refer to **Wiring Repairs** in Wiring Systems. Did you complete the repair?	Go to **Step 15**	-
11	Repair a short to battery positive voltage in the instrument panel turn signal indicator circuit. Refer to **Wiring Repairs** in Wiring Systems. Did you complete the repair?	Go to **Step 15**	-
12	Repair a short to battery positive voltage in the turn signal monitor circuit. Refer to **Wiring Repairs** in Wiring Systems. Did you complete the repair?	Go to **Step 15**	-
13	Replace the RH DRL relay. Refer to **Relay Replacement (Within an Electrical Center)** or **Relay Replacement (Attached to Wire Harness)** in Wiring Systems. Did you complete the replacement?	Go to **Step 15**	-
14	**IMPORTANT:** **Perform the BCM reprogram procedure. Refer to Body Control Module (BCM) Programming/RPO Configuration in Body Control System.** Replace the BCM. Refer to **Body Control Module Replacement** in Body Control System.Did you complete the replacement?	Go to **Step 15**	-
15	1. Use the scan tool in order to clear the DTCs. 2. Operate the vehicle within the Conditions for Setting the DTC as specified in the supporting text. Does the DTC reset?	Go to **Step 2**	System OK

DTC B2583

Circuit Description

The BCM monitors the LF turn signal circuit in order to determine the status of the turn signal switch. If the BCM detects an oscillating voltage on the LH turn signal monitor circuit, the BCM interprets this as a LF turn signal ON request from the turn signal switch. The BCM will de-energize the LH DRL relay, which will disable the LF turn signal lamp (which is ON for the DRL), this allows the LF turn signal to flash. If the BCM does not detect an oscillating voltage on the LH turn signal monitor circuit, the BCM interprets this as the LF turn signal being OFF. The BCM will then energize the LH DRL relay and continue normal DRL operation. The BCM monitors the LF turn signal monitor circuit and determines how long voltage is applied. If the voltage is applied for longer than expected, a malfunction is present and a DTC will set.

Conditions for Setting the DTC

- The BCM detects continuous battery positive voltage on the LH turn signal monitor circuit.
- The condition must be present for longer than 5 seconds.

Action Taken When the DTC Sets

Stores a DTC B2583 in the BCM memory.

Conditions for Clearing the DTC

- This DTC requires an ignition cycle in order to change from current to history.
- The BCM no longer detects continuous battery positive voltage on the LH turn signal monitor circuit for longer than 5 seconds.
- A history DTC will clear after 50 consecutive ignition cycles if the condition for the malfunction is no longer present.
- Use the IPC clearing DTCs feature.
- The BCM receives the Clear Code command from the scan tool.

Diagnostic Aids

- The following conditions may cause an intermittent malfunction:
  - There is an intermittent short to battery positive voltage in the LH turn signal monitor circuit.
  - The turn signal switch or the hazard switch is shorted internally or is sticking.
- The BCM needs to detect voltage oscillations on the LH turn signal monitor circuit in order to de-energize the LH DRL relay. If the BCM detects continuous voltage on the LH turn signal monitor circuit, the BCM interprets this as a short to battery positive voltage. The BCM will continue with normal DRL operation, and the LF turn signal will remain inoperative.
- If the DTC is a history DTC, the problem may be intermittent. Perform the tests shown while moving related wiring and connectors. This can often cause the malfunction to occur. Refer to **Testing for Intermittent Conditions and Poor Connections** in Wiring Systems.

Test Description

The number(s) below refer to the step number(s) on the diagnostic table.

2: Tests if a DTC B2578 is stored in the BCM. If both the LH and LH turn signal monitor DTCs are stored, test the hazard switch and related circuits for a short to battery positive voltage.

3: Tests if the BCM is receiving oscillating voltage on the LH turn signal monitor circuit. If the test lamp is ON steady, the BCM will set a DTC B2583.

4: Tests if the BCM is receiving oscillating voltage on the LH turn signal monitor circuit. If the test lamp is ON steady, the BCM will set a DTC B2583.

5: Tests if the turn signal switch or related circuits are shorted to battery positive voltage.

6: Tests if the hazard switch or related circuits are shorted to battery positive voltage.

7: Tests if the instrument panel cluster turn signal indicator is shorted to battery positive voltage.

8: Tests if the body control module is shorted to voltage.

DTC B2583

Step	Action	Yes	No
Schematic Reference:Exterior Lights Schematics **Connector End View Reference:Master Electrical Component List**			
1	Did you perform the Lighting System Diagnostic System Check?	Go to **Step 2**	Go to **Diagnostic System Check - Lighting Systems**
2	1. Install a scan tool. 2. Turn ON the ignition, with the engine OFF. 3. Select the BCM display DTC function on the scan tool. Does the scan tool display DTC B2583?	Go to **Step 10**	Go to **Step 3**
3	1. Turn OFF the ignition. 2. Disconnect the LH DRL relay. 3. Turn ON the ignition, with the engine OFF. 4. Probe the LH turn signal monitor circuit at the LH DRL relay with a test lamp that is connected to ground. Refer to **Power Distribution Schematics** in Wiring Systems for electrical center circuit identification. 5. Turn ON the LH turn signals. Does the test lamp turn ON and OFF with the LH turn signals?	Go to **Step 13**	Go to **Step 4**
4	Does the test lamp remain illuminated?	Go to **Step 5**	Go to **Turn Signal Lamps and/or Indicators Inoperative**
5	Disconnect the turn signal switch.	Go to	

	Does the test lamp remain illuminated?	**Step 6**	Go to **Step 9**
6	Disconnect the hazard switch. Does the test lamp remain illuminated?	Go to **Step 7**	Go to **Step 10**
7	Disconnect the instrument panel cluster. Does the test lamp remain illuminated?	Go to **Step 8**	Go to **Step 11**
8	Disconnect the body control module. Does the test lamp remain illuminated?	Go to **Step 12**	Go to **Step 14**
9	Repair a short to battery positive voltage in the turn signal switch circuit. Refer to **Wiring Repairs** in Wiring Systems. Did you complete the repair?	Go to **Step 15**	-
10	Repair a short to battery positive voltage in the hazard switch circuit. Refer to **Wiring Repairs** in Wiring Systems. Did you complete the repair?	Go to **Step 15**	-
11	Repair a short to battery positive voltage in the instrument panel turn signal indicator circuit. Refer to **Wiring Repairs** in Wiring Systems. Did you complete the repair?	Go to **Step 15**	-
12	Repair a short to battery positive voltage in the turn signal monitor circuit. Refer to **Wiring Repairs** in Wiring Systems. Did you complete the repair?	Go to **Step 15**	-
13	Replace the LH DRL relay. Refer to **Relay Replacement (Within an Electrical Center)** or **Relay Replacement (Attached to Wire Harness)** in Wiring Systems. Did you complete the replacement?	Go to **Step 15**	-
14	**IMPORTANT:** **Perform the BCM reprogram procedure. Refer to Body Control Module (BCM) Programming/RPO Configuration in Body Control System.** Replace the BCM. Refer to **Body Control Module Replacement** in Body Control System.Did you complete the replacement?	Go to **Step 15**	-
15	1. Use the scan tool in order to clear the DTCs. 2. Operate the vehicle within the Conditions for Setting the DTC as specified in the supporting text. Does the DTC reset?	Go to **Step 2**	System OK

DTC B2647

Circuit Description

The ambient light sensor circuit provides an input to the BCM for DRL and automatic headlight functions. This input allows the BCM to activate or deactivate DRL and automatic headlamps with different ambient light levels. The BCM supplies a 5 volt reference circuit and a signal circuit to the ambient light sensor. The BCM

will detect high voltage on the ambient light sensor signal circuit when ambient light is high, and low voltage when ambient light is low. The BCM monitors the ambient light sensor voltage at the signal circuit and determines if the voltage is within range. If the voltage is not within range, a malfunction is present and a DTC will set.

Conditions for Setting the DTC

- An open in the ambient light sensor circuit.
- A short to ground in the ambient light sensor circuit.
- Condition must be present for 2 seconds.

Action Taken When the DTC Sets

- Stores a DTC B2647 in the BCM memory.
- The automatic headlamps and park lamps will remain ON.

Conditions for Clearing the DTC

- The BCM no longer detects an open or short to ground in the ambient light sensor circuit.
- The BCM no longer detects an open or short to ground in the ambient light low reference circuit.
- A history DTC will clear after 50 consecutive ignition cycles if the condition for the malfunction is no longer present.
- Use the IPC clearing DTCs feature.
- The BCM receives the Clear Code command from the scan tool.

Diagnostic Aids

- The following conditions may cause an intermittent malfunction:
  - An intermittent short to ground in the ambient light sensor reference circuit.
  - An intermittent open in the ambient light sensor signal circuit.
  - The ambient light sensor is shorted or open internally.
- If the ambient light sensor circuit is open or shorted (to ground or voltage), the BCM will command the automatic headlamps and park lamps ON. If the ignition is cycled the BCM will retest for any malfunctions in the ambient light sensor circuit and if a malfunction is current the BCM will activate the automatic.
- If the DTC is a history DTC, the problem may be intermittent. Perform the tests shown while moving related wiring and connectors. This can often cause the malfunction to occur. Refer to **Testing for Intermittent Conditions and Poor Connections** in Wiring Systems.

Test Description

The number(s) below refer to the step number(s) on the diagnostic table.

2: Tests ambient light sensor data using a scan tool.

3: Tests the ambient light sensor data with the sensor disconnected. The scan tool will display ambient light sensor voltage as 0 volts with the sensor disconnected.

4: Tests the ambient light sensor data with a jumper wire between the reference and signal circuit. The scan tool will display ambient light sensor voltage between 3.5-4.5 volts with the sensor jumpered.

5: Tests for a short to voltage in the DRL ambient light sensor low reference circuit.

DTC B2647

Step	Action	Value (s)	Yes	No
Schematic Reference:Headlights/Daytime Running Lights (DRL) Schematics **Connector End View Reference:Master Electrical Component List**				
1	Did you perform the Lighting System Diagnostic System Check?	-	Go to **Step 2**	Go to **Diagnostic System Check - Lighting Systems**
2	1. Install a scan tool. 2. Turn ON the ignition, with the engine OFF. 3. Apply a bright incandescent light to the ambient light sensor. 4. With a scan tool, observe the DRL Ambient Light Sensor parameter in the BCM data list. Does the scan tool indicate that the DRL Ambient Light Sensor parameter is within the specified range?	0.1-2.5 V	Go to Diagnostic Aids	Go to **Step 3**
3	1. Turn OFF the ignition. 2. Disconnect the ambient light sensor. 3. Turn ON the ignition, with the engine OFF. 4. With a scan tool, observe the DRL Ambient Light Sensor parameter. Does the scan tool indicate that the DRL Ambient Light Sensor parameter is less than the specified value?	0.1 V	Go to **Step 4**	Go to **Step 9**
4	1. Turn OFF the ignition. 2. Connect a 3 amp fused jumper wire between the 5 volt reference circuit of the ambient light sensor and the signal circuit of the ambient light sensor. 3. Turn ON the ignition, with the engine OFF. 4. With a scan tool, observe the DRL Ambient Light Sensor parameter. Does the scan tool indicate that the DRL Ambient Light Sensor parameter is greater than the specified value?	3.5 V	Go to **Step 5**	Go to **Step 7**
	1. Disconnect the fused jumper wire.			

5	2. Measure the voltage between the DRL ambient light sensor low reference circuit of the ambient light sensor and the signal circuit of the ambient light sensor. Does the voltage measure less than the specified value?	5.0 V	Go to **Step 10**	Go to **Step 6**
6	Test the DRL ambient light sensor low reference circuit of the ambient light sensor for a short to voltage. Refer to **Circuit Testing** and **Wiring Repairs** in Wiring Systems. Did you find and correct the condition?	-	Go to **Step 14**	Go to **Step 11**
7	Test the DRL ambient light sensor low reference circuit of the ambient light sensor for a short to ground, a high resistance, or an open. Refer to **Circuit Testing** and **Wiring Repairs** in Wiring Systems. Did you find and correct the condition?	-	Go to **Step 14**	Go to **Step 8**
8	Test the signal circuit of the ambient light sensor for a short to ground, a high resistance, or an open. Refer to **Circuit Testing** and **Wiring Repairs** in Wiring Systems. Did you find and correct the condition?	-	Go to **Step 14**	Go to **Step 11**
9	Test the signal circuit of the ambient light sensor for a short to voltage. Refer to **Circuit Testing** and **Wiring Repairs** in Wiring Systems. Did you find and correct the condition?	-	Go to **Step 14**	Go to **Step 11**
10	Inspect for poor connections at the harness connector of the ambient light sensor. Refer to **Testing for Intermittent Conditions and Poor Connections** and **Connector Repairs** in Wiring Systems. Did you find and correct the condition?	-	Go to **Step 14**	Go to **Step 12**
11	Inspect for poor connections at the harness connector of the BCM. Refer to **Testing for Intermittent Conditions and Poor Connections** and **Connector Repairs** in Wiring Systems. Did you find and correct the condition?	-	Go to **Step 14**	Go to **Step 13**
12	Replace the ambient light sensor. Refer to **Daytime Running Lamps (DRL) Ambient Light Sensor Replacement** . Did you complete the replacement?	-	Go to **Step 14**	-
13	**IMPORTANT:** **Perform the BCM reprogram procedure. Refer to Body Control Module (BCM) Programming/RPO Configuration in Body Control System.** Replace the BCM. Refer to **Body Control Module Replacement** in Body Control System.Did you complete the replacement?	-	Go to **Step 14**	-

14	1. Use the scan tool in order to clear the DTCs. 2. Operate the vehicle within the Conditions for Running the DTC as specified in the supporting text. Does the DTC reset?	-	Go to **Step 2**	System OK

DTC B2648

Circuit Description

The ambient light sensor circuit provides an input to the BCM for DRL and automatic headlight functions. This input allows the BCM to activate or deactivate DRL and automatic headlamps with different ambient light levels. The BCM supplies a DRL ambient light sensor low reference circuit and a signal circuit to the ambient light sensor. The BCM will detect high voltage on the ambient light sensor signal circuit when ambient light is high, and low voltage when ambient light is low. The BCM monitors the ambient light sensor voltage at the signal circuit and determines if the voltage is within range. If the voltage is not within range, a malfunction is present and a DTC will set.

Conditions for Setting the DTC

- A short to voltage in the ambient light sensor circuit.
- A short to voltage in the DRL ambient light sensor low reference.
- Condition must be present for 2 seconds.

Action Taken When the DTC Sets

- Stores a DTC B2648 in the BCM memory.
- The automatic headlamps and park lamps will remain ON.

Conditions for Clearing the DTC

- The BCM no longer detects a short to voltage in the ambient light sensor circuit.
- The BCM no longer detects a short to voltage in the DRL ambient light sensor low reference circuit.
- A history DTC will clear after 50 consecutive ignition cycles if the condition for the malfunction is no longer present.
- Use the IPC clearing DTCs feature.
- The BCM receives the Clear Code command from the scan tool.

Diagnostic Aids

- The following conditions may cause an intermittent malfunction:
  - An intermittent short to voltage in the ambient light sensor signal circuit.
  - An intermittent short to voltage in the ambient light sensor reference circuit.

- If the ambient light sensor circuit is open or shorted (to ground or voltage), the BCM will command the automatic headlamps and park lamps ON. If the ignition is cycled the BCM will retest for any malfunctions in the ambient light sensor circuit and if a malfunction is current the BCM will activate the automatic.
- If the DTC is a history DTC, the problem may be intermittent. Perform the tests shown while moving related wiring and connectors. This can often cause the malfunction to occur. Refer to **Testing for Intermittent Conditions and Poor Connections** in Wiring Systems.

Test Description

The number(s) below refer to the step number(s) on the diagnostic table.

2: Tests ambient light sensor data using a scan tool.

3: Tests the ambient light sensor data with the sensor disconnected. The scan tool will display ambient light sensor voltage as 0 volts with the sensor disconnected.

4: Tests the ambient light sensor data with a jumper wire between the reference and signal circuit. The scan tool will display ambient light sensor voltage between 3.5-4.5 volts with the sensor jumpered.

5: Tests for a short to voltage in the DRL ambient light sensor low reference circuit.

DTC B2648

Step	Action	Value (s)	Yes	No
Schematic Reference:Headlights/Daytime Running Lights (DRL) Schematics **Connector End View Reference:Master Electrical Component List**				
1	Did you perform the Lighting System Diagnostic System Check?	-	Go to **Step 2**	Go to **Diagnostic System Check - Lighting Systems**
2	1. Install a scan tool. 2. Turn ON the ignition, with the engine OFF. 3. Apply a bright incandescent light to the ambient light sensor. 4. With a scan tool, observe the DRL Ambient Light Sensor parameter in the BCM data list. Does the scan tool indicate that the DRL Ambient Light Sensor parameter is within the specified range?	0.1-2.5 V	Go to Diagnostic Aids	Go to **Step 3**
3	1. Turn OFF the ignition. 2. Disconnect the ambient light sensor. 3. Turn ON the ignition, with the engine OFF. 4. With a scan tool, observe the DRL Ambient Light Sensor parameter. Does the scan tool indicate that the DRL Ambient Light	0.1 V		

	Sensor parameter is less than the specified value?		Go to **Step 4**	Go to **Step 9**
4	1. Turn OFF the ignition. 2. Connect a 3 amp fused jumper wire between the 5 volt reference circuit of the ambient light sensor and the signal circuit of the ambient light sensor. 3. Turn ON the ignition, with the engine OFF. 4. With a scan tool, observe the DRL Ambient Light Sensor parameter. Does the scan tool indicate that the DRL Ambient Light Sensor parameter is greater than the specified value?	3.5 V	Go to **Step 5**	Go to **Step 7**
5	1. Disconnect the fused jumper wire. 2. Measure the voltage between the DRL ambient light sensor low reference circuit of the ambient light sensor and the signal circuit of the ambient light sensor. Does the voltage measure less than the specified value?	5.0 V	Go to **Step 10**	Go to **Step 6**
6	Test the DRL ambient light sensor low reference circuit of the ambient light sensor for a short to battery positive voltage. Refer to **Circuit Testing** and **Wiring Repairs** in Wiring Systems. Did you find and correct the condition?	-	Go to **Step 14**	Go to **Step 11**
7	Test the DRL ambient light sensor low reference circuit of the ambient light sensor for a short to ground, a high resistance, or an open. Refer to **Circuit Testing** and **Wiring Repairs** in Wiring Systems. Did you find and correct the condition?	-	Go to **Step 14**	Go to **Step 8**
8	Test the signal circuit of the ambient light sensor for a short to ground, a high resistance, or an open. Refer to **Circuit Testing** and **Wiring Repairs** in Wiring Systems. Did you find and correct the condition?	-	Go to **Step 14**	Go to **Step 11**
9	Test the signal circuit of the ambient light sensor for a short to battery positive voltage. Refer to **Circuit Testing** and **Wiring Repairs** in Wiring Systems. Did you find and correct the condition?	-	Go to **Step 14**	Go to **Step 11**
10	Inspect for poor connections at the harness connector of the ambient light sensor. Refer to **Testing for Intermittent Conditions and Poor Connections** and **Connector Repairs** in Wiring Systems. Did you find and correct the condition?	-	Go to **Step 14**	Go to **Step 12**
11	Inspect for poor connections at the harness connector of the BCM. Refer to **Testing for Intermittent Conditions and Poor Connections** and **Connector Repairs** in	-		

	Wiring Systems. Did you find and correct the condition?		Go to **Step 14**	Go to **Step 13**
12	Replace the ambient light sensor. Refer to **Daytime Running Lamps (DRL) Ambient Light Sensor Replacement** . Did you complete the replacement?	-	Go to **Step 14**	-
13	**IMPORTANT:** **Perform the BCM reprogram procedure. Refer to Body Control Module (BCM) Programming/RPO Configuration in Body Control System.** Replace the BCM. Refer to **Body Control Module Replacement** in Body Control System.Did you complete the replacement?	-	Go to **Step 14**	-
14	1. Use the scan tool in order to clear the DTCs. 2. Operate the vehicle within the Conditions for Running the DTC as specified in the supporting text. Does the DTC reset?	-	Go to **Step 2**	System OK

SYMPTOMS - LIGHTING SYSTEMS

IMPORTANT: Complete the following steps before using the symptom tables.

1. Perform **Diagnostic System Check - Lighting Systems** before using the Symptom Tables in order to verify that all of the following conditions are true:
   - No DTCs are set.
   - The control module(s) can communicate via the serial data link.
2. Review the system operation in order to familiarize yourself with the system functions. Refer to the following procedures:
   - **Exterior Lighting Systems Description and Operation**
   - **Interior Lighting Systems Description and Operation**

Visual/Physical Inspection

- Inspect for aftermarket devices which could affect the operation of the Lighting System. Refer to **Checking Aftermarket Accessories** in Wiring Systems.
- Inspect the easily accessible or visible system components for obvious damage or conditions which could cause the symptom.

Intermittent

Faulty electrical connections or wiring may be the cause of intermittent conditions. Refer to **Testing for**

Intermittent Conditions and Poor Connections in Wiring Systems.

Symptom List

Refer to a symptom diagnostic procedure from the following list in order to diagnose the symptom:

- **Backup Lamps Always On**
- **Backup Lamps Inoperative**
- **Courtesy Lamps Always On**
- **Courtesy Lamps Inoperative**
- **Fog Lamp Indicator Inoperative**
- **Fog Lamps Always On**
- **Fog Lamps Inoperative**
- **Hazard Lamps Always On**
- **Hazard Lamps Inoperative**
- **Headlamp Door(s) Inoperative**
- **Headlamps Inoperative - Low Beams**
- **Headlamps Inoperative - High Beams**
- **Headlamps Inoperative - Low and High Beams**
- **High Beam Indicator Inoperative**
- **Instrument Panel (I/P) Compartment Lamp Inoperative**
- **Park Lamps Inoperative**
- **Rearview Mirror Lamp(s) Inoperative - Inside**
- **Stop Lamps Always On**
- **Stop Lamps Inoperative**
- **Turn Signal Lamps and/or Indicators Inoperative**
- **Twilight Sentinel Inoperative**
- **Underhood Lamp Inoperative**
- **Vanity Mirror Lamp(s) Inoperative**

BACKUP LAMPS ALWAYS ON

Backup Lamps Always On

Step	Action	Yes	No
Schematic Reference:Exterior Lights Schematics **Connector End View Reference:Master Electrical Component List**			
1	Did you perform the Lighting Systems Diagnostic System Check?	Go to **Step 2**	Go to **Diagnostic System Check - Lighting Systems**

2	1. Turn ON the ignition. 2. Shift the gear selector lever to the REVERSE position and then to the PARK position. Do the backup lamps turn ON in the REVERSE position and turn OFF in the PARK position?	Go to **Testing for Intermittent Conditions and Poor Connections** in Wiring Systems	Go to **Step 3**
3	1. Turn the ignition to ON position with the engine off. 2. Install a scan tool, display the output controls-light test information. 3. Display the backup light request information. Does the scan tool indicate the Backup Light Request is OFF?	Go to **Step 4**	Go to **Step 8**
4	Disconnect the backup lamp (manual) switch or the park/neutral position (auto) switch connector. Do the backup lamps turn OFF?	Go to **Step 9**	Go to **Step 5**
5	Remove the BACKUP relay #38 from the underhood electrical center. Do the backup lamps turn OFF?	Go to **Step 6**	Go to **Step 7**
6	Test the backup lamp switch circuit for a short to battery positive voltage. Refer to **Circuit Testing** and **Wiring Repairs** in Wiring Systems. Did you find and correct the condition?	Go to **Step 11**	Go to **Step 10**
7	Repair a short to battery positive voltage in the backup lamp voltage supply circuit. Refer to **Circuit Testing** and **Wiring Repairs** in Wiring Systems. Did you complete the repair?	Go to **Step 11**	-
8	**IMPORTANT:** **Perform the set-up procedure for the BCM. Refer to Body Control Module (BCM) Programming/RPO Configuration in Body Control System.** Replace the BCM. Refer to **Body Control Module Replacement** in Body Control System.Did you complete the replacement?	Go to **Step 11**	-
9	Replace the backup lamp (manual) switch or the park/neutral position (auto) switch. Refer to **Backup Lamp Switch Replacement** in Manual Transmission or **Park/Neutral Position Switch Replacement** in Automatic Transaxle. Did you complete the replacement?	Go to **Step 11**	-
	Replace the BACKUP relay #38. Refer to **Relay Replacement (Within an Electrical Center)** or		

10	**Relay Replacement (Attached to Wire Harness)** in Wiring Systems. Did you complete the replacement?	Go to **Step 11**	-
11	Operate the system in order to verify the repair. Did you correct the condition?	System OK	Go to **Step 2**

BACKUP LAMPS INOPERATIVE

Backup Lamps Inoperative

Step	Action	Yes	No
Schematic Reference:Exterior Lights Schematics **Connector End View Reference:Master Electrical Component List**			
1	Did you perform the Lighting Systems Diagnostic System Check?	Go to **Step 2**	Go to **Diagnostic System Check - Lighting Systems**
2	1. Turn ON the ignition. 2. Place the gear selector lever to the REVERSE position. Do both backup lamps illuminate?	Go to **Testing for Intermittent Conditions and Poor Connections** in Wiring Systems	Go to **Step 3**
3	Is only one lamp inoperative?	Go to **Step 12**	Go to **Step 4**
4	1. Disconnect the harness connector at one of the following switches: • Auto: The park neutral position (PNP) switch • Manual: The backup lamp switch 2. Probe the ignition positive voltage supply circuit of the switch with a test lamp that is connected to ground. Does the test lamp illuminate?	Go to **Step 5**	Go to **Step 11**
5	Install a fused jumper across the ignition positive voltage supply circuit and the backup lamps relay switched voltage supply circuit. Do the backup lamps illuminate?	Go to **Step 8**	Go to **Step 6**
6	1. Remove the backup lamp relay #38. 2. Reconnect the park/neutral position switch or the backup switch. 3. Install a fused jumper between the backup lamps relay switched voltage supply circuit and the backup lamps voltage supply circuit 4. Place the gear selector in the REVERSE		

	position. Do the backup lamps illuminate?	Go to **Step 13**	Go to **Step 7**
7	Test the backup lamp relay switched voltage supply circuit for a short to ground or an open. Refer to **Circuit Testing** and **Wiring Repairs** in Wiring Systems. Did you find and correct the condition?	Go to **Step 15**	Go to **Step 9**
8	1. Inspect the PNP switch (auto) or the backup lamp switch (manual). 2. Adjust or replace the switch if needed. Refer to **Park/Neutral Position Switch Replacement** in Automatic Transaxle - 4T65E or **Backup Lamp Switch Replacement** in Manual Transmission. Did you complete the repair?	Go to **Step 15**	-
9	Test the backup lamp voltage supply circuit for a short to ground, or an open. Refer to **Circuit Testing** and **Wiring Repairs** in Wiring Systems. Did you find and correct the condition?	Go to **Step 15**	Go to **Step 10**
10	Inspect the underhood fuse block harness connectors for a poor connection or an open. Refer to **Testing for Intermittent Conditions and Poor Connections** and **Connector Repairs** in Wiring Systems. Did you find and correct the condition?	Go to **Step 15**	Go to **Step 14**
11	Repair the open, high resistance, or short to ground in the ignition positive voltage supply circuit of the PNP switch (auto) or the backup lamp switch (manual). Refer to **Circuit Testing** and **Wiring Repairs** in Wiring Systems. Did you complete the repair?	Go to **Step 15**	-
12	Repair the open or the high resistance in the inoperative backup lamp voltage supply circuit or the ground circuit. Refer to **Circuit Testing** and **Wiring Repairs** in Wiring Systems. Did you complete the repair?	Go to **Step 15**	-
13	Replace the backup lamp relay #38. Refer to **Relay Replacement (Within an Electrical Center)** or **Relay Replacement (Attached to Wire Harness)** in Wiring Systems. Did you complete the repair?	Go to **Step 15**	-
14	Replace the underhood fuse center. Refer to **Underhood Electrical Center or Junction Block Replacement** in Wiring Systems.		

	Did you complete the repair?	Go to **Step 15**	-
15	Operate the system in order to verify the repair. Did you correct the condition?	System OK	Go to **Step 2**

COURTESY LAMPS ALWAYS ON

Courtesy Lamps Always On

Step	Action	Yes	No
Schematic Reference:Interior Lights Dimming Schematics **Connector End View Reference:Master Electrical Component List**			
1	Did you perform the Lighting System Diagnostic System Check?	Go to **Step 2**	Go to **Diagnostic System Check - Lighting Systems**
2	1. Turn the headlamp switch to the OFF position. 2. Close all doors. Are all of the courtesy lamps OFF?	Go to **Testing for Intermittent Conditions and Poor Connections** in Wiring Systems	Go to **Step 3**
3	Remove the CTSY LP relay 42. Do the courtesy lamps turn OFF?	Go to **Step 4**	Go to **Step 5**
4	1. Inspect for a short to ground in the CTSY LP relay control circuit. Refer to **Wiring Repairs** in Wiring Systems. 2. If OK, replace the CTSY LP relay 42. Refer to **Relay Replacement (Within an Electrical Center)** or **Relay Replacement (Attached to Wire Harness)** in Wiring Systems. Did you complete the repair?	Go to **Step 6**	-
5	Repair a short to battery positive voltage in the switch courtesy lamp voltage supply circuit. Refer to **Wiring Repairs** in Wiring Systems. Did you complete the repair?	Go to **Step 6**	-
6	Operate the system in order to verify the repair. Did you correct the condition?	System OK	Go to **Step 3**

COURTESY LAMPS INOPERATIVE

Courtesy Lamps Inoperative

Step	Action	Yes	No
Schematic Reference:Interior Lights Schematics **Connector End View Reference:Master Electrical Component List**			

1	Did you perform the Lighting System Diagnostic System Check?	Go to **Step 2**	Go to **Diagnostic System Check - Lighting Systems**
2	Open each of the doors. Do all of the courtesy lamps illuminate when you open each door?	Go to **Testing for Intermittent Conditions and Poor Connections** in Wiring Systems	Go to **Step 3**
3	Are the courtesy lamps inoperative from one door only?	Go to **Diagnostic Starting Point - Doors** in Doors	Go to **Step 4**
4	Are all of the courtesy lamps inoperative?	Go to **Step 5**	Go to **Step 8**
5	1. Remove the CTSY LP relay 42. 2. Using a test lamp, probe between the battery positive voltage supply circuit of the CTSY LP relay and the CTSY LP relay control circuit. 3. Open a door. Does the test lamp illuminate?	Go to **Step 6**	Go to **Step 7**
6	Install a jumper between the battery positive voltage supply circuit of the CTSY LP relay and the switched CTSY lamp supply circuit. Do the courtesy lamps illuminate?	Go to **Step 10**	Go to **Step 11**
7	Test for a high resistance, an open, or a short to battery positive in the CTSY LP relay control circuit. Refer to **Circuit Testing** and **Wiring Repairs** in Wiring Systems. Did you find and correct the condition?	Go to **Step 12**	Go to **Step 9**
8	Repair the open, high resistance, or short to ground in the inoperative courtesy lamp power supply or ground circuit. Refer to **Circuit Testing** and **Wiring Repairs** in Wiring Systems. Did you complete the repair?	Go to **Step 12**	-
9	**IMPORTANT:** **Perform the set-up procedure for the BCM. Refer to Body Control Module (BCM) Programming/RPO Configuration in Body Control System.** Replace the BCM. Refer to **Body Control Module Replacement** in Body Control System.Did you complete the replacement?	Go to **Step 12**	-
10	Replace the CTSY LP relay 42. Refer to **Relay Replacement (Within an Electrical Center)** or **Relay Replacement (Attached to Wire Harness)** in Wiring Systems.		

	Did you complete the replacement?	Go to **Step 12**	-
11	Replace the instrument panel fuse block. Refer to **Instrument Panel Electrical Center or Junction Block Replacement** in Wiring Systems. Did you complete the replacement?	Go to **Step 12**	-
12	Operate the system in order to verify the repair. Did you correct the condition?	System OK	Go to **Step 2**

FOG LAMP INDICATOR INOPERATIVE

Fog Lamp Indicator Inoperative

Step	Action	Yes	No
Schematic Reference:Fog Lights Schematics **Connector End View Reference:Master Electrical Component List**			
1	Did you perform the Lighting System Diagnostic System Check?	Go to **Step 2**	Go to **Diagnostic System Check - Lighting Systems**
2	1. Turn the ignition to the RUN position. 2. Turn ON the park lamps. 3. Turn ON the fog lamps. Does the fog lamp indicator illuminate?	Go to **Testing for Intermittent Conditions and Poor Connections** in Wiring Systems	Go to **Step 3**
3	1. Turn the ignition to the ON position. 2. Remove the fog lamp switch, do not disconnect. 3. Turn the headlamp switch ON. 4. Press the fog lamp switch. 5. Using a test lamp connected to ground, back probe the fog lamp relay switched battery positive voltage supply circuit at the fog lamp switch. Does the test lamp illuminate?	Go to **Step 5**	Go to **Step 4**
4	Test for a poor connection or an open in the fog lamp relay switched battery positive voltage supply circuit. Refer to **Circuit Testing** and **Wiring Repairs** in Wiring Systems. Did you find and correct condition?	Go to **Step 10**	Go to **Step 8**
5	1. Disconnect the BCM connector C3. 2. At the BCM connector C3, install a jumper between the fog lamp indicator control circuit and ground.		

	3. Turn the ignition to the ON position. 4. Press the fog lamp switch. Does the fog lamp switch indicator illuminate?	Go to **Step 9**	Go to **Step 6**
6	Test for a short to battery positive voltage, an open or a high resistance in the fog lamp indicator control circuit. Refer to **Circuit Testing** and **Wiring Repairs** in Wiring Systems. Did you find and correct the condition?	Go to **Step 10**	Go to **Step 7**
7	Replace the fog lamp switch. Refer to **Fog Lamp Switch Replacement - Front** . Did you complete the repair?	Go to **Step 10**	-
8	Replace the underhood fuse block. Refer to **Underhood Electrical Center or Junction Block Replacement** in Wiring Systems. Did you complete the repair?	Go to **Step 9**	-
9	**IMPORTANT:** **Perform the set up procedure for the body control module. Refer to Body Control Module (BCM) Programming/RPO Configuration in Body Control Systems. Replace the BCM. Refer to Body Control Module Replacement in Body Control System.** Did you complete the replacement?	Go to **Step 10**	-
10	Operate the system in order to verify the repair. Did you correct the condition?	System OK	Go to **Step 3**

FOG LAMPS ALWAYS ON

Fog Lamps Always On

Step	Action	Yes	No
Schematic Reference:Fog Lights Schematics **Connector End View Reference:Master Electrical Component List** DEFINITION: Use this chart if either the front or the rear fog lamps are ON all of the time.			
1	Did you perform the Lighting System Diagnostic System Check?	Go to **Step 2**	Go to **Diagnostic System Check - Lighting Systems**
2	1. Turn the ignition to the ON position. 2. Press the fog lamp switch to the OFF position. Are the fog lamps off?	Go to **Testing for Intermittent Conditions and Poor Connections** in Wiring Systems	Go to **Step 3**
3	Remove the fog lamp relay. Do the fog lamps turn OFF?	Go to **Step 5**	Go to **Step 4**

4	1. Reinstall the fog lamp relay. 2. Test for a short to battery positive voltage on the fog lamp switched battery positive voltage. Refer to **Circuit Testing** and **Wiring Repairs** in Wiring Systems. Did you find and correct the condition?	Go to **Step 8**	Go to **Step 7**
5	Test for a short to ground in the fog lamp relay control circuit. Refer to **Circuit Testing** and **Wiring Repairs** in Wiring Systems. Did you find and current the condition?	Go to **Step 8**	Go to **Step 6**
6	Replace the fog lamp relay. Refer to **Relay Replacement (Within an Electrical Center)** or **Relay Replacement (Attached to Wire Harness)** in Wiring Systems. Did you complete the replacement?	Go to **Step 8**	-
7	Replace the underhood fuse block. Refer to **Underhood Electrical Center or Junction Block Replacement** in Wiring Systems. Did you complete the replacement?	Go to **Step 8**	-
8	Operate the system in order to verify the repair. Did you correct the condition?	System OK	Go to **Step 2**

FOG LAMPS INOPERATIVE

Fog Lamps Inoperative

Step	Action	Yes	No
Schematic Reference:Fog Lights Schematics **Connector End View Reference:Master Electrical Component List** DEFINITION: Use this chart if either the front or the rear fog lamp is inoperative.			
1	Did you perform the Lighting System Diagnostic System Check?	Go to **Step 2**	Go to **Diagnostic System Check - Lighting Systems**
2	1. Turn ON the ignition, with the engine OFF. 2. Turn ON the park lamps. 3. Turn ON the fog lamps. Do both fog lamps illuminate?	Go to **Testing for Intermittent Conditions and Poor Connections** in Wiring Systems	Go to **Step 3**
3	Did only one lamp illuminate?	Go to **Step 11**	Go to **Step 4**
4	1. Install a scan tool. 2. Turn ON the ignition, with the engine OFF. 3. With the scan tool, command the inoperable fog lamp relay ON and OFF.		

	Do the fog lamps turn ON and OFF with each command?	Go to **Step 5**	Go to **Step 6**
5	1. Remove and disconnect the front or the rear fog lamp switch. 2. Install a jumper, between the fused F/TNKDR battery positive voltage supply circuit and the inoperable fog lamp switch signal circuit at the front or the rear fog lamp switch. Do the fog lamps illuminate?	Go to **Step 12**	Go to **Step 9**
6	1. Remove the fog lamp relay. 2. Install a fused jumper across the switch relay connection. Do the fog lamps turn ON?	Go to **Step 7**	Go to **Step 10**
7	1. Reinstall the fog lamp relay. 2. Disconnect the BCM connector C1. 3. Install a fused jumper at the BCM connector C1 between the fog lamp relay control circuit and ground. Do the fog lamps illuminate?	Go to **Step 15**	Go to **Step 8**
8	Test for a short to battery positive voltage, open or a poor connection in the fog lamp relay control circuit. Refer to **Circuit Testing** and **Wiring Repairs** in Wiring Systems. Did you find and complete the repair?	Go to **Step 17**	Go to **Step 13**
9	Test for short to ground, open or a poor connection in the fog lamp switch signal circuit. Refer to **Circuit Testing** and **Wiring Repairs** in Wiring Systems. Did you find and complete the repair?	Go to **Step 17**	Go to **Step 16**
10	Test for an short to ground in the fog lamp switched battery positive voltage supply circuit. Refer to **Circuit Testing** and **Wiring Repairs** in Wiring Systems. Did you complete the repair?	Go to **Step 17**	Go to **Step 14**
11	Repair the open or high resistance in the inoperative fog lamp power supply or ground circuit. Refer to **Circuit Testing** and **Wiring Repairs** in Wiring Systems. Did you complete the repair?	Go to **Step 17**	-

12	Replace the fog lamp switch. Refer to **Fog Lamp Switch Replacement - Front** . Did you complete the replacement?	Go to **Step 17**	-
13	Replace the fog lamp relay. Refer to **Relay Replacement (Within an Electrical Center)** or **Relay Replacement (Attached to Wire Harness)** in Wiring Systems. Did you complete the replacement?	Go to **Step 17**	-
14	Replace the underhood fuse block. Refer to **Underhood Electrical Center or Junction Block Replacement** in Wiring Systems. Did you complete the replacement?	Go to **Step 17**	-
15	**IMPORTANT:** **Perform the setup procedure for the body control module (BCM). Refer to Body Control Module (BCM) Programming/RPO Configuration in Body Control System.** Replace the BCM. Refer to **Body Control Module Replacement** in Body Control Systems.Did you complete the replacement?	Go to **Step 17**	-
16	Repair an open, high resistance or short to ground in the F/TNKDR fused battery positive voltage supplied circuit. Refer to **Circuit Testing** and **Wiring Repairs** in Wiring Systems. Did you complete the repair?	Go to **Step 17**	-
17	Operate the system in order to verify the repair. Did you correct the condition?	System OK	Go to **Step 2**

HAZARD LAMPS ALWAYS ON

Hazard Lamps Always On

Step	Action	Yes	No
Schematic Reference:Exterior Lights Schematics			
1	Did you perform the Lighting System Diagnostic System Check?	Go to **Step 2**	Go to **Diagnostic System Check - Lighting Systems**
2	Place the hazard switch in the OFF position. Do the hazard lamp remain ON continuously?	Go to **Step 3**	Go to **Testing for Intermittent Conditions and Poor Connections** in Wiring Systems
3	Replace the hazard warning switch. Refer to **Hazard Warning Switch Replacement** . Did you complete the repair?	Go to **Step 4**	-
4	Operate the system in order to verify the repair. Did you correct the condition?	System OK	Go to **Step 2**

HAZARD LAMPS INOPERATIVE

Hazard Lamps Inoperative

Step	Action	Yes	No
Schematic Reference:Exterior Lights Schematics **Connector End View Reference:Master Electrical Component List**			
1	Did you perform the Lighting Systems Diagnostic System Check?	Go to **Step 2**	Go to **Diagnostic System Check - Lighting Systems**
2	Place the hazard switch to the ON position. Do the hazard lamps turn ON?	Go to **Testing for Intermittent Conditions and Poor Connections** in Wiring Systems	Go to **Step 3**
3	1. Disconnect connector C215. 2. Using a test lamp connected to ground, probe the STP HAZ fuse circuit. Does the test lamp illuminate?	Go to **Step 5**	Go to **Step 4**
4	Repair the open, high resistance, or short to ground in the STP HAZ circuit. Refer to **Circuit Testing** and **Wiring Repairs** in Wiring Systems. Is the repair complete?	Go to **Step 6**	-
5	Replace the hazard warning switch. Refer to **Hazard Warning Switch Replacement** . Is the repair complete?	Go to **Step 6**	-
6	Operate the system in order to verify the repair. Did you correct the condition?	System OK	Go to **Step 3**

HEADLAMP DOOR(S) INOPERATIVE

Headlamp Door(s) Inoperative

Step	Action	Yes	No
Schematic Reference:Headlight Doors Schematics **Connector End View Reference:Master Electrical Component List**			
1	Did you perform the Diagnostic System Check?	Go to **Step 2**	Go to **Diagnostic System Check - Lighting Systems**
2	Turn the headlamps ON and OFF. Do the headlamp doors open and close?	Go to **Testing for Intermittent Conditions and Poor Connections** in Wiring Systems	Go to **Step 3**
3	Is only one headlamp door inoperative?	Go to **Step 9**	Go to **Step 4**

4	Are the headlamp doors closed at all times?	Go to **Step 5**	Go to **Step 7**
5	1. Remove the right hand headlamp assembly. 2. Disconnect the control module connectors C1 and C2 to the actuator for the headlamp opening door. 3. Turn the headlamps ON. 4. Connect a test lamp between the headlamps ON input circuit and ground at connector C1. Refer to **Circuit Testing** in Wiring Systems. Does the test lamp illuminate?	Go to **Step 6**	Go to **Step 14**
6	Connect a test lamp between the headlamps ON input circuit and the headlamp door control module ground circuit. Does the test lamp illuminate?	Go to **Step 12**	Go to **Step 15**
7	1. Turn OFF the headlamp switch. 2. Disconnect the headlamp door control module. 3. Using a test lamp, probe between the headlamp OFF input circuit and ground. Does the test lamp illuminate?	Go to **Step 12**	Go to **Step 8**
8	1. Disconnect connector C209. 2. Using a test lamp, probe between the headlamp OFF input circuit (female side) and ground. Does the test lamp illuminate?	Go to **Step 16**	Go to **Step 13**
9	1. Disconnect the headlamp door control module. 2. Using a test lamp connected to ground, probe the inoperative headlamp door motor fused battery positive voltage supply circuit. 3. Turn the ignition to the ON position. 4. Turn the headlamps ON. Does the test lamp illuminate?	Go to **Step 10**	Go to **Step 17**
10	Test the inoperative headlamp door assembly motor up and down circuits for a short to ground, short to battery positive voltage or an open. Refer to **Circuit Testing** and **Wiring Repairs** in Wiring Systems. Did you find and complete the repair?	Go to **Step 21**	Go to **Step 11**

11	Inspect the harness connector for headlamp opening door assembly for a poor connection. Refer to **Testing for Intermittent Conditions and Poor Connections** and **Connector Repairs** in Wiring Systems. Did you find and complete the repair?	Go to **Step 21**	Go to **Step 18**
12	Inspect the harness connector for headlamp door control module for a poor connection. Refer to **Testing for Intermittent Conditions and Poor Connections** and **Connector Repairs** in Wiring Systems. Did you find and complete the repair?	Go to **Step 21**	Go to **Step 19**
13	Inspect the harness connector for multifunction turn signal lever for a poor connection. Refer to **Testing for Intermittent Conditions and Poor Connections** and **Connector Repairs** in Wiring Systems. Did you find and complete the repair?	Go to **Step 21**	Go to **Step 20**
14	Repair a poor connector or an open in the headlamp ON input circuit. Refer to **Circuit Testing** and **Wiring Repairs** in Wiring Systems. Did you complete the repair?	Go to **Step 21**	-
15	Repair a poor connector or an open in the ground circuit of the headlamp door control module. Refer to **Circuit Testing** and **Wiring Repairs** in Wiring Systems. Did you complete the repair?	Go to **Step 21**	-
16	Repair a short to battery positive voltage in the headlamps OFF input circuit. Refer to **Circuit Testing** and **Wiring Repairs** in Wiring Systems. Did you complete the repair?	Go to **Step 21**	-
17	Repair a short to ground or an open in the inoperative headlamp door battery supply circuit. Refer to **Circuit Testing** and **Wiring Repairs** in Wiring Systems. Did you complete the repair?	Go to **Step 21**	-
18	Replace the headlamp opening door assembly. Refer to **Headlamp Opening Door Replacement** . Did you complete the replacement?	Go to **Step 21**	-
19	Replace the headlamp control module. Refer to **Headlamp Control Module Replacement** . Did you complete the replacement?	Go to **Step 21**	-
20	Replace the multifunction turn signal lever. Refer to **Multifunction, Turn Signal Switch Replacement** in Steering Wheel and Column. Did you complete the replacement?	Go to **Step 21**	-

21	Operate the system in order to verify the repair. Did you correct the condition?	System OK	Go to **Step 2**

HEADLAMPS INOPERATIVE - HIGH BEAMS

Headlamps Inoperative - High Beams

Step	Action	Yes	No
Schematic Reference:Headlights/Daytime Running Lights (DRL) Schematics **Connector End View Reference:Master Electrical Component List**			
1	Did you perform the Lighting System Diagnostic System Check?	Go to **Step 2**	Go to **Diagnostic System Check - Lighting Systems**
2	1. Turn ON the headlamps. 2. Ensure that the headlamp dimmer switch in is the HIGH position. Do the high beams illuminate?	Go to **Testing for Intermittent Conditions and Poor Connections** in Wiring Systems	Go to **Step 3**
3	Is only one lamp operative?	Go to **Step 8**	Go to **Step 4**
4	1. Place the headlamp switch in the HDLP position. 2. Disconnect connector C209. 3. Install a fused jumper between the headlamp battery positive voltage supply circuit and the switched high beam voltage supply circuit. Do the high beams illuminate?	Go to **Step 5**	Go to **Step 6**
5	Inspect the harness connection of the multifunction turn signal lever for a poor connection. Refer to **Testing for Intermittent Conditions and Poor Connections** and **Connector Repairs** in Wiring Systems. Did you find and correct the condition?	Go to **Step 10**	Go to **Step 9**
6	Test for a open, poor connection or a short to ground in the high beam headlamp supply voltage circuit between the multifunction turn signal lever and the underhood fuse block. Refer to **Circuit Testing** and **Wiring Repairs** in Wiring Systems. Did you find and correct the condition?	Go to **Step 10**	Go to **Step 7**
7	Replace the underhood fuse block. Refer to **Underhood Electrical Center or Junction Block Replacement** in Wiring Systems. Did you complete the repair?	Go to **Step 10**	-
	Repair the short to ground, open, or high resistance in		

8	the inoperative headlamp power supply or the ground circuit. Refer to **Circuit Testing** and **Wiring Repairs** in Wiring Systems. Did you complete the repair?	Go to **Step 10**	-
9	Replace the multifunction turn signal lever. Refer to **Multifunction, Turn Signal Switch Replacement** in Steering Wheel and Column. Did you complete the repair?	Go to **Step 10**	-
10	Operate the system in order to verify the repair. Did you correct the situation?	System OK	Go to **Step 3**

HEADLAMPS INOPERATIVE - LOW BEAMS

Headlamps Inoperative - Low Beams

Step	Action	Yes	No
Schematic Reference:Headlights/Daytime Running Lights (DRL) Schematics **Connector End View Reference:Master Electrical Component List**			
1	Did you perform the Lighting System Diagnostic System Check?	Go to **Step 2**	Go to **Diagnostic System Check - Lighting Systems**
2	1. Turn ON the headlamps. 2. Ensure that the headlamp dimmer switch in is the LOW position. Do the low beams illuminate?	Go to **Testing for Intermittent Conditions and Poor Connections** in Wiring Systems	Go to **Step 3**
3	Is only one lamp operative?	Go to **Step 8**	Go to **Step 4**
4	1. Place the headlamp switch in the HDLP position. 2. Disconnect connector C209. 3. Install a fused jumper between the headlamp battery positive voltage supply circuit and the switched low beam voltage supply circuit. Do the low beams illuminate?	Go to **Step 5**	Go to **Step 6**
5	Inspect the harness connection of the multifunction turn signal lever for a poor connection. Refer to **Testing for Intermittent Conditions and Poor Connections** and **Connector Repairs** in Wiring Systems. Did you find and correct the condition?	Go to **Step 10**	Go to **Step 9**
	Test for an open, poor connection or a short to ground in the low beam supply voltage circuit between the multifunction turn signal switch lever and the		

6	underhood fuse block. Refer to **Circuit Testing** and **Wiring Repairs** in Wiring Systems. Did you find and correct the condition?	Go to **Step 10**	Go to **Step 7**
7	Replace the underhood fuse block. Refer to **Underhood Electrical Center or Junction Block Replacement** in Wiring Systems. Did you complete the repair?	Go to **Step 10**	-
8	Repair the short to ground, open, or high resistance in the inoperative headlamp power supply or the ground circuit. Refer to **Circuit Testing** and **Wiring Repairs** in Wiring Systems. Did you complete the repair?	Go to **Step 10**	-
9	Replace the multifunction turn signal lever. Refer to **Multifunction, Turn Signal Switch Replacement** in Steering Wheel and Column. Did you complete the repair?	Go to **Step 10**	-
10	Operate the system in order to verify the repair. Did you correct the situation?	System OK	Go to **Step 3**

HEADLAMPS INOPERATIVE - LOW AND HIGH BEAMS

Headlamps Inoperative - Low and High Beams

Step	Action	Yes	No
Schematic Reference:Headlights/Daytime Running Lights (DRL) Schematics **Connector End View Reference:Master Electrical Component List**			
1	Did you perform the Lighting System Diagnostic System Check?	Go to **Step 2**	Go to **Diagnostic System Check - Lighting Systems**
2	1. Turn the ignition to the ON position. 2. Cover the ambient light sensor with a dark cloth. Do the low beam headlamps illuminate?	Go to **Step 3**	Go to **Twilight Sentinel Inoperative**
3	1. Turn the headlamp switch to the ON position. 2. Uncover the ambient sensor. 3. Turn the high beam switch to the ON and then to the OFF position Do the low and then the high beam headlamps turn on and off?	Go to **Testing for Intermittent Conditions and Poor Connections** in Wiring Systems	Go to **Step 4**
	1. Disconnect connector C209. 2. Using a test lamp at C209, probe the male		

4	side between the switched headlamp battery positive voltage supply circuit and ground. Does the test lamp illuminate?	Go to **Step 5**	Go to **Step 6**
5	Inspect the multifunction turn signal lever harness connector C209 for a poor connection. Refer to **Testing for Intermittent Conditions and Poor Connections** and **Connector Repairs** in Wiring Systems. Did you find and correct the condition?	Go to **Step 9**	Go to **Step 8**
6	Test for an open, high resistance or a short to ground in the headlamp battery positive voltage input circuit. Refer to **Circuit Testing** and **Wiring Repairs** in Wiring Systems. Did you find and correct the condition?	Go to **Step 9**	Go to **Step 7**
7	Replace the ALC relay. Refer to **Relay Replacement (Within an Electrical Center)** or **Relay Replacement (Attached to Wire Harness)** in Wiring Systems. Did you complete the repair?	Go to **Step 9**	-
8	Replace the multifunction turn signal lever. Refer to **Multifunction, Turn Signal Switch Replacement** in Steering Wheel and Column. Did you complete the replacement?	Go to **Step 9**	-
9	Operate the system in order to verify the repair. Did you correct the condition?	System OK	Go to **Step 3**

HIGH BEAM INDICATOR INOPERATIVE

High Beam Indicator Inoperative

Step	Action	Yes	No
Schematic Reference:Headlights/Daytime Running Lights (DRL) Schematics **Connector End View Reference:Master Electrical Component List**			
1	Did you perform the Lighting System Diagnostic System Check?	Go to **Step 2**	Go to **Diagnostic System Check - Lighting Systems**
2	1. Place the headlamp switch to the HDLP position. 2. Turn ON the ignition, with the engine OFF. 3. Place the headlamp switch in the HIGH position. 4. Observe the high beam indicator. Does the indicator illuminate?	Go to **Testing for Intermittent Conditions and Poor Connections** in Wiring Systems	Go to **Step 3**

3	1. Disconnect C209. 2. Using a test lamp connected to a ground, probe the male side of connector C209 between the high beam indicator voltage supply circuit and ground. 3. Turn ON the high beam headlamps. Does the test lamp illuminate?	Go to **Step 4**	Go to **Step 5**
4	Inspect the instrument panel cluster harness connector for a poor connection. Refer to **Testing for Intermittent Conditions and Poor Connections** and **Connector Repairs** in Wiring Systems. Did you find and correct the condition?	Go to **Step 7**	Go to **Step 6**
5	Repair a poor connection or an open in the high beam indicator voltage supply circuit. Refer to **Circuit Testing** and **Wiring Repairs** in Wiring Systems. Did you complete the repair?	Go to **Step 7**	-
6	Replace the instrument cluster. Refer to **Instrument Panel Cluster (IPC) Replacement** in Instrument Panel, Gauges, and Console. Did you complete the replacement?	Go to **Step 7**	-
7	Operate the system in order to verify the repair. Did you correct the condition?	System OK	Go to **Step 2**

INSTRUMENT PANEL (I/P) COMPARTMENT LAMP INOPERATIVE

Instrument Panel (I/P) Compartment Lamp Inoperative

Step	Action	Yes	No
Schematic Reference:Interior Lights Schematics **Connector End View Reference:Master Electrical Component List**			
1	Did you perform the Lighting Systems Diagnostic System Check?	Go to **Step 2**	Go to **Diagnostic System Check - Lighting Systems**
2	Open the I/P compartment. Does the lamp turn ON?	Go to **Testing for Intermittent Conditions and Poor Connections** in Wiring Systems	Go to **Step 3**
3	Does the underhood lamp, vanity mirror lamp, and rearview mirror lamp operate normally?	Go to **Step 6**	Go to **Step 4**
4	1. Remove the monitored LD relay. 2. Install a 10 A fused jumper between the coil side supply circuit and the switched side		

	supply circuit. Do the lamps operate normally?	Go to **Step 5**	Go to **Step 12**
5	1. Reinstall the monitored LD relay. 2. Disconnect the BCM connector C1. 3. Install a jumper between the courtesy lamp relay control circuit and ground. Do the lamps operate normally?	Go to **Step 13**	Go to **Step 8**
6	1. Turn ON the ignition, with the engine OFF. 2. Remove the I/P compartment lamp. 3. Probe the I/P compartment lamp voltage supply circuit with a test lamp connected to ground. Does the test lamp illuminate?	Go to **Step 7**	Go to **Step 9**
7	Connect a test lamp between the I/P compartment lamp voltage supply circuit and the ground circuit of the I/P compartment lamp. Does the test lamp illuminate?	Go to **Step 14**	Go to **Step 10**
8	Test for a poor connection, an open, or a short to battery positive voltage in the courtesy lamp relay control circuit. Refer to **Circuit Testing** and **Wiring Repairs** in Wiring Systems. Did you find and correct the condition?	Go to **Step 15**	Go to **Step 11**
9	Repair the open in the switched voltage supply circuit of the I/P compartment lamp. Refer to **Circuit Testing** and **Wiring Repairs** in Wiring Systems. Did you complete the repair?	Go to **Step 15**	-
10	Repair the open in the ground circuit of the I/P compartment lamp. Refer to **Circuit Testing** and **Wiring Repairs** in Wiring Systems. Did you complete the repair?	Go to **Step 15**	-
11	Replace the monitored LD relay. Refer to **Relay Replacement (Within an Electrical Center)** or **Relay Replacement (Attached to Wire Harness)** in Wiring Systems. Did you complete the repair?	Go to **Step 15**	-
12	Replace the I/P fuse block. Refer to **Relay Replacement (Within an Electrical Center)** or **Relay Replacement (Attached to Wire Harness)** in Wiring Systems. Did you complete the replacement.	Go to **Step 15**	-

13	**IMPORTANT:** **Perform the set up procedure for the body control module. Refer to Body Control Module (BCM) Programming/RPO Configuration in Body Control System.** Replace the BCM. Refer to **Body Control Module Replacement** in Body Control System.Did you complete the replacement.	Go to **Step 15**	-
14	Replace the IP compartment lamp switch. Refer to **Instrument Panel (I/P) Compartment Lamp Switch Replacement** . Did you complete the replacement?	Go to **Step 15**	-
15	Operate the system in order to verify the repair. Did you correct the condition?	System OK	Go to **Step 3**

PARK LAMPS INOPERATIVE

Park Lamps Inoperative

Step	Action	Yes	No
Schematic Reference:Exterior Lights Schematics **Connector End View Reference:Master Electrical Component List**			
1	Did you perform the Lighting System Diagnostic System Check?	Go to **Step 2**	Go to **Diagnostic System Check - Lighting Systems**
2	1. Turn ON the ignition, with the engine OFF. 2. Turn the headlamp switch to the PARK position. Do all of the park lamps illuminate?	Go to **Testing for Intermittent Conditions and Poor Connections** in Wiring Systems	Go to **Step 3**
3	Is only one lamp inoperative?	Go to **Step 6**	Go to **Step 4**
4	1. Disconnect the headlamp switch. 2. Connect a test lamp between switched battery positive voltage and the park lamp supply circuit of the park lamp switch at the headlamp connector. Does the test lamp illuminate?	Go to **Step 7**	Go to **Step 5**
5	Repair an open or a poor connection in the switched park lamp supply circuit of the headlamp switch. Refer to **Circuit Testing** and **Wiring Repairs** in Wiring Systems. Did you complete the repair?	Go to **Step 8**	-

6	Repair the open or high resistance in the inoperative park lamp power supply or ground circuit. Refer to **Circuit Testing** and **Wiring Repairs** in Wiring Systems. Did you complete the repair?	Go to **Step 8**	-
7	Replace the headlamp switch. Refer to **Multifunction, Turn Signal Switch Replacement** in Steering Wheel and Column. Did you complete the replacement?	Go to **Step 8**	-
8	Operate the system in order to verify the repair. Did you correct the condition?	System OK	Go to **Step 3**

REARVIEW MIRROR LAMP(S) INOPERATIVE - INSIDE

Rearview Mirror Lamp(s) Inoperative - Inside

Step	Action	Yes	No
Schematic Reference:Interior Lights Schematics **Connector End View Reference:Master Electrical Component List**			
1	Did you perform the Lighting Systems Diagnostic Systems Check?	Go to **Step 2**	Go to **Diagnostic System Check - Lighting Systems**
2	Turn ON the rearview mirror reading lamps. Do the lamps illuminate?	Go to **Testing for Intermittent Conditions and Poor Connections** in Wiring Systems	Go to **Step 3**
3	Does the I/P compartment lamp, underhood lamp, and vanity mirror lamp operate normally?	Go to **Step 4**	Go to **Instrument Panel (I/P) Compartment Lamp Inoperative**
4	1. Disconnect the inside rearview mirror. 2. Probe the switched battery positive voltage supply circuit of the inside rearview mirror reading lamp with the test lamp connected to ground. Does the test lamp illuminate?	Go to **Step 5**	Go to **Step 6**
5	Connect a test lamp between the switched battery positive voltage feed circuit of the inside rearview mirror reading lamp and the ground circuit. Does the test lamp illuminate?	Go to **Step 8**	Go to **Step 7**
6	Repair the poor connection or the open in the switched battery positive voltage feed circuit of the inside rearview mirror reading lamp. Refer to **Circuit Testing** and **Wiring Repairs** in		

	Wiring Systems. Did you complete the repair?	Go to **Step 9**	-
7	Repair the poor connection or the open in the ground circuit of the inside rearview mirror reading lamp. Refer to **Circuit Testing** and **Wiring Repairs** in Wiring Systems. Did you complete the repair?	Go to **Step 9**	-
8	Replace the inside rearview mirror. Refer to **Rearview Mirror Lamp Replacement** . Did you complete the replacement?	Go to **Step 9**	-
9	Operate the system in order to verify the repair. Did you correct the condition?	System OK	Go to **Step 3**

STOP LAMPS ALWAYS ON

Stop Lamps Always On

Step	Action	Yes	No
Schematic Reference:Exterior Lights Schematics **Connector End View Reference:Master Electrical Component List**			
1	Did you perform the Lighting System Diagnostic System Check?	Go to **Step 2**	Go to **Diagnostic System Check - Lighting Systems**
2	Ensure that the brake pedal is not depressed. Do the stop lamps remain OFF?	Go to **Testing for Intermittent Conditions and Poor Connections** in Wiring Systems	Go to **Step 3**
3	Disconnect the stop lamp switch. Do the stop lamps turn OFF?	Go to **Step 4**	Go to **Step 5**
4	Inspect the stop lamp switch adjustment. Refer to **Stop Lamp Switch Adjustment** . Did you find and correct the condition?	Go to **Step 7**	Go to **Step 6**
5	Repair a short to battery positive voltage in the stop lamp switched circuit. Refer to **Wiring Repairs** in Wiring Systems. Did you complete the repair?	Go to **Step 7**	-
6	Replace the stop lamp switch. Refer to **Stop Lamp Switch Replacement** . Did you complete the replacement?	Go to **Step 7**	-
7	Operate the system in order to verify the repair. Did you correct the condition?	System OK	Go to **Step 3**

STOP LAMPS INOPERATIVE

Stop Lamps Inoperative

Step	Action	Yes	No

Schematic Reference: Exterior Lights Schematics Connector End View Reference: Master Electrical Component List			
1	Did you perform the Lighting System Diagnostic System Check?	Go to **Step 2**	Go to **Diagnostic System Check - Lighting Systems**
2	Depress the brake pedal. Do all of the stop lamps illuminate?	Go to **Testing for Intermittent Conditions and Poor Connections** in Wiring Systems	Go to **Step 3**
3	Is only one lamp inoperative?	Go to **Step 9**	Go to **Step 4**
4	1. Disconnect the stop lamp switch. 2. Connect a 15A fused jumper between the battery positive voltage circuit of the stop lamp switch and the signal circuit of the stop lamp switch at the stop lamp switch connector. Do the stop lamps illuminate?	Go to **Step 6**	Go to **Step 5**
5	With a test lamp connected to ground, probe the stop lamp switch fused battery positive voltage supply circuit. Does the test lamp illuminate?	Go to **Step 7**	Go to **Step 8**
6	Inspect the stop lamp switch, adjust and/or replace if needed. Refer to **Stop Lamp Switch Adjustment** . Did you complete the repair?	Go to **Step 10**	-
7	Repair an open, high resistance, or short to ground in the switched power supply stop lamp circuit. Refer to **Wiring Repairs** or **Connector Repairs** in Wiring Systems. Did you complete the repair?	Go to **Step 10**	Go to **Step 7**
8	Repair the open, high resistance, or short to ground in the stop lamp battery positive voltage supply circuit. Refer to **Wiring Repairs** or **Connector Repairs** in Wiring Systems. Did you complete the repair?	Go to **Step 10**	-
9	Repair the open or high resistance in the inoperative stop lamp power supply or ground circuit. Refer to **Wiring Repairs** or **Connector Repairs** in Wiring Systems. Did you complete the repair?	Go to **Step 10**	-
10	Operate the system in order to verify the repair. Did you correct the condition?	System OK	Go to **Step 3**

TURN SIGNAL LAMPS AND/OR INDICATORS INOPERATIVE

Turn Signal Lamps and/or Indicators Inoperative

Step	Action	Yes	No
Schematic Reference:Exterior Lights Schematics **Connector End View Reference:Master Electrical Component List**			
1	Did you perform the Diagnostic System Check?	Go to Step 2	Go to **Diagnostic System Check - Lighting Systems**
2	1. Turn the ignition to the RUN position. 2. Turn the turn signal switch to the TURN LEFT position and then to the TURN RIGHT position. Do the turn signal lamps and the turn signal indicators flash?	Go to **Testing for Intermittent Conditions and Poor Connections** in Wiring Systems	Go to **Step 3**
3	Are only the turn signal indicators inoperative?	Go to **Step 5**	Go to **Step 4**
4	Are all of the turn lamps inoperative?	Go to **Step 6**	Go to **Step 13**
5	1. Leave the turn signal switch at the inoperative side. 2. Using a test lamp, backprobe the control circuit of the turn signal lamp indicator at the instrument panel cluster. Does the test lamp flash?	Go to **Step 8**	Go to **Step 11**
6	1. Disconnect connector C215. 2. Using a test lamp connected to ground, probe the HAZT/SG fuse #15 battery positive voltage circuit. 3. Turn the ignition switch to the RUN position. Does the test lamp illuminate?	Go to **Step 7**	Go to **Step 12**
7	1. Using a test lamp, probe between the HAZT/SG fuse #15 battery positive voltage circuit and the turn signal switch battery positive voltage supply circuit. 2. Turn the ignition to the RUN position. Does the test lamp illuminate?	Go to **Step 9**	Go to **Step 10**
8	Inspect the harness connector of the instrument panel cluster for a poor connection. Refer to **Testing for Intermittent Conditions and Poor Connections** and **Connector Repairs** in Wiring Systems. Did you find and correct the condition?	Go to **Step 17**	Go to **Step 14**

9	Inspect the harness connector of the hazard warning switch for a poor connection. Refer to **Testing for Intermittent Conditions and Poor Connections** and **Connector Repairs** in Wiring Systems. Did you find and correct the condition?	Go to **Step 17**	Go to **Step 15**
10	Inspect the harness connector of the turn signal switch for a poor connection. Refer to **Testing for Intermittent Conditions and Poor Connections** and **Connector Repairs** in Wiring Systems. Did you find and correct the condition?	Go to **Step 17**	Go to **Step 16**
11	Repair the open or the high resistance in the inoperative turn signal lamp indicator power supply circuit. Refer to **Circuit Testing** and **Wiring Repairs** in Wiring Systems. Did you complete the repair?	Go to **Step 17**	-
12	Repair the open, high resistance, or short to ground in the HAZT/SG fuse #15 battery positive voltage feed circuit. Refer to **Circuit Testing** and **Wiring Repairs** in Wiring Systems. Did you complete the repair?	Go to **Step 17**	-
13	Repair the open or the high resistance in the inoperative turn signal lamp power supply or ground circuit. Refer to **Circuit Testing** and **Wiring Repairs** in Wiring Systems. Did you complete the repair?	Go to **Step 17**	-
14	Replace the instrument panel cluster. Refer to **Instrument Panel Cluster (IPC) Replacement** in Instrument Panel, Gages, and Console. Did you complete the replacement?	Go to **Step 17**	-
15	Replace the hazard warning switch. Refer to **Hazard Warning Switch Replacement** . Did you complete the replacement?	Go to **Step 17**	-
16	Replace the turn signal switch. Refer to **Multifunction, Turn Signal Switch Replacement** in Steering Wheel and Column. Did you complete the replacement?	Go to **Step 17**	-
17	Operate the system in order to verify the repair. Did you correct the condition?	System OK	Go to **Step 3**

TWILIGHT SENTINEL INOPERATIVE

Twilight Sentinel Inoperative

Step	Action	Yes	No
Schematic Reference:Headlights/Daytime Running Lights (DRL) Schematics			

Connector End View Reference: **Master Electrical Component List**			
1	Did you perform the Lighting System Diagnostic System Check?	Go to **Step 2**	Go to **Diagnostic System Check - Lighting Systems**
2	1. Release the park brake. 2. Turn ON the ignition, with the engine OFF. 3. Verify the twilight sentinel option is turned ON in the DIC. 4. Cover the ambient light sensor with a dark cloth. Do the headlamps turn ON?	Go to **Testing for Intermittent Conditions and Poor Connections** in Wiring Systems	Go to **Step 3**
3	1. Install a scan tool. 2. Access the Special Functions menu. 3. Select the Twilight Sentinel Reprogramming. 4. After the reprogramming is completed, cover the ambient light sensor with a dark cloth. Do the headlamps turn ON?	Go to **Step 11**	Go to **Step 4**
4	1. Remove the ALC HDLP relay. 2. Using a test lamp, probe between the ALC HDLP battery positive voltage supply circuit and the ALC HDLP relay control circuit. 3. Turn ON the ignition switch, with the engine OFF. 4. Cover the ambient light sensor with a dark cloth. Does the test lamp illuminate?	Go to **Step 5**	Go to **Step 7**
5	1. Turn OFF the ignition. 2. Install a fused jumper between battery positive voltage and the headlamp switch signal headlamps ON circuit. 3. Turn ON the ignition switch, with the engine OFF. Do the headlamps turn ON?	Go to **Step 9**	Go to **Step 8**
6	Test the ALC HDLP relay control circuit for a open, short to ground or a short to battery positive voltage. Refer to **Circuit Testing** and **Wiring Repairs** in Wiring Systems.		

	Did you find and correct the condition?	Go to **Step 11**	Go to **Step 7**
7	Inspect the ALC HDLP relay control circuit for a poor connection or an open. Refer to **Circuit Testing** and **Wiring Repairs** in Wiring Systems. Did you find and correct the condition?	Go to **Step 11**	Go to **Step 10**
8	Repair a poor connection or an open in the headlamp switch signal headlamps ON circuit. Refer to **Circuit Testing** and **Wiring Repairs** in Wiring Systems. Did you complete the repair?	Go to **Step 11**	-
9	**IMPORTANT:** **Perform the setup procedure for the body control module. Refer to Body Control Module (BCM) Programming/RPO Configuration in Body Control System.** Replace the body control module. Refer to **Body Control Module Replacement** in Body Control System.Did you complete the replacement?	Go to **Step 11**	-
10	Replace the ALC headlamp relay. Refer to **Relay Replacement (Within an Electrical Center)** or **Relay Replacement (Attached to Wire Harness)** in Wiring Systems. Did you complete the replacement?	Go to **Step 11**	-
11	Operate the system in order to verify the repair. Did you correct the condition?	System OK	Go to **Step 4**

UNDERHOOD LAMP INOPERATIVE

Underhood Lamp Inoperative

Step	Action	Yes	No
Schematic Reference:Interior Lights Schematics **Connector End View Reference:Master Electrical Component List**			
1	Did you perform the Lighting Systems Diagnostic System Check?	Go to **Step 2**	Go to **Diagnostic System Check - Lighting Systems**
2	Raise the hood. Does the underhood lamp turn ON?	Go to **Testing for Intermittent Conditions and Poor Connections** in Wiring Systems	Go to **Step 3**
3	Does the instrument panel (I/P) compartment lamp, vanity mirror lamp, and inside rearview mirror lamp operate?	Go to **Step 4**	Go to **Instrument Panel (I/P) Compartment Lamp Inoperative**
	1. Remove the underhood lamp switch.		

4	2. Probe the underhood lamp switched battery positive voltage supply circuit with the test lamp connected to ground. Does the test lamp illuminate?	Go to **Step 5**	Go to **Step 7**
5	Connect a test lamp between the switched battery positive voltage supply circuit of the underhood lamp and the ground circuit. Does the test lamp illuminate?	Go to **Step 6**	Go to **Step 8**
6	Inspect the underhood lamp switch harness connector for a poor connection. Refer to **Testing for Intermittent Conditions and Poor Connections** and **Connector Repairs** in Wiring Systems. Did you find and correct the condition?	Go to **Step 10**	Go to **Step 9**
7	Repair the poor connection or the open in the switched battery positive voltage supply circuit of the underhood lamp. Refer to **Wiring Repairs** in Wiring Systems. Did you complete the repair?	Go to **Step 10**	-
8	Repair the poor connection or the open in the ground circuit of the underhood lamp. Refer to **Circuit Testing** and **Wiring Repairs** in Wiring Systems. Did you complete the repair?	Go to **Step 10**	-
9	Replace the underhood lamp switch. Refer to **Underhood Lamp Replacement** . Did you complete the replacement?	Go to **Step 10**	-
10	Operate the system in order to verify the repair. Did you correct the condition?	System OK	Go to **Step 3**

VANITY MIRROR LAMP(S) INOPERATIVE

Vanity Mirror Lamp(s) Inoperative

Step	Action	Yes	No
Schematic Reference:Interior Lights Dimming Schematics **Connector End View Reference:Master Electrical Component List**			
1	Did you perform the Lighting Systems Diagnostic System Check?	Go to **Step 2**	Go to **Diagnostic System Check - Lighting Systems**
2	Open the vanity mirror(s). Do the lamps turn ON?	Go to **Testing for Intermittent Conditions and Poor Connections** in Wiring Systems	Go to **Step 3**
	Does the I/P compartment lamp, underhood		Go to **Instrument**

3	lamp, and inside rearview mirror lamp operate?	Go to **Step 4**	**Panel (I/P) Compartment Lamp Inoperative**
4	1. Remove and disconnect the sunshade from the headliner. 2. Probe the vanity mirror lamp switched battery positive voltage circuit with the test lamp connected to ground. Does the test lamp illuminate?	Go to **Step 5**	Go to **Step 7**
5	Connect a test lamp between the switched battery positive voltage circuit of the vanity mirror lamp and the ground circuit of the vanity mirror lamp. Does the test lamp illuminate?	Go to **Step 6**	Go to **Step 8**
6	Inspect the vanity mirror lamp harness connector for a poor connection. Refer to **Testing for Intermittent Conditions and Poor Connections** and **Connector Repairs** in Wiring Systems. Did you find and correct the condition?	Go to **Step 10**	Go to **Step 9**
7	Repair the poor connection or the open in the switched battery positive voltage circuit of the vanity mirror lamp. Refer to **Circuit Testing** and **Wiring Repairs** in Wiring Systems. Did you complete the repair?	Go to **Step 10**	-
8	Repair the poor connection or the open in the ground circuit of the vanity mirror lamp. Refer to **Circuit Testing** and **Wiring Repairs** in Wiring Systems. Did you complete the repair?	Go to **Step 10**	-
9	Replace the vanity mirror lamp. Refer to **Sunshade Replacement** in Interior Trim. Did you complete the replacement?	Go to **Step 10**	-
10	Operate the system in order to verify the repair. Did you correct the condition?	System OK	Go to **Step 3**

REPAIR INSTRUCTIONS

STOP LAMP SWITCH ADJUSTMENT

1. With the brake pedal depressed, insert the stop lamp/cruise control switch into the retainer until the switch body seats in the retainer. You will hear the CLICKS as the threaded portion of the switch is pushed through the retainer.

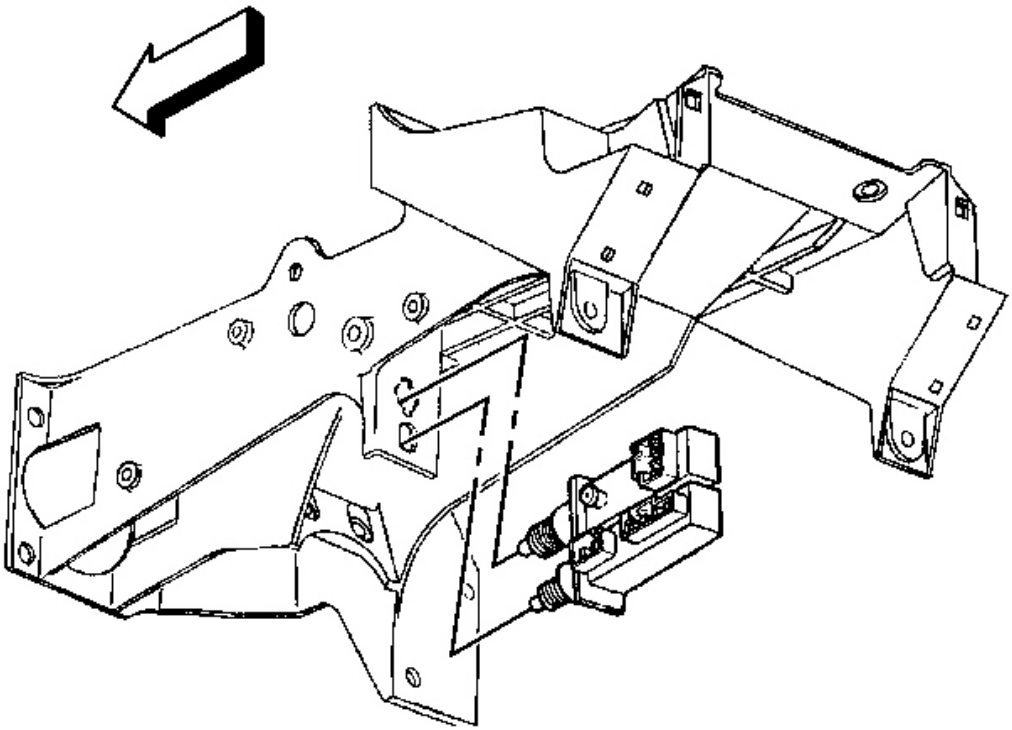

Fig. 36: Stop Lamp Switch
Courtesy of GENERAL MOTORS CORP.

2. Slowly pull the brake pedal fully rearward against the stop until you no longer hear the CLICK sound. The switch will be moved in the retainer providing proper adjustment.

STOP LAMP SWITCH REPLACEMENT

Removal Procedure

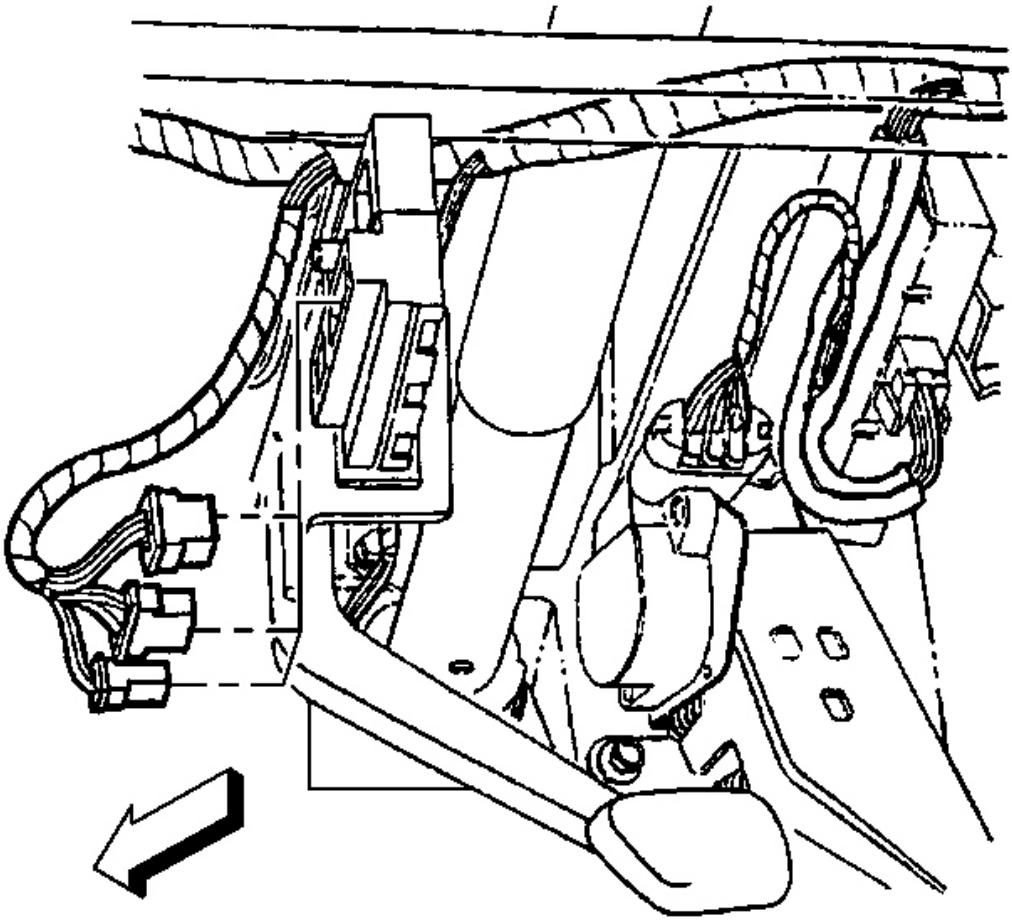

Fig. 37: Lower Trim Panel & Stop Lamp Switch Connectors
Courtesy of GENERAL MOTORS CORP.

1. Remove the instrument panel (IP) lower trim panel. Refer to **Trim Panel Replacement - Knee Bolster** in Instrument Panel, Gages, and Console.
2. Disconnect the stop lamp switch connectors.

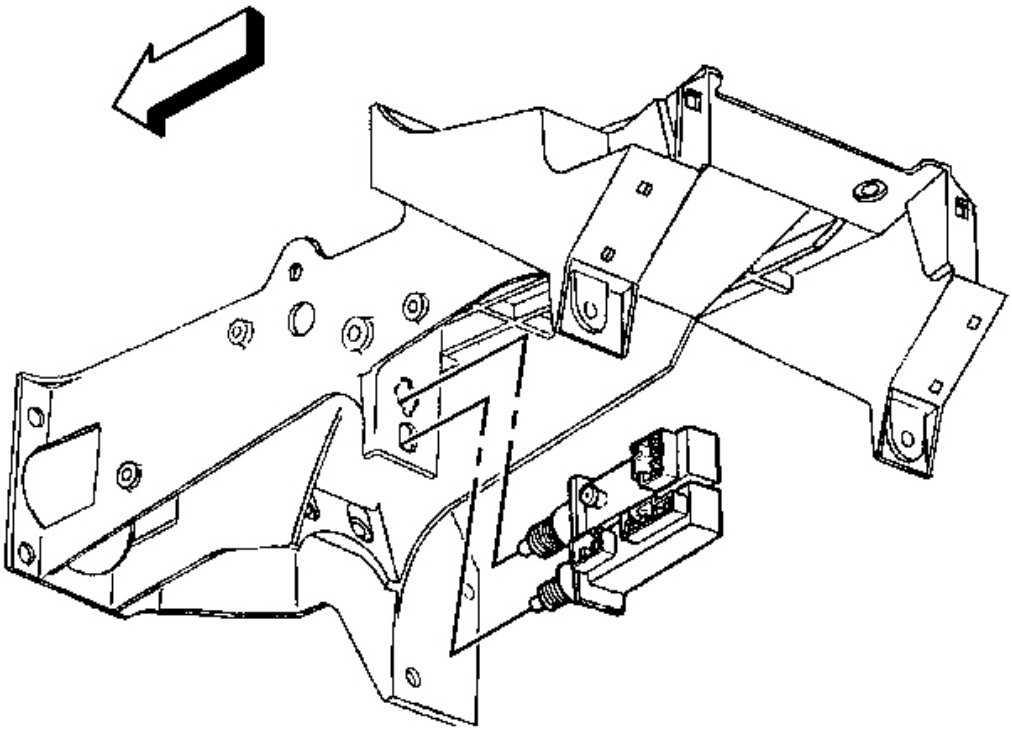

Fig. 38: Stop Lamp Switch
Courtesy of GENERAL MOTORS CORP.

3. Remove the stop lamp switch.

Installation Procedure

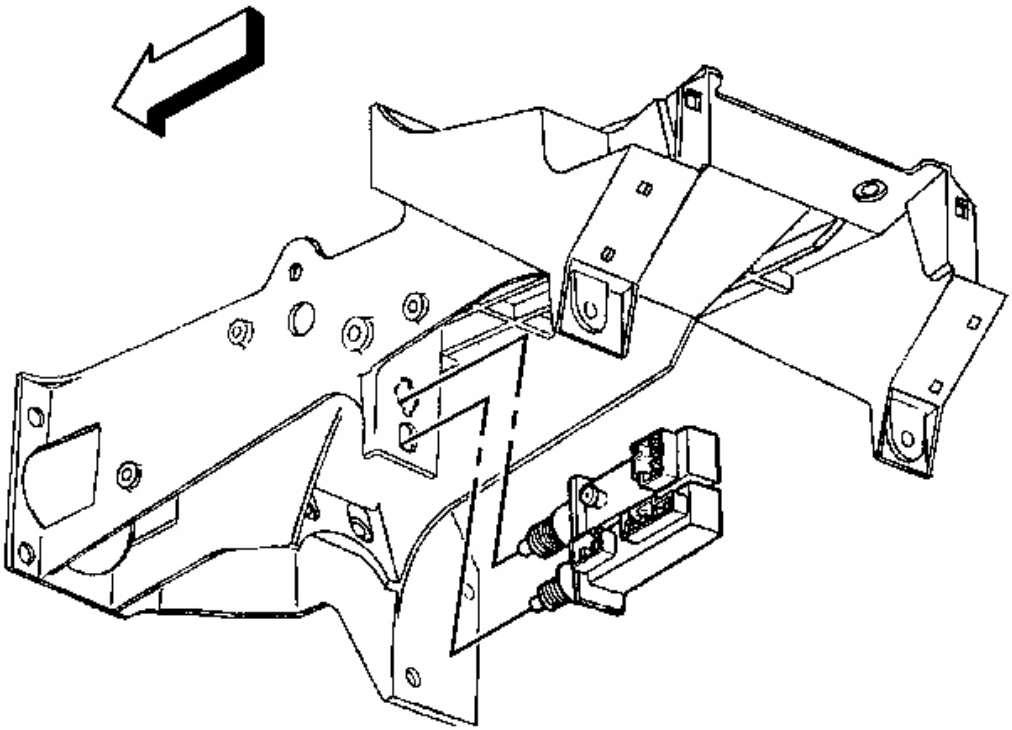

Fig. 39: Stop Lamp Switch
Courtesy of GENERAL MOTORS CORP.

1. Install the stop lamp switch.
2. Adjust the stop lamp switch. Refer to **Stop Lamp Switch Adjustment** .

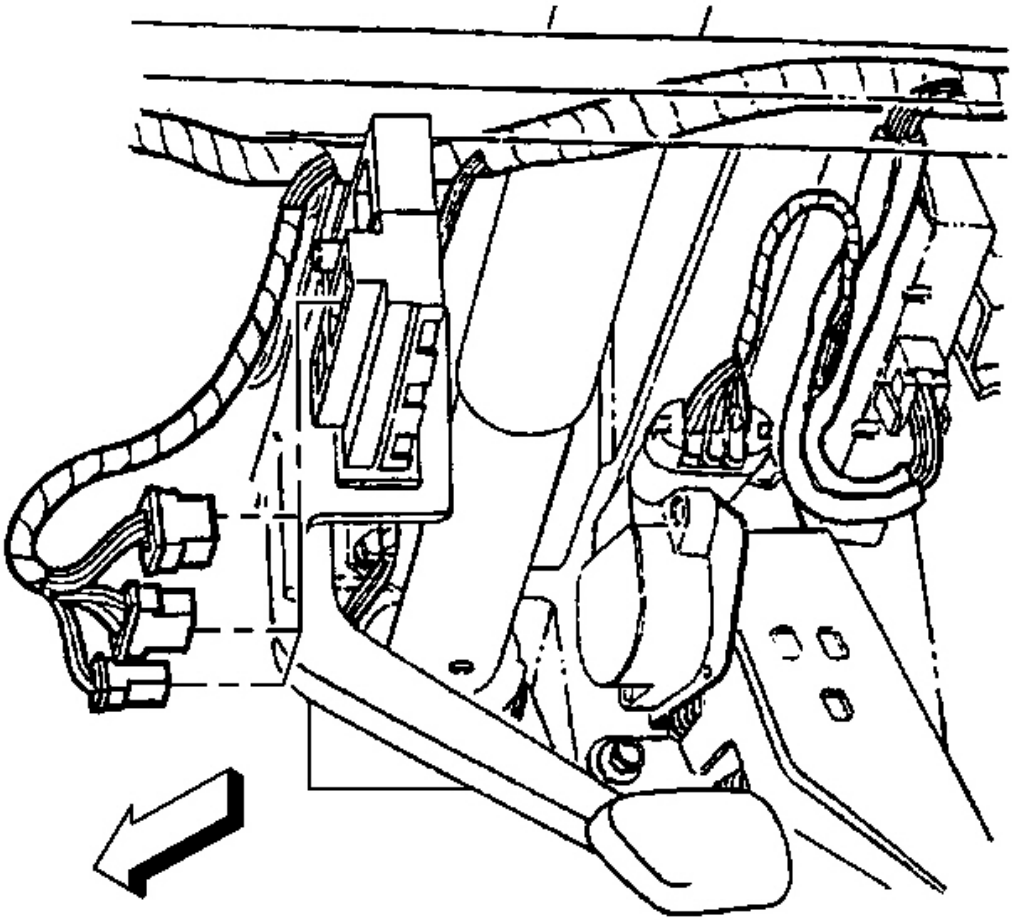

Fig. 40: Lower Trim Panel & Stop Lamp Switch Connectors
Courtesy of GENERAL MOTORS CORP.

3. Connect the stop lamp switch connectors.
4. Install the I/P lower trim panel. Refer to **Trim Panel Replacement - Knee Bolster** in Instrument Panel, Gages, and Console.

FOG LAMP SWITCH REPLACEMENT - FRONT

Removal Procedure

The front fog lamp switch controls the front fog lamps, the rear compartment lid release (domestic), and the rear fog lamps (export). The rear compartment lid release switch export is in the center console.

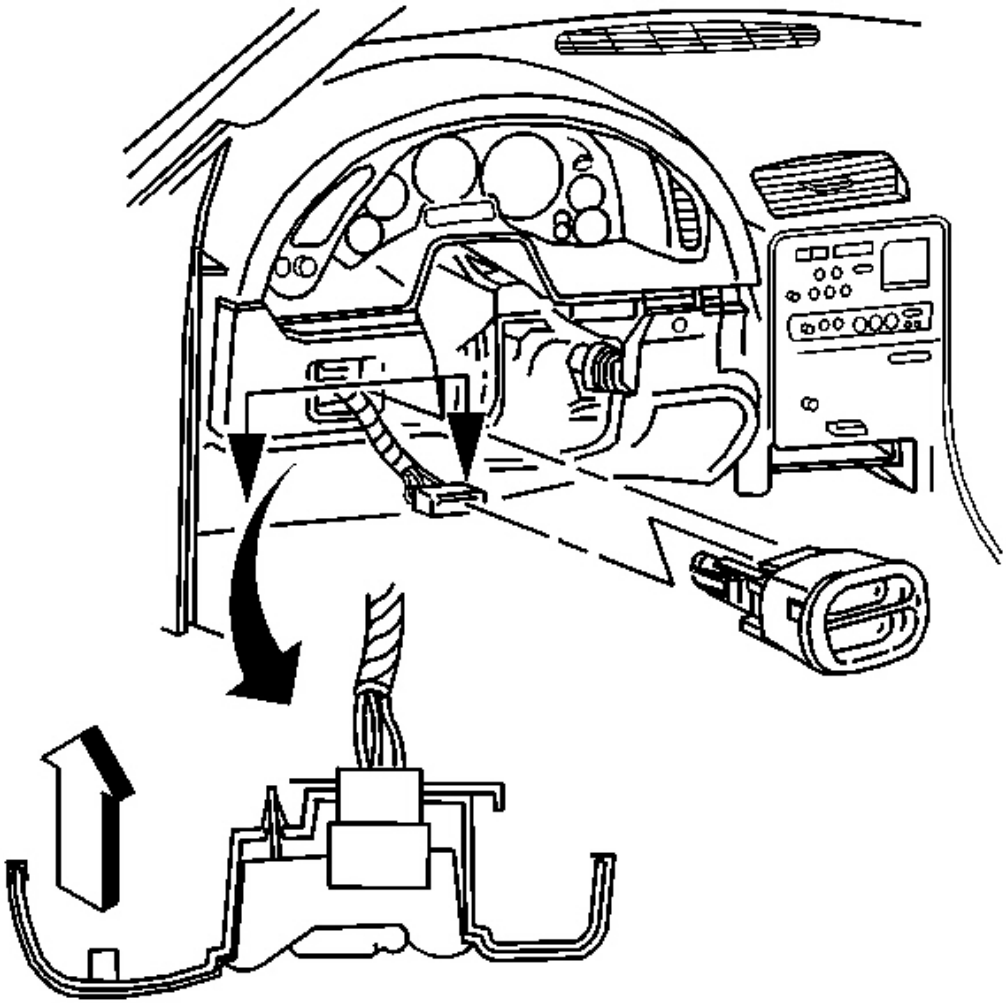

Fig. 41: Electrical Connector To Fog Lamp Switch
Courtesy of GENERAL MOTORS CORP.

1. Pry carefully at the lower edge of the fog lamp switch to release the locking tab.
2. Disconnect the electrical connector from the switch.
3. Remove the switch.

Installation Procedure

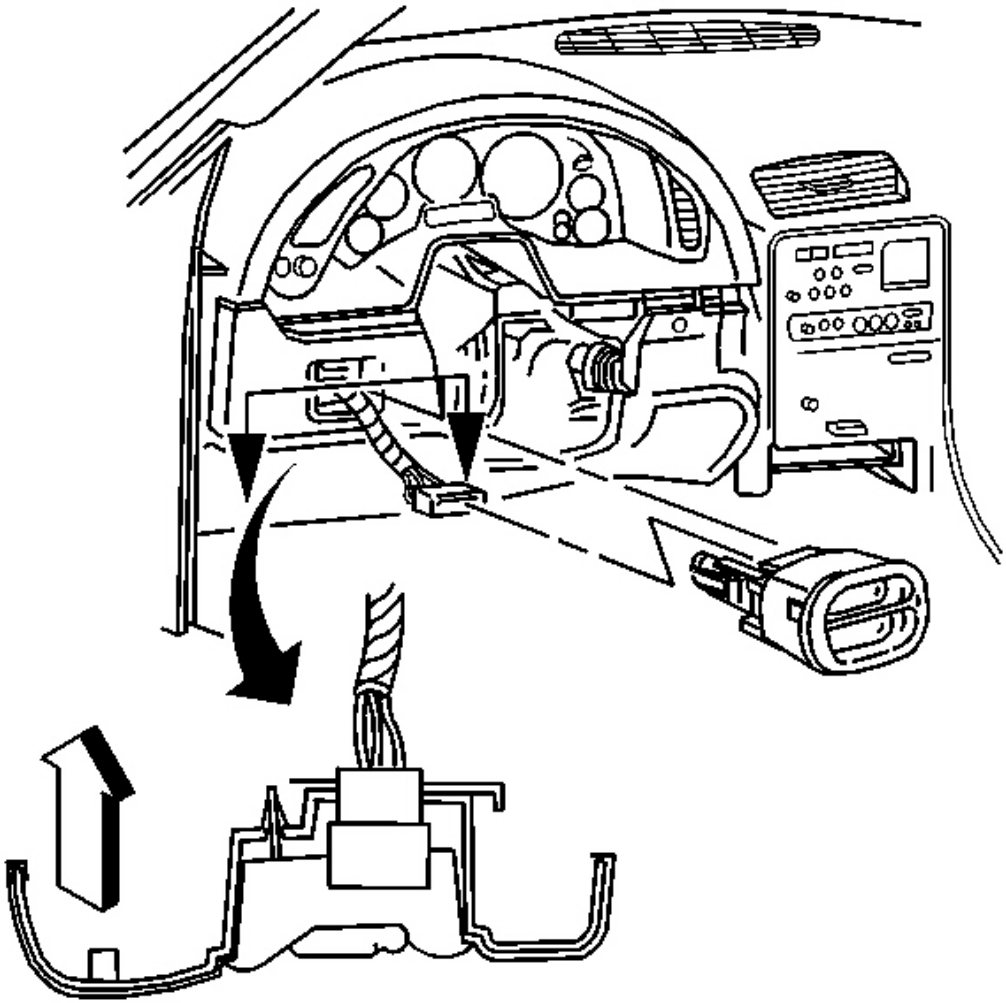

Fig. 42: Electrical Connector To Fog Lamp Switch
Courtesy of GENERAL MOTORS CORP.

1. Connect the electrical connector to the fog lamp switch.
2. Install the switch.

   Align the switch to the opening in the trim panel, then push to secure.

HAZARD WARNING SWITCH REPLACEMENT

Removal Procedure

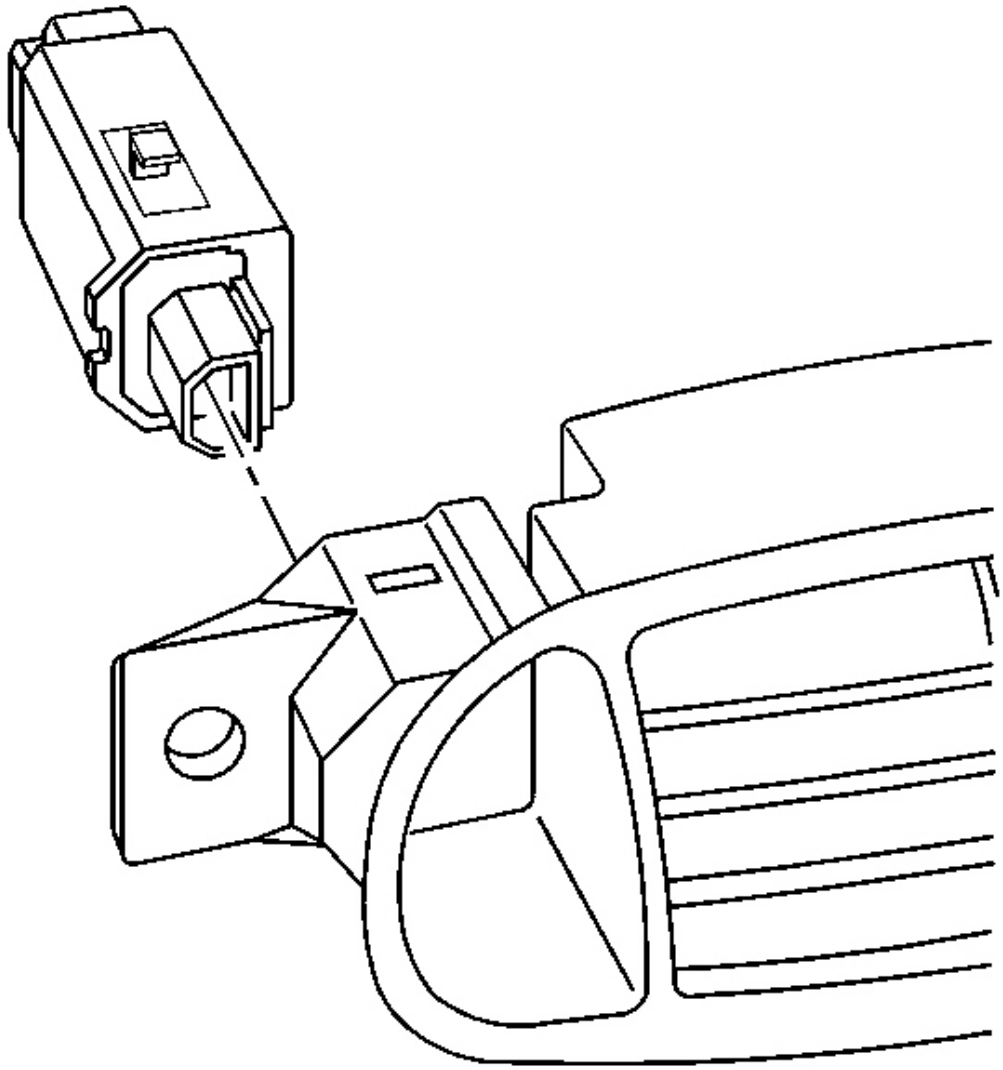

Fig. 43: Center Air Outlet To IP Upper Trim Pad
Courtesy of GENERAL MOTORS CORP.

1. Remove the instrument panel (IP) upper trim pad. Refer to **Trim Pad Replacement - Instrument Panel (I/P) Upper** in Instrument Panel, Gauges and Console.
2. Remove the air distribution duct and the center air outlet from the IP upper trim pad. Refer to **Air Outlet Replacement - Center** in HVAC.
3. Remove the hazard warning switch from the center air outlet.

CAREFULLY release the switch retaining tabs from the rear of the air outlet, then pull to remove the switch. The hazard warning switch button will release from the switch.

Installation Procedure

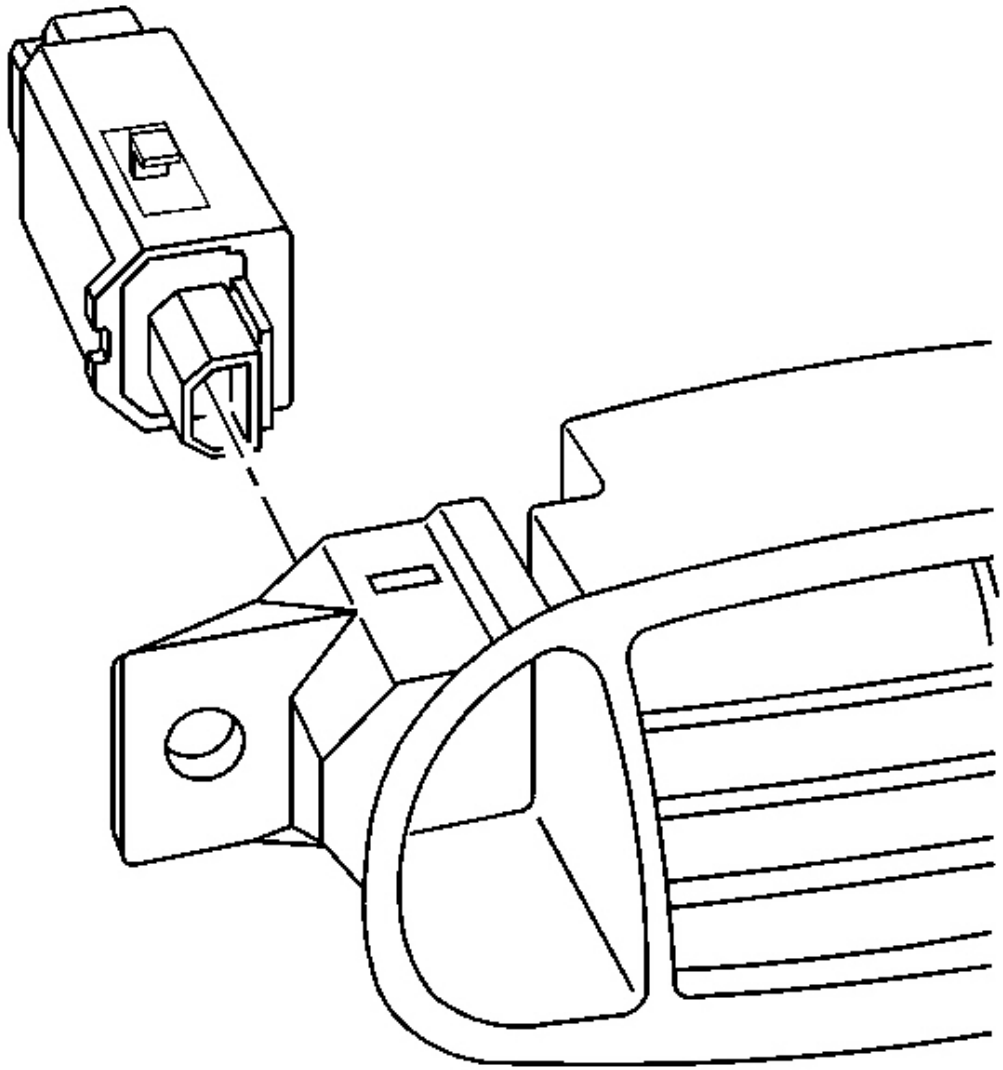

Fig. 44: Center Air Outlet To IP Upper Trim Pad
Courtesy of GENERAL MOTORS CORP.

1. Install the hazard warning switch to the center air outlet.

Align the switch to the rear of the air outlet, then push to secure the switch.

2. Install the center air outlet and the air distribution duct to the IP upper trim pad. Refer to **Air Outlet Replacement - Center** in Heating, Ventilation and Air Conditioning.

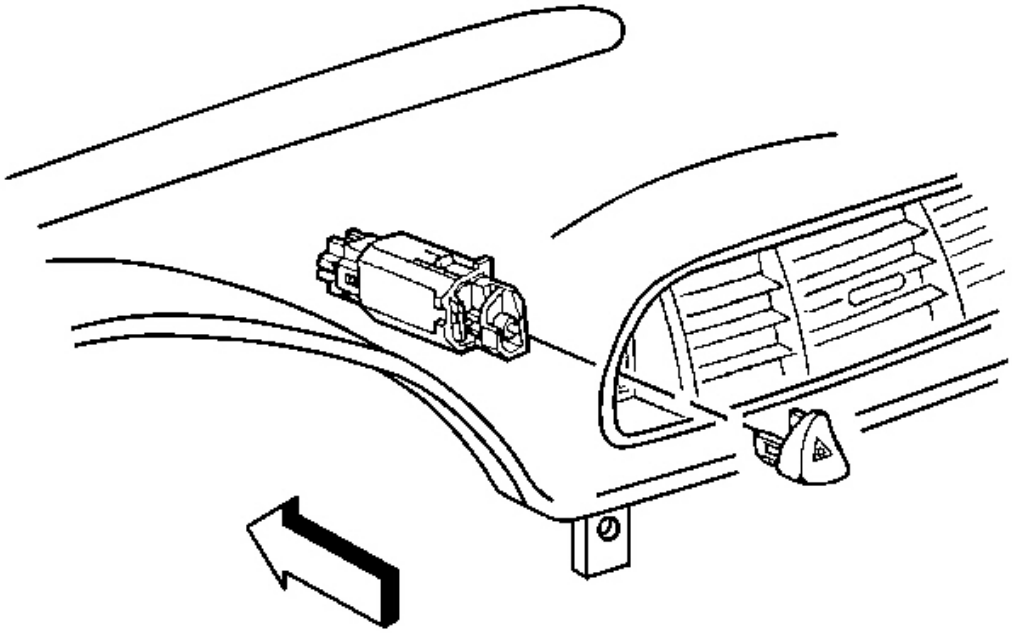

Fig. 45: Hazard Warning Switch Button To IP Upper Trim Pad
Courtesy of GENERAL MOTORS CORP.

3. Install the hazard warning switch button.

   Align the button to the switch, then push to secure.

4. Position the switch in the off position.
5. Install the IP upper trim pad. Refer to **Trim Pad Replacement - Instrument Panel (I/P) Upper** in Instrument Panel, Gauges and Console.

HEADLAMP CONTROL MODULE REPLACEMENT

Removal Procedure

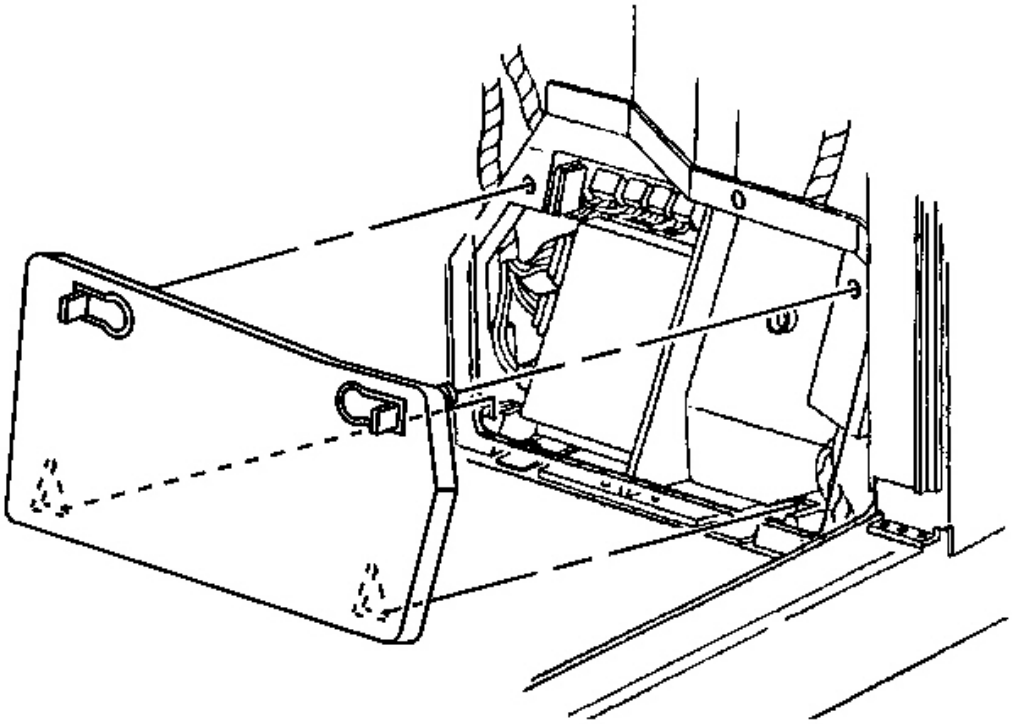

Fig. 46: Passenger Side Front Floor Kick Up Panel To IP Electrical Center
Courtesy of GENERAL MOTORS CORP.

1. Remove the passenger side front floor kick up panel cover to access the instrument panel (IP) electrical center.

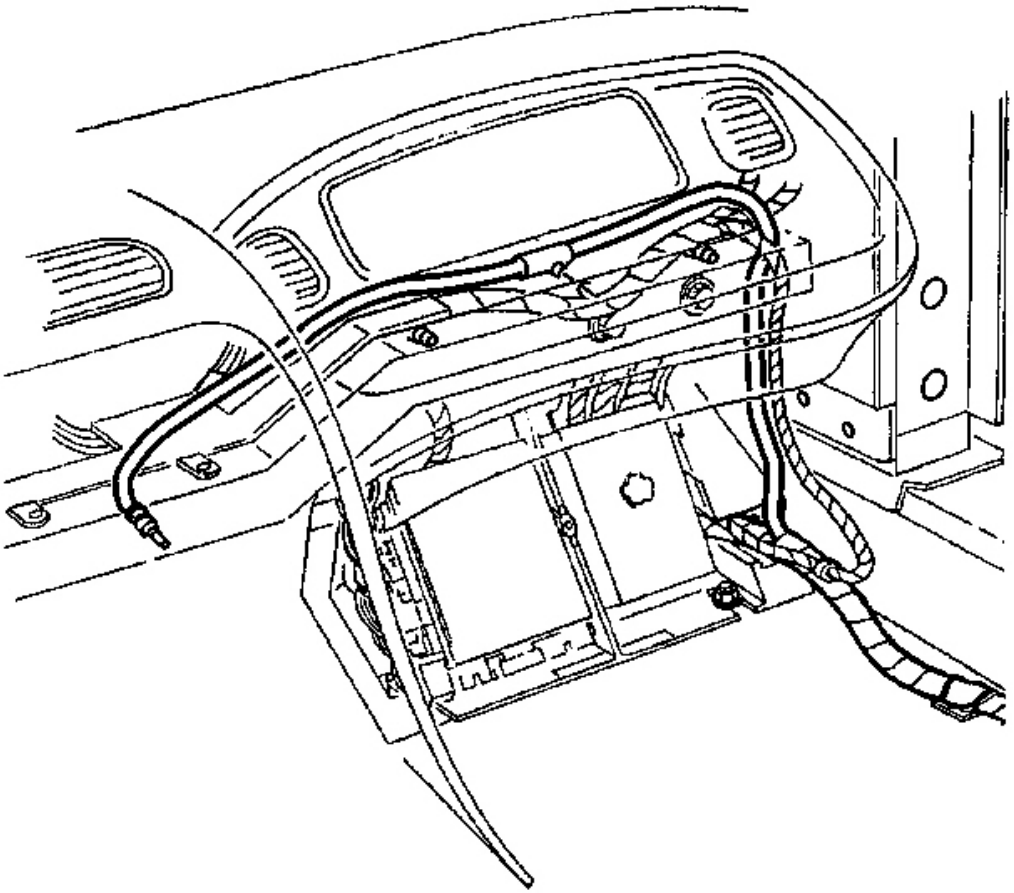

Fig. 47: Headlamp Circuit Breaker To IP Electrical Center
Courtesy of GENERAL MOTORS CORP.

2. Remove the headlamp circuit breaker from the IP electrical center.
3. Open the hood.

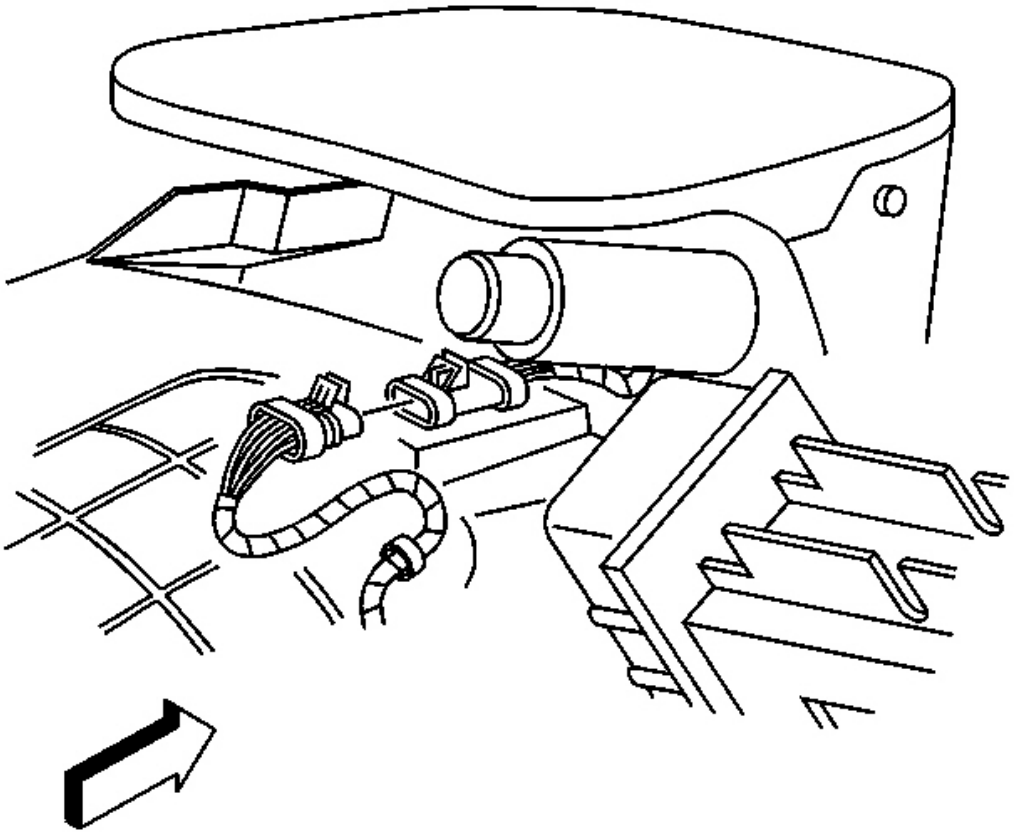

Fig. 48: RH Headlamp Wiring Harness Electrical Connector To Forward Lamp Wiring Harness
Courtesy of GENERAL MOTORS CORP.

4. Raise the RH headlamp manually.
5. Turn the headlamp motor/actuator manual control knob counterclockwise to raise the headlamp.
6. Disconnect the RH headlamp wiring harness electrical connector from the forward lamp wiring harness.

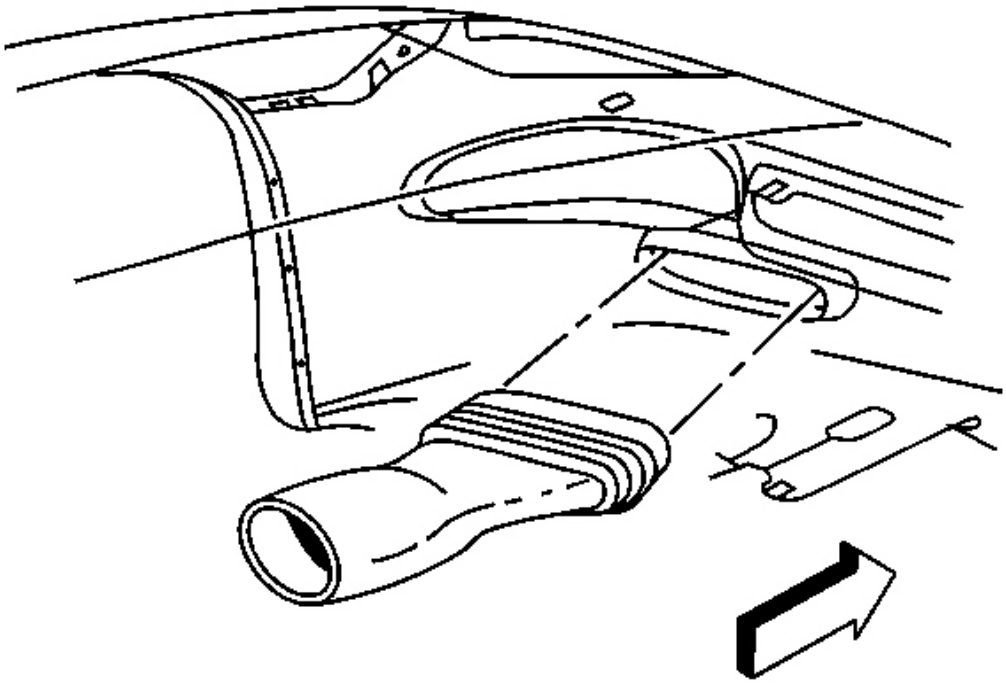

Fig. 49: Brake Caliper Cooling Duct To Front Fascia
Courtesy of GENERAL MOTORS CORP.

7. Raise and suitably support the vehicle. Refer to **Lifting and Jacking the Vehicle** in General Information.
8. Remove the front fascia lower closeout panel. Refer to **Close Out Panel - Front Bumper Fascia Lower** in Bumpers.
9. Release the brake caliper cooling duct from the front fascia and reposition the duct.

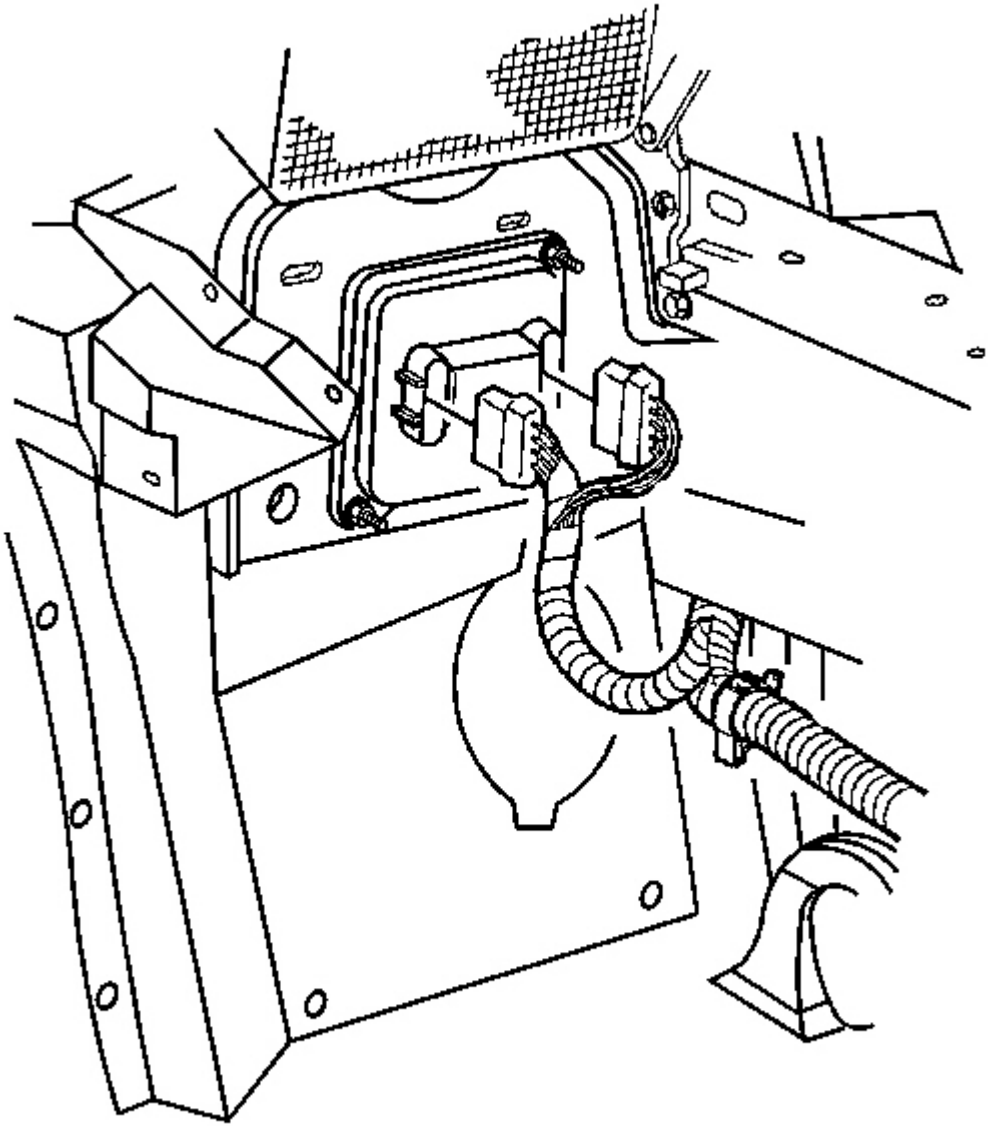

Fig. 50: Electrical Connectors To Headlamp Control Module
Courtesy of GENERAL MOTORS CORP.

10. Disconnect the electrical connectors from the headlamp control module.

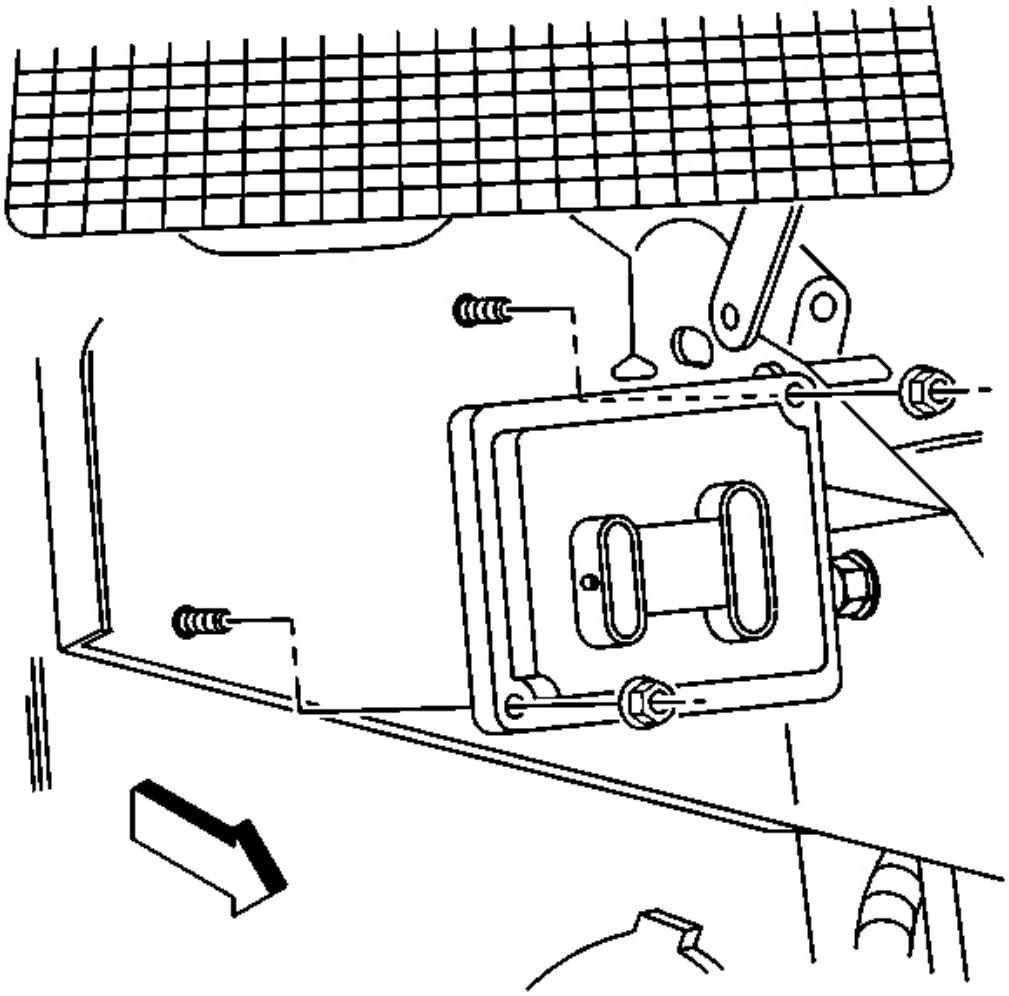

Fig. 51: Nuts Mounting The Module To Headlamp Bracket
Courtesy of GENERAL MOTORS CORP.

11. Remove the nuts mounting the module to the headlamp bracket.
12. Remove the module from the vehicle.

Installation Procedure

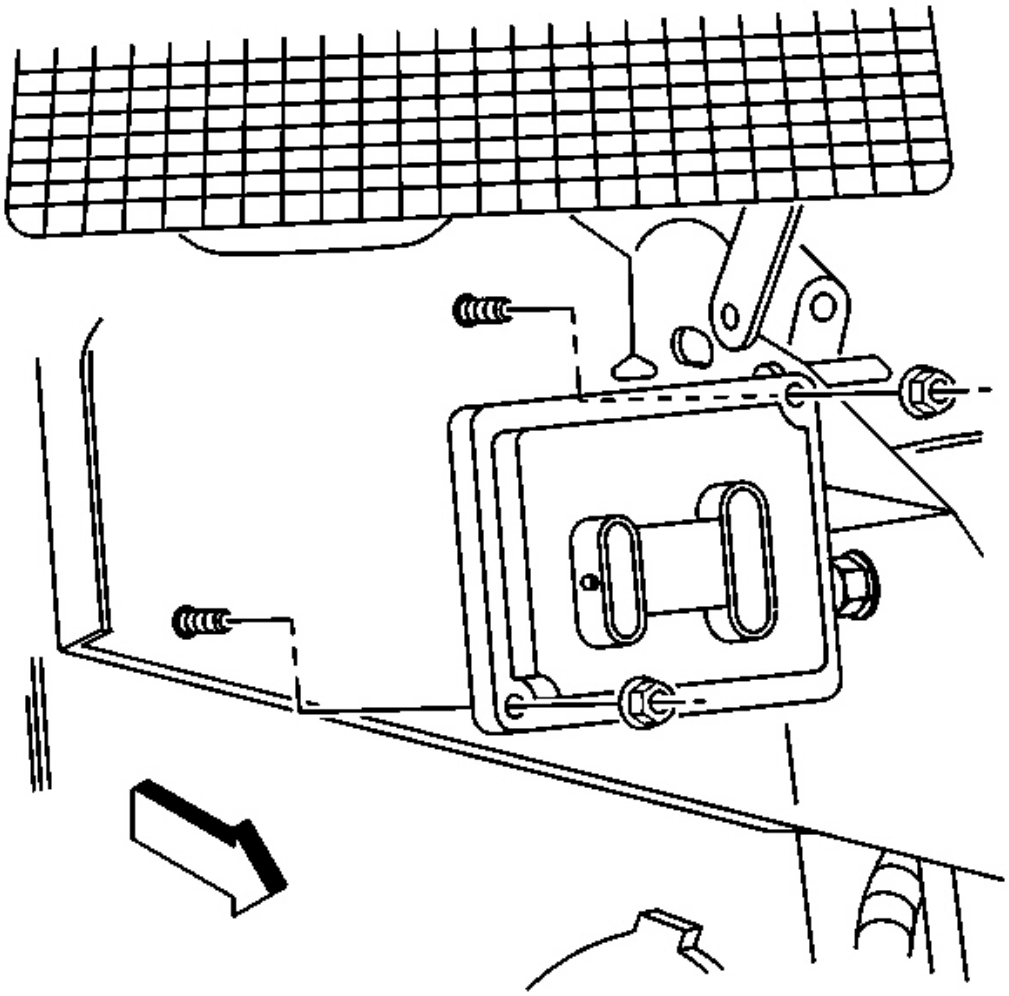

Fig. 52: Nuts Mounting The Module To Headlamp Bracket
Courtesy of GENERAL MOTORS CORP.

1. Install the headlamp control module into position on the headlamp bracket.
2. Install the nuts mounting the module to the headlamp bracket.

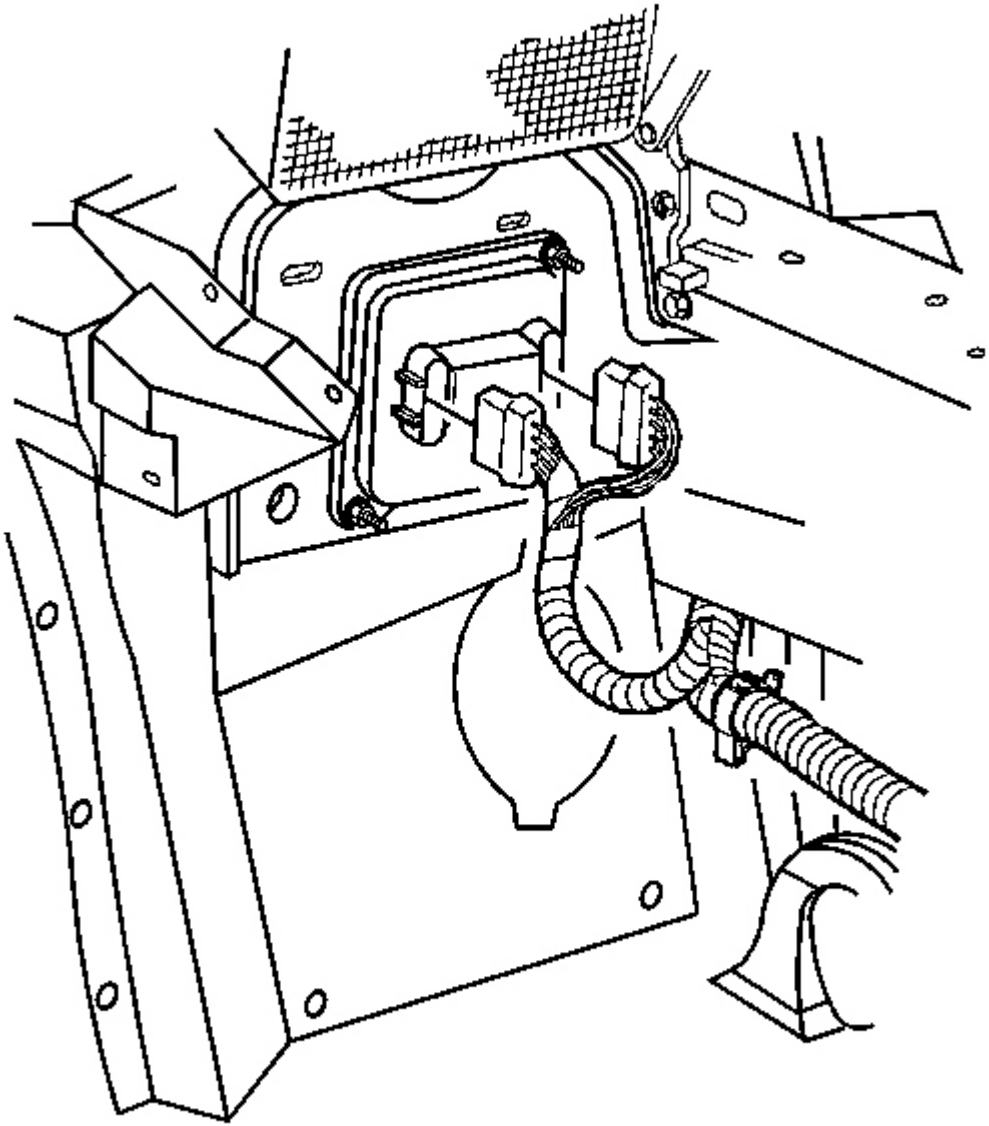

Fig. 53: Electrical Connectors To Headlamp Control Module
Courtesy of GENERAL MOTORS CORP.

3. Connect the electrical connectors to the module.

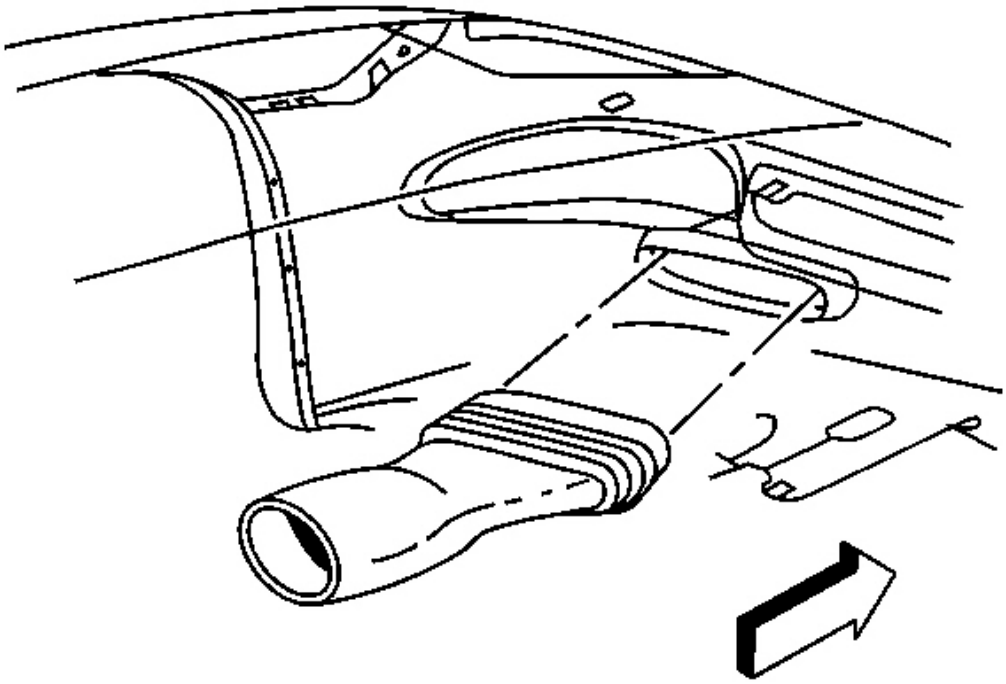

Fig. 54: Brake Caliper Cooling Duct To Front Fascia
Courtesy of GENERAL MOTORS CORP.

4. Position the brake caliper cooling duct to the front fascia and push to secure.
5. Install the front fascia lower closeout panel. Refer to **Close Out Panel - Front Bumper Fascia Lower** in Bumpers.
6. Lower the vehicle.

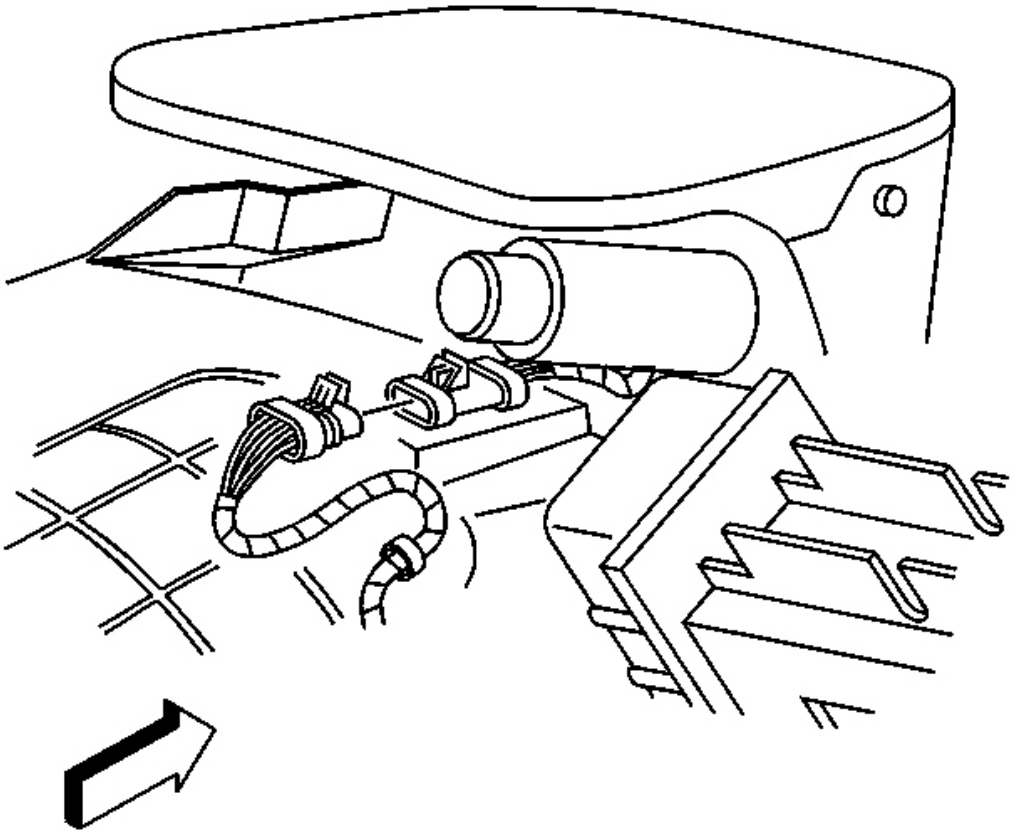

Fig. 55: RH Headlamp Wiring Harness Electrical Connector To Forward Lamp Wiring Harness
Courtesy of GENERAL MOTORS CORP.

7. Connect the RH headlamp wiring harness electrical connector to the forward lamp wiring harness.
8. Lower the RH headlamp manually.

   Turn the headlamp motor/actuator manual control knob clockwise to lower the headlamp.

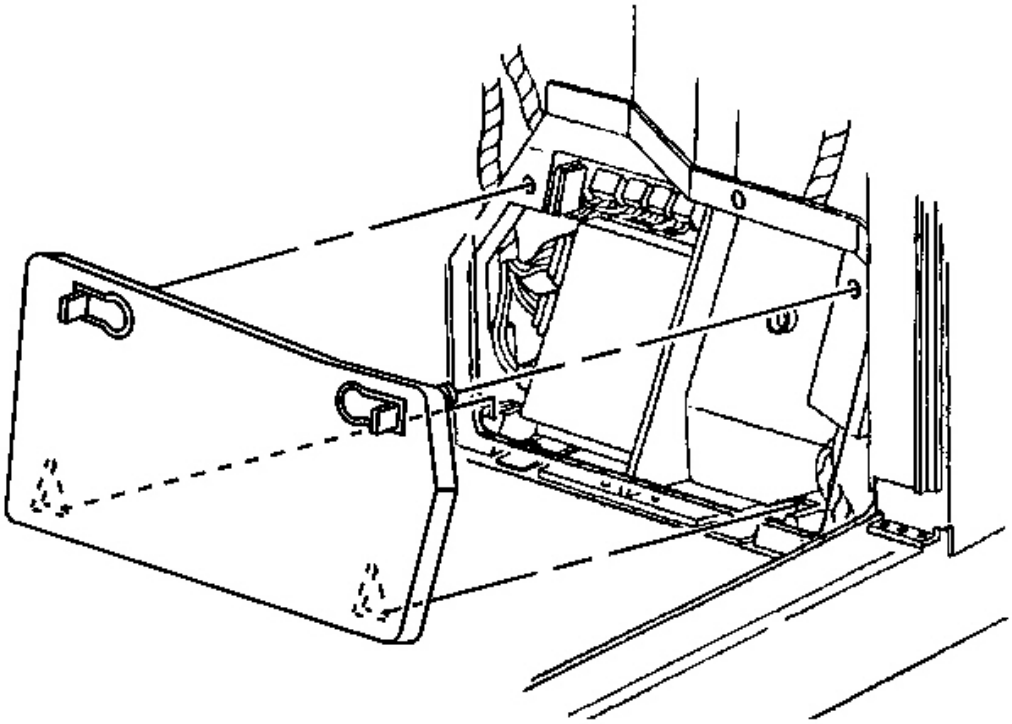

Fig. 56: Passenger Side Front Floor Kick Up Panel To IP Electrical Center
Courtesy of GENERAL MOTORS CORP.

9. Install the headlamp circuit breaker into the IP electrical center.
10. Install the floor kick up panel covering the IP electrical center.
11. Close the hood.

DAYTIME RUNNING LAMPS (DRL) AMBIENT LIGHT SENSOR REPLACEMENT

Removal Procedure

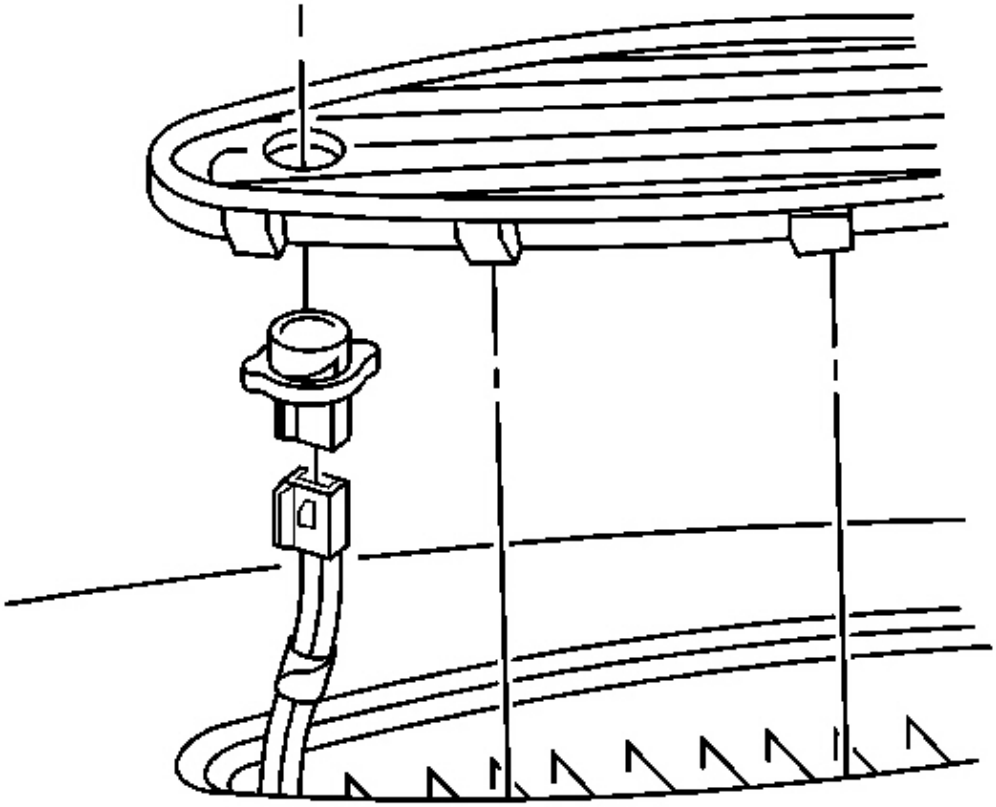

Fig. 57: Electrical Connector To DRL Sensor
Courtesy of GENERAL MOTORS CORP.

1. Release and lift the windshield defroster grille from the I/P upper trim pad.
    1. Insert two small flat bladed screwdrivers, or other suitable tools, close to each other between the rear edge of the defroster grille and the upper trim pad near one corner of the grille.
    2. Begin to CAREFULLY pry the grille up from the trim pad.
    3. Work the screwdrivers gradually to the other corner of the grille while continuing to CAREFULLY pry the grille up.
2. Lift the grille to access the DRL sensor.
3. Twist to release the DRL sensor from the grille.
4. Disconnect the electrical connector from the sensor.

Installation Procedure

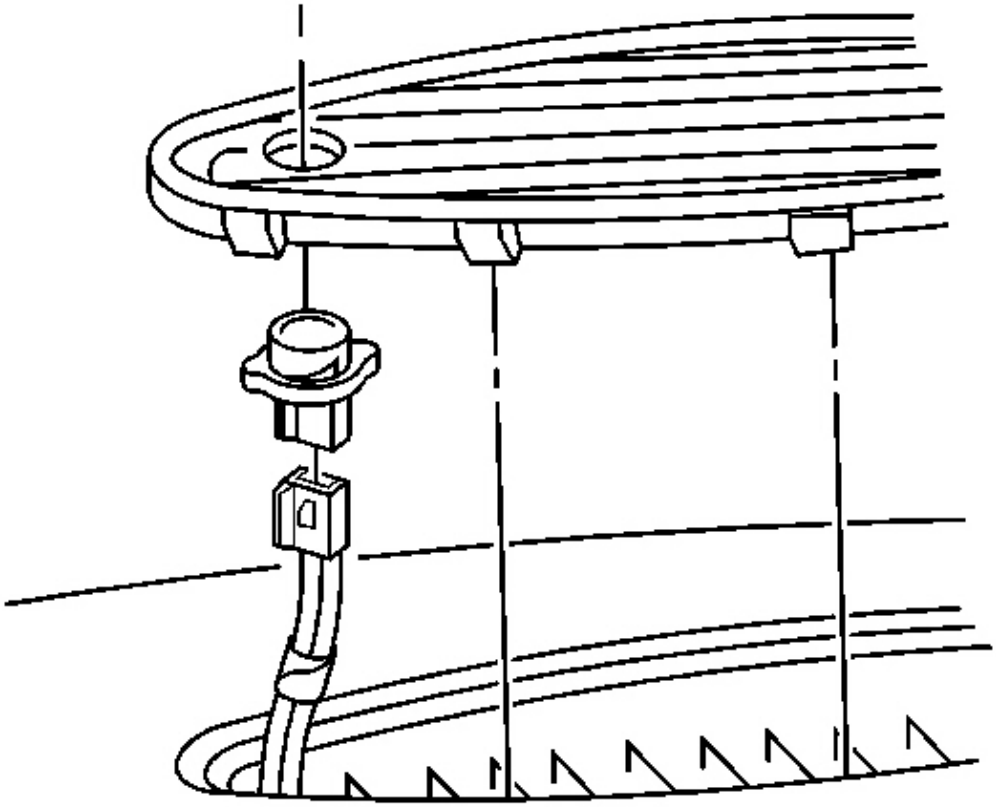

Fig. 58: Electrical Connector To DRL Sensor
Courtesy of GENERAL MOTORS CORP.

1. Connect the electrical connector to the DRL sensor.
2. Twist to secure the DRL sensor to the defroster grille.
3. Position the tabs along the front edge of the defroster grille down into the slots in the upper trim pad.
4. Lower the rear edge of the defroster grille into position, then CAREFULLY press the rear tabs into place.

TURN SIGNAL FLASHER REPLACEMENT

The turn signal flasher is integrated into the hazard warning switch. Refer to **Hazard Warning Switch Replacement** .

HAZARD LAMP FLASHER REPLACEMENT

The hazard lamp flasher is integrated into the hazard warning switch. Refer to **Hazard Warning Switch**

Replacement .

COURTESY LAMP REPLACEMENT - INSTRUMENT PANEL

Removal Procedure

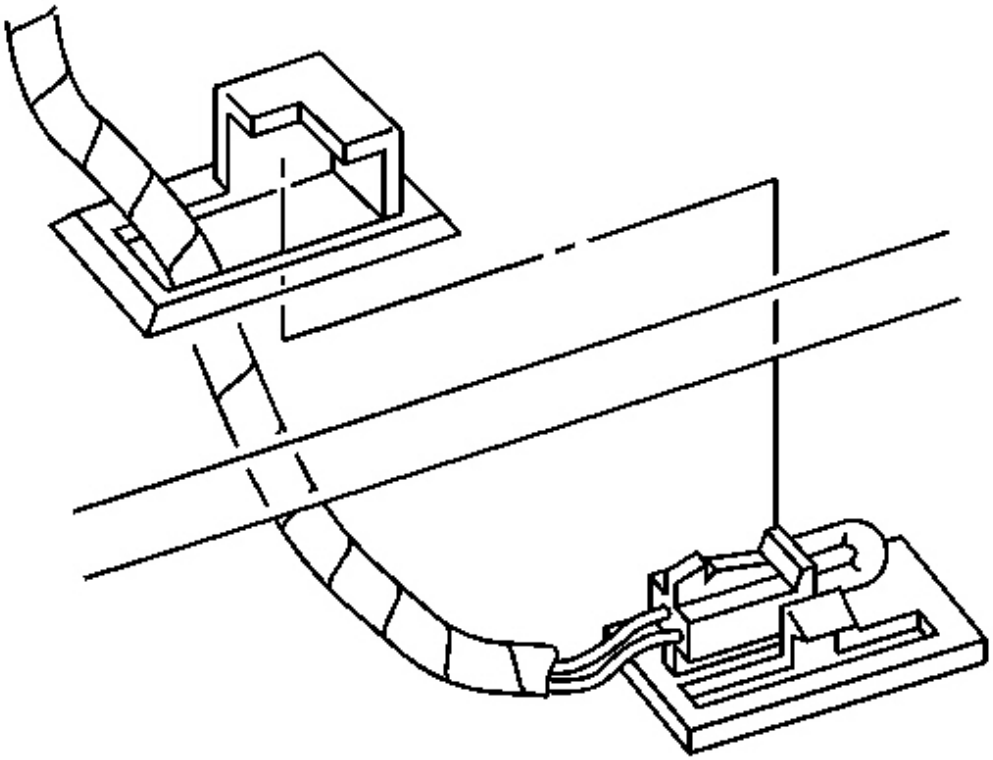

Fig. 59: IP Courtesy Lamp To IP Lower Closeout Panel
Courtesy of GENERAL MOTORS CORP.

1. Using a flat-bladed screwdriver or similar tool, unsnap the instrument panel (IP) courtesy lamp from the IP lower closeout panel.

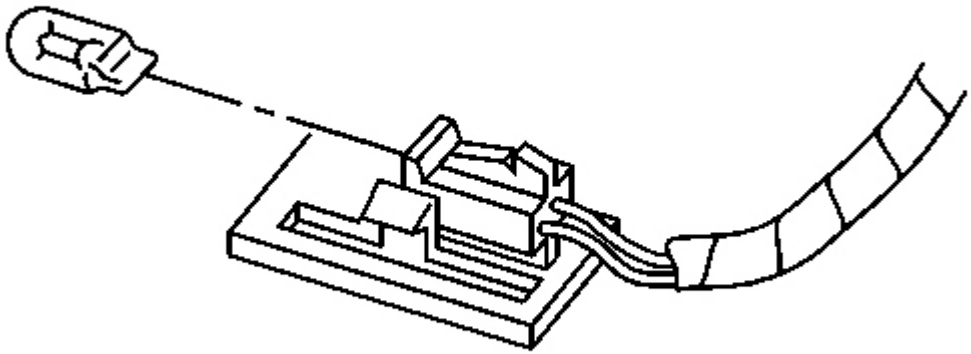

Fig. 60: Bulb At Socket
Courtesy of GENERAL MOTORS CORP.

2. Remove the bulb from the socket, if replacing.

Installation Procedure

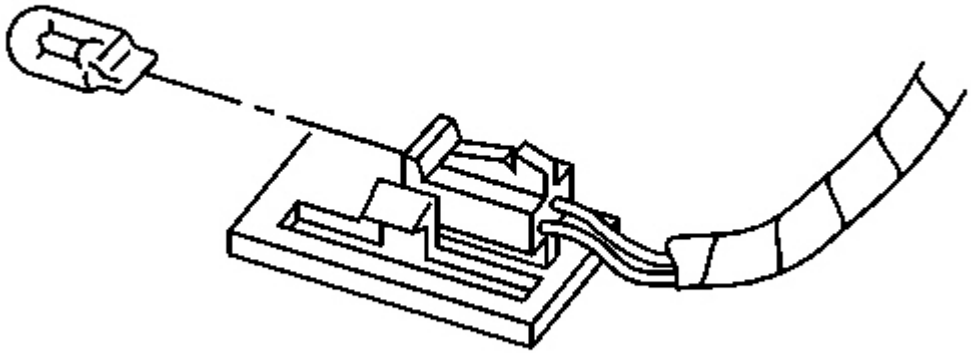

Fig. 61: Bulb At Socket
Courtesy of GENERAL MOTORS CORP.

1. Install the bulb to the socket, if replacing.

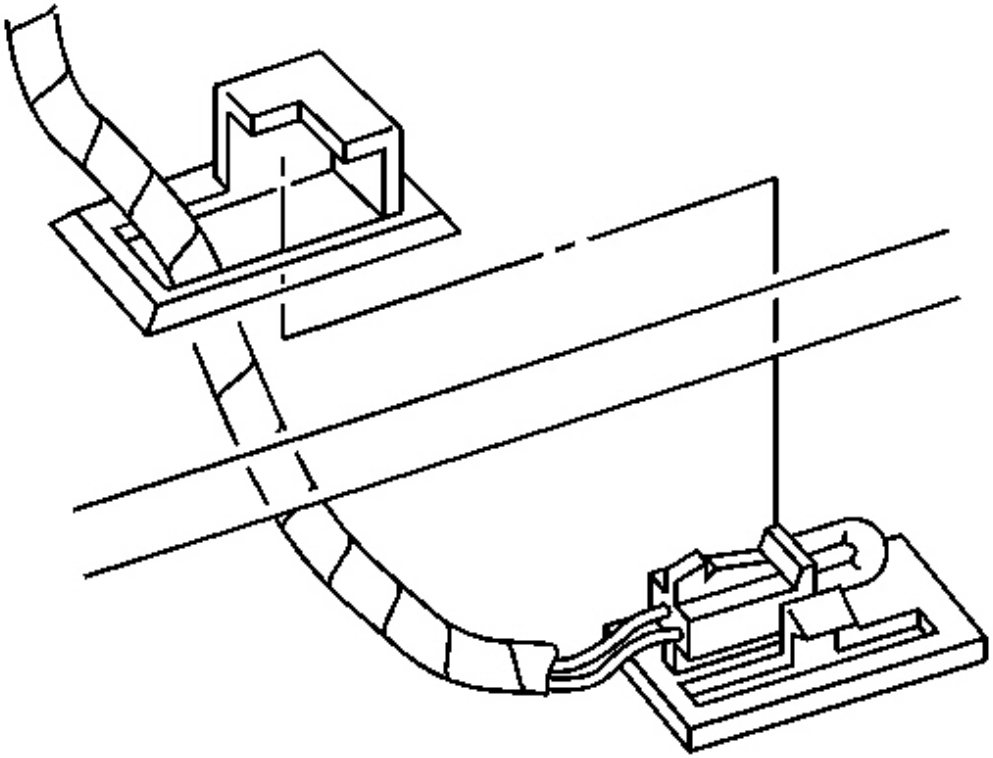

Fig. 62: IP Courtesy Lamp To IP Lower Closeout Panel
Courtesy of GENERAL MOTORS CORP.

2. Install the IP courtesy lamp into the IP lower closeout panel.

   Push on the lamp snapping the lamp into the panel.

INSTRUMENT PANEL (I/P) COMPARTMENT LAMP SWITCH REPLACEMENT

Removal Procedure

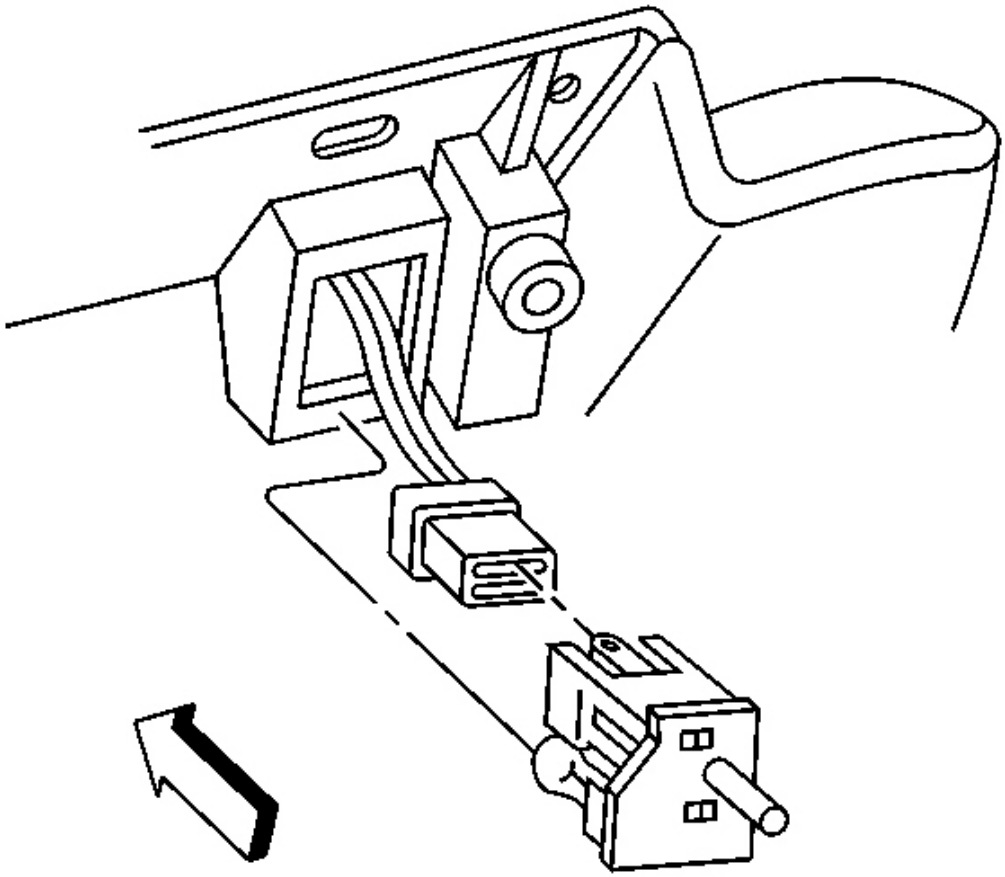

Fig. 63: IP Compartment Lamp & Switch To IP Passenger Compartment
Courtesy of GENERAL MOTORS CORP.

1. Remove the instrument panel (IP) passenger compartment. Refer to **Compartment Replacement - Instrument Panel (I/P)** in Instrument Panel, Gauges and Console.
2. Depress the tabs on the sides of the IP compartment lamp switch.
3. Carefully push the switch and lamp unit out of the opening and remove.

Installation Procedure

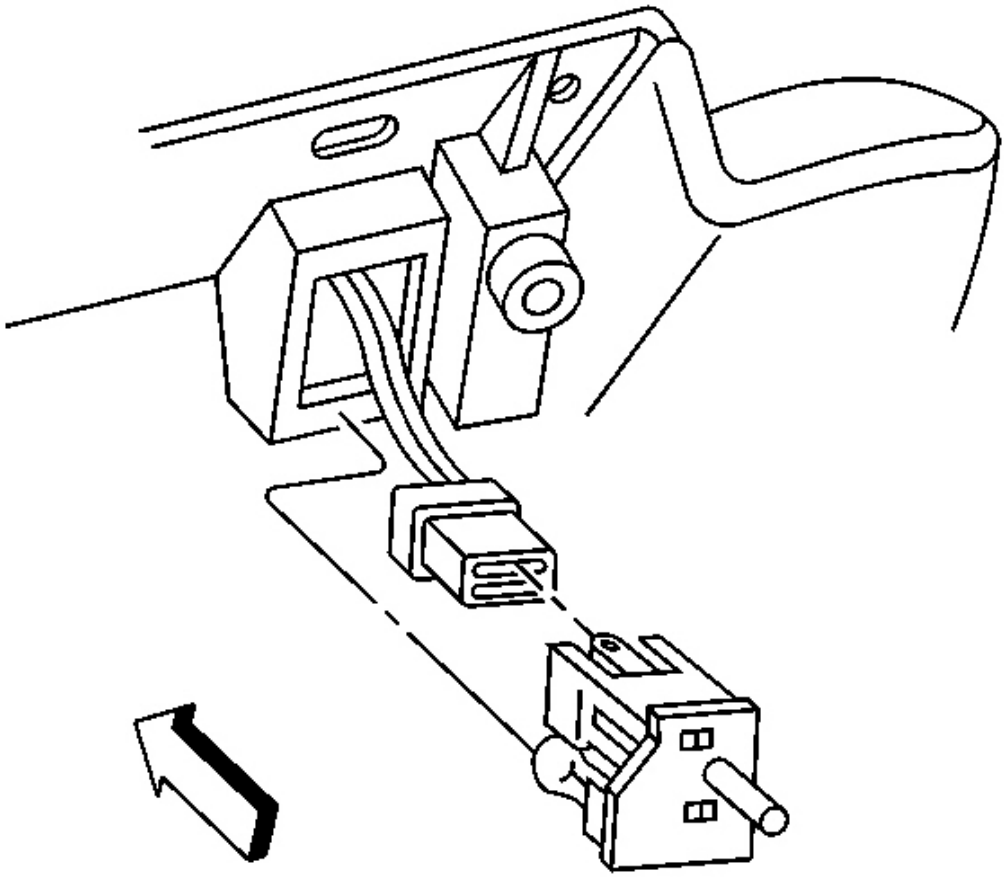

Fig. 64: IP Compartment Lamp & Switch To IP Passenger Compartment
Courtesy of GENERAL MOTORS CORP.

1. Position the IP compartment lamp and switch unit into the opening in the IP passenger compartment.
2. Push on the switch snapping the switch into the panel.
3. Install the IP passenger compartment. Refer to **Compartment Replacement - Instrument Panel (I/P)** in Instrument Panel, Gauges and Console.

INSTRUMENT PANEL (I/P) COMPARTMENT LAMP BULB REPLACEMENT

Removal Procedure

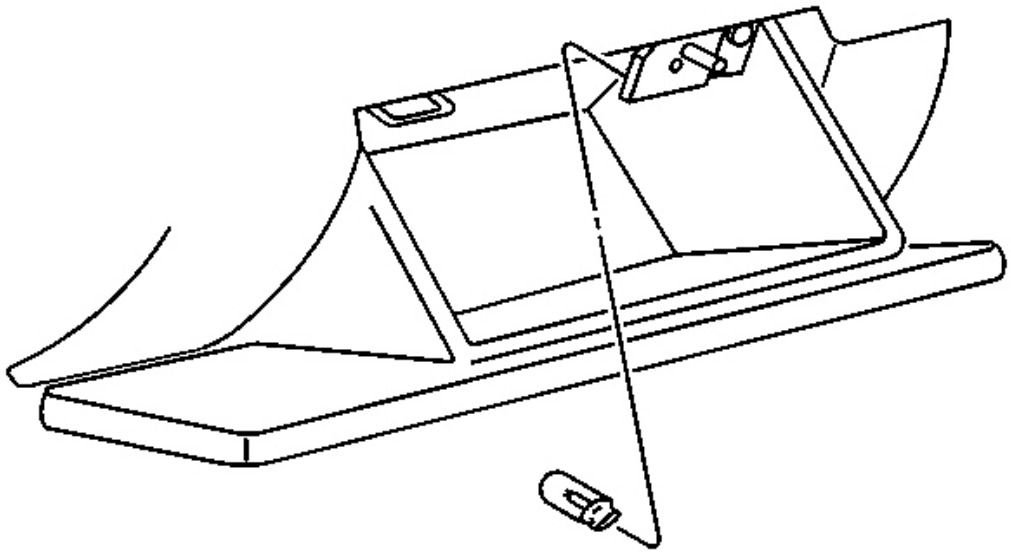

Fig. 65: IP Passenger Compartment Door
Courtesy of GENERAL MOTORS CORP.

1. Open the instrument panel (IP) passenger compartment door.
2. Reach behind the IP compartment lamp switch, grasp the bulb, then pull the bulb to remove.

Installation Procedure

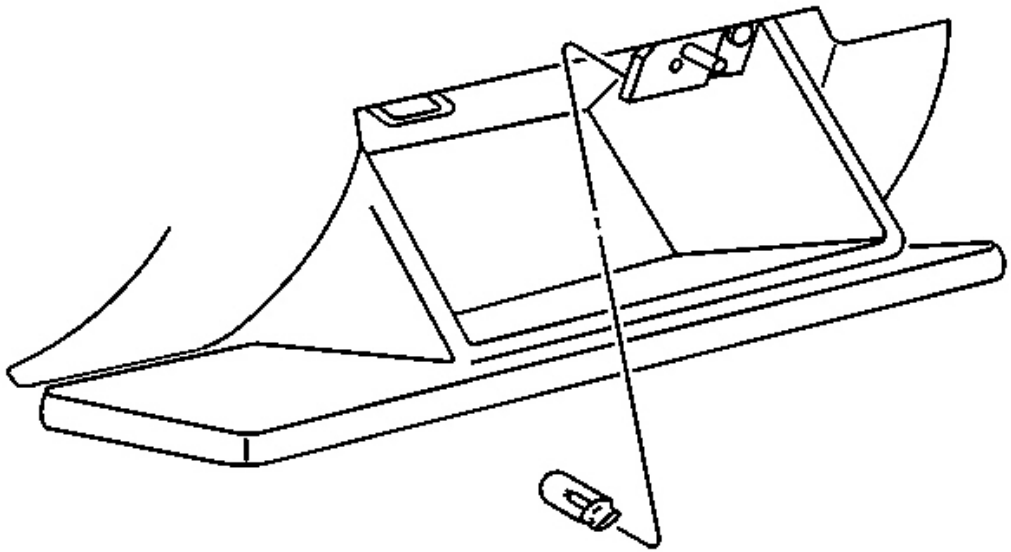

Fig. 66: IP Passenger Compartment Door
Courtesy of GENERAL MOTORS CORP.

1. Install the bulb to the socket in the back of the switch.
2. Close the IP passenger compartment door.

REARVIEW MIRROR LAMP REPLACEMENT

Removal Procedure

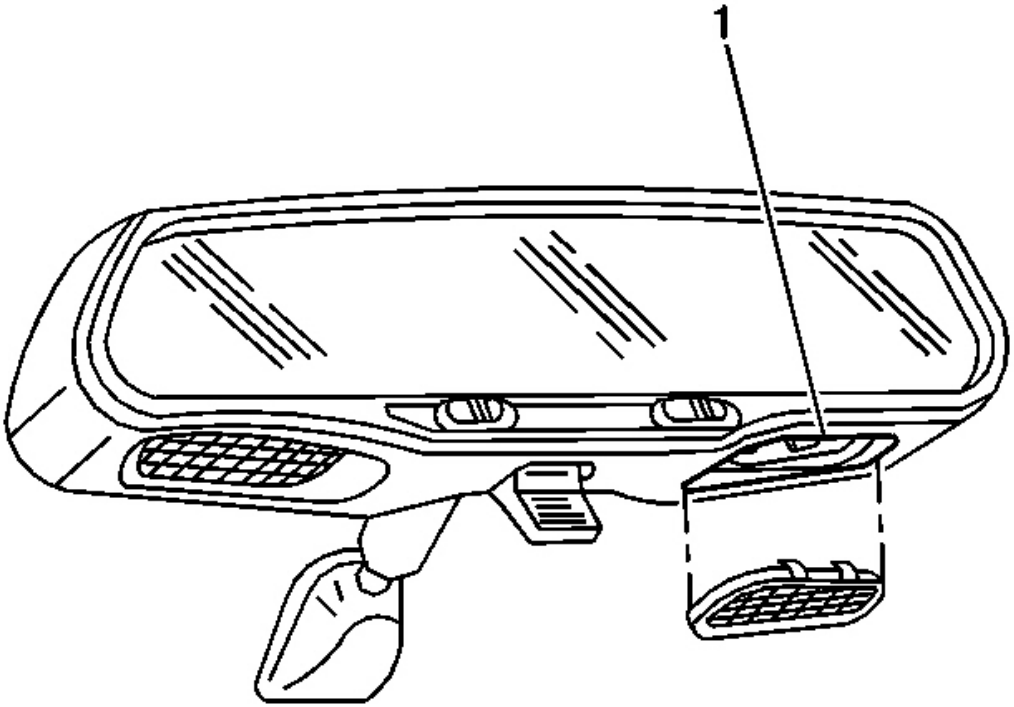

Fig. 67: Lamp Lens To Mirror Housing
Courtesy of GENERAL MOTORS CORP.

1. Remove the lamp lens from the mirror housing.

   Pry carefully with a small, flat-bladed screwdriver (at the rear edge (1) of the lens, furthest from the windshield).

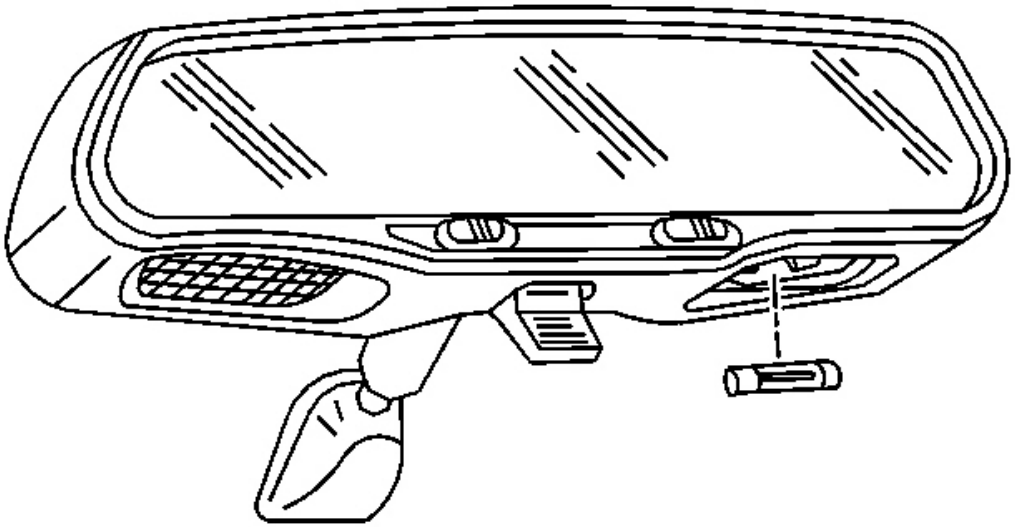

Fig. 68: Bulb At Socket
Courtesy of GENERAL MOTORS CORP.

2. Remove the bulb from the socket.

Installation Procedure

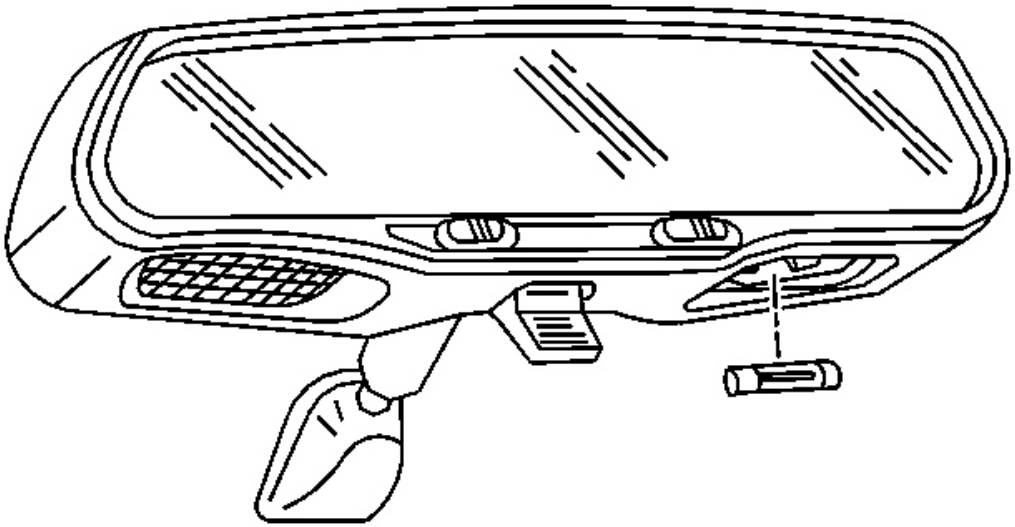

Fig. 69: Bulb At Socket
Courtesy of GENERAL MOTORS CORP.

1. Install the bulb into the socket.

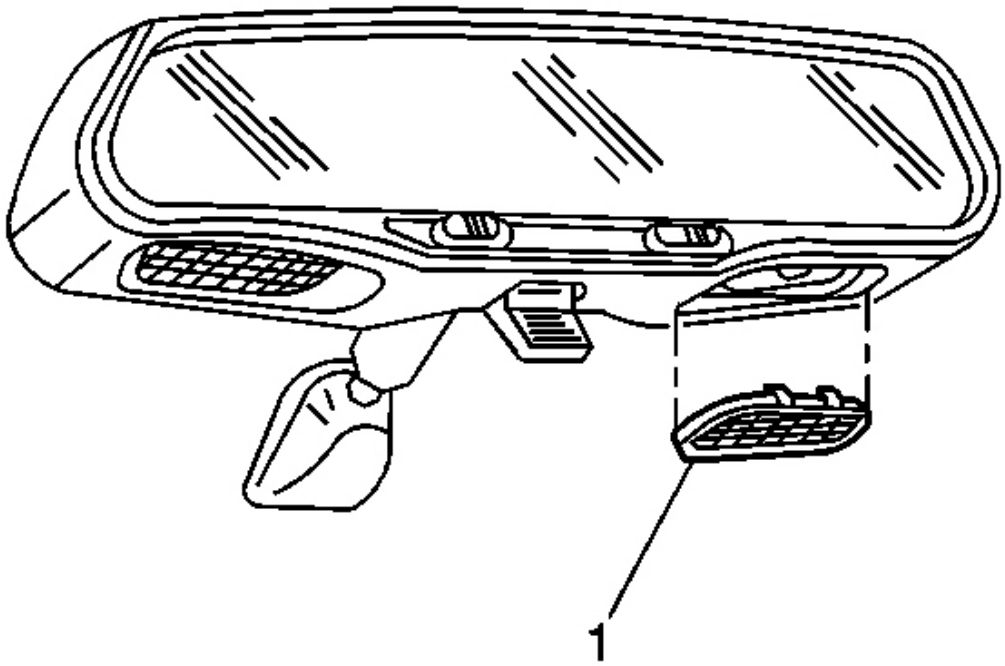

Fig. 70: Lamp Lens To Mirror Housing Edge Nearest To Windshield
Courtesy of GENERAL MOTORS CORP.

2. Install the lamp lens to the mirror housing.

   Insert the forward edge of the lens (1) (the edge nearest to the windshield) into place and push up the rear edge to snap in place.

VANITY MIRROR LAMP BULB REPLACEMENT

Removal Procedure

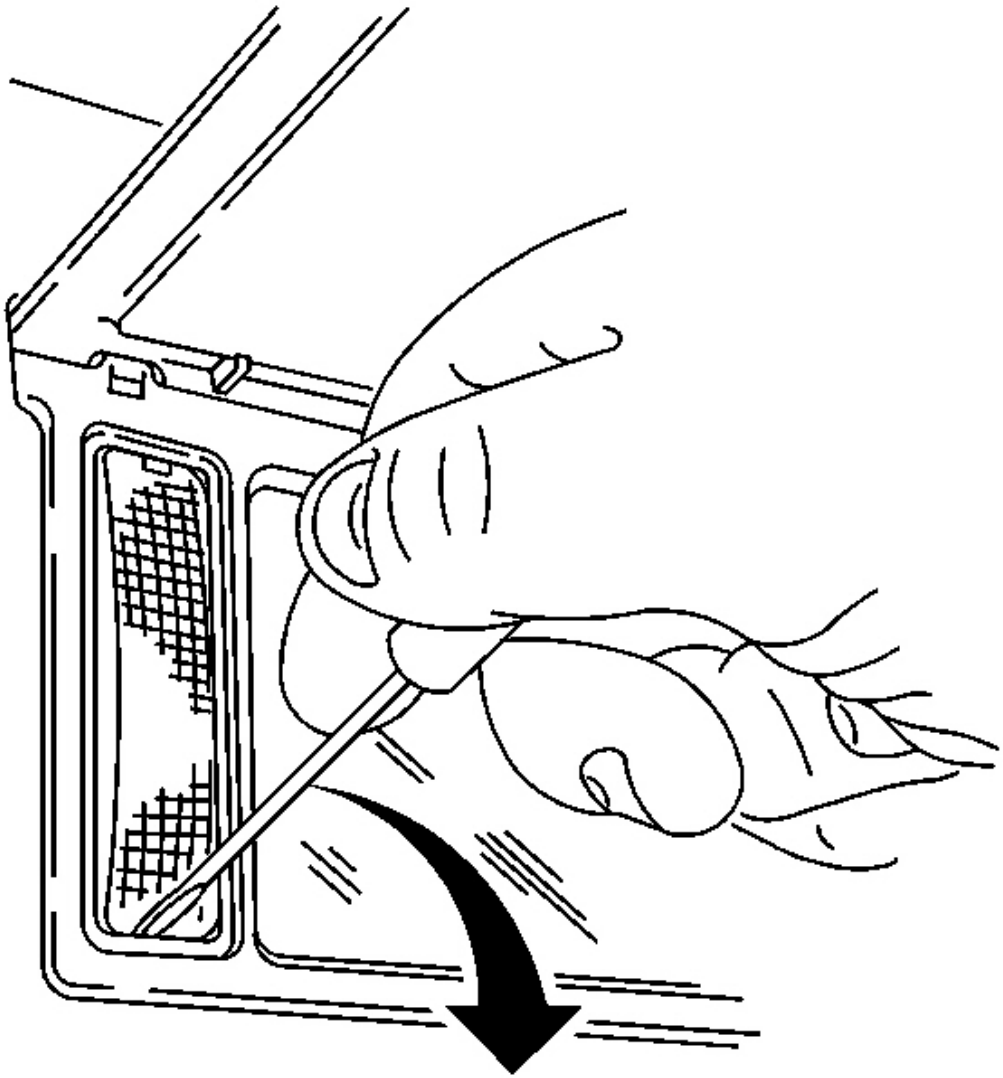

Fig. 71: Lower Edge To Vanity Mirror Lamp Lens
Courtesy of GENERAL MOTORS CORP.

1. Lower the sunshade and raise the mirror/lamp cover (the door).
2. Insert a small flat-bladed screwdriver at the lower edge of the vanity mirror lamp lens then gently pry down to release the lens.

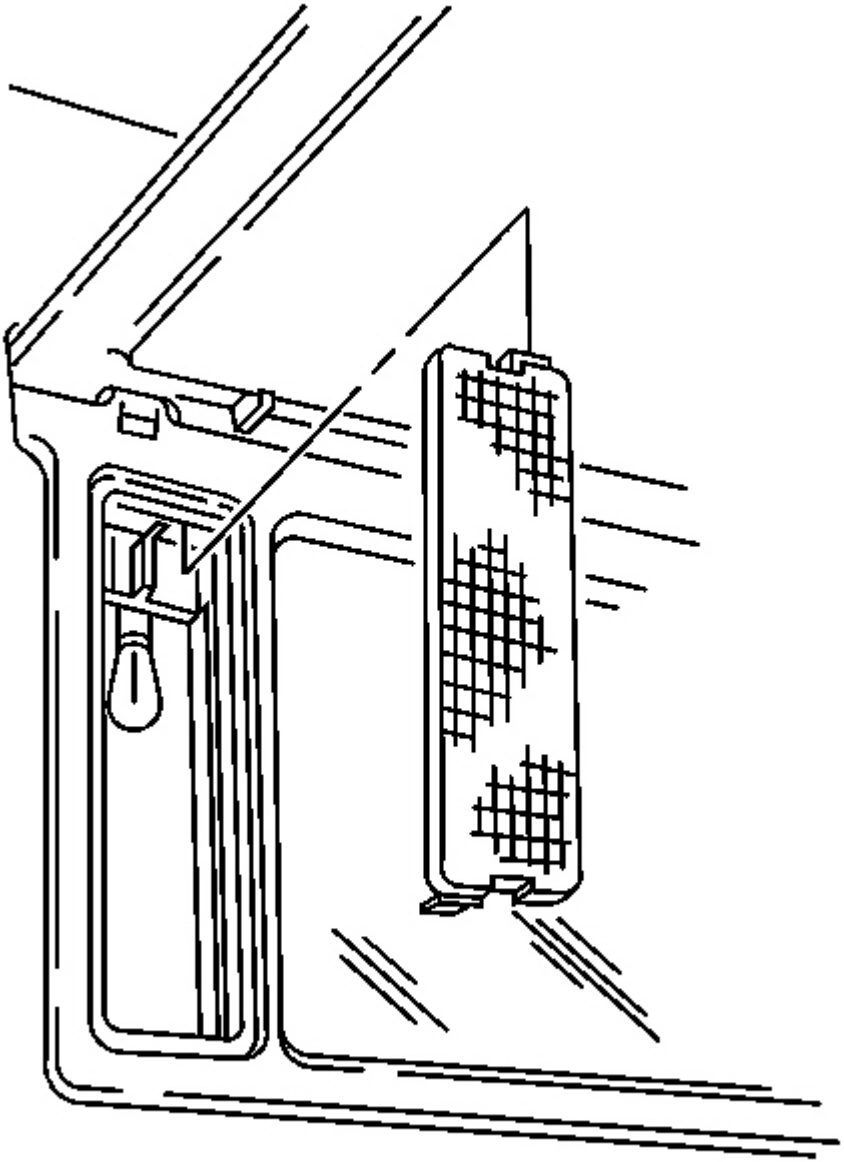

Fig. 72: Vanity Mirror Lamp Lens To Sunshade
Courtesy of GENERAL MOTORS CORP.

3. Remove the vanity mirror lamp lens from the sunshade.

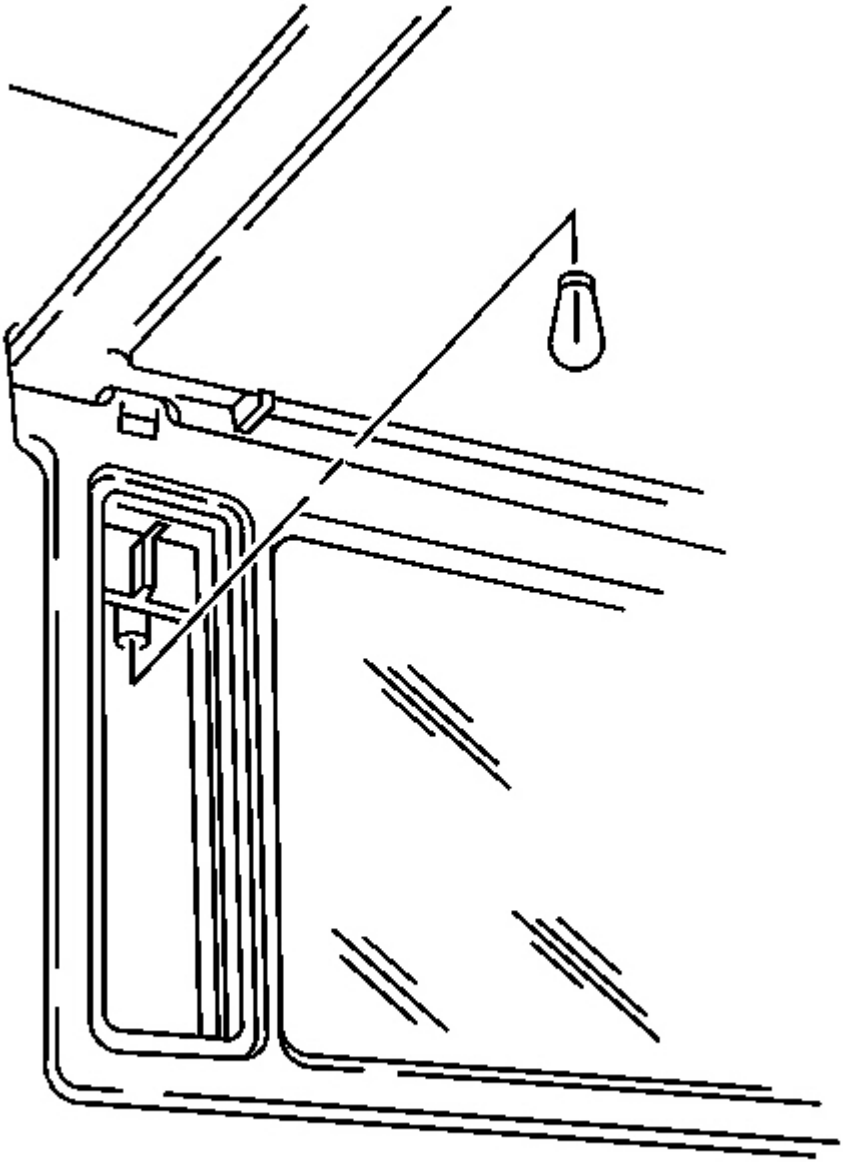

Fig. 73: Bulb To Socket
Courtesy of GENERAL MOTORS CORP.

4. Remove the bulb from the socket.

Installation Procedure

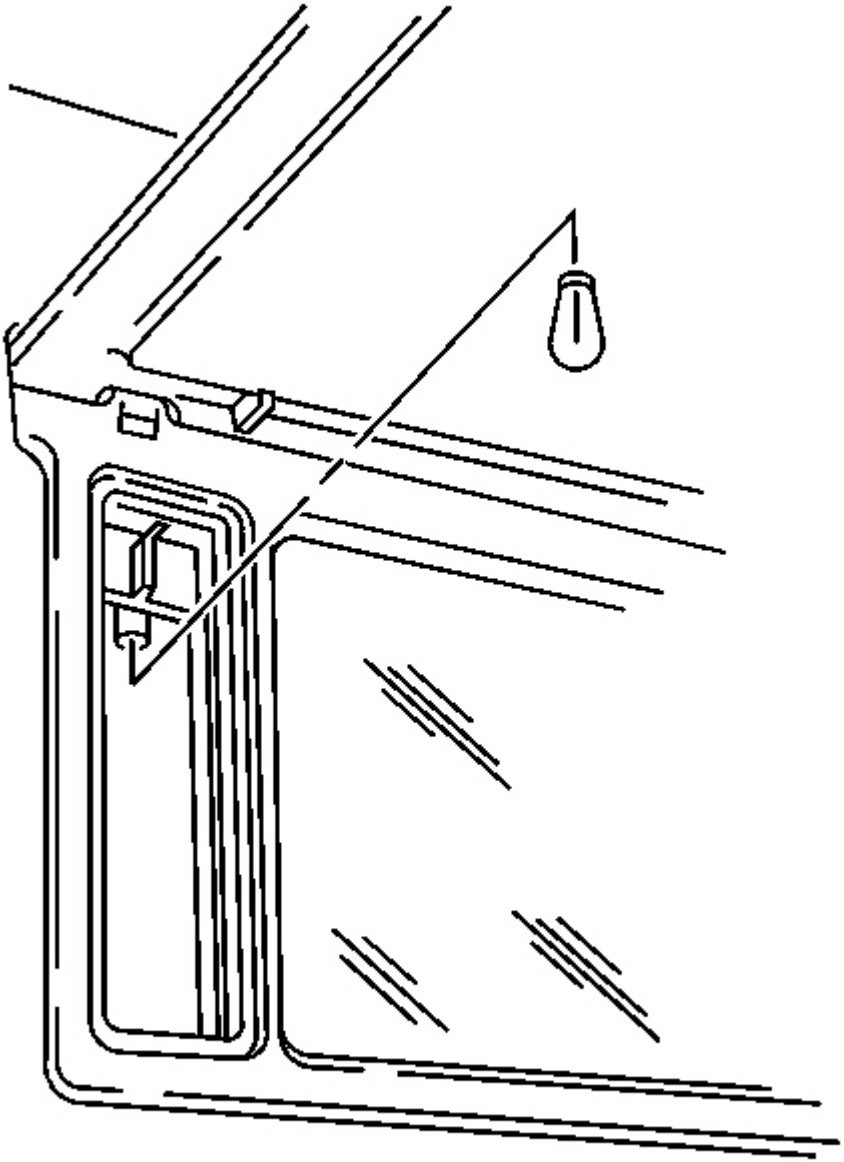

Fig. 74: Bulb To Socket
Courtesy of GENERAL MOTORS CORP.

1. Install the bulb into the socket.

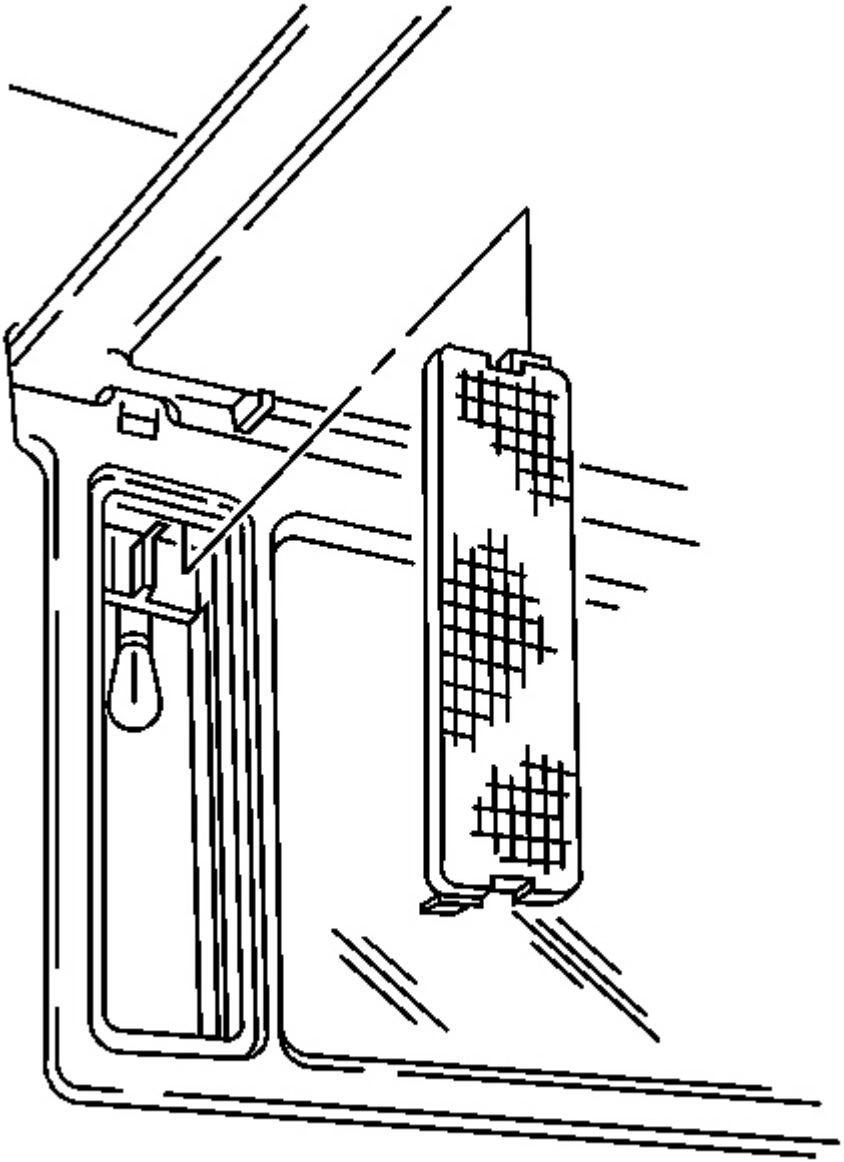

Fig. 75: Vanity Mirror Lamp Lens To Sunshade
Courtesy of GENERAL MOTORS CORP.

2. Position the vanity mirror lamp lens to the sunshade.

   Align the lens tabs into the housing slots inserting the upper edge of the lens first.

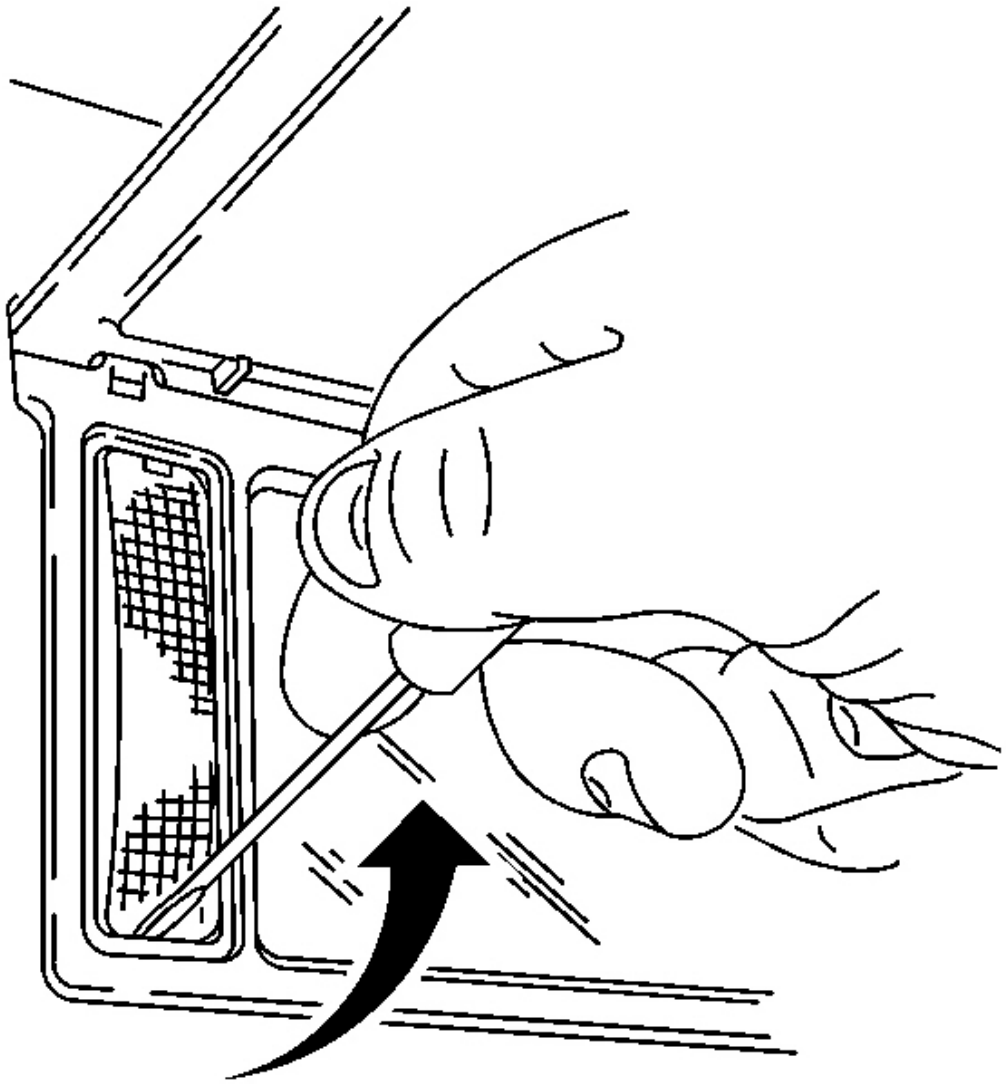

Fig. 76: Vanity Mirror Lamp Lens To Sunshade
Courtesy of GENERAL MOTORS CORP.

3. Insert a small flat-bladed screwdriver at the lower edge of the vanity mirror lamp lens then gently pry up to fully install the lens.
4. Close the lamp cover door and raise the sunshade.

TRANS FLOOR SHIFT CONTROL INDICATOR LAMP REPLACEMENT

Removal Procedure

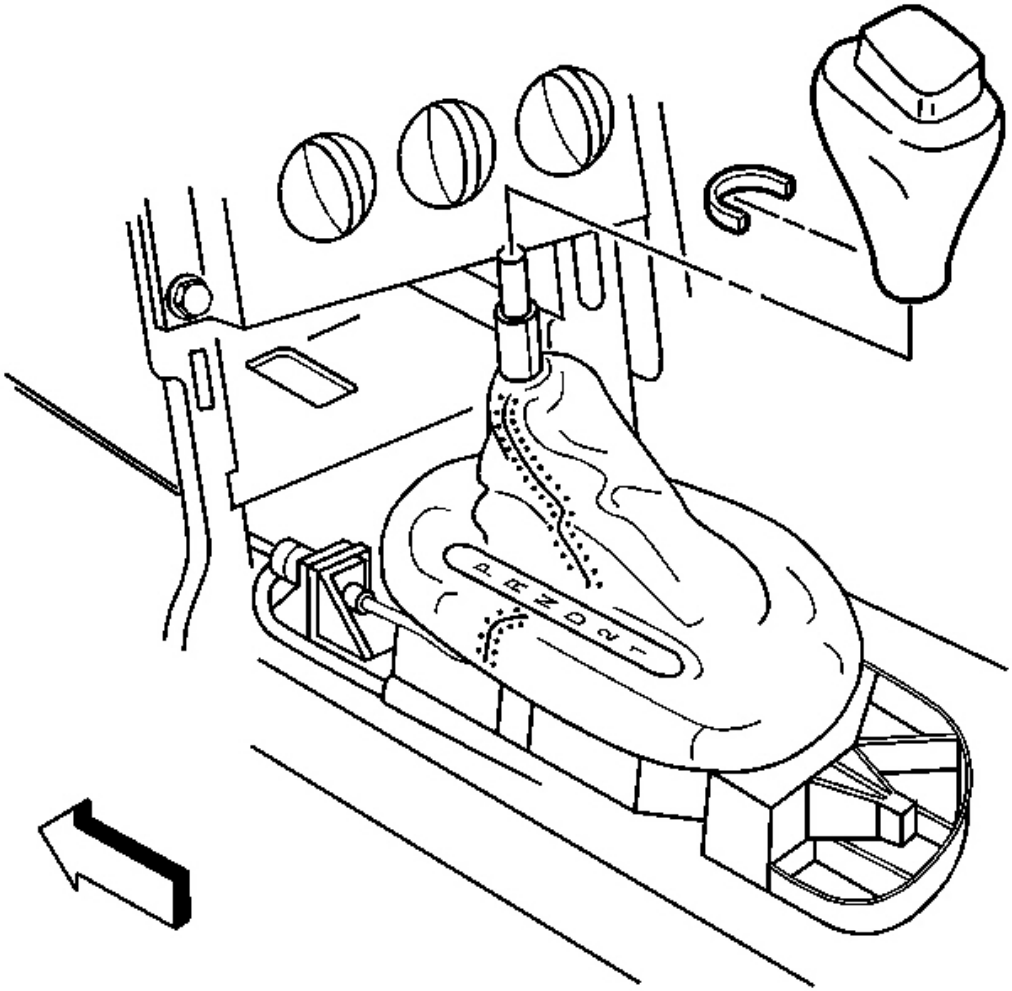

Fig. 77: Floor Shift Control To Console
Courtesy of GENERAL MOTORS CORP.

1. Remove the floor shift control. Refer to **Floor Shift Control Replacement** in Automatic Transmission - 4L60-E.

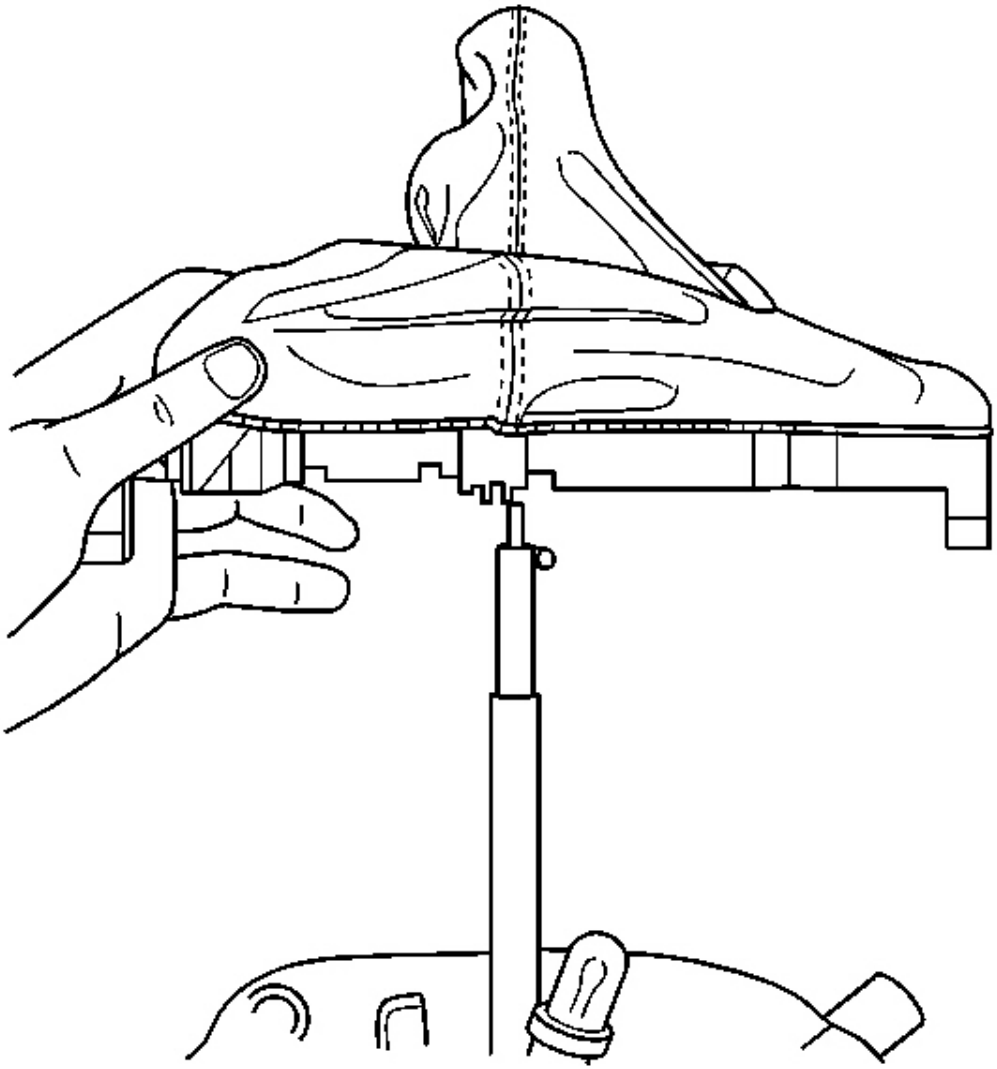

Fig. 78: Bulb To Lamp Socket
Courtesy of GENERAL MOTORS CORP.

2. Remove the floor shift control boot assembly. Refer to **Floor Shift Control Boot Replacement** in Automatic Transmission - 4L60-E.
3. Remove the lamp socket.
4. Remove the bulb from the lamp socket.

Installation Procedure

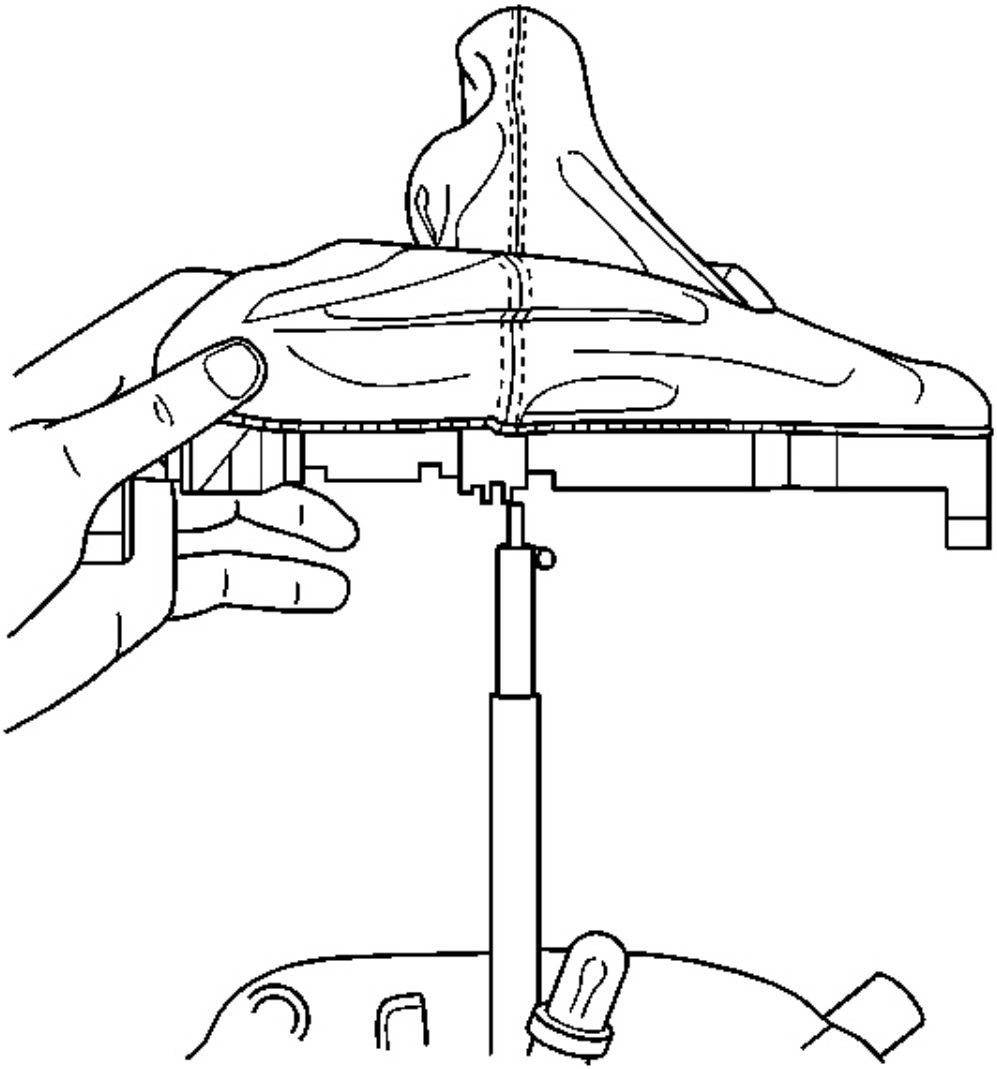

Fig. 79: Bulb To Lamp Socket
Courtesy of GENERAL MOTORS CORP.

1. Install the bulb to the socket.
2. Install the socket to the shift boot assembly.
3. Install the shift boot to the floor shift control. Refer to **Floor Shift Control Boot Replacement** in Automatic Transmission - 4L60-E.

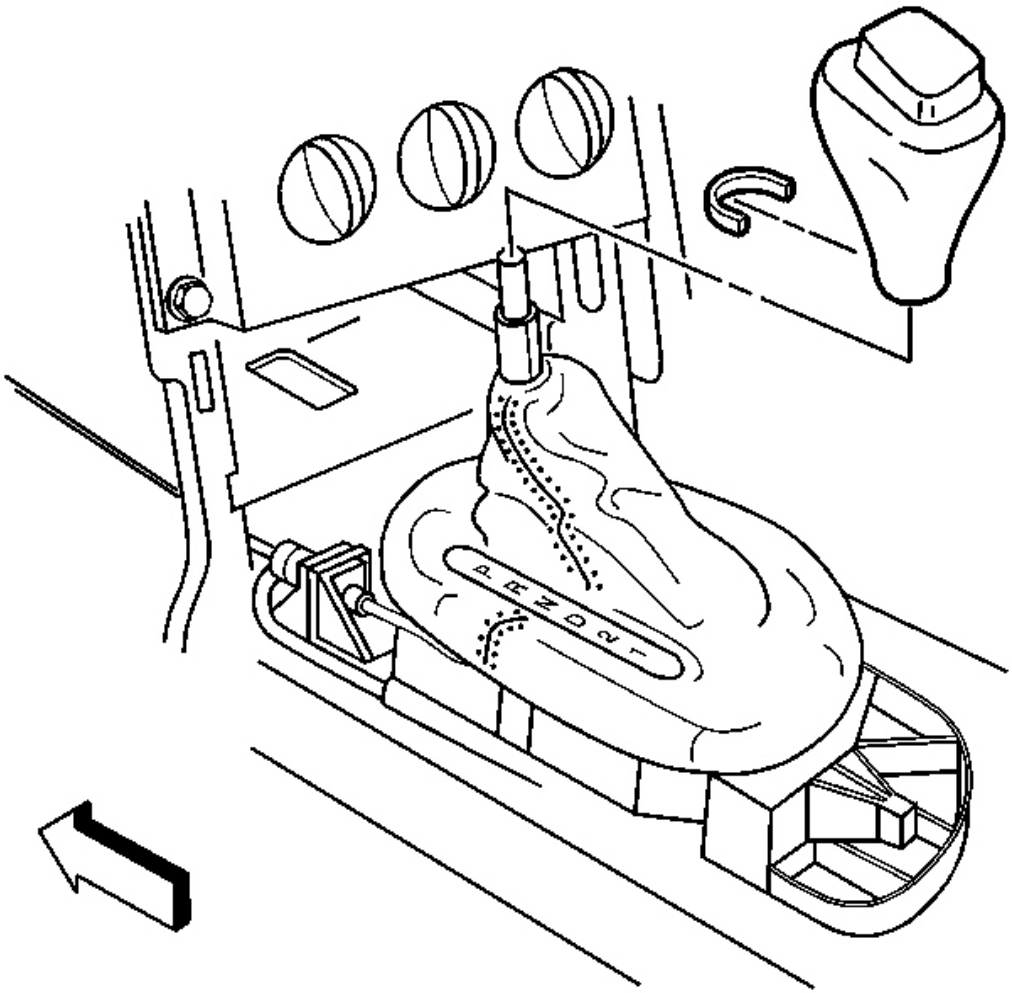

Fig. 80: Floor Shift Control To Console
Courtesy of GENERAL MOTORS CORP.

4. Install the floor shift control to the console. Refer to **Floor Shift Control Replacement** in Automatic Transmission - 4L60-E.

UNDERHOOD LAMP REPLACEMENT

Removal Procedure

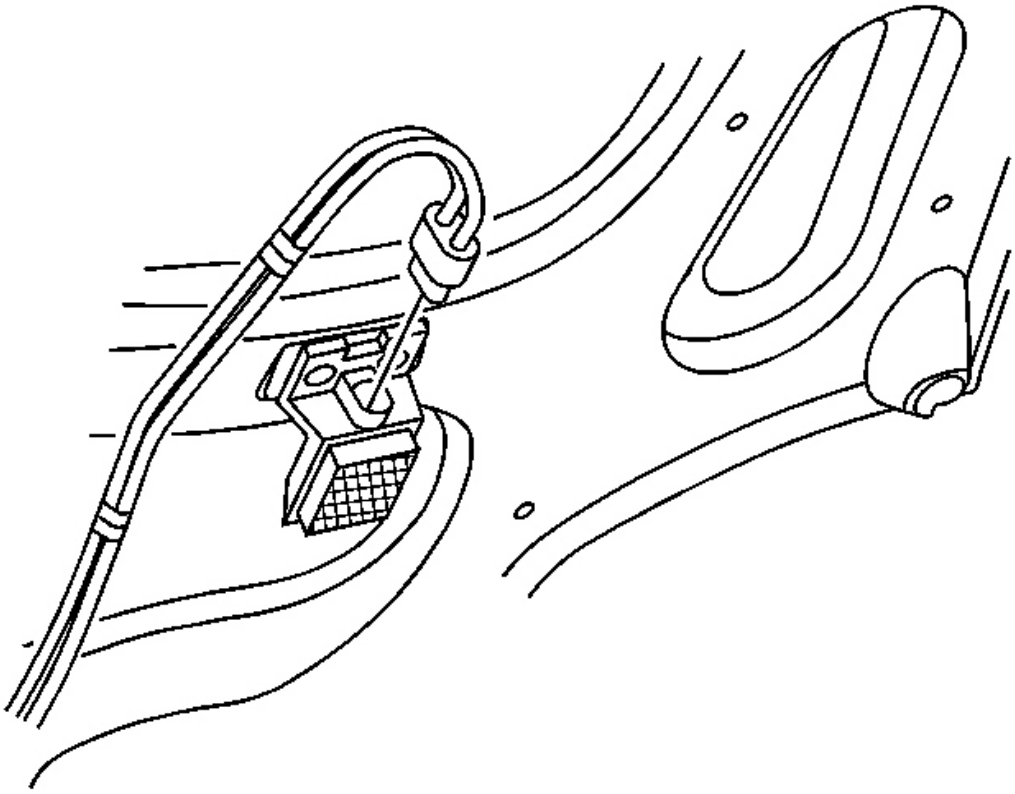

Fig. 81: Electrical Connector To Underhood Lamp Assembly
Courtesy of GENERAL MOTORS CORP.

1. Open the hood.
2. Disconnect the electrical connector from the underhood lamp assembly.

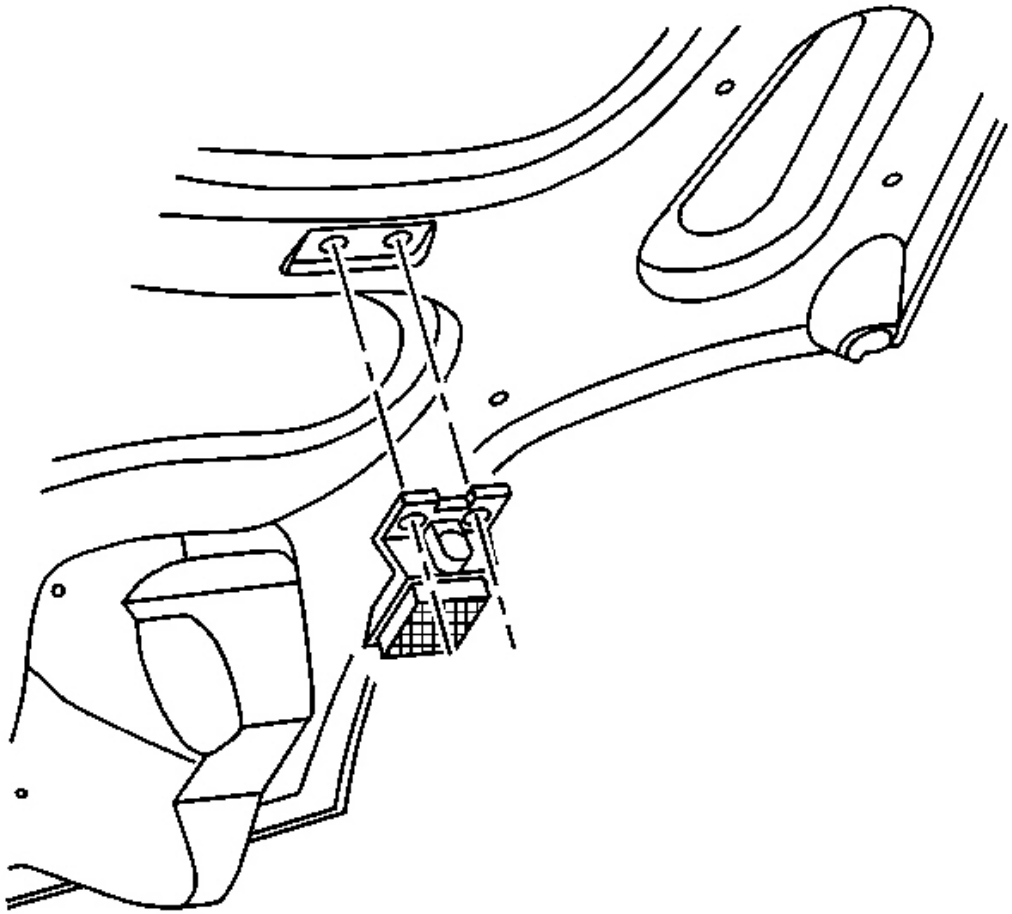

Fig. 82: Rivets At Underhood Lamp Assembly
Courtesy of GENERAL MOTORS CORP.

CAUTION: Refer to Safety Glasses Caution in Cautions and Notices.

3. Drill out the 2 rivets retaining the underhood lamp assembly.
4. Remove the underhood lamp from the vehicle.

Installation Procedure

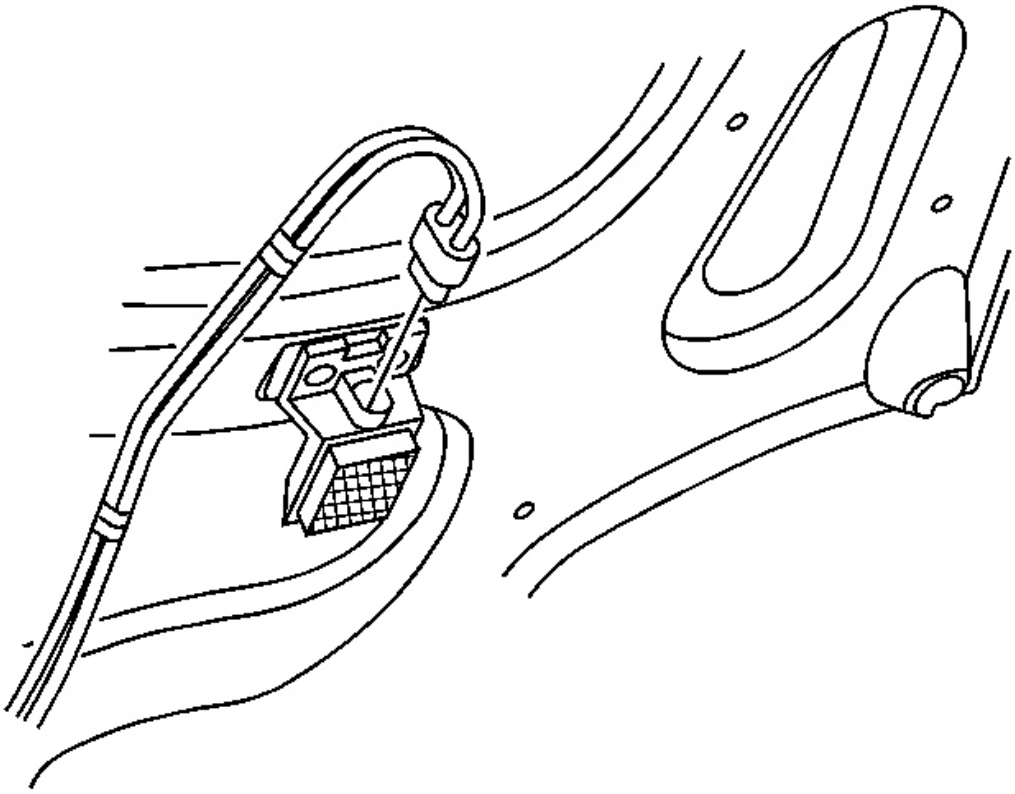

Fig. 83: Electrical Connector To Underhood Lamp Assembly
Courtesy of GENERAL MOTORS CORP.

1. Position the underhood lamp to the hood.
2. Rivet the lamp to the hood.
3. Connect the electrical connector to the lamp.
4. Close the hood.

UNDERHOOD LAMP BULB REPLACEMENT

Removal Procedure

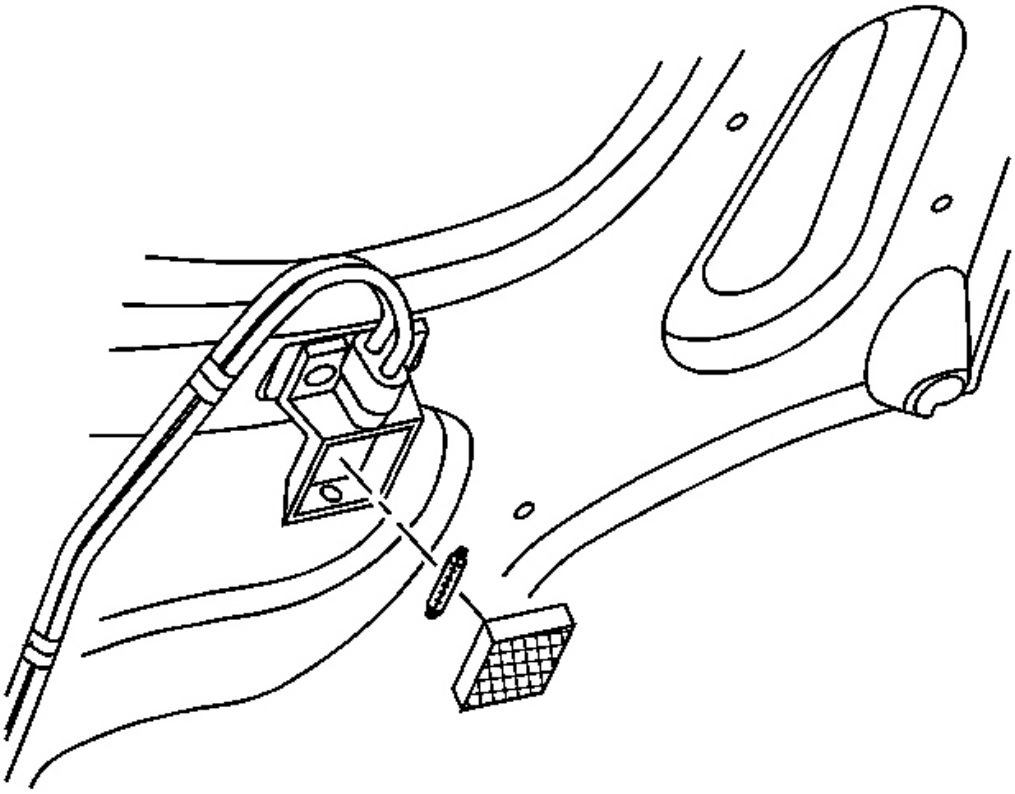

Fig. 84: Bulb To Underhood Lamp Lens Cover
Courtesy of GENERAL MOTORS CORP.

1. Remove the underhood lamp lens cover.

   Grasp the lens cover and depress the upper and lower locking tabs to release.

2. Remove the bulb from the underhood lamp.

   Gently grasp the bulb, lift the bulb to release tension, then swing the top edge of the bulb away from the connector.

Installation Procedure

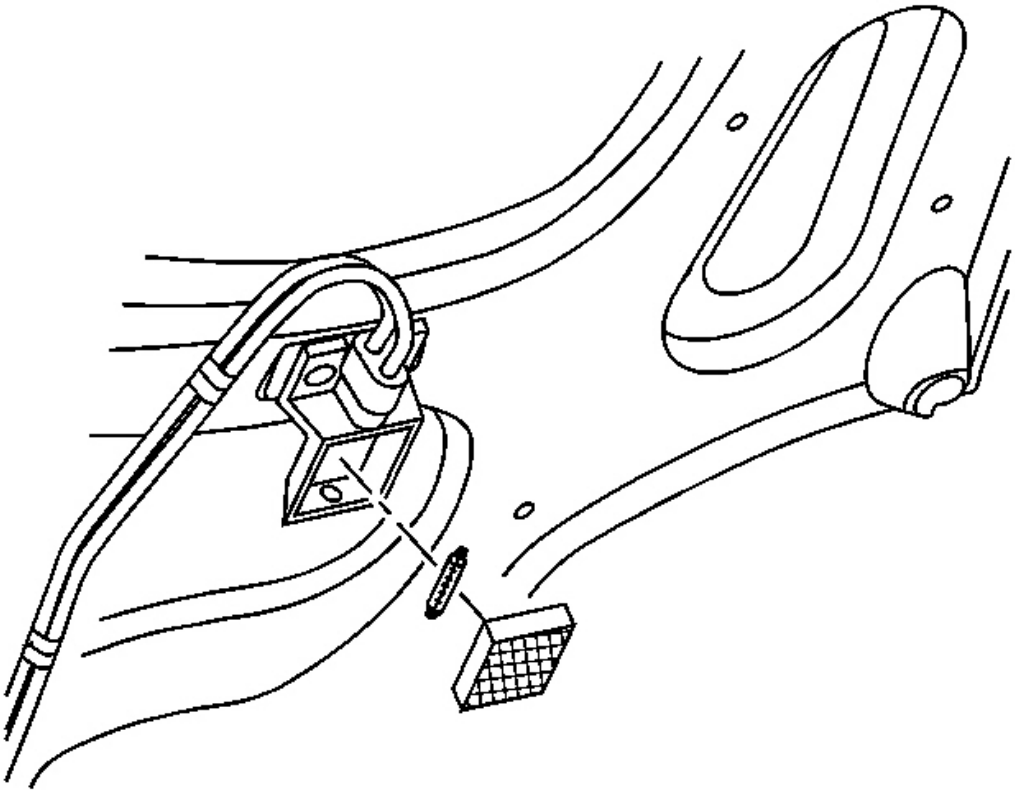

Fig. 85: Bulb To Underhood Lamp Lens Cover
Courtesy of GENERAL MOTORS CORP.

1. Install the bulb to the underhood lamp.

   Gently grasp the bulb, connect the lower edge of the bulb onto the lower connector, lift the bulb, then swing the top edge of the bulb onto the upper connector.

2. Install the underhood lamp lens cover.

   Snap the lens cover locking tabs into place.

HEADLAMP REPLACEMENT

Removal Procedure

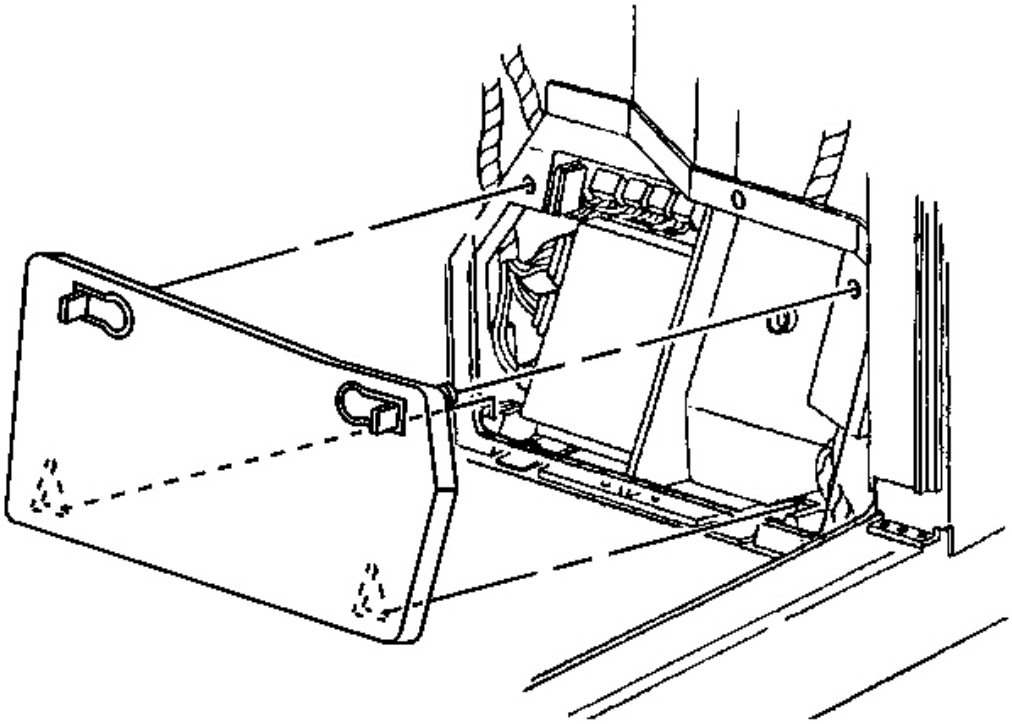

Fig. 86: Passenger Side Front Floor Kick Up Panel To IP Electrical Center
Courtesy of GENERAL MOTORS CORP.

1. Remove the passenger side front floor kick up panel to access the IP electrical center.

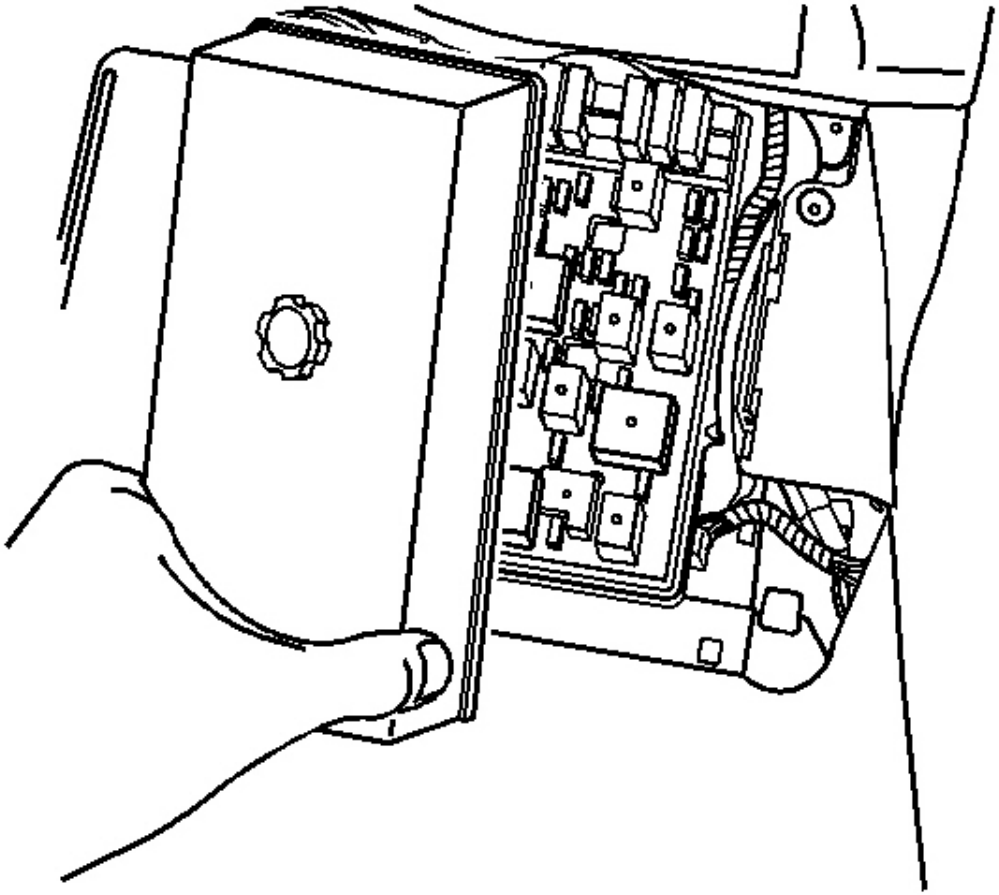

Fig. 87: Cover To IP Electrical Center
Courtesy of GENERAL MOTORS CORP.

2. Remove the cover from the IP electrical center.

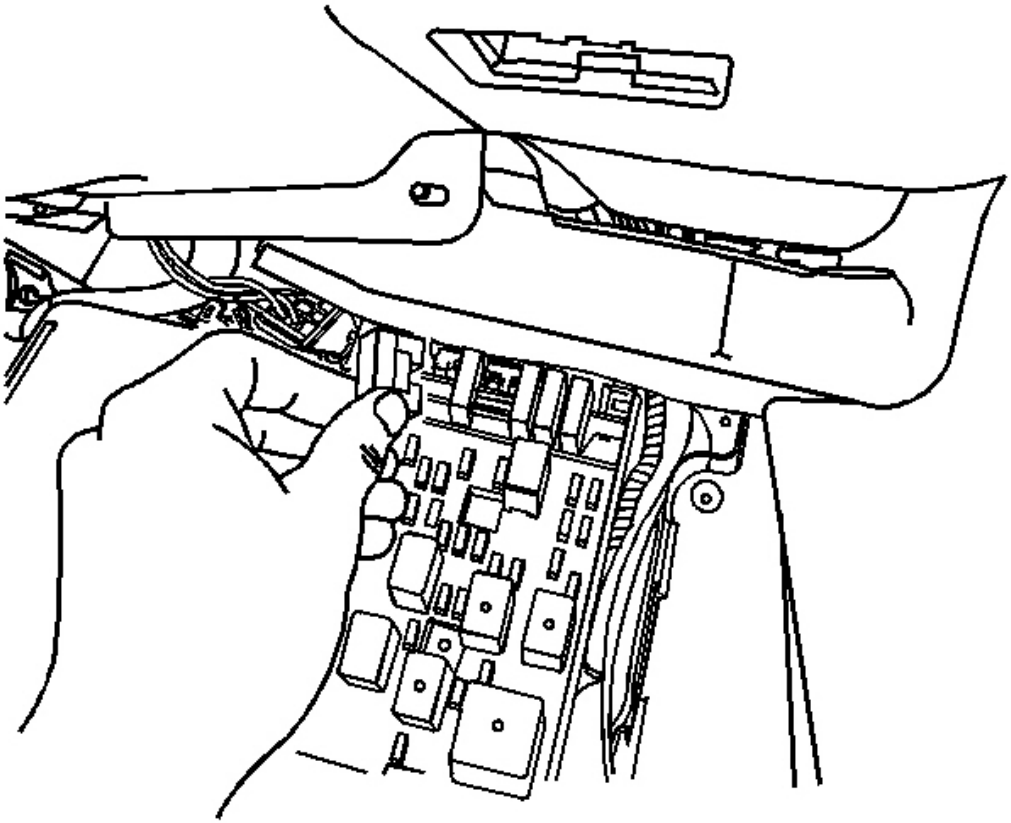

Fig. 88: HDLP Maxi Circuit Breaker #54 To IP Electrical Center
Courtesy of GENERAL MOTORS CORP.

3. Remove the HDLP Maxi circuit breaker #54, from the IP electrical center.
4. Raise the hood.

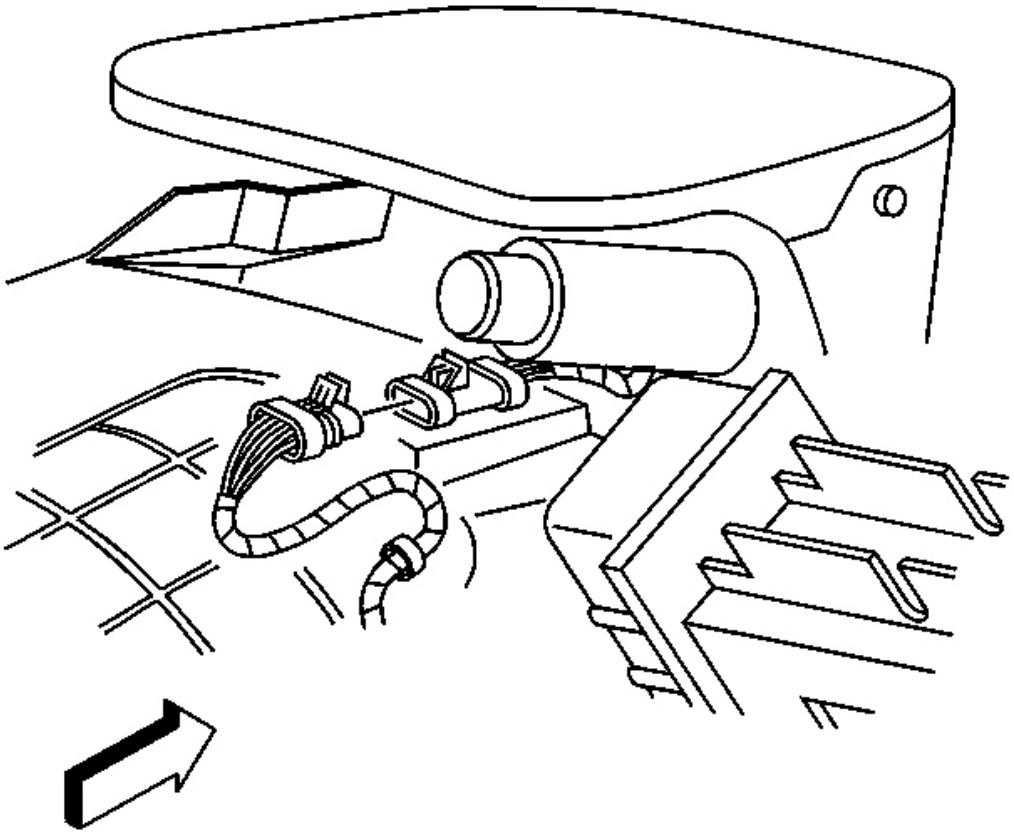

Fig. 89: RH Headlamp Wiring Harness Electrical Connector To Forward Lamp Wiring Harness
Courtesy of GENERAL MOTORS CORP.

5. Disconnect the headlamp wiring harness electrical connector from the forward lamp wiring harness.

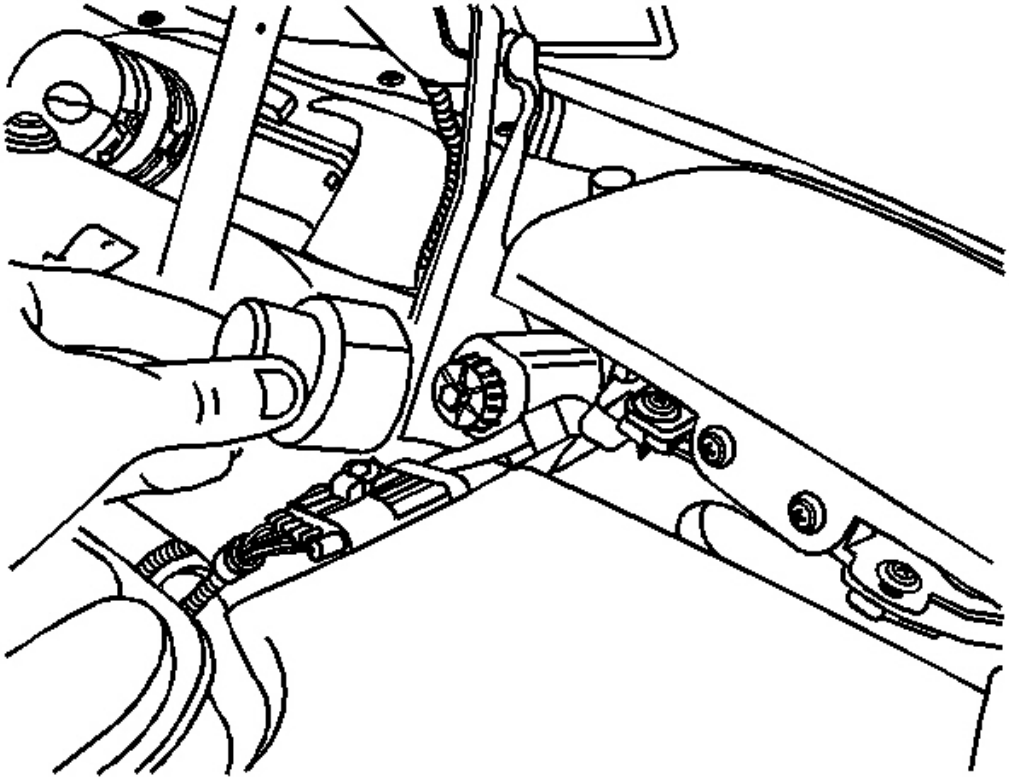

Fig. 90: Headlamp Actuator Knob Cover
Courtesy of GENERAL MOTORS CORP.

6. Remove the headlamp actuator knob cover.
7. Raise the headlamp by turning the headlamp motor/actuator manual control knob counterclockwise.

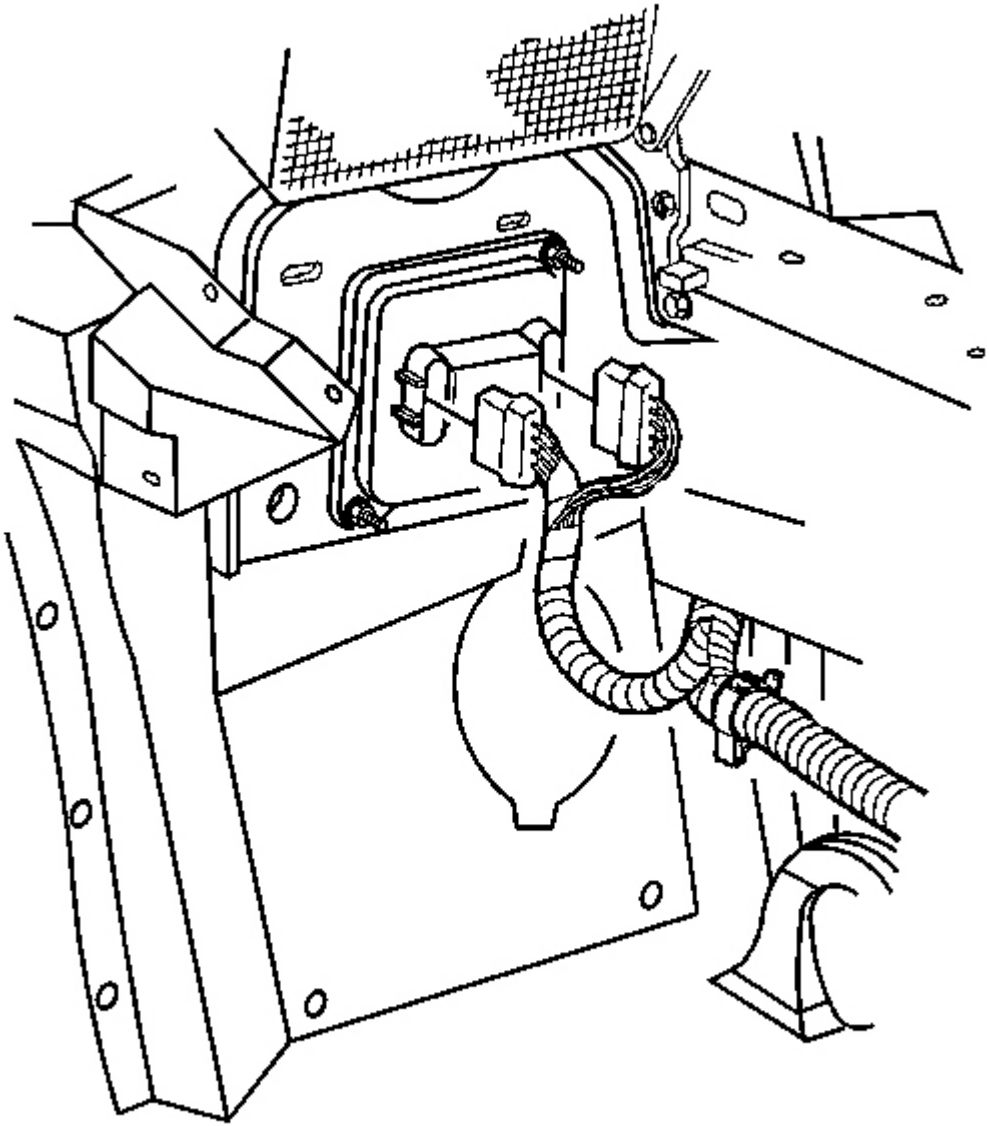

Fig. 91: Electrical Connectors To Headlamp Control Module
Courtesy of GENERAL MOTORS CORP.

8. Remove the headlamp bezel. Refer to **Headlamp Bezel Replacement** .

NOTE: **Refer to Notice - Apply Tape When Removing Body Panels in Cautions and Notices.**

9. Apply tape to the fender and hood edge to protect the paint.
10. Remove the front fascia lower closeout panel. Refer to **Close Out Panel - Front Bumper Fascia Lower** in Bumpers.
11. Remove the brake caliper cooling duct. Refer to **Brake Caliper Cooling Duct Replacement - Front** in Bumpers.
12. Disconnect the electrical connectors from the headlamp automatic control module, RH side only.

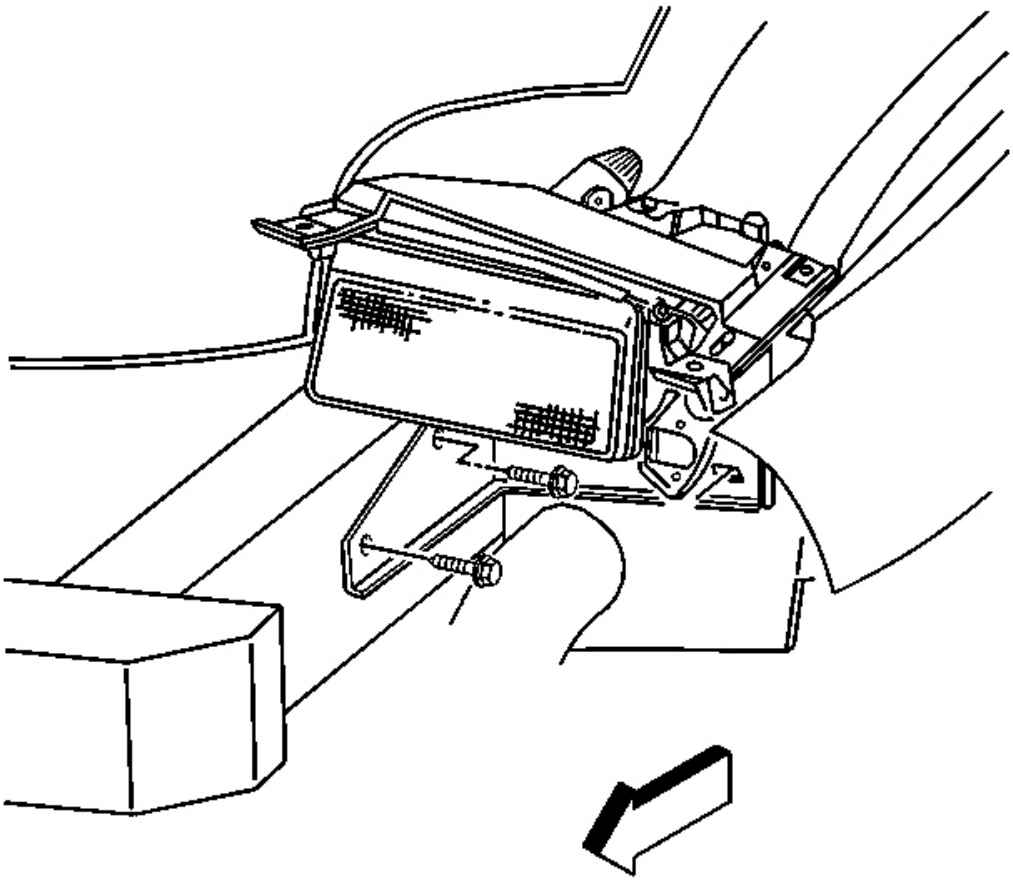

Fig. 92: Headlamp Bracket To Frame Rail Bolts
Courtesy of GENERAL MOTORS CORP.

IMPORTANT: Before removing the fasteners, support the headlamp assembly.

13. Remove the headlamp bracket to the frame rail bolts.

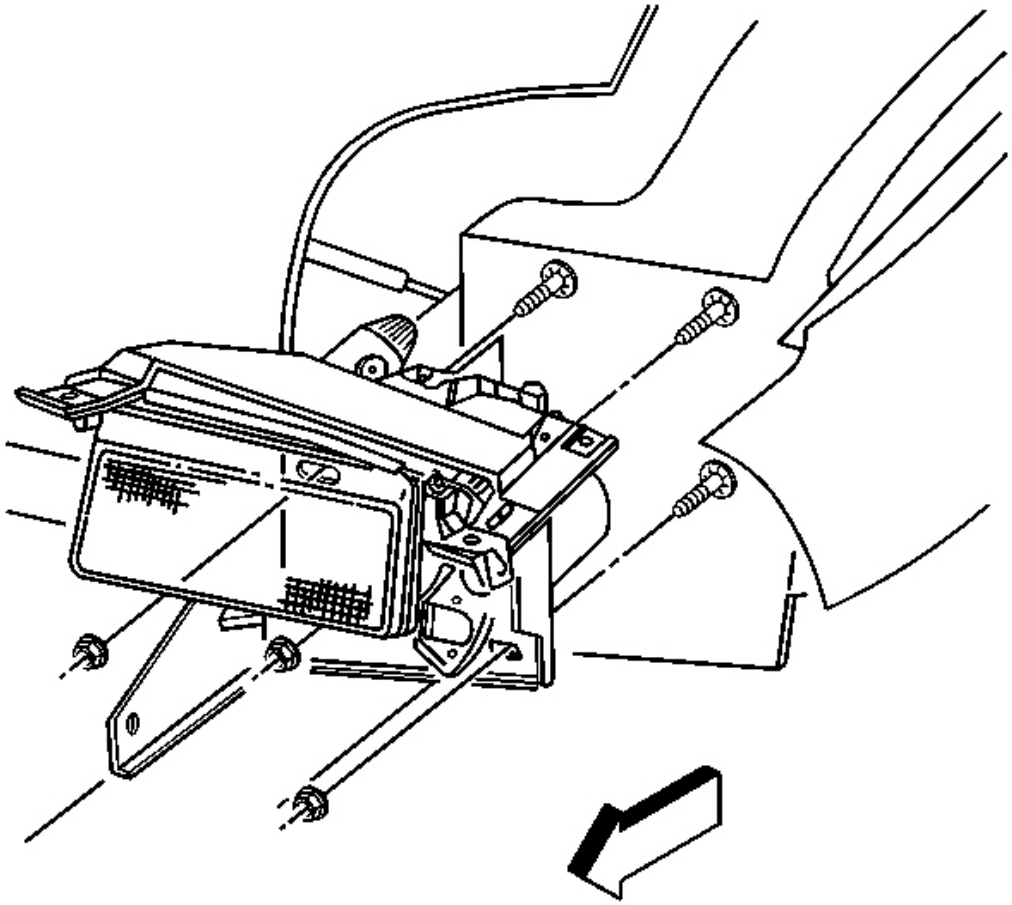

Fig. 93: Headlamp Bracket To Headlamp Stud Plate Nuts
Courtesy of GENERAL MOTORS CORP.

IMPORTANT: The headlamp assembly will have to clear the studs extending from the headlamp stud plate.

14. Remove the headlamp bracket nuts from the headlamp stud plate.
15. Lift the headlamp assembly out of the vehicle.
16. Remove the headlamp intermediate bracket from the headlamp. Refer to **Headlamp Intermediate Bracket Replacement** .
17. Remove the headlamp motor/actuator from the headlamp. Refer to **Headlamp Motor/Actuator Replacement** .
18. Remove the headlamp capsule from the headlamp. Refer to **Headlamp Capsule Replacement** .

Installation Procedure

1. Install the headlamp capsule to the headlamp. Refer to **Headlamp Capsule Replacement** .
2. Install the headlamp motor/actuator to the headlamp. Refer to **Headlamp Motor/Actuator Replacement** .
3. Install the headlamp intermediate bracket to the headlamp. Refer to **Headlamp Intermediate Bracket Replacement** .

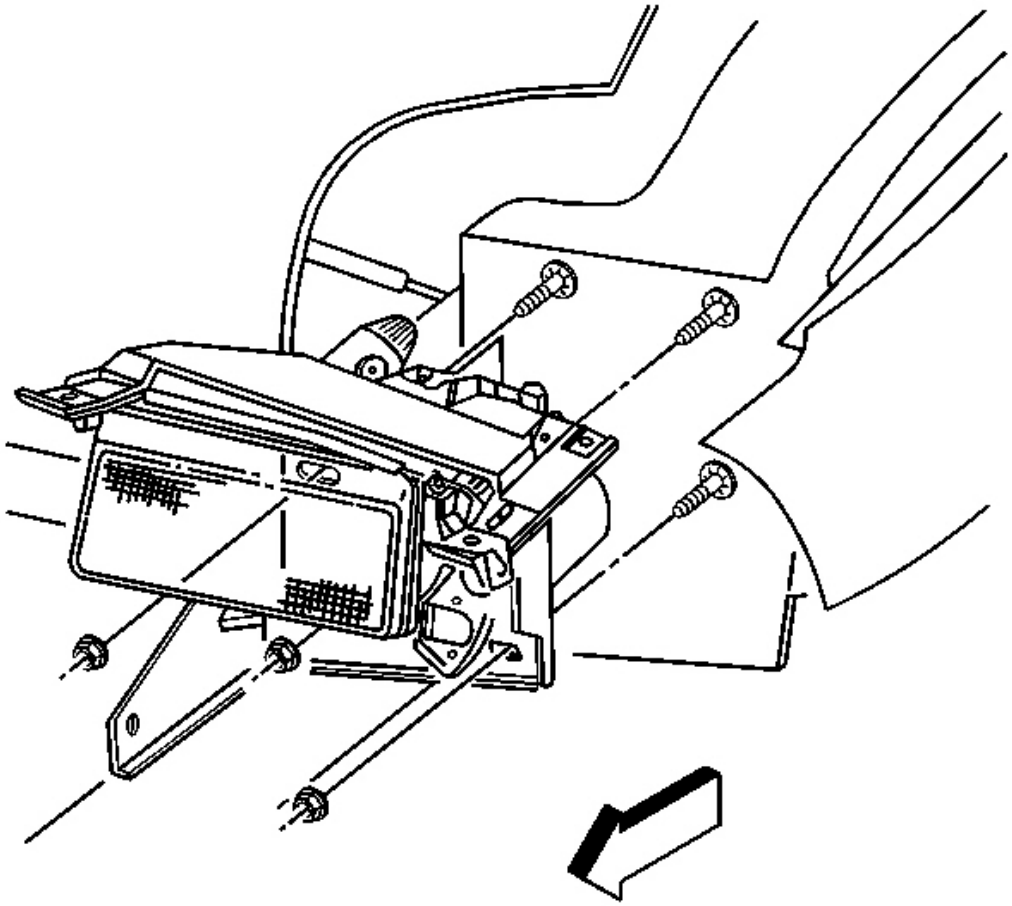

Fig. 94: Headlamp Bracket To Headlamp Stud Plate Nuts
Courtesy of GENERAL MOTORS CORP.

4. Position the headlamp assembly onto the studs extending from the headlamp stud plate.
5. Loosely install the headlamp bracket to the headlamp stud plate nuts.

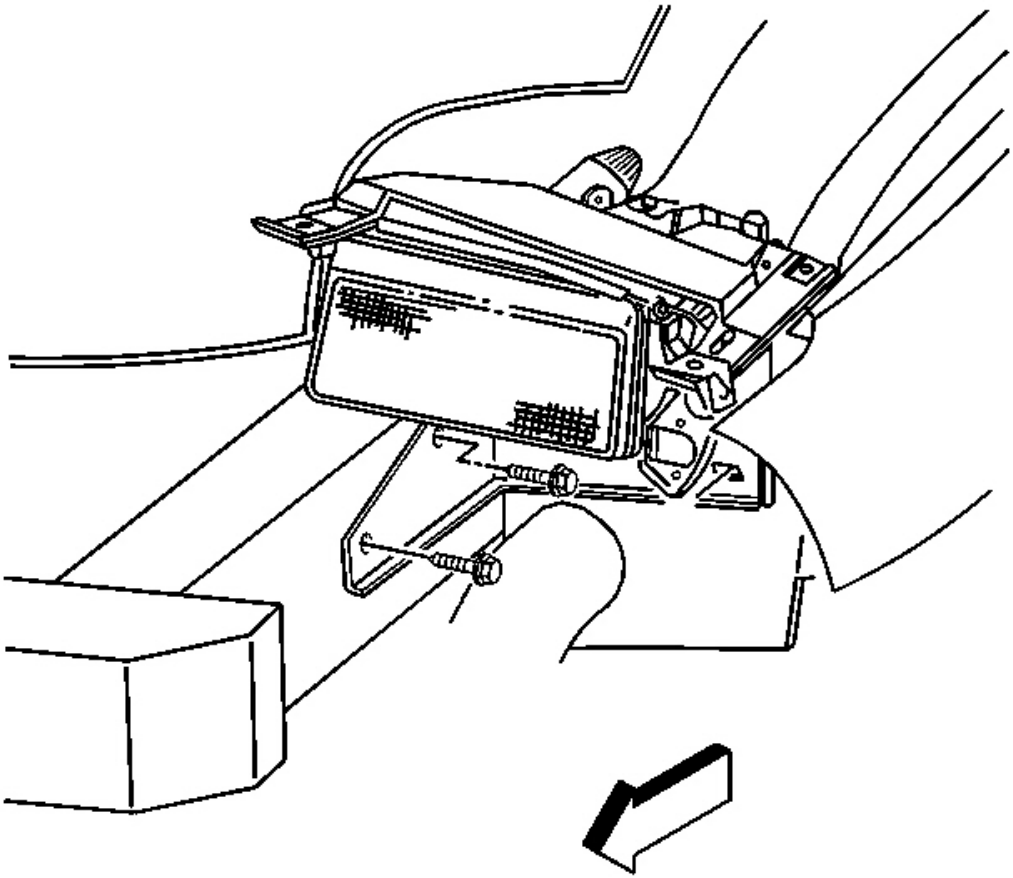

Fig. 95: Headlamp Bracket To Frame Rail Bolts
Courtesy of GENERAL MOTORS CORP.

6. Install the headlamp bracket to the frame rail bolts.

NOTE: **Refer to Fastener Notice in Cautions and Notices.**

7. Beginning with the upper location, tighten the headlamp bracket to the frame rail bolts.

   Tighten: Tighten the headlamp mounting bolts to 20 N.m (15 lb ft).

8. Beginning with the upper inner location, tighten the headlamp to stud plate nuts.

   Tighten: Tighten the headlamp mounting nuts to 10 N.m (89 lb in).

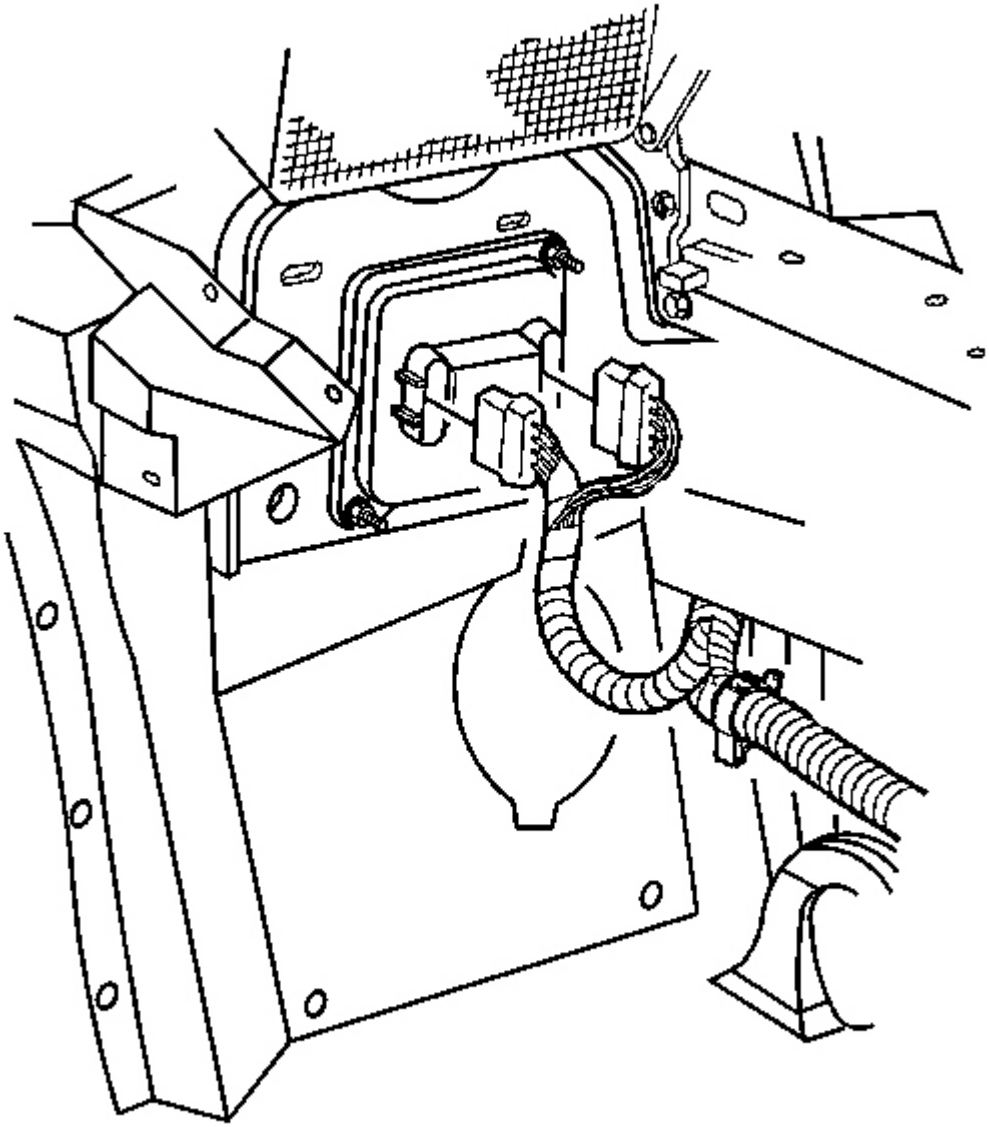

Fig. 96: Electrical Connectors To Headlamp Control Module
Courtesy of GENERAL MOTORS CORP.

9. Connect the electrical connectors to the headlamp automatic control module, RH side.
10. Install the brake caliper cooling duct. Refer to **Brake Caliper Cooling Duct Replacement - Front** in Bumpers.
11. Install the front fascia lower closeout panel. Refer to **Close Out Panel - Front Bumper Fascia Lower** in

Bumpers.

12. Install the headlamp bezel. Refer to **Headlamp Bezel Replacement** .

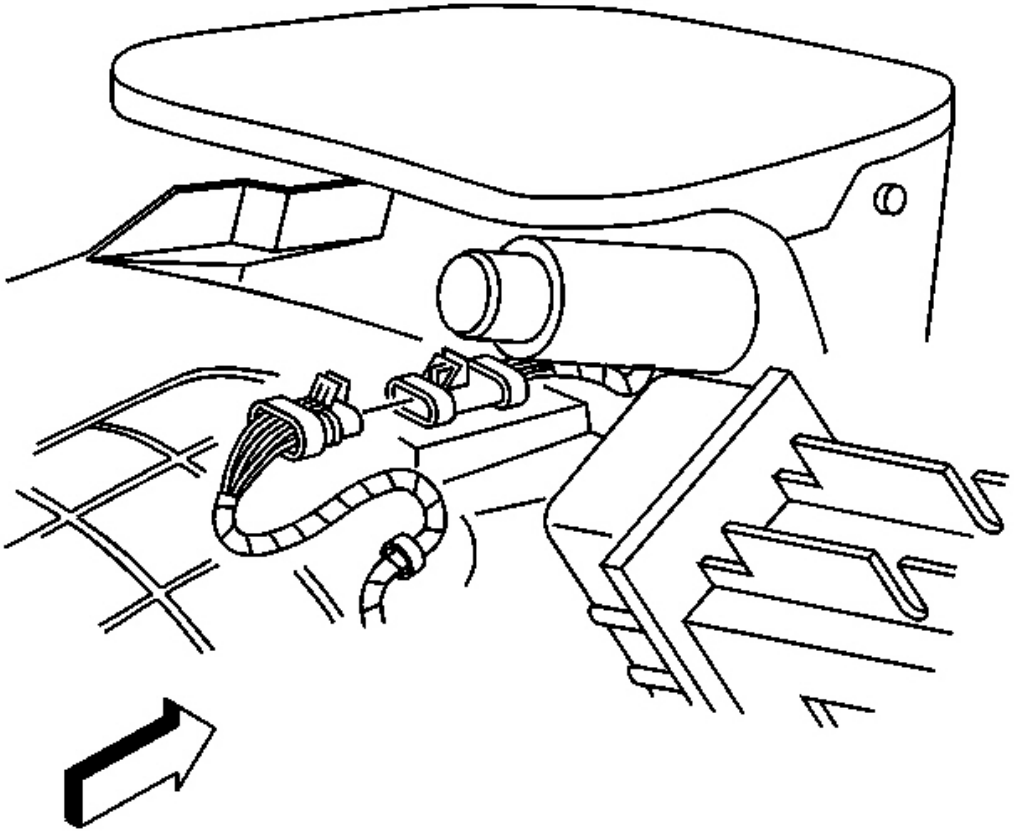

Fig. 97: RH Headlamp Wiring Harness Electrical Connector To Forward Lamp Wiring Harness
Courtesy of GENERAL MOTORS CORP.

13. Connect the headlamp wiring harness electrical connector to the forward lamp wiring harness.
14. Rotate the headlamp motor/actuator manual control knob clockwise to lower the headlamp.

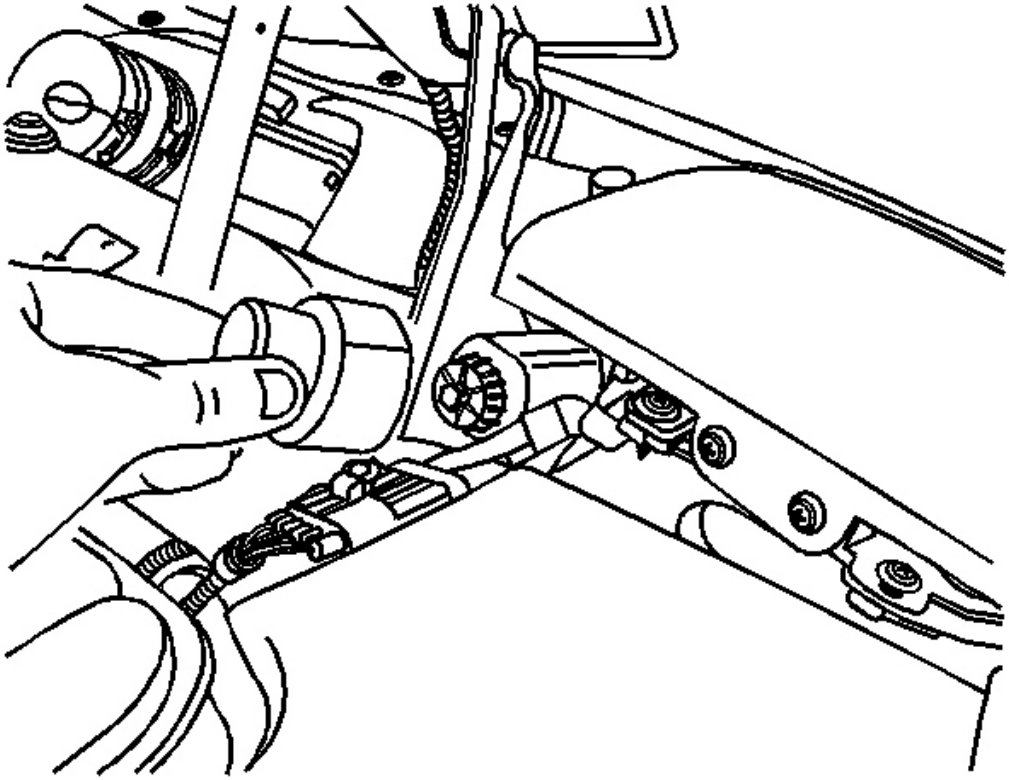

Fig. 98: Headlamp Actuator Knob Cover
Courtesy of GENERAL MOTORS CORP.

15. Install the headlamp motor/actuator knob cover.
16. Remove the protective tape installed during removal of the headlamp.
17. Close the hood.

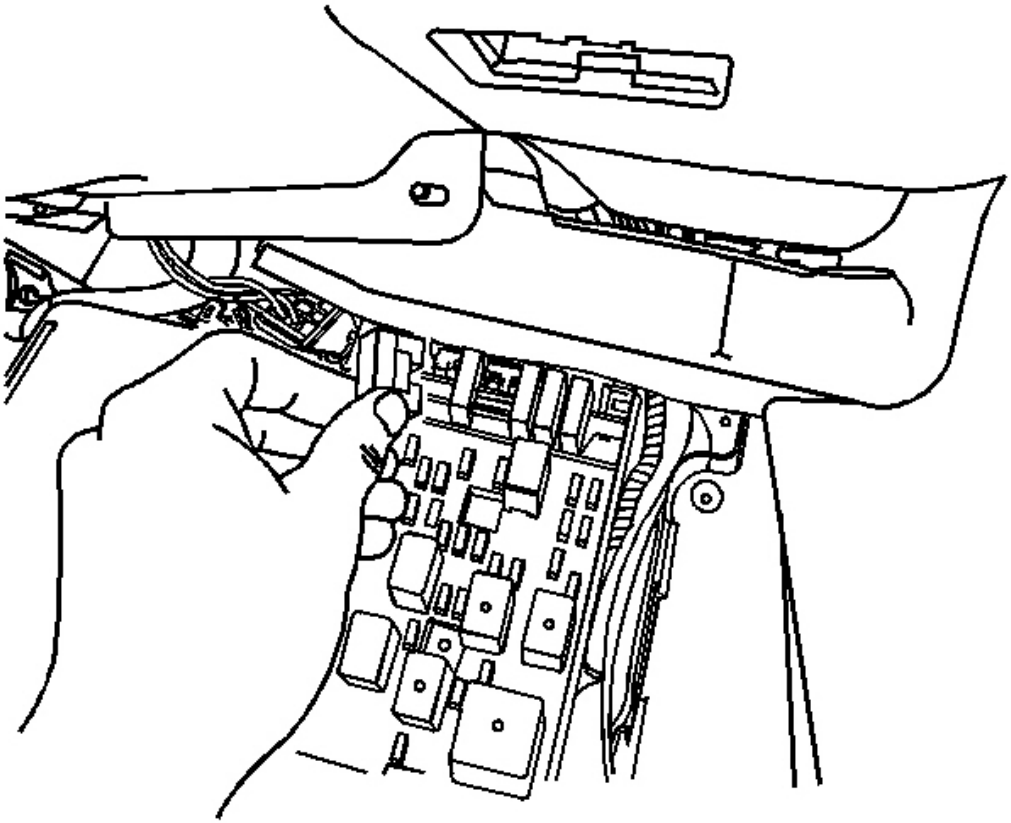

Fig. 99: HDLP Maxi Circuit Breaker #54 To IP Electrical Center
Courtesy of GENERAL MOTORS CORP.

18. Install the HDLP Maxi circuit breaker #54 into the IP electrical center.

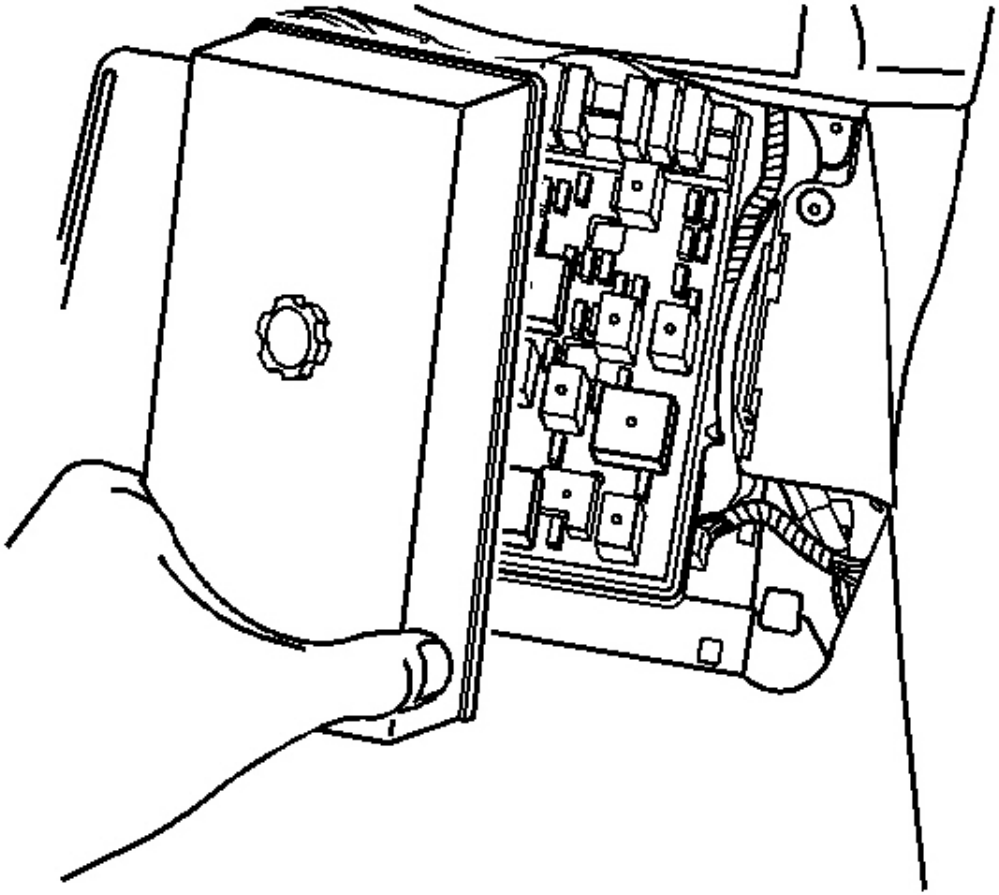

Fig. 100: Cover To IP Electrical Center
Courtesy of GENERAL MOTORS CORP.

19. Install the cover to the IP electrical center.

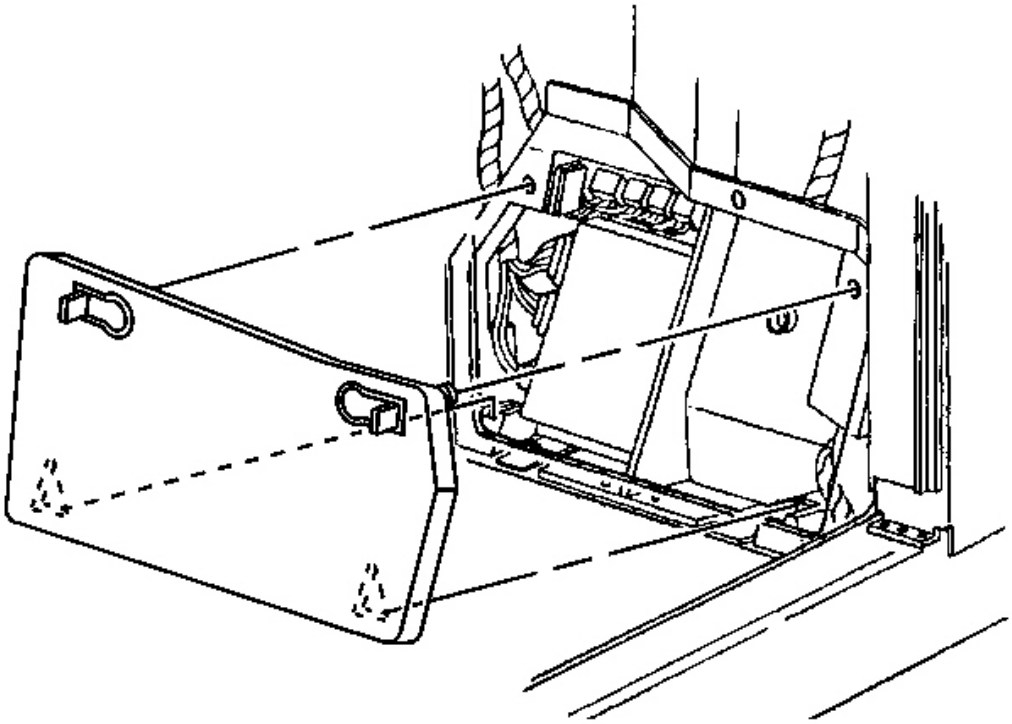

Fig. 101: Passenger Side Front Floor Kick Up Panel To IP Electrical Center
Courtesy of GENERAL MOTORS CORP.

20. Install the floor kick up panel.
21. Check the alignment of the headlamp opening door. Refer to **Headlamp Opening Door Adjustment** .
22. Check and adjust headlamp aim as necessary. Refer to **Headlamp Aiming (Visual Method)** or **Headlamp Aiming (Export, LH Rule of the Road)** or **Headlamp Aiming (Export, RH Rule of the Road)** .

HEADLAMP BULB REPLACEMENT

Removal Procedure

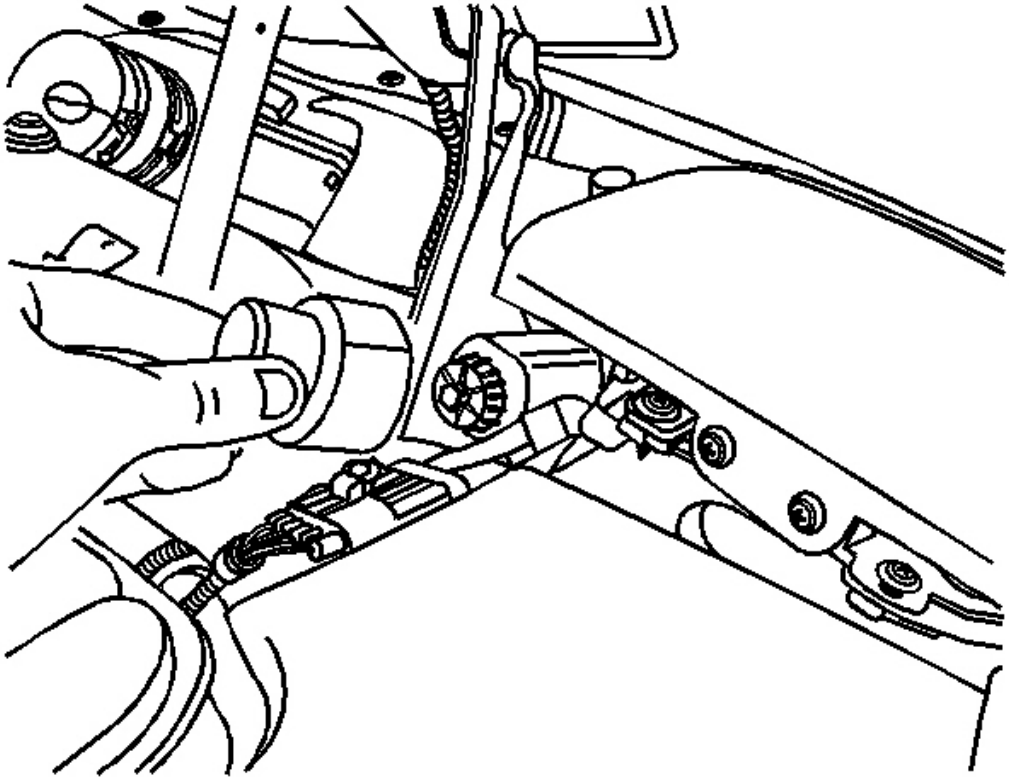

Fig. 102: Headlamp Actuator Knob Cover
Courtesy of GENERAL MOTORS CORP.

1. Open the hood.
2. Remove the headlamp motor/actuator cover from the knob.
3. Rotate the headlamp motor/actuator manual control knob counterclockwise to raise the headlamp.

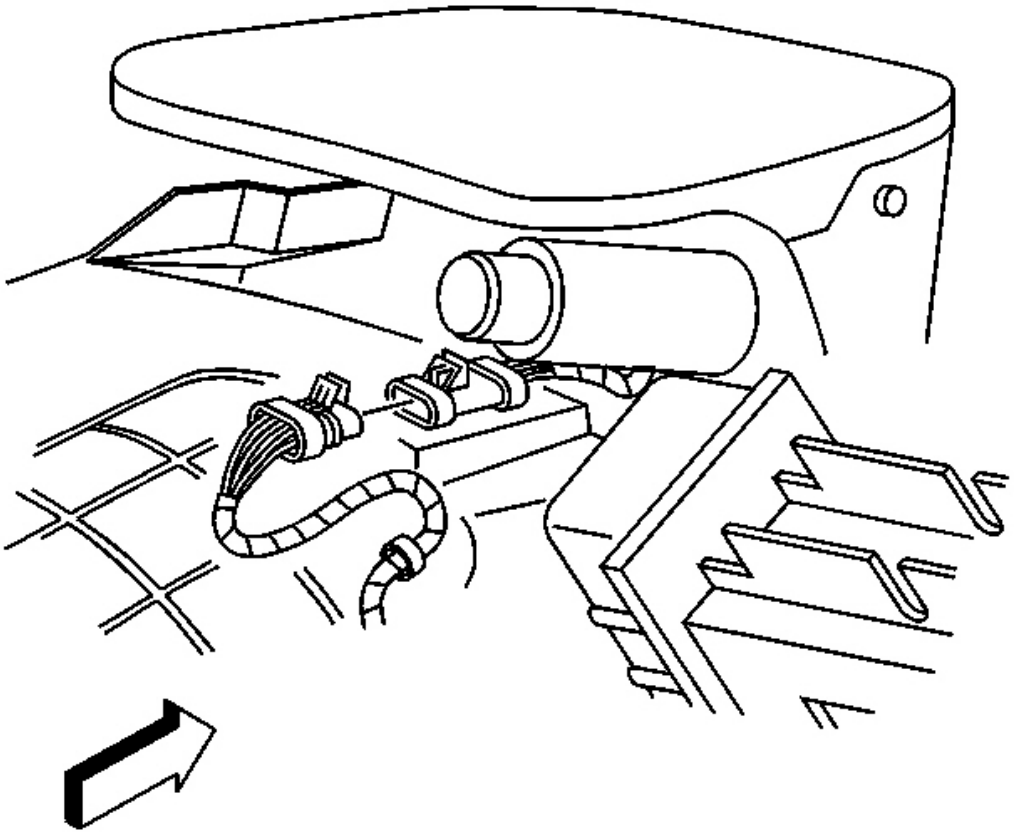

Fig. 103: RH Headlamp Wiring Harness Electrical Connector To Forward Lamp Wiring Harness
Courtesy of GENERAL MOTORS CORP.

4. Disconnect the headlamp wiring harness electrical connector from the forward lamp wiring harness.

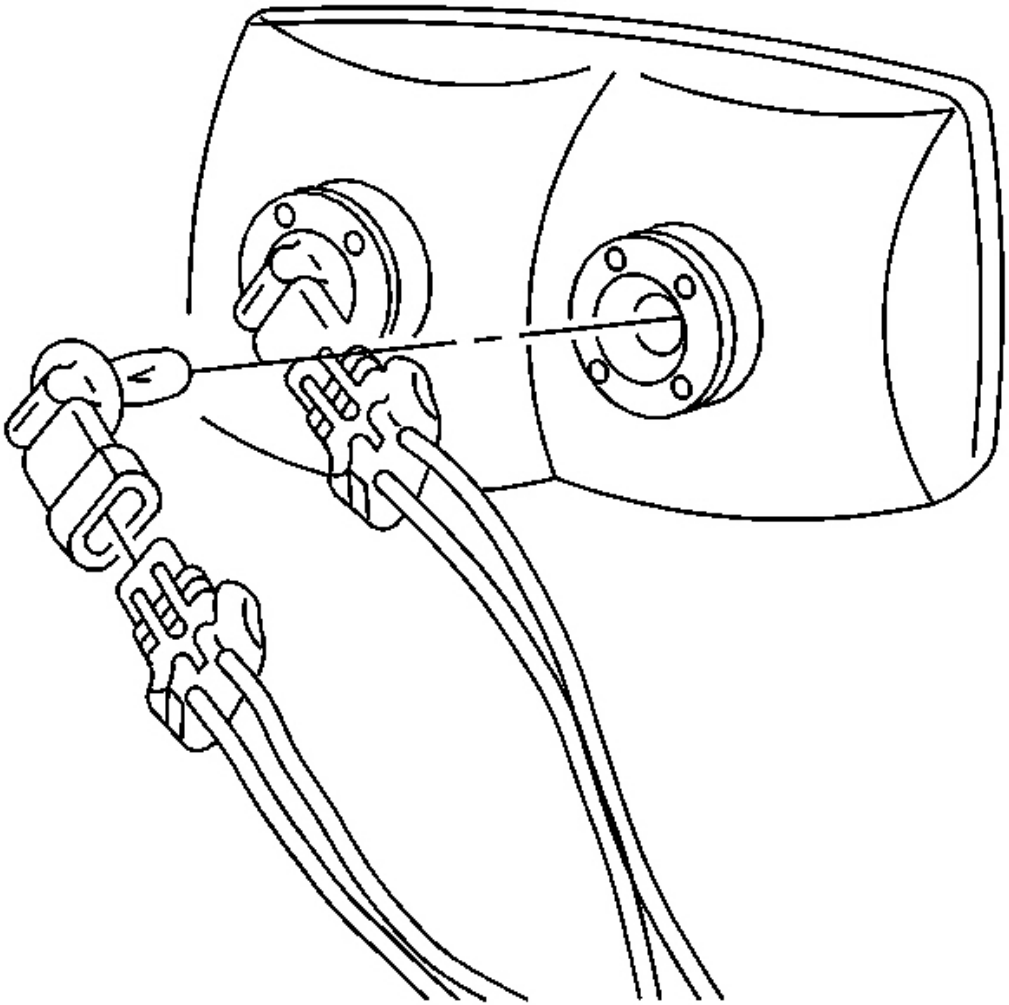

Fig. 104: Electrical Connector To Headlamp Bulb/Socket
Courtesy of GENERAL MOTORS CORP.

5. Remove the headlamp bezel. Refer to **Headlamp Bezel Replacement** .

CAUTION: Refer to Halogen Bulb Caution in Cautions and Notices.

6. Reach through the opening between the headlamp assembly and the frame rail to access the headlamp bulb/socket.
7. Rotate the headlamp bulb/socket counterclockwise to remove it from the headlamp capsule.

8. Disconnect the electrical connector from the headlamp bulb/socket.

Installation Procedure

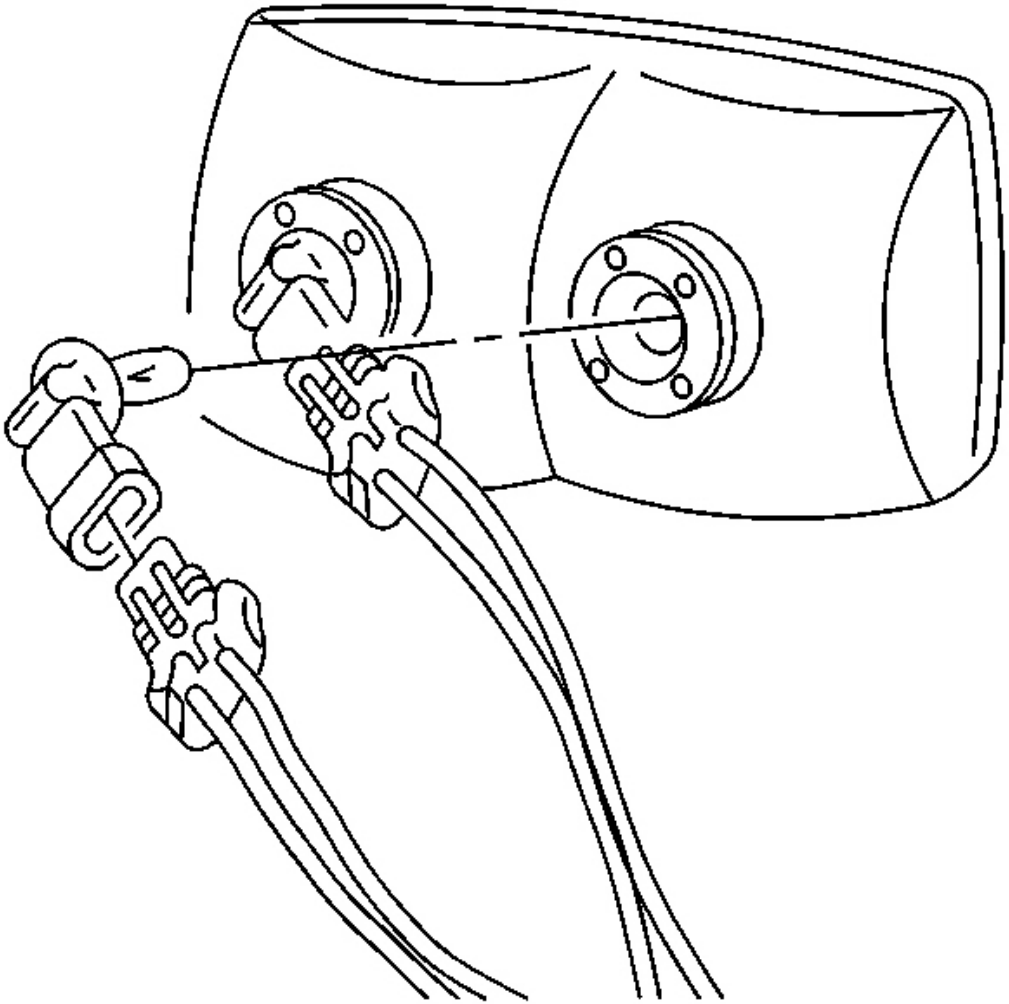

Fig. 105: Electrical Connector To Headlamp Bulb/Socket
Courtesy of GENERAL MOTORS CORP.

1. Connect the electrical connector to the headlamp bulb/socket.
2. Install the headlamp bulb/socket to the headlamp capsule rotating clockwise until fully seated.
3. Install the headlamp bezel. Refer to **Headlamp Bezel Replacement** .

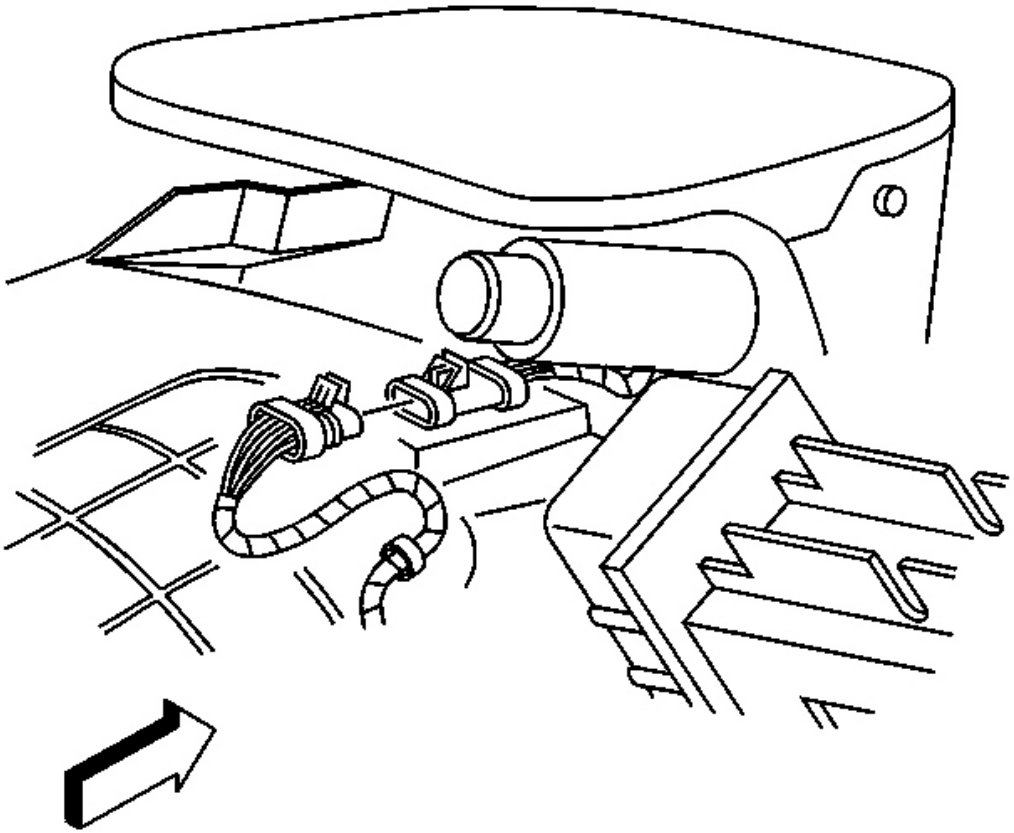

Fig. 106: RH Headlamp Wiring Harness Electrical Connector To Forward Lamp Wiring Harness
Courtesy of GENERAL MOTORS CORP.

4. Rotate the headlamp motor/actuator manual control knob clockwise to lower the headlamp.
5. Connect the headlamp wiring harness electrical connector to the forward lamp wiring harness.

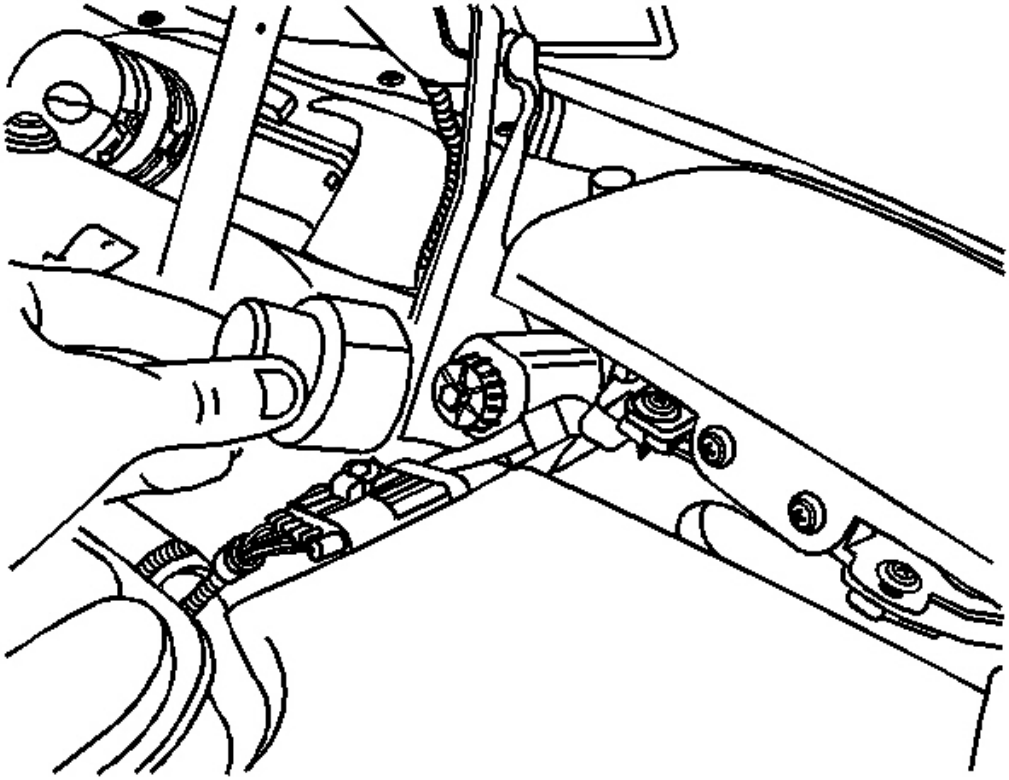

Fig. 107: Headlamp Actuator Knob Cover
Courtesy of GENERAL MOTORS CORP.

6. Install the headlamp motor/actuator knob cover.
7. Check and adjust the headlamp aim as necessary. Refer to **Headlamp Aiming (Visual Method)** or **Headlamp Aiming (Export, LH Rule of the Road)** or **Headlamp Aiming (Export, RH Rule of the Road)** .
8. Close the hood.

HEADLAMP CAPSULE REPLACEMENT

Removal Procedure

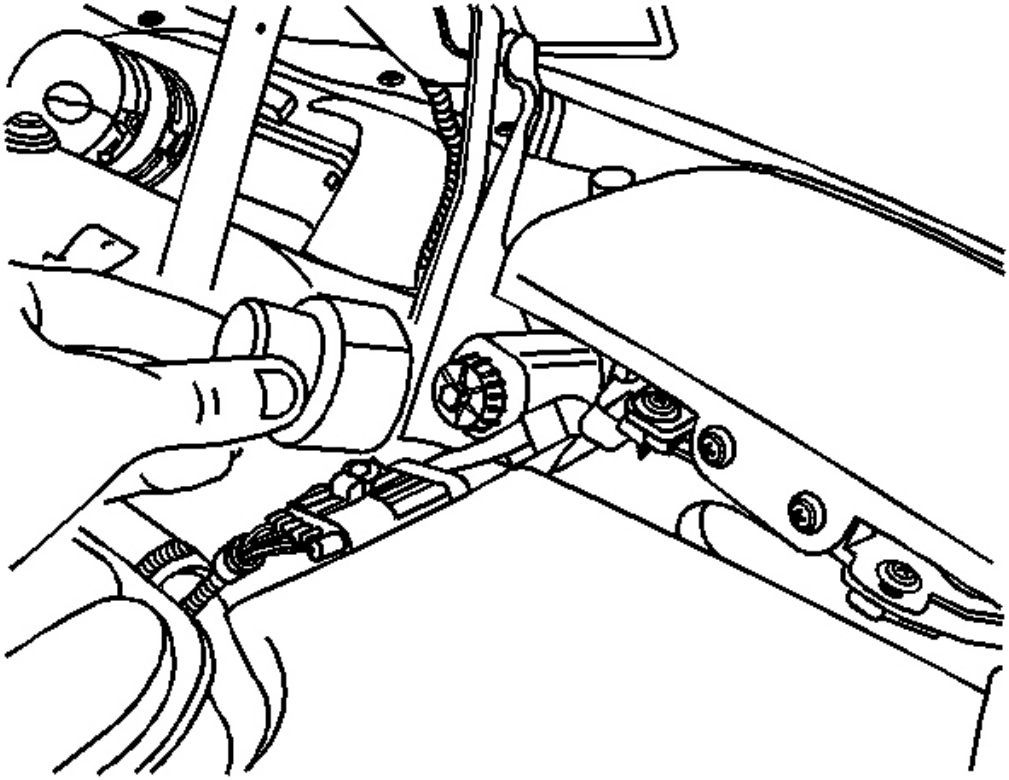

Fig. 108: Headlamp Actuator Knob Cover
Courtesy of GENERAL MOTORS CORP.

1. Open the hood.
2. Remove the headlamp motor/actuator knob cover.
3. Rotate the headlamp motor/actuator manual control knob counterclockwise to raise the headlamp.

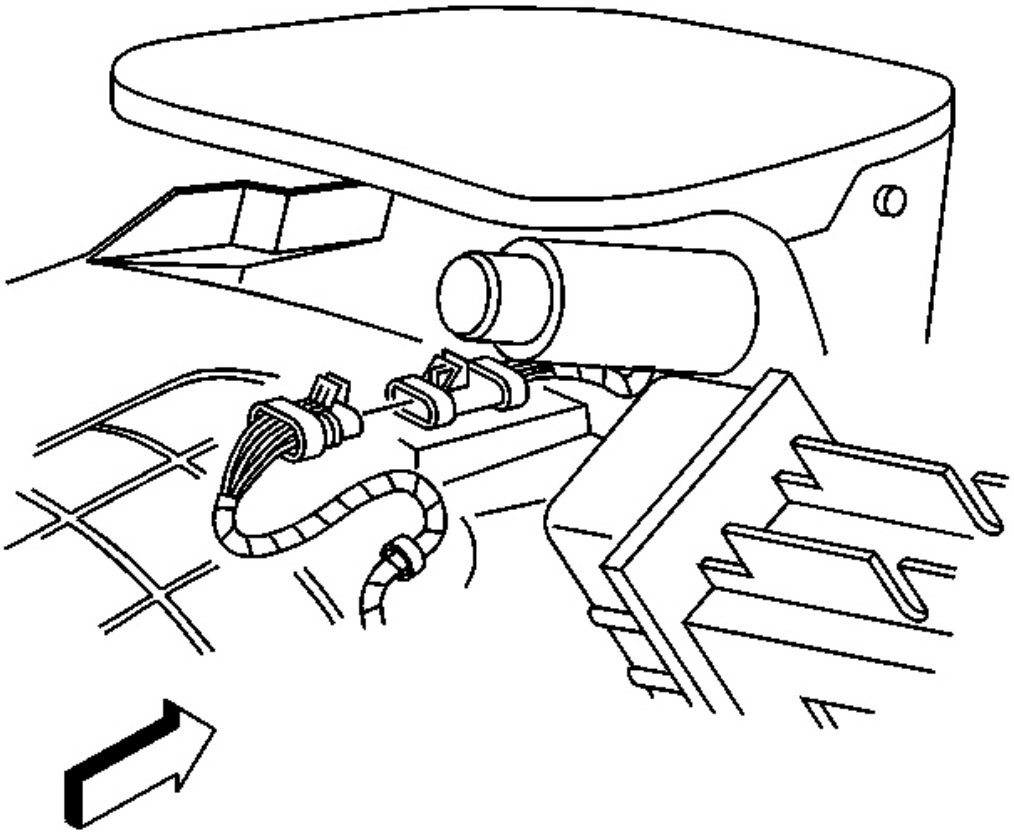

Fig. 109: RH Headlamp Wiring Harness Electrical Connector To Forward Lamp Wiring Harness
Courtesy of GENERAL MOTORS CORP.

4. Disconnect the headlamp wiring harness electrical connector from the forward lamp wiring harness.

NOTE: **Refer to Notice - Apply Tape When Removing Body Panels in Cautions and Notices.**

5. Apply tape to the area around the headlamp opening to protect the paint.

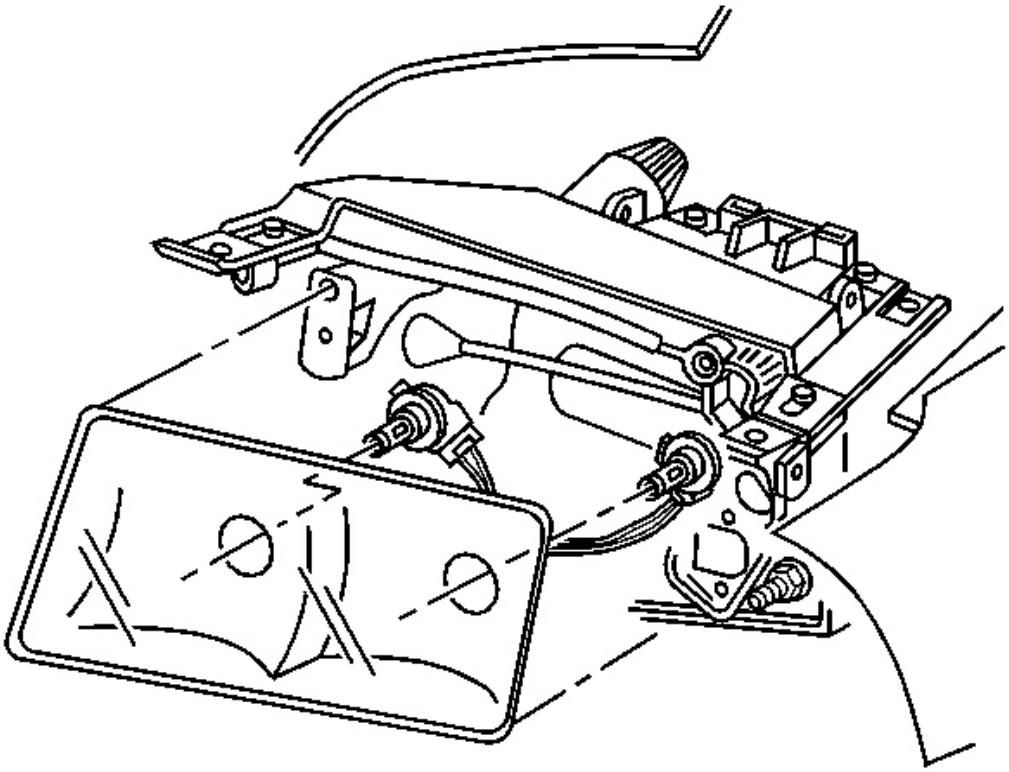

Fig. 110: Headlamp Bulb/Socket Electrical Connectors
Courtesy of GENERAL MOTORS CORP.

6. Remove the headlamp bezel. Refer to **Headlamp Bezel Replacement** .

IMPORTANT: Support the headlamp capsule while removing the retaining screws.

7. Remove the headlamp capsule retaining screws.
8. Disconnect the headlamp bulb/socket electrical connectors.
9. Remove the capsule from the headlamp pivot and adjusting bracket.

CAUTION: Refer to Halogen Bulb Caution in Cautions and Notices.

10. Remove the headlamp bulb/sockets from the capsule.

Installation Procedure

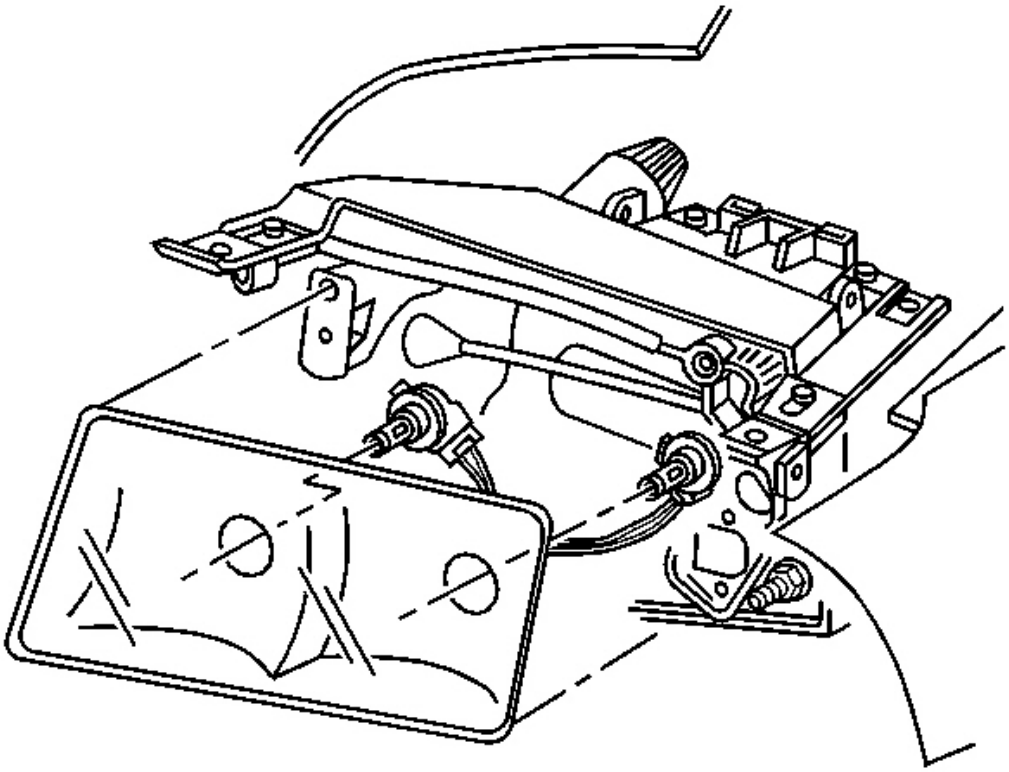

Fig. 111: Headlamp Bulb/Socket Electrical Connectors
Courtesy of GENERAL MOTORS CORP.

1. Install the headlamp bulb/sockets to the headlamp capsule.
2. Connect the headlamp bulb/socket electrical connectors.
3. Position the headlamp capsule to the headlamp pivot and adjustment bracket.

NOTE: Refer to Fastener Notice in Cautions and Notices.

4. Install the headlamp capsule retaining screws.

   Tighten: Tighten the headlamp capsule retaining screws to 4 N.m (35 lb in).

5. Install the headlamp bezel. Refer to **Headlamp Bezel Replacement** .

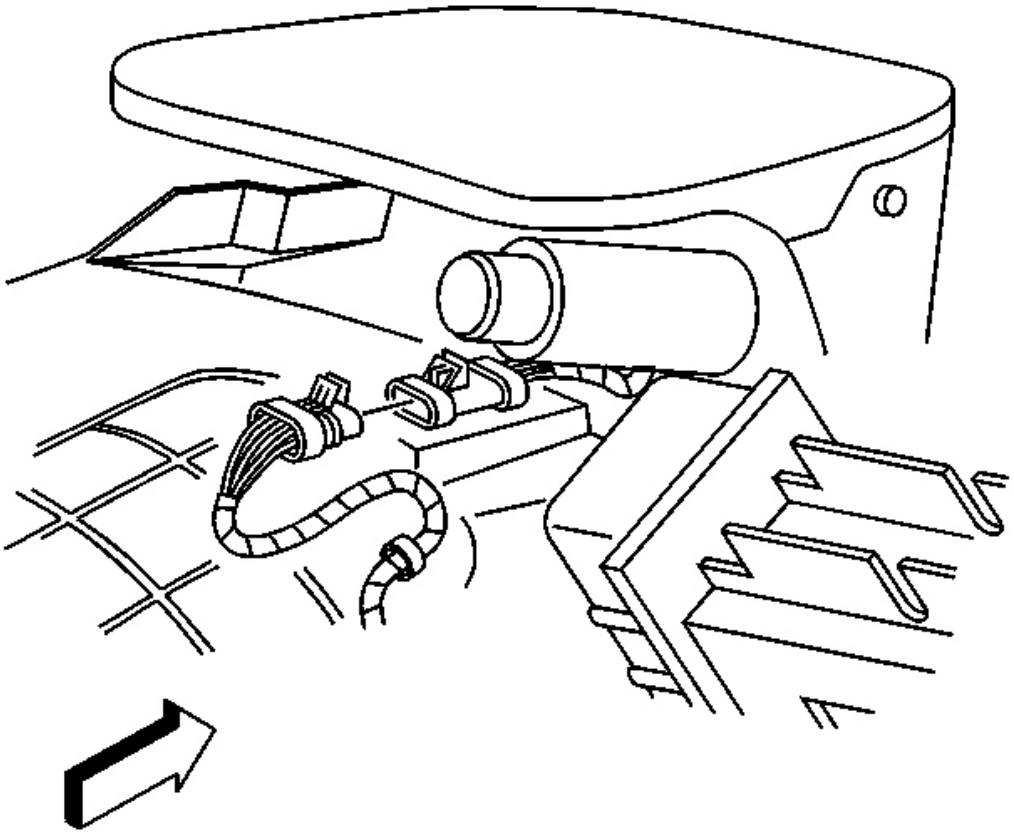

Fig. 112: RH Headlamp Wiring Harness Electrical Connector To Forward Lamp Wiring Harness
Courtesy of GENERAL MOTORS CORP.

6. Connect the headlamp wiring harness electrical connector to the forward lamp wiring harness.
7. Remove any protective tape applied during the removal procedure.

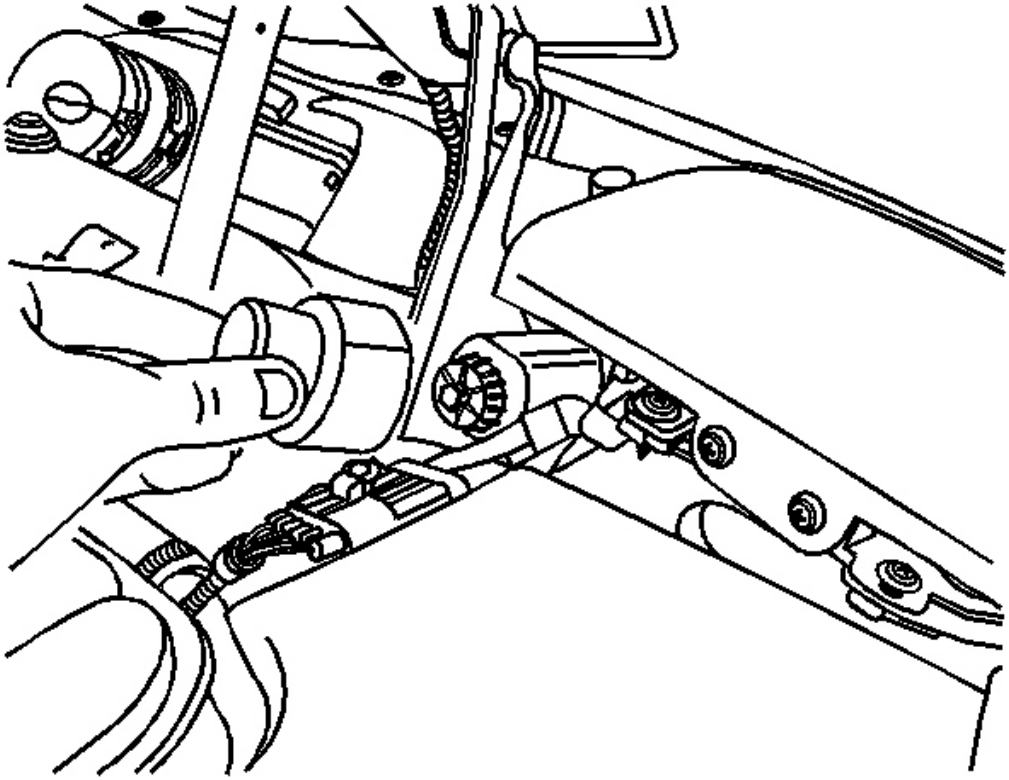

Fig. 113: Headlamp Actuator Knob Cover
Courtesy of GENERAL MOTORS CORP.

8. Rotate the headlamp motor/actuator manual control knob clockwise to lower the headlamp.
9. Install the headlamp motor/actuator knob cover.
10. Check and adjust the headlamp aim as necessary. Refer to **Headlamp Aiming (Visual Method)** or **Headlamp Aiming (Export, LH Rule of the Road)** or **Headlamp Aiming (Export, RH Rule of the Road)** .
11. Close the hood.

HEADLAMP OPENING DOOR REPLACEMENT

Removal Procedure

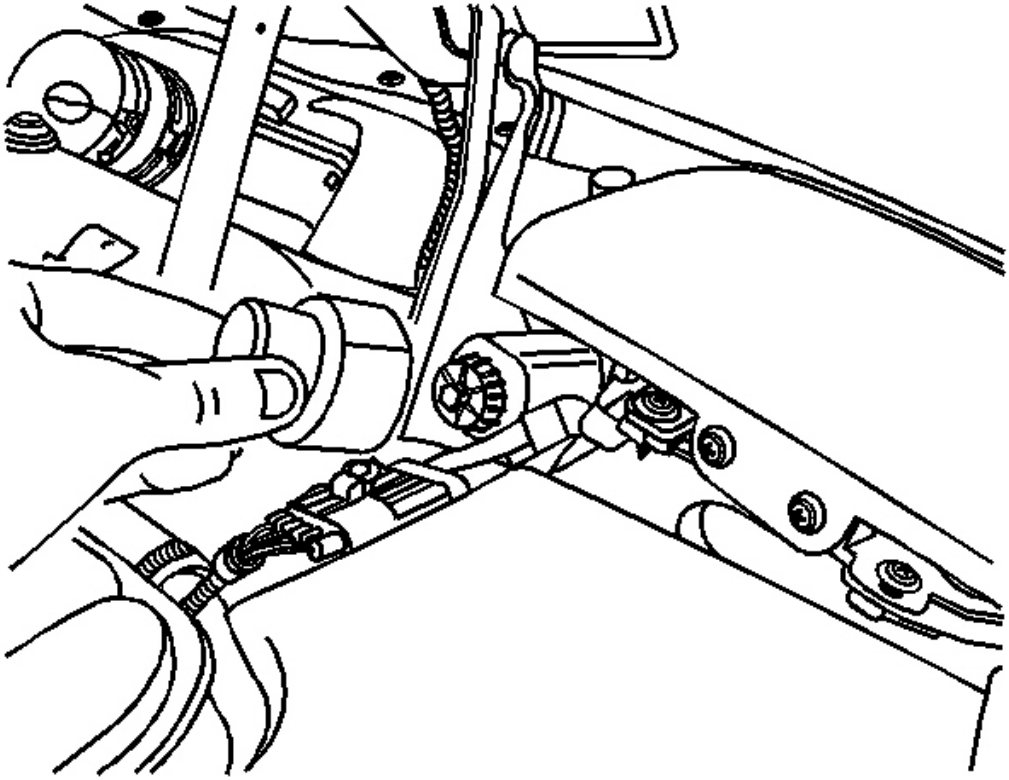

Fig. 114: Headlamp Actuator Knob Cover
Courtesy of GENERAL MOTORS CORP.

1. Open the hood.
2. Remove the headlamp motor/actuator knob cover.

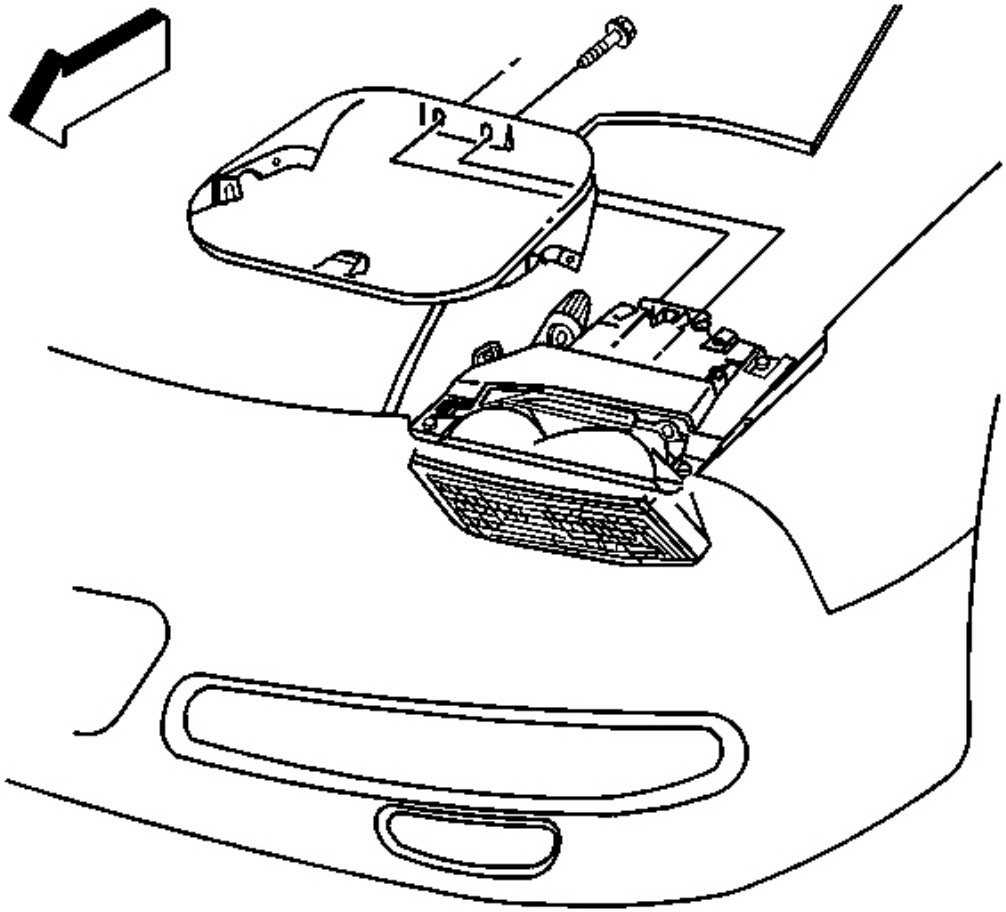

Fig. 115: Headlamp Opening Door Rear Retaining Screws
Courtesy of GENERAL MOTORS CORP.

3. Remove the headlamp opening door rear retaining screws.

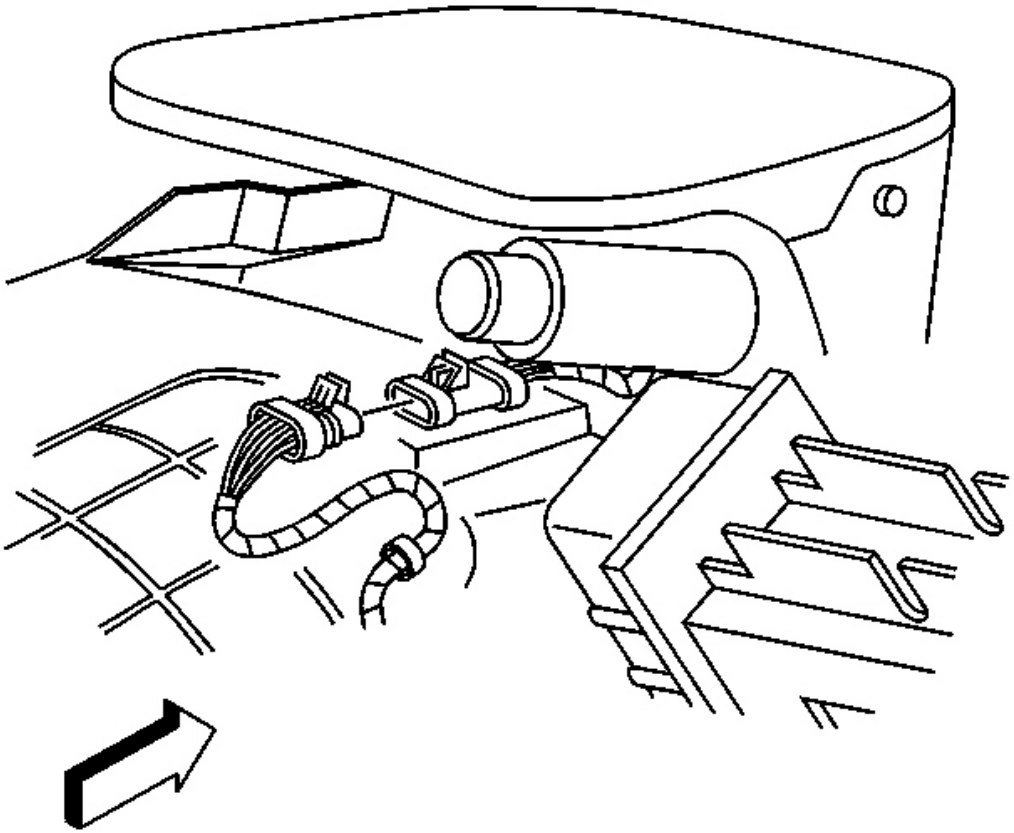

Fig. 116: RH Headlamp Wiring Harness Electrical Connector To Forward Lamp Wiring Harness
Courtesy of GENERAL MOTORS CORP.

4. Disconnect the headlamp wiring harness electrical connector from the forward lamp wiring harness.

NOTE: **Refer to Notice - Apply Tape When Removing Body Panels in Cautions and Notices.**

5. Apply tape to the area around the headlamp opening to protect the paint.
6. Rotate the headlamp motor/actuator manual control knob counterclockwise to raise the headlamp.

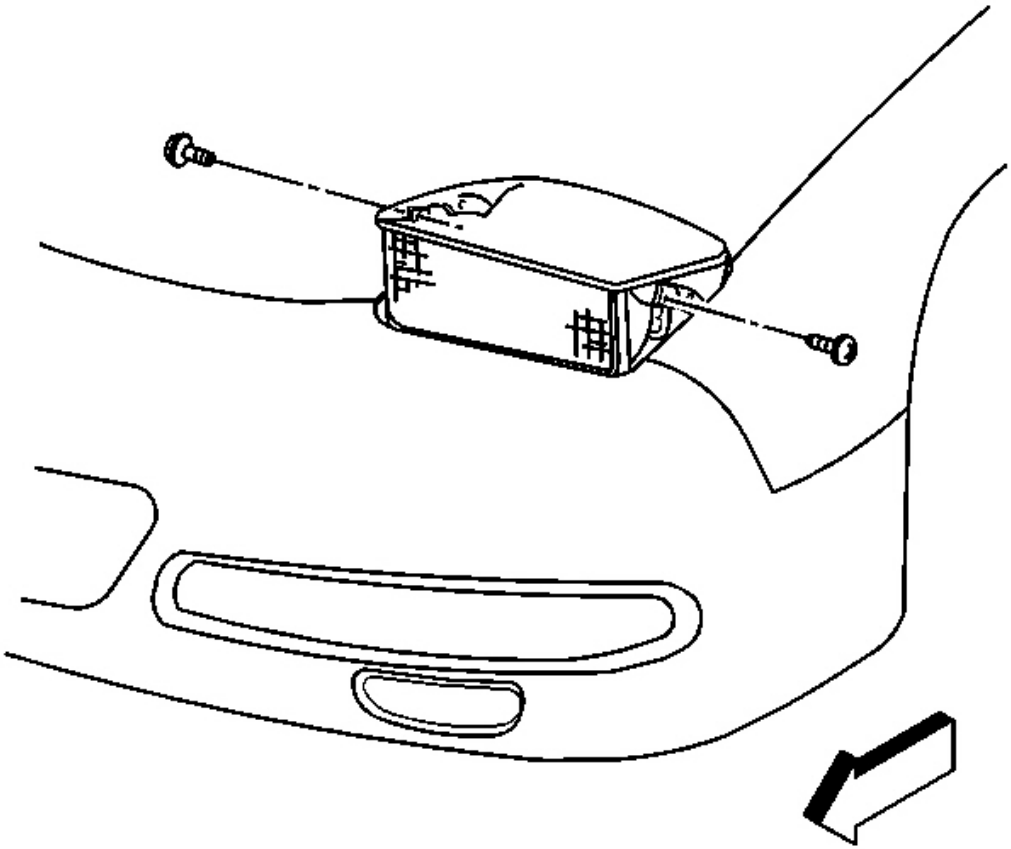

Fig. 117: Headlamp Opening Door At Headlamp
Courtesy of GENERAL MOTORS CORP.

7. Remove the headlamp bezel. Refer to **Headlamp Bezel Replacement** .
8. Remove the headlamp opening door side retaining screws.
9. Remove the headlamp opening door from the headlamp.

Installation Procedure

1. Position the headlamp opening door to the headlamp.

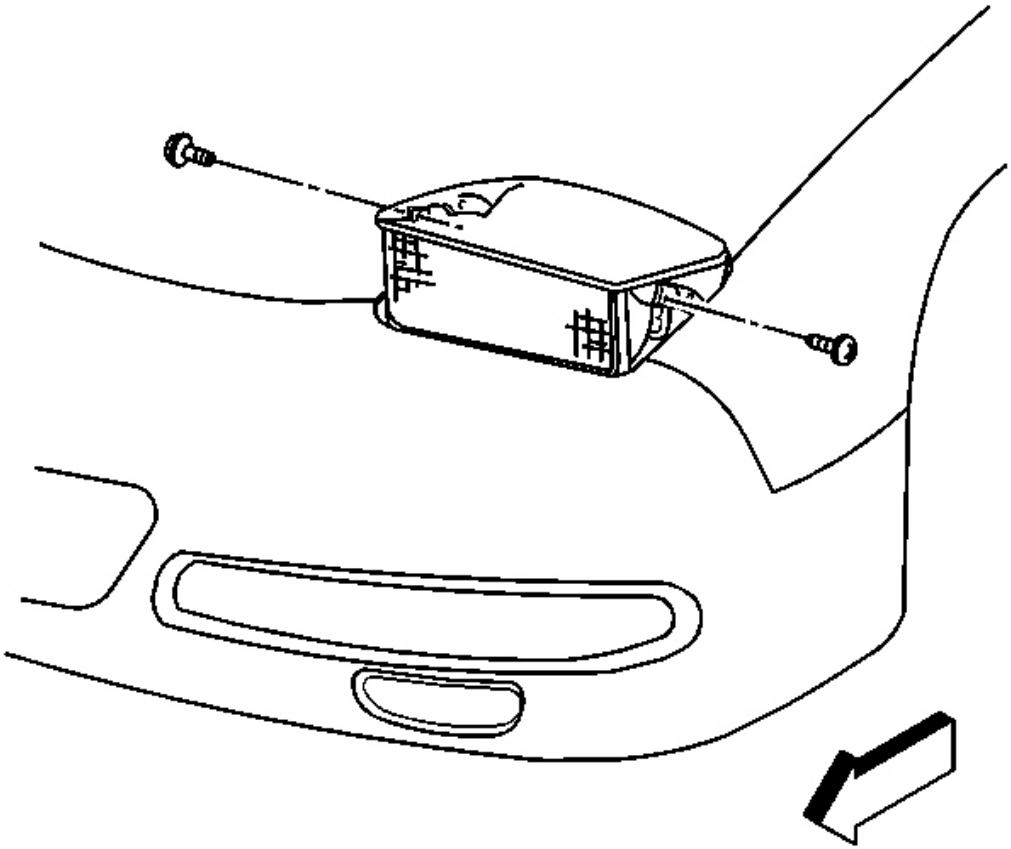

Fig. 118: Headlamp Opening Door At Headlamp
Courtesy of GENERAL MOTORS CORP.

NOTE: Refer to Fastener Notice in Cautions and Notices.

2. Install the headlamp opening door side retaining screws.

   Tighten: Tighten the screws to 2 N.m (18 lb in).

3. Install the headlamp bezel. Refer to **Headlamp Bezel Replacement** .
4. Rotate the headlamp motor/actuator manual control knob clockwise to lower the headlamp.

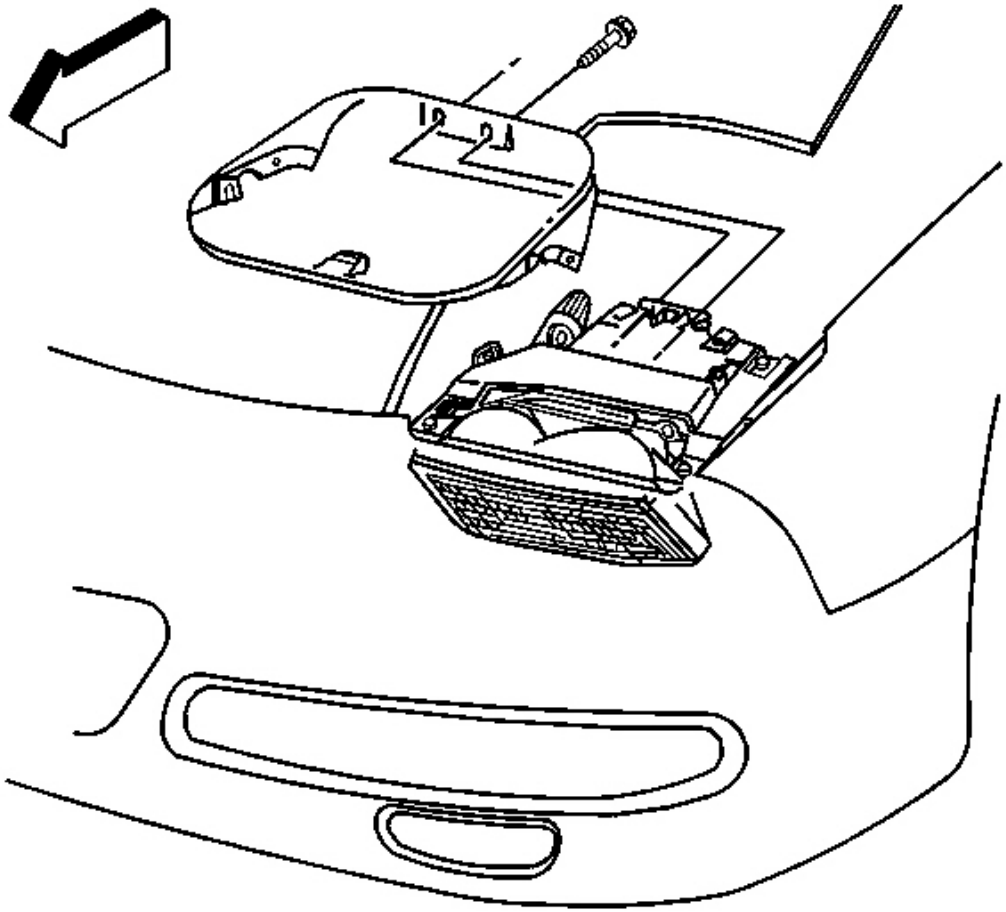

Fig. 119: Headlamp Opening Door Rear Retaining Screws
Courtesy of GENERAL MOTORS CORP.

NOTE: Refer to Fastener Notice in Cautions and Notices.

5. Install the screws to the rear of the headlamp opening door.

   Tighten: Tighten the screws to 2 N.m (18 lb in).

6. Adjust the headlamp opening door fit as necessary. Refer to **Headlamp Opening Door Adjustment** .

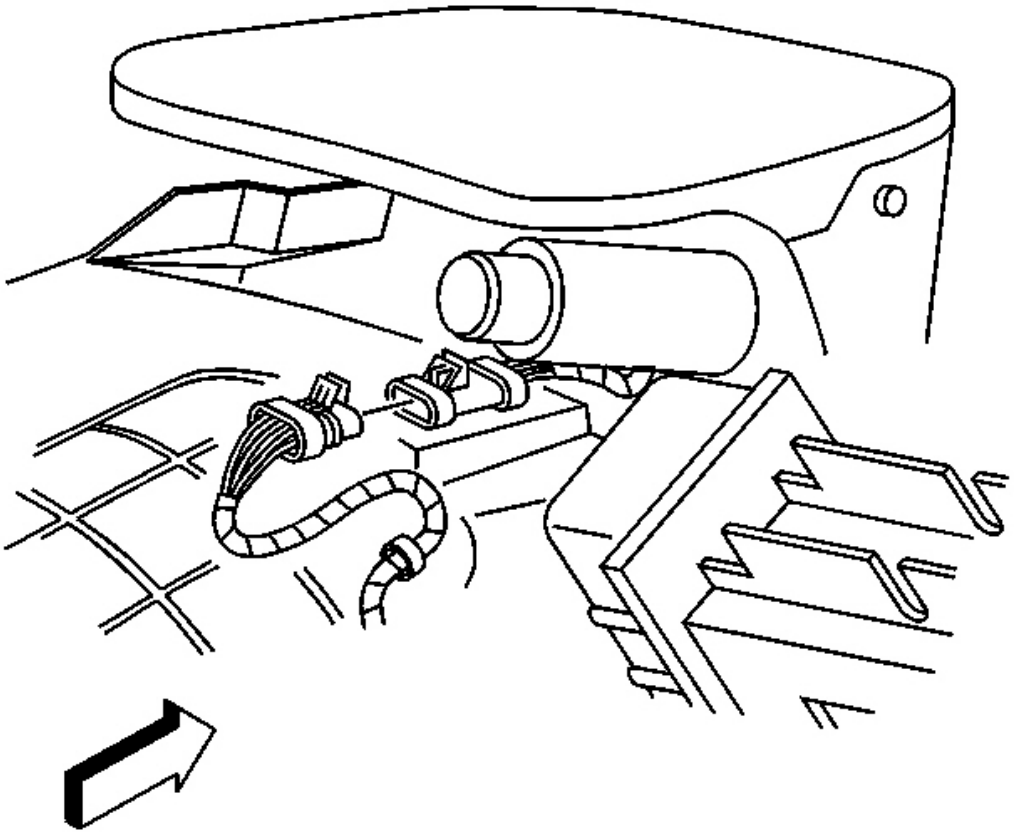

Fig. 120: RH Headlamp Wiring Harness Electrical Connector To Forward Lamp Wiring Harness
Courtesy of GENERAL MOTORS CORP.

7. Connect the headlamp wiring harness electrical connector to the forward lamp wiring harness.
8. Remove any protective tape applied during the removal procedure.
9. Close the hood.

HEADLAMP OPENING DOOR ADJUSTMENT

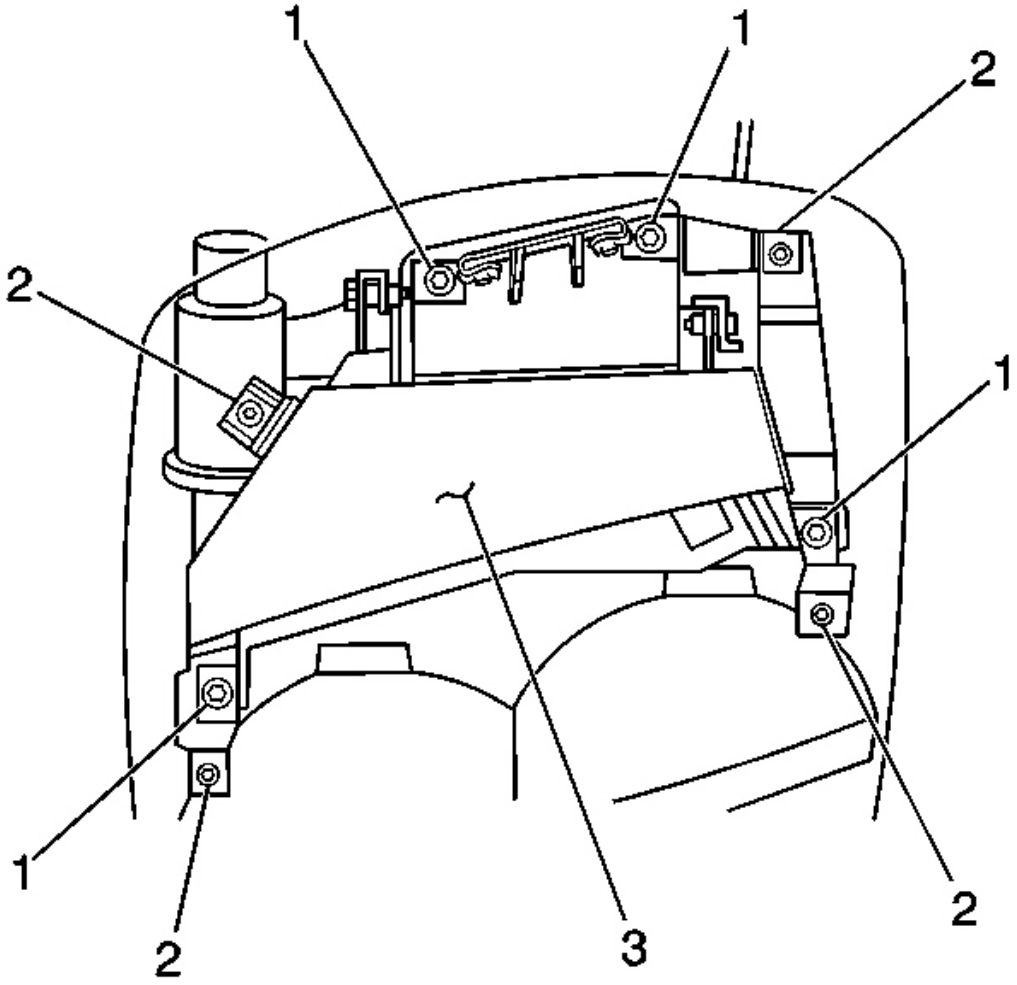

Fig. 121: Headlamp Opening Door To The Hood At Fender & Front Fascia
Courtesy of GENERAL MOTORS CORP.

1. Remove the headlamp opening door. Refer to **Headlamp Opening Door Replacement** .
2. For horizontal adjustment:
    1. Loosen the headlamp intermediate bracket to headlamp assembly screws (1).
    2. Adjust the position of the headlamp intermediate bracket (3) as required and retighten the retaining screws (1).

NOTE: Refer to Fastener Notice in Cautions and Notices.

Tighten: Tighten the headlamp intermediate bracket screws to 2 N.m (18 lb in).

3. For vertical adjustment:

   Tighten (to lower) or loosen (to raise) the vertical adjusting screws (2) as needed.

4. For headlamp opening door stop position adjustment, if necessary:

   Tighten or loosen the door stop adjustment screw as needed.

5. Install the headlamp opening door. Refer to **Headlamp Opening Door Replacement** .
6. Inspect the fit of the headlamp opening door to the hood, the fender and the front fascia.
7. If the fit of the headlamp opening door is unsatisfactory, repeat steps 2 through 7.

HEADLAMP MOTOR/ACTUATOR REPLACEMENT

Removal Procedure

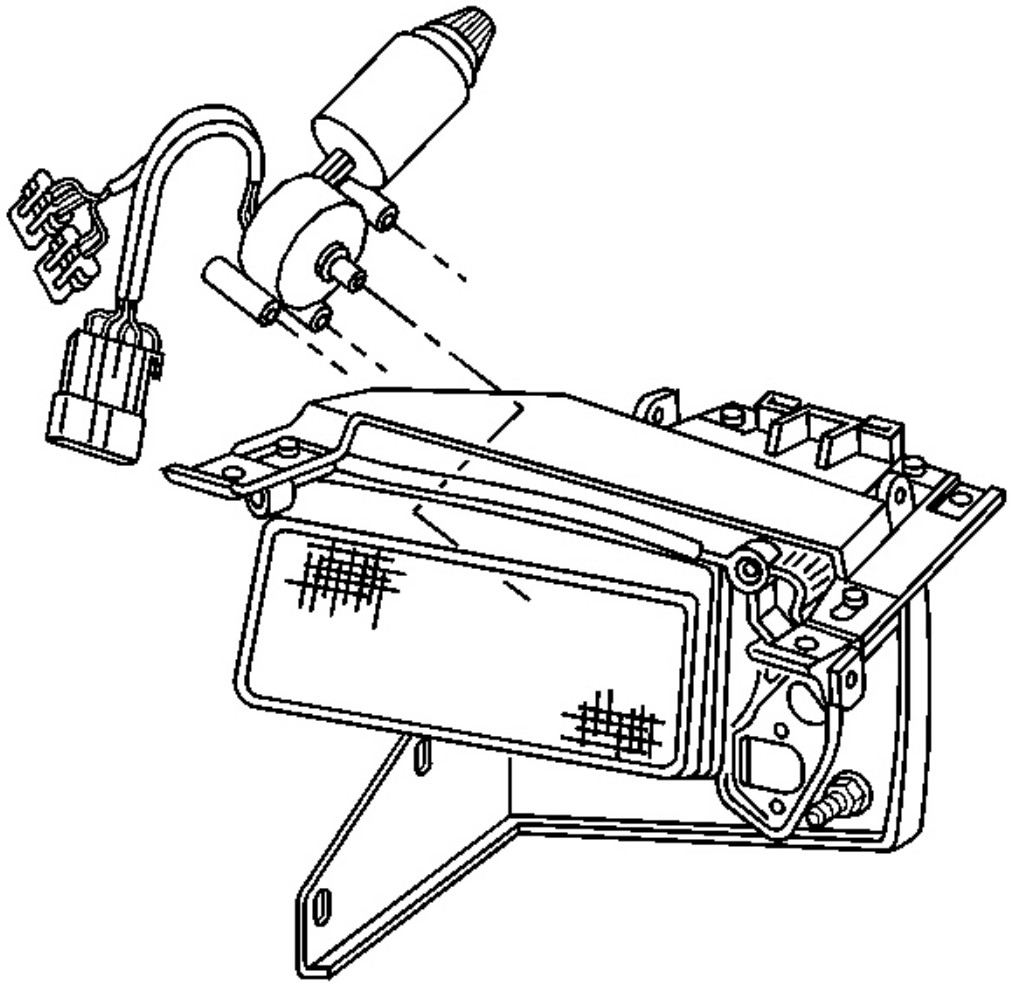

Fig. 122: Headlamp Wiring Harness Electrical Connectors To Headlamp Bulb/Sockets
Courtesy of GENERAL MOTORS CORP.

1. Remove the appropriate headlamp assembly from the vehicle. Refer to **Headlamp Replacement** .
2. Disconnect the headlamp wiring harness electrical connectors from the headlamp bulb/sockets.

IMPORTANT: Note the linkage-to-motor relationship for reassembly.

3. Remove the headlamp assembly pivot arm to the headlamp motor/actuator nut.
4. Remove the bolts from headlamp motor/actuator.
5. Remove the headlamp motor/actuator from the headlamp.

Installation Procedure

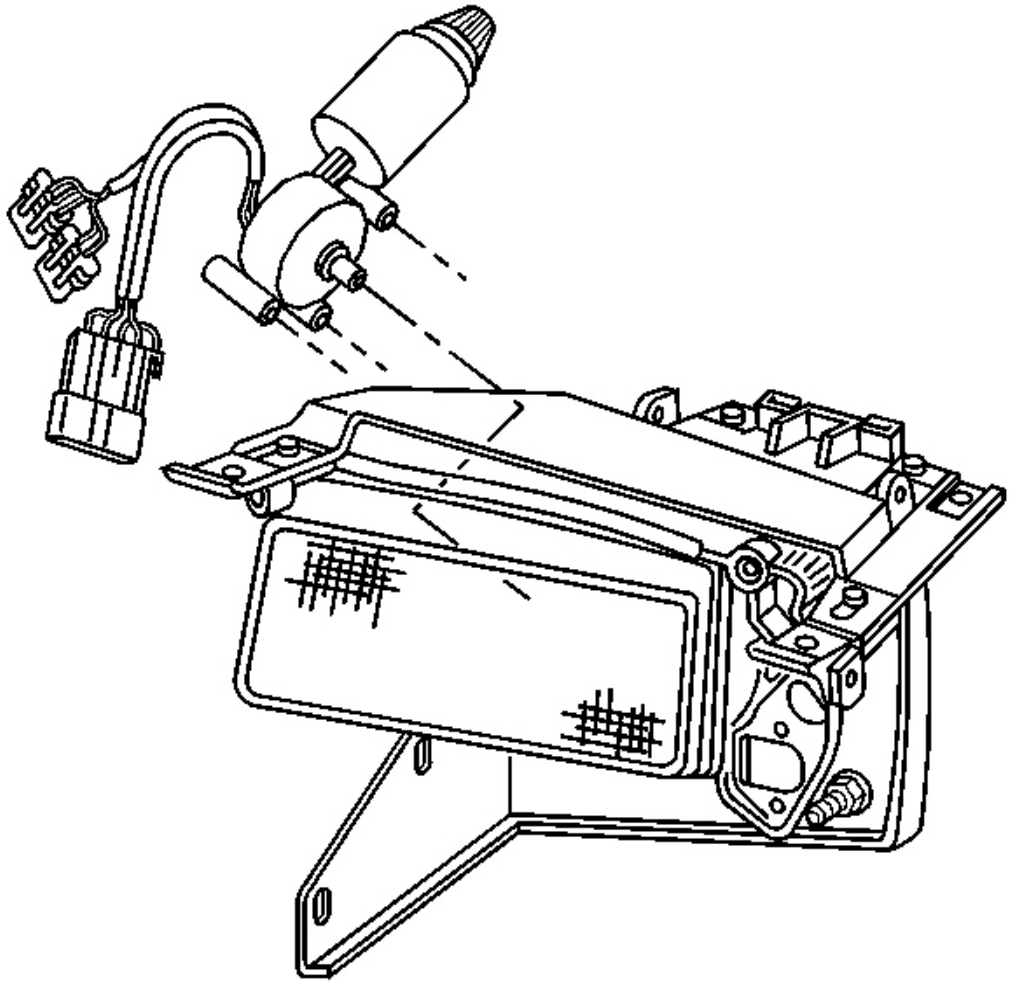

Fig. 123: Headlamp Wiring Harness Electrical Connectors To Headlamp Bulb/Sockets
Courtesy of GENERAL MOTORS CORP.

1. Position the headlamp motor/actuator to the headlamp assembly.
2. Install the pivot arm to the motor.

   Place the pivot arm in the position noted prior to removal.

3. Loosely install the nut retaining the headlamp assembly pivot arm to the motor/actuator.

NOTE: **Refer to Fastener Notice in Cautions and Notices.**

4. Install the headlamp motor/actuator bolts.

   Tighten:
   - Tighten the headlamp motor/actuator mounting bolts to 7 N.m (62 lb in).
   - Tighten the headlamp motor/actuator to pivot arm nut to 6 N.m (53 lb in).

5. Connect the headlamp wiring harness electrical connectors to the headlamp bulbs.
6. Install the headlamp assembly to the vehicle. Refer to **Headlamp Replacement** .

HEADLAMP BEZEL REPLACEMENT

Removal Procedure

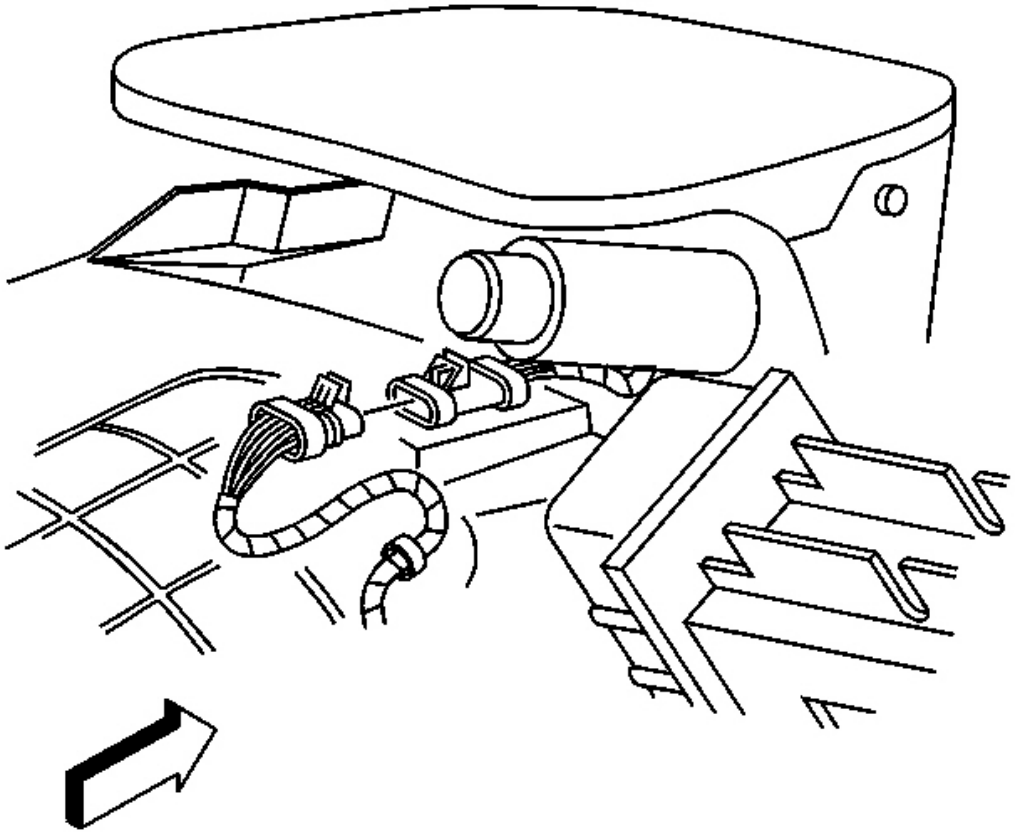

Fig. 124: RH Headlamp Wiring Harness Electrical Connector To Forward Lamp Wiring Harness

Courtesy of GENERAL MOTORS CORP.

1. Open the hood.
2. Disconnect the headlamp wiring harness electrical connector from the forward lamp wiring harness.
3. Remove the rear screw attaching the headlamp bezel.

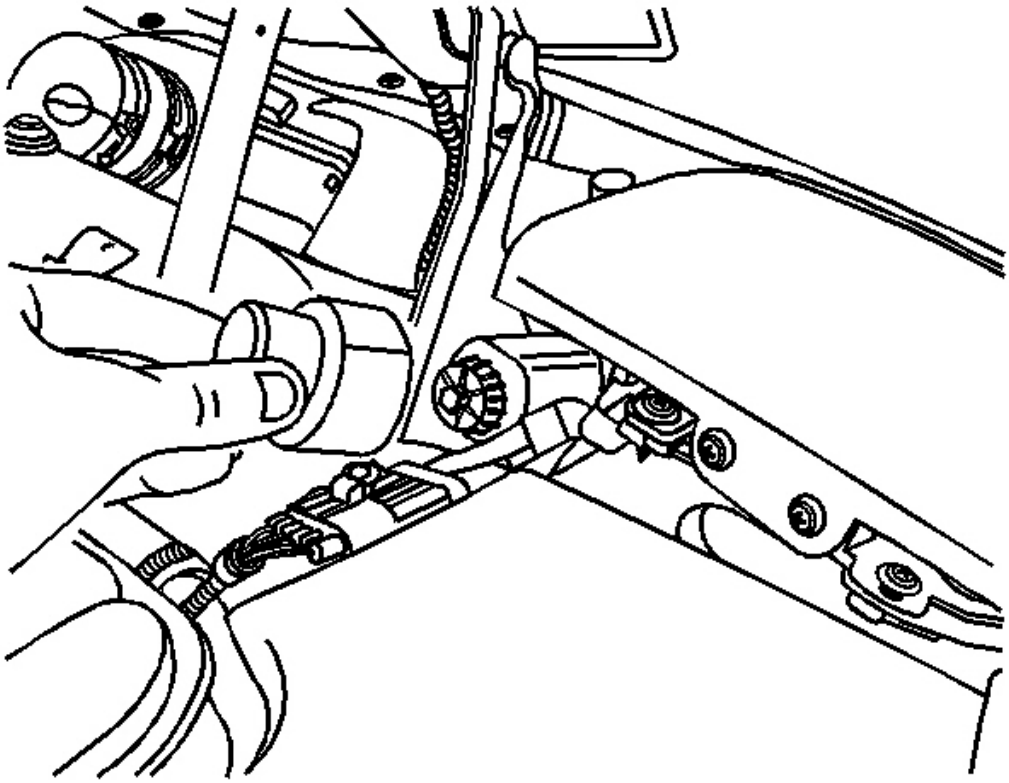

Fig. 125: Headlamp Actuator Knob Cover
Courtesy of GENERAL MOTORS CORP.

4. Remove the headlamp motor/actuator knob cover.
5. Rotate the headlamp motor/actuator manual control knob counterclockwise to raise the headlamp.

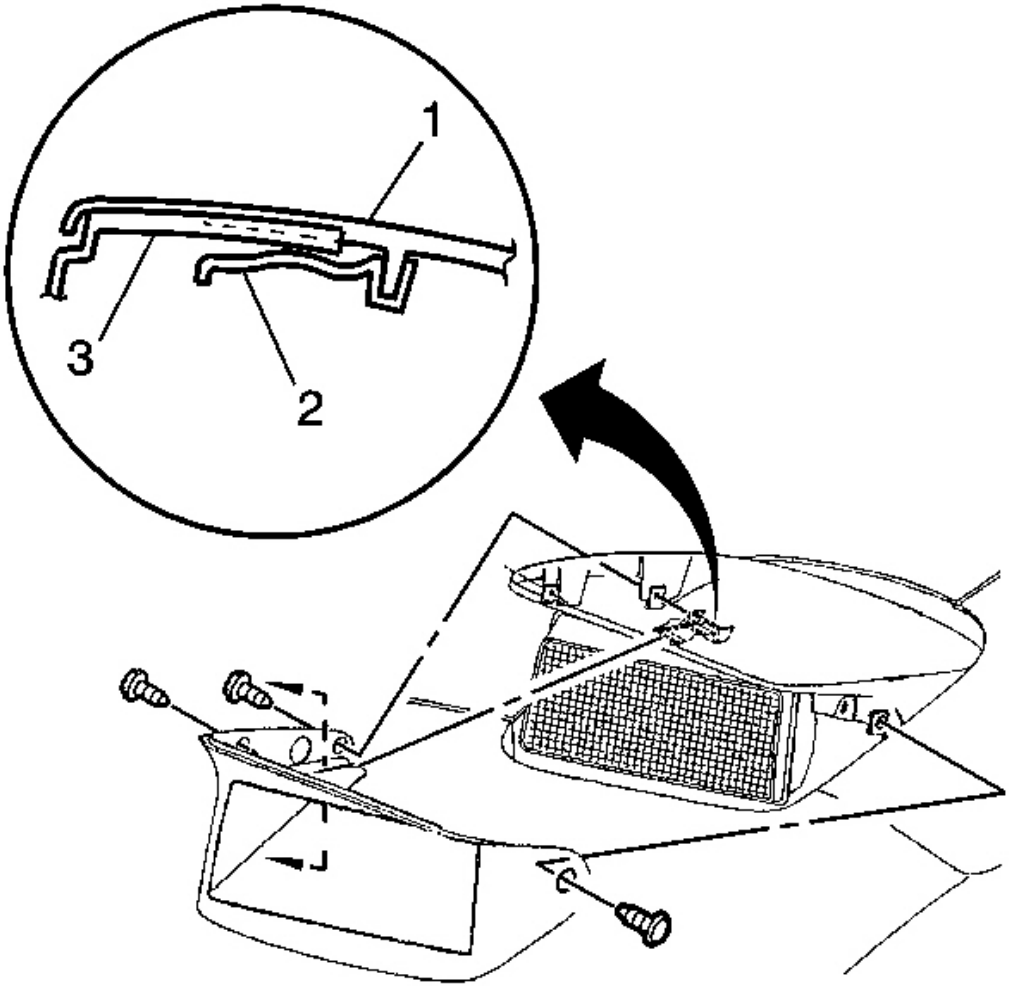

Fig. 126: Headlamp Bezel To Headlamp Opening Door
Courtesy of GENERAL MOTORS CORP.

6. Remove the screws from the side of the headlamp bezel.

IMPORTANT: The headlamp bezel has a tab (3) which fits into a retaining clip (2) on the underside of the headlamp opening door (1). Observe caution when separating the parts.

7. Pull the rear sides of the bezel out slightly, then begin to raise the rear sides and pull the bezel away from the headlamp opening door.

Pull the bezel to release the bezel tab (3) from the retaining clip (2) on the underside of the headlamp opening door (1).

8. Remove the headlamp bezel from the vehicle.

Installation Procedure

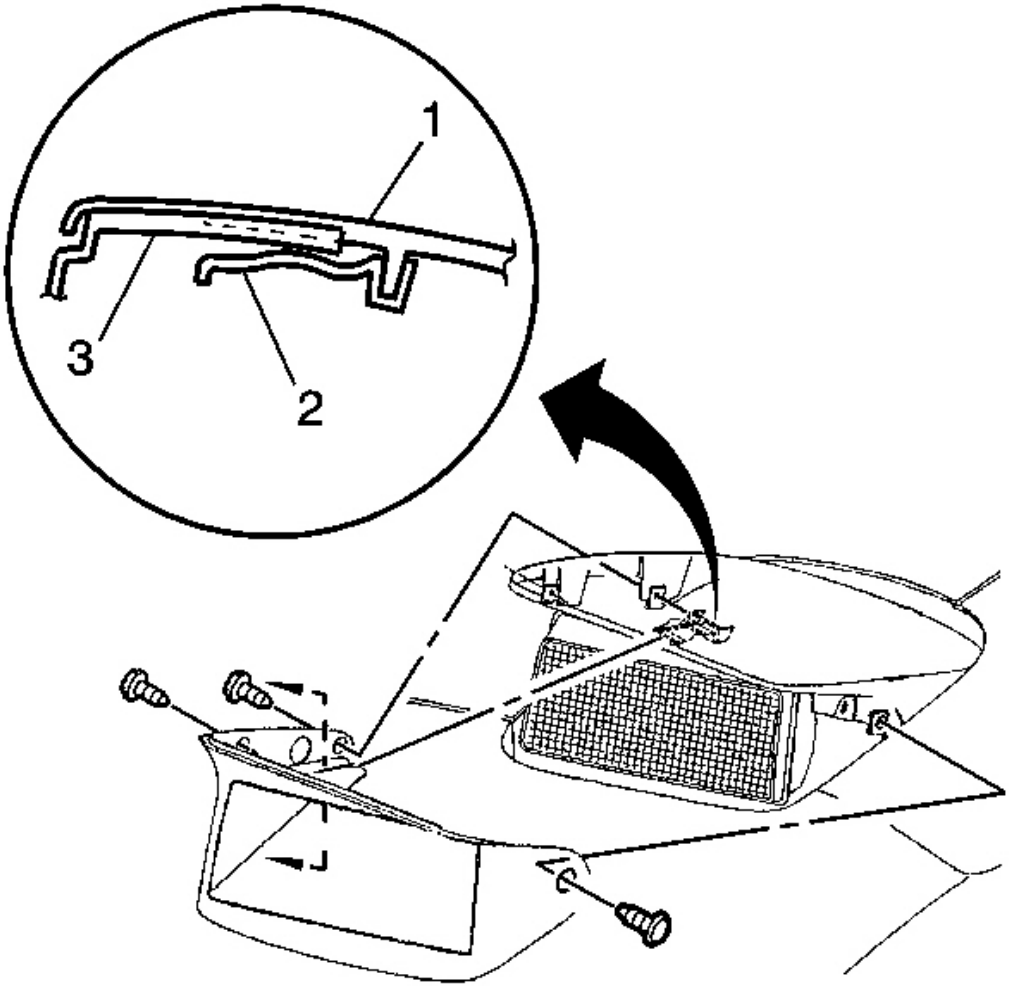

Fig. 127: Headlamp Bezel To Headlamp Opening Door
Courtesy of GENERAL MOTORS CORP.

IMPORTANT: The headlamp bezel has a tab (3) which fits into a retaining clip (2) on the underside of the headlamp opening door (1). Observe caution when

installing the headlamp bezel.

1. Pull the rear sides of the bezel out slightly.
2. Position the headlamp bezel to the headlamp, inserting the bezel tab (3) into the retaining clip (2) on the underside of the headlamp opening door (1).

NOTE: Refer to Fastener Notice in Cautions and Notices.

3. Install the screws to the side of the headlamp bezel.

   Tighten: Tighten the headlamp bezel retaining screws to 2 N.m (18 lb in).

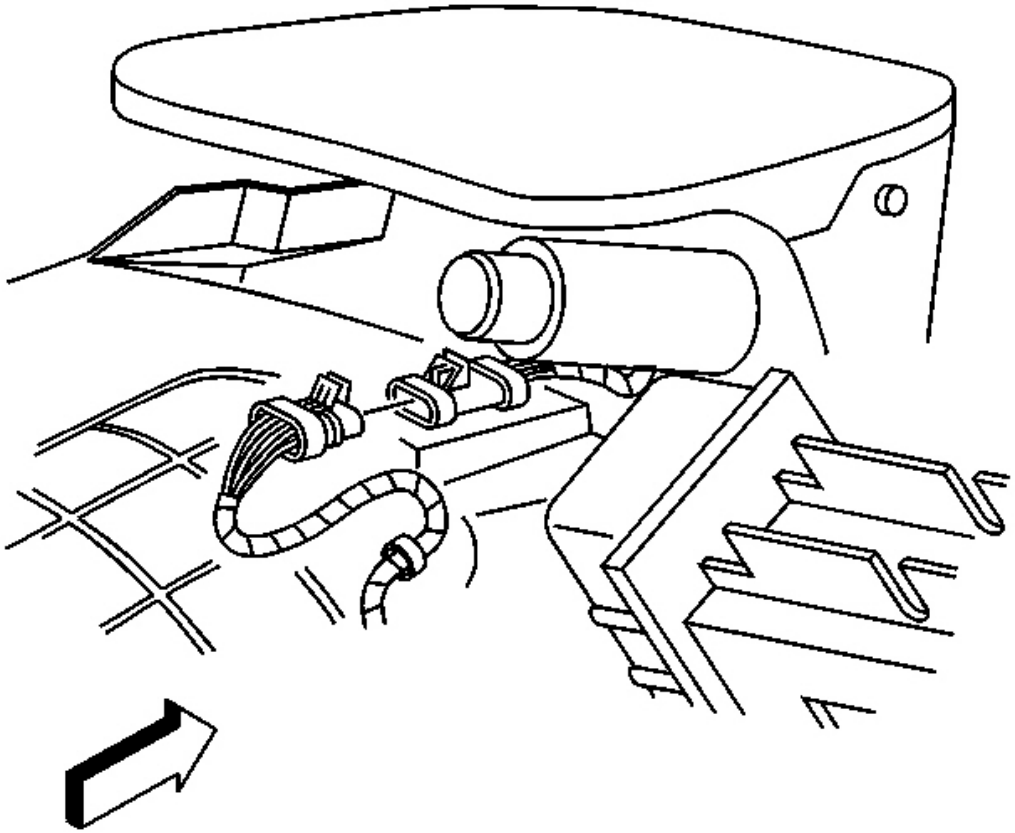

Fig. 128: RH Headlamp Wiring Harness Electrical Connector To Forward Lamp Wiring Harness
Courtesy of GENERAL MOTORS CORP.

4. Connect the headlamp wiring harness electrical connector to the forward lamp wiring harness.

5. Rotate the headlamp motor/actuator manual control knob clockwise to lower the headlamp.
6. Install the rear screw to the headlamp bezel.

   Tighten: Tighten the headlamp bezel retaining screw to 2 N.m (18 lb in).

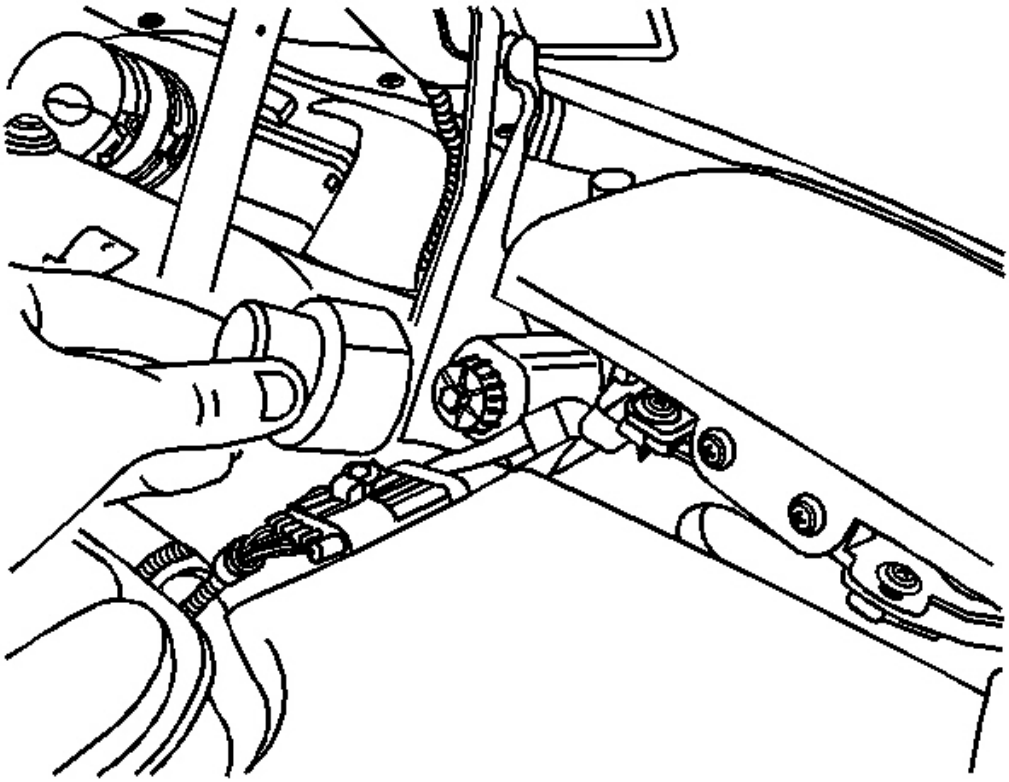

Fig. 129: Headlamp Actuator Knob Cover
Courtesy of GENERAL MOTORS CORP.

7. Install the motor/actuator knob cover.
8. Close the hood.

HEADLAMP INTERMEDIATE BRACKET REPLACEMENT

Removal Procedure

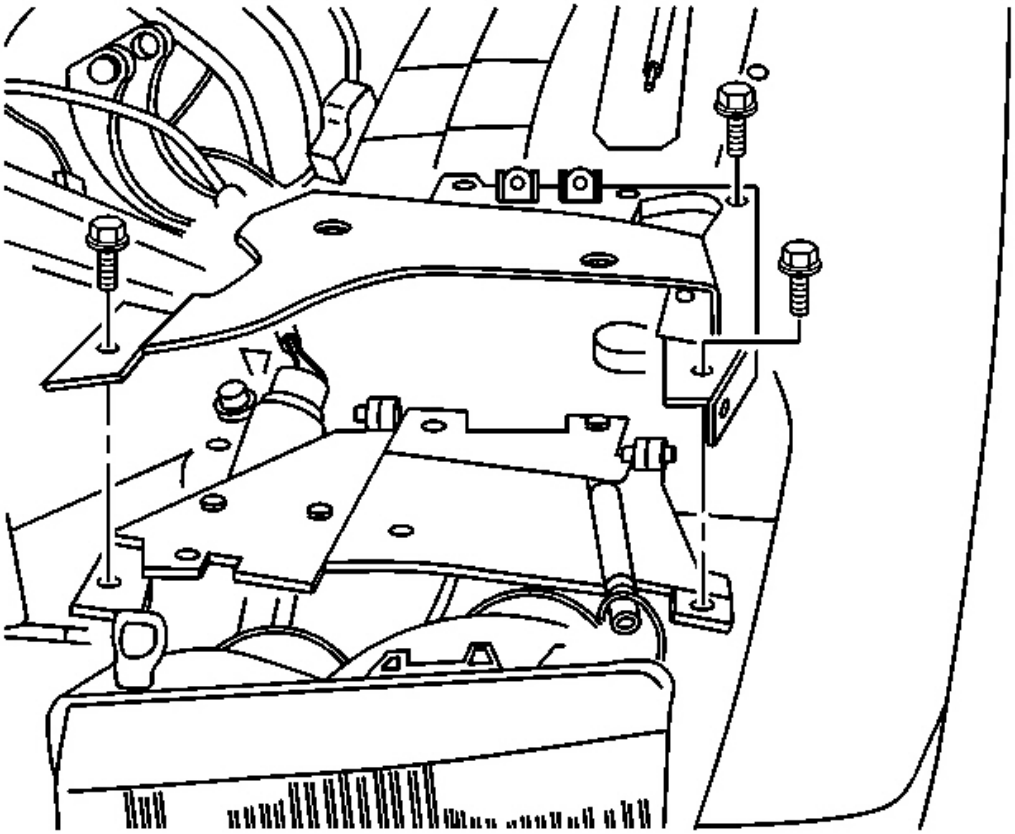

Fig. 130: Headlamp Intermediate Bracket To Headlamp
Courtesy of GENERAL MOTORS CORP.

1. Remove the headlamp opening door. Refer to **Headlamp Opening Door Replacement** .
2. Mark the location of the headlamp intermediate bracket.
3. Remove the headlamp intermediate bracket retaining screws.
4. Remove the headlamp intermediate bracket from the headlamp.

Installation Procedure

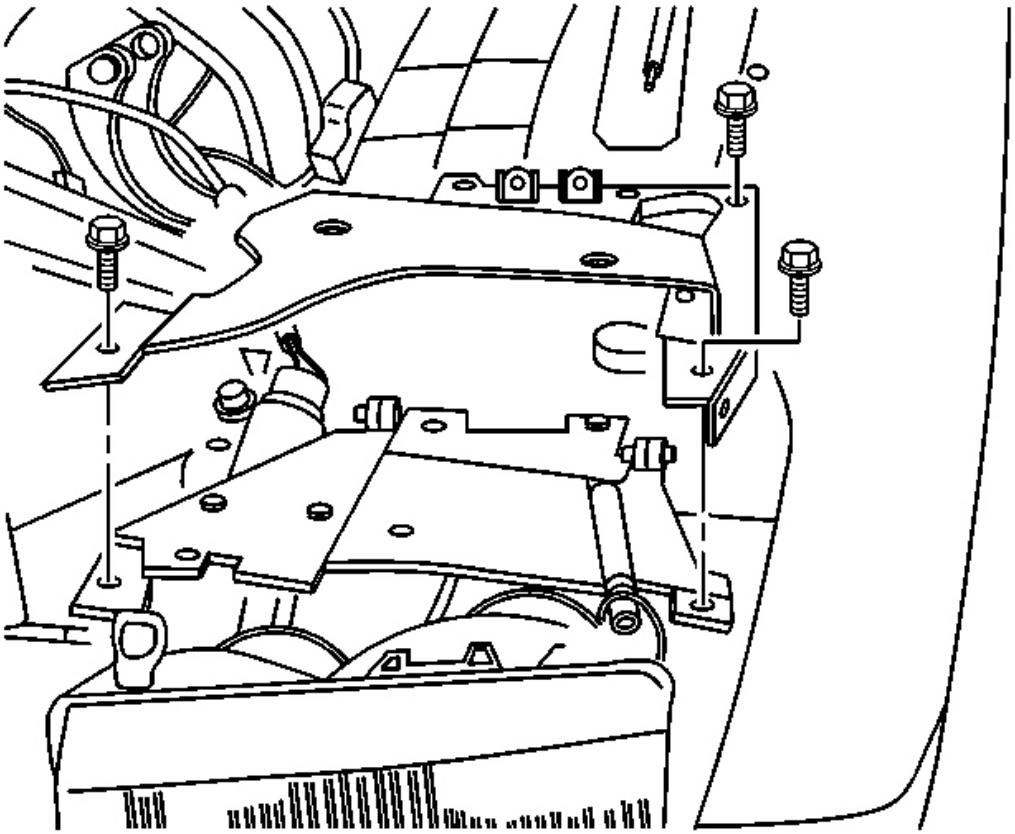

Fig. 131: Headlamp Intermediate Bracket To Headlamp
Courtesy of GENERAL MOTORS CORP.

1. Position the headlamp intermediate bracket to the position as marked prior to removal.

   NOTE: Refer to Fastener Notice in Cautions and Notices.

2. Install the headlamp intermediate bracket retaining screws.

   Tighten: Tighten the headlamp intermediate bracket screws to 2 N.m (18 lb in).

3. Install the headlamp opening door. Refer to **Headlamp Opening Door Replacement** .

HEADLAMP AIMING (VISUAL METHOD)

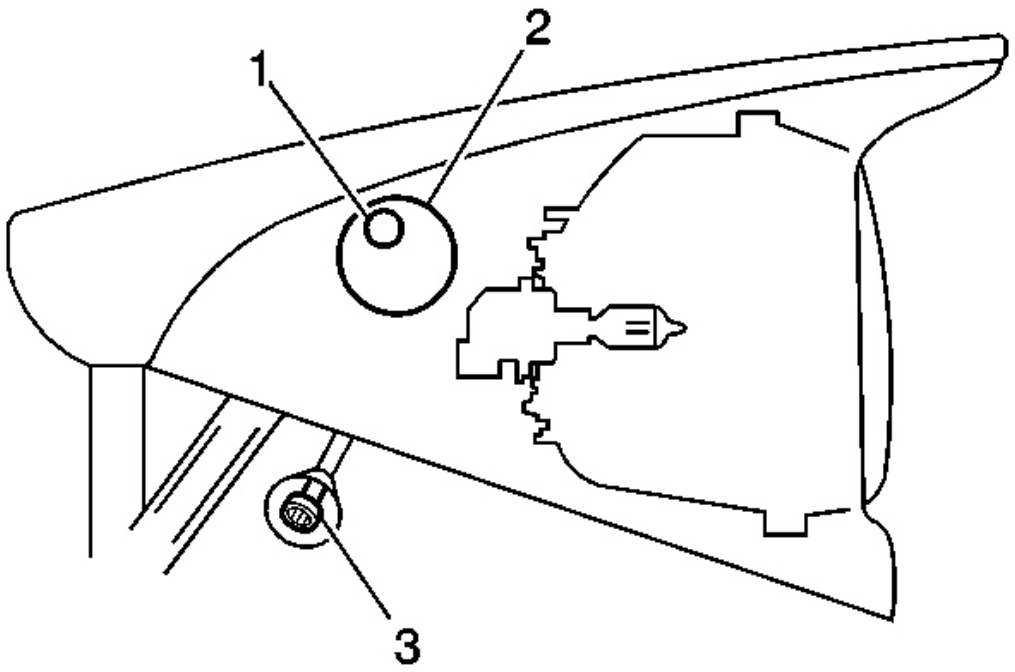

Fig. 132: Headlamp Assemblies & Headlamp Bezel
Courtesy of GENERAL MOTORS CORP.

Horizontal and vertical aiming of each of the composite headlamps is done by turning adjusting screws which move the headlamp capsule in relation to the headlamp frame. The horizontal adjustment screw (1) is located on the inboard side of each of the headlamp assemblies, covered by a plug (2) on the headlamp bezel. The vertical adjustment screw (3) is located on the inboard side of each of the headlamp assemblies, below the lower edge of the headlamp bezel.

Some state and local authorities have specific requirements for aiming the headlamps. These requirements must be followed.

Aiming Area Preparation

Choose an appropriate aiming area, then prepare the aiming screen as described in the following.

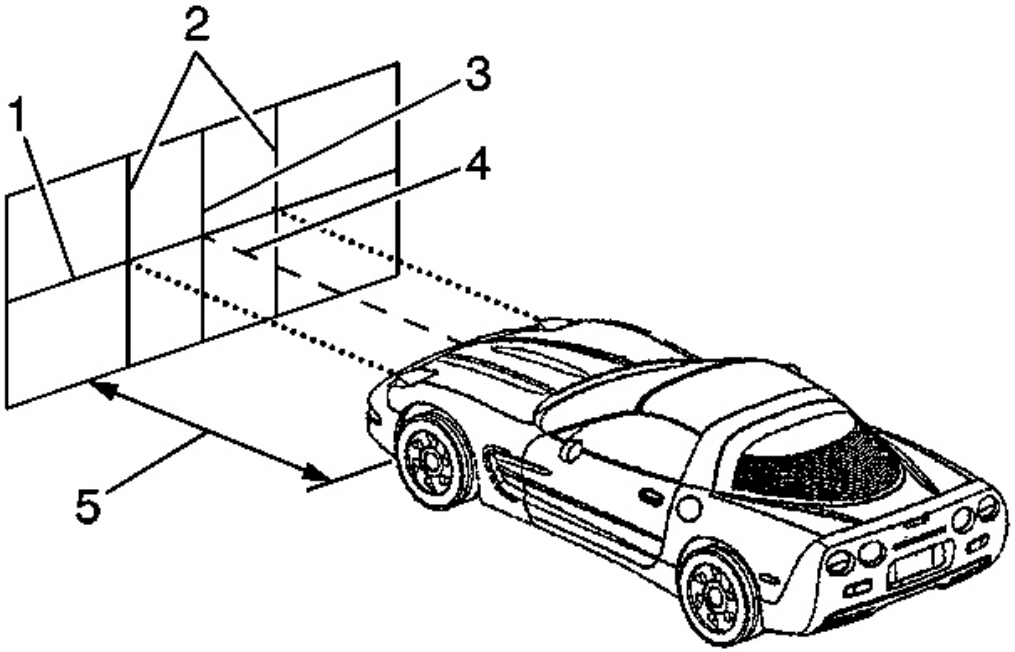

Fig. 133: Vehicle To Headlamp Capsules & Vertical Centerline
Courtesy of GENERAL MOTORS CORP.

- The aiming area should be darkened and large enough to accommodate the vehicle and an additional 7.62 m (25 ft) measured from the face of the headlamp capsules to the front of the screen.
- The floor on which the vehicle rests must be flat with the bottom of the screen. If the floor is not level, compensate as necessary.
- The aiming screen should be at least 1.52 m (5 ft) high by 3.66 m (12 ft) wide with a matte white surface well shaded from extraneous light, and properly adjusted to the floor on which the vehicle stands. The screen should be provided with a vertical centerline (3), 2 laterally adjustable vertical tapes (2), and 1 vertically adjustable horizontal tape (1).

IMPORTANT: For each vehicle checked, the horizontal line or tape (1) on the screen must be adjusted. Vehicles of the same model and year may have different standing height for the headlamp capsules.

- Make provisions to allow the screen to be movable, so that it can be aligned parallel with the rear axle of the vehicle. This will allow for a horizontal line drawn perpendicular to the centerline of the screen to pass through the center point between the 2 headlamp capsules (4).
- After the aiming screen has been set up in a permanent location, paint or tape a reference line on the floor 7.62 m (25 ft) from the screen, to identify the proper location of the headlamp capsules when they are

being aimed (5).

If a regular commercial aiming screen is not available, the screen may consist of a vertical wall having a clear uninterrupted area at least 1.83 m (6 ft) high by 3.66 m (12 ft) wide, finished with a washable non-gloss white paint.

Vehicle Preparation

Prepare the vehicle for checking the headlamp beam aim as follows:

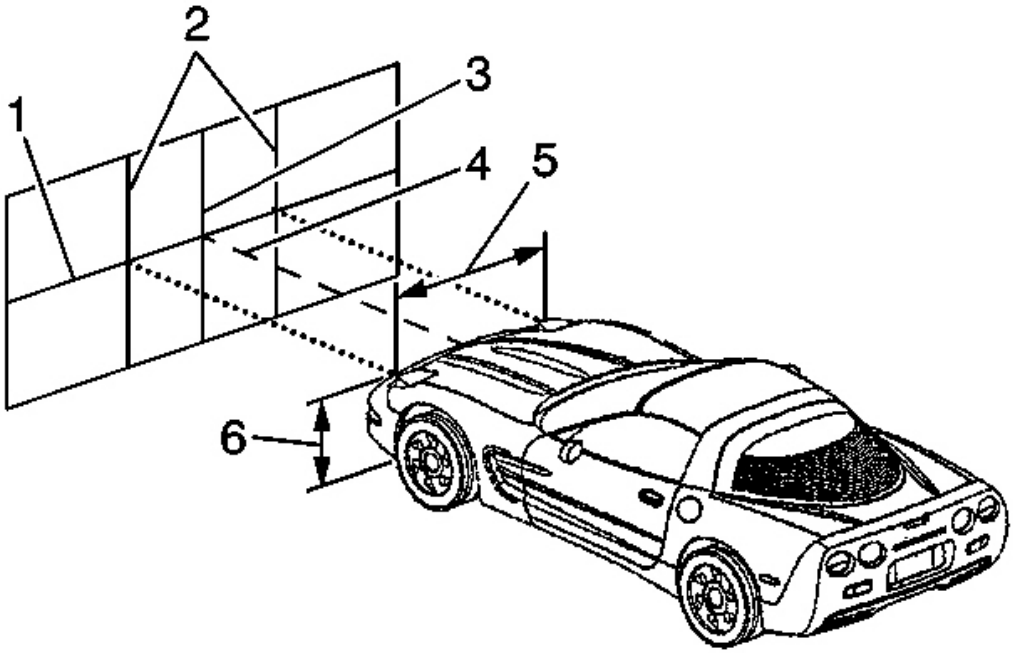

Fig. 134: Vehicle To Headlamp Capsules & Horizontal Center
Courtesy of GENERAL MOTORS CORP.

1. Make sure that all the components are in place on the vehicle, if other service has been performed on the vehicle.
2. The vehicle must have a full tank of gas.
3. Make sure the tires are inflated to the proper pressures.
4. Stop all other operations of work on the vehicle.
5. Position the vehicle so it is square with the aiming screen, and with the headlamp capsules directly over the reference line which has been painted or taped on the floor.
6. Locate the vertical center line on the aiming screen (3) so that it is in line with the center of the vehicle

(4). This can be accomplished by sighting through the center of the rear window and over the hood.

Mark the vertical center of the front and rear windows with narrow tape. Use these marks as sights to locate the centerline of the vehicle. Move the vehicle or the screen until the center line of the screen comes into alignment with the 2 points.

7. Close the doors.
8. Rock the vehicle sideways to stabilize the suspension.
9. Measure the height from the floor to the horizontal center of a headlamp capsule lens (6). Adjust the horizontal tape on the aiming screen (1) to match this dimension.
10. Measure the distance between the centerline of the right headlamp capsule lens and the center of the left headlamp capsule lens (5). Position the vertical tapes on the aiming screen (2) this distance to the right and left of the screen centerline.

Adjustment Procedure

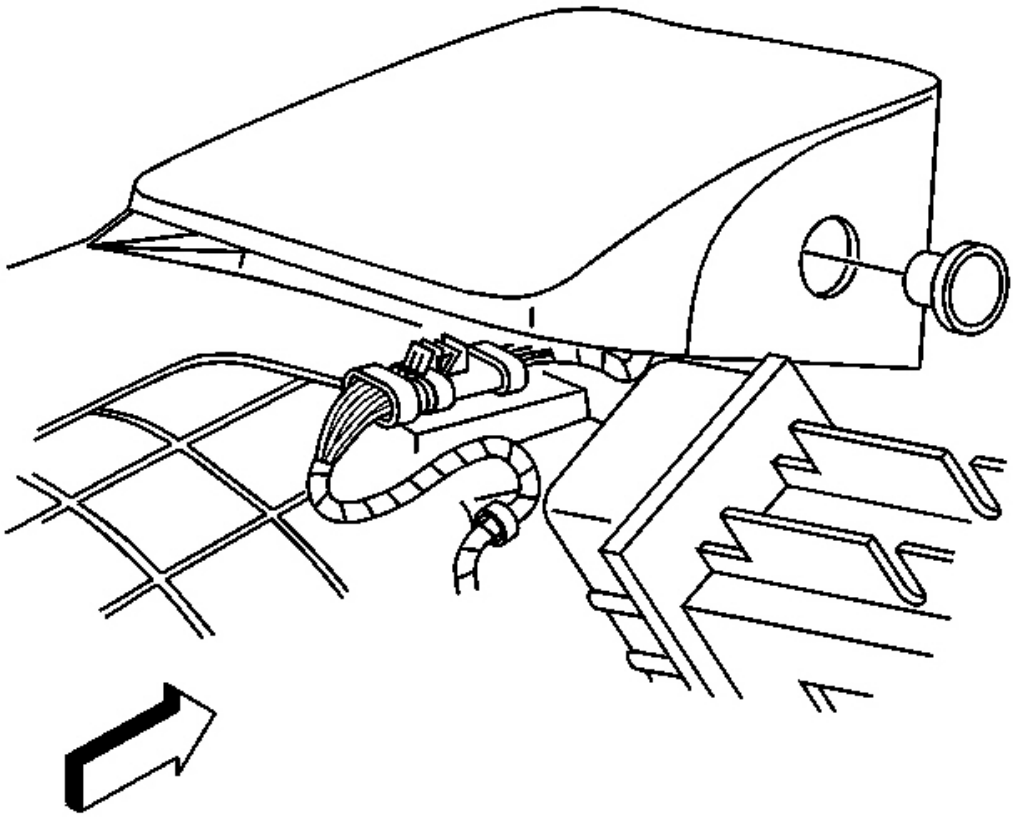

Fig. 135: Headlamp To Headlamp Bezel

Courtesy of GENERAL MOTORS CORP.

1. Raise the hood.
2. Raise the headlamps.
3. Remove the headlamp adjustment screw plug from the headlamp bezel.

   Reach under the headlamp bezel and push out the plug from behind.

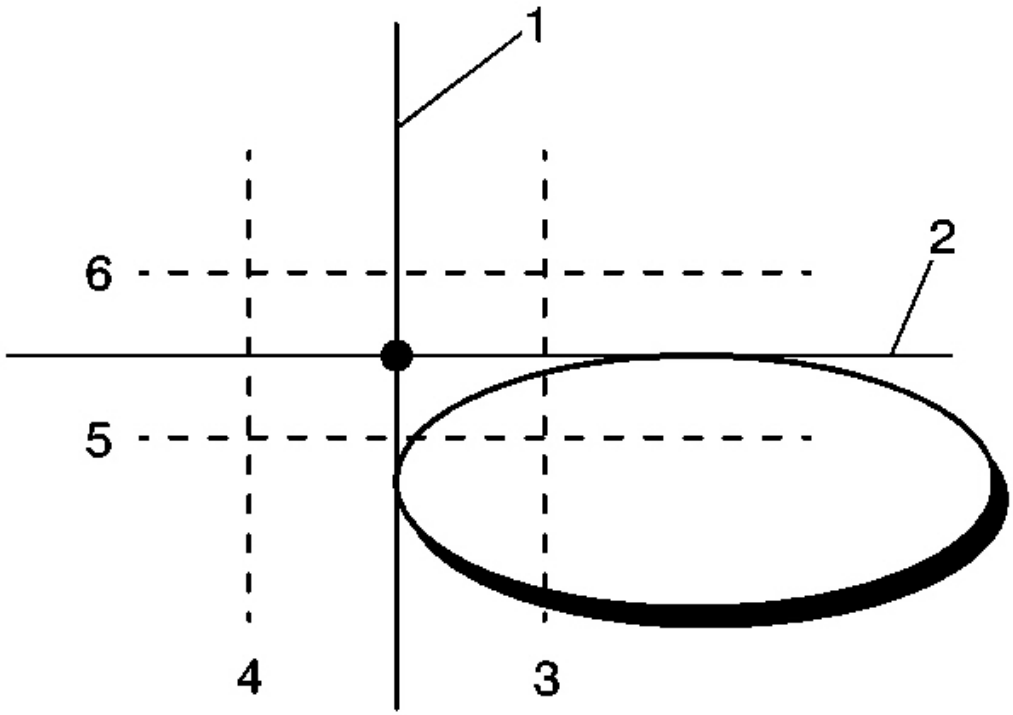

Fig. 136: Low Beam Headlamps At Passenger Side Headlamp
Courtesy of GENERAL MOTORS CORP.

IMPORTANT: DO NOT cover the headlamp, this may cause excessive heat build up.

4. Turn on the low beam headlamps and block the light from projecting onto the screen from the passenger side headlamp.
5. Inspect the horizontal aim.
6. Adjust the aim using the horizontal adjusting screw, to align the left edge of the high intensity zone with the headlamp vertical centerline (1), within the range of 102 mm (4 in) to the left (4) of the lamp vertical centerline (1), to 102 mm (4 in) to the right (3) of the lamp vertical centerline (1) on the aiming screen.

7. Inspect the vertical aim.
8. Adjust the aim using the vertical adjusting screw, to align the top edge of the high intensity zone to the headlamp horizontal centerline (2), within the range of 51 mm (2 in) above (6) the lamp horizontal centerline (2), to 64 mm (2.5 in) below (5) the lamp horizontal centerline (2) on the aiming screen.

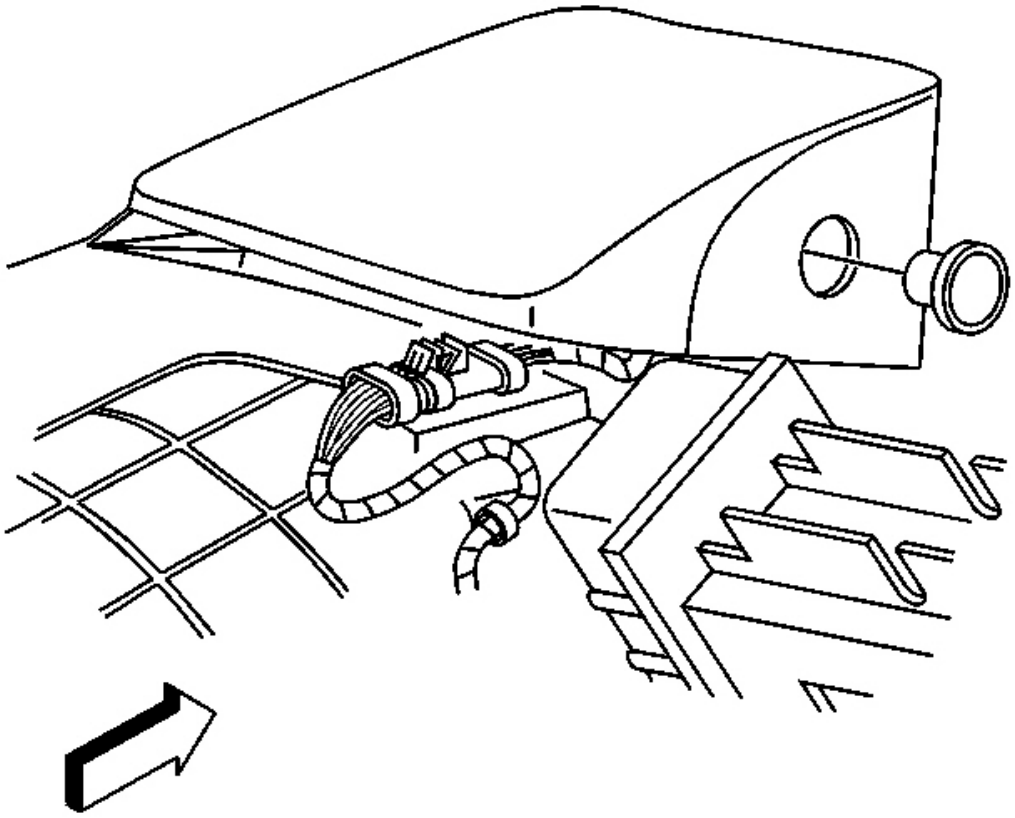

Fig. 137: Headlamp To Headlamp Bezel
Courtesy of GENERAL MOTORS CORP.

9. Install the headlamp adjustment screw plug.

   Push to secure.

10. Repeat the aiming procedure for the passenger side headlamp while blocking the light from projecting onto the screen from the driver side headlamp.
11. Turn OFF the headlamps.
12. Close the hood.

HEADLAMP AIMING (EXPORT, LH RULE OF THE ROAD)

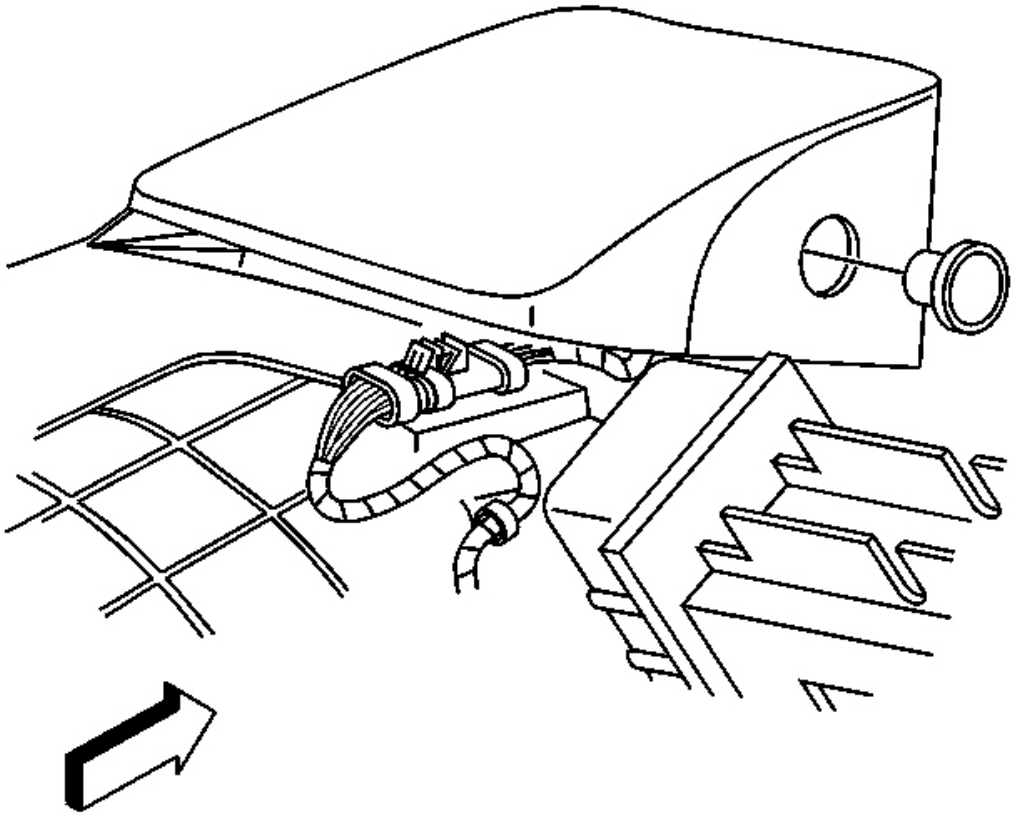

Fig. 138: Headlamp To Headlamp Bezel
Courtesy of GENERAL MOTORS CORP.

1. Prepare the aiming screen and the vehicle for headlamp aiming. Refer to **Headlamp Aiming (Visual Method)** or **Headlamp Aiming (Export, LH Rule of the Road)** or **Headlamp Aiming (Export, RH Rule of the Road)** .
2. Raise the hood.
3. Raise the headlamps.
4. Remove the headlamp adjustment screw plug from the headlamp bezel.

   Reach under the headlamp bezel and push out the plug from behind.

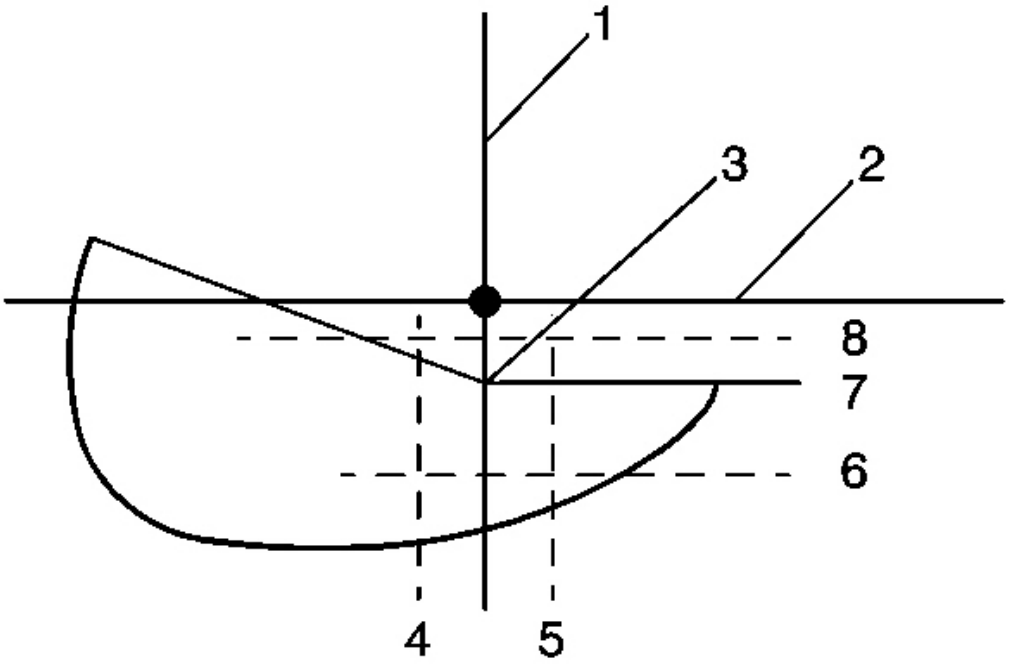

Fig. 139: LH Headlamp Aiming
Courtesy of GENERAL MOTORS CORP.

5. Turn ON the low beam lamps.
6. Inspect the horizontal aim.
7. Adjust the aim using the horizontal adjusting screw, to align the break point (3) of the high intensity zone to the headlamp vertical centerline (1), within the range of 38 mm (1.5 in) to the left (4) of the lamp vertical centerline (1), to 38 mm (1.5 in) to the right (5) of the lamp vertical centerline (1) on the aiming screen.
8. Inspect the vertical aim.
9. Adjust the aim using the vertical adjusting screw, to align the upper edge of the beam horizontal cut off line 114 mm (4.5 in) below (7) the headlamp horizontal centerline (2), within the range of 76 mm (3 in) below (8) the lamp horizontal centerline (2), to 191 mm (7.5 in) below (6) the lamp horizontal centerline (2) on the aiming screen.

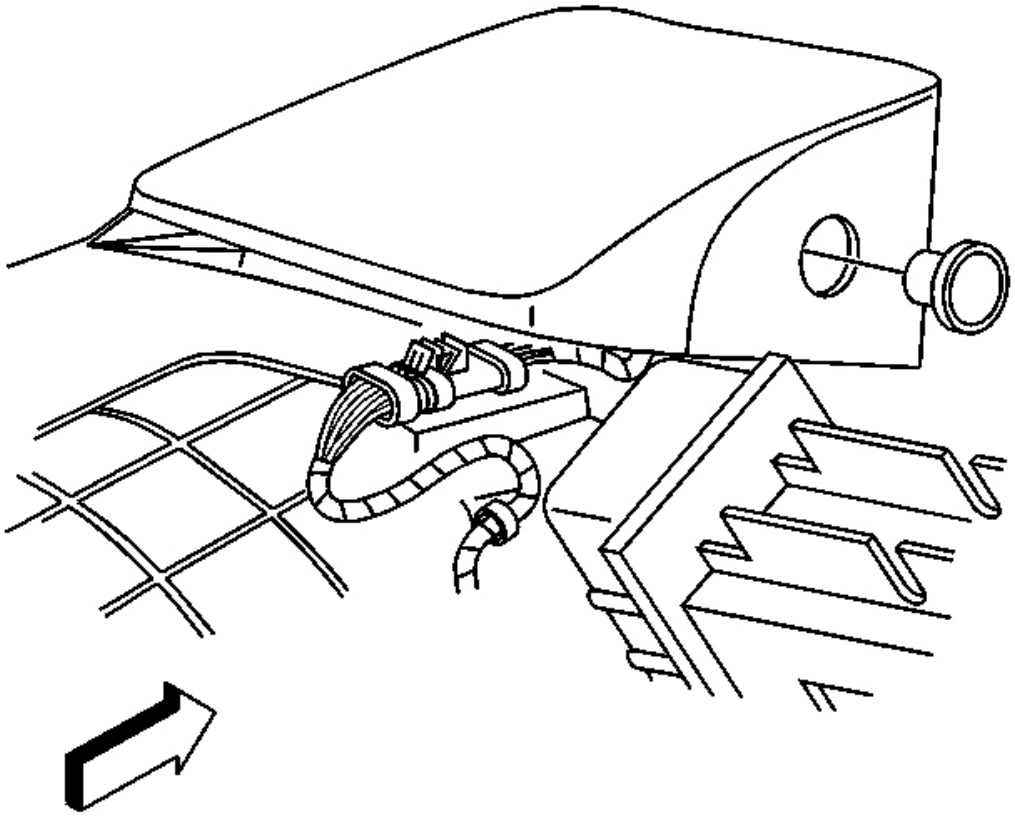

Fig. 140: Headlamp To Headlamp Bezel
Courtesy of GENERAL MOTORS CORP.

10. Install the headlamp adjustment screw plug.

    Push to secure.

11. Turn OFF the headlamps.
12. Lower the hood.

HEADLAMP AIMING (EXPORT, RH RULE OF THE ROAD)

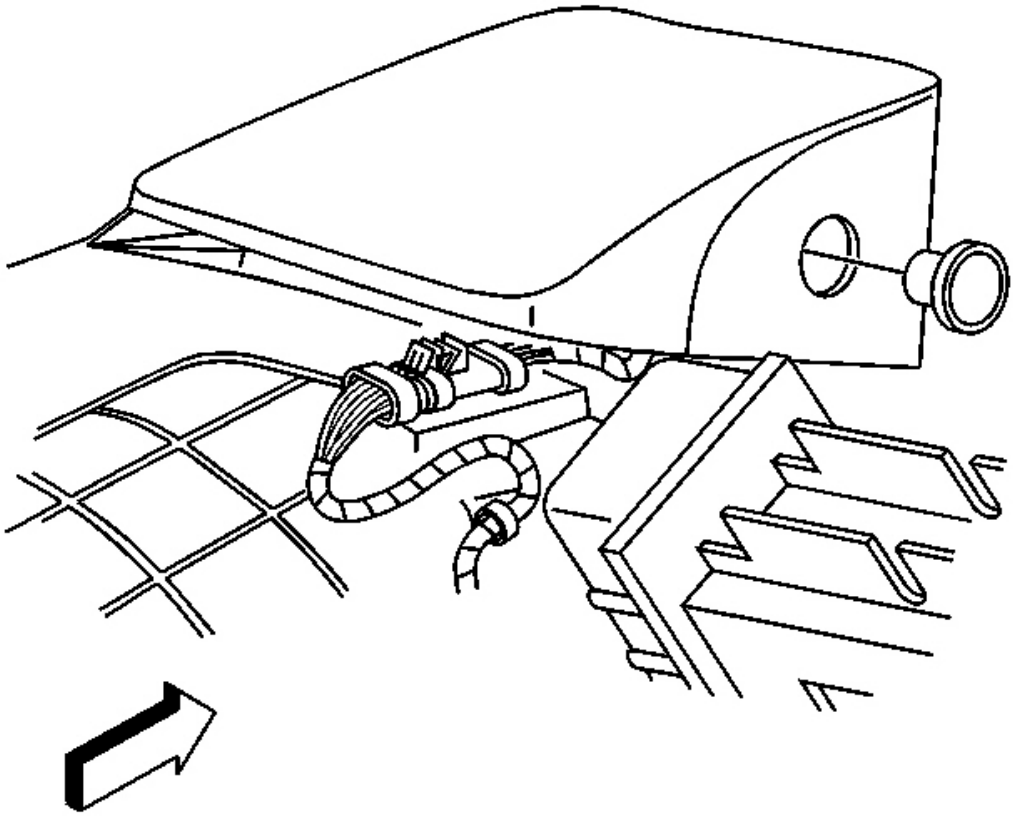

Fig. 141: Headlamp To Headlamp Bezel
Courtesy of GENERAL MOTORS CORP.

1. Prepare the aiming screen and the vehicle for headlamp aiming. Refer to **Headlamp Aiming (Visual Method)** or **Headlamp Aiming (Export, LH Rule of the Road)** or **Headlamp Aiming (Export, RH Rule of the Road)** .
2. Raise the hood.
3. Raise the headlamps.
4. Remove the headlamp adjustment screw plug from the headlamp bezel.

   Reach under the headlamp bezel and push out the plug from behind.

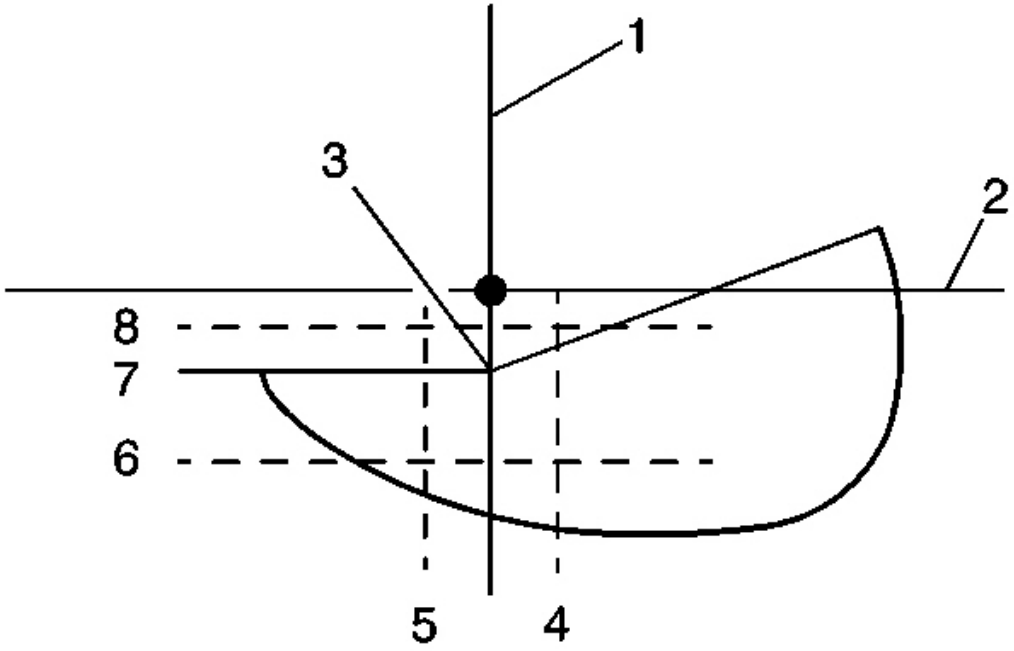

Fig. 142: RH Headlamp Aiming
Courtesy of GENERAL MOTORS CORP.

5. Turn ON the low beam lamps.
6. Inspect the horizontal aim.
7. Adjust the aim using the horizontal adjusting screw, to align the break point (3) of the high intensity zone to the headlamp vertical centerline (1), within the range of 38 mm (1.5 in) to the left (5) of the lamp vertical centerline (1), to 38 mm (1.5 in) to the right (4) of the lamp vertical centerline (1) on the aiming screen.
8. Inspect the vertical aim.
9. Adjust the aim using the vertical adjusting screw, to align the upper edge of the beam horizontal cut off line 114 mm (4.5 in) below (7) the headlamp horizontal centerline (2), within the range of 76 mm (3 in) below (8) the lamp horizontal centerline (2), to 191 mm (7.5 in) below (6) the lamp horizontal centerline (2) on the aiming screen.

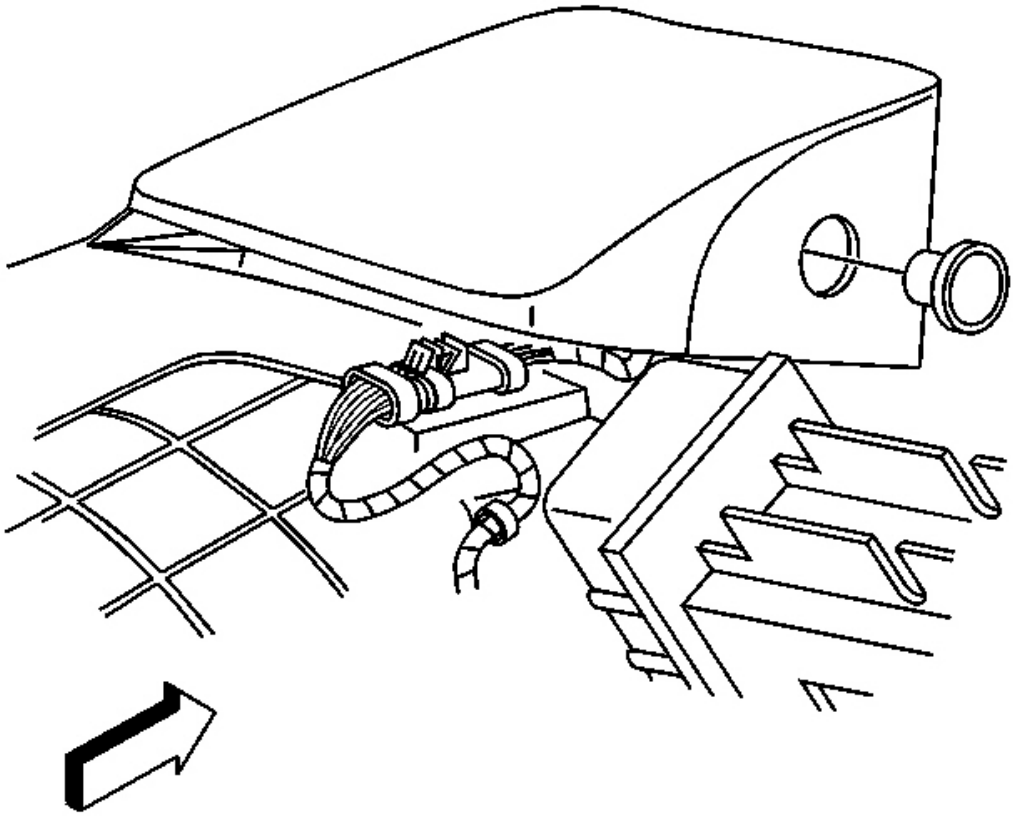

Fig. 143: Headlamp To Headlamp Bezel
Courtesy of GENERAL MOTORS CORP.

10. Install the headlamp adjustment screw plug.

    Push to secure.

11. Turn OFF the headlamps.
12. Lower the hood.

FOG LAMP REPLACEMENT - FRONT

Removal Procedure

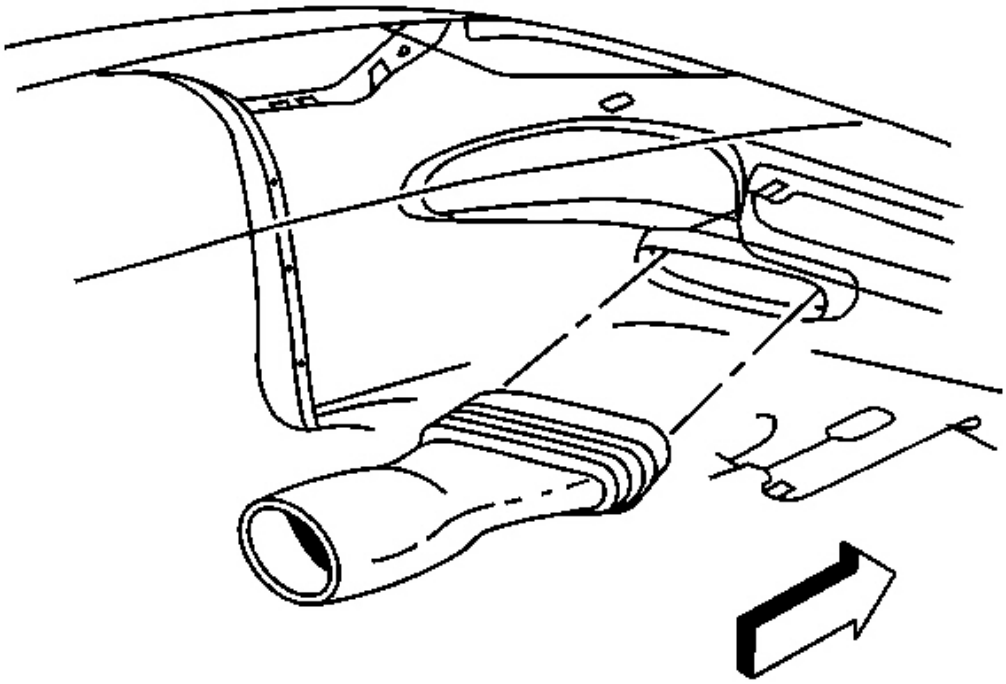

Fig. 144: Brake Caliper Cooling Duct To Front Fascia
Courtesy of GENERAL MOTORS CORP.

1. Raise and support the vehicle. Refer to **Lifting and Jacking the Vehicle** in General Information.
2. Remove the front fascia lower close out panel. Refer to **Close Out Panel - Front Bumper Fascia Lower** in Bumpers.
3. Release the brake caliper cooling duct from the front fascia and position the duct aside.

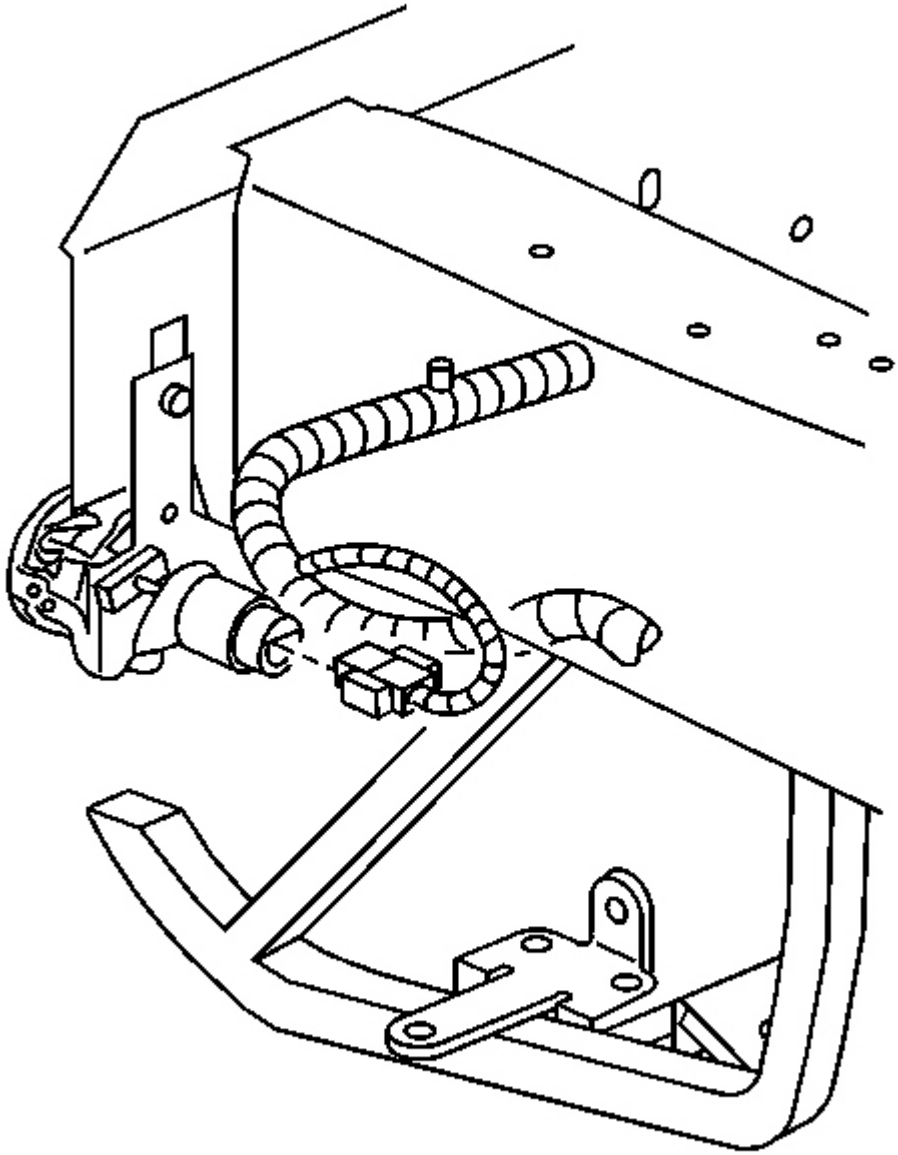

Fig. 145: Front Fog Lamp Electrical Connector To Fog Lamp Bulb/Socket
Courtesy of GENERAL MOTORS CORP.

4. Disconnect the front fog lamp electrical connector from the fog lamp bulb/socket.

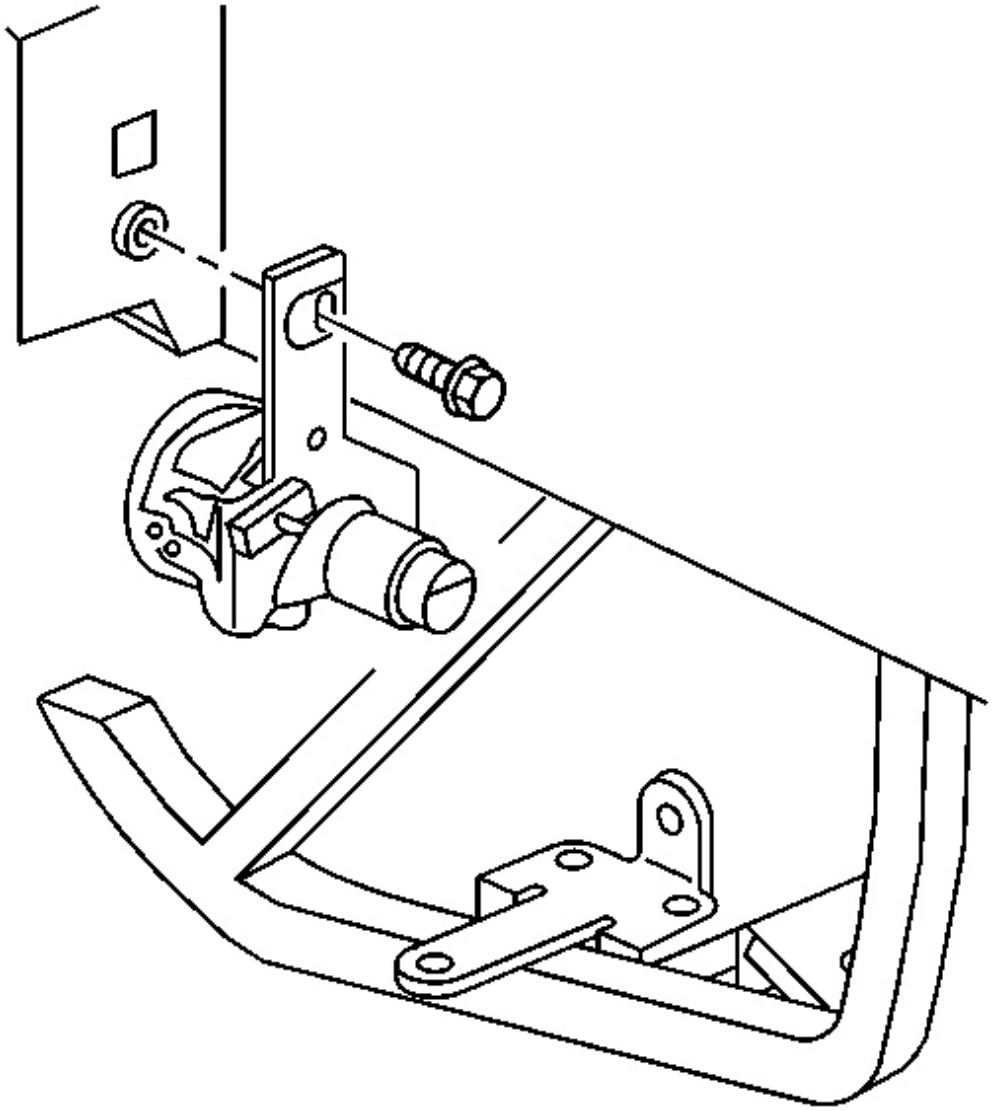

Fig. 146: Front Fog Lamp To Front Bumper Impact Bar
Courtesy of GENERAL MOTORS CORP.

5. Remove the front fog lamp mounting bolt from the front bumper impact bar.
6. Remove the fog lamp from the vehicle.

Installation Procedure

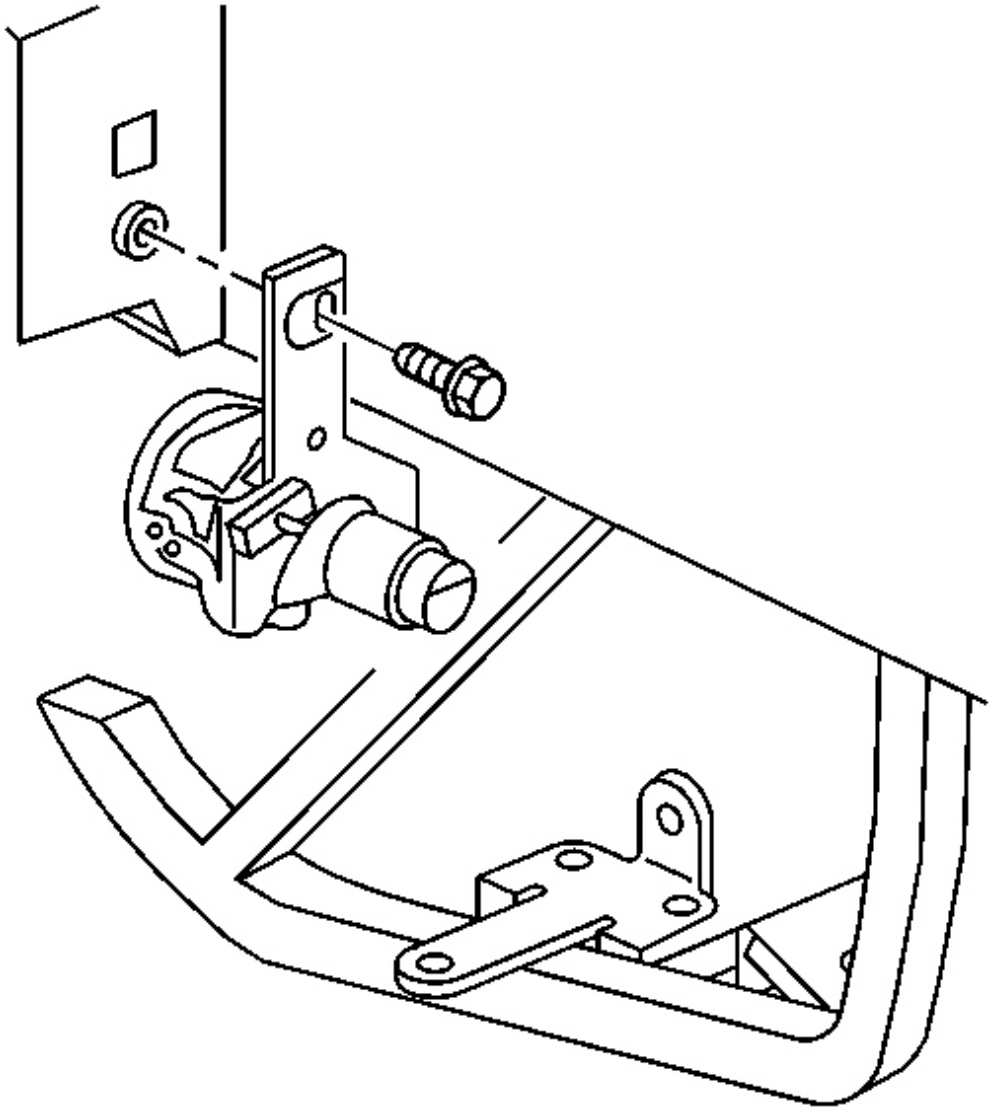

Fig. 147: Front Fog Lamp To Front Bumper Impact Bar
Courtesy of GENERAL MOTORS CORP.

1. Position the front fog lamp to the front bumper impact bar.

   Insert the fog lamp bracket alignment tab into the hole on the front bumper impact bar.

NOTE: Refer to Fastener Notice in Cautions and Notices.

2. Install the front fog lamp mounting bolt to the front bumper impact bar.

   Tighten: Tighten the front fog lamp mounting bolt to 2 N.m (18 lb in).

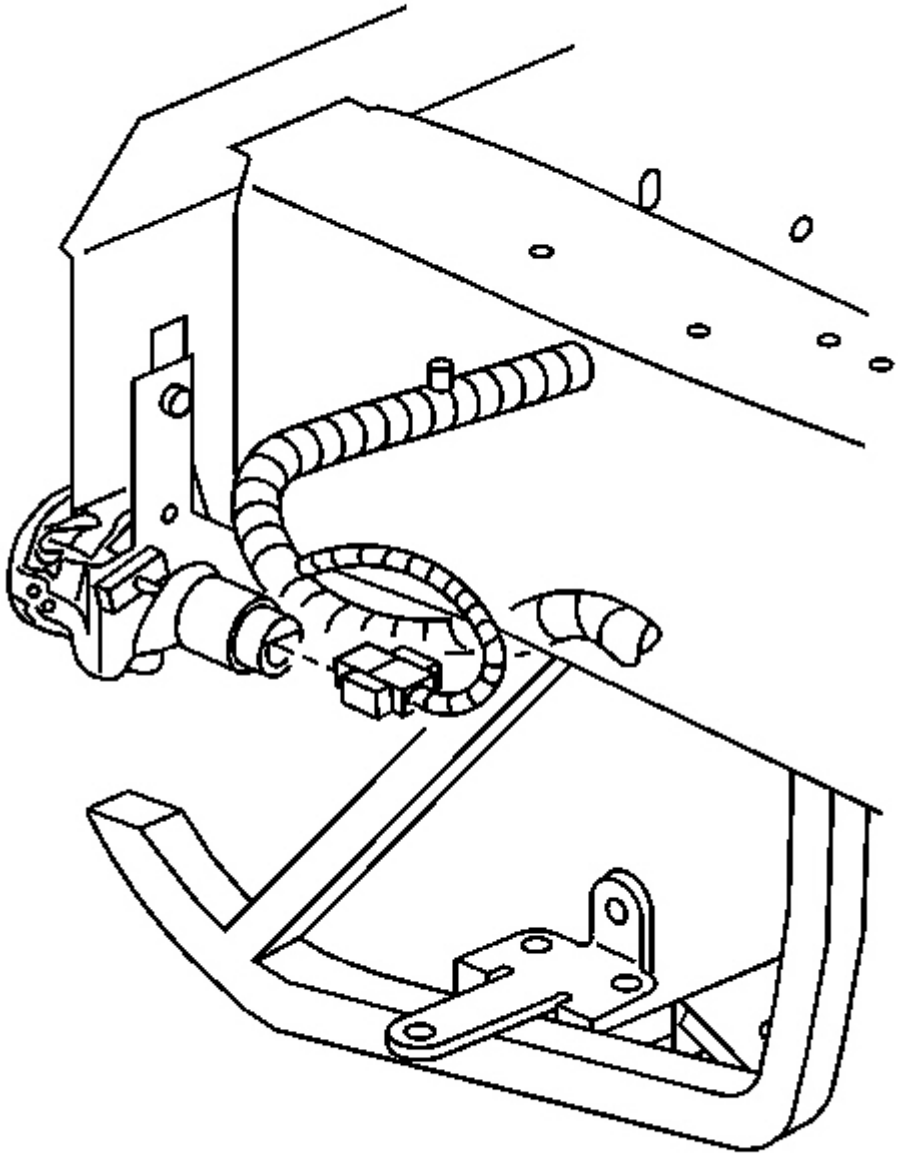

Fig. 148: Front Fog Lamp Electrical Connector To Fog Lamp Bulb/Socket
Courtesy of GENERAL MOTORS CORP.

3. Connect the front fog lamp electrical connector to the fog lamp bulb/socket.

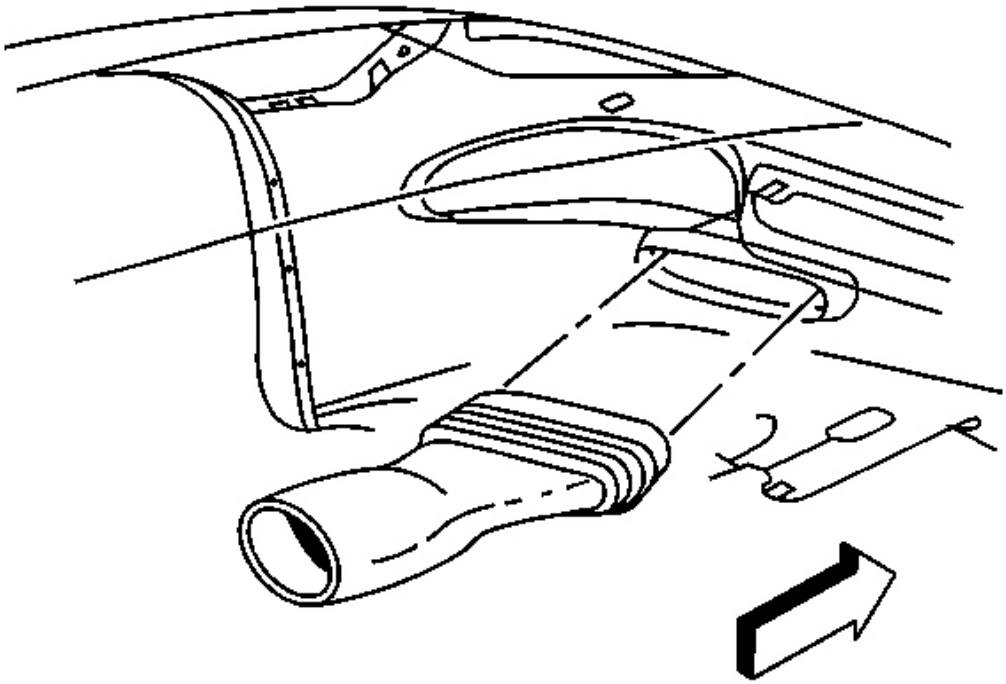

Fig. 149: Brake Caliper Cooling Duct To Front Fascia
Courtesy of GENERAL MOTORS CORP.

4. Position the brake caliper cooling duct to the front fascia, and press to secure.
5. Install the front fascia lower close out panel. Refer to **Close Out Panel - Front Bumper Fascia Lower** in Bumpers.
6. Lower the vehicle.
7. Check and adjust fog lamp aim as necessary. Refer to **Fog Lamp Aiming Procedure** .

FOG LAMP BULB REPLACEMENT - FRONT

Removal Procedure

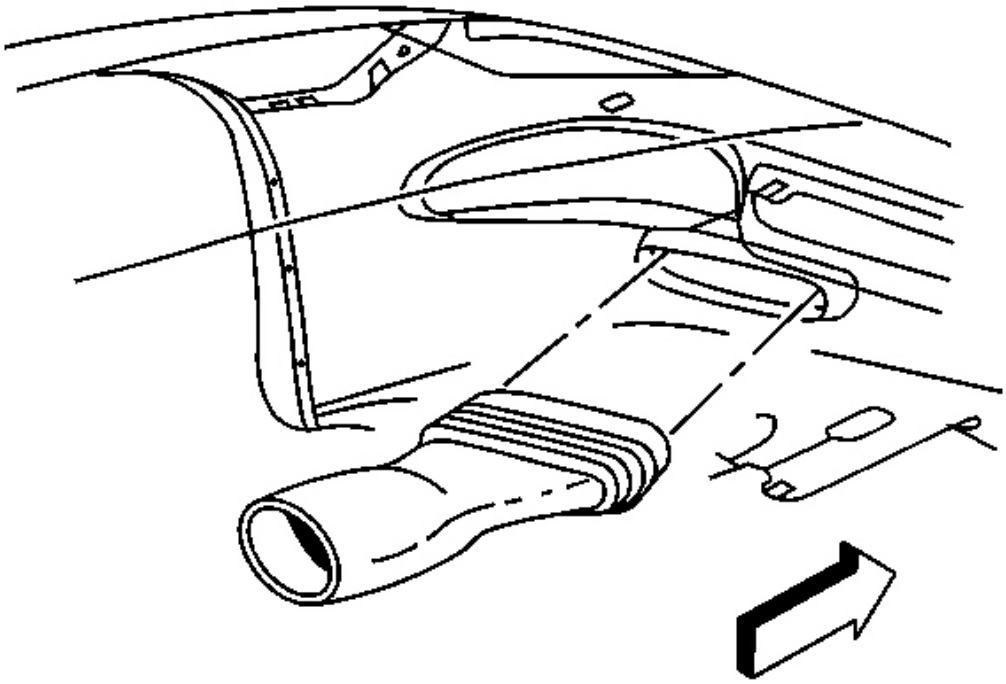

Fig. 150: Brake Caliper Cooling Duct To Front Fascia
Courtesy of GENERAL MOTORS CORP.

1. Raise and support the vehicle. Refer to **Lifting and Jacking the Vehicle** in General Information.
2. Remove the front fascia lower close out panel. Refer to **Close Out Panel - Front Bumper Fascia Lower** in Bumpers.
3. Release the brake caliper cooling duct from the front fascia and position the duct aside.

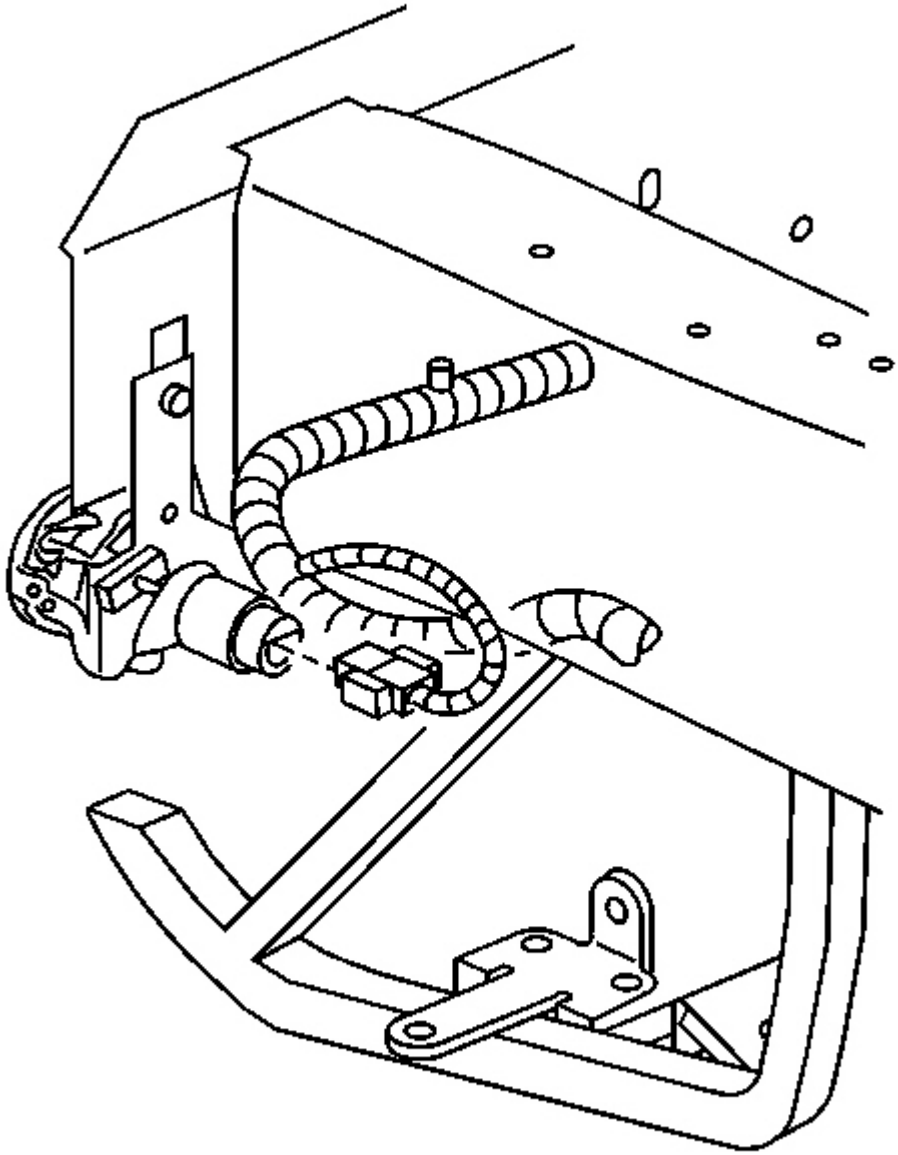

Fig. 151: Front Fog Lamp Electrical Connector To Fog Lamp Bulb/Socket
Courtesy of GENERAL MOTORS CORP.

4. Disconnect the front fog lamp electrical connector from the fog lamp bulb/socket.

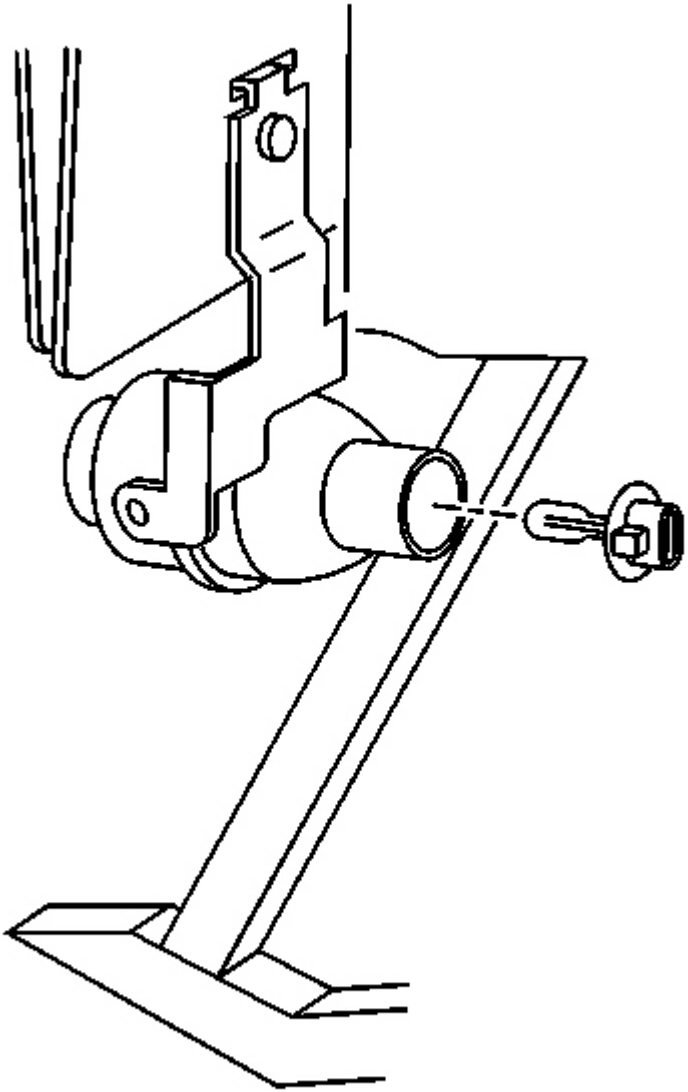

Fig. 152: Fog Lamp Bulb/Socket To Fog Lamp
Courtesy of GENERAL MOTORS CORP.

CAUTION: Refer to Halogen Bulb Caution in Cautions and Notices.

5. Remove the fog lamp bulb/socket from the fog lamp.

Rotate the fog lamp bulb/socket counterclockwise to release it from fog lamp.

Installation Procedure

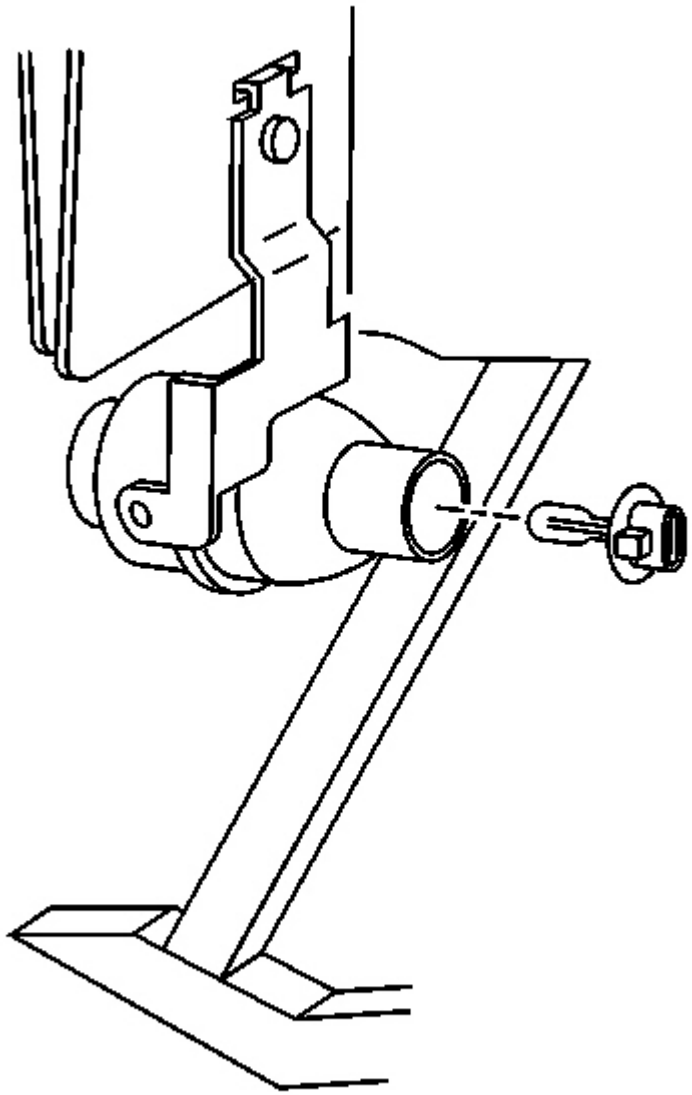

Fig. 153: Fog Lamp Bulb/Socket To Fog Lamp
Courtesy of GENERAL MOTORS CORP.

CAUTION: Refer to Halogen Bulb Caution in Cautions and Notices.

1. Install the fog lamp bulb/socket to the fog lamp.

   Rotate the fog lamp bulb/socket clockwise to secure it to the fog lamp.

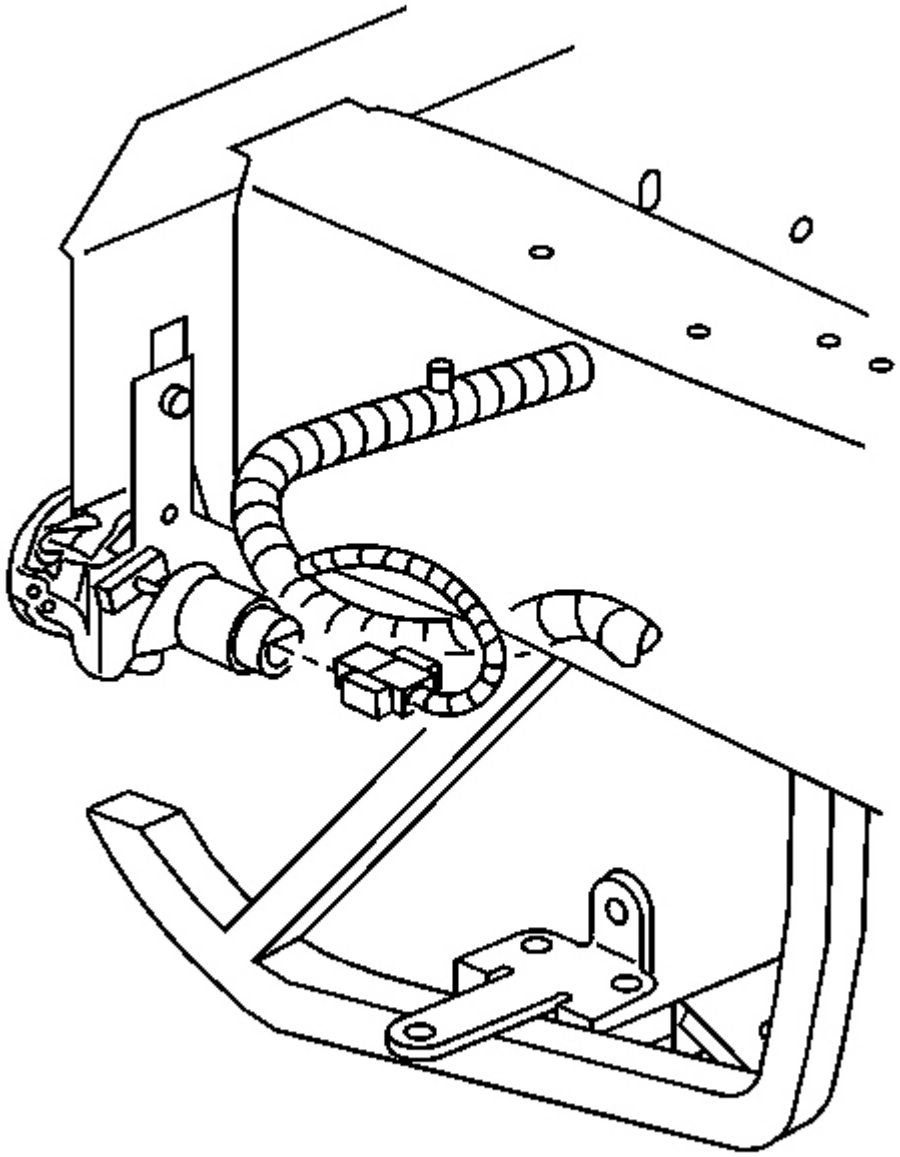

Fig. 154: Front Fog Lamp Electrical Connector To Fog Lamp Bulb/Socket
Courtesy of GENERAL MOTORS CORP.

2. Connect the front fog lamp electrical connector to the fog lamp bulb/socket.

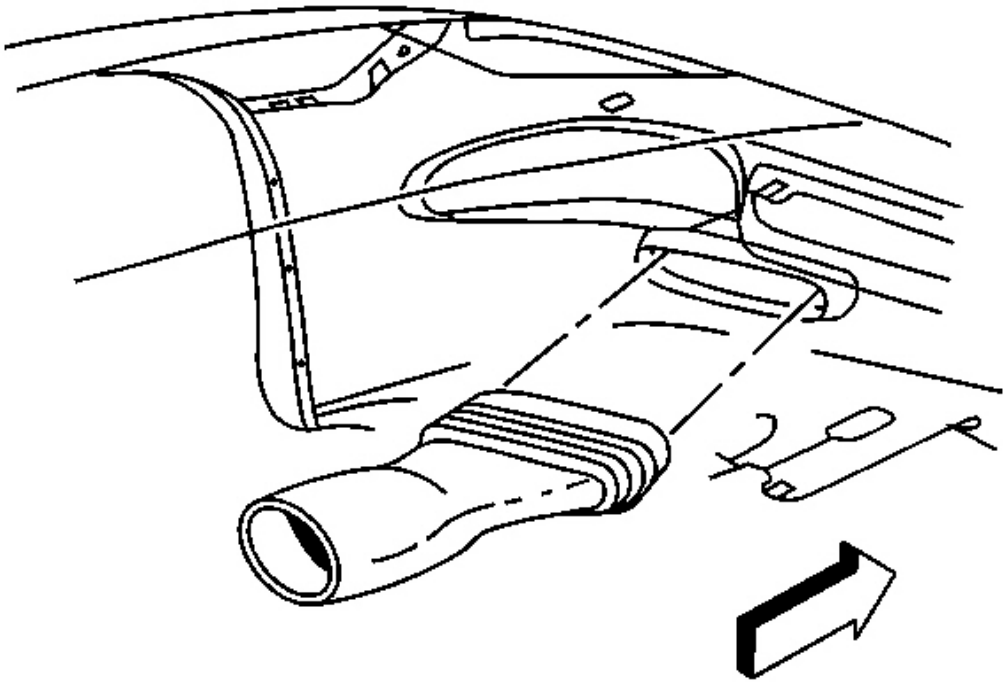

Fig. 155: Brake Caliper Cooling Duct To Front Fascia
Courtesy of GENERAL MOTORS CORP.

3. Position the brake caliper cooling duct to the front fascia, and press to secure.
4. Install the front fascia lower close out panel. Refer to **Close Out Panel - Front Bumper Fascia Lower** in Bumpers.
5. Lower the vehicle.
6. Check and adjust fog lamp aim as necessary. Refer to **Fog Lamp Aiming Procedure** .

FOG LAMP REPLACEMENT - REAR

Removal Procedure

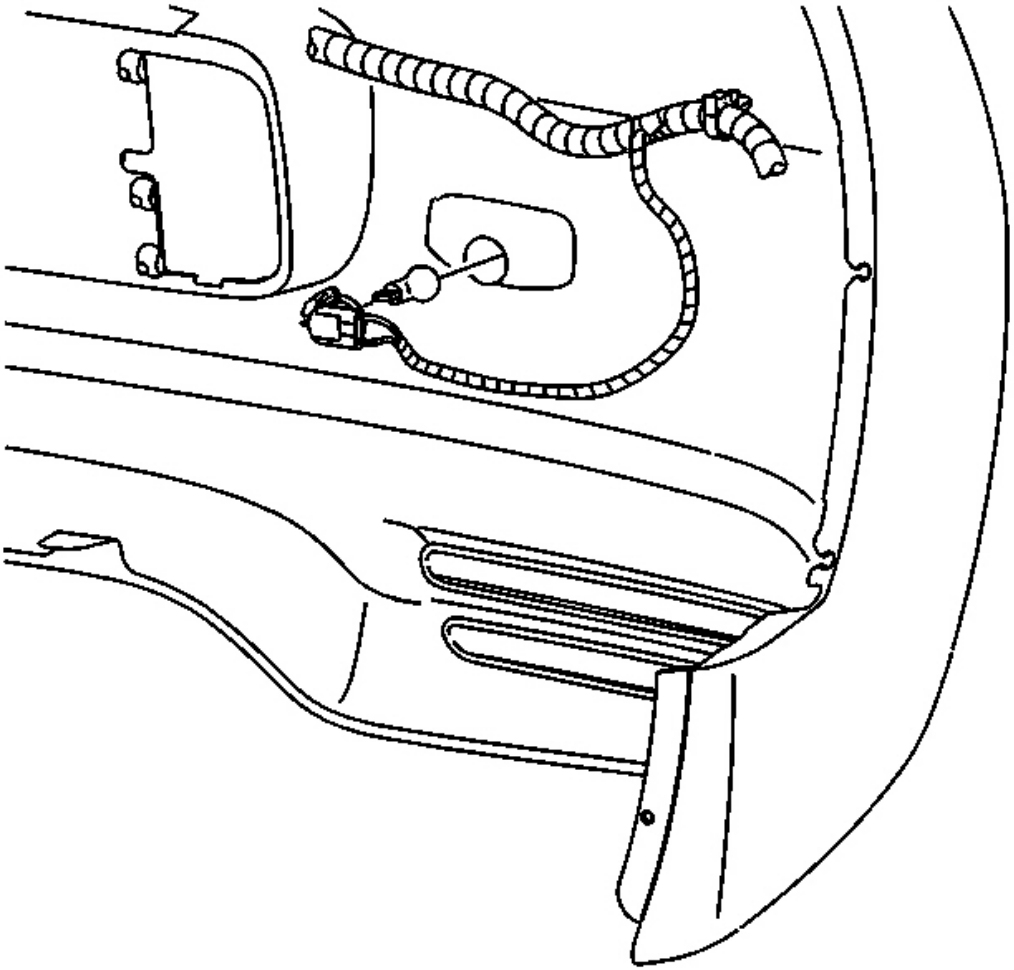

Fig. 156: Rear Fog Lamp Socket At Rear Fog Lamp Assembly
Courtesy of GENERAL MOTORS CORP.

1. Remove the tail/turn signal lamp. Refer to **Tail/Turn Signal Lamp Replacement (Europe, Japan)** .
2. Remove the rear fog lamp socket from the rear fog lamp assembly.

   Access the rear fog lamp through the tail lamp opening.

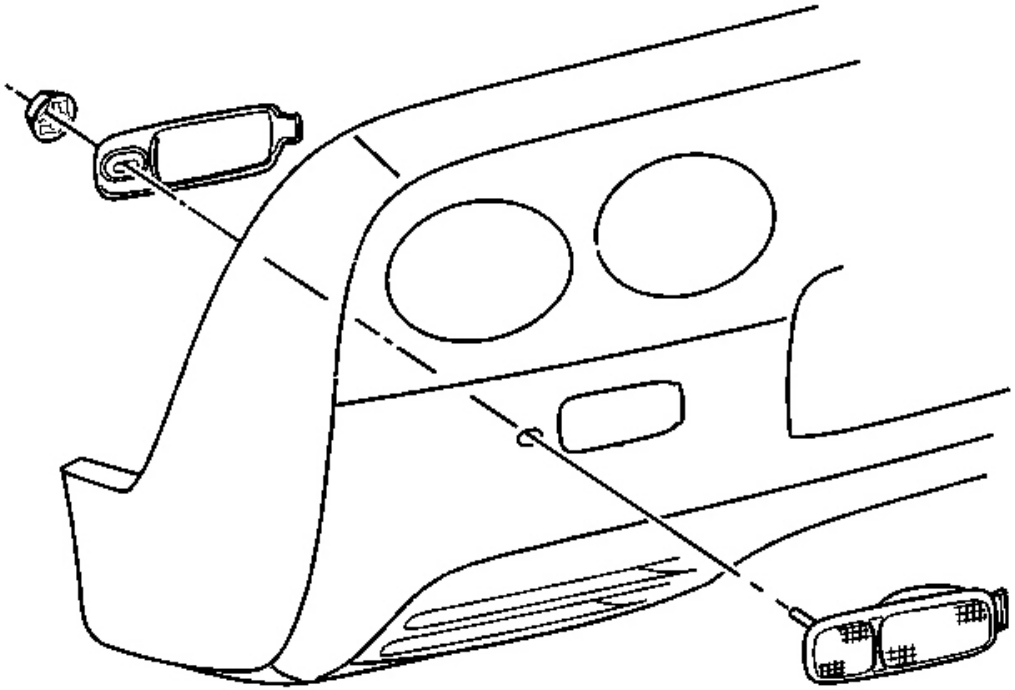

Fig. 157: Rear Fog Lamp Bezel At Lamp Assembly
Courtesy of GENERAL MOTORS CORP.

3. Remove the rear fog lamp bezel retaining nut and support the lamp assembly.
4. Remove the bezel from the lamp.

   Lift the bezel off of the stud and pivot it out of the slot on the lamp.

5. Remove the rear fog lamp assembly.

Installation Procedure

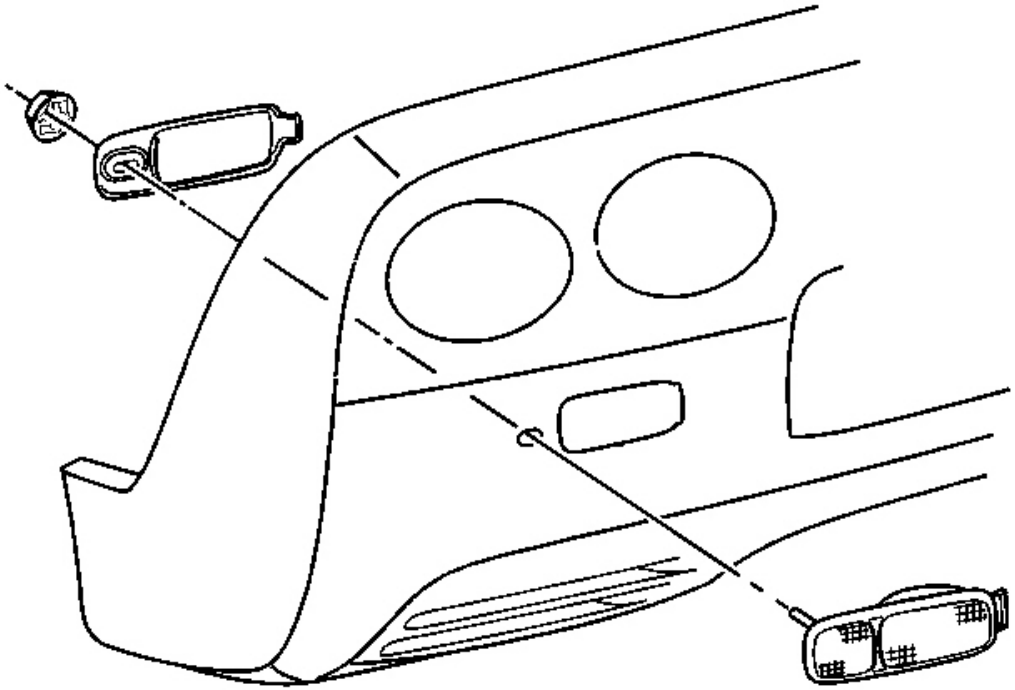

Fig. 158: Rear Fog Lamp Bezel At Lamp Assembly
Courtesy of GENERAL MOTORS CORP.

1. Position the rear fog lamp assembly to the rear fascia.
2. Install the bezel to the lamp.

   Insert the bezel into the slot on the lamp, then pivot the bezel onto the stud.

   NOTE: Refer to Fastener Notice in Cautions and Notices.

3. Install the rear fog lamp bezel retaining nut.

   Tighten: Tighten the rear fog lamp bezel retaining nut to 2 N.m (18 lb in).

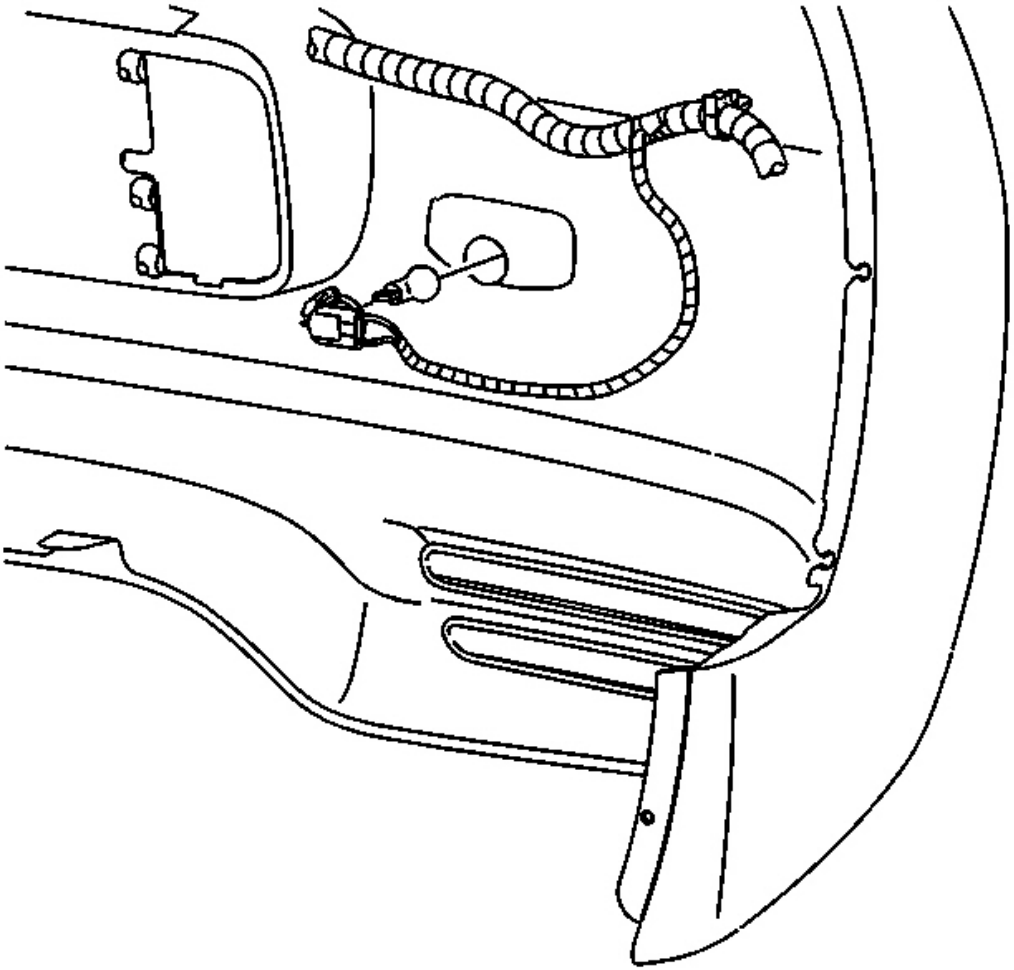

Fig. 159: Rear Fog Lamp Socket At Rear Fog Lamp Assembly
Courtesy of GENERAL MOTORS CORP.

4. Install the socket to the lamp.
5. Install the tail/turn signal lamp. Refer to **Tail/Turn Signal Lamp Replacement (Europe, Japan)** .

FOG LAMP BULB REPLACEMENT - REAR

Removal Procedure

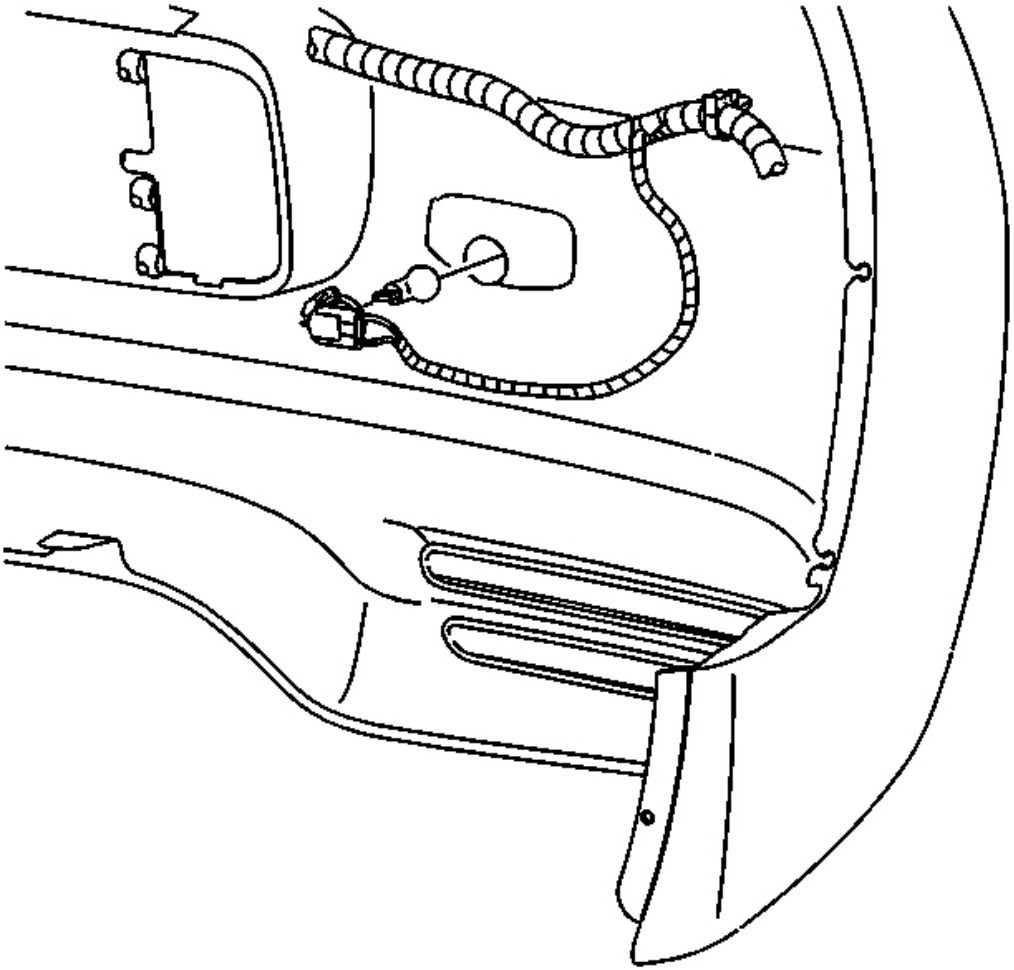

Fig. 160: Rear Fog Lamp Socket At Rear Fog Lamp Assembly
Courtesy of GENERAL MOTORS CORP.

1. Remove the tail/turn signal lamp. Refer to **Tail/Turn Signal Lamp Replacement (Europe, Japan)** .
2. Remove the rear fog lamp socket from the rear fog lamp assembly.

   Access the rear fog lamp through the tail lamp opening.

3. Remove the bulb from the socket.

Installation Procedure

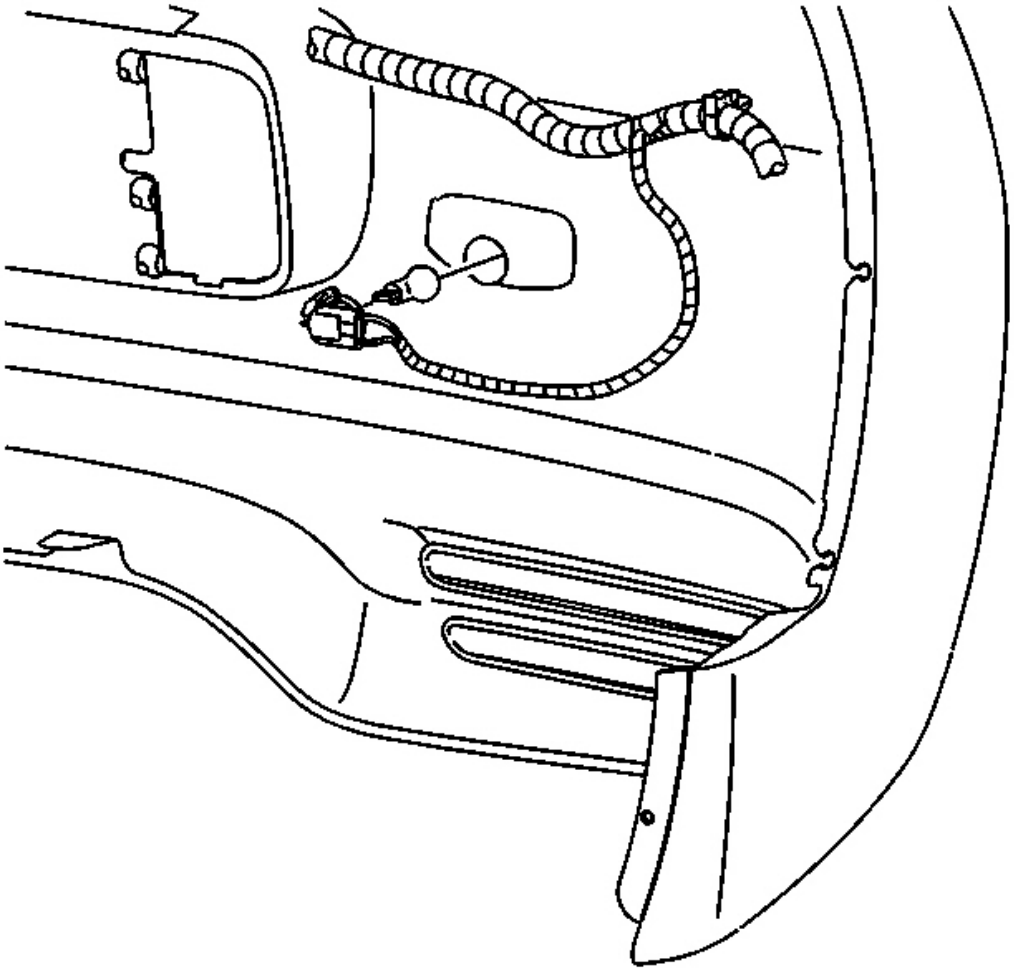

Fig. 161: Rear Fog Lamp Socket At Rear Fog Lamp Assembly
Courtesy of GENERAL MOTORS CORP.

1. Install the bulb to the socket.
2. Install the socket to the lamp.
3. Install the tail/turn signal lamp. Refer to **Tail/Turn Signal Lamp Replacement (Europe, Japan)** .

FOG LAMP AIMING PROCEDURE

The front fog lamps must be aimed for proper illumination of the road. The front fog lamp aim should be checked at least once a year, when a new bulb is installed, when a new fog lamp assembly is installed, or if service or repairs in the front end area may have disturbed the fog lamp mounting.

There is no horizontal adjustment for aiming the front fog lamp assemblies on this vehicle.

1. To ensure accurate vertical front fog lamp aiming, first perform the following steps to prepare the vehicle.
   - Verify that all the components are in place on the vehicle, if other service has been performed on the vehicle.
   - Verify that the fuel level is full.
   - Place the vehicle on a level surface 7.6 m (25 ft) away from a target screen.
   - Stop all other operations of work on the vehicle.
   - Jounce the vehicle to settle the suspension.

IMPORTANT: DO NOT cover the headlamps, this may cause excessive heat buildup.

   - Block the light from the headlamps from projecting onto the aiming screen while aiming the fog lamps.

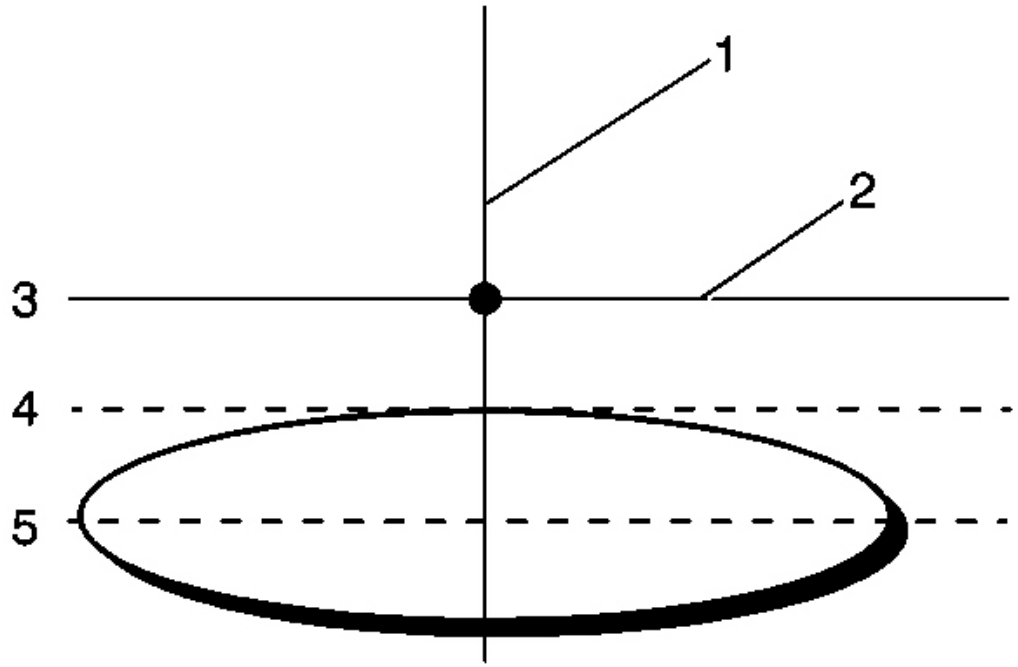

Fig. 162: Front Fascia Deflector Access Hole To Fog Lamp
Courtesy of GENERAL MOTORS CORP.

2. Turn the front fog lamps ON.
3. Insert a TORX(R) driver through the front fascia deflector access hole to reach the fog lamp vertical adjustment screw.
4. Adjust the fog lamp up or down until the top edge of the high intensity zone on the screen is 102 mm (4 in) below the horizontal centerline (2).
5. Turn OFF the front fog lamps.

POSITION LAMP REPLACEMENT - FRONT (EUROPE JAPAN)

Removal Procedure

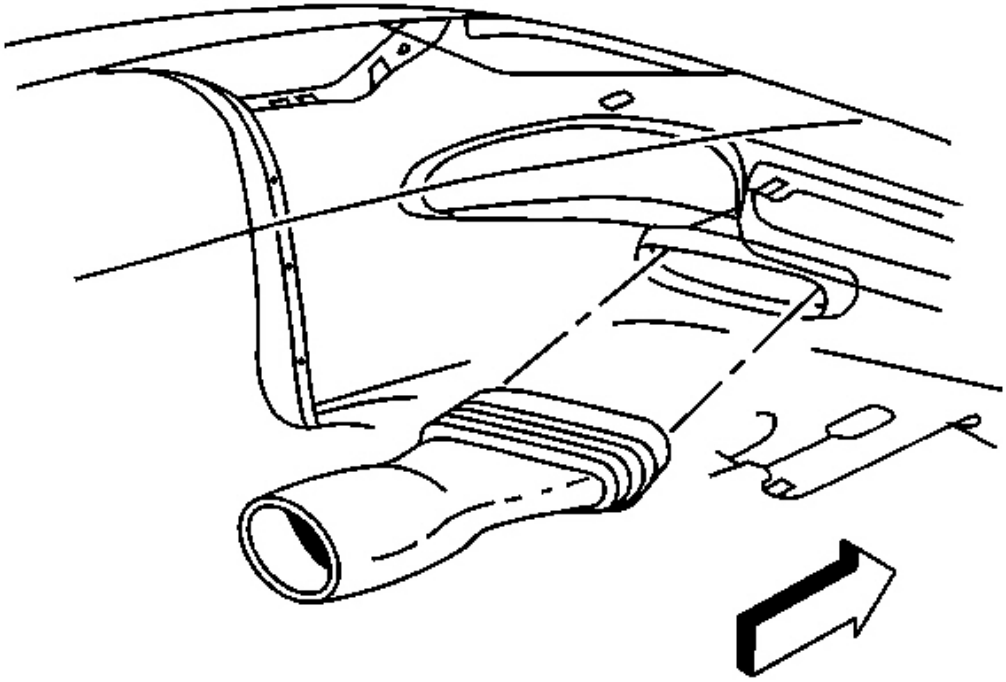

Fig. 163: Brake Caliper Cooling Duct To Front Fascia
Courtesy of GENERAL MOTORS CORP.

1. Raise and support the vehicle. Refer to **Lifting and Jacking the Vehicle** in General Information.
2. Remove the front fascia lower closeout panel. Refer to **Close Out Panel - Front Bumper Fascia Lower** in Bumpers.
3. Release the brake caliper cooling duct from the front fascia, and position aside.

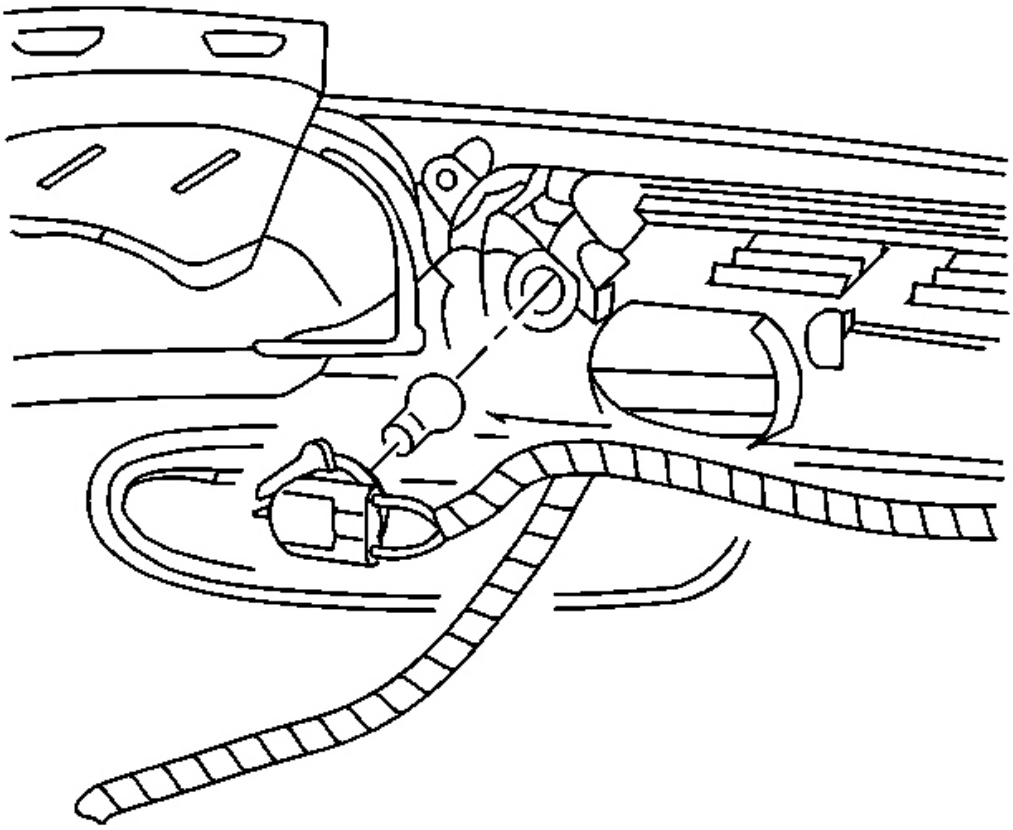

Fig. 164: Front Position Lamp Socket To Lamp Assembly
Courtesy of GENERAL MOTORS CORP.

4. Open the lamp access door on top of the front fascia closeout.
5. Remove the front position lamp socket from the lamp assembly.

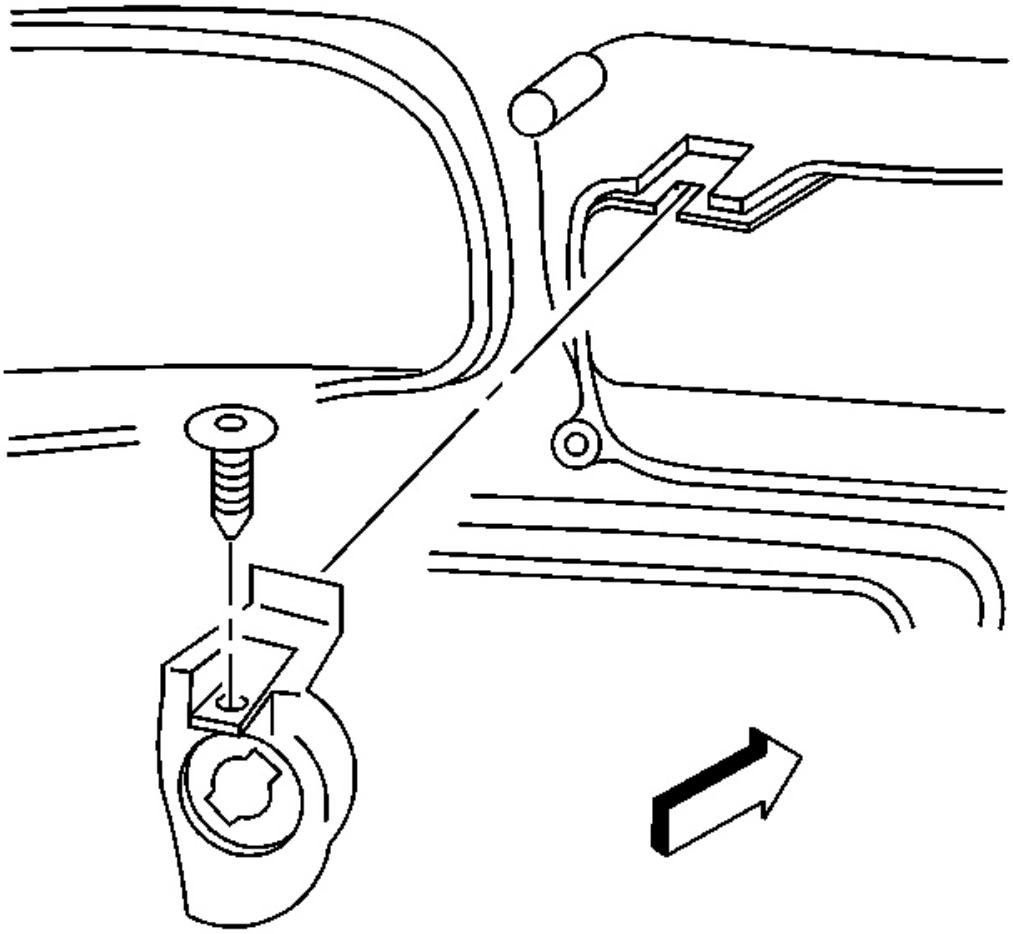

Fig. 165: Front Position Lamp Assembly
Courtesy of GENERAL MOTORS CORP.

6. Remove the front position lamp retaining screw.
7. Remove the front position lamp assembly.

Installation Procedure

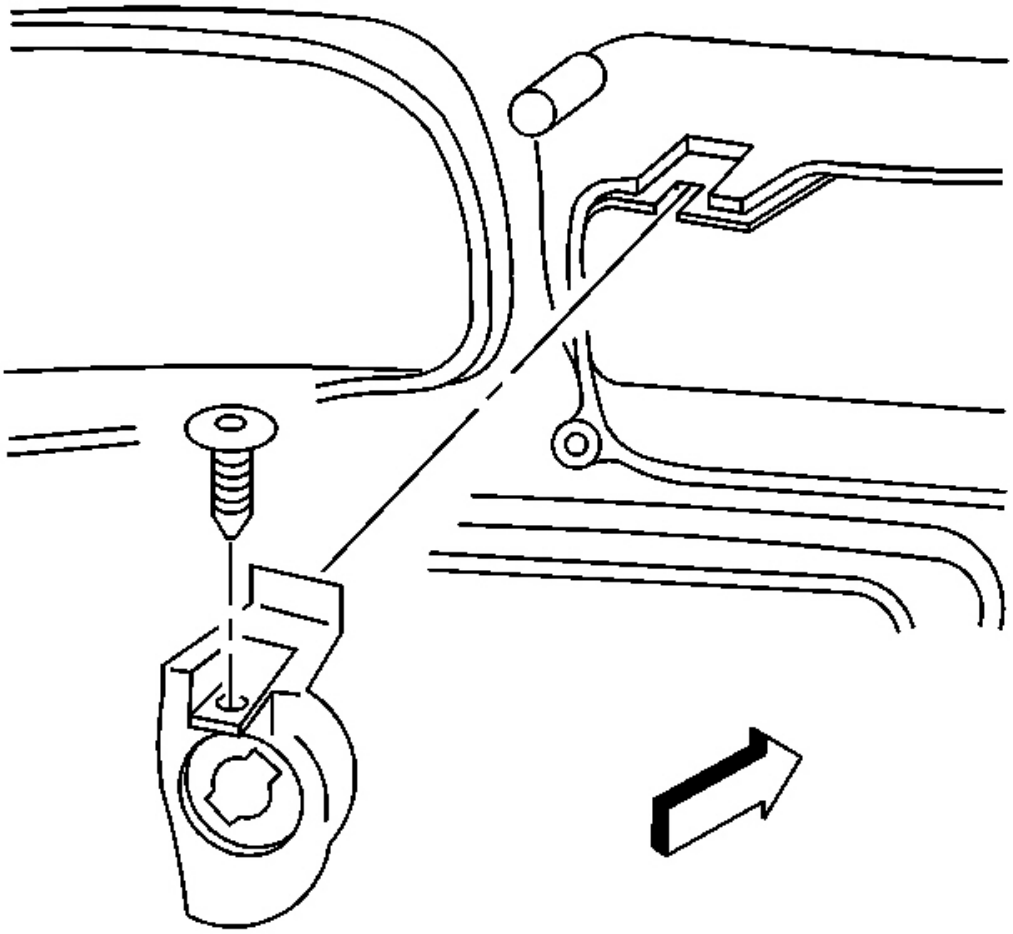

Fig. 166: Front Position Lamp Assembly
Courtesy of GENERAL MOTORS CORP.

1. Position the front position lamp to the front fascia.

   NOTE: Refer to Fastener Notice in Cautions and Notices.

2. Install the front position lamp retaining screw.

   Tighten: Tighten the front position lamp retaining screw to 2 N.m (18 lb in).

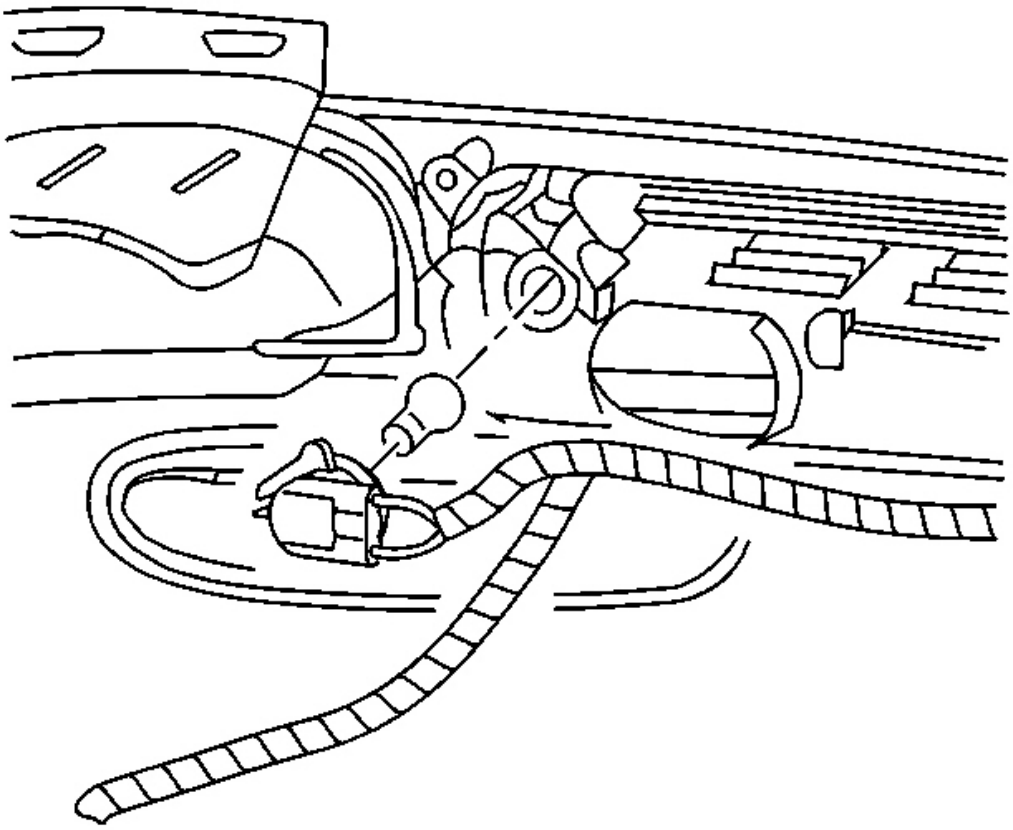

Fig. 167: Front Position Lamp Socket To Lamp Assembly
Courtesy of GENERAL MOTORS CORP.

3. Install the socket to the lamp.
4. Close the lamp access door on top of the front fascia closeout.

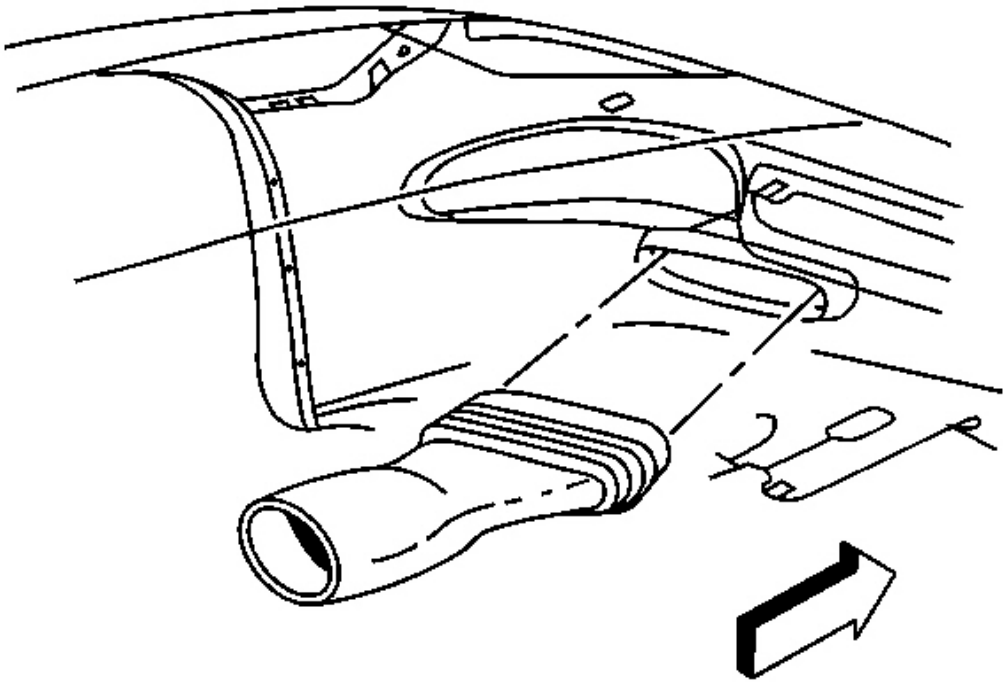

Fig. 168: Brake Caliper Cooling Duct To Front Fascia
Courtesy of GENERAL MOTORS CORP.

5. Position the brake caliper cooling duct to the front fascia and press to secure.
6. Install the front fascia lower closeout panel. Refer to **Close Out Panel - Front Bumper Fascia Lower** in Bumpers.
7. Lower the vehicle.

POSITION LAMP BULB REPLACEMENT (EUROPE JAPAN)

Removal Procedure

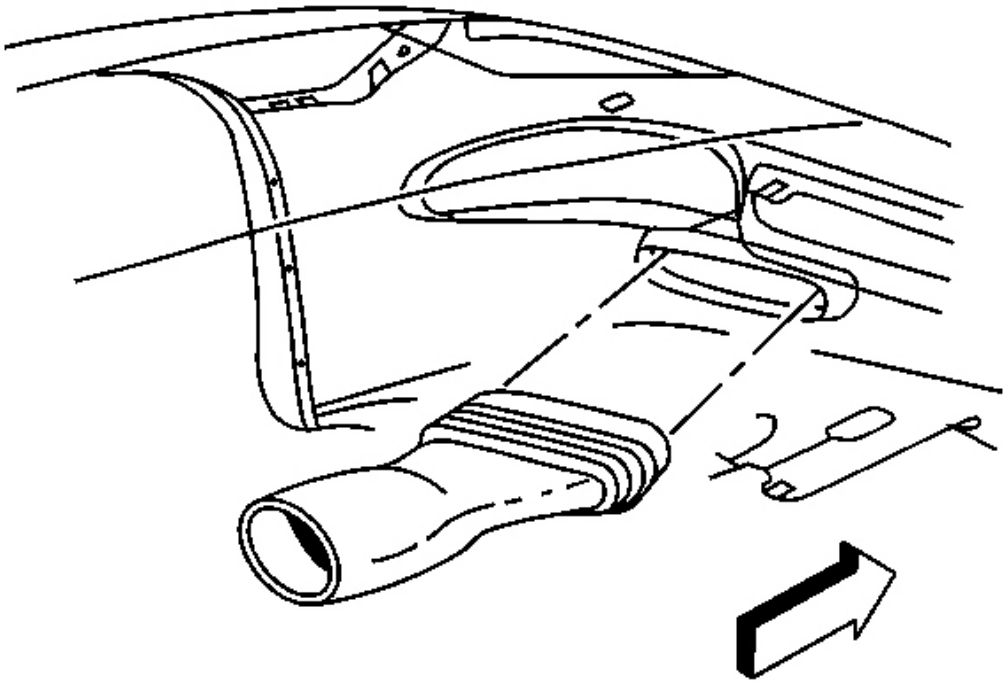

Fig. 169: Brake Caliper Cooling Duct To Front Fascia
Courtesy of GENERAL MOTORS CORP.

1. Raise and support the vehicle. Refer to **Lifting and Jacking the Vehicle** in General Information.
2. Remove the front fascia lower closeout panel. Refer to **Close Out Panel - Front Bumper Fascia Lower** in Bumpers.
3. Release the brake caliper cooling duct from the front fascia, and position aside.

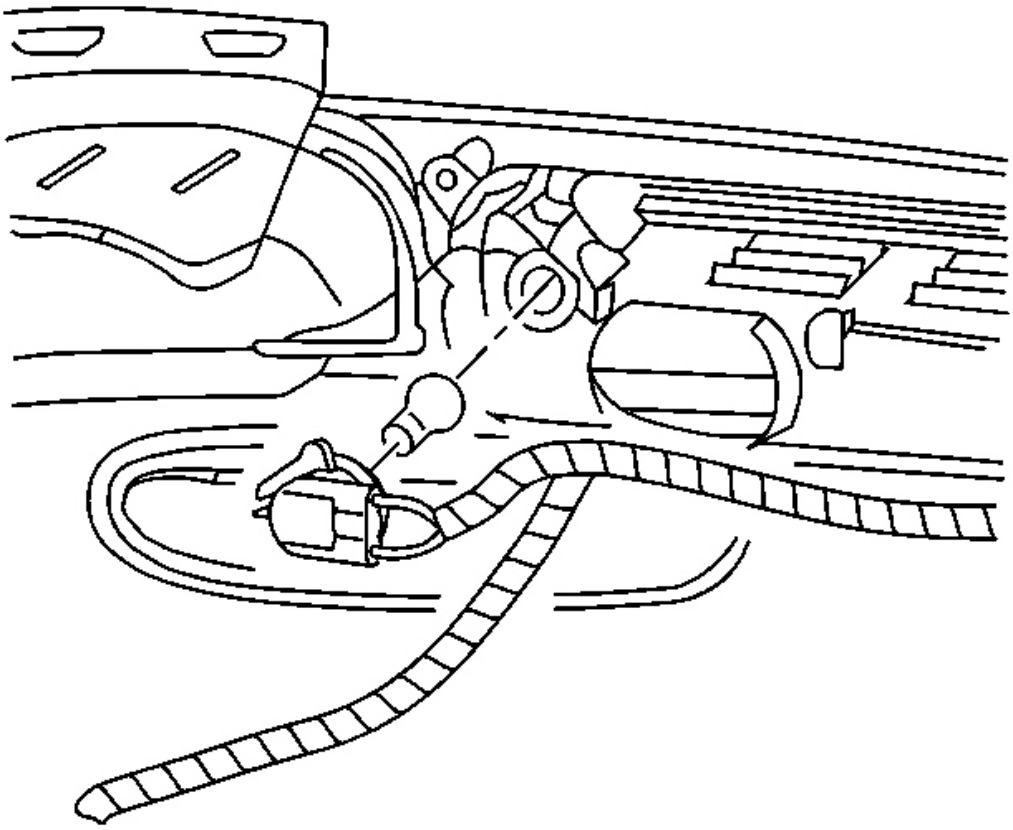

Fig. 170: Front Position Lamp Socket To Lamp Assembly
Courtesy of GENERAL MOTORS CORP.

4. Open the lamp access door on top of the front fascia closeout.
5. Remove the front position lamp socket from the lamp assembly.
6. Remove the bulb from the socket.

Installation Procedure

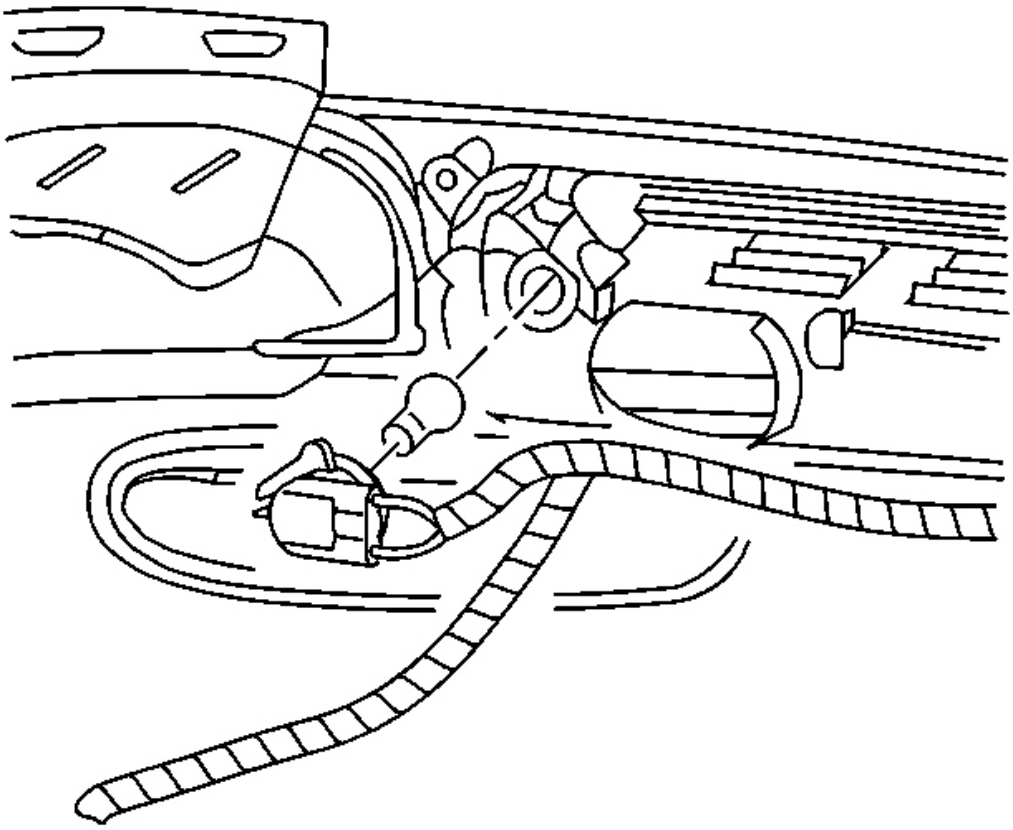

Fig. 171: Front Position Lamp Socket To Lamp Assembly
Courtesy of GENERAL MOTORS CORP.

1. Install the bulb to the socket.
2. Install the socket to the lamp.
3. Close the lamp access door on top of the front fascia closeout.

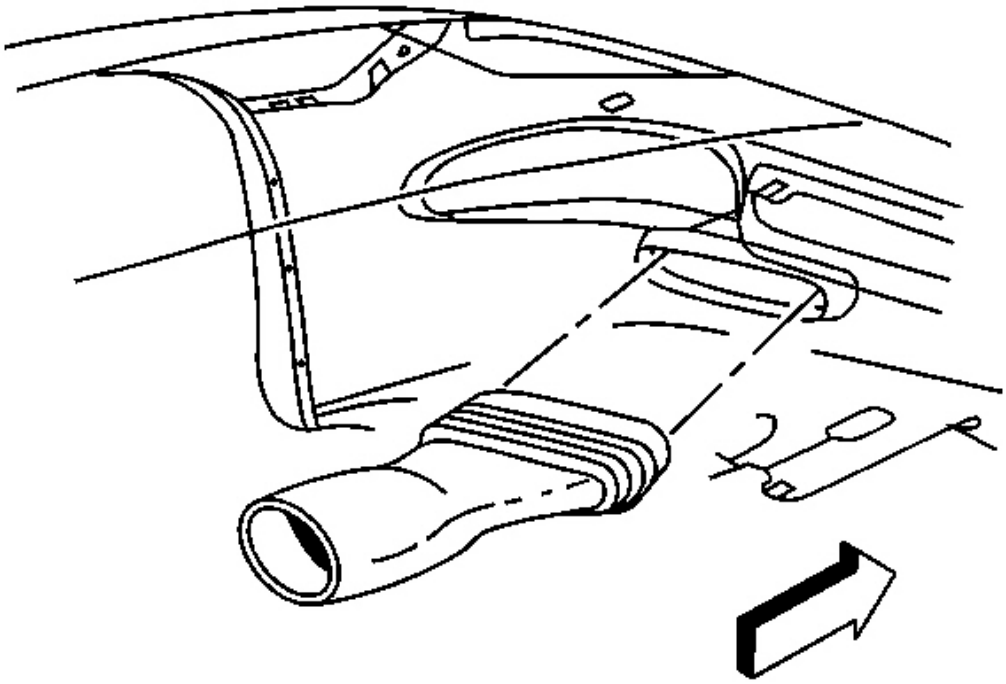

Fig. 172: Brake Caliper Cooling Duct To Front Fascia
Courtesy of GENERAL MOTORS CORP.

4. Position the brake caliper cooling duct to the front fascia and press to secure.
5. Install the front fascia lower closeout panel. Refer to **Close Out Panel - Front Bumper Fascia Lower** in Bumpers.
6. Lower the vehicle.

REPEATER LAMP REPLACEMENT (EUROPE JAPAN)

Removal Procedure

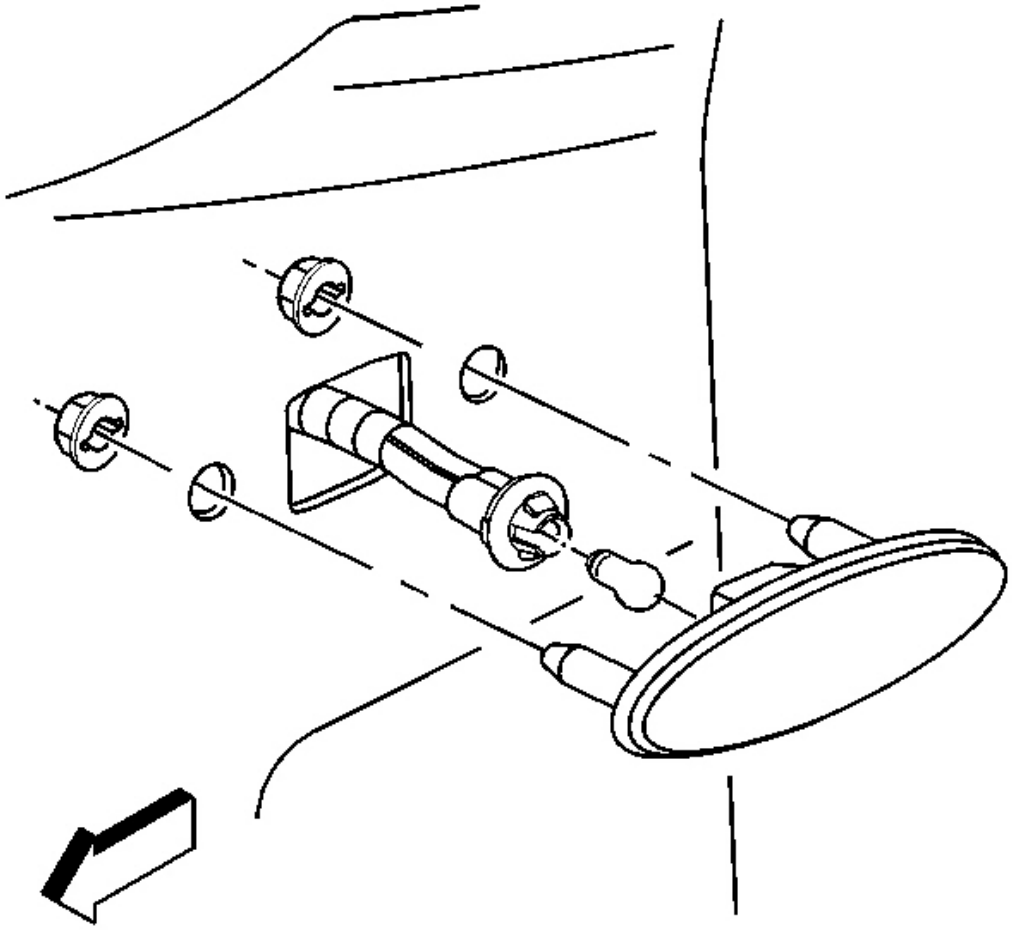

Fig. 173: Front Side Repeater Lamp Socket To Front Side Repeater Lamp Assembly
Courtesy of GENERAL MOTORS CORP.

1. Remove the wheelhouse filler panel. Refer to **Wheelhouse Filler Replacement** in Body Front End.
2. Remove the front side repeater lamp socket from the front side repeater lamp assembly.
3. Remove the lamp assembly retaining nuts.
4. Remove the lamp assembly.

Installation Procedure

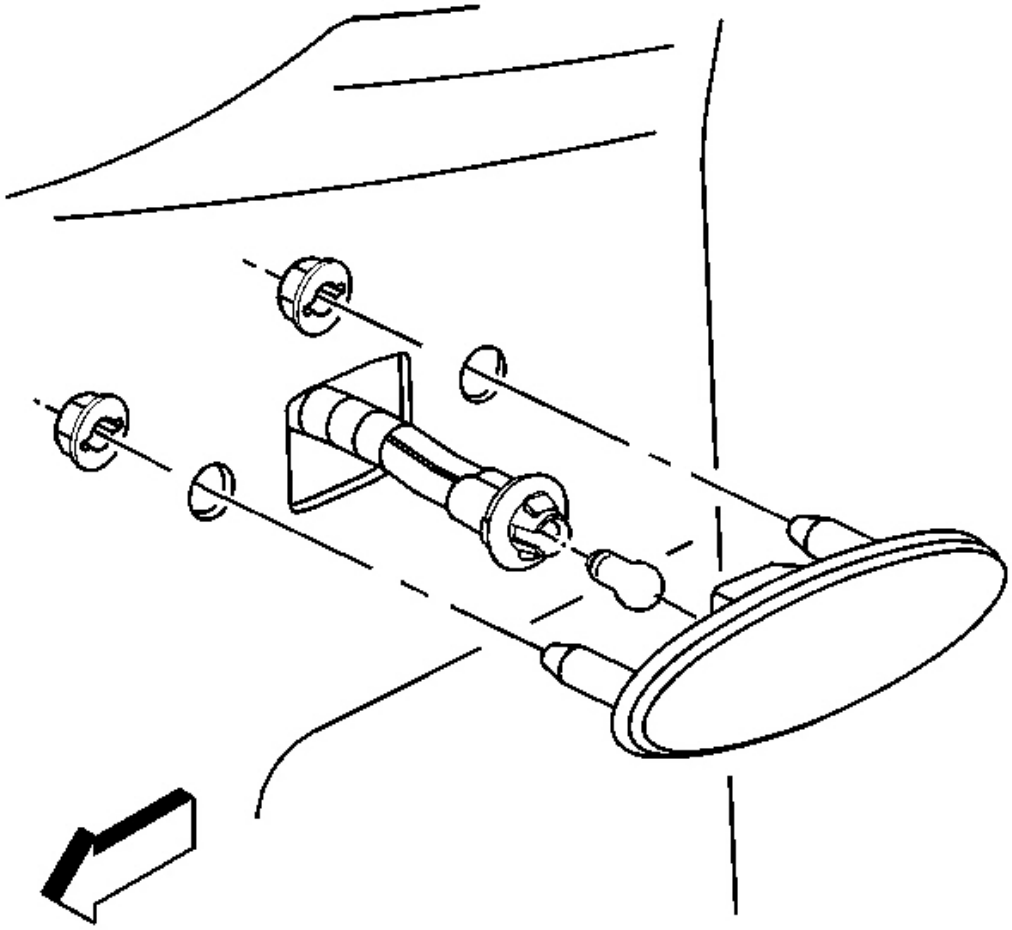

Fig. 174: Front Side Repeater Lamp Socket To Front Side Repeater Lamp Assembly
Courtesy of GENERAL MOTORS CORP.

1. Position the front side repeater lamp to the fender.

NOTE: **Refer to Fastener Notice in Cautions and Notices.**

2. Install the front side repeater lamp retaining nuts.

   Tighten: Tighten the front side repeater lamp retaining nuts to 2 N.m (18 lb in).

3. Install the socket to the lamp assembly.
4. Install the wheelhouse filler panel. Refer to **Wheelhouse Filler Replacement** in Body Front End.

REPEATER LAMP BULB REPLACEMENT (EUROPE JAPAN)

Removal Procedure

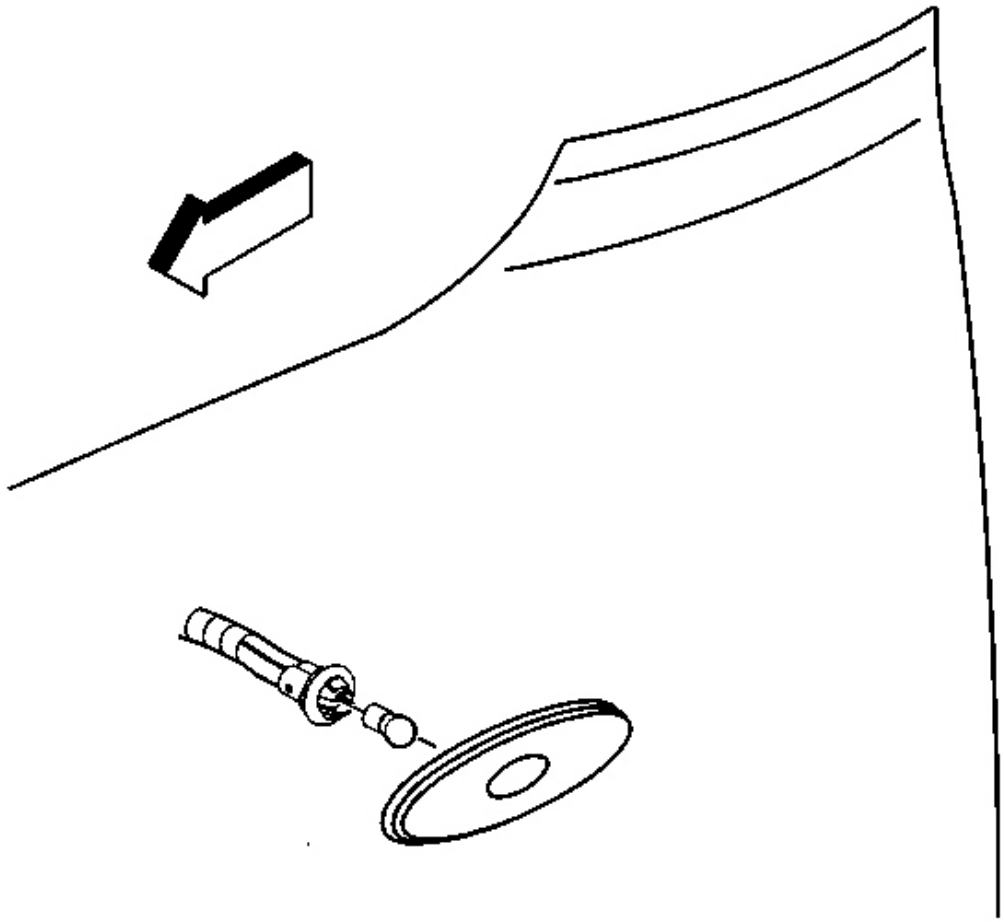

Fig. 175: Front Side Repeater Lamp Socket To Front Side Repeater Lamp Assembly & Wheelhouse Filler Panel
Courtesy of GENERAL MOTORS CORP.

1. Remove the wheelhouse filler panel. Refer to **Wheelhouse Filler Replacement** in Body Front End.
2. Remove the front side repeater lamp socket from the front side repeater lamp assembly.
3. Remove the bulb from the socket.

Installation Procedure

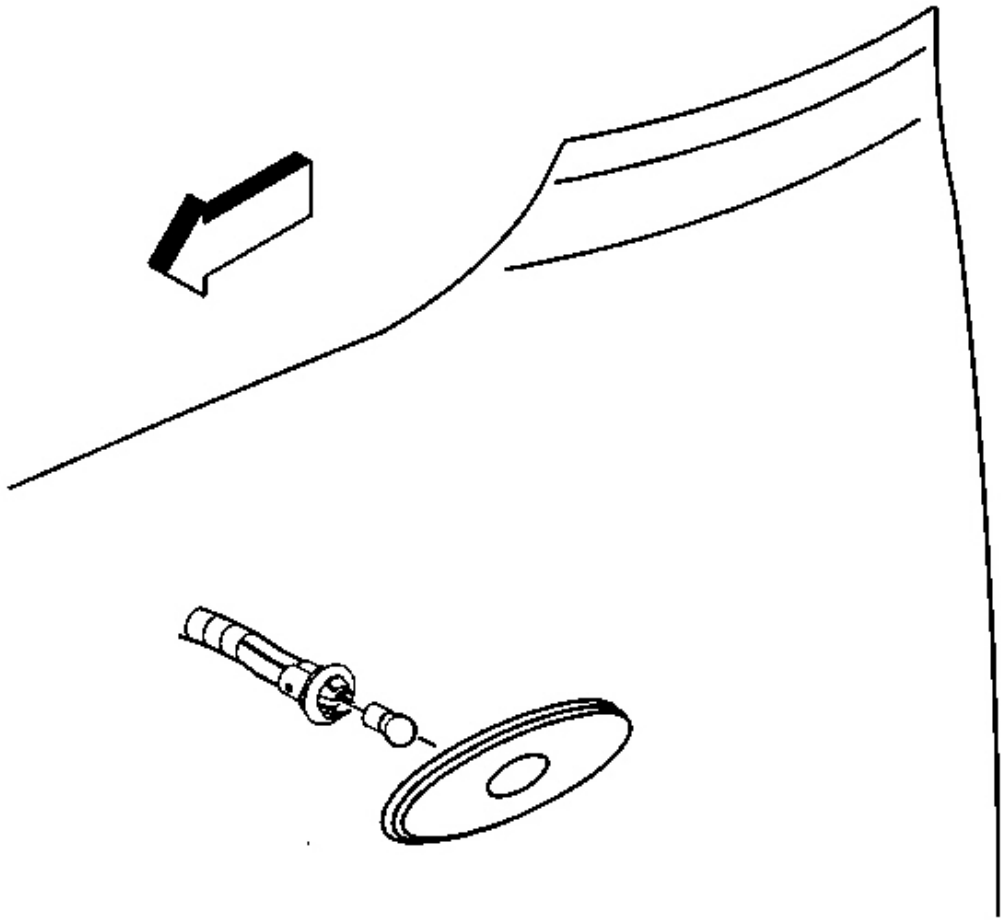

Fig. 176: Front Side Repeater Lamp Socket To Front Side Repeater Lamp Assembly & Wheelhouse Filler Panel
Courtesy of GENERAL MOTORS CORP.

1. Install the bulb to the socket.
2. Install the socket to the lamp assembly.
3. Install the wheelhouse filler panel. Refer to **Wheelhouse Filler Replacement** in Body Front End.

MARKER LAMP REPLACEMENT - SIDE

Removal Procedure

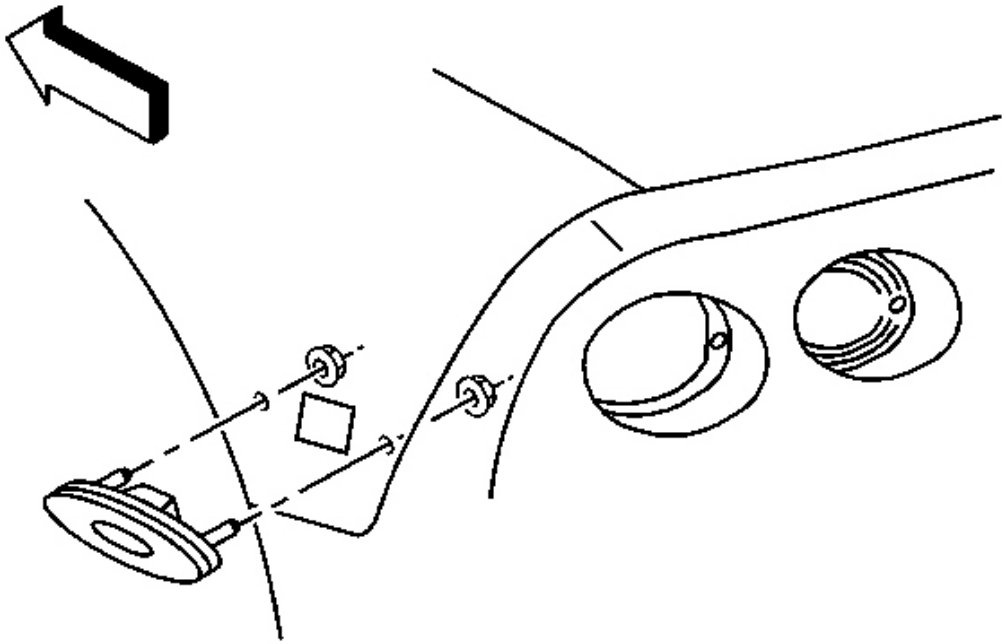

Fig. 177: Sidemarker Lamp Socket To Sidemarker Lamp
Courtesy of GENERAL MOTORS CORP.

1. Remove the nearest outer tail lamp. Refer to **Tail Lamp Replacement** .
2. Remove the two nuts attaching the radio antenna bracket and position the antenna for access to the side marker lamp if equipped with a power antenna.
3. Remove the sidemarker lamp socket from the sidemarker lamp.

   Access the sidemarker lamp through the tail lamp opening.

4. Remove the sidemarker lamp retaining nuts.
5. Remove the sidemarker lamp.

Installation Procedure

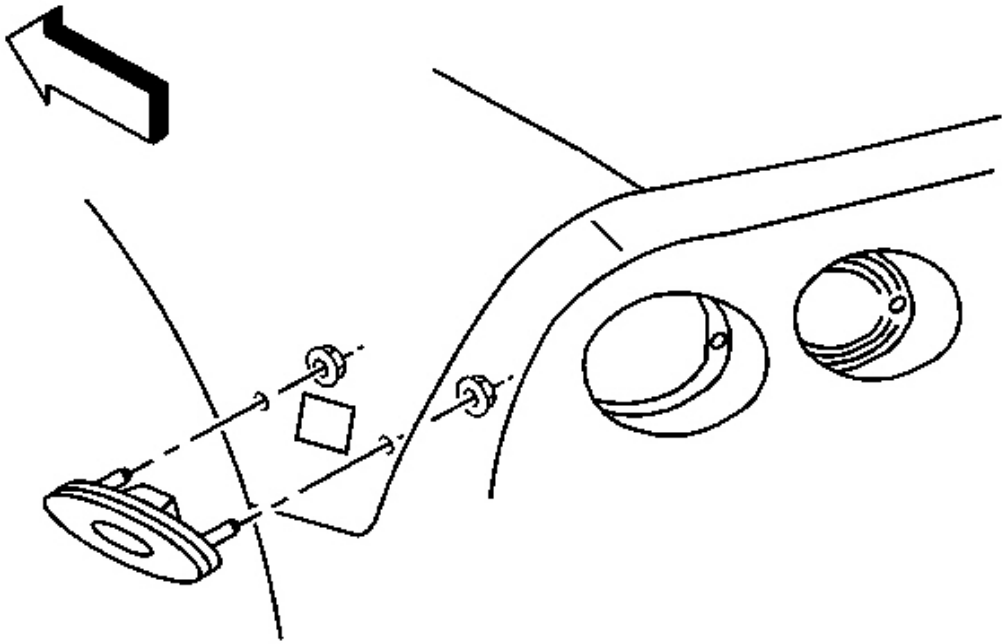

Fig. 178: Sidemarker Lamp Socket To Sidemarker Lamp
Courtesy of GENERAL MOTORS CORP.

1. Position the sidemarker lamp to the fender.

NOTE: **Refer to Fastener Notice in Cautions and Notices.**

2. Install the sidemarker lamp retaining nuts.

   Tighten: Tighten the rear sidemarker lamp retaining nuts to 2 N.m (18 lb in).

3. Install the socket to the sidemarker lamp assembly.
4. Install the nuts attaching the radio antenna, if removed.

   Tighten: Tighten the antenna bracket retaining nuts to 12 N.m (106 lb in).

5. Install the tail lamp. Refer to **Tail Lamp Replacement** .

MARKER LAMP BULB REPLACEMENT - SIDE

Removal Procedure

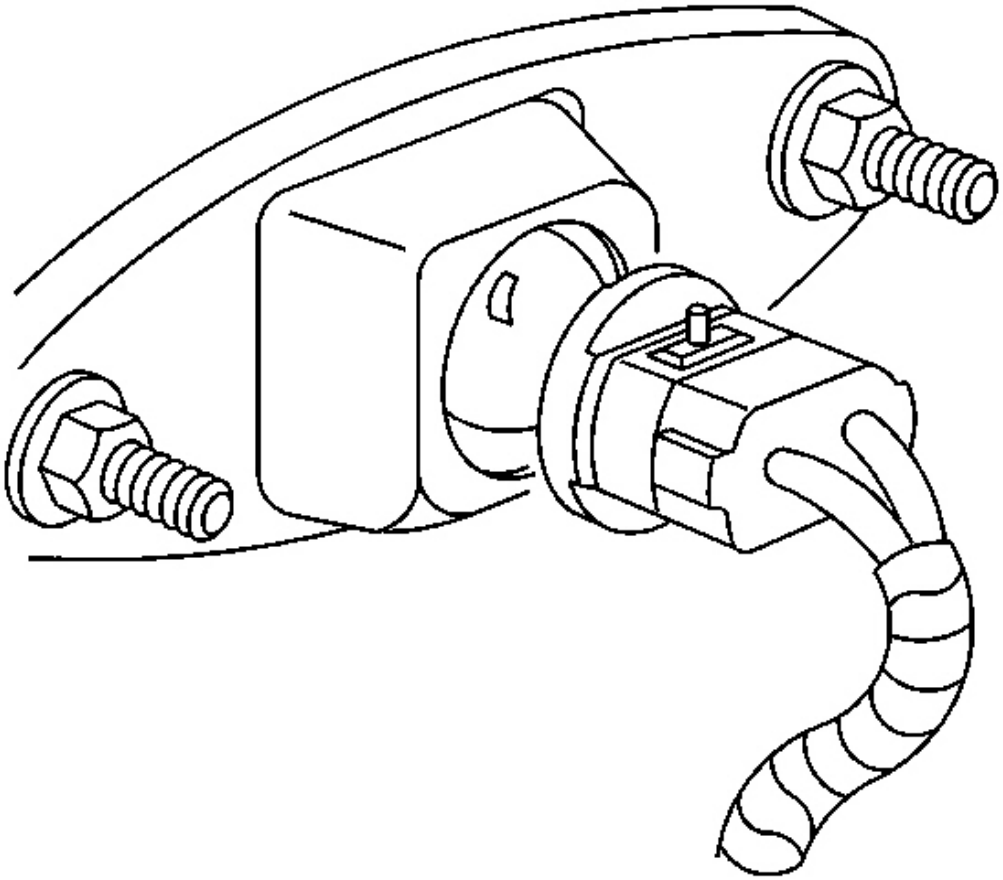

Fig. 179: Sidemarker Lamp Socket At Tail Lamp Opening
Courtesy of GENERAL MOTORS CORP.

1. Remove the nearest outer tail lamp. Refer to **Tail Lamp Replacement** .

   Access the sidemarker lamp through the tail lamp opening.

2. Remove the sidemarker lamp socket from the sidemarker lamp assembly by rotating the socket counterclockwise.
3. Remove the bulb from the socket.

Installation Procedure

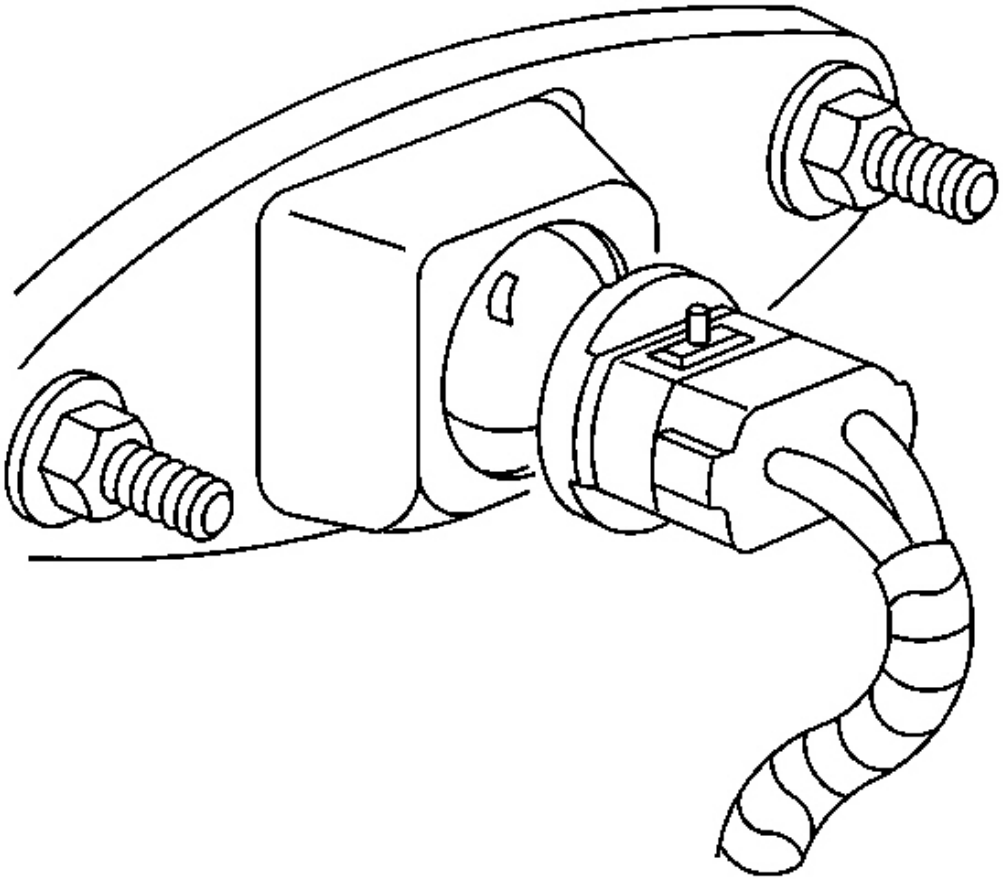

Fig. 180: Sidemarker Lamp Socket At Tail Lamp Opening
Courtesy of GENERAL MOTORS CORP.

1. Install the bulb to the sidemarker lamp socket.
2. Install the socket to the sidemarker lamp assembly. Rotate the socket clockwise to engage the locking tabs.
3. Install the tail lamp. Refer to **Tail Lamp Replacement** .

PARK/TURN SIGNAL/SIDE MARKER LAMP REPLACEMENT

Removal Procedure

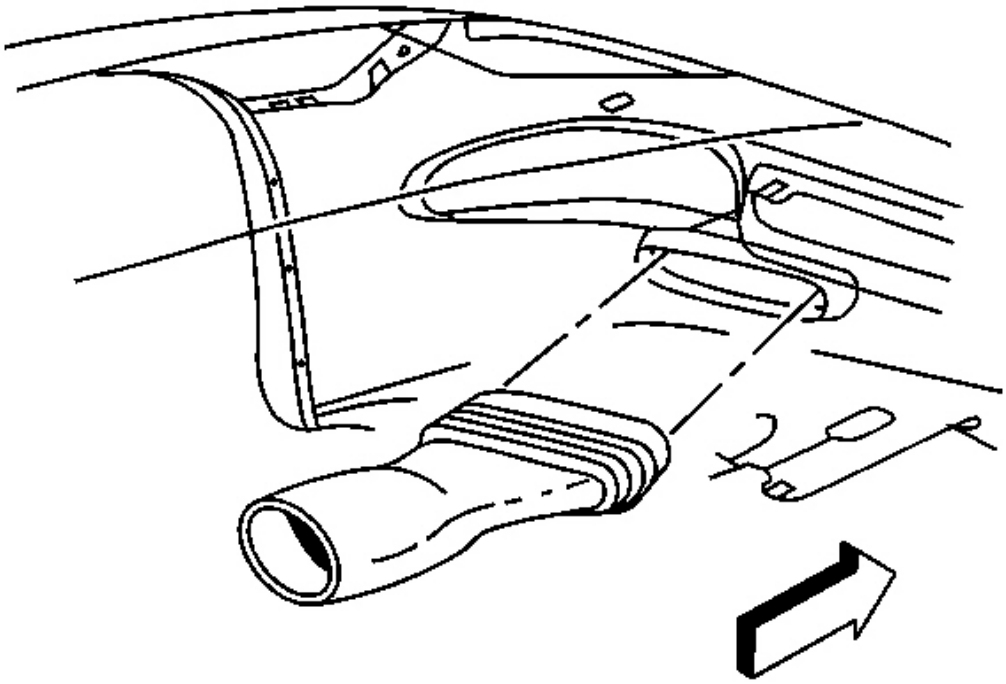

Fig. 181: Brake Caliper Cooling Duct To Front Fascia
Courtesy of GENERAL MOTORS CORP.

1. Raise and support the vehicle. Refer to **Lifting and Jacking the Vehicle** in General Information.
2. Remove the front fascia lower closeout panel. Refer to **Close Out Panel - Front Bumper Fascia Lower** in Bumpers.
3. Release the brake caliper cooling duct from the front fascia, and position the duct aside.

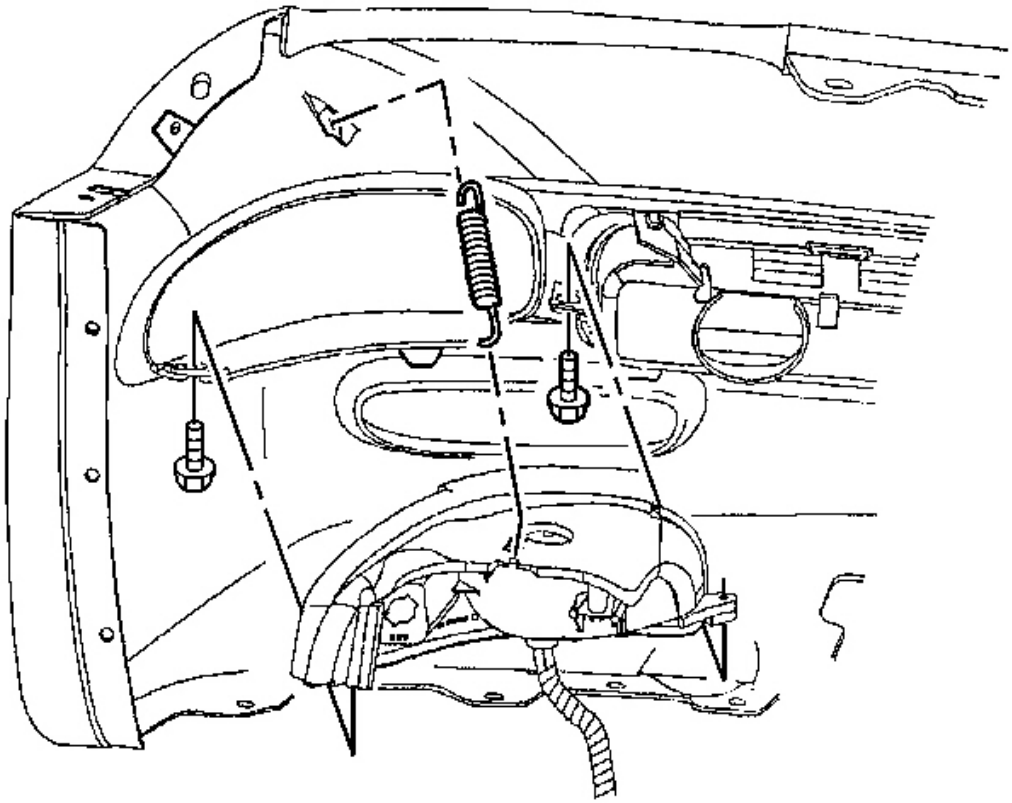

Fig. 182: Lamp Bracket To Front Fascia
Courtesy of GENERAL MOTORS CORP.

4. Remove the front turn signal lamp bracket retaining spring from the lamp bracket.
5. Remove the lamp bracket retaining spring from the front fascia.
6. Remove the front turn signal lamp bracket retaining screws.

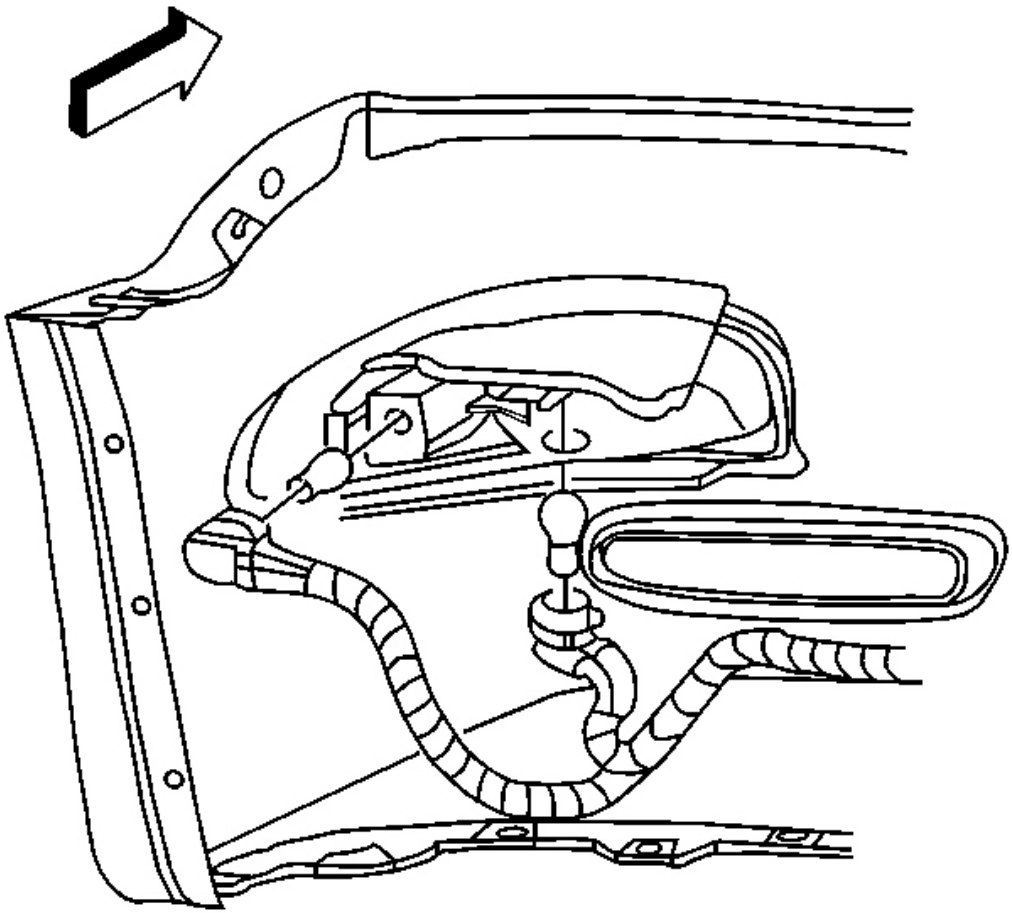

Fig. 183: Sockets To Lamp
Courtesy of GENERAL MOTORS CORP.

7. Disconnect the sockets from the lamp.

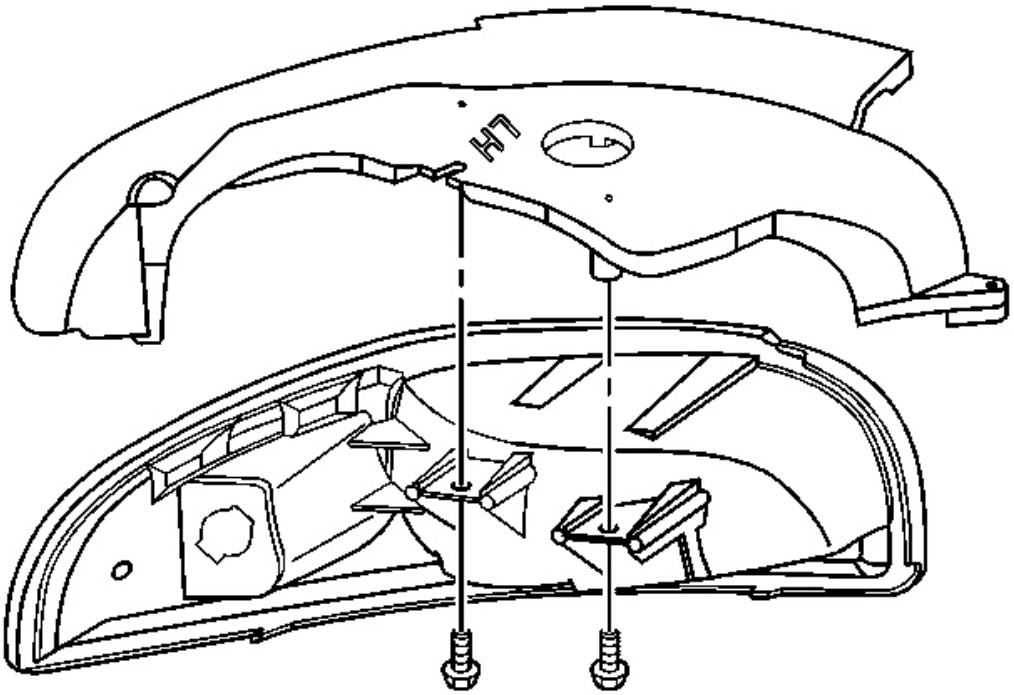

Fig. 184: Lamp To Bracket & Screws
Courtesy of GENERAL MOTORS CORP.

8. Remove the lamp, with the bracket, from the vehicle.
9. Remove the lamp to bracket retaining screws.
10. Remove the lamp from the bracket.

Installation Procedure

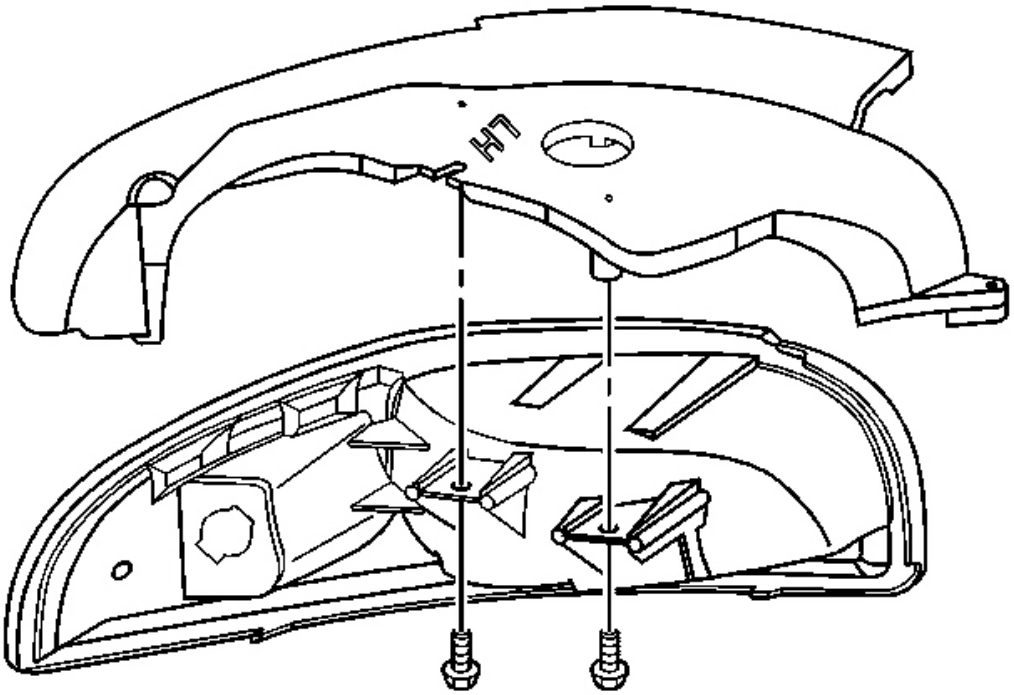

Fig. 185: Lamp To Bracket & Screws
Courtesy of GENERAL MOTORS CORP.

1. Install the front park/turn signal and sidemarker lamp into position on the front turn signal lamp bracket.

   NOTE: Refer to Fastener Notice in Cautions and Notices.

2. Install the front park/turn signal and sidemarker lamp to bracket retaining screws.

   Tighten: Tighten the front park/turn signal and sidemarker lamp to bracket retaining screws to 2 N.m (18 lb in).

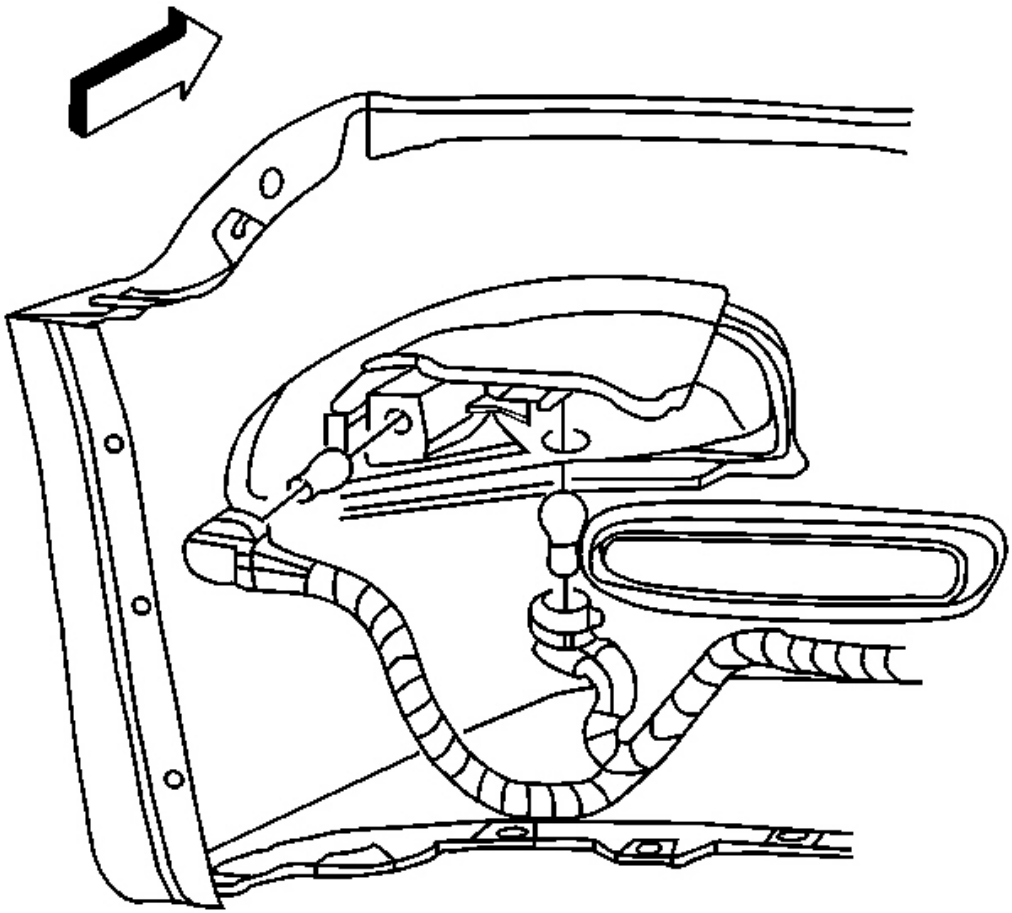

Fig. 186: Sockets To Lamp
Courtesy of GENERAL MOTORS CORP.

3. Install the sockets to the lamp.

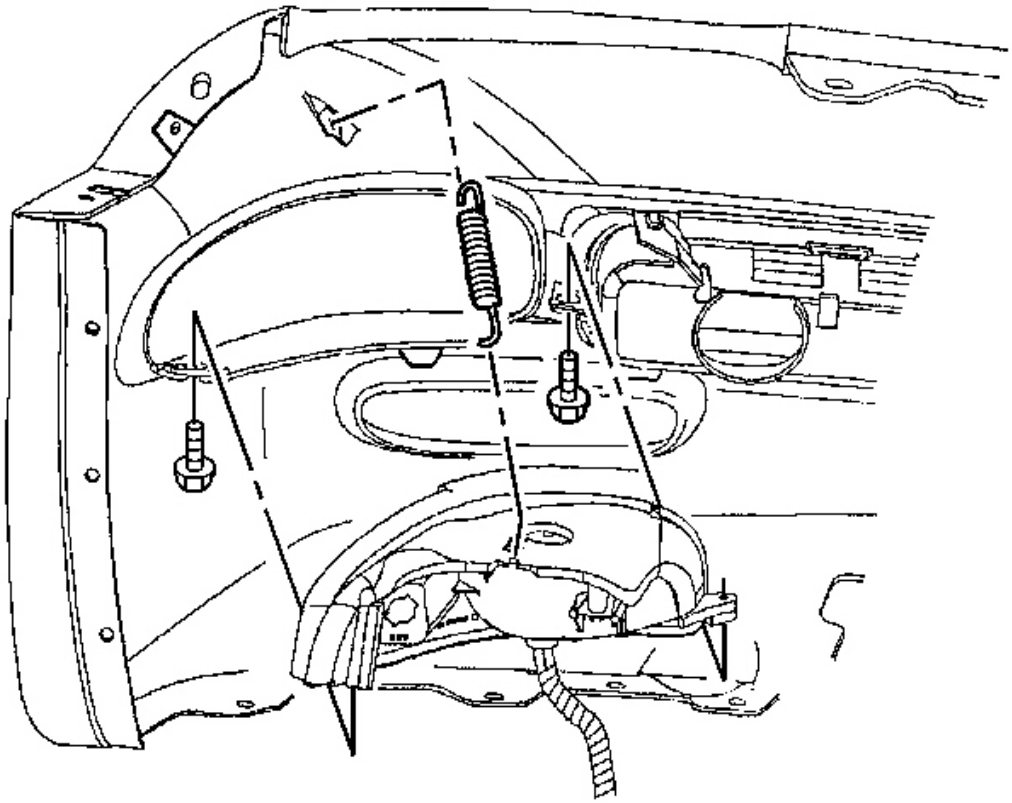

Fig. 187: Lamp Bracket To Front Fascia
Courtesy of GENERAL MOTORS CORP.

4. Install the lamp, with the bracket, to the front fascia.
5. Align the lamp to the opening in the front fascia and hold the lamp firmly in place against the fascia, while installing the front turn signal lamp bracket retaining screws.

   Tighten: Tighten the front turn signal lamp bracket retaining screws to 3 N.m (27 lb in).

6. Install the lamp bracket retaining spring to the front fascia.
7. Install the front turn signal lamp bracket retaining spring to the lamp bracket.

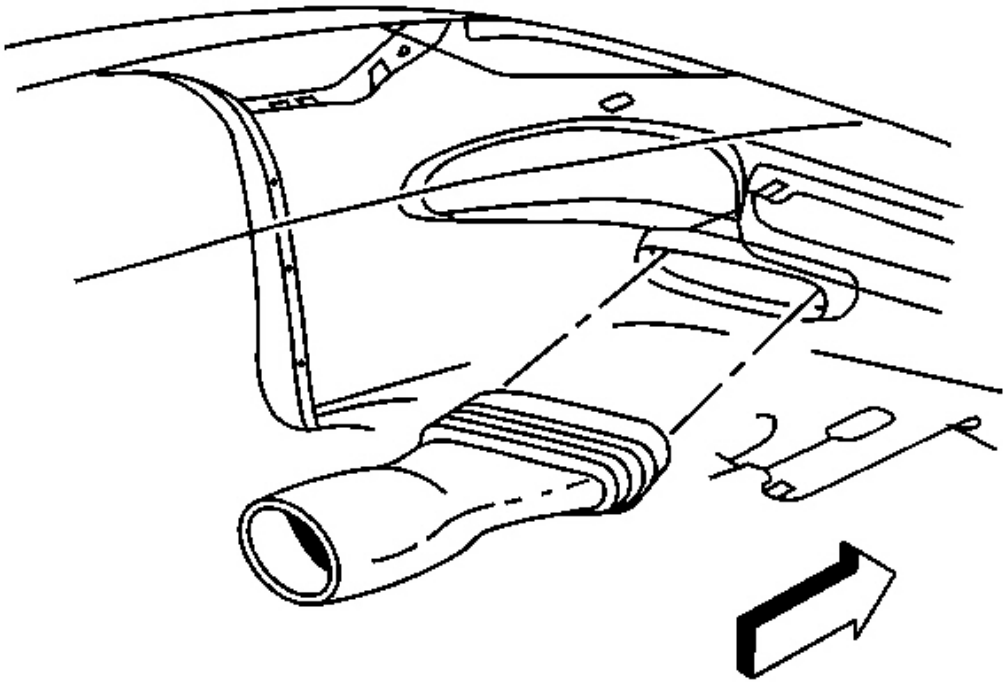

Fig. 188: Brake Caliper Cooling Duct To Front Fascia
Courtesy of GENERAL MOTORS CORP.

8. Position the brake caliper cooling duct to the front fascia and press the duct toward the fascia to secure.
9. Install the front fascia lower closeout panel. Refer to **Close Out Panel - Front Bumper Fascia Lower** in Bumpers.

PARK/TURN SIGNAL/SIDE MARKER LAMP BULB REPLACEMENT

Removal Procedure

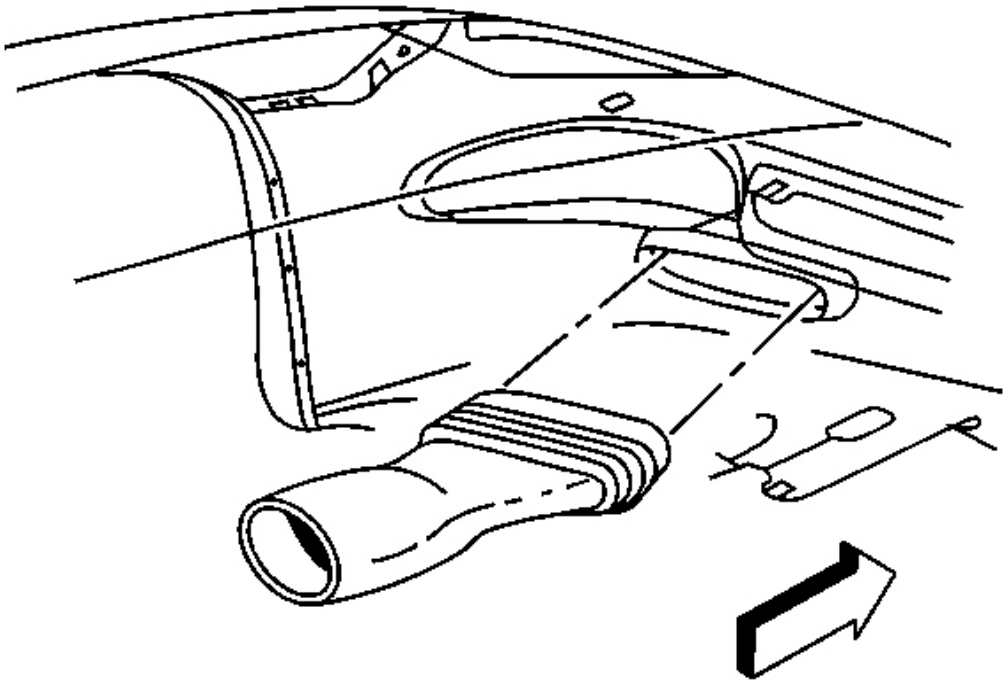

Fig. 189: Brake Caliper Cooling Duct To Front Fascia
Courtesy of GENERAL MOTORS CORP.

1. Raise and support the vehicle. Refer to **Lifting and Jacking the Vehicle** in General Information.
2. Remove the front fascia lower closeout panel. Refer to **Close Out Panel - Front Bumper Fascia Lower** in Bumpers.
3. Release the brake caliper cooling duct from the front fascia, and position the duct aside.

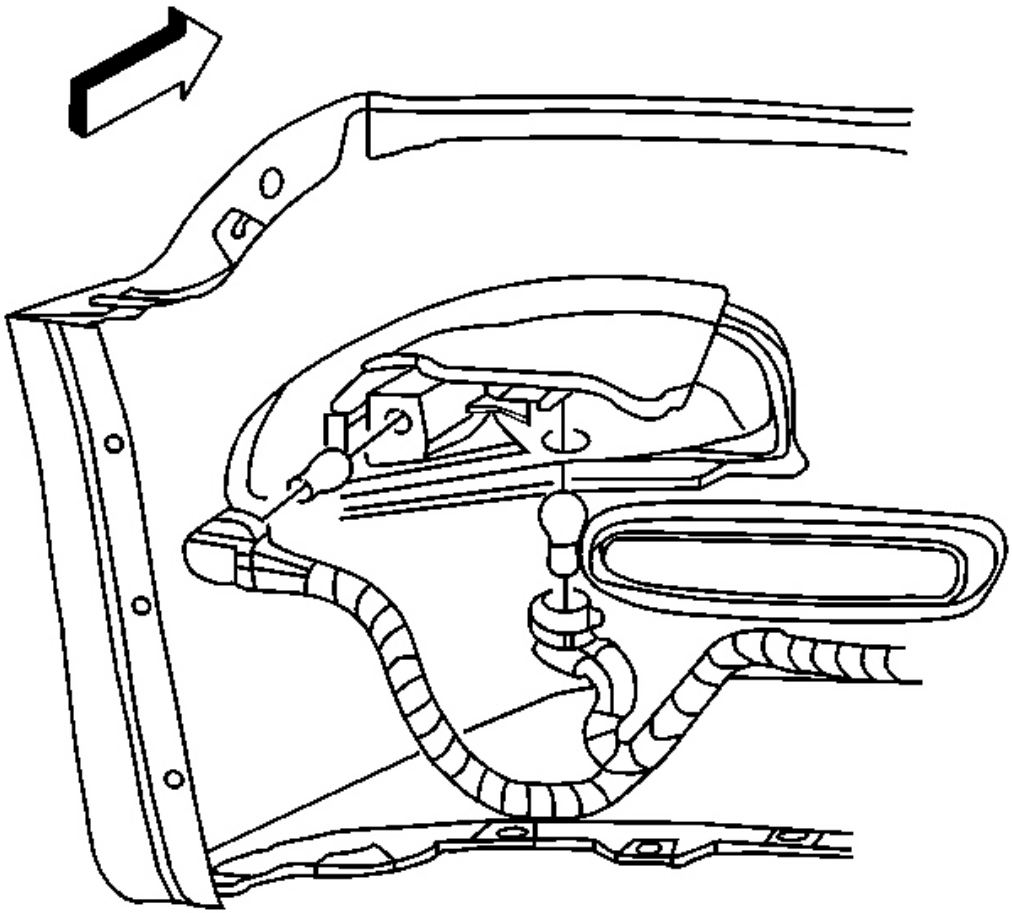

Fig. 190: Sockets To Lamp
Courtesy of GENERAL MOTORS CORP.

4. Remove the appropriate socket from the lamp assembly.
5. Remove the bulb from the socket.

Installation Procedure

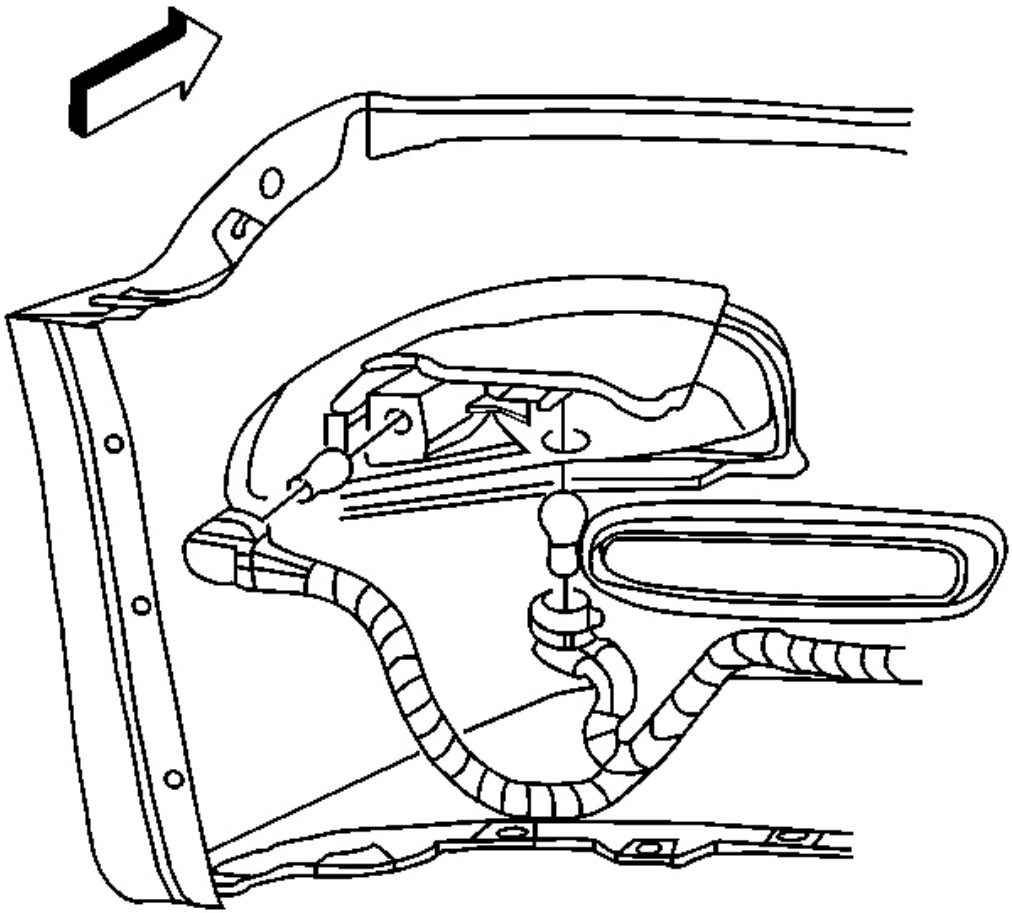

Fig. 191: Sockets To Lamp
Courtesy of GENERAL MOTORS CORP.

1. Install the bulb to the socket.
2. Install the socket to the lamp assembly.

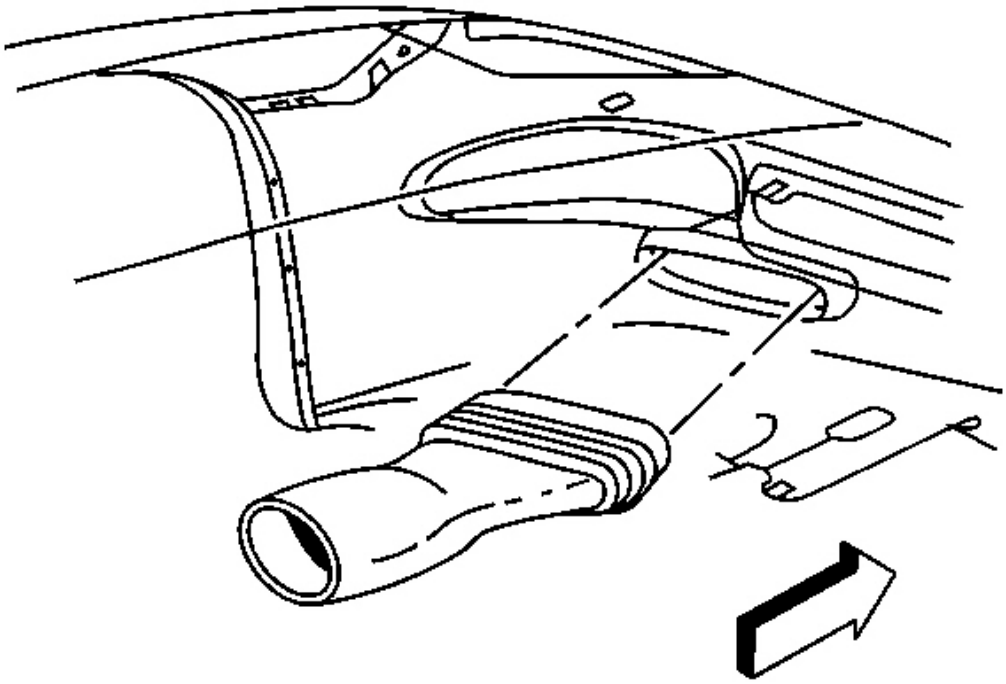

Fig. 192: Brake Caliper Cooling Duct To Front Fascia
Courtesy of GENERAL MOTORS CORP.

3. Position the brake caliper cooling duct to the front fascia and press the duct toward the fascia to secure.
4. Install the front fascia lower closeout panel. Refer to **Close Out Panel - Front Bumper Fascia Lower** in Bumpers.
5. Lower the vehicle.

HIGH MOUNTED STOP LAMP REPLACEMENT

Removal Procedure

The high mount stop lamp is illuminated by a Light Emitting Diode (LED). The lamp and diode are serviced as an assembly.

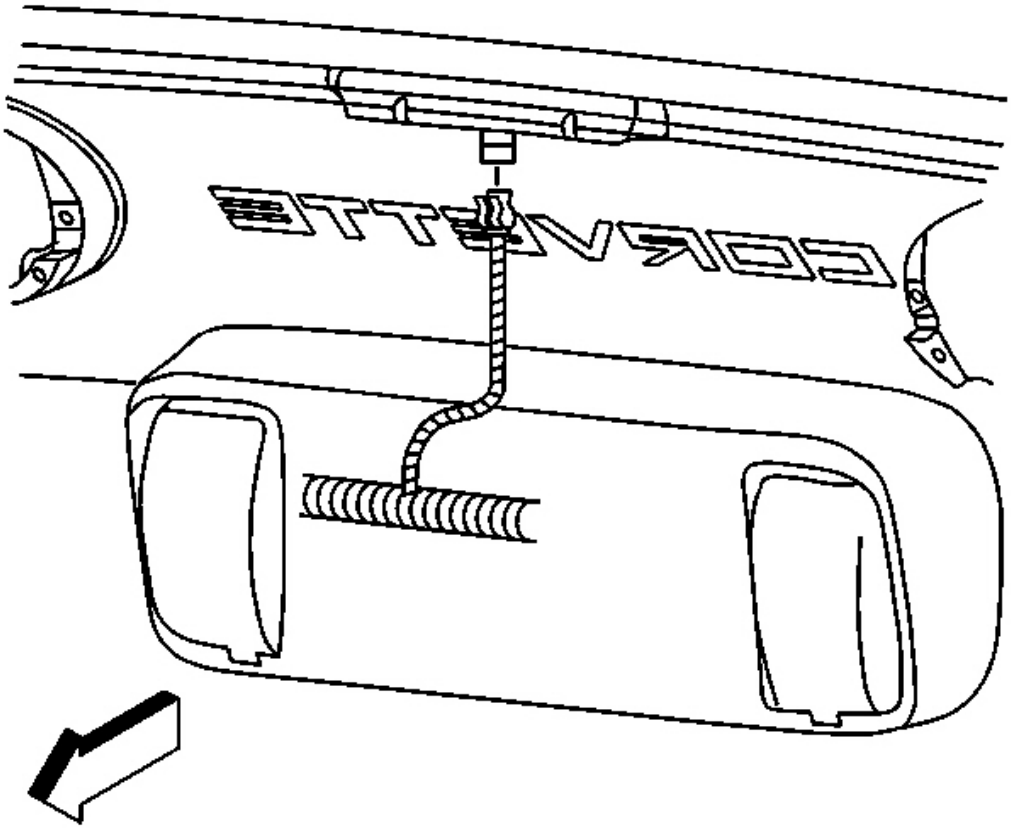

Fig. 193: Electrical Connector To Stop Lamp
Courtesy of GENERAL MOTORS CORP.

1. Remove one of the inner tail lamps. Refer to **Tail Lamp Replacement** .

   Access the high-mounted stop lamp through the tail lamp opening.

2. Disconnect the electrical connector from the stop lamp.

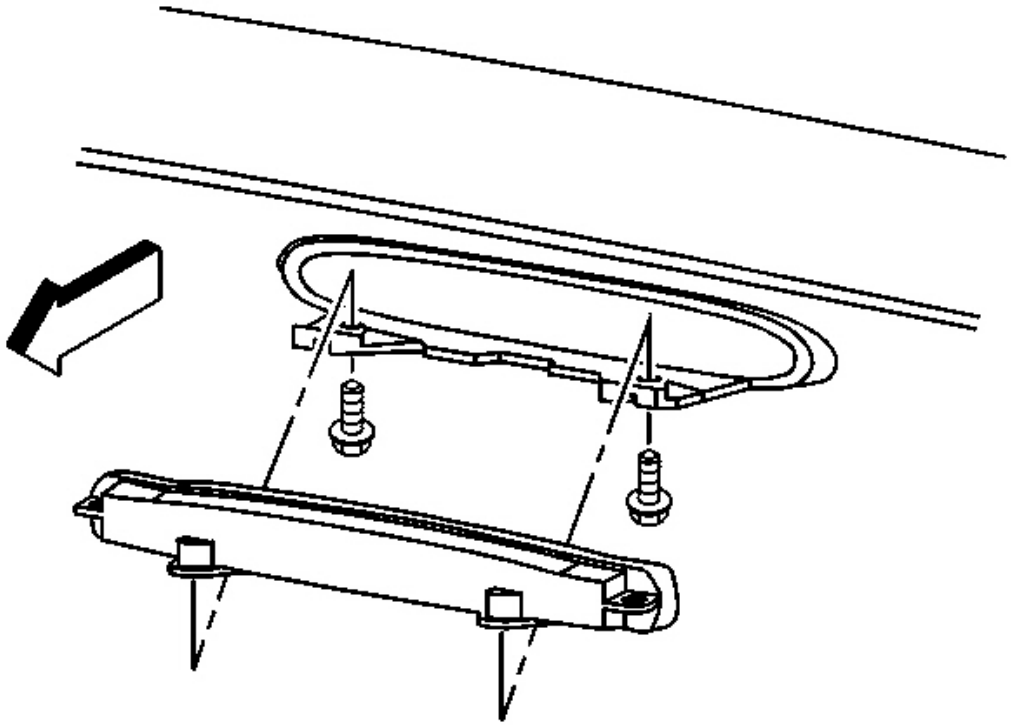

Fig. 194: Stop Lamp To Rear Fascia
Courtesy of GENERAL MOTORS CORP.

3. Remove the screws retaining the stop lamp to the rear fascia.
4. Remove the stop lamp from the vehicle through the tail lamp opening.

Installation Procedure

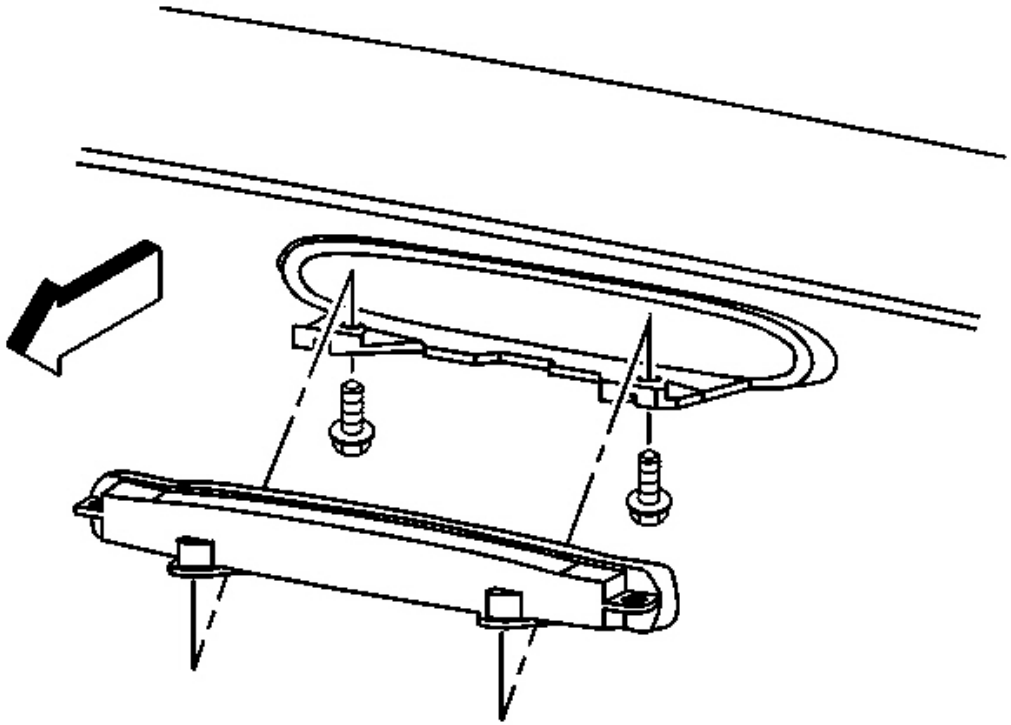

Fig. 195: Stop Lamp To Rear Fascia
Courtesy of GENERAL MOTORS CORP.

1. Install the high-mounted stop lamp into position inside the rear fascia.
2. Loosely install the stop lamp mounting screws.

NOTE: Refer to Fastener Notice in Cautions and Notices.

3. Align the stop lamp to the rear fascia, then press and hold the lamp to the fascia for flushness.

   Tighten: Tighten the high-mounted stop lamp retaining screws to 4 N.m (35 lb in).

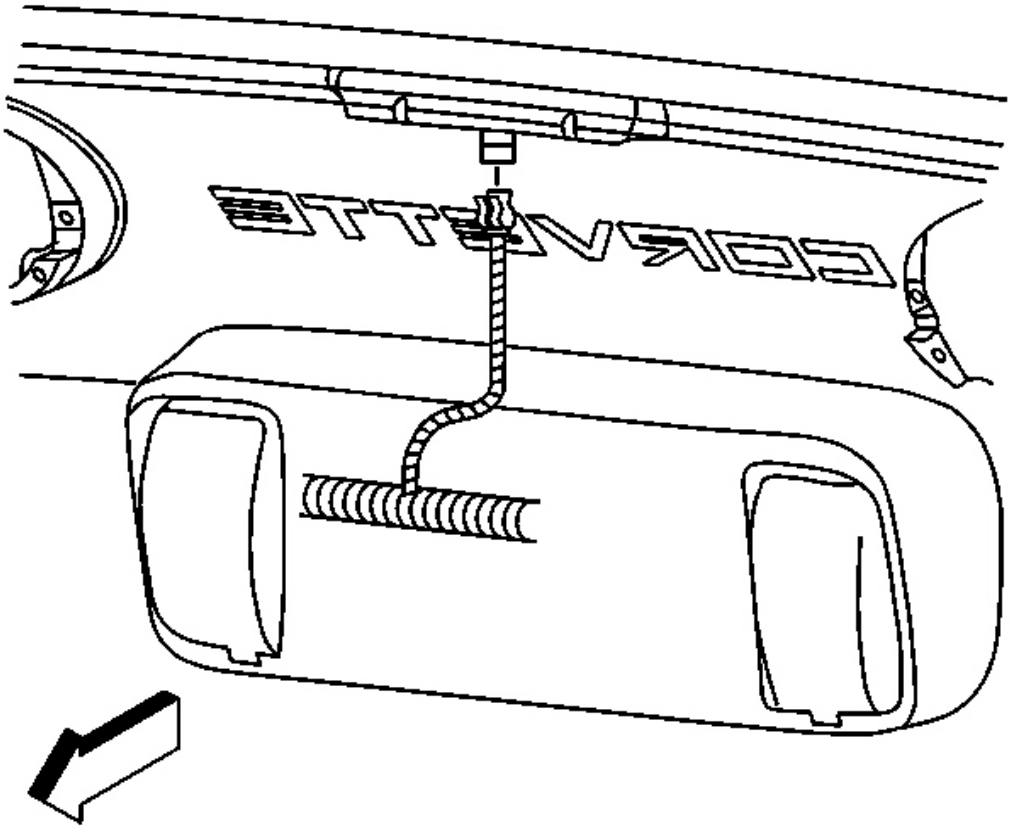

Fig. 196: Electrical Connector To Stop Lamp
Courtesy of GENERAL MOTORS CORP.

4. Connect the electrical connector to the stop lamp.
5. Install the inner tail lamp. Refer to **Tail Lamp Replacement** .

CARGO LAMP REPLACEMENT

Removal Procedure

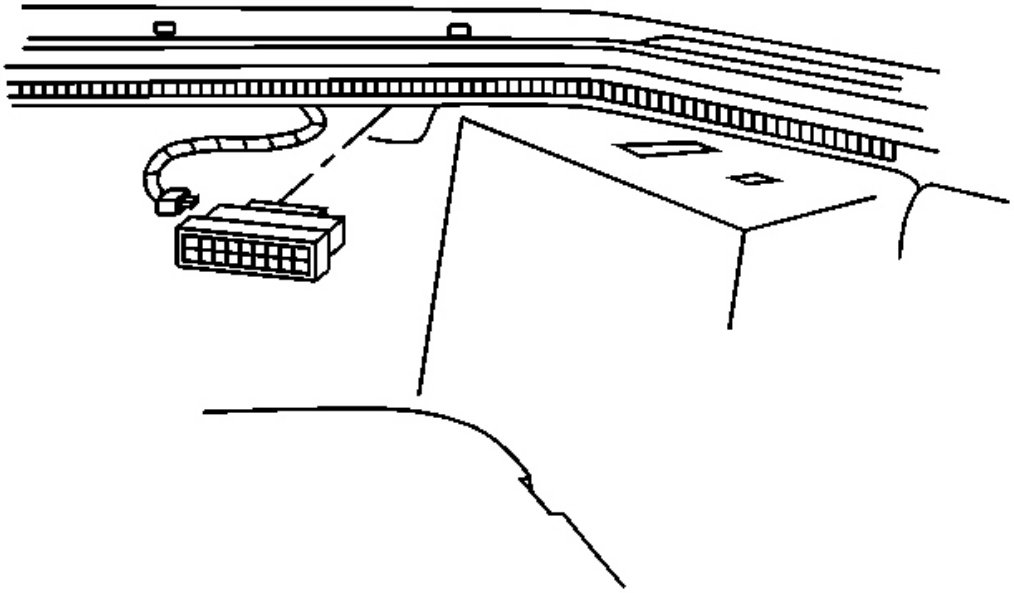

Fig. 197: Slide The Cargo Lamps Up Out Of The Corners Of The Carpet
Courtesy of GENERAL MOTORS CORP.

1. Open the rear lift window (coupe), or open the trunk lid.
2. Remove the cargo lamp assembly from the cargo area corner carpet section.

   Slide the lamp up out of the carpet panel.

Installation Procedure

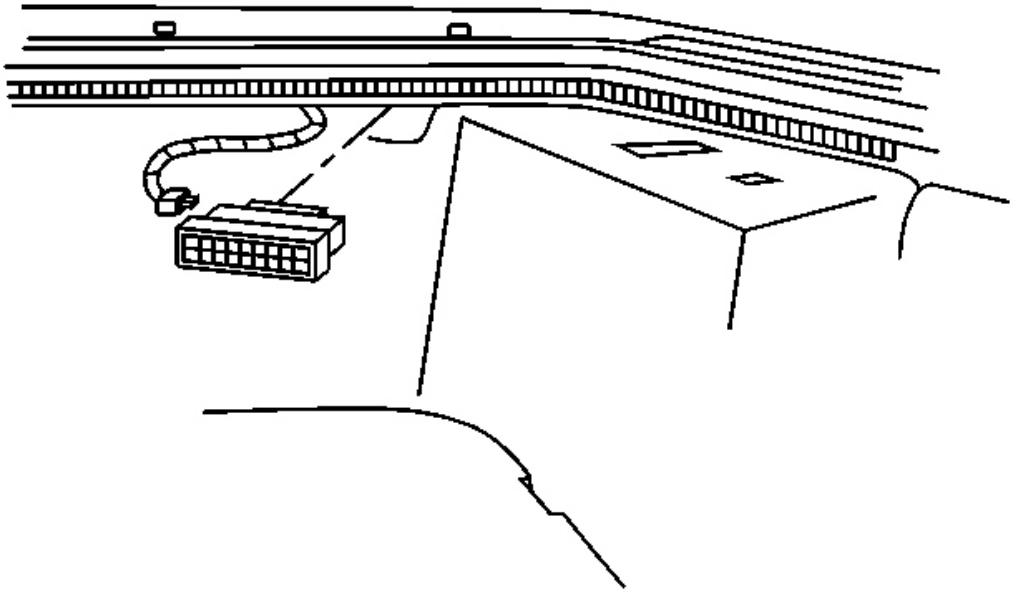

Fig. 198: Slide The Cargo Lamps Up Out Of The Corners Of The Carpet
Courtesy of GENERAL MOTORS CORP.

1. Install the cargo lamp assembly to the cargo area corner carpet section.

   Snap the lamp into the carpet panel.

2. Close the rear lift window (coupe), or close the trunk lid.

CARGO LAMP BULB REPLACEMENT

Removal Procedure

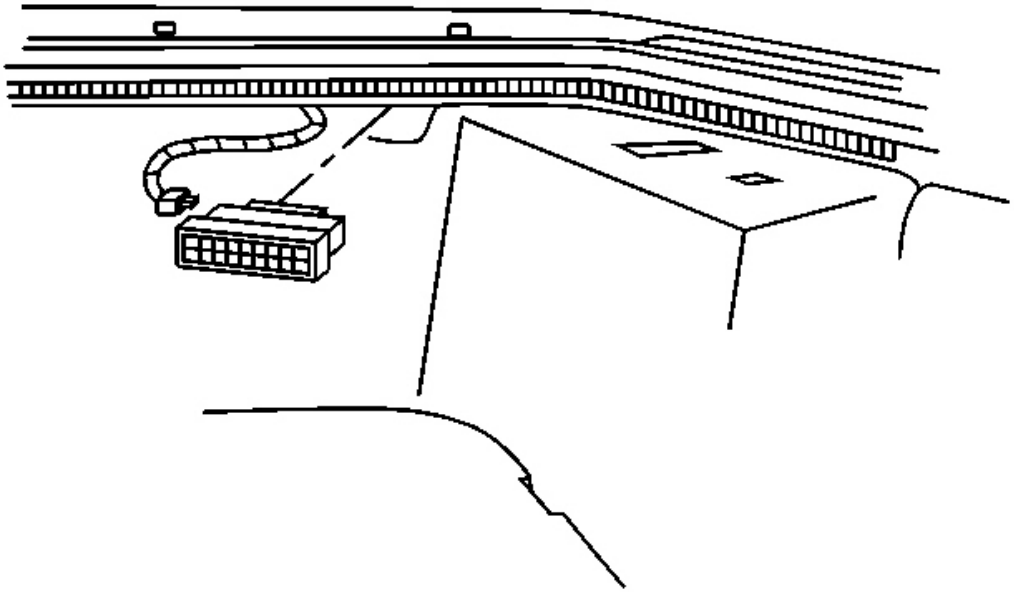

Fig. 199: Slide The Cargo Lamps Up Out Of The Corners Of The Carpet
Courtesy of GENERAL MOTORS CORP.

1. Open the rear lift window (coupe), or open the trunk lid.
2. Remove the cargo lamp assembly from the cargo area corner carpet section.

   Slide the lamp up out of the carpet panel.

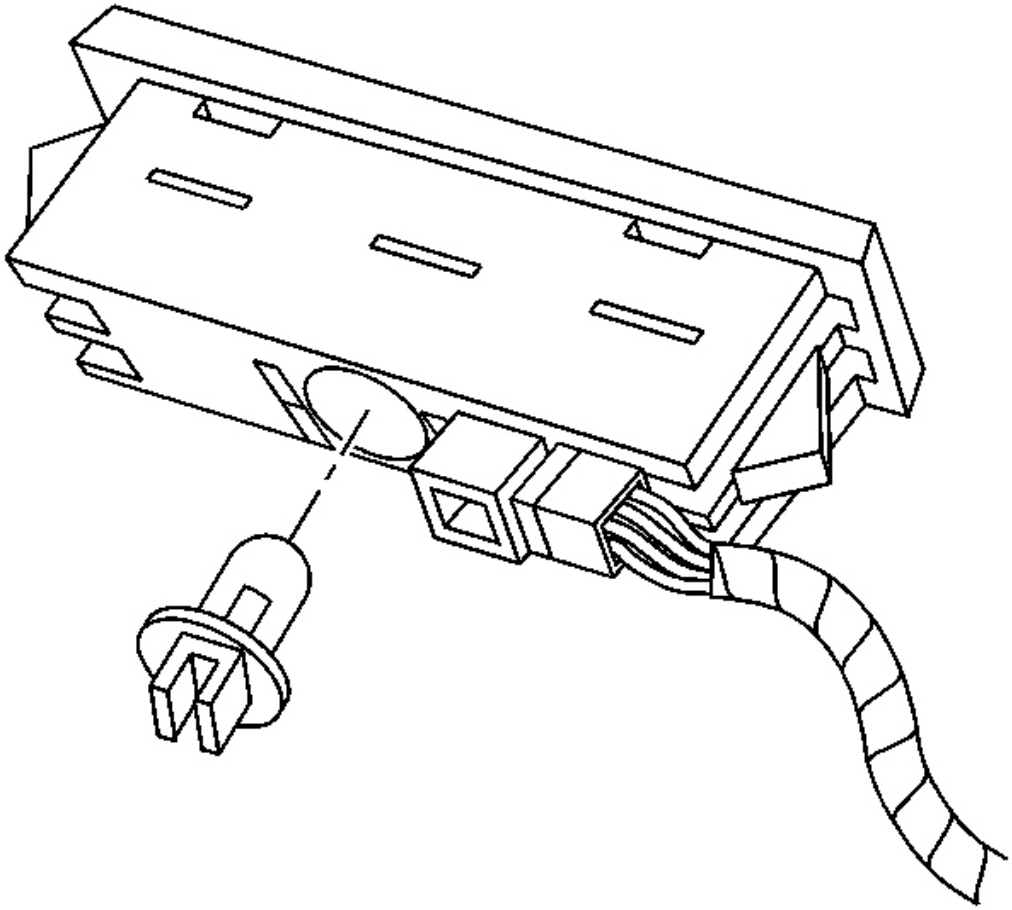

Fig. 200: Bulb To Cargo Lamp
Courtesy of GENERAL MOTORS CORP.

3. Remove the bulb from the cargo lamp.

Installation Procedure

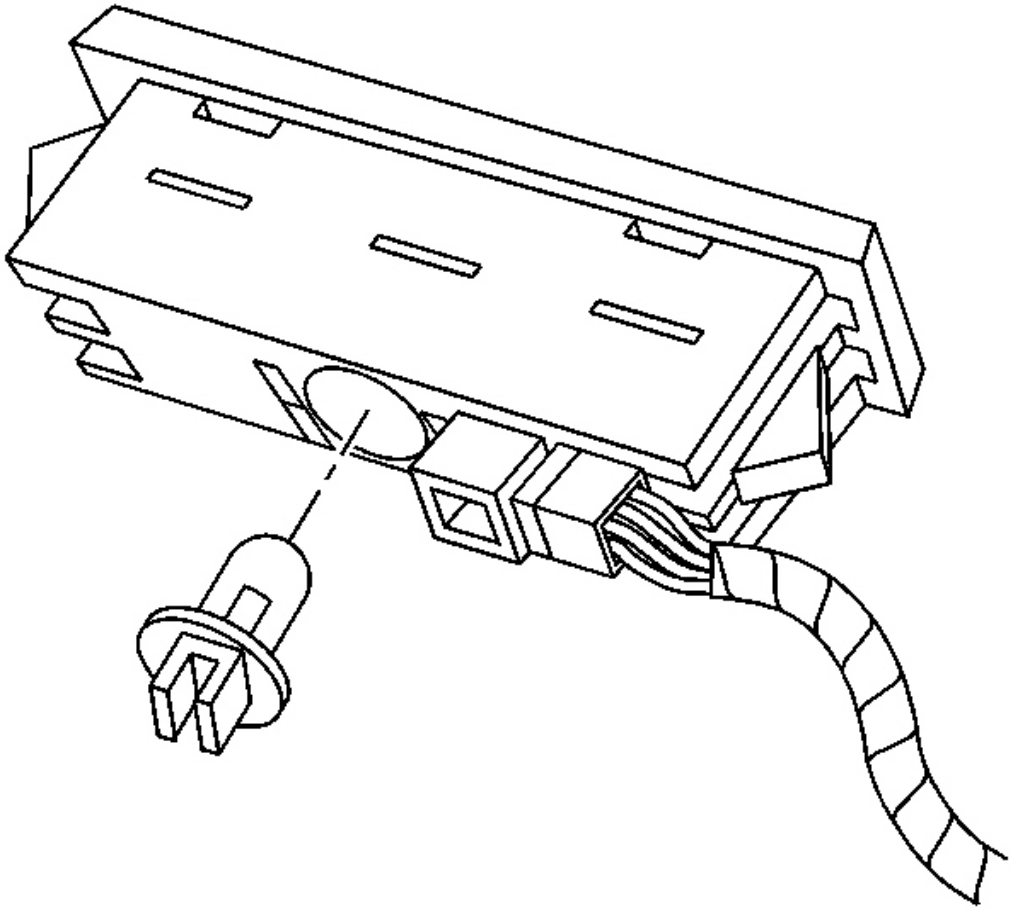

Fig. 201: Bulb To Cargo Lamp
Courtesy of GENERAL MOTORS CORP.

1. Install the bulb to the cargo lamp.

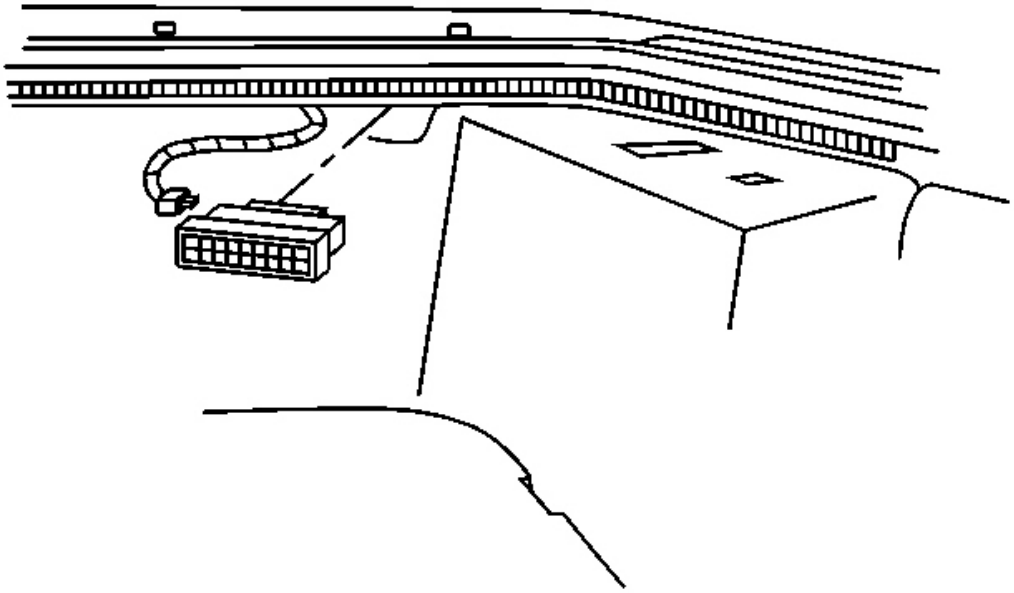

Fig. 202: Slide The Cargo Lamps Up Out Of The Corners Of The Carpet
Courtesy of GENERAL MOTORS CORP.

2. Install the cargo lamp assembly to the cargo area corner carpet section.

   Snap the lamp into the carpet panel.

3. Close the rear lift window (coupe), or close the trunk lid.

BACKUP LAMP REPLACEMENT

Removal Procedure

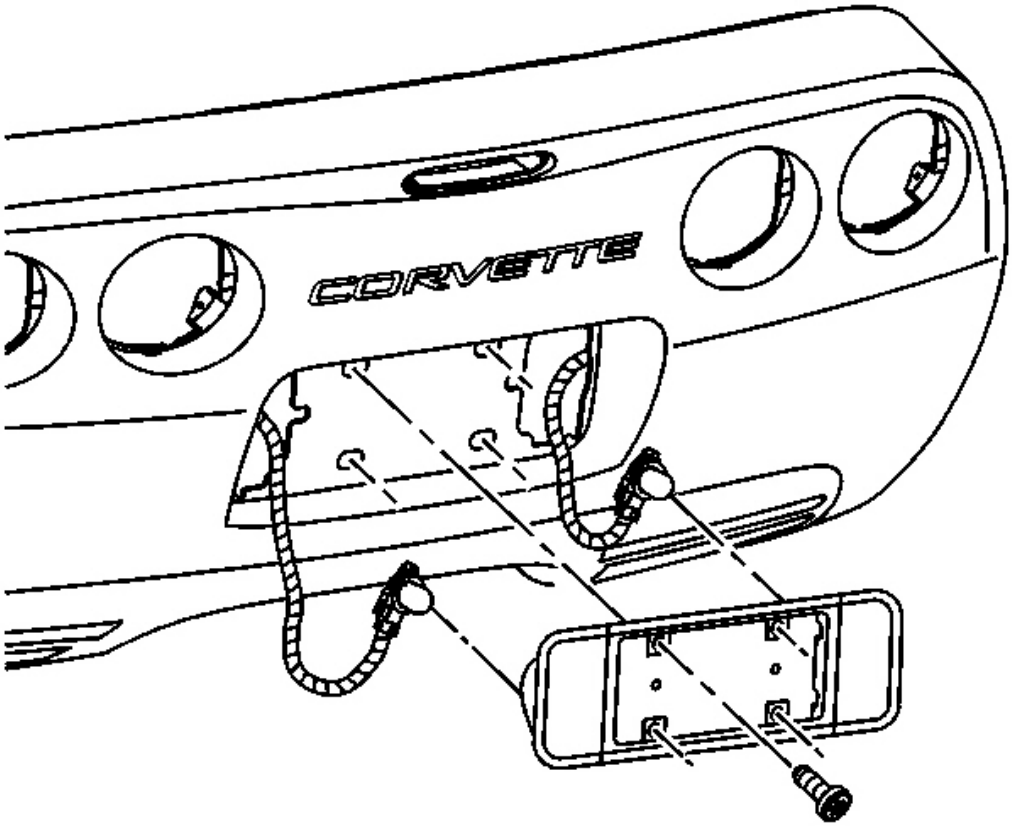

Fig. 203: Backup Lamp Assembly To Vehicle
Courtesy of GENERAL MOTORS CORP.

1. Remove the rear license frame.

   Release the locking tabs with a flat-bladed screwdriver.

2. Remove the rear license plate.
3. Remove the backup lamp assembly retaining screws.
4. Partially remove the backup lamp assembly to expose the backup lamp sockets.
5. Remove the backup lamp sockets from the backup lamp assembly.

   Rotate the sockets counterclockwise to release the locking tabs.

6. Remove the backup lamp assembly from the vehicle.

Installation Procedure

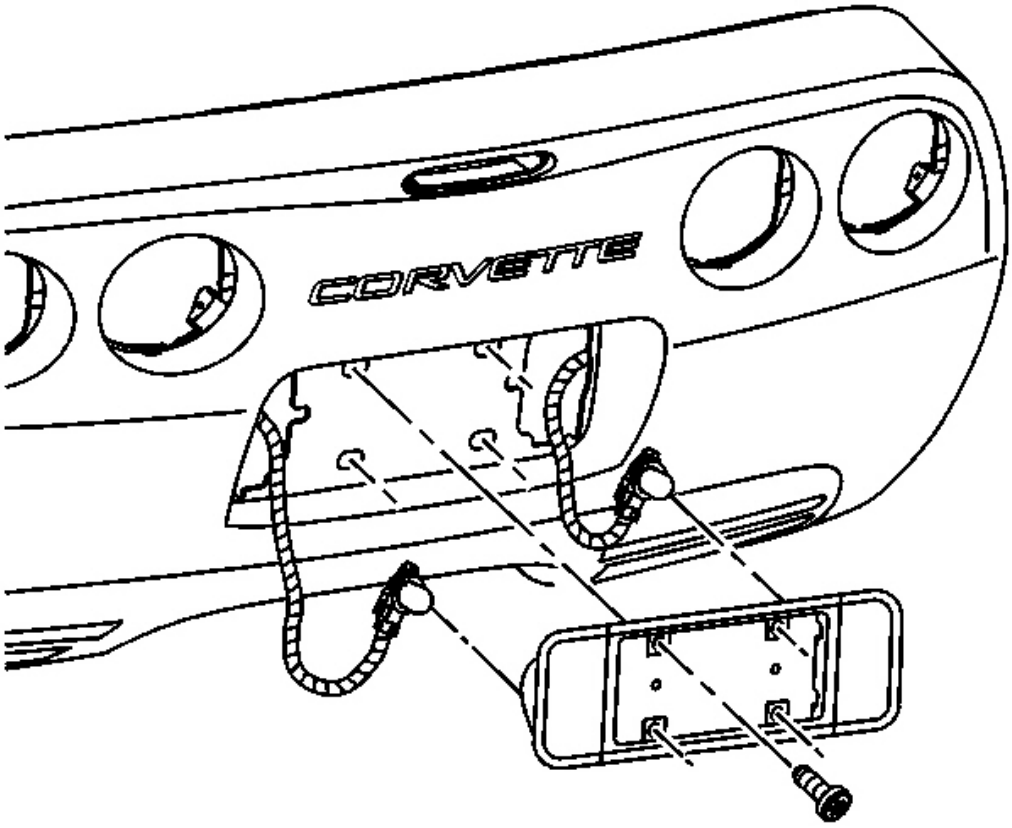

Fig. 204: Backup Lamp Assembly To Vehicle
Courtesy of GENERAL MOTORS CORP.

1. Install the backup lamp sockets to the backup lamp assembly.

   Rotate the sockets clockwise to engage the locking tabs.

2. Install the backup lamp assembly into position on the vehicle.

   NOTE: Refer to Fastener Notice in Cautions and Notices.

3. Install the backup lamp assembly retaining screws.

   Tighten: Tighten the backup lamp and rear license assembly retaining screws to 2 N.m (18 lb in).

4. Install the rear license plate.
5. Install the rear license frame.

   Align the locking tabs, then press engage.

BACKUP LAMP BULB REPLACEMENT

Removal Procedure

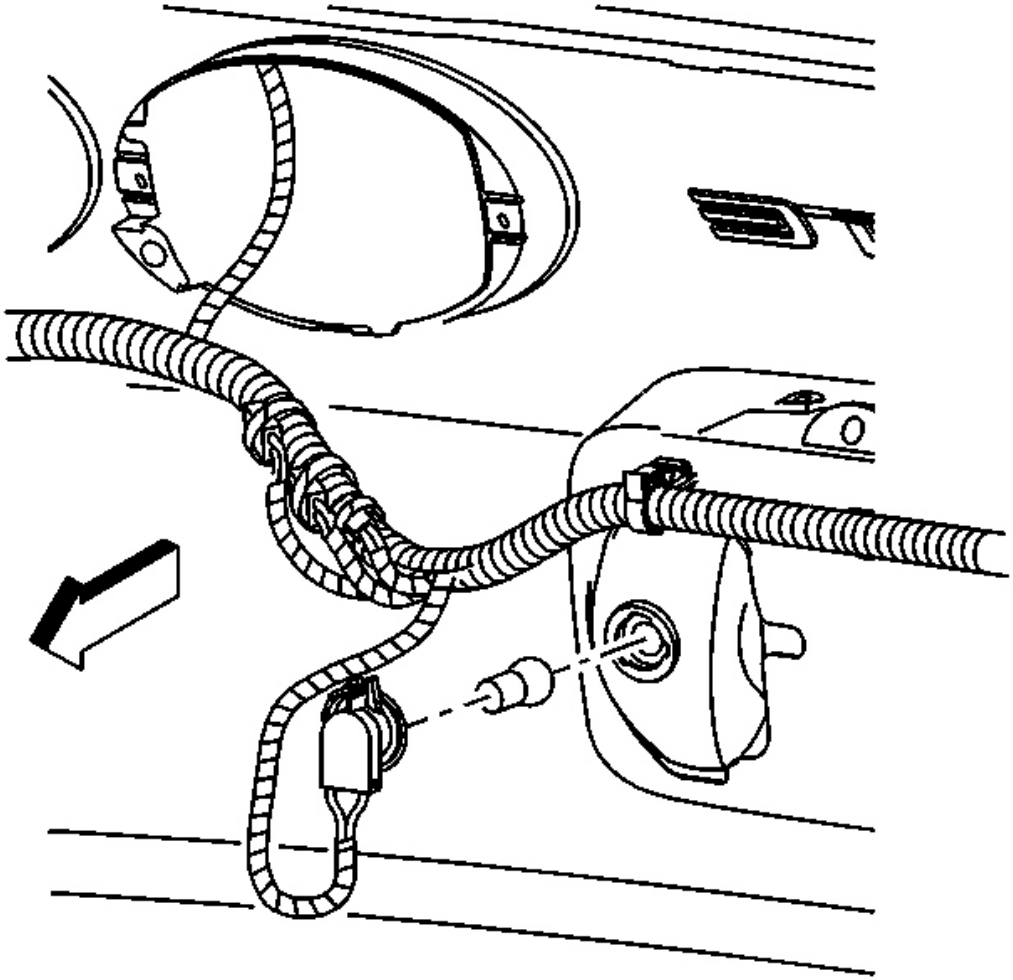

Fig. 205: Backup Lamp Socket To Backup Lamp Assembly
Courtesy of GENERAL MOTORS CORP.

1. Remove the nearest inner tail lamp. Refer to **Tail Lamp Replacement** .

   Access the backup lamp through the tail lamp opening.

2. Remove the backup lamp socket from the backup lamp assembly.

   Rotate the socket counterclockwise to disengage the locking tabs.

3. Remove the bulb from the socket.

Installation Procedure

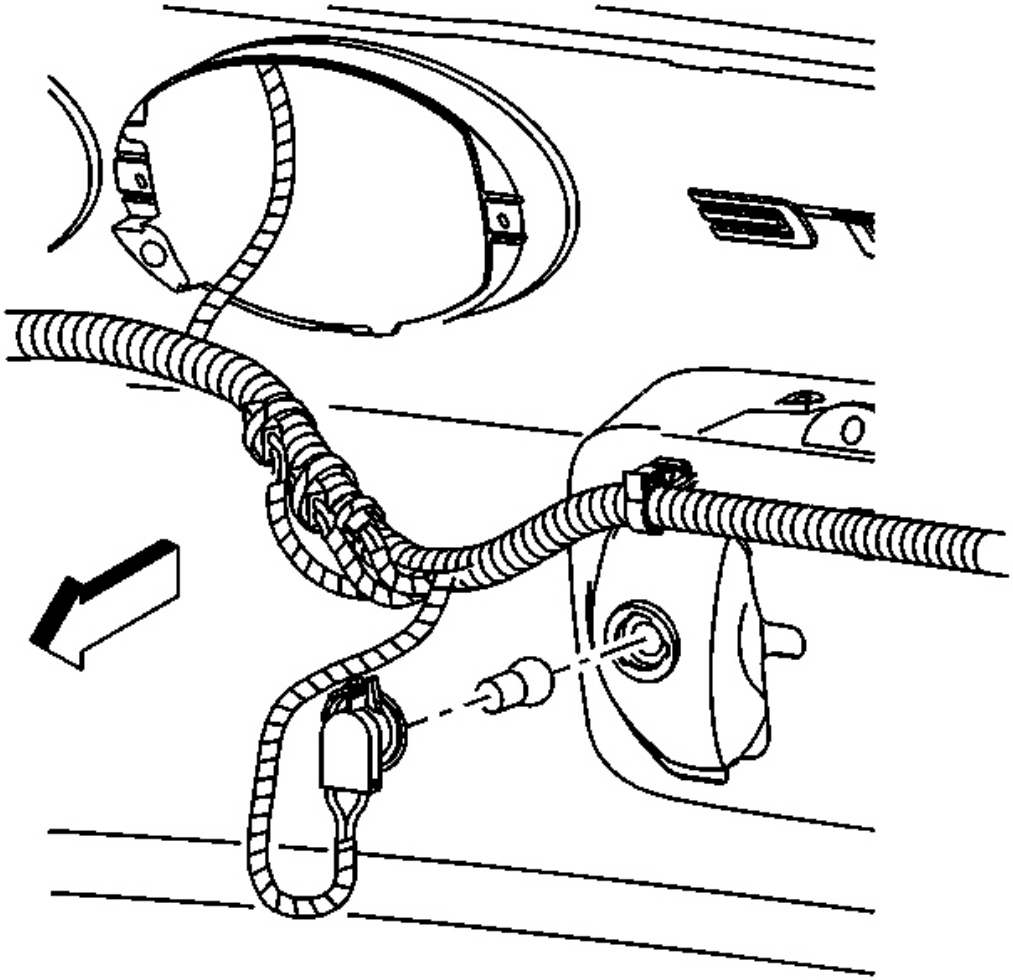

Fig. 206: Backup Lamp Socket To Backup Lamp Assembly
Courtesy of GENERAL MOTORS CORP.

1. Install the bulb to the backup lamp socket.

   Rotate the socket clockwise to engage the locking tabs.

2. Install the backup lamp socket to the backup lamp assembly.
3. Install the inner tail lamp. Refer to **Tail Lamp Replacement** .

LICENSE LAMP REPLACEMENT

Removal Procedure

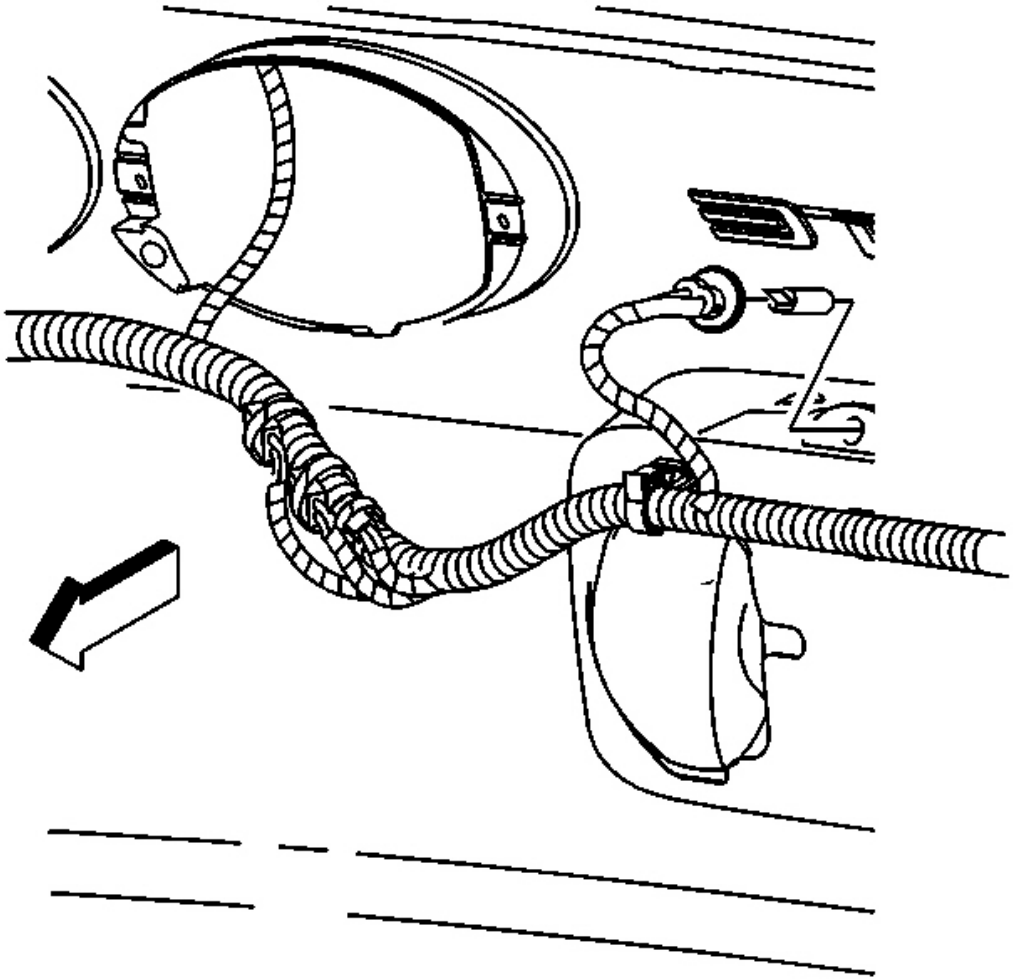

Fig. 207: Tail Lamp Opening At License Lamp Assembly & Sockets
Courtesy of GENERAL MOTORS CORP.

1. Remove the nearest inner tail lamp. Refer to **Tail Lamp Replacement** .

   Access the license lamp through the tail lamp opening.

2. Remove the socket from the license lamp assembly.

   Rotate the socket counterclockwise to disengage the locking tabs.

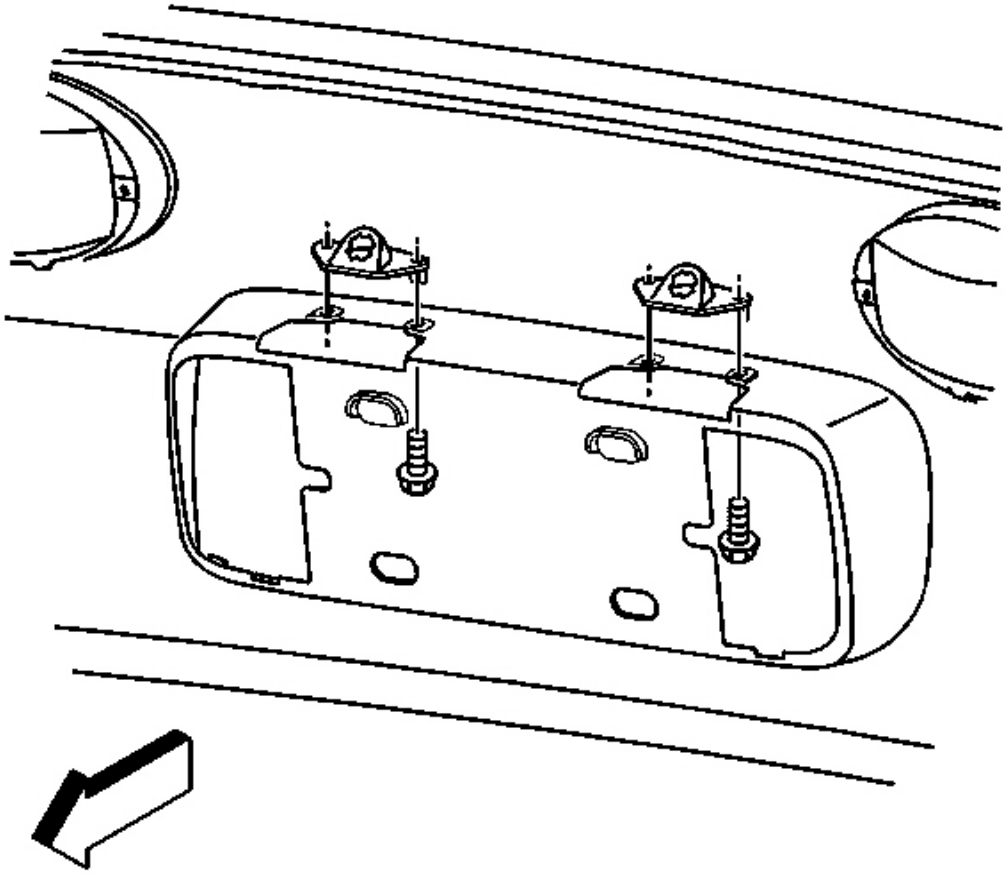

Fig. 208: License Lamp Assembly To Tail Lamp Opening
Courtesy of GENERAL MOTORS CORP.

3. Reach through the tail lamp opening and hold the license lamp assembly in place, while removing the screws from the lamp assembly.
4. Remove the license lamp assembly through the tail lamp opening.

Installation Procedure

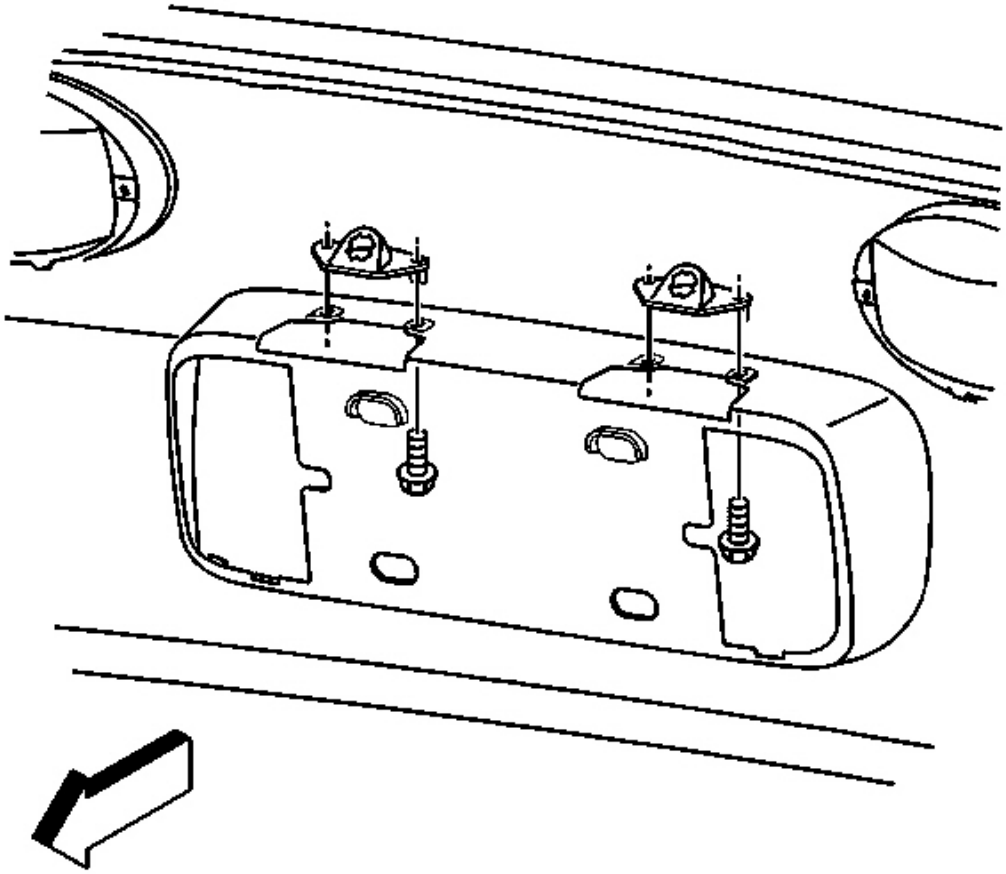

Fig. 209: License Lamp Assembly To Tail Lamp Opening
Courtesy of GENERAL MOTORS CORP.

1. Install the license lamp assembly through the tail lamp opening.
2. Position the lamp assembly and hold in place.

NOTE: Refer to Fastener Notice in Cautions and Notices.

3. Install the screws securing the lamp assembly to the rear fascia.

Tighten: Tighten the license lamp assembly retaining screws to 2 N.m (18 lb in).

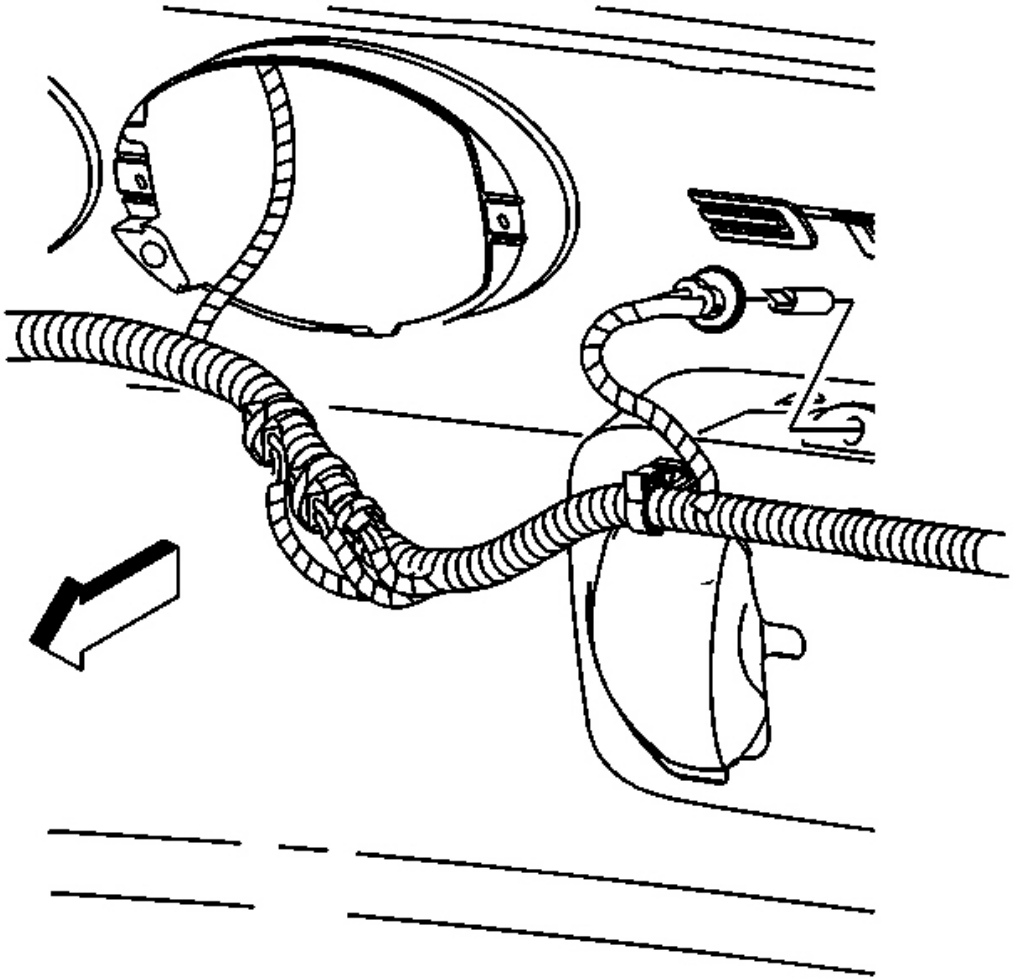

Fig. 210: Tail Lamp Opening At License Lamp Assembly & Sockets
Courtesy of GENERAL MOTORS CORP.

4. Install the socket to the license lamp assembly.

   Rotate the socket clockwise to engage the locking tabs.

5. Install the inner tail lamp. Refer to **Tail Lamp Replacement** .

LICENSE LAMP BULB REPLACEMENT

Removal Procedure

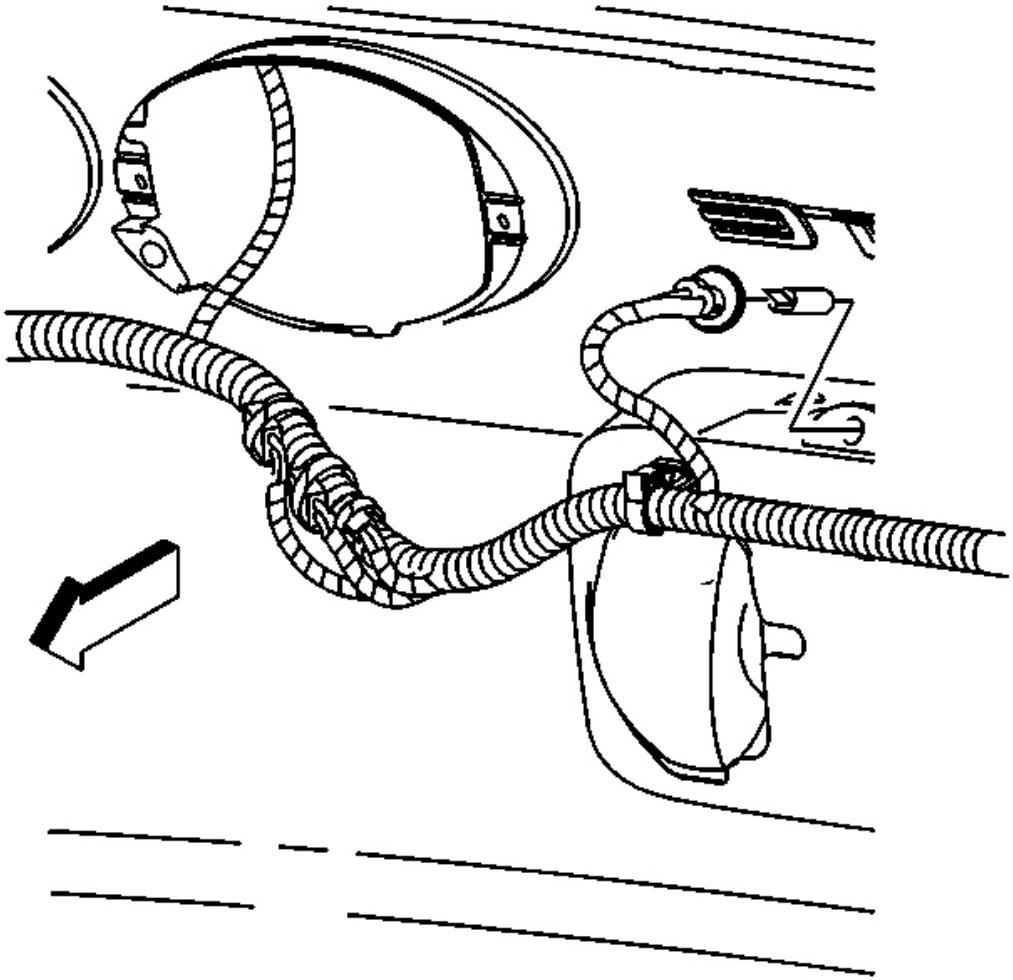

Fig. 211: Tail Lamp Opening At License Lamp Assembly & Sockets
Courtesy of GENERAL MOTORS CORP.

1. Remove the nearest inner tail lamp. Refer to **Tail Lamp Replacement** .

   Access the license lamp through the tail lamp opening.

2. Remove the socket from the license lamp.

   Rotate the socket counterclockwise to disengage the locking tabs.

3. Remove the bulb from the socket.

Installation Procedure

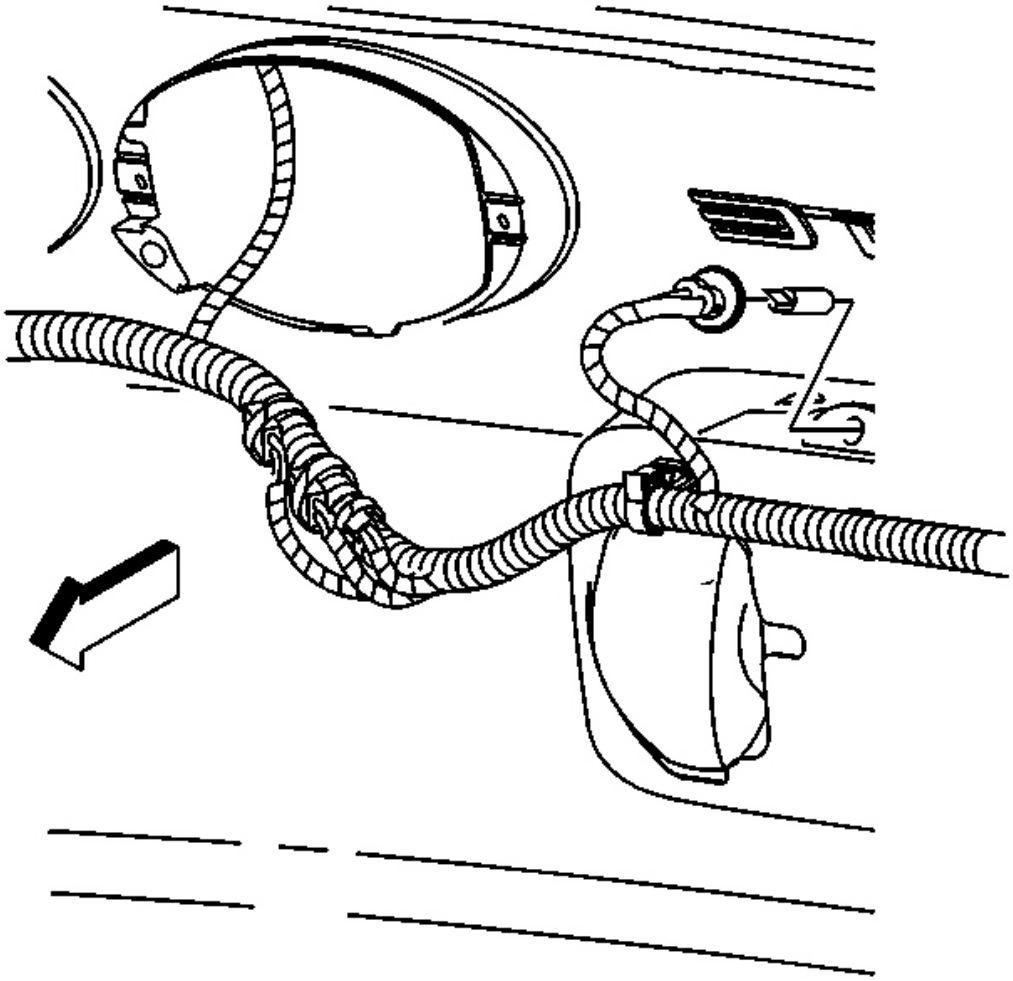

Fig. 212: Tail Lamp Opening At License Lamp Assembly & Sockets
Courtesy of GENERAL MOTORS CORP.

1. Install the bulb into the socket through the rear tail lamp opening.
2. Install the socket to the license lamp.

   Rotate the socket clockwise to engage the locking tabs.

3. Install the inner tail lamp. Refer to **Tail Lamp Replacement** .

TAIL LAMP REPLACEMENT

Removal Procedure

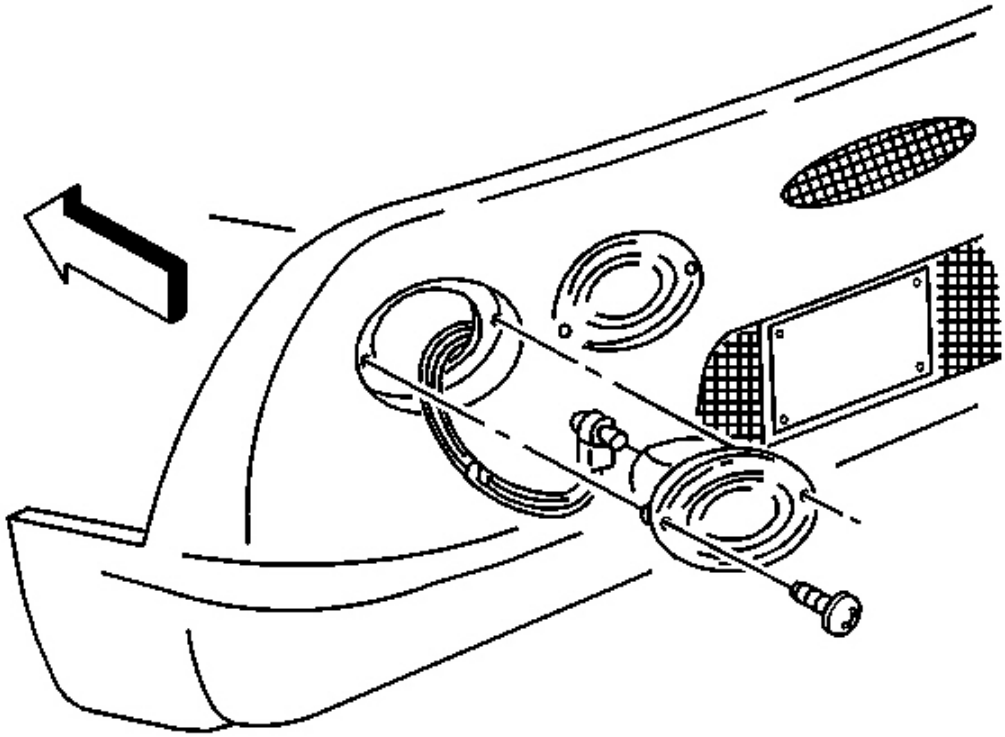

Fig. 213: Tail Lamp At Fascia To Tail Lamp Socket
Courtesy of GENERAL MOTORS CORP.

1. Remove the screws retaining the tail lamp assembly to the rear fascia.
2. Remove the tail lamp from the fascia to gain access to the tail lamp socket.
3. Remove the socket from the lamp assembly.
4. Remove the bulb from the socket, if replacing the bulb.
5. Remove the tail lamp from the vehicle.

Installation Procedure

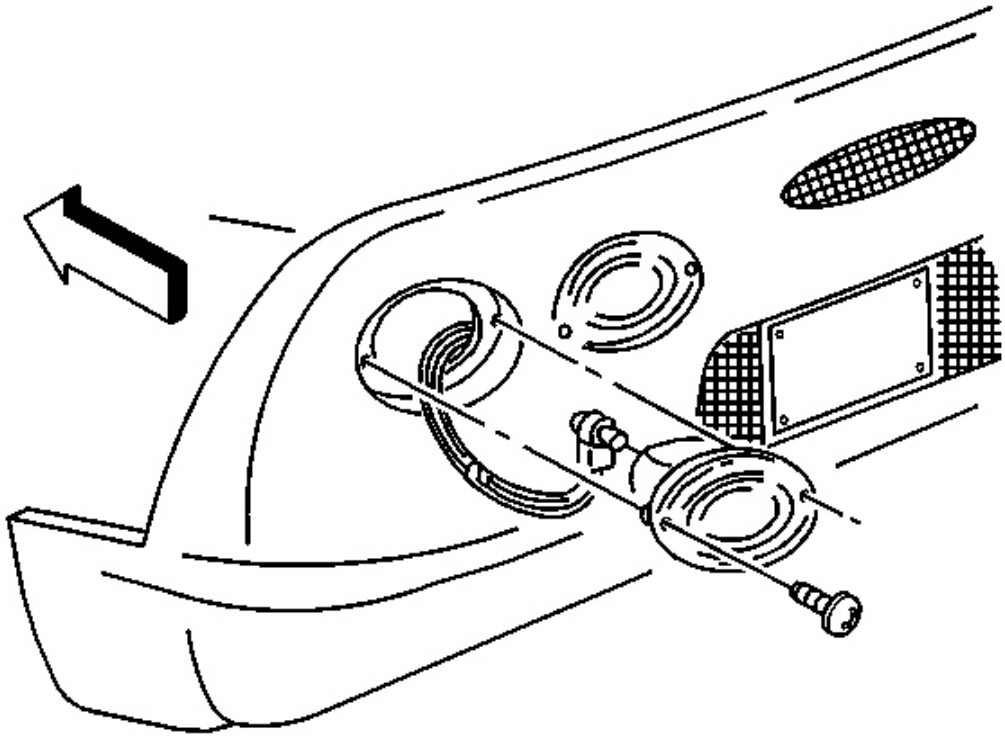

Fig. 214: Tail Lamp At Fascia To Tail Lamp Socket
Courtesy of GENERAL MOTORS CORP.

1. Install the bulb to the tail lamp socket, if replacing the bulb.
2. Install the socket to the tail lamp assembly.
3. Position the tail lamp assembly to the rear fascia.

NOTE: Refer to Fastener Notice in Cautions and Notices.

4. Install the screws retaining the taillamp to the rear fascia.

   Tighten: Tighten the tail lamp retaining screws to 2 N.m (18 lb in).

TAIL/TURN SIGNAL LAMP REPLACEMENT (EUROPE, JAPAN)

Removal Procedure

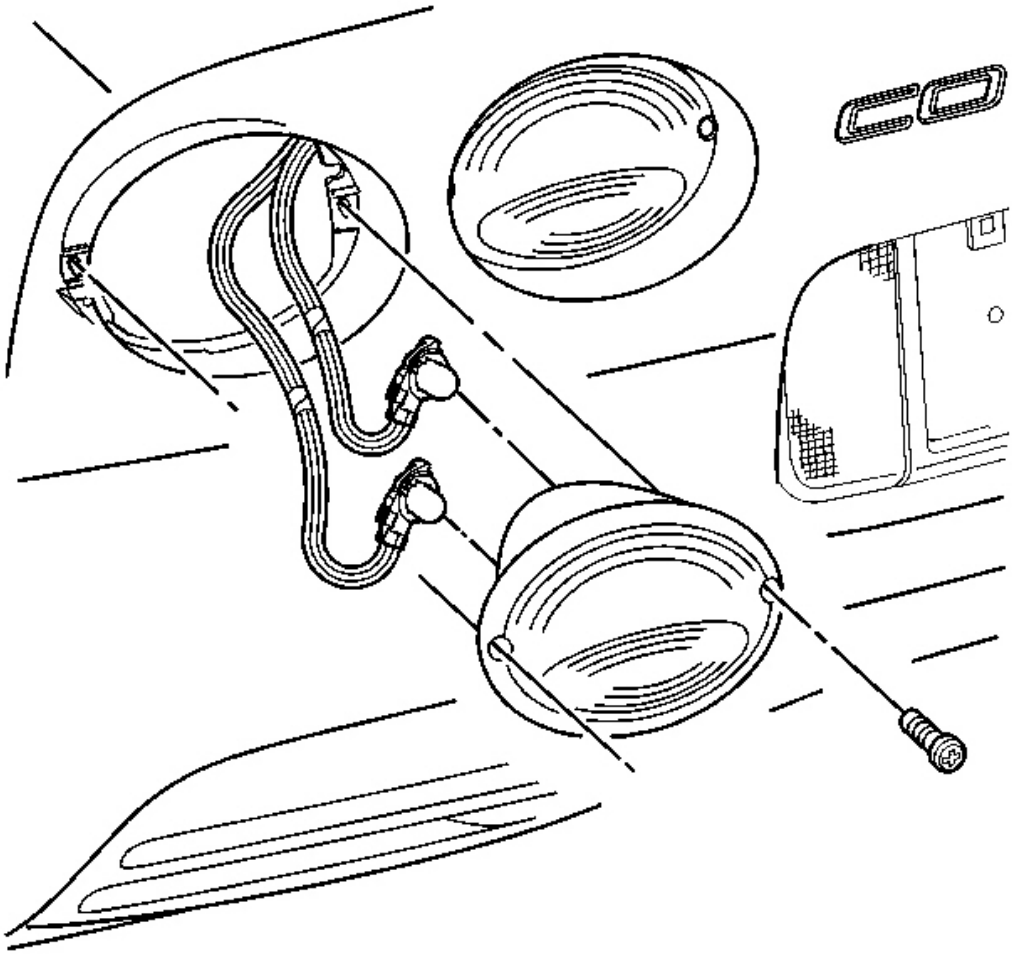

Fig. 215: Lamp At Fascia To Tail & Turn Signal Lamp Sockets
Courtesy of GENERAL MOTORS CORP.

1. Remove the screws retaining the tail/turn signal lamp assembly to the rear fascia.
2. Remove the lamp from the fascia to gain access to the tail and turn signal lamp sockets.
3. Remove the sockets from the lamp assembly.
4. Remove the bulbs from the sockets, if replacing the bulbs.
5. Remove the lamp from the vehicle.

Installation Procedure

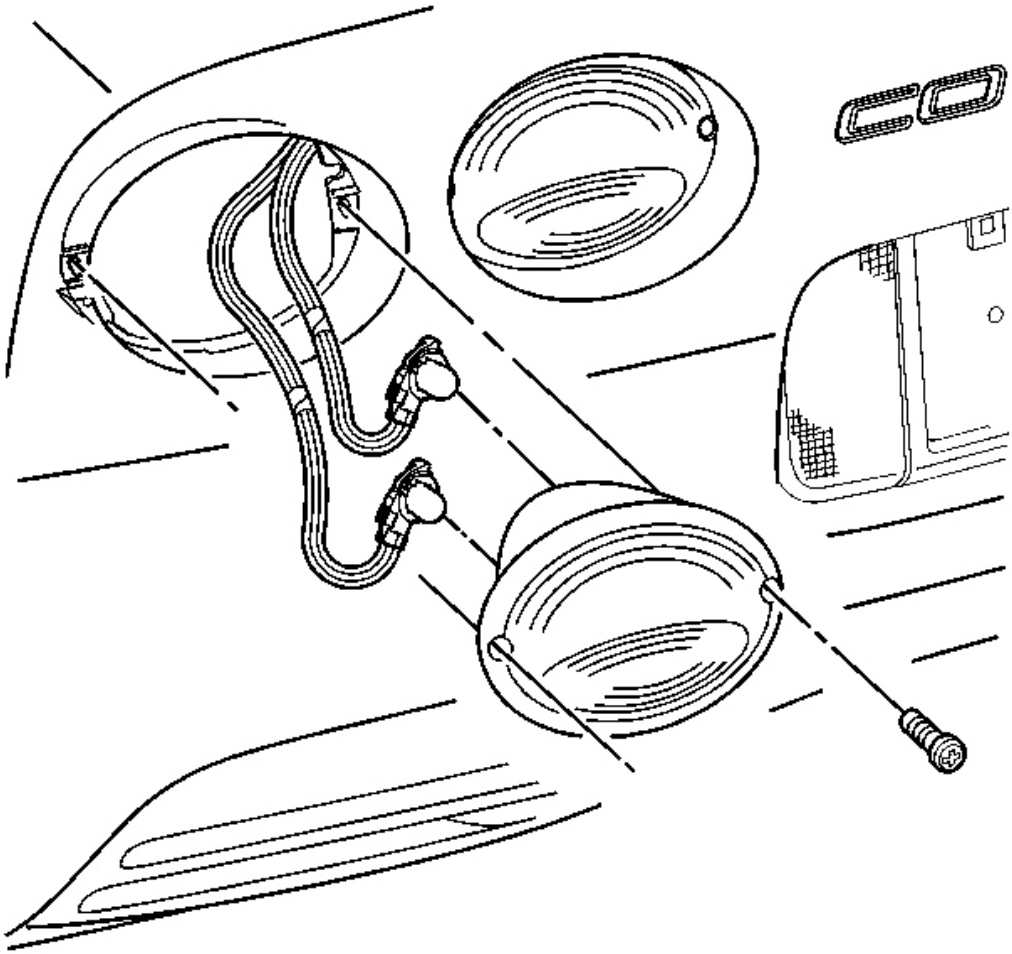

Fig. 216: Lamp At Fascia To Tail & Turn Signal Lamp Sockets
Courtesy of GENERAL MOTORS CORP.

1. Install the bulbs to the lamp sockets, if replacing the bulbs.
2. Install the sockets to the lamp assembly.
3. Position the tail/turn signal lamp assembly to the rear fascia.

NOTE: Refer to Fastener Notice in Cautions and Notices.

4. Install the tail/turn signal lamp screws to the rear fascia.

   Tighten: Tighten the tail/turn signal lamp screws to 2 N.m (18 lb in).

TAIL/BACKUP LAMP REPLACEMENT (EUROPE)

Removal Procedure

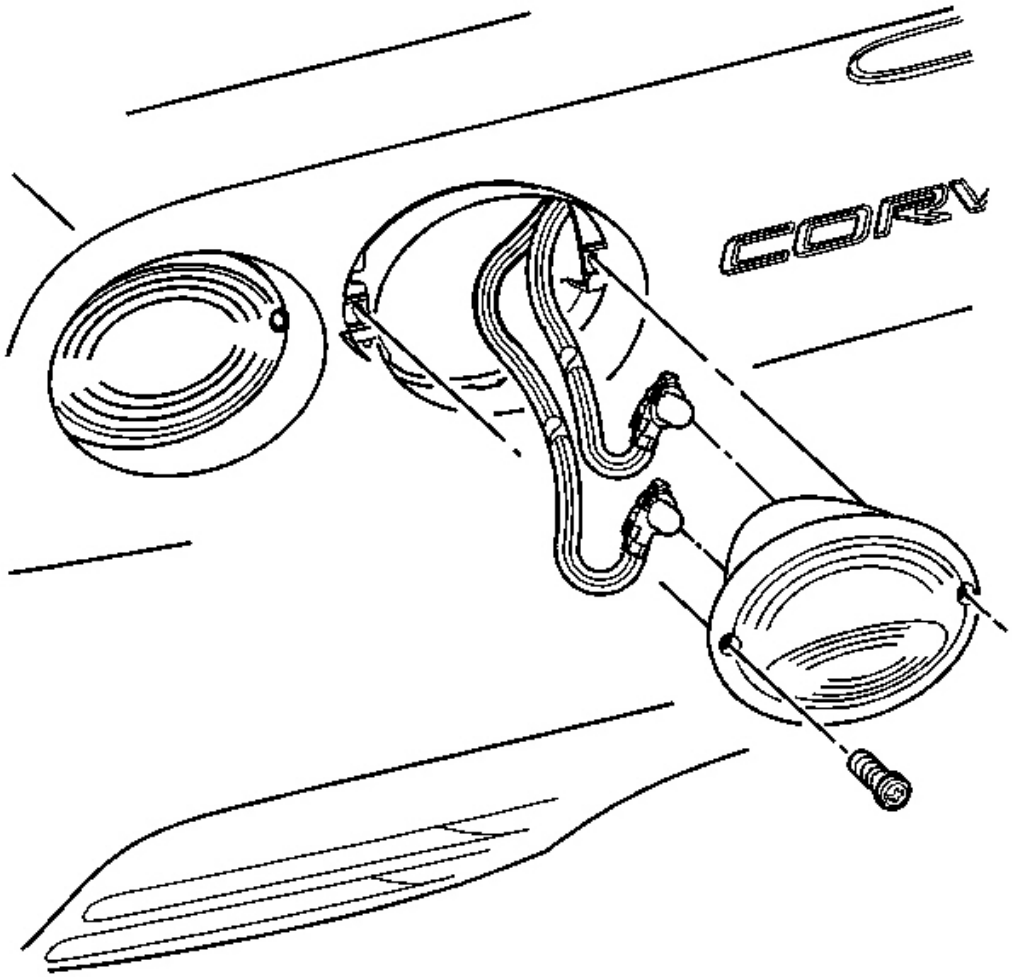

Fig. 217: Lamp At Fascia To Tail & Backup Lamp Sockets
Courtesy of GENERAL MOTORS CORP.

1. Remove the screws retaining the tail/backup lamp assembly to the rear fascia.
2. Remove the lamp from the fascia to gain access to the tail and backup lamp sockets.
3. Remove the sockets from the lamp assembly.

   Rotate the sockets counterclockwise to disengage the locking tabs.

4. Remove the bulbs from the sockets, if replacing the bulbs.
5. Remove the lamp from the vehicle.

Installation Procedure

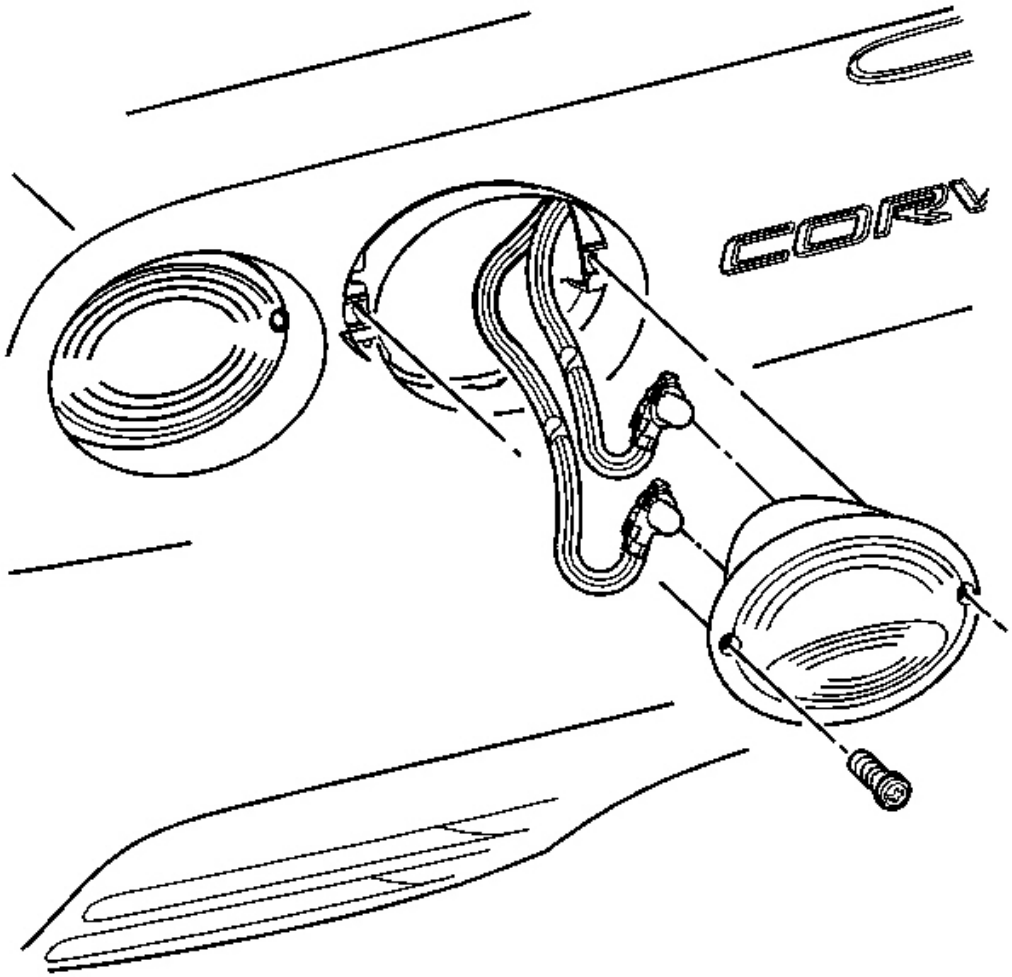

Fig. 218: Lamp At Fascia To Tail & Backup Lamp Sockets
Courtesy of GENERAL MOTORS CORP.

1. Install the bulbs to the lamp sockets, if replacing the bulbs.
2. Install the sockets to the lamp assembly.

   Rotate the sockets clockwise to engage the locking tabs.

3. Position the tail/backup lamp assembly to the rear fascia.

   NOTE: Refer to Fastener Notice in Cautions and Notices.

4. Install the screws retaining the tail/backup lamp to the rear fascia.

   Tighten: Tighten the tail/backup lamp retaining screws to 2 N.m (18 lb in).

DESCRIPTION AND OPERATION

EXTERIOR LIGHTING SYSTEMS DESCRIPTION AND OPERATION

Exterior Lamps

The exterior lighting consist of the following lamps:

- The Headlamps
- The Daytime Running Lamps (DRL)
- The Fog Lamps
- The Park, Tail, Licence and Marker Lamps
- The Turn Signal Lamps
- The Stop Lamps
- The Backup Lamps

Headlamps

Manual Operation

Place the headlamp switch in the ON position, for normal operation. Battery positive voltage is then applied at all times from the HDLP circuit breaker to the headlamp switch. When the headlamp switch is placed to the HEAD position, battery positive voltage is applied to the headlamp dimmer switch. Battery positive voltage is then applied to the underhood fuse block. When the headlamp dimmer switch is in the LOW position, battery positive voltage is applied to the HDLOBML fuse and the HDLOBMR fuse. When the headlamp switch is in the HIGH position, battery positive voltage is applied to the HDHIBML fuse and the HDHIBMR fuse. Battery positive voltage is then applied from the fuse to the individual headlamps. The ground circuit for the left headlamps is provided from G101 and the ground circuit for the right side is provided by G102.

Automatic Lamp Control/Twilight Sentinel

To turn on or off the automatic lamp control/twilight sentinel feature:

- Turn the ignition switch to the ON position.
- Press the OPTIONS button located on the DIC, until the twilight option appears.
- Press the RESET button to the desired mode.

Place the headlamp switch in the OFF position, for automatic lamp control (ALC). During ALC control the headlamps will be OFF during daylight conditions but will turn ON when the ambient light sensor detects low light level. The ambient light sensor is a light sensitive transistor that varies its voltage signal to the body control module (BCM) in response to changes to the outside (ambient) light level. The BCM will apply a ground to the coil side of the ALC HDLP relay 44. This energizes the relay, closing the switch and applies battery positive voltage to the headlamp switch and to the headlamp opening door actuator control module. With the headlamp switch in the OFF position battery positive voltage is then applied from the headlamp switch to the HDLOBML fuse and HDLOBMR fuse in the underhood fuse block. Battery positive voltage is then applied from the fuse to the individual headlamps. The ground circuit for the left headlamps is provided from G101 and the ground circuit for the right side is provided by G102 for low beam operation in low light conditions.

If the headlight switch is left in the ON position, the inadvertent power control feature will turn off the headlights approximately 30 seconds after the ignition switch is turned to the OFF position. If the driver places the headlight switch in the ON position after the ignition switch has been turned OFF, or if the ignition switch is in the ACCY position, the headlights will remain on until turned off or until the battery runs dead.

Lights On Warning

The IPC activates the lights on warning as requested by the body control module (BCM). The BCM sends a class 2 message to the IPC indicating the chime frequency (fast rate) and duration (continuous). The lights on warning sounds when the following occurs:

- The ignition is OFF.
- The BCM determines that the driver's door is open (signal circuit is low). The IPC receives a class 2 message from the BCM indicating the door ajar status.
- The IPC determines that the headlamp switch is in the park or head position.

Daytime Running Lamps (DRL)

Battery positive voltage is applied at all times from the APPROACH fuse 2 in the underhood electrical center to both the coil side and switch side of the DRL R relay 38 and the DRL L relay 40 in the instrument panel electrical center. The ambient light sensor is a light sensitive transistor that varies its voltage signal to the BCM in response to changes to the outside (ambient) light level. The BCM will apply a ground to the coil side of the DRL L and DRL R relays. This energizes the relays and allows battery positive voltage to be applied from the switch side of the relays to the front turn signal lamps. The front turn signal lamps will be ON steady (non-flashing). Any function or condition that turns on the headlights will cancel the daytime running lamps operation. With the headlight switch in the OFF position, the turn signal lamps will either be turned ON or OFF after a 30-second delay, depending on whether daylight or low light conditions are sensed. The DRL operates when the ignition switch is in the RUN position, and the parking brake is not set or the transmission is not in park. When these conditions have been met and the ambient light sensor indicates daytime conditions, the DRL will illuminate.

Headlight Doors

Battery Positive voltage is applied from the HDLP circuit breaker in the instrument panel fuse block to both the coil and switch side of the ALC HDLP relay 44. When the BCM receives this signal it will apply a ground to

the coil side of the ALC HDLP relay 44. This energizes the relay, closing the switch, and applies battery positive voltage to the headlamp switch and to the headlamp opening door actuator control module. This actuator allows battery positive voltage from the HDLP MOT LH fuse and HDLP MOT RH fuse in the underhood electrical center to be applied to the headlamp opening door assemblies. The ground circuit is applied from G102.

Fog Lamps

With the ignition switch in the ON position, and the park lamps or low beam headlights on, the fog lights will illuminate when the driver presses the fog lamp switch. The F/TNKDR fuse 32 in the instrument panel fuse block supplies battery positive voltage to the fog lamp switch contacts. Battery positive voltage may also by applied to the FOG LP relay 39. When the fog lamp switch is pressed, battery positive voltage is applied to the BCM. The BCM applies a ground to the FOG LP relay 39 coil circuit, which energizes the fog lamp relay coil control circuit. The current flow is now from the fog lamp relay to both front fog lamps and to ground G102 and to the fog lamp switch turning ON the fog lamp indicator. The state of the fog lamps either ON or OFF will remain the same until the front fog lamp switch is pressed again, or the ignition switch is cycled OFF and ON. The park lamps or low beam headlights must be ON in order for the fog lights to be illuminated. Fog lamp operation will be cancelled whenever the park lamps are turned OFF or when the high beam headlights are selected.

The rear fog lamps are controlled in much the same way, however the front fog lamps must be ON in order to turn on the rear fog lamps. The rear fog lamps have their own relay, and both the relay and current flow are the same.

Park, Tail and Marker Lamps

The park, tail and marker lamps, including the license lamps, are turned ON when the headlamp switch is placed in either the PARK or HEADLAMP position, or anytime the headlights are requested. The PK/TLP fuse in the instrument panel fuse block supplies battery positive voltage to both the ALC PRK LP relay 43 coil and switch contacts. The park lamp relay coil is controlled by the BCM. When the headlamp switch is placed in the PARK position, the BCM energizes the relay 43 coil control circuit. Current flow is now from the ALC PRK LP relay 43 to the headlamp switch and then to the park, tail, license, and marker lamps. The front park lamps are grounded at G102. The rear park lamps are grounded at G401. The license plate lamps are a part of the rear park lamp circuit and are grounded at G401. The inadvertent power control feature prevents the park lights from remaining on more than 10 minutes if left ON. If the park lights are turned ON after the ignition switch has been turned OFF, or is in the ACCY position, they will remain ON until turned OFF or until the battery runs dead.

Remote Keyless Entry Exterior Lamp Illumination

When the remote function actuation (RFA) module receives a door unlock command from the remote function actuator transmitter, the RFA module will ground the door unlock signal circuit to the BCM and will send a class 2 message to the BCM, indicating that an UNLOCK command has been received. The BCM will then flash the park lamps twice. If all the doors closed, and the RKE transmitter is used to lock the doors, the park lamps will flash twice. The park lamps will not flash if the rear compartment is opened using the RKE transmitter.

Turn Signal Lamps

Ignition positive voltage from the HAZT/SIG fuse 15 in the instrument panel fuse block is supplied to the hazard warning switch. The turn signal lamps may only be activated with the ignition switch in the ON or ACCY position. When the turn signal switch is placed in either the left or right position, the flasher module sends an ON/OFF voltage to the turn signal switch assembly. For the rear turn lamps, battery voltage is applied directly to either the left or right turn signal lamps. The ground for the rear turn lamps is supplied from G401. For the front turn lamps, battery positive voltage is applied from the turn signal switch to the instrument panel electrical center. From the instrument panel fuse block, battery positive voltage is applied to the instrument cluster (IC) indicators and to the normally-open switched side of either the DRL L or DRL R relay, depending on the turn signal switch position. Battery positive voltage is then applied to either the left or right turn signal lamps. The front turn signals are grounded at G102.

For the hazard lamps, voltage is applied from the STP HAZ fuse 8 to the hazard warning switch. When the hazard switch is pressed, all the turn signal lamps will flash, including both IPC turn signal indicators. The hazard warning switch is grounded at G201.

Turn Signal Reminder

The IPC activates the turn signal warning as requested by the IPC. The IPC receives a low input signal from the turn signal switch indicating the chime frequency (medium rate) and duration (continuous). The turn signal warning sounds when the following occurs:

- The ignition is in RUN.
- The turn signal switch is in either turn position, sensing, within 1 second, an open to B+ transition in the turn signal control circuit (left or right turn).
- The vehicle has traveled a distance of 1.2 km (0.75 mi) by counting pulses on the vehicle speed input circuit.

The IPC turns off the turn signal reminder when either the ignition switch is turned to the OFF position, or the turn signal switch returns to the OFF position, or the turn signal switch returns to the OFF position, sensing, within 1 second, no transitions from open to B+ in either of the turn signal control circuits (left turn or right turn).

Stop lamps

The STP HAZ fuse in the instrument panel fuse block supplies battery positive voltage to the normally-open stop lamp switch.

Export

When the driver presses the brake pedal, the switch contacts close and the stop lamp output signal is supplied to both left and right stop lamp assemblies and to the center high mounted stop lamp (CHMSL). The stop lamps are grounded at G401.

Domestic

When the driver presses the brake pedal, the switch contacts close and the stop lamp output signal is applied to the CHMSL and to the hazard warning switch. The stop lamp signal is applied from the hazard warning switch

to the turn signal switch. The turn signal switch applies the stop lamp switch signal to both of the rear stop/turn lamps, turning them on full bright. The stop/turn lamps ground is applied from G401.

Backup Lamps

The BTSI BU 21 fuse in the instrument panel fuse block supplies battery positive voltage to the park neutral position switch (automatic) or backup lamp switch (manual). When the gear selector lever is in the REVERSE position, power is supplied to both of the backup lamps. The backup lamps are grounded at G401.

The BCM also can control the backup lamps for theft deterrent operations. Battery positive voltage is applied at all times from the APPROACH fuse 2 to the coil and switched side of the BACKUP relay 38. When the BCM detects a theft alarm activation or deactivation, the BCM will apply a ground to the BACKUP relay coil. Battery positive voltage is then applied to the backup lamps flashing them ON.

Battery Rundown Protection/Inadvertent Power

The BCM controls the lighting system through circuits that enable both the exterior lamp functions of the park lamps, the head lamps, the fog lamps, and the interior lamps. The BCM opens these enabling circuits 20 minutes after the ignition switch is turned OFF with no lamp switch activity. If the ignition switch is turned to any position other than OFF, or if a lamp switch is activated during this 20 minute period, the timer resets for another 20 minutes.

Lighting System Indicator(s)

High Beam

The IPC illuminates the high beam indicator when the high beams are on or the flash to pass feature is activated. The IPC receives a discrete input from the headlamp dimmer switch requesting illumination.

Turn Signals

The IPC illuminates the right or left turn signal indicator when a turn signal or a hazard request is received. The IPC receives a discrete input from the turn signal switch requesting illumination. If the BCM determines that the turn signal is active for more than 1.2 km (0.75 mi), the BCM activates the audible warning.

INTERIOR LIGHTING SYSTEMS DESCRIPTION AND OPERATION

Interior Lamps

The interior lighting consist of two groups. This first group includes lamps that may not be dimmed.

- The Inside Rearview Mirror Lamps
- The Rear Compartment Courtesy Lamp
- The Vanity Mirror Lamps
- The IP Compartment Lamps
- The Instrument Panel (IP) Courtesy Lamps

- Underhood Lamp

Courtesy Lamps

The courtesy lamps include the instrument panel courtesy lamps, the rear compartment courtesy lamps, and the rear view mirror lamps. Turn the courtesy lamps ON manually by placing the interior lamp switch in the DOME position. If low light levels are detected by the ambient light sensor, then whenever a door or if the trunk is opened the courtesy lamps will illuminate. After all the doors have been closed the courtesy lamps will remain illuminated approximately 15 seconds after the last door closes.

The C\LALDL fuse in the instrument panel electrical center supplies battery positive voltage to the coil and switch side of the CTSY LP relay 42. The BCM controls the ground to the CTSY LP relay 42 coil side. When any door or if the trunk is opened, the jam switch contacts close and the BCM receives a door-open or trunk open input. If the BCM receives a door lock or unlock input or an trunk open input and it is a low light condition then the BCM will activate the CTS LP 42 relay providing battery positive voltage to all of the interior courtesy lamps. You may use some of the courtesy lamps as reading lamps by placing the lamp switch in the ON position.

The courtesy lamps will normally turn OFF using the theater dimming feature. The BCM provides a pulse width modulated ground to all courtesy/reading, dome and inside rear view mirror lamps for the theater dimming feature. The BCM turns OFF the courtesy lamps if a door lock command is received after all of the doors are closed, or if the ignition switch is turned to either the ON or RUN position.

The courtesy lamps will also turn on after an air bag deployment for approximately 15 seconds.

Keyless Entry Interior Illumination

When the driver uses the door key in order to unlock the doors, BCM receives a door-unlock signal. The BCM must have inputs that indicate that the ignition switch is OFF, the courtesy lamp switch is OFF and all the doors are closed. The BCM will then activate the interior lamps. The courtesy lamps will remain ON for 15 seconds after the door is closed. The BCM will turn off the courtesy lamps through the theater dimming feature. If the door locks are activated to the LOCK position, or if the ignition switch is turned to either the RUN or CRANK position, the courtesy lamps will turn OFF immediately.

When the driver uses the remote function actuator transmitter to unlock the doors or the trunk or to press the panic button, the BCM will keep the courtesy lamps ON for 30 seconds. If the door locks are activated to the UNLOCK or LOCK position, or if the ignition switch is turned to either the RUN or CRANK position, the courtesy lamps turn OFF immediately. The BCM keeps the courtesy lamps on for 40 seconds after an alarm event is completed.

Vanity Lamps

Battery positive voltage is applied at all times to the MONITORED LD relay 37 coil and switch side. The BCM applies a ground to the MONITORED LD relay 37 coil side, energizes the relay, and closes the switch contacts. Then the BCM allows battery positive voltage to the MONITORED LD fuse 2 and to the vanity mirror lamps. When the vanity mirror cover on the sunshade is opened, its switch closes providing a ground circuit, and the vanity lamp illuminates.

IP Compartment Lamp

Battery positive voltage is applied at all times to the MONITORED LD relay 37 coil and switch side. The BCM applies a ground to the MONITORED LD relay 37 coil side, energizes the relay and closes the switch contacts, The BCM then allows battery positive voltage to the MONITORED LD fuse 2 and then the IP compartment lamp. When the IP compartment is opened, its switch closes providing a ground circuit, and the IP compartment lamp illuminates.

Underhood Lamp

Battery positive voltage is applied at all times to the MONITORED LD relay 37 coil and switch side. The BCM applies a ground to the MONITORED LD relay 37 coil side, energizes the relay and closes the switch contacts. The BCM then allows battery positive voltage to the MONITORED LD fuse 2 and the underhood lamp. When the underhood is opened, its switch closes providing a ground circuit, and the underhood lamp illuminates.

Interior Lamps Dimming

The second group includes lamps which may be dimmed. This group may use a combination of vacuum fluorescent (VF) illumination and of incandescent lamps:

- The Door Switches and the Window Switches
- The HVAC Control Head Assembly
- The Radio
- The Traction/Suspension Control Switch
- The PRNDL
- The Fog Lamp\Rear Compartment Lid Release Switch (Domestic)
- The Front and Rear Fog Lamp Switch (Export)

When the ignition switch is turned to the ON position, the vacuum fluorescent (VF) displays, for radio and HVAC control assembly, and the incandescent lamps turn ON at maximum brightness. When the park lamps are ON and the ambient light sensor indicates low light conditions, all incandescent back lighting turn ON at the dimming level indicated by the IP dimmer switch. At the same time all VF displays dim in order to match the indicated dimming level. The PK\LP fuse 6 in the instrument panel electrical center supplies battery positive voltage to both the ALC PRK LP relay switch and coil contacts. The ALC PRL LP relay coil is controlled by the BCM. When the headlamp switch is placed in the PARK position, the BCM energizes the park lamp relay coil control circuit and dims the interior lamps to the dimming level indicated by the IP dimmer switch. When the driver selects a dimming setting by moving the IP dimming switch potentiometer, all incandescent back lighting lamps are provided with a specific voltage. When the IP dimmer switch is moved from MIN to MAX, all VF displays and all incandescent back lighting respond from minimum intensity to maximum brightness in response to the IP dimmer switch.

The driver may select parade mode by manually turning on the park lamps during daylight conditions. The front park lamp circuit supplies voltage to the instrument panel cluster, the radio, and the HVAC assembly for a park lamp on input, and the displays become full bright.

Driver Controls and Modules

Driver controls include the following components:

- The Emergency Flasher Switch
- The Fog Lamp Switch
- The Headlamp Dimmer Switch
- The Headlamp Switch
- The Interior Lamp Switch
- The IP Dimmer Switch
- The Stop Lamp Switch
- The Turn Signal Switch

Three modules process the inputs and the controls. The ambient light sensor supplies the BCM with a signal for daytime conditions or for low light conditions.

- The Ambient Light Sensor
- The Body Control Module (BCM)
- The Instrument Panel Cluster (IPC)

Battery Rundown Protection/Inadvertent Power

The BCM controls the lighting system through circuits that enable both the exterior lamp functions of the park lamps, the head lamps, the fog lamps, and the interior lamps. The BCM opens these enabling circuits 20 minutes after the ignition switch is turned OFF with no lamp switch activity. If the ignition switch is turned to any position other than OFF, or if a lamp switch is activated during this 20 minute period, the timer resets for another 20 minutes.