242

Service.

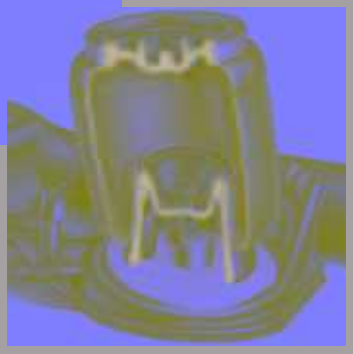

Pneumatic suspension system Part 1 Selflevelling suspension in the Audi A6

Design and Function

Self-study programme 242

For internal use only

Pneumatic self-levelling suspension system

This self-study programme is divided into two parts:

Principles of spring suspension, damping and air suspension

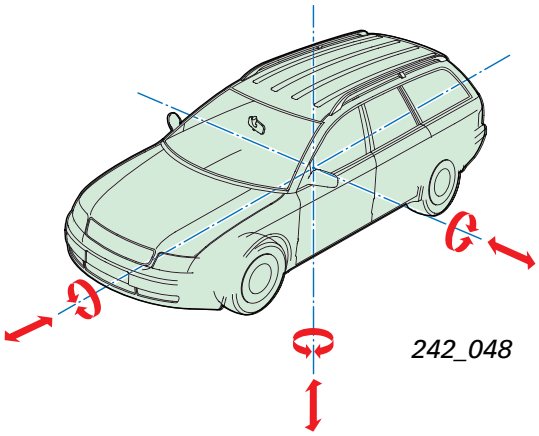

242_048

Self-levelling suspension, A6

The rear axle air suspension system for the Audi A6 Avant is described here.

242_046

The 4-level air suspension of the Audi allroad quattro is described in self-study program 243.

You will find further information on the Audi allroad quattro in self-study programme 241.

242_067

Contents

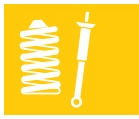

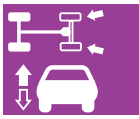

Page

Principles

Vehicle suspension 4
The suspension system 6
Vibration 8
Characteristic values of springs 12
Conventional running gear without self-levelling 14

Principles of air suspension

Self-levelling air suspension 16
Characteristic values of air spring 21
Vibration damping 23
Shock absorbers (vibration dampers) 25
PDC shock absorbers 33

Self-levelling suspension, A6

System overview 38
Air springs 40
Air supply unit 42
Diagram of pneumatic system 43
Compressor 44
Air dryer 47
Discharge valve N111 48
Valve for suspension struts N150 and N151 51
Self-levelling suspension sender G84 52
Self-levelling suspension control unit J197 54
Self-levelling suspension warning lamps K134 55
Function diagram 56
Interfaces 57
The control concept 58
Other features of the control concept 60

The self-study programme will provide you with information on design and functions.

The self-study programme is not intended as a workshop manual.

For maintenance and repairs please refer to the current technical literature.

New Note

Important: Note

Vehicle suspension

When a vehicle travels over irregular road surfaces, impact forces are transmitted to the wheels. These forces pass to the bodywork via the suspension system and the wheel suspension.

The purpose of the vehicle suspension is to absorb and reduce these forces.

When we talk about the vehicle suspension we can basically distinguish between the **suspension system** and the **vibration damping system**.

By means of the interaction of the two systems, the following is achieved:

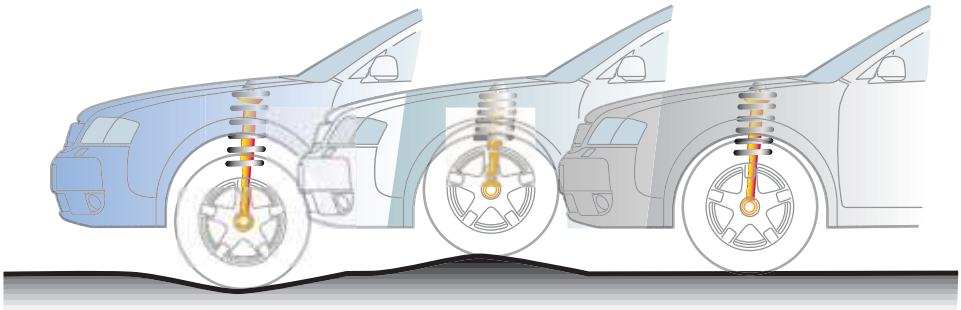

242_003

Driving safety	Wheel contact with the road surface, which is essential for braking and steering, is maintained.
Driving comfort	Unpleasant and unhealthy stresses to vehicle passengers are minimised, and damage to fragile loads is avoided.
Operating safety	The vehicle components are protected against excessive stresses.

During driving operation, the vehicle body is subject not only to the forces which cause the upward and downward motion of the vehicle, but also the movements and vibrations in the direction of the three spatial axes.

Along with the axle kinematics, the vehicle suspension has a significant influence on these movements and vibrations.

The correct matching of the springs and vibration damping system is therefore of great significance.

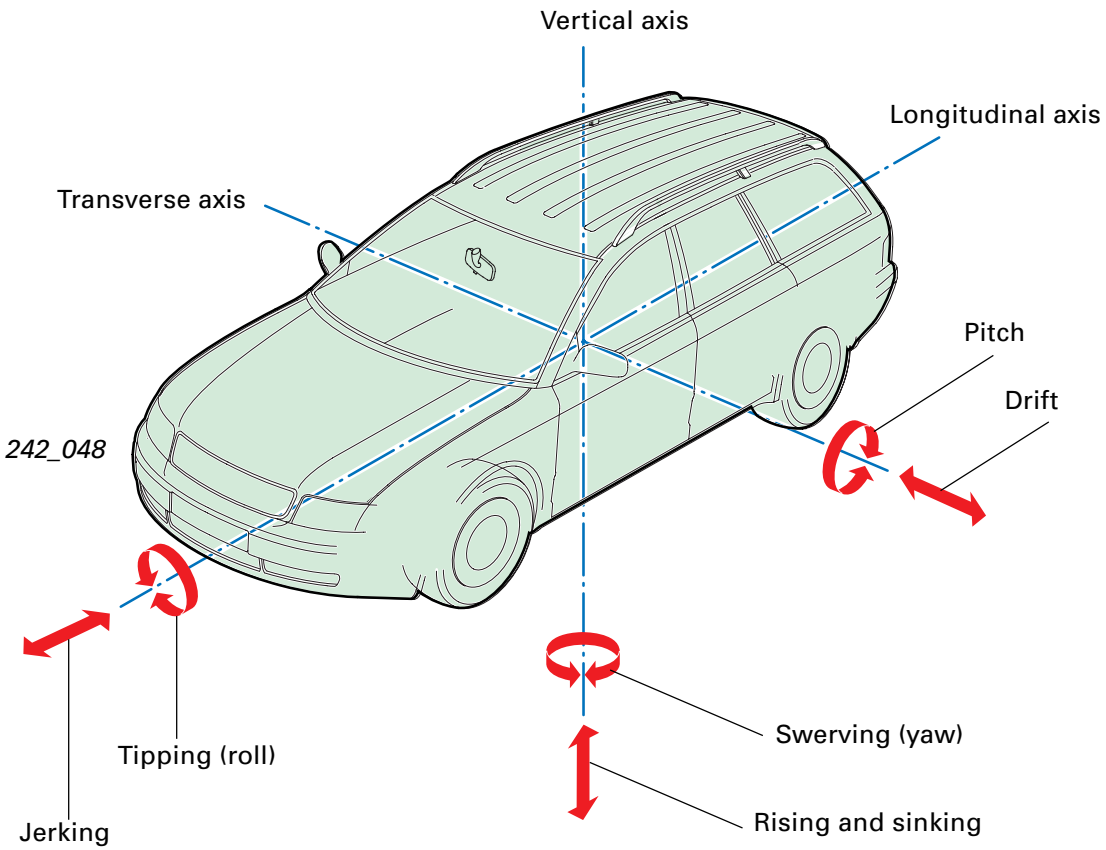

The suspension system

As "supporting" components of the suspension system, the suspension elements form the connection between the wheel suspension and the bodywork. This system is complemented by the spring action of the tyres and vehicle seats.

The suspension elements include steel springs, gas/air and rubber/elastomers or combinations of the above.

Steel spring suspensions have become well established in passenger vehicles. Steel springs are available in a wide variety of designs, of which the coil spring has become the most widespread.

Air suspension, which has been used for many years in heavy goods vehicles, is finding increasing application in passenger vehicles due to its system-related advantages.

In the case of the passenger vehicle we can differentiate between **sprung masses** (body with drive train and parts of the running gear) and **unsprung masses** (the wheels, brakes and parts of the running gear and the axle shafts).

As a result of the suspension system, the vehicle forms an oscillatory unit with a natural frequency of the bodywork determined by the sprung masses and the matching of the suspension system (see "Vibration" chapter).

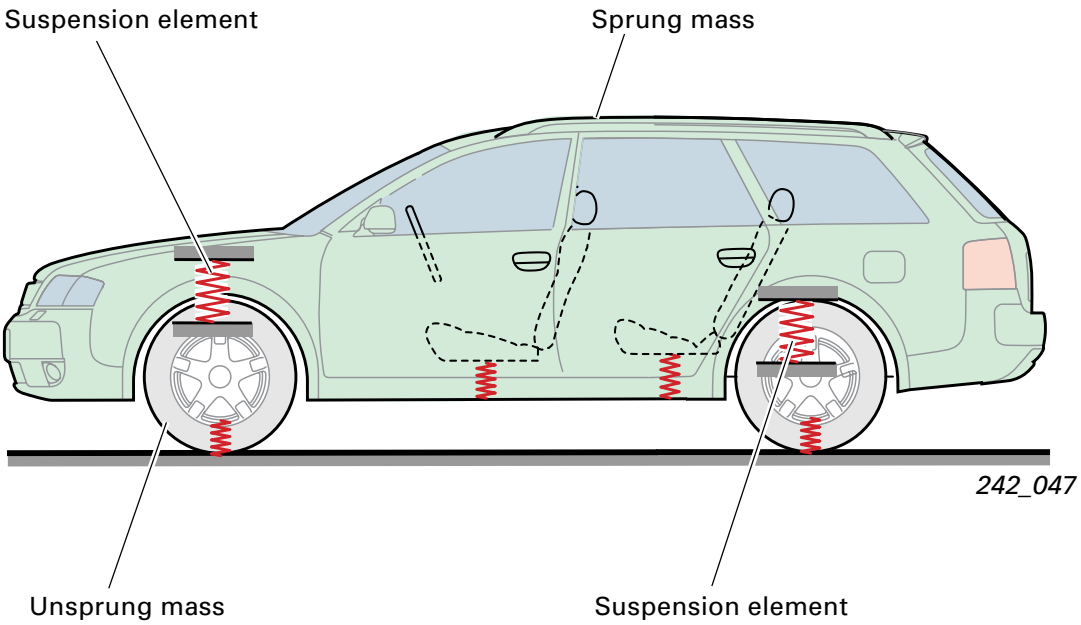

The unsprung masses

The aim in principle is to minimise the volume of unsprung masses and their influence on the vibration characteristics (natural frequency of the bodywork). Furthermore, a low inertia of masses reduces the impact load on the unsprung components and significantly improves the response characteristics of the suspension. These effects result in a marked increase in driver comfort.

Examples for the reduction of unsprung masses:

- Aluminium hollow spoke wheel
- Running gear parts (swivel bearing, wheel carrier, links etc.) made of aluminium
- Aluminium brake callipers
- Weight-optimised tyres
- Weight optimisation of running gear parts (e.g. wheel hubs)

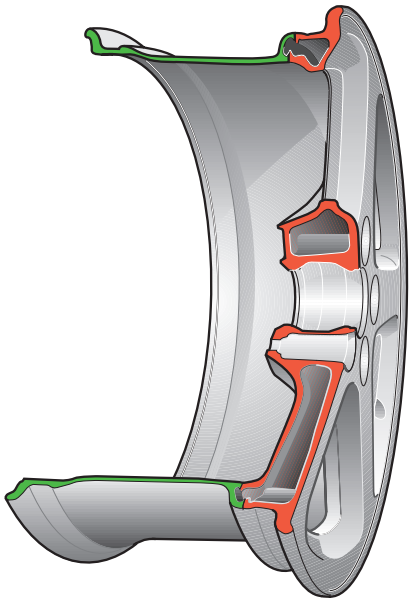

213_041

213_091

See also SSP 213, chapter “Running gear”.

213_068

Vibration

If a mass on a spring is deflected from its rest position by a force, a restoring force develops in the spring which allows the mass to rebound. The mass **oscillates** beyond its rest position which results in a further restoring force being exerted. This process is repeated until air resistance and the internal friction of the spring causes the vibration to cease.

The natural frequency of the bodywork

The vibrations are defined by the degree of amplitude and its frequency. The natural frequency of the bodywork is particularly important during matching of the suspension.

The natural frequency of unsprung parts is between 10 Hz and 16 Hz for a medium-size vehicle. Appropriate matching of the suspension system reduces the natural frequency of the bodywork (sprung mass) to between 1 Hz and 1.5 Hz.

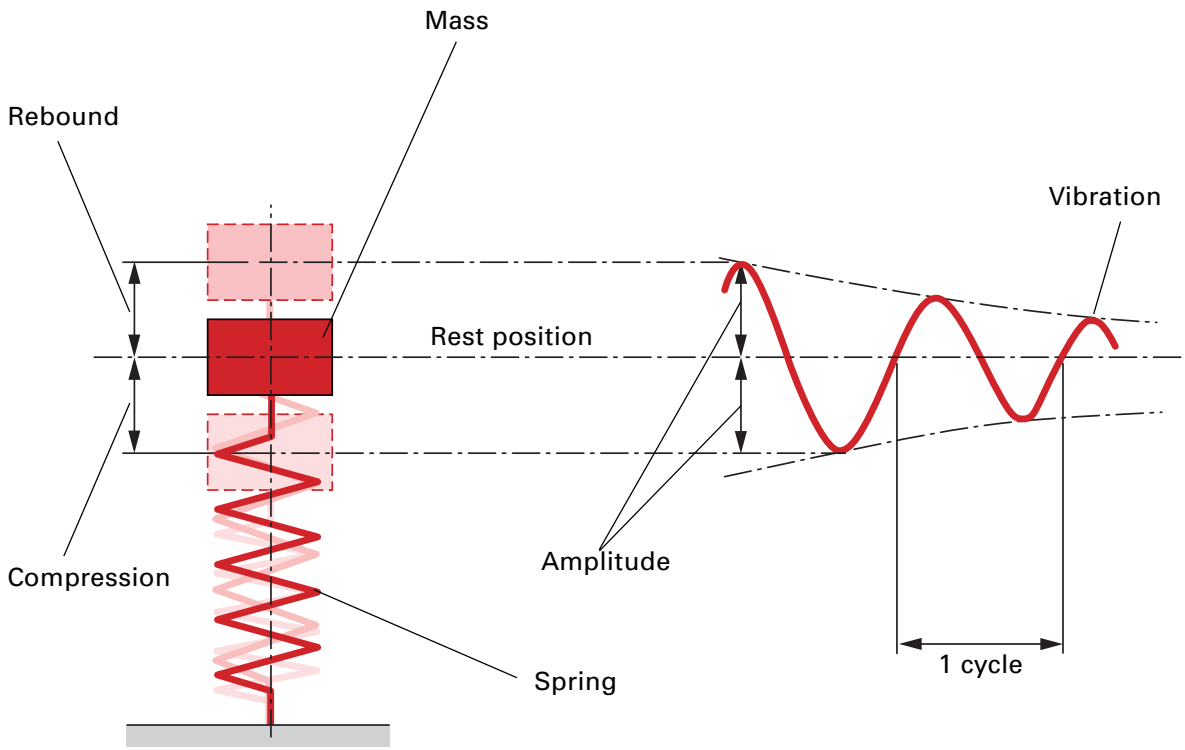

242_021

The natural frequency of the bodywork is essentially determined by the characteristics of the springs (spring rate) and by the sprung mass.

Greater mass or softer springs produce a lower natural frequency of the bodywork and a greater spring travel (amplitude).

Smaller mass or harder springs produce a higher natural frequency of the bodywork and a lesser spring travel.

Depending on personal sensitivity, a natural frequency of the bodywork below 1 Hz can cause nausea. Frequencies above 1.5 Hz impair driving comfort and are experienced as shudders above around 5Hz.

Definitions

Vibration	Upward and downward motion of the mass (body)
Amplitude	The greatest distance of the vibrating mass from the rest position (vibration extent, spring travel)
Cycle	Duration of a single vibration
Frequency	Number of vibrations (cycles) per second
Natural frequency of the bodywork	Number of vibrations of the sprung mass (body) per second
Resonance	The mass is disturbed in its rhythm by a force which increases the amplitude (build-up).

Greater mass or softer springs

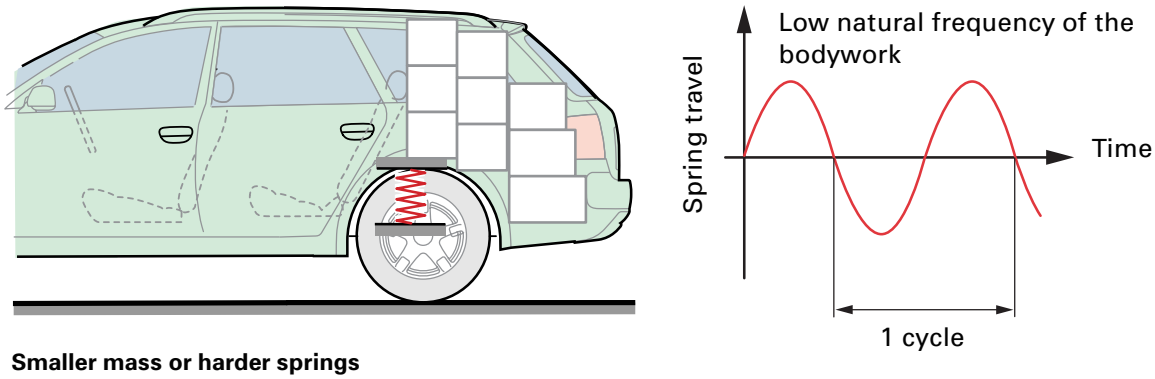

Smaller mass or harder springs

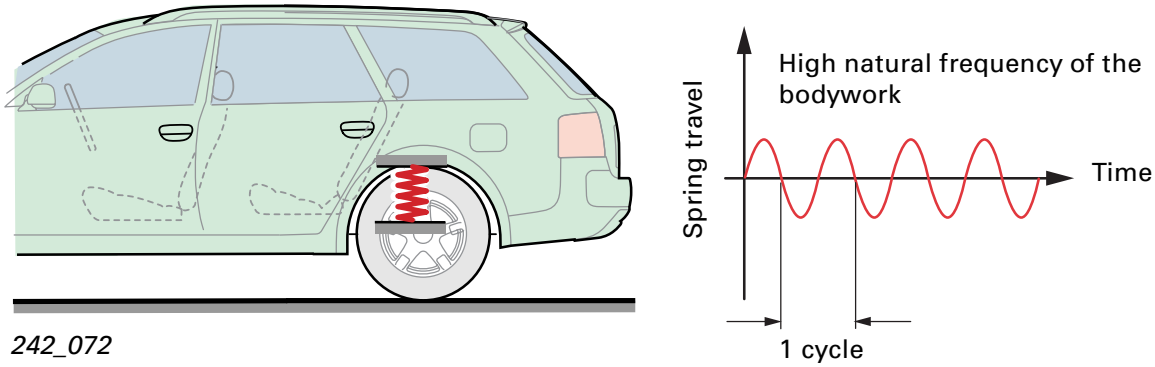

242_072

Matching of the natural frequency of the bodywork

The axle loads (sprung masses) of a vehicle vary, at times considerably, depending on the engine and equipment installed.

To ensure that the bodywork height (appearance) and the natural frequency of the bodywork (which determines the driving dynamics) remains practically identical for all vehicle versions, different spring and shock absorber combinations are fitted to the front and rear axles in accordance with the axle load.

For instance, the natural frequency of the bodywork of the Audi A6 is matched to 1.13Hz on the front axle and 1.33Hz on the rear axle (design position).

The spring rate of the springs therefore determines the value of the natural frequency of the bodywork.
The springs are colour-coded to differentiate between the different spring rates (see table).

The degree of damping of the vibration damper has no significant influence on the value of the natural frequency of the bodywork. It influences only how quickly the vibrations cease (damping coefficient). For further information, see chapter “Vibration damping”.

For standard running gear without self-levelling, the rear axle is always matched to a higher natural frequency of the bodywork because when the vehicle is loaded, it is principally the load to the rear axle which increases, thus reducing the natural frequency of the bodywork.

Spring rate levels of the front axle for the A6

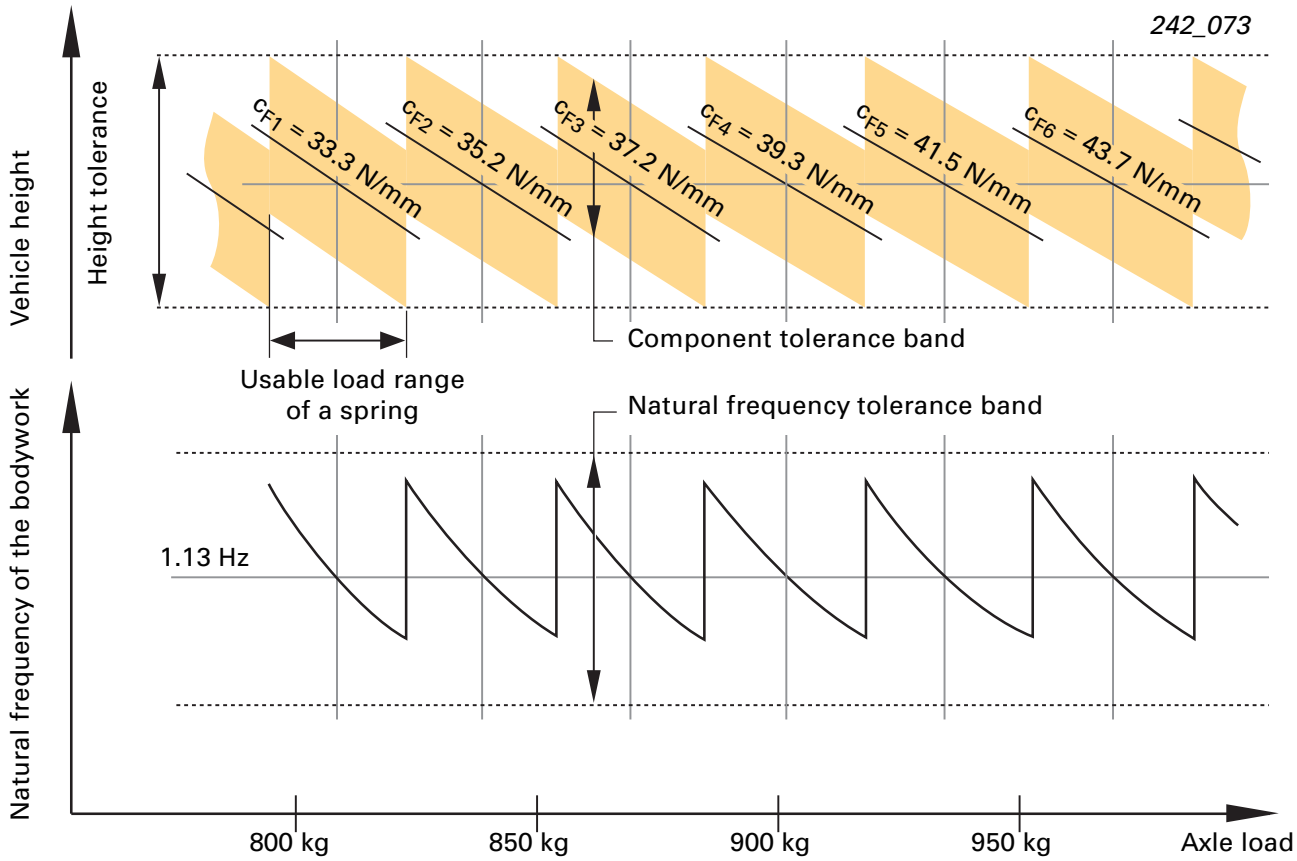

Spring allocation table (e.g. A6 front axle 1BA)

PR-No. weight class, front axle		Axle load (kg)	Suspension, left and right (spring rate)	Colour coding
Standard running gear e.g. 1 BA	OJD	739 - 766	800 411 105 AN (29.6 N/mm)	1 violet, 3 brown
	OJE	767 - 794	800 411 105 AP (31.4 N/mm)	1 white, 1 brown
	OJF	795 - 823	800 411 105 AQ (33.3 N/mm)	1 white, 2 brown
	OJG	824 - 853	800 411 105 AR (35.2 N/mm)	1 white, 3 brown
	OJH	854 - 885	800 411 105 AS (37.2 N/mm)	1 yellow, 1 brown
	OJJ	886 - 918	800 411 105 AT (39.3 N/mm)	1 yellow, 2 brown
	OJK	919 - 952	800 411 105 BA (41.5 N/mm)	1 yellow, 3 brown
	OJL	953 - 986	800 411 105 BM (43.7 N/mm)	1 green, 1 brown
	OJM	987 - 1023	800 411 105 BN (46.1 N/mm)	1 green, 2 brown
Sports running gear e.g. 1BE	OJD	753 - 787	800 411 105 P (40.1 N/mm)	1 grey, 3 violet
	OJE	788 - 823	800 411 105 Q (43.2 N/mm)	1 green, 1 violet
	OJF	824 - 860	800 411 105 R (46.3 N/mm)	1 green, 2 violet
	OJG	861 - 899	800 411 105 S (49.5 N/mm)	1 green, 3 violet
	OJH	900 - 940	800 411 105 T (53.0 N/mm)	1 yellow, 1 violet
	OJJ	941 - 982	800 411 105 AA (56.6 N/mm)	1 yellow, 2 violet
	OJK	983 - 1027	800 411 105 AB (60.4 N/mm)	1 yellow, 3 violet

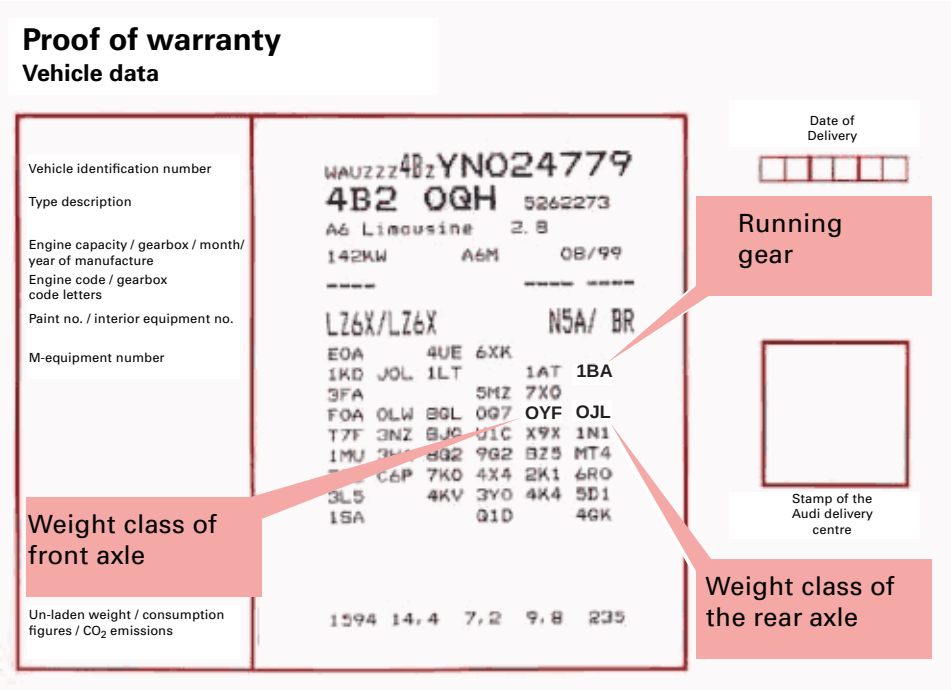

242_108

Characteristic values of springs

Characteristic curve/spring rate of springs

We can obtain the characteristic curve of a spring by producing a forces/travel diagram.

The spring rate is the ratio between the effective force and the spring travel. The unit of measurement for the spring rate is N/mm. It informs us whether a spring is hard or soft.

If the spring rate remains the same throughout the entire spring travel, the spring has a linear characteristic curve.

A soft spring has a flat characteristic curve while a hard spring has a steep curve.

A coil spring is harder due to:

- a greater wire diameter
- a smaller spring diameter
- a lower number of coils

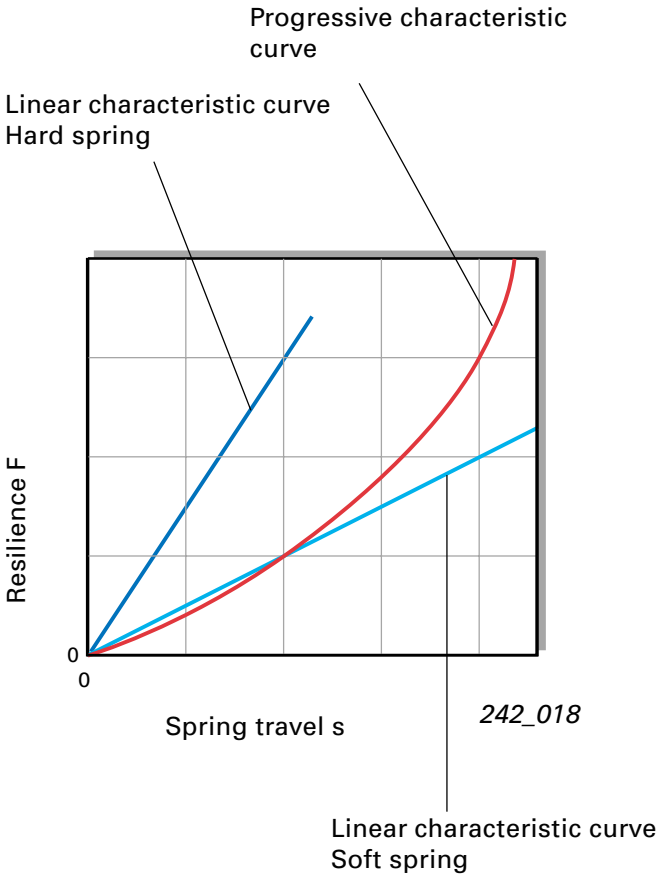

If the spring rate becomes greater as the spring travel increases, the spring has a progressive characteristic curve.

Coil springs with a progressive characteristic curve can be recognised as follows:

a) uneven coil pitch
b) conical coil shape
c) conical wire diameter
d) combination of two spring elements (example, see next page)

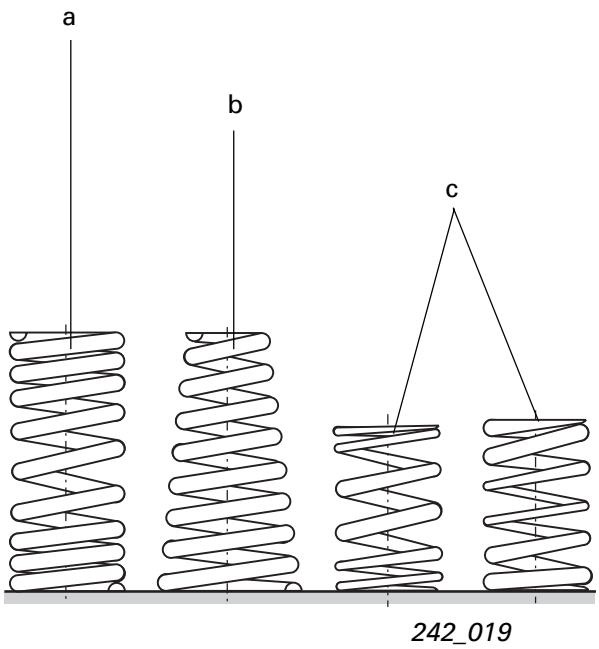

(Example: Suspension strut with auxiliary polyurethane springs).

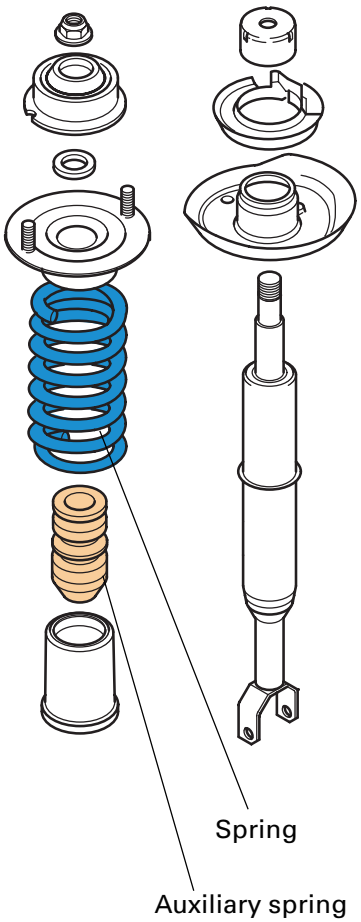

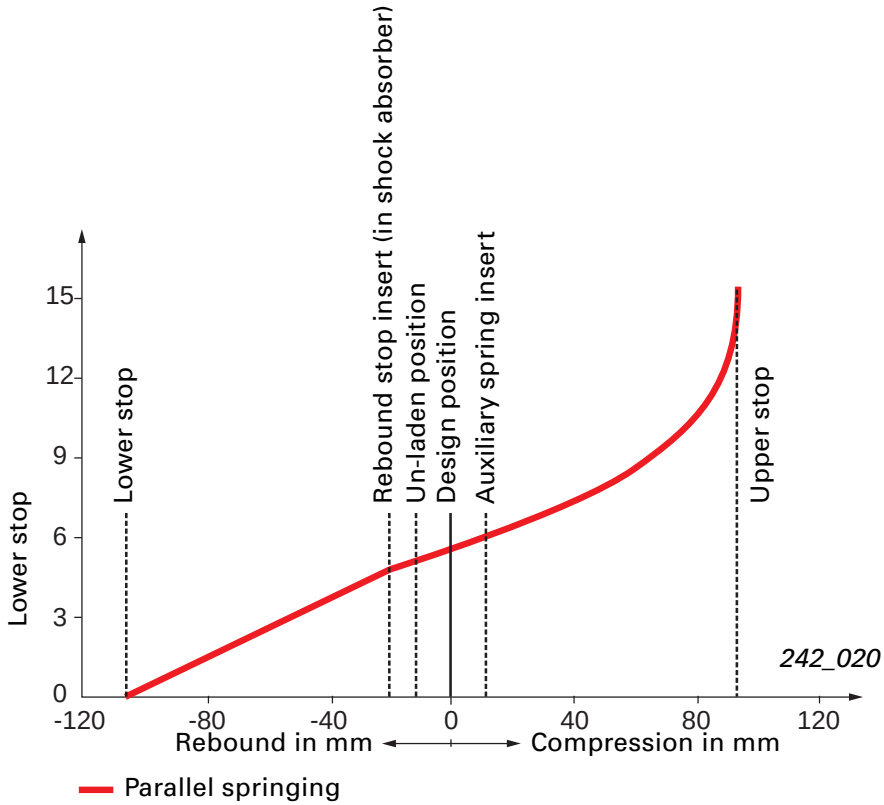

Advantages of progressive characteristic curve of spring:

- ▶ Better matching of the suspension system from normal to full load.
- ▶ The natural frequency of the bodywork remains practically constant during loading.
- ▶ The suspension is not so prone to impacts in the case of significant irregularities in the road surface.
- ▶ Better use of the available spring travel.

Conventional running gear (steel springs) without self-levelling

Spring travel

The overall spring travel s_{tot} required for running gear without self-levelling is comprised of the static compression s_{stat} and the dynamic spring travel caused by vehicle vibrations s_{dyn} for both laden and un-laden vehicles.

$$s_{tot} = s_{stat} + s_{dyn(un\text{-}laden)} + s_{dyn(fully\ laden)}$$

When the vehicle is stationary, the vehicle body retracts by a certain spring travel depending upon the load. In this case, we speak of static compression: s_{stat}.

The disadvantage of conventional running gear without self-levelling is its reduced spring travel at full load.

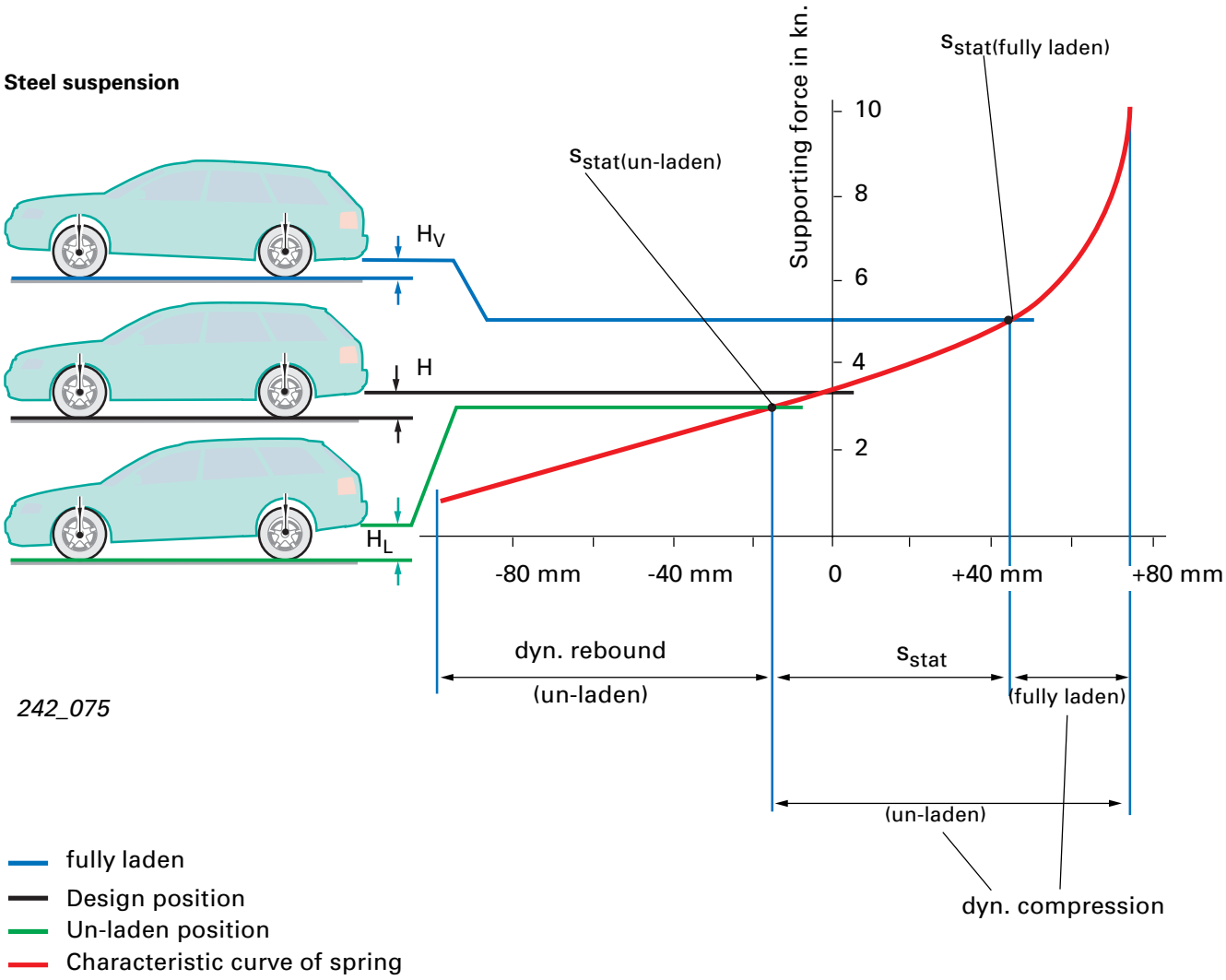

H_V = height when fully laden

H = design position height

H_L = height when un-laden

The static compression ...

... is the starting point (zero) for the dynamic spring movements, compression travel (plus) and rebound travel (minus).

... is dependant upon the spring rate and the load (sprung masses).

... results from the difference between the static compression when un-laden $s_{stat(un\text{-}laden)}$ and the static compression when fully laden $s_{stat(fully\ laden)}$.

$$s_{stat} = s_{stat(fully\ laden)} - s_{stat(un\text{-}laden)}$$

Definitions:

The **un-laden position** ...
... is the compression exerted onto the wheels when the vehicle is ready for the road (fuel tank completely filled, spare wheel and vehicle tools present).
The **design position** ...
... is defined as the un-laden position plus the additional load of three persons, each weighing 68 kg.

In the case of a flat characteristic curve (soft springs), the difference and thereby the static compression between full and un-laden is very great.

In the case of a steep characteristic spring curve, this state of affairs is reversed and is coupled with an excessive increase of the natural frequency of the bodywork.

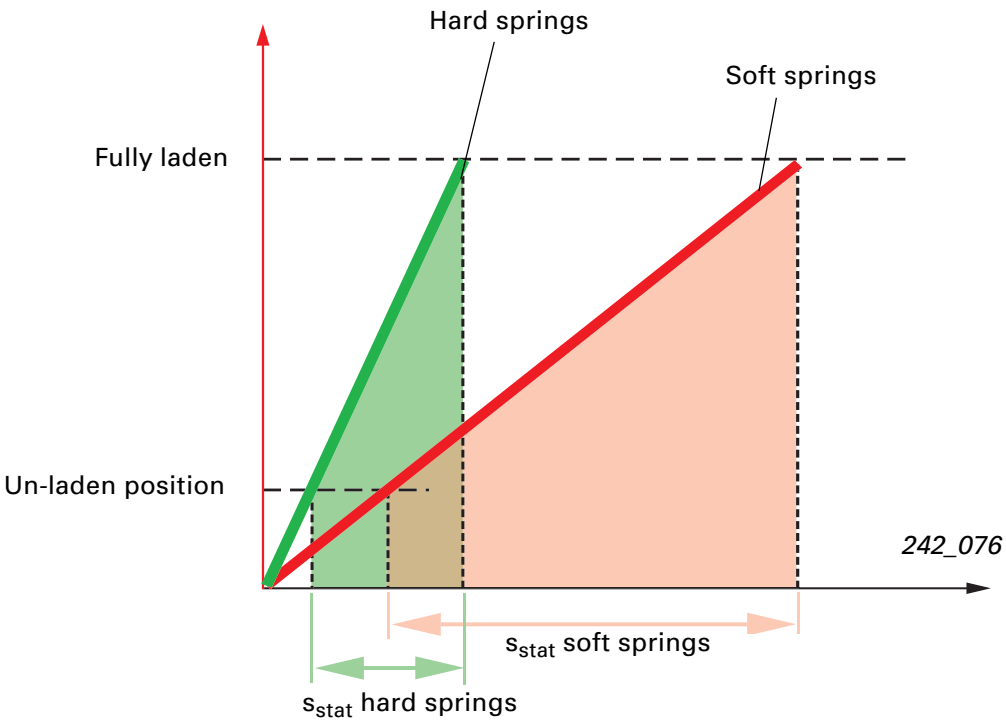

Self-levelling air suspension

Air suspension is a controllable form of vehicle suspension.
With air suspension, it is simple to achieve self-levelling and it is therefore generally integrated into the system.
The basic advantages of self-levelling are:

- Static compression remains the same, irrespective of vehicle loads (see overleaf). The space requirement in the wheel arches for free wheel movement kept to a minimum, which has benefits for the overall use of available space.
- The vehicle body can be suspended more softly, which improves driving comfort.
- Full compression and rebound travel is maintained, whatever the load.
- Ground clearance is maintained, whatever the load.
- There are no track or camber changes when vehicle is laden.
- The c_w value is maintained, as is the visual appearance.
- Less wear to ball joints due to reduced working angle.
- Greater loads are possible if required.

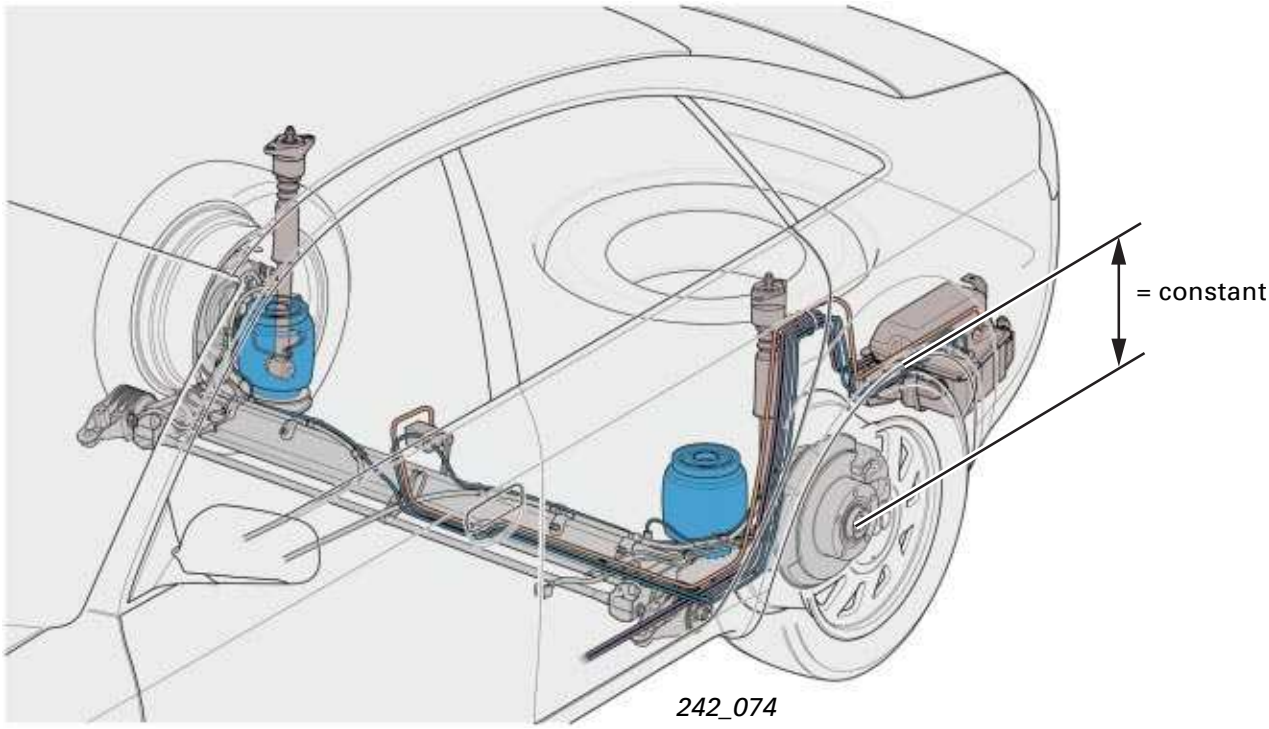

With the aid of self-levelling, the vehicle (sprung masses) remains at one level (design position) because the air spring pressure is adapted accordingly.

Static compression is thus the same at all times thanks to the self-levelling system and need not be accounted for when designing the wheel clearances.

$s_{stat} = 0$

Another feature of self-levelling air suspension is that the natural frequency of the bodywork is kept virtually constant between un-laden and full-load (see chapter "Air spring characteristic values" page 21).

In addition to the main advantages offered by self-levelling, its realisation by means of air suspension (Audi A6) offers another significant advantage.
As the air pressure in the air springs is adapted in accordance with the load, the spring rate alters proportionally to the sprung mass. The positive outcome is that the natural frequency of the bodywork and thereby driving comfort remain virtually constant, irrespective of the load.

Air suspension

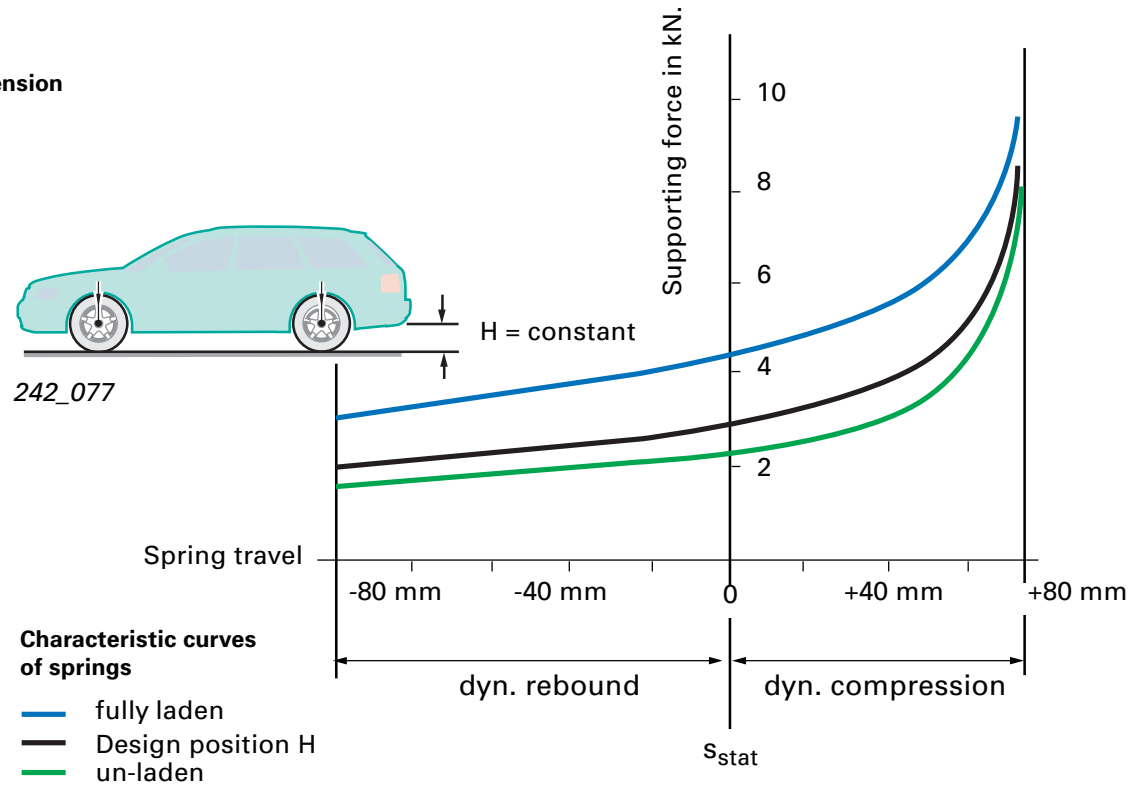

Principles of air suspension

Another benefit is the principle-related progressive characteristic curve of an air spring.

With **fully supporting** air suspension on both axles (Audi allroad quattro), different vehicle levels can be set, e.g.:

- ▶ Normal driving position for city driving.
- ▶ Lowered driving position for high speeds to improve driving dynamics and air resistance.
- ▶ Raised driving position for travel off-road and on poor road surfaces.

You can find further details in SSP 243 “4-Level air suspension in the Audi allroad quattro”.

Fully supporting means:

Self-levelling systems are often combined with steel or gas-filled spring devices with hydraulic or pneumatic control. The supporting force of these systems results from the sum of both systems. We therefore call them “partially supporting” (Audi 100/ Audi A8).

In the self-levelling suspension systems in the Audi A6 (on the rear axle) and in the Audi allroad quattro (rear and front axles) air springs are the only supporting suspension elements and these systems are therefore described as “fully supporting”.

242_030

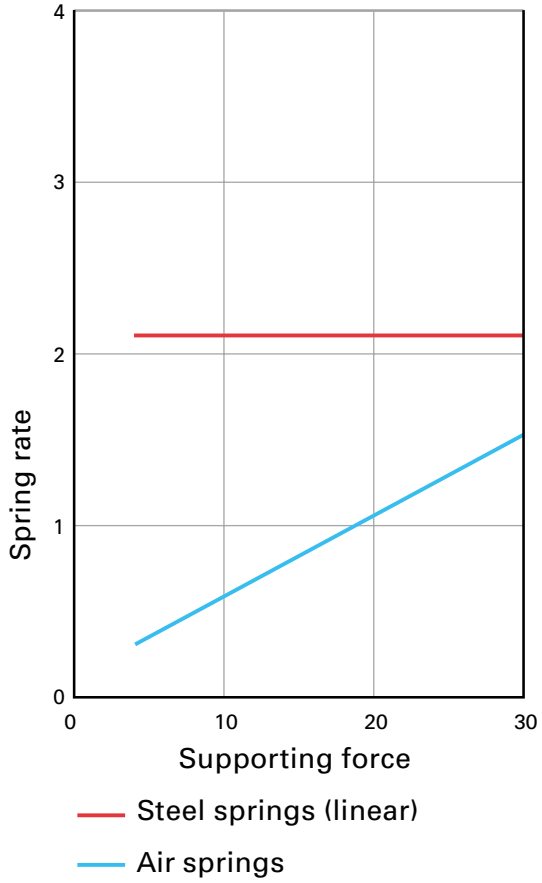

242_031

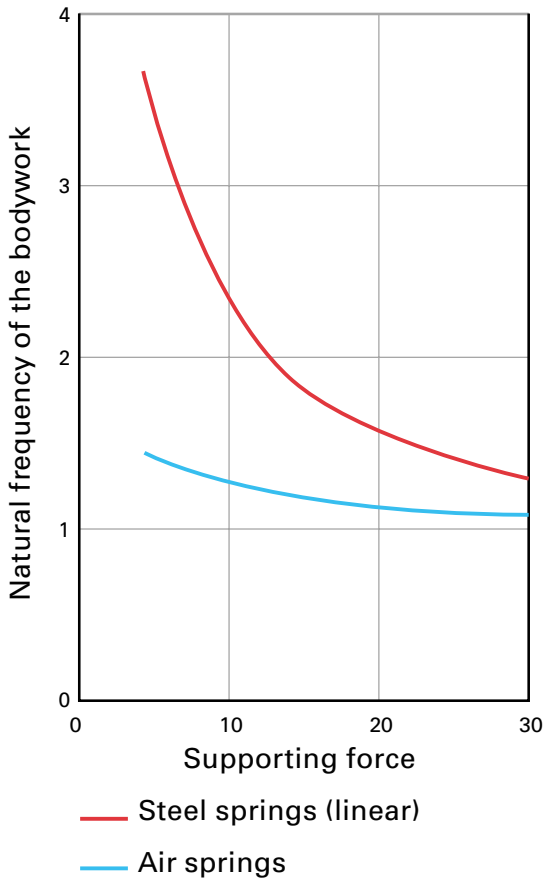

Design of the air springs:

In passenger vehicles, air springs with U-bellows are used as suspension elements. These allow greater spring travel in restricted spaces.

The air springs consist of:

- Upper housing closure
- U-bellows
- Piston (lower housing closure)
- Retaining rings

The construction of the U-bellows can be seen in fig. 242_032.

The outer and inner surfaces are made of an elastomer material. The material is resistant to all weather influences and is largely oil-resistant. The inner surface finish is designed to be particularly air-tight.

The stability supports absorb the forces produced by the internal pressure in the air springs.

Coaxial arrangement of the air springs

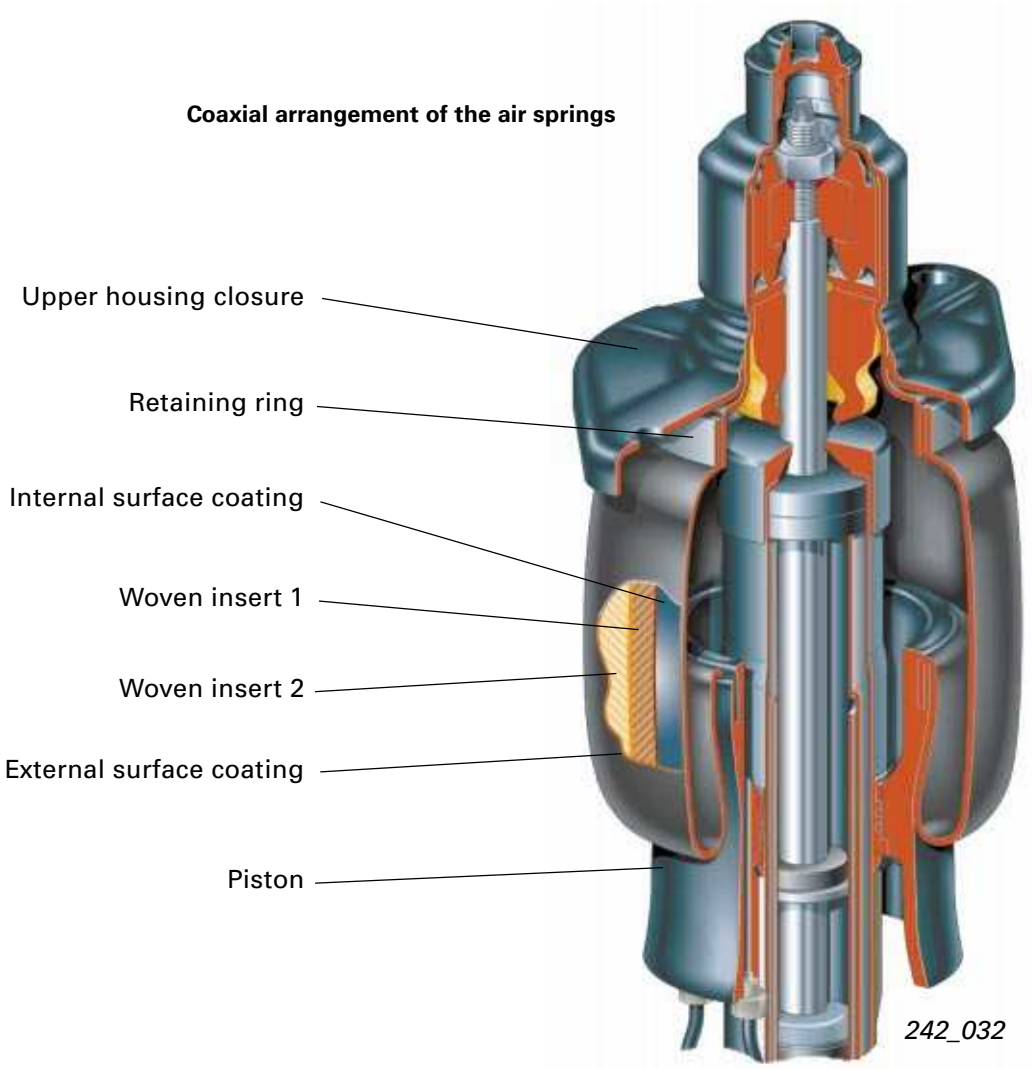

242_032

Principles of air suspension

High-quality elastomer material and polyamide cord woven inserts (stability supports) provide the U-bellows with good unrolling characteristics and a sensitive response of the spring system.
The necessary properties are ensured over a wide temperature range between -35 °C and +90 °C.

Metal retaining rings tension the U-bellows between the upper housing closure and the piston. The retaining rings are machine-pressed by the manufacturer.

The U-bellows unrolls onto the piston.

Depending on the axle design, the air springs are either separate from the shock absorbers or combined as a suspension strut (coaxial arrangement).

Air springs must not be moved in an unpressurised condition since the air bellows cannot unroll on the piston and would be damaged.
In a vehicle in which the air springs are unpressurised, the relevant air springs must be filled with the aid of the diagnostic tester (see Workshop Manual) before raising or lowering the vehicle (e.g. vehicle lifting platform or vehicle jack).

Separate arrangement of the air springs

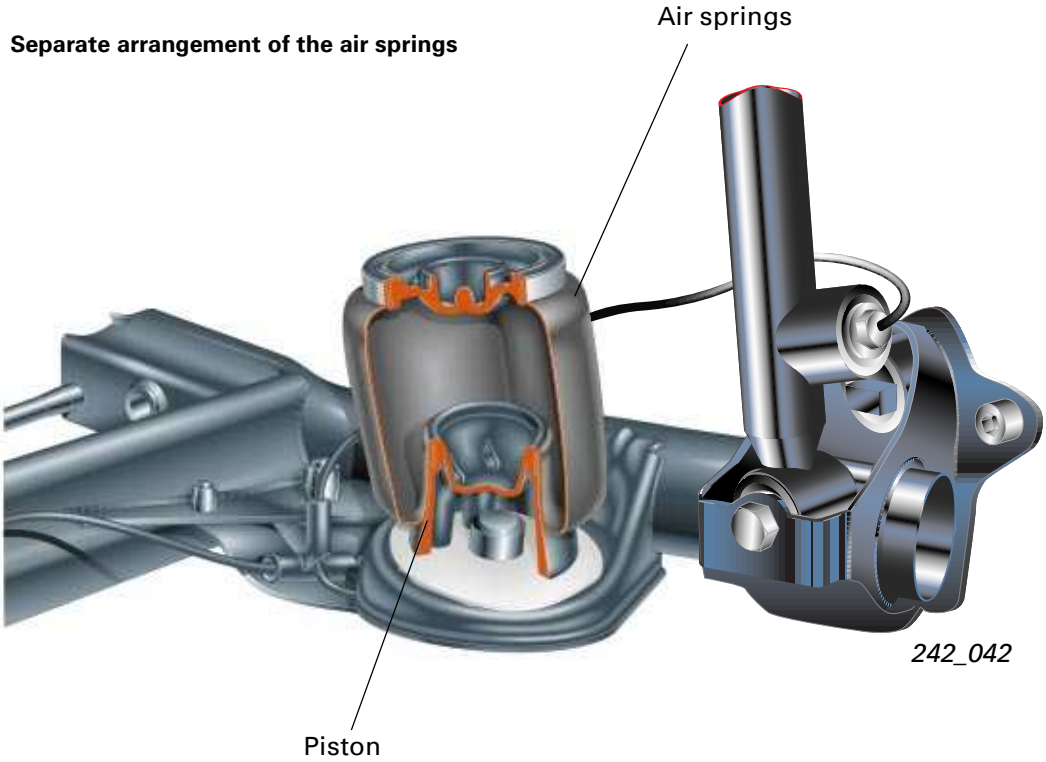

Air spring parameters

Resilience/spring rate

The resilience (supporting force) F of an air spring is determined by the effective surface A_w and the excess pressure in the air spring p_i.

$F = p_i \times A_w$

The effective surface A_w is defined by the effective diameter d_w.

In the case of a rigid structure, such as piston and cylinder, the effective diameter corresponds to the piston diameter.

In the case of air springs with U-bellows, the effective diameter is determined by the lowest point of the fold.

As the formula shows, the supporting force of an air spring is in direct relation to the internal pressure and the effective surface. It is very easy to alter the supporting strength (resilience) statically (no movement of the bodywork) by varying the pressure in the air spring.

The various pressures, depending on the load, result in the relevant characteristic curves of the springs and/or spring rates. The spring rate alters at the same rate as the bodywork weight, while the natural frequency of the bodywork which determines the handling characteristics remains constant. The air suspension is adapted to a natural frequency of the bodywork of 1.1 Hz.

Piston and cylinder

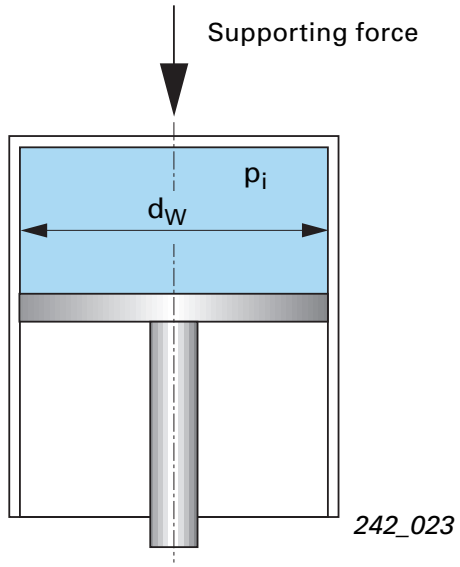

U-bellows

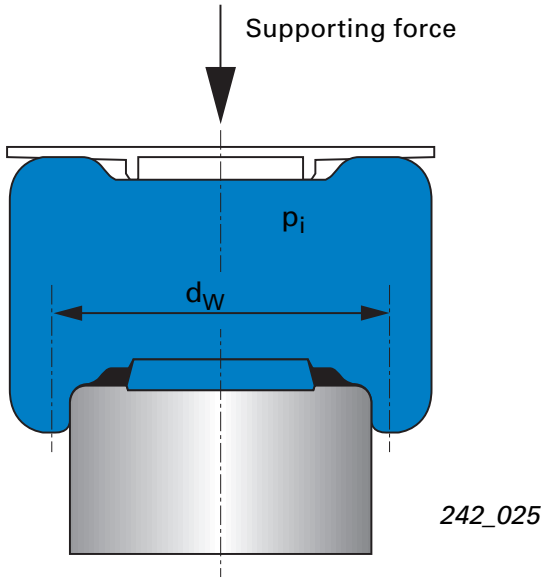

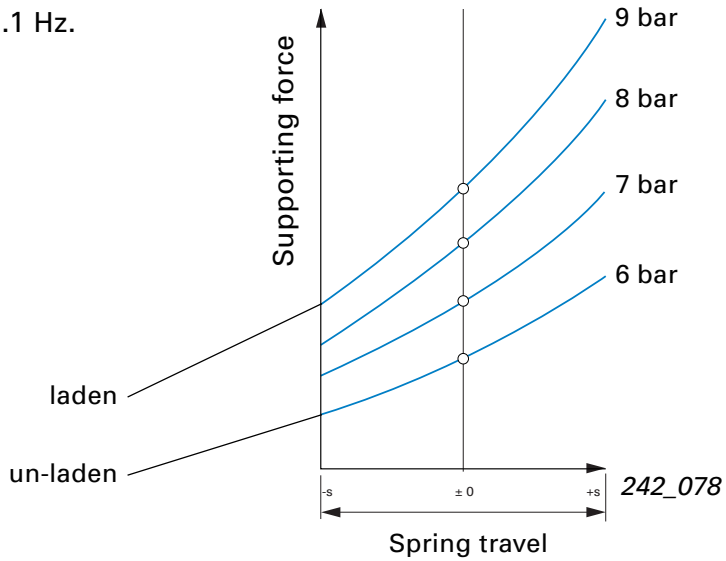

Principles of air suspension

Characteristic curve of springs

Owing to the functional principle, the characteristic curve of an air spring is progressive (in the case of cylindrical pistons).

The progress of the characteristic curve of the spring (flat/steep inclination) is determined by the spring volume.

A large spring volume produces a flat progression of the characteristic curve (soft springs), a small spring volume produces a steep progression of the characteristic curve (hard springs).

The progression of the characteristic curve of a spring can be influenced by the contour of the piston.

Changing the contour of the piston alters the effective diameter and thereby the resilience.

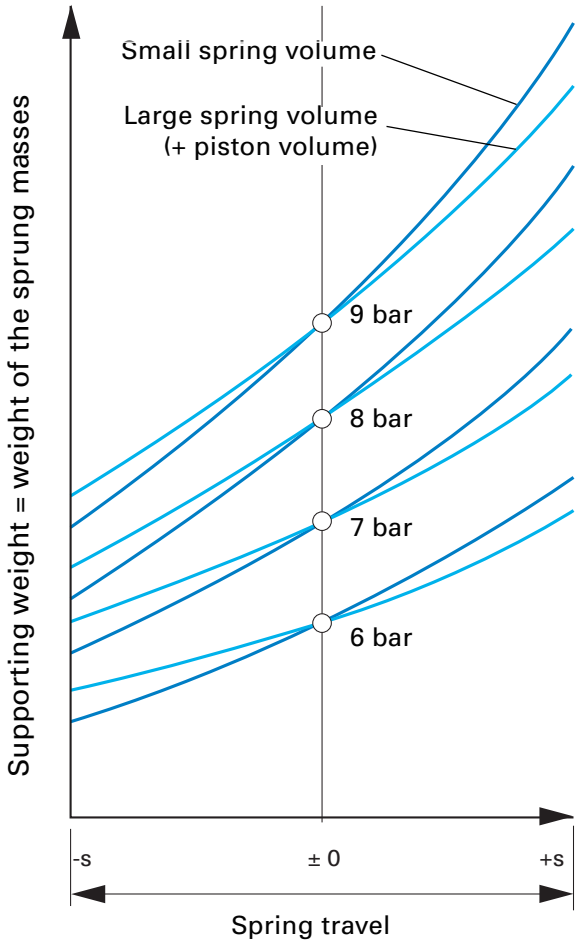

242_027

Result

The following options are available for matching the air springs using U-bellows:

- ► Size of the effective surface
- ► Size of spring volume
- ► Contour of the piston

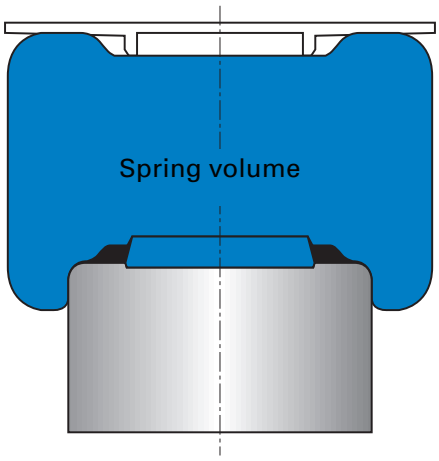

242_084

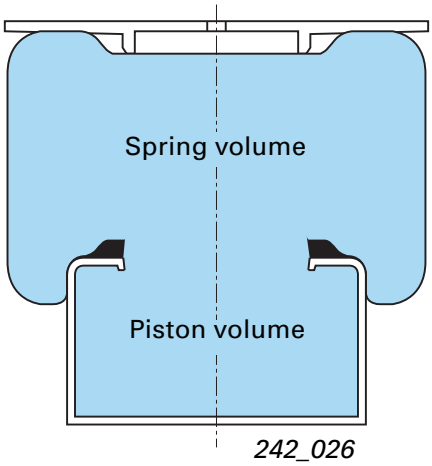

242_026

Example of the contour of a piston
(suspension strut in the Audi allroad quattro)

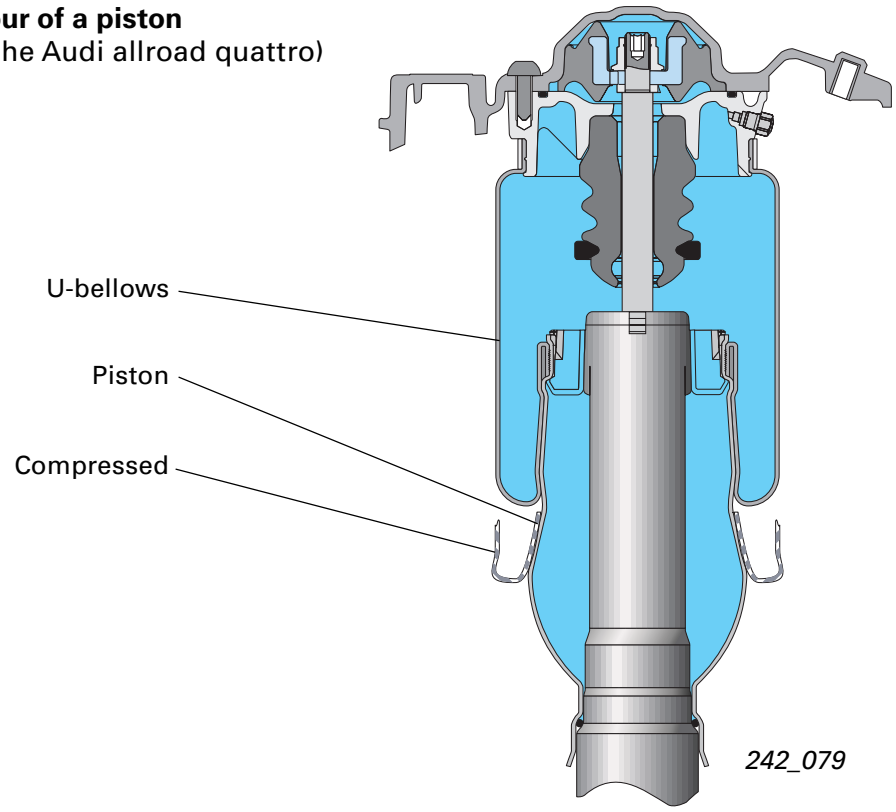

Vibration damping

Without vibration damping, the vibration of the masses during driving operation would be increased to such an extent by repeated road irregularities, that bodywork vibration would build up increasingly and the wheels would lose contact with the road surface.

The purpose of the vibration damping system is to eliminate vibrations (energy) as quickly as possible via the suspension.

For this purpose, hydraulic vibration dampers (shock absorbers) are located parallel to the springs.

Vibration dampers are available in different designs but their basic function and purpose are the same.

Hydraulic/mechanical damping has found widespread application in modern vehicle design. The telescopic shock absorber is now particularly favoured due to its small dimensions, minimum friction, precise damping and simple design.

Principles of air suspension

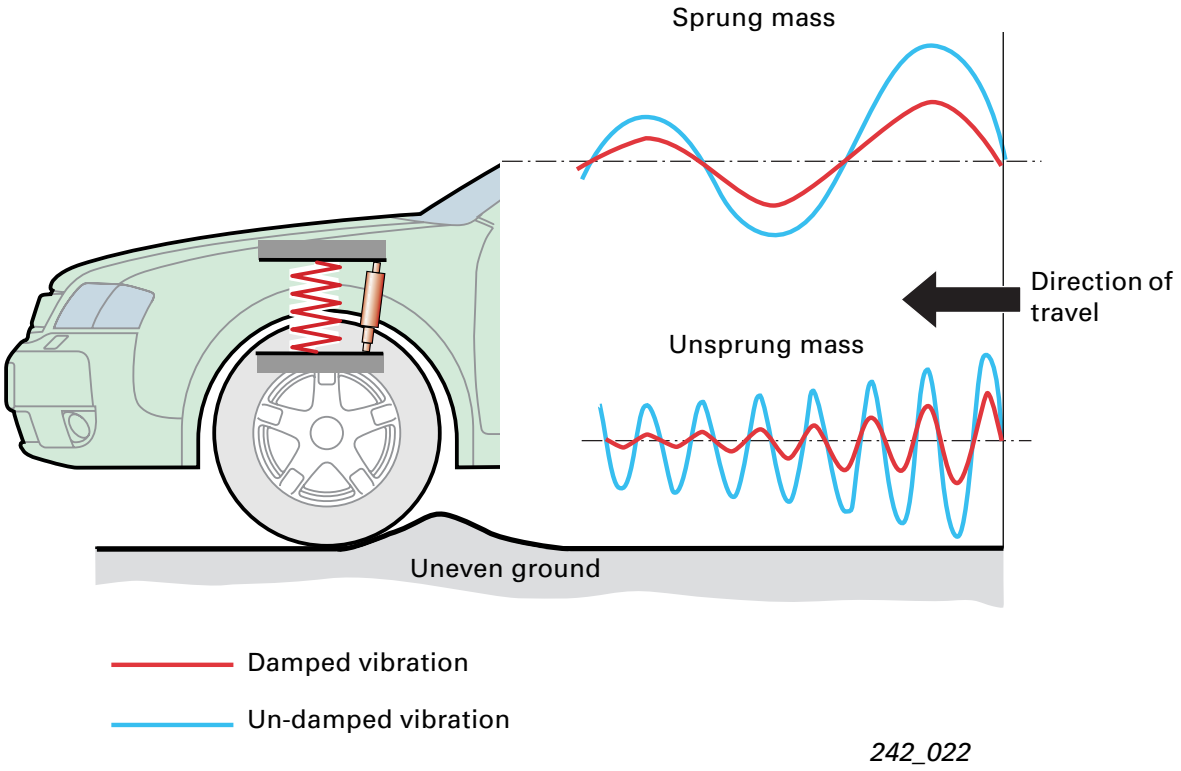

As previously mentioned, vibration damping has a fundamental effect on driving safety and comfort.

However, the requirements of driving safety (driving dynamics) and driving comfort are conflicting.

Within certain limits, the following applies in principle:

- A higher rate of damping improves driving dynamics and reduces driving comfort.
- A lower rate of damping lessens driving dynamics and improves driving comfort.

The term “shock absorbers” is misleading as it does not precisely describe the function.
For this reason we shall use the term “vibration damper” instead.

Shock absorbers (vibration dampers).

Dual pipe gas-pressure shock absorber

The dual pipe gas-pressure shock absorber has become established as the standard damper.
In the dual pipe gas-pressure shock absorber, the working cylinder and the housing form two chambers. The piston and piston rod move inside the working chamber, which is completely filled with hydraulic oil. The ring-shaped oil reservoir between the working cylinder and the housing serves to compensate volumetric changes caused by the piston rods and temperature changes in the hydraulic oil.

The oil reservoir is only partially filled with oil and is under a pressure of 6 - 8 bar, which reduces the tendency towards cavitation.

Two damping valve units are used for damping; the piston valve and the bottom valve. These comprise a system of spring washers, coil springs and valve bodies with throttle bores.

Cavitation is the formation cavities and the creation of a vacuum in a rapid liquid flow.

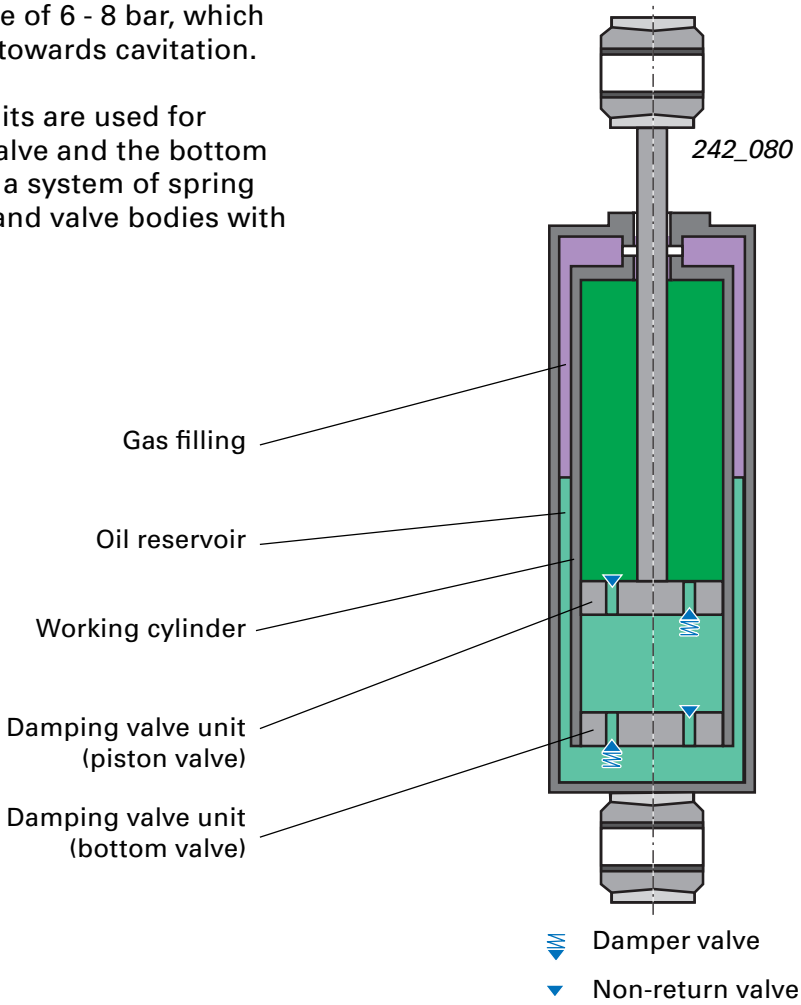

Principles of air suspension

Function

During compression, damping is determined by the bottom valve and to a certain extent by the return flow resistance of the piston.
The oil displaced by the piston rod flows into the oil reservoir. The bottom valve exerts a defined resistance against this flow, thereby braking the movement.

During rebound, the piston valve alone carries out the damping action and exerts a predetermined resistance against the oil flowing downwards.
The oil required in the working chamber can flow back unhindered via the non-return valve in the bottom valve.

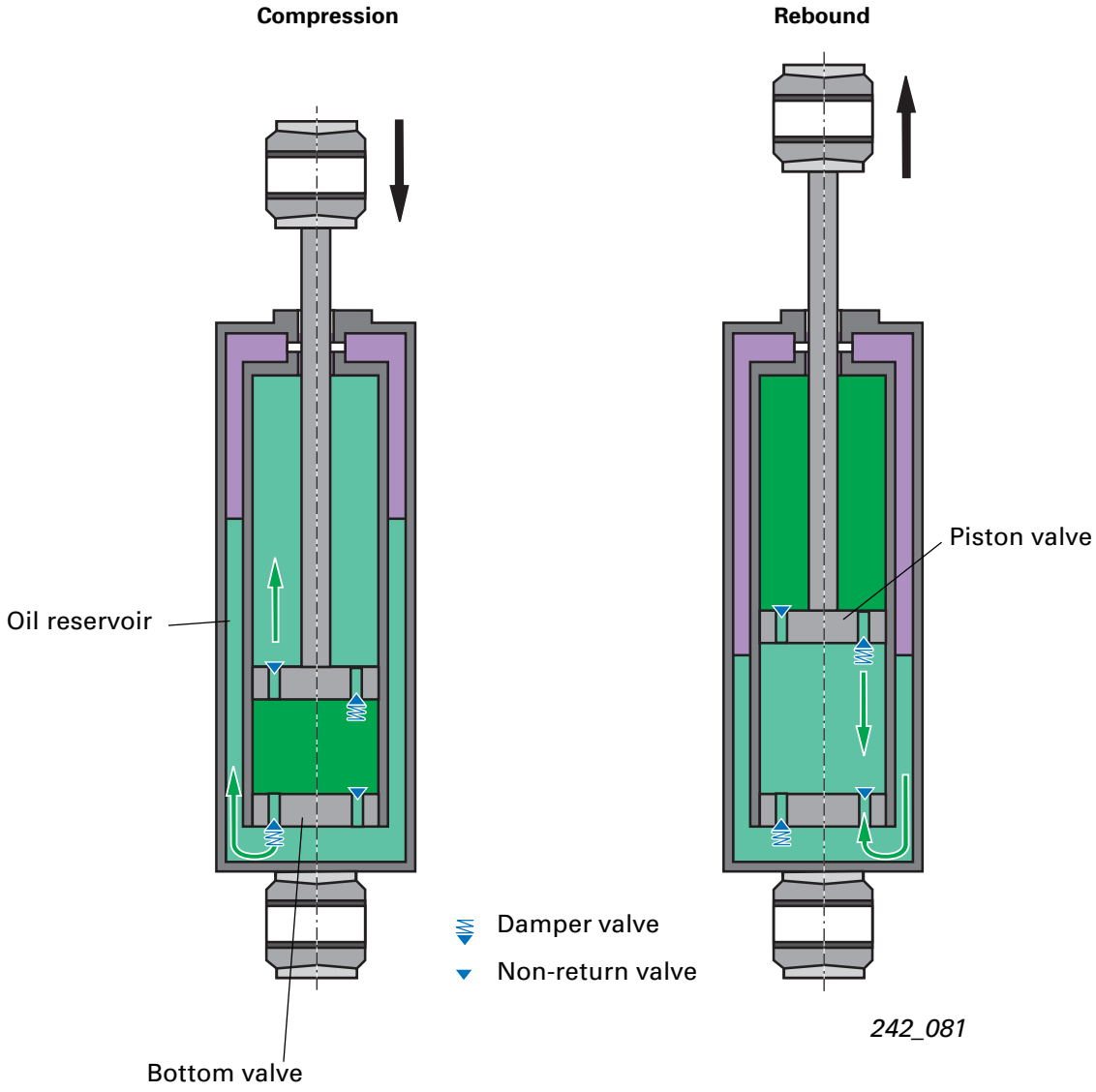

Single pipe gas-pressure shock absorber

With the single pipe gas-pressure shock absorber, the working chamber and the oil reservoir are located in a single cylinder. Volumetric changes caused by the piston rod and the temperature changes in the oil are compensated by another gas chamber which is separated from the working cylinder by a dividing piston. The level of pressure in the gas chamber is approx. 25 - 30 bar and must be able to sustain the damping forces during compression.

The damping valves for compression and rebound are integrated into the piston.

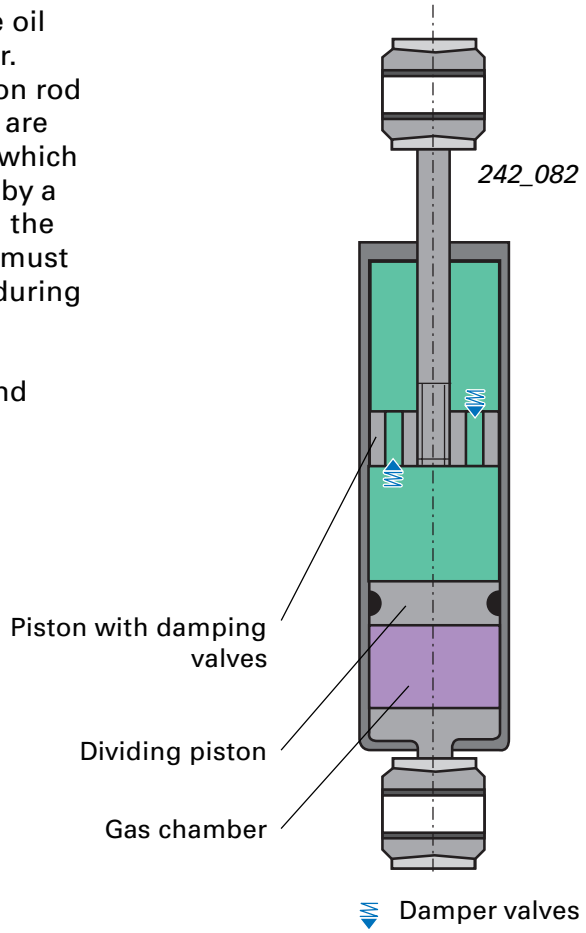

Comparison of single/dual pipe gas-pressure shock absorbers

	Dual pipe gas-pressure shock absorber	**Single pipe gas-pressure shock absorber**
Valve function	The tendency towards cavitation is reduced by the gas pressure in the oil reservoir	Minimal tendency towards cavitation thanks to high gas pressure and separation of oil and gas
Characteristic curves	Any, due to separate valves for compression and rebound	Dependant on the gas pressure during compression
Short damping strokes	Good	Better
Friction	Low	Higher due to seal under pressure
Design	Greater diameter	Longer due to gas chamber in the cylinder
Installation position	Approximately vertical	Any
Weight	Heavier	Lighter

Principles of air suspension

Function

During compression, oil is forced out of the lower chamber through the discharge valve integrated into the piston which exerts a defined resistance against the oil. The gas cushion thereby compresses by the amount of the piston rod volume inserted.

During rebound, oil is forced out of the upper chamber through the suction valve integrated into the piston which exerts a defined resistance against the oil. The gas cushion thereby expands by the amount of the emerging piston rod volume.

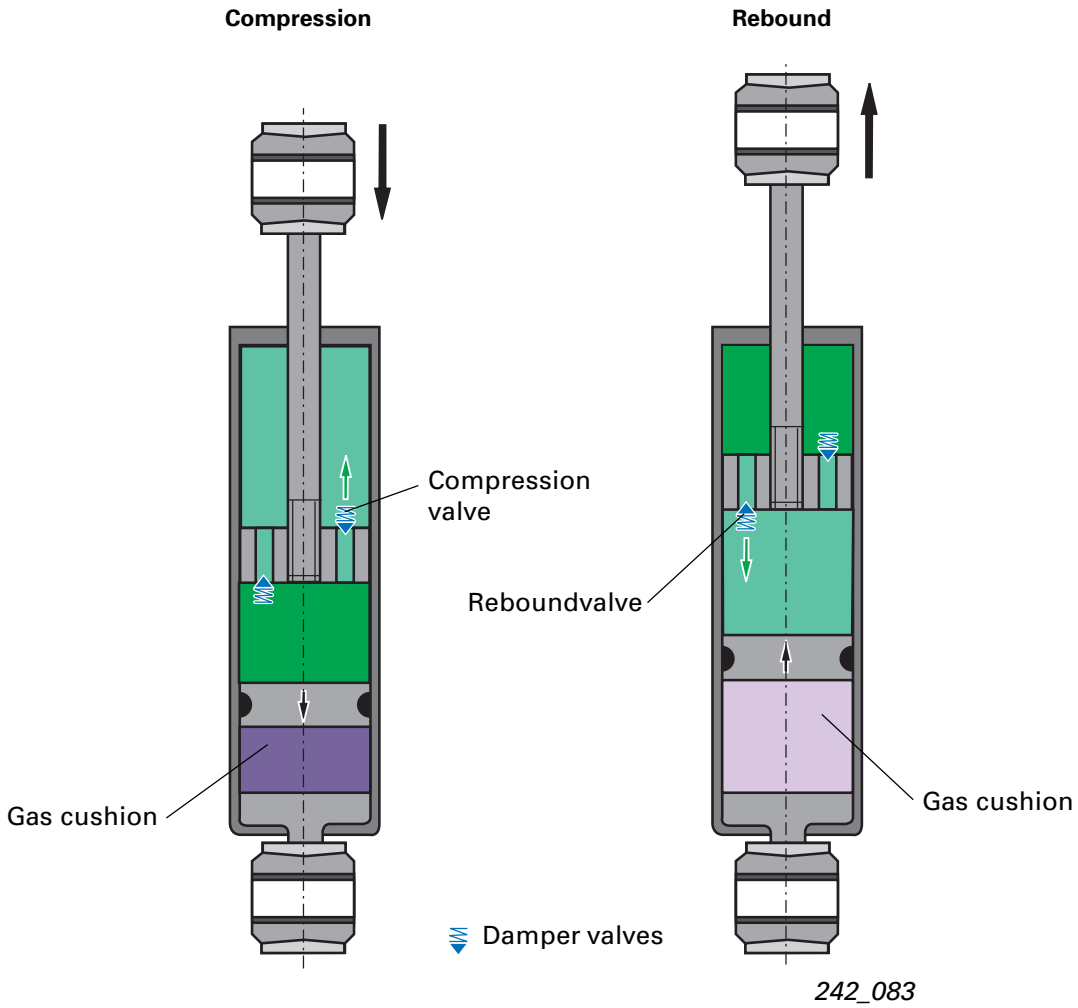

Damping matching

We can basically distinguish between compression and rebound in the damping process.

The damping force during compression is generally smaller than during rebound. Consequently, irregularities in the road are transmitted to the vehicle bodywork with diminished force. The spring absorbs the energy which is quickly dissipated during rebound by the more efficient action of the shock absorber.

Advantage of this matching:
Good response of the vehicle suspension ensures greater driving comfort.

The disadvantage of this matching occurs in the case of a quick succession of irregularities in the road. If the time between the individual impacts is no longer sufficient for rebound, the suspension can "harden" significantly in extreme cases, impairing driver comfort and driver safety.

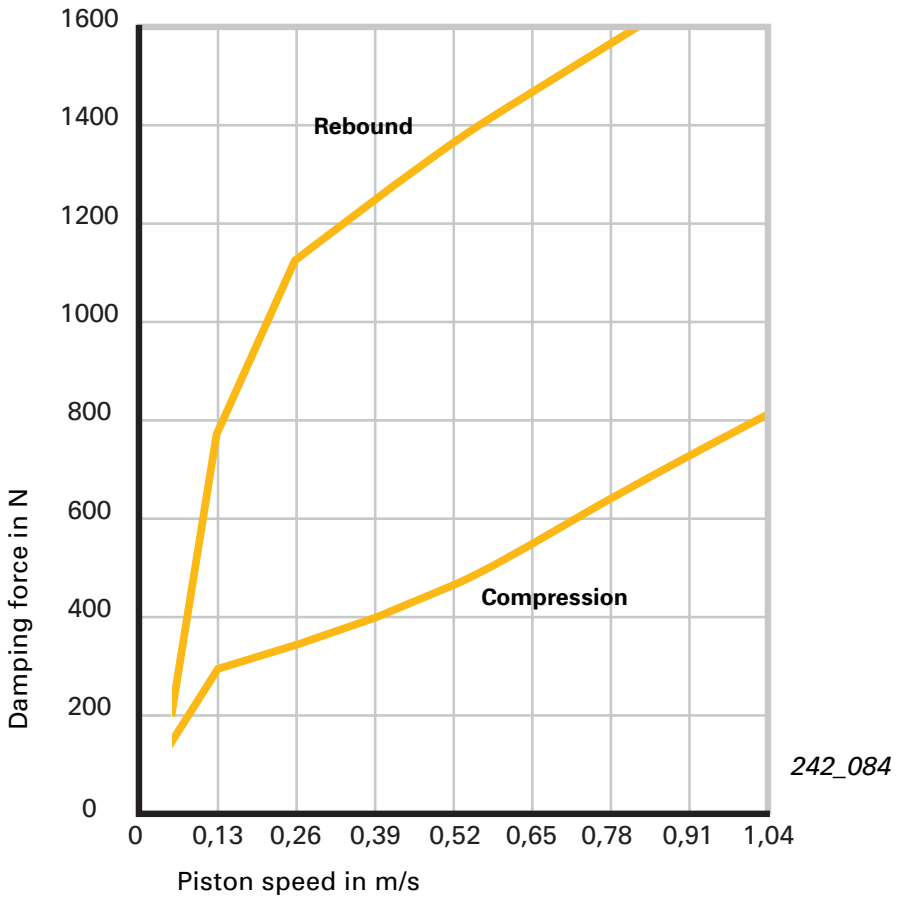

The degree of damping

... (the factor which determines how quickly the vibrations are eliminated)

of the vehicle body is dependant on the damping force of the shock absorber and the sprung masses.

If the damping force is unchanged, the following applies:

An increase of the sprung masses reduces the degree of damping. This means that the vibrations are eliminated more slowly.

A reduction of the sprung masses increases the degree of damping. This means that the vibrations are eliminated more rapidly.

The **degree of damping** describes how much kinetic energy a vibration system been dissipated between two vibration cycles as a result of damping.

The **damping coefficient** is just another term for degree of damping.

Increased sprung mass

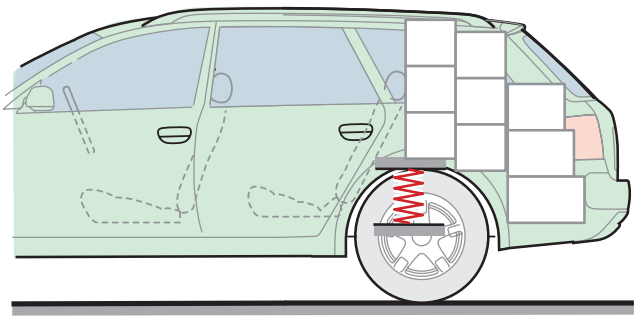

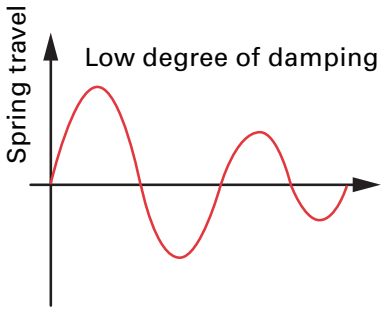

Reduced sprung mass

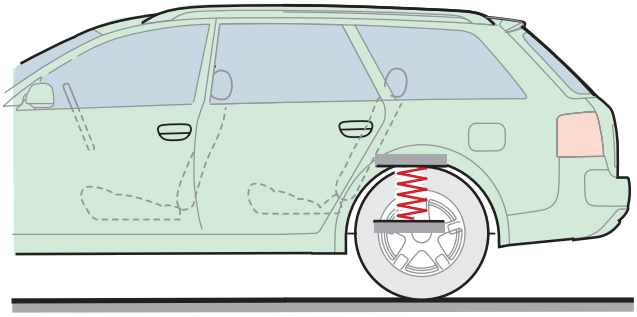

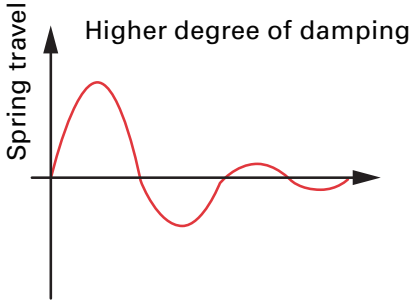

242_068

Damping force

The damping force depends upon the oil volume to be displaced (surface of the damping valve), the flow resistance of the damper valves, the speed of the damper piston and the viscosity of the damping oil.

The damping force is determined with the aid of a test machine. At a constant speed, this machine produces various rebound and compression strokes thereby producing differing rebound and compression speeds in the damper.

The force/stroke diagrams thus obtained can be converted into force/velocity diagrams (f-v diagrams).

These characteristic curves show the relationship between the damping force and the piston speed, thereby indicating the shock absorber characteristics.

We differentiate between linear, progressive and decreasing characteristic curves.

F-v diagram characteristic curve progressions (speed constant for all strokes)

decreasing

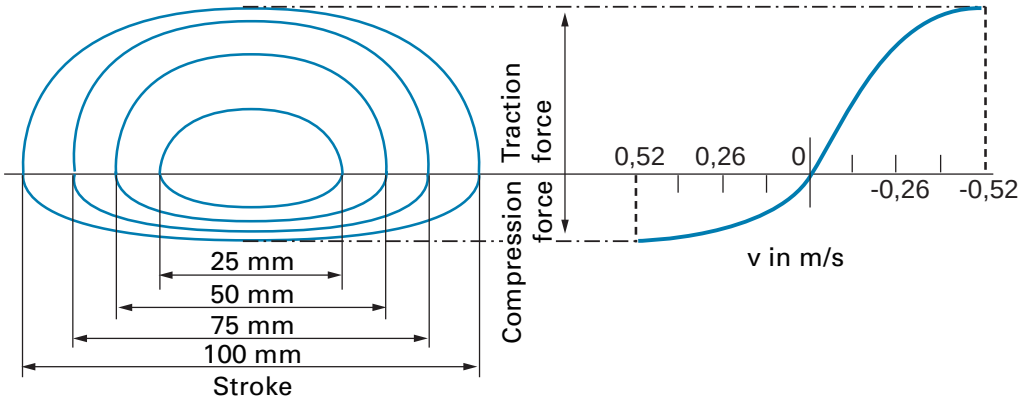

progressive

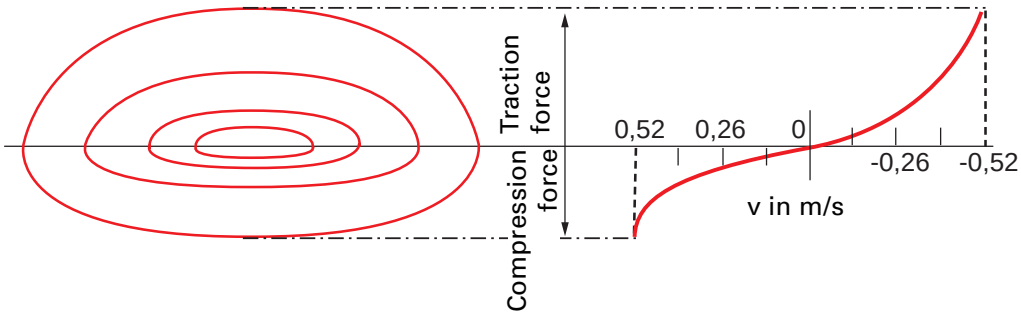

linear

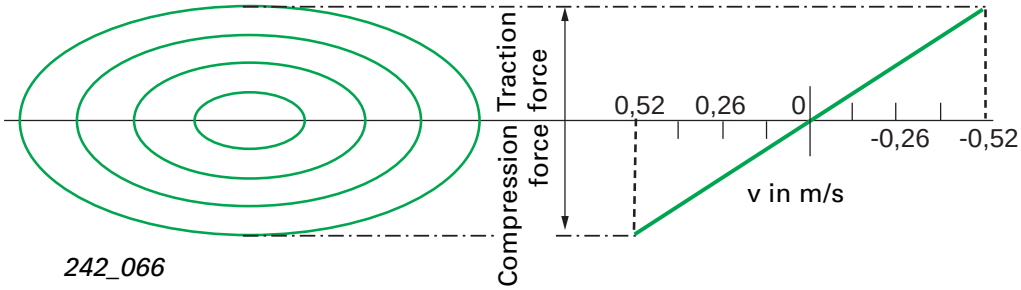

242_066

Principles of air suspension

Measures are taken during the design stage to adapt the characteristic curves to the requirements of suspension matching.

Shock absorbers with decreasing characteristic curves are normally used.

Normal shock absorbers have predetermined characteristic curves. They are adapted to normal bodywork weights and can cope with a wide range of driving situations in a well-matched running gear.

Running gear matching is always a compromise between driving safety (driving dynamics) and driving comfort.

The degree of damping (damping effect of sprung masses) is lessened as the load increases, which affects the driving dynamics. In contrast, the degree of damping is greater when the vehicle is un-laden, which lessens driving comfort.

Note:

A distinctive feature of damper matching is described in SSP 213, page 28, “Shock absorbers with load and travel-dependent damping characteristics”.

The PDC damper

In order to maintain the degree of damping and thereby the handling characteristics at a constant level between partially and fully laden, the Audi A6 self-levelling air suspension and the Audi allroad quattro 4-level air suspension both have a continuously variable load recognition system fitted to the rear axle.

Along with the constant natural frequency of the bodywork, the vehicle bodywork maintains virtually constant vibration characteristics irrespective of the load thanks to the air springs.

When the vehicle is partially-laden, good driving comfort is achieved and body movements are damped sufficiently firmly at full load.

The PDC damper (Pneumatic Damping Control) is responsible for this. The damping force can be varied according to the air spring pressure.

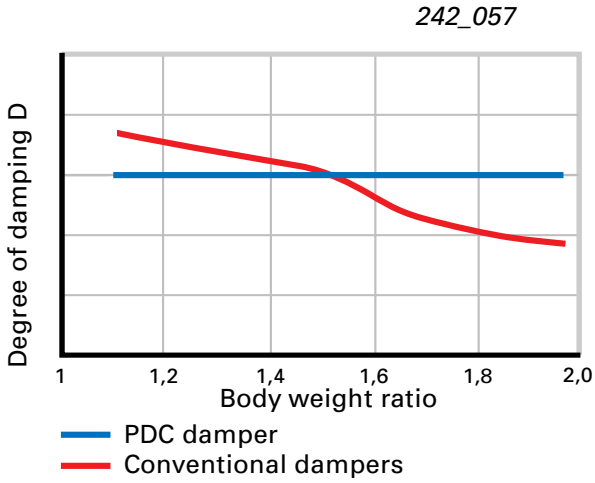

Coaxial arrangement of air springs/PDC damper

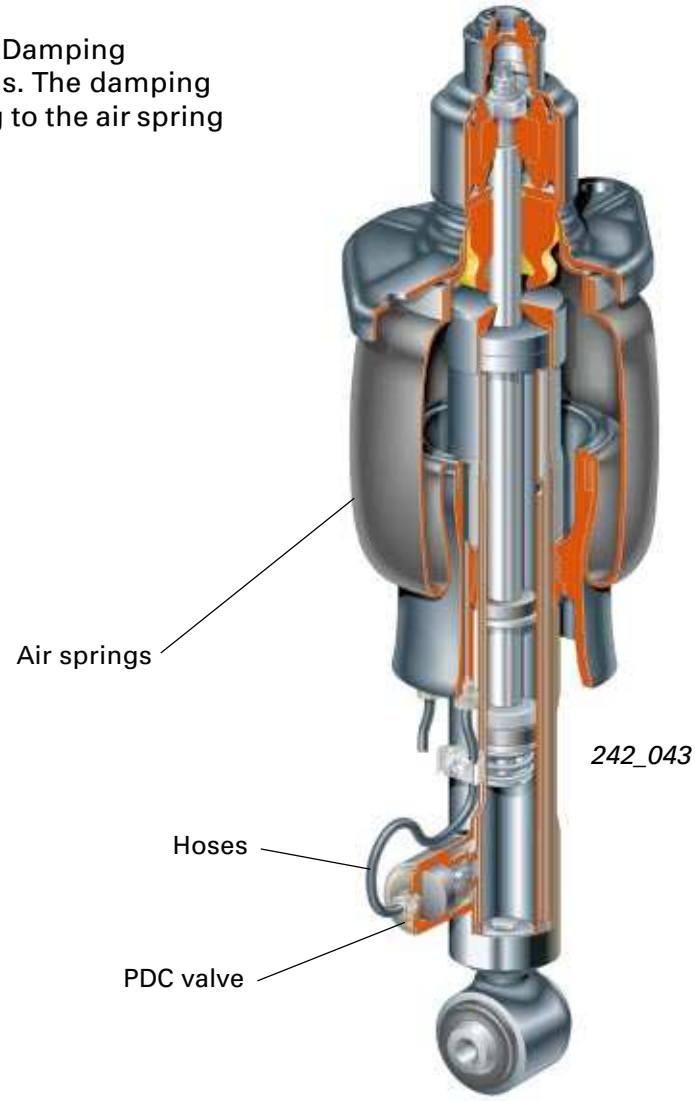

Principles of air suspension

The damping force is altered by means of a separate PDC valve integrated into the damper. It is connected to the air springs via a hose.

A variable throttle in the PDC valve is controlled by the air spring pressure acting as a control variable proportional to the load. This influences the flow resistance and thereby the damping force during rebound and compression.

The air connector in the PDC valve is fitted with a throttle to counteract the undesirable influence of the dynamic pressure changes (compression and rebound) in the air springs.

242_087

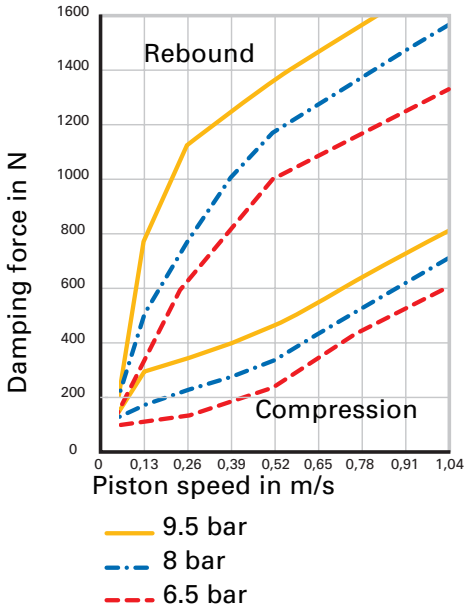

Separate arrangement of air springs/PDC damper

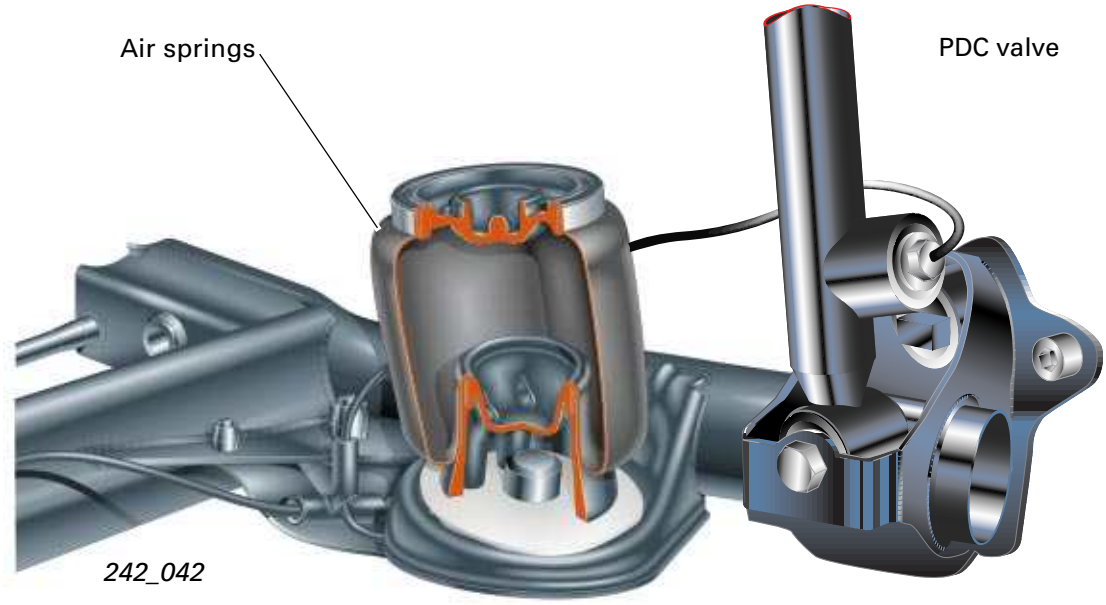

242_042

Design and function

The PDC valve influences the flow resistance of the working chamber on the piston rod side (working chamber 1).

Working chamber 1 is connected to the PDC valve via bore holes. The PDC valve has a low flow resistance when the air spring pressure is low (no load or small partial load). Part of the damping oil bypasses the damping valve, thereby reducing the damping force.

The flow resistance of the PDC valve has a fixed relation to the control pressure (air spring pressure).
The damping force is dependent on the flow resistance of the relevant damping valve (compression/rebound) plus that of the PDC valve.

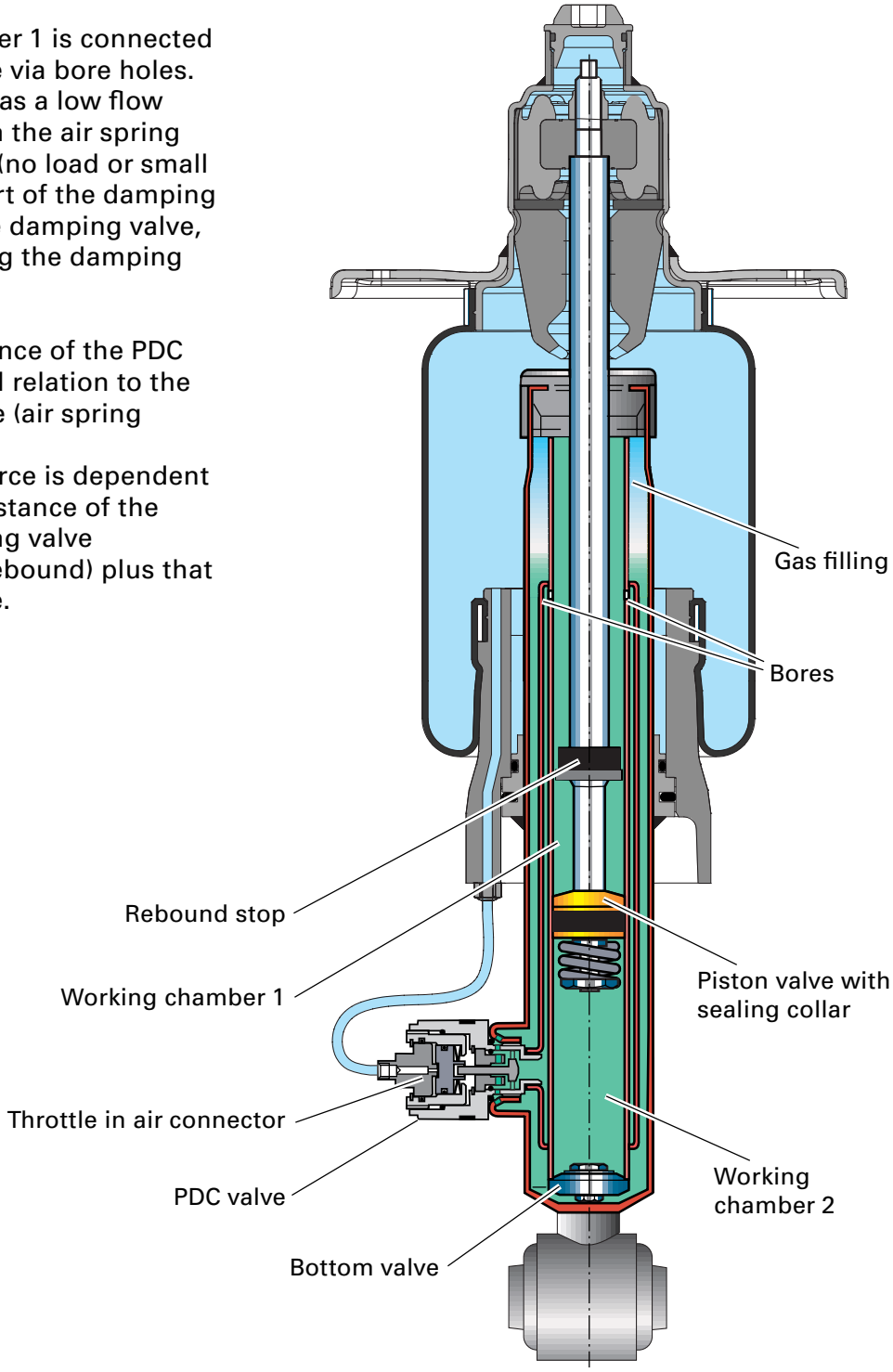

242_033

Function during rebound at low air spring pressure

The piston is drawn upwards, part of the oil flows through the piston valve, the remainder flows through the bore holes in working chamber 1 to the PDC valve. As the control pressure (air spring pressure) and consequently the flow resistance of the PDC valve is low, the damping force is reduced.

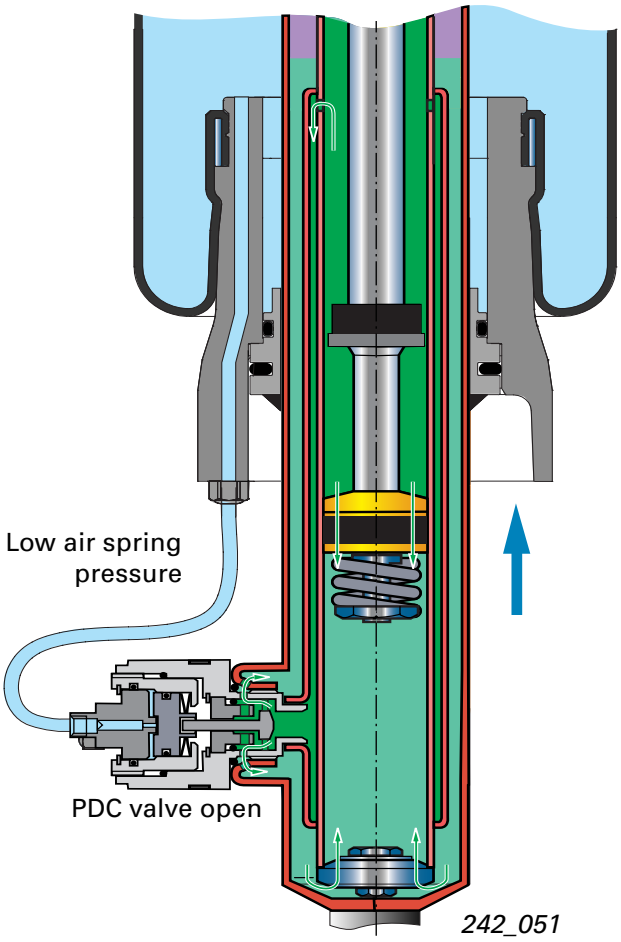

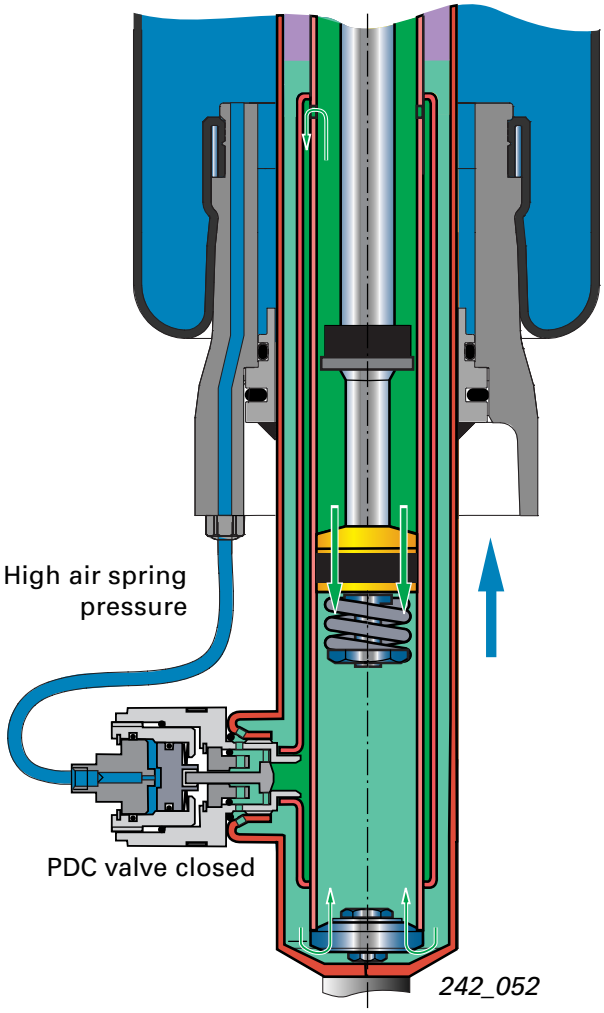

Function during rebound at high air spring pressure

The control pressure and consequently the flow resistance of the PDC valve is high. Most of the oil (depending on the control pressure) is forced to flow through the piston valve, thereby increasing the damping force.

Function during compression at low air spring pressure

The piston is pushed downwards and damping is determined by the bottom valve and to a certain extent by the flow resistance of the piston. The oil displaced by the piston rod flows partly via the bottom valve into the reservoir. The remainder flows through the bore holes in working chamber 1 to the PDC valve. As the control pressure (air spring pressure) and consequently the low flow resistance of the PDC valve is low, the damping force is reduced.

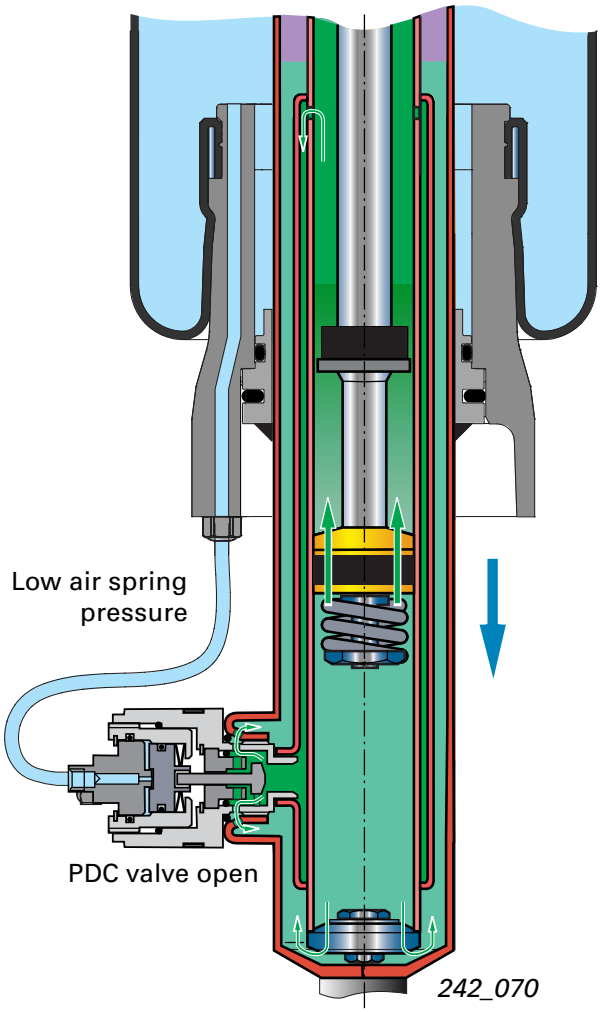

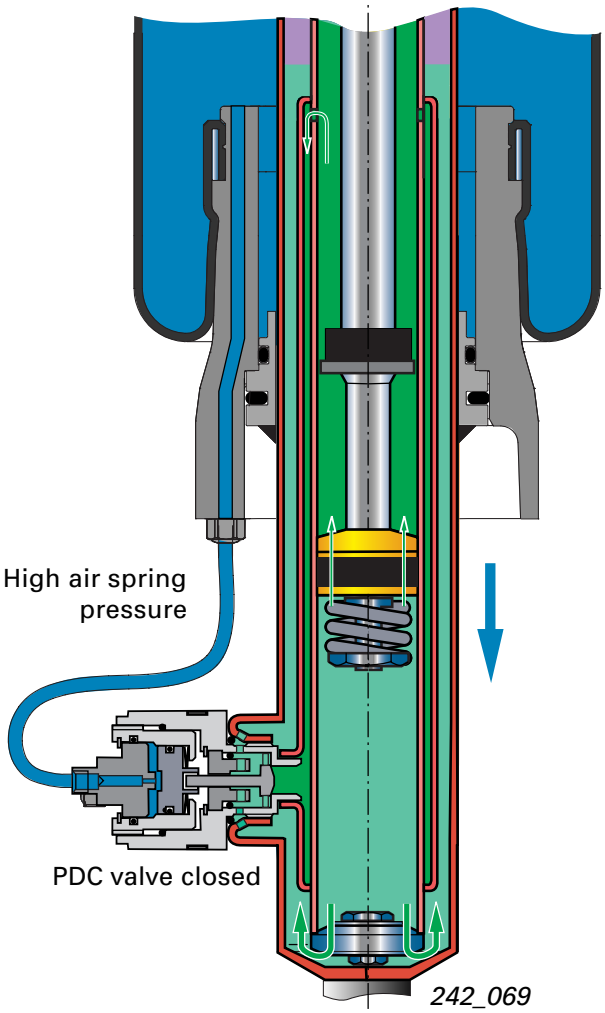

Function during compression at high air spring pressure

The control pressure and consequently the flow resistance of the PDC valve are high. Most of the oil (in relation to the control pressure) must flow through the piston valve, thereby increasing the damping force.

Self-levelling suspension, A6

The following chapter deals with the self-levelling air suspension system in the Audi A6 '98. Basic information about air suspension/ self levelling has already been given in the "Principles" chapter. As this information and knowledge forms the basis for the next chapter we recommend making yourself familiar with the principles before continuing.

Overview of system

In the case of the Audi A6, an air suspension-based self-levelling system is offered as an optional extra. The air suspension system is designed specifically for the rear axle because only small loads are applied to the front axle and consequently only small level changes occur as a result of loading the vehicle.

The Audi A6 air suspension system comprises the following main components:

Air springs with U-bellows are used as suspension elements.

PDC dampers as used as shock absorbers (see page 33).

The air supply unit with integrated air dryer, control valves and control unit are contained in a metal box within the air supply unit.

A level sensor detects the actual vehicle level.

Self-levelling suspension, A6 front wheel drive

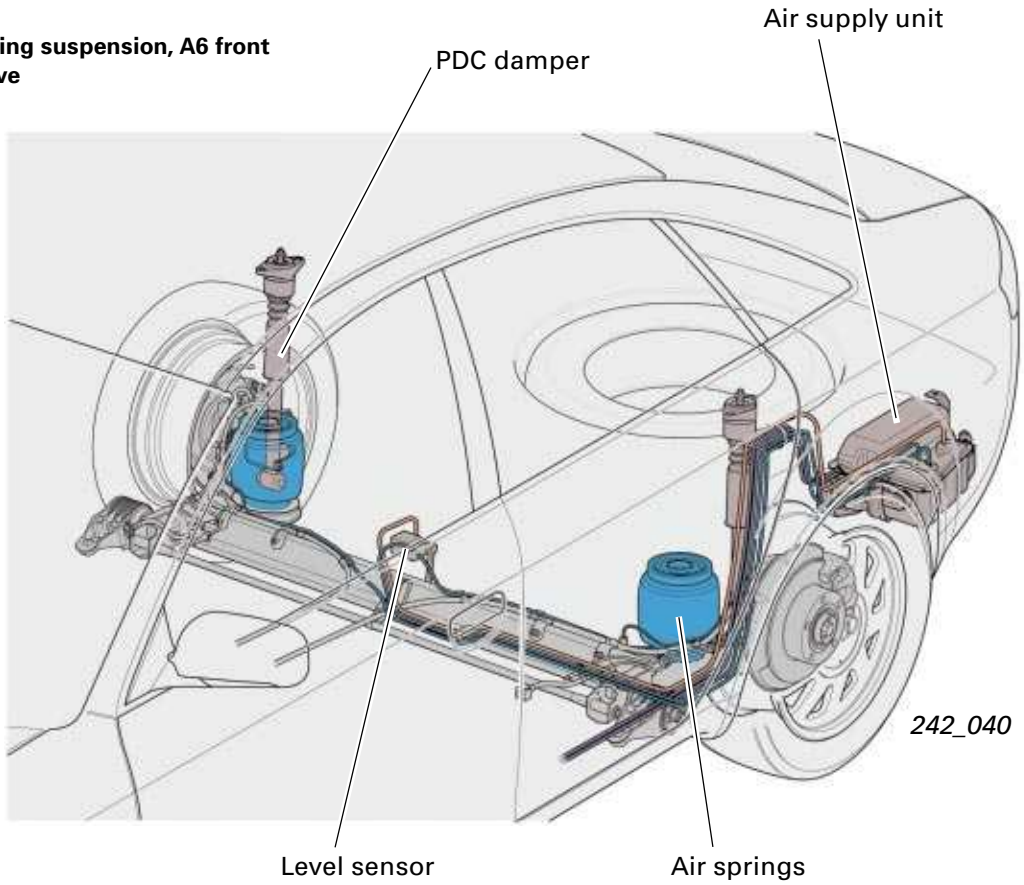

Along with the principle advantages of self-levelling (see Principles), the system realised in the A6 has the following advantages:

- Virtually load-independent suspension and vibration behaviour.
- Little space requirement due to compact design, especially in the axle area.
- Self-levelling even available when engine is off.
- Rapid raising and lowering times
- Low energy requirement
- Environmentally friendly, uses air
- Good operating safety due to great stability.
- Electronic control system with comprehensive self-diagnosis functions
- Maintenance-free

Self-levelling suspension, A6 quattro drive

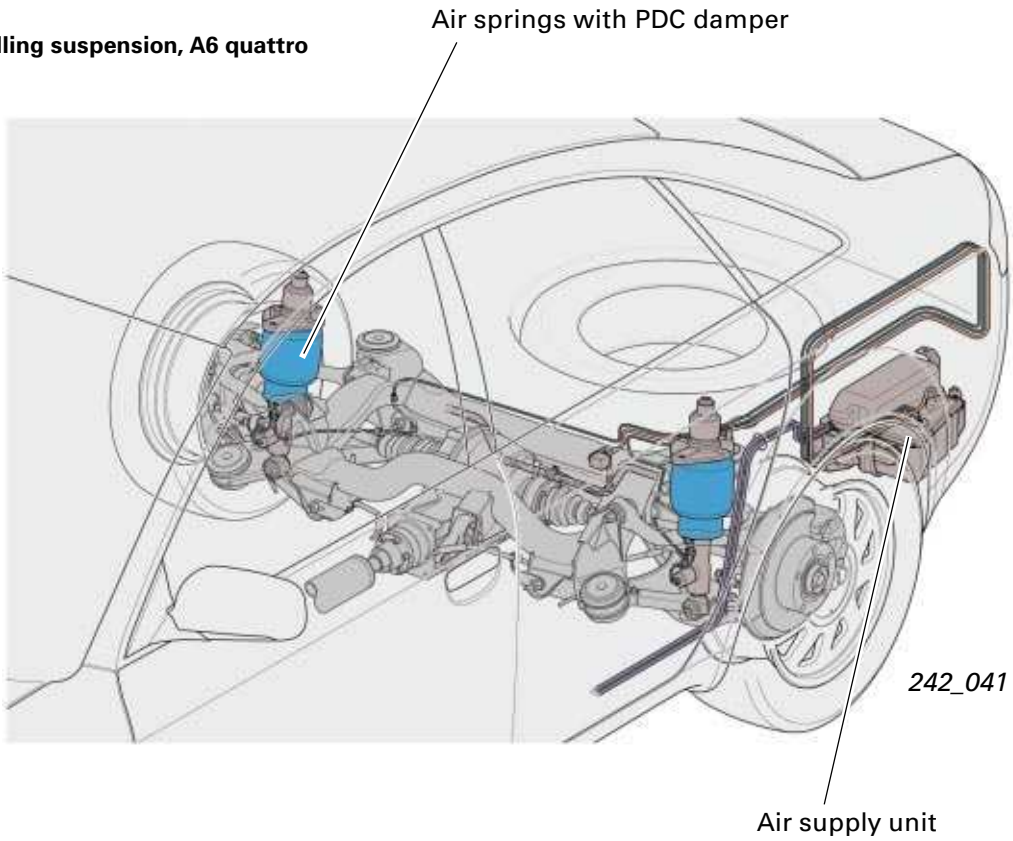

The air springs

The installation of the air springs on the front-wheel drive and the quattro drive is the same as in the steel spring version. This allowed the use of the axle design from the production running gear with few modifications.

In the front wheel drive version the piston is conical in shape to allow sufficient clearance for the spring movement between the bellows and the piston.

In the quattro drive the air springs are combined coaxially with the dampers to act as a suspension strut.

Air springs may not be moved while at atmospheric pressure since the U-bellows cannot uncoil on the piston and would be damaged.
In a vehicle with depressurised air springs, the corresponding air springs must be filled with the aid of the diagnostic tester (see Workshop Manual) before raising or lowering the vehicle.

quattro drive
Coaxial arrangement of air springs/PDC damper

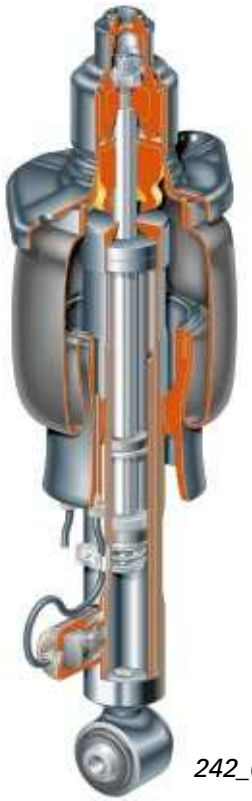

242_043

Front-wheel drive
Separate arrangement of air springs/PDC damper

242_042

Air suspension strut design

In the case of the quattro suspension strut, the connection/seal between the air spring (piston) and the damper is made via a double-sealed bayonet connector.

The bayonet connector must be absolutely clean and is greased before assembly with a special lubricant (see Workshop Manual).

It is assembled by pushing on and rotating the air spring.

Always check for leaks on the O-ring seals at the marked positions. The sealing surfaces must be clean, free from corrosion and pitting (aluminium parts) and greased as required (see Workshop Manual).

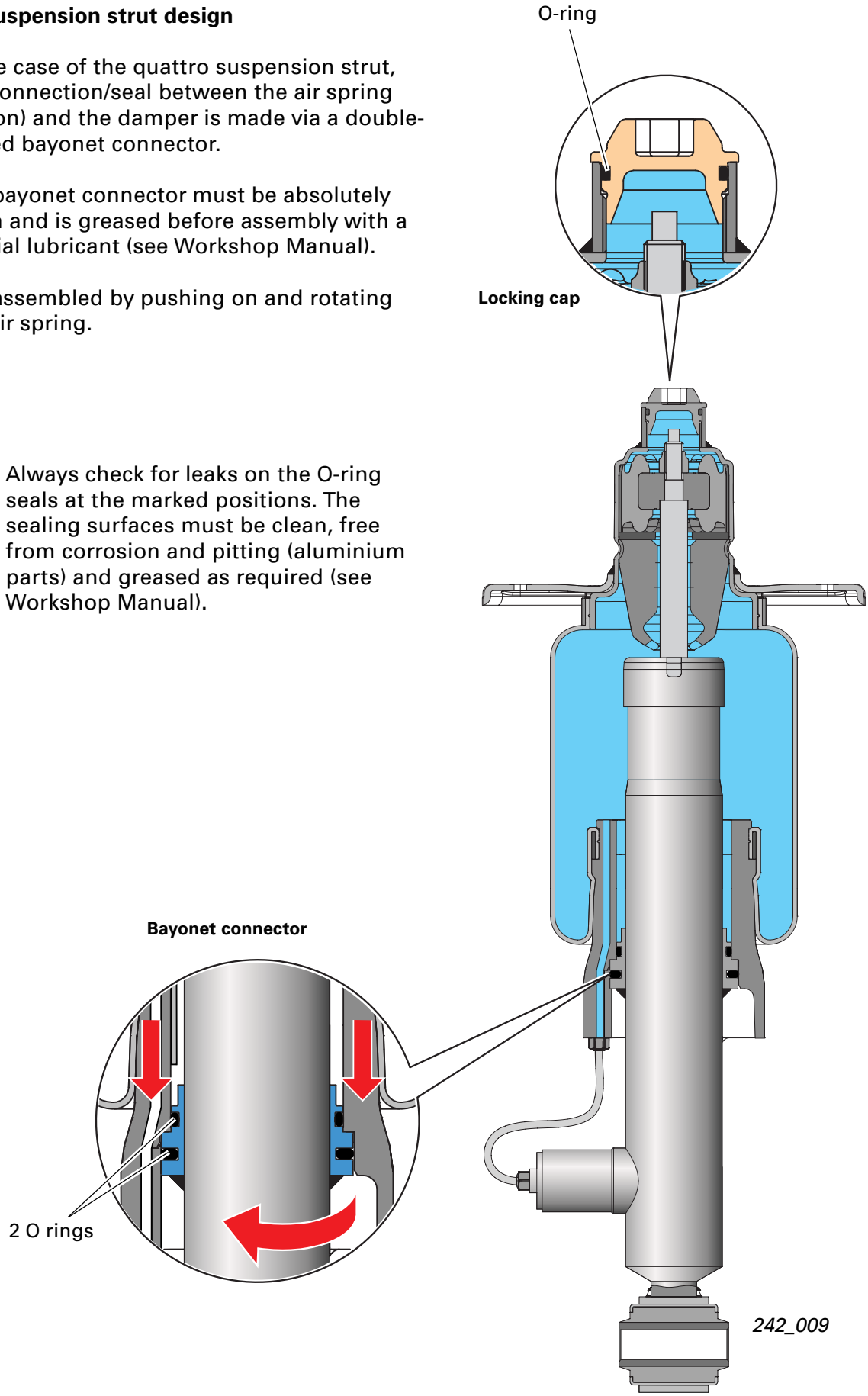

The air supply unit

The following components are contained in a metal box inside the air supply unit:

- the V66 compressor with integrated air dryer and discharge valve N111,
- transverse check valves N150 and N151,
- control unit J197
- and the relay for compressor J403

The components listed above are housed in a special polyurethane foam (PUR foam) insulation mat to ensure vibration and acoustic damping. The insulation mat is designed to fix the positions of the individual components within the metal box.

Specially adapted rubber bushes prevent any significant vibration transfer to the bodywork. **Ensure that rubber bushes are installed correctly!**

Both halves of the metal box housing are fitted with a seal. This seal is essentially for soundproofing. As the compressor sucks and vents the air out of the metal box, it is designed to allow a certain degree of leakage.

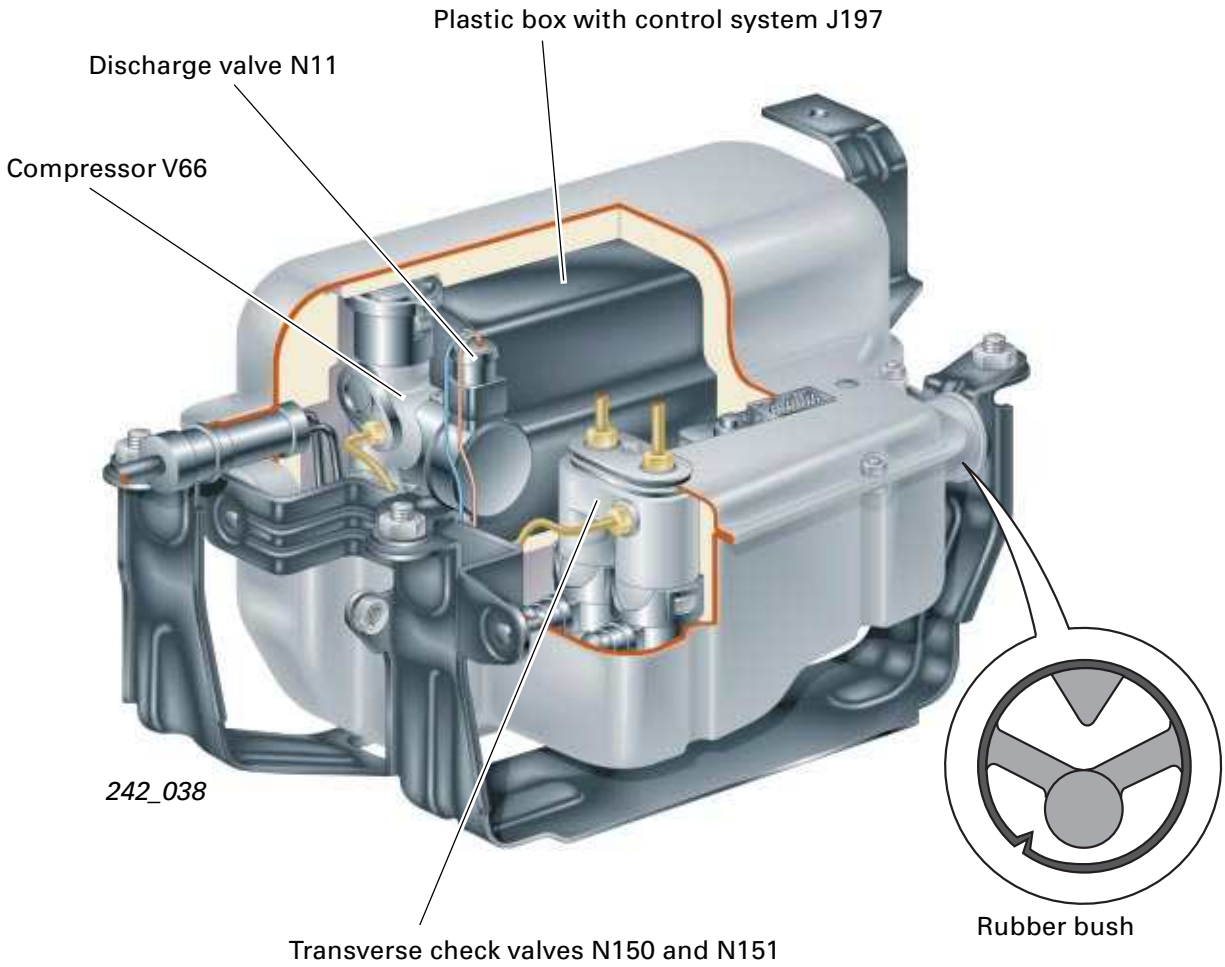

Diagram of pneumatic system

1 Suction filter
2 Compressor with motor V66
3 Non-return valve 1
4 Air dryer
5 Non-return valve 2
6 Non-return valve 3
7 Throttle
8 Discharge filter
9 Pneumatic discharge valve
10 Discharge valve N11
11 Valve for suspension strut HL N150
12 Valve for suspension strut HL N151
13 Rear left air spring
14 Rear right air spring

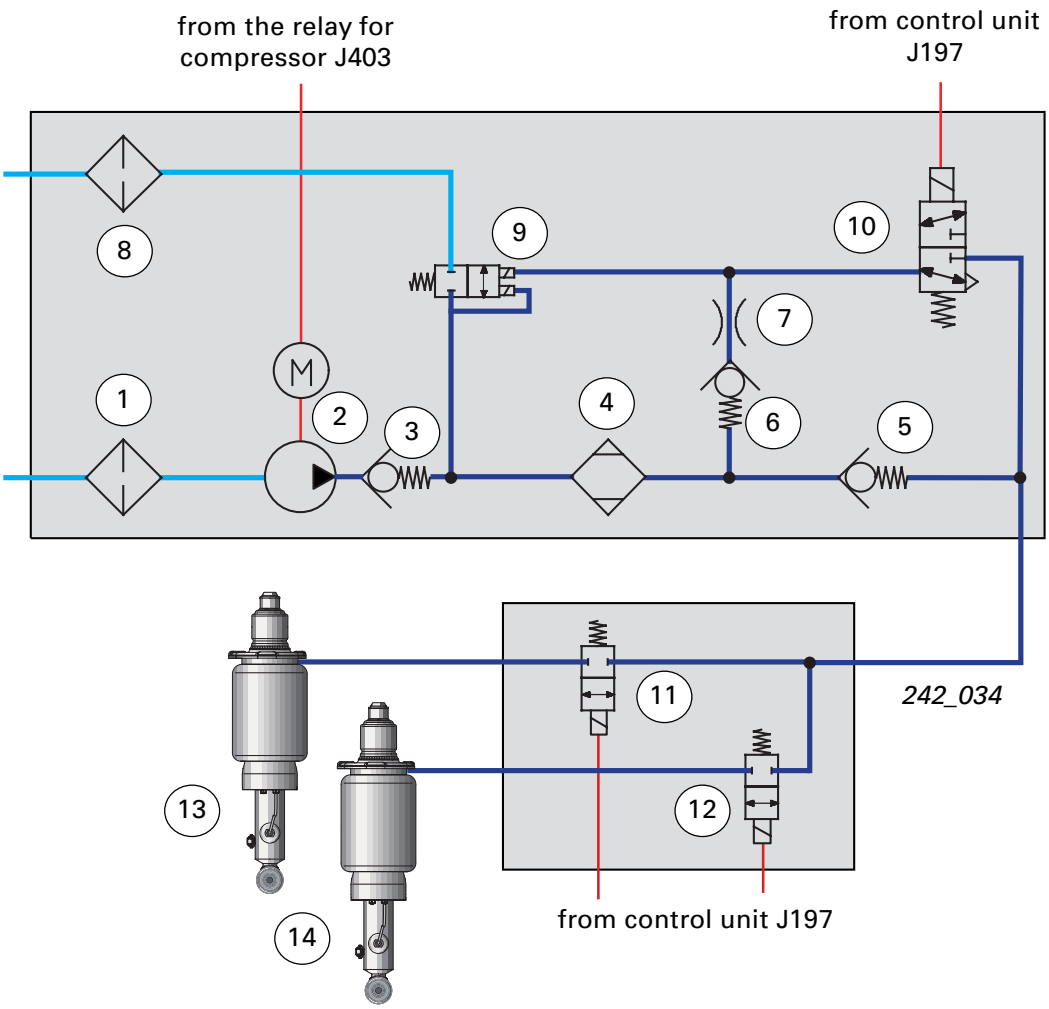

The compressor

The compressed air is generated by means of a single stage piston compressor with integrated air dryer. In order to avoid oil contamination of the U-bellows and the dryer cartridge, the compressor is a so-called dry running compressor.

Permanently lubricated bearings and a PTFE (polytetrafluoroethylene) piston ring ensure a long service life.

The discharge valve N111 and the pneumatic discharge valve are integrated into the dryer cartridge housing.

In order to protect the compressor from overheating, it switches off at excess temperatures (see Overheating protection chapter, page 61).

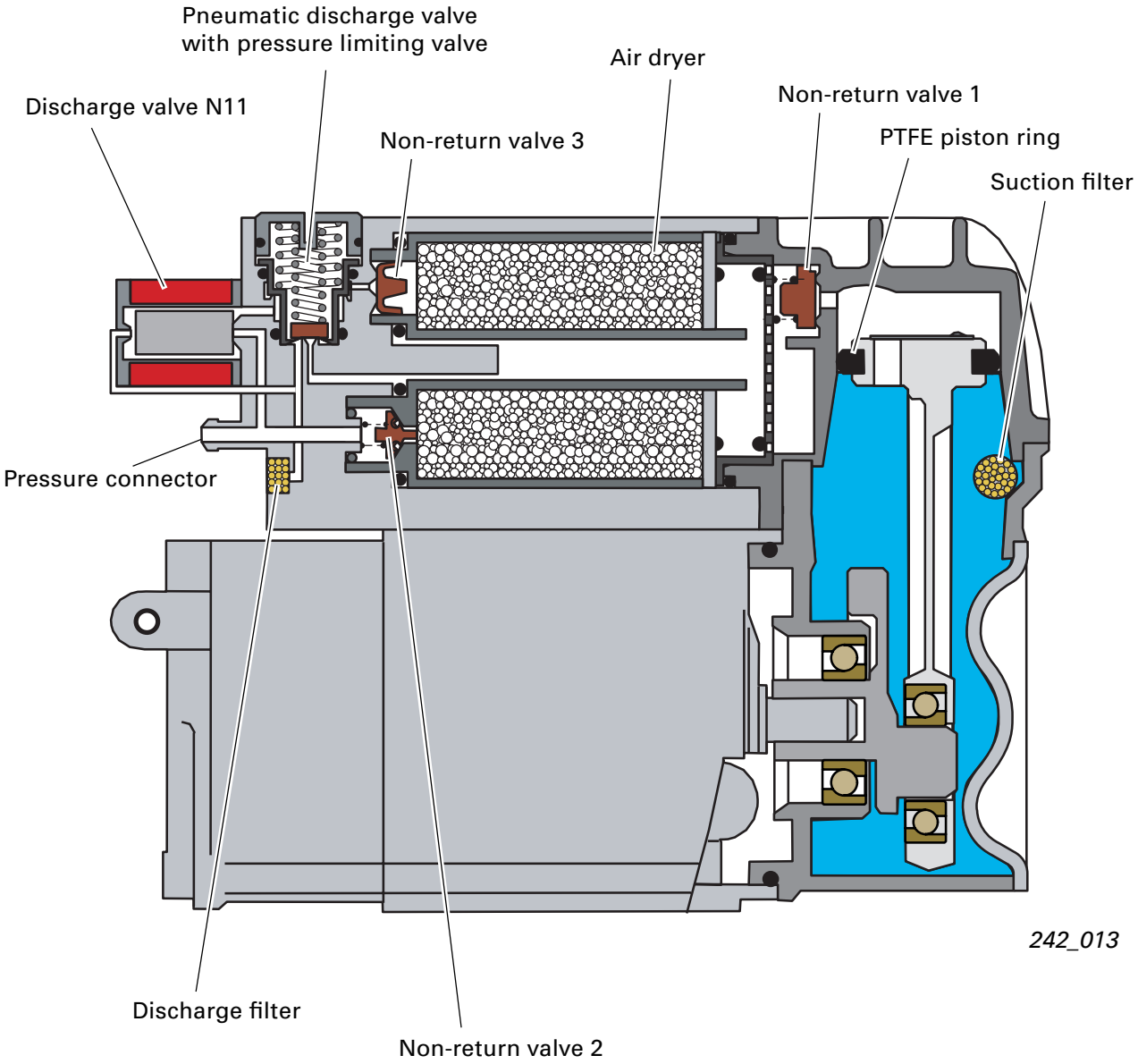

Suction/compression

When the piston moves upwards, air is sucked into the crankcase via the sinter filter. The air is compressed above the piston and enters the air dryer via non-return valve 1.

The compressed and dried air passes via non-return valve 2 to the pressure connector which leads to the transverse check valves N150 and N151.

Overflow

When the piston moves back, the air which has been sucked into the crankcase passes via the diaphragm valve into the cylinder.

Filling/lifting

The relay for the compressor and the air spring valves are controlled simultaneously by the control unit for filling (see Suction/Compression).

Suction/compression

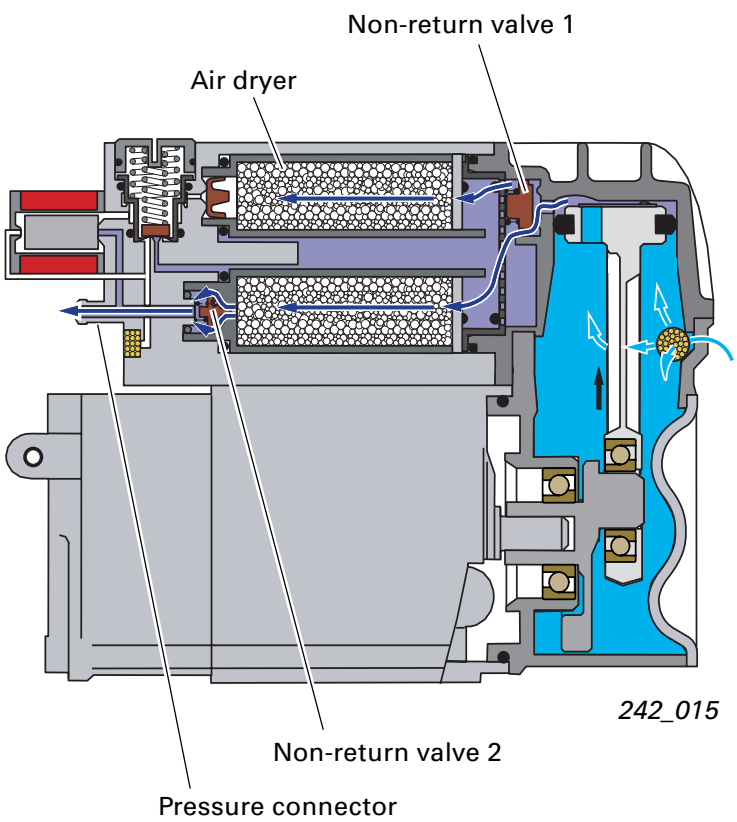

Overflow

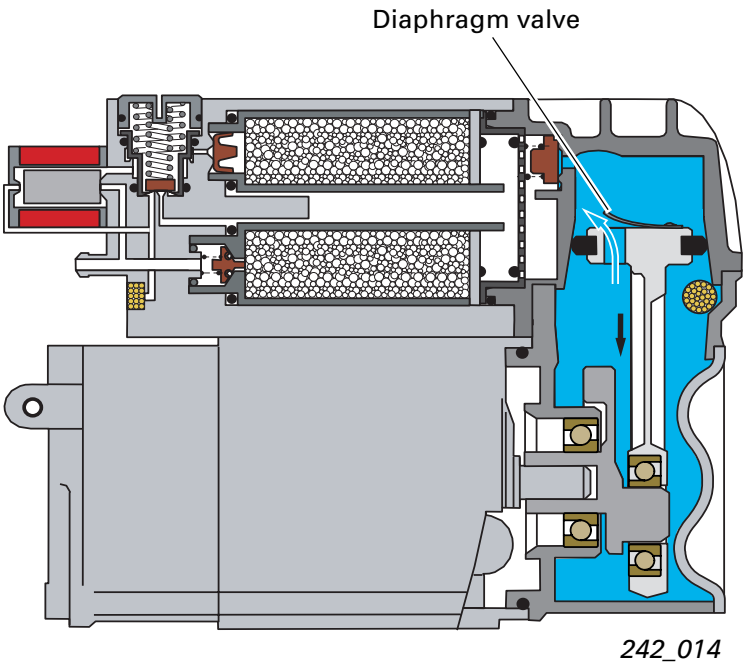

Discharge/lowering

The air spring valves N150 and N151 and discharge valve N111 open during compression. The air spring pressure flows to the pneumatic discharge valve and out of the system from there via the air dryer and the pressure limiting valve (see description of pneumatic discharge valve).

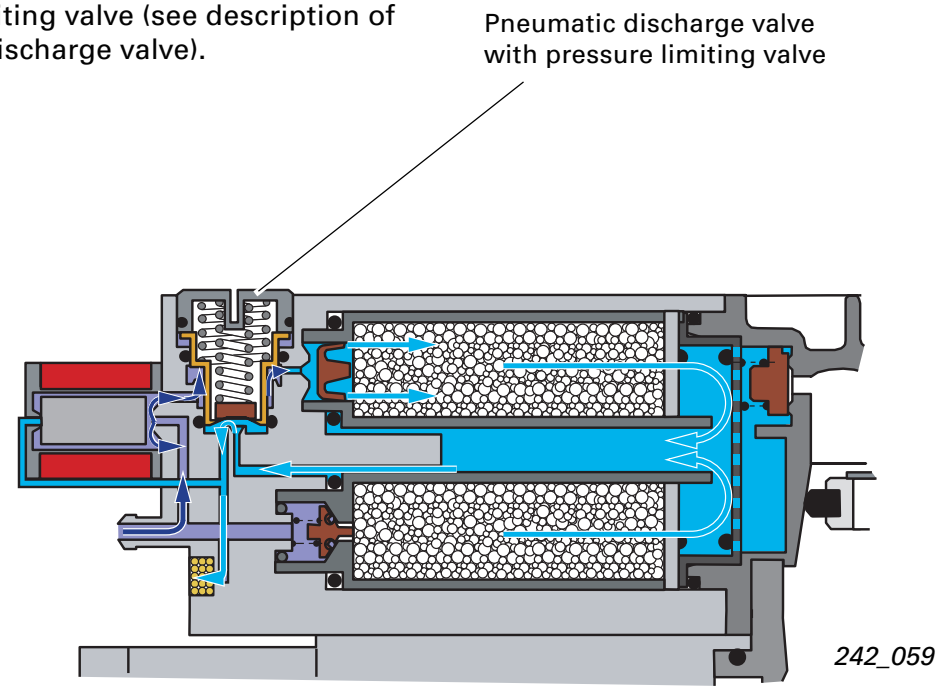

Diagram of pneumatic system, discharge

4	Air dryer
6	Non-return valve 3
7	Throttle
8	Discharge filter
9	Pneumatic discharge valve
10	N111
11	N150
12	N151

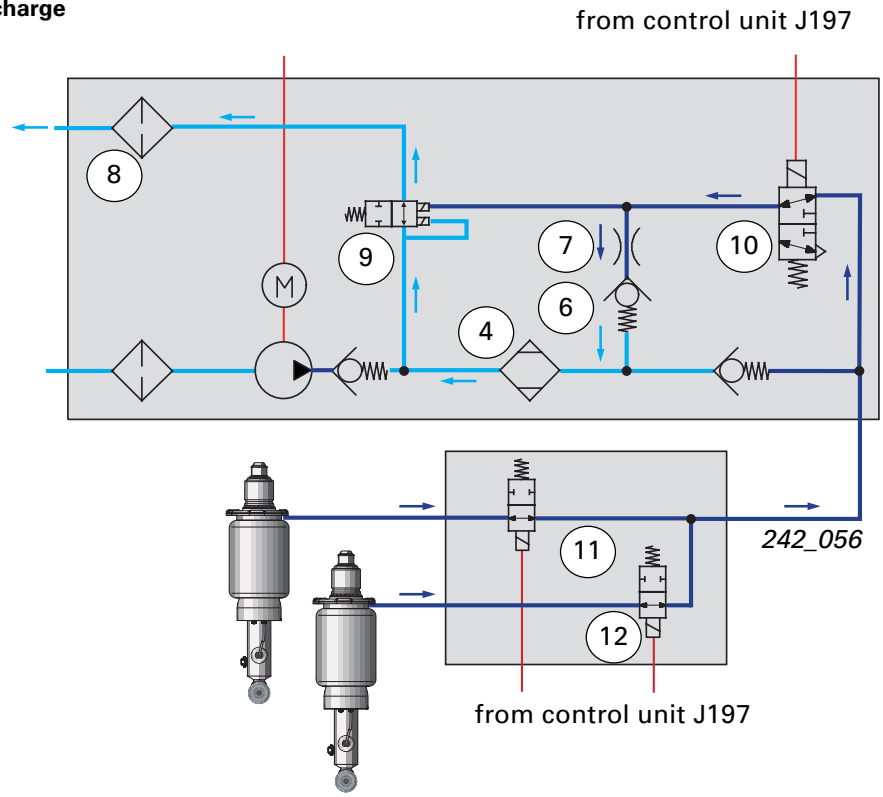

The air dryer

The air must be dehumidified in order to prevent condensate and the associated problems of corrosion and freezing. The system used here is a so-called regenerative air dryer system. A synthetically manufactured silicate granulate is used as the drying agent. This granulate can, depending on the temperature, store up to 20% of its own weight in water.
As the air dryer operates regeneratively, and is only operated with oil-free, filtered air, it is not subject to replacement intervals and is therefore maintenance-free.

Because the air dryer is regenerated only with waste air, the compressor cannot be used to fill any other components. As this compressed air is not fed back via the air dryer, no regeneration can take place. For this reason, the manufacturers do not fit a pressure connection for external components.

Water/moisture in the system indicates a fault in the air dryer or the system.

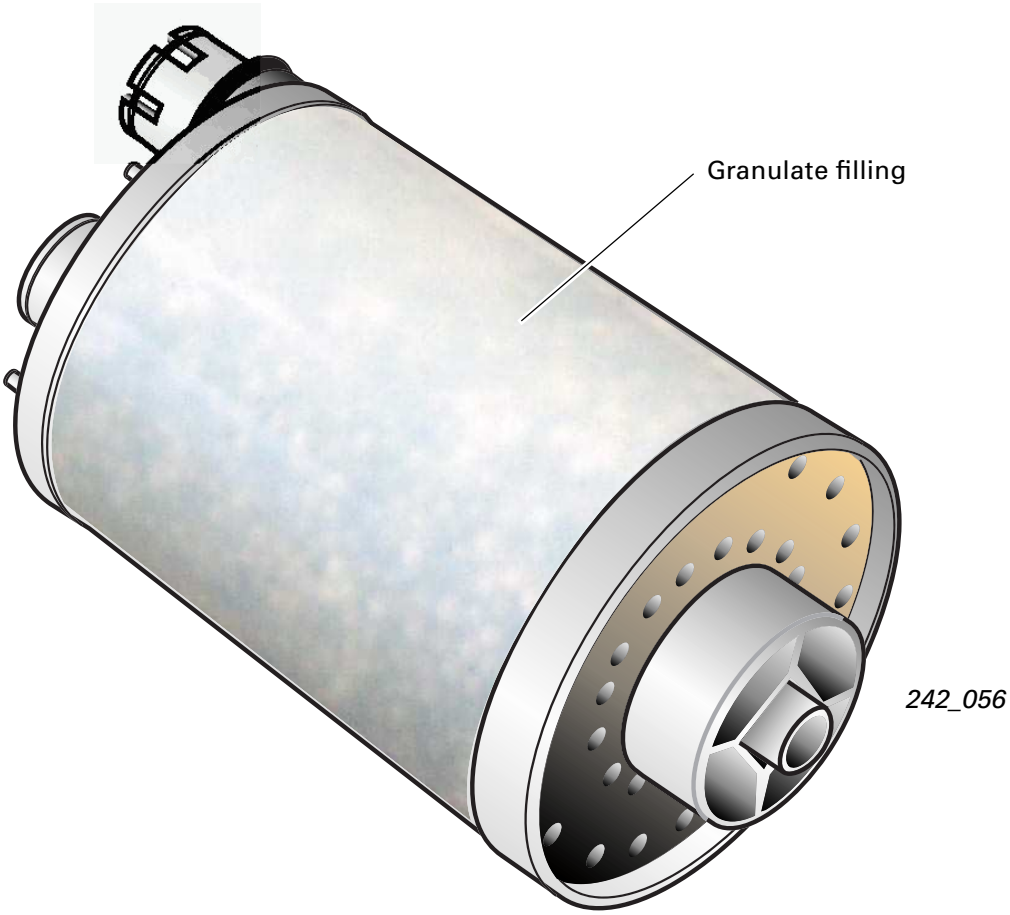

Regeneration

As outlined above, the compressed air is initially fed through the air dryer and dried. The moisture is temporarily stored in the air dryer and the dried compressed air passes into the system.

The air dryer is regenerated during discharge (lowering). During discharge, the dried compressed air ("waste air") is fed back into the air dryer where it re-absorbs the moisture stored there and discharges it into the ambient air.

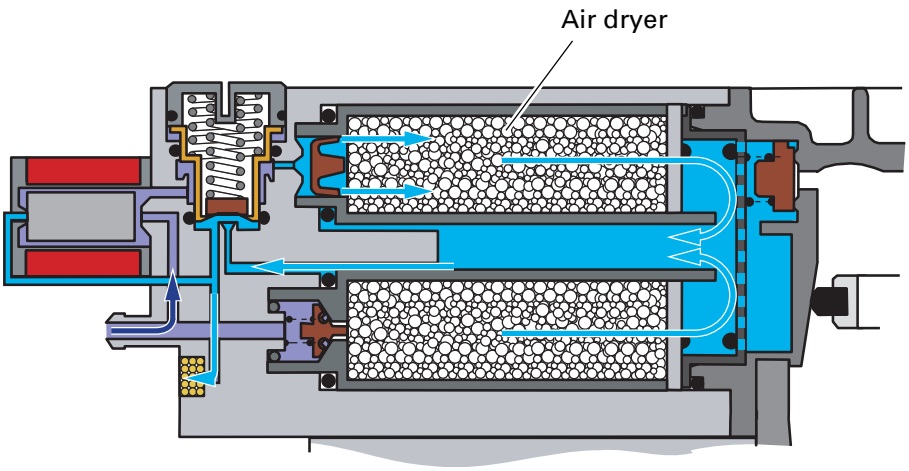

242_016

Discharge valve N111

The discharge valve N111 is a 3/2 way valve (three connections and two switching positions) and is closed without current. The N111 is used only for discharge purposes (lowering).
For lowering, the discharge valve is controlled by the control unit J197 together with valves N150 and 151.
(see description of the Pneumatic discharge valve and under Discharge)

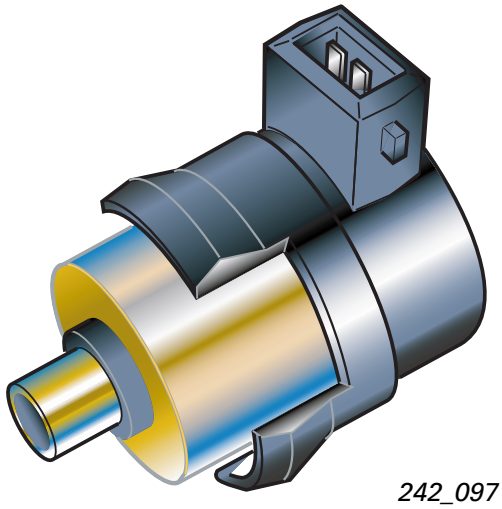

242_097

Pneumatic discharge valve

The pneumatic discharge valve performs two tasks:

- ► It is a residual pressure retaining device
- ► and a pressure limitation device

A predefined minimum pressure (>3.5 bar) is necessary to prevent damage to the air springs (U-bellows).
The **residual pressure retaining device** ensures that the pressure in the air suspension system does not fall below 3.5 bar during de-pressurisation (except in the case of leaks upstream from the pneumatic discharge valve).

At an air spring pressure of >3.5 bar, the valve body lifts against the resilience of both valve springs and opens valve seats 1 and 2. The air spring pressure then passes to the air dryer via the throttle and non-return valve 3. Once it has passed through the air dryer, the air flows through the valve seat of the pressure limiting valve and the discharge filter into the ambient air.

The significant drop in pressure downstream from the throttle results in the uptake of the relative air humidity whereby the moisture uptake of the "waste air" is increased.

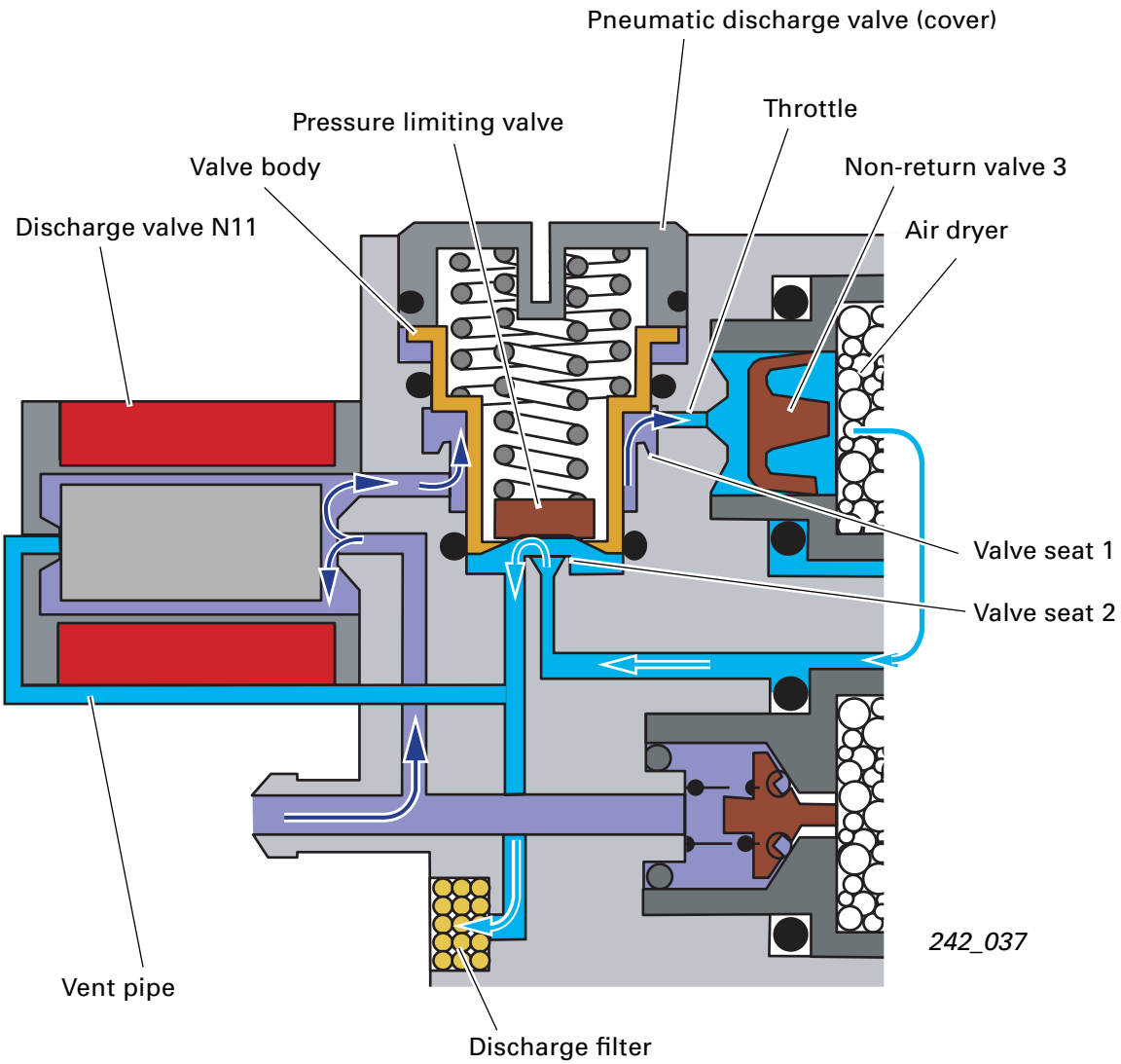

The **pressure limiting function** protects the system against inadmissible high pressure e.g. when the compressor fails to switch off due to a defective relay contact or defective control unit.

In such cases, the pressure limiting valve opens against the resilience from approx. 13.5 bar upwards, and the pressure is discharged via the discharge filter.

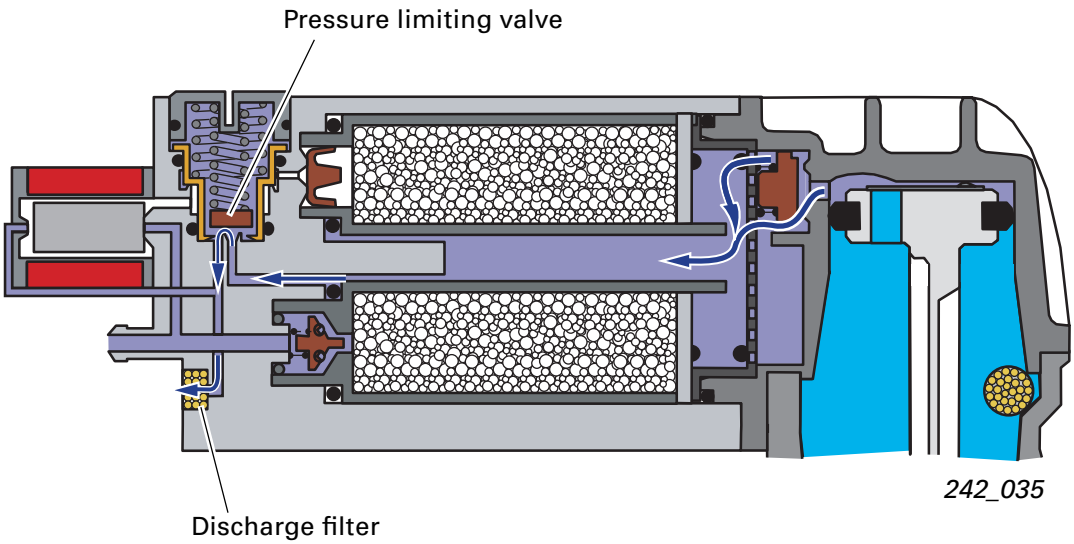

Diagram of pneumatic system, pressure limiting function

1 Suction filter
2 Compressor
8 Discharge filter
9 Pneumatic discharge valve

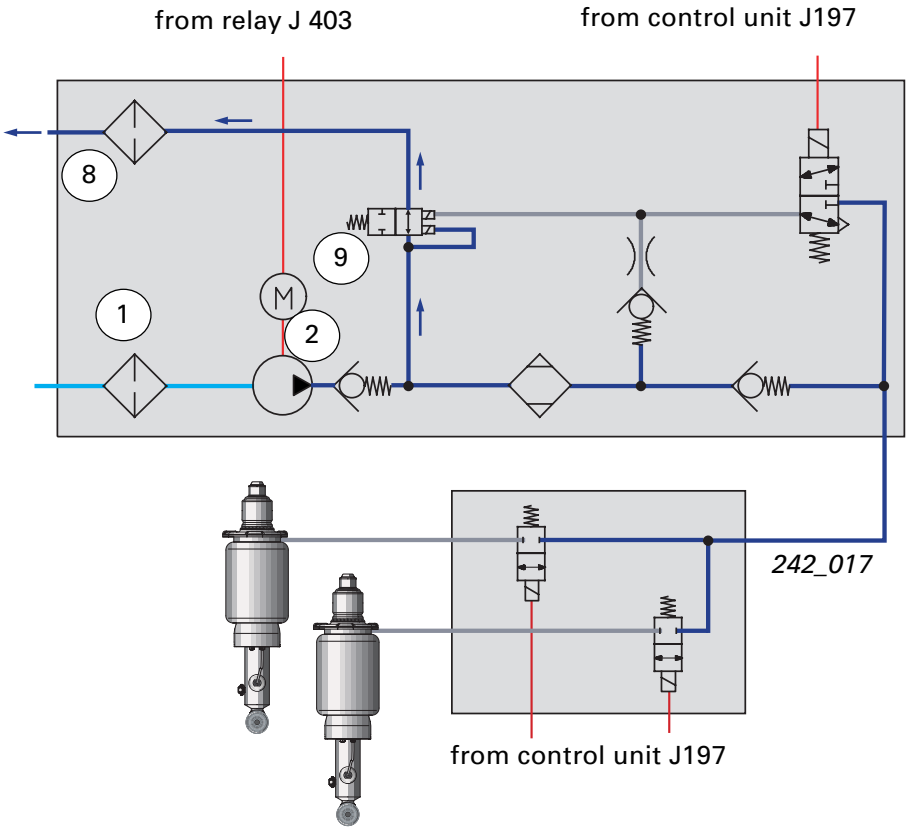

Valve for suspension strut rear left N150 and rear right N151

Valves N150 and N151 are described as transverse check valves and are combined in one housing.

Both transverse check valves are so-called 2/2 way valves (2 connections and 2 switching positions). The transverse check valves are used to fill and discharge the air springs. The valves are closed without current and prevent an undesirable pressure equalisation between the left and right-hand air springs. This prevents the air spring pressure of the outer wheel (higher air spring pressure) escaping to the inside wheel (lower air spring pressure) when cornering. This would result in a momentary tilt of the vehicle.

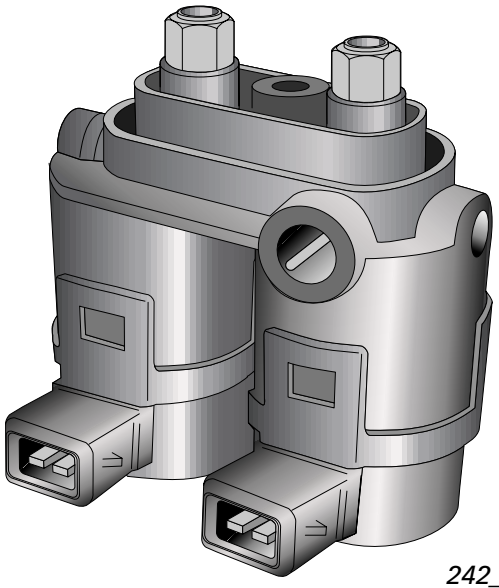

242_036

The transverse check valves are always controlled in unison during raising and lowering as adjustment can only be performed for the whole axle (see level sensor).

Following a control process while the vehicle is in driving operation (v >10km/h) the transverse check valves are opened three times for approx. 3 seconds at intervals of approx. 12 seconds in order to equalise the pressure between the left and right-hand air springs.

If, for example, a control process takes place while cornering, this will cause the rear axle to tilt. The tilt is compensated by the opening of the transverse check valves, as described above (not in the case of a one-sided load).

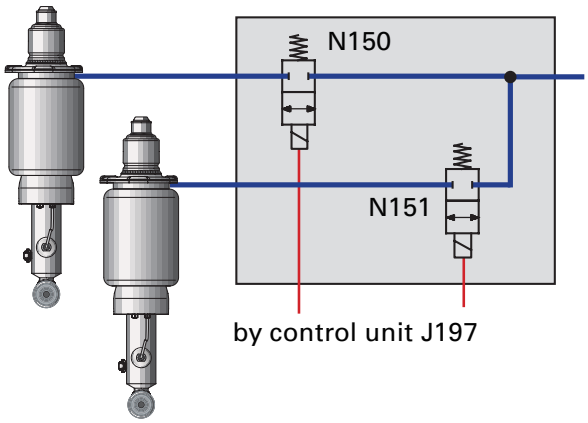

242_012

The self-levelling system in the Audi A6 is not able to compensate for one-sided loads (level difference between left and right). To prevent differing pressures in the air springs the transverse check valves are opened as described after a control process.

Self-levelling suspension sender G84

The vehicle level is detected by the self-levelling system G84 sender (level sensor).

A contact-free angle sensor is used to determine the spring compression between the rear axle and the bodywork with the aid of the connecting link kinematics unit.

The connection of the connecting link kinematics unit (see figures 242_044 and 242_045) is designed to largely compensate for one-sided compression. This connection allows self-levelling to operate using only one level sensor.

The self-levelling system in the Audi A6 is not able to compensate for different levels on the left and right-hand sides (e.g. due to one-sided loads).

Pin assignment for level sensor G84

Pin	
1	Earth (from J197)
2	Vacant
3	Vacant
4	Analogue signal output, voltage signal
5	5 Volt voltage signal (from J197)
6	Vacant

J197 Self-levelling suspension control unit

The angle sensor operates according to the Hall principle. Evaluation electronics integrated into the sensor convert the signal of the Hall IC into a voltage signal proportional to the angle (see diagram).

Connection to the torsion beam axle assembly in the front wheel drive version

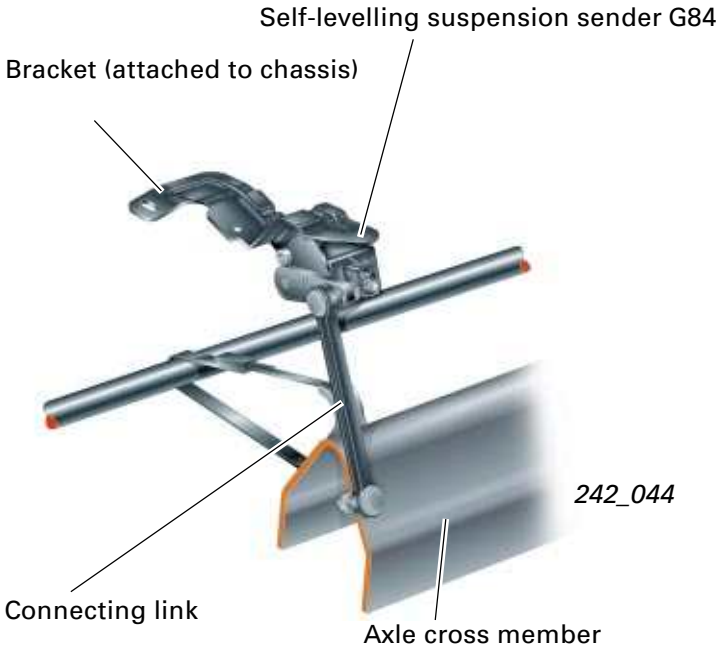

Connection for quattro drive with double-wishbone axle

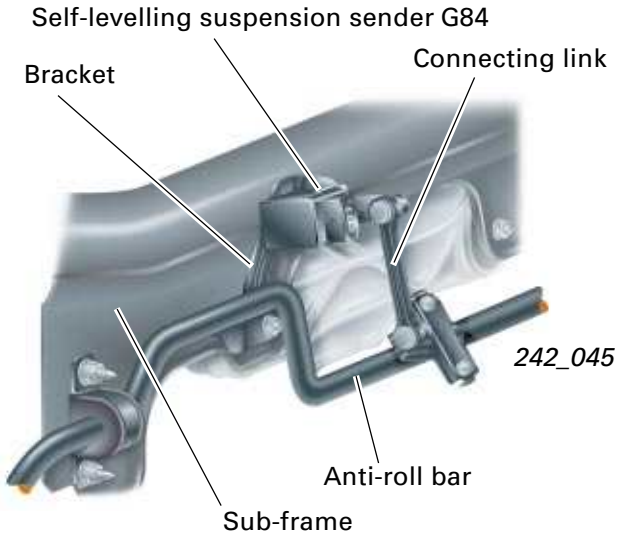

Function

A ring magnet is connected to the axle of the sensor crank (rotor).

A hall IC is positioned eccentrically between a two-piece iron core (stator). It forms a single unit together with the evaluation electronics.

Depending on the position of the ring magnet, the magnetic field which penetrates the Hall IC changes.
The resulting Hall signal is converted by the evaluation electronics into a voltage signal proportional to the angle. The control unit J197 uses this analogue voltage signal to determine the current vehicle level.

The angle sensor described here is also used for the automatic headlight range control system. A total of 3 sensors are fitted into vehicles with automatic headlight range control.

No deflection

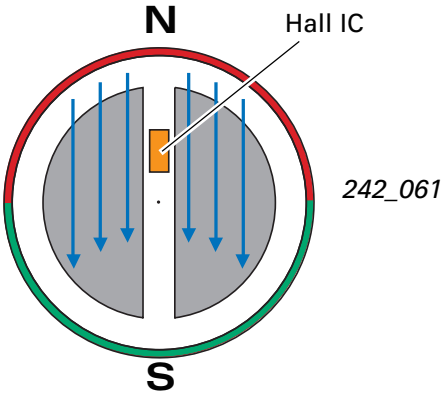

242_061

Deflection 35° left

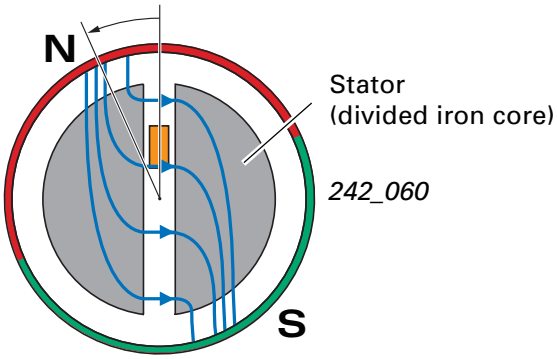

242_060

Deflection 35° right

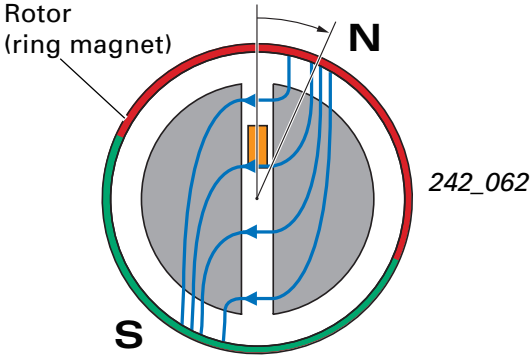

242_062

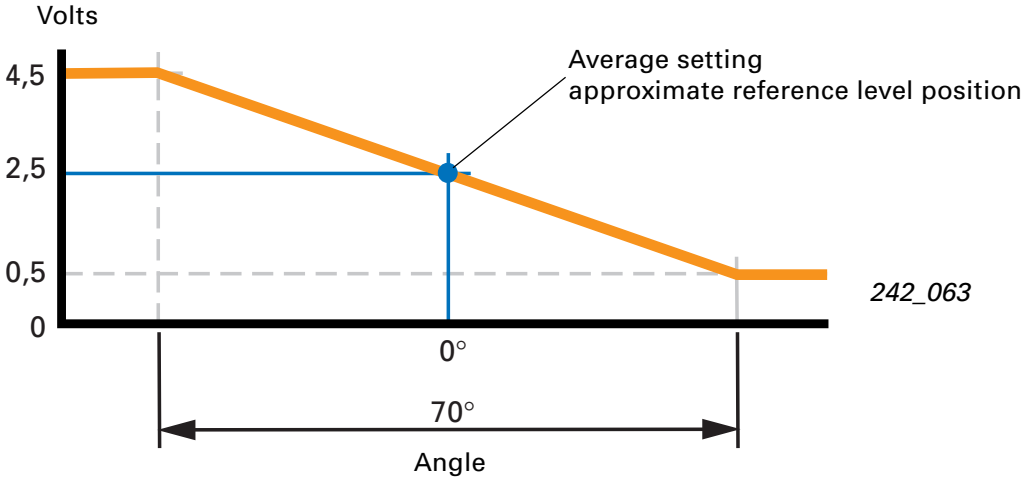

242_063

Self-diagnosis system G84

If the G84 fails, no self-levelling is possible. The system initiates the appropriate emergency operation mode.
The G84 is adjusted by adapting the reference level with the aid of the diagnostic tester and spacer gauges T40002 (see Workshop Manual).

VAS 5051

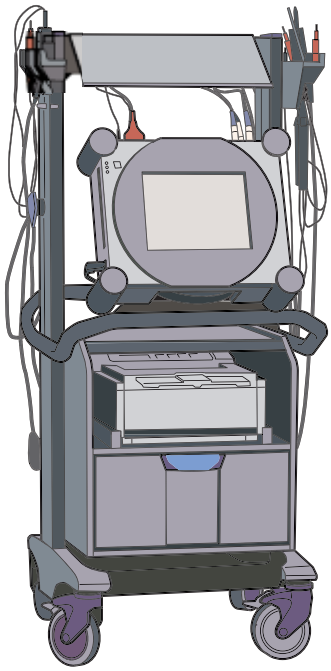

T40002

242_055

198_039

Self-levelling control unit J197

The central element of the system is the control unit which, along with its control functions, enables the monitoring and diagnosis of the entire system.
The control unit detects the signal from the level sensor and uses it to determine the current vehicle level. This is compared with the reference level and corrected if necessary depending on further input variables (interfaces) and its internal control parameters (filter times and level tolerances). It differentiates between various control situations and controls them via the relevant control concepts (see Control concept).

Comprehensive self-diagnosis facilitates inspection and servicing of the system (see Workshop Manual).

Address word 34

242_004

Self-levelling suspension warning lamp K134

The warning lamp ...

... is constantly illuminated in the case of corresponding system errors or when the system is switched off.

... ...flashes in the case of extremely low or high levels. <–55 mm/>+30 mm.

... ... flashes during final control diagnosis.

... flashes when the control system is switched off (only possible with diagnostic tester).

After switching off the ignition, K134 illuminates for a function check and extinguishes after the control system has performed internal control unit test sequence (unless an error is present).

The vehicle should not be driven as long as the warning lamp is flashing, as low vehicle parts may be damaged due to inadequate ground clearance.

If the warning lamp remains on continuously to indicate a system error, the system is switched off.
The driver is requested to contact the nearest Audi service centre.

Warning lamp K134

242_050

Self-levelling suspension, A6

Functional diagram

C11	Condenser
G84	Self-levelling suspension sender
J197	Self-levelling suspension control unit
J403	Relay for self-levelling suspension compressor
K134	Self-levelling suspension warning lamp
N11	Discharge valve
N150	Rear left strut valve
N151	Rear right strut valve
S	Fuse
V66	Compressor motor

1	Diagnostic interface
2	Driving speed signal
3	Door contact signal
4	Terminal 50 signal

= Input signal

= Output signal

= Positive

= Earth

= bi-directional

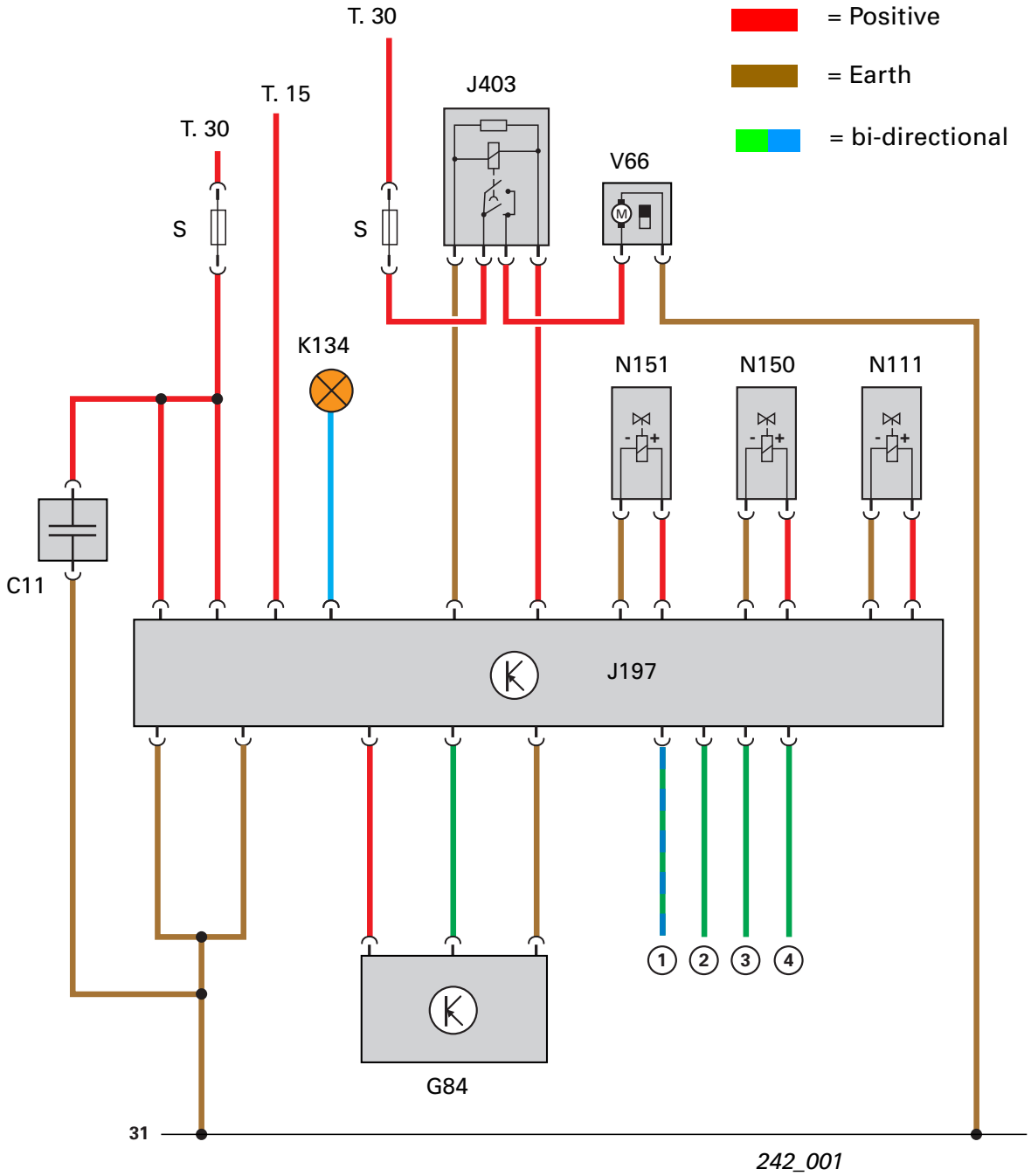

The interfaces

The driving speed signal

(a square wave signal processed by the dash panel insert, the frequency of which changes analogously to the speed)

is required in the evaluation of the driving condition (stationary/driving mode) and thereby for the selection of the control criteria (see “Control concept”).

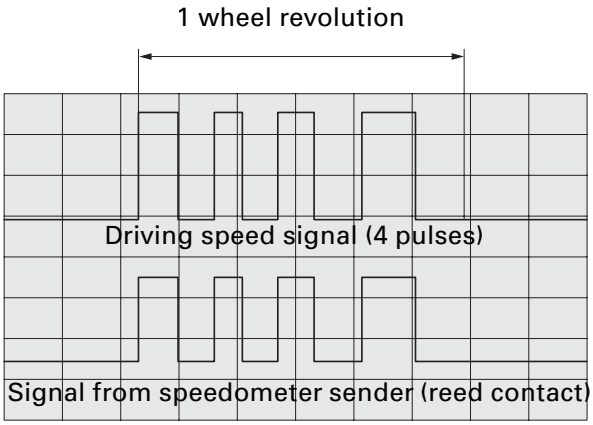

198_069

Signal T.15 ...

... is used for the evaluation of the system status, run-on, stationary, driving and sleep modes.

The door switch signal...

... is an earth signal from the control unit for central locking. It signals that the door or boot lid/tailgate is open.

... serves as the “wake-up pulse” for the transition from sleep mode to run-on mode (see “Control concept”).

We speak of run-on mode even if the system is currently in “run-up” mode (after a wake-up pulse before commencing driving).

Signal T. 50 ...

... signals the control of the starter and is used to switch off the compressor during the starting process.

If a low position is detected after a wake-up pulse, the compressor is actuated immediately in order to allow the vehicle to drive off as quickly as possible.

The compressor is switched off during the starting process to protect the battery and ensure starting performance.

The control concept

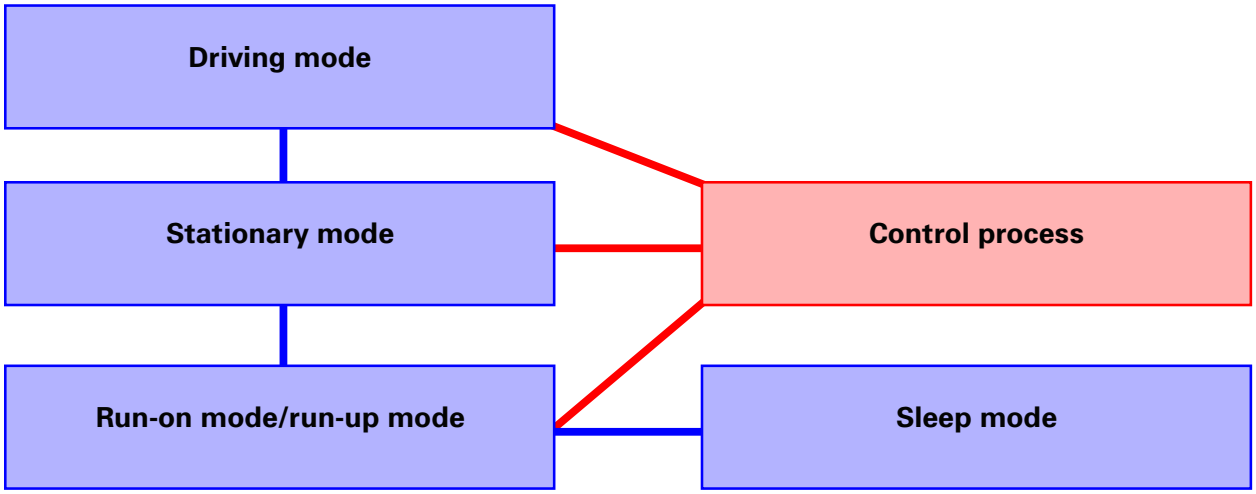

Driving mode

The driving mode is recognised at a speed of >10 km/h.

In driving mode, level changes in the air springs caused by fuel consumption or temperature-related volumetric changes (changing ambient temperatures) are adjusted.

So that acceleration or braking does not affect the control system, long response times are set in the driving mode.

The response times are between 50 seconds and 15 minutes depending on the control thresholds.

Stationary mode

The stationary mode is recognised at a speed of <5 km/h.

In stationary mode, vehicle level deviations due to e.g. passengers entering or leaving the vehicle, or due to loading or unloading the luggage compartment, are readjusted within a short response time, in order to restore the reference level as far as possible even before the journey has begun.

The response time is 1 or 5 seconds, depending on the level deviation. If the deviation is great (extremely low position) the response time is 1 second, at lesser level deviations (normal deviation) it is 5 seconds.

Run-on mode/run-up mode

After “Ignition OFF”, the control system is in the so-called run-on/run-up mode. The control unit remains active for a maximum of 15 minutes (via terminal 30) until it goes into sleep mode.

The run-on/run-up mode is used to adjust level deviations after parking the vehicle or prior to starting on a journey.

The limit value in the rebound direction is increased by 25 mm in the run-on/run-up mode so that when the driver and/or the passenger re-enters the vehicle, it does not sink lower than the reference level or in order to minimise any necessary vehicle raising period.

The same response times apply as those indicated for the stationary mode.

Sleep mode

To minimise electricity consumption the control system switches to “system idle” (sleep mode) after 15 minutes.

There is no level adjustment in sleep mode. “Wake-up” is primarily triggered by the door switch signal.
If the door switch signal fails, the system is activated when the ignition is switched “ON” or by the driving speed signal.

The system can switch between sleep mode and run-up mode, triggered by the door switch signal, a maximum of 5 times. After this, the system can only be activated via terminal 15 and/or the driving speed signal.

Other features of the control concept

Lifting platform mode

System behaviour:
If the vehicle is raised on a lifting platform the system will react in the same manner as for a level increase, by discharging the air spring pressure.

The vehicle body would normally lower at this point. Lowering ceases once the reference level is reached.
As, however, the reference level is not reached when a vehicle is raised on a lifting platform, the air spring pressure would continue to discharge down to the residual supporting pressure. To prevent this happening, the control system incorporates a lifting platform mode.

This evaluates the level signal during the discharge process and recognises a lifting platform (no lowering, despite discharge), whereby the system switches to lifting platform mode.

When it recognises a lifting platform, discharge stops and lowering ceases.

The system exits lifting platform mode by means of the evaluation of further input signals.

It is normal for the rear axle to sink after placing the vehicle onto the lifting platform as a certain amount of time will elapse before the system switches to lifting platform mode and will therefore release some pressure.

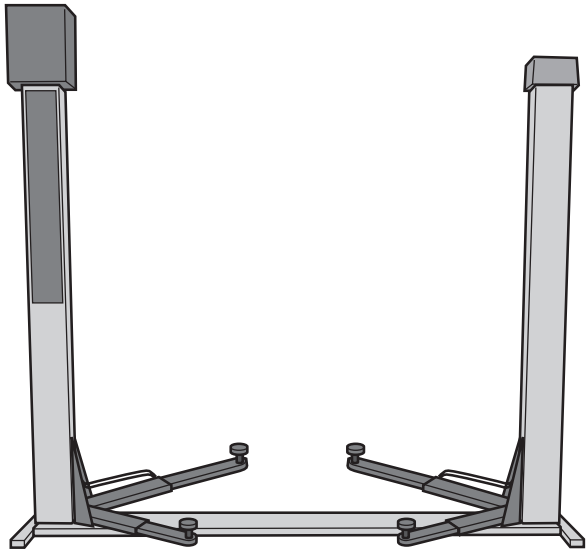

242_001

Overheating protection

In order to protect the compressor from overheating, it switches off at excess temperatures.

A temperature module is integrated into the control unit. This monitors the temperature and is used to calculate the compressor temperature.

The calculations are based on the running and cooling times of the compressor.

The max. running time is limited to 120 sec. (an fault entry is made in the control unit whenever the maximum running time is exceeded).
15 seconds running time are allowed following every 6 minutes of cooling time. After 48 minutes of cooling time the maximum running time of 120 seconds is available.

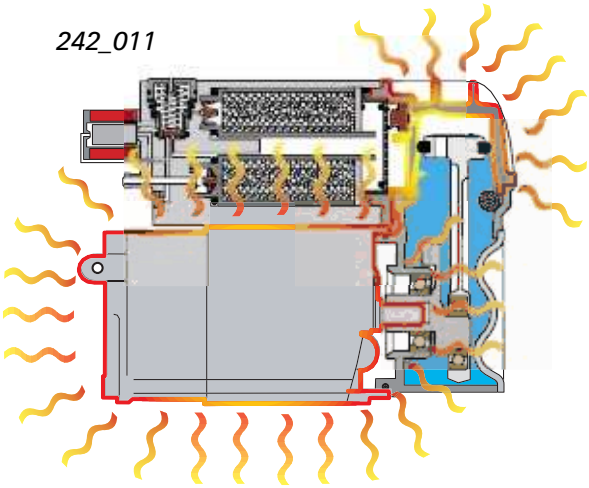

242_011

Battery protection

In order to protect the battery, the maximum running time of the compressor is limited to 60 seconds after the ignition has been switched “OFF”. The system switches off and only reactivates after the ignition has been switched “ON” again.

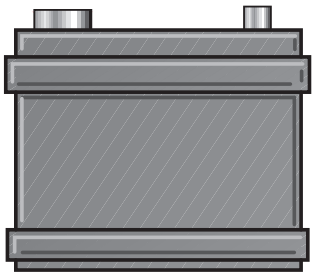

242_085

Switching self-levelling on/off.

The system can be switched off using the diagnostic tester, e.g. during repair work. When the ignition is switched “ON”, the system’s off status is indicated by a flashing warning lamp (T34).

At a driving speed of >20 km/h the system is activated automatically.

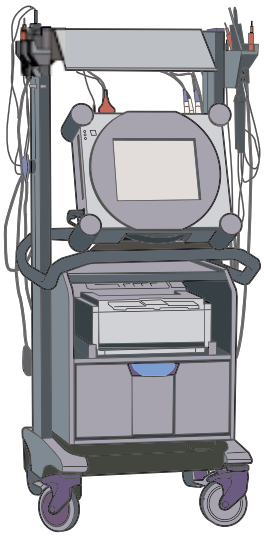

198_039

Notes

All rights reserved, including the right to make technical changes.
AUDI AG
Dept. I/VK-5
D-85045 Ingolstadt
Fax 0841/89-36367
940.2810.47.20
Technical status 11/00
Printed in Germany