STEERING

Steering Wheel and Column - Escalade, Suburban, Tahoe, Yukon

SPECIFICATIONS

FASTENER SPECIFICATIONS

Application	Specification	
	Metric	English
Automatic Transmission Control Bolt	10 N.m	89 lb in
Automatic Transmission Control Bracket Bolt	10 N.m	89 lb in
Automatic Transmission Range Selector Lever Cable Lever Bolt	20 N.m	15 lb ft
Instrument Panel Knee Bolster Deflector Bolt	9 N.m	80 lb in
Intermediate Steering Shaft Lower Bolt	45 N.m	33 lb ft
Intermediate Steering Shaft Upper Bolt	50 N.m	37 lb ft
Steering Column Bolt	27 N.m	20 lb ft
Steering Column Control Module Bolt	2 N.m	18 lb in
Steering Column Electronic Lock Bolt	13 N.m	115 lb in
Steering Column Nut	27 N.m	20 lb ft
Steering Column Seal Nut	3 N.m	27 lb in
Steering Column Shroud Bolt (N33, N38)	3 N.m	27 lb in
Steering Column Shroud Bolt (N37)	2.5 N.m	22 lb in
Steering Column Telescope Actuator Motor Bolt - Lower	15 N.m	11 lb ft
Steering Column Telescope Actuator Motor Bolt - Upper	15 N.m	11 lb ft
Steering Column Tilt Wheel Actuator Motor Bolt	15 N.m	11 lb ft
Steering Wheel Nut	37 N.m	27 lb ft
Turn Signal Switch Bolt	2.5 N.m	22 lb in
Upper Intermediate Steering Shaft Nut	62 N.m	46 lb ft

ADHESIVES, FLUIDS, LUBRICANTS, AND SEALERS

cardiagn.com

Application	Type of Material	GM Part Number	
		US	Canada
Steering Column Tilt Head Pivot Pin	Lubricant	12346293	992723

SCHEMATIC WIRING DIAGRAMS

STEERING WHEEL WIRING SCHEMATICS

Heated Steering Wheel (X88 or Z88 with UVD)

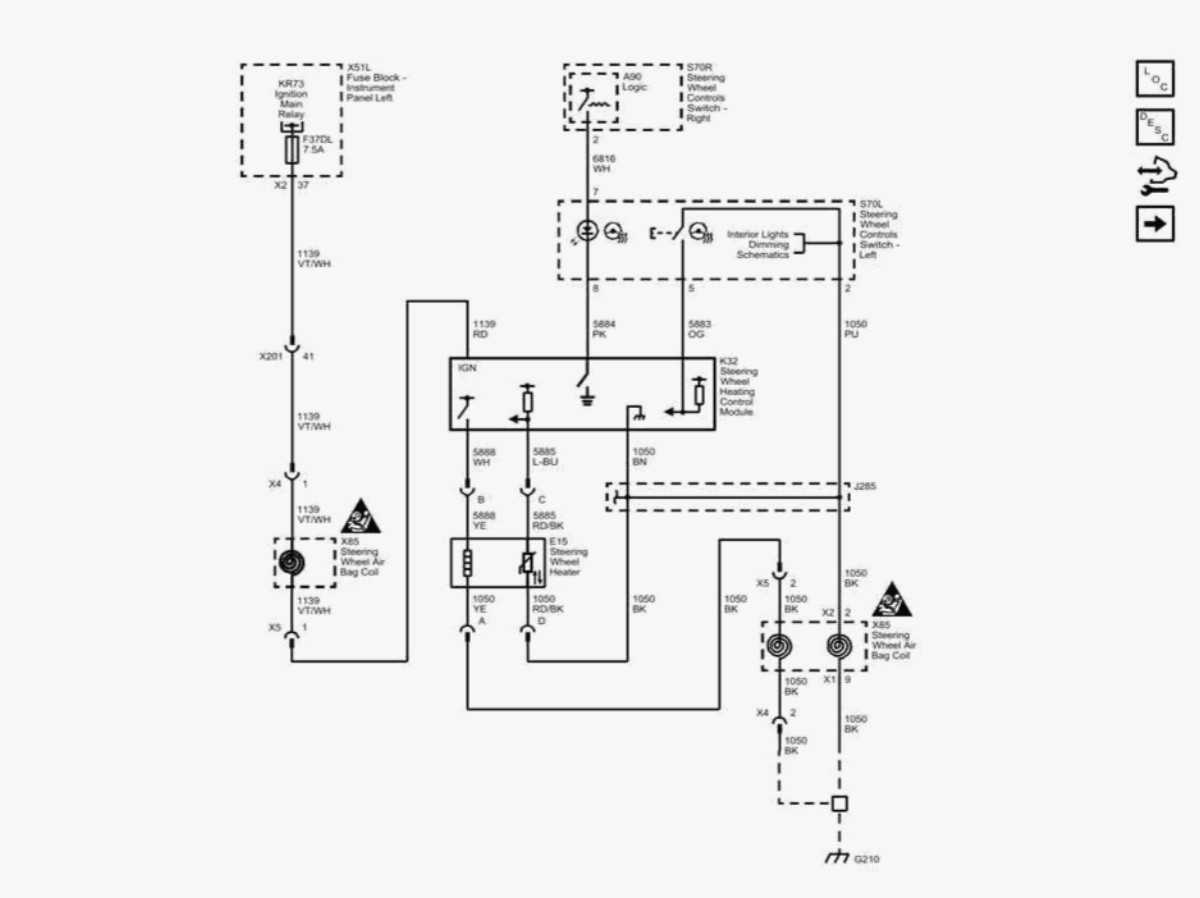

Fig. 1: Heated Steering Wheel (X88 or Z88 with UVD)
Courtesy of GENERAL MOTORS COMPANY

cardiagn.com

Heated Steering Wheel (Z75 with UVD)

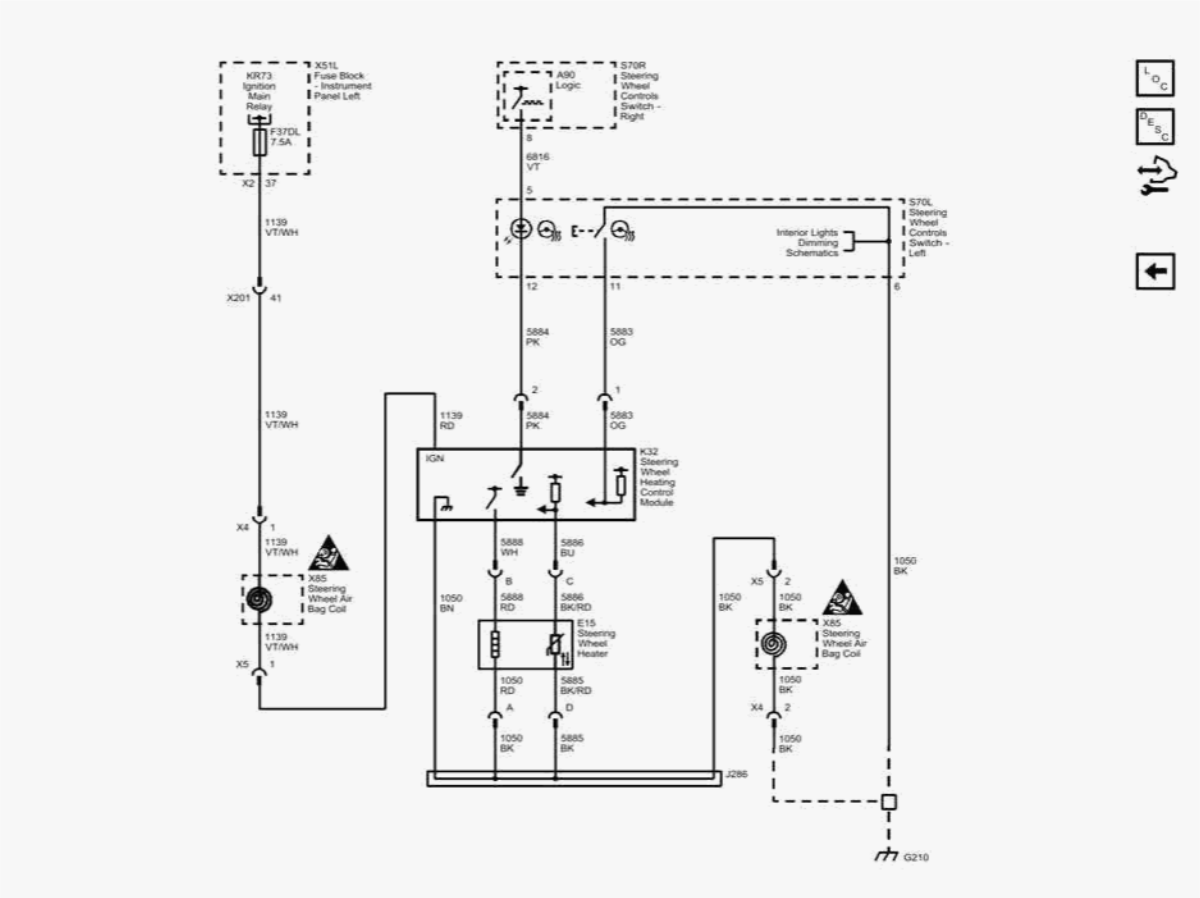

Fig. 2: Heated Steering Wheel (Z75 with UVD)
Courtesy of GENERAL MOTORS COMPANY

COLUMN LOCK WIRING SCHEMATICS

Steering Column Lock (BTM)

cardiagn.com

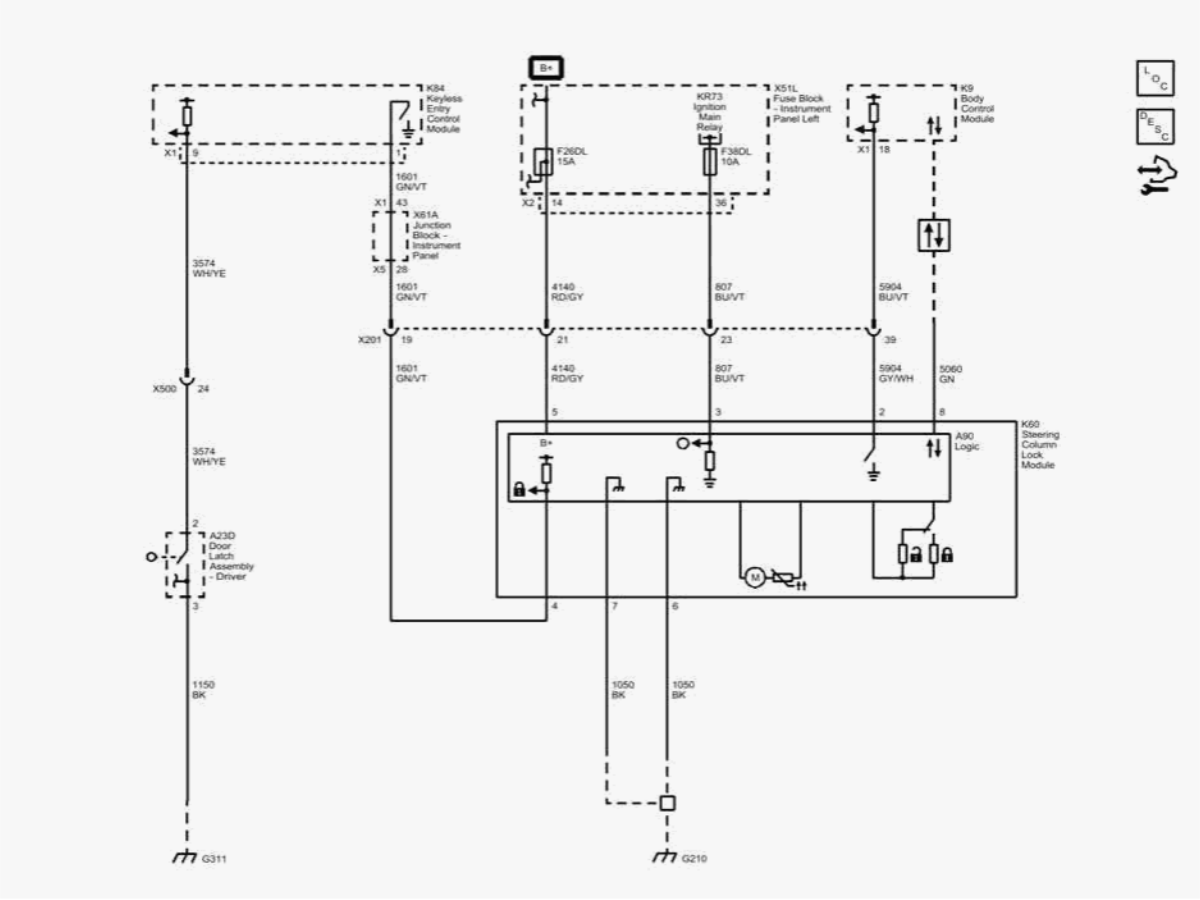

Fig. 3: Steering Column Lock (BTM)
Courtesy of GENERAL MOTORS COMPANY

TILT/TELESCOPING STEERING COLUMN WIRING SCHEMATICS

Tilt/Telescoping Steering Column (N38)

cardiagn.com

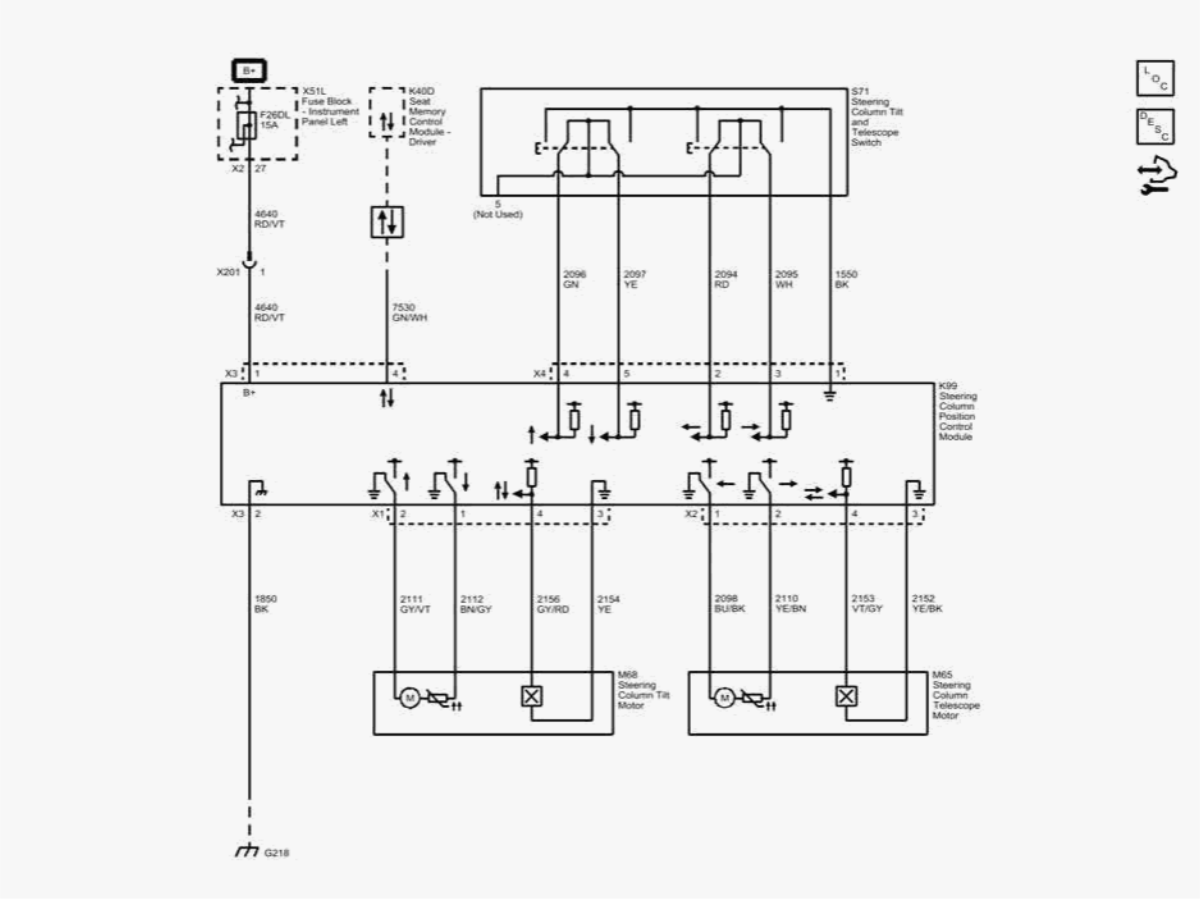

Fig. 4: Tilt/Telescoping Steering Column (N38)
Courtesy of GENERAL MOTORS COMPANY

DIAGNOSTIC INFORMATION AND PROCEDURES

DTC B1023: INTEGRAL SWITCH MALFUNCTION

Diagnostic Instructions

- Perform the **Diagnostic System Check - Vehicle** prior to using this diagnostic procedure.
- Review **Strategy Based Diagnosis** for an overview of the diagnostic approach.
- **Diagnostic Procedure Instructions** provides an overview of each diagnostic category.

cardiagn.com

DTC Descriptor

DTC B1023 00

Integral Switch Malfunction

Circuit/System Description

The vehicle theft deterrent subsystem provides the capability to lock or unlock the steering electrically. The steering column lock module is allowed to unlock when power mode transitions to a non off power mode and an authenticated driver identification device is present. Once the column is unlocked, a crank request can be allowed.

Conditions for Running the DTC

- The ignition is in OFF, ACCESSORY or RUN position.
- The system voltage is between 9-16 V.

Conditions for Setting the DTC

The steering column lock module detects an internal sensor malfunction resulting in lock status of invalid to be transmitted on serial data.

Action Taken When the DTC Sets

- DTC B1023 is stored in memory.
- The driver information center displays the service column lock system warning message.
- The steering column lock indicator is ON.

Conditions for Clearing the DTC

- No steering column lock module internal sensor malfunction so lock status of valid is transmitted on serial data.
- The condition for setting the DTC is no longer present.

Reference Information

Schematic Reference

Column Lock Schematics

Connector End View Reference

cardiagn.com

COMPONENT CONNECTOR END VIEWS - INDEX

Description and Operation

Steering Wheel and Column Description and Operation

Electrical Information Reference

- **Circuit Testing**
- **Connector Repairs**
- **Testing for Intermittent Conditions and Poor Connections**
- **Wiring Repairs**

Scan Tool Reference

Control Module References for scan tool information

Circuit/System Verification

1. Ignition ON. Clear all DTCs.
2. Verify that the DTC does not set while operating the integral switch at the steering column lock within the conditions for running the DTC.
   - **If the DTC sets**

     Replace the K60 Steering Column Lock Module.

   - **If the DTC does not set**
3. All OK.

Repair Instructions

Perform the **Diagnostic Repair Verification** after completing the repair.

Control Module References for steering column lock module replacement, programming and setup.

DTC B144C: INVERTED RUN/START POWER RELAY

Diagnostic Instructions

cardiagn.com

- Perform the **Diagnostic System Check - Vehicle** prior to using this diagnostic procedure.
- Review **Strategy Based Diagnosis** for an overview of the diagnostic approach.
- **Diagnostic Procedure Instructions** provides an overview of each diagnostic category.

DTC Descriptors

DTC B144C 01

Inverted Run/Start Power Relay Circuit Short to Battery

DTC B144C 06

Inverted Run/Start Power Relay Circuit Low Voltage/Open

Diagnostic Fault Information

Circuit	Short to Ground	Open/High Resistance	Short to Voltage	Signal Performance
Ignition	B144C 06	B144C 06	B144C 01	-

Circuit/System Description

The vehicle theft deterrent subsystem provides the capability to lock or unlock the steering column electrically. The steering column lock module is allowed to unlock when power mode transitions to a non off power mode and an authenticated driver identification device is present. Once the column is unlocked, a crank request can be allowed.

Conditions for Running the DTC

- The system voltage is between 9-16 V.
- The DTC can only run when the steering column lock module is awake.

Conditions for Setting the DTC

B144C 01

The steering column lock module detects a short to voltage when the power mode is in the RUN or CRANK for greater than 5 s.

B144C 06

cardiagn.com

The steering column lock control detects a short to ground or an open in the ignition circuit when the power mode is in the OFF/ACC for greater than 3 s.

Action Taken When the DTC Sets

- The steering column lock module will command the driver information center to display the service column lock warning message.
- The steering column lock module indicator is ON.

Conditions for Clearing the DTC

- The DTC will be current for as long as the fault is present.
- The DTC will be a history DTC when the voltage is present and the power mode is OFF or ACC or when voltage is not present and the power mode is RUN or CRANK.
- A history DTC will clear after 50 ignition cycles.

Reference Information

Schematic Reference

- **Column Lock Schematics**
- **Power Moding Schematics**

Connector End View Reference

COMPONENT CONNECTOR END VIEWS - INDEX

Description and Operation

Steering Wheel and Column Description and Operation

Electrical Information Reference

- **Circuit Testing**
- **Connector Repairs**
- **Testing for Intermittent Conditions and Poor Connections**
- **Wiring Repairs**

cardiagn.com

Scan Tool Reference

Control Module References for scan tool information

Circuit/System Verification

1. Ignition ON.
2. Verify that DTC B144B is not set.
   - **If DTC B144B is set**

     Refer to **DTC B144B**

   - **If DTC B144B is not set**
3. Refer to Circuit/System Testing.

Circuit/System Testing

B144C 01

1. Ignition OFF, disconnect the harness connector at the K60 Steering Column Lock Module. Ignition ON.
2. Test for less than 1 V between the ignition circuit terminal 3 and ground.
   - **If 1 V or greater**

     Repair the short to voltage on the circuit.

   - **If less than 1 V**
3. Replace the K60 Steering Column Lock Module.

B144C 06

1. Ignition OFF, disconnect the harness connector at the K60 Steering Column Lock Module. Connect a test lamp between the ignition circuit terminal 3 and ground.
2. Verify that a test lamp illuminates between the ignition circuit terminal 3 and ground.
   - **If the test lamp does not illuminate and the circuit fuse is good**
   1. Ignition OFF, remove the test lamp.
   2. Test for less than 2 Ω in the ignition circuit end to end.

cardiagn.com

- If 2 Ω or greater, repair the open/high resistance in the circuit.
- If less than 2 Ω, refer to **Power Mode Mismatch (With BTM)** **Power Mode Mismatch (Without BTM)**

- **If the test lamp does not illuminate and the circuit fuse is open**

1. Ignition OFF, remove the test lamp
2. Test for infinite resistance between the ignition circuit and ground.
    - If less than infinite resistance, repair the short to ground on the circuit.
    - If infinite resistance, replace the K60 Steering Column Lock Module.

- **If the test lamp illuminates**

3. Replace the K60 Steering Column Lock Module.

Repair Instructions

Perform the **Diagnostic Repair Verification** after completing the repair.

Control Module References for control module replacement, programming and setup.

DTC B2515: STEERING COLUMN LOCK MOTOR FEEDBACK CIRCUIT NOT PLAUSIBLE

Diagnostic Instructions

- Perform the **Diagnostic System Check - Vehicle** prior to using this diagnostic procedure.
- Review **Strategy Based Diagnosis** for an overview of the diagnostic approach.
- **Diagnostic Procedure Instructions** provides an overview of each diagnostic category.

DTC Descriptor

DTC B2515 5A

Steering Column Lock Motor Feedback Circuit Not Plausible

Circuit/System Description

The vehicle theft deterrent subsystem provides the capability to lock or unlock the steering electrically. The steering column lock module is allowed to unlock when power mode transitions to a non off power mode and an authenticated driver identification device is present. Once the column is unlocked, a crank request can be allowed.

cardiagn.com

Conditions for Running the DTC

- The ignition is in OFF, ACCESSORY or RUN position.
- The system voltage is between 9-16 V.

Conditions for Setting the DTC

The body control module (BCM) detects a not plausible feedback from the steering column lock module.

Action Taken When the DTC Sets

- DTC B2515 is stored in memory.
- The driver information center displays the service column lock system warning message.
- The steering column lock indicator is ON.

Conditions for Clearing the DTC

- The condition for setting the DTC is no longer present.
- The BCM detects a plausible feedback from the steering column lock module.

Reference Information

Schematic Reference

Column Lock Schematics

Connector End View Reference

COMPONENT CONNECTOR END VIEWS - INDEX

Description and Operation

Steering Wheel and Column Description and Operation

Electrical Information Reference

- **Circuit Testing**
- **Connector Repairs**

cardiagn.com

- **Testing for Intermittent Conditions and Poor Connections**
- **Wiring Repairs**

Scan Tool Reference

Control Module References for scan tool information

Circuit/System Verification

1. Ignition ON. Clear all DTCs.
2. Verify DTC B2515 does not set while operating the steering column lock module within the conditions for running the DTC.
   - **If DTC B2515 sets**

     Refer to Circuit/System Testing.

   - **If DTC B2515 does not set**
3. All OK.

Circuit/System Testing

1. Ignition OFF and all vehicle systems OFF, disconnect the harness connector at the K60 Steering Column Lock Module. It may take up to 5 minutes for all vehicle systems to power down.
2. Test for less than 3 V between the control circuit terminal 2 and ground.
   - **If 3 V or greater**

   1. Disconnect the harness connector at the K9 Body Control Module. Ignition ON.

      NOTE: **For vehicles with push button start, it is necessary to back out the terminal for the steering column lock status signal circuit at the K 9 Body Control Module harness. When the harness connector is removed, the vehicle cannot be put back into an Ignition ON state.**

   2. Test for less than 3 V between the control circuit terminal 2 and ground.
      - If 3 V or greater, repair the short to voltage on the circuit.
      - If less than 3 V, replace the K9 Body Control Module.
   - **If less than 3 V**
3. Ignition ON.

cardiagn.com

4. Test for B+ between the control circuit terminal 2 and ground.
    - **If less than B+**
    1. Disconnect the harness connector at the K9 Body Control Module.
    2. Test for infinite resistance between the signal circuit terminal 2 and ground.
        - If less than infinite resistance, repair the short to ground on the circuit.
        - If infinite resistance
    3. Test for less than 2 Ω in the signal circuit terminal 2 end to end.
        - If 2 Ω or greater, repair the open/high resistance in the circuit.
        - If less than 2 Ω
    4. Replace the K9 Body Control Module.
    - **If B+**
5. Replace the K60 Steering Column Lock Module.

Repair Instructions

Perform the **Diagnostic Repair Verification** after completing the repair.

Control Module References for control module replacement, programming and setup.

DTC B285A: STEERING COLUMN POSITION MODULE

Diagnostic Instructions

- Perform the **Diagnostic System Check - Vehicle** prior to using this diagnostic procedure.
- Review **Strategy Based Diagnosis** for an overview of the diagnostic approach.
- **Diagnostic Procedure Instructions** provides an overview of each diagnostic category.

DTC Descriptors

DTC B285A 39

Steering Column Position Module Internal Malfunction

DTC B285A 4B

cardiagn.com

Steering Column Position Module Calibration Not Learned

Diagnostic Fault Information

Circuit	Short to Ground	Open/High Resistance	Short to Voltage	Signal Performance
B+	-	1	-	-
Tilt Switch Signal UP	B285A 39, 4	2	B285A 39, 4	-
Tilt Switch Signal DOWN	B285A 39, 4	2	B285A 39, 4	-
Telescope Switch Signal FORWARD	B285A 39, 5	3	B285A 39, 5	-
Telescope Switch Signal REARWARD	B285A 39, 5	3	B285A 39, 5	-
Tilt Motor Control	-	2	-	-
Telescope Motor Control	-	3	-	-
Tilt Motor Position Signal	B285A 39, 4	B285A 39, 4	B285A 39, 4	4
Telescope Motor Position Signal	B285A 39, 5	B285A 39, 5	B285A 39, 5	5
Switch Ground	-	1	-	-
Steering Column Tilt Motor Return	-	B285A 39, 4	-	-
Steering Column Telescope Motor Return	-	B285A 39, 5	-	-
Module Ground	-	1	-	-
1. Column Tilt and Telescope Inoperative 2. Column Tilt Inoperative 3. Column Telescope Inoperative 4. Column Tilt Motor Inoperative\Erratic 5. Column Telescope Motor Inoperative\Erratic				

Circuit/System Description

The steering column has a tilt/telescoping control system that consists of an steering column position control module capable of serial data communication, a steering column power assembly with positioning motors and sensors, and a steering column tilt and telescope switch. The steering column position control module will wake up either by the serial data or by the steering column tilt and telescope switch.

Two position sensors are hall effect sensors and are used by the steering column position control module. The steering column position control module provides a 12 V reference voltage and a ground to both the tilt and telescoping position sensors. The sensor feedback circuit voltage varies from 0-12 V. Each sensor is part of the motor assembly. The steering column position control module monitors the feedback voltage to determine the column position.

cardiagn.com

All DTCs and data from steering column position control module is communicated through the serial data and stored in the seat memory control module.

Conditions for Running the DTC

None

Conditions for Setting the DTC

B285A 39

The steering column position control module has detected an internal electronic failure or external circuit malfunction.

B285A 4B

The steering column position control module soft stops are not learned.

Action Taken When the DTC Sets

The steering column position control module requests the DTC to be stored in the seat memory control module memory.

Conditions for Clearing the DTC

B285A 39

The external fault has been removed or steering column position control module has been replaced.

B285A 4B

The steering column position control module learn procedure has been completed.

Diagnostic Aids

All DTCs and data from steering column position control module is communicated through the serial data and stored in the seat memory control module. The seat memory control module only reports the DTCs communicated from the steering column position control module. DTCs stored in the memory seat module for the steering column position control module **DOES NOT** affect the operation of the seat or the seat memory. **DO NOT** replace the seat memory control module when DTC B285A is stored because the steering column position control module has detected a fault within it's system.

Reference Information

cardiagn.com

Schematic Reference

Tilt/Telescoping Steering Column Schematics

Connector End View Reference

COMPONENT CONNECTOR END VIEWS - INDEX

Description and Operation

Steering Wheel and Column Description and Operation

Electrical Information Reference

- **Circuit Testing**
- **Connector Repairs**
- **Testing for Intermittent Conditions and Poor Connections**
- **Wiring Repairs**

Circuit/System Verification

1. Ignition ON.
2. Verify that DTC B285A 4B is not set.
   - **DTC B285A 4B is set**
   1. Perform the Steering Column Tilt Wheel and Telescope Control Module Learn. Refer to **Steering Column Tilt Wheel and Telescope Control Module Learn**
   2. Verify that DTC B285A 4B does not reset.

      NOTE: **DO NOT replace the K40D Seat Memory Control Module - Driver.**

      - DTC B285A 4B is set, replace the K99 Steering Column Position Control Module.
      - DTC B285A 4B is not set
   3. All OK
   - **DTC B285A 4B is not set.**
3. Verify the scan tool Steering Column Direction Switch parameter changes between Inactive, Forward, Rearward, Up, and Down when

cardiagn.com

exercising the S71 Steering Column Tilt and Telescope Switch.

- **If the parameter does not change**

  Refer to Circuit/System Testing - Switch Malfunction.

- **If the parameter changes**

4. Verify the operation of the M68 Steering Column Tilt Motor while commanding the Steering Column Tilt Up and Steering Column Tilt Down Command with a scan tool.
   - **If the Steering Column Tilt Up or Steering Column Tilt Down Command does not work**

     Refer to Circuit/System Testing - Tilt Motor Malfunction

   - **If the Steering Column Tilt Up and Steering Column Tilt Down Command works**
5. Verify the M65 Steering Column Telescope Motor while commanding the Steering Column Telescope Forward and Steering Column Telescope Rearward with a scan tool.
   - **If the Steering Column Telescope Forward and Steering Column Telescope Rearward does not work**

     Refer to Circuit/System Testing - Telescope Motor Malfunction

   - **If the Steering Column Telescope Forward and Steering Column Telescope Rearward works**
6. Verify that DTC B285A 39 is not set.
   - **DTC B285A 39 is set**

     NOTE: **DO NOT replace the K40D Seat Memory Control Module - Driver.**

     Replace the K99 Steering Column Position Control Module.

   - **DTC B285A 39 is not set.**
7. All OK.

Circuit/System Testing

Switch Malfunction

1. Ignition OFF, disconnect the harness connector at the S71 Steering Column Tilt and Telescope Switch. It may take up to 2 min for all vehicle systems to power down.

cardiagn.com

2. Test for less than 10 Ω between the low reference circuit terminal G and ground.
    - **If 10 Ω or greater**
    1. Ignition OFF.
    2. Test for less than 2 Ω in the ground circuit end to end.
        - If 2 Ω or greater, repair the open/high resistance in the circuit.
        - If less than 2 Ω, replace the K99 Steering Column Position Control Module.
    - **If less than 10 Ω**
3. Ignition ON.
4. Test for B+ between the signal circuit terminals listed below and ground:
    - Terminal A
    - Terminal F
    - Terminal C
    - Terminal B
    - **If less than B+**
    1. Ignition OFF, disconnect the X4 harness connector at the K99 Steering Column Control Module.
    2. Test for infinite resistance between the signal circuit and ground.
        - If less than infinite resistance, repair the short to ground on the circuit.
        - If infinite resistance
    3. Test for less than 2 Ω in the signal circuit end to end.
        - If 2 Ω or greater, repair the open/high resistance in the circuit.
        - If less than 2 Ω, replace the K99 Steering Column Position Control Module.
    - **If B+**
5. Ignition OFF, disconnect the X4 harness connector at the K99 Steering Column Position Control Module. It may take up to 2 min for all vehicle systems to power down.
6. Ignition ON.
7. Test for less than 1 v between the signal circuit terminals listed below and ground:
    - Terminal 2
    - Terminal 3
    - Terminal 4

cardiagn.com

- Terminal 5
- **If greater than 1 V**

  Repair the short to voltage on the circuit

- **If less than 1 V**

8. Ignition OFF, connect the X4 harness connector at the K99 Steering Column Position Control Module. It may take up to 2 min for all vehicle systems to power down.
9. Ignition ON.

NOTE: **When performing the following test, make sure that the steering column is not already in the position the test is attempting to produce.**

10. Install a 3 A fused jumper wire between the signal circuits listed below and the ground circuit terminal G. Verify the steering column telescopes FORWARD and REVERSE to the soft stop.
    - Terminal A
    - Terminal F
    - **If the M65 Steering Column Telescope Motor does not operate**
    1. Ignition OFF, disconnect the X2 harness connector at the K99 Steering Column Position Control Module.
    2. Test for 1-2.5 Ω between terminal 1 and terminal 2.
        - If not within the specified range, replace the M65 Steering Column Telescope Motor.
        - If within the specified range, replace the K99 Steering Column Position Control Module.
    - **If the M65 Steering Column Telescope Motor operates**

NOTE: **When performing the following test, make sure that the steering column is not already in the position the test is attempting to produce.**

11. Install a 3 A fused jumper wire between the signal circuits listed below and the ground circuit terminal G. Verify the steering column telescopes FORWARD and REVERSE to the soft stop.
    - Terminal B
    - Terminal C
    - **If the M68 Steering Column Tilt Motor does not operate**

cardiagn.com

1. Ignition OFF, disconnect the X1 harness connector at the K99 Steering Column Position Control Module.
2. Test for 1-2.5 Ω between terminal 1 and terminal 2.
    - If not within the specified range, replace the M68 Steering Column Tilt Motor.
    - If within the specified range, replace the K99 Steering Column Position Control Module.
- **If the M68 Steering Column Tilt Motor operates**

12. Test or replace the S71 Steering Column Tilt and Telescope Switch.

Tilt Motor Malfunction

1. Ignition OFF, disconnect the X1 harness connector at the K99 Steering Column Position Control Module, ignition ON.
2. Test for less than 1 V between each K99 Steering Column Position Control Module harness connector terminals listed below and ground.
    - Steering Column Tilt Motor Down Control - terminal 1
    - Steering Column Tilt Motor Up Control - terminal 2
    - Steering Column Tilt Motor Signal - terminal 4
    - **If 1 V or greater**

      Repair the short to voltage on the circuit.

    - **If less than 1 V**
3. Ignition OFF.
4. Test for infinite resistance between each K99 Steering Column Position Control Module harness connector terminals listed below and ground.
    - Steering Column Tilt Motor Down Control - terminal 1
    - Steering Column Tilt Motor Up Control - terminal 2
    - Steering Column Tilt Motor Signal - terminal 4
    - **If less than infinite resistance**

      Repair the short to ground on the circuit.

    - **If Infinite resistance**
5. Replace the M68 Steering Column Tilt Motor.

Telescope Motor Malfunction

cardiagn.com

1. Ignition OFF, disconnect the X2 harness connector at the K99 Steering Column Position Control Module, ignition ON.
2. Test for less than 1 V between each K99 Steering Column Position Control Module harness connector terminals listed below and ground.
   - Steering Column Telescope Motor Forward - terminal 1
   - Steering Column Telescope Motor Rearward - terminal 2
   - Steering Column Telescope Motor Signal - terminal 4
   - **If 1 V or greater**

     Repair the short to voltage on the circuit.

   - **If less than 1 V**
3. Ignition OFF.
4. Test for infinite resistance between each K99 Steering Column Position Control Module harness connector terminals listed below and ground.
   - Steering Column Telescope Motor Forward - terminal 1
   - Steering Column Telescope Motor Rearward - terminal 2
   - Steering Column Telescope Motor Signal - terminal 4
   - **If less than infinite resistance**

     Repair the short to ground on the circuit.

   - **If Infinite resistance**
5. Replace the M65 Steering Column Telescope Motor.

Component Testing

Steering Column Tilt/Telescope Switch Test

1. Ignition OFF, disconnect the harness connector at the S71 Steering Column Tilt and Telescope Switch.
2. Test for infinite resistance between the low reference terminal G and each signal terminal with the S71 Steering Column Tilt and Telescope Switch in the released position.
   - **If less than infinite resistance**

     Replace the S71 Steering Column Tilt and Telescope Switch.

   - **If infinite resistance**

cardiagn.com

3. Test for less than 2 Ω between the ground terminal G and each signal terminal with the S71 Steering Column Tilt and Telescope Switch in the pressed position.
   - **If 2 Ω or greater**

     Replace the S71 Steering Column Tilt and Telescope Switch.

   - **If less than 2 Ω**
4. All OK.

Steering Column Telescope Motor Test

1. Ignition OFF, disconnect the X2 harness connector at the K99 Steering Column Position Control Module.
2. Test for 1-2.5 Ω between terminal 1 and terminal 2.
   - **If not within the specified range**

     Replace the M65 Steering Column Telescope Motor.

   - **If within the specified range**
3. All OK.

Steering Column Tilt Motor Test

1. Ignition OFF, disconnect the X1 harness connector at the K99 Steering Column Position Control Module.
2. Test for 1-2.5 Ω between terminal 1 and terminal 2.
   - **If not within the specified range**

     Replace the M68 Steering Column Tilt Motor.

   - **If within the specified range**
3. All OK.

Repair Instructions

Perform the **Diagnostic Repair Verification** after completing the repair.

Control Module References for control module replacement, programming, and setup

cardiagn.com

DTC B2897: STEERING COLUMN LOCK MOTOR LOCK CIRCUIT

Diagnostic Instructions

- Perform the **Diagnostic System Check - Vehicle** prior to using this diagnostic procedure.
- Review **Strategy Based Diagnosis** for an overview of the diagnostic approach.
- **Diagnostic Procedure Instructions** provides an overview of each diagnostic category.

DTC Descriptors

DTC B2897

Steering Column Lock Motor Lock Circuit

For symptom byte information, refer to **Symptom Byte List**

Diagnostic Fault Information

Circuit	Short to Ground	Open/High Resistance	Short to Voltage	Signal Performance
Steering Column Lock Motor Lock Signal	B2897 02	B2897 05	B2897 01, 05	-

Circuit/System Description

The vehicle theft deterrent subsystem provides the capability to lock or unlock the steering electrically. The steering column lock module is allowed to unlock when power mode transitions to a non off power mode and an authenticated driver identification device is present. Once the column is unlocked, a crank request can be allowed.

Conditions for Running the DTC

- The ignition is in OFF, ACCESSORY or RUN position.
- The system voltage is between 9-16 V.

Conditions for Setting the DTC

B2897 02

The steering column lock enable input circuit is shorted to ground.

cardiagn.com

B2897 01 or 05

The steering column lock enable input circuit is open or shorted to battery.

Action Taken When the DTC Sets

- DTC B2897 is stored in the steering column lock module memory.
- The steering column lock module will command the driver information center to display the Service Column Lock warning message.
- The steering column lock module indicator is ON.

Conditions for Clearing the DTC

The steering column lock module has received a lock command and detects no longer a malfunction in the steering column lock circuit.

Reference Information

Schematic Reference

Column Lock Schematics

Connector End View Reference

COMPONENT CONNECTOR END VIEWS - INDEX

Description and Operation

Steering Wheel and Column Description and Operation

Electrical Information Reference

- **Circuit Testing**
- **Connector Repairs**
- **Testing for Intermittent Conditions and Poor Connections**
- **Wiring Repairs**

Scan Tool Reference

Control Module References for scan tool information

cardiagn.com

Circuit/System Testing

1. Ignition OFF, disconnect the harness connector at the K60 Steering Column Lock Module. Ignition ON.
2. Test for less than B+ between the control circuit terminal 4 and ground.
   - **If B+**

     Repair the short to voltage on the circuit.

   - **If less than B+**
3. Ignition OFF.
4. Test for infinite resistance between the control circuit terminal 4 and ground.
   - **If less than infinite resistance**
   1. Disconnect the X1 harness connector at the K84 Keyless Entry Control Module.
   2. Test for infinite resistance between the control circuit terminal 4 and ground.
      - If less than infinite resistance, repair the short to ground on the circuit.
      - If infinite resistance, replace the K84 Keyless Entry Control Module.
   - **If infinite resistance**
5. Disconnect the X1 harness connector at the K84 Keyless Entry Control Module.
6. Test for less than 2 Ω in the harness connector control circuit terminal 4 at the K60 Steering Column Lock Module end to end.
   - **If 2 Ω or greater**

     Repair the open/high resistance in the circuit.

   - **If less than 2 Ω**
7. Replace the K60 Steering Column Lock Module.

Repair Instructions

Perform the **Diagnostic Repair Verification** after completing the repair.

Control Module References for steering column lock module or keyless entry control module replacement, programming and setup.

DTC B2910: STEERING COLUMN LOCK PASSWORD INCORRECT

Diagnostic Instructions

cardiagn.com

- Perform the **Diagnostic System Check - Vehicle** prior to using this diagnostic procedure.
- Review **Strategy Based Diagnosis** for an overview of the diagnostic approach.
- **Diagnostic Procedure Instructions** provides an overview of each diagnostic category.

DTC Descriptor

DTC B2910

Steering Column Lock Password Incorrect

For symptom byte information, refer to **Symptom Byte List** .

Circuit/System Description

The vehicle theft deterrent subsystem provides the capability to lock or unlock the steering electrically. The steering column lock module is allowed to unlock when power mode transitions to a non off power mode and an authenticated driver identification device is present. Once the column is unlocked, a crank request can be allowed.

Conditions for Running the DTC

- The ignition is in OFF, ACCESSORY or RUN position.
- The system voltage is between 9-16 V.

Conditions for Setting the DTC

The steering column lock module has not received the correct password or did not receive a password with the command to unlock the steering column.

Action Taken When the DTC Sets

- DTC B2910 is stored in memory.
- The driver information center displays the Service Column Lock warning message.
- The steering column lock indicator is ON.
- The engine will not crank.

Conditions for Clearing the DTC

- The condition for setting the DTC is no longer present.

cardiagn.com

- The steering column lock module has received the correct password with the command to unlock the steering column.

Diagnostic Aids

This DTC may set if the BCM was replaced and the steering column lock module was not programmed.

Reference Information

Schematic Reference

Column Lock Schematics

Connector End View Reference

COMPONENT CONNECTOR END VIEWS - INDEX

Description and Operation

Steering Wheel and Column Description and Operation

Electrical Information Reference

- **Circuit Testing**
- **Connector Repairs**
- **Testing for Intermittent Conditions and Poor Connections**
- **Wiring Repairs**

Scan Tool Reference

Control Module References for scan tool information

Circuit/System Verification

NOTE: **To ensure that the steering column lock password from the BCM is learned: turn ignition ON and then OFF, close all doors, and wait 5 minutes.**

1. Ignition ON. Clear all DTCs.
2. Verify DTC B2910 does not set while operating the steering column lock module within the conditions for running the DTC.

cardiagn.com

- **If DTC B2910 sets**

1. Program the K60 Steering Column Lock Module.
2. Ignition ON. Clear all DTCs.
3. Verify DTC B2910 does not set while operating the steering column lock module within the conditions for running the DTC.
    - If DTC B2910 sets, replace the K60 Steering Column Lock Module.
    - If DTC B2910 does not set
4. All OK.

- **If DTC B2910 does not set**

3. All OK.

Repair Instructions

Perform the **Diagnostic Repair Verification** after completing the repair.

Control Module References for steering column lock module replacement, programming and setup.

DTC B305A: NO RESPONSE FROM STEERING COLUMN LOCK RECEIVED

Diagnostic Instructions

- Perform the **Diagnostic System Check - Vehicle** prior to using this diagnostic procedure.
- Review **Strategy Based Diagnosis** for an overview of the diagnostic approach.
- **Diagnostic Procedure Instructions** provides an overview of each diagnostic category.

DTC Descriptor

DTC B305A 00

No Response From Steering Column Lock Received

Diagnostic Fault Information

Circuit	Short to Ground	Open/High Resistance	Short to Voltage	Signal Performance
Steering Column Lock Status Signal	B305A 00	B305A 00 B2515 5A	B305A 00 B2515 5A	-

cardiagn.com

Circuit/System Description

The vehicle theft deterrent subsystem provides the capability to lock or unlock the steering electrically. The steering column lock module is allowed to unlock when power mode transitions to a non off power mode and an authenticated driver identification device is present. Once the column is unlocked, a crank request can be allowed.

Conditions for Running the DTC

- The ignition is in OFF, ACCESSORY or RUN position.
- The system voltage is between 9-16 V.

Conditions for Setting the DTC

The body control module (BCM) has not received any response from the steering column lock module.

Action Taken When the DTC Sets

- DTC B305A is stored in the BCM memory.
- The driver information center displays the Service Steering Column Lock message.
- The steering column lock indicator is ON.

Conditions for Clearing the DTC

- The condition for setting the DTC is no longer present.
- The BCM has received response from the steering column lock module.

Reference Information

Schematic Reference

Column Lock Schematics

Connector End View Reference

COMPONENT CONNECTOR END VIEWS - INDEX

Description and Operation

Steering Wheel and Column Description and Operation

cardiagn.com

Electrical Information Reference

- **Circuit Testing**
- **Connector Repairs**
- **Testing for Intermittent Conditions and Poor Connections**
- **Wiring Repairs**

Scan Tool Reference

Control Module References for scan tool information

Circuit/System Verification

1. Ignition ON. Clear all DTCs.
2. Verify the scan tool communicates with the control module and there are no U codes set.
   - **If the scan tool does not communicate with the control module and there are U codes set**

     Refer to **Diagnostic Trouble Code (DTC) List - Vehicle** .

   - **If the scan tool does not communicate with the control module and there are no codes set**

     Refer to **Scan Tool Does Not Communicate with Low Speed GMLAN Device** .

   - **If the scan tool communicates with the control module and there are no codes set**
3. Verify DTC B305A does not set while operating the steering column lock module within the conditions for running the DTC.
   - **If DTC B305A sets**

     Refer to Circuit/System Testing.

   - **If DTC B305A does not set**
4. All OK.

Circuit/System Testing

1. Ignition OFF and all vehicle systems OFF, disconnect the harness connector at the K60 Steering Column Lock Module. It may take up to 5 minutes for all vehicle systems to power down.

cardiagn.com

2. Test for less than 2 Ω between the following terminals and ground.
    - Terminal 6
    - Terminal 7
    - If 2 Ω or greater, repair the open/high resistance in the circuit.
    - If less than 2 Ω
3. Test for less than 3 V between the control circuit terminal 2 and ground.
    - **If 3 V or greater**

    1. Disconnect the harness connector at the K9 Body Control Module. Ignition ON.

    NOTE: **For vehicles with push button start, it is necessary to back out the terminal for the steering column lock status signal circuit at the K 9 Body Control Module harness. When the harness connector is removed, the vehicle cannot be put back into an Ignition ON state.**

    2. Test for less than 3 V between the control circuit terminal 2 and ground.
        - If 3 V or greater, repair the short to voltage on the circuit.
        - If less than 3 V, replace the K9 Body Control Module.
    - **If less than 3 V**
4. Ignition ON.
5. Test for B+ between the control circuit terminal 2 and ground.
    - **If less than B+**

    1. Disconnect the harness connector at the K9 Body Control Module.
    2. Test for infinite resistance between the signal circuit terminal 2 and ground.
        - If less than infinite resistance, repair the short to ground on the circuit.
        - If infinite resistance
    3. Test for less than 2 Ω in the signal circuit terminal 2 end to end.
        - If 2 Ω or greater, repair the open/high resistance in the circuit.
        - If less than 2 Ω
    4. Replace the K9 Body Control Module.
    - **If B+**
6. Replace the K60 Steering Column Lock Module.

cardiagn.com

Repair Instructions

Perform the **Diagnostic Repair Verification** after completing the repair.

Control Module References for control module replacement, programming and setup.

DTC C0549: STEERING COLUMN LOCK SOLENOID ACTUATOR UNLOCKED SIGNAL

Diagnostic Instructions

- Perform the **Diagnostic System Check - Vehicle** prior to using this diagnostic procedure.
- Review **Strategy Based Diagnosis** for an overview of the diagnostic approach.
- **Diagnostic Procedure Instructions** provides an overview of each diagnostic category.

DTC Descriptor

DTC C0549 02

Steering Column Lock Solenoid Actuator Unlocked Signal Circuit Short to Ground

DTC C0549 05

Steering Column Lock Solenoid Actuator Unlocked Signal Circuit High Voltage/Open

Diagnostic Fault Information

Circuit	Short to Ground	Open/High Resistance	Short to Voltage	Signal Performance
Steering Column Lock Solenoid Actuator Unlocked Signal	C0549 02	C0549 05	C0549 05	-

Circuit/System Description

The vehicle theft deterrent subsystem provides the capability to lock or unlock the steering electrically. The steering column lock module is allowed to unlock when power mode transitions to a non off power mode and an authenticated driver identification device is present. Once the column is unlocked, a crank request can be allowed.

Conditions for Running the DTC

cardiagn.com

- The ignition is in OFF, ACCESSORY or RUN position.
- The system voltage is between 9-16 V.

Conditions for Setting the DTC

C0549 02

The steering column lock module is locked and has detected less than 0.3 V on the Unlock Status circuit.

C0549 05

The steering column lock module is in unlocked and has detected greater than 0.6 V difference between the Unlock Status circuit and the hall sensors for more than 100ms.

Action Taken When the DTC Sets

- DTC C0549 is stored in the steering column lock module memory.
- The driver information center displays the Service Steering Column Lock message.
- The steering column lock indicator is ON.

Conditions for Clearing the DTC

- The conditions for setting the DTC is no longer present.
- The steering column lock module has received signal on the Unlock Status circuit.

Reference Information

Schematic Reference

Column Lock Schematics

Connector End View Reference

COMPONENT CONNECTOR END VIEWS - INDEX

Description and Operation

Steering Wheel and Column Description and Operation

cardiagn.com

Electrical Information Reference

- **Circuit Testing**
- **Connector Repairs**
- **Testing for Intermittent Conditions and Poor Connections**
- **Wiring Repairs**

Scan Tool Reference

Control Module References for scan tool information

Circuit/System Verification

1. Ignition ON. Clear all DTCs.
2. Verify DTC C0549 does not set while operating the steering column lock module within the conditions for running the DTC.
   - **If DTC C0549 sets**

     Refer to Circuit/System Testing.

   - **If DTC C0549 does not set**
3. All OK.

Circuit/System Testing

1. Ignition OFF, disconnect the harness connector at the K60 Steering Column Lock Module.
2. Test for less than 1 V between the control circuit terminal 2 and ground.
   - **If 1 V or greater**
   1. Disconnect the harness connector at the K9 Body Control Module. Ignition ON.
   2. Test for less than 1 V between the control circuit terminal 2 and ground.
      - If 1 V or greater, repair the short to voltage on the circuit.
      - If less than 1 V, replace the K9 Body Control Module.
   - **If less than 1 V**
3. Ignition ON.
4. Test for B+ between the control circuit terminal 2 and ground.

cardiagn.com

- **If less than B+**

1. Disconnect the harness connector at the K9 Body Control Module.
2. Test for infinite resistance between the signal circuit terminal 2 and ground.
    - If less than infinite resistance, repair the short to ground on the circuit.
    - If infinite resistance
3. Test for less than 2 Ω in the signal circuit terminal 2 end to end.
    - If 2 Ω or greater, repair the open/high resistance in the circuit.
    - If less than 2 Ω
4. Replace the K9 Body Control Module.

- **If B+**

5. Replace the K60 Steering Column Lock Module.

Repair Instructions

Perform the **Diagnostic Repair Verification** after completing the repair.

Control Module References for steering column lock module and body control module replacement, programming and setup.

SYMPTOMS - STEERING WHEEL AND COLUMN

Review the system description and operation in order to familiarize yourself with the system functions. Refer to **Steering Wheel and Column Description and Operation**.

Visual/Physical Inspection

- Inspect for aftermarket devices which could affect the operation of the steering wheel and column.
- Inspect the easily accessible or visible system components for obvious damage or conditions which could cause the symptom.

Symptoms List

Refer to a symptom diagnostic procedure from the following list in order to diagnose the symptom:

- **Heated Steering Wheel Indicator Malfunction (Z75)Heated Steering Wheel Indicator Malfunction (X88 or Z88)**
- **Heated Steering Wheel Malfunction (Z75)Heated Steering Wheel Malfunction (X88 or Z88)**
- **Steering Column Tilt/Telescoping Malfunction (N38)**

cardiagn.com

- Steering Column Tilt Function Inoperative (N33, N37)
- High Telescoping Effort (N37)
- Noise in Steering Column
- High Shift Effort
- Looseness in Steering Column

HEATED STEERING WHEEL INDICATOR MALFUNCTION (Z75)

Diagnostic Instructions

- Perform the Diagnostic System Check - Vehicle prior to using this diagnostic procedure.
- Review Strategy Based Diagnosis for an overview of the diagnostic approach.
- Diagnostic Procedure Instructions provides an overview of each diagnostic category.

Diagnostic Fault Information

Circuit	Short to Ground	Open/High Resistance	Short to Voltage	Signal Performance
Ignition	1	1	-	-
Switch Signal	2	1	-	-
LED Control	3	3	4	-
Switch and LED Ground	-	1	-	-
Module Ground	-	1	-	-
1. Heated Steering Wheel System Inoperative 2. Heated Steering Wheel Always ON 3. LED Inoperative 4. LED Always ON				

Circuit/System Description

The Steering Wheel Heating Control Module controls the heated steering wheel and the heated steering wheel ON indicator based on an input from the heated steering wheel switch. When the heated steering wheel switch is pressed, the switch signal circuit is pulled to ground. This indicates to the heating steering wheel control module that steering wheel heat is requested. When the request is seen, the heated steering module supplies voltage to the indicator lamp and supplies voltage to the heating elements, which are internal to the steering wheel.

Reference Information

cardiagn.com

Schematic Reference

- **Steering Wheel Schematics**
- **Interior Lights Dimming Schematics**

Connector End View Reference

COMPONENT CONNECTOR END VIEWS - INDEX

Description and Operation

Steering Wheel and Column Description and Operation

Electrical Information Reference

- **Circuit Testing**
- **Connector Repairs**
- **Testing for Intermittent Conditions and Poor Connections**
- **Wiring Repairs**

Circuit/System Verification

1. Ignition ON.
2. Verify the S70L Steering Wheel Controls Switch - Left is OFF. The steering wheel heater indicator should not be illuminated and the left and right sides of the steering wheel should not be warm.
   - **The steering wheel is always warm**

     Refer to **Heated Steering Wheel Malfunction (Z75)Heated Steering Wheel Malfunction (X88 or Z88)**

   - **The steering wheel does not become warm and the heater indicator is illuminated**

     Refer to Circuit/System Testing

   - **The steering wheel does not become warm and the heater indicator is not illuminated**
3. Press and release the S70L Steering Wheel Controls Switch - Left. The steering wheel heater indicator should illuminate and the left and right sides of the steering wheel should become warm.

cardiagn.com

- **The steering wheel does not become warm**

  Refer to **Heated Steering Wheel Malfunction (Z75)Heated Steering Wheel Malfunction (X88 or Z88)**

- **The steering wheel becomes warm and the heater indicator does not illuminate**

  Refer to Circuit/System Testing

- **The steering wheel becomes warm and the heater indicator illuminates**

4. All OK.

Circuit/System Testing

1. Ignition OFF, disconnect the X5 in-line harness connector at the X85 Steering Wheel Air Bag Coil.
2. Test for less than 10 Ω between the ground circuit terminal 2 and ground.
   - **If 10 Ω or greater**
   1. Ignition OFF.
   2. Test for less than 2 Ω in the ground circuit end to end.
      - If 2 Ω or greater, repair the open/high resistance in the circuit.
      - If less than 2 Ω, repair the open/high resistance in the ground connection.
   - **If less than 10 Ω**
3. Ignition ON.
4. Verify a test lamp illuminates between the ignition voltage circuit terminal 1 and ground.
   - **If the test lamp does not illuminate and the circuit fuse is good**
   1. Ignition OFF, remove the test lamp.
   2. Test for less than 2 Ω in the ignition circuit end to end.
      - If less than 2 Ω, verify the fuse is OK and there is voltage at the fuse. Refer to **Power Mode Mismatch (With BTM)** **Power Mode Mismatch (Without BTM)** .
      - If 2 Ω or greater
   3. Verify the in-line fuse is OK and there is voltage at the fuse.
      - If the in-line fuse is blown, replace the K32 Steering Wheel Heating Control Module.
      - If the in-line fuse is OK, repair the open/high resistance in the circuit.

cardiagn.com

- **If the test lamp does not illuminate and the circuit fuse is open**

1. Ignition OFF.
2. Test for infinite resistance between the ignition voltage circuit and ground.
    - If less than infinite resistance, repair the short to ground on the circuit.
    - If infinite resistance, replace the K32 Steering Wheel Heating Control Module.

- **If the test lamp illuminates**

5. Ignition OFF, connect the X5 in-line harness connector. Disconnect the harness connector at the S70L Steering Wheel Control Switch - Left. Ignition ON.
6. Verify a test lamp illuminates between the signal voltage circuit terminal 5 and ground.

- **If the test lamp does not illuminate**

1. Ignition OFF, disconnect the harness connector at the S70R Steering Wheel Control Switch - Right.
2. Test for infinite resistance between the signal circuit and ground.
    - If less than infinite resistance, repair the short to ground on the circuit.
    - If infinite resistance
3. Test for less than 2 Ω in the signal circuit end to end.
    - If 2 Ω or greater, repair the open/high resistance in the circuit.
    - If less than 2 Ω, replace the S70R Steering Wheel Control Switch - Right.

- **If the test lamp illuminates**

7. Ignition ON.
8. Test for less than 1 V between the control circuit terminal 12 and ground.

- **If greater than 1 V**

1. Disconnect the K32 Steering Wheel Heating Control Module harness connector.
2. Test for less than 1 V between the control circuit terminal 2 and ground.
    - If greater than 1 V, repair the short to voltage on the circuit.
    - If less than 1 V
3. Replace the K32 Steering Wheel Heating Control Module.

- **If infinite resistance**

9. Ignition OFF.
10. Test for infinite resistance between the control circuit terminal 12 and ground.

cardiagn.com

- **If less than infinite resistance**

1. Disconnect the K32 Steering Wheel Heating Control Module in-line harness connector.
2. Test for infinite resistance between the signal circuit and ground.
    - If less than infinite resistance, repair the short to ground on the circuit.
    - If infinite resistance
3. Replace the K32 Steering Wheel Heating Control Module.

- **If infinite resistance**

11. Install a 3 A fused jumper wire between the ground circuit terminal 12 and ground. Ignition ON.
12. Verify the steering wheel heat indicator is illuminated.

- **If the steering wheel heat indicator does not illuminate**

1. Disconnect the K32 Steering Wheel Heating Control Module in-line harness connector.
2. Test for less than 2 Ω in the signal circuit end to end.
    - If 2 Ω or greater, repair the open/high resistance in the circuit.
    - Replace the S70L Steering Wheel Control Switch - Left

- **If the steering wheel heat indicator illuminates**

13. Replace the K32 Steering Wheel Heating Control Module.

Repair Instructions

Perform the **Diagnostic Repair Verification** after completing the repair.

- **Cruise Control Switch Replacement (Cadillac)** **Cruise Control Switch Replacement (Chevrolet/GMC)**
- **Control Module References** for control module replacement, programming and setup.

HEATED STEERING WHEEL INDICATOR MALFUNCTION (X88 OR Z88)

Diagnostic Instructions

- Perform the **Diagnostic System Check - Vehicle** prior to using this diagnostic procedure.
- Review **Strategy Based Diagnosis** for an overview of the diagnostic approach.
- **Diagnostic Procedure Instructions** provides an overview of each diagnostic category.

Diagnostic Fault Information

cardiagn.com

Circuit	Short to Ground	Open/High Resistance	Short to Voltage	Signal Performance
Ignition	1	1	-	-
Switch Signal	2	1	-	-
LED Control	3	3	4	-
Switch and LED Ground	-	1	-	-
Module Ground	-	1	-	-
1. Heated Steering Wheel System Inoperative 2. Heated Steering Wheel Always ON 3. LED Inoperative 4. LED Always ON				

Circuit/System Description

The Steering Wheel Heating Control Module controls the heated steering wheel and the heated steering wheel ON indicator based on an input from the heated steering wheel switch. When the heated steering wheel switch is pressed, the switch signal circuit is pulled to ground. This indicates to the heating steering wheel control module that steering wheel heat is requested. When the request is seen, the heated steering module supplies voltage to the indicator lamp and supplies voltage to the heating elements, which are internal to the steering wheel.

Reference Information

Schematic Reference

- **Steering Wheel Schematics**
- **Interior Lights Dimming Schematics**

Connector End View Reference

COMPONENT CONNECTOR END VIEWS - INDEX

Description and Operation

Steering Wheel and Column Description and Operation

Electrical Information Reference

- **Circuit Testing**

cardiagn.com

- **Connector Repairs**
- **Testing for Intermittent Conditions and Poor Connections**
- **Wiring Repairs**

Circuit/System Verification

1. Ignition ON.
2. Verify the S70L Steering Wheel Controls Switch - Left is OFF. The steering wheel heater indicator should not be illuminated and the left and right sides of the steering wheel should not be warm.
   - **The steering wheel is always warm**

     Refer to **Heated Steering Wheel Malfunction (X88 or Z88)**

   - **The steering wheel does not become warm and the heater indicator is illuminated**

     Refer to Circuit/System Testing

   - **The steering wheel does not become warm and the heater indicator is not illuminated**
3. Press and release the S70L Steering Wheel Controls Switch - Left. The steering wheel heater indicator should illuminate and the left and right sides of the steering wheel should become warm.
   - **The steering wheel does not become warm**

     Refer to **Heated Steering Wheel Malfunction (X88 or Z88)**

   - **The steering wheel becomes warm and the heater indicator does not illuminate**

     Refer to Circuit/System Testing

   - **The steering wheel becomes warm and the heater indicator illuminates**
4. All OK.

Circuit/System Testing

1. Ignition OFF, disconnect the X5 in-line harness connector at the X85 Steering Wheel Air Bag Coil.
2. Test for less than 10 Ω between the ground circuit terminal 2 and ground.
   - **If 10 Ω or greater**

cardiagn.com

1. Ignition OFF.
2. Test for less than 2 Ω in the ground circuit end to end.
   - If 2 Ω or greater, repair the open/high resistance in the circuit.
   - If less than 2 Ω, repair the open/high resistance in the ground connection.

- **If less than 10 Ω**

3. Ignition ON.
4. Verify a test lamp illuminates between the ignition voltage circuit terminal 1 and ground.

- **If the test lamp does not illuminate and the circuit fuse is good**

1. Ignition OFF, remove the test lamp.
2. Test for less than 2 Ω in the ignition circuit end to end.
   - If less than 2 Ω, verify the fuse is OK and there is voltage at the fuse. Refer to **Power Mode Mismatch (With BTM)** **Power Mode Mismatch (Without BTM)** .
   - If 2 Ω or greater
3. Verify the fuse is OK and there is voltage at the fuse.
   - If the fuse is blown, replace the K32 Steering Wheel Heating Control Module.
   - If the fuse is OK, repair the open/high resistance in the circuit.

- **If the test lamp does not illuminate and the circuit fuse is open**

1. Ignition OFF.
2. Test for infinite resistance between the ignition voltage circuit and ground.
   - If less than infinite resistance, repair the short to ground on the circuit.
   - If infinite resistance, replace the K32 Steering Wheel Heating Control Module.

- **If the test lamp illuminates**

5. Ignition OFF, connect the X5 in-line harness connector. Disconnect the harness connector at the S70L Steering Wheel Control Switch - Left. Ignition ON.
6. Test for B+ between the signal voltage circuit terminal 7 and ground.

- **If less than B+**

1. Ignition OFF, disconnect the harness connector at the S70R Steering Wheel Control Switch - Right.
2. Test for infinite resistance between the signal circuit and ground.
   - If less than infinite resistance, repair the short to ground on the circuit.

cardiagn.com

- If infinite resistance

3. Test for less than 2 Ω in the signal circuit end to end.
   - If 2 Ω or greater, repair the open/high resistance in the circuit.
   - If less than 2 Ω, replace the S70R Steering Wheel Control Switch - Right.
- **If B+**

NOTE: **Once the jumper is installed the module will only ground the circuit for approximately 3 s.**

7. Ignition OFF, install a 3 A fused jumper wire between the signal circuit terminal 5 and ground circuit terminal 1 at the S70L Steering Wheel Controls Switch - Left. Ignition ON.
8. Test for less than 300 Ω between the control circuit terminal 8 and ground.
   - **If 300 Ω or greater**

     Replace the K32 Steering Wheel Heating Control Module.

   - **If less than 300 Ω**
9. Replace the S70L Steering Wheel Controls Switch - Left.

Repair Instructions

Perform the **Diagnostic Repair Verification** after completing the repair.

- **Cruise Control Switch Replacement (Cadillac)** **Cruise Control Switch Replacement (Chevrolet/GMC)**
- **Radio Control Switch Replacement - Steering Wheel (Cadillac)** **Radio Control Switch Replacement - Steering Wheel (Chevrolet/GMC)**
- **Control Module References** for control module replacement, programming and setup.

HEATED STEERING WHEEL MALFUNCTION (Z75)

Diagnostic Instructions

- Perform the **Diagnostic System Check - Vehicle** prior to using this diagnostic procedure.
- Review **Strategy Based Diagnosis** for an overview of the diagnostic approach.
- **Diagnostic Procedure Instructions** provides an overview of each diagnostic category.

Diagnostic Fault Information

cardiagn.com

Circuit	Short to Ground	Open/High Resistance	Short to Voltage	Signal Performance
Ignition	1	1	-	-
Switch Signal	2	1	-	-
Switch and LED Ground	-	1	-	-
Temperature Sensor Signal	3	3	3	-
Temperature Sensor Ground	-	3	-	-
Heater Element Control	3	3	2	-
Heater Element Ground	-	3	-	-
Module Ground	-	1	-	-
1. Heated Steering Wheel System Inoperative 2. Heated Steering Wheel Always ON 3. Heated Steering Wheel Inoperative				

Circuit/System Description

The heated steering wheel control module controls the heated steering wheel and the heated steering wheel ON indicator based on an input from the heated steering wheel switch. When the heated steering wheel switch is pressed, the switch signal circuit is pulled to ground. This indicates to the heating steering wheel control module that steering wheel heat is requested. When the request is seen, the heated steering wheel control module supplies voltage to the indicator lamp and supplies voltage to the heating elements, which are internal to the steering wheel.

Diagnostic Aids

- Before replacing the steering wheel for complaints of not getting hot enough, a reliable infrared temperature gun should be used to measure the temperature at various points around the rim. The steering wheel's normal operating temperature is 32Â°C (89.6Â°F) and takes approximately 10 min to reach that temperature. It may take up to 20 min for the normal operating temperature to stabilize within the steering wheel rim. There may be spike in temperature during the first 3-4 min before it stabilizes at normal operating temperature. The steering wheel will take longer to heat up if the vehicle temperature is below -21Â°C (-5.8Â°F). The steering wheel heater will not operate when the steering wheel temperature is above 32Â°C (89.6Â°F).

cardiagn.com

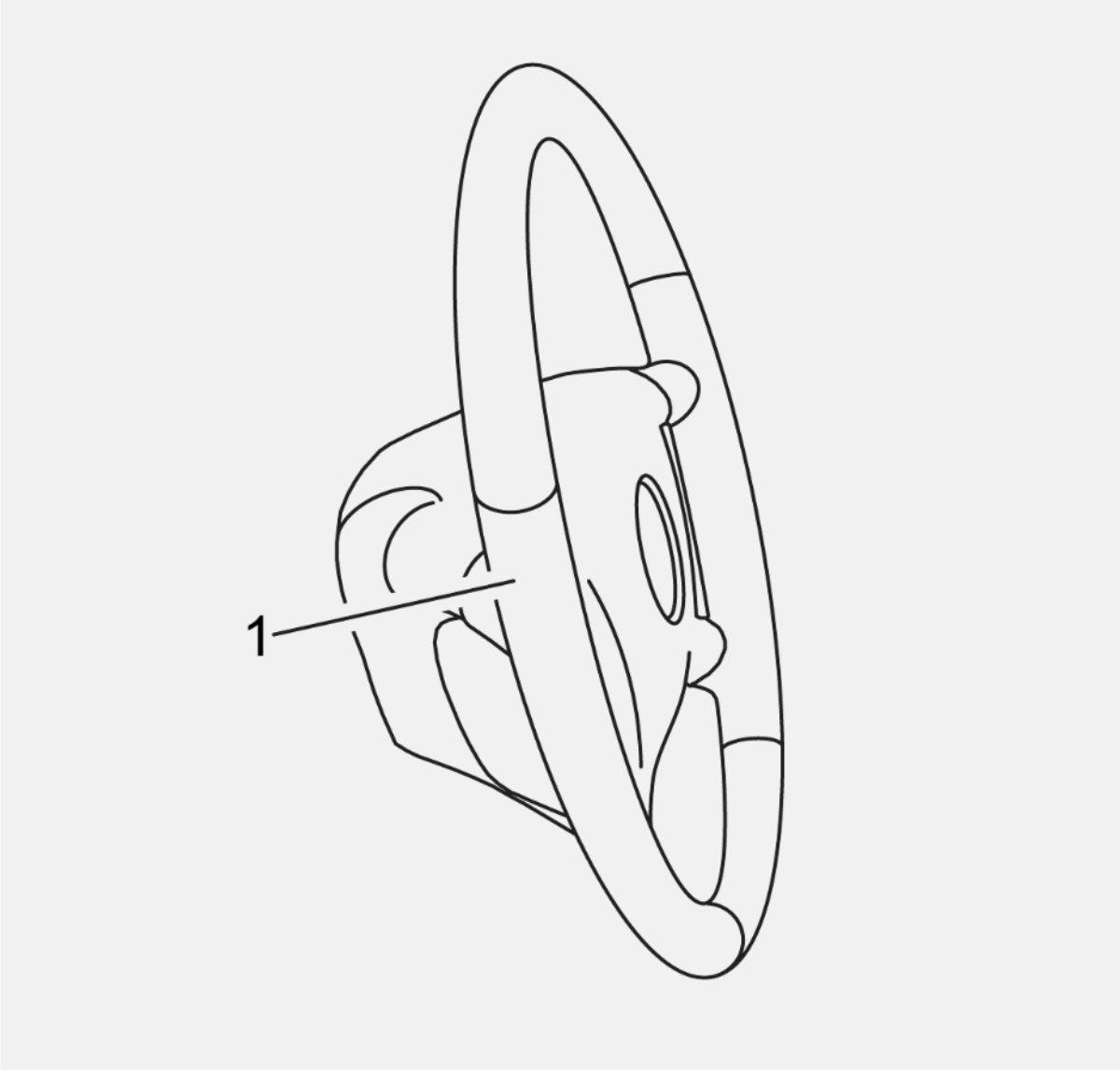

Fig. 5: Steering Wheel Rim Measurement Point
Courtesy of GENERAL MOTORS COMPANY

- The infrared measurements are made at the rim (1) at the 3 and 9 o'clock positions of the steering wheel.

cardiagn.com

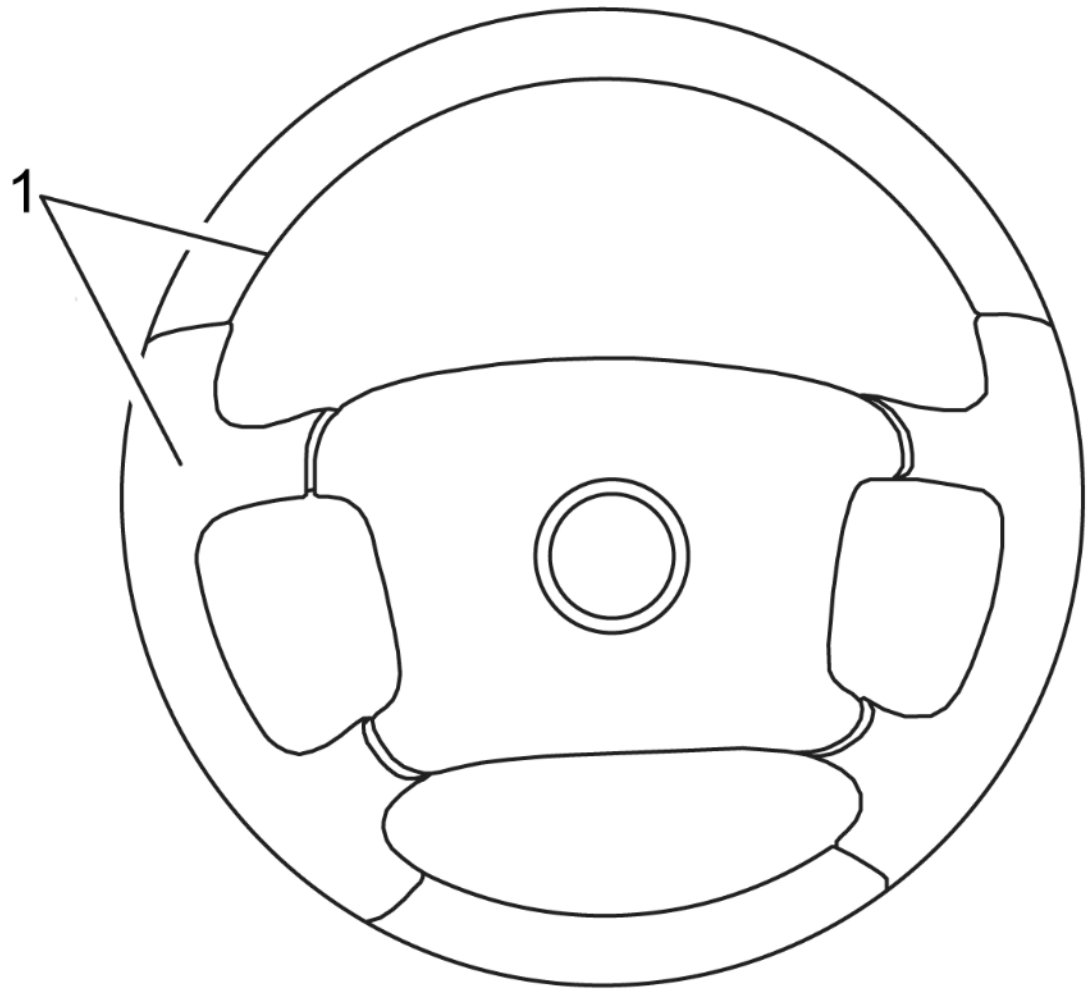

Fig. 6: Temperature Measurement Points
Courtesy of GENERAL MOTORS COMPANY

- The wood sections and the stitching are not heated. Temperature measurements should not be made on the face (1) to insure accurate temperature readings.

Reference Information

cardiagn.com

Schematic Reference

Steering Wheel Schematics

Connector End View Reference

COMPONENT CONNECTOR END VIEWS - INDEX

Description and Operation

Steering Wheel and Column Description and Operation

Electrical Information Reference

- **Circuit Testing**
- **Connector Repairs**
- **Testing for Intermittent Conditions and Poor Connections**
- **Wiring Repairs**

Circuit/System Verification

Using an Infrared Temperature Gun

1. Engine running, all accessories OFF.
2. Verify the steering wheel heater switch is OFF and the steering wheel heater indicator should not be illuminated.
    - **If the heater indicator is illuminated**

      Refer to **Heated Steering Wheel Indicator Malfunction (Z75)**

    - **If the heater indicator is not illuminated**

cardiagn.com

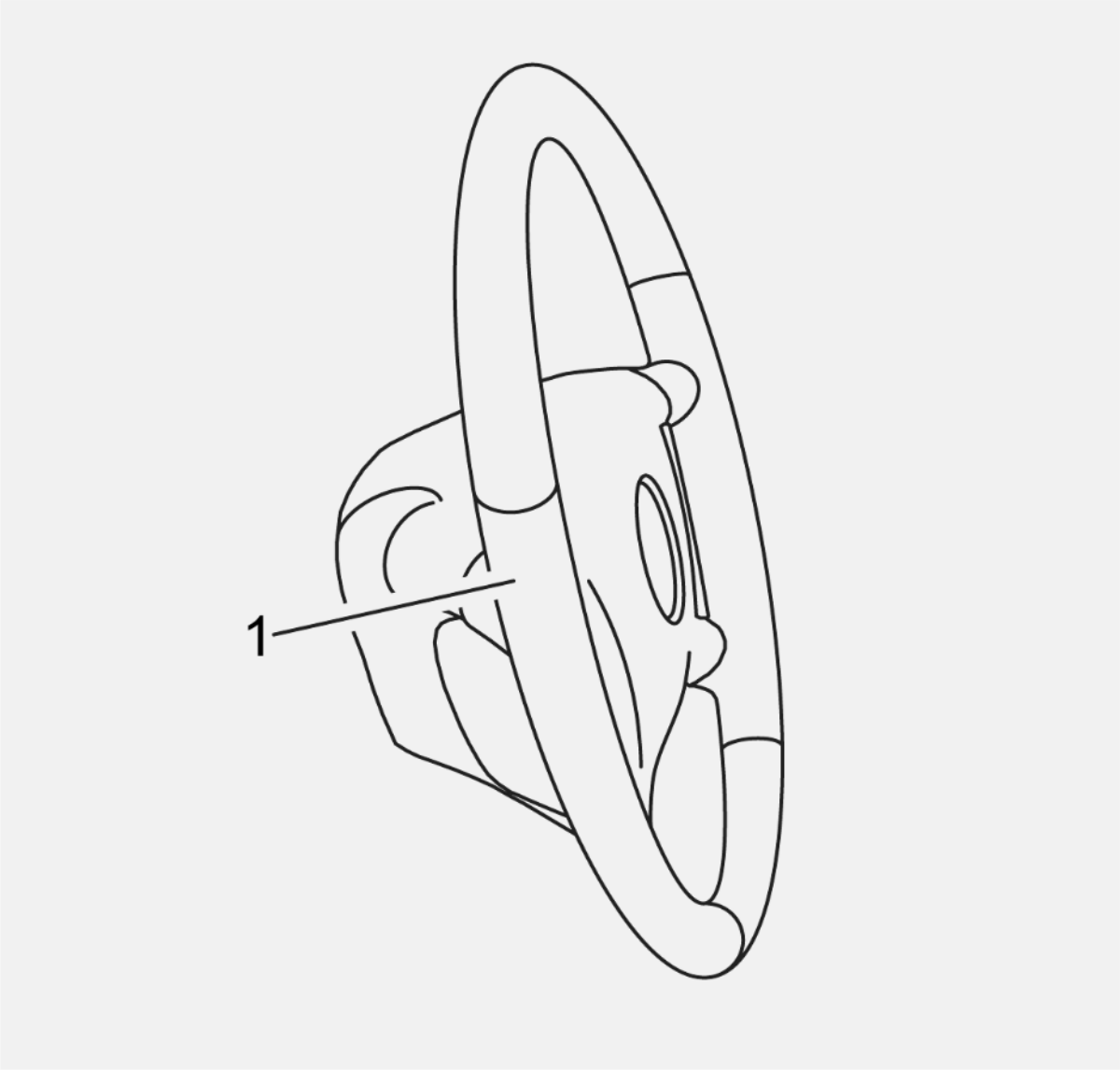

Fig. 7: Steering Wheel Rim Measurement Point
Courtesy of GENERAL MOTORS COMPANY

NOTE: **The Infrared Temperature Gun should be within 50.8mm (2 in) and parallel to the steering wheel rim when taking temperature readings.**

cardiagn.com

3. Measure the temperature readings at the 3 and 9 o'clock positions on the steering wheel rim (1).
4. Verify that the steering wheel temperature is 25Â°C (77Â°F) or below.
   - **If the steering wheel temperature is greater than 25Â°C (77Â°F)**

     Allow the steering wheel to cool before proceeding to next step.

   - **If the steering wheel temperature is 25Â°C (77Â°F) or below**
5. Press and release the steering wheel heater switch. The steering wheel heater indicator should illuminate. Allow the steering wheel to heat for a minimum of 10 min so that the temperature stabilizes.
   - **If the heater indicator does not illuminate**

     Refer to **Heated Steering Wheel Indicator Malfunction (Z75)**

   - **If the heater indicator illuminates**

cardiagn.com

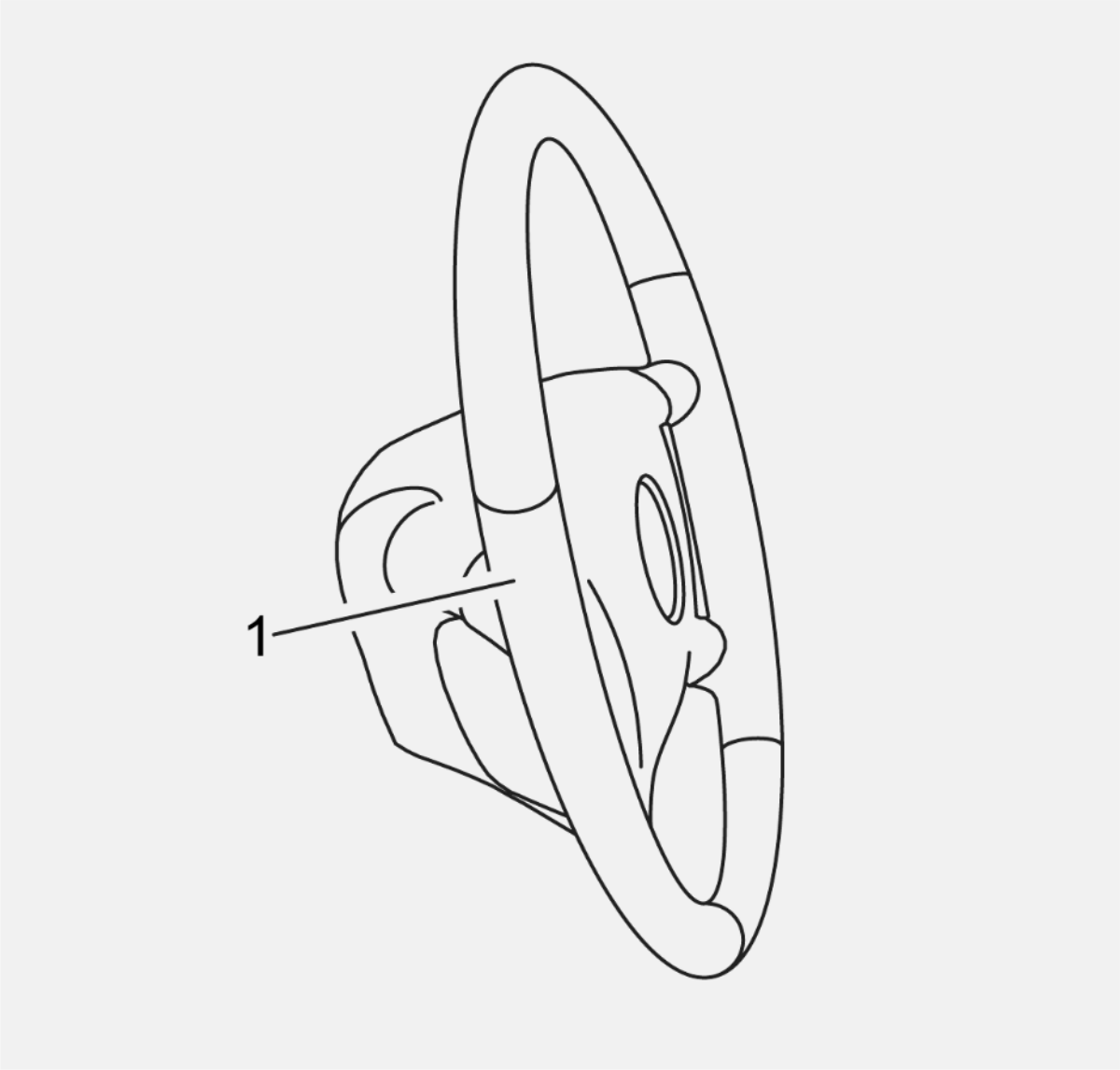

Fig. 8: Steering Wheel Rim Measurement Point
Courtesy of GENERAL MOTORS COMPANY

NOTE: **The Infrared Temperature Gun should be within 50.8mm (2 in) and parallel to the steering wheel rim when taking temperature readings.**

cardiagn.com

6. Measure the temperature readings at the 3 and 9 o'clock positions on the steering wheel rim (1).
7. Verify that the steering wheel temperature is greater than 28Â°C (82.4Â°F) within 20 min.
   - **If after 20 minutes the measured temperature is less than 28Â°C (82.4Â°F)**

     Refer to Circuit System Testing.

   - **If after 20 minutes the measured temperature is 28Â°C (82.4Â°F) or greater**
8. All OK.

Circuit/System Testing

1. Ignition OFF, disconnect the X5 in-line harness connector at the X85 Steering Wheel Air Bag Coil.
2. Test for less than 10 Ω between the ground circuit terminal 2 and ground.
   - **If 10 Ω or greater**
   1. Ignition OFF.
   2. Test for less than 2 Ω in the ground circuit end to end.
      - If 2 Ω or greater, repair the open/high resistance in the circuit.
      - If less than 2 Ω, repair the open/high resistance in the ground connection.
   - **If less than 10 Ω**
3. Ignition ON.
4. Verify a test lamp illuminates between the ignition voltage circuit terminal 1 and ground.
   - **If the test lamp does not illuminate and the circuit fuse is good**
   1. Ignition OFF, remove the test lamp.
   2. Test for less than 2 Ω in the ignition circuit end to end.
      - If less than 2 Ω, verify the fuse is OK and there is voltage at the fuse. Refer to **Power Mode Mismatch (With BTM)** **Power Mode Mismatch (Without BTM)** .
      - If 2 Ω or greater
   3. Verify the fuse is OK and there is voltage at the fuse.
      - If the fuse is blown, replace the K32 Steering Wheel Heating Control Module.
      - If the fuse is OK, repair the open/high resistance in the circuit.
   - **If the test lamp does not illuminate and the circuit fuse is open**

cardiagn.com

1. Ignition OFF.
2. Test for infinite resistance between the ignition voltage circuit and ground.
    - If less than infinite resistance, repair the short to ground on the circuit.
    - If infinite resistance, replace the K32 Steering Wheel Heating Control Module.

- **If the test lamp illuminates**

5. Ignition OFF, reconnect the in-line harness connector X5. Disconnect the harness connector at the S70L Steering Wheel Controls Switch - Left.
6. Test for less than 10 Ω between the ground circuit terminal 6 and ground.

- **If 10 Ω or greater**

1. Ignition OFF.
2. Test for less than 2 Ω in the ground circuit end to end.
    - If 2 Ω or greater, repair the open/high resistance in the circuit.
    - If less than 2 Ω, repair the open/high resistance in the ground connection.

- **If less than 10 Ω**

7. Ignition ON.
8. Test for B+ between the signal circuit terminal 11 and ground.

- **If less than B+**

  Replace the K32 Steering Wheel Heating Control Module.

- **If B+**

9. Place the S70L Steering Wheel Controls Switch - Left in the OFF position.
10. Test for infinite resistance between terminal 11 and terminal 6 at the S70L Steering Wheel Controls Switch - Left.

- **If less than infinite resistance**

  Replace the S70L Steering Wheel Controls Switch - Left.

- **If infinite resistance**

11. Place the S70L Steering Wheel Controls Switch - Left in the ON position.
12. Test for less than 40 Ω between terminal 11 and terminal 6.

- **If 40 Ω or greater**

cardiagn.com

Replace the S70L Steering Wheel Controls Switch - Left

- **If less than 40 Ω**

13. Ignition OFF, disconnect the in-line harness connector at the E15 Steering Wheel Heater.
14. Test for less than 10 Ω between the ground circuit terminal A at the K32 Steering Wheel Heating Control Module and ground.
    - **If 10 Ω or greater**

      Repair the open/high resistance in the circuit.

    - **If less than 10 Ω**
15. Test for 1.5-3.0 Ω between the signal terminal A and the ground terminal B at the E15 Steering Wheel Heater.
    - **If not within the specified range**

      Replace the E15 Steering Wheel Heater.

    - **If within the specified range**
16. Test for 9-11k Ω between the control circuit terminal D and the ground terminal C at the E15 Steering Wheel Heater.
    - **If not within the specified range**

      Replace the E15 Steering Wheel Heater.

    - **If within the specified range**
17. Replace the K32 Steering Wheel Heating Control Module.

Repair Instructions

Perform the **Diagnostic Repair Verification** after completing the repair

- **Cruise Control Switch Replacement (Cadillac)** **Cruise Control Switch Replacement (Chevrolet/GMC)**
- **Steering Wheel Replacement (Chevrolet/GMC)Steering Wheel Replacement (Cadillac)**
- **Control Module References** for control module replacement, programming and setup

HEATED STEERING WHEEL MALFUNCTION (X88 OR Z88)

Diagnostic Instructions

cardiagn.com

- Perform the **Diagnostic System Check - Vehicle** prior to using this diagnostic procedure.
- Review **Strategy Based Diagnosis** for an overview of the diagnostic approach.
- **Diagnostic Procedure Instructions** provides an overview of each diagnostic category.

Diagnostic Fault Information

Circuit	Short to Ground	Open/High Resistance	Short to Voltage	Signal Performance
Ignition	1	1	-	-
Switch Signal	2	1	-	-
Switch and LED Ground	-	1	-	-
Temperature Sensor Signal	3	3	3	-
Temperature Sensor Ground	-	3	-	-
Heater Element Control	3	3	2	-
Heater Element Ground	-	3	-	-
Module Ground	-	1	-	-
1. Heated Steering Wheel System Inoperative 2. Heated Steering Wheel Always ON 3. Heated Steering Wheel Inoperative				

Circuit/System Description

The heated steering wheel control module controls the heated steering wheel and the heated steering wheel ON indicator based on an input from the heated steering wheel switch. When the heated steering wheel switch is pressed, the switch signal circuit is pulled to ground. This indicates to the heating steering wheel control module that steering wheel heat is requested. When the request is seen, the heated steering wheel control module supplies voltage to the indicator lamp and supplies voltage to the heating elements, which are internal to the steering wheel.

Diagnostic Aids

- Before replacing the steering wheel for complaints of not getting hot enough, a reliable infrared temperature gun should be used to measure the temperature at various points around the rim. The steering wheel's normal operating temperature is 32Â°C (89.6Â°F) and takes approximately 10 min to reach that temperature. It may take up to 20 min for the normal operating temperature to stabilize within the steering wheel rim. There may be spike in temperature during the first 3-4 min before it stabilizes at normal operating temperature. The steering wheel will take longer to heat up if the vehicle temperature is below -21Â°C (-5.8Â°F). The steering wheel heater will not operate when the steering wheel temperature is above 32Â°C (89.6Â°F).

cardiagn.com

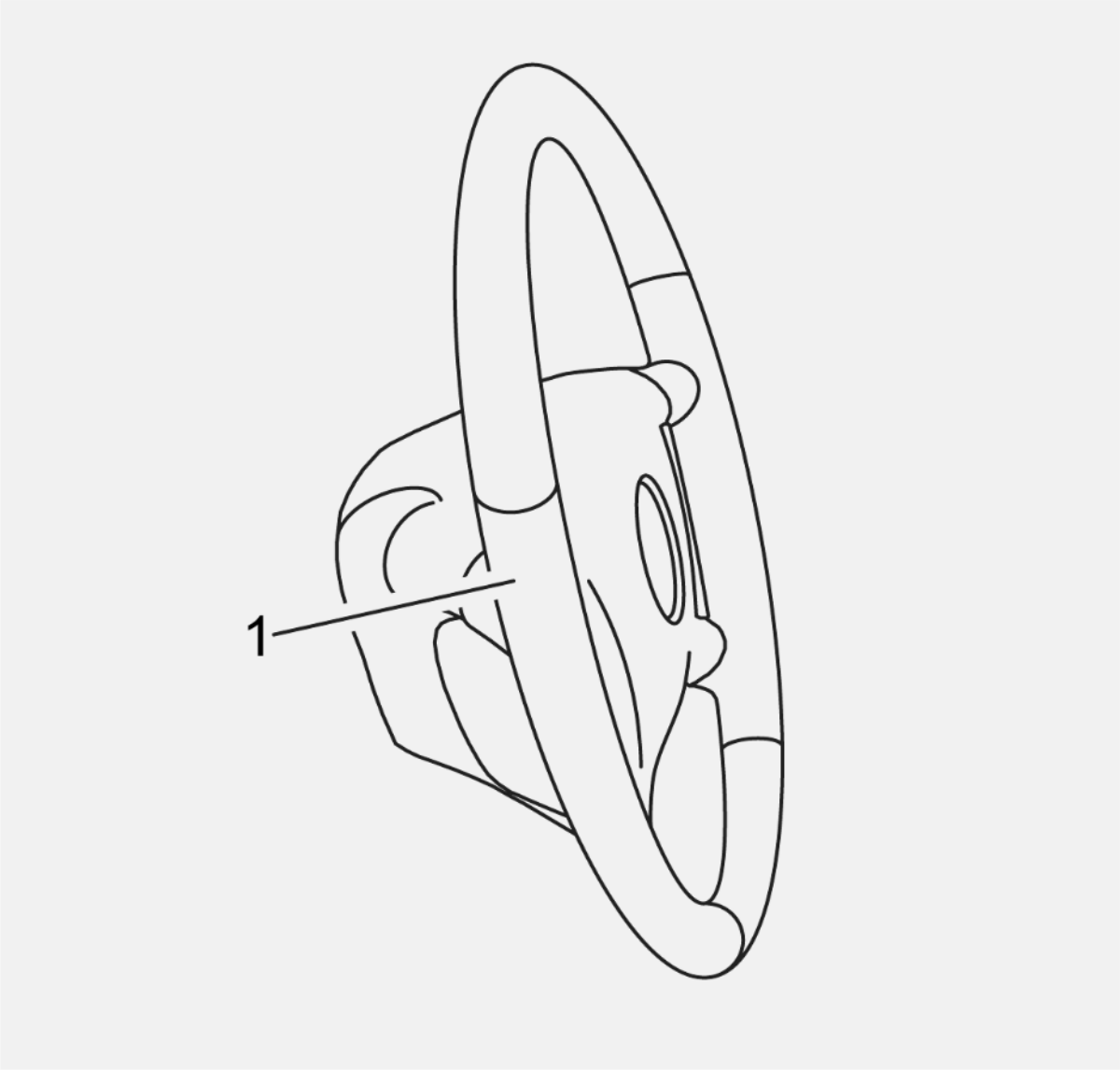

Fig. 9: Steering Wheel Rim Measurement Point
Courtesy of GENERAL MOTORS COMPANY

- The infrared measurements are made at the rim (1) at the 3 and 9 o'clock positions of the steering wheel.

cardiagn.com

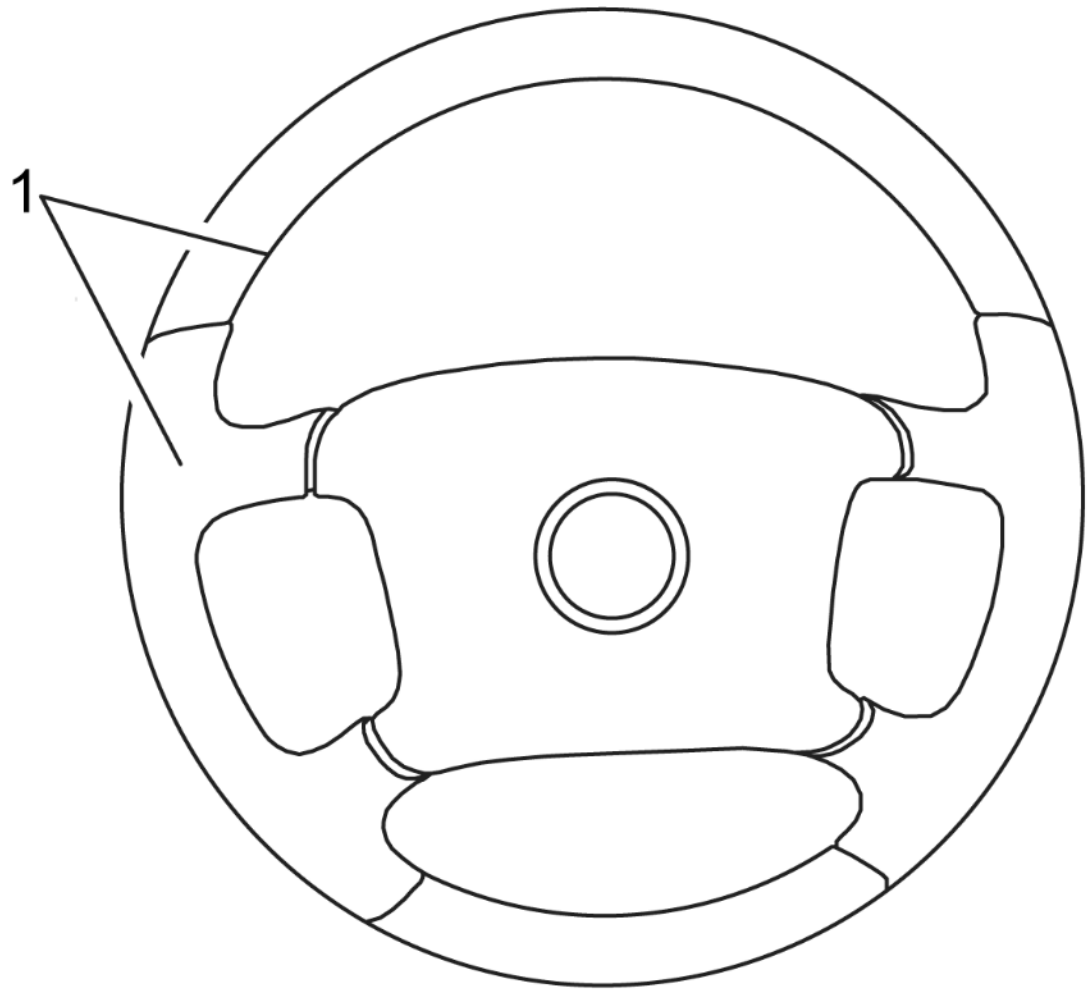

Fig. 10: Temperature Measurement Points
Courtesy of GENERAL MOTORS COMPANY

- The wood sections and the stitching are not heated. Temperature measurements should not be made on the face (1) to insure accurate temperature readings.

Reference Information

cardiagn.com

Schematic Reference

Steering Wheel Schematics

Connector End View Reference

COMPONENT CONNECTOR END VIEWS - INDEX

Description and Operation

Steering Wheel and Column Description and Operation

Electrical Information Reference

- **Circuit Testing**
- **Connector Repairs**
- **Testing for Intermittent Conditions and Poor Connections**
- **Wiring Repairs**

Circuit/System Verification

Using an Infrared Temperature Gun

1. Engine running, all accessories OFF.
2. Verify the steering wheel heater switch is OFF and the steering wheel heater indicator should not be illuminated.
    - **If the heater indicator is illuminated**

      Refer to **Heated Steering Wheel Indicator Malfunction (X88 or Z88)**

    - **If the heater indicator is not illuminated**

cardiagn.com

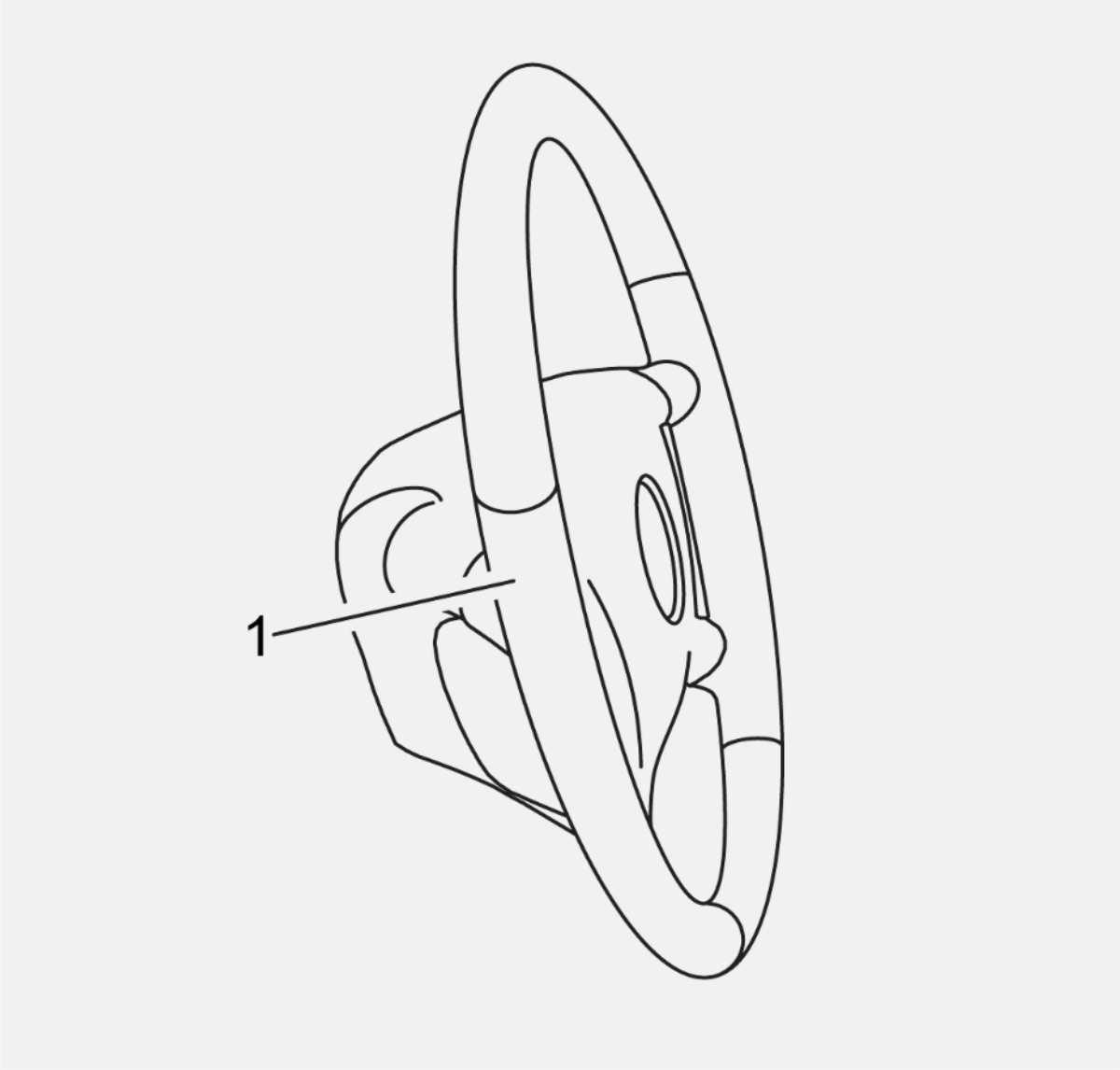

Fig. 11: Steering Wheel Rim Measurement Point
Courtesy of GENERAL MOTORS COMPANY

NOTE: **The Infrared Temperature Gun should be within 50.8mm (2 in) and parallel to the steering wheel rim when taking temperature readings.**

cardiagn.com

3. Measure the temperature readings at the 3 and 9 o'clock positions on the steering wheel rim (1).
4. Verify that the steering wheel temperature is 25Â°C (77Â°F) or below.
   - **If the steering wheel temperature is greater than 25Â°C (77Â°F)**

     Allow the steering wheel to cool before proceeding to next step.

   - **If the steering wheel temperature is 25Â°C (77Â°F) or below**
5. Press and release the steering wheel heater switch. The steering wheel heater indicator should illuminate. Allow the steering wheel to heat for a minimum of 10 min so that the temperature stabilizes.
   - **If the heater indicator does not illuminate**

     Refer to **Heated Steering Wheel Indicator Malfunction (X88 or Z88)**

   - **If the heater indicator illuminates**

cardiagn.com

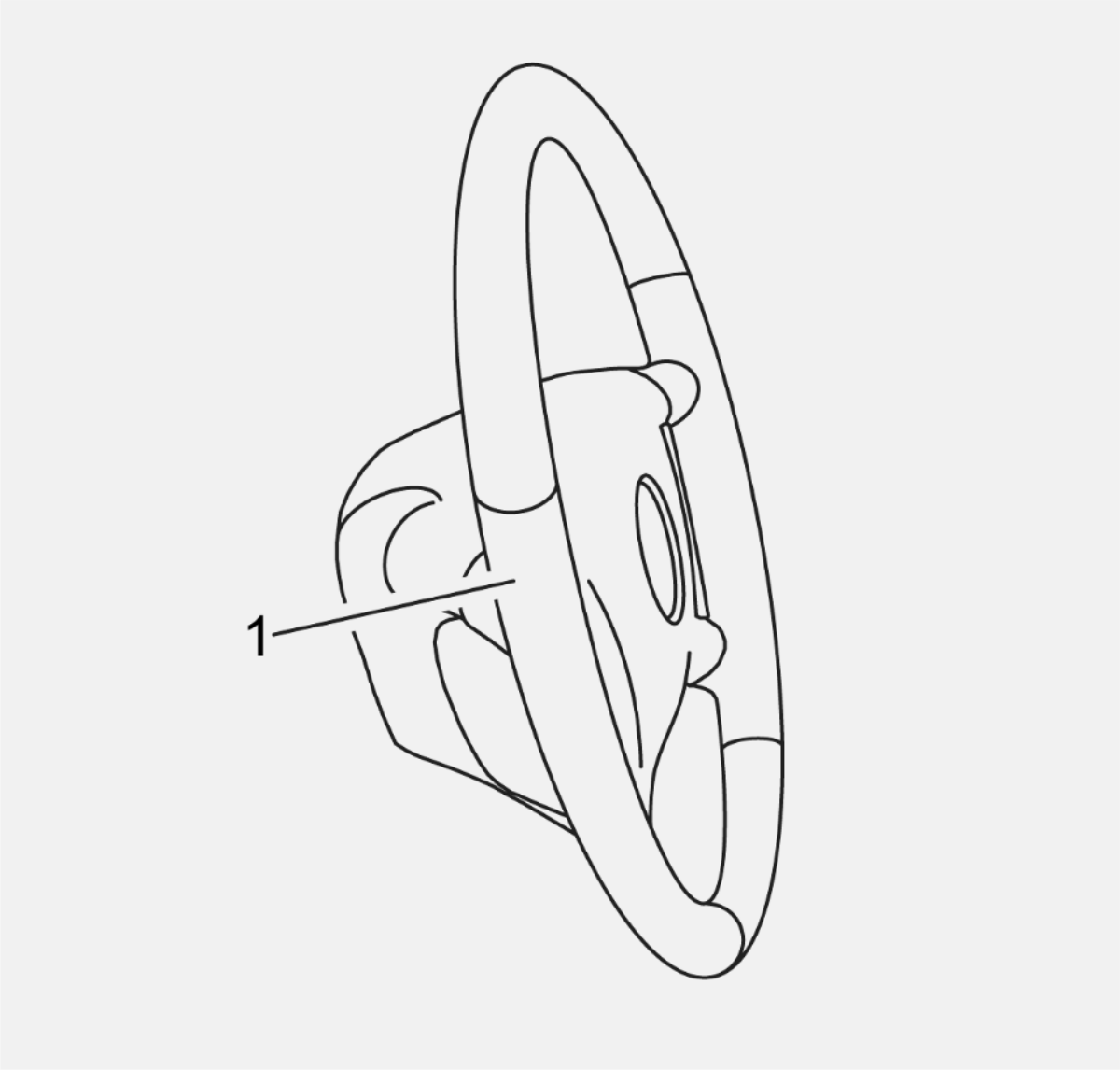

Fig. 12: Steering Wheel Rim Measurement Point
Courtesy of GENERAL MOTORS COMPANY

NOTE: **The Infrared Temperature Gun should be within 50.8mm (2 in) and parallel to the steering wheel rim when taking temperature readings.**

cardiagn.com

6. Measure the temperature readings at the 3 and 9 o'clock positions on the steering wheel rim (1).
7. Verify that the steering wheel temperature is greater than 28Â°C (82.4Â°F) within 20 min.
   - **If after 20 minutes the measured temperature is less than 28Â°C (82.4Â°F)**

     Refer to Circuit System Testing.

   - **If after 20 minutes the measured temperature is 28Â°C (82.4Â°F) or greater**
8. All OK.

Circuit/System Testing

1. Ignition OFF, disconnect the X5 in-line harness connector at the X85 Steering Wheel Air Bag Coil.
2. Test for less than 10 Ω between the ground circuit terminal 2 and ground.
   - **If 10 Ω or greater**
   1. Ignition OFF.
   2. Test for less than 2 Ω in the ground circuit end to end.
      - If 2 Ω or greater, repair the open/high resistance in the circuit.
      - If less than 2 Ω, repair the open/high resistance in the ground connection.
   - **If less than 10 Ω**
3. Ignition ON.
4. Verify a test lamp illuminates between the ignition voltage circuit terminal 1 and ground.
   - **If the test lamp does not illuminate and the circuit fuse is good**
   1. Ignition OFF, remove the test lamp.
   2. Test for less than 2 Ω in the ignition circuit end to end.
      - If less than 2 Ω, verify the fuse is OK and there is voltage at the fuse. Refer to **Power Mode Mismatch (With BTM)** **Power Mode Mismatch (Without BTM)** .
      - If 2 Ω or greater
   3. Verify the fuse is OK and there is voltage at the fuse.
      - If the fuse is blown, replace the K32 Steering Wheel Heating Control Module.
      - If the fuse is OK, repair the open/high resistance in the circuit.
   - **If the test lamp does not illuminate and the circuit fuse is open**

cardiagn.com

1. Ignition OFF.
2. Test for infinite resistance between the ignition voltage circuit and ground.
    - If less than infinite resistance, repair the short to ground on the circuit.
    - If infinite resistance, replace the K32 Steering Wheel Heating Control Module.

- **If the test lamp illuminates**

5. Ignition OFF, reconnect the in-line harness connector X5. Disconnect the harness connector at the S70L Steering Wheel Controls Switch - Left.
6. Test for less than 10 Ω between the ground circuit terminal 2 and ground.

- **If 10 Ω or greater**

1. Ignition OFF.
2. Test for less than 2 Ω in the ground circuit end to end.
    - If 2 Ω or greater, repair the open/high resistance in the circuit.
    - If less than 2 Ω, repair the open/high resistance in the ground connection.

- **If less than 10 Ω**

7. Ignition ON.
8. Test for B+ between the signal circuit terminal 5 and ground.

- **If less than B+**

  Replace the K32 Steering Wheel Heating Control Module.

- **If B+**

9. Place the S70L Steering Wheel Controls Switch - Left in the OFF position.
10. Test for infinite resistance between terminal 5 and terminal 2 at the S70L Steering Wheel Controls Switch - Left.

- **If less than infinite resistance**

  Replace the S70L Steering Wheel Controls Switch - Left.

- **If infinite resistance**

11. Place the S70L Steering Wheel Controls Switch - Left in the ON position.
12. Test for less than 40 Ω between terminal 5 and terminal 2.

- **If 40 Ω or greater**

cardiagn.com

Replace the S70L Steering Wheel Controls Switch - Left

- **If less than 40 Ω**

13. Ignition OFF, disconnect the in-line harness connector at the E15 Steering Wheel Heater.
14. Test for less than 10 Ω between the ground circuit terminal A at the K32 Steering Wheel Heating Control Module and ground.
    - **If 10 Ω or greater**

      Repair the open/high resistance in the circuit.

    - **If less than 10 Ω**
15. Test for 1.5-3.0 Ω between the signal terminal A and the ground terminal B at the E15 Steering Wheel Heater.
    - **If not within the specified range**

      Replace the E15 Steering Wheel Heater.

    - **If within the specified range**
16. Test for 9-11k Ω between the control circuit terminal D and the ground terminal C at the E15 Steering Wheel Heater.
    - **If not within the specified range**

      Replace the E15 Steering Wheel Heater.

    - **If within the specified range**
17. Replace the K32 Steering Wheel Heating Control Module.

Repair Instructions

Perform the **Diagnostic Repair Verification** after completing the repair

- **Cruise Control Switch Replacement (Cadillac)** **Cruise Control Switch Replacement (Chevrolet/GMC)**
- **Steering Wheel Replacement (Chevrolet/GMC)Steering Wheel Replacement (Cadillac)**
- **Control Module References** for control module replacement, programming and setup

STEERING COLUMN TILT/TELESCOPING MALFUNCTION (N38)

Diagnostic Instructions

cardiagn.com

- Perform the **Diagnostic System Check - Vehicle** prior to using this diagnostic procedure.
- Review **Strategy Based Diagnosis** for an overview of the diagnostic approach.
- **Diagnostic Procedure Instructions** provides an overview of each diagnostic category.

Diagnostic Fault Information

Circuit	Short to Ground	Open/High Resistance	Short to Voltage	Signal Performance
B+	-	1	-	-
Tilt Switch Signal UP	2	2	-	-
Tilt Switch Signal DOWN	2	2	-	-
Telescope Switch Signal FORWARD	3	3	-	-
Telescope Switch Signal REARWARD	3	3	-	-
Tilt Motor Control	-	2	-	-
Telescope Motor Control	-	3	-	-
Tilt Motor Position Signal	4	4	-	4
Telescope Motor Position Signal	5	5	-	5
Switch Ground	-	1	-	-
Module Ground	-	1	-	-
1. Column Tilt and Telescope Inoperative 2. Column Tilt Inoperative 3. Column Telescope Inoperative 4. Column Tilt Motor Inoperative\Erratic 5. Column Telescope Motor Inoperative\Erratic				

Circuit/System Description

The steering column has a tilt/telescoping control system that consists of an steering column position control module capable of serial data communication, a steering column power assembly with positioning motors and sensors, and a steering column tilt and telescope switch. The steering column position control module will wake up either by the serial data or by the steering column tilt and telescope switch.

Two position sensors are hall effect sensors and are used by the steering column position control module. The steering column position control module provides a 5 V reference voltage and a ground to both the tilt and telescoping position sensors. The sensor feedback circuit voltage varies from 0-5 V. Each sensor is part of the motor assembly. The steering column position control module monitors the feedback voltage to determine the column position.

cardiagn.com

If the vehicle has memory seat option, all DTCs and data from steering column position control module is communicated through the serial data and stored in the seat memory control module. With the steering column at the Forward and Up soft stops, the steering column position voltage readings will be 5.0 V. With the steering column at the Rearward and Down soft stops, the steering column position voltage readings will be 0 V.

Diagnostic Aids

A bad hall effect will cause a tilt or telescope motor to move for only.5 s.

Reference Information

Schematic Reference

Tilt/Telescoping Steering Column Schematics

Connector End View Reference

COMPONENT CONNECTOR END VIEWS - INDEX

Description and Operation

Steering Wheel and Column Description and Operation

Electrical Information Reference

- **Circuit Testing**
- **Connector Repairs**
- **Testing for Intermittent Conditions and Poor Connections**
- **Wiring Repairs**

Circuit/System Verification

1. Ignition ON.

NOTE: **Operate the steering column switch in each direction for more than 1 s.**

NOTE: **When performing the following tests, make sure that the steering column is not already in the position the test is attempting to produce.**

cardiagn.com

2. Verify the steering column directional motors listed below operate while operating the S71 Steering Column Tilt and Telescope Switch in all directions.
   - M65 Steering Column Telescope Motor
   - M68 Steering Column Tilt Motor
   - **If the M65 Steering Column Telescope Motor moves for only.5 s FORWARD or REARWARD**

   1. Wait 5 s.
   2. Operate the S71 Steering Column Tilt and Telescope Switch FORWARD and REARWARD.
      - If the M65 Steering Column Telescope Motor moves for only.5 s FORWARD or REARWARD, replace the M65 Steering Column Telescope Motor
   - **If the M65 Steering Column Telescope Motor does not operate FORWARD and REARWARD**

     Refer to Circuit/System Testing - Steering Column Telescope Motor Control Circuit Test.

   - **If the M68 Steering Column Tilt Motor moves for only.5 s UP and DOWN**

   1. Wait 5 s.
   2. Operate the S71 Steering Column Tilt and Telescope Switch UP and DOWN.
      - If the M68 Steering Column Tilt Motor moves for only.5 s UP or DOWN, replace the M68 Steering Column Tilt Motor.
   - **If the M68 Steering Column Tilt Motor does not operate UP and DOWN**

     Refer to Circuit/System Testing - Steering Column Tilt Motor Control Circuit Test.

   - **If both the M65 Steering Column Telescope Motor and the M68 Steering Column Tilt Motor do not operate in any direction**

     Refer to Circuit/System Testing - Steering Column Tilt and Telescope Motor Control Circuit Test.

   - **If both the M65 Steering Column Telescope Motor and the M68 Steering Column Tilt Motor operate**
3. All OK.

Circuit/System Testing

Steering Column Telescope Motor Control Circuit Test

1. Ignition OFF, disconnect the harness connector at the S71 Steering Column Tilt and Telescope Switch.
2. Test for less than 10 Ω between the low reference circuit terminal G and ground.

cardiagn.com

- **If 10 Ω or greater**

1. Ignition OFF.
2. Test for less than 2 Ω in the ground circuit end to end.
    - If 2 Ω or greater, repair the open/high resistance in the circuit.
    - If less than 2 Ω, replace the K99 Steering Column Position Control Module.

- **If less than 10 Ω**

3. Ignition ON.
4. Test for B+ between the signal circuits listed below and ground:
    - Terminal A
    - Terminal F
    - **If less than B+**

    1. Ignition OFF, disconnect the X4 harness connector at the K99 Steering Column Control Module.
    2. Test for infinite resistance between the signal circuit and ground.
        - If less than infinite resistance, repair the short to ground on the circuit.
        - If infinite resistance
    3. Test for less than 2 Ω in the signal circuit end to end.
        - If 2 Ω or greater, repair the open/high resistance in the circuit.
        - If less than 2 Ω, replace the K99 Steering Column Position Control Module.

    - **If B+**

NOTE: **When performing the following test, make sure that the steering column is not already in the position the test is attempting to produce.**

5. Install a 3 A fused jumper wire between the signal circuits listed below and the ground circuit terminal G. Verify the steering column telescopes FORWARD and REVERSE to the soft stop.
    - Terminal A
    - Terminal F
    - **If the M65 Steering Column Telescope Motor does not operate**

    1. Ignition OFF, disconnect the X2 harness connector at the K99 Steering Column Position Control Module.
    2. Test for 0.6-1.0 Ω between terminal 1 and terminal 2.

cardiagn.com

- If not within the specified range, replace the M65 Steering Column Telescope Motor.
- If within the specified range, replace the K99 Steering Column Position Control Module.

- **If the M65 Steering Column Telescope Motor operates**

6. Test or replace the S71 Steering Column Tilt and Telescope Switch.

Steering Column Tilt Motor Control Circuit Test

1. Ignition OFF, disconnect the harness connector at the S71 Steering Column Tilt and Telescope Switch.
2. Test for less than 10 Ω between the low reference circuit terminal G and ground.
   - **If 10 Ω or greater**
   1. Ignition OFF.
   2. Test for less than 2 Ω in the ground circuit end to end.
      - If 2 Ω or greater, repair the open/high resistance in the circuit.
      - If less than 2 Ω, replace the K99 Steering Column Position Control Module.
   - **If less than 10 Ω**
3. Ignition ON.
4. Test for B+ between the signal circuits listed below and ground:
   - Terminal B
   - Terminal C
   - **If less than B+**
   1. Ignition OFF, disconnect the X4 harness connector at the K99 Steering Column Position Control Module.
   2. Test for infinite resistance between the signal circuit and ground.
      - If less than infinite resistance, repair the short to ground on the circuit.
      - If infinite resistance
   3. Test for less than 2 Ω in the signal circuit end to end.
      - If 2 Ω or greater, repair the open/high resistance in the circuit.
      - If less than 2 Ω, replace the K99 Steering Column Position Control Module.
   - **If B+**

NOTE: **When performing the following test, make sure that the steering column is not already in the position the**

cardiagn.com

test is attempting to produce.

5. Install a 3 A fused jumper wire between the signal circuits listed below and the low reference circuit terminal G. Verify the steering column tilts UP and DOWN to the soft stop.
   - Terminal B
   - Terminal C
   - **If the M68 Steering Column Tilt Motor does not operate**
   1. Ignition OFF, disconnect the X1 harness connector at the K99 Steering Column Position Control Module.
   2. Test for 0.6-1.0 Ω between terminal 1 and terminal 2.
      - If not within the specified range, replace the M68 Steering Column Tilt Motor.
      - If within the specified range, replace the K99 Steering Column Position Control Module.
   - **If the M68 Steering Column Tilt Motor operates**
6. Test or replace the S71 Steering Column Tilt and Telescope Switch.

Steering Column Tilt and Telescope Motor Control Circuit Test

1. Ignition OFF and all vehicle systems OFF, disconnect the X3 harness connector at the K99 Steering Column Position Control Module. It may take up to 2 min for all vehicle systems to power down.
2. Test for less than 10 Ω between the ground circuit terminal 2 and ground.
   - **If 10 Ω or greater**
   1. Ignition OFF.
   2. Test for less than 2 Ω in the ground circuit end to end.
      - If 2 Ω or greater, repair the open/high resistance in the circuit.
      - If less than 2 Ω, repair the open/high resistance in the ground connection.
   - **If less than 10 Ω**
3. Ignition ON.
4. Verify a test lamp illuminates between the B+ circuit terminal 1 and ground.
   - **If the test lamp does not illuminate and the circuit fuse is good**
   1. Ignition OFF.
   2. Test for less than 2 Ω in the B+ circuit end to end.

cardiagn.com

- If less than 2 Ω, verify the fuse is OK and there is voltage at the fuse.
- If 2 Ω or greater

3. Verify the fuse is OK and there is voltage at the fuse.
   - If the fuse is open, replace the K99 Steering Column Position Control Module.
   - If the fuse is OK, repair the open/high resistance in the circuit.

- **If the test lamp does not illuminate and the circuit fuse is open**

1. Ignition OFF.
2. Test for infinite resistance between the B+ circuit and ground.
   - If less than infinite resistance, repair the short to ground on the circuit.
   - If infinite resistance, replace the K99 Steering Column Position Control Module.

- **If the test lamp illuminates**

5. Ignition OFF, connect the X3 harness connector at the K99 Steering Column Position Control Module. Disconnect the harness connector at the S71 Steering Column Tilt and Telescope Switch.
6. Test for less than 10 Ω between the low reference circuit terminal G and ground.
   - **If 10 Ω or greater**

   1. Ignition OFF.
   2. Test for less than 2 Ω in the ground circuit end to end.
      - If 2 Ω or greater, repair the open/high resistance in the circuit.
      - If less than 2 Ω, replace the K99 Steering Column Position Control Module.

   - **If less than 10 Ω**

7. Replace the K99 Steering Column Position Control Module.

Component Testing

Steering Column Tilt/Telescope Switch Test

1. Ignition OFF, disconnect the harness connector at the S71 Steering Column Tilt and Telescope Switch.
2. Test for infinite resistance between the low reference terminal G and each signal terminal with the S71 Steering Column Tilt and Telescope Switch in the released position.
   - **If less than infinite resistance**

cardiagn.com

Replace the S71 Steering Column Tilt and Telescope Switch.

- **If infinite resistance**

3. Test for less than 2 Ω between the ground terminal G and each signal terminal with the S71 Steering Column Tilt and Telescope Switch in the pressed position.
   - **If 2 Ω or greater**

     Replace the S71 Steering Column Tilt and Telescope Switch.

   - **If less than 2 Ω**
4. All OK.

Steering Column Telescope Motor Test

1. Ignition OFF, disconnect the X2 harness connector at the K99 Steering Column Position Control Module.
2. Test for 0.6-1.0 Ω between terminal 1 and terminal 2.
   - **If not within the specified range**

     Replace the M65 Steering Column Telescope Motor.

   - **If within the specified range**
3. All OK.

Steering Column Tilt Motor Test

1. Ignition OFF, disconnect the X1 harness connector at the K99 Steering Column Position Control Module.
2. Test for 0.6-1.0 Ω between terminal 1 and terminal 2.
   - **If not within the specified range**

     Replace the M68 Steering Column Tilt Motor.

   - **If within the specified range**
3. All OK.

Repair Instructions

cardiagn.com

Perform the **Diagnostic Repair Verification** after completing the repair.

- **Steering Column Tilt Wheel and Telescope Switch Replacement**
- **Steering Column Tilt Wheel Actuator Motor Replacement**
- **Steering Column Telescope Actuator Motor Replacement**
- **Control Module References** for steering column position control module replacement, programming and setup.

STEERING COLUMN TILT FUNCTION INOPERATIVE (N33, N37)

Step	Action	Yes	No
1	Did you review the Steering Wheel and Column Description and Operation and perform the necessary inspections?	Go to **Step 2**	Go to **Symptoms - Steering Wheel and Column**
2	Verify that the steering column tilt function is inoperative. Does the steering column tilt function operate normally?	System OK	Go to **Step 3**
3	If equipped, verify that the following components are not seized or corroded: • Tilt pivot pins • Tilt head lock shoes Are the components seized or corroded?	Go to **Step 7**	Go to **Step 4**
4	Inspect the tilt pivot pins for binding. Are the tilt pivot pins binding?	Go to **Step 8**	Go to **Step 5**
5	Inspect for a weak or broken steering column tilt spring. Is the steering column tilt spring weak or broken?	Go to **Step 9**	Go to **Step 6**
6	Inspect the steering column wiring harness routing for tightness. Was the steering column wiring harness routed correctly?	Go to **Step 11**	Go to **Step 10**
7	Replace the steering column. Refer to **Steering Column Replacement (N33, N37)**. Did you complete the repair?	Go to **Step 11**	-
8	If serviceable, replace the pivot pins. If not serviceable replace the steering column. Refer to **Steering Column Replacement (N33, N37)**.	Go to **Step 11**	-

cardiagn.com

Step	Action	Yes	No
	Did you complete the repair?		
9	If serviceable, replace the tilt spring. Did you complete the repair?	Go to **Step 11**	-
10	Route the steering column wiring harness to the correct location. Did you correctly route the wiring harness?	Go to **Step 11**	-
11	Operate the steering column tilt function in order to verify the repair. Did you correct the condition?	System OK	Go to **Step 3**

HIGH TELESCOPING EFFORT (N37)

Condition	Action
The telescoping lever assembly adjustment nut is too tight.	The telescoping lever assembly adjustment nut is not adjustable. Replace the steering column. Refer to **Steering Column Replacement (N33, N37)**.
The steering shaft assembly is bent or damaged.	If the steering shaft assembly is bent or damaged, replace the steering column. Refer to **Steering Column Replacement (N33, N37)**.
The telescoping lever assembly is damaged.	If the telescoping lever assembly is damaged, replace the steering column. Refer to **Steering Column Replacement (N33, N37)**.

NOISE IN STEERING COLUMN

Step	Action	Yes	No
1	Did you review the Steering Wheel and Column Description and Operation and perform the necessary inspections?	Go to **Step 2**	Go to **Symptoms - Steering Wheel and Column**
2	Verify that noise is present in the steering column during operation. Is noise present in the steering column during operation?	Go to **Step 3**	System OK
3	Inspect the steering column mounting features for the following conditions: • The steering column mounting fasteners are loose. • The steering column mounting features are sheared.	Go to **Step 10**	Go to **Step 4**

cardiagn.com

Step	Action	Yes	No
	Are the steering column mounting features loose or sheared?		
4	Inspect the SIR/SRS coil for noise. Is the SIR/SRS coil noisy?	Go to **Step 11**	Go to **Step 5**
5	If equipped, inspect the lock plate retaining ring for correct installation. Is the lock plate retaining ring installed incorrectly?	Go to **Step 12**	Go to **Step 6**
6	Inspect the steering column upper and lower bearings for the following conditions: • Damage • Lubrication • Wear • Proper seating Are the bearings in need of repair or replacement?	Go to **Step 13**	Go to **Step 7**
7	Does the steering column tilt joint need to be lubricated?	Go to **Step 14**	Go to **Step 8**
8	**NOTE:** **Inspect the intermediate steering shaft for noise while driving the vehicle, turning the steering wheel, and applying the brakes.** Inspect the intermediate steering shaft for noise.Is the intermediate steering shaft noisy?	Go to **Step 15**	Go to **Step 9**

cardiagn.com

Step	Action	Yes	No
9	**NOTE:** **For vehicles equipped with a telescoping steering column, perform this step. If not equipped, go to next step.** Inspect the steering column for noise while telescoping the column.Is the steering column noisy while telescoping?	Go to **Step 16**	Go to **Step 17**

cardiagn.com

Step	Action	Yes	No
10	**NOTE:** **If the steering column mounting features are damaged or sheared, replace the steering column. Refer to Steering Column Replacement (N33, N37)Steering Column Replacement (N38).** Tighten the steering column mounting fasteners to specification. Refer to **Fastener Specifications**.Did you complete the repair?	Go to **Step 17**	-
11	Replace the SIR/SRS coil. Refer to **Steering Wheel Airbag Coil Replacement (Chevrolet/GMC)** **Steering Wheel Airbag Coil Replacement (Cadillac)** . Did you complete the repair?	Go to **Step 17**	-
12	Install the lock plate retaining ring correctly. Did you complete the repair?	Go to **Step 17**	-
13	**NOTE:** **If the steering column upper and/or**	Go to **Step 17**	-

cardiagn.com

Step	Action	Yes	No
	lower bearings are not serviceable, replace the steering column. Refer to Steering Column Replacement (N33, N37)Steering Column Replacement (N38). Replace the steering column upper and/or lower bearings, if serviceable.Did you complete the replacement?		
14	Lubricate the steering column tilt joint. Did you complete the repair?	Go to **Step 17**	-
15	Replace the appropriate intermediate steering shaft component. Did you complete the repair?	Go to **Step 17**	-
16	Redistribute or add lubricant to the steering column lower jacket with the column telescoped to its end of outward travel. Did you complete the repair?	Go to **Step 17**	-
17	Operate the system in order to verify the repair. Did you correct the condition?	System OK	Go to **Step 3**

HIGH SHIFT EFFORT

Step	Action	Yes	No
DEFINITION: Abnormally high shift effort is required to shift the transmission out of the Park (P) position.			

cardiagn.com

Step	Action	Yes	No
1	Did you review the Steering Wheel and Column Description and Operation?	Go to **Step 2**	Go to **Steering Wheel and Column Description and Operation**
2	Verify that a high column shift effort is required in order to shift out of the PARK position. Does the column shifter operate normally?	System OK	Go to **Step 3**
3	Inspect for worn or worn or damaged automatic transmission range selector shift cable. Is the transmission range selector shift cable worn or damaged?	Go to **Step 6**	Go to **Step 4**
4	Inspect the automatic transmission range selector shift cable for binding or mis-adjustment. Is the automatic transmission range selector shift cable binding or mis-adjusted?	Go to **Step 7**	Go to **Step 5**
5	Inspect the column linear shift assembly for damage. Is the column linear shift assembly damaged?	Go to **Step 8**	Go to **Step 9**
6	Replace the automatic transmission range selector shift cable. Did you complete the repair?	Go to **Step 9**	-
7	Adjust the automatic transmission range selector shift cable. Did you complete the repair?	Go to **Step 9**	-
8	IMPORTANT: If the column linear shift assembly is not serviceable, then the steering column will need to be replaced. Refer to **Steering Column Replacement (N33, N37)Steering Column Replacement (N38)**. Replace the column linear shift assembly, if serviceable.Did you complete the replacement?	Go to **Step 9**	-
9	Operate the system in order to verify the repair. Did you correct the condition?	System OK	Go to **Step 3**

LOOSENESS IN STEERING COLUMN

Step	Action	Yes	No
1	Did you review the Steering Wheel and Column Description and	Go to **Step 2**	Go to **Symptoms -**

cardiagn.com

Step	Action	Yes	No
	Operation and perform the necessary inspections?		Steering Wheel and Column
2	Verify that the steering column is loose. Is the steering column loose?	Go to **Step 3**	System OK
3	Inspect the steering column mounting features for the following conditions: • The steering column mounting fasteners are loose. • The steering column mounting features are sheared. Are the steering column mounting fasteners loose or the mounting features sheared?	Go to **Step 6**	Go to **Step 4**
4	Inspect the steering column upper and/or lower bearings for looseness. Are any of the steering column bearings worn or loose?	Go to **Step 7**	Go to **Step 5**
5	**NOTE:** **The steering column telescoping stop feature fastener is located on the underside of the steering column jacket on manual tilt and telescope steering columns.** To inspect the steering column telescoping stop feature fastener for	Go to **Step 8**	Go to **Step 3**

cardiagn.com

Step	Action	Yes	No
	looseness, perform the following steps: 1. Lock the steering column. 2. Try to rotate the steering wheel back and forth in both directions. 3. Note if the steering column assembly rotates with the steering wheel. If the steering column assembly rotates then the fastener is loose. Did the steering column assembly rotate with the steering wheel?		
6	**NOTE:** **If any of the steering column mounting features are sheared, replace the steering column. Refer to Steering Column Replacement (N33, N37)Steering Column Replacement (N38).** Tighten the steering column mounting fasteners to specification. Refer to **Fastener Specifications**.Did you complete the repair?	Go to **Step 9**	-
7	**NOTE:** **If the steering**	Go to **Step 9**	-

cardiagn.com

Step	Action	Yes	No
	column upper and/or lower bearings are not serviceable, replace the steering column. Refer to Steering Column Replacement (N33, N37)Steering Column Replacement (N38). Replace the steering column upper and/or lower bearings, if serviceable.Did you complete the repair?		
8	**NOTE:** **Do not try to re-tighten the telescoping stop feature fastener. If the fastener is loose the steering column must be replaced.** Replace the steering column. Refer to **Steering Column Replacement**	Go to **Step 9**	-

cardiagn.com

Step	Action	Yes	No
	(N33, N37)Steering Column Replacement (N38).Did you complete the repair?		
9	Operate the steering column in order to verify the repair. Did you correct the condition?	System OK	Go to **Step 3**

REPAIR INSTRUCTIONS

WIRE TO WIRE REPAIR - STEERING

Special Tools

- **EL-38125-10** Splice Sleeve Crimping Tool (non GMNA)
- **J-38125-5A** Ultra Torch Special Tool
- **J-38125-8** Splice Sleeve Crimping Tool (GMNA)

For equivalent regional tools, refer to **Special Tools** .

WARNING: **In order to reduce the risk of personal injury, loss of high voltage isolation to ground and higher system impedance, do not attempt to repair any HV wiring, connector, or terminal that is damaged. High voltage coaxial type cables are not repairable. Never attempt to repair a coaxial type cable. The entire cable/harness or component must be replaced. In order to maintain system integrity and personal safety, never attempt to repair any high voltage wiring, cables, or terminals. Performing this procedure on high voltage circuits may result in serious injury or death.**

NOTE: **If the wiring harness internal to the transmission is damaged, the wiring harness must be replaced. The use of splice sleeves in an attempt to repair the internal transmission wires, connectors, or terminals could result in performance issues.**

NOTE: **Do not splice wires in Door Harness Grommets.**

NOTE: **The DuraSeal splice sleeves have the following 2 critical features:**

- **A special heat shrink sleeve environmentally seals the splice. The heat shrink sleeve contains a sealing adhesive inside.**

cardiagn.com

- **A cross hatched (knurled) core crimp provides the necessary low resistance contact integrity for these sensitive, low energy circuits.**

Use only DuraSeal splice sleeves to form a one-to-one splice on all types of insulation except high voltage and specialty cables. Use DuraSeal splice sleeves where there are special requirements such as moisture sealing. Follow the instructions below in order to splice copper wire using DuraSeal splice sleeves.

Splice Sleeve Selection

Splice Sleeve Color	Crimp Tool Nest Color		Wire Gauge mm^2 / (AWG)
	3 Crimp Nests	4 Crimp Nests	
Salmon (Yellow-Pink) 19300089	Red (1) or Red/Green (1)	Red (2)	0.22-0.8/(18-26)
Blue 19168447	Blue (2)	Blue (3)	1.0-2.0/(14-16)
Yellow 19168448	Yellow (3)	Yellow (4)	3.0-5.0/(10-12)

NOTE: **You must perform the following procedures in the listed order. Repeat the procedure if any wire strands are damaged. You must obtain a clean strip with all of the wire strands intact.**

1. Open the harness by removing any tape:
   - Use a sewing seam ripper, available from sewing supply stores, in order to cut open the harness in order to avoid wire insulation damage.
   - Use the DuraSeal splice sleeves on all types of insulation except Tefzel and coaxial.
   - Do not use the crimp and DuraSeal splice sleeve to form a splice with more than 2 wires coming together.
2. Cut as little wire off the harness as possible. You may need the extra length of wire in order to change the location of a splice.

   Adjust splice locations so that each splice is at least 40 mm (1.5 in) away from the other splices, harness branches, or connectors.

3. Strip the insulation:
   - When adding a length of wire to the existing harness, use the same size wire as the original wire.
   - Perform one of the following items in order to find the correct wire size:
     - Find the wire on the schematic and convert to regional wiring gauge size.
     - If you are unsure of the wire size, begin with the largest opening in the wire stripper and work down until achieving a clean strip of

cardiagn.com

the insulation.

- Strip approximately 5.0 mm (0.20 in) of insulation from each wire to be spliced.
- Do not nick or cut any of the strands. Inspect the stripped wire for nicks or cut strands.
- If the wire is damaged, repeat this procedure after removing the damaged section.

4. For high temperature wiring, slide a section of high temperature SCT1 shrink tubing down the length of wire to be spliced. Ensure that the shrink tubing will not interfere with the splice procedure.
5. Select the proper DuraSeal splice sleeve according to the wire size. Refer to the above table at the beginning of the repair procedure for the color coding of the DuraSeal splice sleeves and the crimp tool nests.

cardiagn.com

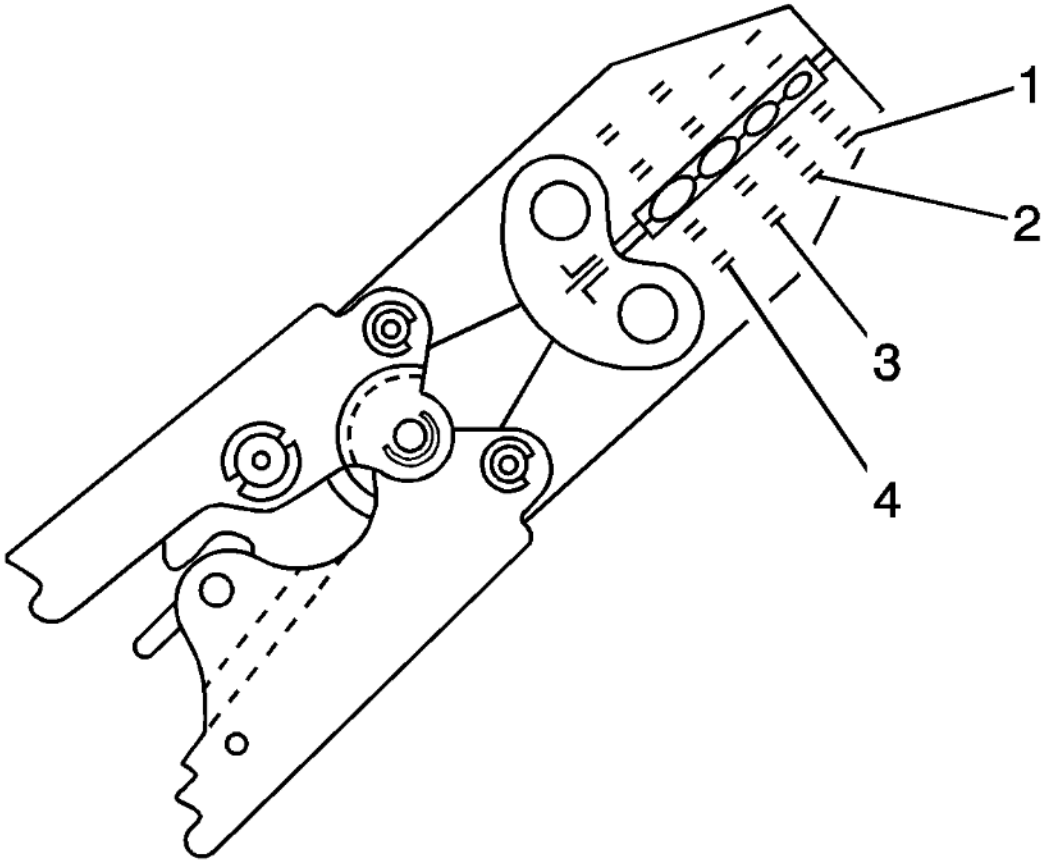

Fig. 13: Splice Sleeve Crimping Tool With 4 Crimp Nests
Courtesy of GENERAL MOTORS COMPANY

6. The **EL-38125-10** splice sleeve crimping tool has four crimp nests. The largest crimp nest (4) is used for crimping 10 and 12 gauge wires. The second largest crimp nest (3) is used for crimping 14 and 16 gauge wires. The third largest crimp nest (2) is used for crimping 18 and 20 gauge wires. The smallest crimp nest (1) is used for crimping 22 to 26 gauge wires. The crimp nests are referenced in the table (farther above) under the crimp tool nest color.

cardiagn.com

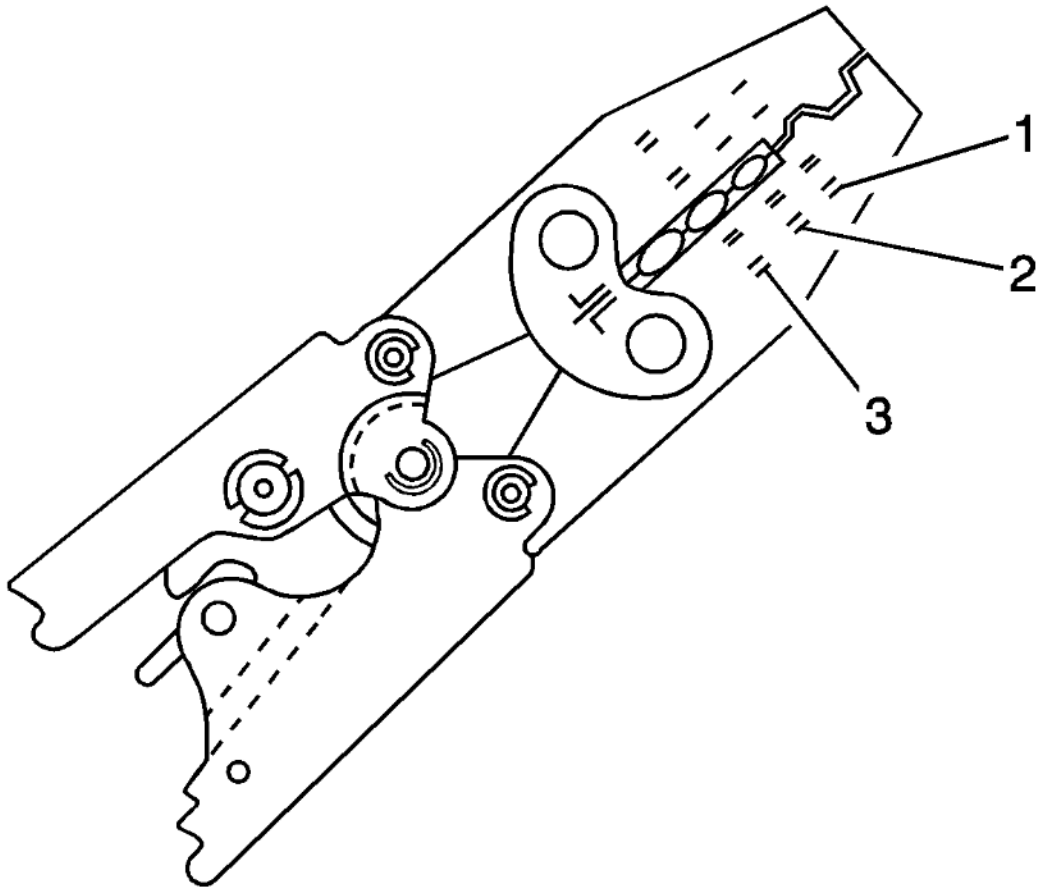

Fig. 14: Splice Sleeve Crimping Tool With 3 Crimp Nests
Courtesy of GENERAL MOTORS COMPANY

7. The **J-38125-8** splice sleeve crimping tool has three crimp nests. The largest crimp nest (3) is used for crimping 10 and 12 gauge wires. The second largest crimp nest (2) is used for crimping 14 and 16 gauge wires. The smallest crimp nest (1) is used for crimping 18 to 20 gauge wires. The crimp nests are referenced in the table (farther above) under the crimp tool nest color.
8. Use the splice sleeve crimp tool in order to position the DuraSeal splice sleeve in the proper color nest of the splice sleeve crimp tool. For the four crimp nest tool, use the three largest crimp nests to crimp the splice sleeves. For the three crimp nest tool, use all three crimp nests to

cardiagn.com

crimp the splice sleeves. Use the four and three crimp tool diagrams (above) and the table (farther above) to match the splice sleeve with the correct crimp nest. The crimp tool diagram callout numbers match the numbers in the table (under crimp tool nest color).

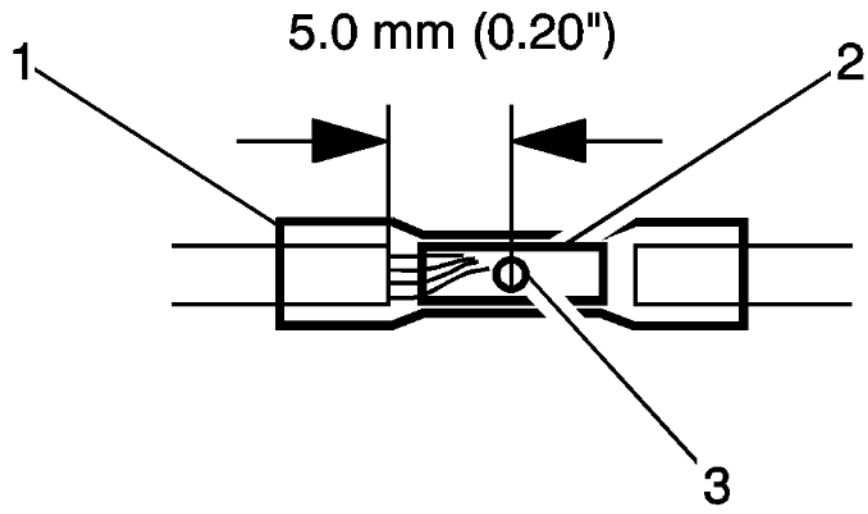

Fig. 15: Duraseal Splice Sleeve
Courtesy of GENERAL MOTORS COMPANY

9. Place the DuraSeal splice sleeve in the nest. Ensure that the crimp falls midway between the end of the barrel and the stop. The sleeve has a stop (3) in the middle of the barrel (2) in order to prevent the wire (1) from going further. Close the hand crimper handles slightly in order to

cardiagn.com

firmly hold the DuraSeal splice sleeve in the proper nest.

Fig. 16: Crimped Duraseal Splice Sleeve
Courtesy of GENERAL MOTORS COMPANY

cardiagn.com

10. Insert the wire into the splice sleeve barrel until the wire hits the barrel stop. Refer to **Folded-Over Wire Repair** for splicing wires of 0.35 mm or less (22, 24, 26 gauge sizes) and for splicing wires of different gauges.
11. Tightly close the handles of the crimp tool until the crimper handles open when released.

    The crimper handles will not open until you apply the proper amount of pressure to the DuraSeal splice sleeve. Repeat steps 4 and 6 for the opposite end of the splice.

cardiagn.com

Fig. 17: Crimped Duraseal Splice Sleeve
Courtesy of GENERAL MOTORS COMPANY

12. Using the heat torch, apply heat to the crimped area of the barrel.
13. Start in the middle and gradually move the heat barrel to the open ends of the tubing:

cardiagn.com

- The tubing will shrink completely as the heat is moved along the insulation.
- A small amount of sealant will come out of the end of the tubing when sufficient shrinkage is achieved.

Weatherpack™ Wiring Repair

NOTE: **Some replacement pigtail connectors may be delivered without the terminated leads installed into the connector. For Weatherpack™ connectors, all terminated leads included in the package should to be installed into the connector. If the connector end view shows that a terminal is not occupied, the extra terminated lead(s) need to be installed and the end(s) sealed using a DuraSeal splice sleeve and taped back into the harness.**

1. Insert the wire into the splice sleeve barrel until the wire hits the barrel stop. Refer to **Folded-Over Wire Repair** for splicing wires of 0.35 mm or less (22, 24, 26 gauge sizes) and for splicing wires of different gauges.

cardiagn.com

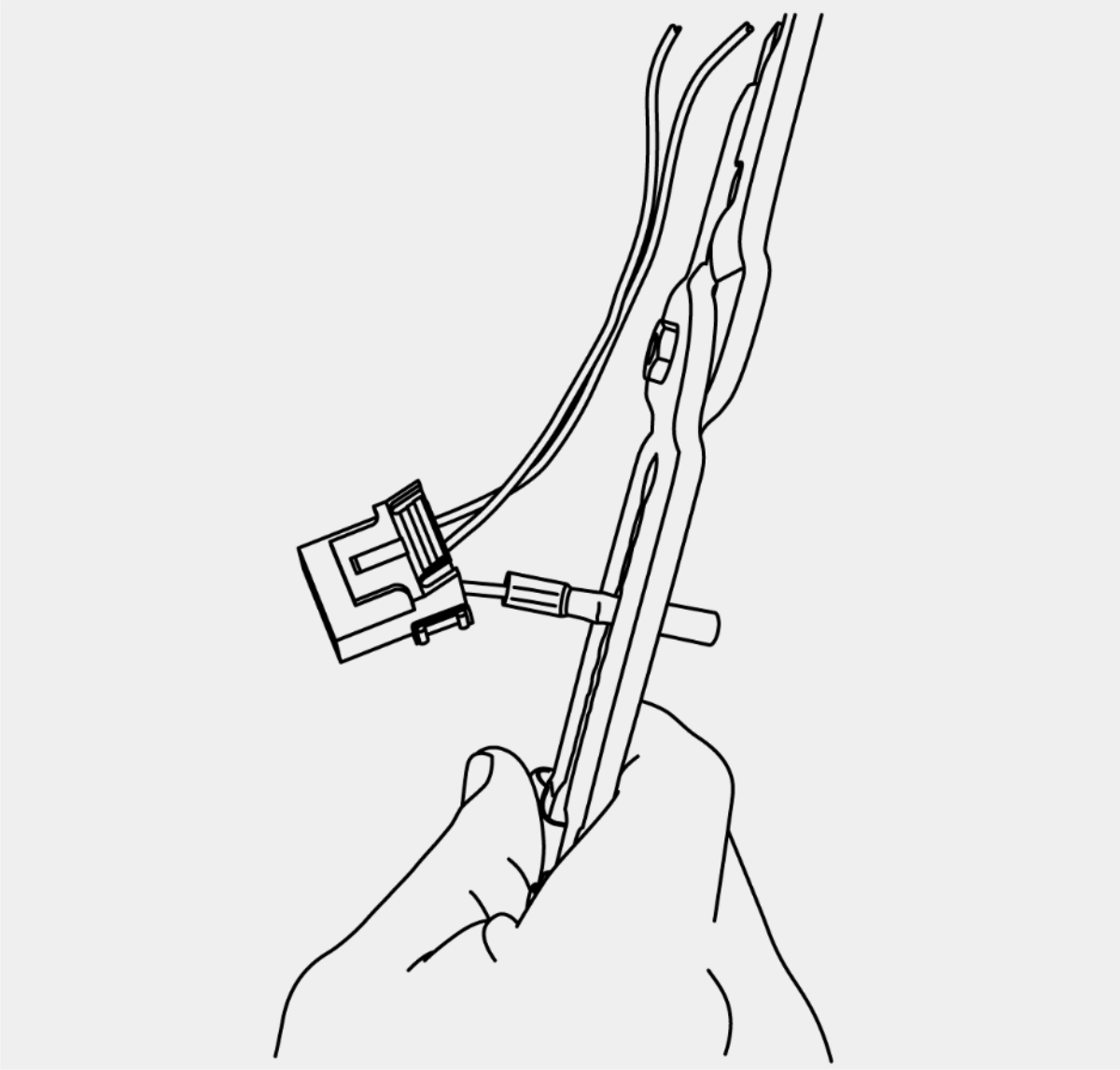

Fig. 18: Tightly Close Handles Of Crimp Tool
Courtesy of GENERAL MOTORS COMPANY

2. Tightly close the handles of the crimp tool until the crimper handles open when released.

   The crimper handles will not open until you apply the proper amount of pressure to the DuraSeal splice sleeve. Holding the DuraSEAL with

cardiagn.com

one hand gently tug on the wire to ensure it is crimped in the DuraSeal.

3. Using the heat torch, apply heat to the crimped area of the barrel.

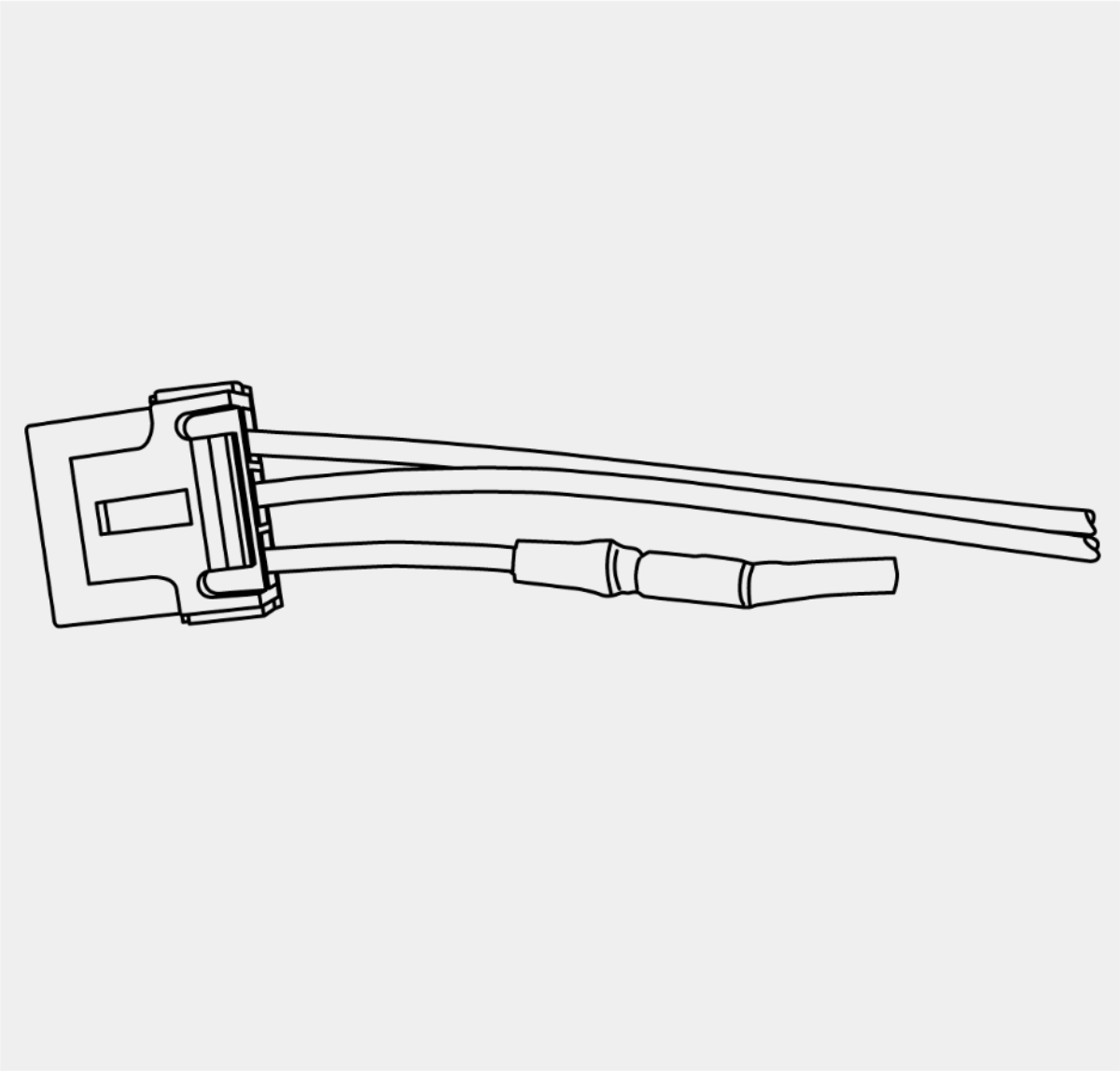

Fig. 19: Applying Heat To Crimped Area Of Barrel
Courtesy of GENERAL MOTORS COMPANY

cardiagn.com

4. Start in the middle and gradually move the heat barrel to the open ends of the tubing:
    - The tubing will shrink completely as the heat is moved along the insulation.
    - A small amount of sealant will come out of the end of the tubing when sufficient shrinkage is achieved.

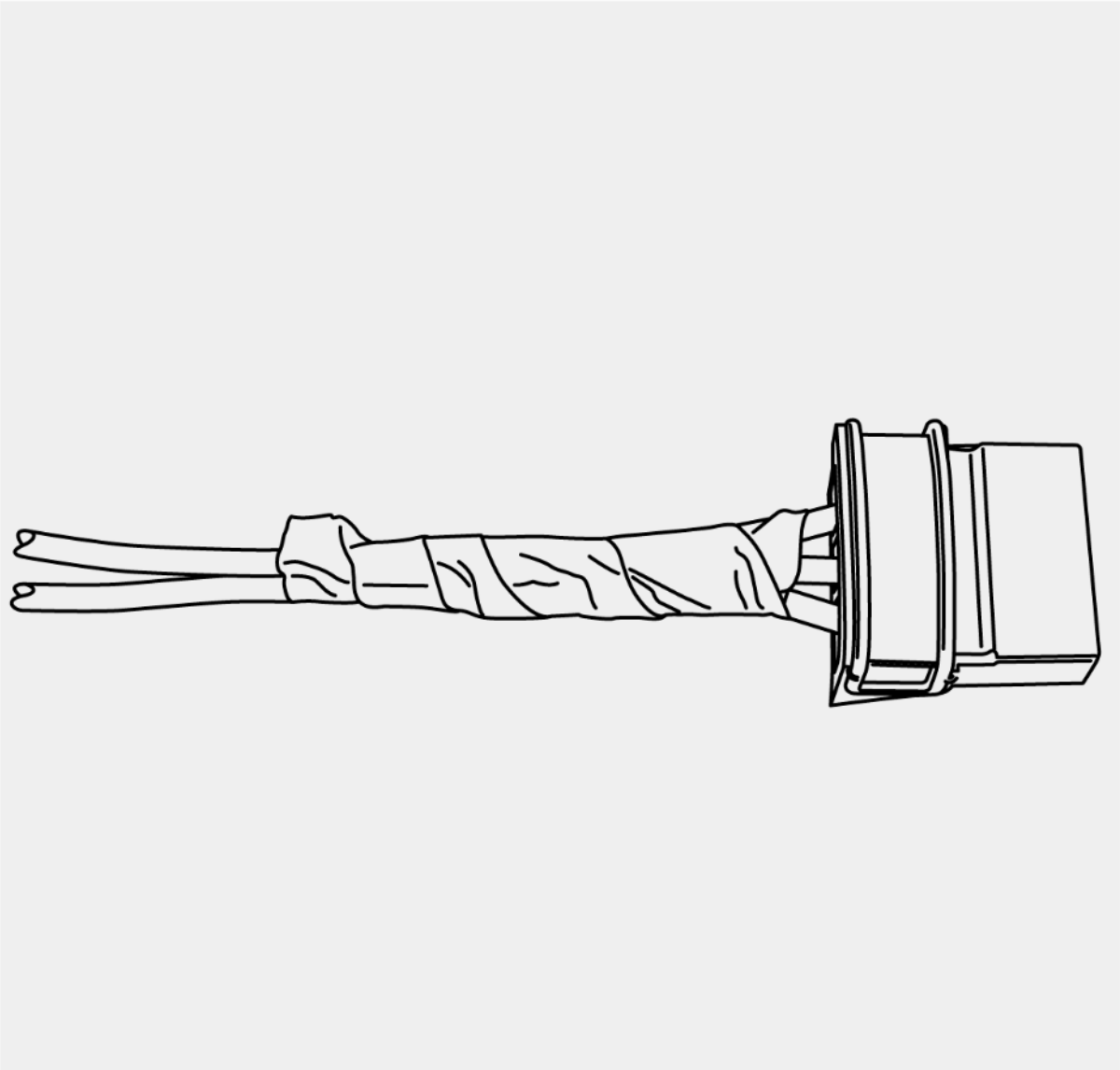

Fig. 20: Taping Extra Terminated Leads Back Into Harness
Courtesy of GENERAL MOTORS COMPANY

cardiagn.com

5. Tape the extra terminated lead(s) back into the harness.

High Temperature Wiring Repairs

Use the following procedures to perform high temperature wiring repairs:

1. Center the high temperature SCT1 shrink tube over the DuraSeal splice sleeve.
2. Using the heat torch, apply heat to the high temperature heat shrink tubing.
3. Gradually move the heat from the center to the open end of the tubing:
    - The tubing will shrink completely as the heat is moved along the insulation.
    - A small amount of sealant will come out of the end of the tubing when sufficient shrinkage is achieved.
4. Replace any reflective tape and clips that may have been removed during the repair.

CONNECTOR RECONNECTION - STEERING

Special Tools

EL-35616 Terminal Test Probe Kit

For equivalent regional tools, refer to **Special Tools** .

When the condition is not currently present, but is indicated in DTC history, the cause may be intermittent. An intermittent may also be the cause when there is a customer complaint, but the symptom cannot be duplicated. Refer to the Symptom Table of the system that is suspect of causing the condition before trying to locate an intermittent condition.

Most intermittent conditions are caused by faulty electrical connections or wiring. Inspect for the following items:

- Wiring broken inside the insulation
- Poor connection between the male and female terminal at a connector
- A terminal not seated all the way into the connector body
- Poor terminal to wire connection - Some conditions which fall under this description are poor crimps, poor solder joints, crimping over the wire insulation rather than the wire itself, and corrosion in the wire to terminal contact area, etc.
- Pierced or damaged insulation can allow moisture to enter the wiring causing corrosion. The conductor can corrode inside the insulation, with little visible evidence. Look for swollen and stiff sections of wire in the suspect circuits.
- Wiring which has been pinched, cut, or its insulation rubbed through may cause an intermittent open or short as the bare area touches other

cardiagn.com

wiring or parts of the vehicle.

- Wiring that comes in contact with hot or exhaust components
- Refer to **Inducing Intermittent Fault Conditions** in order to duplicate the conditions required, in order to verify the customer concern.
- Refer to **Testing for Electrical Intermittents** for test procedures to detect intermittent open, high resistance, short to ground, and short to voltage conditions.
- Refer to **Scan Tool Snapshot Procedure** for advanced intermittent diagnosis and Vehicle Data Recorder operation.

Testing for Terminal Fretting

Some intermittent conditions can be caused by wire terminal fretting corrosion. Fretting corrosion is a build-up of insulating, oxidized wear debris that can form when there is a small motion between electrical contacts. The oxidized wear debris can pile up enough at the electrical contact spots that the electrical resistance across the connection increases. Movement between the contacting surfaces as small as 10 to 100 microns can cause fretting. To put this in perspective, a sheet of paper is about 100 microns thick, so fretting motion is small and hard to see. Vibration and thermal expansion/contraction are the main sources that create fretting motion. Since vehicles vibrate and can experience large temperature swings, they are a good source for fretting motion. Tin, copper, nickel, and iron surfaces are all susceptible to fretting corrosion. Fretting corrosion can be difficult to see but it looks like small, dark smudges on the terminals contact surface.

To correct a fretting condition disconnect the suspect connector and add dielectric grease / lubricant (Nyogel 760G or equivalent, meeting GM specification 9986087) to both sides of the connector terminals. Then reconnect the connector and wipe away any excess lubricant. This will correct the additional terminal contact resistance due to the terminal fretting corrosion.

Testing for Proper Terminal Contact

It is important to test terminal contact at the component and any inline connectors before replacing a suspect component. Mating terminals must be inspected to ensure good terminal contact. A poor connection between the male and female terminal at a connector may be the result of contamination or deformation.

Contamination may be caused by the connector halves being improperly connected. A missing or damaged connector seal, damage to the connector itself, or exposing the terminals to moisture and dirt can also cause contamination. Contamination, usually in the underhood or underbody connectors, leads to terminal corrosion, causing an open circuit or intermittently open circuit.

Deformation is caused by probing the mating side of a connector terminal without the proper adapter. Always use the **EL-35616** kit when probing connectors. Other causes of terminal deformation are improperly joining the connector halves, or repeatedly separating and joining the connector halves. Deformation, usually to the female terminal contact tang, can result in poor terminal contact causing an open or intermittently open circuit.

Testing for Proper Terminal Contact in Bussed Electrical Centers

cardiagn.com

It is very important to use the correct test adapter when testing for proper terminal contact of fuses and relays in a bussed electrical center. Use the **EL-35616** kit to test for proper terminal contact. Failure to use the **EL-35616** kit can result in improper diagnosis of the bussed electrical center.

Follow the procedure below in order to test terminal contact:

1. Separate the connector halves.
2. Visually inspect the connector halves for contamination. Contamination may result in a white or green build-up within the connector body or between terminals. This causes high terminal resistance, intermittent contact, or an open circuit. An underhood or underbody connector that shows signs of contamination should be replaced in its entirety: terminals, seals, and connector body.
3. Using an equivalent male terminal/terminated lead, verify that the retention force is significantly different between a known good terminal and the suspect terminal. Replace the female terminal in question.

Flat Wire Connectors

There are no serviceable parts for flat wire connectors on the harness side or the component side.

Follow the procedure below in order to test terminal contact:

1. Remove the component in question.
2. Visually inspect each side of the connector for signs of contamination. Avoid touching either side of the connector as oil from your skin may be a source of contamination as well.
3. Visually inspect the terminal bearing surfaces of the flat wire circuits for splits, cracks, or other imperfections that could cause poor terminal contact. Visually inspect the component side connector to ensure that all of the terminals are uniform and free of damage or deformation.
4. Insert the appropriate adapter into the flat wire harness connector in order to test the circuit in question.

Control Module/Component Voltage and Grounds

Poor voltage or ground connections can cause widely varying symptoms.

- Test all control module voltage supply circuits. Many vehicles have multiple circuits supplying voltage to a control module. Other components in the system may have separate voltage supply circuits that may also need to be tested. Inspect connections at the module/component connectors, fuses, and any intermediate connections between the voltage source and the module/component. A test lamp or a DMM may indicate that voltage is present, but neither tests the ability of the circuit to carry sufficient current. Operate the component to test the ability of the circuit to carry sufficient current. Refer to **Circuit Testing** , and **Power Distribution Schematics** .
- Test all control module ground and system ground circuits. The control module may have multiple ground circuits. Other components in the system may have separate grounds that may also need to be tested. Inspect grounds for clean and tight connections at the grounding point.

cardiagn.com

Inspect the connections at the component and in splice packs, where applicable. Operate the component to test the ability of the circuit to carry sufficient current. Refer to **Circuit Testing** , and **Ground Distribution Schematics** .

Temperature Sensitivity

- An intermittent condition may occur when a component/connection reaches normal operating temperature. The condition may occur only when the component/connection is cold, or only when the component/connection is hot.
- Freeze Frame, Failure Records, Snapshot, or Vehicle Data Recorder data may help with this type of intermittent condition, where applicable.
- If the intermittent is related to heat, review the data for a relationship with the following:
  - High ambient temperatures
  - Underhood/engine generated heat
  - Circuit generated heat due to a poor connection, or high electrical load
  - Higher than normal load conditions, towing, etc.
- If the intermittent is related to cold, review the data for the following:
  - Low ambient temperatures - In extremely low temperatures, ice may form in a connection or component. Inspect for water intrusion.
  - The condition only occurs on a cold start.
  - The condition goes away when the vehicle warms up.
- Information from the customer may help to determine if the trouble follows a pattern that is temperature related.
- If temperature is suspected of causing an intermittent fault condition, attempt to duplicate the condition. Refer to **Inducing Intermittent Fault Conditions** in order to duplicate the conditions required.

Electromagnetic Interference and Electrical Noise

Some electrical components/circuits are sensitive to electromagnetic interference or other types of electrical noise. Inspect for the following conditions:

- A mis-routed harness that is too close to high voltage/high current devices such as secondary ignition components, motors, generator etc. - These components may induce electrical noise on a circuit that could interfere with normal circuit operation.
- Electrical system interference caused by a malfunctioning relay, or a control module driven solenoid or switch - These conditions can cause a sharp electrical surge. Normally, the condition will occur when the malfunctioning component is operating.
- Installation of non-factory or aftermarket add on accessories such as lights, 2-way radios, amplifiers, electric motors, remote starters, alarm systems, cell phones, etc. - These accessories may create interference in other circuits while operating and the interference would disappear when the accessory is not operating. Refer to **Checking Aftermarket Accessories** .

cardiagn.com

- Test for an open diode across the A/C compressor clutch and for other open diodes. Some relays may contain a clamping diode.
- The generator may be allowing AC noise into the electrical system.

Incorrect Control Module

- There are only a few situations where reprogramming a control module is appropriate:
  - A new service control module is installed.
  - A control module from another vehicle is installed.
  - Revised software/calibration files have been released for this vehicle.

NOTE: **DO NOT re-program the control module with the SAME software/calibration files that are already present in the control module. This is not an effective repair for any type of concern.**

- Verify that the control module contains the correct software/calibration. If incorrect programming is found, reprogram the control module with the most current software/calibration. Refer to **Control Module References** for replacement, setup, and programming.

UPPER INTERMEDIATE STEERING SHAFT REPLACEMENT

Special Tools

CH-42640 Steering Column Anti-Rotation Pin

Equivalent regional tools:**Special Tools**

Removal Procedure

CAUTION: **With wheels of the vehicle facing straight ahead, secure the steering wheel utilizing steering column anti-rotation pin, steering column lock, or a strap to prevent rotation. Locking of the steering column will prevent damage and a possible malfunction of the SIR system. The steering wheel must be secured in position before disconnecting the following components:**

- **The steering column**
- **The intermediate shaft(s)**
- **The steering gear**

After disconnecting these components, do not rotate the steering wheel or move the front tires and wheels. Failure to follow this procedure may cause the SIR coil assembly to become un-centered and

cardiagn.com

cause possible damage to the SIR coil. If you think the SIR coil has became un-centered, refer to your specific SIR coil's centering procedure to re-center SIR Coil.

CAUTION: Do not lubricate the upper intermediate shaft for any condition. This upper intermediate shaft is not designed to be lubricated. If you add lubricant to this upper intermediate shaft in order to correct a front end noise, the upper intermediate shaft will develop a stick/slip condition. Failure to follow these instructions may cause damage to the upper intermediate shaft.

1. With the front wheels of the vehicle in the straight ahead position, use the **CH-42640** anti-rotation pin to lock the steering column.

cardiagn.com

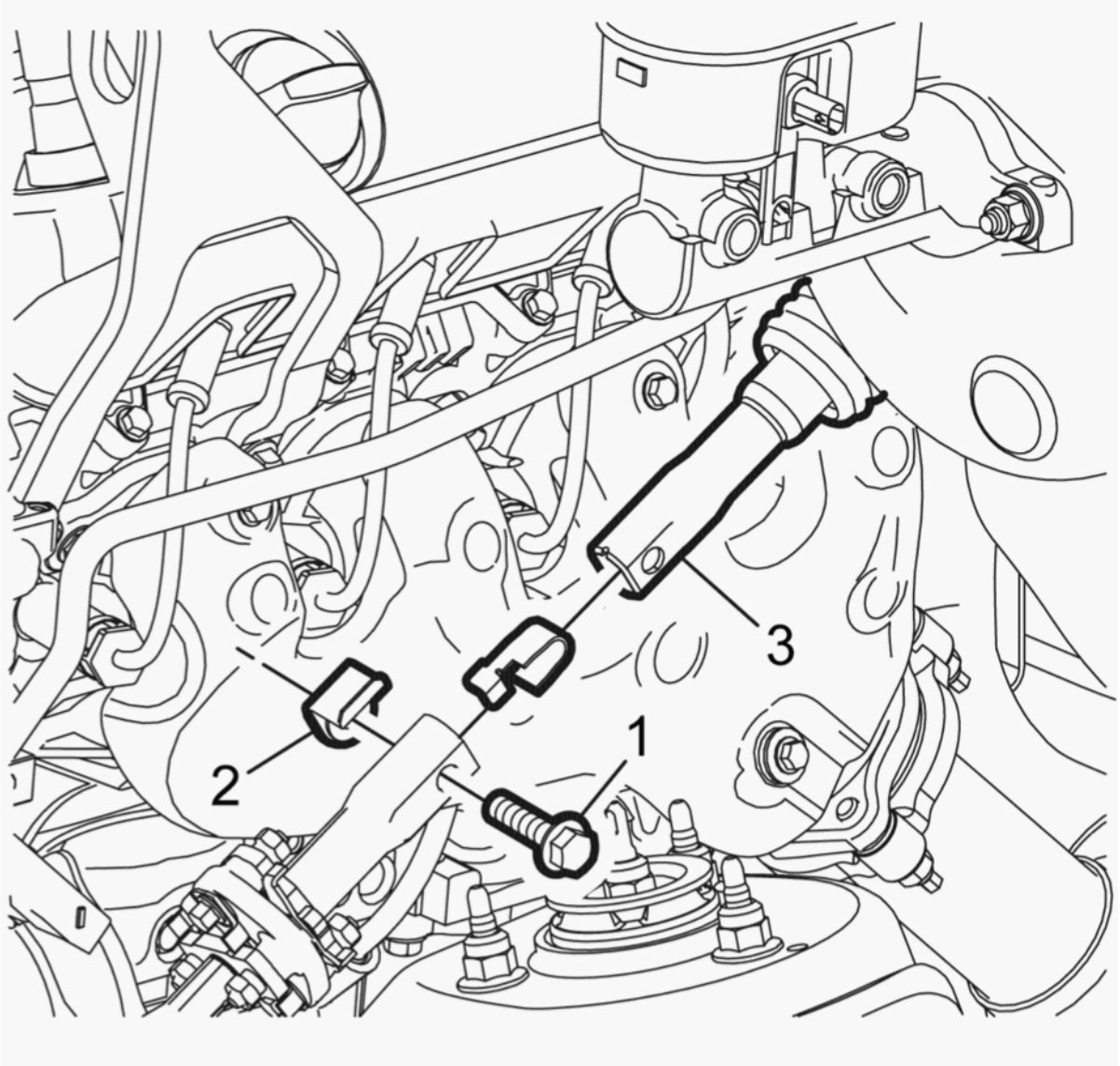

Fig. 21: Steering Shaft Upper Bolt
Courtesy of GENERAL MOTORS COMPANY

2. Remove Intermediate Steering Shaft Upper Bolt (1)
3. Remove Intermediate Steering Shaft Upper Nut (2)
4. Separate Upper Intermediate Steering Shaft (3) @Intermediate Steering Shaft

cardiagn.com

5. Remove Steering Column Seal **Steering Column Seal Replacement**

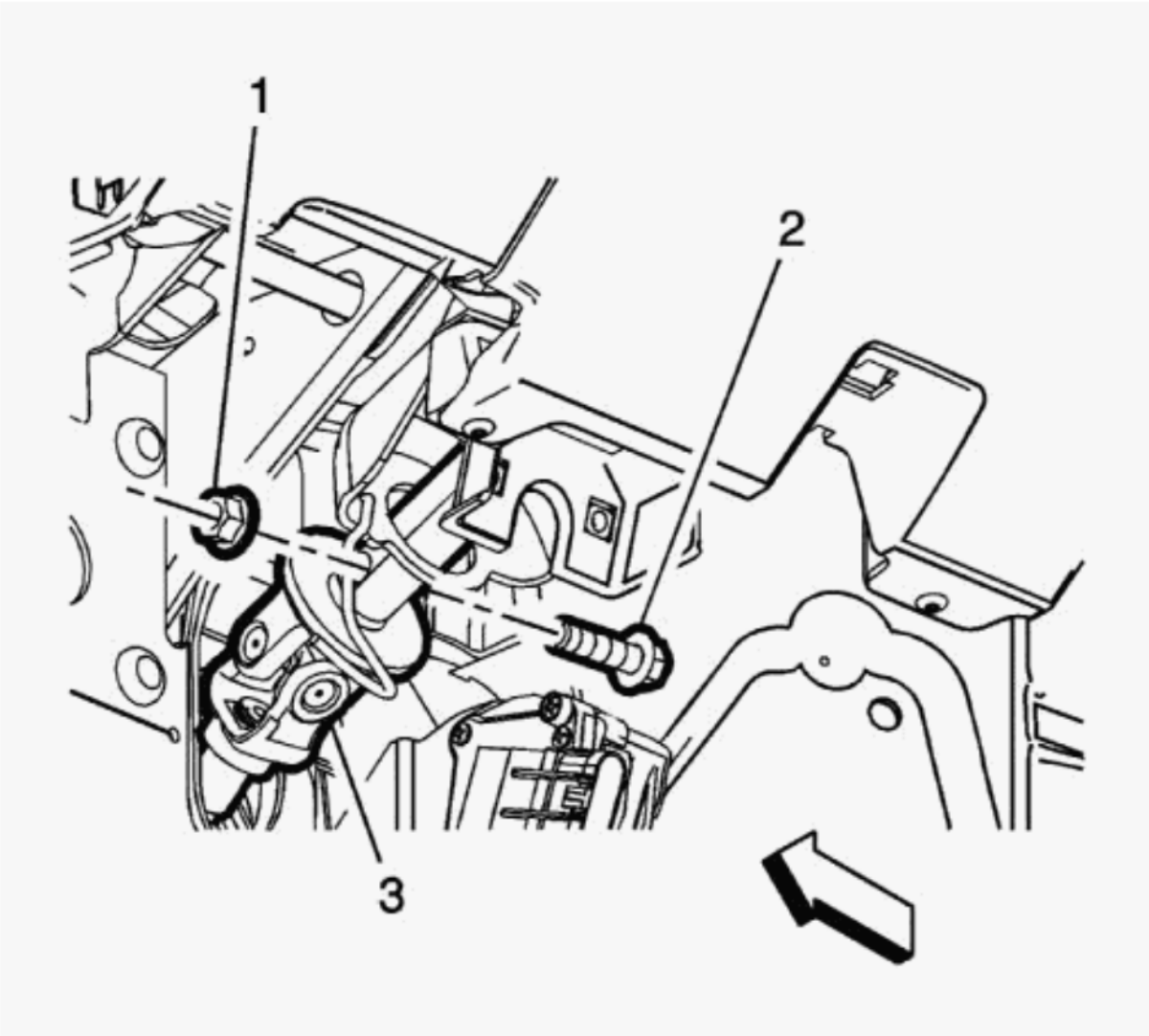

Fig. 22: Upper Intermediate Steering Shaft And Steering Column
Courtesy of GENERAL MOTORS COMPANY

6. Remove Upper Intermediate Steering Shaft Nut (1)
7. Remove Upper Intermediate Steering Shaft Bolt (2)
8. Separate Upper Intermediate Steering Shaft (3) @Steering Column

cardiagn.com

9. Remove the upper intermediate steering shaft (3) from the engine compartment side of the vehicle.

Installation Procedure

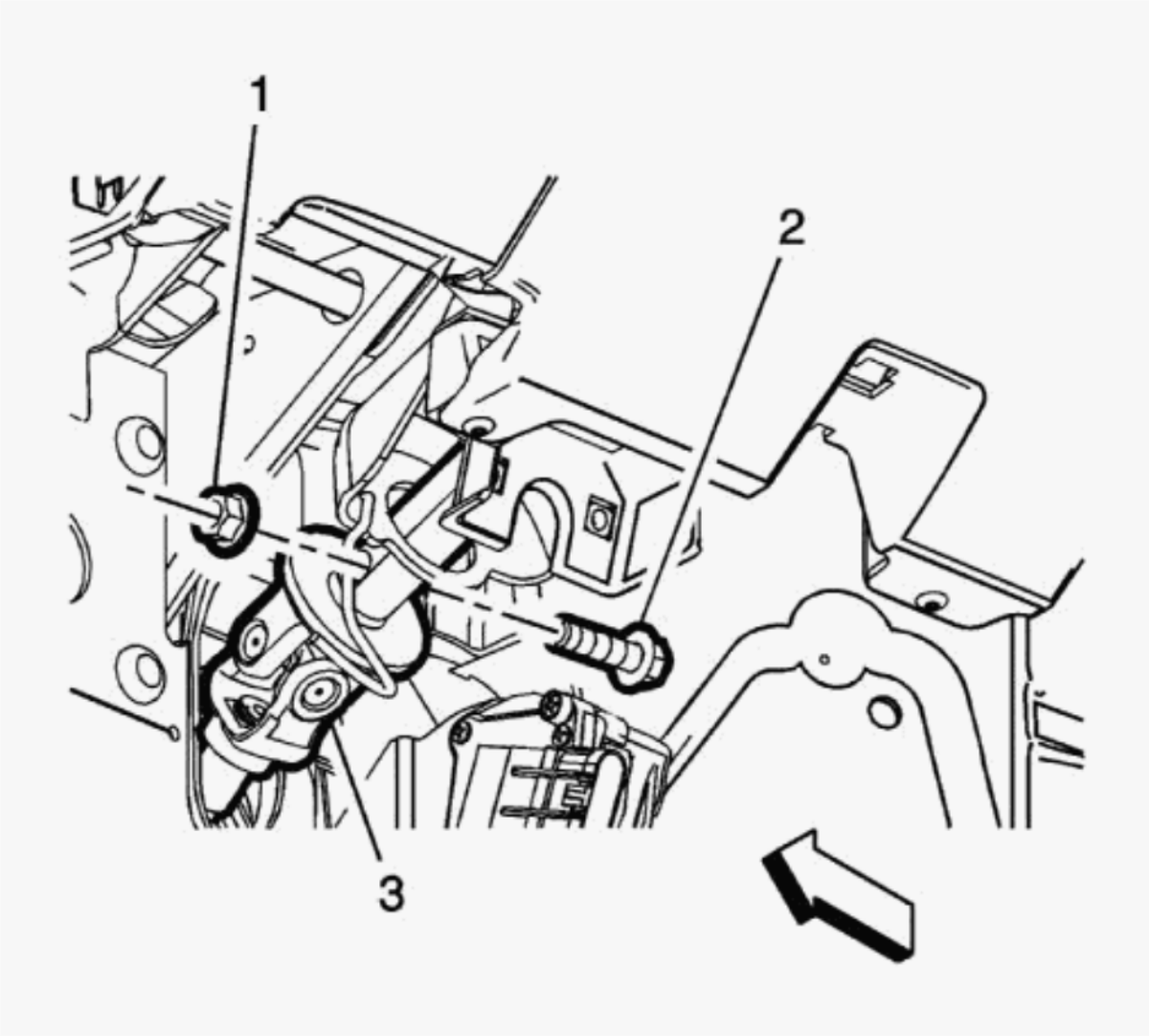

Fig. 23: Upper Intermediate Steering Shaft And Steering Column
Courtesy of GENERAL MOTORS COMPANY

1. Position the upper intermediate steering shaft (3) on the vehicle from the engine compartment side.

cardiagn.com

WARNING: When installing the (upper) intermediate steering shaft to the steering column, do NOT overextend the shaft or force the shaft onto the steering column. Overextending or forcing the intermediate steering shaft could damage the shaft and/or the steering column resulting in a loss of steering and possible bodily injury.

2. Install Upper Intermediate Steering Shaft (3) @Steering Column
3. Install Upper Intermediate Steering Shaft Bolt (2)

CAUTION: Refer to Fastener Caution .

4. Install Upper Intermediate Steering Shaft Nut (1) and tighten 62 N.m (46 lb ft)
5. Install Steering Column Seal **Steering Column Seal Replacement**

cardiagn.com

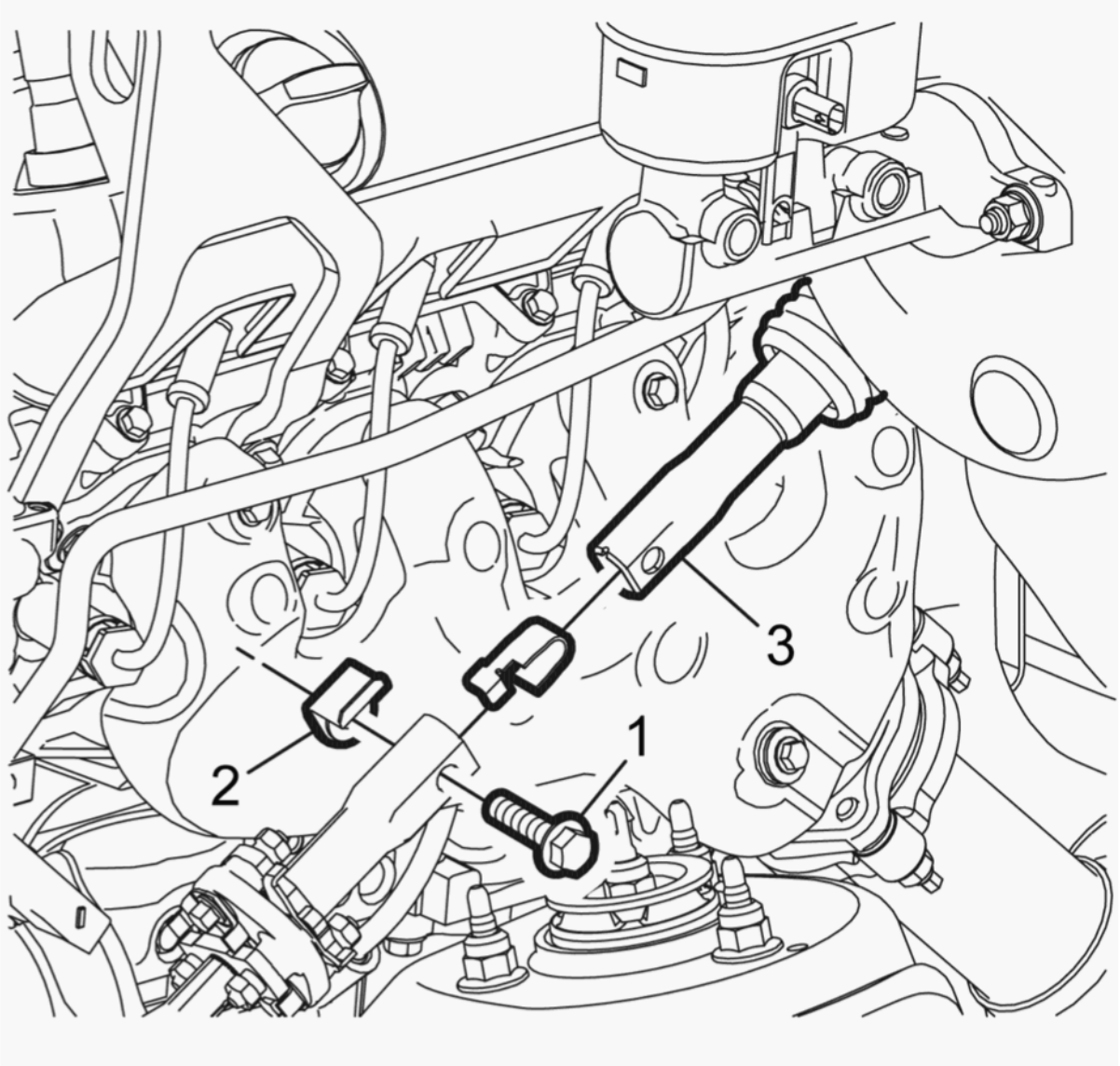

Fig. 24: Steering Shaft Upper Bolt
Courtesy of GENERAL MOTORS COMPANY

6. Install Upper Intermediate Steering Shaft (3) @Intermediate Steering Shaft
7. Intermediate Steering Shaft Upper Nut (2)
8. Intermediate Steering Shaft Upper Bolt (1) and tighten 50 N.m (37 lb ft)

cardiagn.com

INTERMEDIATE STEERING SHAFT REPLACEMENT

Special Tools

CH-42640 Steering Column Anti-Rotation Pin

Equivalent regional tools:**Special Tools**

Removal Procedure

CAUTION: With wheels of the vehicle facing straight ahead, secure the steering wheel utilizing steering column anti-rotation pin, steering column lock, or a strap to prevent rotation. Locking of the steering column will prevent damage and a possible malfunction of the SIR system. The steering wheel must be secured in position before disconnecting the following components:

- **The steering column**
- **The intermediate shaft(s)**
- **The steering gear**

After disconnecting these components, do not rotate the steering wheel or move the front tires and wheels. Failure to follow this procedure may cause the SIR coil assembly to become un-centered and cause possible damage to the SIR coil. If you think the SIR coil has became un-centered, refer to your specific SIR coil's centering procedure to re-center SIR Coil.

1. With the front wheels of the vehicle in the straight ahead position, use the **CH-42640** anti-rotation pin to lock the steering column.

cardiagn.com

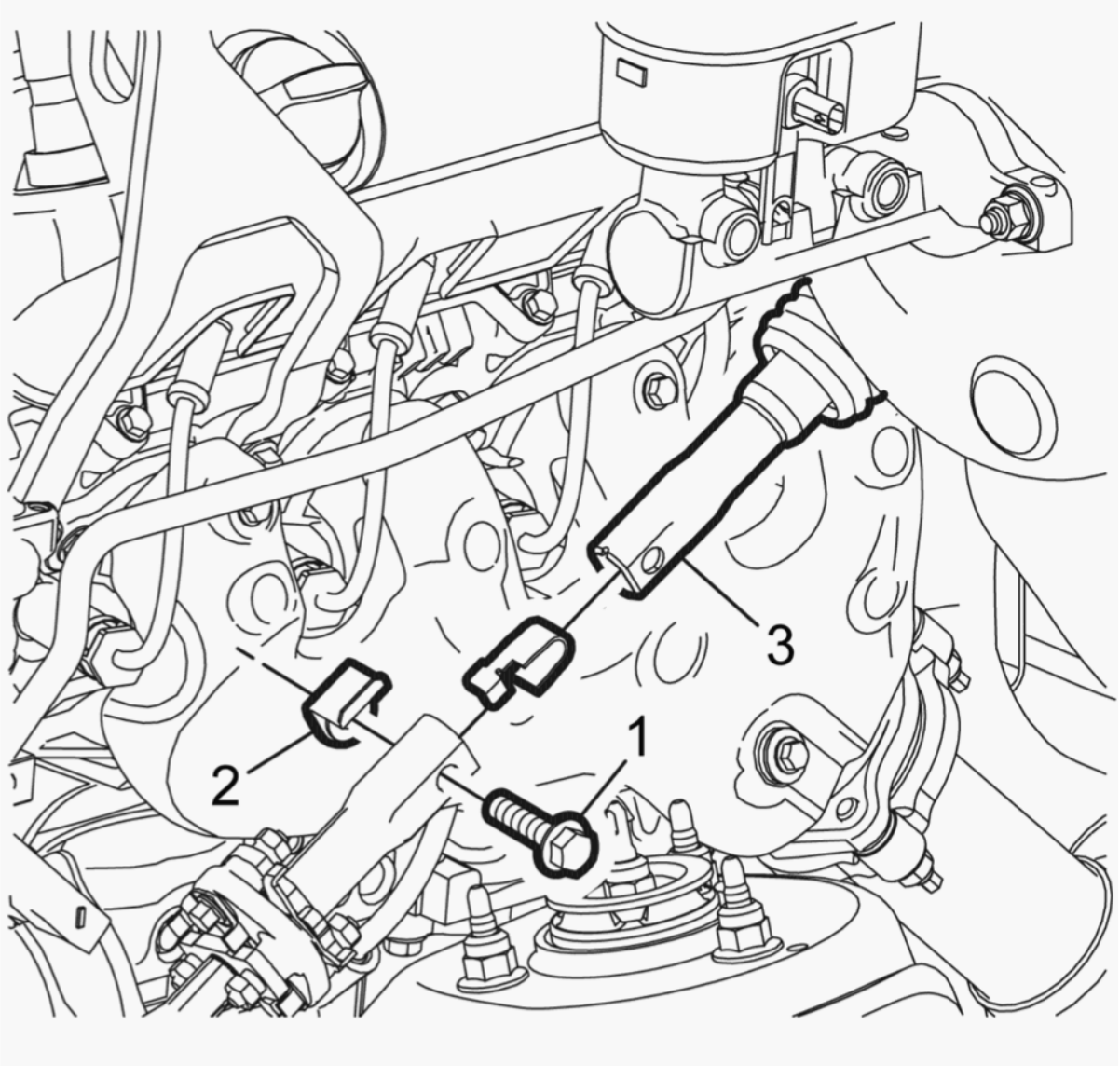

Fig. 25: Steering Shaft Upper Bolt
Courtesy of GENERAL MOTORS COMPANY

2. Remove Intermediate Steering Shaft Upper Bolt (1).
3. Remove Intermediate Steering Shaft Upper Nut (2)
4. Separate Upper Intermediate Steering Shaft (3) @Intermediate Steering Shaft

cardiagn.com

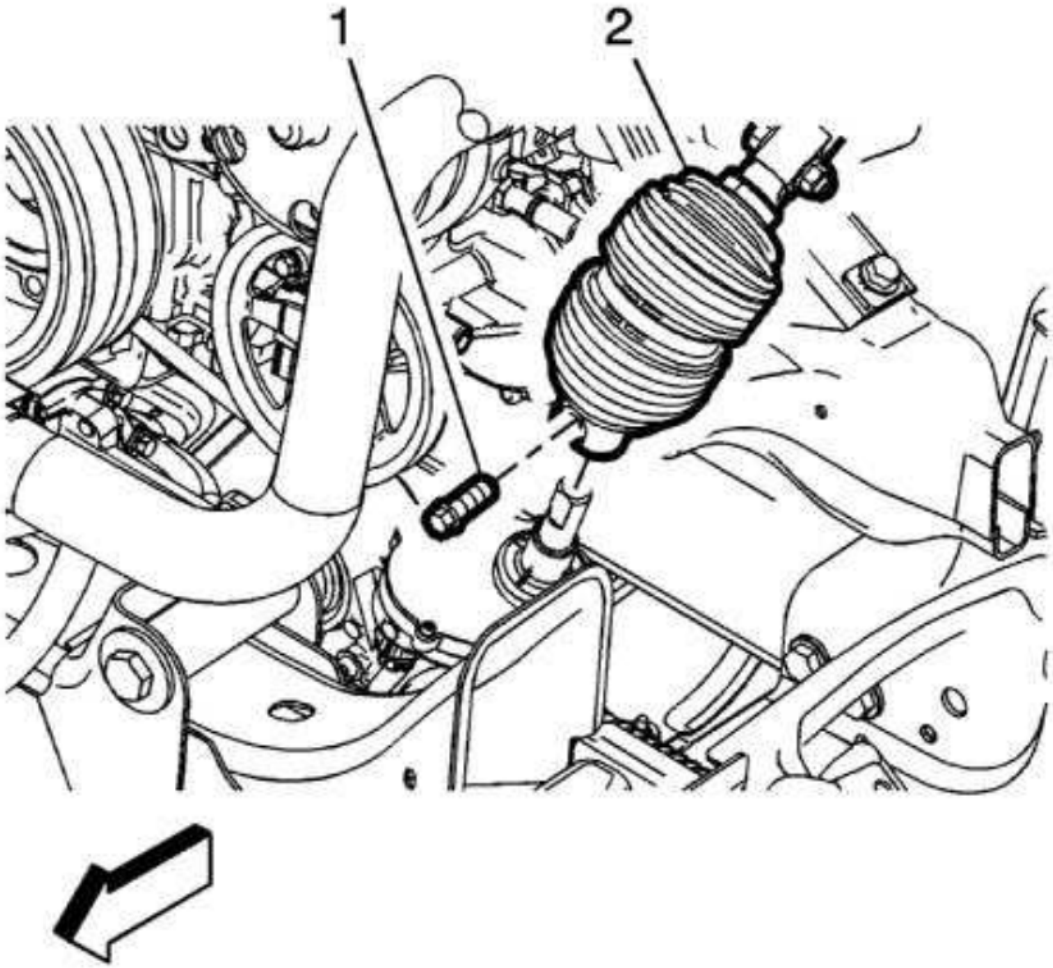

Fig. 26: Intermediate Steering Shaft Lower Bolt
Courtesy of GENERAL MOTORS COMPANY

5. Remove Intermediate Steering Shaft Lower Bolt (1)

NOTE: **Do NOT pull on the intermediate steering shaft to separate the shaft from the steering gear.**

6. Separate Intermediate Steering Shaft (2) @Steering Gear

cardiagn.com

7. Remove the intermediate steering shaft (2) from the vehicle.

Installation Procedure

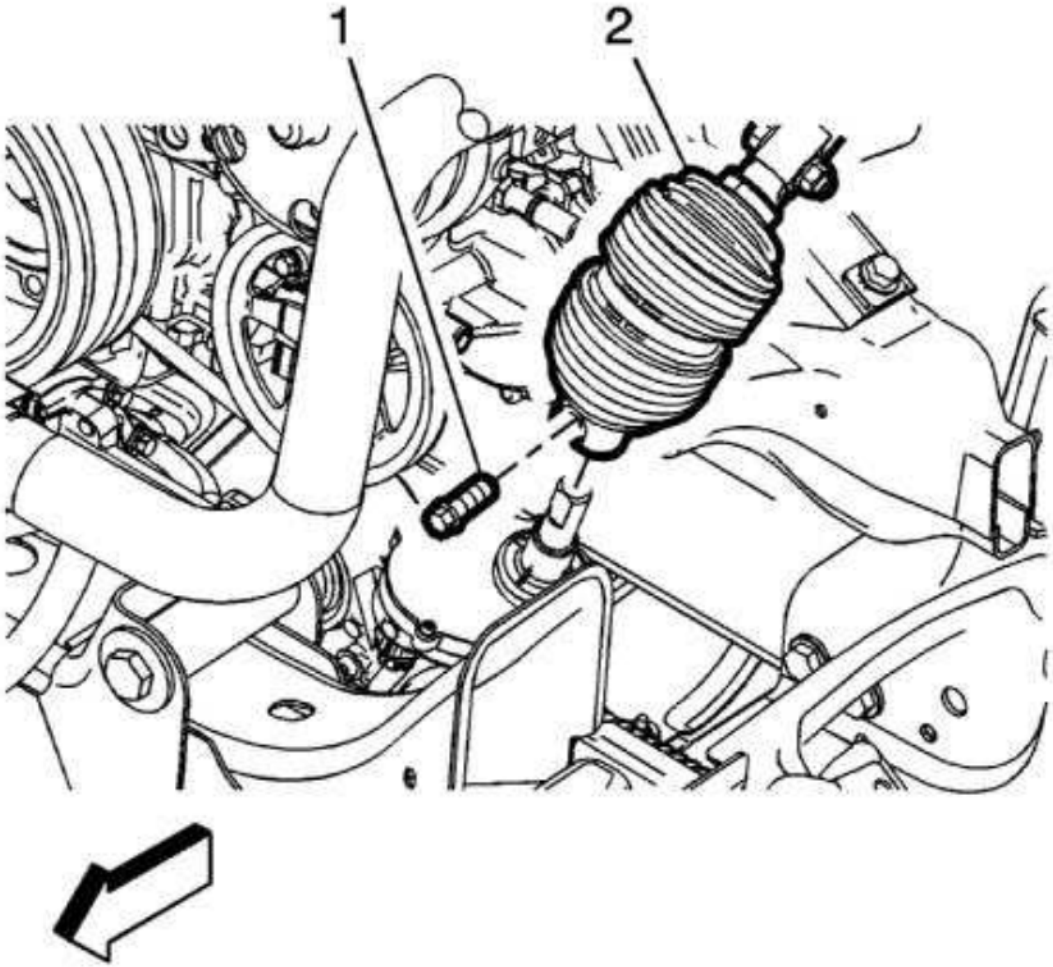

Fig. 27: Intermediate Steering Shaft Lower Bolt
Courtesy of GENERAL MOTORS COMPANY

1. Position the intermediate steering shaft (2) on the vehicle.

cardiagn.com

2. Install Intermediate Steering Shaft (2) @Steering Gear

CAUTION: **Refer to Fastener Caution .**

3. Install Intermediate Steering Shaft Lower Bolt (1) and tighten 45 N.m (33 lb ft)

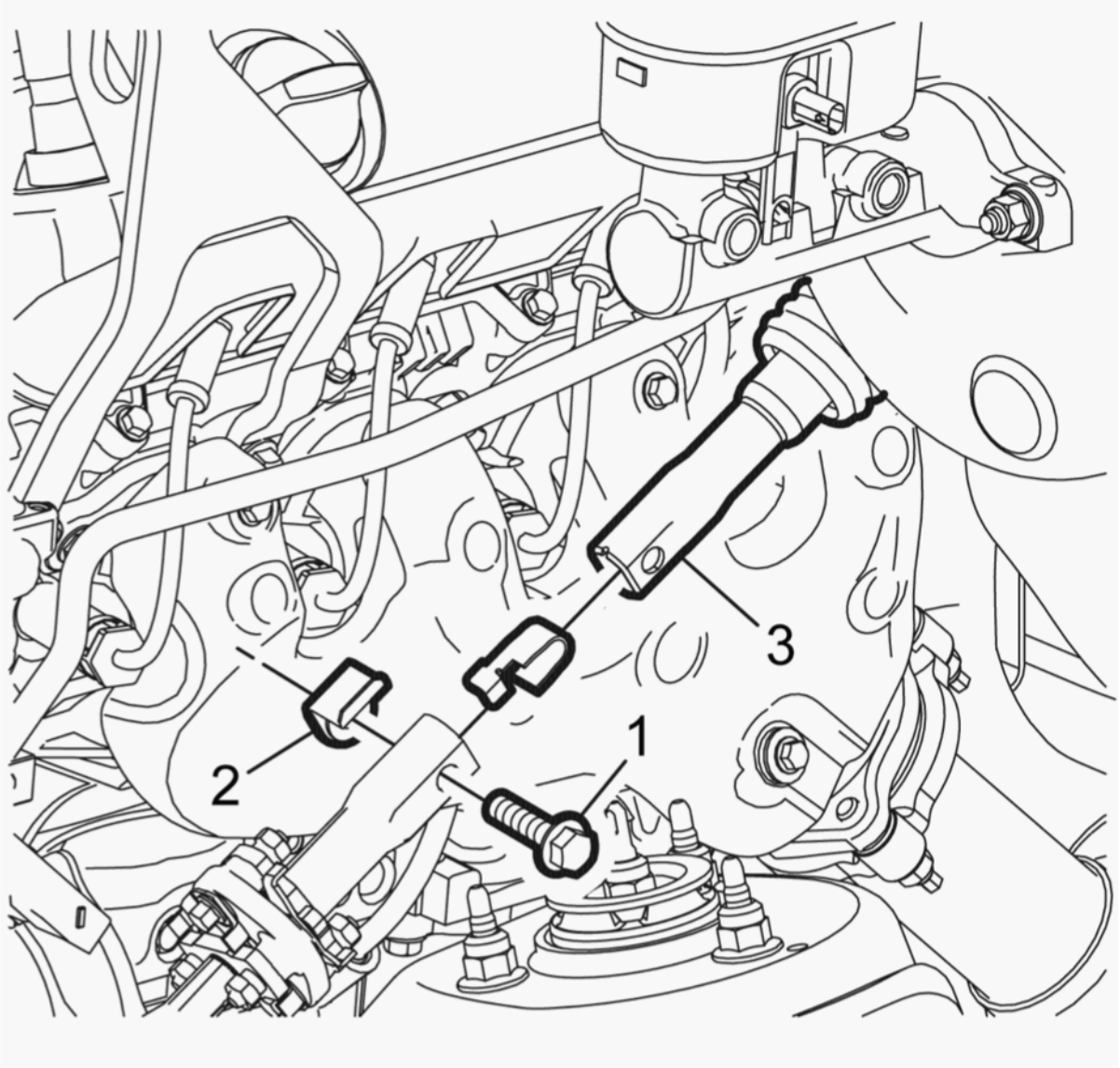

cardiagn.com

Fig. 28: Steering Shaft Upper Bolt
Courtesy of GENERAL MOTORS COMPANY

4. Install Upper Intermediate Steering Shaft (3) @Intermediate Steering Shaft
5. Install Intermediate Steering Shaft Upper Nut (2)
6. Install Intermediate Steering Shaft Upper Bolt (1) and tighten 50 N.m (37 lb ft)

STEERING COLUMN ACCIDENT DAMAGE INSPECTION (N33)

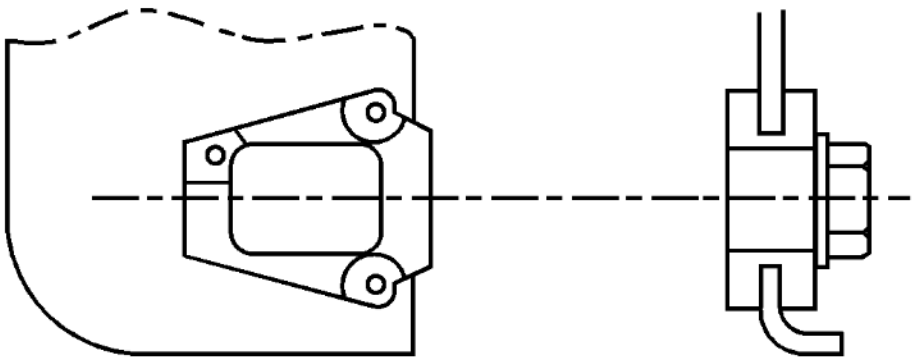

cardiagn.com

Fig. 29: Inspecting Capsules On Steering Column Bracket Assembly
Courtesy of GENERAL MOTORS COMPANY

- Vehicles involved in accidents which result in the following conditions may also have a damaged or misaligned steering column:
  - Frame damage
  - Major body or sheet metal damage
  - Where the steering column has been impacted
  - Where supplemental inflatable restraint systems deployed
- Inspect the capsules on the steering column bracket assembly. All capsules must be securely seated in the bracket slots and checked for any loose conditions when pushed or pulled by hand. If not, the bracket should be replaced if bolted to the jacket assembly. If the bracket is welded to the jacket assembly then replace the jacket assembly.

cardiagn.com

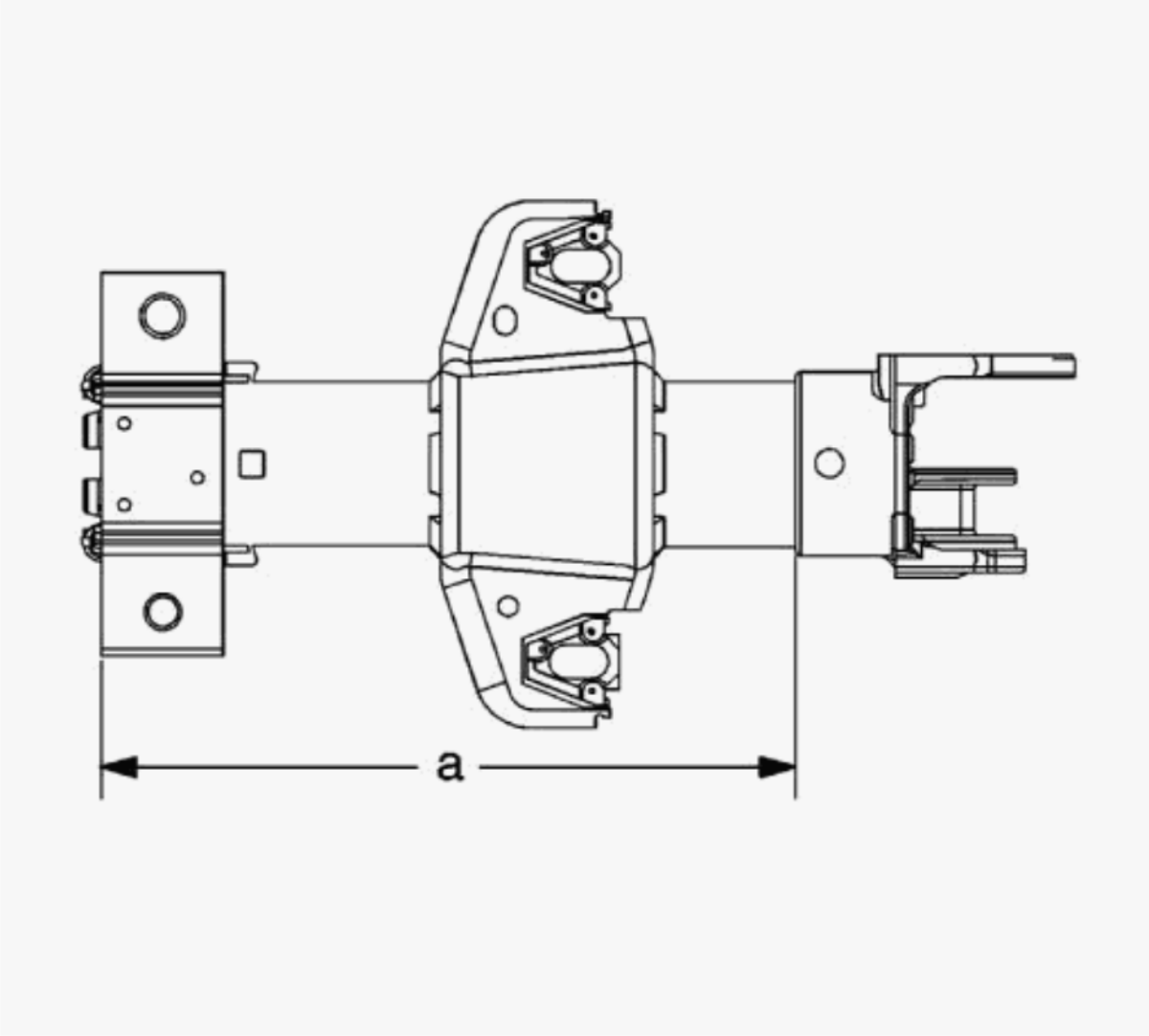

Fig. 30: Inspecting For Jacket Assembly Collapse By Measuring Distance
Courtesy of GENERAL MOTORS COMPANY

NOTE: **On manual tilt and telescope columns, it will be necessary to remove the closeout shroud to measure the jacket.**

- Inspect for jacket assembly collapse by measuring distance (a) from the steering column support bracket mounting plate to the lower edge of the jacket lower bracket. Replace the steering column assembly if the measured dimensions is less than 286 mm.

cardiagn.com

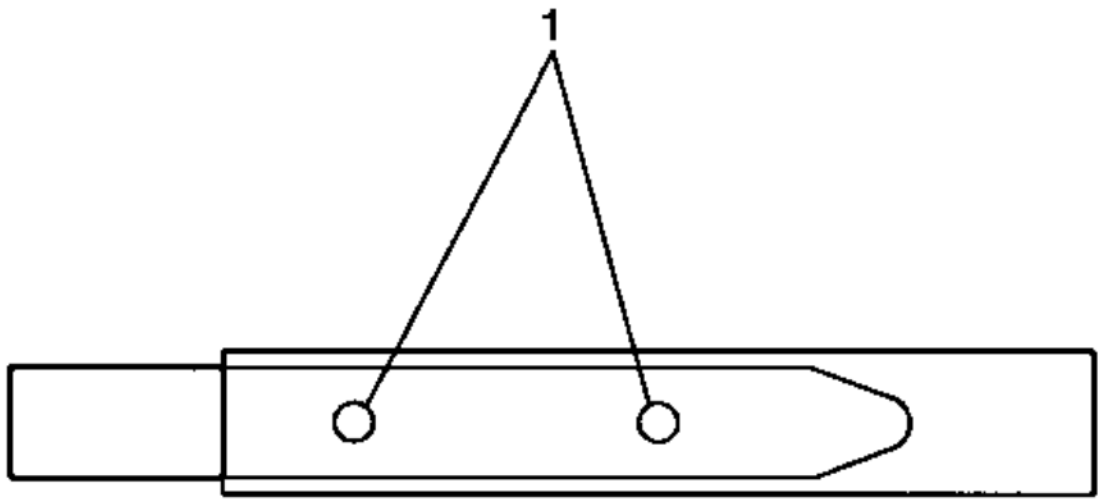

Fig. 31: Inspecting Steering Shaft For Sheared Injected Plastic
Courtesy of GENERAL MOTORS COMPANY

- Remove the SIR coil from the steering column and allow the coil to hang freely before the steering shaft is rotated. Refer to **Steering Wheel Airbag Coil Replacement (Chevrolet/GMC)** **Steering Wheel Airbag Coil Replacement (Cadillac)** .
- Visually inspect the steering shaft for sheared injected plastic (1). If the steering shaft shows sheared plastic, replace the steering shaft.

cardiagn.com

- Inspect the steering shaft runout for any frame damage that could cause a bent steering shaft. Using a dial indicator at the lower end of the steering shaft, rotate the steering wheel. The runout must not exceed 1.60 mm (0.0625 in).

STEERING COLUMN ACCIDENT DAMAGE INSPECTION (N37)

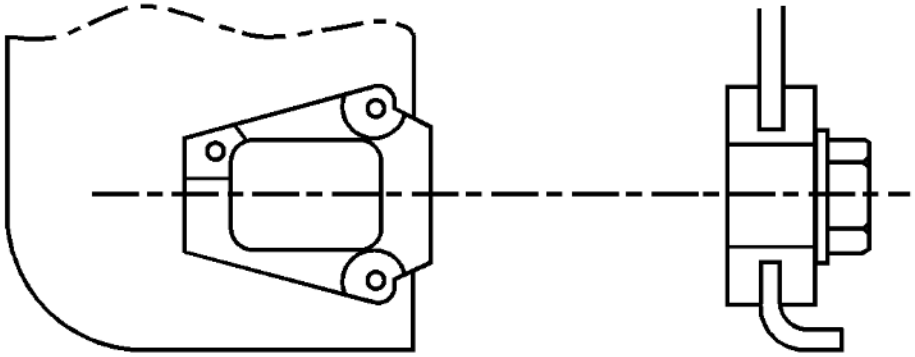

Fig. 32: Inspecting Capsules On Steering Column Bracket Assembly
Courtesy of GENERAL MOTORS COMPANY

cardiagn.com

- Vehicles involved in accidents which result in the following conditions may also have a damaged or misaligned steering column:
  - Frame damage
  - Major body or sheet metal damage
  - Where the steering column has been impacted
  - Where supplemental inflatable restraint systems deployed
- Inspect the capsules on the steering column bracket assembly. All capsules must be securely seated in the bracket slots and checked for any loose conditions when pushed or pulled by hand. If not, the bracket should be replaced if bolted to the jacket assembly. If the bracket is welded to the jacket assembly then replace the jacket assembly.

cardiagn.com

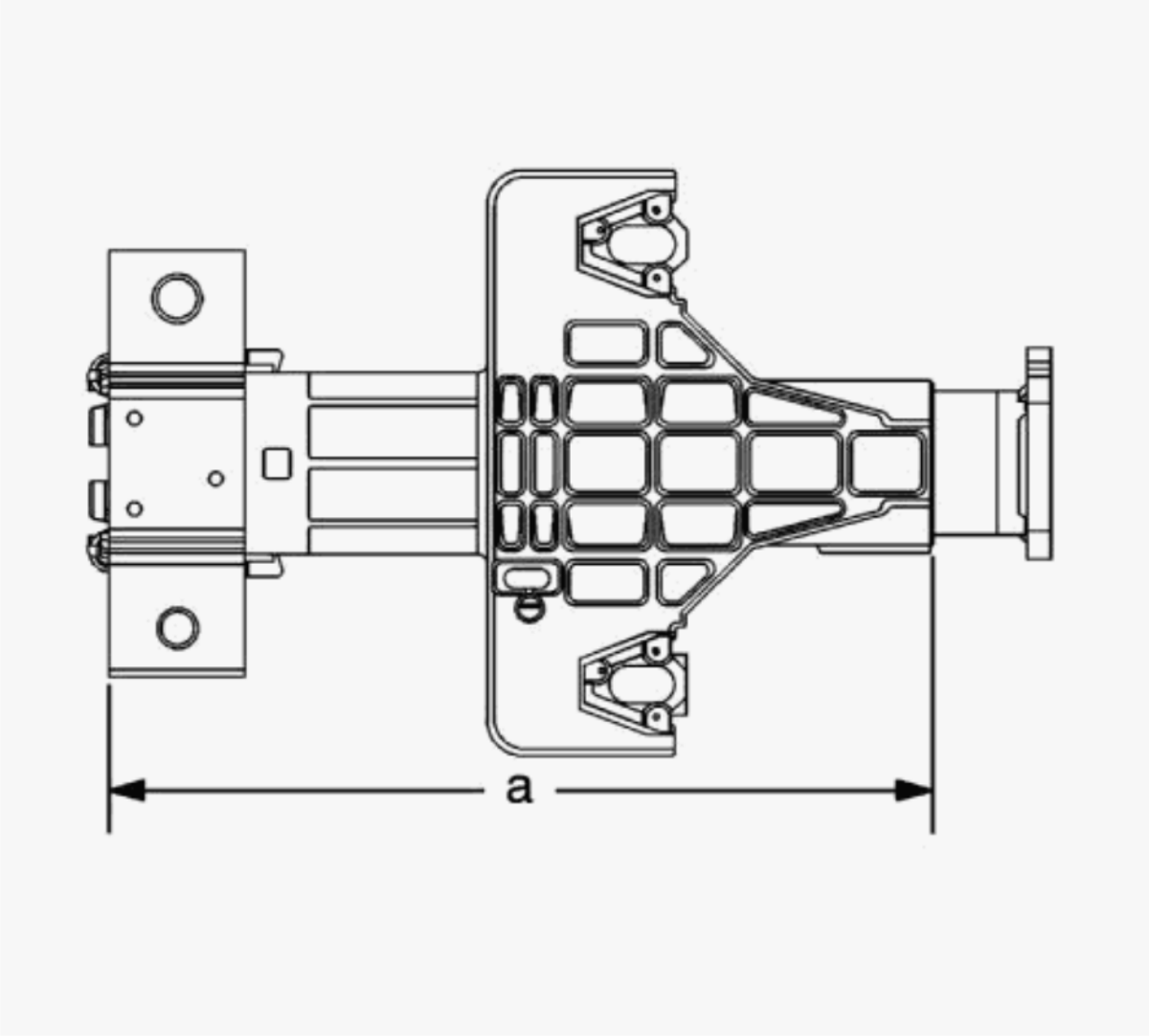

Fig. 33: Inspecting For Jacket Assembly Collapse By Measuring Distance
Courtesy of GENERAL MOTORS COMPANY

- Inspect for jacket assembly collapse by measuring distance (a) from the steering column support bracket mounting plate to the lower edge of the jacket lower bracket. Replace the steering column assembly if the measured dimensions is less than 286 mm.

cardiagn.com

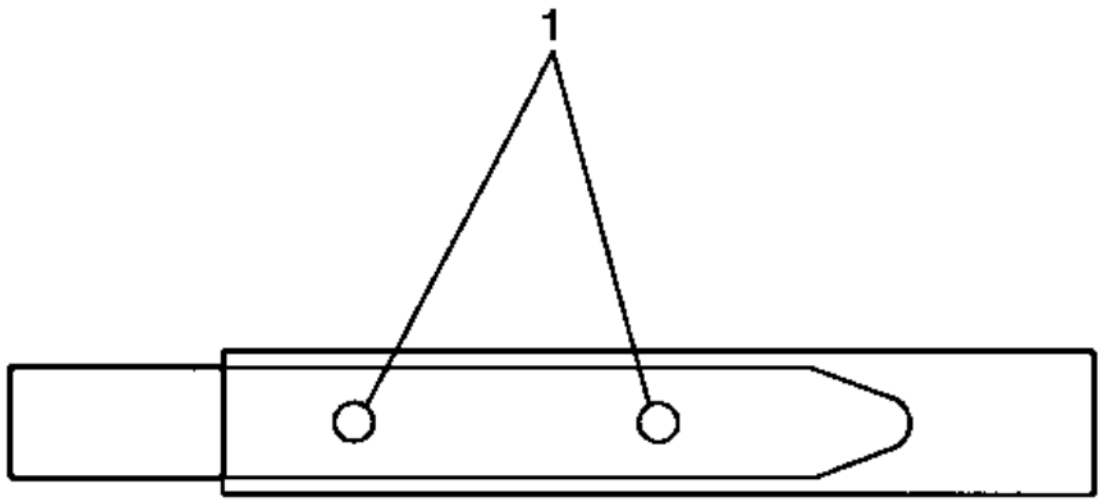

Fig. 34: Inspecting Steering Shaft For Sheared Injected Plastic
Courtesy of GENERAL MOTORS COMPANY

- Remove the SIR coil from the steering column and allow the coil to hang freely before the steering shaft is rotated. Refer to **Steering Wheel Airbag Coil Replacement (Chevrolet/GMC)** **Steering Wheel Airbag Coil Replacement (Cadillac)** .
- Visually inspect the steering shaft for sheared injected plastic (1). If the steering shaft shows sheared plastic, replace the steering shaft.

cardiagn.com

- Inspect the steering shaft runout for any frame damage that could cause a bent steering shaft. Using a dial indicator at the lower end of the steering shaft, rotate the steering wheel. The runout must not exceed 1.60 mm (0.0625 in).

STEERING COLUMN SHROUD REPLACEMENT (RPO N37)

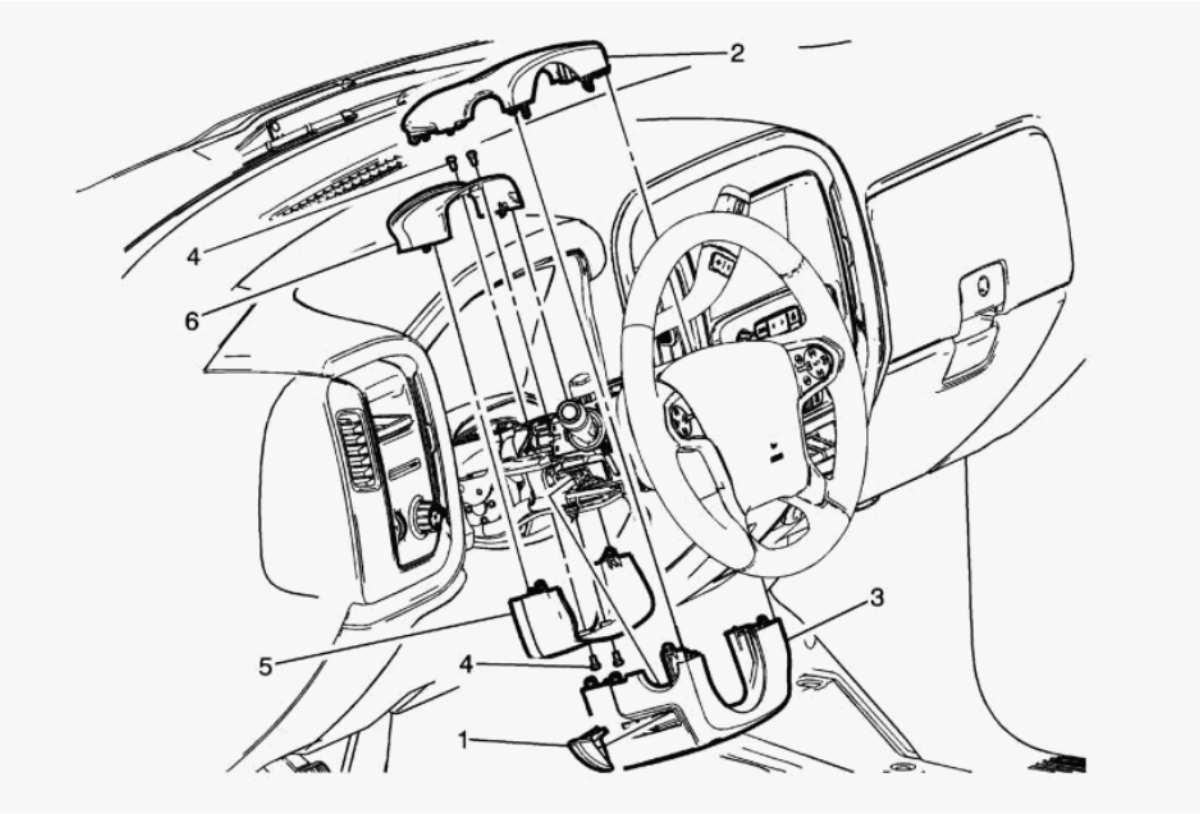

Fig. 35: Steering Column Shroud (RPO N37)
Courtesy of GENERAL MOTORS COMPANY

Callout	Component Name
Preliminary Procedure **Instrument Panel Knee Bolster Replacement (Chevrolet / GMC)** **Instrument Panel Knee Bolster Replacement (Cadillac)**	
1	Steering Column Tilt Wheel Release Lever **Steering Column Tilt Wheel Release Lever Replacement**

cardiagn.com

Callout	Component Name
2	Steering Column Shroud - Upper **Procedure** Use a flat bladed plastic trim tool to release the tabs securing the upper steering column shroud cover to the lower steering column shroud cover.
3	Steering Column Shroud - Lower
4	Steering Column Shroud Bolt (Qty: 4) **CAUTION:** **Refer to** **Fastener Caution** . **Tighten** 2.5 N.m (22 lb in)
5	Steering Column Shroud Closeout - Lower
6	Steering Column Shroud Closeout - Upper **Procedure** Use a flat bladed plastic trim tool in order to release the tabs securing the upper steering column shroud closeout to the lower steering column shroud closeout.

STEERING COLUMN SHROUD REPLACEMENT (RPO N38)

cardiagn.com

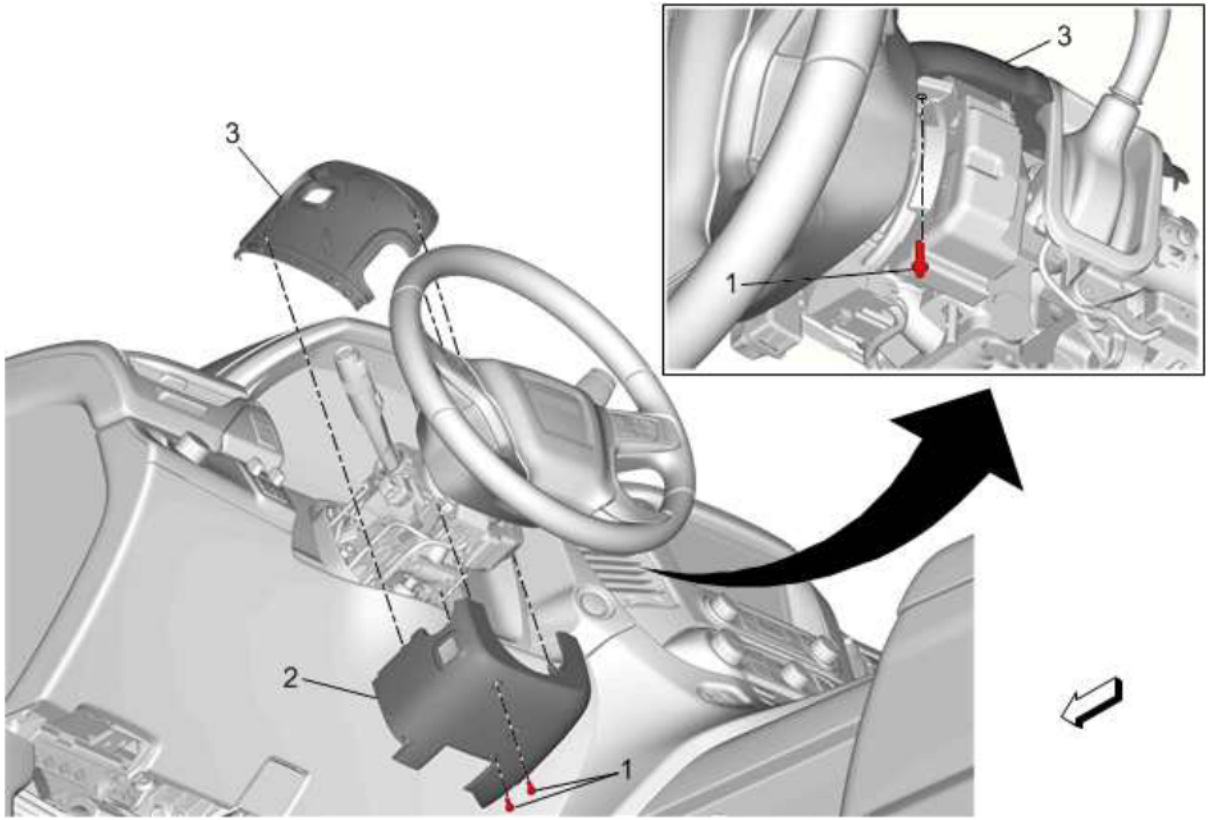

Fig. 36: Steering Column Shroud (RPO N38)
Courtesy of GENERAL MOTORS COMPANY

Callout	Component Name
1	Steering Column Shroud Bolt (Qty: 3) **CAUTION:** **Refer to** **Fastener Caution** . **Tighten** 3 N.m (27 lb in)

cardiagn.com

Callout	Component Name
2	Lower Steering Column Shroud **Procedures** 1. Use a flat bladed plastic trim tool in order to release the tabs securing the upper shroud cover to the lower trim cover. 2. Disconnect the steering column tilt wheel and telescope switch. Refer to **Steering Column Tilt Wheel and Telescope Switch Replacement**.
3	Upper Steering Column Shroud **Procedure** Use a flat bladed plastic trim tool in order to release the tabs securing the instrument panel cluster trim plate to the upper and lower trim cover.

STEERING COLUMN SHROUD REPLACEMENT (RPO N33)

cardiagn.com

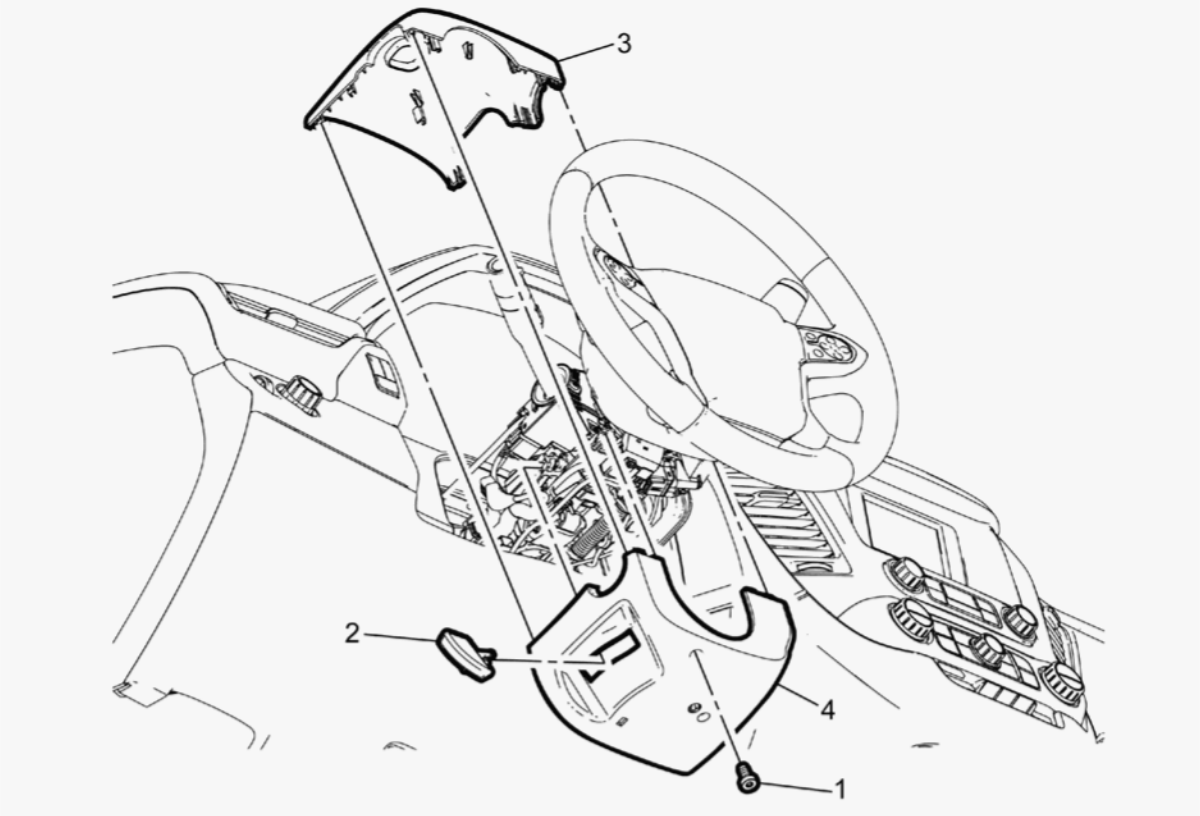

Fig. 37: Steering Column Shroud (RPO N33)
Courtesy of GENERAL MOTORS COMPANY

Callout	Component Name
1	Steering Column Shroud Bolt **CAUTION:** **Refer to** **Fastener Caution .** **Tighten** 3 N.m (27 lb in)

cardiagn.com

Callout	Component Name
2	Steering Column Tilt Wheel Release Lever **Procedure** Remove by pulling straight outwards.
3	Steering Column Shroud - Upper **Procedure** Use a flat bladed plastic trim tool in order to release the tabs securing the upper shroud cover to the lower shroud cover.
4	Steering Column Shroud - Lower

STEERING COLUMN CONTROL MODULE REPLACEMENT

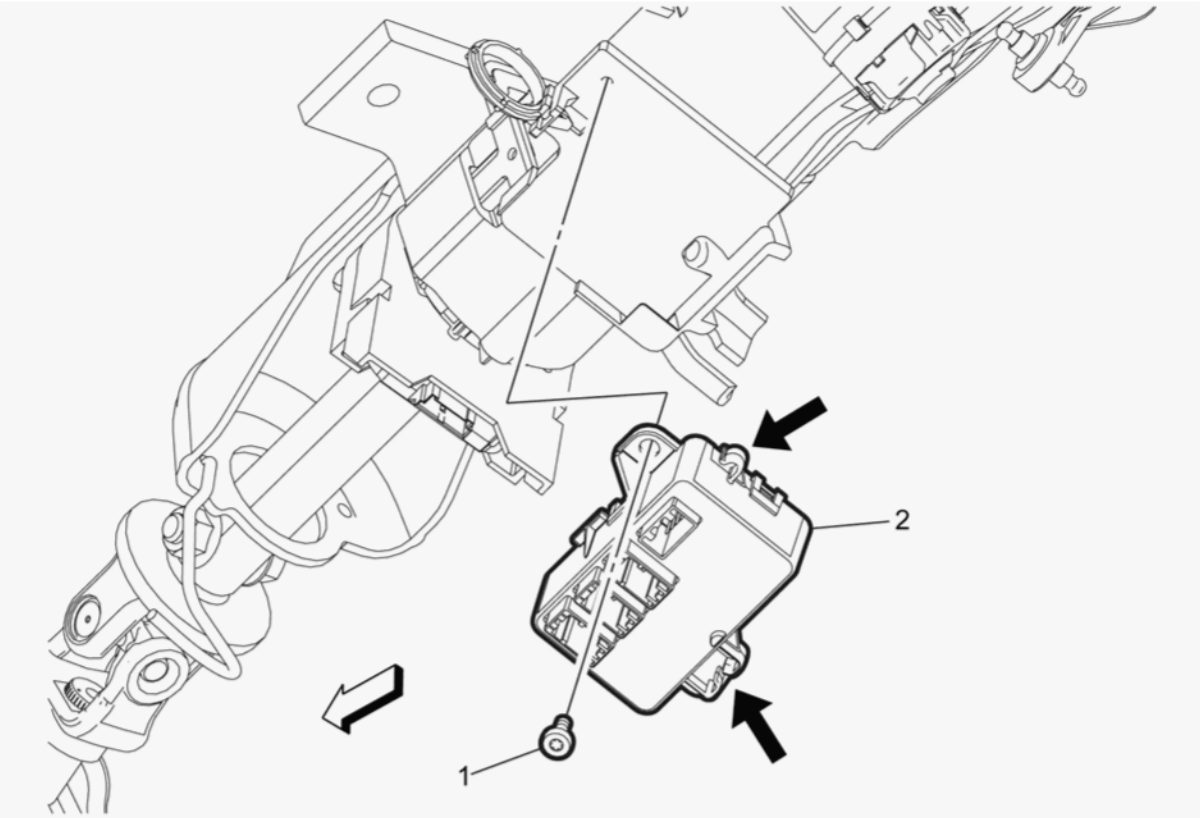

Fig. 38: Steering Column Control Module
Courtesy of GENERAL MOTORS COMPANY

cardiagn.com

Callout	Component Name
Preliminary Procedure Instrument Panel Knee Bolster Replacement (Chevrolet / GMC) Instrument Panel Knee Bolster Replacement (Cadillac)	
1	Steering Column Control Module Bolt **CAUTION:** **Refer to Fastener Caution .** **Tighten** 2 N.m (18 lb in)
2	Steering Column Control Module **Procedure** 1. Disconnect the electrical connectors. 2. Perform the steering column tilt wheel and telescope control module learn procedure. Steering Column Tilt Wheel and Telescope Control Module Learn **NOTE:** **Several wiring harnesses are secured to the steering column control module. Note the routing of the harnesses**

cardiagn.com

Callout	Component Name
	before removing them from the retainers to aid in installation.

TURN SIGNAL SWITCH REPLACEMENT (N33, N37)

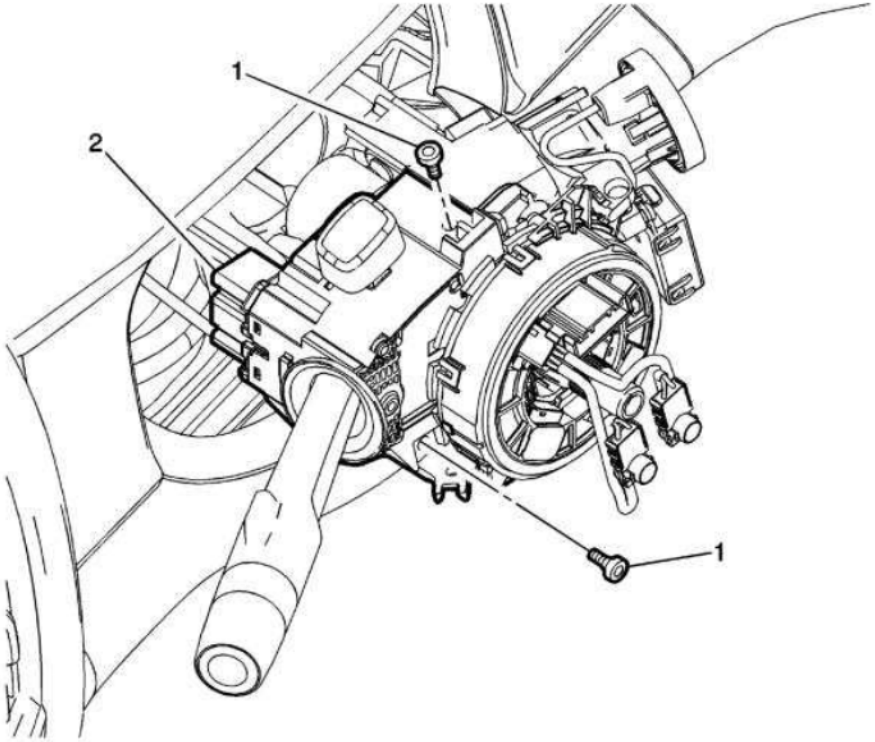

Fig. 39: Turn Signal Switch
Courtesy of GENERAL MOTORS COMPANY

Callout	Component Name

cardiagn.com

Callout	Component Name
Preliminary Procedures 1. **Steering Wheel Replacement (Chevrolet/GMC)Steering Wheel Replacement (Cadillac)** 2. **Steering Column Shroud Replacement (RPO N37)Steering Column Shroud Replacement (RPO N33)**	
1	Turn Signal Switch Bolt (Qty: 2) **CAUTION:** **Refer to** **Fastener Caution** . **Tighten** 2.5 N.m (22 lb in)
2	Turn Signal Switch **Procedure** 1. Disconnect the electrical connectors. 2. Press in the pin on the front of the turn signal switch to avoid interference with the turn signal switch cancel cam position plate.

TURN SIGNAL SWITCH REPLACEMENT (N38)

cardiagn.com

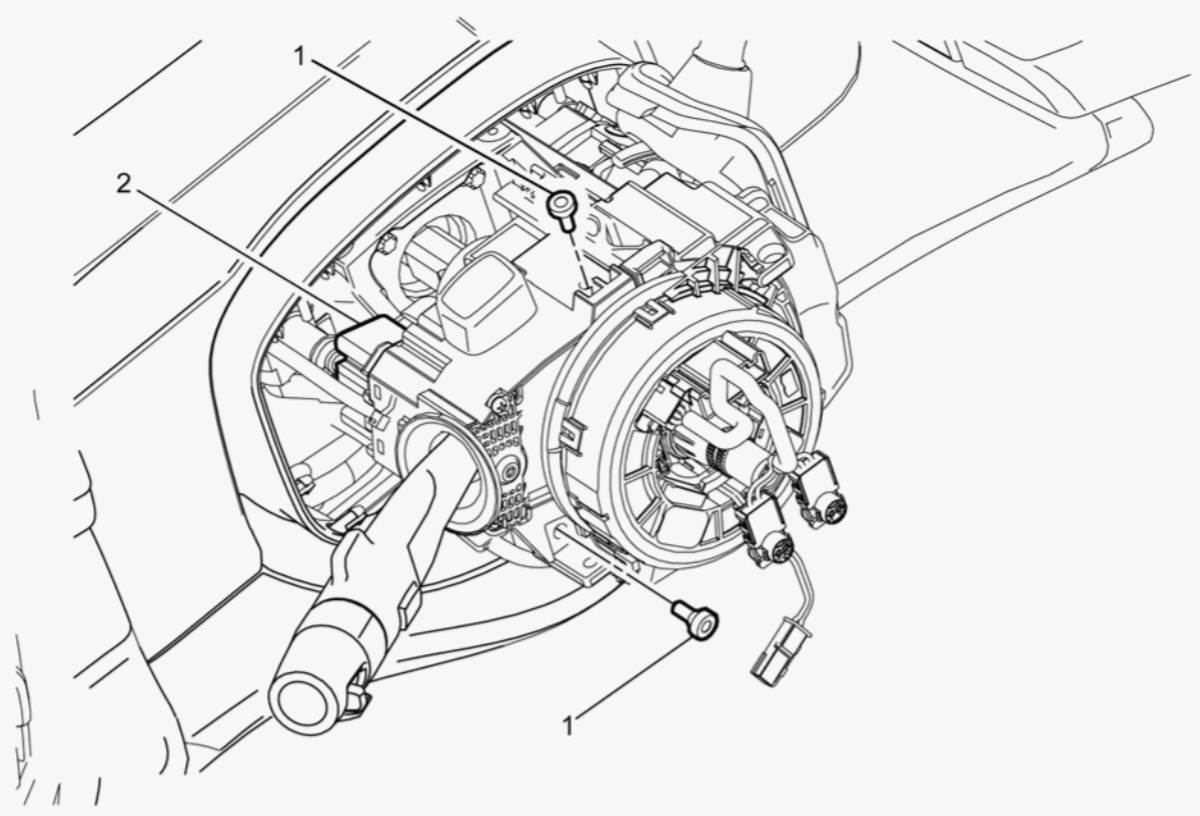

Fig. 40: Turn Signal Switch (N38)
Courtesy of GENERAL MOTORS COMPANY

Callout	Component Name
Preliminary Procedures 1. Steering Wheel Replacement (Chevrolet/GMC)Steering Wheel Replacement (Cadillac) 2. Steering Column Shroud Replacement (RPO N38)	
1	Turn Signal Switch Bolt (Qty: 2) **CAUTION:** **Refer to** **Fastener**

cardiagn.com

Callout	Component Name
	Caution . **Tighten** 2.5 N.m (22 lb in)
2	Turn Signal Switch **Procedure** 1. Disconnect the electrical connectors. 2. Press in the pin on the front of the turn signal switch to avoid interference with the turn signal switch cancel cam position plate.

RANGE SELECTOR LEVER CABLE LEVER REPLACEMENT (N33, N37)

cardiagn.com

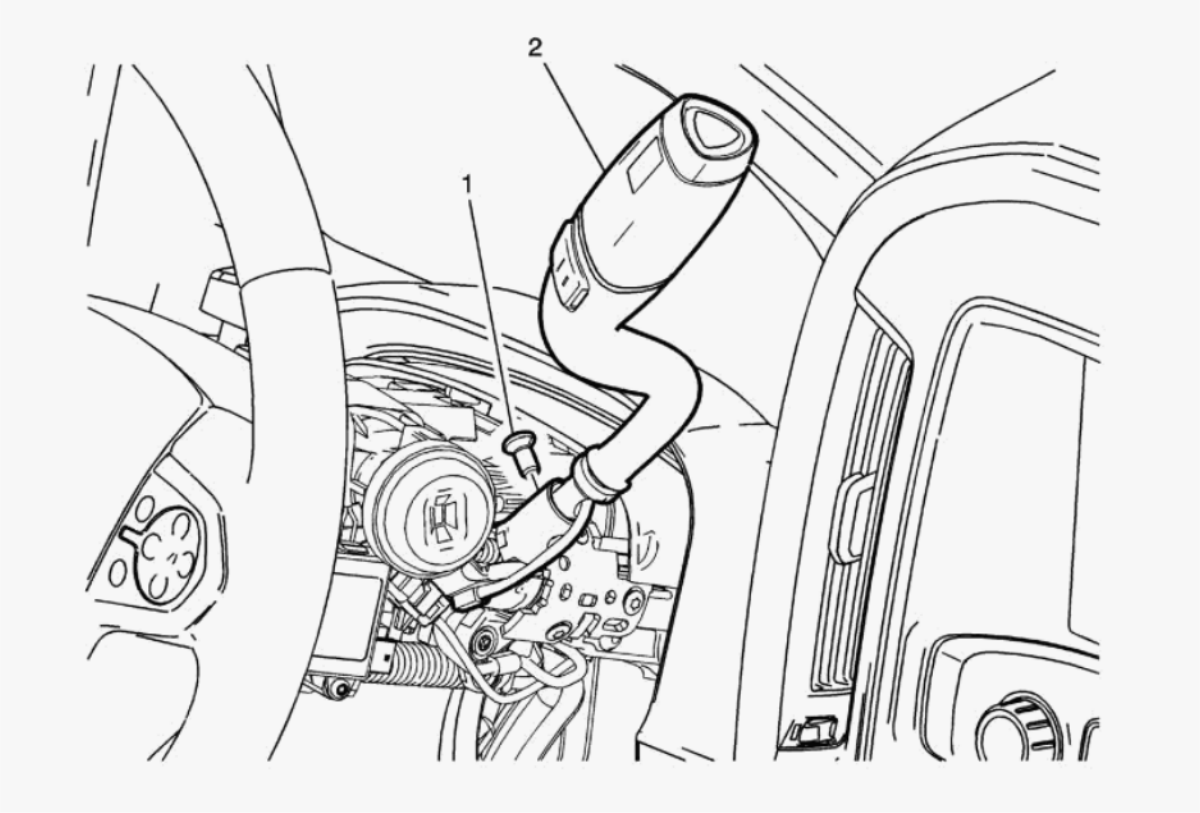

Fig. 41: Automatic Transmission Range Selector Lever Cable Lever
Courtesy of GENERAL MOTORS COMPANY

Callout	Component Name
Preliminary Procedures 1. **Instrument Panel Knee Bolster Replacement (Chevrolet / GMC)** **Instrument Panel Knee Bolster Replacement (Cadillac)** 2. Remove the steering column shroud and the steering column lower shroud closeout. **Steering Column Shroud Replacement (RPO N37)Steering Column Shroud Replacement (RPO N33)**	
1	Automatic Transmission Range Selector Lever Cable Lever Bolt **CAUTION:**

cardiagn.com

Callout	Component Name
	Refer to Fastener Caution . **Procedure** Move the automatic transmission control lever seal, as necessary, to access the automatic transmission range selector lever cable lever bolt. **Tighten** 20 N.m (15 lb ft)
2	Automatic Transmission Range Selector Lever Cable Lever **Procedure** 1. Disconnect the electrical connector. 2. Disconnect the automatic transmission range selector lever cable lever wiring harness from any mounting points. 3. Transfer components as necessary. **NOTE:** • **Note the routing of the automatic transmission range selector lever cable lever wiring harness before removing the cable lever.** • **When**

cardiagn.com

Callout	Component Name
	installing the automatic transmission range selector lever cable lever, ensure the wiring harness is installed in the same routing and mounting positions as noted before removal.

RANGE SELECTOR LEVER CABLE LEVER REPLACEMENT (N38)

cardiagn.com

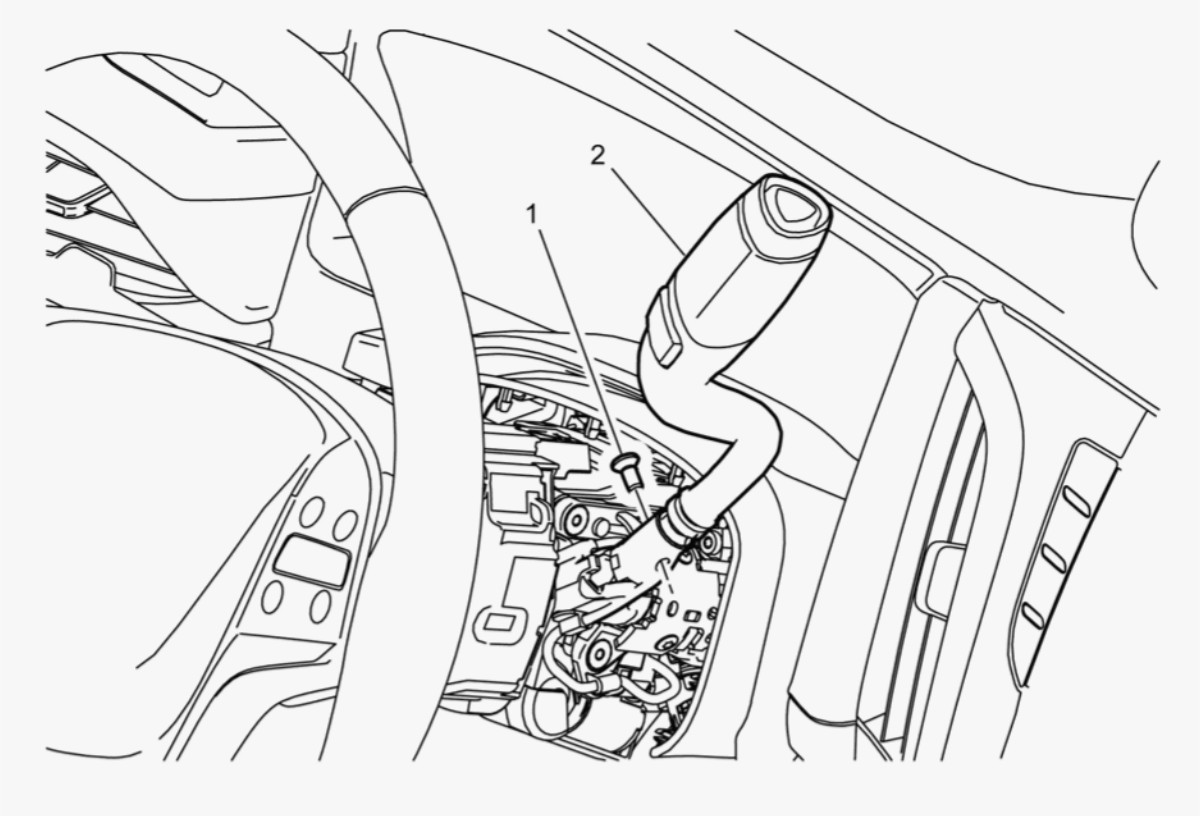

Fig. 42: Range Selector Lever Cable Lever (N38)
Courtesy of GENERAL MOTORS COMPANY

Callout	Component Name
Preliminary Procedures 1. **Instrument Panel Knee Bolster Replacement (Chevrolet / GMC)** **Instrument Panel Knee Bolster Replacement (Cadillac)** 2. Remove the steering column shroud and the steering column lower shroud closeout. **Steering Column Shroud Replacement (RPO N38)**	
1	Automatic Transmission Range Selector Lever Cable Lever Bolt **CAUTION:**

cardiagn.com

Callout	Component Name
	Refer to Fastener Caution . **Procedure** Move the automatic transmission control lever seal, as necessary, to access the automatic transmission range selector lever cable lever bolt. **Tighten** 20 N.m (15 lb ft)
2	Automatic Transmission Range Selector Lever Cable Lever **Procedure** 1. Disconnect the electrical connector. 2. Disconnect the automatic transmission range selector lever cable lever wiring harness from any mounting points. 3. Transfer components as necessary. **NOTE:** • **Note the routing of the automatic transmission range selector lever cable lever wiring harness before removing the cable lever.** • **When**

cardiagn.com

Callout	Component Name
	installing the automatic transmission range selector lever cable lever, ensure the wiring harness is installed in the same routing and mounting positions as noted before removal.

TRANSMISSION CONTROL REPLACEMENT (N33, N37)

Removal Procedure

1. Remove Steering Column -**Steering Column Replacement (N33, N37)**
2. Remove Range Selector Lever Cable Lever -**Range Selector Lever Cable Lever Replacement (N33, N37)**

cardiagn.com

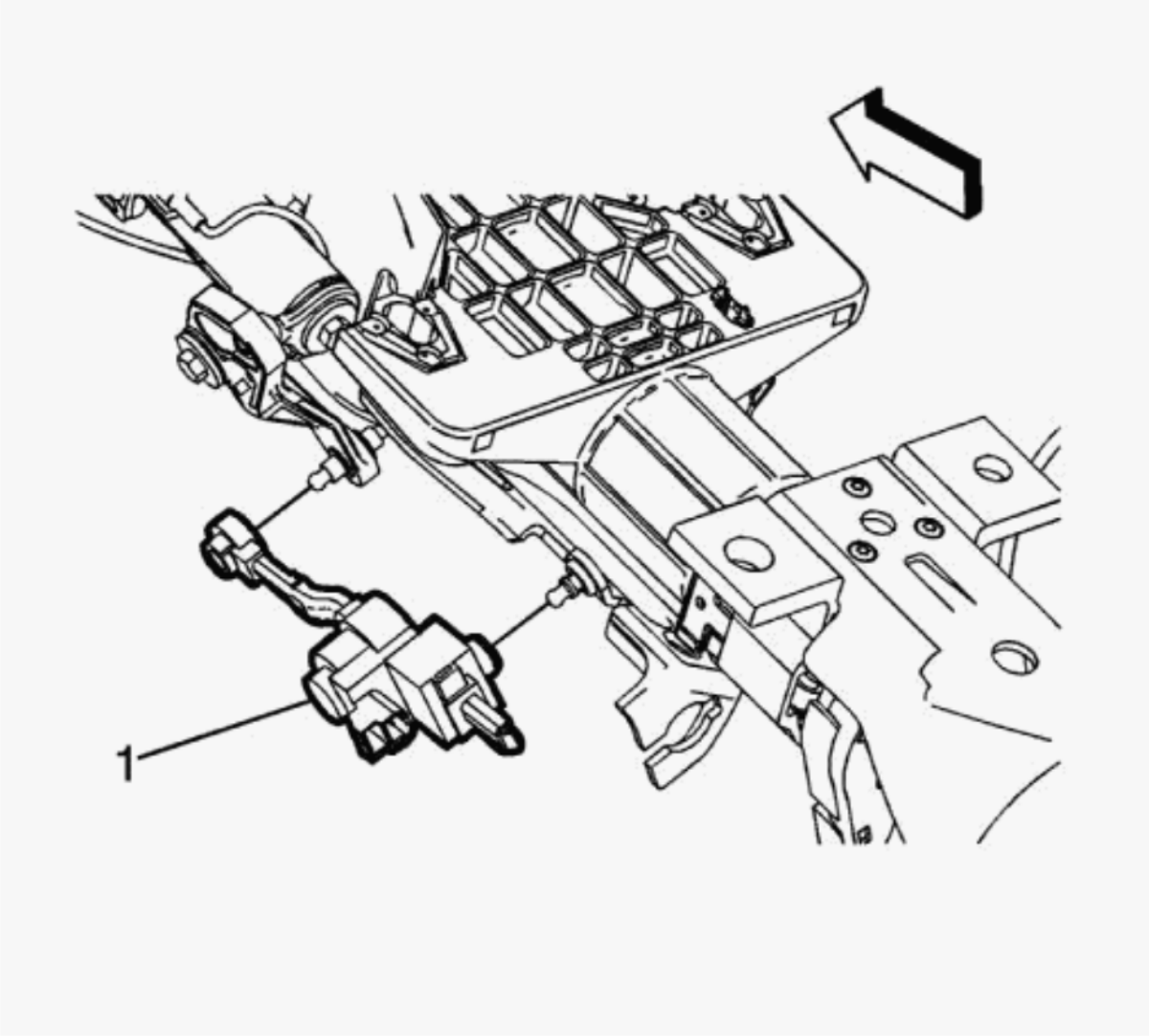

Fig. 43: Automatic Transmission Shift Lock Control Solenoid
Courtesy of GENERAL MOTORS COMPANY

CAUTION: **Do not use excessive force when removing the automatic transmission shift lock control from the steering column. Using excessive force may cause damage to the automatic transmission shift lock control and/or the steering column.**

3. Remove the automatic transmission shift lock control solenoid (1) from the automatic transmission control bracket. Automatic Transmission

cardiagn.com

Shift Lock Control Actuator Replacement (N33, N37)

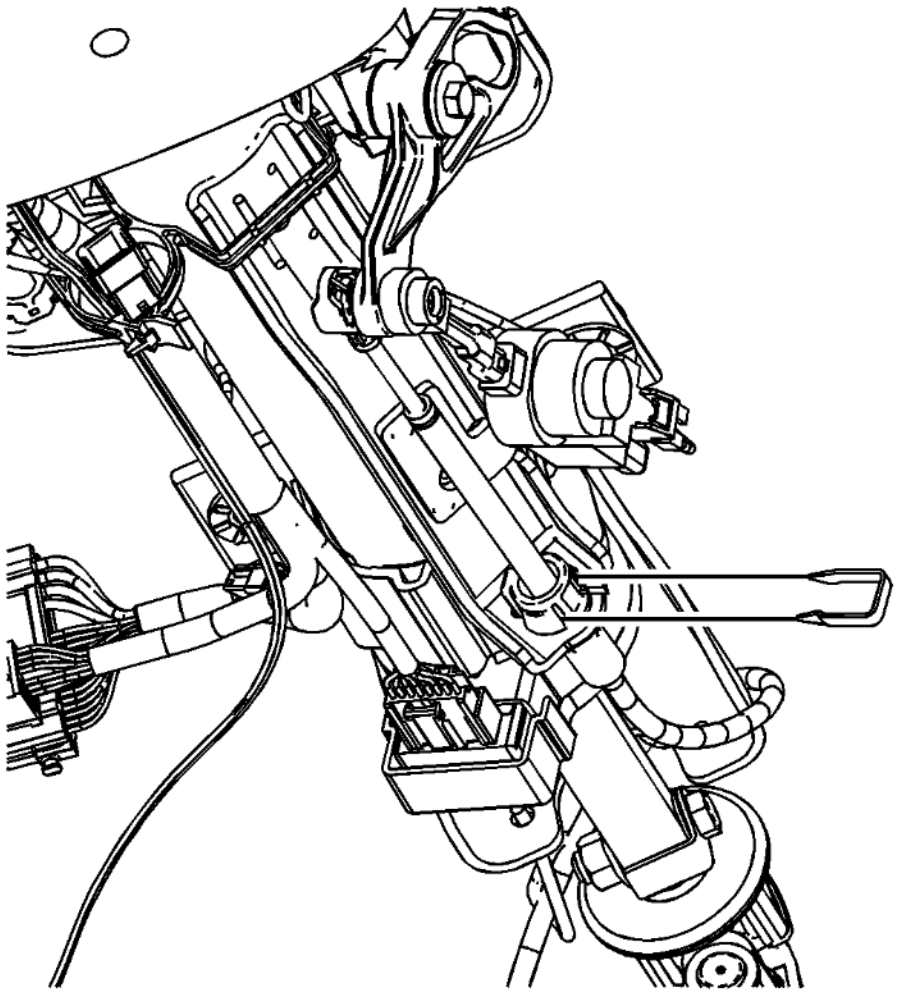

Fig. 44: View Of Steering Cable Retainer On Steering Column
Courtesy of GENERAL MOTORS COMPANY

4. Disconnect the range selector lever cable and set aside. **Range Selector Lever Cable Replacement**

cardiagn.com

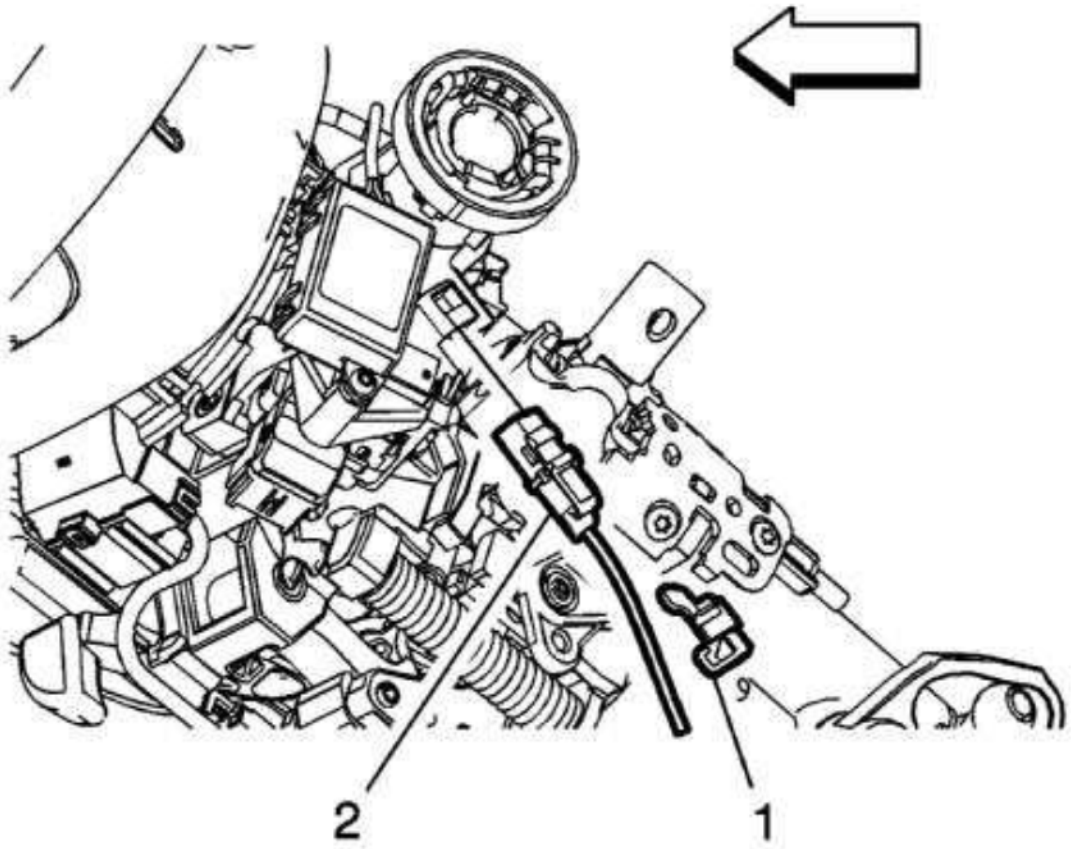

Fig. 45: Automatic Transmission Park Lock Cable Retainer
Courtesy of GENERAL MOTORS COMPANY

NOTE: **The ignition lock cylinder should be in the OFF-LOCK position.**

5. Remove the automatic transmission park lock cable retainer (1).
6. Disconnect the automatic transmission park lock cable (2) from the ignition lock cylinder case.

cardiagn.com

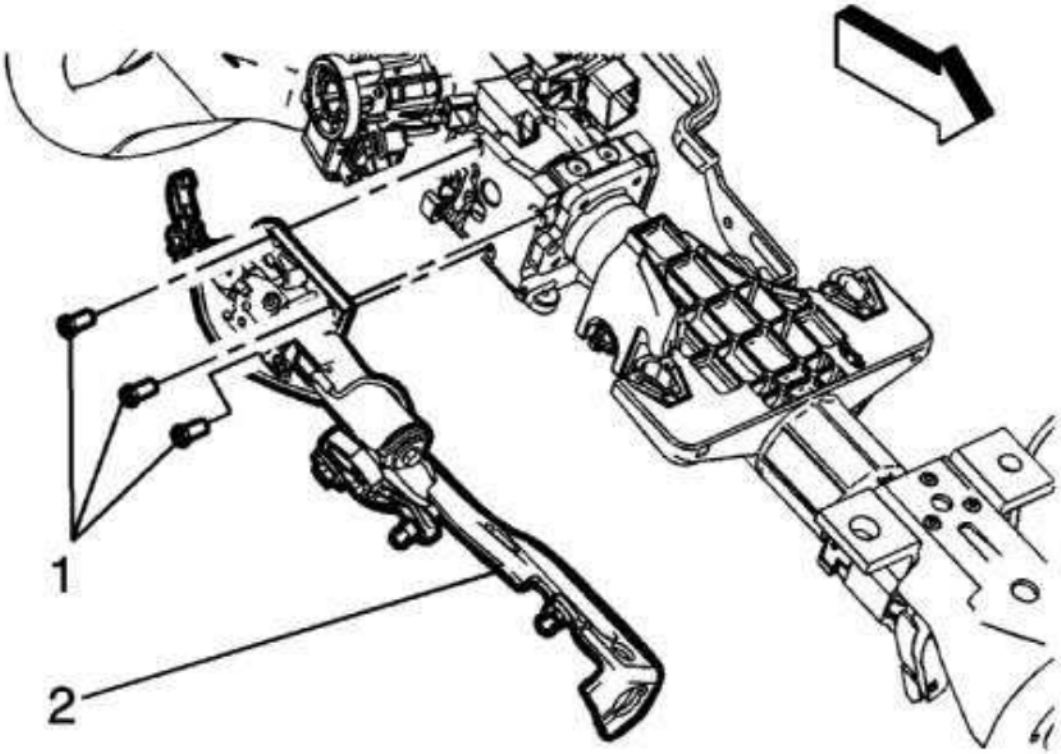

Fig. 46: Automatic Transmission Control Bolts
Courtesy of GENERAL MOTORS COMPANY

7. Remove the automatic transmission control bolts (1).
8. Remove the automatic transmission control (2) from the steering column.

Installation Procedure

cardiagn.com

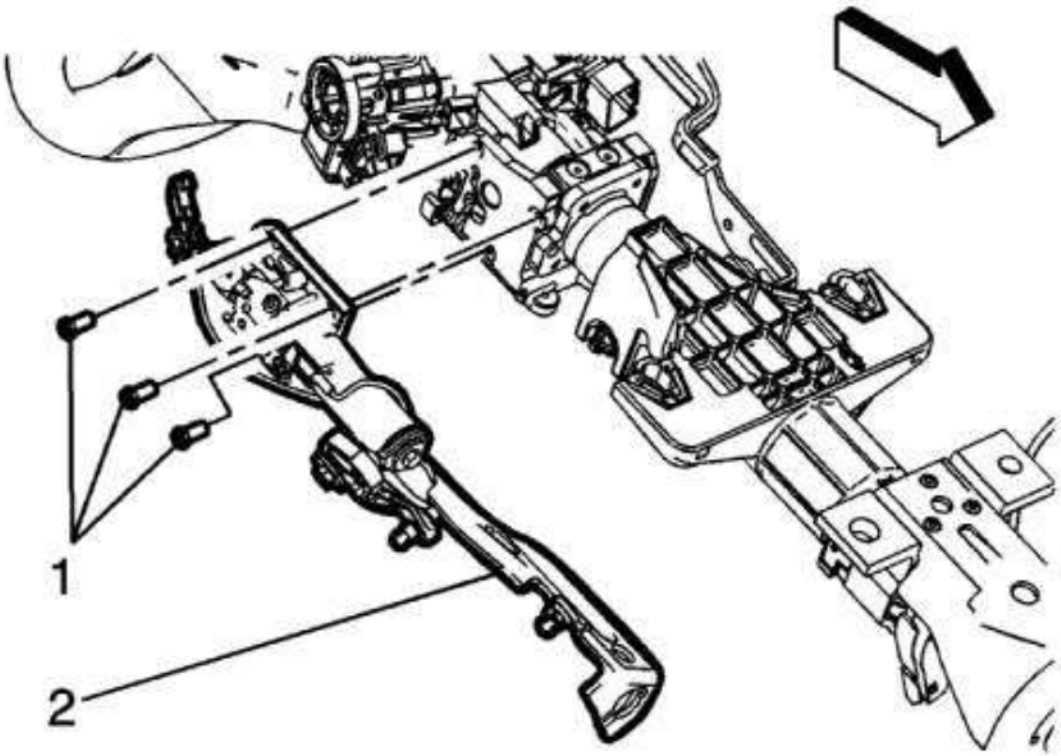

Fig. 47: Automatic Transmission Control Bolts
Courtesy of GENERAL MOTORS COMPANY

1. Position the automatic transmission control (2) on the steering column.

CAUTION: **Refer to Fastener Caution .**

2. Install the automatic transmission control bolts (1) and tighten to 10 N.m (89 lb in).

cardiagn.com

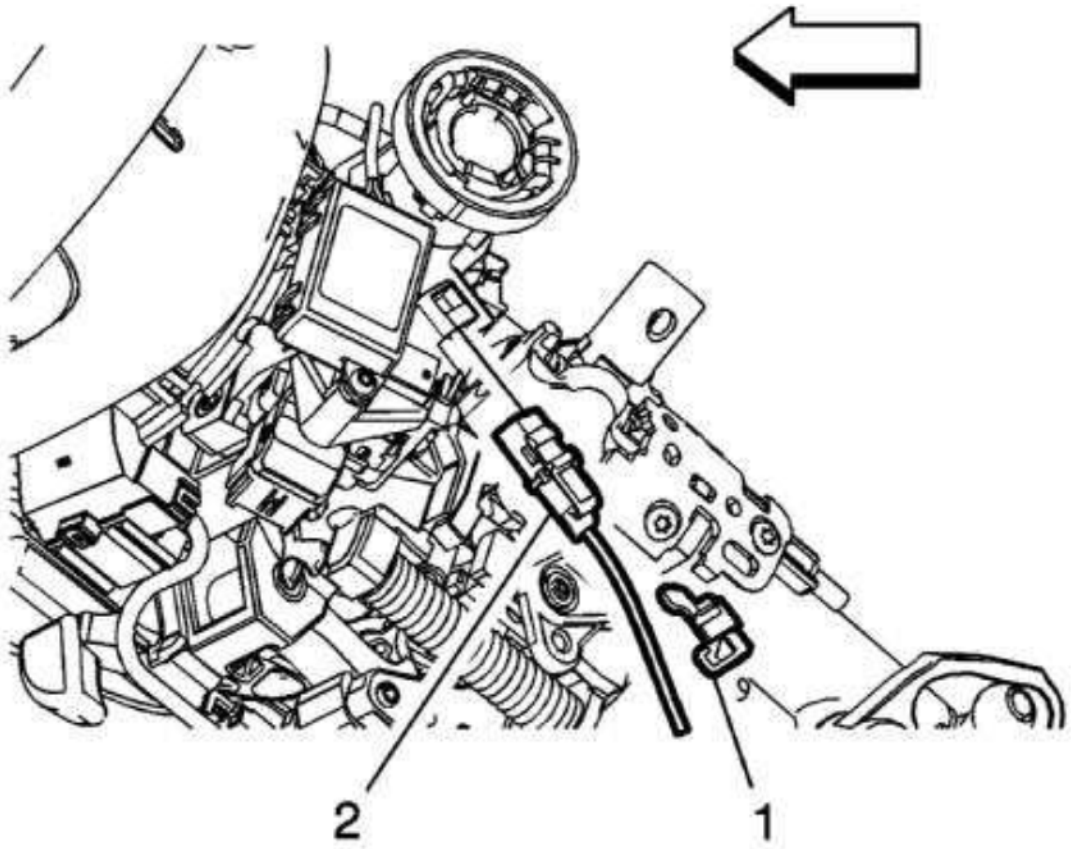

Fig. 48: Automatic Transmission Park Lock Cable Retainer
Courtesy of GENERAL MOTORS COMPANY

3. Connect the automatic transmission park lock cable (2) to the ignition lock cylinder case.
    1. Place the ignition lock cylinder in the OFF-LOCK position.
    2. Place the automatic transmission control in the PARK position.
    3. Push the automatic transmission park lock cable into the ignition lock cylinder case until the lock tab engages.

cardiagn.com

4. Install the automatic transmission park lock cable lock clip (1).
5. Connect the range selector lever cable. **Range Selector Lever Cable Replacement**

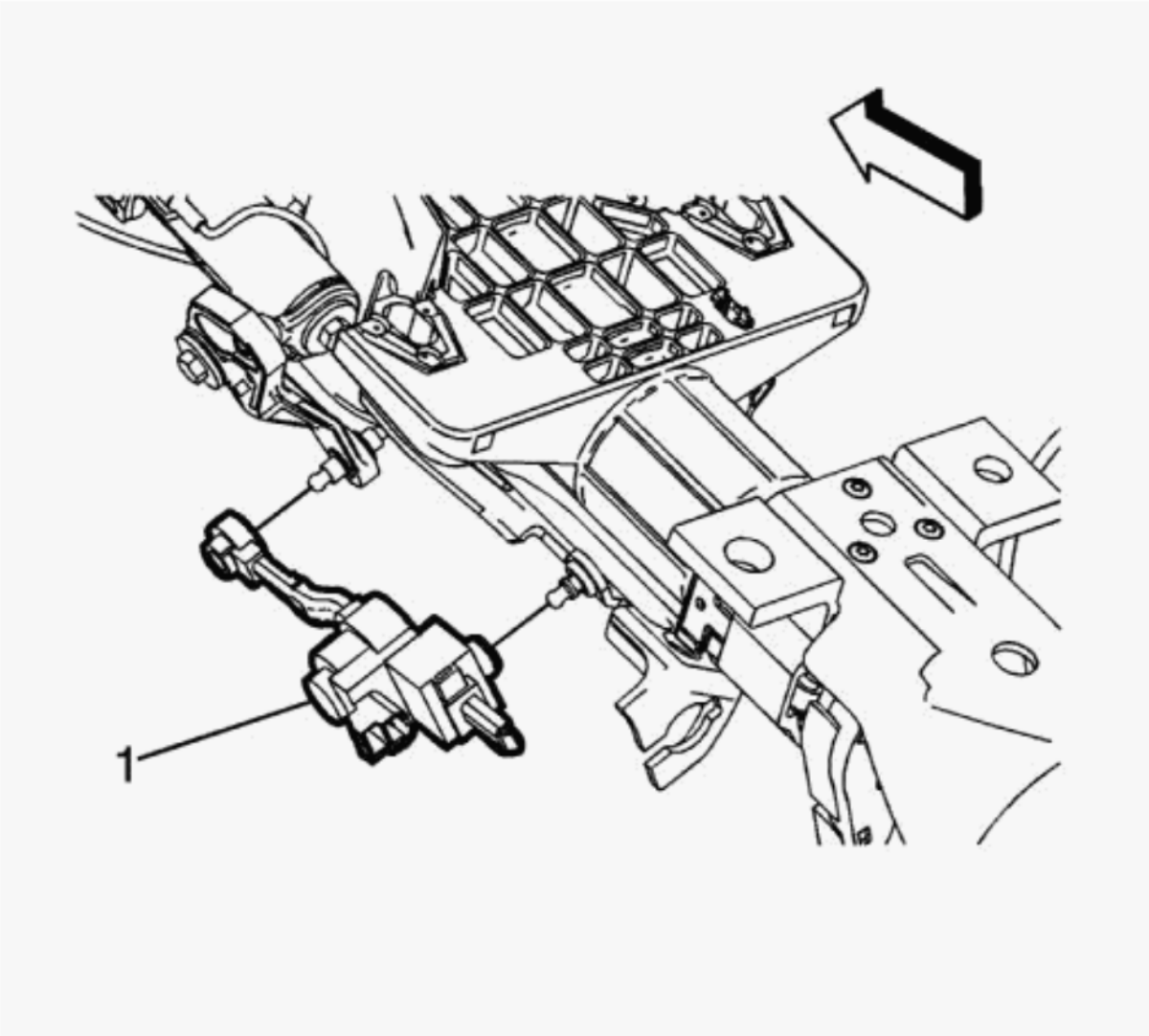

Fig. 49: Automatic Transmission Shift Lock Control Solenoid
Courtesy of GENERAL MOTORS COMPANY

6. Connect the automatic transmission shift lock control solenoid (1) to the automatic transmission control bracket. **Automatic Transmission Shift Lock Control Actuator Replacement (N33, N37)**

cardiagn.com

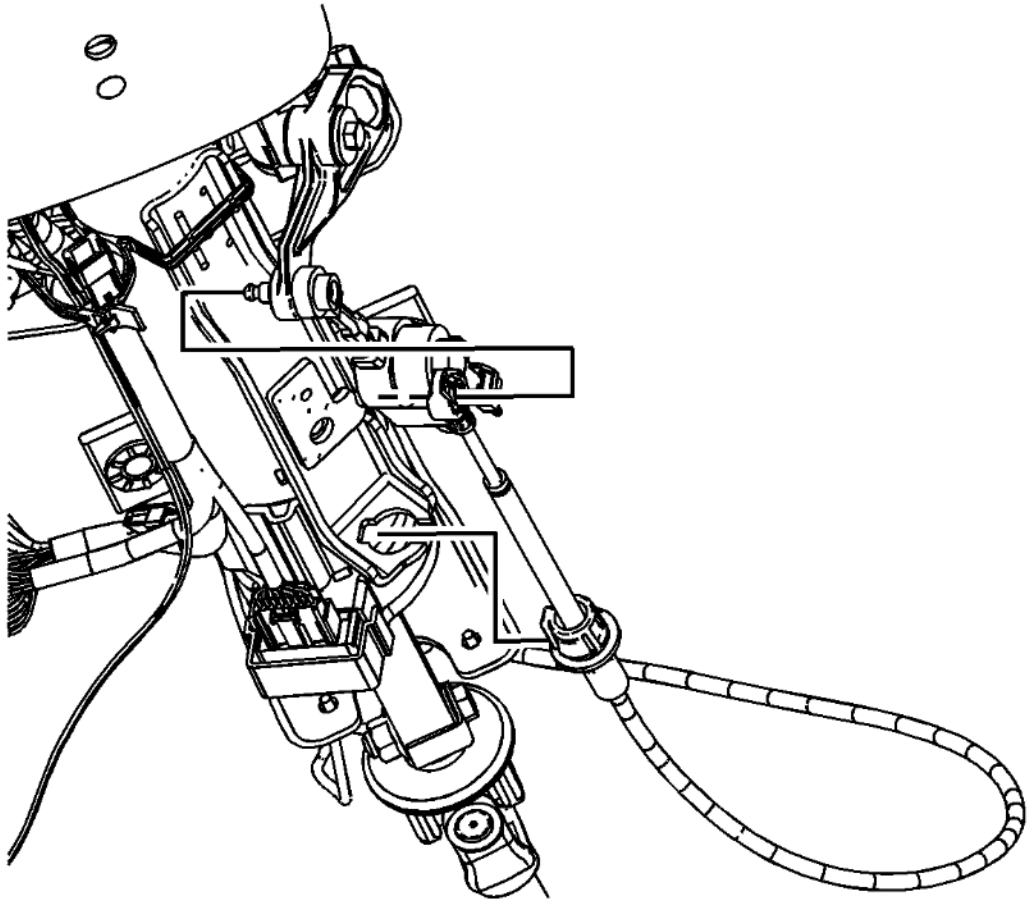

Fig. 50: View Of Cable, Steering Column Ball Stud & Steering Column Bracket
Courtesy of GENERAL MOTORS COMPANY

7. Install the automatic transmission range selector lever cable lever. **Range Selector Lever Cable Lever Replacement (N33, N37)**
8. Install Steering Column -**Steering Column Replacement (N33, N37)**

TRANSMISSION CONTROL REPLACEMENT (N38)

cardiagn.com

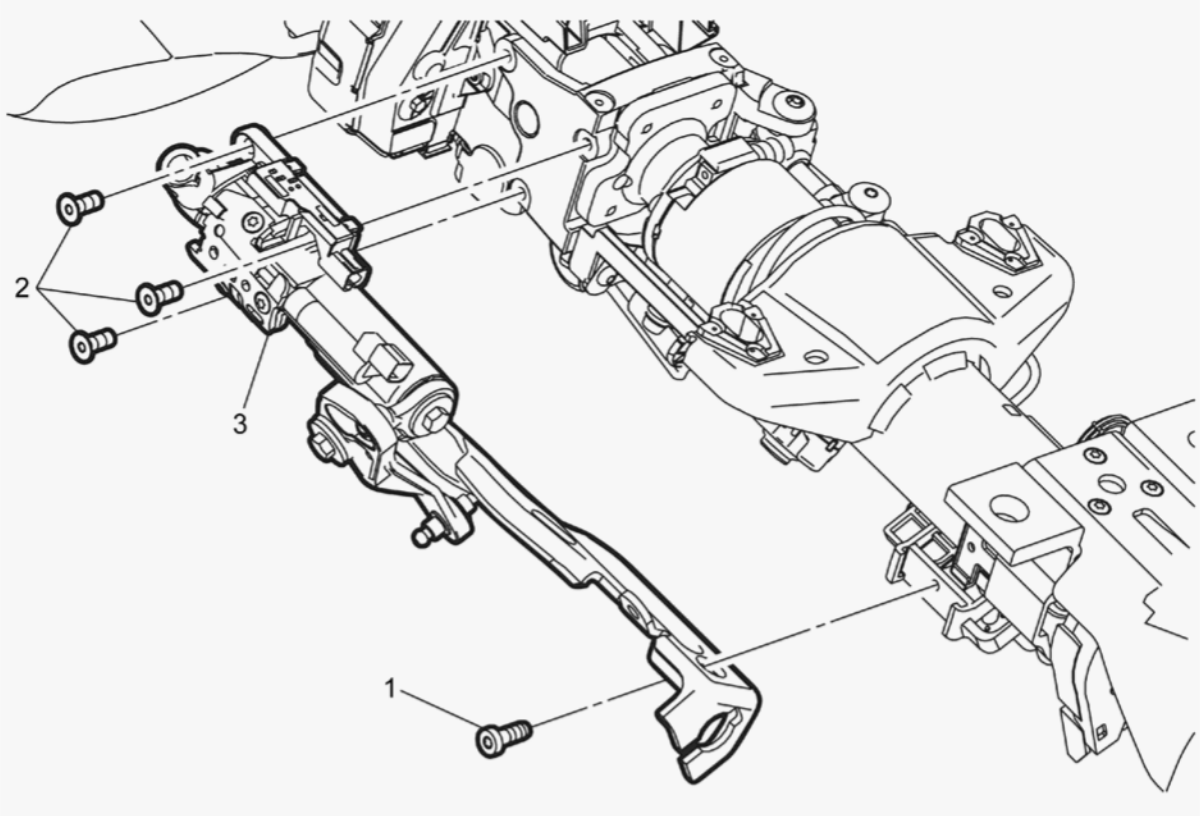

Fig. 51: Transmission Control (N38)
Courtesy of GENERAL MOTORS COMPANY

Callout	Component Name
Preliminary Procedures 1. Steering Column Replacement (N33, N37) 2. Range Selector Lever Cable Lever Replacement (N33, N37)	
1	Automatic Transmission Control Bracket Bolt **CAUTION:** **Refer to** **Fastener**

cardiagn.com

Callout	Component Name
	Caution . **Tighten** 10 N.m (89 lb in)
2	Automatic Transmission Control Bolt (Qty: 3) **Tighten** 10 N.m (89 lb in)
3	Automatic Transmission Control **Procedure** 1. Disconnect the electrical connectors. 2. Transfer components as necessary.

STEERING COLUMN TILT WHEEL RELEASE LEVER REPLACEMENT

cardiagn.com

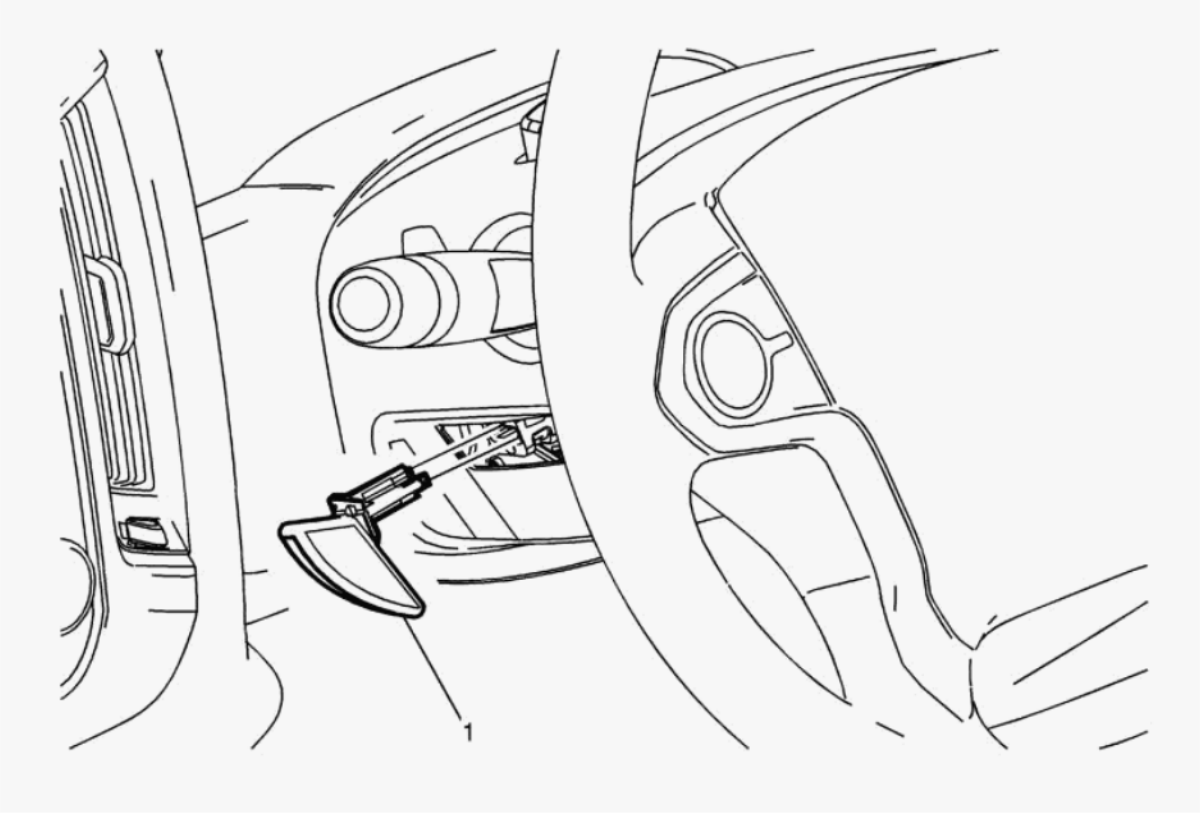

Fig. 52: Steering Column Tilt Wheel Release Lever
Courtesy of GENERAL MOTORS COMPANY

Callout	Component Name
1	Steering Column Tilt Wheel Release Lever **Procedure** Remove the steering column tilt wheel release lever by pulling outward.

STEERING COLUMN TILT WHEEL ACTUATOR MOTOR REPLACEMENT

cardiagn.com

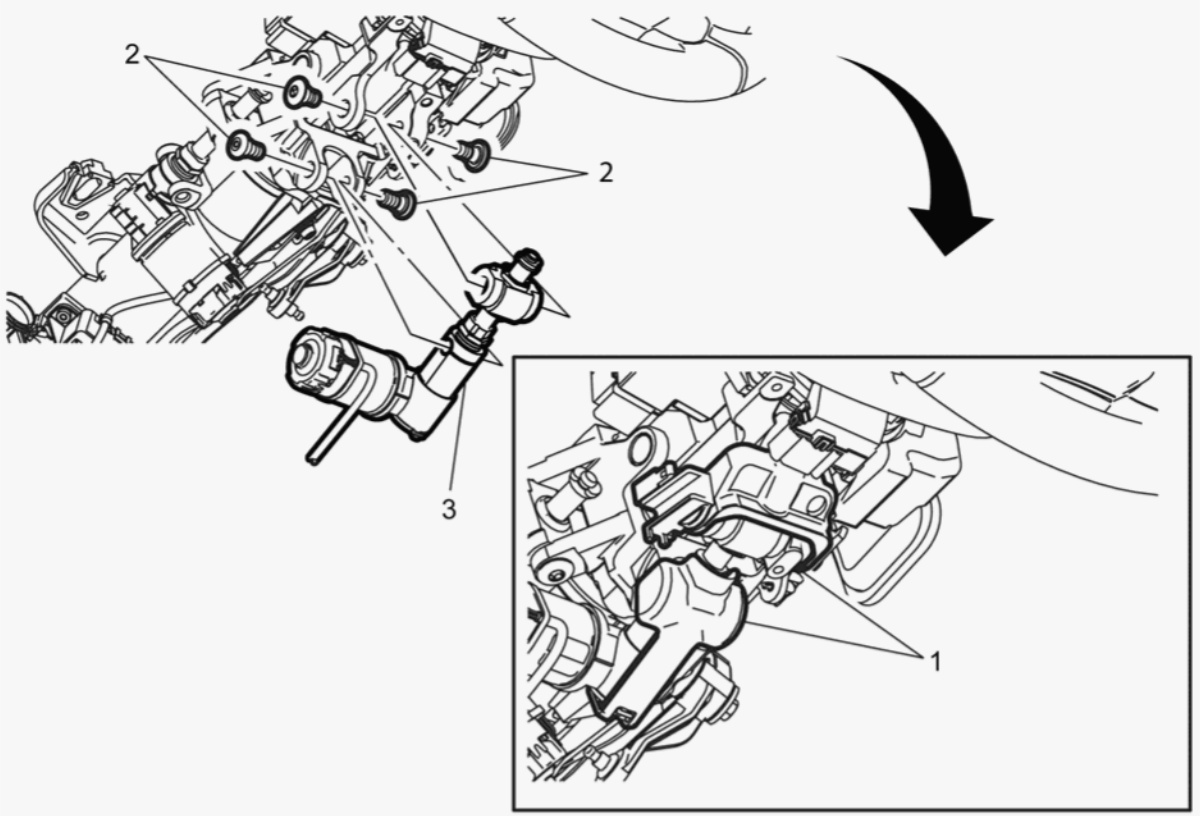

Fig. 53: Steering Column Tilt Wheel Actuator Motor
Courtesy of GENERAL MOTORS COMPANY

Callout	Component Name
Preliminary Procedure Steering Column Replacement (N33, N37)Steering Column Replacement (N38)	
1	Steering Column Tilt Wheel Actuator Motor Cover (Qty: 2)
2	Steering Column Tilt Wheel Actuator Motor Bolt (Qty: 4) **CAUTION:** **Refer to** **Fastener** **Caution** .

cardiagn.com

Callout	Component Name
	Tighten 15 N.m (11 lb ft)
3	Steering Column Tilt Wheel Actuator Motor **Procedure** 1. Disconnect the electrical connector. 2. Perform the steering column tilt wheel and telescope control module learn procedure. **Steering Column Tilt Wheel and Telescope Control Module Learn**

STEERING WHEEL PAD ACCESSORY WIRING HARNESS REPLACEMENT (CADILLAC)

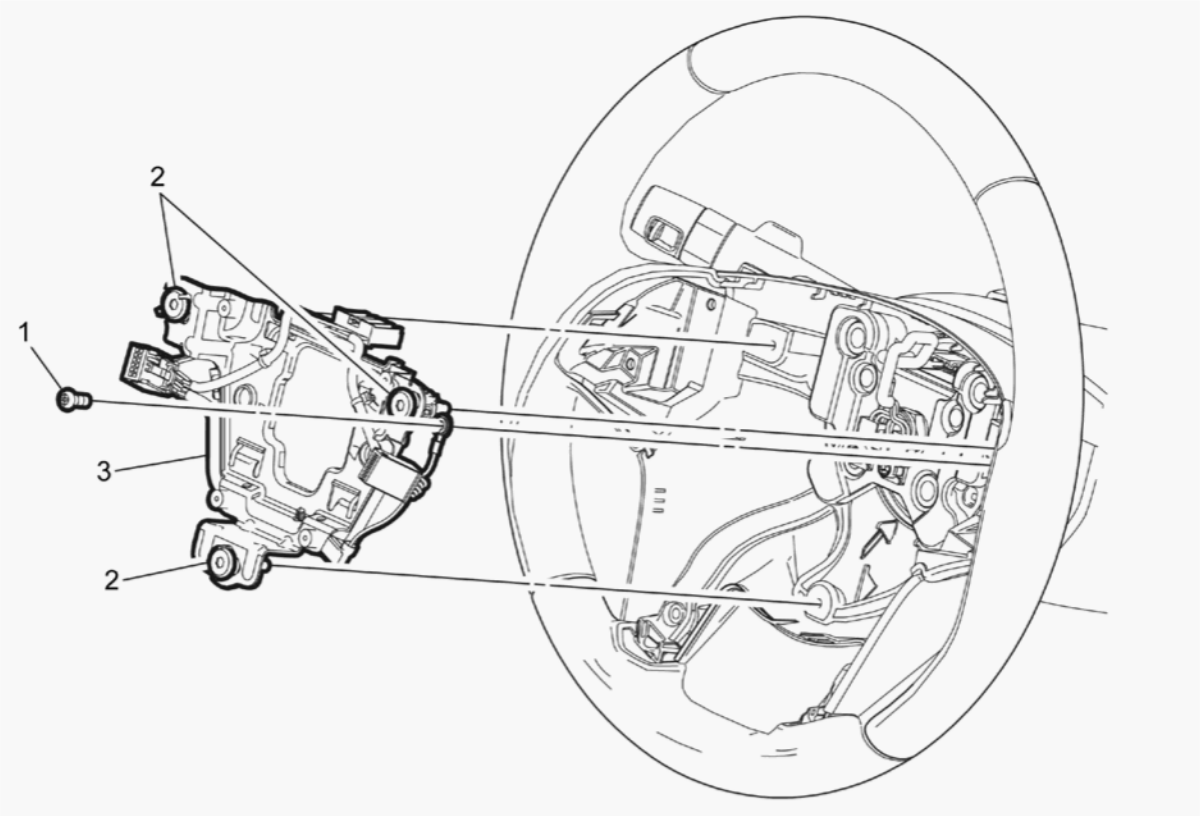

cardiagn.com

Fig. 54: Steering Wheel Pad Accessory Wiring Harness (Cadillac)
Courtesy of GENERAL MOTORS COMPANY

Callout	Component Name
Preliminary Procedure Remove the steering wheel spoke cover. Refer to **Steering Wheel Spoke Cover Replacement (LH with Cruise Control Switch)Steering Wheel Spoke Cover Replacement (RH with Radio Control Switch)Steering Wheel Spoke Cover Replacement (Cadillac)**.	
1	Steering Wheel Pad Accessory Wiring Ground Bolt **CAUTION:** **Refer to** **Fastener Caution** . **Tighten** 2.5 N.m (22 lb in)
2	Steering Wheel Horn Switch Bolt (Qty: 3) **Tighten** 8 N.m (71 lb in)
3	Steering Wheel Pad Accessory Wiring Harness **Procedure** Disconnect any electrical connectors as needed.

STEERING WHEEL HEAT CONTROL MODULE REPLACEMENT

cardiagn.com

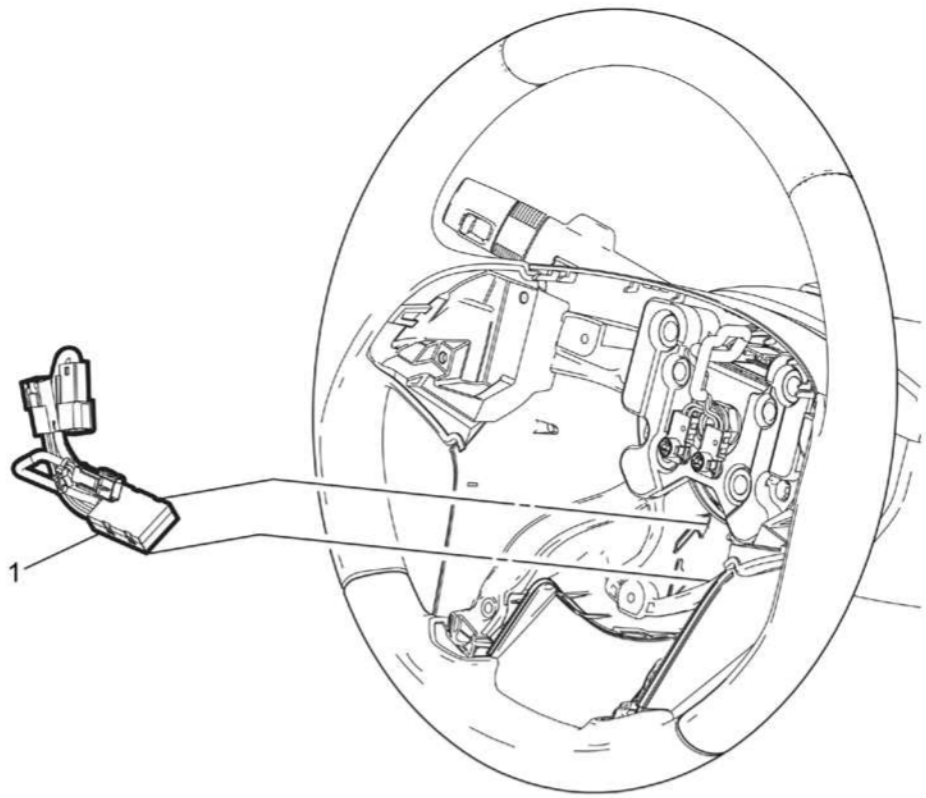

Fig. 55: Steering Wheel Heat Control Module
Courtesy of GENERAL MOTORS COMPANY

Callout	Component Name
Preliminary Procedure Remove the steering wheel pad accessory wiring harness. Refer to **Steering Wheel Pad Accessory Wiring Harness Replacement (Cadillac)**.	
1	Steering Wheel Heat Module **Procedure** Disconnect any electrical connectors as needed.

STEERING WHEEL REPLACEMENT (CHEVROLET/GMC)

cardiagn.com

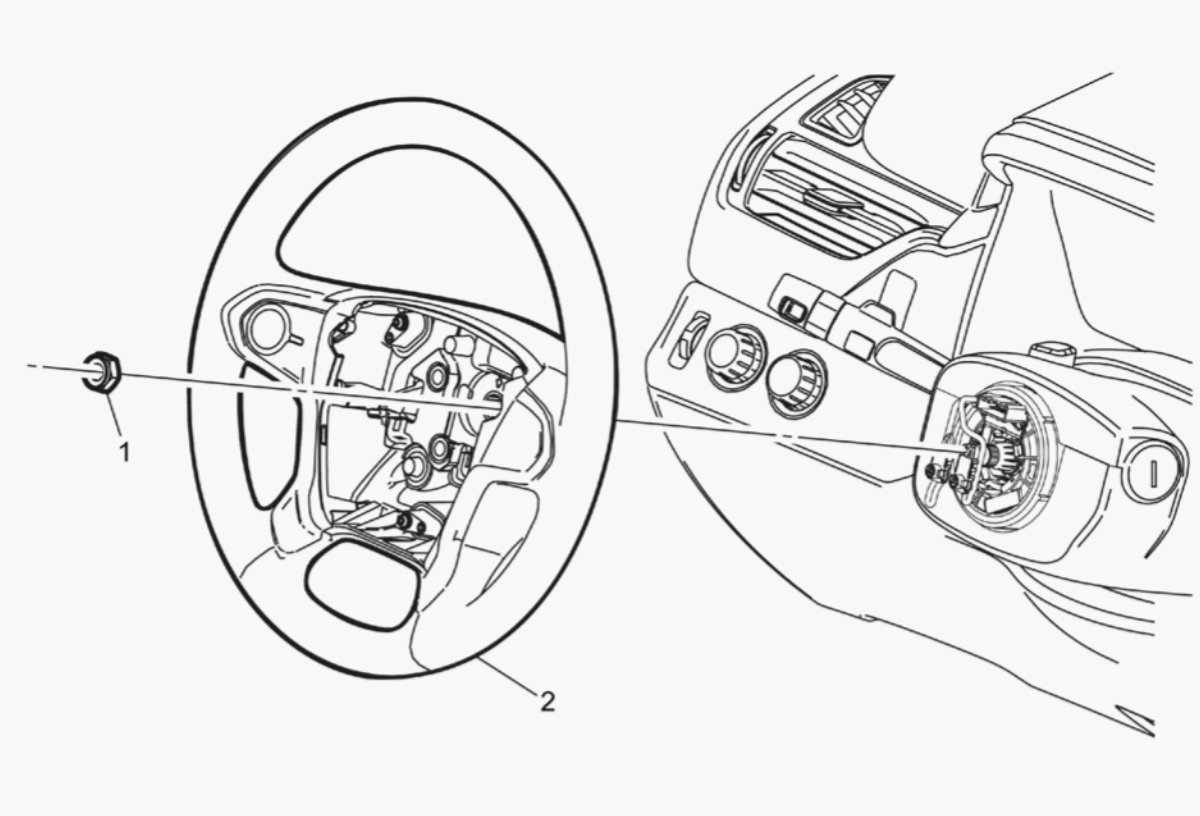

Fig. 56: Steering Wheel (Chevrolet/GMC)
Courtesy of GENERAL MOTORS COMPANY

Callout	Component Name
WARNING: Refer to SIR Warning .	
WARNING: Refer to SIR Inflator Module Handling and Storage	

cardiagn.com

Callout	Component Name
Warning . **Preliminary Procedure** **Steering Wheel Airbag Replacement (Chevrolet / GMC)**	
1	Steering Wheel Nut **CAUTION:** **Refer to Fastener Caution .** **Tighten** 37 N.m (27 lb ft)
2	Steering Wheel **CAUTION:** **Do not hammer on the end of the steering column shaft. Hammering could loosen the plastic injections which maintain the steering column rigidity.** **Procedure**

cardiagn.com

Callout	Component Name
	1. Disconnect the electrical connectors. 2. Install the steering wheel nut until 2 to 3 threads are engaged. 3. Wiggle the steering wheel until the wheel disengages completely. 4. Remove Steering Wheel Nut 5. Remove Steering Wheel 6. Transfer components as necessary.

STEERING WHEEL REPLACEMENT (CADILLAC)

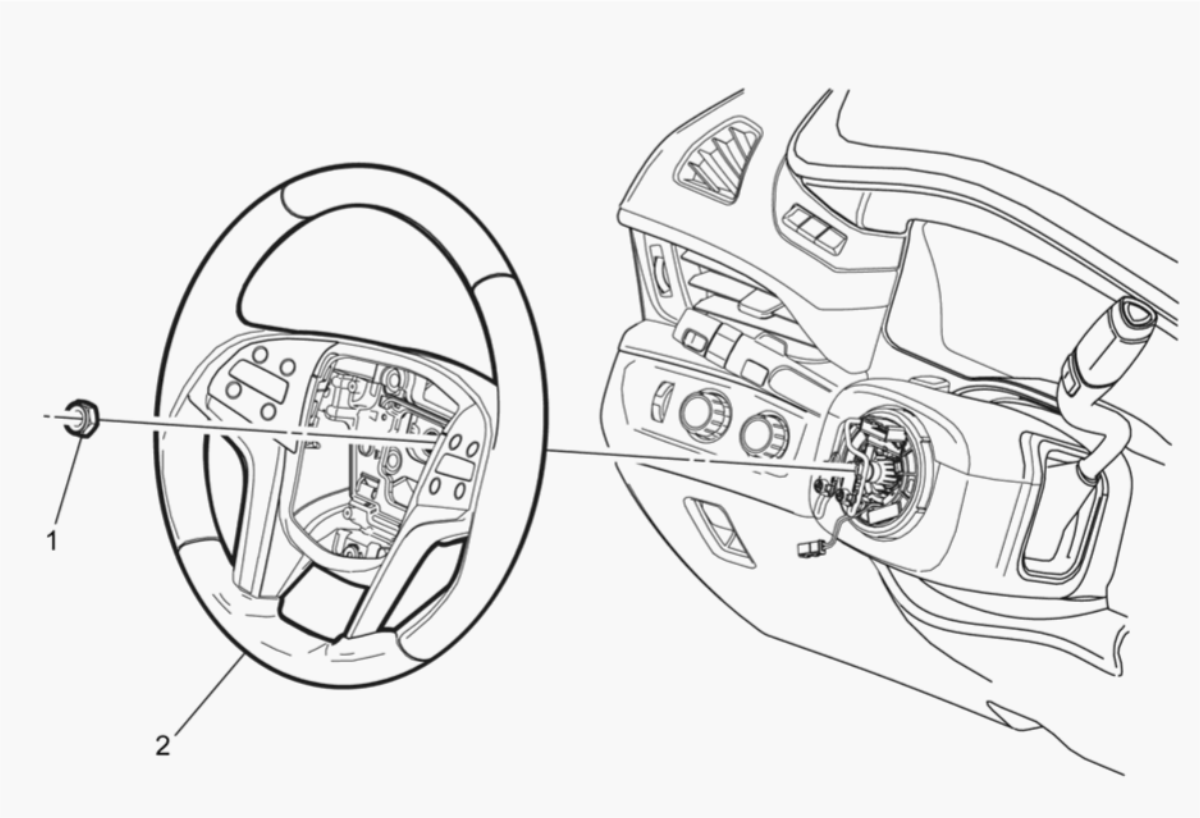

Fig. 57: Steering Wheel (Cadillac)
Courtesy of GENERAL MOTORS COMPANY

cardiagn.com

Callout	Component Name
WARNING: **Refer to SIR Warning .** **WARNING:** **Refer to SIR Inflator Module Handling and Storage Warning .** **Preliminary Procedure Steering Wheel Airbag Replacement (Cadillac)**	
1	Steering Wheel Nut **CAUTION:** **Refer to Fastener Caution .** **Tighten** 37 N.m (27 lb ft)
2	Steering Wheel **CAUTION:** **Do not hammer on the end of the steering column shaft. Hammering could loosen**

cardiagn.com

Callout	Component Name
	the plastic injections which maintain the steering column rigidity. **Procedure** 1. Disconnect the electrical connectors. 2. Install the steering wheel nut until 2 to 3 threads are engaged. 3. Wiggle the steering wheel until the wheel disengages completely. 4. Remove Steering Wheel Nut 5. Remove Steering Wheel 6. Transfer components as necessary.

STEERING WHEEL SPOKE COVER REPLACEMENT (LH WITH CRUISE CONTROL SWITCH)

cardiagn.com

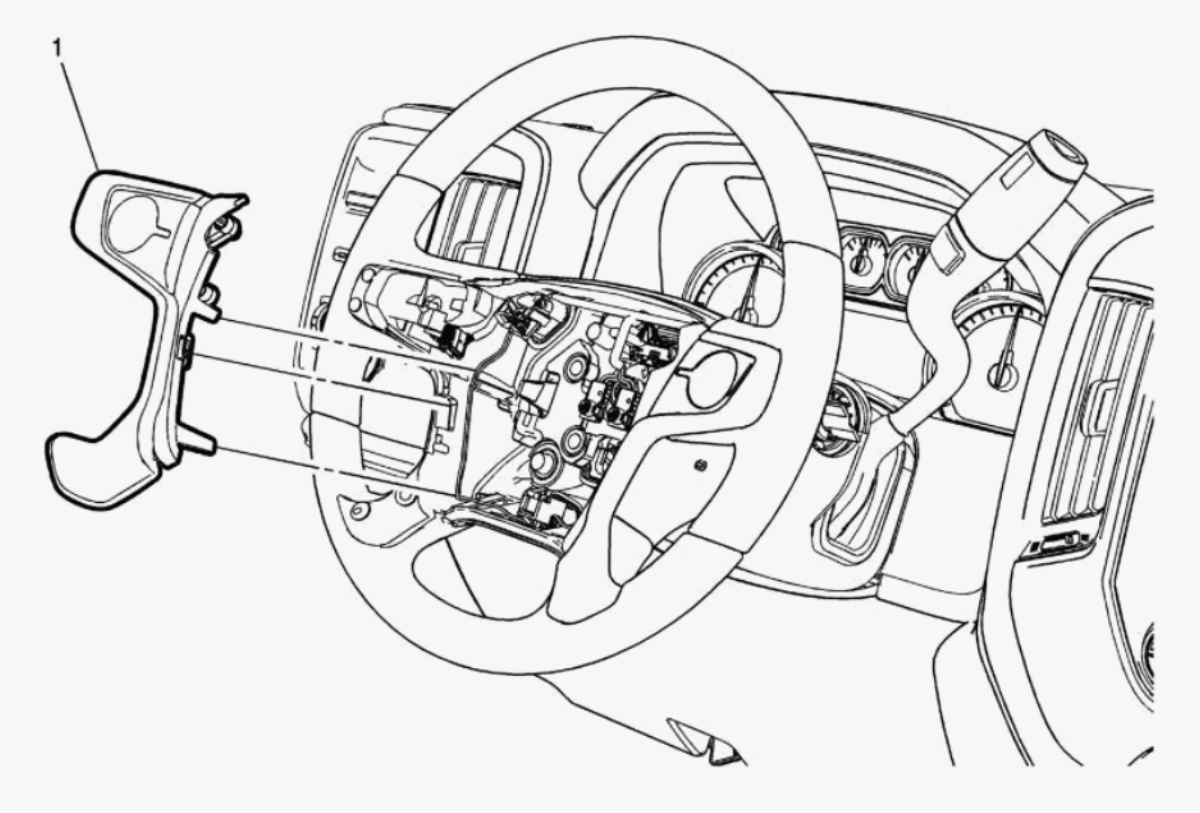

Fig. 58: Steering Wheel Spoke Cover (LH with Cruise Control Switch)
Courtesy of GENERAL MOTORS COMPANY

Callout	Component Name
Preliminary Procedures 1. **Steering Wheel Airbag Replacement (Chevrolet / GMC)** **Steering Wheel Airbag Replacement (Cadillac)** 2. **Radio Control Switch Replacement - Rear**	
1	Steering Wheel Spoke Cover Fastener **CAUTION:** **Refer to** **Fastener**

cardiagn.com

Callout	Component Name
	Caution .
2	Steering Wheel Spoke Cover **Procedure** 1. Use the appropriate tool to gently release the retaining tabs on the cover. 2. Disconnect the electrical connector. 3. Transfer components as necessary. **NOTE:** **Gently release the tabs one by one, using care to avoid snapping any tabs off.**

STEERING WHEEL SPOKE COVER REPLACEMENT (RH WITH RADIO CONTROL SWITCH)

cardiagn.com

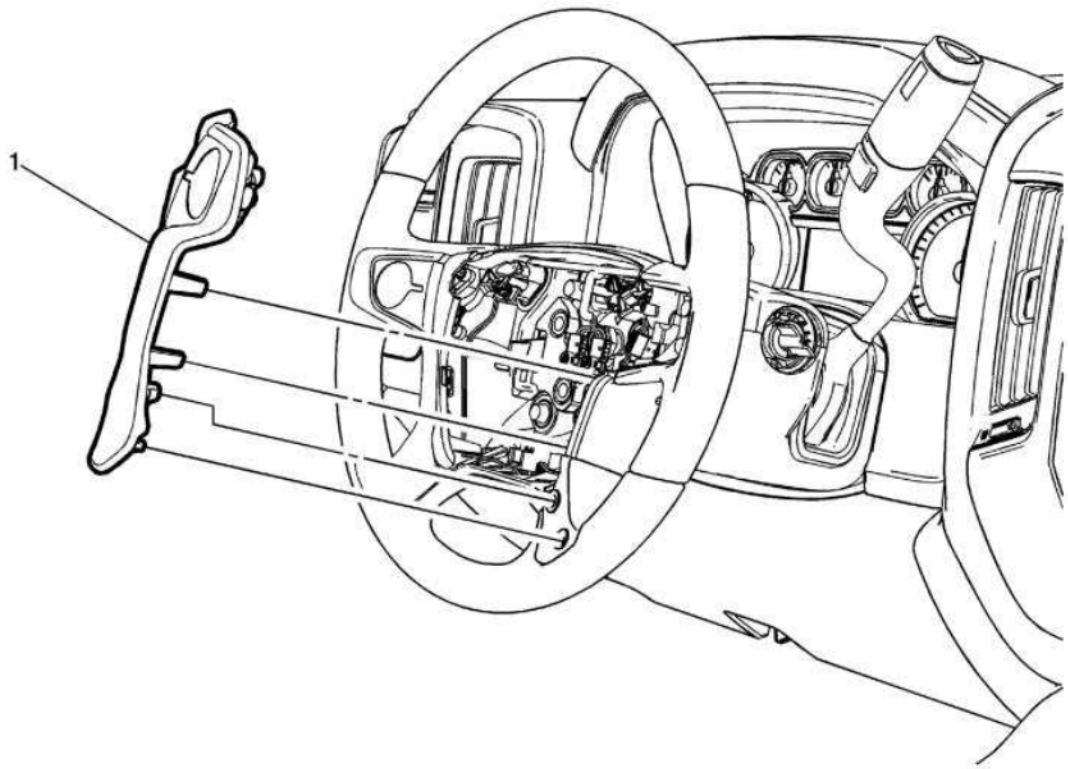

Fig. 59: Steering Wheel Spoke Cover (RH with Radio Control Switch)
Courtesy of GENERAL MOTORS COMPANY

Callout	Component Name
Preliminary Procedures 1. **Steering Wheel Airbag Replacement (Chevrolet / GMC)** **Steering Wheel Airbag Replacement (Cadillac)** 2. **Radio Control Switch Replacement - Rear**	
1	Steering Wheel Spoke Cover Fastener **CAUTION:** **Refer to** **Fastener**

cardiagn.com

Callout	Component Name
	Caution .
2	Steering Wheel Spoke Cover **Procedure** 1. Use the appropriate tool to gently release the retaining tabs on the cover. 2. Disconnect the electrical connector. 3. Transfer components as necessary. **NOTE:** **Gently release the tabs one by one, using care to avoid snapping any tabs off.**

STEERING WHEEL SPOKE COVER REPLACEMENT (CADILLAC)

cardiagn.com

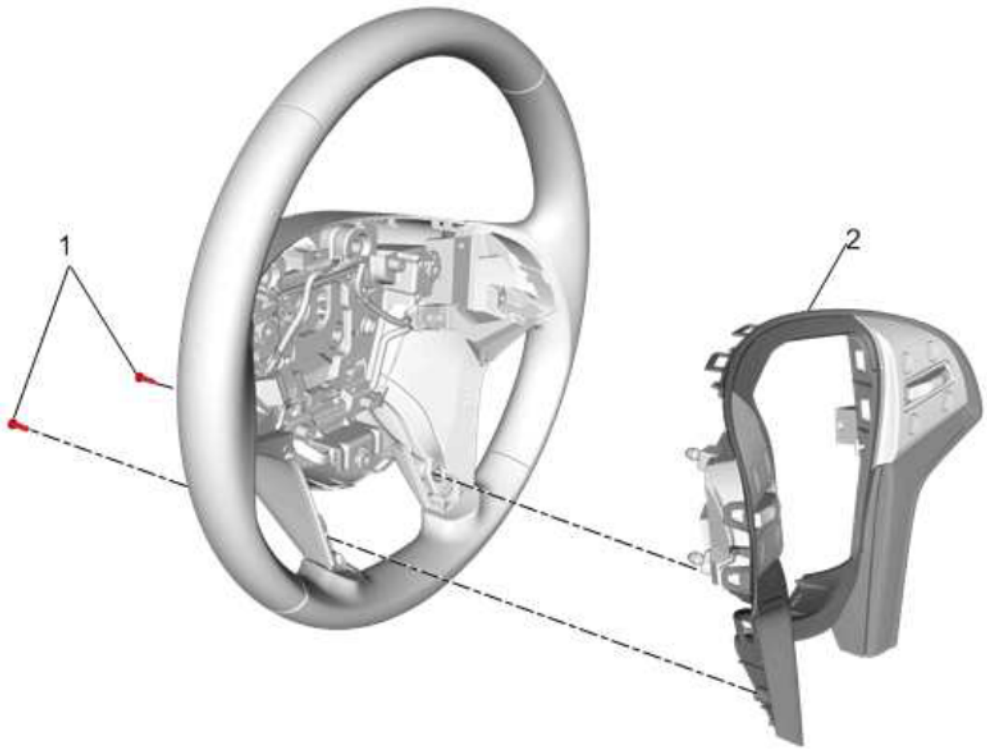

Fig. 60: Steering Wheel Spoke Cover (Cadillac)
Courtesy of GENERAL MOTORS COMPANY

Callout	Component Name
Preliminary Procedure Remove the steering wheel airbag. Refer to **Steering Wheel Airbag Replacement (Cadillac)** .	
1	Steering Wheel Spoke Cover Fastener (Qty: 2) **CAUTION:** **Refer to** **Fastener** **Caution** .
2	Steering Wheel Spoke Cover

cardiagn.com

Callout	Component Name
	Procedure 1. Use the appropriate tool to gently release the retaining tabs on the cover. 2. Disconnect the electrical connections. 3. Transfer components, as necessary. **NOTE:** **Gently release tabs one by one, using care to avoid snapping the tab off.**

STEERING COLUMN TELESCOPE ACTUATOR MOTOR REPLACEMENT

cardiagn.com

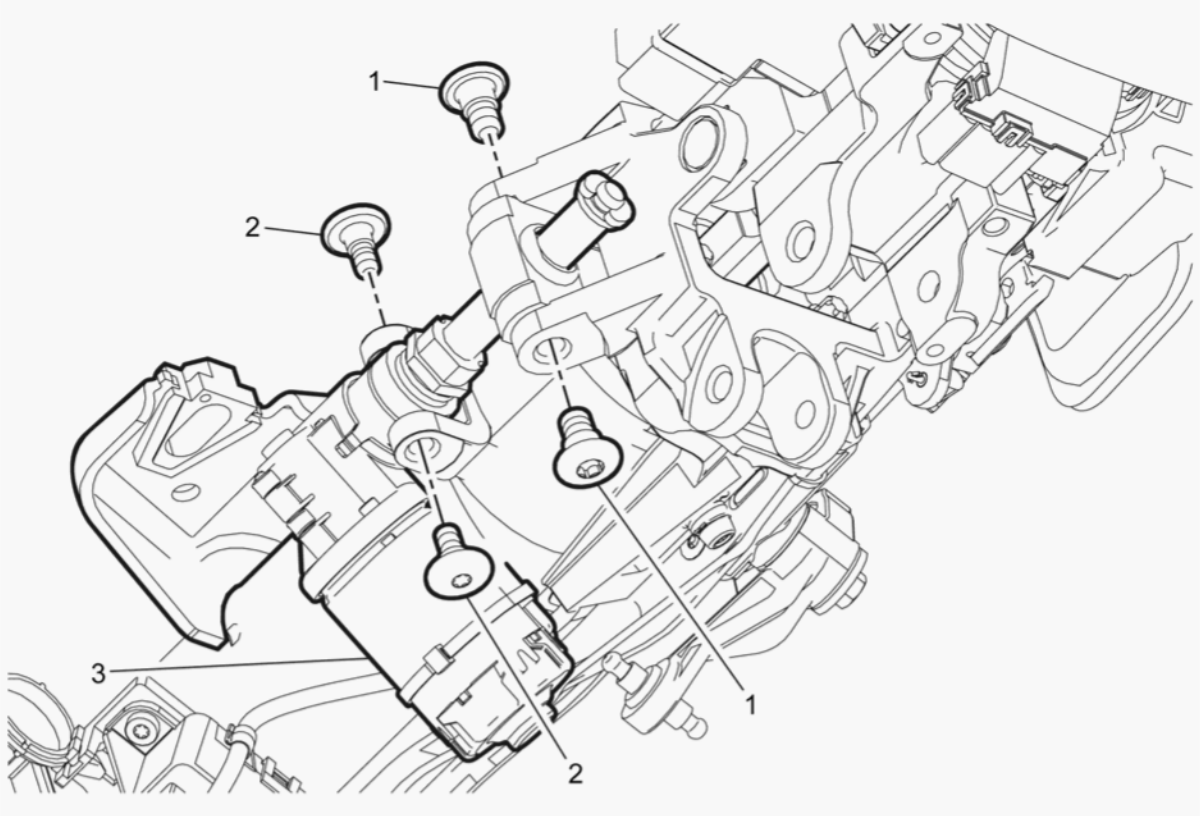

Fig. 61: Steering Column Telescope Actuator Motor
Courtesy of GENERAL MOTORS COMPANY

Callout	Component Name
Preliminary Procedure **Steering Column Tilt Wheel Actuator Motor Replacement**	
1	Steering Column Telescope Actuator Motor Bolt - Upper (Qty: 2) **CAUTION:** **Refer to** **Fastener** **Caution** .

cardiagn.com

Callout	Component Name
	Tighten 15 N.m (133 lb in)
2	Steering Column Telescope Actuator Motor Bolt - Lower (Qty: 2) **Tighten** 15 N.m (133 lb in)
3	Steering Column Telescope Actuator Motor **Procedure** 1. Disconnect the electrical connector. 2. Perform the steering column tilt wheel and telescope control module learn procedure. **Steering Column Tilt Wheel and Telescope Control Module Learn**

STEERING COLUMN TILT WHEEL AND TELESCOPE SWITCH REPLACEMENT

cardiagn.com

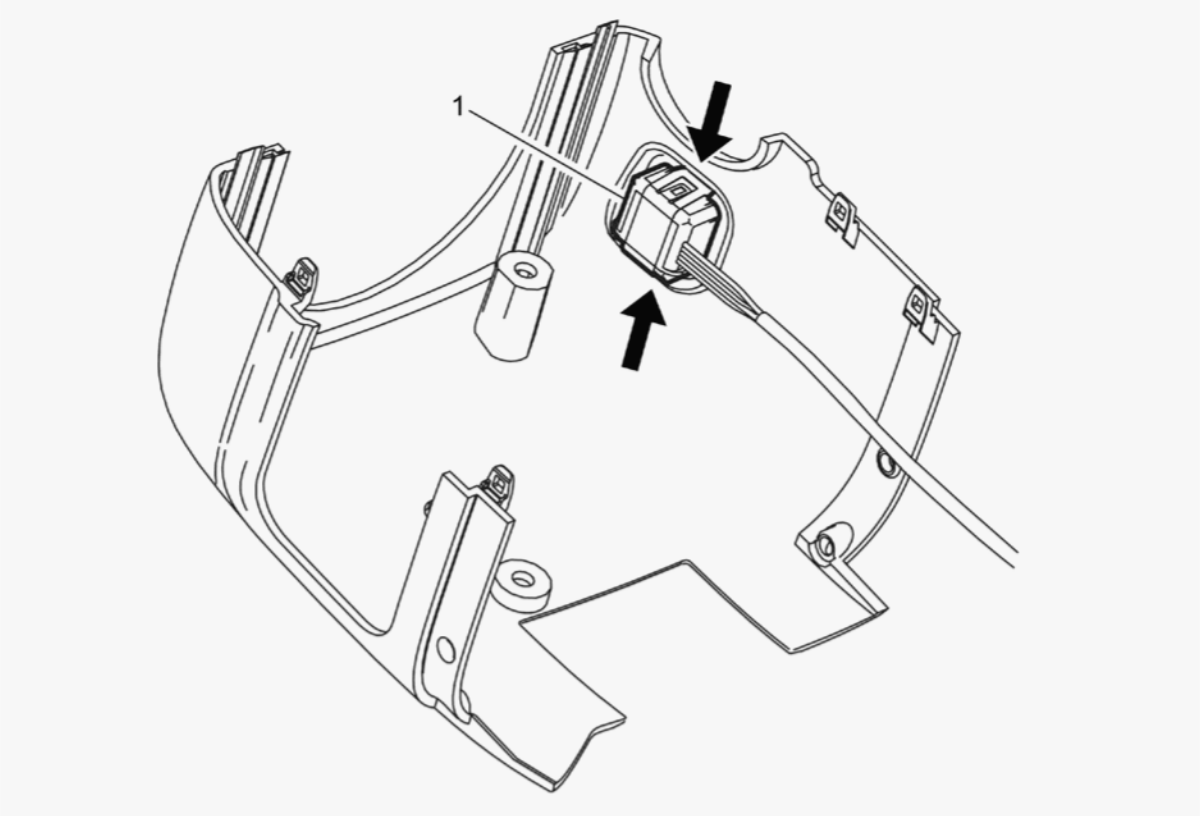

Fig. 62: Steering Column Tilt Wheel and Telescope Switch
Courtesy of GENERAL MOTORS COMPANY

Callout	Component Name
Preliminary Procedures 1. **Instrument Panel Knee Bolster Replacement (Chevrolet / GMC)** **Instrument Panel Knee Bolster Replacement (Cadillac)** 2. Lower the lower steering column shroud. **Steering Column Shroud Replacement (RPO N37)Steering Column Shroud Replacement (RPO N38)Steering Column Shroud Replacement (RPO N33)**	
1	Steering Column Tilt Wheel and Telescope Switch **Procedure**

cardiagn.com

Callout	Component Name
	1. Disconnect the electrical connector. 2. Release the retaining tabs and remove the steering column tilt wheel and telescope switch from the lower steering column shroud.

STEERING COLUMN ELECTRONIC LOCK REPLACEMENT

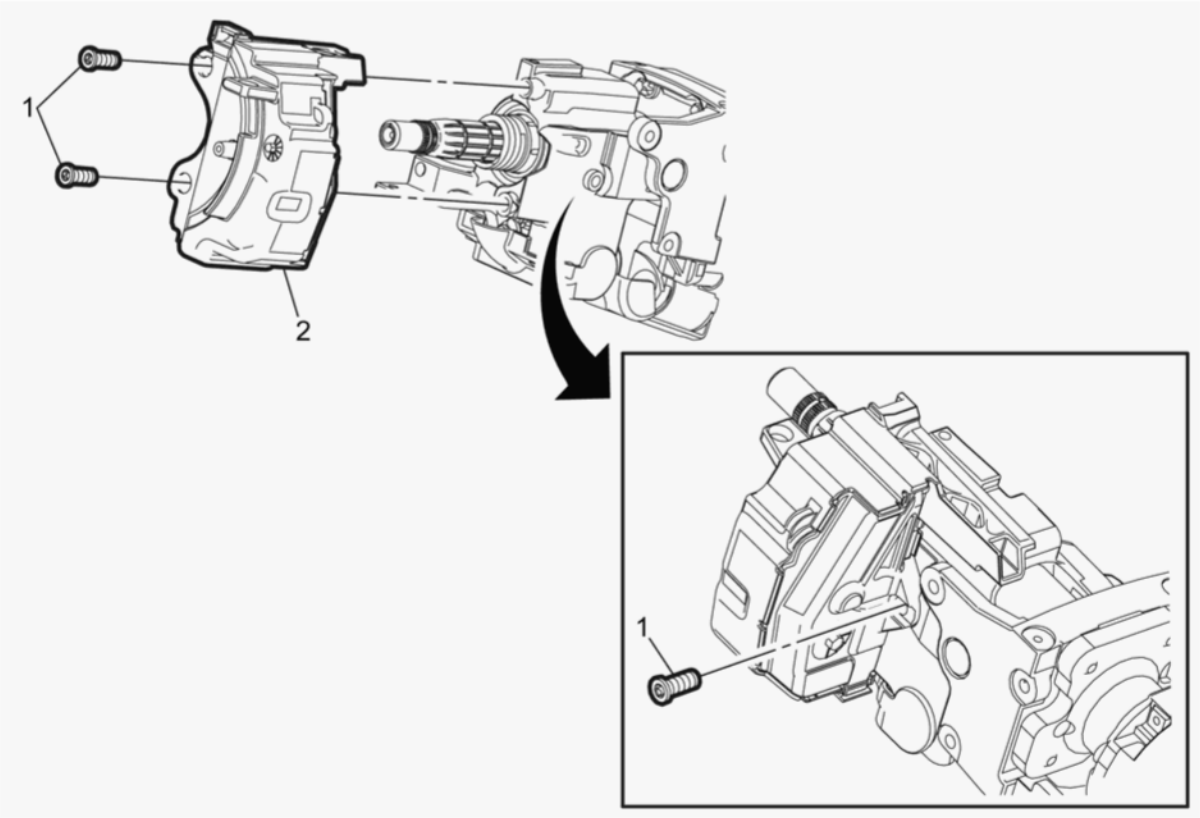

Fig. 63: Steering Column Electronic Lock
Courtesy of GENERAL MOTORS COMPANY

Callout	Component Name
Preliminary Procedures	

cardiagn.com

Callout	Component Name
1. Turn Signal Switch Cancel Cam Replacement (Chevrolet/GMC)Turn Signal Switch Cancel Cam Replacement (Cadillac) 2. Turn Signal Switch Replacement (N33, N37)Turn Signal Switch Replacement (N38)	
1	Steering Column Electronic Lock Bolt (Qty: 3) **CAUTION:** **Refer to Fastener Caution .** **Tighten** 13 N.m (115 lb in)
2	Steering Column Electronic Lock **Procedure** 1. Disconnect the electrical connector. 2. Program the steering column electronic lock. Steering Column Lock Module Programming and Setup

STEERING COLUMN TILT SPRING REPLACEMENT

Removal Procedure

1. Remove Instrument Panel Knee Bolster -Instrument Panel Knee Bolster Replacement (Chevrolet / GMC) Instrument Panel Knee Bolster Replacement (Cadillac)
2. Remove Steering Column Shroud - Steering Column Shroud Replacement (RPO N37)Steering Column Shroud Replacement (RPO N38)Steering Column Shroud Replacement (RPO N33)
3. Position the steering column in the uppermost tilted position.

cardiagn.com

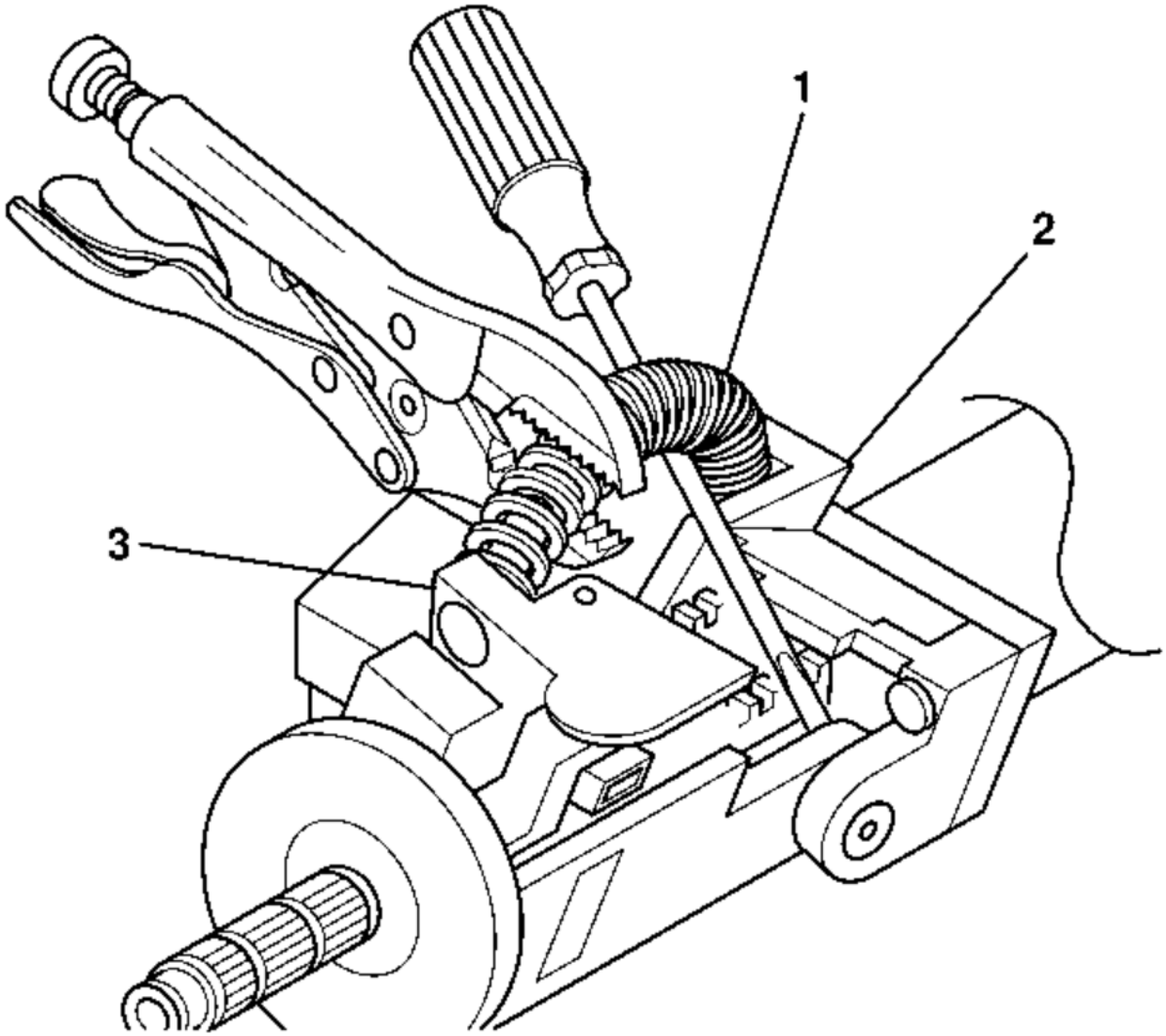

Fig. 64: View Of Tilt Spring And Steering Column Support Assembly
Courtesy of GENERAL MOTORS COMPANY

WARNING: **The tilt spring and the spring guide are under pressure. The tilt spring and the spring guide may become a projectile. Secure the spring with locking pliers during removal. Secure the spring with locking pliers**

cardiagn.com

during installation. Bodily injury may result during removal and installation of the tilt spring and the spring guide. Always use caution during removal and installation of the tilt spring and the spring guide.

4. Remove the tilt spring (1) from the steering column using the following procedure:
    1. Pry the tilt spring (1) until a bulge occurs and most of the tension is removed.
    2. Secure the tilt spring (1) with locking pliers.
    3. Continue prying until the tilt spring (1) disengages from the posts on the steering column (2) and the steering column tilt head (3).

cardiagn.com

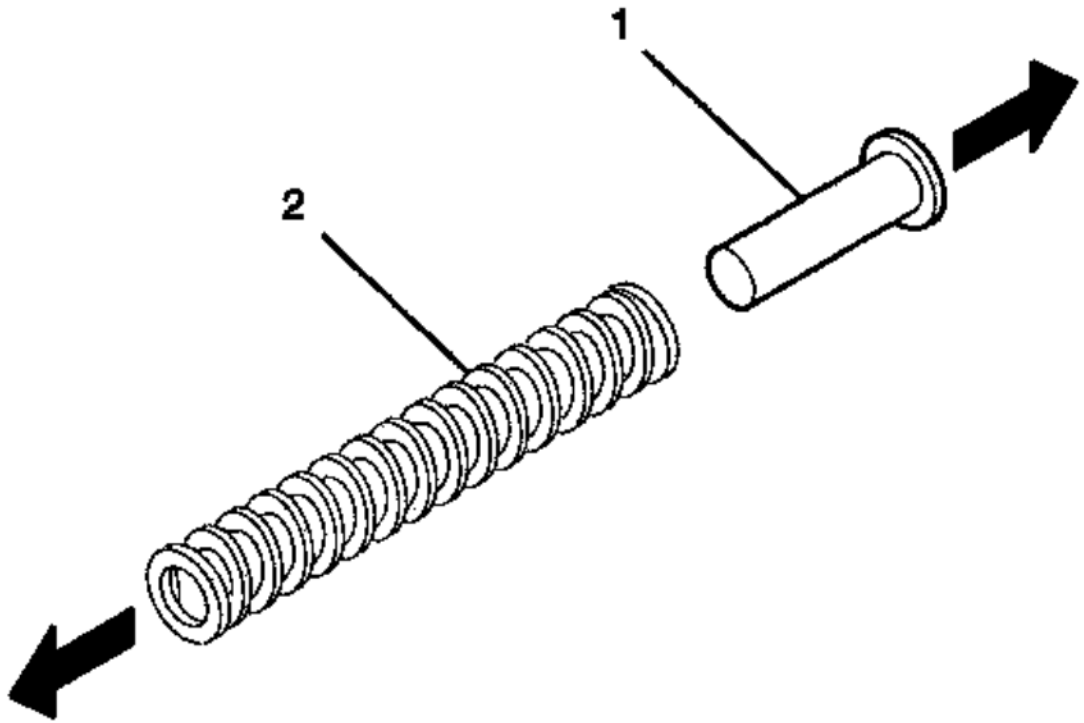

Fig. 65: Identifying Spring Guide Components
Courtesy of GENERAL MOTORS COMPANY

5. Remove the spring guide (1) from the tilt spring (2).

Installation Procedure

cardiagn.com

1. Position the steering column in the uppermost tilted position.

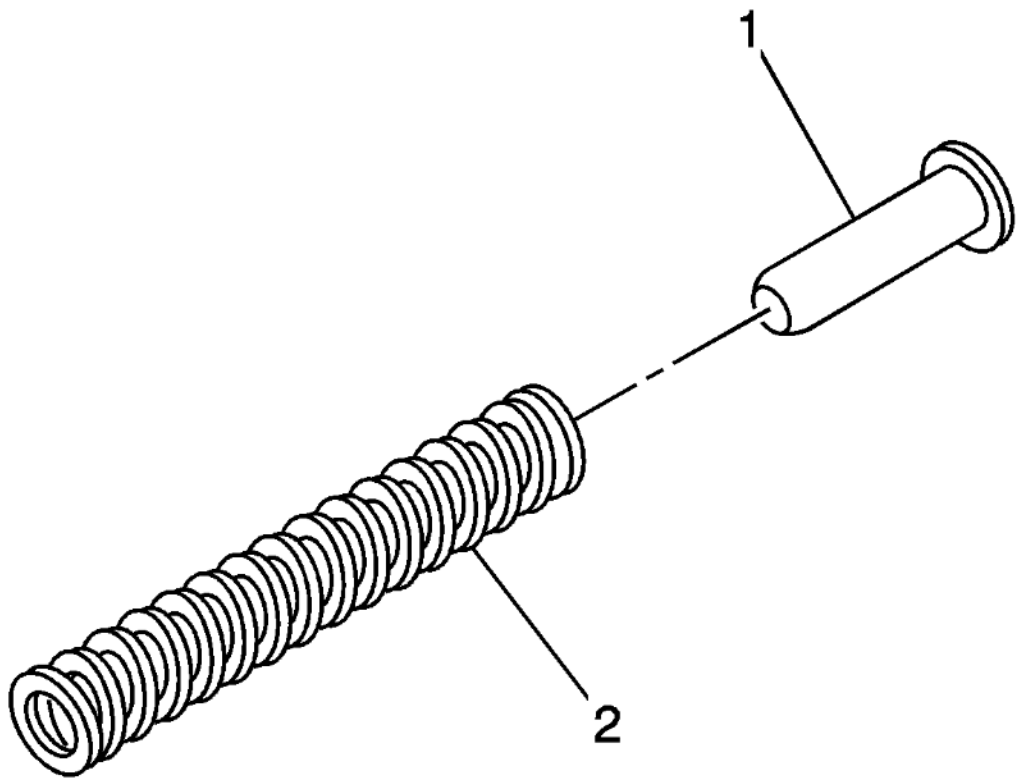

Fig. 66: View Of Tilt Spring & Guide
Courtesy of GENERAL MOTORS COMPANY

2. Install the spring guide (1) into the tilt spring (2).

cardiagn.com

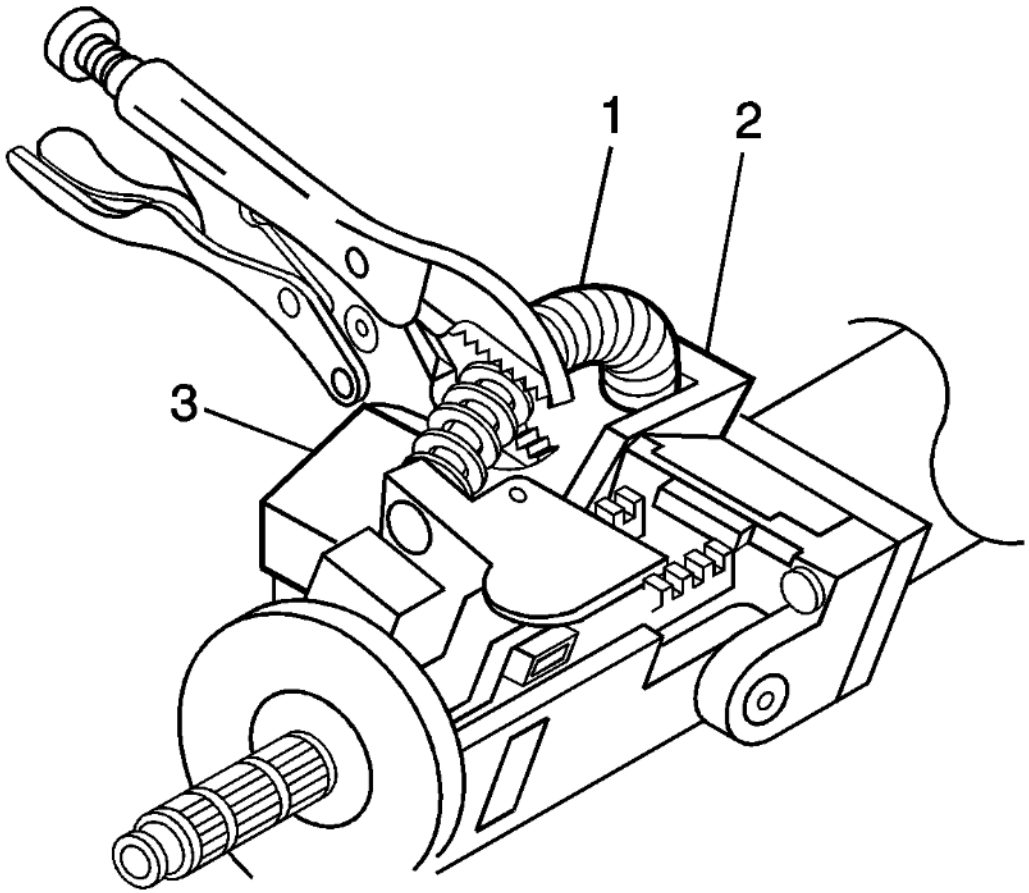

Fig. 67: View Of Steering Column, Tilt Head & Spring
Courtesy of GENERAL MOTORS COMPANY

WARNING: **The tilt spring and the spring guide are under pressure. The tilt spring and the spring guide may become a projectile. Secure the spring with locking pliers during removal. Secure the spring with locking pliers during installation. Bodily injury may result during removal and installation of the tilt spring and the spring guide. Always use caution during removal and installation of the tilt spring and the spring guide.**

cardiagn.com

3. Install the tilt spring (1) on the steering column using the following procedure:
    1. Install the tilt spring (1) onto the post on the steering column tilt head (3).
    2. Install the tilt spring (1) onto the post on the steering column (2).
    3. Remove the locking pliers.
4. Install Steering Column Shroud -**Steering Column Shroud Replacement (RPO N37)Steering Column Shroud Replacement (RPO N38)Steering Column Shroud Replacement (RPO N33)**
5. Install Instrument Panel Knee Bolster - **Instrument Panel Knee Bolster Replacement (Chevrolet / GMC)** **Instrument Panel Knee Bolster Replacement (Cadillac)**

TURN SIGNAL SWITCH CANCEL CAM REPLACEMENT (CHEVROLET/GMC)

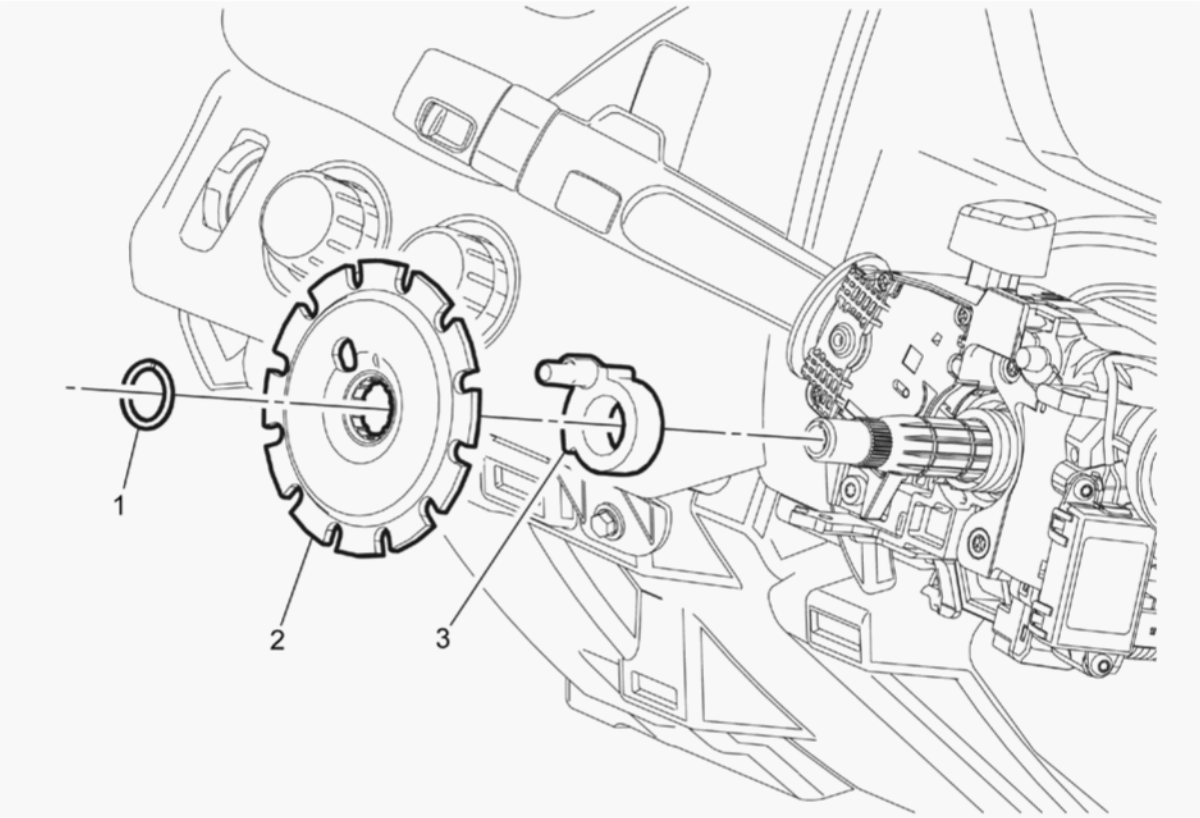

Fig. 68: Turn Signal Switch Cancel Cam (Chevrolet/GMC)
Courtesy of GENERAL MOTORS COMPANY

cardiagn.com

Callout	Component Name
Preliminary Procedure **Steering Wheel Airbag Coil Replacement (Chevrolet/GMC)**	
1	Steering Shaft Lock Plate Retaining Ring **CAUTION:** **Refer to** **Fastener** **Caution** . **Procedure** 1. Use the **CH-23653-SIR** compressor to remove the steering shaft lock plate retaining ring. DISCARD the retaining ring. 2. Install a NEW steering shaft lock plate retaining ring. **Special Tools** **CH-23653-SIR** Steering Column Lock Plate Compressor Equivalent regional tools:**Special Tools**
2	Turn Signal Switch Cancel Cam Position Plate **Procedure** Use the alignment tooth on the turn signal switch cancel cam position plate to ensure proper alignment with the steering column shaft.
3	Turn Signal Switch Cancel Cam

TURN SIGNAL SWITCH CANCEL CAM REPLACEMENT (CADILLAC)

cardiagn.com

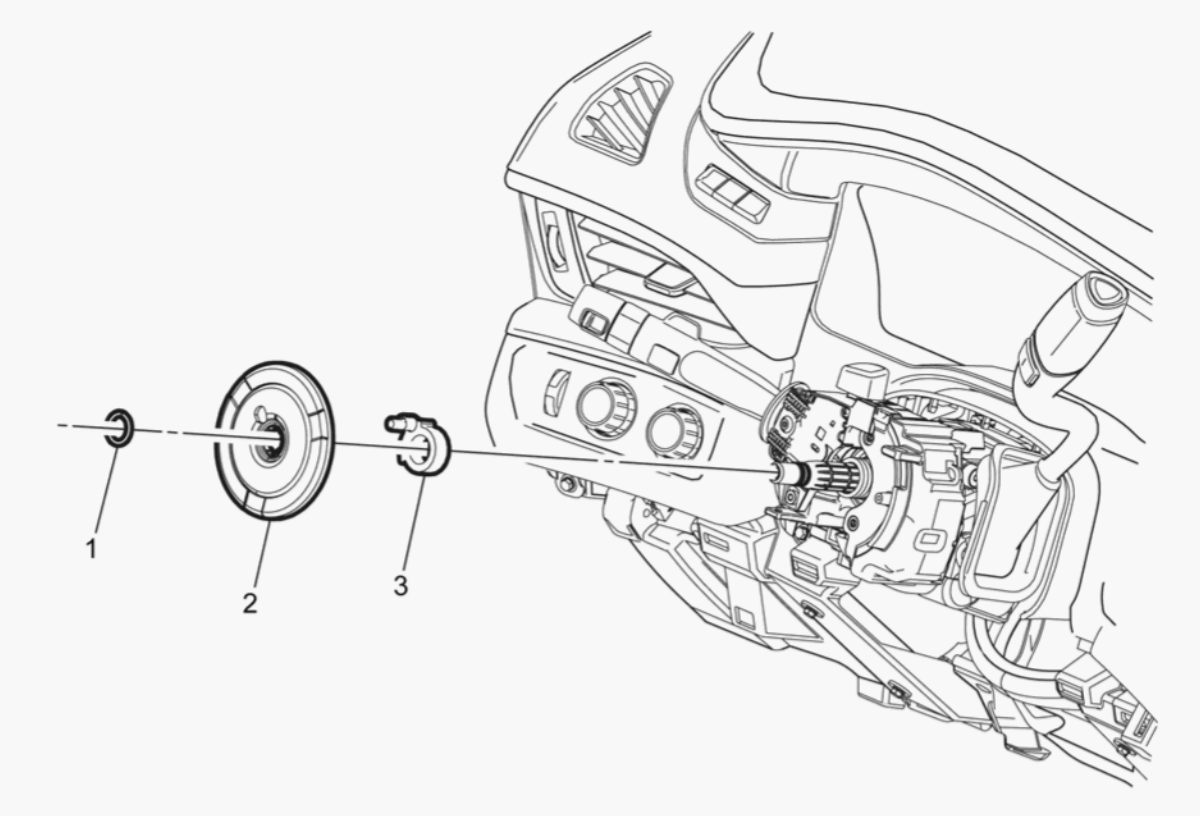

Fig. 69: Turn Signal Switch Cancel Cam (Cadillac)
Courtesy of GENERAL MOTORS COMPANY

Callout	Component Name
Preliminary Procedure Steering Wheel Airbag Coil Replacement (Cadillac)	
1	Steering Shaft Lock Plate Retaining Ring **CAUTION:** **Refer to** **Fastener Caution .** **Procedure**

cardiagn.com

Callout	Component Name
	1. Use the **CH-23653-SIR** compressor to remove the steering shaft lock plate retaining ring. DISCARD the retaining ring. 2. Install a NEW steering shaft lock plate retaining ring. **Special Tools** **CH-23653-SIR** Steering Column Lock Plate Compressor Equivalent regional tools:**Special Tools**
2	Turn Signal Switch Cancel Cam Position Plate **Procedure** Use the alignment tooth on the turn signal switch cancel cam position plate to ensure proper alignment with the steering column shaft.
3	Turn Signal Switch Cancel Cam

STEERING SHAFT UPPER BEARING REPLACEMENT (N33, N37)

Special Tools

- **CH-21854-01** Pivot Pin Remover
- **CH-42640** Steering Column Anti-Rotation Pin

Equivalent regional tools:**Special Tools**

Removal Procedure

1. Remove Steering Column -**Steering Column Replacement (N33, N37)**
2. Remove Steering Column Tilt Spring -**Steering Column Tilt Spring Replacement**
3. Remove Transmission Control -**Transmission Control Replacement (N33, N37)**
4. Remove Steering Wheel Airbag Coil -**Steering Wheel Airbag Coil Replacement (Chevrolet/GMC)** **Steering Wheel Airbag Coil Replacement (Cadillac)**
5. Remove Turn Signal Switch Cancel Cam -**Turn Signal Switch Cancel Cam Replacement (Chevrolet/GMC)Turn Signal Switch Cancel Cam Replacement (Cadillac)**

cardiagn.com

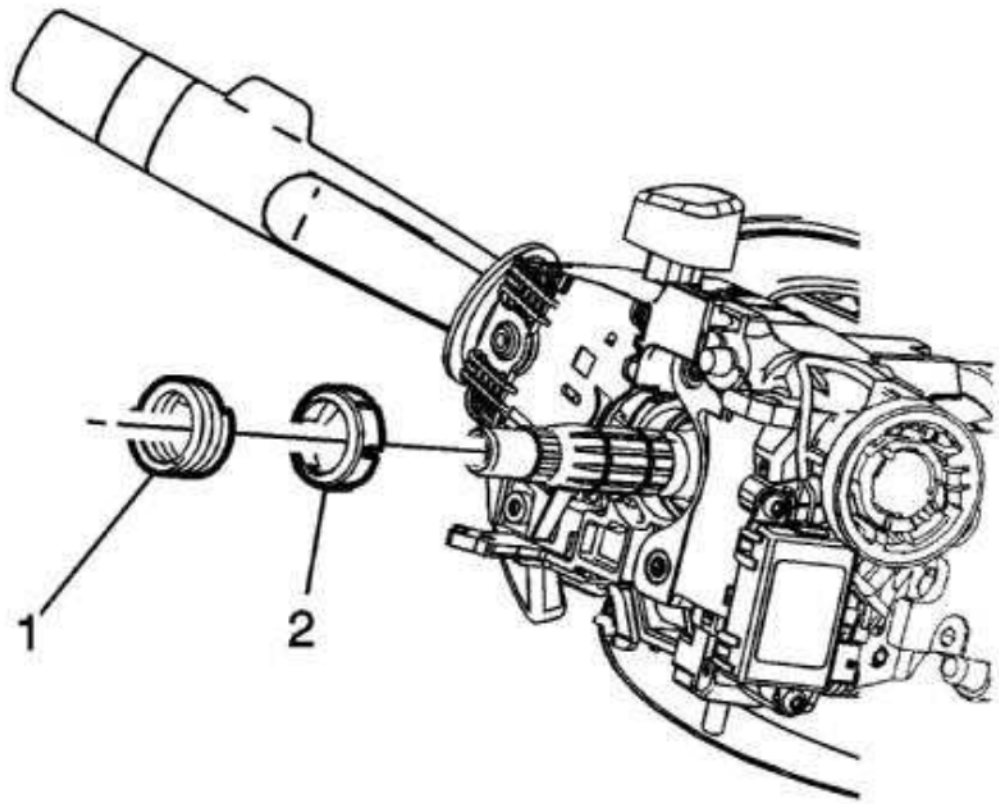

Fig. 70: Steering Shaft Upper Bearing Spring
Courtesy of GENERAL MOTORS COMPANY

6. Remove the steering shaft upper bearing spring (1) and steering shaft upper bearing race seat (2).
7. Remove Theft Deterrent Module -**Theft Deterrent Module Replacement (Chevrolet / GMC)** **Theft Deterrent Module Replacement (Cadillac)**
8. Remove Turn Signal Switch -**Turn Signal Switch Replacement (N33, N37)**

cardiagn.com

9. Remove Ignition Lock Cylinder Case -**Ignition Lock Cylinder Case Replacement**

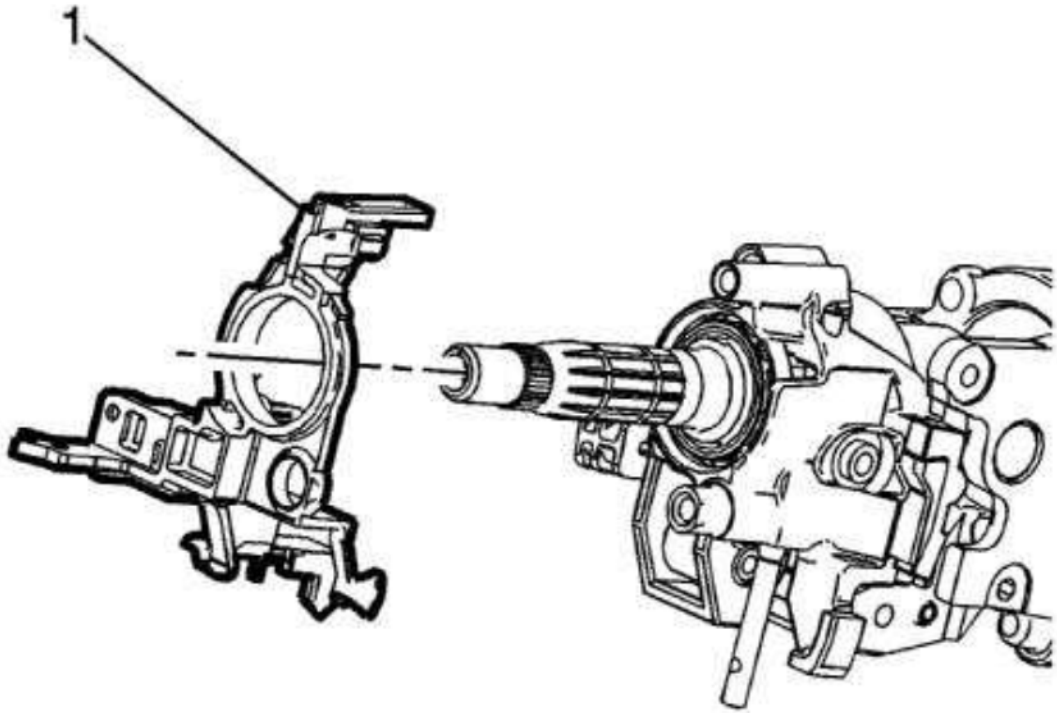

Fig. 71: Turn Signal Switch Bracket
Courtesy of GENERAL MOTORS COMPANY

10. Remove the turn signal switch bracket (1).
11. Install the steering column tilt wheel release lever in the steering column tilt head assembly.

cardiagn.com

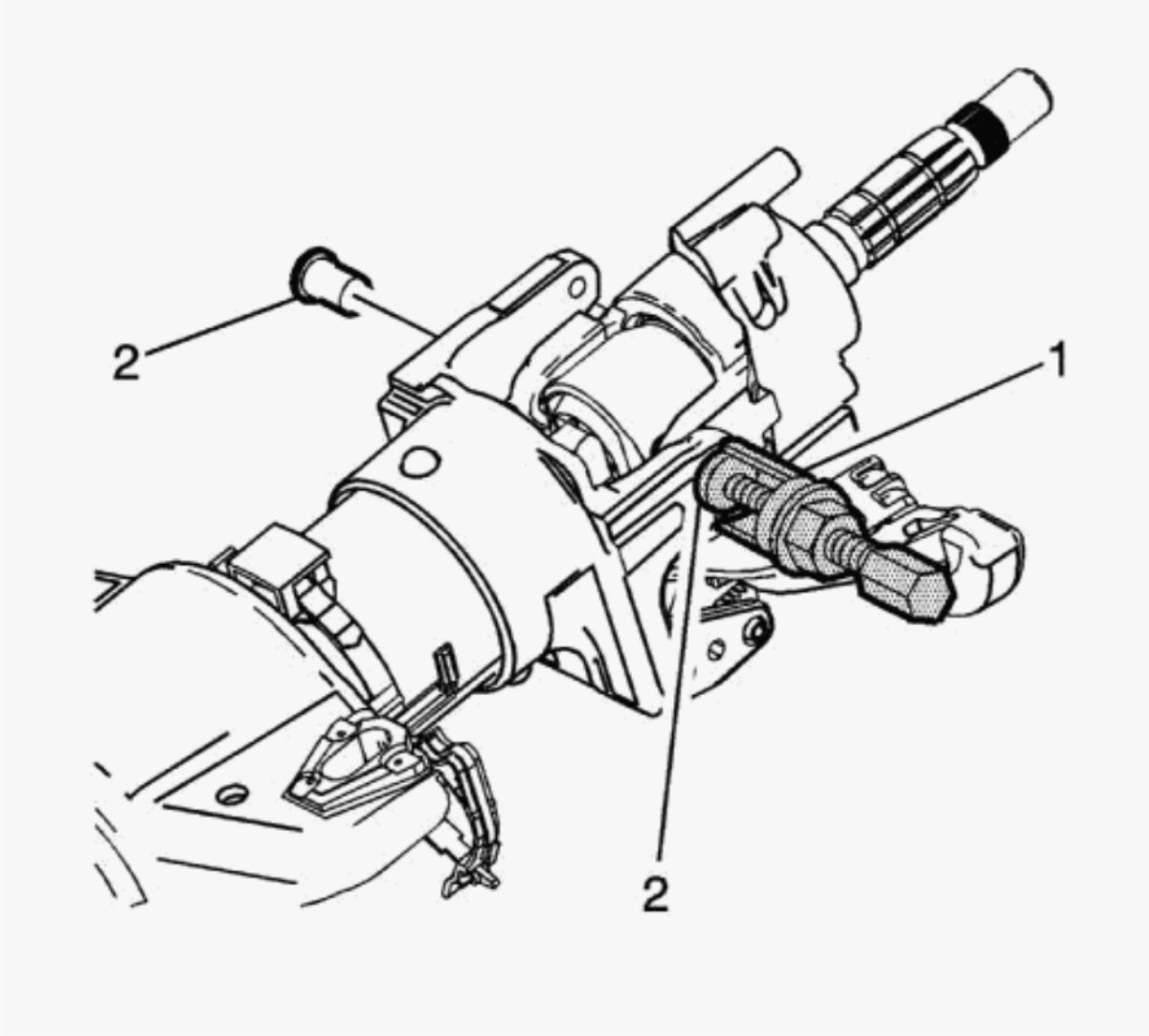

Fig. 72: Pivot Pin Remover
Courtesy of GENERAL MOTORS COMPANY

12. Use the **CH-21854-01** pivot pin remover (1) to remove the steering column tilt head pivot pins (2) from the steering column tilt head assembly.
13. Remove the **CH-42640** anti-rotation pin from the steering column.

cardiagn.com

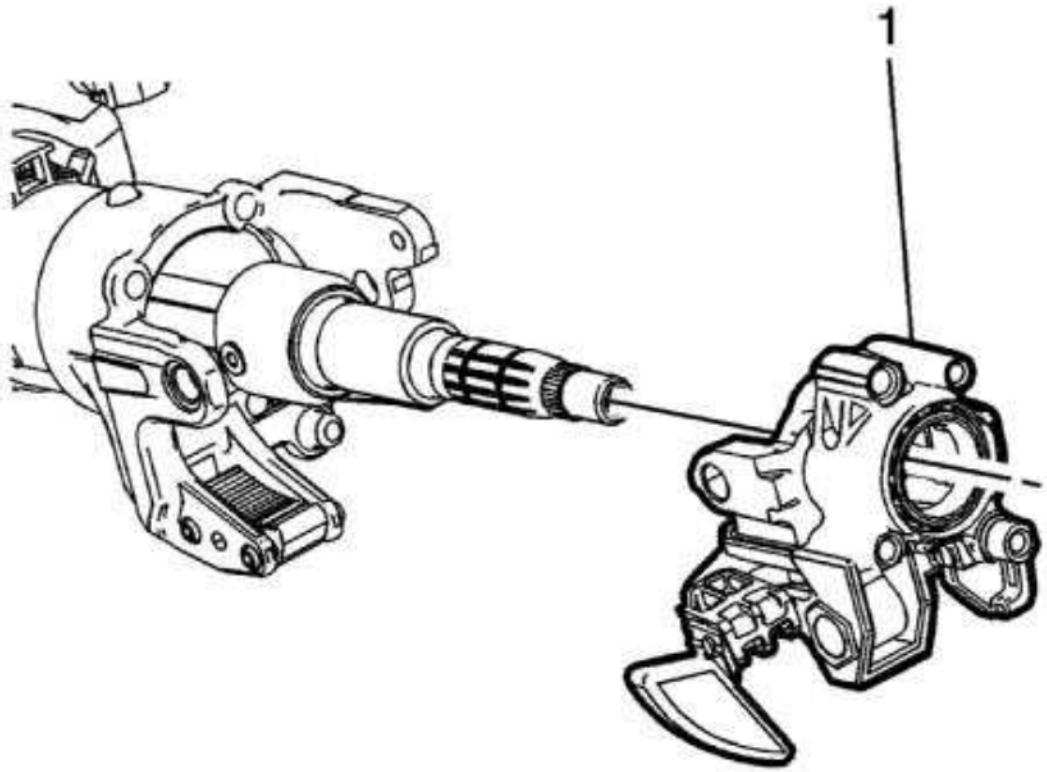

Fig. 73: Steering Column Tilt Head Assembly
Courtesy of GENERAL MOTORS COMPANY

14. Pull back on the steering column tilt wheel release lever and pull the steering column tilt head assembly (1) down and away to disengage the tilt mechanism.
15. Remove the steering column tilt head assembly (1) from the steering column.
16. Remove the steering column tilt wheel release lever (2) from the steering column tilt head assembly.

cardiagn.com

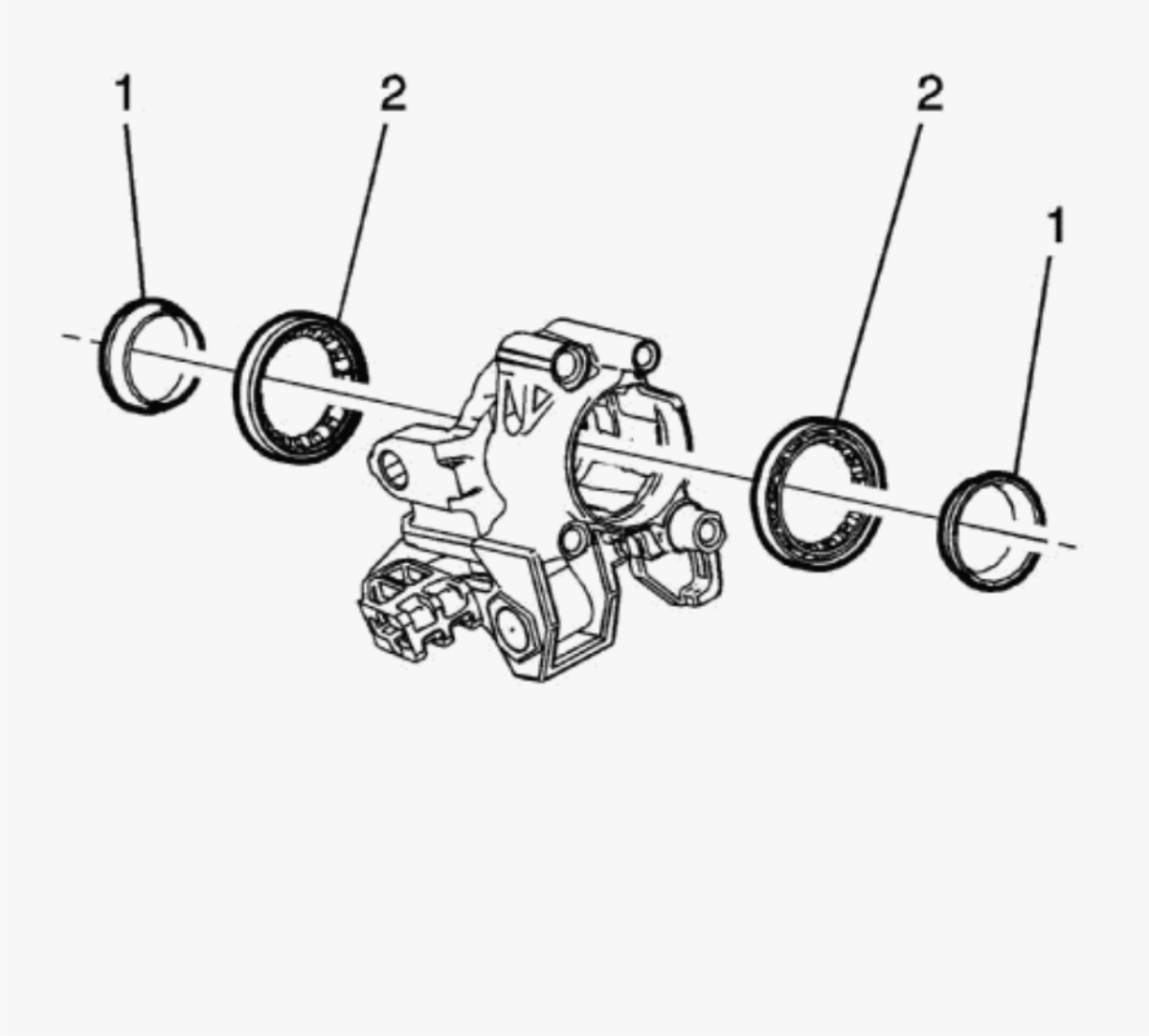

Fig. 74: Steering Shaft Upper Bearing Race
Courtesy of GENERAL MOTORS COMPANY

17. Remove the steering shaft upper bearing race(s) (1) and steering shaft upper bearing(s) (2) from the steering column tilt head assembly.

Installation Procedure

cardiagn.com

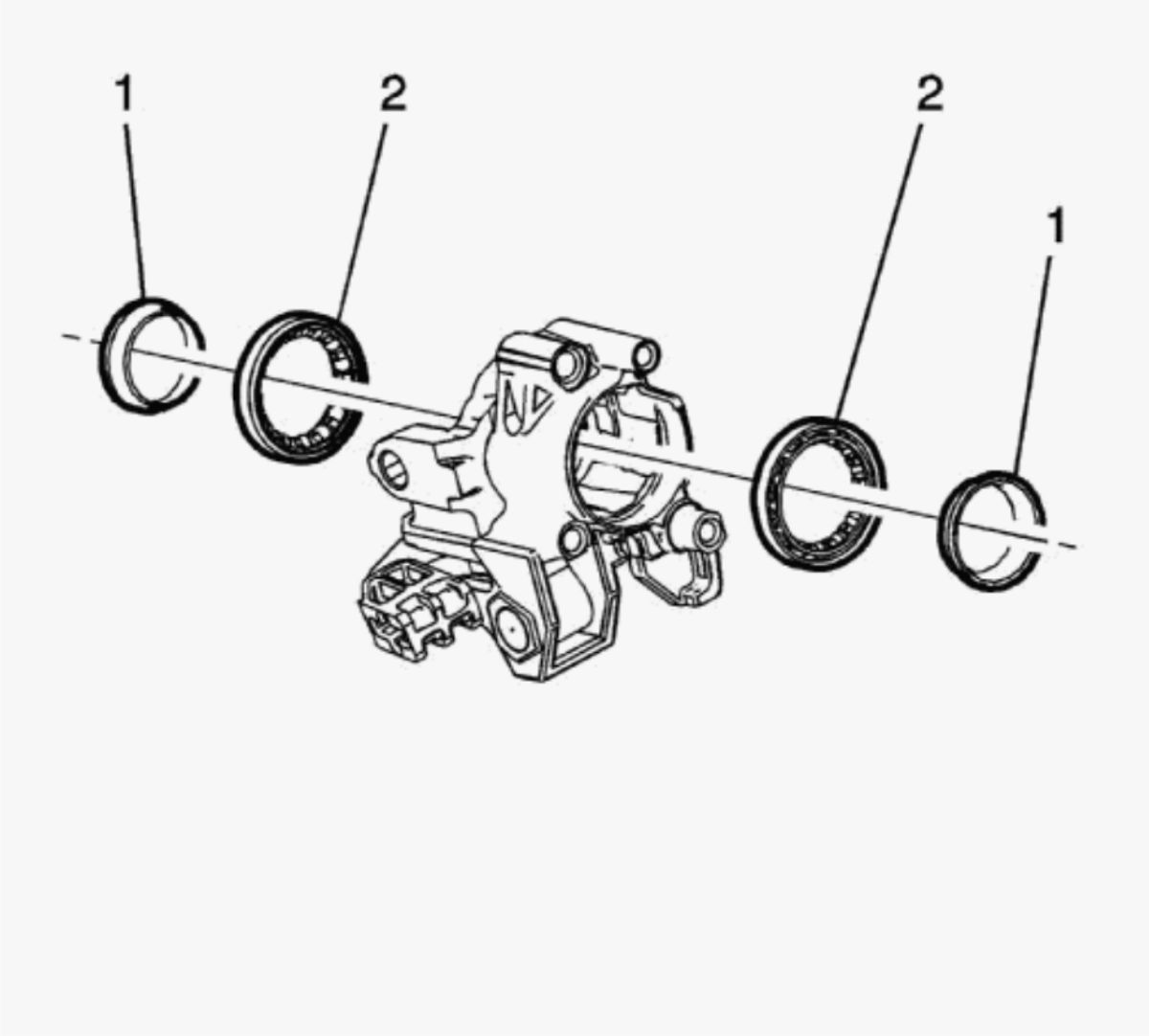

Fig. 75: Steering Shaft Upper Bearing Race
Courtesy of GENERAL MOTORS COMPANY

1. Install the steering shaft upper bearing(s) (2) and steering shaft upper bearing race(s) (1) in the steering column tilt head assembly.

cardiagn.com

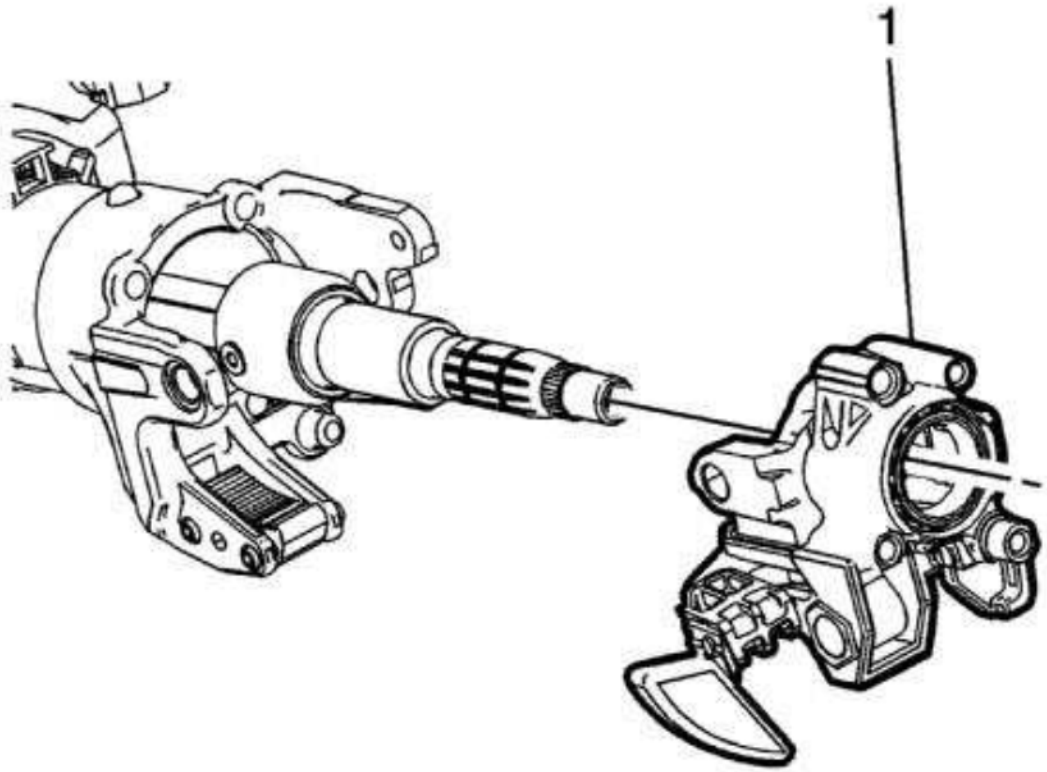

Fig. 76: Steering Column Tilt Head Assembly
Courtesy of GENERAL MOTORS COMPANY

2. Install the steering column tilt wheel release lever (2) in the steering column tilt head assembly.
3. Pull back on the steering column tilt wheel release lever and engage the steering column tilt head assembly (1) in the tilt mechanism.
4. Install the **CH-42640** anti-rotation pin in the steering column.
5. Lubricate the steering column tilt head pivot pins. **Adhesives, Fluids, Lubricants, and Sealers**

cardiagn.com

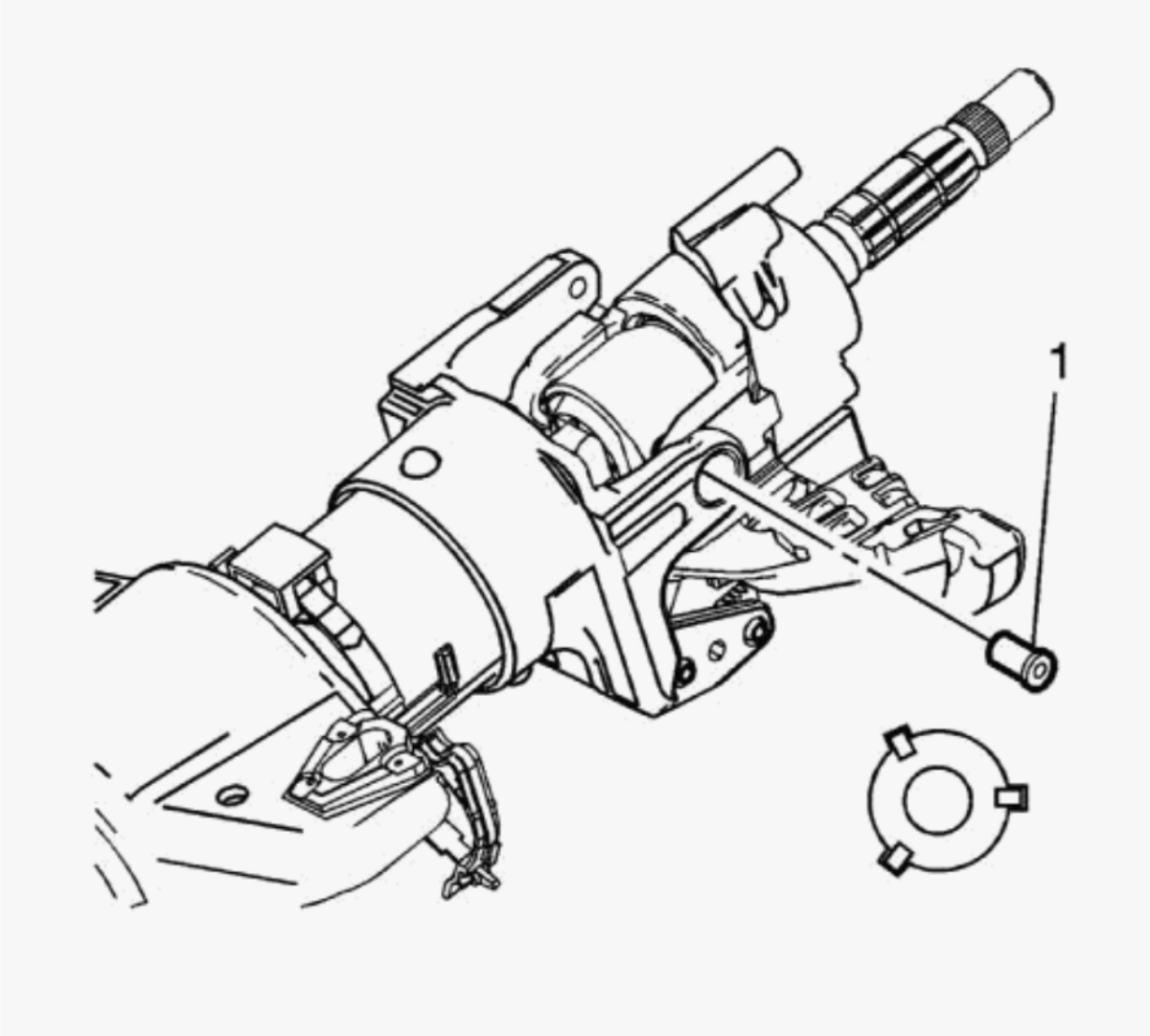

Fig. 77: Steering Column Tilt Head Pivot Pins
Courtesy of GENERAL MOTORS COMPANY

6. Install the steering column tilt head pivot pins (1) into the steering column tilt head assembly.
7. Stake the steering column in three locations around each steering column tilt head pivot pin.

cardiagn.com

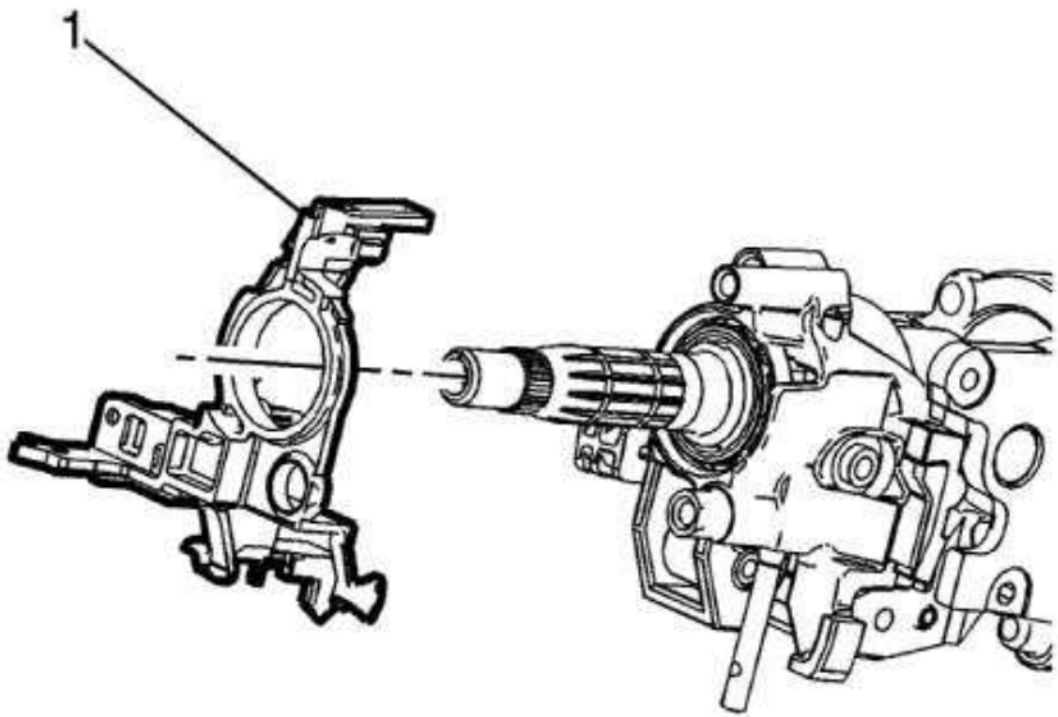

Fig. 78: Turn Signal Switch Bracket
Courtesy of GENERAL MOTORS COMPANY

8. Install the turn signal switch bracket (1).
9. Install Ignition Lock Cylinder Case -**Ignition Lock Cylinder Case Replacement**
10. Install Turn Signal Switch - **Turn Signal Switch Replacement (N33, N37)**
11. Install Theft Deterrent Module -**Theft Deterrent Module Replacement (Chevrolet / GMC)** **Theft Deterrent Module Replacement**

cardiagn.com

(Cadillac)

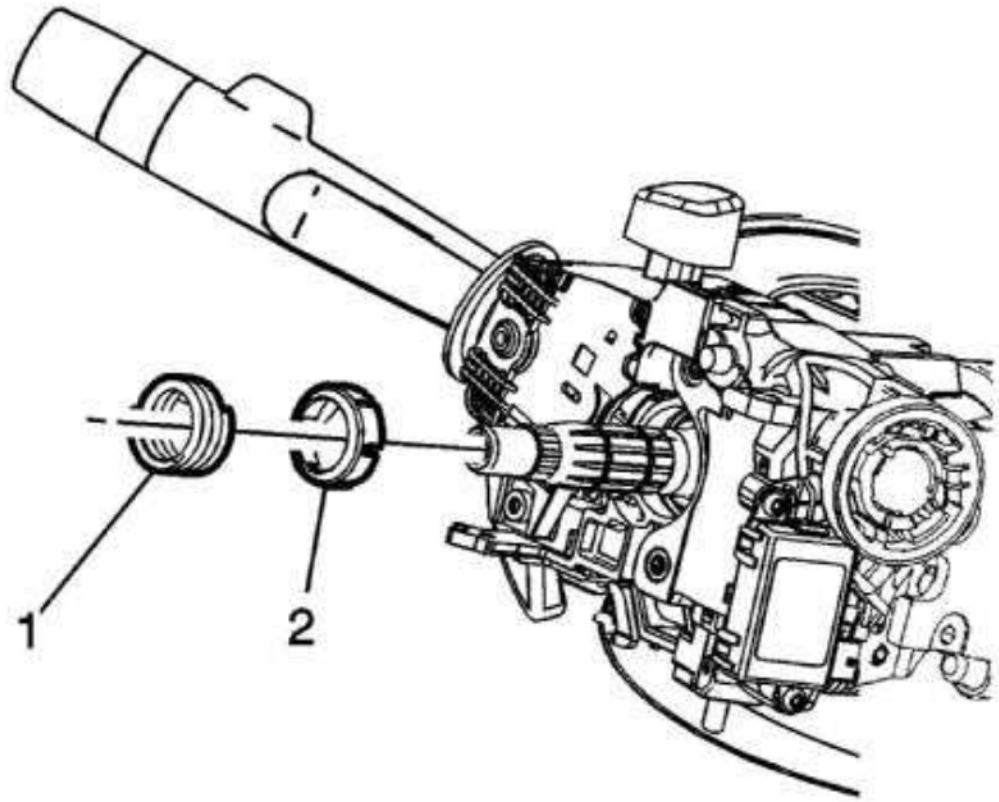

Fig. 79: Steering Shaft Upper Bearing Spring
Courtesy of GENERAL MOTORS COMPANY

12. Install the steering shaft upper bearing race seat (2) and steering shaft upper bearing spring (1).
13. Install Turn Signal Switch Cancel Cam -Turn Signal Switch Cancel Cam Replacement (Chevrolet/GMC)Turn Signal Switch Cancel Cam Replacement (Cadillac)

cardiagn.com

14. Install Steering Wheel Airbag Coil -**Steering Wheel Airbag Coil Replacement (Chevrolet/GMC)** **Steering Wheel Airbag Coil Replacement (Cadillac)**
15. Install Transmission Control -**Transmission Control Replacement (N33, N37)**
16. Install Steering Column Tilt Spring -**Steering Column Tilt Spring Replacement**
17. Install Steering Column -**Steering Column Replacement (N33, N37)**

STEERING SHAFT UPPER BEARING REPLACEMENT (N38)

Special Tools

- **CH-21854-01** Pivot Pin Remover
- **CH-42640** Steering Column Anti-Rotation Pin

Equivalent regional tools:**Special Tools**

Removal Procedure

1. Remove Steering Column - **Steering Column Replacement (N38)**
2. Remove Steering Wheel Airbag Coil -**Steering Wheel Airbag Coil Replacement (Chevrolet/GMC)** **Steering Wheel Airbag Coil Replacement (Cadillac)**
3. Remove Turn Signal Switch Cancel Cam -**Turn Signal Switch Cancel Cam Replacement (Chevrolet/GMC)Turn Signal Switch Cancel Cam Replacement (Cadillac)**

cardiagn.com

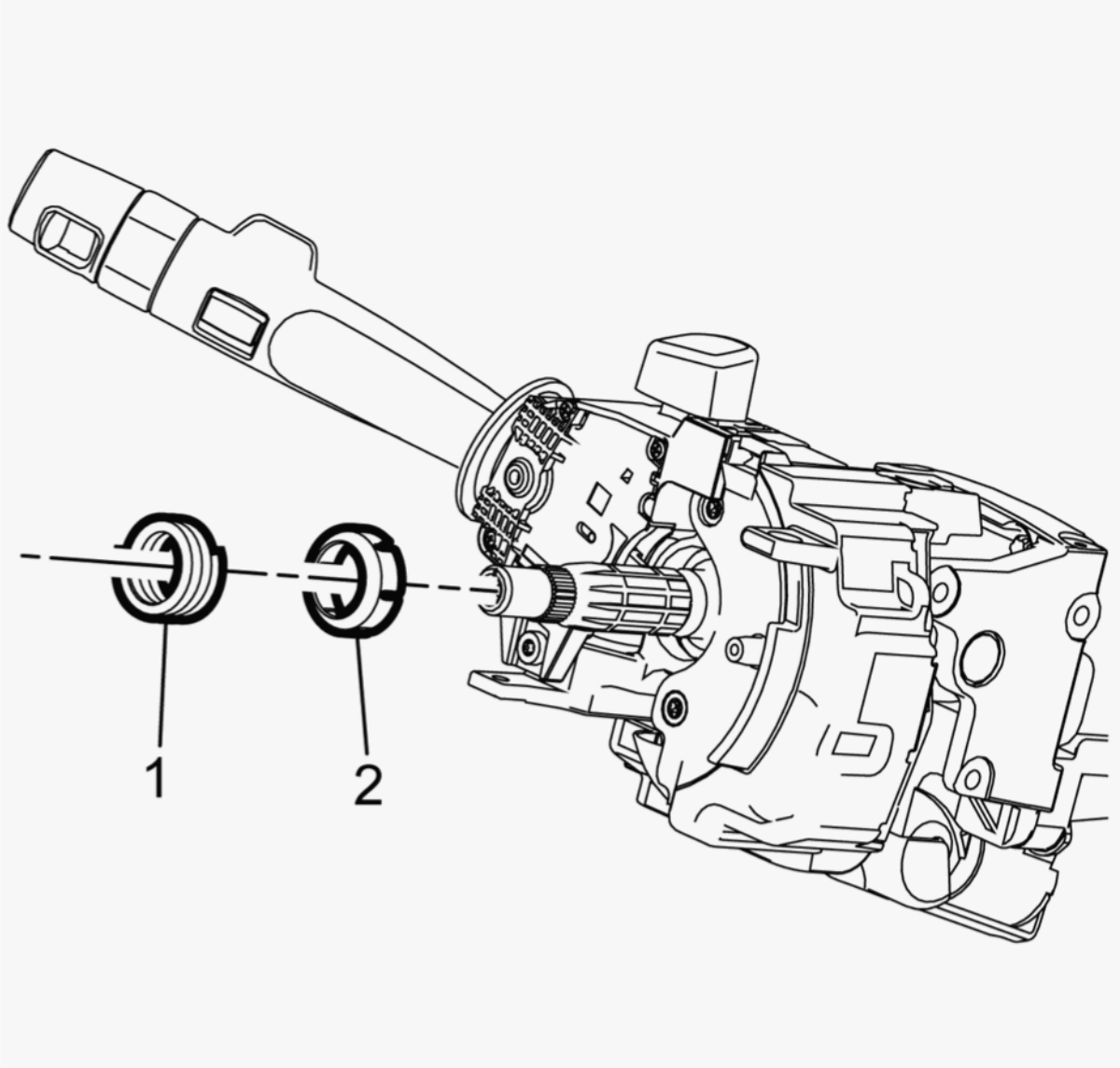

Fig. 80: Steering Shaft Upper Bearing Spring
Courtesy of GENERAL MOTORS COMPANY

4. Remove the steering shaft upper bearing spring (1) and steering shaft upper bearing race seat (2).
5. Remove Turn Signal Switch -**Turn Signal Switch Replacement (N38)**
6. Remove Transmission Control -**Transmission Control Replacement (N38)**

cardiagn.com

7. Remove Steering Column Electronic Lock -**Steering Column Electronic Lock Replacement**
8. Remove Steering Column Tilt Wheel Actuator Motor - **Steering Column Tilt Wheel Actuator Motor Replacement**

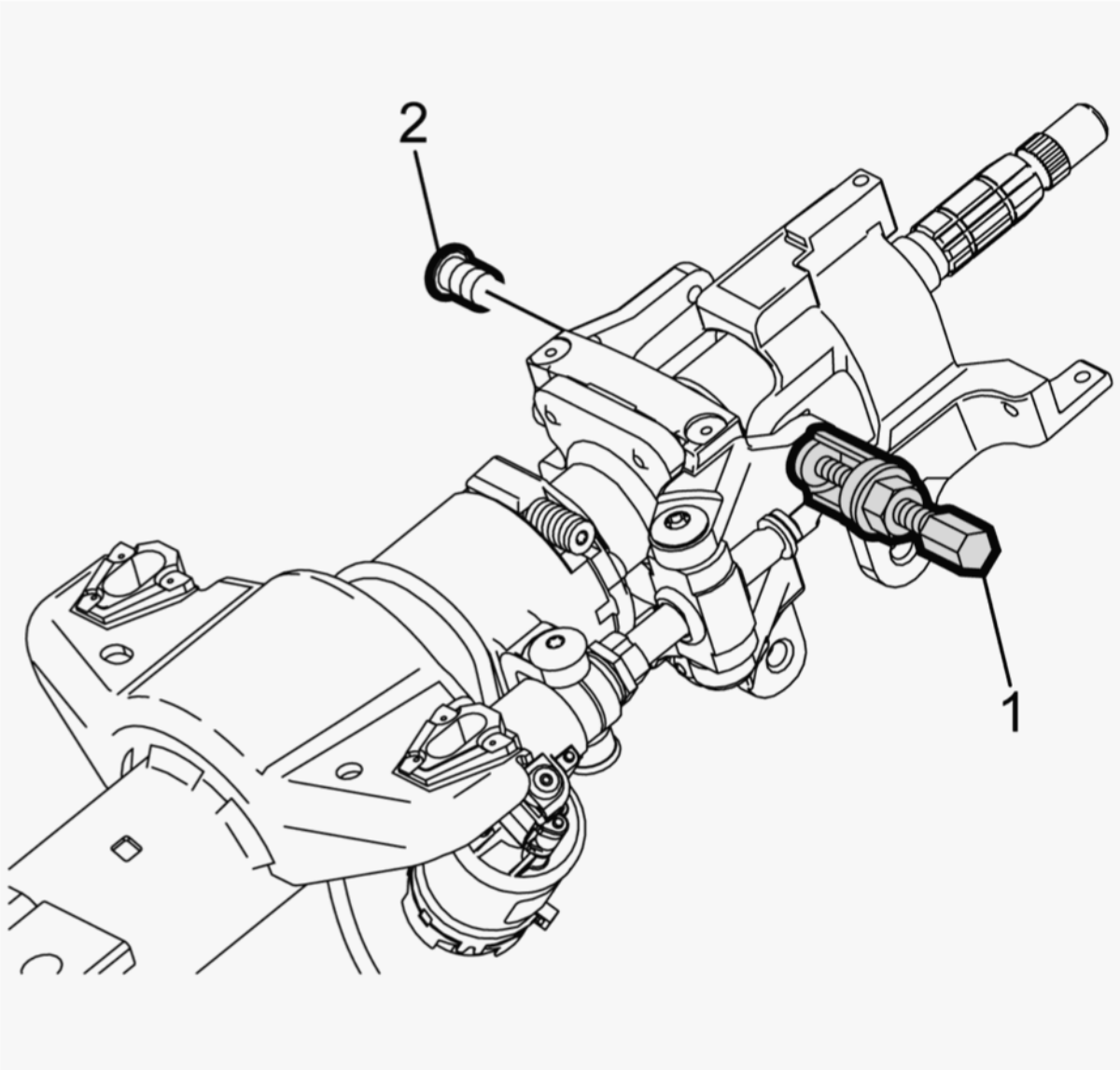

Fig. 81: CH-21854--01 Pivot Pin Remover
Courtesy of GENERAL MOTORS COMPANY

cardiagn.com

9. Use the **CH-21854-01** pivot pin remover (1) to remove the steering column tilt head pivot pins (2) from the steering column tilt head assembly.
10. Remove the **CH-42640** anti-rotation pin from the steering column.

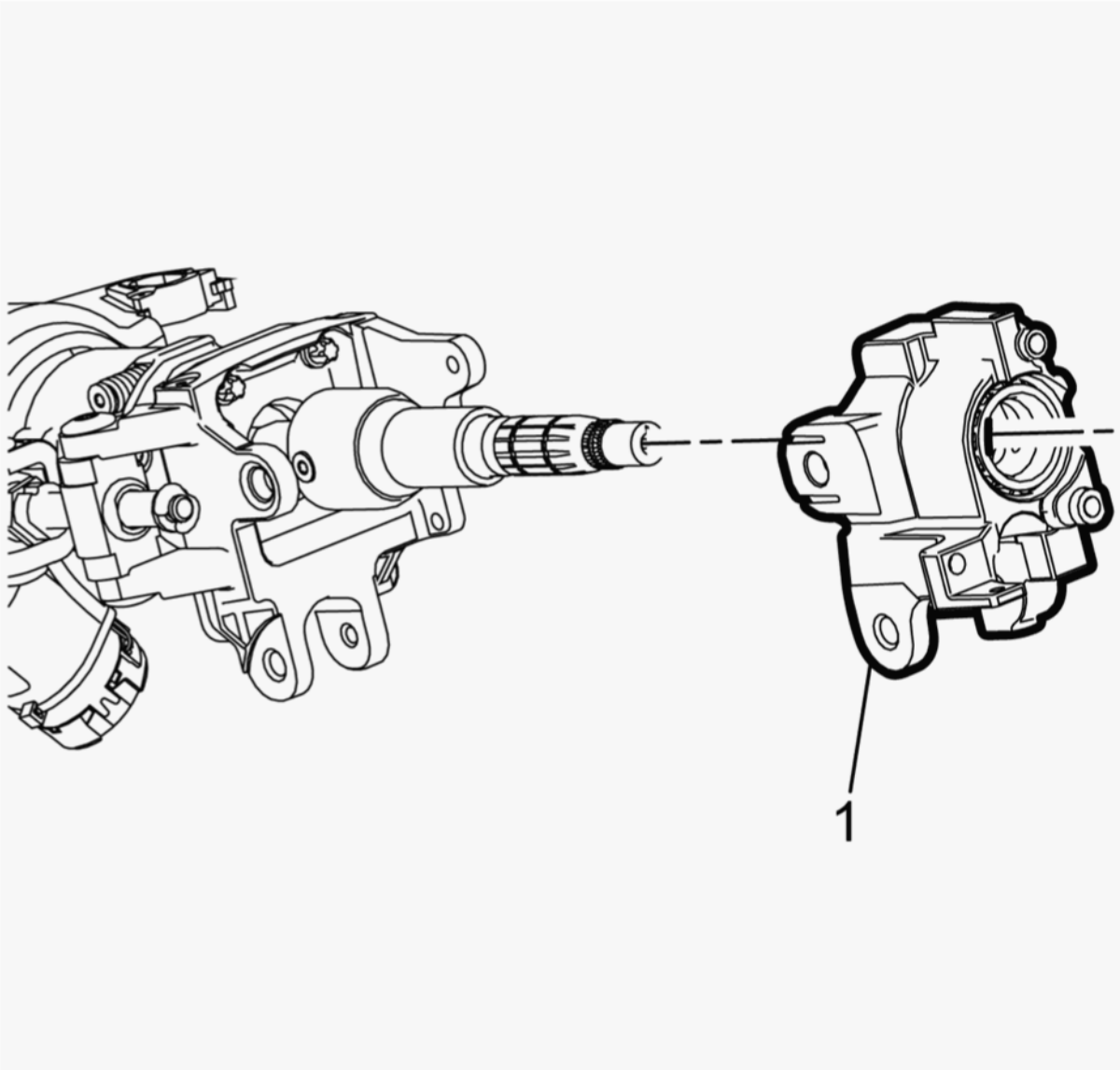

Fig. 82: Steering Column Tilt Head Assembly
Courtesy of GENERAL MOTORS COMPANY

cardiagn.com

11. Remove the steering column tilt head assembly (1) from the steering column.

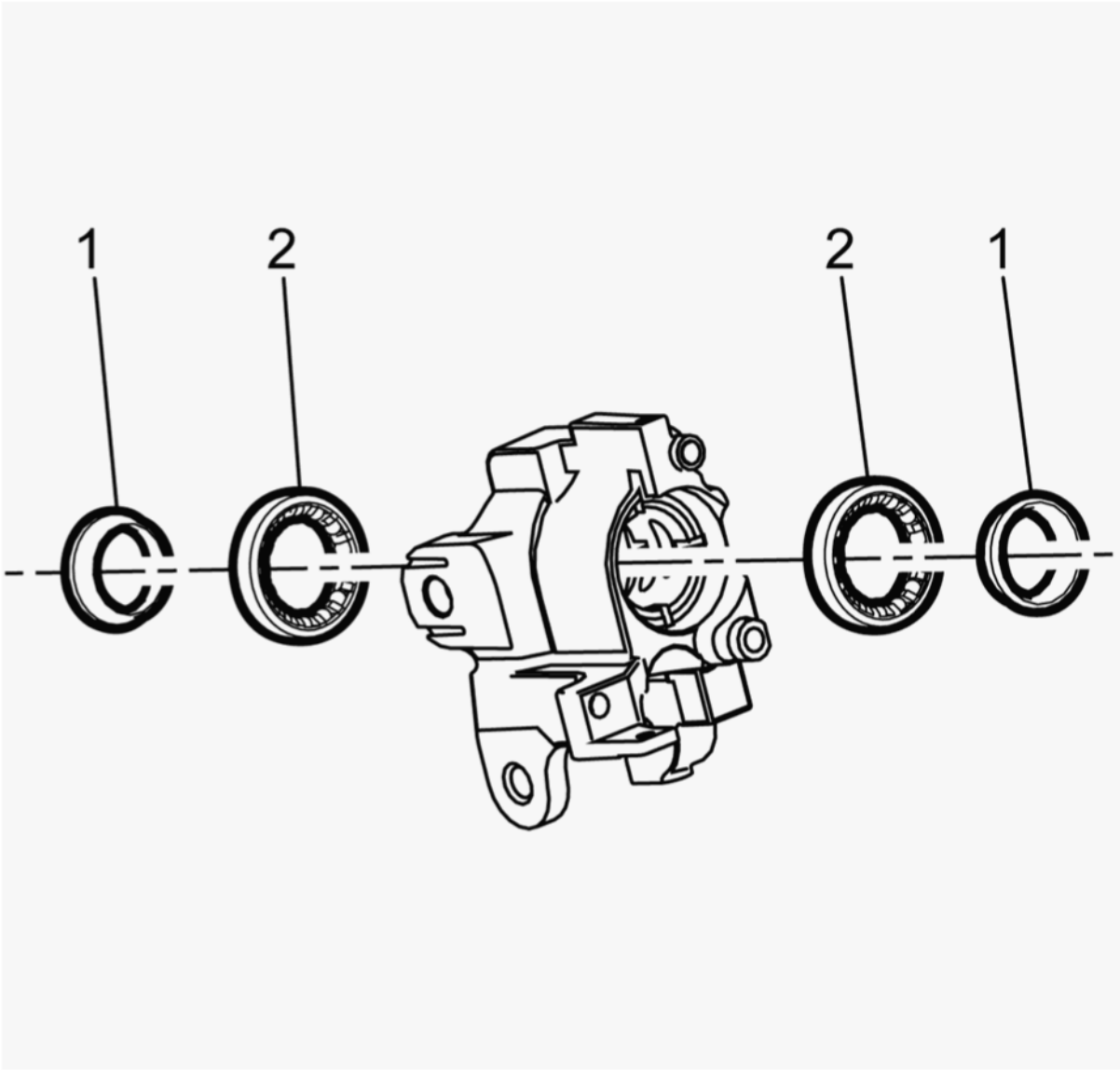

Fig. 83: Steering Shaft Upper Bearing And Steering Shaft Upper Bearing Race
Courtesy of GENERAL MOTORS COMPANY

12. Remove the steering shaft upper bearing race(s) (1) and steering shaft upper bearing(s) (2) from the steering column tilt head assembly.

cardiagn.com

Installation Procedure

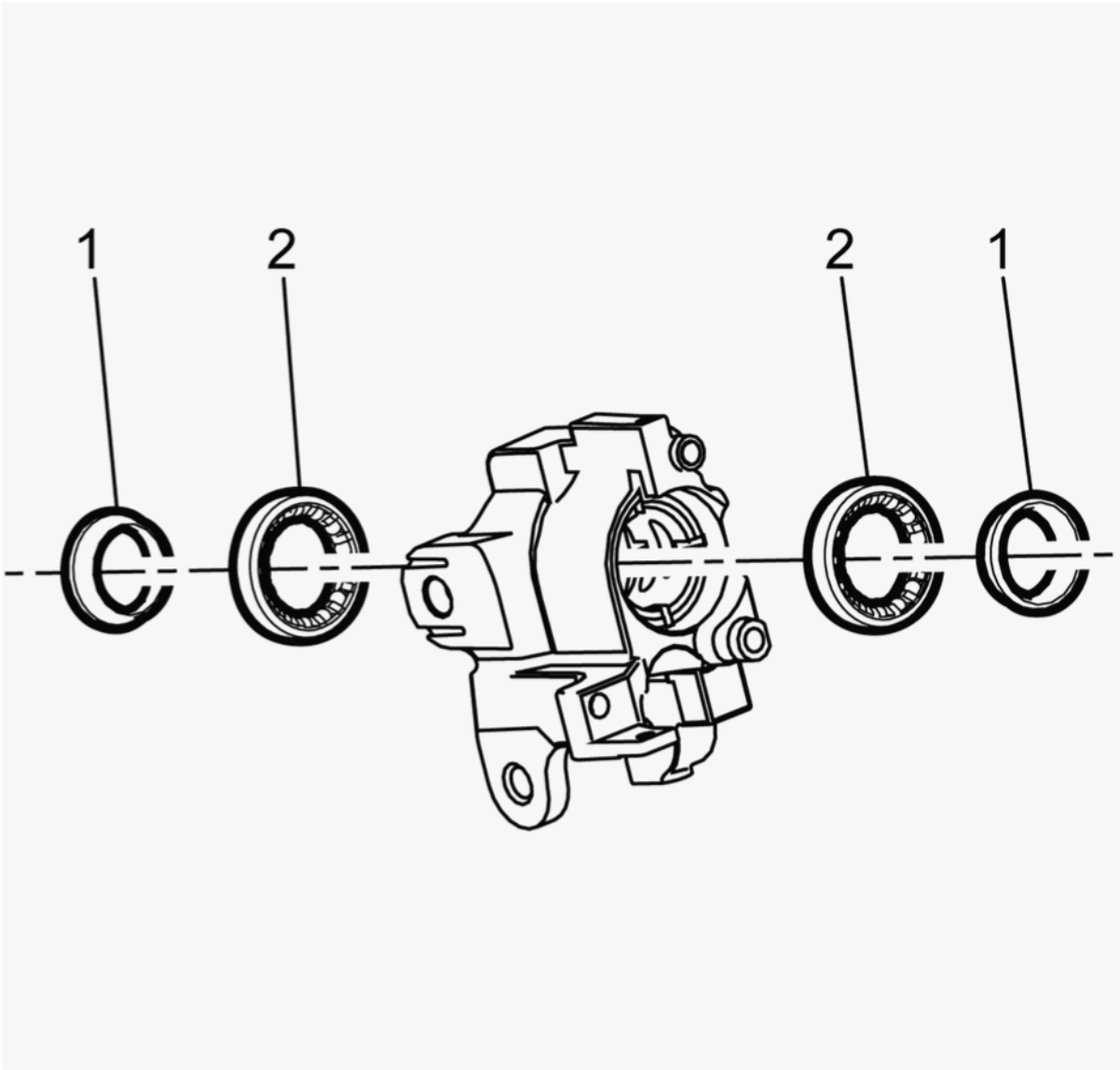

Fig. 84: Steering Shaft Upper Bearing And Steering Shaft Upper Bearing Race
Courtesy of GENERAL MOTORS COMPANY

1. Install the steering shaft upper bearing(s) (2) and steering shaft upper bearing race(s) (1) in the steering column tilt head assembly.

cardiagn.com

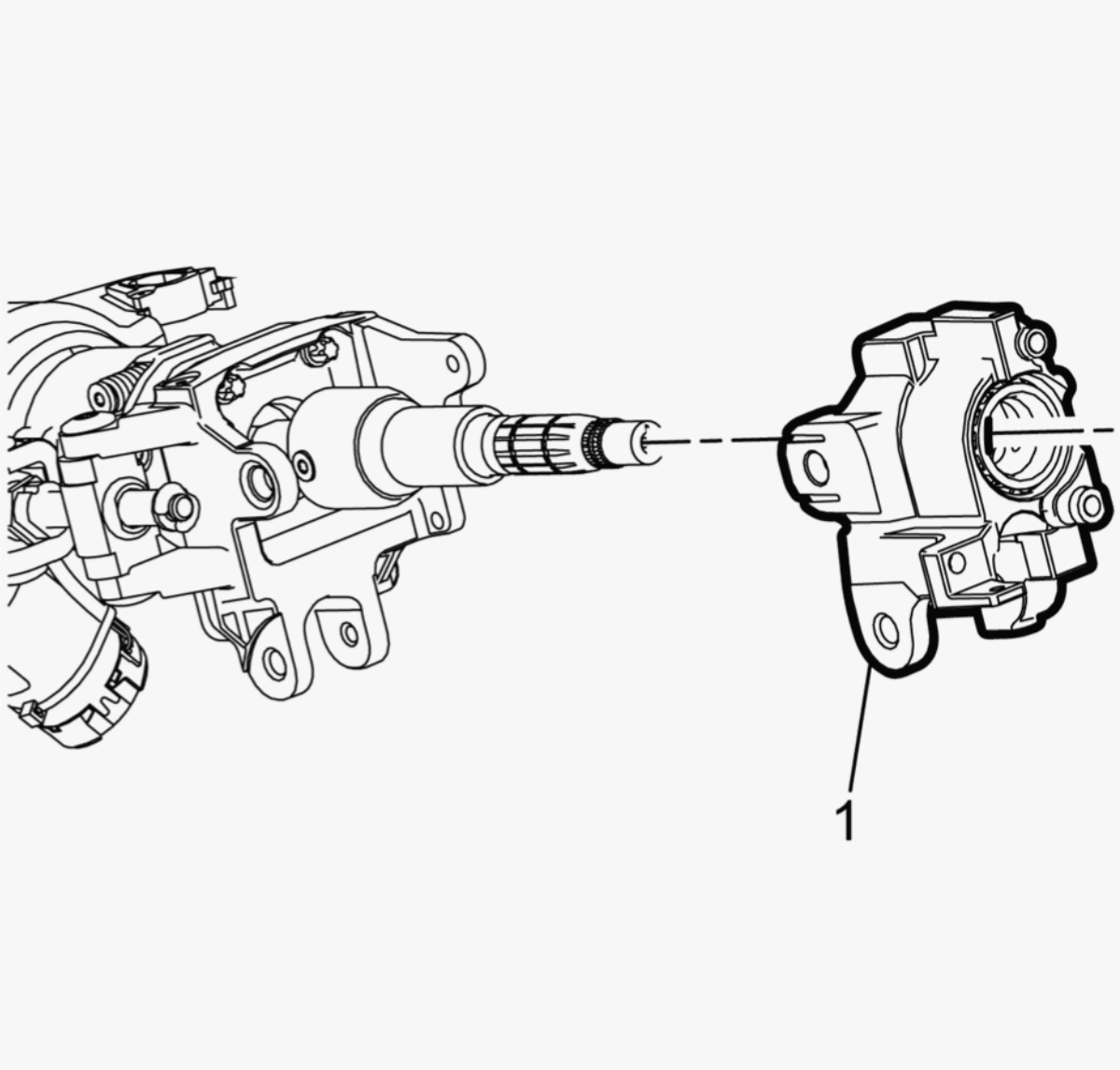

Fig. 85: Steering Column Tilt Head Assembly
Courtesy of GENERAL MOTORS COMPANY

2. Install the steering column tilt head assembly (1) on the steering column.
3. Install the **CH-42640** anti-rotation pin in the steering column.
4. Lubricate the steering column tilt head pivot pins. **Adhesives, Fluids, Lubricants, and Sealers**

cardiagn.com

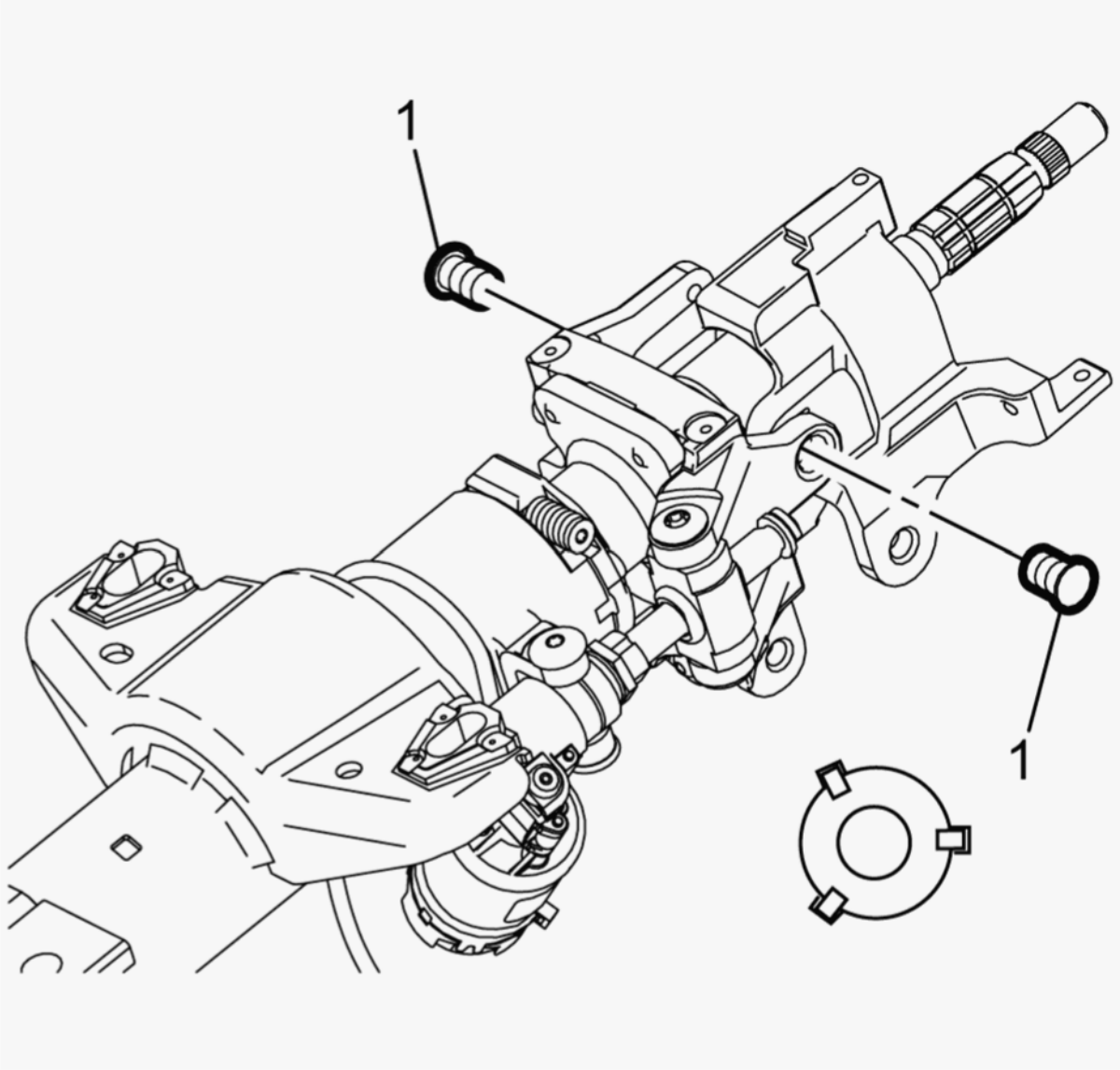

Fig. 86: Steering Column Tilt Head Pivot Pins
Courtesy of GENERAL MOTORS COMPANY

5. Install the steering column tilt head pivot pins (1) into the steering column tilt head assembly.
6. Stake the steering column in three locations around each steering column tilt head pivot pin.
7. Install Steering Column Tilt Wheel Actuator Motor -**Steering Column Tilt Wheel Actuator Motor Replacement**

cardiagn.com

8. Install Steering Column Electronic Lock - **Steering Column Electronic Lock Replacement**
9. Install Transmission Control -**Transmission Control Replacement (N38)**
10. Install Turn Signal Switch -**Turn Signal Switch Replacement (N38)**

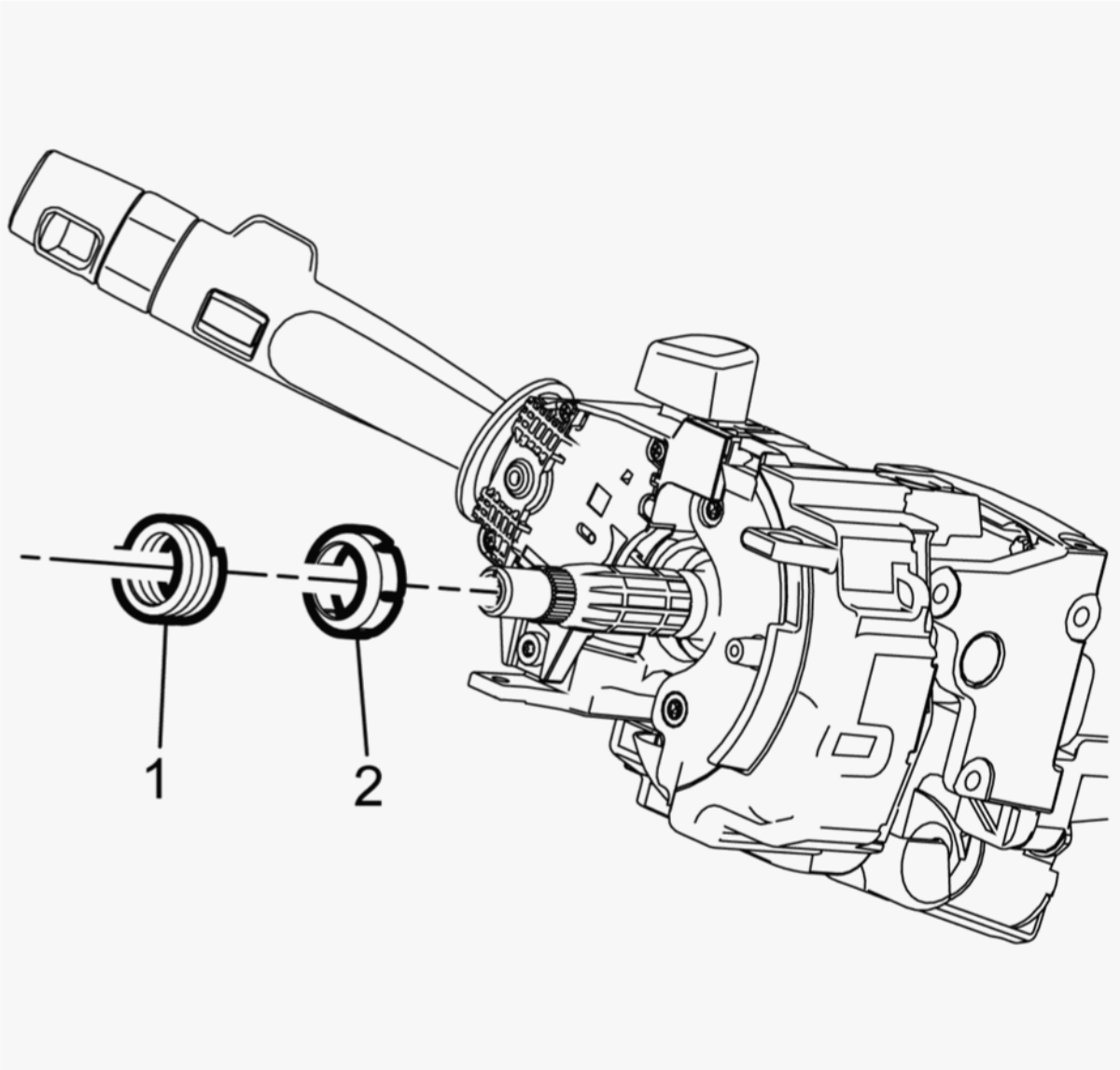

Fig. 87: Steering Shaft Upper Bearing Spring
Courtesy of GENERAL MOTORS COMPANY

cardiagn.com

11. Install the steering shaft upper bearing race seat (2) and steering shaft upper bearing spring (1).
12. Install Turn Signal Switch Cancel Cam -**Turn Signal Switch Cancel Cam Replacement (Chevrolet/GMC)Turn Signal Switch Cancel Cam Replacement (Cadillac)**
13. Install Steering Wheel Airbag Coil -**Steering Wheel Airbag Coil Replacement (Chevrolet/GMC)** **Steering Wheel Airbag Coil Replacement (Cadillac)**
14. Install Steering Column -**Steering Column Replacement (N38)**

STEERING COLUMN REPLACEMENT (N33, N37)

Special Tools

CH-42640 Steering Column Anti-Rotation Pin

Equivalent regional tools:**Special Tools**

Removal Procedure

1. Unlearn the steering angle sensor using the scan tool to perform the reset function listed under the steering wheel angle sensor module. **Steering Wheel Angle Sensor Centering**

   WARNING: Refer to SIR Warning .

   WARNING: Refer to SIR Inflator Module Handling and Storage Warning .

2. Disable the SIR system. **SIR Disabling and Enabling**

   CAUTION: With wheels of the vehicle facing straight ahead, secure the steering wheel utilizing steering column anti-rotation pin, steering column lock, or a strap to prevent rotation. Locking of the steering column will prevent damage and a possible malfunction of the SIR system. The steering wheel must be secured in position before disconnecting the following components:

   - **The steering column**
   - **The intermediate shaft(s)**
   - **The steering gear**

   After disconnecting these components, do not rotate the steering wheel or move the front tires and wheels. Failure to follow this procedure may cause the SIR coil assembly to become un-centered and

cardiagn.com

cause possible damage to the SIR coil. If you think the SIR coil has become un-centered, refer to your specific SIR coil's centering procedure to re-center SIR Coil.

3. With the wheels of the vehicle in the straight ahead position, use the **CH-42640** anti-rotation pin to lock the steering column.
4. Remove Steering Column Shroud -**Steering Column Shroud Replacement (RPO N37)Steering Column Shroud Replacement (RPO N33)**
5. Remove Instrument Panel Knee Bolster -**Instrument Panel Knee Bolster Replacement (Chevrolet / GMC)** **Instrument Panel Knee Bolster Replacement (Cadillac)**
6. Remove Floor Front Air Outlet Duct - Left Side -**Floor Front Air Outlet Duct Replacement - Left Side (Utilities)** **Floor Front Air Outlet Duct Replacement - Left Side (Z75)**

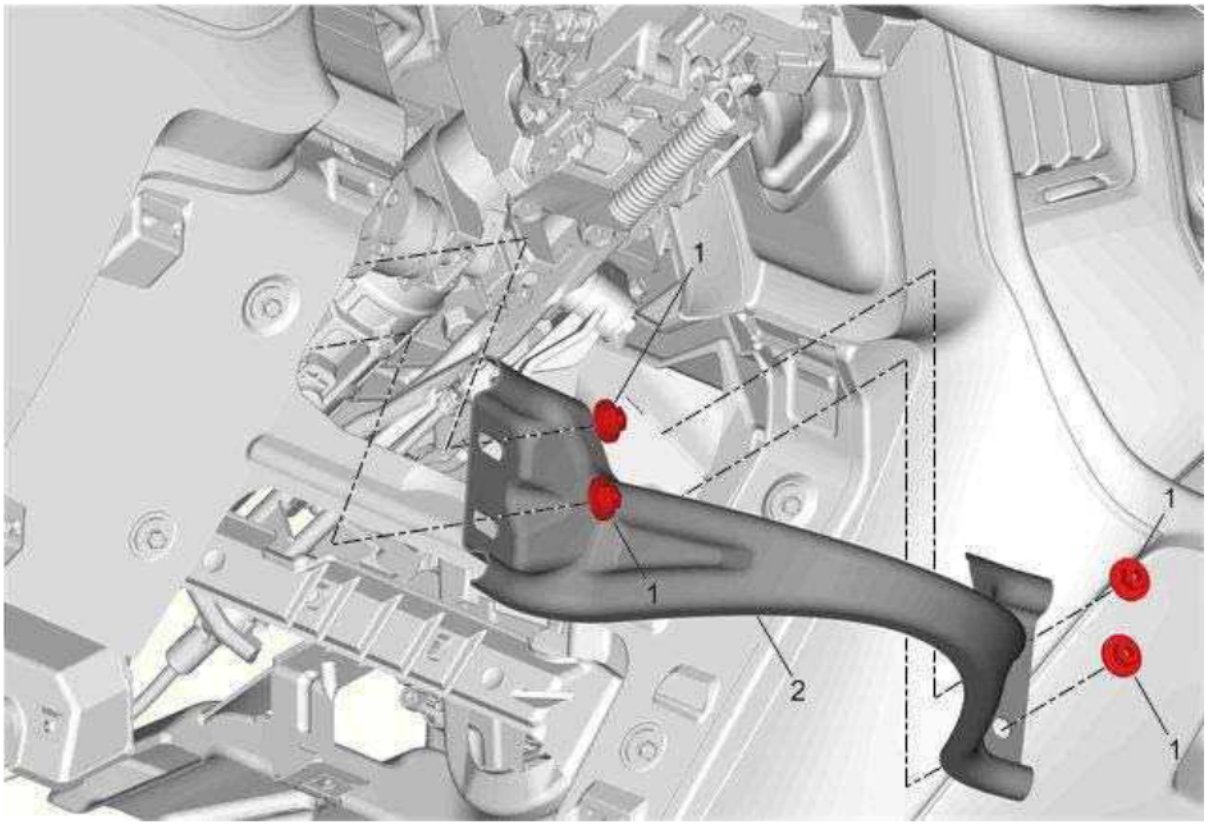

Fig. 88: Deflector And Nuts
Courtesy of GENERAL MOTORS COMPANY

7. Remove the instrument panel knee bolster deflector nuts (1) and deflector (2).

cardiagn.com

8. Separate the upper intermediate steering shaft from the steering column. **Upper Intermediate Steering Shaft Replacement**
9. If equipped, disconnect the automatic transmission shift lock control actuator. **Automatic Transmission Shift Lock Control Actuator Replacement (N33, N37)**
10. Disconnect the range selector lever cable from the steering column and set aside. **Range Selector Lever Cable Replacement**

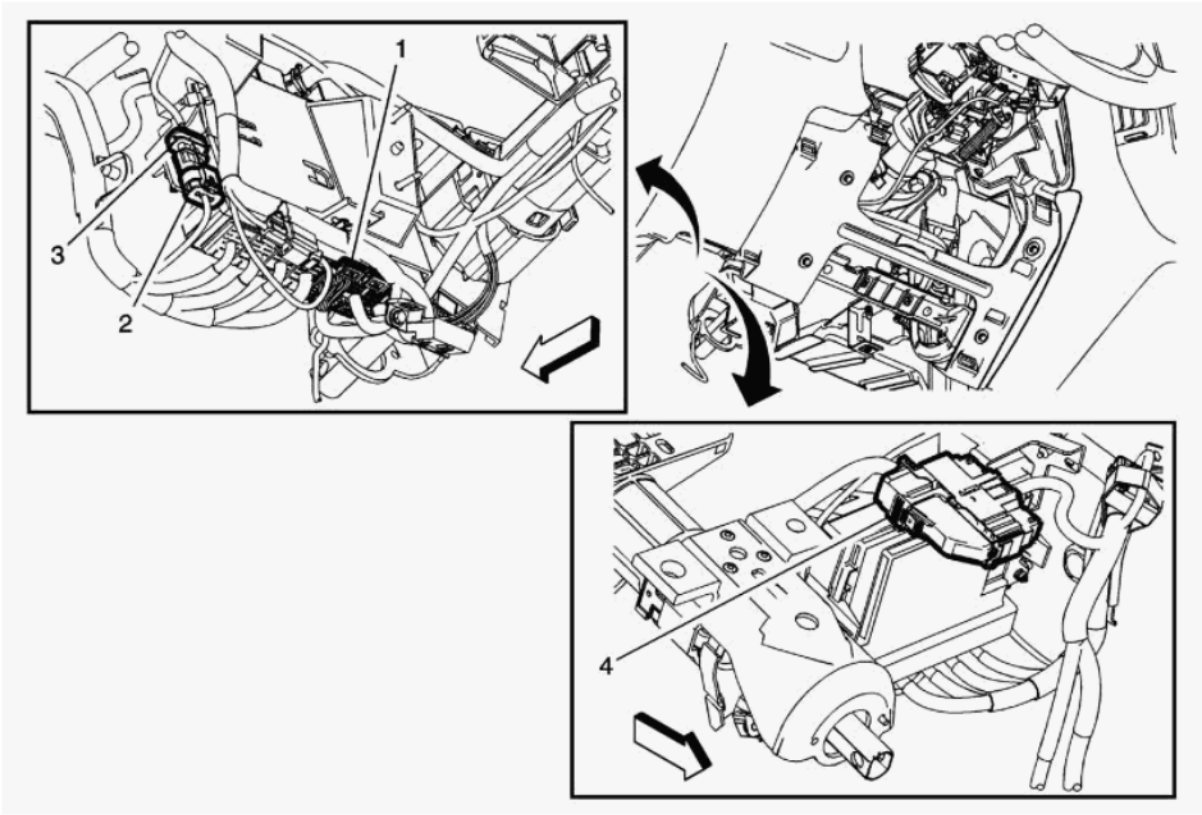

Fig. 89: Steering Column Wiring Harness Connector
Courtesy of GENERAL MOTORS COMPANY

11. Disconnect the steering column wiring harness connector (1) from the body control module.
12. Disconnect the vehicle body wiring harness connector (2) from the steering wheel airbag wiring harness connector (3).

    Remove the airbag wiring harness connector from the plastic retainer on the body control module bracket.

13. Release the cam lock on the steering column wiring harness connector (4) on top of the body control module bracket and disconnect the

cardiagn.com

connector from the vehicle body wiring harness.

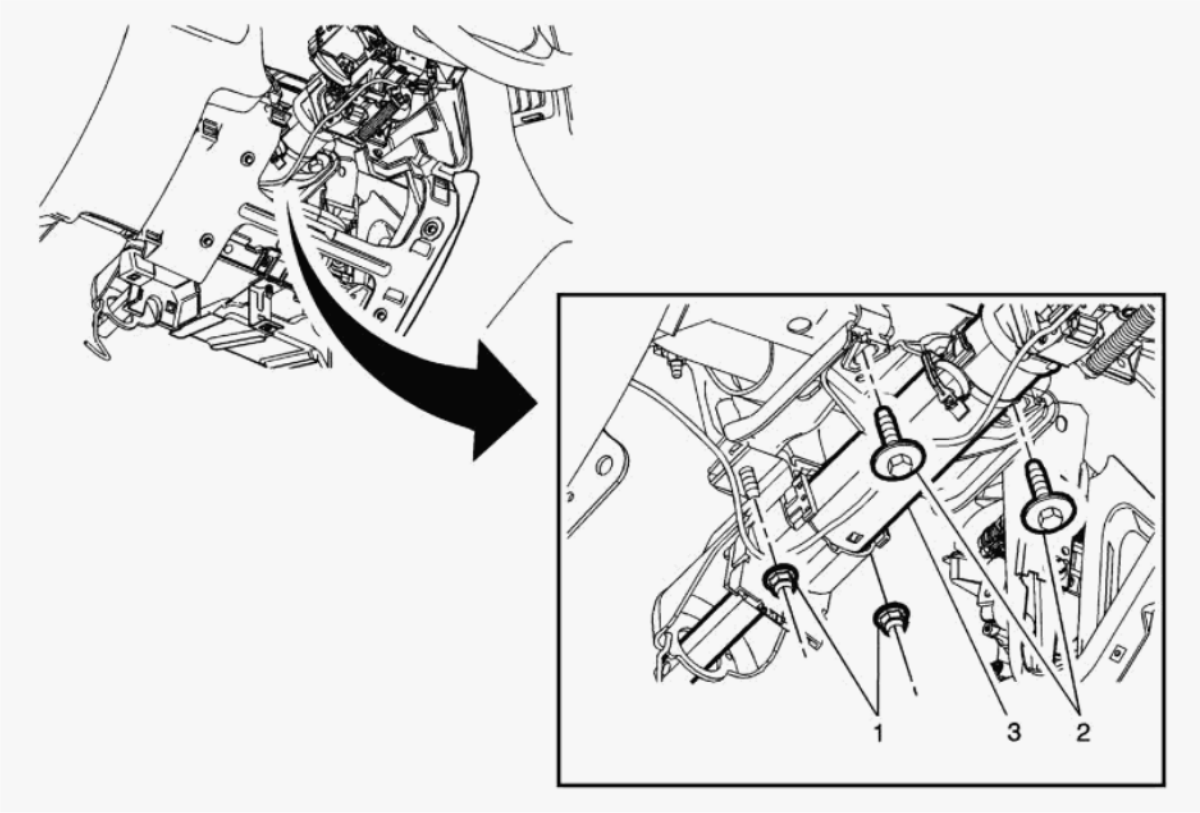

Fig. 90: Steering Column
Courtesy of GENERAL MOTORS COMPANY

14. Remove the steering column nuts (1).
15. Remove the steering column bolts (2).
16. Remove the steering column (3) from the vehicle.
17. Transfer components as necessary.

Installation Procedure

cardiagn.com

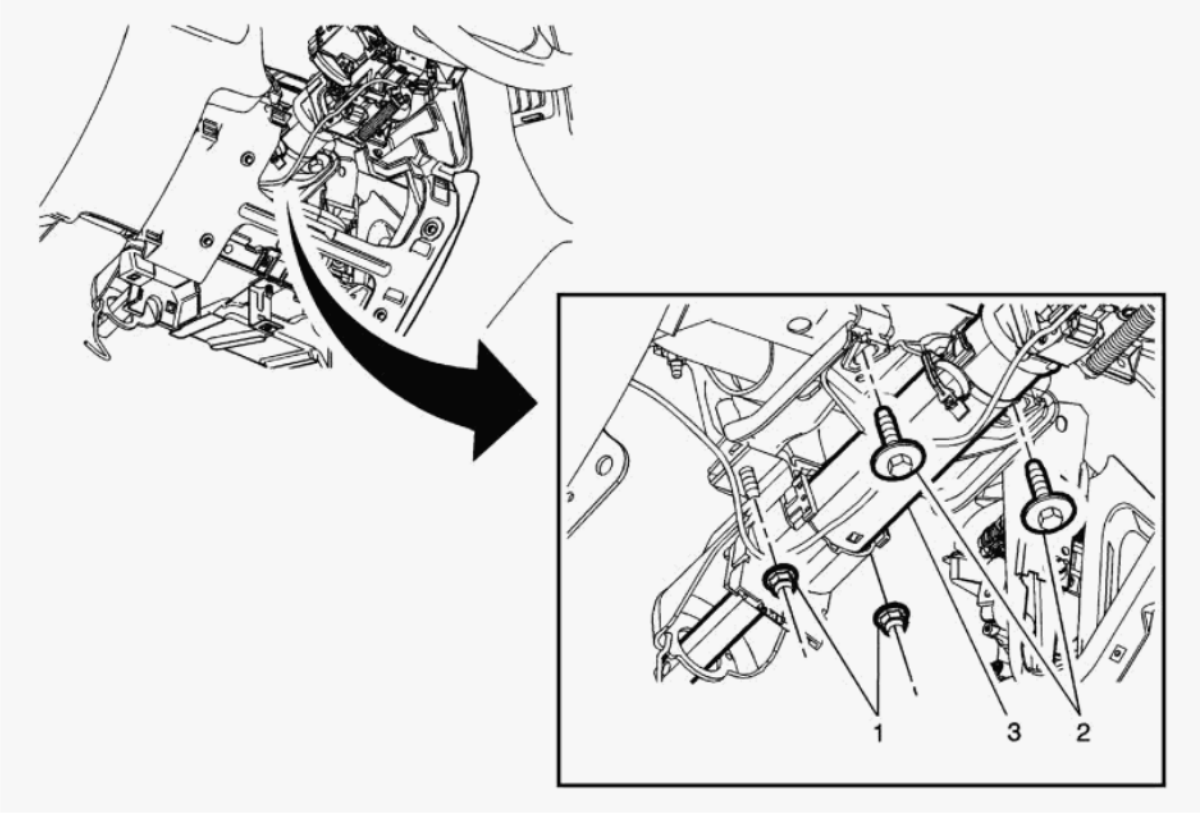

Fig. 91: Steering Column
Courtesy of GENERAL MOTORS COMPANY

1. Position the steering column (3) in the vehicle.

WARNING: In order to ensure the intended function of the steering column in a vehicle during a crash and in order to avoid personal injury to the driver, perform the following:

- **Tighten the steering column lower fasteners before you tighten the steering column upper fasteners. Failure to do this can damage the steering column.**
- **Tighten the steering column fasteners to the specified torque. Overtightening the upper steering column fasteners could affect the steering column collapse.**

2. Start the steering column nuts (1) but do NOT tighten.

cardiagn.com

3. Start the steering column bolts (2) but do NOT tighten.

CAUTION: Refer to Fastener Caution .

4. Tighten the steering column nuts (1) to 27 N.m (20 lb ft).
5. Tighten the steering column bolts (2) to 27 N.m (20 lb ft).

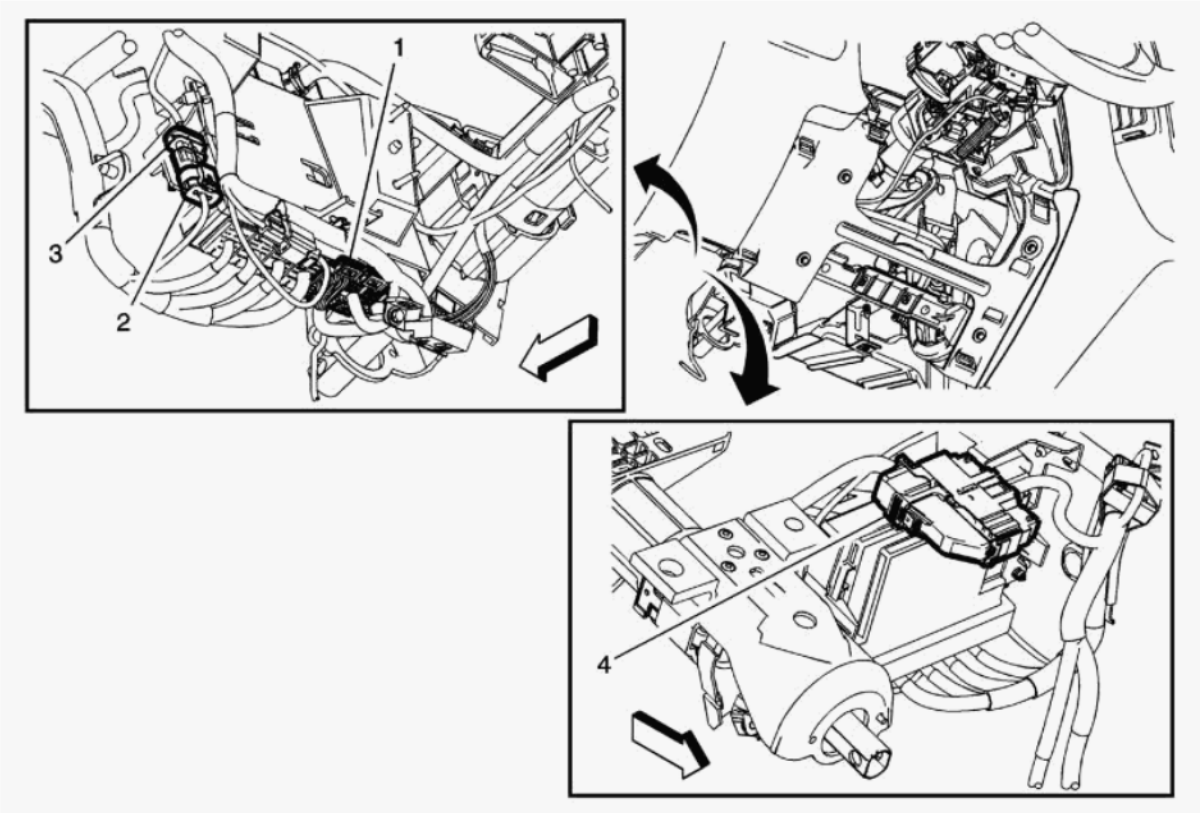

Fig. 92: Steering Column Wiring Harness Connector
Courtesy of GENERAL MOTORS COMPANY

6. Connect the steering column wiring harness connector (4) to the vehicle body wiring harness on top of the body control module bracket.

   Ensure the cam lock on the connector is secured completely.

7. Secure the steering wheel airbag wiring harness connector (3) on the plastic retainer on the body control module bracket and connect the

cardiagn.com

vehicle body wiring harness connector (2).

8. Connect the steering column wiring harness connector (1) to the body control module.
9. Connect the range selector lever cable to the steering column. **Range Selector Lever Cable Replacement**
10. If equipped, connect the automatic transmission shift lock control actuator. **Automatic Transmission Shift Lock Control Actuator Replacement (N33, N37)**
11. Connect the upper intermediate steering shaft to the steering column. **Upper Intermediate Steering Shaft Replacement**

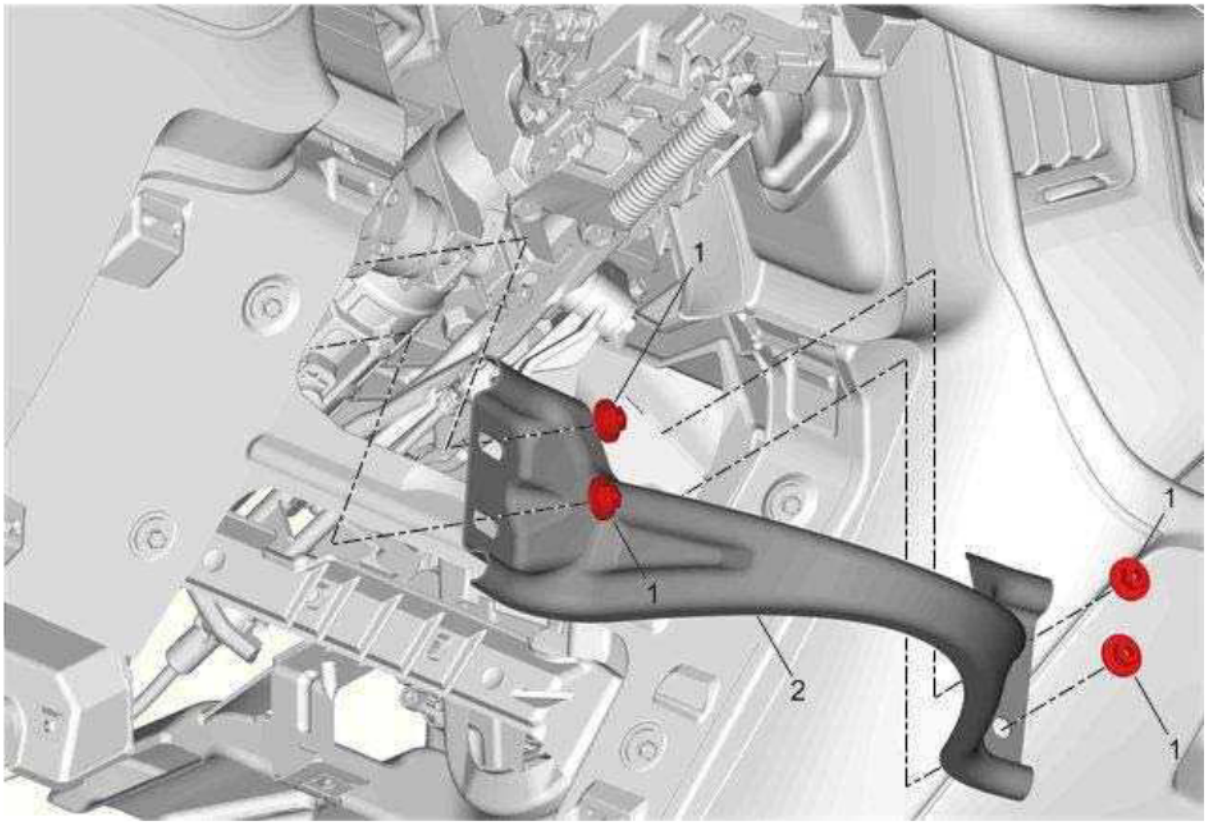

Fig. 93: Deflector And Nuts
Courtesy of GENERAL MOTORS COMPANY

12. Install the instrument panel knee bolster deflector (2) and nuts (1) and tighten the nuts to 9 N.m (80 lb in).
13. Install Floor Front Air Outlet Duct - Left Side - **Floor Front Air Outlet Duct Replacement - Left Side (Utilities)** **Floor Front Air Outlet Duct Replacement - Left Side (Z75)**

cardiagn.com

14. Install Instrument Panel Knee Bolster - **Instrument Panel Knee Bolster Replacement (Chevrolet / GMC)** **Instrument Panel Knee Bolster Replacement (Cadillac)**
15. Install Steering Column Shroud - **Steering Column Shroud Replacement (RPO N37)**Steering Column Shroud Replacement (RPO N33)
16. Enable the SIR System. **SIR Disabling and Enabling**
17. Relearn the steering angle sensor. **Steering Wheel Angle Sensor Centering**

STEERING COLUMN REPLACEMENT (N38)

Special Tools

CH-42640 Steering Column Anti-Rotation Pin

Equivalent regional tools:**Special Tools**

Removal Procedure

1. Unlearn the steering angle sensor using the scan tool to perform the reset function listed under the steering wheel angle sensor module. **Steering Wheel Angle Sensor Centering**

   WARNING: Refer to SIR Warning .

   WARNING: Refer to SIR Inflator Module Handling and Storage Warning .

2. Disable the SIR system. **SIR Disabling and Enabling**

   CAUTION: With wheels of the vehicle facing straight ahead, secure the steering wheel utilizing steering column anti-rotation pin, steering column lock, or a strap to prevent rotation. Locking of the steering column will prevent damage and a possible malfunction of the SIR system. The steering wheel must be secured in position before disconnecting the following components:

   - **The steering column**
   - **The intermediate shaft(s)**
   - **The steering gear**

   After disconnecting these components, do not rotate the steering wheel or move the front tires and wheels. Failure to follow this procedure may cause the SIR coil assembly to become un-centered and cause possible damage to the SIR coil. If you think the SIR coil has become un-centered, refer to your

cardiagn.com

specific SIR coil's centering procedure to re-center SIR Coil.

3. With the wheels of the vehicle in the straight ahead position, use the **CH-42640** anti-rotation pin to lock the steering column.
4. Remove Steering Column Shroud -**Steering Column Shroud Replacement (RPO N38)**
5. Remove Instrument Panel Knee Bolster -**Instrument Panel Knee Bolster Replacement (Chevrolet / GMC)** **Instrument Panel Knee Bolster Replacement (Cadillac)**
6. Remove Floor Front Air Outlet Duct - Left Side -**Floor Front Air Outlet Duct Replacement - Left Side (Utilities)** **Floor Front Air Outlet Duct Replacement - Left Side (Z75)**

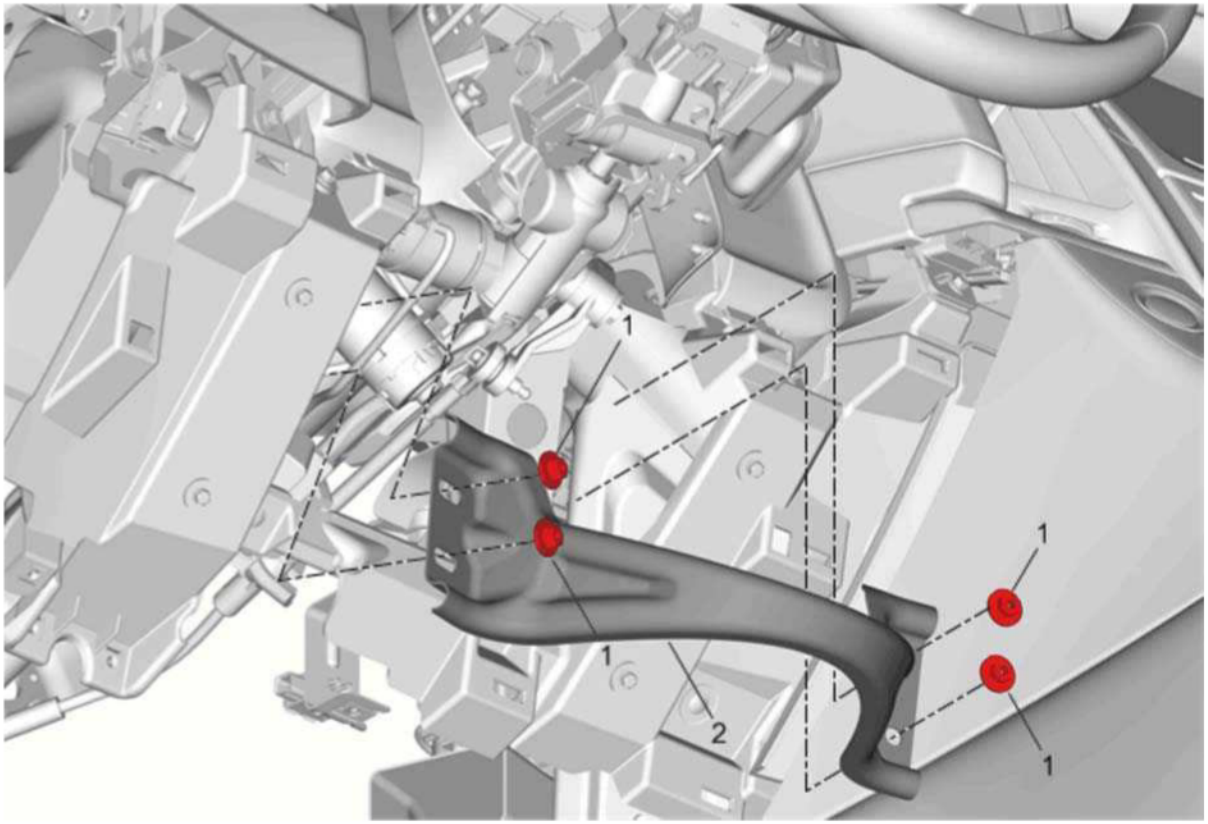

Fig. 94: Instrument Panel Knee Bolster Deflector And Nuts
Courtesy of GENERAL MOTORS COMPANY

7. Remove the instrument panel knee bolster deflector nuts (1) and deflector (2).
8. Separate the upper intermediate steering shaft from the steering column. **Upper Intermediate Steering Shaft Replacement**

cardiagn.com

9. Disconnect the range selector lever cable from the steering column and set aside. **Range Selector Lever Cable Replacement**

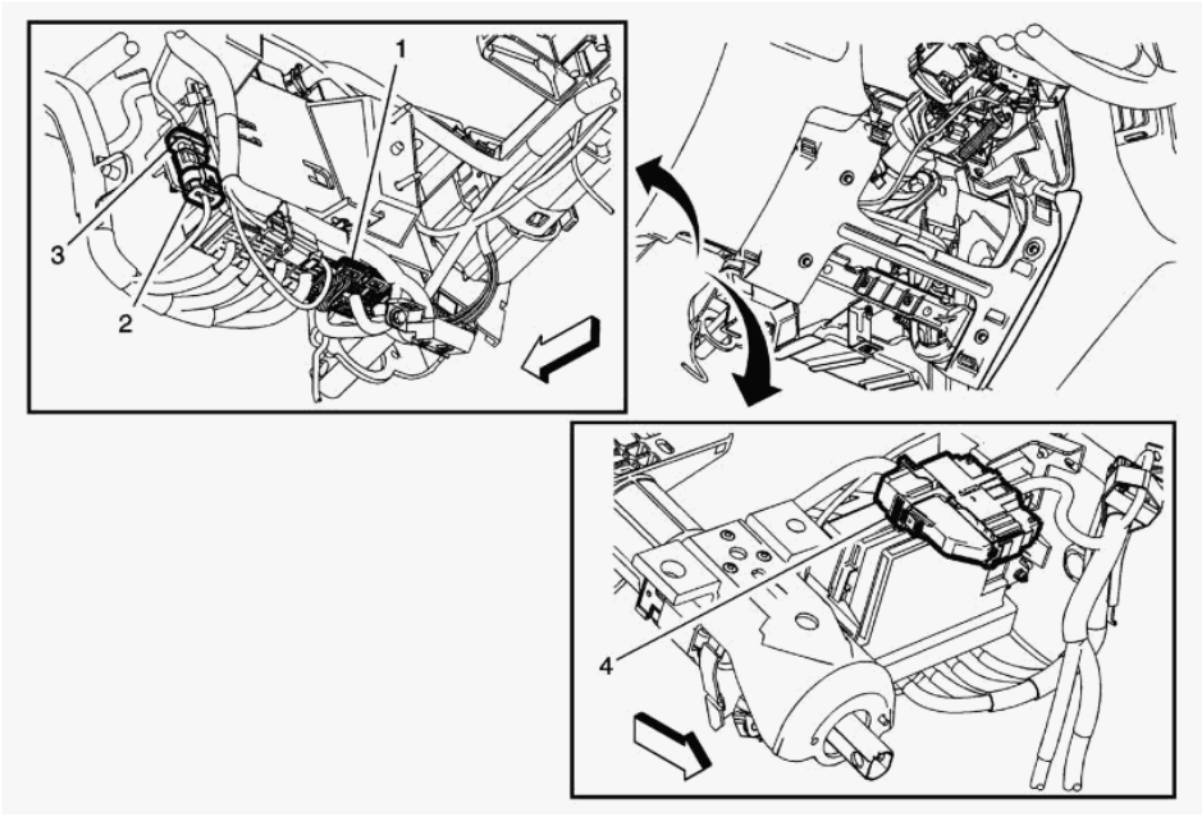

Fig. 95: Steering Column Wiring Harness Connector
Courtesy of GENERAL MOTORS COMPANY

10. Disconnect the steering column wiring harness connector (1) from the body control module.
11. Disconnect the vehicle body wiring harness connector (2) from the steering wheel airbag wiring harness connector (3).

    Remove the airbag wiring harness connector from the plastic retainer on the body control module bracket.

12. Release the cam lock on the steering column wiring harness connector (4) on top of the body control module bracket and disconnect the connector from the vehicle body wiring harness.

cardiagn.com

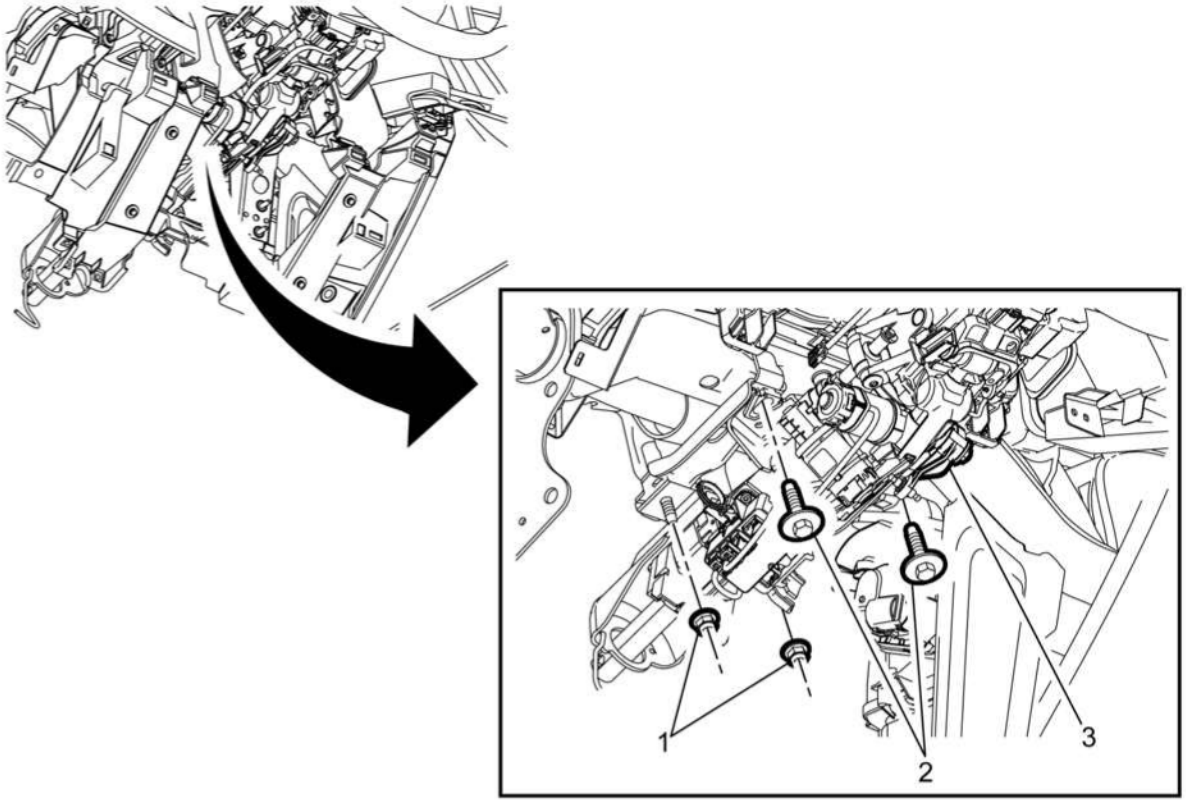

Fig. 96: Steering Column
Courtesy of GENERAL MOTORS COMPANY

13. Remove the steering column nuts (1).
14. Remove the steering column bolts (2).
15. Remove the steering column (3) from the vehicle.
16. Transfer components as necessary.

Installation Procedure

cardiagn.com

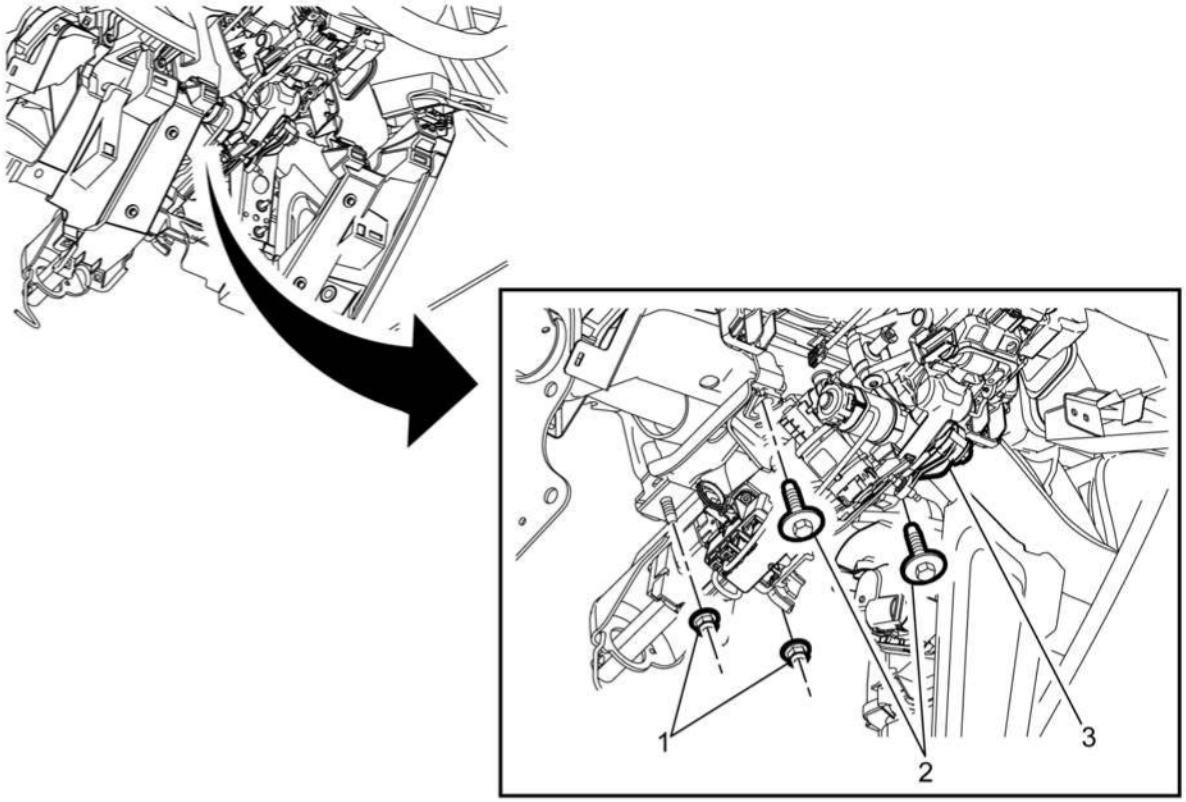

Fig. 97: Steering Column
Courtesy of GENERAL MOTORS COMPANY

1. Position the steering column (3) in the vehicle.

WARNING: In order to ensure the intended function of the steering column in a vehicle during a crash and in order to avoid personal injury to the driver, perform the following:

- **Tighten the steering column lower fasteners before you tighten the steering column upper fasteners. Failure to do this can damage the steering column.**
- **Tighten the steering column fasteners to the specified torque. Overtightening the upper steering column fasteners could affect the steering column collapse.**

2. Start the steering column nuts (1) but do NOT tighten.

cardiagn.com

3. Start the steering column bolts (2) but do NOT tighten.

CAUTION: Refer to Fastener Caution .

4. Tighten the steering column nuts (1) to 27 N.m (20 lb ft).
5. Tighten the steering column bolts (2) to 27 N.m (20 lb ft).

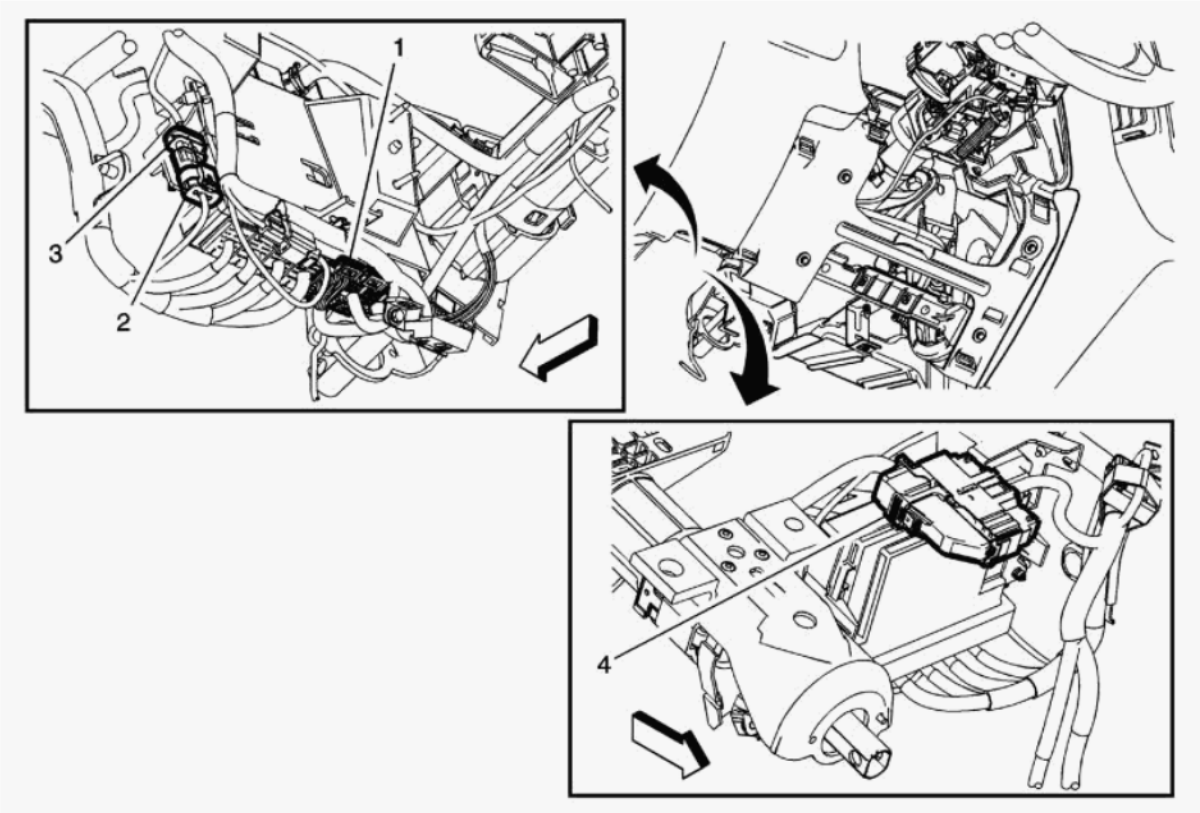

Fig. 98: Steering Column Wiring Harness Connector
Courtesy of GENERAL MOTORS COMPANY

6. Connect the steering column wiring harness connector (4) to the vehicle body wiring harness on top of the body control module bracket.

   Ensure the cam lock on the connector is secured completely.

7. Secure the steering wheel airbag wiring harness connector (3) on the plastic retainer on the body control module bracket and connect the

cardiagn.com

vehicle body wiring harness connector (2).

8. Connect the steering column wiring harness connector (1) to the body control module.
9. Connect the range selector lever cable to the steering column. **Range Selector Lever Cable Replacement**
10. Connect the upper intermediate steering shaft to the steering column. **Upper Intermediate Steering Shaft Replacement**

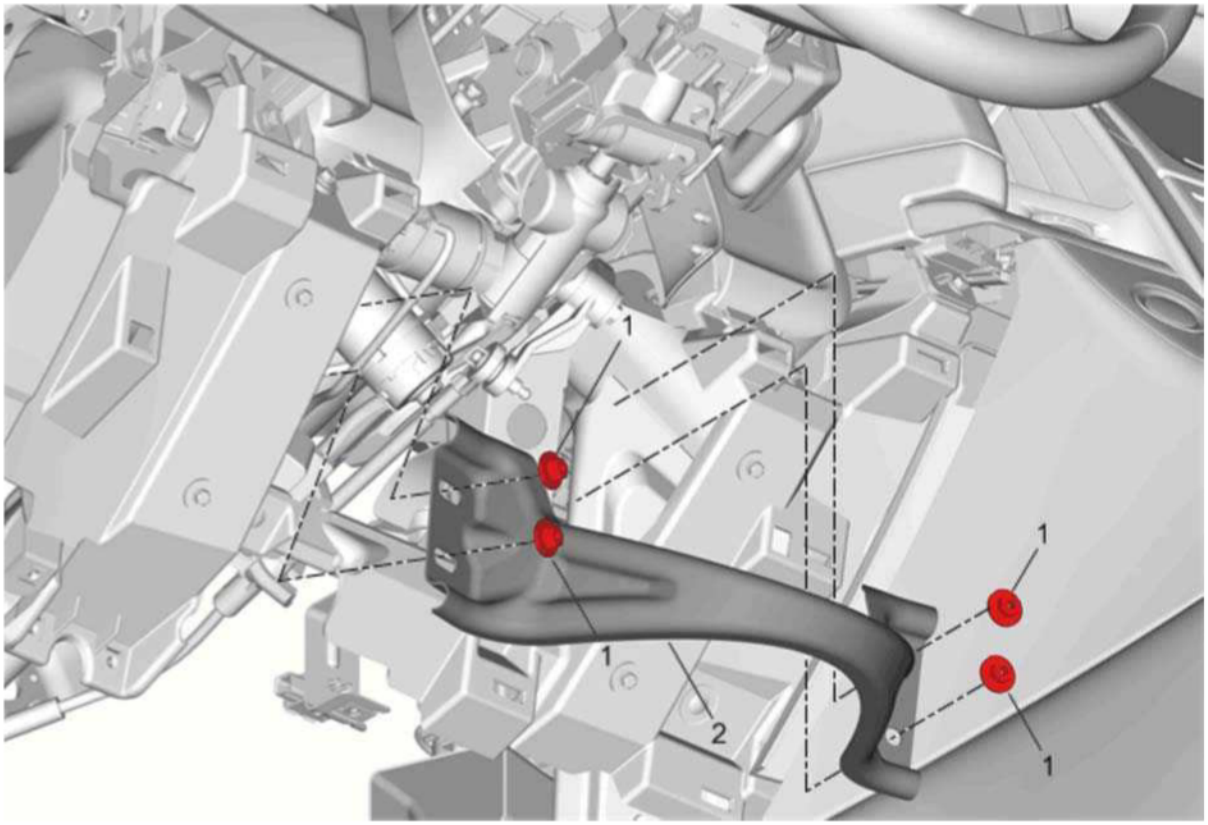

Fig. 99: Instrument Panel Knee Bolster Deflector And Nuts
Courtesy of GENERAL MOTORS COMPANY

11. Install the instrument panel knee bolster deflector (2) and nuts (1) and tighten the nuts to 9 N.m (80 lb in).
12. Install Floor Front Air Outlet Duct - Left Side - **Floor Front Air Outlet Duct Replacement - Left Side (Utilities)** **Floor Front Air Outlet Duct Replacement - Left Side (Z75)**
13. Install Instrument Panel Knee Bolster -**Instrument Panel Knee Bolster Replacement (Chevrolet / GMC)** **Instrument Panel Knee Bolster Replacement (Cadillac)**

cardiagn.com

14. Install Steering Column Shroud -**Steering Column Shroud Replacement (RPO N38)**
15. Enable the SIR System. **SIR Disabling and Enabling**
16. Program the steering column electronic lock. **Steering Column Lock Module Programming and Setup**
17. Relearn the steering angle sensor. **Steering Wheel Angle Sensor Centering**

STEERING COLUMN SEAL REPLACEMENT

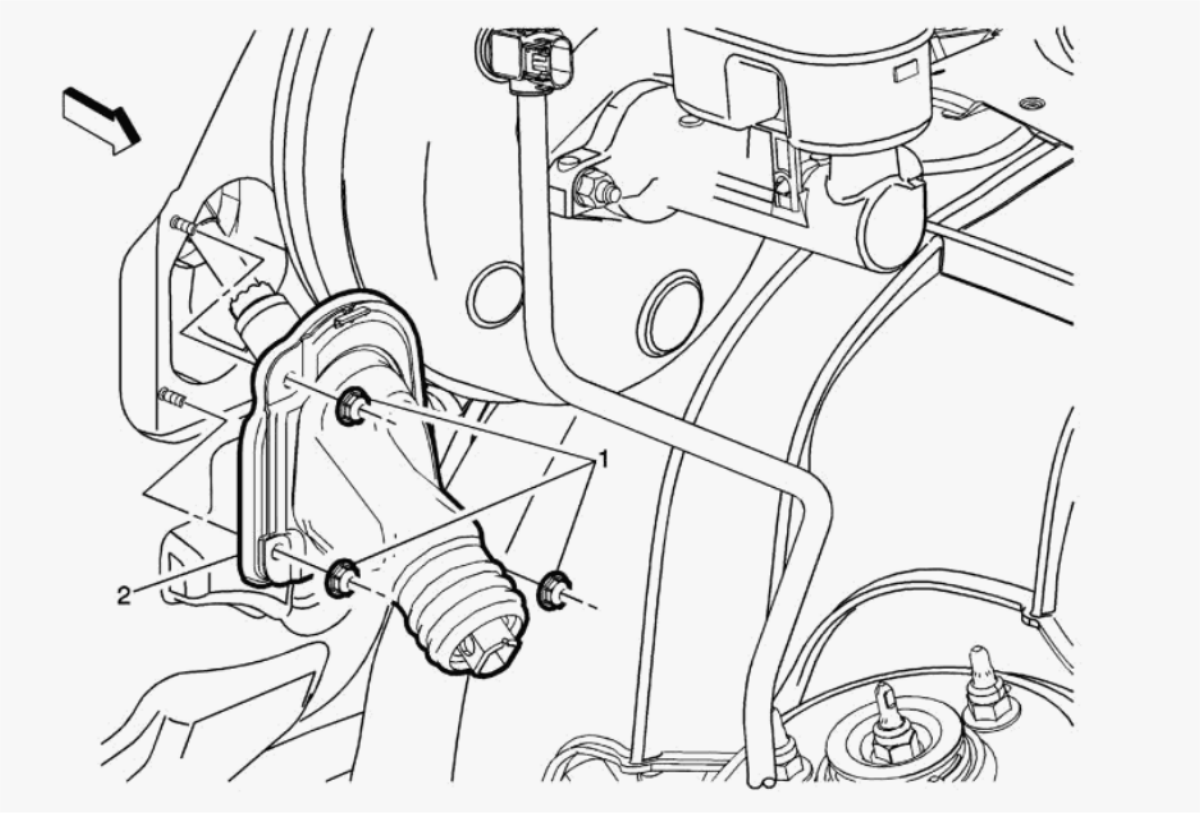

Fig. 100: Steering Column Seal
Courtesy of GENERAL MOTORS COMPANY

Callout	Component Name
Preliminary Procedure	
Separate Intermediate Steering Shaft@Upper Intermediate Steering Shaft - **Intermediate Steering Shaft Replacement**	

cardiagn.com

Callout	Component Name
1	Steering Column Seal Nut (Qty: 3) **CAUTION:** **Refer to** **Fastener Caution** . **Tighten** 3 N.m (27 lb in)
2	Steering Column Seal

STEERING SHAFT LOWER BEARING ADAPTER REPLACEMENT

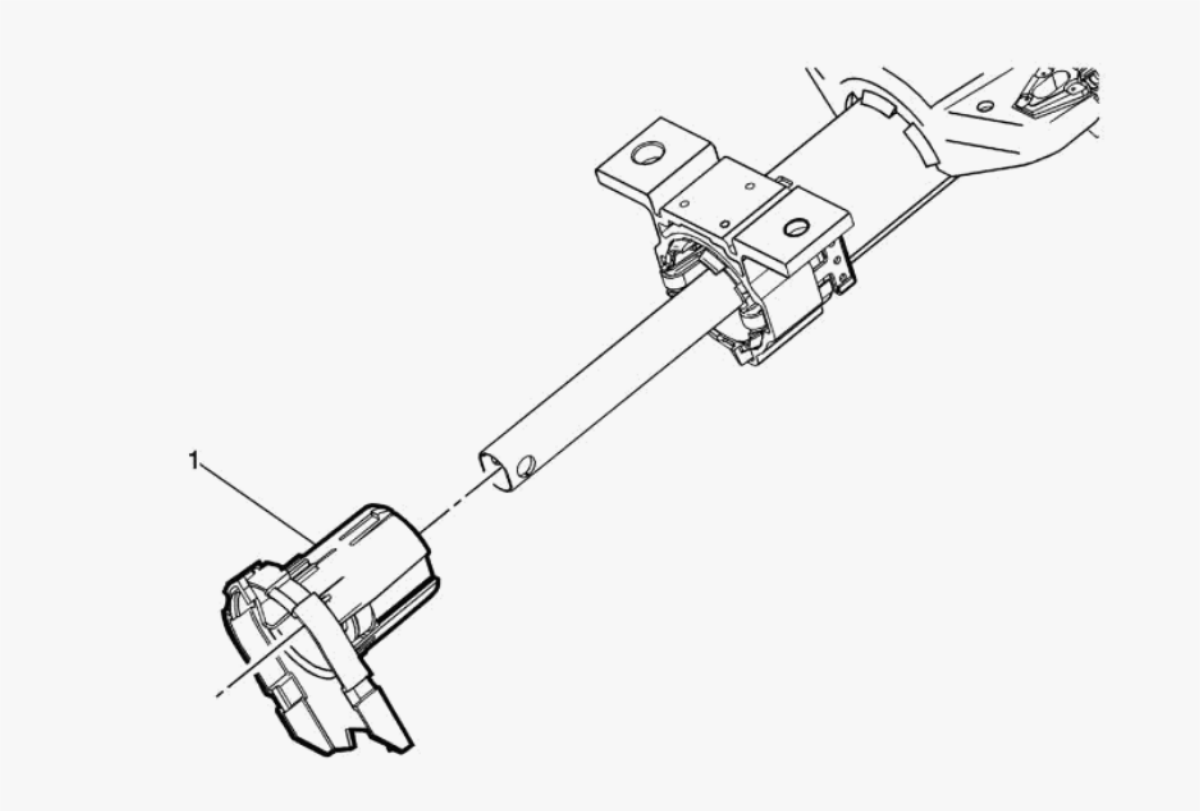

cardiagn.com

Fig. 101: Steering Shaft Lower Bearing Adapter
Courtesy of GENERAL MOTORS COMPANY

Callout	Component Name
Preliminary Procedure **Steering Angle Sensor Replacement**	
1	Steering Shaft Lower Bearing Adapter Retainer
2	Steering Shaft Lower Bearing Adapter **Procedure** 1. Release the plastic retaining tabs and slide the steering shaft lower bearing adapter off the steering column. 2. Use the following procedure to install the steering shaft lower bearing adapter correctly: 1. Measure 154 mm (6 in) from the end of the steering column shaft and draw a line around the shaft. 2. After installing the steering shaft lower bearing adapter, slide the steering shaft lower bearing adapter retainer to the drawn mark. 3. Ensure there is approximately 3-5 mm (0.12-.020 in) clearance between the bearing adapter and retainer.

STEERING COLUMN TILT WHEEL AND TELESCOPE CONTROL MODULE LEARN

The Steering Column Tilt Wheel and Telescope Control Module Learn procedure must be completed when the following components are replaced:

- Steering Column Tilt Wheel and Telescope Control Module
- Steering Column Tilt Motor
- Steering Column Telescope Motor

The Steering Column Tilt Wheel and Telescope Control Module Learn procedure can be completed without a scan tool using the following steps:

1. Ignition ON, engine OFF.

NOTE: **To perform the learn procedure, the directional order does not require a specific sequence. Reaching the mechanical hard stop of each direction is the only requirement.**

2. Using the steering column tilt and telescope switch, actuate the column to each mechanical hard stop in each direction listed below;

cardiagn.com

- Tilt column full up
- Tilt column full down
- Telescope column full forward
- Telescope column full rearward

3. Ignition OFF and all vehicle systems OFF. It may take up to 2 minutes for all vehicle systems to power down.

DESCRIPTION AND OPERATION

STEERING WHEEL AND COLUMN DESCRIPTION AND OPERATION

Steering Column Lock

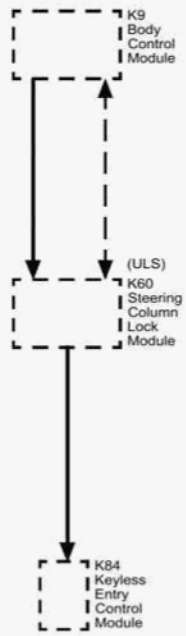

Fig. 102: Steering Column Lock Module Block Diagram
Courtesy of GENERAL MOTORS COMPANY

cardiagn.com

The Steering Column Lock Module (SCLM) controls the steering wheel theft deterrent lock function, which allows the column to be electronically locked. When a valid key is used to start the vehicle, the BCM recognizes this and will send the encrypted password to the SCLM. The SCLM will compare its own stored password to the encrypted password sent by the BCM. If the data matches, the steering column will be unlocked.

In order for the steering column to be locked the SCLM has to see 2 inputs.

1. The BCM power mode is OFF.
2. The driver or passenger door is opened reported by the PEPS module.

When the SCLM receives these inputs, the steering column will be locked.

The SCLM monitors the column lock system and will set DTC codes when the module detects malfunctions within the system. When a malfunction occurs the driver information center (DIC) will display the Service Column Lock Now message indicating DTC codes are set within the SCLM.

Tilt/Telescoping Description

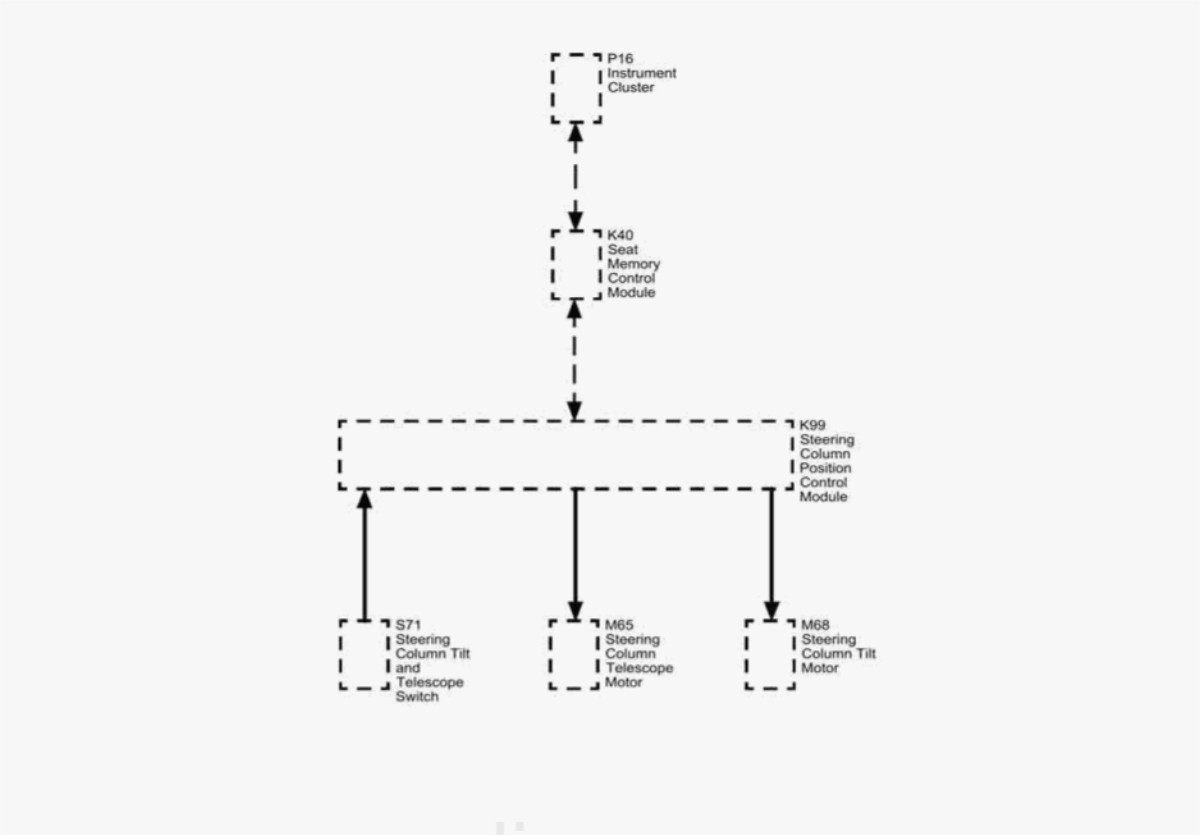

cardiagn.com

Fig. 103: Tilt/Telescoping Schematic Graph
Courtesy of GENERAL MOTORS COMPANY

The steering column has a tilt/telescoping control system that consists of an electronic control module capable of LIN message communication, a steering column power assembly with positioning motors and sensors, and a steering column control switch.

Column Position Module has two versions of operation:

1. N38 - Power Steering Column-Tilt/Telescope, and A45 - Memory Seats

   The column position module will wake up either by the LIN bus or by the tilt/telescope steering column switch. The memory seat module is the master and column position module is the slave. All DTCs and the data from column position module are reported through the LIN bus and stored in the memory seat module.

2. N38 - Power Steering Column-Tilt/Telescope Only

   The column position module will wake up with the tilt/telescope steering column switch. No DTCs or data is available. Vehicle symptoms will cause the customer to bring the vehicle in for service.

Tilt/Telescoping Switch Operation

The tilt/telescope steering column has a four-position switch. The switch may be used to adjust the position of the steering wheel in or out which is telescope and up or down which is tilt. The position of the column may be changed as follows:

- Press the switch up to tilt the column up.
- Press the switch down to tilt the column down.
- Press the switch forward and the column moves toward the front of the vehicle.
- Press the switch rearward and the column moves toward the rear of the vehicle.

Motors

Both the tilt and telescoping motors are reversible. For example, the tilt motor moves the column both up and down. When the column position module receives an input to move the column up, the column position module supplies battery positive voltage and ground to the tilt motor in order to move the column up. When the column position module receives a column down input, the column position module supplies battery positive voltage and ground to the same motor, but with reverse polarity. When the voltage polarity is reversed, the motor runs in the opposite direction and moves the column down.

cardiagn.com

Position Sensors with A45 Memory Seats

Two position sensors are Hall Effect sensors and are used by the column position module. The column position module provides a 5 V reference voltage and a ground to both the tilt and telescoping position sensors. The sensor feedback circuit voltage varies from 0-5 V. Each sensor is part of the motor assembly. When the motor rotates, the voltage of the sensor varies on the scan tool. The column position module monitors the feedback voltage to determine the column position.

Without the A45 Memory Seat option, scan tool data is not available.

Tilt/Telescoping Memory with A45 Memory Seats

Memory settings and the personalization of steering wheel positions are available with the tilt/telescoping steering column only with the A45 Memory Seat option. The data stored consists of entry positions and exit positions. The entry position is the position that the steering column moves in when the ignition is turned ON. The exit position is the direction that the steering column moves in when the ignition is turned OFF and the driver's door is opened. The memory seat module stores memory positions and commands column position module to move motors to specific positions through a LIN message.

An initial memory setting is set in the memory seat module at the assembly plant. This setting may be changed by the customer at any time.

Without the A45 Memory Seat option, memory settings, personalization, and the entry and exit function is not available.

Driver Safety

The steering wheel and column has safety features to protect the driver. The following components may be mounted on or near the steering column:

Energy-Absorbing Steering Column: The energy-absorbing steering column compresses in the event of a front-end collision, which reduces the chance of injury to the driver. The energy-absorbing feature, collapsible steering shaft, and break away mounting features help reduce the injury in the event of an accident.

Heated Steering Wheel

cardiagn.com

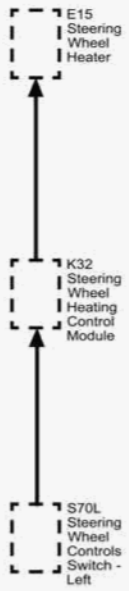

Fig. 104: Heated Steering Wheel Block Diagram
Courtesy of GENERAL MOTORS COMPANY

The heated steering wheel system consists of a heated steering wheel, a heated steering wheel switch, and a steering wheel heat module. The heated steering wheel includes non-serviceable heating elements and a temperature sensor. The heating elements and sensor are located in the left and right sides of the rim of the steering wheel. The heated steering wheel switch is located in the left steering wheel control switch assembly. The steering wheel heat control module is located at the bottom of the steering wheel center hub. When the switch is pressed, the switch signal circuit is grounded and the heat module turns the heated steering wheel on. The system then remains on until the customer turns it off. The wheels normal operating temperature is 32Â°C (89.6Â°F). The wheel takes approximately 3 to 4 minutes to reach the normal operating temperature. The wheel will take longer to heat up if the vehicle temperature is below -21Â°C (-5.8Â°F). The built-in temperature sensor provides input to the controller to limit the temperature to the normal operating temperature. The wheel will not operate if the vehicle temperature is at or above 32Â°C (89.6Â°F).

SPECIAL TOOLS AND EQUIPMENT

cardiagn.com

SPECIAL TOOLS

Illustration	Tool Number/ Description
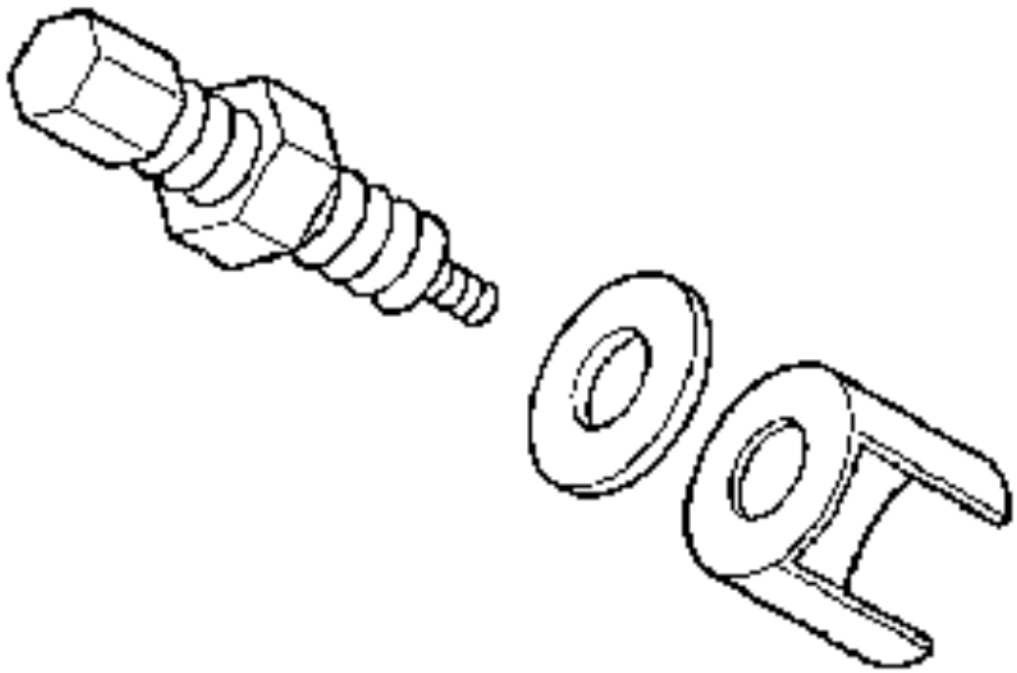	CH-21854-01 J-21854-01 Pivot Pin Remover

cardiagn.com

Illustration	Tool Number/ Description
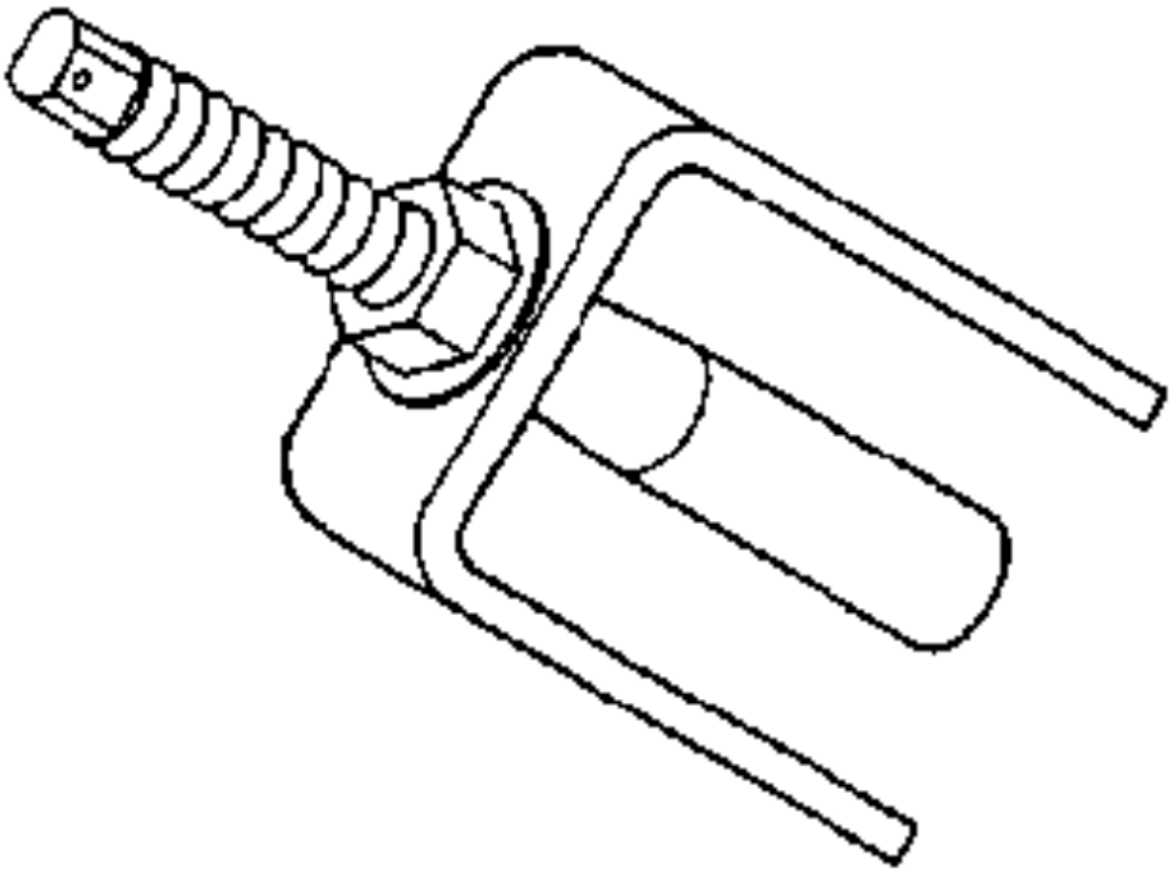	CH-23653-SIR J-23653-SIR Steering Column Lock Plate Compressor

cardiagn.com

Illustration	Tool Number/ Description
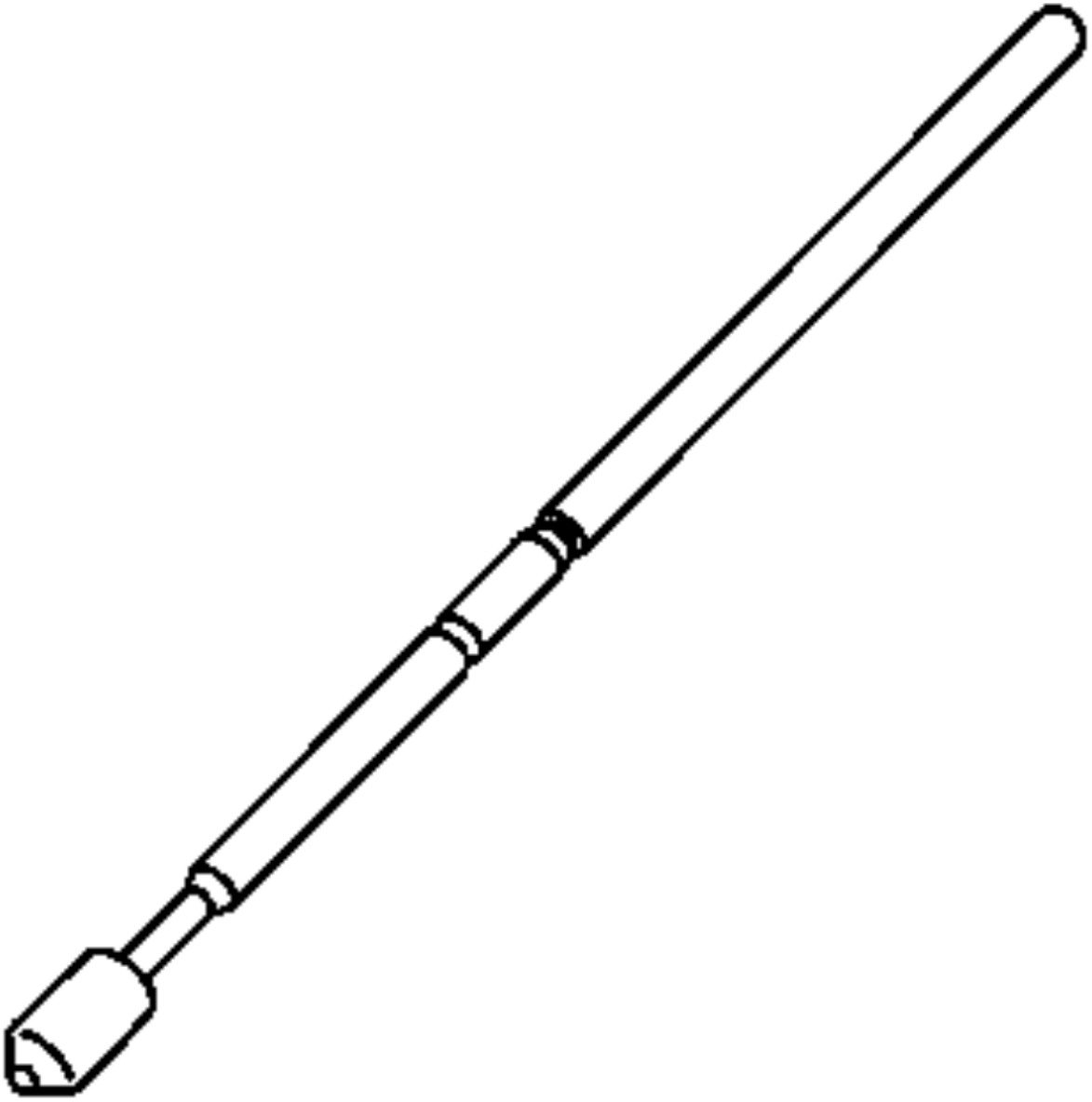	CH-42640 J-42640 Steering Column Anti-Rotation Pin

cardiagn.com

rban...

.

cardiagn.com