Workshop Manual
Audi A2 2001 ➢

General body repairs, exterior

Edition 06.2006

Protected by copyright. Copying for private or commercial purposes, in part or in whole, is not permitted unless authorised by AUDI AG. AUDI AG does not guarantee or accept any liability with respect to the correctness of information in this document. Copyright by AUDI AG.

List of Workshop Manual Repair Groups

Repair Group

50 - Body - front
55 - Bonnet, rear lid
57 - Front doors, door components, central locking
58 - Rear doors, door components
60 - Sunroof
63 - Bumpers
64 - Glazing
66 - Exterior equipment

Protected by copyright. Copying for private or commercial purposes, in part or in whole, is not permitted unless authorised by AUDI AG. AUDI AG does not guarantee or accept any liability with respect to the correctness of information in this document. Copyright by AUDI AG.

Technical information should always be available to the foremen and mechanics, because their careful and constant adherence to the instructions is essential to ensure vehicle road-worthiness and safety. In addition, the normal basic safety precautions for working on motor vehicles must, as a matter of course, be observed.

All rights reserved.
No reproduction without prior agreement from publisher.

Copyright © 2015 Audi AG, Ingolstadt

Contents

50 - Body - front 1
1 Body - front 1
1.1 Contact corrosion 1
1.2 Removing and installing lock carrier with attachments 1
1.3 Wing panel (front) - exploded view 3
1.4 Lateral adjustment of wing panel 4
1.5 Noise insulation - exploded view 5

55 - Bonnet, rear lid 6
1 Bonnet 6
1.1 Contact corrosion 6
1.2 Removing and installing bonnet, adjusting bonnet 6
1.3 Removing and installing lining for bonnet and air intake 8
1.4 Removing and installing bonnet release cable 9
1.5 Removing and installing plenum chamber cover 10
2 Rear lid 11
2.1 Removing, installing and adjusting rear lid and rear lid lock 11

57 - Front doors, door components, central locking 14
1 Front door 14
1.1 Contact corrosion 14
1.2 Tools 14
1.3 Removing and installing mounting panel 16
1.4 Removing and installing mounting panel 16
1.5 Removing and installing front door and door subframe 18
1.6 Panel gaps for door adjustment 21
1.7 Door hinges (front) 22
1.8 Panel gaps 23
1.9 Removing and installing door arrester 23
1.10 Removing and installing window lifter and door window 25
1.11 Door handle and door lock (front) - exploded view 26
1.12 Removing lock cylinder and door handle 27
1.13 Installing door handle 28
1.14 Removing and installing door lock (front) 28
1.15 Removing and installing window guide and window slot trim panel 30
1.16 Removing and installing door seal (outer) 31
1.17 Removing and installing door seal (inner) 32
1.18 Seal on door (front)/ mounting panel and on opening for exterior mirror wiring in door subframe 32

58 - Rear doors, door components 35
1 Rear doors 35
1.1 Contact corrosion 35
1.2 Tools 35
1.3 Removing and installing mounting panel 37
1.4 Removing and installing mounting panel 37
1.5 Removing and installing rear door and door subframe 39
1.6 Panel gaps for door adjustment 42
1.7 Door hinges (rear) 43
1.8 Panel gaps 43
1.9 Removing and installing door arrester 44
1.10 Removing and installing window lifter and door window 45
1.11 Rear door handle and door lock - exploded view 46

Protected by copyright. Copying for private or commercial purposes, in part or in whole, is not permitted unless authorised by AUDI AG. AUDI AG does not guarantee or accept any liability with respect to the correctness of information in this document. Copyright by AUDI AG.

1.12 Removing and installing door lock (rear) . . . 47
1.13 Removing and installing window guide and window slot trim panel . . . 48
1.14 Removing and installing door seal (outer) . . . 48
1.15 Removing and installing door seal (inner) . . . 49
1.16 Seal on rear door/mounting panel . . . 49

60 - Sunroof . . . 52

1 Servicing sliding/tilting sunroof . . . 52
1.1 Contact corrosion . . . 52
1.2 Tools . . . 52
1.3 Removing and installing sunroof . . . 52
1.4 Removing sunroof . . . 53
1.5 Renewing cable guide . . . 56
1.6 Installing sunroof . . . 65
1.7 Removing and installing sunroof panel . . . 66
1.8 Removing and installing sliding frame . . . 67
1.9 Removing and installing wind deflector . . . 68
1.10 Renewing actuating spring for wind deflector . . . 68

63 - Bumpers . . . 70

1 Front bumper . . . 70
1.1 Contact corrosion . . . 70
1.2 Removing and installing front bumper - exploded view . . . 70

2 Rear bumper . . . 73
2.1 Removing and installing rear bumper - exploded view . . . 73

64 - Glazing . . . 74

1 Flush-bonded windows . . . 74
1.1 Contact corrosion . . . 74
1.2 Removing and installing flush-bonded windows - general comments . . . 74
1.3 Repairing windows with resin, Talon VAS 1993/2 . . . 77
1.4 Sticker for windscreen . . . 77
1.5 Materials . . . 77
1.6 Minimum drying times . . . 78
1.7 Cleaning off adhesive sealant . . . 78

2 Windscreen . . . 79
2.1 Removing and installing windscreen - exploded view . . . 79
2.2 Removing windscreen . . . 79
2.3 Preparations before installing a new windscreen . . . 81
2.4 Installing windscreen . . . 83

3 Side window (front) . . . 85
3.1 Removing and installing side window (front) - exploded view . . . 85
3.2 Removing side window (front) . . . 86
3.3 Installing new window . . . 86

4 Side window (rear) . . . 88
4.1 Removing and installing side window (rear) - exploded view . . . 88
4.2 Removing side window (rear) . . . 88
4.3 Installing new window . . . 90

5 Rear window . . . 92
5.1 Removing and installing rear window - exploded view . . . 92
5.2 Removing rear window . . . 92
5.3 Installing rear window . . . 95
5.4 Preparations before installing a new window . . . 96

66 - Exterior equipment . . . 99

Protected by copyright. Copying for private or commercial purposes, in part or in whole, is not permitted unless authorised by AUDI AG. AUDI AG does not guarantee or accept any liability with respect to the correctness of information in this document. Copyright by AUDI AG.

1 Protective strips 99
1.1 Contact corrosion 99
1.2 Renewing protective side strips (top) 99
1.3 Renewing protective side strips (bottom) 101
1.4 Removing and installing trim cover for side member 102
2 Trim panels 103
2.1 Removing and installing trim panel for B-pillar 103
3 Rear-view mirror 104
3.1 Removing and installing rear-view mirror 104
3.2 Removing and installing mirror housing 105
3.3 Renewing mirror glass and adjuster unit 105
4 Side member trim 107
4.1 Removing and installing side member trim 107
5 Rear lid trim panel 109
5.1 Removing and installing trim panel 109
6 Wheel housing liner 110
6.1 Removing and installing wheel housing liner (front) 110
6.2 Removing and installing wheel housing liner (rear) 111
7 Wheel arch trim 112
7.1 Removing and installing wheel arch trim 112

Protected by copyright. Copying for private or commercial purposes, in part or in whole, is not permitted unless authorised by AUDI AG. AUDI AG does not guarantee or accept any liability with respect to the correctness of information in this document. Copyright by AUDI AG.

Protected by copyright. Copying for private or commercial purposes, in part or in whole, is not permitted unless authorised by AUDI AG. AUDI AG does not guarantee or accept any liability with respect to the correctness of information in this document. Copyright by AUDI AG.

50 – Body - front

1 Body - front

1.1 Contact corrosion

Protected by copyright. Copying for private or commercial purposes, in part or in whole, is not permitted unless authorised by AUDI AG. AUDI AG does not guarantee or accept any liability with respect to the correctness of information in this document. Copyright by AUDI AG.

- Contact corrosion can occur if unsuitable fasteners are used on the vehicle (bolts, nuts, washers etc.).
- For this reason, only fasteners with a special surface coating (Dachromet) have been fitted on the vehicle. These fasteners can be identified by their greenish colour.
- In addition, all rubber and plastic parts and all adhesives are made of non-conductive materials.
- Always renew parts if you are in any doubt as to whether the old part can be used again.

Caution

- *Always use genuine replacement parts (same as original equipment). These have been tested and are aluminium-compatible.*
- *Accessories must be approved by AUDI AG.*
- *Damage caused by contact corrosion is not covered by the warranty.*

1.2 Removing and installing lock carrier with attachments

1 - Lock carrier

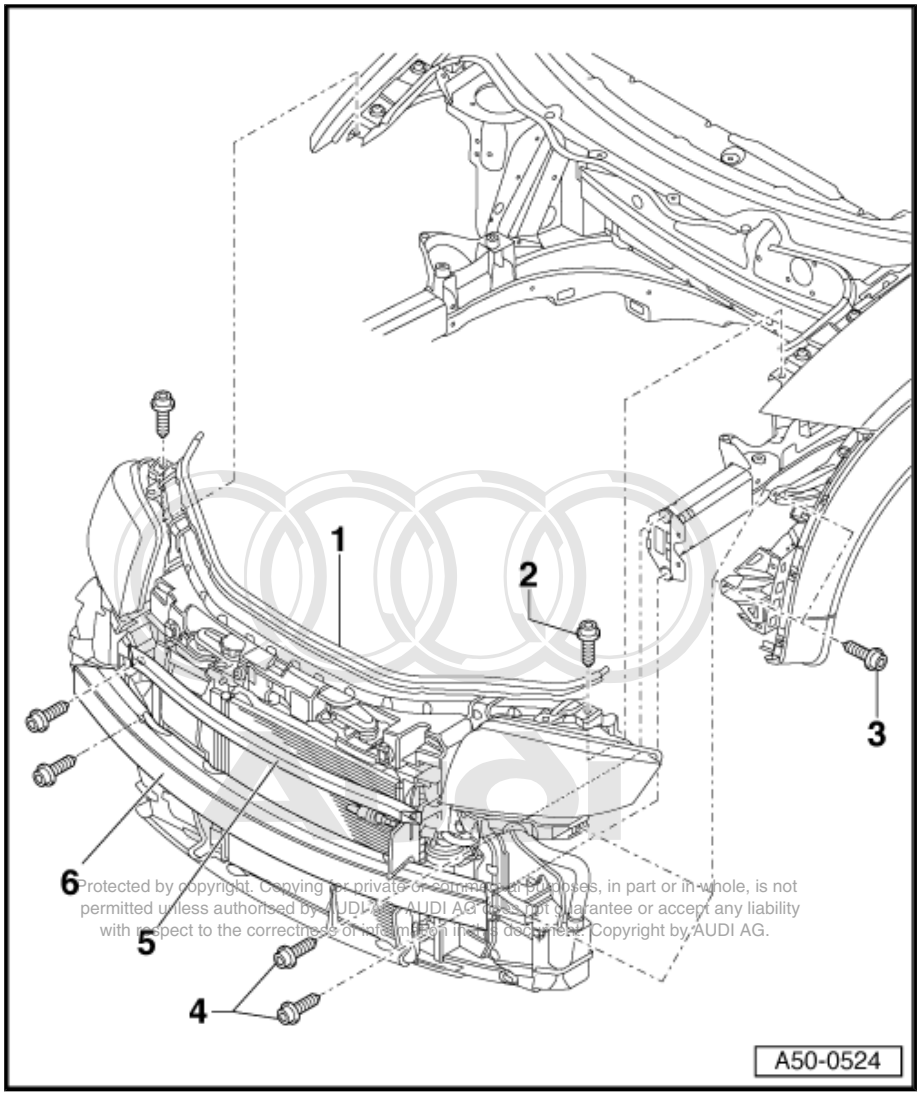

❑ Removing:

– Remove bumper ⇒ page 70 .

– Remove noise insulation ⇒ page 5 .

– Disengage Bowden cable for bonnet lock ⇒ page 9 .

– Detach electrical connectors.

– Remove cross member for bumper ⇒ Item 6 (page 71) and reinforcement bar ⇒ Item 3 (page 71) .

– Unscrew condenser for air conditioner from radiator.

– Unscrew air conditioner dryer from lock carrier.

– Only detach condenser from radiator (do not disconnect any pipes).

– Open quick release fasteners for radiator.

– Tilt radiator towards the rear and lift it out of bonded rubber bushes.

– Secure radiator to cylinder block using welding wire or similar.

• A second mechanic is required to hold lock carrier ⇒ Item 1 (page 2) .

– Detach lock carrier towards front.

– Secure air conditioner condenser to front wheel using wire or similar.

Note

The condenser must not be suspended by its pipes. The condenser pipes must NOT be bent or kinked.

❑ Install in reverse sequence.

❑ Headlights must be re-adjusted.

❑ Adjusting:

– Centralise lock carrier ⇒ Item 1 (page 2) between the wings.

Protected by copyright. Copying for private or commercial purposes, in part or in whole, is not permitted unless authorised by AUDI AG. AUDI AG does not guarantee or accept any liability with respect to the correctness of information in this document. Copyright by AUDI AG.

1.3 Wing panel (front) - exploded view

1 - Guide

2 - Bolt with washer

- ❑ 4 Nm

3 - Hexagon bolt

- ❑ 4 Nm

4 - Flange bolt

- ❑ Screw in or out as required for lateral adjustment.
- ❑ When tightening the nuts, use an Allen key to secure the flange bolts to prevent them turning.

5 - Bolt with washer

- ❑ 4 Nm

6 - Hexagon nut

- ❑ 4 Nm

7 - Bolt with washer

- ❑ 4 Nm

8 - Wing panel

- ❑ Removing:

– Remove bumper ⇒ page 70 .

– Remove wheel housing liner ⇒ page 110 .

– Unscrew bolts ⇒ Item 2 (page 3) , ⇒ Item 5 (page 3) and ⇒ Item 7 (page 3) .

– Unscrew nuts ⇒ Item 3 (page 3) and ⇒ Item 6 (page 3) .

– Detach wing from brackets on A-pillar.

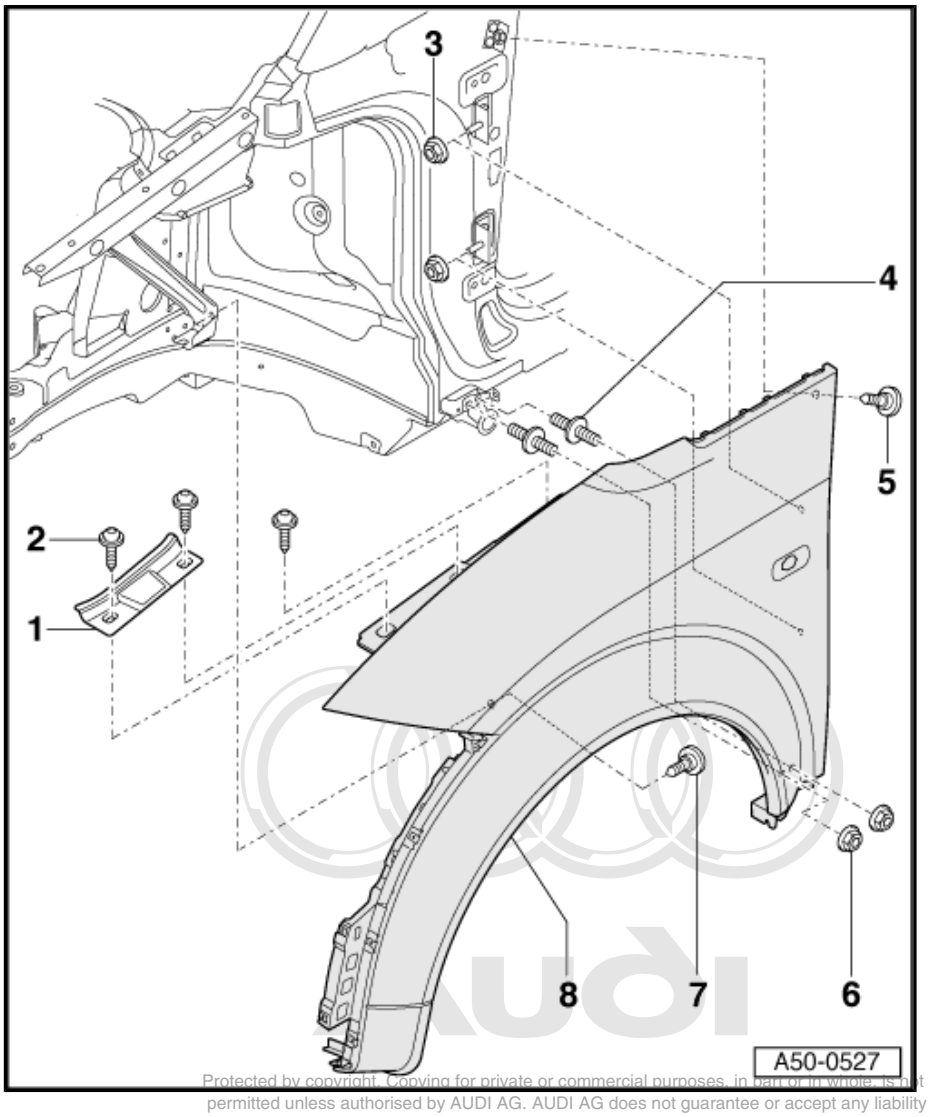

Protected by copyright. Copying for private or commercial purposes, in part or in whole, is not permitted unless authorised by AUDI AG. AUDI AG does not guarantee or accept any liability with respect to the correctness of information in this document. Copyright by AUDI AG.

1.4 Lateral adjustment of wing panel

1 - Flange bolts

- ❑ Screw in or out as required for lateral adjustment.
- ❑ When tightening the nuts, use an Allen key to secure the flange bolts to prevent them turning.

2 - Guide

- ❑ Fitted onto flange bolts.

3 - Hexagon nuts

- ❑ When tightening hexagon nuts, use an Allen key to secure flange bolts against turning.
- ❑ 4 Nm

4 - Bracket

5 - Bolts with washers

- ❑ 10 Nm

6 - Bracket

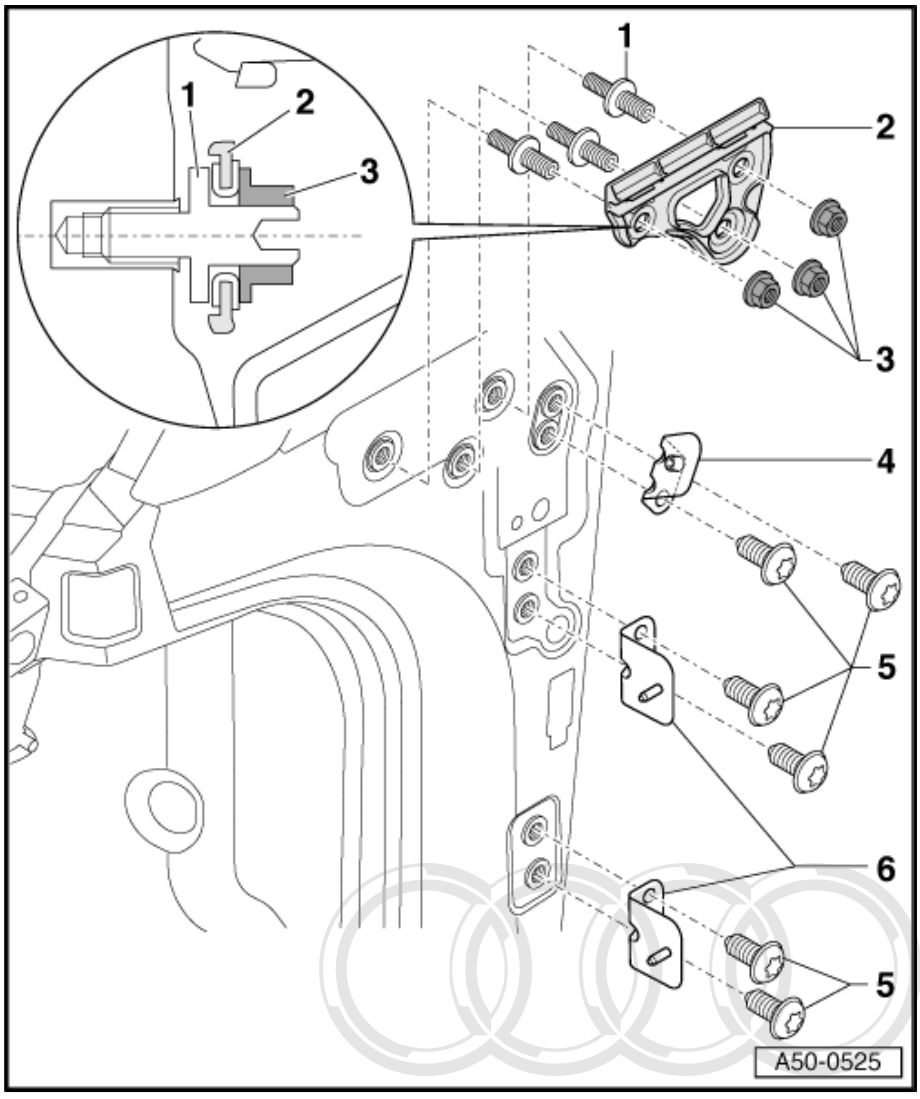

Support for wing panel

- Bumper is removed.

– Unscrew bolts -1- and -3- and remove guide -2-.

– Tighten bolts to 1.5 Nm when installing.

Protected by copyright. Copying for private or commercial purposes, in part or in whole, is not permitted unless authorised by AUDI AG. AUDI AG does not guarantee or accept any liability with respect to the correctness of information in this document. Copyright © AUDI AG.

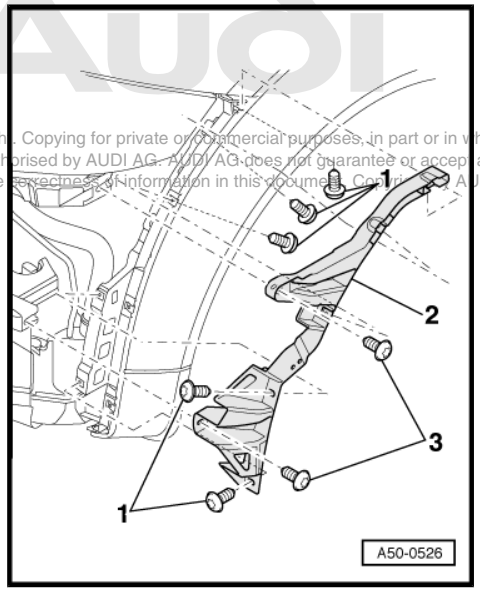

1.5 Noise insulation - exploded view

1 - Noise insulation

- ❑ Unscrew bolts ⇒ Item 5 (page 5) and remove noise insulation.
- ❑ When installing, slide bumper cover ⇒ Item 2 (page 5) into noise insulation as shown in detail view in top right-hand corner.

2 - Bumper cover

3 - Lock carrier

4 - Subframe

5 - Bolt with washer

- ❑ 10 Nm

6 - Panel bolt

- ❑ 1.5 Nm

7 - Wing panel

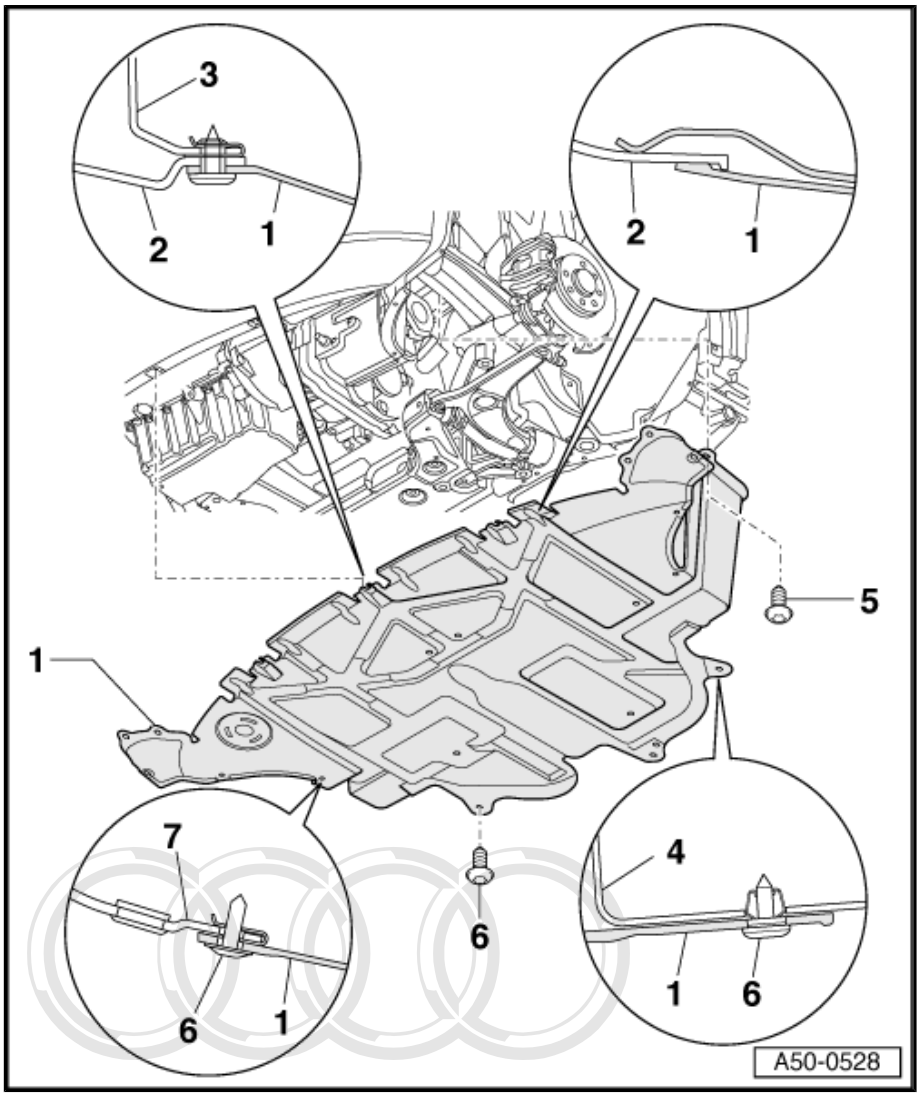

Protected by copyright. Copying for private or commercial purposes, in part or in whole, is not permitted unless authorised by AUDI AG. AUDI AG does not guarantee or accept any liability with respect to the correctness of information in this document. Copyright by AUDI AG.

55 – Bonnet, rear lid

1 Bonnet

1.1 Contact corrosion

- Contact corrosion can occur if unsuitable fasteners are used on the vehicle (bolts, nuts, washers etc.).
- For this reason, only fasteners with a special surface coating (Dachromet) have been fitted on the vehicle. These fasteners can be identified by their greenish colour.
- In addition, all rubber and plastic parts and all adhesives are made of non-conductive materials.
- Always renew parts if you are in any doubt as to whether the old part can be used again.

Caution

- *Always use genuine replacement parts (same as original equipment). These have been tested and are aluminium-compatible.*
- *Accessories must be approved by AUDI AG.*
- *Damage caused by contact corrosion is not covered by the warranty.*

1.2 Removing and installing bonnet, adjusting bonnet

Protected by copyright. Copying for private or commercial purposes, in part or in whole, is not permitted unless authorised by AUDI AG. AUDI AG does not guarantee or accept any liability with respect to the correctness of information in this document. Copyright by AUDI AG.

1 - Bonnet

- ❑ Release bonnet ⇒ page 7 before removing.
- ❑ Pull bonnet slightly forwards out of mountings at rear detach bonnet from vehicle.
- ❑ To avoid damaging the paintwork protect the bonnet using engine cover protector -VAS 6011- . Then set bonnet down.

2 - Hexagon socket head bolt

- ❑ 8 Nm

3 - Radiator grille

- ❑ Removing:
- – Release flap on radiator grille.
- – Press opened flap upwards slightly in area around bolts and unscrew hexagon socket head bolts ⇒ Item 2 (page 7) .
- – Release retainers securing radiator grille to flap.
- – Detach radiator grille from flap.

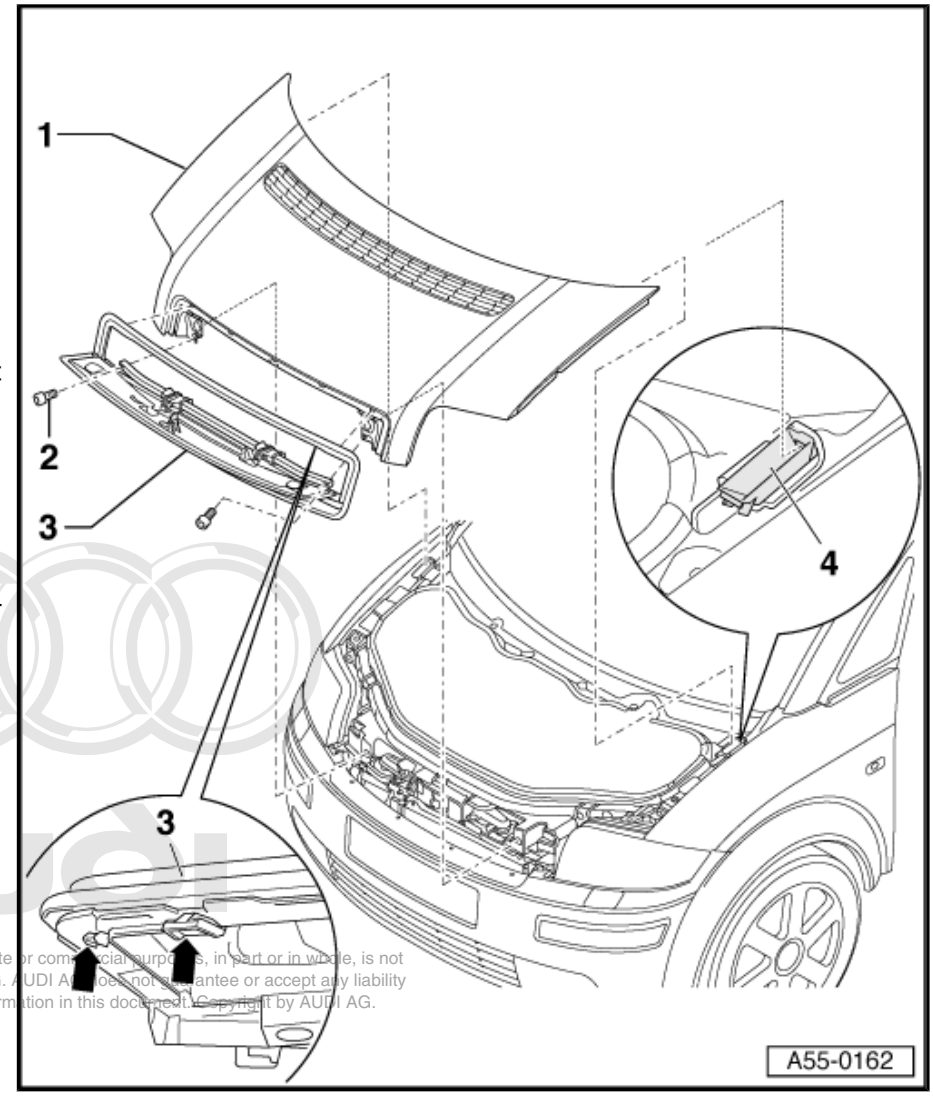

Protected by copyright. Copying for private or commercial purposes, in part or in whole, is not permitted unless authorised by AUDI AG. AUDI AG does not guarantee or accept any liability with respect to the correctness of information in this document. Copyright by AUDI AG.

Releasing bonnet

- – Release locking knob -1- by turning it in anti-clockwise direction and pull bonnet forwards slightly, out of mountings.
- – To remove locking knob -1-, detach nut -2- from thread, turning it in anti-clockwise direction.
- – Press locking knob towards inside, clear of backing plate -3-.
- – Turn backing plate 90° and detach it towards the rear.
- – Detach locking knob towards the front.

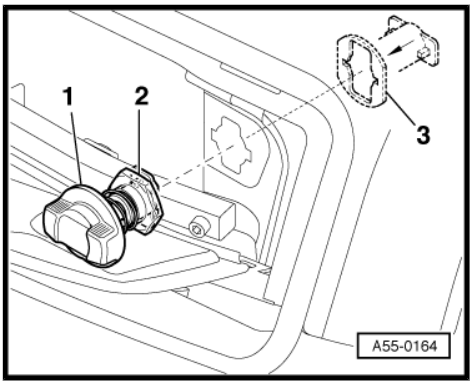

1.3 Removing and installing lining for bonnet and air intake

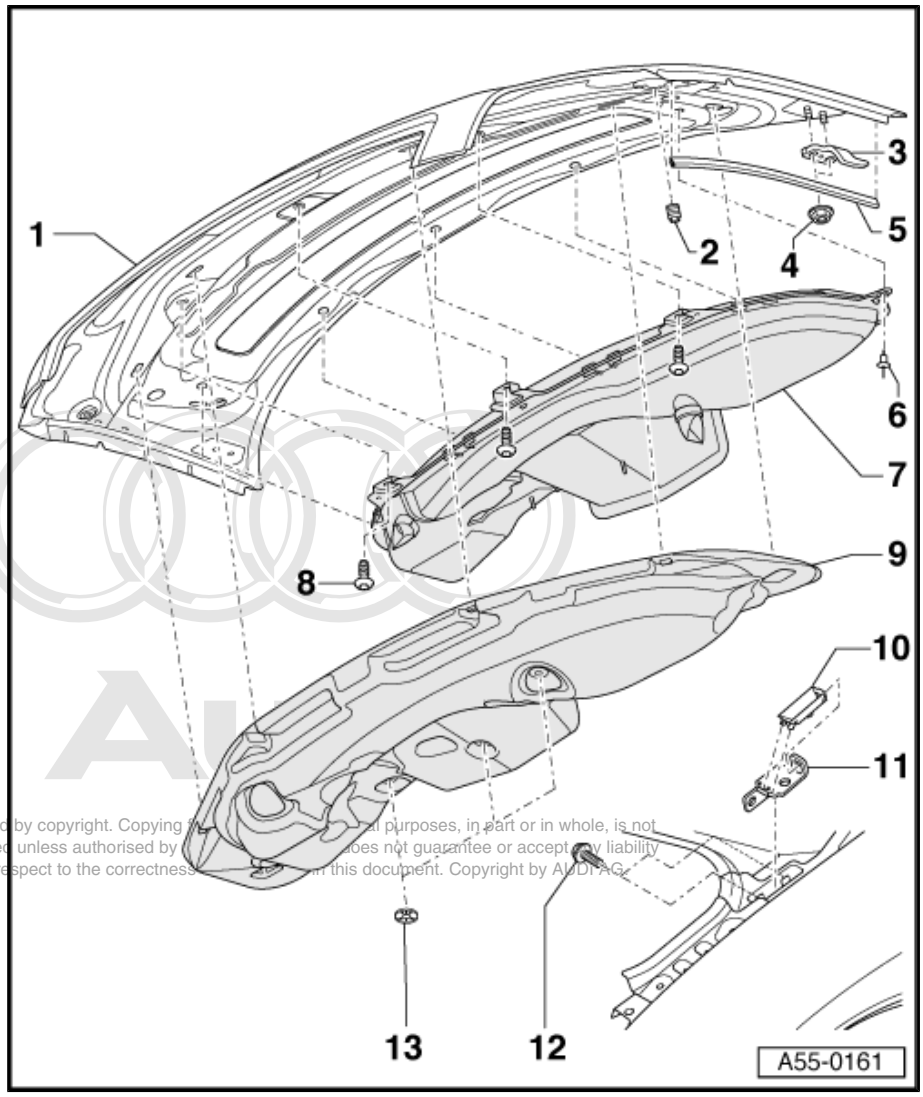

1 - Bonnet

2 - Stop buffer for height adjustment

- ❑ To adjust bonnet, unscrew stop buffers as far as necessary to make bonnet align with wing panel.
- ❑ When adjustment is correct, stop buffer should make contact with lock carrier.

3 - Locking hook

4 - Edge protection

5 - Hexagon nut

- ❑ 15 Nm

6 - Spreader rivet

7 - Air intake

- ❑ Remove lining ⇒ Item 9 (page 8) before removing air intake.
- ❑ Unscrew Torx bolts ⇒ Item 8 (page 8) , pull off spreader rivet and detach air intake.

8 - Torx bolt

- ❑ 3 Nm

9 - Lining

- ❑ To remove, unscrew the three lock washers ⇒ Item 13 (page 8) and detach lining including the six retaining clips from bonnet.

10 - Guide

11 - Mounting bracket for bonnet

12 - Bolt with washer

- ❑ 15 Nm

13 - Lock washer

Protected by copyright. Copying for private or commercial purposes, in part or in whole, is not permitted unless authorised by AUDI AG. AUDI AG does not guarantee or accept any liability with respect to the correctness of information in this document. Copyright by AUDI AG.

Panel gaps

- Dimension -a- = 2 mm.
- Dimension -b- = 2 mm.
- Dimension -c- = 2 mm

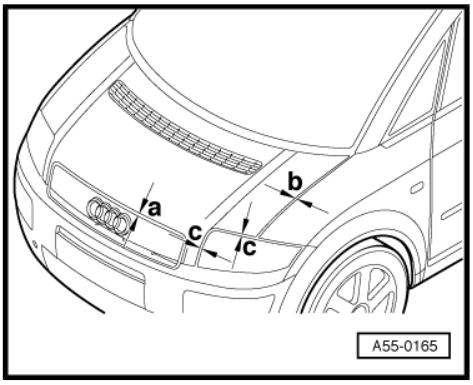

Note

Use setting gauge -3371- to check panel gaps.

1.4 Removing and installing bonnet release cable

1 - Bonnet release cable

❑ Removing:

– Remove storage compartment on driver's side ⇒ General body repairs, interior; Rep. Gr. 68 .

– Remove trim for A-pillar (bottom) ⇒ General body repairs, interior; Rep. Gr. 70 .

– Remove bolt ⇒ Item 4 (page 9) .

– Detach cover ⇒ Item 3 (page 9) .

– Unclip Bowden cable from operating lever ⇒ Item 2 (page 9)

– Unscrew bolts ⇒ Item 8 (page 9) on front part of lock carrier.

– Remove Bowden cable, guiding it through engine compartment.

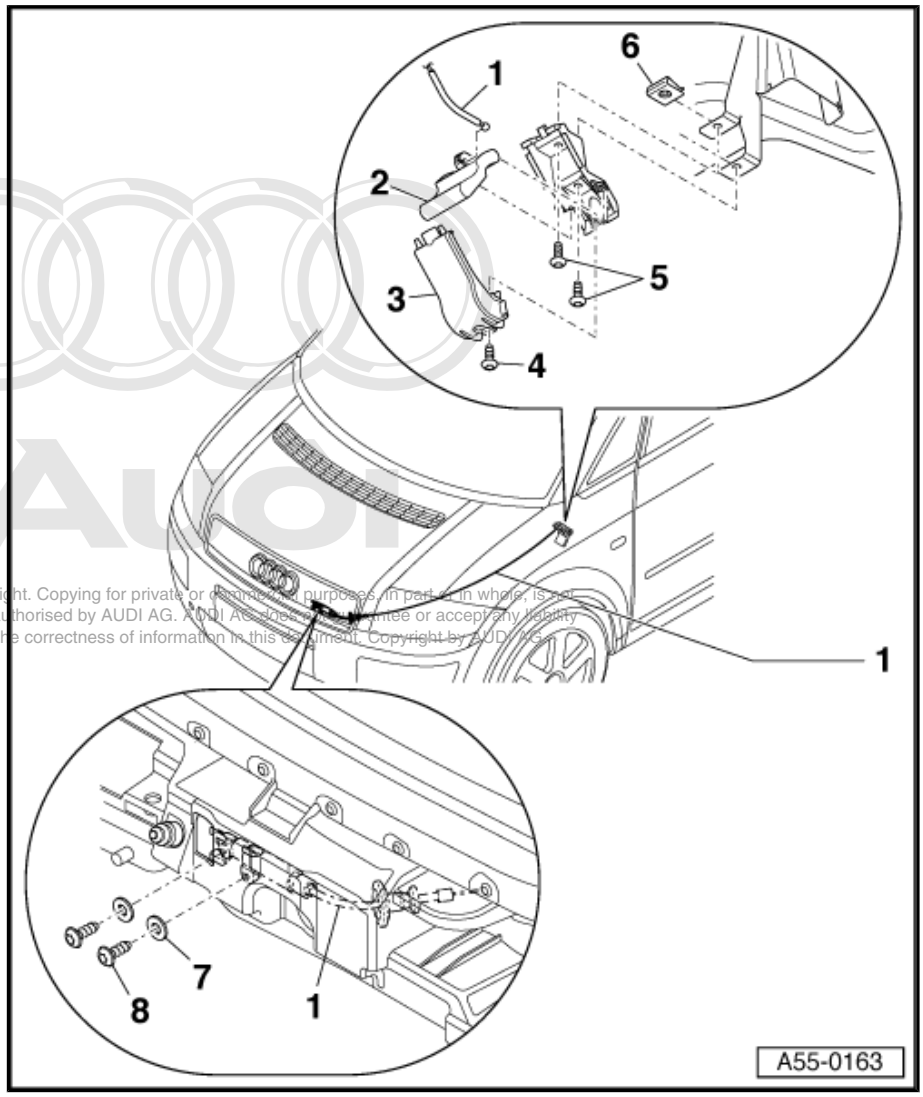

2 - Operating lever

3 - Cover

4 - Torx bolt

❑ 6 Nm

5 - Torx bolt

❑ 6 Nm

6 - Speed nut

7 - Washer

8 - Torx bolt

❑ 6 Nm

Protected by copyright. Copying for private or commercial purposes, in part or in whole, is not permitted unless authorised by AUDI AG. AUDI AG does not guarantee or accept any liability with respect to the correctness of information in this document. Copyright by AUDI AG.

1.5 Removing and installing plenum chamber cover

1 - Plenum chamber cover

- ❑ Remove bonnet ⇒ Item 3 (page 10) .
- ❑ Remove windscreen wiper ⇒ Electrical system; Rep. Gr. 92 .
- ❑ Detach seal ⇒ Item 2 (page 10) towards the front.
- ❑ Detach plenum chamber cover from fastening strip on windscreen.
- ❑ Detach hoses from washer jets and remove plenum chamber cover.
- ❑ When installing, carefully push into fastening strip ⇒ page 10 in order to avoid damage to windscreen.

2 - Seal

- ❑ When installing, attach to seal on lock carrier.

3 - Bonnet

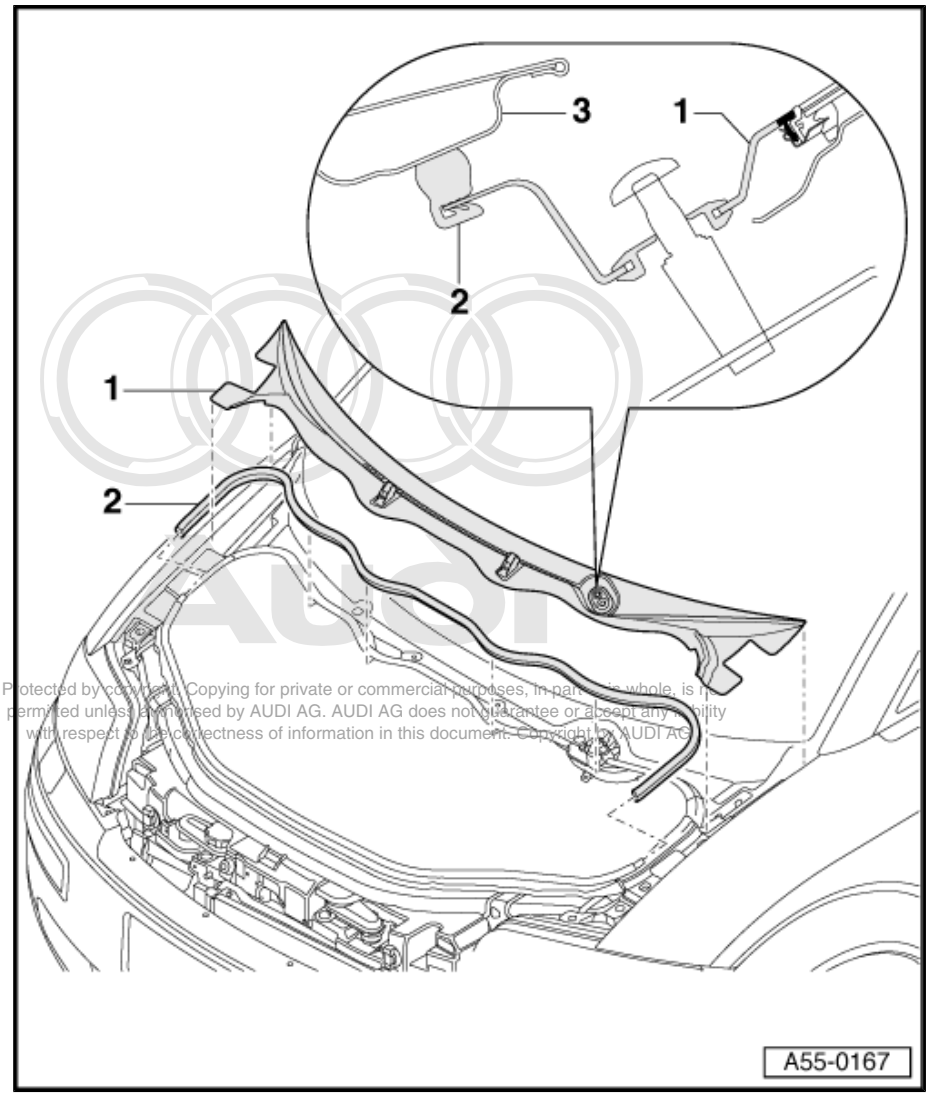

Protected by copyright. Copying for private or commercial purposes, in part or in whole, is not permitted unless authorised by AUDI AG. AUDI AG does not guarantee or accept any liability with respect to the correctness of information in this document. Copyright by AUDI AG

Clipping in plenum chamber cover

– When installing plenum chamber cover, clip moulding -1- on plenum chamber cover into fastening strip -2- on windscreen -3-.

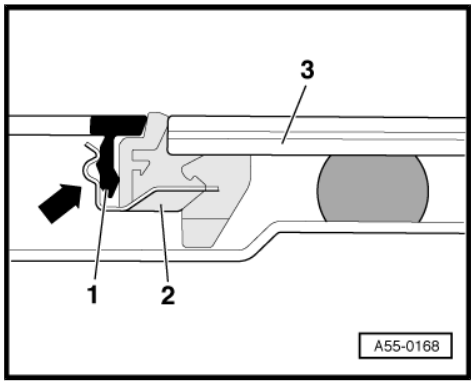

2 Rear lid

2.1 Removing, installing and adjusting rear lid and rear lid lock

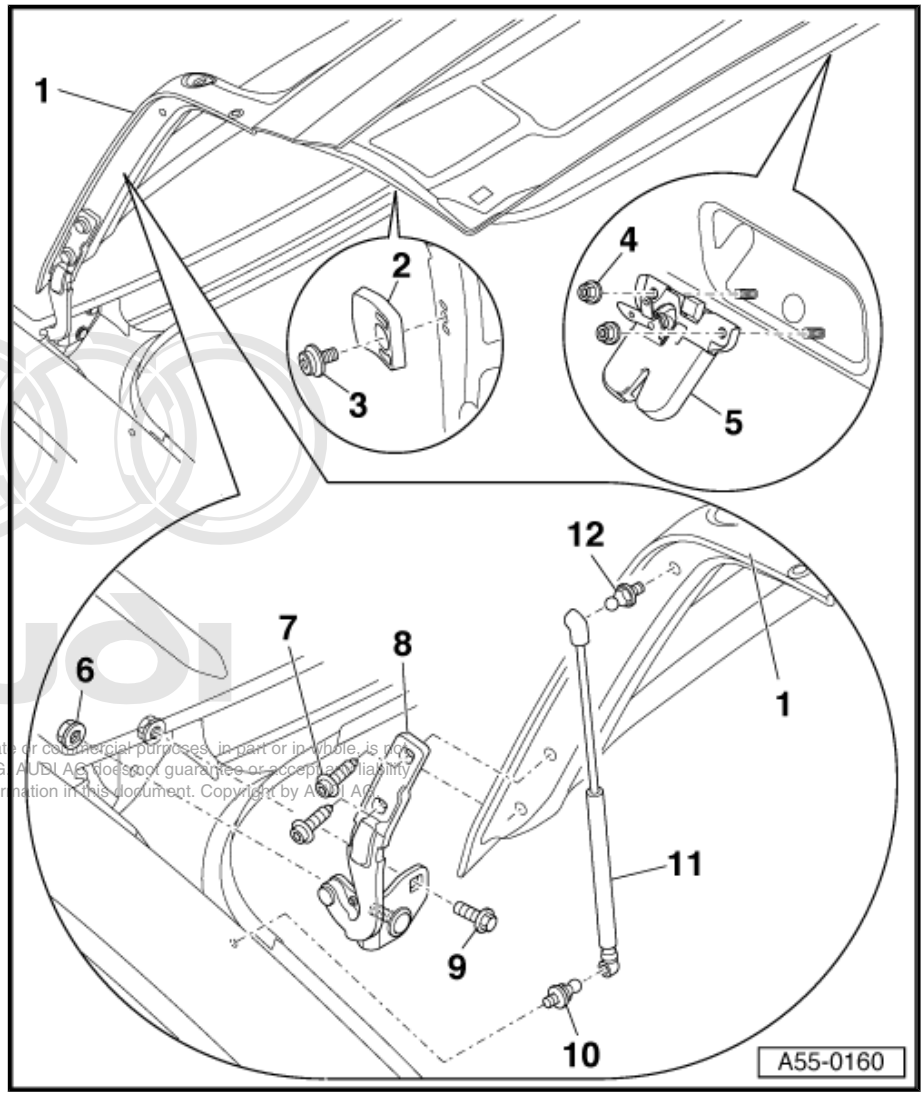

1 - Rear lid

- ❑ Removing:
  - – Remove rear lid trim.
  - – Unplug electrical connectors and pull them out of rear lid.
  - – Disengage gas-filled struts from rear lid.
  - – Unscrew Torx bolts ⇒ Item 7 (page 11) and detach rear lid.

2 - Stop buffer

- ❑ Markings for adjusting stop buffer are located on rear lid and stop buffer.
- ❑ When installing, secure stop buffer loosely.
- ❑ Close rear lid and align with body contour.
- ❑ Open rear lid and pull stop buffer out one division further.
- ❑ Tighten bolts ⇒ Item 3 (page 11) to 8 Nm.

3 - Torx bolt

- ❑ 8 Nm

4 - Hexagon nut

- ❑ 23 Nm

5 - Rear lid lock

- ❑ To remove, unclip operating rod for lock mechanism, unscrew nuts ⇒ Item 4 (page 11) and detach rear lid lock.

6 - Hexagon nut

- ❑ 15 Nm
- ❑ Not accessible without first removing headliner in this area.

7 - Torx bolt

- ❑ 15 Nm

8 - Rear lid hinge

- ❑ Removing:
  - – Lower headliner in area of hexagon nut ⇒ Item 6 (page 11) and unscrew nut.
  - – Unscrew hexagon bolts ⇒ Item 9 (page 11) and ⇒ Item 7 (page 11) .

9 - Hexagon bolt

- ❑ 15 Nm

Protected by copyright. Copying for private or commercial purposes, in part or in whole, is not permitted unless authorised by AUDI AG. AUDI AG does not guarantee or accept any liability with respect to the correctness of information in this document. Copyright by AUDI AG.

10 - Ball head studs

- ❑ 10 Nm

11 - Gas-filled strut

- ❑ Prop up rear lid.
- ❑ Use a small screwdriver to lift retaining clip at top and bottom and detach gas-filled strut from ball head stud.
- ❑ To install, simply press onto ball head stud.
- ❑ The tubular end of the gas-filled strut must be engaged on the body side.
- ❑ Releasing gas from gas-filled strut ⇒ page 12 .

12 - Ball head studs

- ❑ 10 Nm

Removing and installing striker plate

- Trim for rear cross panel removed ⇒ General body repairs, interior; Rep. Gr. 70 .

– Unscrew hexagon nuts -1- and remove striker plate.

– When installing, fit striker plate and secure loosely with nuts.

– Close rear lid and align with body contour.

– Open rear lid and tighten hexagon nuts to 23 Nm.

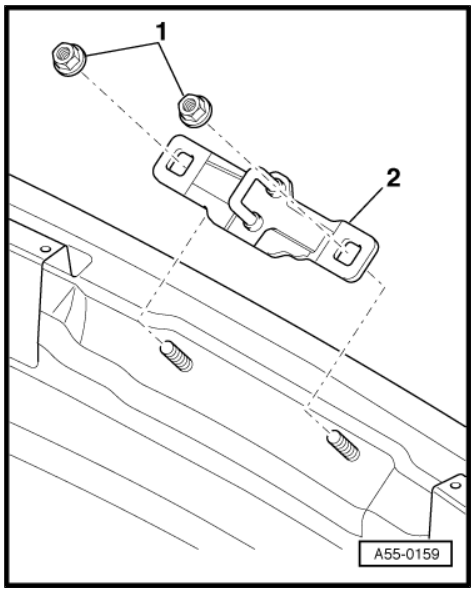

Releasing gas from gas-filled strut

– Clamp section -x- = 50 mm of gas-filled strut in a vice.

WARNING

- *Only the section indicated may be clamped in the vice (accident risk!).*
- *Protective goggles must be worn during sawing process.*

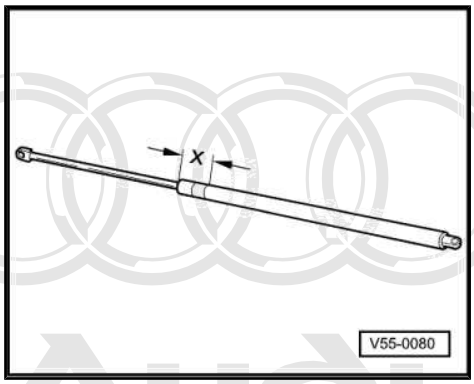

– Cover area around saw cut with a cloth to catch escaping fluid.

– Saw open the first third of the cylinder part of the gas-filled strut (measured from the strut rod end of the cylinder).

Protected by copyright. Copying for private or commercial purposes, in part or in whole, is not permitted unless authorised by AUDI AG. AUDI AG does not guarantee or accept any liability with respect to the correctness of information in this document. Copyright by AUDI AG.

Removing and installing seal

– Pull seal -1- off to remove.

– To install, press seal onto body flange all around.

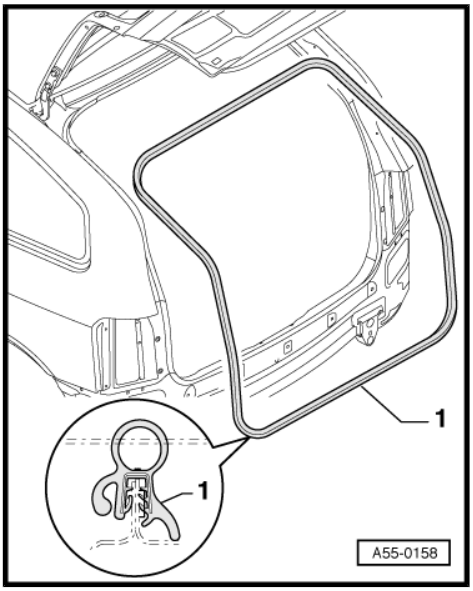

Protected by copyright. Copying for private or commercial purposes, in part or in whole, is not permitted unless authorised by AUDI AG. AUDI AG does not guarantee or accept any liability with respect to the correctness of information in this document. Copyright by AUDI AG.

57 – Front doors, door components, central locking

1 Front door

1.1 Contact corrosion

- Contact corrosion can occur if unsuitable fasteners are used on the vehicle (bolts, nuts, washers etc.).
- For this reason, only fasteners with a special surface coating (Dachromet) have been fitted on the vehicle. These fasteners can be identified by their greenish colour.
- In addition, all rubber and plastic parts and all adhesives are made of non-conductive materials.
- Always renew parts if you are in any doubt as to whether the old part can be used again.

Caution

- *Always use genuine replacement parts (same as original equipment). These have been tested and are aluminium-compatible.*
- *Accessories must be approved by AUDI AG.*
- *Damage caused by contact corrosion is not covered by the warranty.*

1.2 Tools

Protected by copyright. Copying for private or commercial purposes, in part or in whole, is not permitted unless authorised by AUDI AG. AUDI AG does not guarantee or accept any liability with respect to the correctness of information in this document. Copyright by AUDI AG.

Special tools and workshop equipment required

- Multi-point socket screwdriver -T10011-
- Door alignment tool -3320- with bit inserts -3320/2- and -3320/3-
- Socket -3410-
- Assembly tool -T10034-

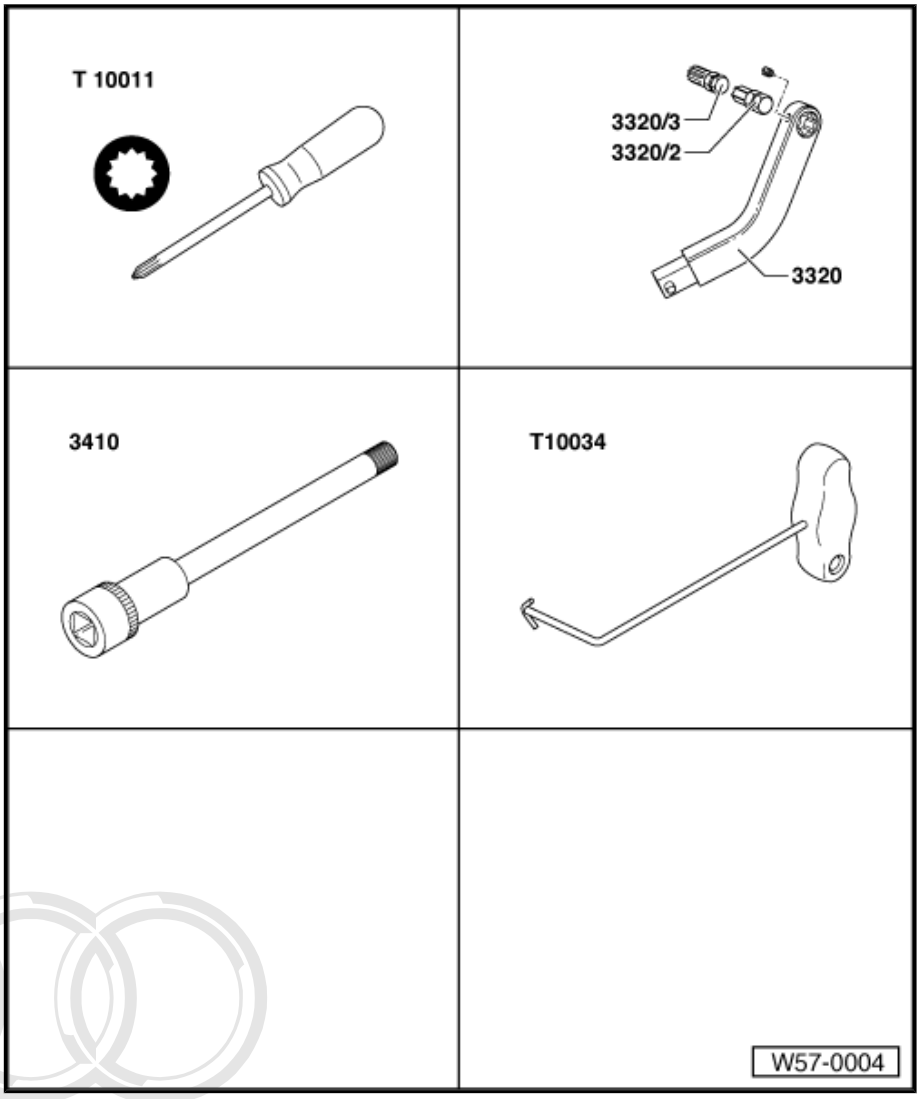

- Socket wrench -T10072-

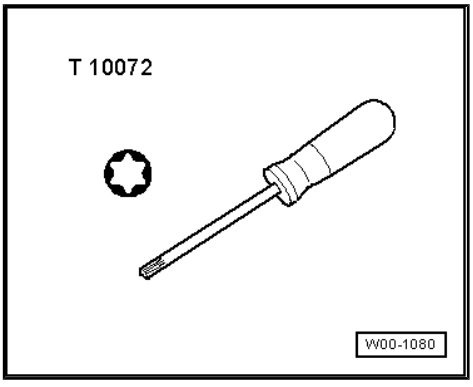

Protected by copyright. Copying for private or commercial purposes, in part or in whole, is not permitted unless authorised by AUDI AG. AUDI AG does not guarantee or accept any liability with respect to the correctness of information in this document. Copyright by AUDI AG.

1.3 Removing and installing mounting panel

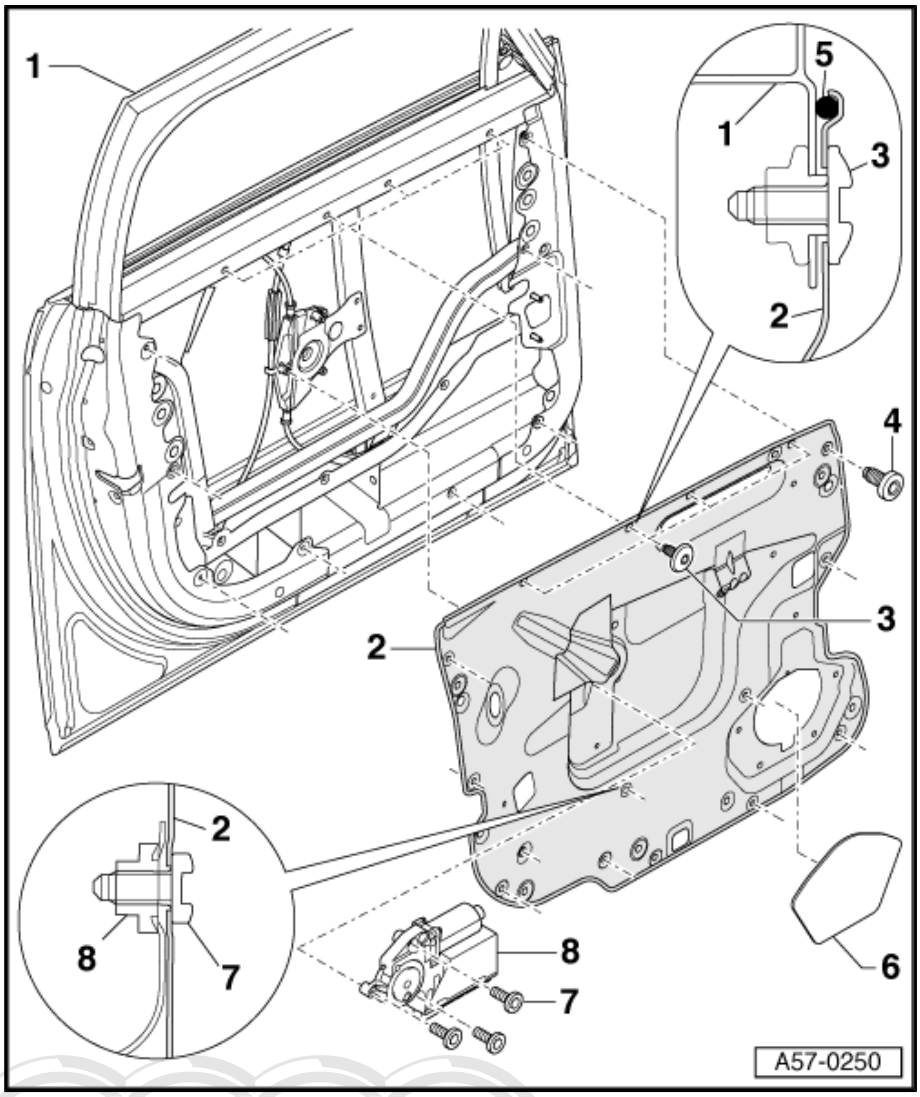

1 - Door subframe

- ❑ After removing the door subframe, ALWAYS seal the opening for the exterior mirror wiring with a butyl strip -AKL 450 005 05- . Use the butyl strip -AKL 450 005 05- from the kit “Fasteners and seals for mounting panel” ⇒ Parts Catalogue .
- ❑ Removing and installing ⇒ page 18

2 - Mounting panel

- ❑ Removing and installing ⇒ page 16

3 - Torx bolt M6x16

- ❑ 10 Nm
- ❑ Note different lengths and diameters of bolt heads.

4 - Torx bolt M6x14

- ❑ 10 Nm

5 - Seal

- ❑ Make sure it is seated correctly on mounting panel.

6 - Cover

- ❑ Only installed on vehicles without a radio.

7 - Torx bolt

- ❑ 3.5 Nm

8 - Motor for window lifter

- ❑ Removing:
  - – Remove door trim ⇒ General body repairs, interior; Rep. Gr. 70 .
  - – Unplug electrical connectors, unscrew bolts ⇒ Item 7 (page 16) and remove motor.

1.4 Removing and installing mounting panel

Special tools and workshop equipment required

Protected by copyright. Copying for private or commercial purposes, in part or in whole, is not permitted unless authorised by AUDI AG. AUDI AG does not guarantee or accept any liability with respect to the correctness of information in this document. Copyright by AUDI AG.

♦ Angled knife -VAS 6269-

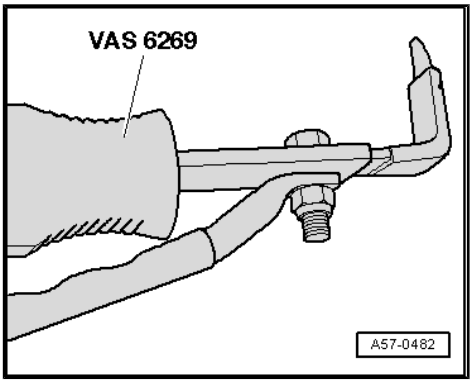

♦ Butyl strip -AKL 450 005 05- from the kit “Fasteners and seals for mounting panel” ⇒ Parts Catalogue .

Removing

Note

The following procedure applies to vehicles which have butyl adhesive strips in place.

– Remove door trim ⇒ General body repairs, interior; Rep. Gr. 70 .
– Unscrew Torx bolts for mounting panel ⇒ Item 3 (page 16) , ⇒ Item 4 (page 16) and ⇒ Item 7 (page 16) .
– Make a note of the installation positions of the bolts to refer to when re-installing them.
– Remove window lifter motor.
– Move electrical wiring clear.

Caution

The adhesive bead on the mounting panel is only just concealed by the door trim. Make sure the paintwork on the door panel does not become damaged. For this reason, you should ALWAYS use the angled knife -VAS 6269- to cut into the adhesive bead.

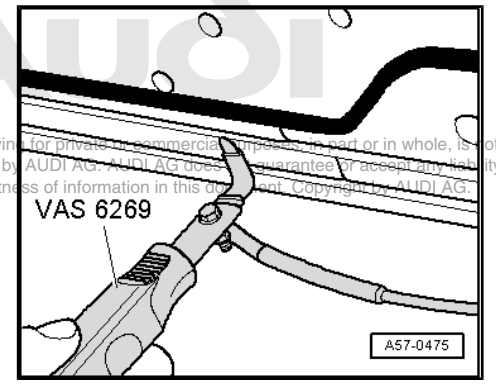

– Starting at the bottom front of the panel, insert the blade of the angled knife -VAS 6269- -item 1- into the adhesive bead -2-, between mounting panel -3- and door panel.

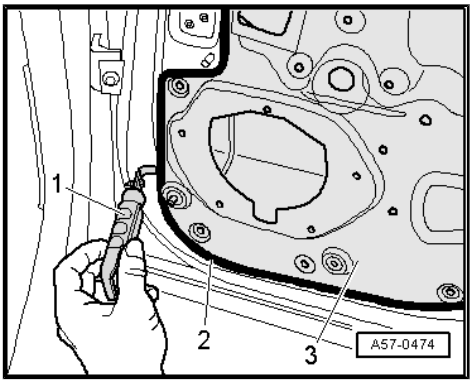

Protected by copyright. Copying for private or commercial purposes, in part or in whole, is not permitted unless authorised by AUDI AG. AUDI AG does not guarantee or accept any liability with respect to the correctness of information in this document. Copyright by AUDI AG.

– Pull the angled knife -VAS 6269- along the adhesive bead in order to cut the adhesive all round.

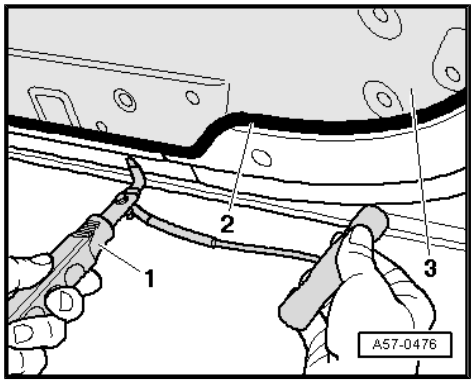

Installing

- Bonding surface must be free of adhesive residue, dust and grease.

– Apply cleaning fluid -D 009 401 04- to the bonding surface and rub it dry.

– Position sealing strip -2- all around outer edge of mounting panel -3-. Use the butyl strip -AKL 450 005 05- from the kit “Fasteners and seals for mounting panel” ⇒ Parts Catalogue .

– Detach backing foil -1-.

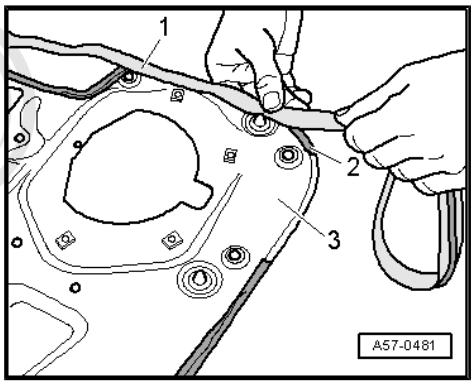

– Fit mounting panel in exact installation position in door and tighten bolts ⇒ Item 3 (page 16) , ⇒ Item 4 (page 16) and ⇒ Item 7 (page 16) . Note the differing bolt lengths and diameters.

– After tightening bolts, check whether sealant -1- has emerged from beneath mounting panel -2-.

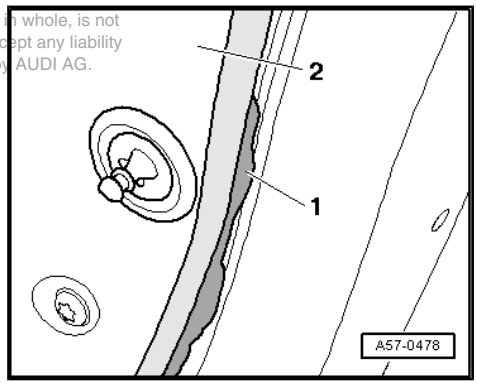

– Remove any sealant -1- which has emerged by pulling it off in direction of mounting panel -2-.

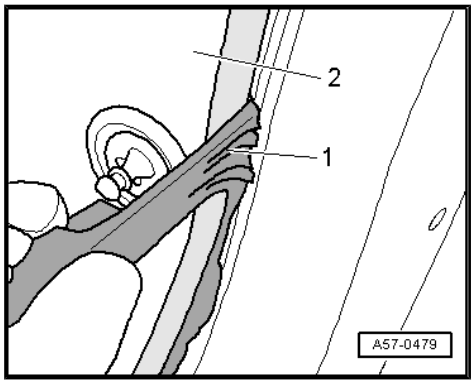

Reproduced by permission of the copyright owner. Unauthorised use of this document, in part or in whole, is not permitted unless authorised by AUDI AG. AUDI AG does not guarantee or accept any liability with respect to the correctness of information in this document. Copyright by AUDI AG.

1.5 Removing and installing front door and door subframe

1 - Front door

- ❑ Seal on front door/ mounting panel is not shown in illustration for reasons of clarity.
- ❑ Seal between front door and mounting panel (sealing strip made of PU foam) ⇒ page 32
- ❑ Seal for gap between metal panels in area of hinge/side impact bar (butyl strip -AKL 450 005 05-) ⇒ page 32
- ❑ Sealing openings in side impact bar with plugs and seal ⇒ page 32

2 - Door subframe

- ❑ Seal on opening for exterior mirror wiring in door subframe is not shown in illustration for reasons of clarity.
- ❑ Seal on opening for exterior mirror wiring in door subframe (butyl strip -AKL 450 005 05-) ⇒ page 32

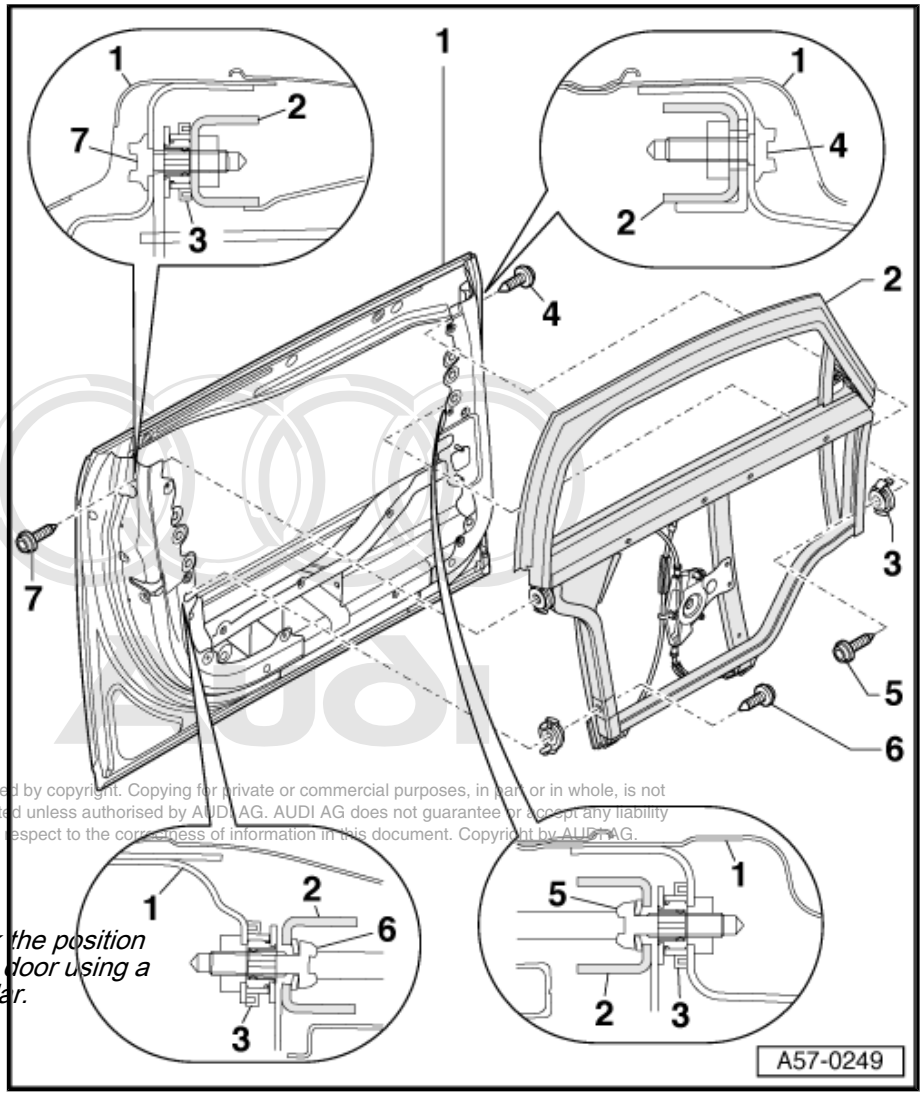

Protected by copyright. Copying for private or commercial purposes, in part or in whole, is not permitted unless authorised by AUDI AG. AUDI AG does not guarantee or accept any liability with respect to the correctness of information in this document. Copyright by AUDI AG.

Note

Before removing, mark the position of the subframe on the door using a fine felt-tip pen or similar.

- ❑ Removing:
- – Remove mounting panel ⇒ Item 2 (page 16) .
- – Detach wires from door subframe and unclip.
- – Remove door seal.
- – Unscrew bolts ⇒ Item 4 (page 20) , ⇒ Item 5 (page 20) , ⇒ Item 6 (page 20) and ⇒ Item 7 (page 20) and lift out door subframe.
- ❑ Installing:
- – Before fitting door subframe, make sure that adjusting elements are completely screwed in.
- – The adjusting elements may have to be screwed in by hand.
- – Fit subframe in door from above.
- – Screw bolts ⇒ Item 4 (page 20) and ⇒ Item 7 (page 20) in loosely.
- – Install door seal.
- – Close door.
- – Align subframe in door opening.
- – Screw lower bolts ⇒ Item 5 (page 20) and ⇒ Item 6 (page 20) in loosely.
- – Open door.

– Check panel gaps ⇒ page 21 .

– You may have to adjust the position of the subframe.

– If panel gaps are OK, tighten bolts in the following sequence: ⇒ Item 4 (page 20) , ⇒ Item 7 (page 20) , ⇒ Item 6 (page 20) and ⇒ Item 5 (page 20) (tightening torque: 30 Nm).

Caution

IMPORTANT: The tightening sequence must be observed.

– Seal opening for exterior mirror wiring with a butyl strip -AKL 450 005 05- from the kit “Fasteners and seals for mounting panel” ⇒ Parts Catalogue .

3 - Adjusting element

❑ When bolts are tightened, adjusting element is automatically set to correct length.

Caution

Ensure that the adjusting elements are completely screwed in (left-hand thread!) ⇒ page 20 before installing the door subframe.

4 - Torx bolt

❑ 30 Nm

❑ When installing, observe tightening sequence for securing bolts.

5 - Torx bolt

❑ 30 Nm

6 - Torx bolt

❑ 30 Nm

7 - Torx bolt

❑ 30 Nm

Adjusting element

– Before installing the door subframe you must completely screw in the threaded sleeves -2- of the adjusting elements -1- in anti-clockwise direction.

– Make sure the retainer on the threaded sleeve -arrow- is located between the limit stop and the locating lug.

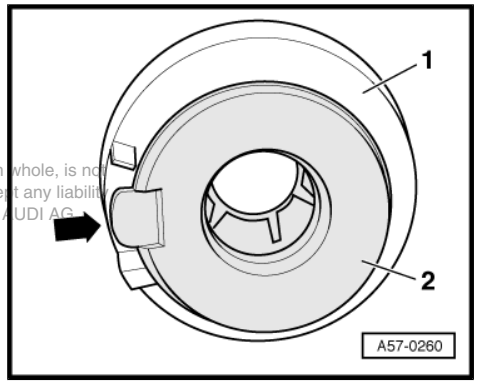

Protected by copyright. Copying for private or commercial purposes, in part or in whole, is not permitted unless authorised by AUDI AG. AUDI AG does not guarantee or accept any liability with respect to the correctness of information in this document. Copyright by AUDI AG.

1.6 Panel gaps for door adjustment

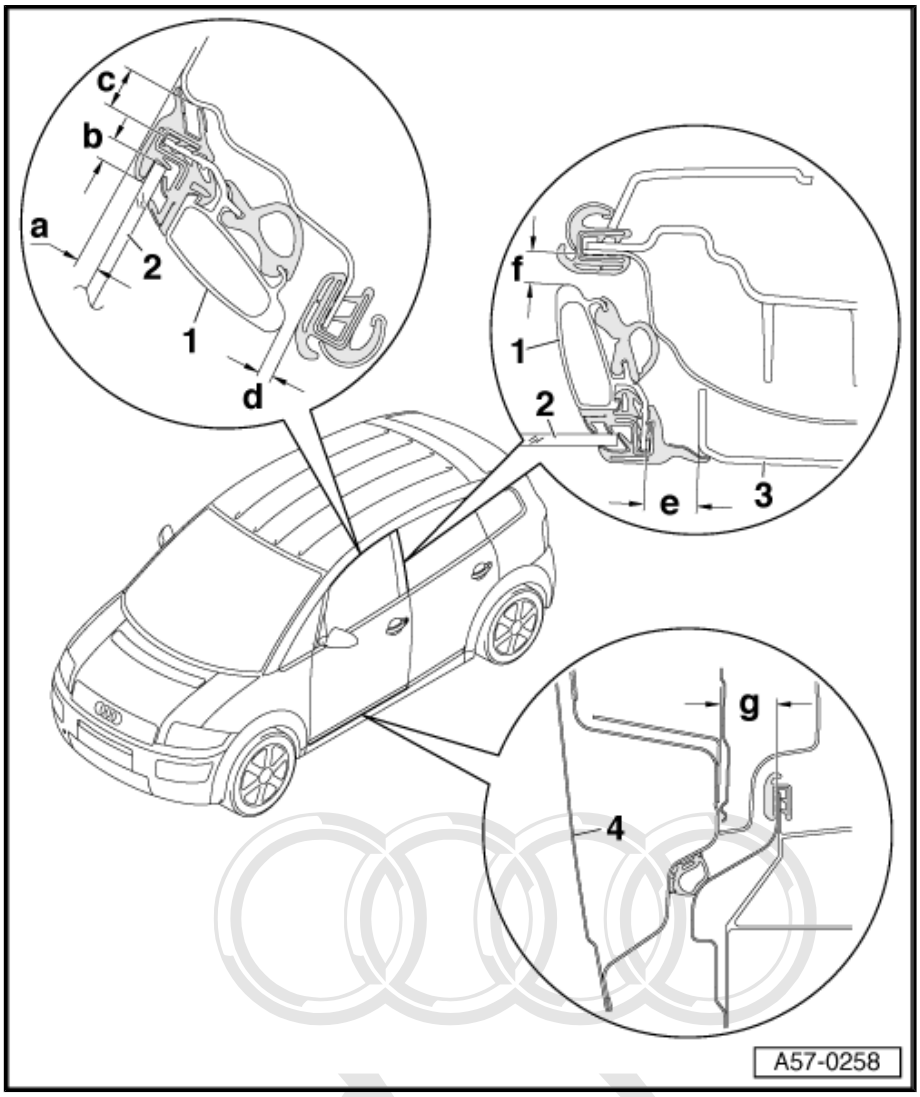

1 - Door subframe

- ❑ Dimension -a- = 5 mm + 1.5 mm.
- ❑ Use setting gauge to set dimension -a- ⇒ page 22 .
- ❑ Dimension -b- = 5 mm - 2 mm.
- ❑ Dimension -c- = 9.5 mm ± 1 mm.
- ❑ Dimension -d- = 8.5 mm ± 1 mm (distance to B-pillar).

2 - Door window

- ❑ Dimension -b- = 5 mm - 2 mm.
- ❑ To check dimension -b- lower window completely into door seal.
- ❑ Mark lower edge of door seal on window using a fine coloured pen.
- ❑ Open door window and measure dimension -b- from top edge of window to marking made earlier.

3 - Trim for C-pillar

- ❑ Dimension -e- = 15.5 mm ± 1 mm
- ❑ Dimension -f- = 9 mm ± 1 mm

4 - Front door

- ❑ Dimension -g- = 31 mm ± 1 mm
- ❑ Can only be measured with door trim removed.

Protected by copyright. Copying for private or commercial purposes, in part or in whole, is not permitted unless authorised by AUDI AG. AUDI AG does not guarantee or accept any liability with respect to the correctness of information in this document. Copyright by AUDI AG.

Making improvised setting gauge

– Make improvised setting gauge -1- from plastic or plywood according to the specified dimensions.

• Dimension -a- = 5 mm.

• Dimension -b- = approx. 30 mm

– If the door subframe is correctly adjusted, the gauge should make contact with the door window and roof trim moulding when applied at a point approx. 100 mm from B-pillar.

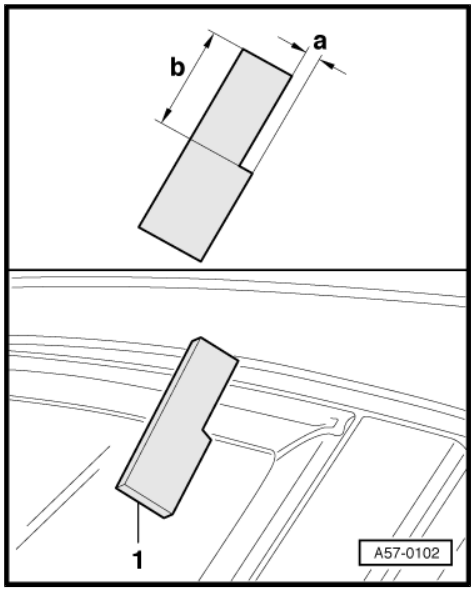

1.7 Door hinges (front)

1 - Torx bolt
- ❑ 30 Nm
- ❑ Accessible from vehicle interior.
- ❑ To unscrew bolt you must first remove trim for A-pillar (bottom).

2 - Door hinge (top)

3 - Torx bolt
- ❑ 30 Nm

4 - Torx bolt
- ❑ Accessible from vehicle interior.
- ❑ To unscrew bolt you must first remove trim for A-pillar (bottom).
- ❑ 30 Nm

5 - Door hinge (bottom)

6 - Torx bolt
- ❑ 30 Nm

7 - Front door

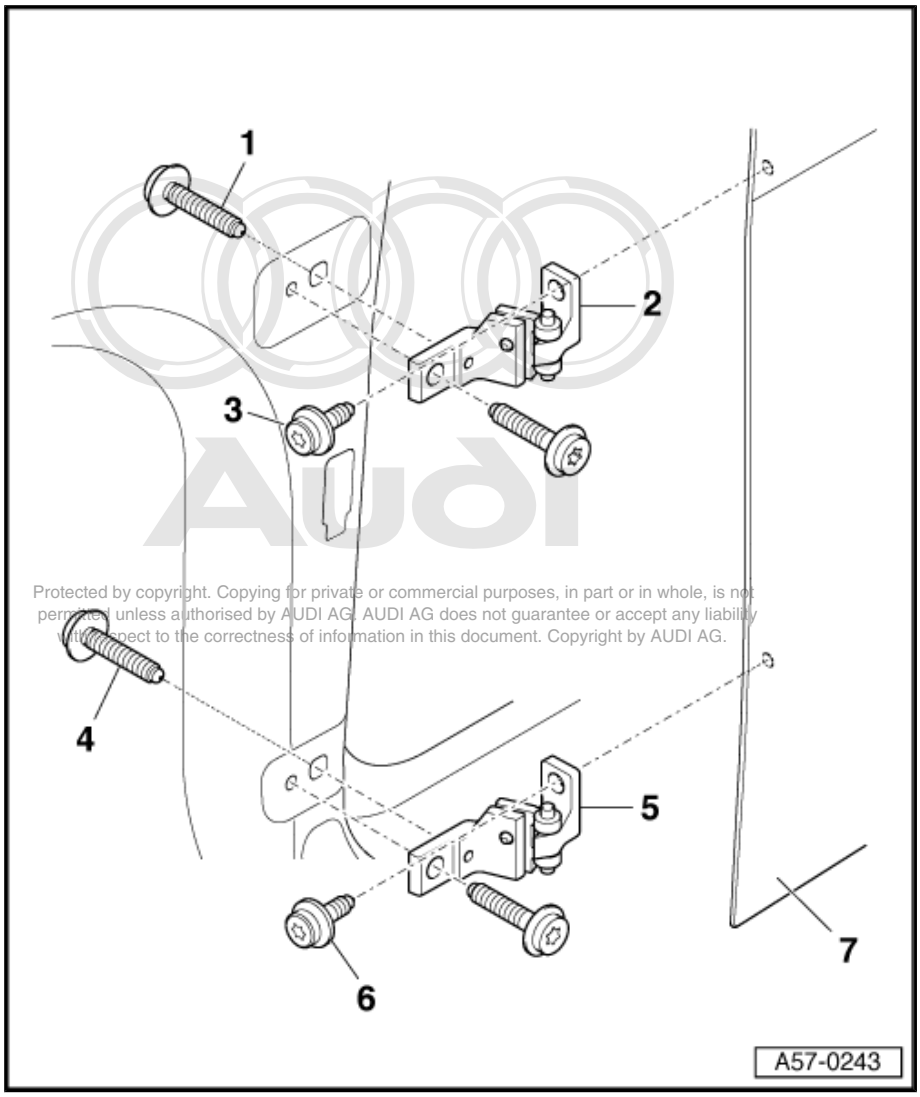

Protected by copyright. Copying for private or commercial purposes, in part or in whole, is not permitted unless authorised by AUDI AG. AUDI AG does not guarantee or accept any liability with respect to the correctness of information in this document. Copyright by AUDI AG.

1.8 Panel gaps

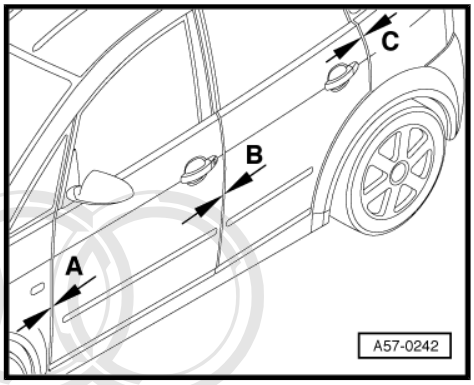

- Rear door must be adjusted if this has not already been done.
- Dimension -A- = 3.5 mm ± 0.5 mm
- Dimension -B- = 4 mm ± 0.5 mm
- Dimension -A- = 3.5 mm ± 0.5 mm

Note

- *Use setting gauge -3371- to check panel gaps.*
- *The shut lines and panel gaps can be adjusted by loosening the hinge bolts and moving the door.*

Adjusting door at striker plate

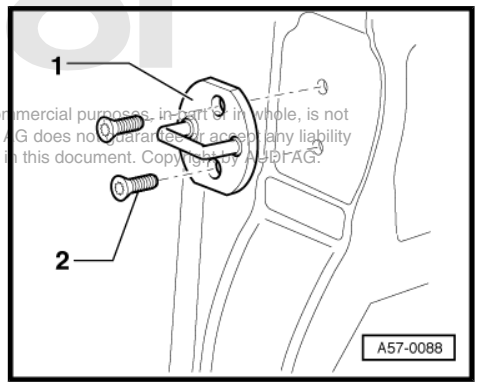

Note

Markings for the precise adjustment of the door are located on the striker plate and on the B-pillar.

– Slacken bolts -2-.
– Move striker plate -1- until door shell is flush with contour of body.
– Tighten bolts.
- Tightening torque: 20 Nm.

Note

Use this adjustment only to adjust door inwards or outwards, not vertically.

1.9 Removing and installing door arrester

Protected by copyright. Copying for private or commercial purposes, in part or in whole, is not permitted unless authorised by AUDI AG. AUDI AG does not guarantee or accept any liability with respect to the correctness of information in this document. Copyright by AUDI AG.

1 - Front door

2 - Door arrester

- ❑ Before removing first detach door trim and trim for A-pillar (bottom).
- ❑ To remove, unscrew hexagon nuts ⇒ Item 4 (page 24) and Torx bolts ⇒ Item 6 (page 24) . Then detach door arrester.

3 - Cover

- ❑ Pressed over pin of door arrester.

4 - Hexagon nut

- ❑ 10 Nm

5 - A-pillar.

6 - Torx bolts

- ❑ 21 Nm

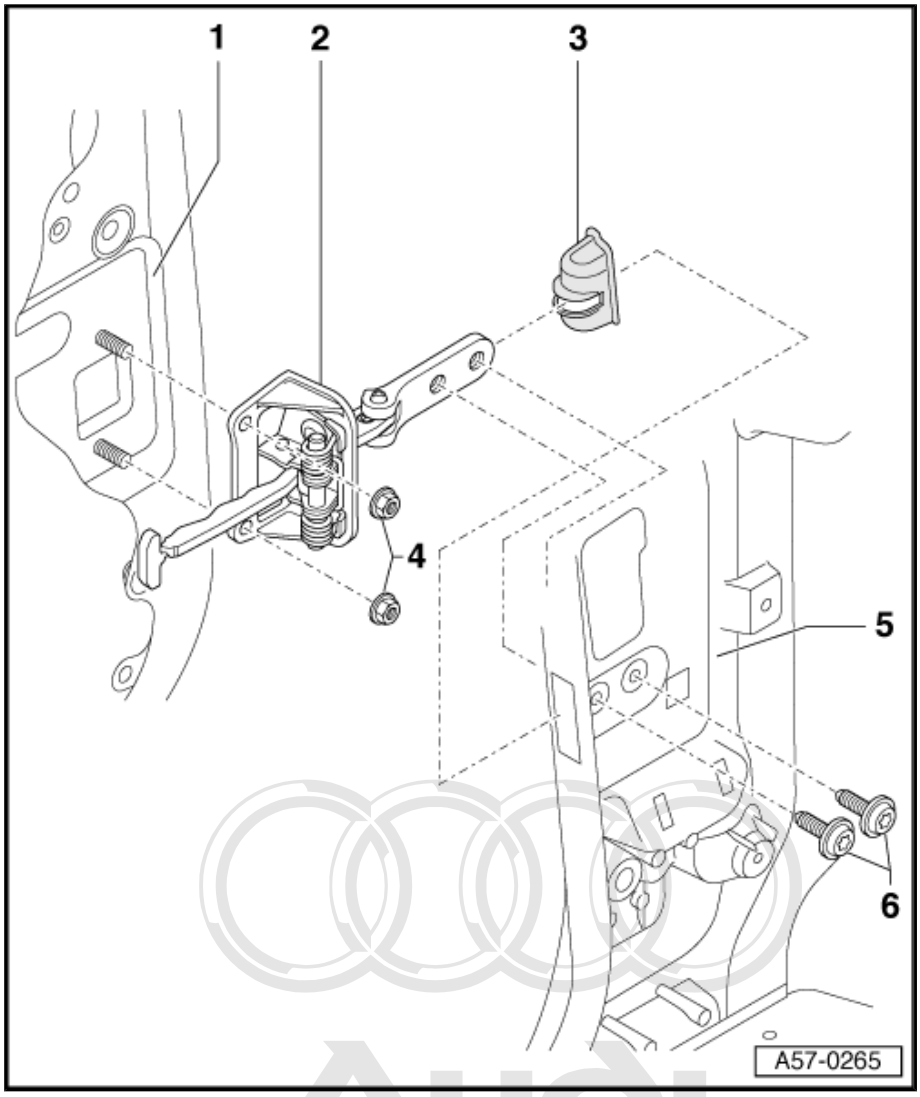

Protected by copyright. Copying for private or commercial purposes, in part or in whole, is not permitted unless authorised by AUDI AG. AUDI AG does not guarantee or accept any liability with respect to the correctness of information in this document. Copyright by AUDI AG.

1.10 Removing and installing window lifter and door window

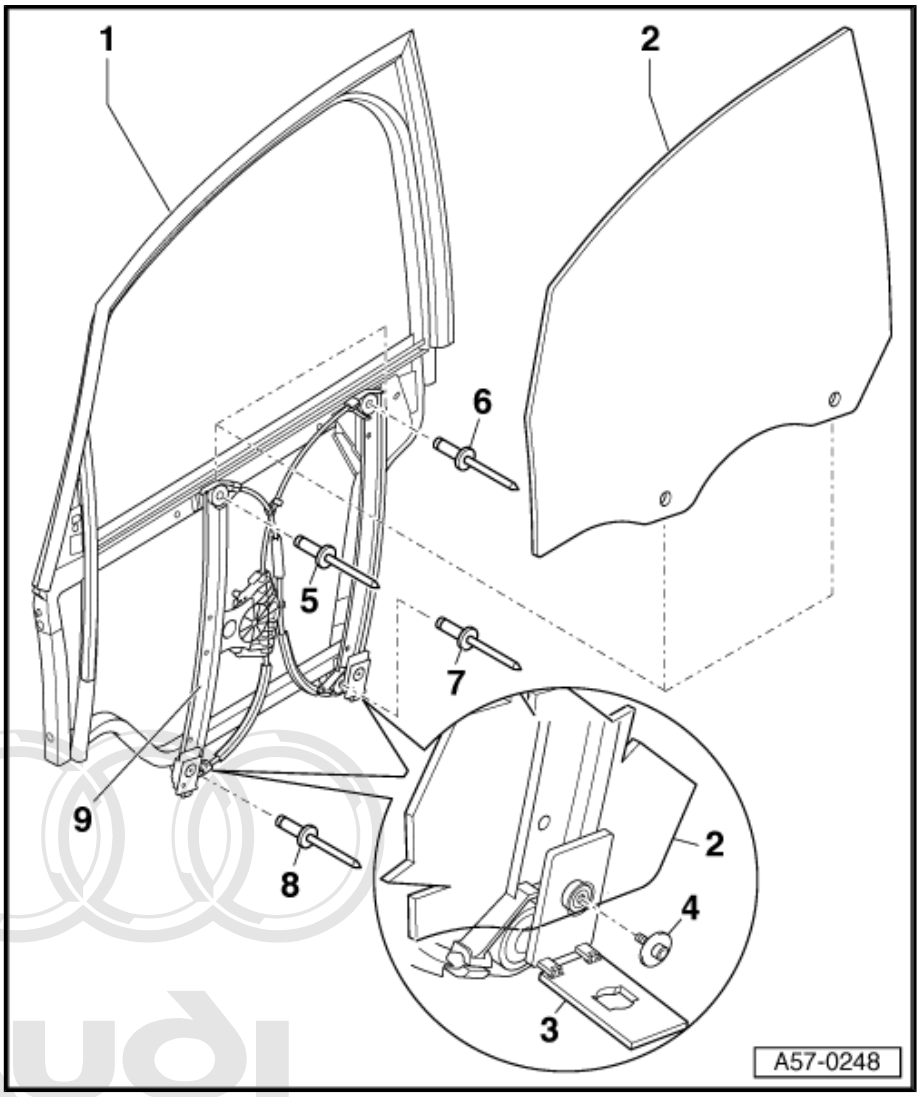

1 - Door subframe

2 - Door window

- ❑ Removing:
  - – Unscrew bolt ⇒ Item 4 (page 25) and open folding hinge ⇒ Item 3 (page 25) .
  - – Pull window downwards out of guides.
- ❑ Installing:
  - – Insert window in guides and move it up to make contact with seal on B-pillar.
  - – Raise door window into seal and tighten bolt ⇒ Item 4 (page 25) to 4 Nm.
  - – Then lower window again.

3 - Folding hinge

4 - Torx bolt

- ❑ 4 Nm

5 - Pop rivet

- ❑ Observe sequence for riveting.

6 - Pop rivet

7 - Pop rivet

8 - Pop rivet

9 - Window lifter

- ❑ Removing:
  - – Remove window lifter motor.
  - – Remove door subframe ⇒ Item 2 (page 19) .
  - – Drill rivet heads off pop rivets and strike out rivet stems.
  - – Take rivet stems out of door subframe.
- ❑ Installing:
  - – Rivet window lifter in the following sequence: ⇒ Item 5 (page 25) , ⇒ Item 6 (page 25) , ⇒ Item 7 (page 25) and ⇒ Item 8 (page 25) .

Protected by copyright. Copying for private or commercial purposes, in part or in whole, is not permitted unless authorised by AUDI AG. AUDI AG does not guarantee or accept any liability with respect to the correctness of information in this document. Copyright by AUDI AG.

1.11 Door handle and door lock (front) - exploded view

1 - Door lock

- ❑ Can be removed without removing door sub-frame.
- ❑ Removing and installing ⇒ page 28

2 - Door handle mounting

- ❑ Before removing, detach door handle.
- ❑ To remove, unscrew bolt ⇒ Item 8 (page 26) and disengage mounting from retainer, pushing it slightly towards the rear. Then remove door handle mounting towards the inside.

3 - Front door

4 - Lock cylinder

- ❑ Removing ⇒ Item 1 (page 27) .

5 - Backing plate

6 - Door handle

- ❑ Before removing, detach lock cylinder.

7 - Operating rod

- ❑ When installing, operating rod must engage in door lock as shown in illustration (detail view).

8 - Securing bolt

- ❑ 4.5 Nm

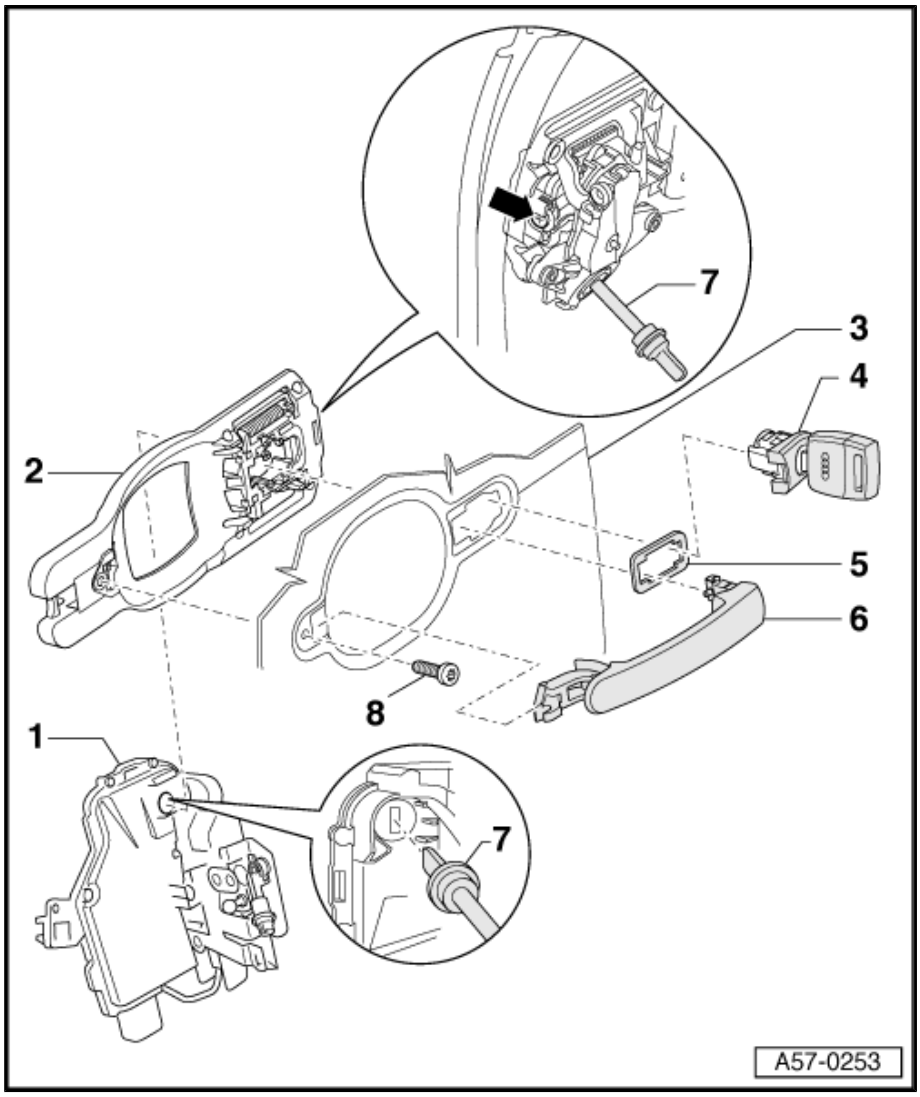

Protected by copyright. Copying for private or commercial purposes, in part or in whole, is not permitted unless authorised by AUDI AG. AUDI AG does not guarantee or accept any liability with respect to the correctness of information in this document. Copyright by AUDI AG.

1.12 Removing lock cylinder and door handle

1 - Lock cylinder

- ❑ Removing:
  - – Pull door handle outwards and hold it in this position.
  - – Use socket wrench -T10072- to turn screw -arrow C- as far as stop in anti-clockwise direction.
  - – Once the screw has been unscrewed the door handle will be locked in the outward position ⇒ page 27 .
  - – Use key to pull lock cylinder out of door handle mounting.

2 - Door handle mounting

- ❑ Removing ⇒ Item 2 (page 26) .

3 - Door handle

- ❑ Before removing, detach lock cylinder.
- ❑ Pull door handle towards the rear and remove towards the outside.
- ❑ When installing, ensure that seal on door handle is inserted behind door panel.
- ❑ The retaining tab must engage above the catch mechanism ⇒ page 28 .

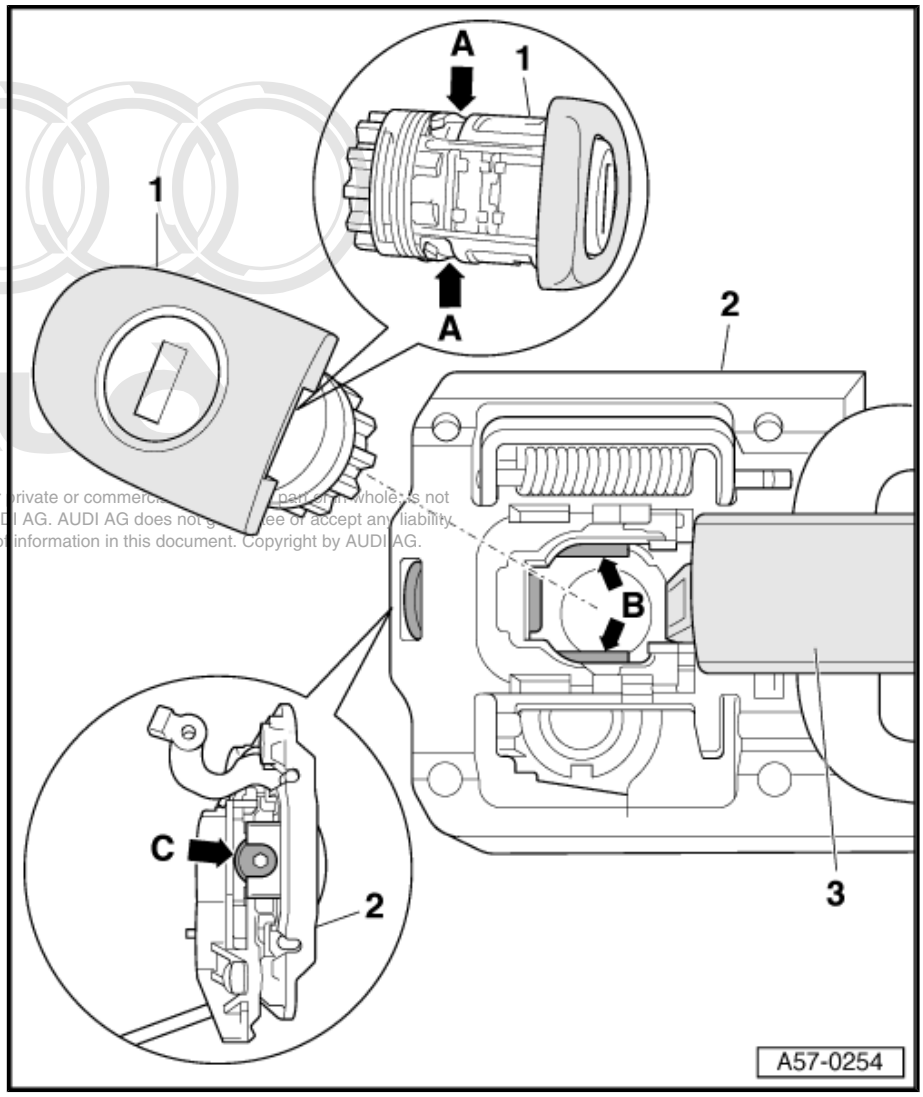

Protected by copyright. Copying for private or commercial purposes, in part or in whole, is not permitted unless authorised by AUDI AG. AUDI AG does not guarantee or accept any liability with respect to the correctness of information in this document. Copyright by AUDI AG.

Locking door handle in place

– Once you have used screw -2- to turn the catch mechanism -1- as far as the stop, the door handle will be locked in place in the outward position -arrow-.

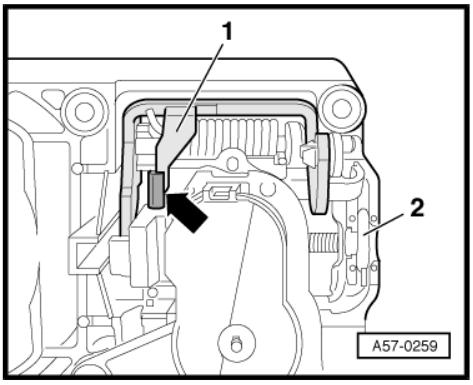

1.13 Installing door handle

– Install door handle, guiding it through opening in door panel (front).

– The seal on the front of the door handle -1- must be inserted behind the door panel and the retaining tab must engage behind the catch mechanism -2-.

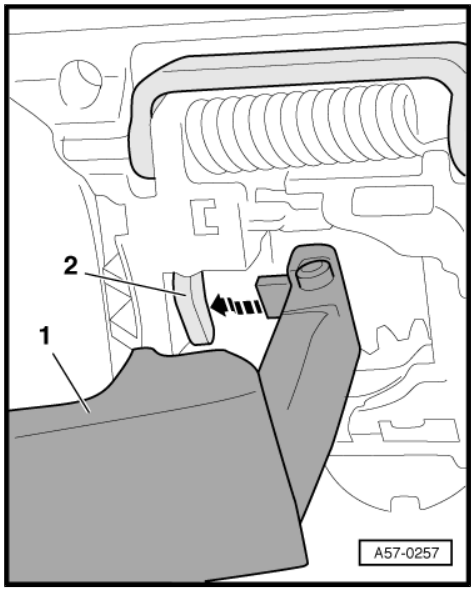

Protected by copyright. Copying for private or commercial purposes, in part or in whole, is not permitted unless authorised by AUDI AG. AUDI AG does not guarantee or accept any liability with respect to the correctness of information in this document. Copyright by AUDI AG.

– When installed correctly, the retaining tab -1- on the door handle engages behind the catch mechanism -2-.

– Fit the lock cylinder into the door handle mounting.

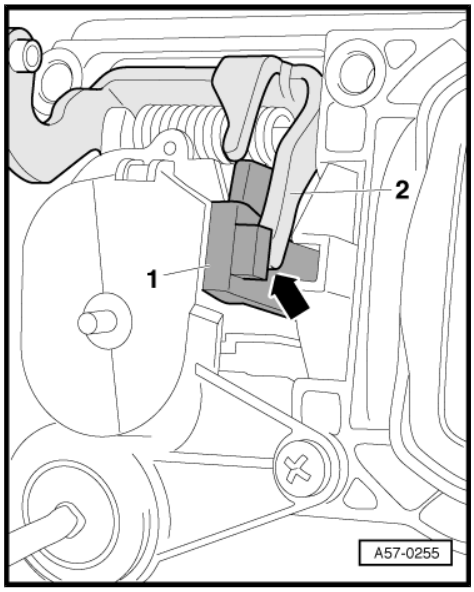

– Turn screw -2- in clockwise direction as far as the stop.

– This releases the retaining tab -arrow- locking the catch mechanism -1- in place and the door handle is then pulled towards the inside.

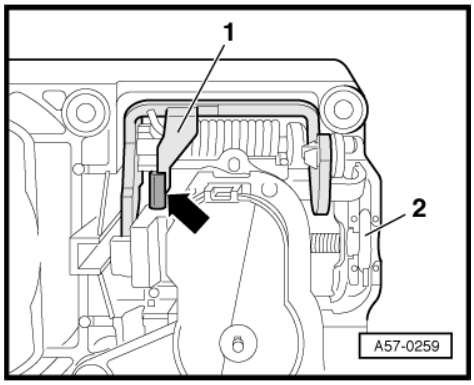

1.14 Removing and installing door lock (front)

1 - Door lock (front)

- ❑ Removing:
- – Remove door trim ⇒ General body repairs, interior; Rep. Gr. 70 .
- – Remove mounting panel ⇒ page 16 .
- – Unclip operating rod for door handle ⇒ page 30 .
- – Remove bolts with washers ⇒ Item 5 (page 29) .
- – Slide door lock downwards out of the door.
- ❑ Installing ⇒ page 30 .

2 - Bowden cable

- ❑ To remove, unclip from door lock -arrow c-.
- ❑ Swivel Bowden cable approx. 90° downwards and detach from operating rod for door lock.
- ❑ To install, engage Bowden cable in direction of -arrow a-, swivel upwards approx. 90°, and then clip into door lock -arrow c-.

3 - Cover cap

4 - Backing plate

- ❑ Slide in sideways to install.

5 - Bolt with washer

- ❑ 20 Nm

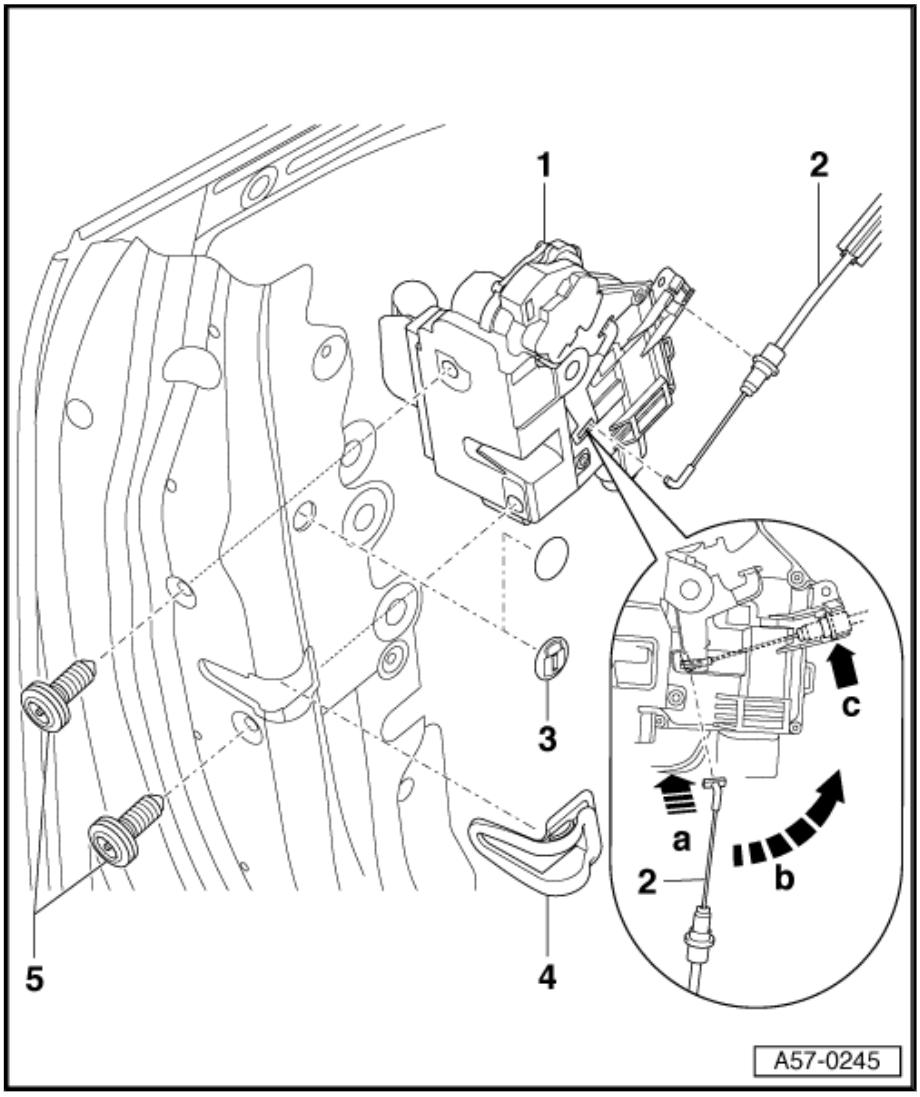

Protected by copyright. Copying for private or commercial purposes, in part or in whole, is not permitted unless authorised by AUDI AG. AUDI AG does not guarantee or accept any liability with respect to the correctness of information in this document. Copyright by AUDI AG.

Disengaging operating rod

– If re-installing the same door lock, disengage operating rod -1- from operating lever at clip -2-.

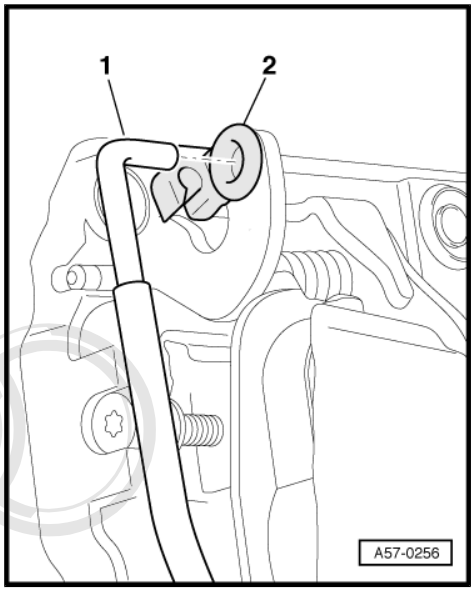

Installing door lock

– If re-installing the same door lock, disengage operating rod -2- at top of operating lever -1-.

– If you are installing a new door lock, slide sleeve -4- downwards and push operating rod -2- out of clip -3-.

– Before installing, engage Bowden cable -6- in door lock.

– Fit door lock in door and secure it with the two bolts with washers.

– Make sure the flexible operating rod on the mounting for the door handle engages in the door lock ⇒ Item 2 (page 26) .

– Press operating rod -2- into clip -3- and push sleeve -4- upwards.

– After completing the installation, pull securing pin -6- out of door lock.

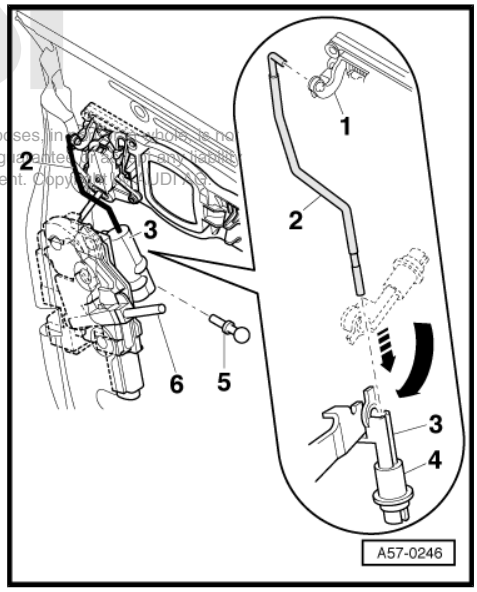

Protected by copyright. Copying for private or commercial purposes, in part or in whole, is not permitted unless authorized by AUDI AG. AUDI AG does not guarantee or accept any liability with respect to the correctness of information in this document. Copyright by AUDI AG

1.15 Removing and installing window guide and window slot trim panel

1 - Door subframe

- ❑ Removing ⇒ page 18 .

2 - Window guide

- ❑ Remove door window before detaching.
- ❑ To remove, detach window guide from door subframe, pulling it off to the side.

3 - Window slot trim panel

- ❑ Remove door window before detaching.
- ❑ Pull window slot trim panel out of guide.
- ❑ Coat new window slot trim panel with soap solution or similar to facilitate installation.

4 - Door window

5 - Door seal (outer)

- ❑ To facilitate installation, apply soap solution in the area of the door subframe.
- ❑ Installing in door ⇒ page 31 .

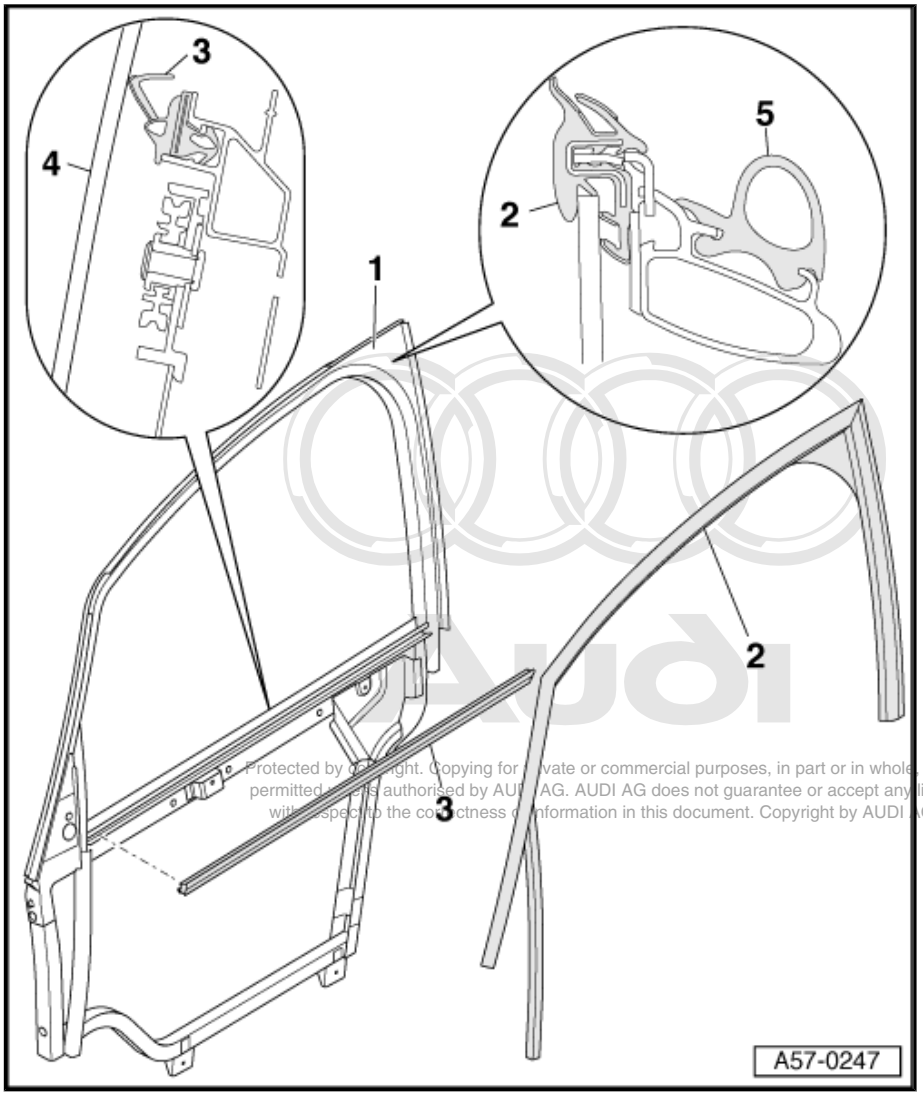

Protected by copyright. Copying for private or commercial purposes, in part or in whole, is not permitted unless authorised by AUDI AG. AUDI AG does not guarantee or accept any liability with respect to the correctness of information in this document. Copyright by AUDI AG.

1.16 Removing and installing door seal (outer)

– To remove, unclip bottom section from door and detach top section from the door subframe.

– When installing, first fit rubber corner -arrow a- at joint between door and door subframe, inserting retaining lug in door cut-out.

– Attach seal to top of door subframe in direction of -arrow b-.

– Fix rubber corner -arrow c- in position at joint between door and door subframe.

– Then fit clips all around the door, starting at the top and working towards the bottom.

– Finally, pull protective film off adhesive surface and press seal firmly onto door in area of door lock.

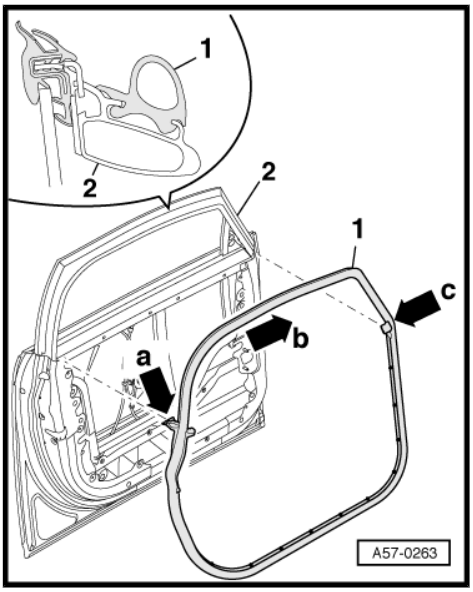

1.17 Removing and installing door seal (inner)

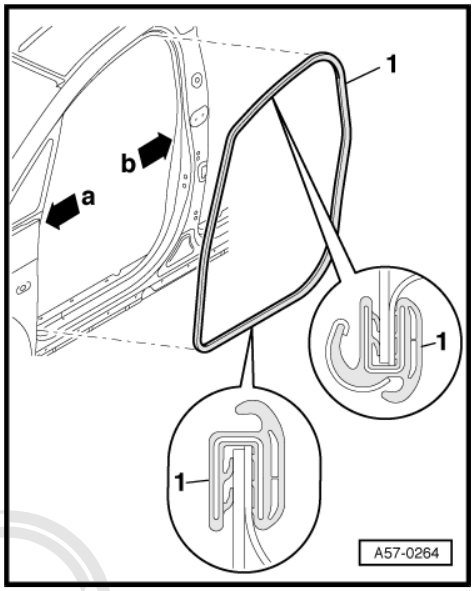

– To remove, pull it off door flange.
– Before installing remove trim for A-pillar (bottom) and B-pillar (bottom).
– When installing, first fix seal -1- in position at markings on body flange -arrow a- and -arrow b-.
– Then press seal onto door flange in area of roof.
– Finally, press seal onto door flange at bottom.

1.18 Seal on door (front)/ mounting panel and on opening for exterior mirror wiring in door subframe

Note

- *ALWAYS use the kit "Fasteners and seals for mounting panel" ⇒ Parts Catalogue .*
- *All materials for the sealing operations must be taken from the kit "Fasteners and seals for mounting panel" ⇒ Parts Catalogue .*
- *When installing new replacement doors you must always carry out all sealing operations after the door has been painted.*
- *After renewing the door subframe ⇒ Item 2 (page 19) or the exterior mirror the opening for the exterior mirror wiring must be sealed with a butyl strip -AKL 450 005 05- .*
- *If the door mounting panel has to be removed, take care when detaching door trim, mounting panel and clips and avoid bending the mounting panel.*
- *After removing the mounting panel, you must ALWAYS renew the sealing strip ⇒ Item 5 (page 33) and renew the connection between the sealant bead ⇒ Item 4 (page 33) and the sealing strip using a butyl strip -AKL 450 005 05- .*
- *All bolts, clips for wiring harnesses and the door trim have a sealing surface and must ALWAYS be renewed.*
- *After installing the mounting panel and the door trim carry out a leak test with water.*
- *The surfaces to be bonded must be at least as warm as room temperature. If necessary, heat up with a hot-air blower.*

Protected by copyright. Copying for private or commercial purposes, in part or in whole, is not permitted unless authorised by AUDI AG. AUDI AG does not guarantee or accept any liability with respect to the correctness of information in this document. Copyright by AUDI AG.

1 - Front door

2 - Side impact bar

3 - Hinge reinforcement

4 - Sealant bead

- ❑ Consisting of a butyl strip -AKL 450 005 05- .
- ❑ Butyl strip -AKL 450 005 05- is included in the kit “Fasteners and seals for mounting panel” ⇒ Parts Catalogue .
- ❑ Seals the gap between side impact bar ⇒ Item 2 (page 33) , hinge reinforcement ⇒ Item 3 (page 33) and forms a joint with sealing strip ⇒ Item 5 (page 33) .
- ❑ Before applying the sealant bead you must bond the sealing strip ⇒ Item 5 (page 33) on-to the side impact bar ⇒ Item 2 (page 33) .
- ❑ Remove the damaged sealant bead very carefully to avoid damaging the paintwork on the door. Use a scraper or similar tool to remove the damaged sealant bead.
- ❑ Apply new sealant bead as shown in illustration and then spread it evenly. Make sure that the gap between side impact bar ⇒ Item 2 (page 33) and hinge reinforcement ⇒ Item 3 (page 33) is filled completely and that the sealing strip ⇒ Item 5 (page 33) already bonded on is joined up with the sealant bead.

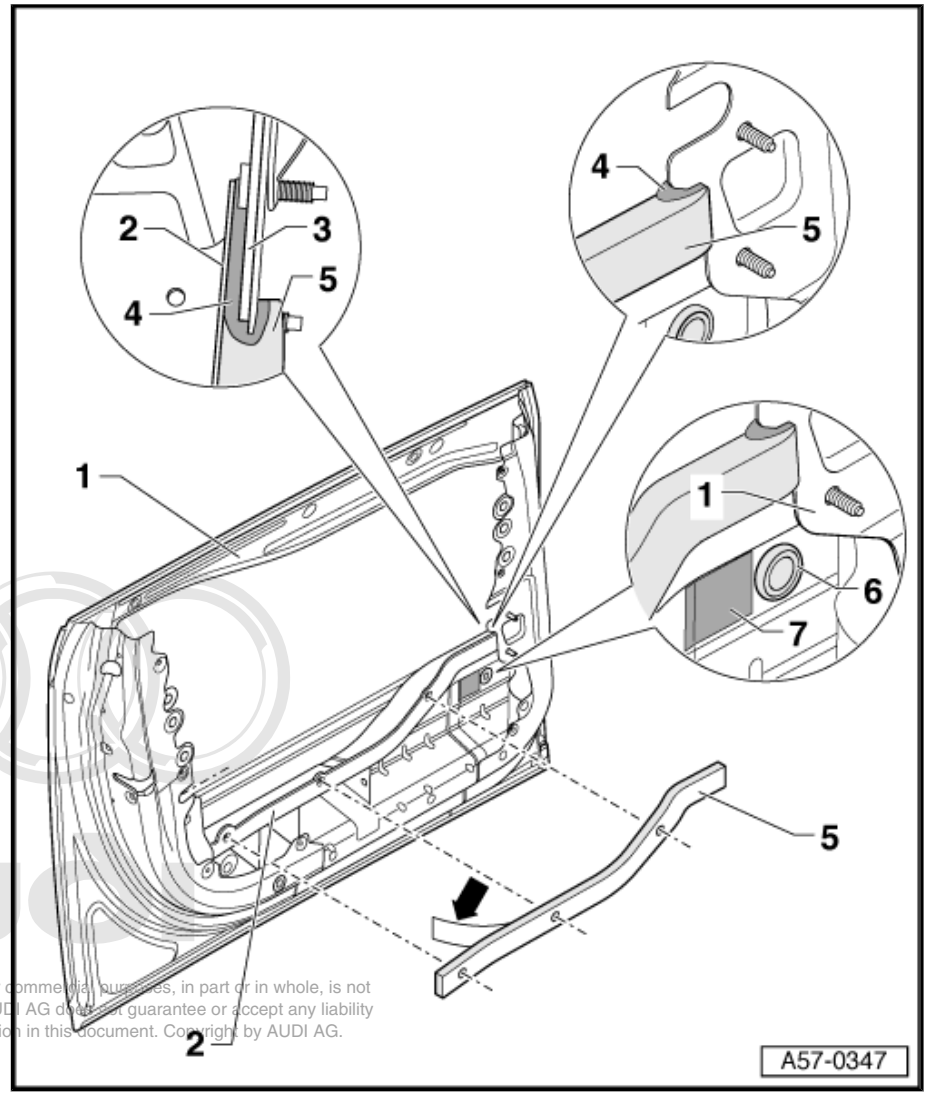

Protected by copyright. Copying for private or commercial purposes, in part or in whole, is not permitted unless authorised by AUDI AG. AUDI AG does not guarantee or accept any liability with respect to the correctness of information in this document. Copyright by AUDI AG.

5 - Sealing strip (PU foam)

- ❑ Is included in the kit “Fasteners and seals for mounting panel” ⇒ Parts Catalogue .
- ❑ Self-adhesive on both sides; has a protective film backing
- ❑ Do not detach protective film until just before you bond on the sealing strip.
- ❑ Bonding surface of side impact bar ⇒ Item 2 (page 33) must be free of adhesive residue, dust and grease.
- ❑ Apply cleaning fluid -D 009 401 04- to the bonding surface and rub it dry.
- ❑ Remove protective film -arrow- on the side which is bonded on first.
- ❑ Position sealing strip on side impact bar ⇒ Item 2 (page 33) . Do NOT press sealing strip on yet.
- ❑ Align holes on sealing strip with holes in side impact bar.

Note

The holes on the sealing strip and in the side impact bar must be flush. If this is not the case, the sealing strip will become damaged when the door is installed.

- ❑ Firmly press on the sealing strip along the entire bonding surface. If there is already a sealant bead in place, pay particular attention to the joint between sealing strip and sealant bead.

- ❑ If necessary renew joint between sealant bead and sealing strip.
- ❑ Do not detach the outer protective film from the sealing strip until just before you install the mounting panel ⇒ Item 2 (page 16) .

6 - Plug

- ❑ Is included in the kit “Fasteners and seals for mounting panel” ⇒ Parts Catalogue .
- ❑ Make sure the plug is clipped into the side impact bar correctly.

7 - Seal

- ❑ Is included in the kit “Fasteners and seals for mounting panel” ⇒ Parts Catalogue .
- ❑ Self-adhesive
- ❑ Bonding surface must be free of adhesive residue, dust and grease.
- ❑ Apply cleaning fluid -D 009 401 04- to the bonding surface and rub it dry.
- ❑ Position seal on opening to be plugged in side impact bar ⇒ Item 2 (page 33) .
- ❑ Press seal on firmly.

Protected by copyright. Copying for private or commercial purposes, in part or in whole, is not permitted unless authorised by AUDI AG. AUDI AG does not guarantee or accept any liability with respect to the correctness of information in this document. Copyright by AUDI AG.

58 – Rear doors, door components

1 Rear doors

1.1 Contact corrosion

- Contact corrosion can occur if unsuitable fasteners are used on the vehicle (bolts, nuts, washers etc.).
- For this reason, only fasteners with a special surface coating (Dachromet) have been fitted on the vehicle. These fasteners can be identified by their greenish colour.
- In addition, all rubber and plastic parts and all adhesives are made of non-conductive materials.
- Always renew parts if you are in any doubt as to whether the old part can be used again.

Caution

- *Always use genuine replacement parts (same as original equipment). These have been tested and are aluminium-compatible.*
- *Accessories must be approved by AUDI AG.*
- *Damage caused by contact corrosion is not covered by the warranty.*

1.2 Tools

Protected by copyright. Copying for private or commercial purposes, in part or in whole, is not permitted unless authorised by AUDI AG. AUDI AG does not guarantee or accept any liability with respect to the correctness of information in this document. Copyright by AUDI AG.

Special tools and workshop equipment required

- Multi-point socket screwdriver -T10011-
- Door alignment tool -3320- with bit inserts -3320/2- and -3320/3-
- Socket -3410-
- Assembly tool -T10034-

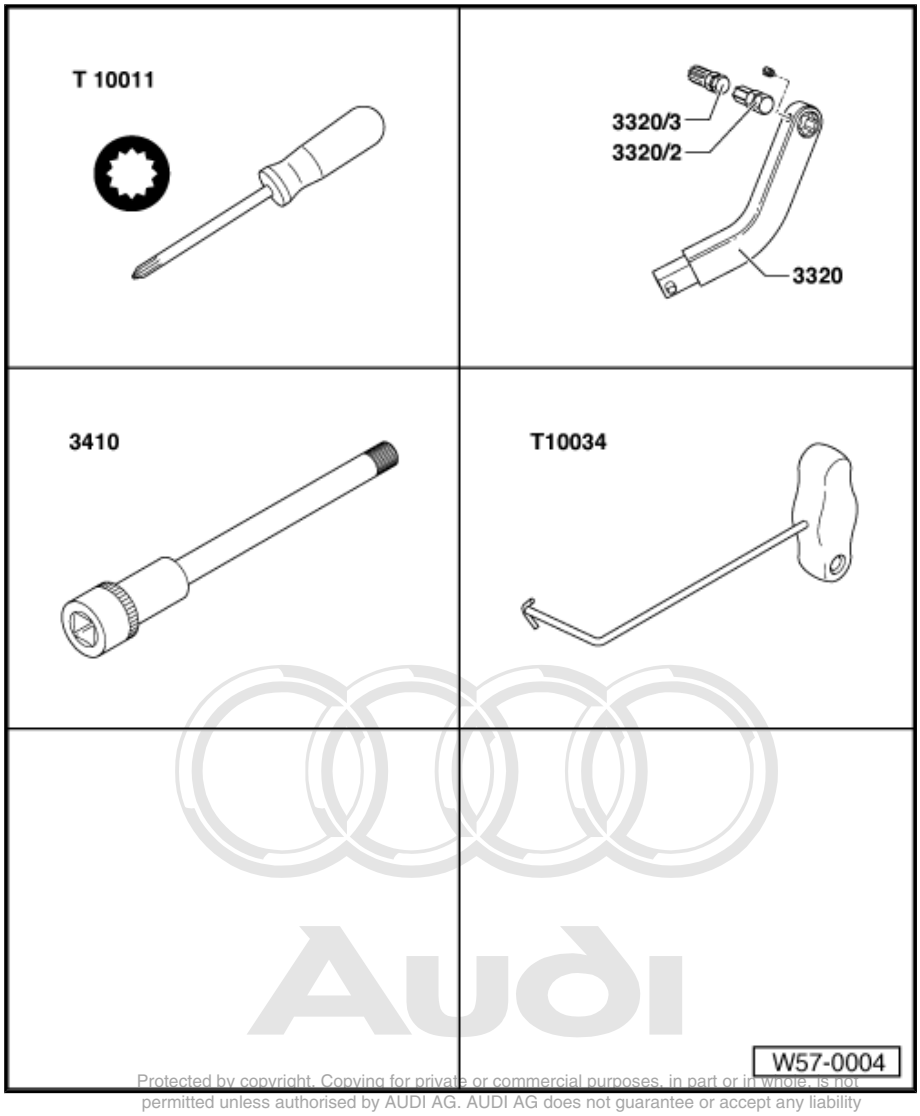

Protected by copyright. Copying for private or commercial purposes, in part or in whole, is not permitted unless authorised by AUDI AG. AUDI AG does not guarantee or accept any liability with respect to the correctness of information in this document. Copyright by AUDI AG.

- Socket wrench -T10072-

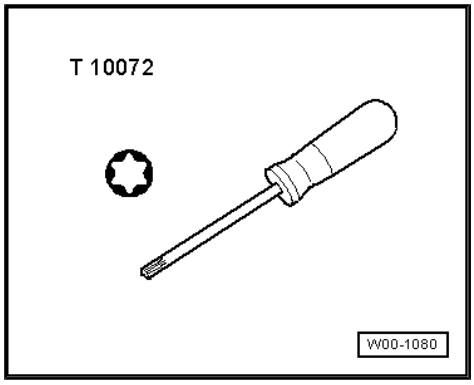

1.3 Removing and installing mounting panel

1 - Door subframe

- ❑ Removing and installing ⇒ page 39

2 - Mounting panel

- ❑ Removing and installing ⇒ page 37

3 - Torx bolt M6x16

- ❑ Qty. 11
- ❑ 10 Nm
- ❑ Note different lengths and diameters of bolt heads.

4 - Torx bolt M6x14

- ❑ Qty. 3
- ❑ 10 Nm

5 - Seal

- ❑ Make sure it is seated correctly on mounting panel.

6 - Retainer

7 - Hexagon nut

- ❑ 10 Nm

8 - Cover

- ❑ Only installed on vehicles without a radio.

9 - Torx bolt

- ❑ 3.5 Nm

10 - Motor for window lifter

- ❑ Removing:

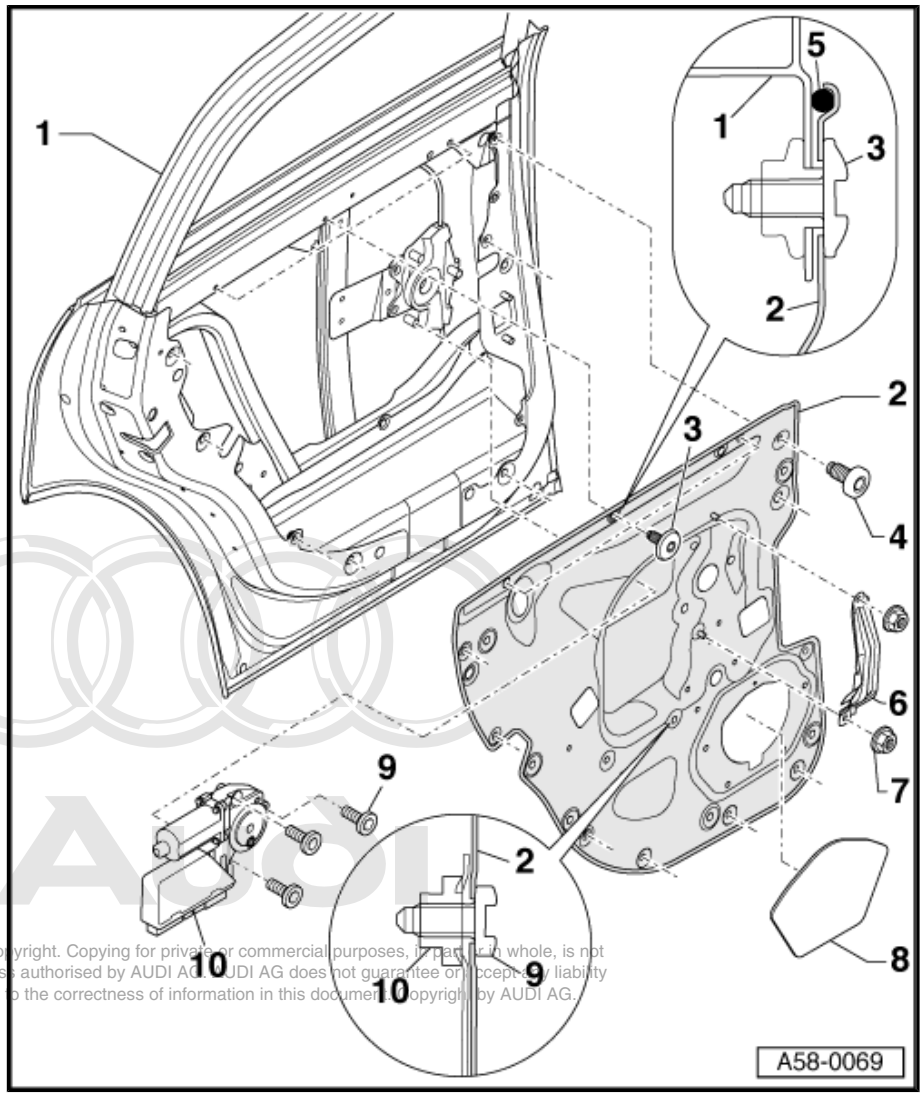

Protected by copyright. Copying for private or commercial purposes, in part or in whole, is not permitted unless authorised by AUDI AG. AUDI AG does not guarantee or accept any liability with respect to the correctness of information in this document. Copyright by AUDI AG.

– Remove door trim ⇒ General body repairs, interior; Rep. Gr. 70 .

– Unplug electrical connectors, unscrew bolts ⇒ Item 9 (page 37) and remove motor.

1.4 Removing and installing mounting panel

Special tools and workshop equipment required

♦ Angled knife -VAS 6269-

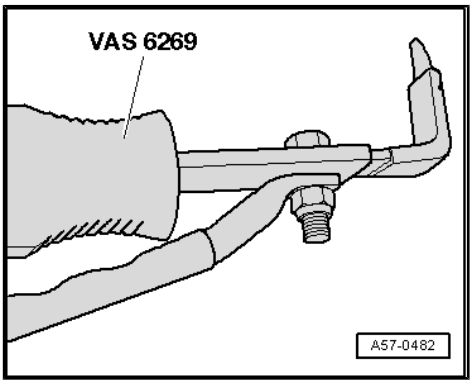

- Butyl strip -AKL 450 005 05- from the kit “Fasteners and seals for mounting panel” ⇒ Parts Catalogue .

Removing

Note

The following procedure applies to vehicles which have butyl adhesive strips in place.

– Remove door trim ⇒ General body repairs, interior; Rep. Gr. 70 .

– Unscrew Torx bolts for mounting panel ⇒ Item 3 (page 37) , ⇒ Item 4 (page 37) and ⇒ Item 9 (page 37) .

– Make a note of the installation positions of the bolts to refer to when re-installing them.

– Remove window lifter motor.

– Move electrical wiring clear.

Caution

The adhesive bead on the mounting panel is only just concealed by the door trim. Make sure the paintwork on the door panel does not become damaged. For this reason, you should ALWAYS use the angled knife -VAS 6269- to cut into the adhesive bead.

Protected by copyright. Copying for private or commercial purposes, in part or in whole, is not permitted unless authorised by AUDI AG. AUDI AG does not guarantee [illegible] with respect to the correctness of information in this document. Copyright by AUDI AG.

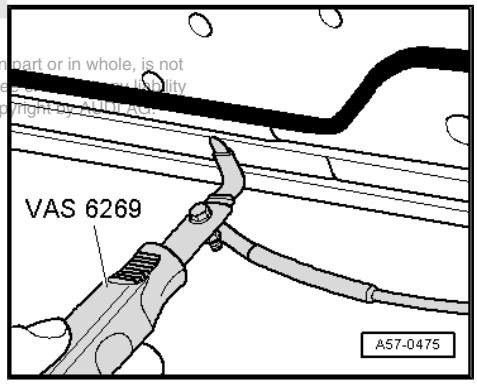

– Starting at the bottom front of the panel, insert the blade of the angled knife -VAS 6269- -item 1- into the adhesive bead -2-, between mounting panel -3- and door panel.

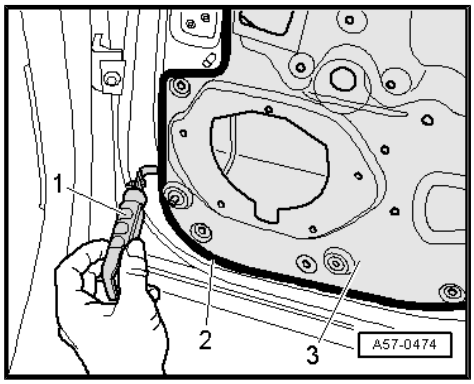

– Pull the angled knife -VAS 6269- along the adhesive bead in order to cut the adhesive all round.

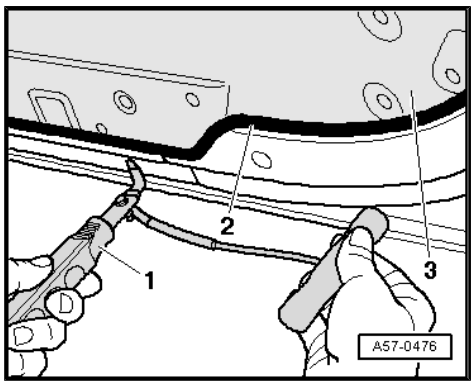

Installing

- Bonding surface must be free of adhesive residue, dust and grease.

– Apply cleaning fluid -D 009 401 04- to the bonding surface and rub it dry.

– Position sealing strip -2- all around outer edge of mounting panel -3-. Use the butyl strip -AKL 450 005 05- from the kit “Fasteners and seals for mounting panel” ⇒ Parts Catalogue .

– Detach backing foil -1-.

– Allow overlap -arrow- of sealing strip to protrude towards the inside.

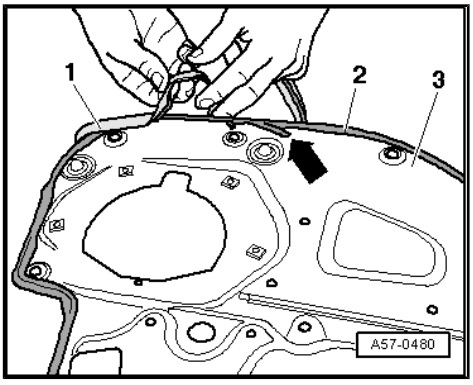

– Fit mounting panel in exact installation position in door and tighten bolts ⇒ Item 3 (page 37) , ⇒ Item 4 (page 37) and ⇒ Item 9 (page 37) . Note the differing bolt length and diameter.

– After tightening bolts, check whether sealant -1- has emerged from beneath mounting panel -2-.

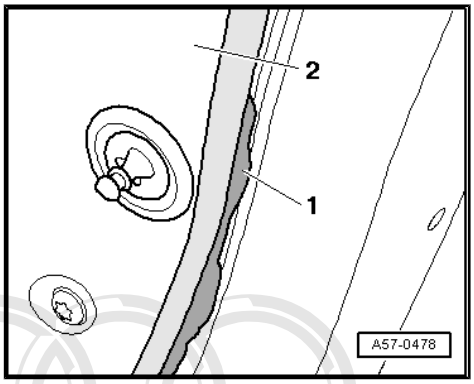

– Remove any sealant -1- which has emerged by pulling it off in direction of mounting panel -2-.

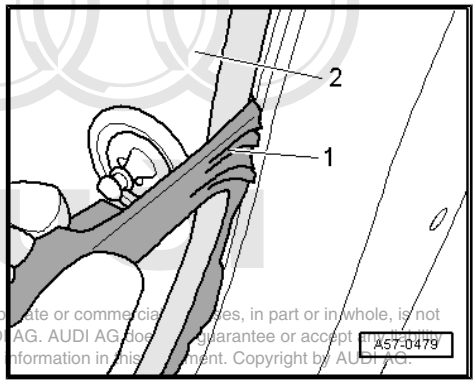

Protected by copyright. Copying for private or commercial purposes, in part or in whole, is not permitted unless authorised by AUDI AG. AUDI AG does not guarantee or accept any liability with respect to the correctness of information in this document. Copyright by AUDI AG.

1.5 Removing and installing rear door and door subframe

1 - Rear door

- ❑ Seal on rear door/ mounting panel is not shown in illustration for reasons of clarity.
- ❑ Seal between rear door and mounting panel (sealing strip made of PU foam) ⇒ page 49
- ❑ Seal for gap between metal panels in area of hinge/side impact bar (butyl strip -AKL 450 005 05-) ⇒ page 49
- ❑ Sealing openings in side impact bar with plugs and seal ⇒ page 49

2 - Door subframe

- ❑ Removing:

Note

Before removing, mark the position of the subframe on the door using a fine felt-tip pen or similar.

– Remove mounting panel ⇒ page 37 .

– Detach wires from door subframe and unclip.

– Unscrew bolts ⇒ Item 4 (page 41) , ⇒ Item 5 (page 41) , ⇒ Item 6 (page 41) and ⇒ Item 7 (page 41) and lift out door subframe.

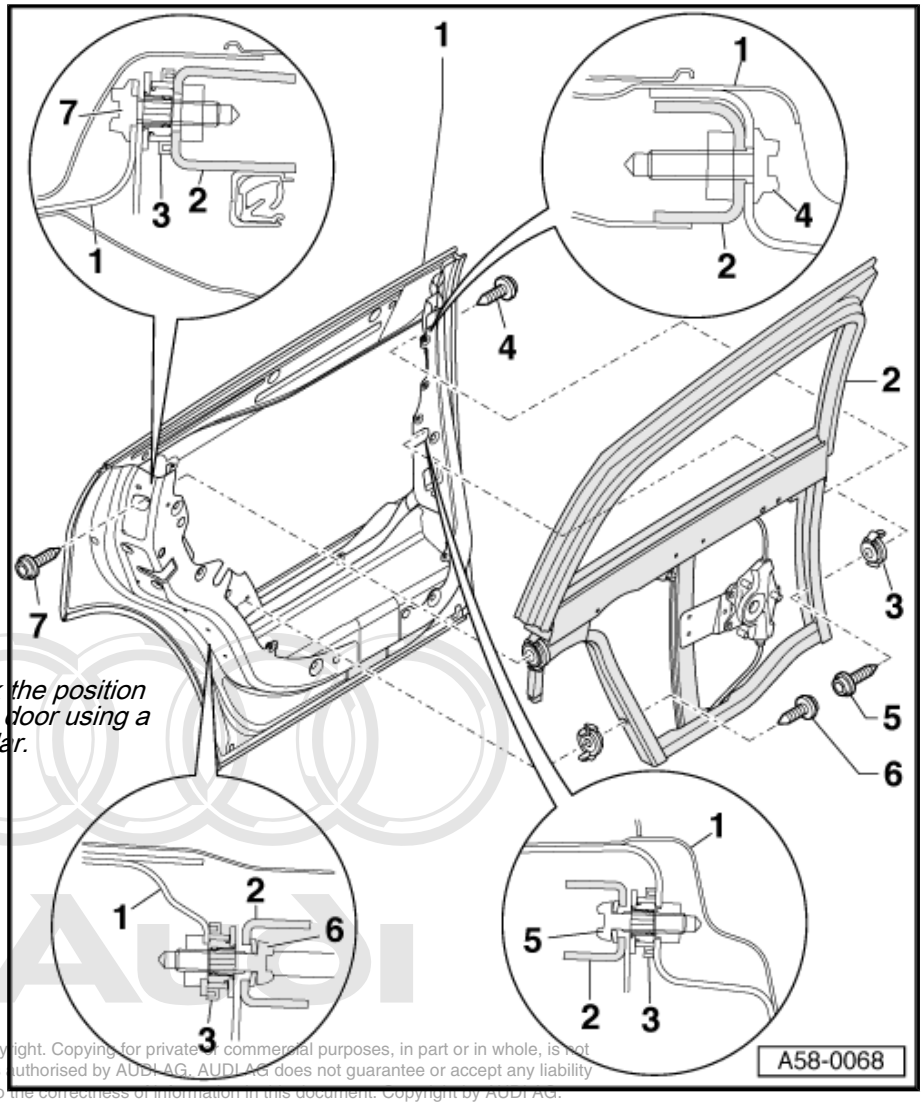

Protected by copyright. Copying for private or commercial purposes, in part or in whole, is not permitted unless authorised by AUDI AG. AUDI AG does not guarantee or accept any liability with respect to the correctness of information in this document. Copyright by AUDI AG.

- ❑ Installing:

– Before fitting door subframe, make sure that adjusting elements are completely screwed in.

– The adjusting elements may have to be screwed in by hand.

– Fit subframe in door from above.

– Screw bolts ⇒ Item 4 (page 41) and ⇒ Item 7 (page 41) in loosely.

– Close door.

– Align subframe in door opening.

– Screw lower bolts ⇒ Item 5 (page 41) and ⇒ Item 6 (page 41) in loosely.

– Open door.

– Check panel gaps ⇒ page 42 .

– You may have to adjust the position of the subframe.

– If panel gaps are OK, tighten bolts in the following sequence: ⇒ Item 4 (page 41) , ⇒ Item 4 (page 41) , ⇒ Item 6 (page 41) and ⇒ Item 5 (page 41) (tightening torque: 30 Nm).

> **Caution**
> *IMPORTANT: The tightening sequence must be observed.*

3 - Adjusting element

- ❑ When bolts are tightened, adjusting element is automatically set to correct length.

> **Caution**
> *Ensure that the adjusting elements are completely screwed in (left-hand thread!) ⇒ page 41 before installing the door subframe.*

4 - Torx bolt

- ❑ 30 Nm
- ❑ When installing, observe tightening sequence for securing bolts.

5 - Torx bolt

- ❑ 30 Nm

6 - Torx bolt

- ❑ 30 Nm

7 - Torx bolt

- ❑ 30 Nm

Adjusting element

– Before installing the door subframe you must completely screw in the threaded sleeves -2- of the adjusting elements -1- in anti-clockwise direction.

– Make sure the retainer on the threaded sleeve -arrow- is located between the limit stop and the locating lug.

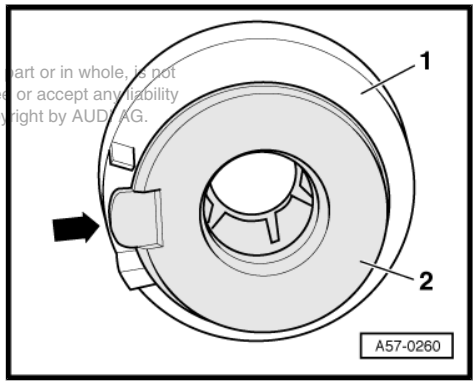

Audi
Copyright by AUDI AG. All rights reserved. For personal purposes, in part or in whole, is not permitted unless authorized by AUDI AG. AUDI AG does not guarantee or accept any liability with respect to the correctness of information in this document. Copyright by AUDI AG.

1.6 Panel gaps for door adjustment

1 - Door subframe

- ❑ Dimension -a- = 4.5 mm + 1.5 mm.
- ❑ Use setting gauge to set dimension -a- ⇒ page 22 .
- ❑ Dimension -b- = 5 mm - 2 mm.
- ❑ Dimension -c- = 9.5 mm ± 1 mm.
- ❑ Dimension -d- = 12 mm ± 1 mm

2 - Door window

- ❑ Dimension -b- = 5 mm - 2 mm.
- ❑ To check dimension -b- lower window completely into door seal.
- ❑ Mark lower edge of door seal on window using a fine coloured pen.
- ❑ Open door window and measure dimension -b- from top edge of window to marking made earlier.

3 - Side window (rear)

- ❑ Dimension -e- = 8.5 mm ± 1 mm

4 - Rear door

- ❑ Dimension -f- = 32 mm ± 1 mm
- ❑ Can only be measured with door trim removed.

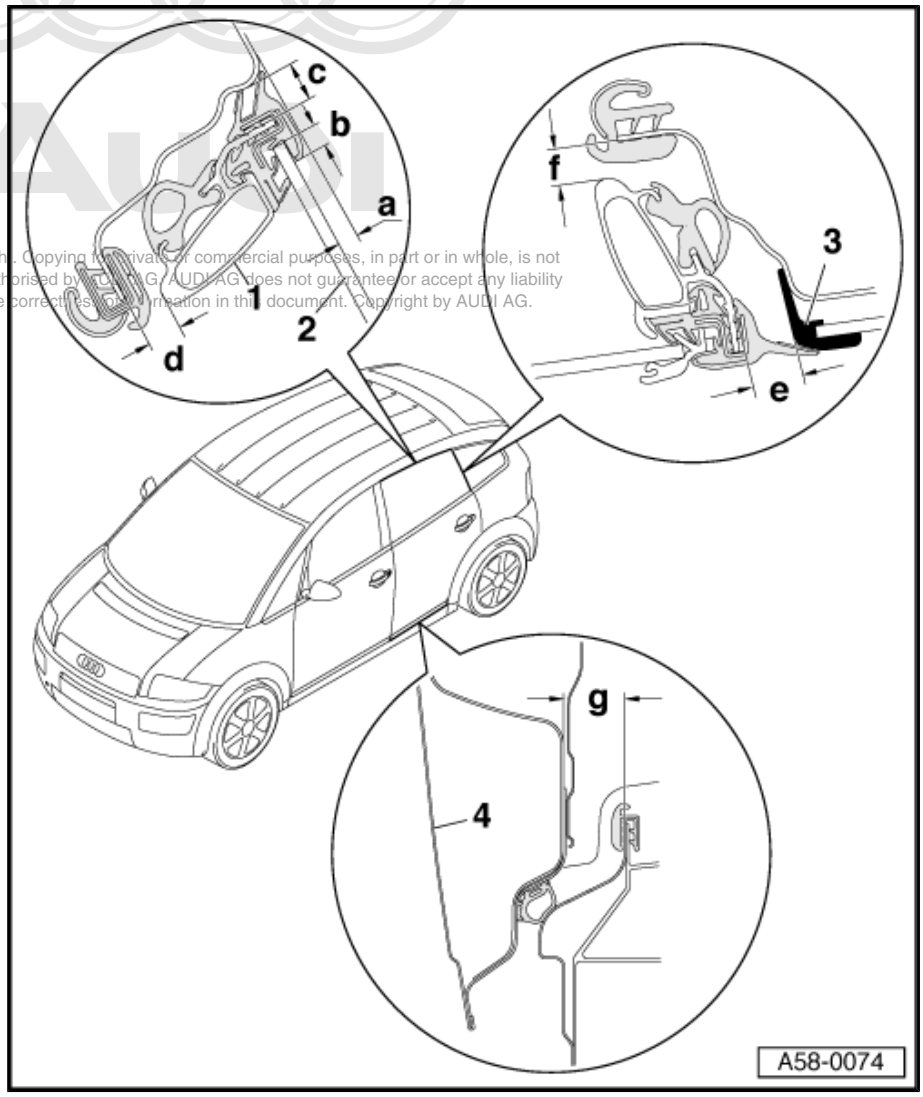

Protected by copyright. Copying for private or commercial purposes, in part or in whole, is not permitted unless authorised by AUDI AG. AUDI AG does not guarantee or accept any liability with respect to the correctness of information in this document. Copyright by AUDI AG.

Making improvised setting gauge

– Make improvised setting gauge -1- from plastic or plywood according to the specified dimensions.

• Dimension -a- = 4.5 mm.

• Dimension -b- = approx. 30 mm

– If the door subframe is correctly adjusted, the gauge should make contact with the door window and roof trim moulding when applied at a point approx. 100 mm from B-pillar.

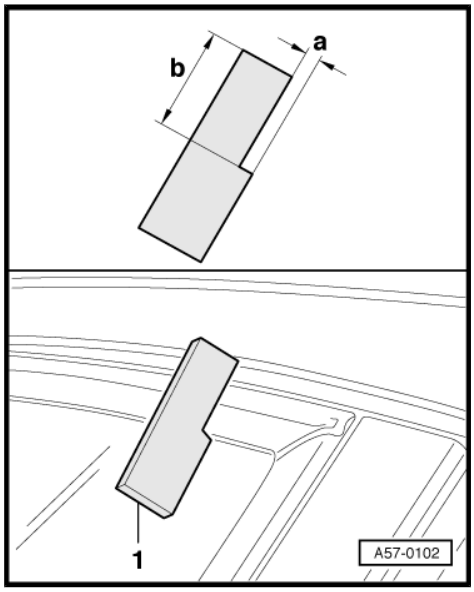

1.7 Door hinges (rear)

1 - Torx bolt
- ❑ 30 Nm

2 - Torx bolt
- ❑ 30 Nm

3 - Torx bolt
- ❑ 30 Nm

4 - Door hinge (top)
- ❑ Before removing detach trim for C-pillar.
- ❑ To remove, unscrew hexagon bolts ⇒ Item 3 (page 43) and ⇒ Item 2 (page 43) .

5 - Door hinge (bottom)
- ❑ Removal as described for door hinge (top).

6 - Torx bolt
- ❑ 30 Nm

7 - Rear door

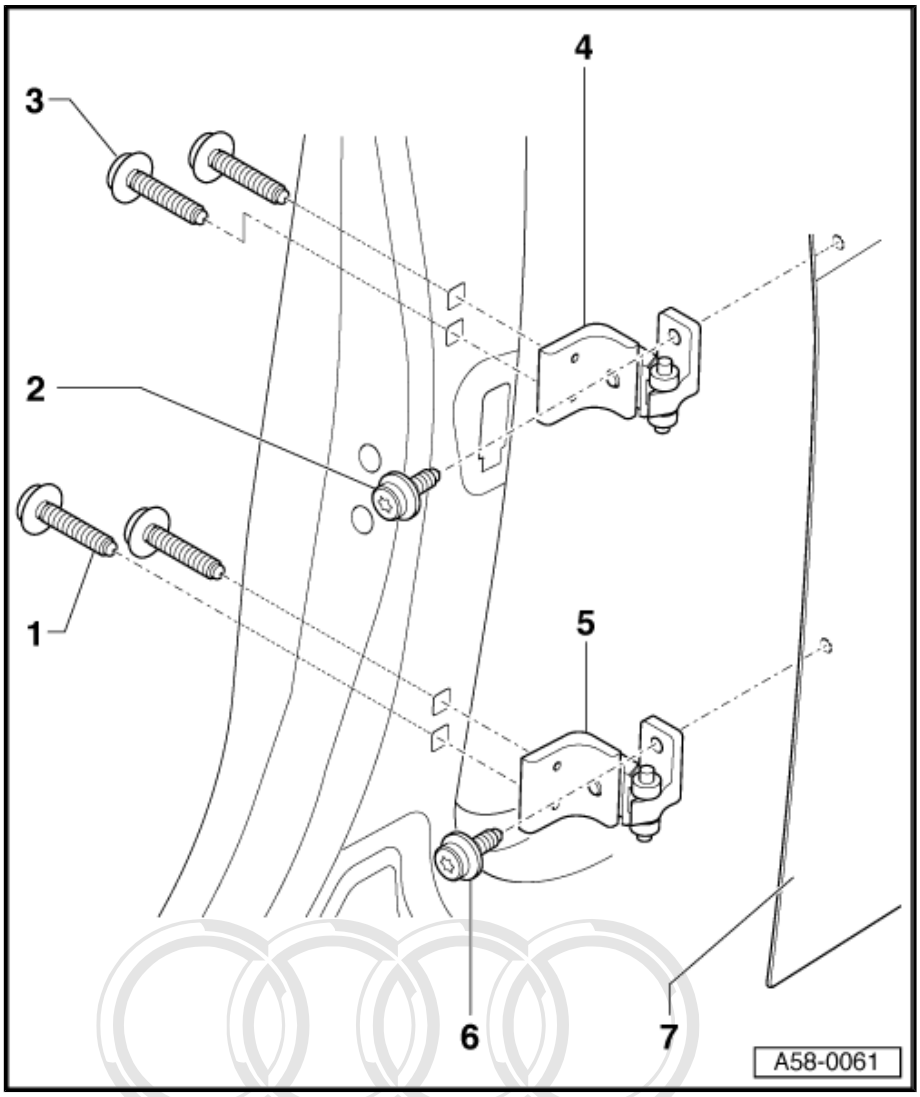

1.8 Panel gaps

- Rear door must be adjusted if this has not already been done.
- Dimension -A- = 3.5 mm ± 0.5 mm
- Dimension -B- = 4 mm ± 0.5 mm
- Dimension -A- = 3.5 mm ± 0.5 mm

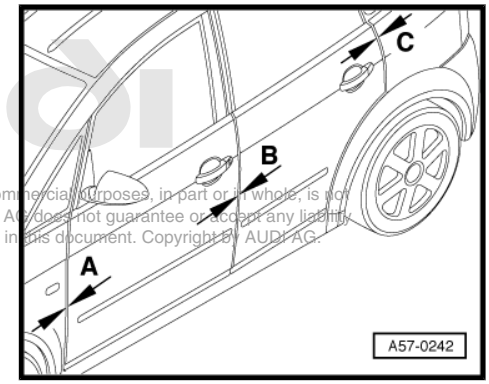

Protected by copyright. Copying for private or commercial purposes, in part or in whole, is not permitted unless authorised by AUDI AG. AUDI AG does not guarantee or accept any liability with respect to the correctness of information in this document. Copyright by AUDI AG.

Note

- *Use setting gauge -3371- to check panel gaps.*
- *The shut lines and panel gaps can be adjusted by loosening the hinge bolts and moving the door.*

Adjusting door at striker plate

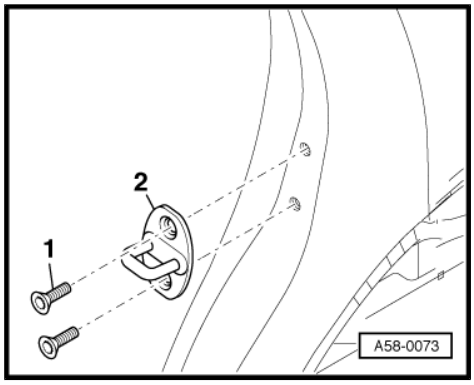

Note

Markings for the precise adjustment of the door are located on the striker plate and on the B-pillar.

– Slacken bolts -1-.
– Move striker plate -2- until door shell is flush with contour of body.
– Tighten bolts.
• Tightening torque: 20 Nm.

Note

Use this adjustment only to adjust door inwards or outwards, not vertically.

1.9 Removing and installing door arrester

1 - Rear door

2 - Door arrester

❑ Before removing first detach door trim and trim for A-pillar (bottom).
❑ To remove, unscrew hexagon nuts ⇒ Item 6 (page 44) and Torx bolts ⇒ Item 5 (page 44) . Then detach door arrester.

3 - Cover

❑ Pressed over pin of door arrester.

4 - C-pillar

5 - Torx bolts

❑ 21 Nm

6 - Hexagon nut

❑ 10 Nm

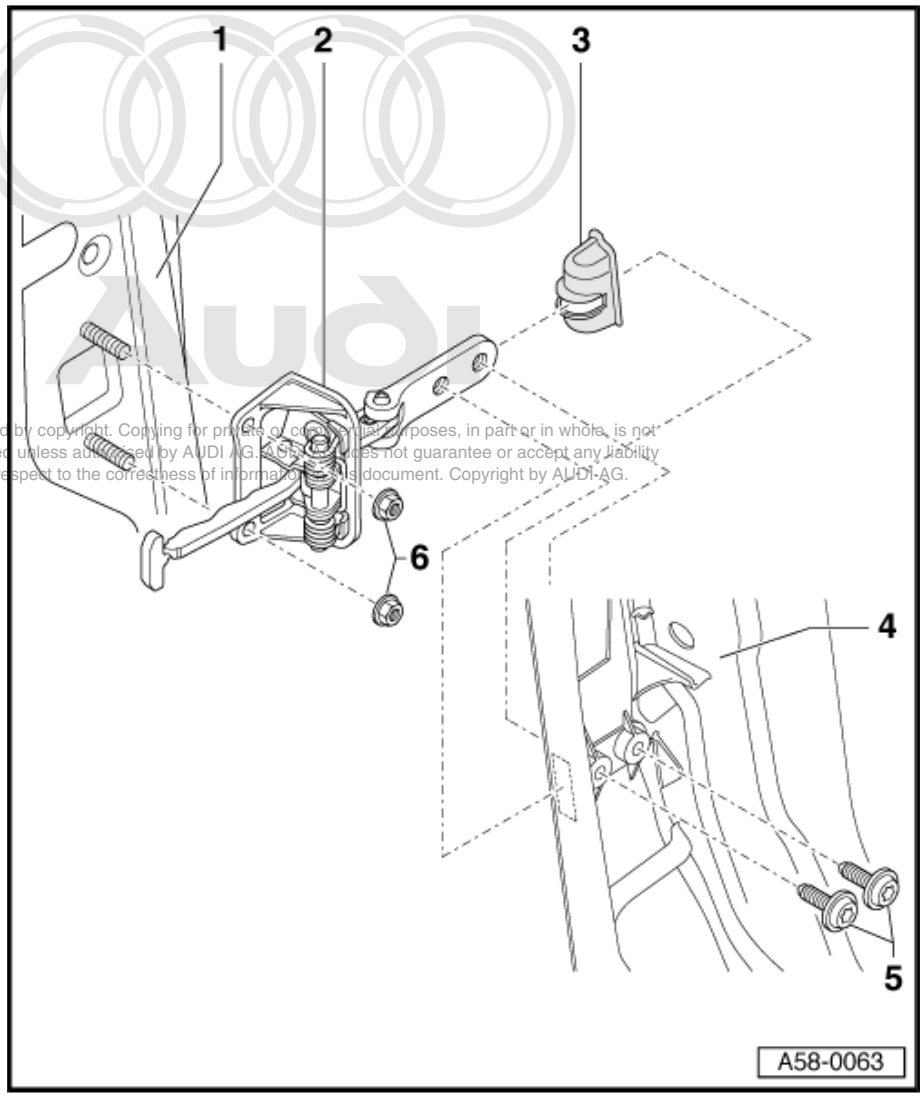

Protected by copyright. Copying for private or commercial purposes, in part or in whole, is not permitted unless authorised by AUDI AG. AUDI AG does not guarantee or accept any liability with respect to the correctness of information in this document. Copyright by AUDI AG.

1.10 Removing and installing window lifter and door window

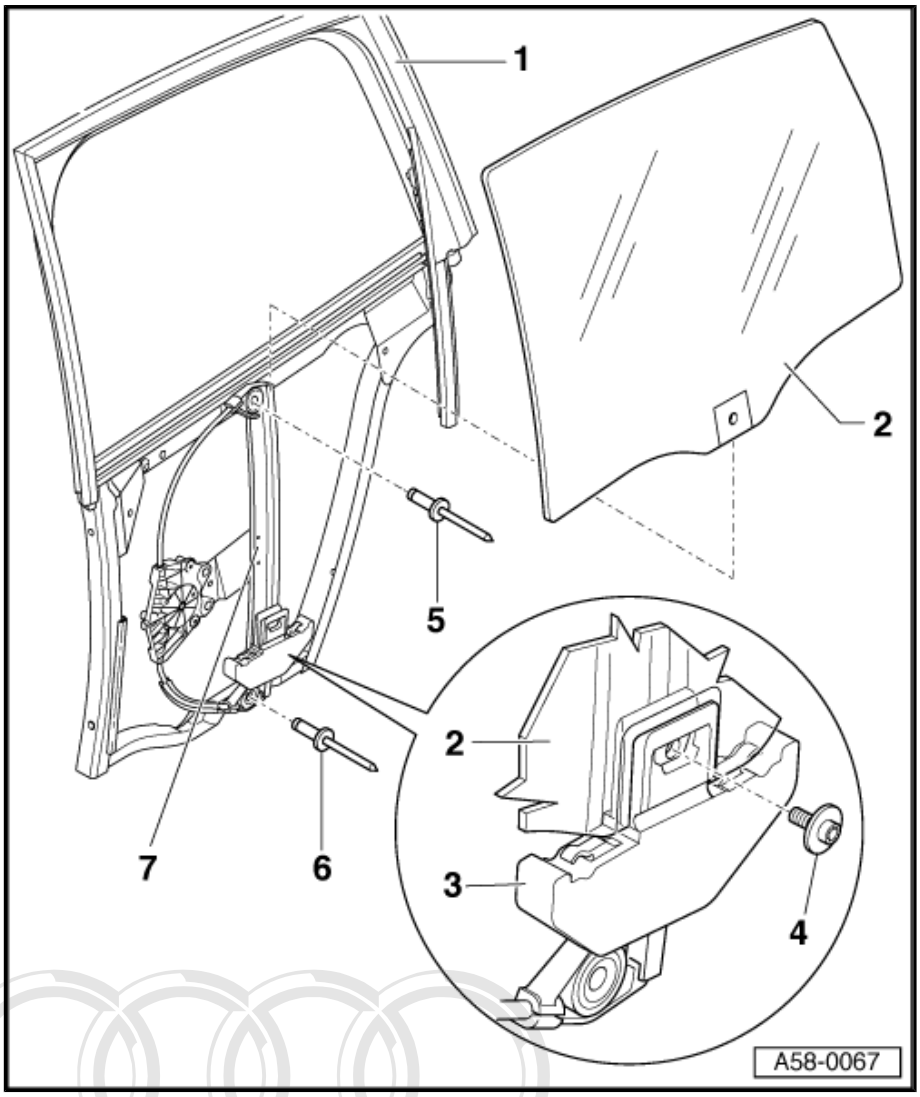

1 - Door subframe

2 - Door window

- ❑ Removing:
  - – Unscrew bolt ⇒ Item 4 (page 45) and slide window out of pressure plate ⇒ Item 3 (page 45) .
  - – Pull window downwards out of window guides.
- ❑ Installing:
  - – Insert window in window guides and move it up to make contact with seal on B-pillar.
  - – Raise window into seal until you hear cam engage in pressure plate.
  - – Tighten bolt ⇒ Item 4 (page 45) to 2.5 Nm + 0.5 Nm.
  - – Then lower window again.

3 - Pressure plate

4 - Torx bolt

- ❑ 3 Nm

5 - Pop rivet

- ❑ Observe sequence for riveting.
- ❑ Start riveting window lifter here.

6 - Pop rivet

7 - Window lifter

- ❑ Removing:
  - – Remove window lifter motor.
  - – Remove door subframe ⇒ Item 2 (page 19) .
  - – Drill rivet heads off pop rivets and strike out rivet stems.
  - – Take rivet stems out of door subframe.
- ❑ Installing:
  - – When installing, rivet window lifter first at ⇒ Item 5 (page 45) , then at ⇒ Item 6 (page 45) .

Protected by copyright. Copying for private or commercial purposes, in part or in whole, is not permitted unless authorised by AUDI AG. AUDI AG does not guarantee or accept any liability with respect to the correctness of information in this document. Copyright by AUDI AG.

1.11 Rear door handle and door lock - exploded view

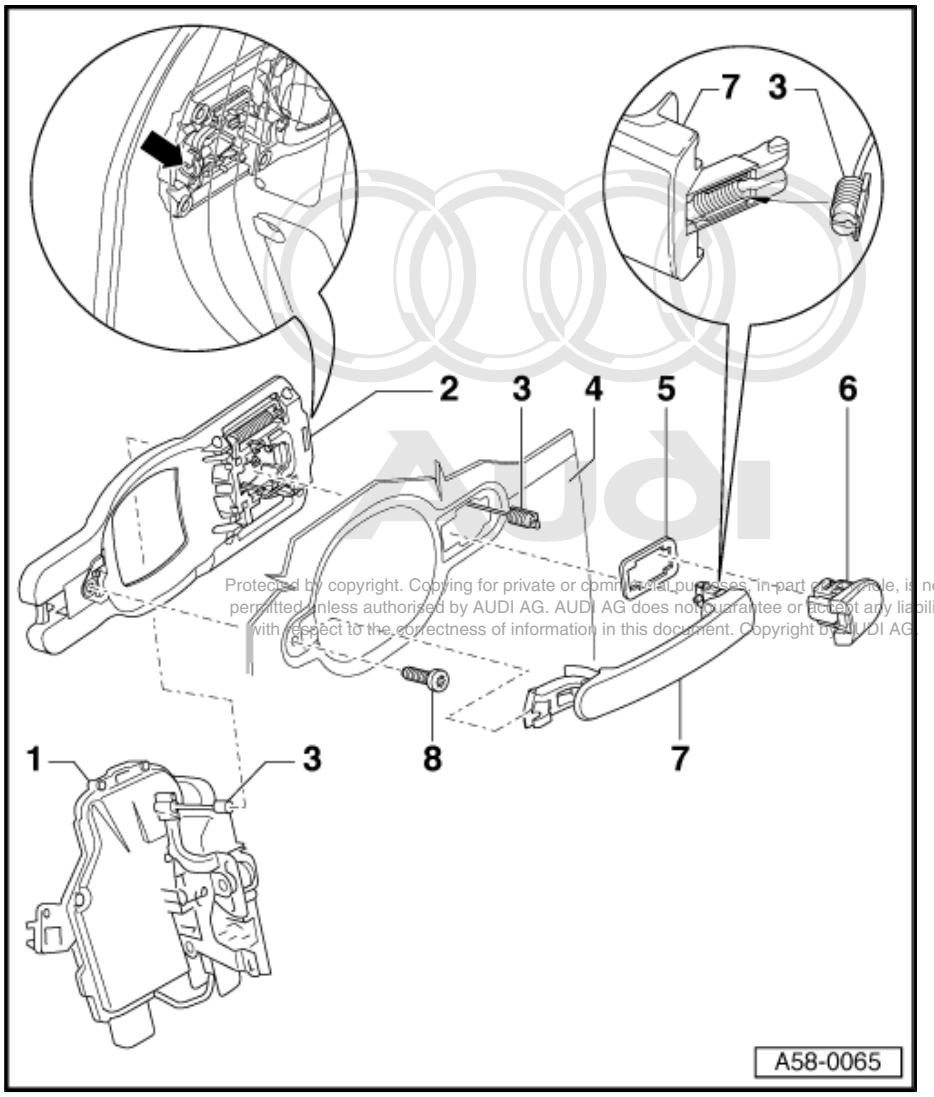

Protected by copyright. Copying for private or commercial purposes, in part or in whole, is not permitted unless authorised by AUDI AG. AUDI AG does not guarantee or accept any liability with respect to the correctness of information in this document. Copyright by AUDI AG

1 - Door lock

- ❑ Before removing, detach door subframe.
- ❑ Removing ⇒ Item 2 (page 40) .

2 - Door handle mounting

- ❑ Before removing, detach door handle.
- ❑ To remove, unscrew bolt ⇒ Item 8 (page 46) and disengage mounting from retainer, pushing it slightly towards the rear. Then remove door handle mounting towards the inside.

3 - Bowden cable

- ❑ Must only be clipped into door handle when latch lever on door lock is in basic setting.

4 - Rear door

5 - Backing plate

6 - Housing

- ❑ Removal as described for front door (Removing lock cylinder ⇒ Item 1 (page 27)).

7 - Door handle

- ❑ Before removing, detach housing ⇒ Item 6 (page 46) .
- ❑ Unclip Bowden cable ⇒ Item 3 (page 46) , disengage door handle from retainer towards the rear and detach towards the outside.

8 - Securing bolt

- ❑ 4.5 Nm

1.12 Removing and installing door lock (rear)

1 - Rear door

2 - Door lock (rear)

- ❑ Removing:
  - – Remove door trim ⇒ General body repairs, interior; Rep. Gr. 70 .
  - – Remove mounting panel ⇒ page 16 .
  - – Remove door handle.
  - – Remove door subframe.
  - – Remove bolts with washers ⇒ Item 7 (page 47) .

3 - Bowden cable

- ❑ To remove, unclip from door lock -arrow c-.
- ❑ Swivel Bowden cable approx. 90° downwards and detach from operating rod for door lock.
- ❑ To install, engage Bowden cable in direction of -arrow a-, swivel upwards approx. 90°, and then clip into door lock -arrow c-.

4 - Cover cap

5 - Grommet

6 - Backing plate

- ❑ Slide on sideways to install.

7 - Bolt with washer

- ❑ 20 Nm

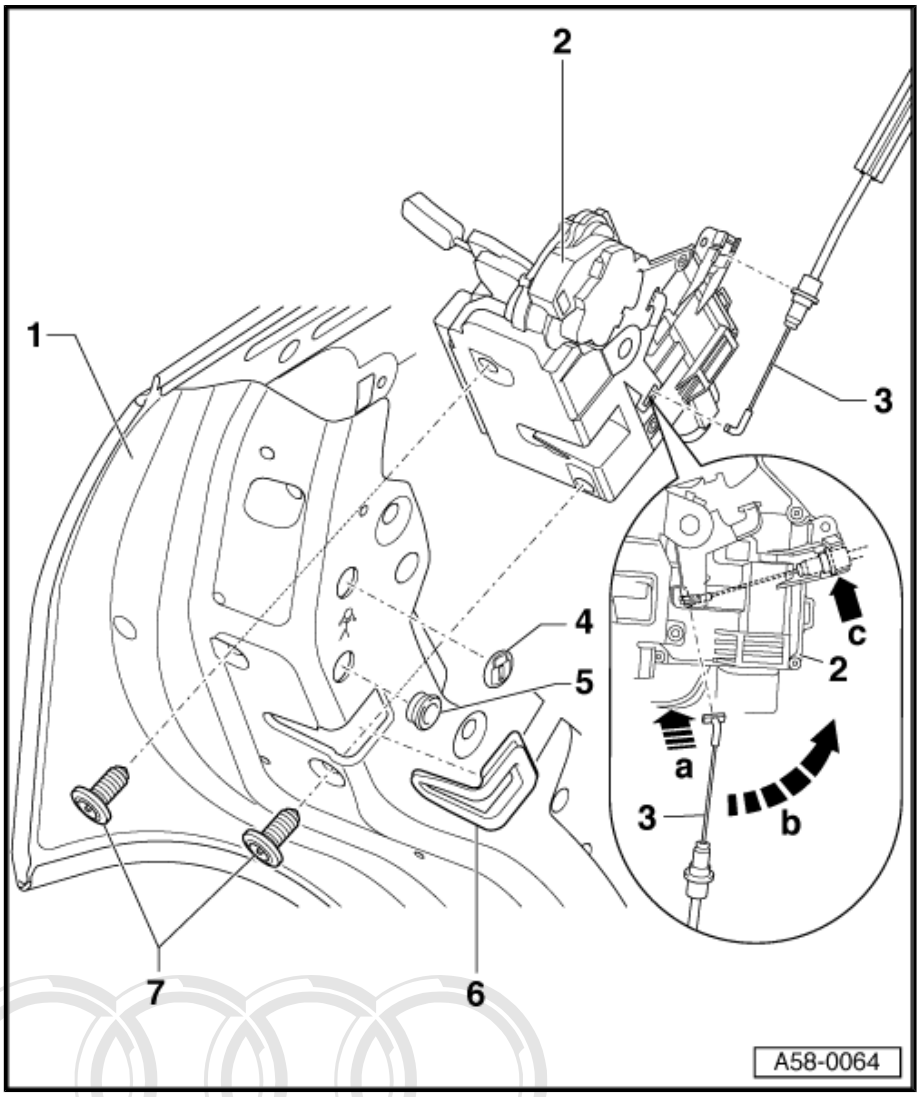

Protected by copyright. Copying for private or commercial purposes, in part or in whole, is not permitted unless authorised by AUDI AG. AUDI AG does not guarantee or accept any liability with respect to the correctness of information in this document. Copyright by AUDI AG.

1.13 Removing and installing window guide and window slot trim panel

1 - Door subframe

- ❑ Removing
  ⇒ Item 2 (page 40)

2 - Window guide

- ❑ Remove door window before detaching.
- ❑ To remove, detach window guide from door subframe, pulling it off to the side.

3 - Window slot trim panel

- ❑ Remove door window before detaching.
- ❑ Pull window slot trim panel out of guide.
- ❑ Coat new window slot trim panel with soap solution or similar to facilitate installation.

4 - Buffer

- ❑ Slide on as far as stop at bottom edge.

5 - Door seal (outer)

- ❑ To facilitate installation, apply soap solution in the area of the door subframe.
- ❑ Installing in door
  ⇒ page 48 .

6 - Door window

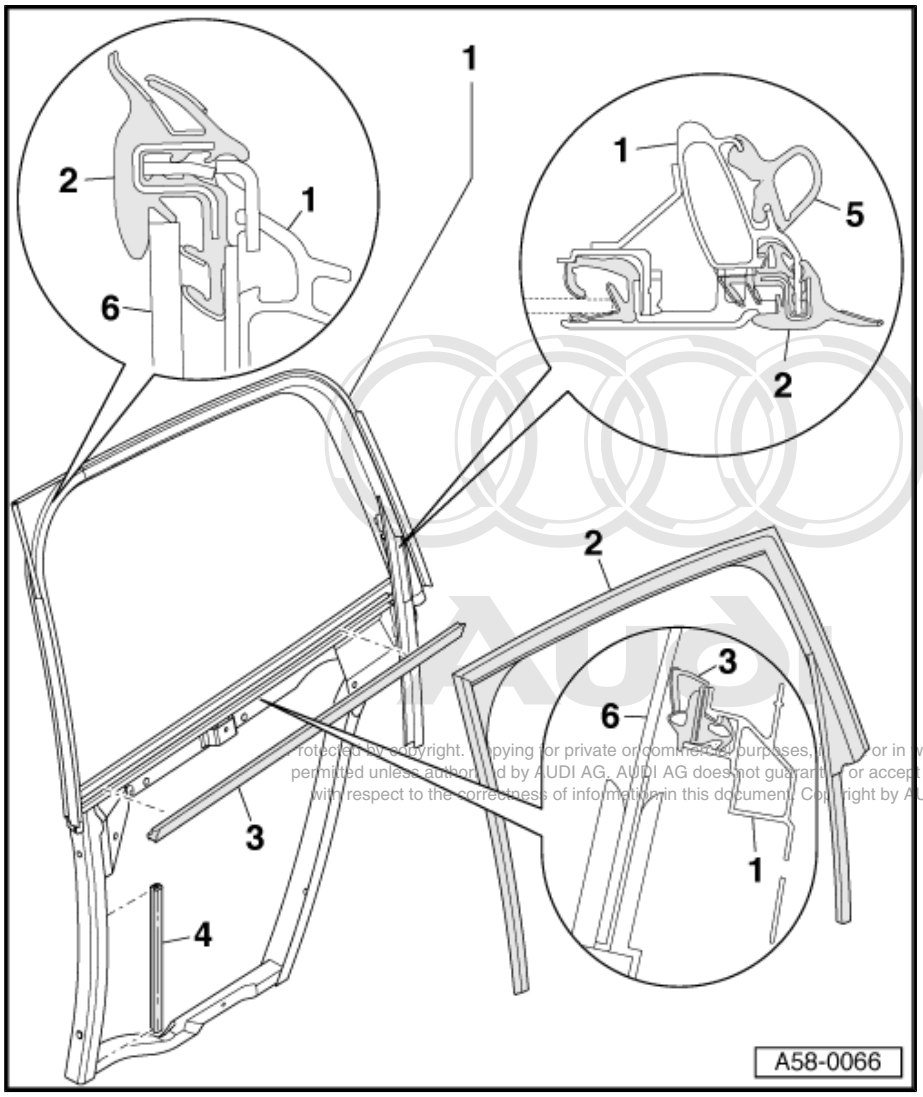

Protected by copyright. Copying for private or commercial purposes, in part or in whole, is not permitted unless authorized by AUDI AG. AUDI AG does not guarantee or accept any liability with respect to the correctness of information in this document. Copyright by AUDI AG.

1.14 Removing and installing door seal (outer)

- To remove, unclip bottom section towards the side from door -1- and detach top section from the door subframe.
- When installing, first fit rubber corner of seal -2- -arrow a- at joint between door and door subframe, inserting retaining lug in door cut-out.
- Attach seal to top of door subframe in direction of -arrow b-.
- Fix rubber corner -arrow c- in position at joint between door and door subframe.
- Then fit clips all around the door, starting at the top and working towards the bottom.
- Finally, pull protective film off adhesive surface and press seal firmly onto door in area of door lock.

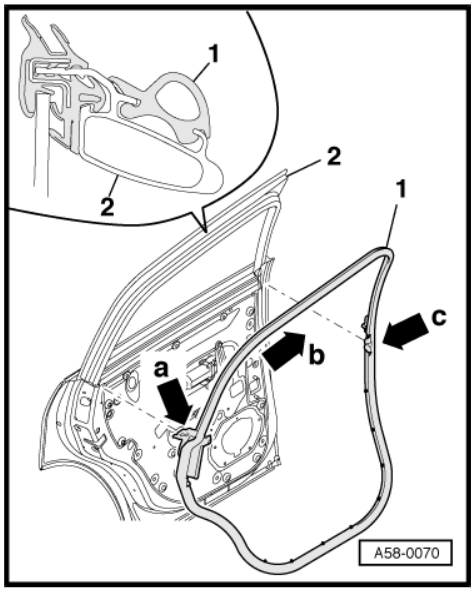

1.15 Removing and installing door seal (inner)

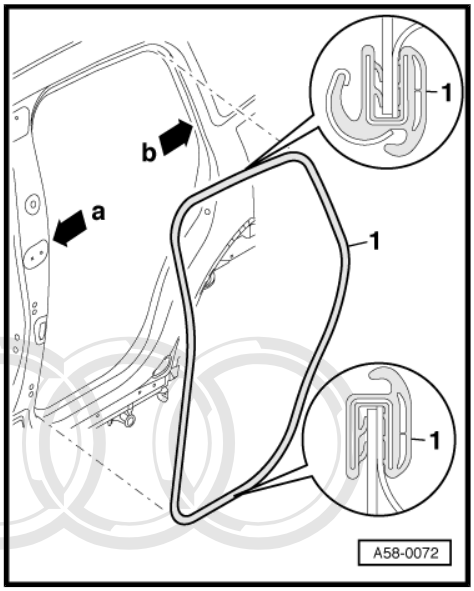

- To remove, pull it off door flange.
- Before installing, remove trim for B-pillar (bottom) and C-pillar (bottom).
- When installing, start by fixing seal -1- in position at markings on body flange -arrow a- and -arrow b-.
- Then press seal onto door flange in area of roof.
- Finally, press seal onto door flange at bottom.

1.16 Seal on rear door/mounting panel

Note

Protected by copyright. Copying for private or commercial purposes, in part or in whole, is not permitted unless authorised by AUDI AG. AUDI AG does not guarantee or accept any liability with respect to the correctness of information in this document. Copyright by AUDI AG.

- *ALWAYS use the kit "Fasteners and seals for mounting panel" ⇒ Parts Catalogue .*
- *All materials for the sealing operations must be taken from the kit "Fasteners and seals for mounting panel" ⇒ Parts Catalogue .*
- *When installing new replacement doors you must always carry out all sealing operations after the door has been painted.*
- *If the door mounting panel has to be removed, take care when detaching door trim, mounting panel and clips and avoid bending the mounting panel.*
- *After removing the mounting panel, you must ALWAYS renew the sealing strip ⇒ Item 5 (page 50) and renew the connection between the sealant bead ⇒ Item 4 (page 50) and the sealing strip using a butyl strip -AKL 450 005 05- .*
- *All bolts, clips for wiring harnesses and the door trim have a sealing surface and must ALWAYS be renewed.*
- *After installing the mounting panel and the door trim carry out a leak test with water.*
- *The surfaces to be bonded must be at least as warm as room temperature. If necessary, heat up with a hot-air blower.*

1 - Rear door

2 - Side impact bar

3 - Hinge reinforcement

4 - Sealant bead

- ❑ Consisting of a butyl strip -AKL 450 005 05- .
- ❑ Butyl strip -AKL 450 005 05- is included in the kit “Fasteners and seals for mounting panel” ⇒ Parts Catalogue .
- ❑ Seals the gap between side impact bar ⇒ Item 2 (page 50) , hinge reinforcement ⇒ Item 3 (page 50) and forms a joint with sealing strip ⇒ Item 5 (page 50) .
- ❑ Before applying the sealant bead you must bond the sealing strip ⇒ Item 5 (page 50) on-to the side impact bar ⇒ Item 2 (page 50) .
- ❑ Remove the damaged sealant bead very carefully to avoid damaging the paintwork on the door. Use a scraper or similar tool to remove the damaged sealant bead.
- ❑ Apply new sealant bead as shown in illustration and then spread it evenly. Make sure that the gap between side impact bar ⇒ Item 2 (page 50) and hinge reinforcement ⇒ Item 3 (page 50) is filled completely and that the sealing strip ⇒ Item 5 (page 50) already bonded on is joined up with the sealant bead.

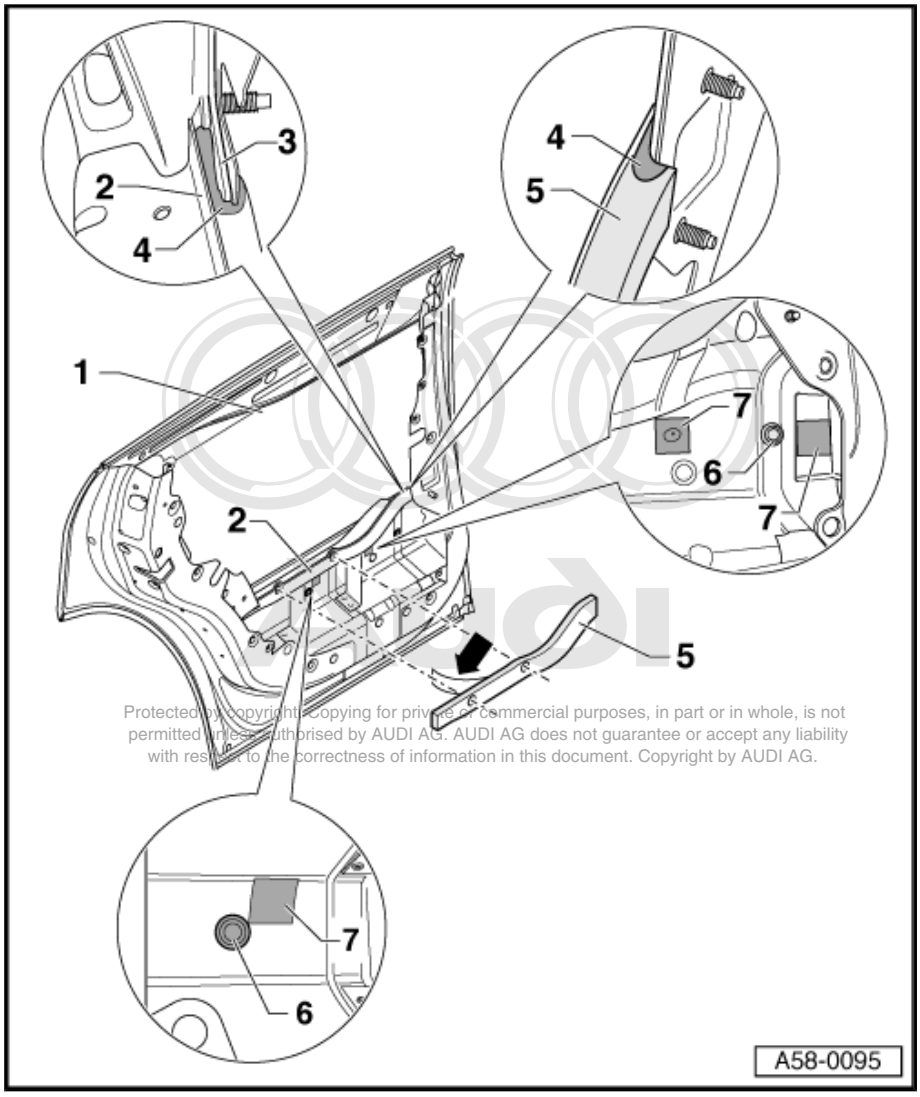

Protected by copyright. Copying for private or commercial purposes, in part or in whole, is not permitted unless authorised by AUDI AG. AUDI AG does not guarantee or accept any liability with respect to the correctness of information in this document. Copyright by AUDI AG.

5 - Sealing strip (PU foam)

- ❑ Is included in the kit “Fasteners and seals for mounting panel” ⇒ Parts Catalogue .
- ❑ Self-adhesive on both sides; has a protective film backing
- ❑ Do not detach protective film until just before you bond on the sealing strip.
- ❑ Bonding surface of side impact bar ⇒ Item 2 (page 50) must be free of adhesive residue, dust and grease.
- ❑ Apply cleaning fluid -D 009 401 04- to the bonding surface and rub it dry.
- ❑ Remove protective film -arrow- on the side which is bonded on first.
- ❑ Position sealing strip on side impact bar ⇒ Item 2 (page 50) . Do NOT press sealing strip on yet.
- ❑ Align holes on sealing strip with holes in side impact bar.

Note

The holes on the sealing strip and in the side impact bar must be flush. If this is not the case, the sealing strip will become damaged when the door is installed.

- ❑ Firmly press on the sealing strip along the entire bonding surface. If there is already a sealant bead in place, pay particular attention to the joint between sealing strip and sealant bead.

- ❑ If necessary renew joint between sealant bead and sealing strip.
- ❑ Do not detach the outer protective film from the sealing strip until just before you install the mounting panel ⇒ Item 2 (page 37) .

6 - Plug

- ❑ Is included in the kit “Fasteners and seals for mounting panel” ⇒ Parts Catalogue .
- ❑ Make sure the plug is clipped into the side impact bar correctly.

7 - Seal

- ❑ Is included in the kit “Fasteners and seals for mounting panel” ⇒ Parts Catalogue .
- ❑ Self-adhesive
- ❑ Bonding surface must be free of adhesive residue, dust and grease.
- ❑ Apply cleaning fluid -D 009 401 04- to the bonding surface and rub it dry.
- ❑ Position seal on opening to be plugged in side impact bar ⇒ Item 2 (page 50) .
- ❑ Press seal on firmly.

Protected by copyright. Copying for private or commercial purposes, in part or in whole, is not permitted unless authorised by AUDI AG. AUDI AG does not guarantee or accept any liability with respect to the correctness of information in this document. Copyright by AUDI AG.

60 – Sunroof

1 Servicing sliding/tilting sunroof

1.1 Contact corrosion

- Contact corrosion can occur if unsuitable fasteners are used on the vehicle (bolts, nuts, washers etc.).
- For this reason, only fasteners with a special surface coating (Dachromet) have been fitted on the vehicle. These fasteners can be identified by their greenish colour.
- In addition, all rubber and plastic parts and all adhesives are made of non-conductive materials.
- Always renew parts if you are in any doubt as to whether the old part can be used again.

Caution

- ***Always use genuine replacement parts (same as original equipment). These have been tested and are aluminium-compatible.***
- ***Accessories must be approved by AUDI AG.***
- ***Damage caused by contact corrosion is not covered by the warranty.***

Protected by copyright. Copying for private or commercial purposes, in part or in whole, is not permitted unless authorised by AUDI AG. AUDI AG does not guarantee or accept any liability with respect to the correctness of information in this document. Copyright by AUDI AG.

1.2 Tools

Special tools and workshop equipment required

- Slide/tilt roof assembly device (open sky) -VAS 6010-

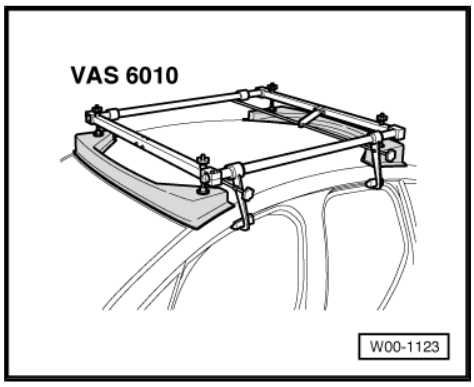

1.3 Removing and installing sunroof

Exploded view

1 - Sunroof frame

- ❑ Removing ⇒ page 53 .

2 - Sliding frame

- ❑ Removing and installing ⇒ page 67

3 - Wind deflector

- ❑ Removing and installing ⇒ page 68

4 - Panel “2”

- ❑ Removing and installing ⇒ page 66

5 - Panel “3”

- ❑ Removing and installing ⇒ page 67

6 - Locking bar

7 - Sunroof motor

8 - Torx bolt

- ❑ 4 Nm

9 - Locking hook

- ❑ Removing ⇒ page 67 .

10 - Cover frame for sunroof

- ❑ Removing and installing ⇒ General body repairs, interior; Rep. Gr. 70 .

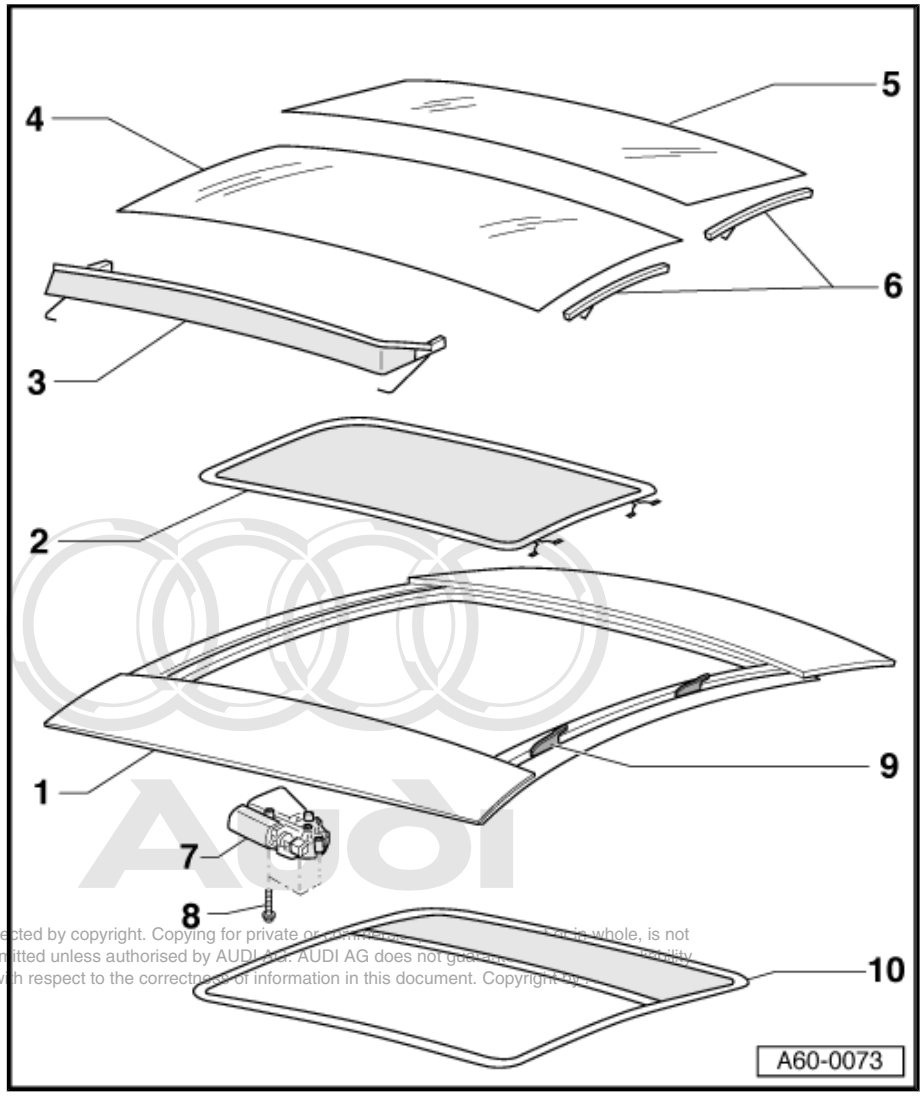

Protected by copyright. Copying for private or commercial purposes, in part or in whole, is not permitted unless authorised by AUDI AG. AUDI AG does not guarantee or accept any liability with respect to the correctness of information in this document. Copyright by AUDI AG.

Caution

- *If a lubricant other than lithium grease -G 052 150 A2- is used, this may impair the sliding function in the guide duct and cause rattling noises.*
- *In the event of malfunctions use cleaning fluid -D 009 401 04- to clean guide duct thoroughly (completely removing any grease residue) and degrease it.*
- *Lubricate guide duct again using lithium grease -G 052 150 A2- . Then open and close sunroof several times.*

1.4 Removing sunroof

Exploded view

1 - Sunroof frame

❑ Removing:

– Remove headliner and cover frame for sliding sunroof ⇒ General body repairs, interior; Rep. Gr. 70 .

– Fully open sunroof towards the rear.

– Remove bolts ⇒ Item 4 (page 55) .

– Unscrew nuts ⇒ Item 6 (page 56) .

– Remove hexagon bolts ⇒ Item 7 (page 56) .

– Unplug electrical connectors to sunroof motor.

– Open windows at front and rear and close doors.

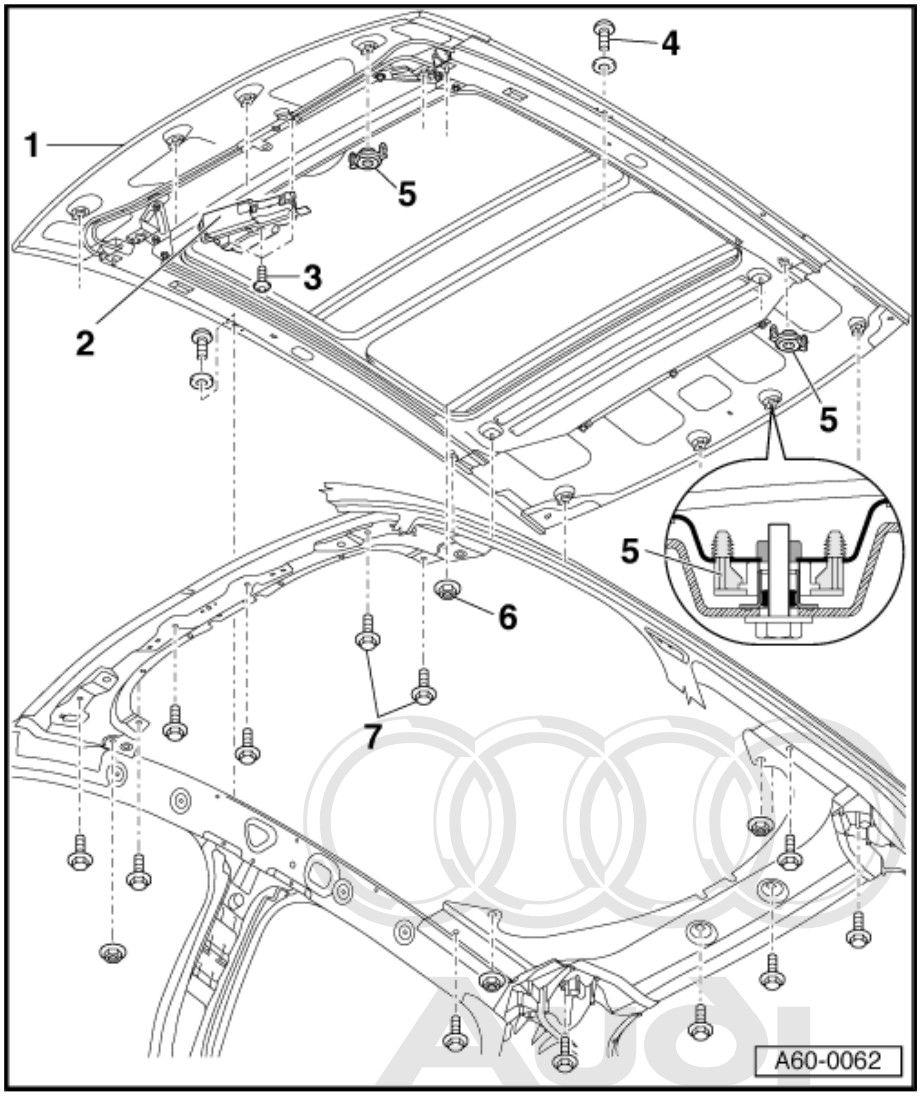

Caution

First loosen sunroof frame in area of panel "3" (panel at rear), otherwise the guide rails will become bent.

– Two people are required to reach into the vehicle through the open side windows and press the sunroof unit out upwards at rear, starting at the frame, NOT at the glass panel.

Protected by copyright. Copying for private or commercial purposes, in part or in whole, is not permitted unless authorised by AUDI AG. AUDI AG does not guarantee or accept any liability with respect to the correctness of information in this document. Copyright by AUDI AG.

❑ Installing:

Note

For installation you require the slide/ tilt roof assembly device -VAS 6010- .

– Remove the remains of the Metafol strip from the body in the area around the sunroof panel "3" (rear panel).

– Affix a new Metafol strip ⇒ page 56 onto the side frame on the body.

Note

Do not stretch the Metafol strip.

– Detach backing from Metafol strip.

– Renew bottom sealing strip and outer seal for guide rail ⇒ page 56 .

– Lubricate top sealing lip on windscreen with washing-up liquid (commercially available type) in order to avoid damaging the seal when installing the sunroof.

- Before installing, make sure that the adjusting elements ⇒ Item 5 (page 56) are screwed in as far as the stop.
- Fit the sunroof in the roof opening, helped by a second mechanic.
- When installing the new sunroof unit, make sure that the unit is first inserted in the area of the windscreen and then aligned with the windscreen.
- Do NOT YET lay the sunroof down on the body at the rear.
- Fit the sunroof properly at the front BEFORE putting it down at the rear end.
- Position the slide/tilt roof assembly device -VAS 6010- on the vehicle ⇒ page 65 .
- Centralise the assembly device at the side.
- Close the tensioners at the sides.
- Unscrew the adjuster screws, so that the front and rear pressure pieces make contact with the sides of the roof frame.
- Check that pressure pieces have made contact using a feeler gauge (thickness: 0.2 mm).
- Tighten adjuster screws to 1.5 Nm.
- Align studs centrally with holes and tighten nuts ⇒ Item 6 (page 56) at front and rear to 8 Nm.
- Screw in hexagon bolts ⇒ Item 7 (page 56) , starting in front centre and working towards the rear.
- Tighten hexagon bolts to 8 Nm, following the same sequence as above.

2 - Sunroof motor

❑ Removing:

- Remove interior light.
- Unplug electrical connector.
- Unscrew bolts ⇒ Item 3 (page 55) and remove motor.

❑ Installing:

Protected by copyright. Copying for private or commercial purposes, in part or in whole, is not permitted unless authorised by AUDI AG. AUDI AG does not guarantee or accept any liability with respect to the correctness of information in this document. Copyright by AUDI AG.

Note

The motor can be installed regardless of the position of the sunroof and the motor.

- Position motor in sunroof and tighten bolts ⇒ Item 3 (page 55) to 4 Nm.
- Plug in the motor.
- Close sunroof completely.
- With sunroof closed, press switch again in “close” position and hold switch in this position for approx. 10 seconds.
- This will initialise the motor in the basic setting.

3 - Torx bolts

❑ 4.5 Nm

4 - Cross-head screw

❑ 3.5 Nm

5 - Adjusting element

Note

The adjusting element is self-adjusting, i.e. it can compensate for differences in height between the sunroof and the roof frame during installation.

❑ Operation ⇒ page 66 .

6 - Hexagon nut

❑ 8 Nm

7 - Hexagon bolts

❑ 8 Nm

Sunroof seal

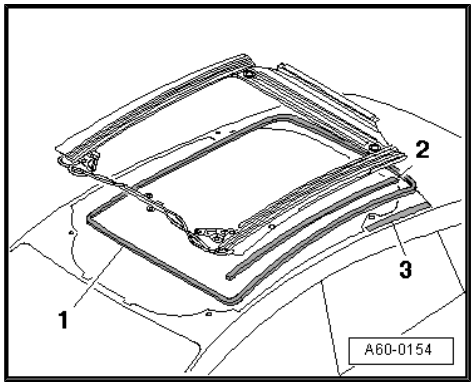

1 - Bottom sealing strip

– Renew

2 - Outer seal for guide rail

– Renew

3 - Metafol strip

– Renew

– Bonding area: along joint from front edge of rear lid to approximately the front edge of the cross member panel (length: approx. 35 mm).

1.5 Renewing cable guide

– Sunroof frame removed

– Sunroof motor removed.

Note

All seals that are removed must be re-fitted in the same positions; any seals damaged during removal must be renewed.

Removing rear panel

– Before removing rear panel, mark position of panel relative to sunroof frame on both sides -arrows-.

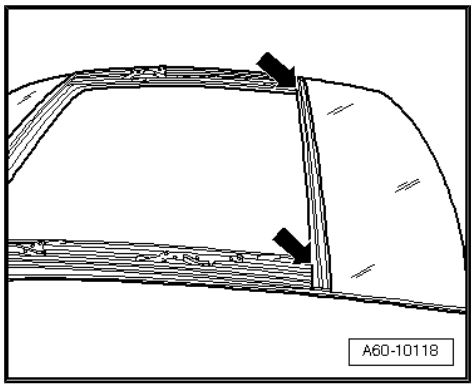

Protected by copyright. Copying for private or commercial purposes, in part or in whole, is not permitted unless authorised by AUDI AG. AUDI AG does not guarantee or accept any liability with respect to the correctness of information in this document. Copyright by AUDI AG.

– Lift up seal from rear panel and mark position of front edge of panel relative to sunroof frame on left ...

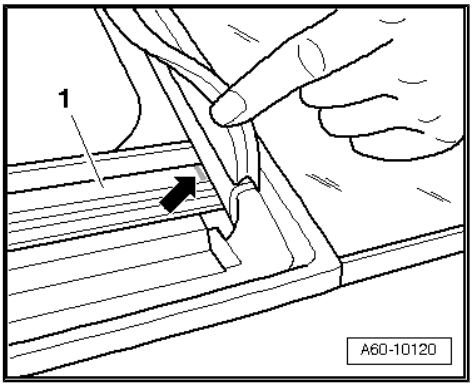

– and right sides -arrows- using a white marker.

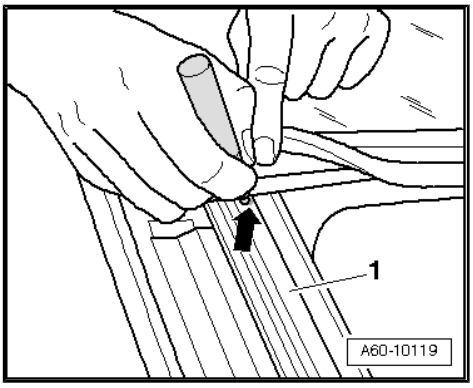

– Remove bolts and nuts -arrows- from rear panel.

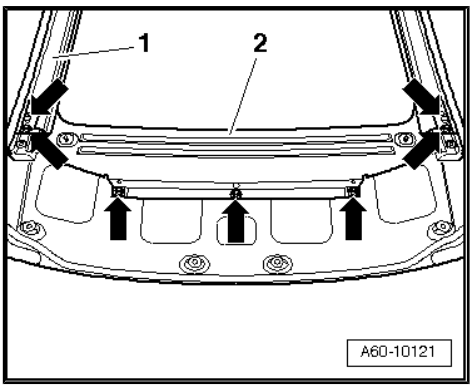

– Cut through adhesive joints between rear panel -2- and frame -1- on left ...

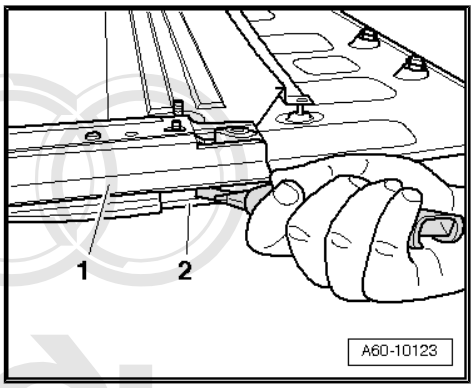

Protected by copyright. Copying for private or commercial purposes, in part or in whole, is not permitted unless authorised by AUDI AG. AUDI AG does not guarantee or accept any liability with respect to the correctness of information in this document. Copyright by AUDI AG.

– and right sides using a carpet knife (commercially available type).

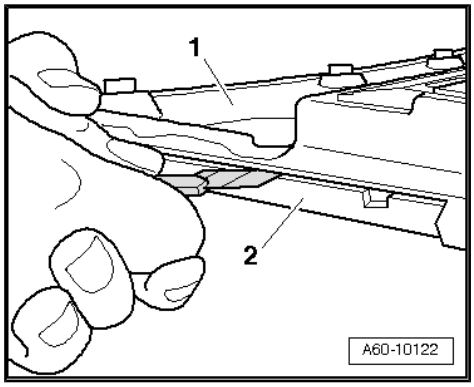

– Using a plastic wedge, separate joint between rear panel -1- and frame -2- on both sides.

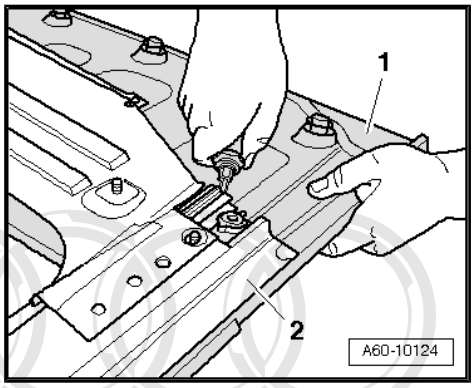

– Pry rear panel -1- away from frame -2- and detach rear panel.

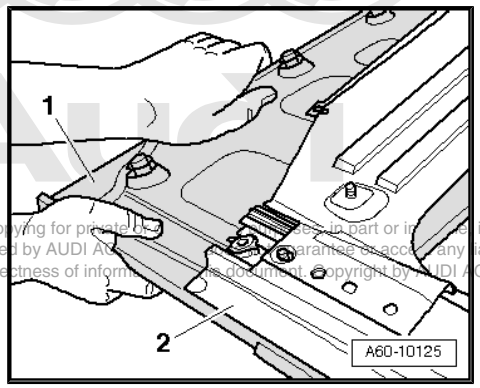

Protected by copyright. Copying for private or commercial purposes, in part or in whole, is not permitted unless authorised by AUDI AG. AUDI AG does not guarantee or accept any liability with respect to the correctness of information in this document. Copyright by AUDI AG.

– Remove remaining adhesive from frame -1- and …

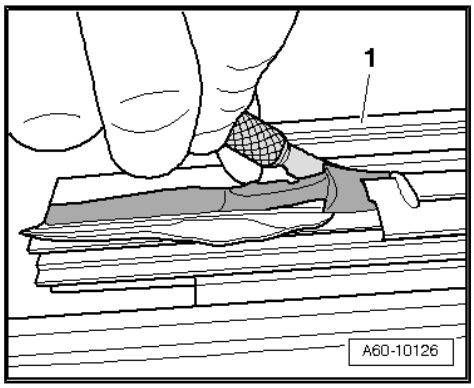

– rear panel -1-, leaving a clean surface.

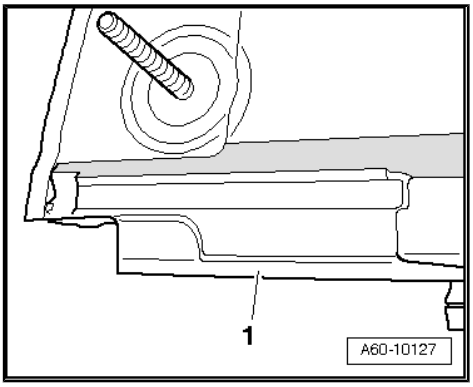

– Pull seal -1- off sunroof frame and remove seal completely.

Removing guides

– Pull cables with guide plates out of frame from the rear.

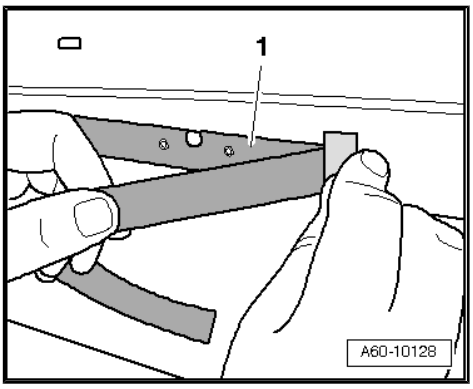

– Remove old grease from guide rails in sunroof frame -1-.

– Clean guide rails with cleaning fluid D 009 401 04.

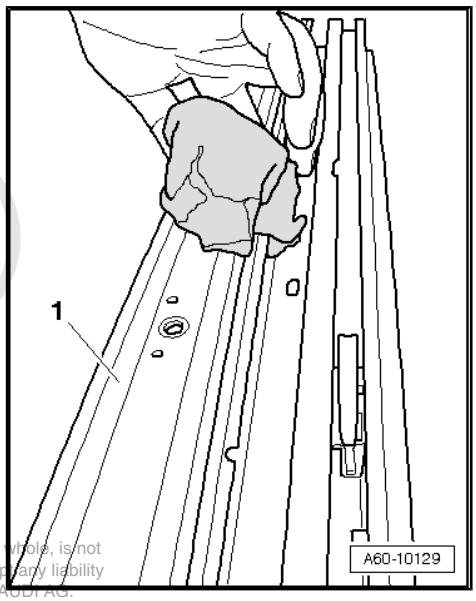

Protected by copyright. Copying for private or commercial purposes, in part or in whole, is not permitted unless authorised by AUDI AG. AUDI AG does not guarantee or accept any liability with respect to the correctness of information in this document. Copyright by AUDI AG.

– Lightly grease guide rails with G 052 150 A2 using a small paintbrush.

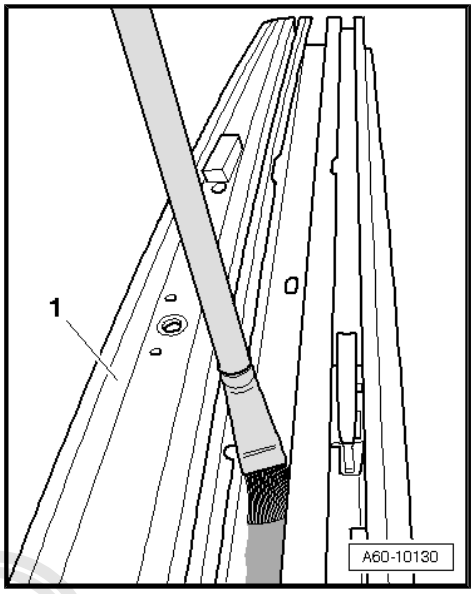

Installing guides

– Grease front guide plate -1- with G 052 150 A2 at contact surfaces -arrow-.

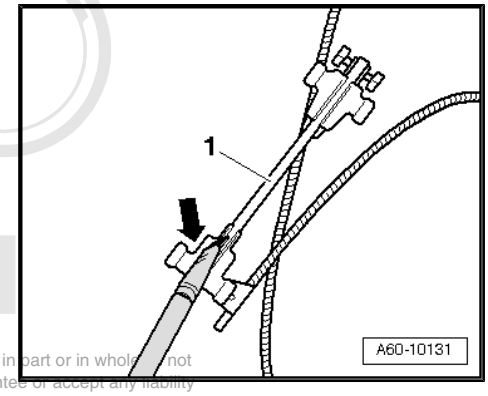

Protected by copyright. Copying for private or commercial purposes, in part or in whole, is not permitted unless authorised by AUDI AG. AUDI AG does not guarantee or accept any liability with respect to the correctness of information in this document. Copyright by AUDI AG.

– Also grease rear guide plate with G 052 150 A2 at contact surfaces -arrow-.

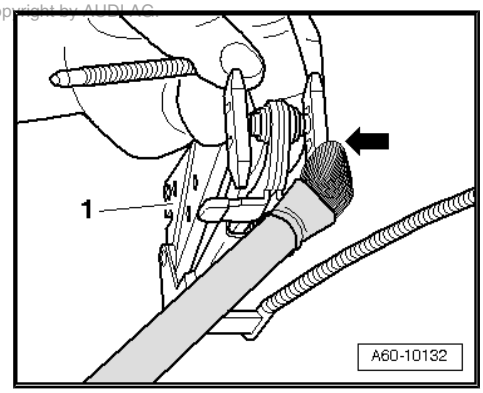

– Pull open front guide plate -1- and slide cable into sunroof frame -2-.

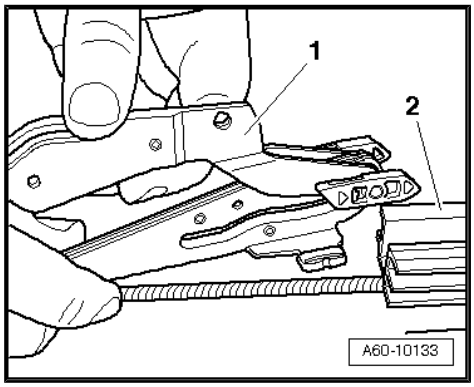

– Fit slides on front guide plate -1- into sunroof frame -2- as illustrated.
– Push guide forwards as far as it will go.

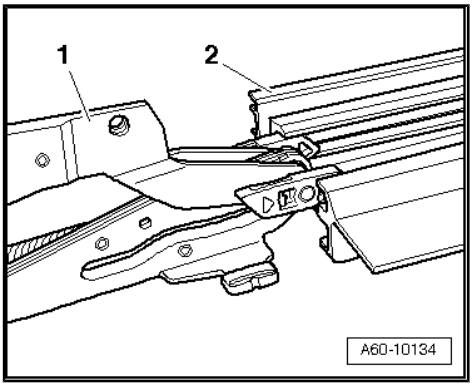

– Press guide -1- into “roof closed” position -arrow- and lock in this position.

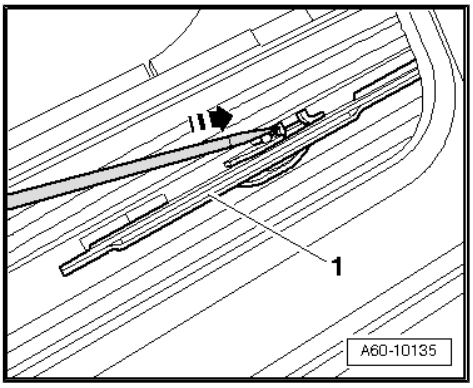

– Fit rear guide plate -1- into sunroof frame -2- as illustrated.

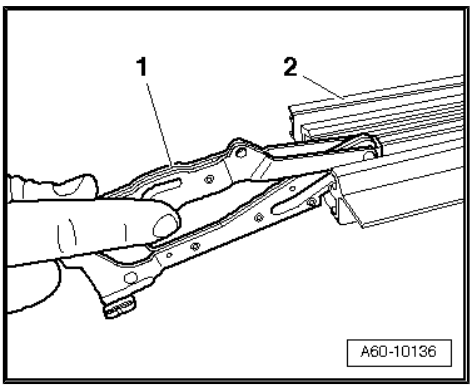

– Slide guide -1- into sunroof frame.

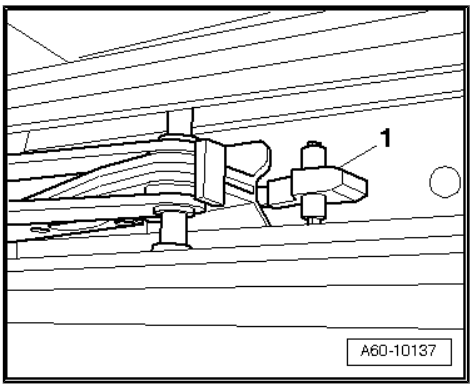

Protected by copyright. Copying for private or commercial purposes, in part or in whole, is not permitted unless authorised by AUDI AG. AUDI AG does not guarantee or accept any liability with respect to the correctness of information in this document. Copyright by AUDI AG.

– Lock guide -1- in direction indicated by arrow using a small screwdriver.

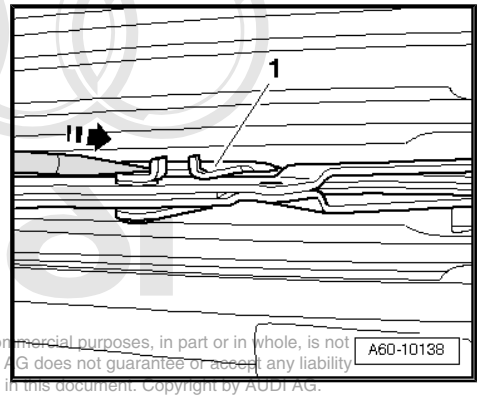

Protected by copyright. Copying for private or commercial purposes, in part or in whole, is not permitted unless authorised by AUDI AG. AUDI AG does not guarantee or accept any liability with respect to the correctness of information in this document. Copyright by AUDI AG.

Installing rear panel

– Clean joint surfaces -arrows- on sunroof frame -1- and rear panel using cleaning fluid D 009 401 04.

– Apply primer D 009 200 02 to joint surfaces on rear panel and sunroof frame and allow to flash off for approx. 10 minutes.

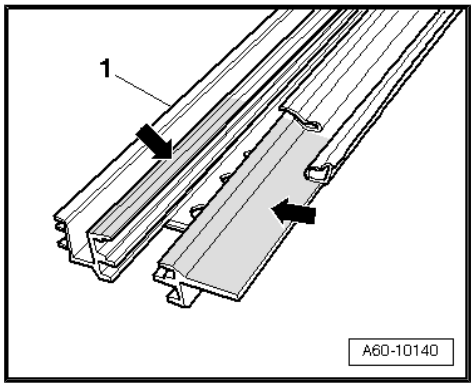

– Apply adhesive DH 009 100 03 (small cartridge) to rear panel -1-.

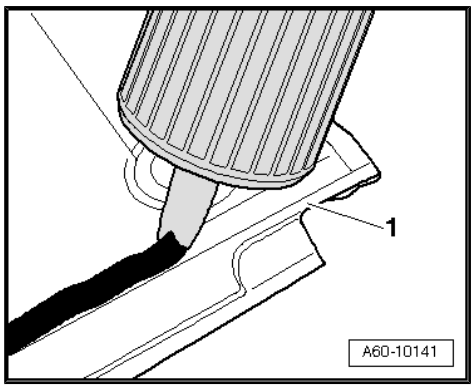

– Draw adhesive inwards slightly at the rear part of the joint as illustrated.

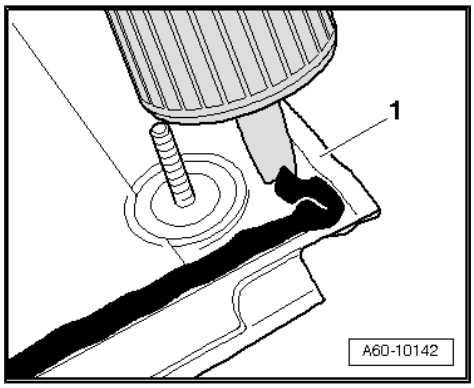

– Install retaining bracket -3-, cross strut -4- and spacer sleeve -2- in sunroof frame -1-.

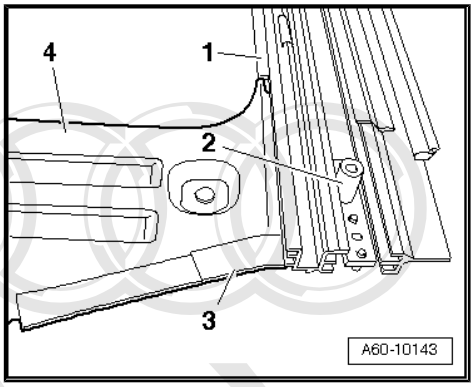

– Fit rear panel -1- through spacer sleeve into frame -2-.

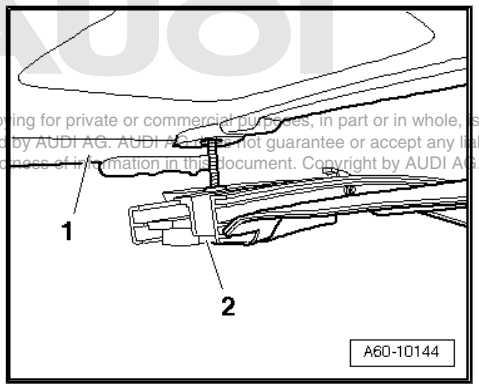

Protected by copyright. Copying for private or commercial purposes, in part or in whole, is not permitted unless authorised by AUDI AG. AUDI AG does not guarantee or accept any liability with respect to the correctness of information in this document. Copyright by AUDI AG.

– Align rear panel on sunroof frame according to markings made before removal -arrow-.
– Bolt cross strut onto sunroof frame.

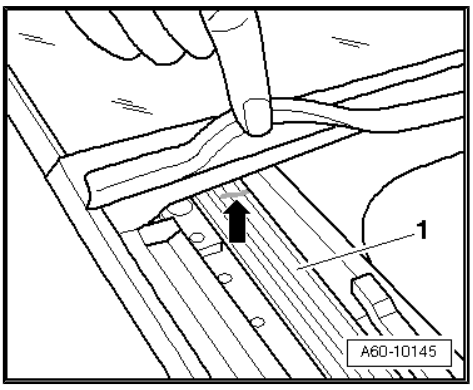

– Bolt, 8 Nm
– Bolt rear panel onto cross strut.
– Tighten nuts and bolts on rear panel to 8 Nm.

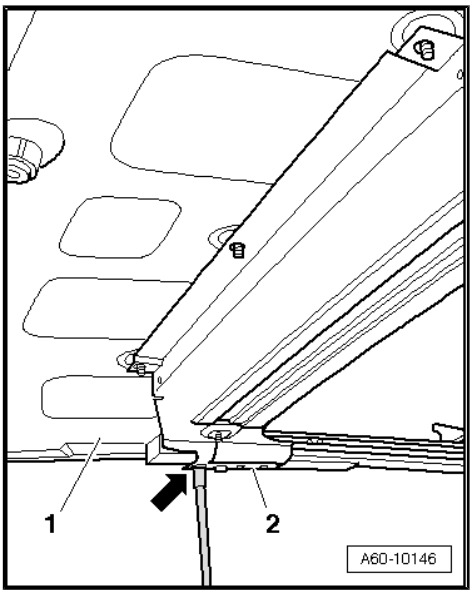

– Remove surplus adhesive at sides of joint between rear panel -1- and frame.

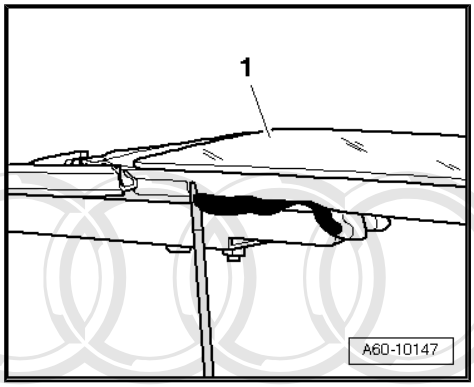

– Do not allow adhesive to enter area around water channel -arrow-. Remove adhesive if necessary.

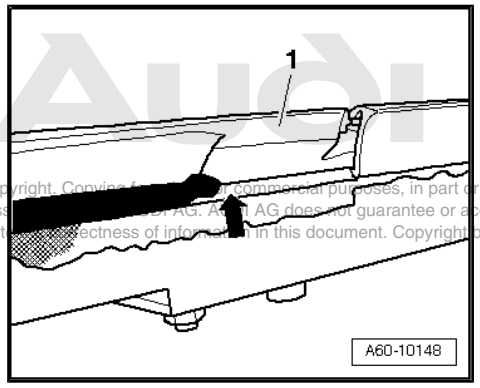

Protected by copyright. Copying for private or commercial purposes, in part or in whole, is not permitted unless authorized by AUDI AG. AUDI AG does not guarantee or accept any liability with respect to the correctness of information in this document. Copyright by AUDI AG.

– Smooth down adhesive at side seals -arrow-.

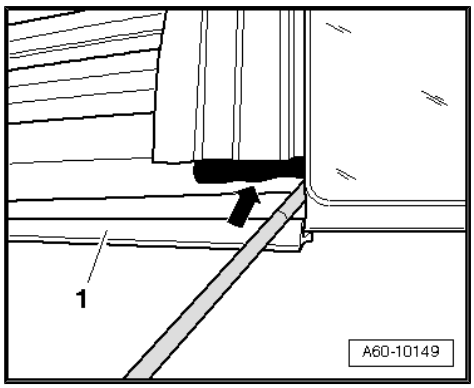

– Smooth down adhesive adjacent to seal -arrow-.
– Perform leak test with water.
– Cover over rear panel opening and pour water into guide rail.
– Check whether water comes out on inside of guide rail.

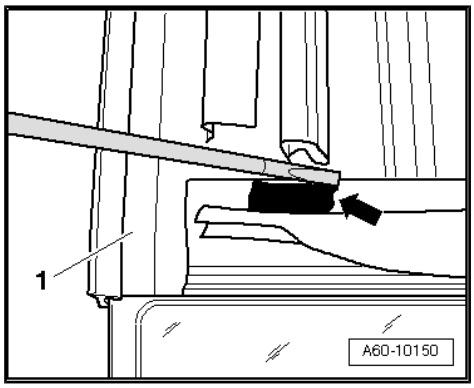

– Glue on seal -1- for guide rail in its original position.
– Install sunroof frame

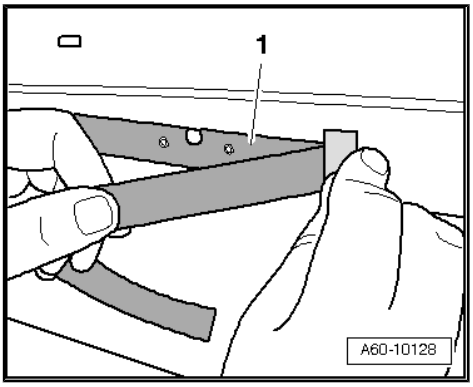

1.6 Installing sunroof

Fitting the slide/tilt roof assembly device (open sky) -VAS 6010-

1 - Slide/tilt roof assembly device (open sky) -VAS 6010-

- ❑ After fitting sunroof in opening, position assembly device on vehicle as shown.
- ❑ Centralise device at sides and secure it using the grip screws -arrow c-.

> **Caution**
> *Adjuster screws (front and rear) -arrows a- and -arrows b- must only be tightened to 1.5 Nm.*

- ❑ Screw down adjuster screws (front) -arrows a-, so that pressure piece ⇒ Item 2 (page 65) makes contact with side frame.
- ❑ Check that pressure pieces have made contact using a feeler gauge (thickness: 0.2 mm).
- ❑ Also screw down adjuster screws (rear) arrows -b- until pressure piece ⇒ Item 3 (page 65) makes contact with side frame

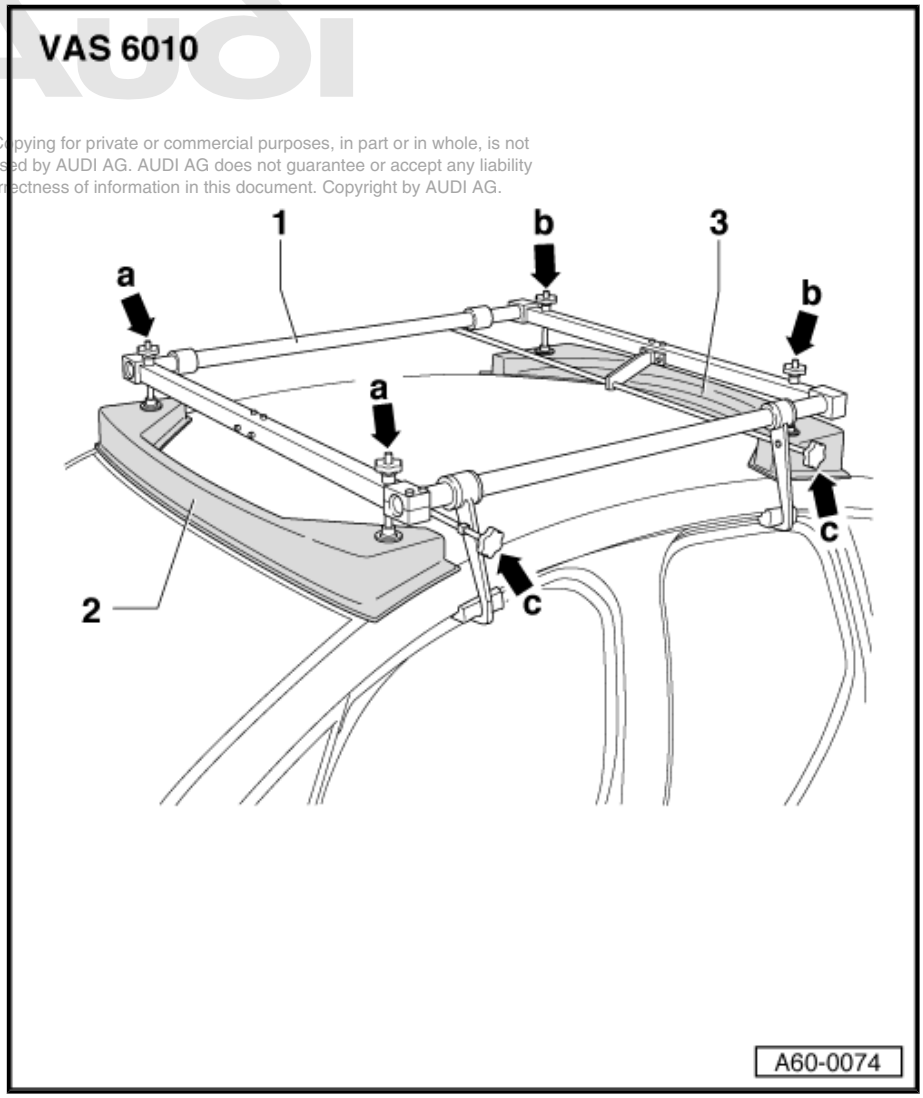

Protected by copyright. Copying for private or commercial purposes, in part or in whole, is not permitted unless authorised by AUDI AG. AUDI AG does not guarantee or accept any liability with respect to the correctness of information in this document. Copyright by AUDI AG.

2 - Pressure piece (front)

- ❑ Must make contact with side frame when adjusted correctly.

3 - Pressure piece (rear)

- ❑ Must make contact with side frame when adjusted correctly.

Adjusting element: mode of operation

- When installing, sunroof is aligned to body and held in position using slide/tilt roof assembly device -VAS 6010- .
- When bolt -4- is turned into nut -2-, adjuster screw -6- (left-hand thread) is unscrewed as far as the stop via plastic element -5- (torque limiter).
- When you turn the bolt further, the sunroof is secured with a torque of 8 Nm.

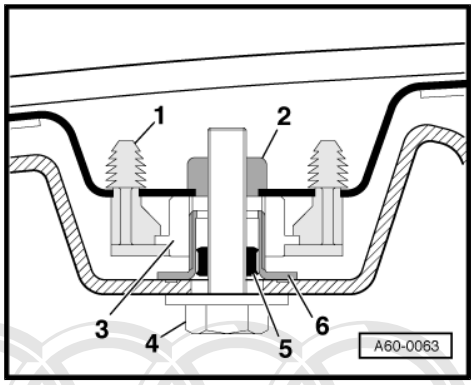

1.7 Removing and installing sunroof panel

Note

- *Panel “1” and panel “4” are bonded to the roof and are not available as replacement parts.*
- *In the case of a defective motor you must move the sunroof by using the manual operation function.*

Protected by copyright. Use or commercial purposes, in part or in whole, is not permitted unless auth AUDI AG does not guarantee or accept any liability with respect to the mation in this document. Copyright by AUDI AG.

Removing panel “2”

– Fully open sliding frame towards the rear.
– Open panel “2” -item 1- towards the rear, so that the front bolt -arrow a- becomes accessible.
– Loosen nut -arrow c- and turn hold-down device -2- out of position in order to improve access to the front bolt.
– Hold panel “2” tight when removing, as it could otherwise tilt towards the rear, beyond guide plate.
– Unscrew bolts on both sides -arrow a- and -arrow b- and detach panel “2”.

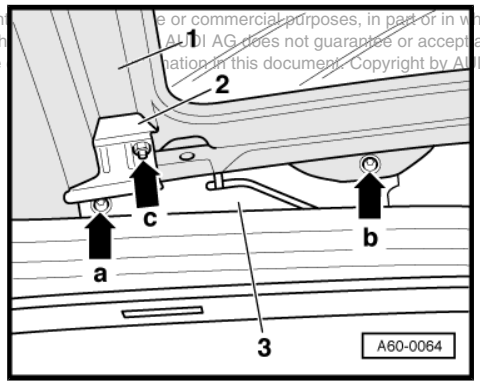

Installing panel “2”

– Position panel “2” on guide plate -3- of the sunroof.
– Secure panel “2” lightly to guide plate -3- using bolts at front -arrow a- and at rear -arrow b-. Then close panel “2”.
– Align panel “2” -item 1- with panel “3” with respect to height and longitudinal position. Then tighten rear bolt -arrow b- to 4.5 Nm.
– Open panel “2” slightly towards the rear, so that front bolt -arrow a- becomes accessible and then tighten bolt to 4.5 Nm.

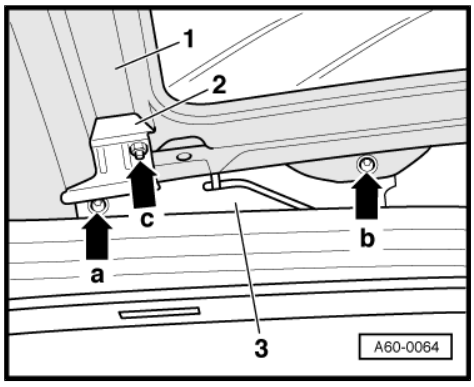

Removing panel “3”

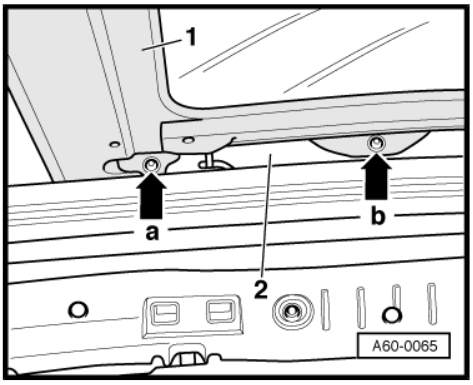

- Run panel “3” back.
- Remove sliding frame ⇒ page 67 .
- Remove cover frame ⇒ General body repairs, interior; Rep. Gr. 70 .
- Hold panel “3” tight when removing, as it could otherwise tilt towards the rear, beyond guide plate.
- Unscrew bolts -arrow a- and -arrow b- from panel “3” -item 1-.
- Detach panel “3” from vehicle.

Installing panel “3”

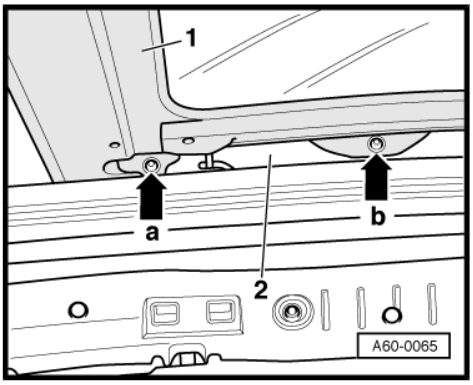

- Position panel “3” on guide plate -2- of the sunroof.
- Lightly secure front and rear of panel “3” to guide plate and close the panel.
- Align panel “3” at front and rear so it is parallel to side frame.
- Align height and longitudinal position of panel “3” according to panel “4”. Then tighten bolts -arrow a- and -arrow b- to 4.5 Nm.
- Fully open the sunroof.
- Install cover frame ⇒ General body repairs, interior; Rep. Gr. 70 .
- Install sliding frame ⇒ page 67 .

Removing and installing locking hook

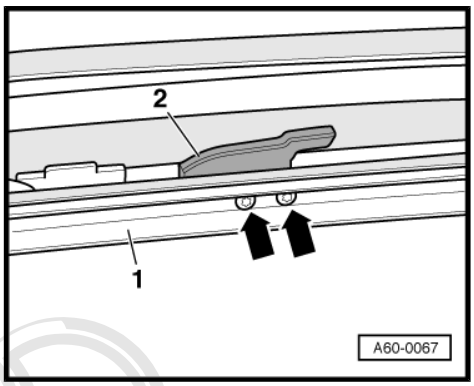

- Unclip cover frame in area of bolts.
- To remove locking hook, unscrew bolts -arrows- and take hook out of frame.
- Fit locking hook in frame and secure it lightly with the bolts.
- Close sunroof.
- After closing roof, press and hold button for operating sunroof again for approx. 10 seconds.
- This initialises the motor and pushes the locking hook into the correct position.
- Open sunroof and tighten bolts to 4.5 Nm.

1.8 Removing and installing sliding frame

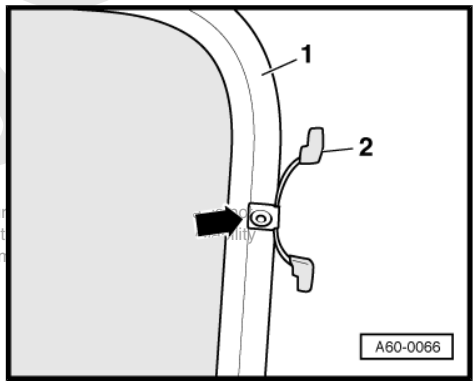

- Run panel “2” and panel “3” back.
- Press sides of sliding frame into guides, reaching through the open roof.
- On the opposite side, press together the spring slides and lift the sliding frame out.

Renewing spring slides

Protected by copyright. Copying for private or commercial pur
permitted unless authorised by AUDI AG. AUDI AG does not
with respect to the correctness of information in this docun

- Sliding frame -1- is removed.
- Carefully drill rivet head -arrow- off spring slide -2-, strike out rivet stem and detach spring slide towards the side.

1.9 Removing and installing wind deflector

– Fully open the sunroof.

– Use screwdriver -1- to carefully press together bearing clip -2- on wind deflector -3-.

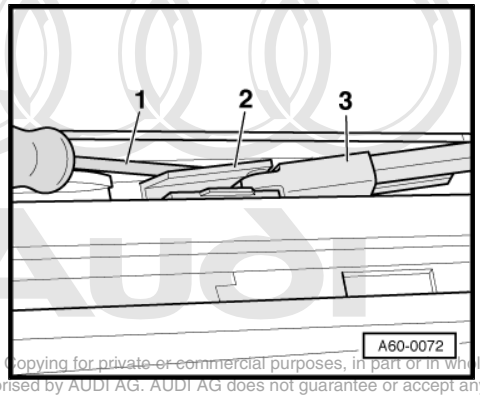

Protected by copyright. Copying for private or commercial purposes, in part or in whole, is not permitted unless authorised by AUDI AG. AUDI AG does not guarantee or accept any liability with respect to the correctness of information in this document. Copyright by AUDI AG.

– Lift bearing clip -1- out of sunroof frame.

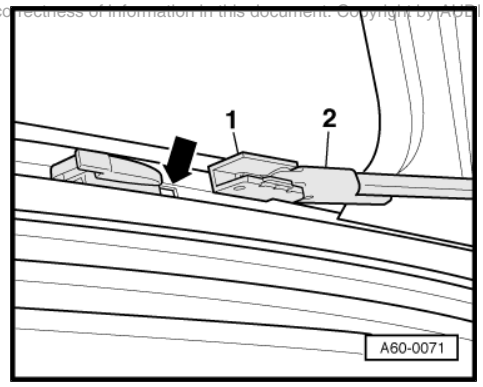

– Push wind deflector -1- to the side out of fastening strip -2-.

– When installing, slide wind deflector -1- into centre of fastening strip -2- in direction of -arrow-.

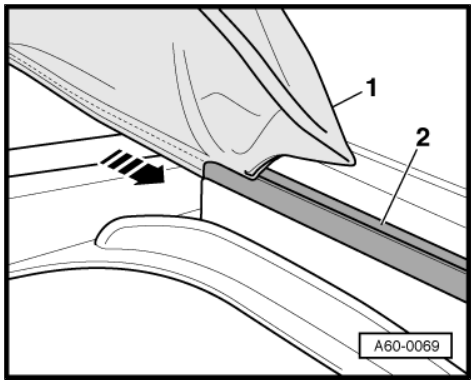

– Press retaining clip into sunroof frame.

– Retaining clip must engage in hole -arrow- on frame.

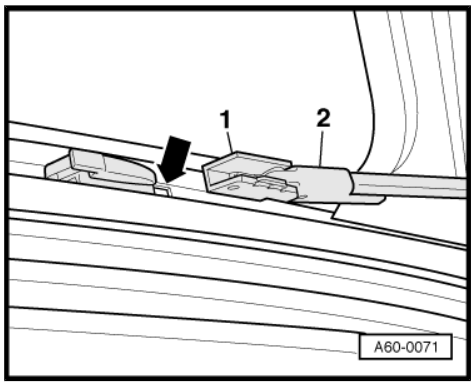

1.10 Renewing actuating spring for wind deflector

1 - Retainer

- ❑ Removing:
- – Before removing, remove wind deflector ⇒ page 68 .
- – Strike out securing pin ⇒ Item 2 (page 69) and take retainer out of cloth cover on wind deflector.

2 - Securing pin

3 - Wind deflector

- ❑ Removing ⇒ page 68 .

4 - Actuating spring for wind deflector

- ❑ Removing:
- – Before removing, remove wind deflector ⇒ page 68 .
- – Strike out grooved pin ⇒ Item 5 (page 69) .
- – Detach actuating spring from wind deflector guide.

5 - Grooved pin

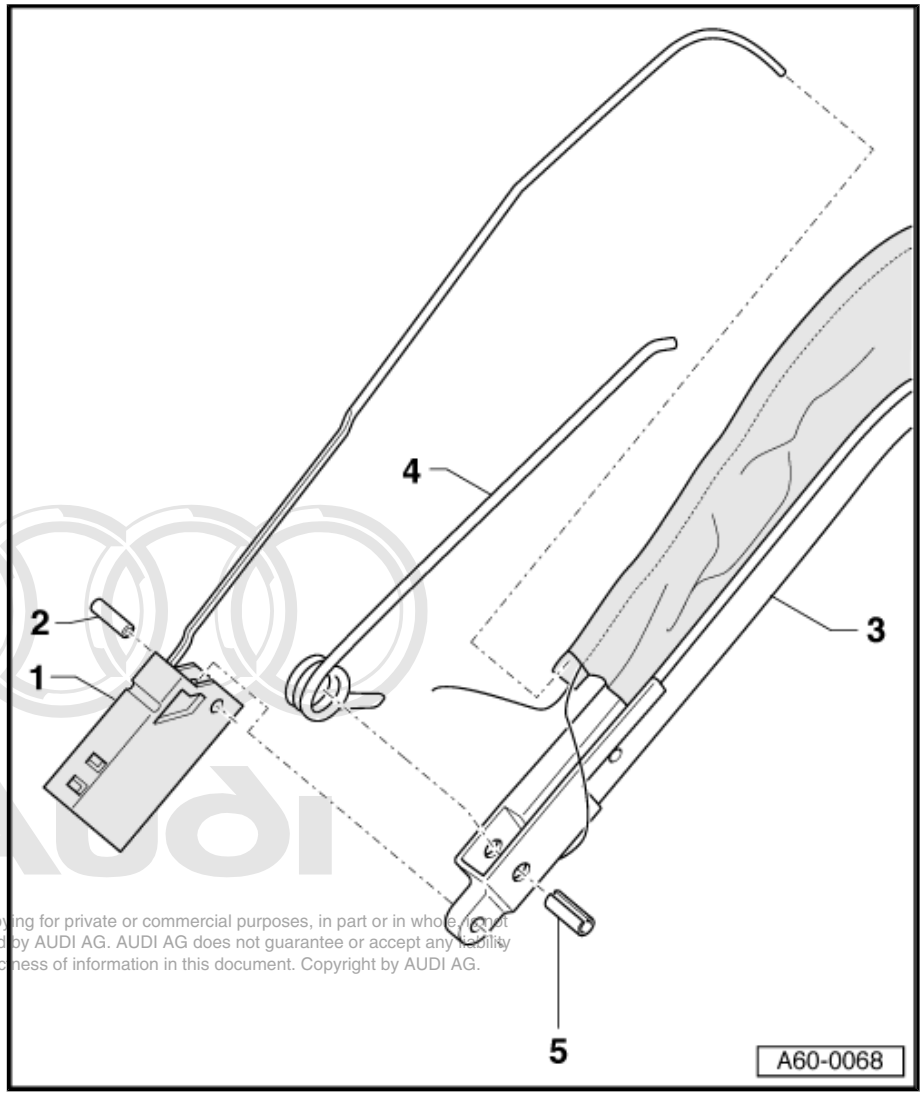

Protected by copyright. Copying for private or commercial purposes, in part or in whole, is not permitted unless authorised by AUDI AG. AUDI AG does not guarantee or accept any liability with respect to the correctness of information in this document. Copyright by AUDI AG.

63 – Bumpers

1 Front bumper

1.1 Contact corrosion

- Contact corrosion can occur if unsuitable fasteners are used on the vehicle (bolts, nuts, washers etc.).
- For this reason, only fasteners with a special surface coating (Dachromet) have been fitted on the vehicle. These fasteners can be identified by their greenish colour.
- In addition, all rubber and plastic parts and all adhesives are made of non-conductive materials.
- Always renew parts if you are in any doubt as to whether the old part can be used again.

Caution

- *Always use genuine replacement parts (same as original equipment). These have been tested and are aluminium-compatible.*
- *Accessories must be approved by AUDI AG.*
- *Damage caused by contact corrosion is not covered by the warranty.*

1.2 Removing and installing front bumper - exploded view

Protected by copyright. Copying for private or commercial purposes, in part or in whole, is not permitted unless authorised by AUDI AG. AUDI AG does not guarantee or accept any liability with respect to the correctness of information in this document. Copyright by AUDI AG.

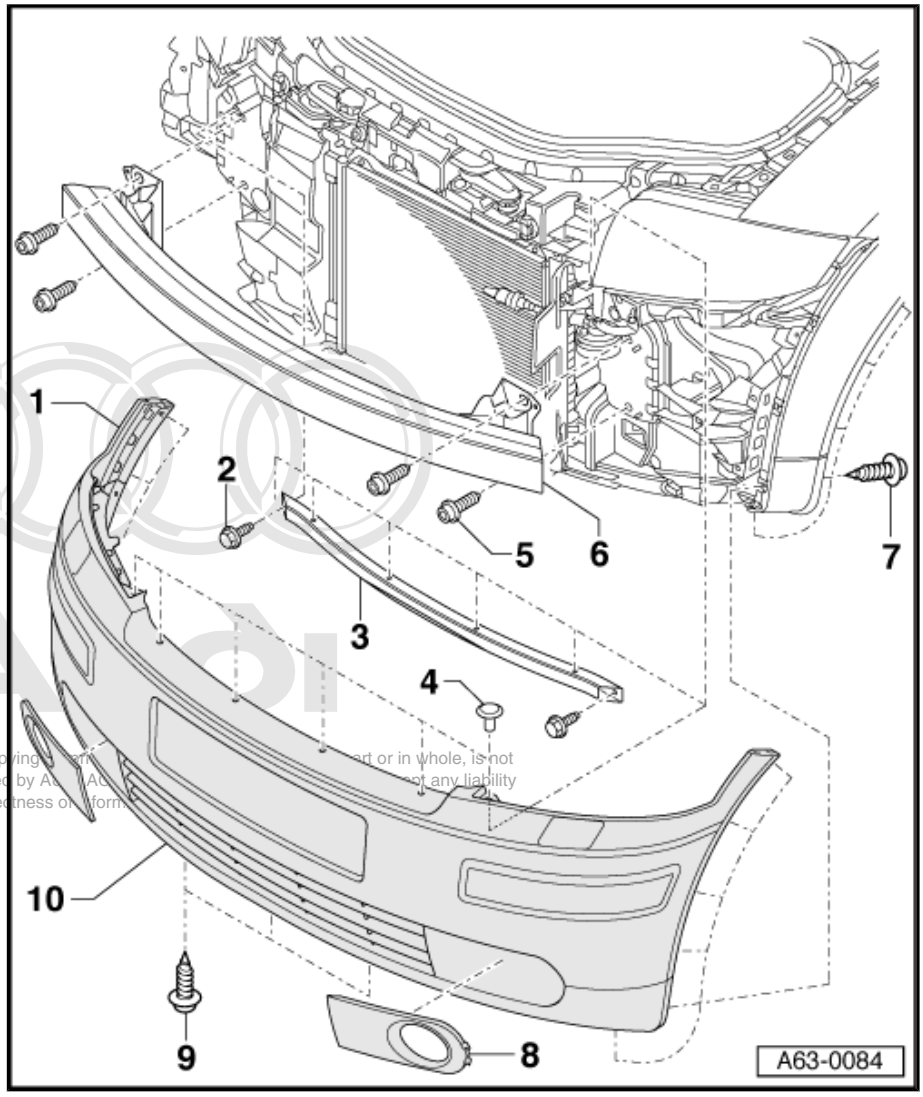

1 - Cover

- ❑ Removing:
  - – Detach wheel housing liner (front)
  - – Remove self-tapping screws ⇒ Item 7 (page 71) and ⇒ Item 9 (page 71) .
  - – Press pins of spreader rivets in so that they engage. Do NOT press in further.
  - – Do NOT press pin through completely.
  - – Pull out spreader rivet.
  - – Unclip sides of cover at left and right from wing panel ⇒ page 72 .
  - – Detach cover from vehicle towards the front.

Protected by copyright. Copying for private or commercial purposes, in part or in whole, is not permitted unless authorised by Audi AG. Audi AG does not guarantee or accept any liability with respect to the correctness of information in this document.

2 - Hexagon bolt

- ❑ 4 Nm

3 - Reinforcement bar

- ❑ Before removing, detach cover ⇒ Item 1 (page 71) .
- ❑ Unscrew hexagon bolts ⇒ Item 2 (page 71) and detach reinforcement bar.

4 - Spreader rivets (5x)

- ❑ To remove, do not press locking pins through completely, but only far enough for them to engage.
- ❑ Pull out spreader rivet with locking pin.
- ❑ If a pin has been pressed through completely, carefully blow it out of reinforcement bar towards the side.

5 - Bolt with washer

- ❑ 23 Nm

6 - Cross member

- ❑ Before removing, detach cover ⇒ Item 1 (page 71) .
- ❑ Unscrew hexagon bolt ⇒ Item 2 (page 71) and detach cross member.

7 - Self-tapping screws (10x)

- ❑ 1.5 Nm

8 - Trim panel for fog lights

- ❑ Unclip on inner side of vehicle and detach ⇒ page 72 .
- ❑ When installing, slide on at outer side of vehicle and press on at inside.

9 - Self-tapping screw (3x)

- ❑ 1.5 Nm

10 - Air intake grille

- ❑ Removing ⇒ page 72 .

Unclipping cover from wing panel

– To remove cover -1-, unscrew Torx bolts -2-.

– Release retainer -arrow-, working from engine compartment side. Then push cover out towards the side.

– Detach cover from vehicle towards the front.

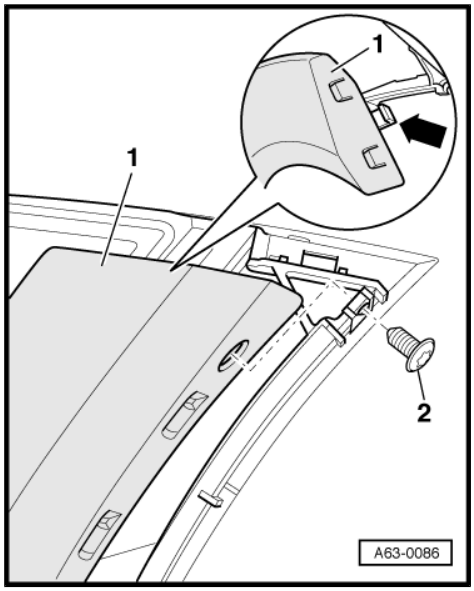

Removing trim for fog light

– Use screwdriver to release retainers -arrows- on trim panel.

– First pull trim panel off on inner side of vehicle, then detach it from cover towards the side.

– When installing, you must hear retainers engage on inner side of vehicle.

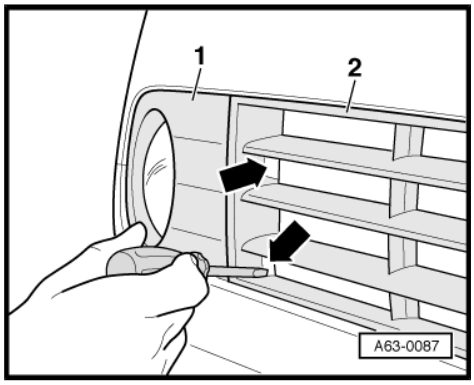

Removing air intake grille

• Side trim panels are removed.

– To remove, press retainers -arrows- together section by section and then detach air intake grille from cover.

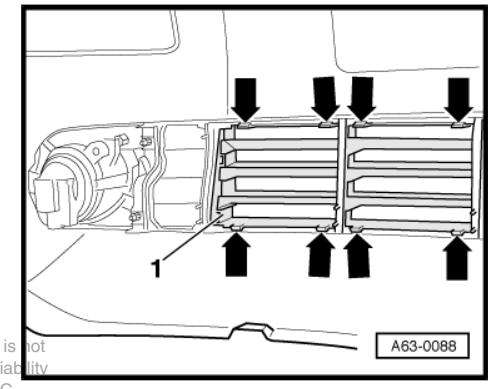

Protected by copyright. Copying for private or commercial purposes, in part or in whole, is not permitted unless authorised by AUDI AG. AUDI AG does not guarantee or accept any liability with respect to the correctness of information in this document. Copyright by AUDI AG.

2 Rear bumper

2.1 Removing and installing rear bumper - exploded view

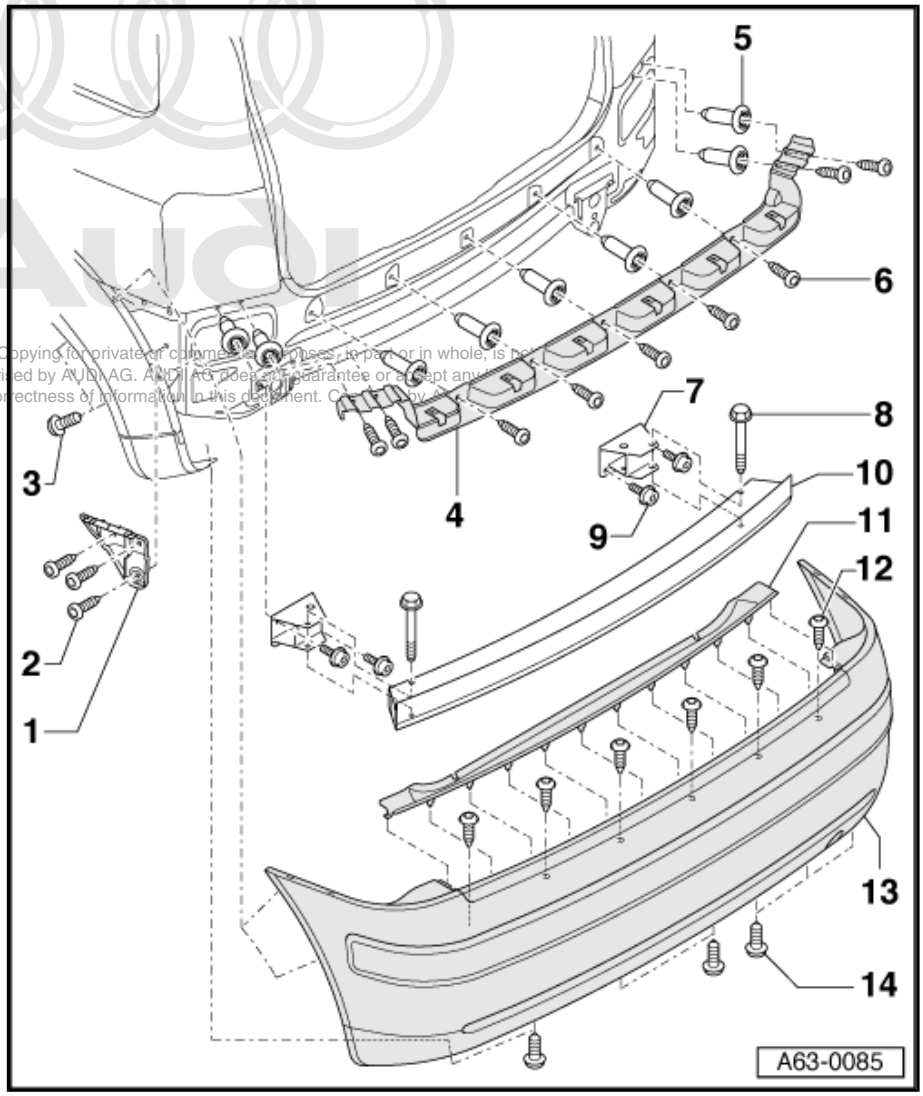

Protected by copyright. Copying for private or commercial purposes, in part or in whole, is not permitted unless authorised by AUDI AG. AUDI AG does not guarantee or accept any liability with respect to the correctness of information in this document. Copyright by AUDI AG.

1 - Guide moulding

2 - Bolt

- ❑ 2 Nm

3 - Self-tapping screw

- ❑ 1.5 Nm

4 - Reinforcement moulding

- ❑ Before removing, detach bumper cover ⇒ Item 13 (page 73) .
- ❑ Fully unscrew bolts ⇒ Item 6 (page 73) and detach moulding.

5 - Plug-in nut

- ❑ Pressed into body.

6 - Self-tapping screw

7 - Bracket

- ❑ 1.5 Nm

8 - Hexagon bolt

- ❑ 23 Nm

9 - Bolt with washer

- ❑ 23 Nm

10 - Cross member

- ❑ Before removing, detach bumper cover ⇒ Item 13 (page 73) .
- ❑ Unscrew hexagon bolts and pull cross member out of bracket ⇒ Item 7 (page 73) .

11 - Trim cover

- ❑ Push trim cover in slightly on body flange and disengage at retainers.
- ❑ Pull trim cover out at left and right and detach.

12 - Self-tapping screw

- ❑ 2 Nm

13 - Cover

- ❑ Loosen rear section of wheel housing liner.
- ❑ Remove bolts ⇒ Item 3 (page 73) below wheel housing liners.
- ❑ Also remove bolts ⇒ Item 14 (page 73) at bottom.
- ❑ Disengage trim cover ⇒ Item 11 (page 73) from bumper cover.
- ❑ Detach sides of cover from guide mouldings ⇒ Item 1 (page 73) and detach cover from vehicle towards the rear.
- ❑ When installing, retainers on guide moulding must engage correctly in cover.

14 - Self-tapping screw

- ❑ 1.5 Nm

64 – Glazing

1 Flush-bonded windows

1.1 Contact corrosion

- Contact corrosion can occur if unsuitable fasteners are used on the vehicle (bolts, nuts, washers etc.).
- For this reason, only fasteners with a special surface coating (Dachromet) have been fitted on the vehicle. These fasteners can be identified by their greenish colour.
- In addition, all rubber and plastic parts and all adhesives are made of non-conductive materials.
- Always renew parts if you are in any doubt as to whether the old part can be used again.

Caution

- *Always use genuine replacement parts (same as original equipment). These have been tested and are aluminium-compatible.*
- *Accessories must be approved by AUDI AG.*
- *Damage caused by contact corrosion is not covered by the warranty.*

1.2 Removing and installing flush-bonded windows - general comments

Protected by copyright. Copying for private or commercial purposes, in part or in whole, is not permitted unless authorised by AUDI AG. AUDI AG does not guarantee or accept any liability with respect to the correctness of information in this document. Copyright by AUDI AG.

Special tools and workshop equipment required

- Removal kit for flush bonded windows -V.A.G 1474 A-
- Suction lifter -V.A.G 1344-
- Cutting tool -V.A.G 1351-
- Windscreen removal kit -V.A.G 1755-
- Cartridge gun -V.A.G 1628-
- Cartridge heater -V.A.G 1939-

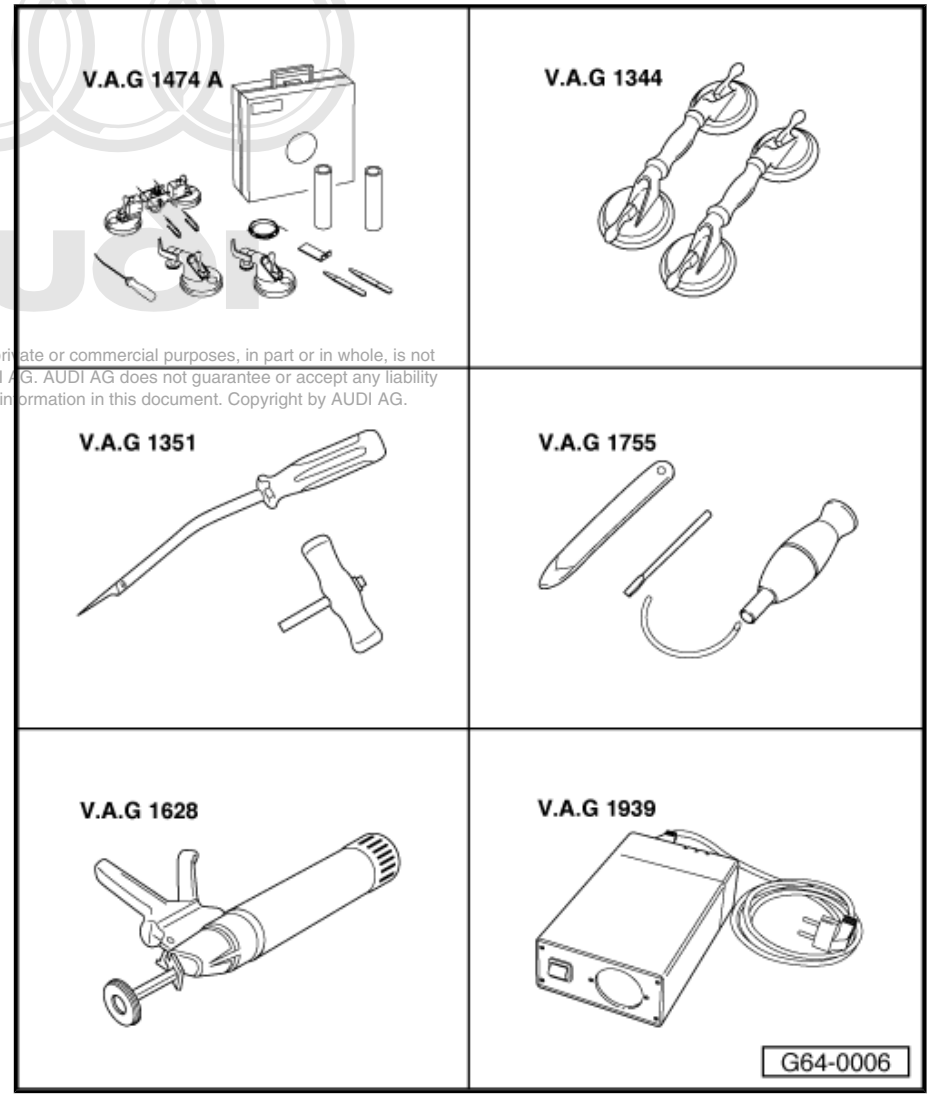

Copyright by AUDI AG. Any use for private or commercial purposes, in part or in whole, is not permitted unless authorised by AUDI AG. AUDI AG does not guarantee or accept any liability whatsoever for the correctness of information in this document. Copyright by AUDI AG.

- Electric cutter -V.A.G 1561 A-
- Blade (58 mm) -V.A.G 1561/2-
- Blade (U-shaped) -V.A.G 1561/3-
- Scraper (25 mm) -V.A.G 1561/8-
- Blade (offset) -V.A.G 1561/10-
- Double cartridge gun -VAS 5237-

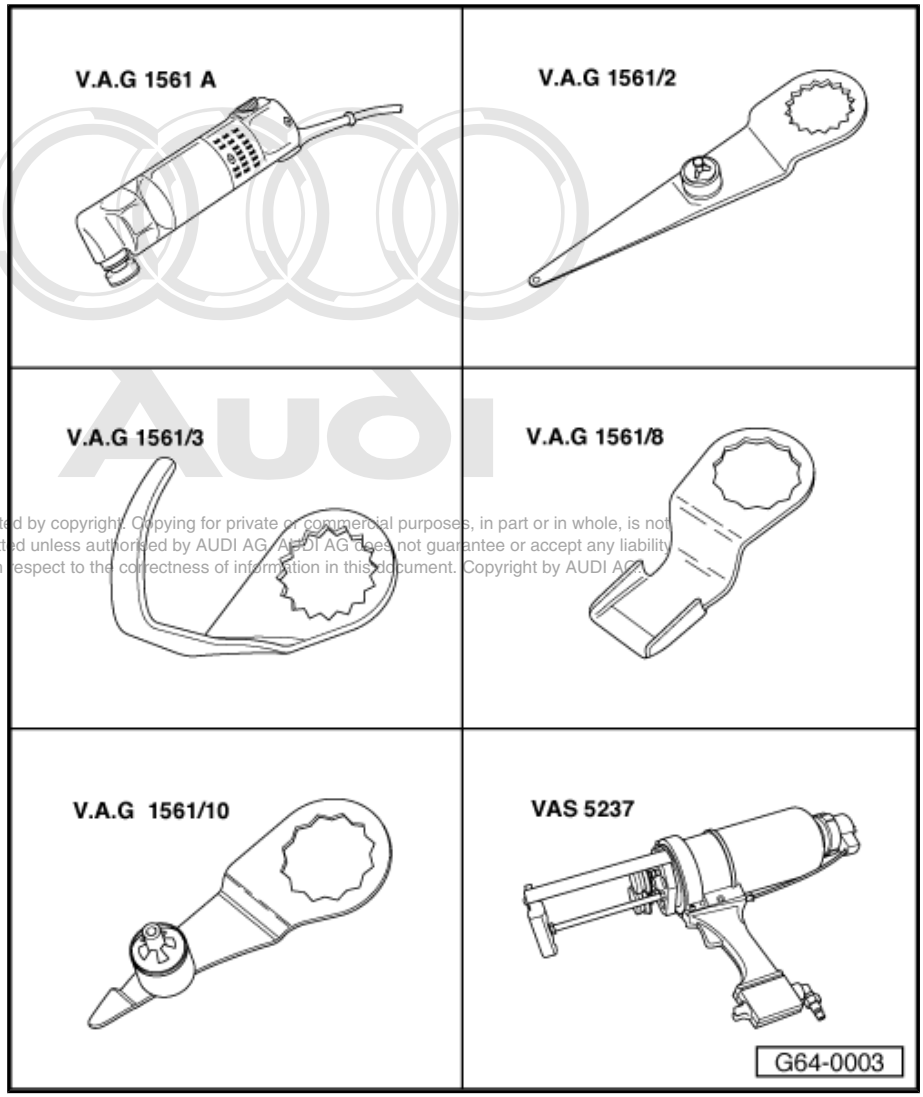

Protected by copyright. Copying for private or commercial purposes, in part or in whole, is not permitted unless authorised by AUDI AG. AUDI AG does not guarantee or accept any liability with respect to the correctness of information in this document. Copyright by AUDI AG.

- Reel device -V.A.G 1654 A-

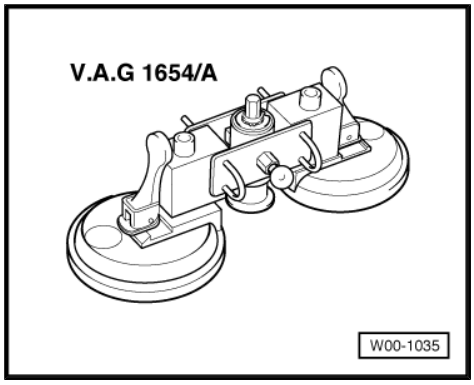

- Protective foil - Audi A2 windscreen -V.A.G 1474/15-
- Protective foil - Audi A2 side windows -V.A.G 1474/16-

1.3 Repairing windows with resin, Talon - VAS 1993/2-

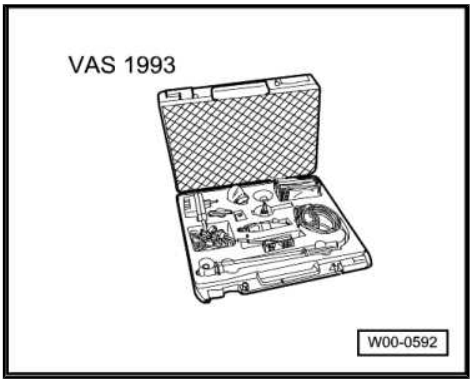

Special tools and workshop equipment required

- Windscreen repair set -VAS 1993- or -VAS 6092-

Note

- *Windscreens damaged by stone chipping can be repaired using resin, Talon -VAS 1993/2- .*
- *The damaged areas must not exceed a certain size, and must not be within the main field of vision.*
- *For detailed information, refer to the instructions supplied with each kit.*

1.4 Sticker for windscreen

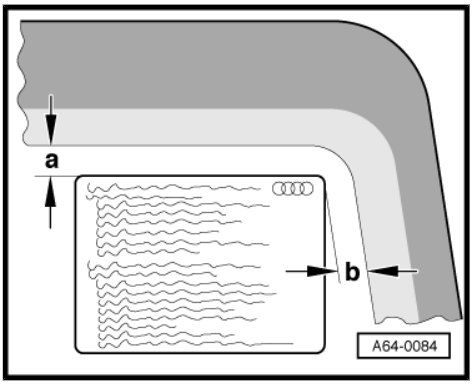

– Reattach stickers affixed to windscreen (e.g. for airbag) at same locations on new windscreen.

Sticker “Attention - Safety precautions”

- Take dimensions -a- and -b- from "old" windscreen you have removed.

Protected by copyright. Copying for private or commercial purposes, in part or in whole, is not permitted unless authorised by AUDI AG. AUDI AG does not guarantee or accept any liability with respect to the correctness of information in this document. Copyright by AUDI AG.

1.5 Materials

- 2-component window adhesive -DA 004 600 A2- [1) 2)]
- 1-component window adhesive -DH 009 100 03- [3) 4)]
- Glass and paint primer -D 009 200 02-
- Cleaning solution -D 009 401 04-
- Applicator -D 009 500 25-
- Adhesive remover -D 002 000 10-
- Cutting thread -357 853 999-
- Cutting thread -357 845 955-

1) Note minimum drying times ⇒ page 78 .

2) To process this material use double cartridge gun -VAS 5237- .

3) Heat using cartridge heater -V.A.G 1939 A- according to manufacturer's instructions.

4) Miniature 110 ml cartridge for sealing and/or for use when the 400 ml double cartridge is not sufficient.

1.6 Minimum drying times

WARNING

- *For safety reasons, when installing windscreen or rear window, use only non-conductive 2-component adhesive with the designations listed below.*
- *You must NOT drive the vehicle until the minimum drying time has elapsed, as the vehicle is otherwise not safe to drive.*

Window	Vehicle	Adhesive sealant	Drying time in hours
Windscreen	With/ without airbag	2-component window glass adhesive -DA 004 600 A2-	3
Rear window		2-component window glass adhesive -DA 004 600 A2-	3
Side windows		1-component window adhesive -DH 009 100 03-	3

Protected by copyright. Copying for private or commercial purposes, in part or in whole, is not permitted unless authorised by AUDI AG. AUDI AG does not guarantee or accept any liability with respect to the correctness of information in this document. Copyright by AUDI AG.

1.7 Cleaning off adhesive sealant

We recommend using adhesive remover -D 002 000 10- for cleaning. Pay attention to safety regulations when handling.

Caution

When cleaning from inside the vehicle passenger compartment, make sure you do not press the window you have just fitted outwards.

Painted surfaces

– First clean painted surface with a dry cloth. Then clean off remaining adhesive sealant with adhesive remover -D 002 000 10- .

Plastic trim

– Allow adhesive sealant to dry (approx. 1 hour) and then pull off.

2 Windscreen

2.1 Removing and installing windscreen - exploded view

1 - Windscreen

- ❑ Removing ⇒ page 79 .
- ❑ Installing ⇒ page 83 .

2 - Adhesive bead

- ❑ Note minimum drying times ⇒ page 78 .
- ❑ Note differing distances from edge of windscreen:
- ❑ Dimension -a- = 30 mm ± 2 mm.
- ❑ Dimension -b- = 6 mm ± 2 mm.

3 - Adjusting wedge

- ❑ Remains in vehicle after installing.
- ❑ Insert adjusting wedge after installing windscreen and fitting trim cover at top so that it makes contact with roof frame.

4 - Cutting thread

- ❑ Place cutting thread beneath trim cover all around.

5 - Plenum chamber cover

- ❑ After installing windscreen, carefully push plenum chamber cover into fastening strip on bottom edge of windscreen.
- ❑ When installing a new windscreen you must first remove protective strip from fastening strip ⇒ page 83 .

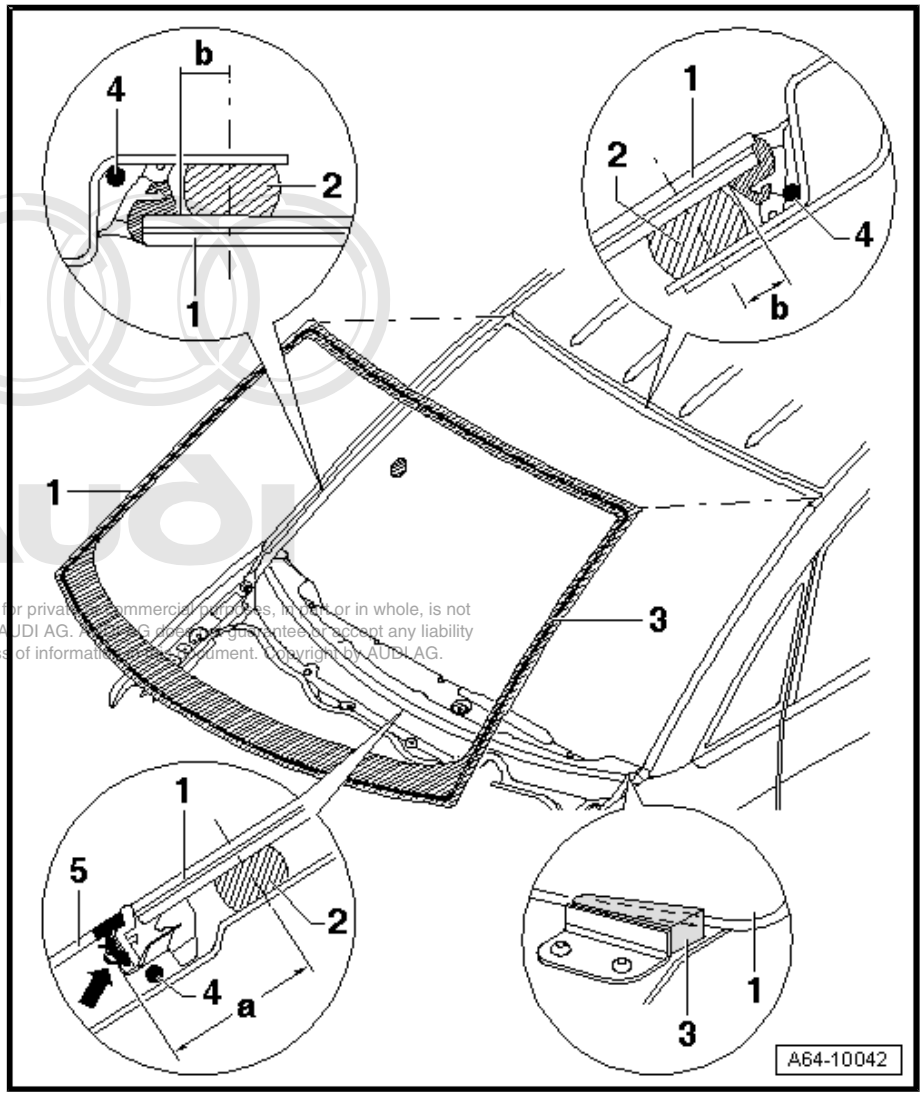

Protected by copyright. Copying for private or commercial purposes, in part or in whole, is not permitted unless authorised by AUDI AG. AUDI AG does not guarantee or accept any liability with respect to the correctness of information in this document. Copyright by AUDI AG.

2.2 Removing windscreen

WARNING

When removing window glass, ALWAYS wear protective goggles and leather gloves.

– Remove wiper arms ⇒ Electrical system; Rep. Gr. 92 .

– Remove cowl panel trim.

– Remove sun visors (left, centre and right) ⇒ General body repairs, interior; Rep. Gr. 70 .

– Remove interior mirror ⇒ General body repairs, interior; Rep. Gr. 68 .
– Remove trim for A-pillars (top) ⇒ General body repairs, interior; Rep. Gr. 70 .
– Using an awl, pierce adhesive bead from inside at bottom left corner of windscreen.
– Thread cutting thread into awl.
– Pull awl with thread through adhesive bead and into vehicle interior.

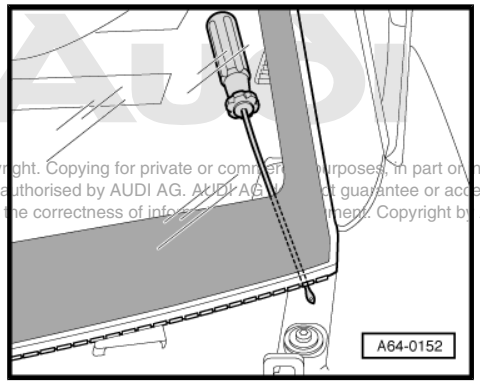

Protected by copyright. Copying for private or commercial purposes, in part or in whole, is not permitted unless authorised by AUDI AG. AUDI AG does not guarantee or accept any liability with respect to the correctness of information in this document. Copyright by AUDI AG.

– Position cutting thread under glass all round windscreen.

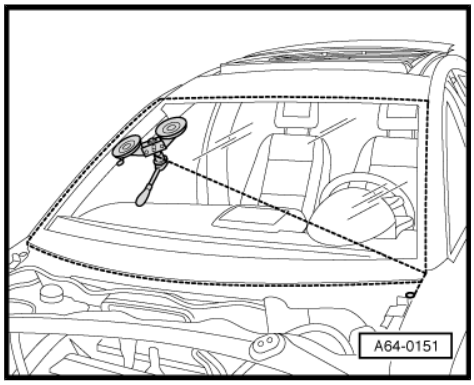

– Fasten end of cutting thread to bolt for securing wing panel.
– Insert protective foil - A2 windscreen -V.A.G 1474/17- at A-pillar (left-side) between windscreen and dash panel.

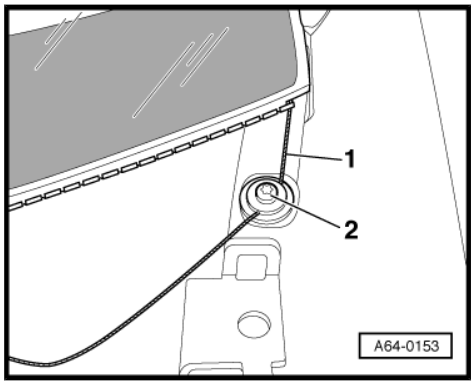

– Secure start of cutting thread in reel device and cut out first section of glass (approx. up to centre of windscreen).
– Move protective foil - Audi A2 windscreen -V.A.G 1474/15- towards the A-pillar on the right side to protect the dash panel.

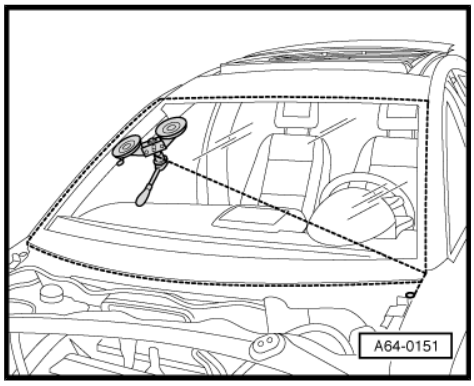

– Move reel device to next position as shown in illustration and fit guide roller.

• Route cutting thread as illustrated.

– Cut out glass up to the point where the cutting thread no longer runs in the guide roller.

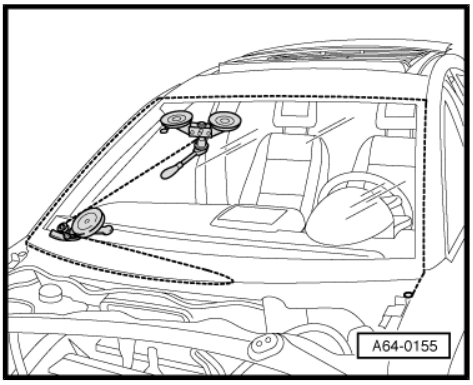

– Remove guide roller and continue to cut out glass.

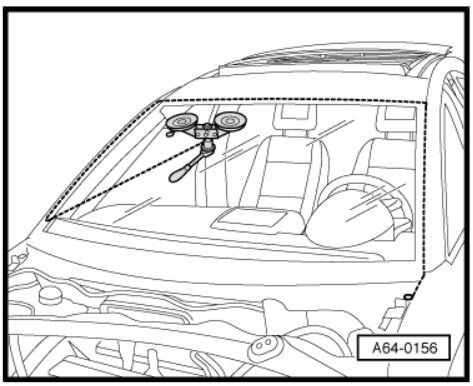

– Move reel device to next position as shown and attach guide roller in top corner of windscreen.

• Route cutting thread as illustrated.

– Insert protective foil - Audi A2 windscreen -V.A.G 1474/15- between windscreen and moulded headliner.

– Cut out glass up to the point where the cutting thread no longer runs in the guide roller.

– Remove guide roller and continue to cut out glass.

– Now repeat these steps in the top left and bottom left corners of the windscreen.

– Completely cut out windscreen following this procedure.

– Remove glass from window opening using double suction lifters.

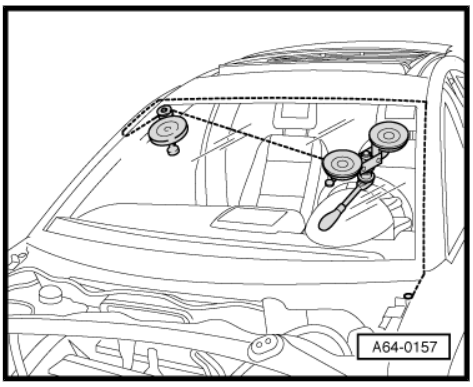

2.3 Preparations before installing a new windscreen

Note

Protected by copyright. Copying for private or commercial purposes, in part or in whole, is not permitted unless authorised by AUDI AG. AUDI AG does not guarantee or accept any liability with respect to the correctness of information in this document. Copyright by AUDI AG.

♦ *If the windscreen flange was damaged, the paintwork must be restored according to specifications in the ⇒ Assessment of vehicle paintwork manual and anti-corrosion coating must be applied according to the ⇒ Surface Treatments/Chemical Materials manual.*

♦ *First clean restored area using cleaning solution -D 009 401 04- , then apply glass and paint primer -D 009 200 02- .*

If you are reusing an undamaged windscreen:

– When reusing an undamaged windscreen, cut back remaining adhesive sealant on the windscreen glass and body flange until it is even using electric cutter -V.A.G 1561 A- and scraper

(25 mm) -V.A.G 1561/8- . Do NOT remove adhesive sealing material completely.

– The remaining sealant is required as a base for better adhesion of the new adhesive sealant.

Note

- *Keep bonding surface clean and free from grease.*
- *Do not cut back bonding surface until shortly before installation.*
- *Do NOT apply primer to bonding surface and do NOT use cleaning solution.*

Protected by copyright. Copying for private or commercial purposes, in part or in whole, is not permitted unless authorised by AUDI AG. AUDI AG does not guarantee or accept any liability with respect to the correctness of information in this document. Copyright by AUDI AG.

If installing a new windscreen

– Clean windscreen in bonding area with cleaning fluid -D 009 401 04- and prime with glass and paint primer -D 009 200 02- .

Note

The ceramic coating on the glass is not a primer. The glass must always be primed before applying adhesive sealant.

– Use applicator -1- to apply primer -2- evenly in one stroke.
– Start application with fully soaked felt.
– Drying time approx. 10 minutes.
– Width of primer coat -a- = approx. 20 mm.
– Apply primer centrally in relation to adhesive bead.

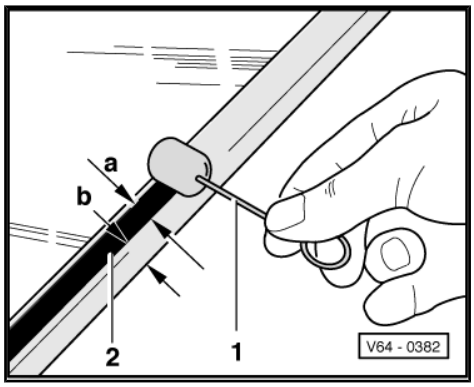

Dimensions for applying adhesive

1 - Adhesive bead
2 - Primer
3 - Windscreen

- Dimension -a- = 8 mm ± 2 mm.
- Dimension -b- = 13.5 mm ± 2 mm.
- Dimension -c-: note different distances from edge of windscreen ⇒ page 79 .

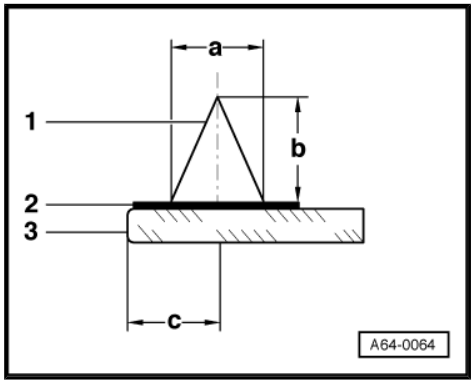

Removing protective strip from fastening strip

– Fit windscreen before pulling protective strip out of fastening strip.

– Before fitting plenum chamber cover, pull protective strip -1- out of fastening strip -2- of windscreen -3-.

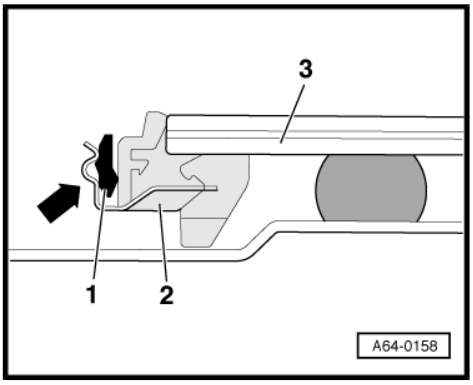

2.4 Installing windscreen

– Apply adhesive after completing the preparations.

– Apply full surface of nozzle -2- to windscreen.

– Direction of application -arrow- for adhesive bead -1-.

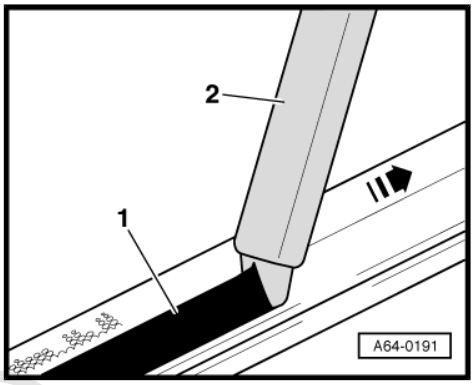

Note

The cross-section of the adhesive bead is determined by the nozzle opening and the rate of application.

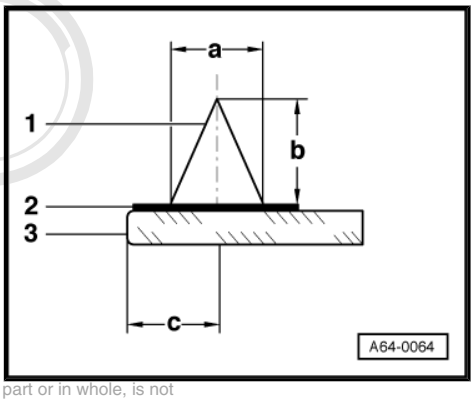

1 - Adhesive bead

2 - Primer

3 - Windscreen

- Dimension -a- = 8 mm ± 2 mm.
- Dimension -b- = 13.5 mm ± 2 mm.
- Dimension -c-: note different distances from edge of windscreen.

Protected by copyright. Copying for private or commercial purposes, in part or in whole, is not permitted unless authorised by AUDI AG. AUDI AG does not guarantee or accept any liability with respect to the correctness of information in this document. Copyright by AUDI AG.

– Apply adhesive sealant all round as shown.
– Install windscreen glass in windscreen opening using two double suction lifters.

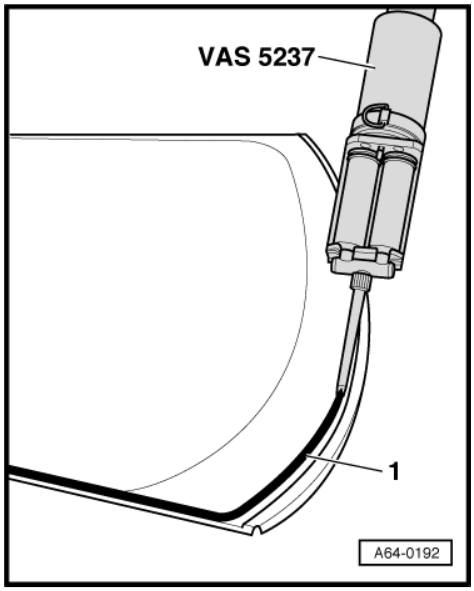

Caution

Windscreen must be fitted within 10 minutes, otherwise the adhesive properties of the adhesive sealant will be impaired.

– Note minimum drying times ⇒ page 78 .
– Reattach stickers affixed to windscreen (e.g. safety warning for airbag) at same locations on new windscreen ⇒ page 77 .

Protected by copyright. Copying for private or commercial purposes, in part or in whole, is not permitted unless authorised by AUDI AG. AUDI AG does not guarantee or accept any liability with respect to the correctness of information in this document. Copyright by AUDI AG.

3 Side window (front)

3.1 Removing and installing side window (front) - exploded view

Note

It is not possible to remove this window without destroying it.

1 - Side window (front)

- ❑ Removing ⇒ page 86 .
- ❑ Installing ⇒ page 86 .

2 - Adhesive bead

- ❑ Note differing distances between adhesive bead and edge of window.
- ❑ Dimension -b- at rear edge of window = 16 mm ± 2 mm
- ❑ Dimension -a- at front and bottom edge of window = 9 mm ± 2 mm

3 - Trim surrounding window

- ❑ Before removing window, cut off bottom section of trim surrounding window using a blade.

4 - Stop for B-pillar

- ❑ When installing, push window towards the rear, so that stop makes contact with B-pillar -arrow-.

5 - Adhesive tape

- ❑ Mask window opening with fabric-backed adhesive tape to prevent damage to paintwork.

6 - Cutting thread

- ❑ Place behind trim cover all around the window ⇒ page 86 .

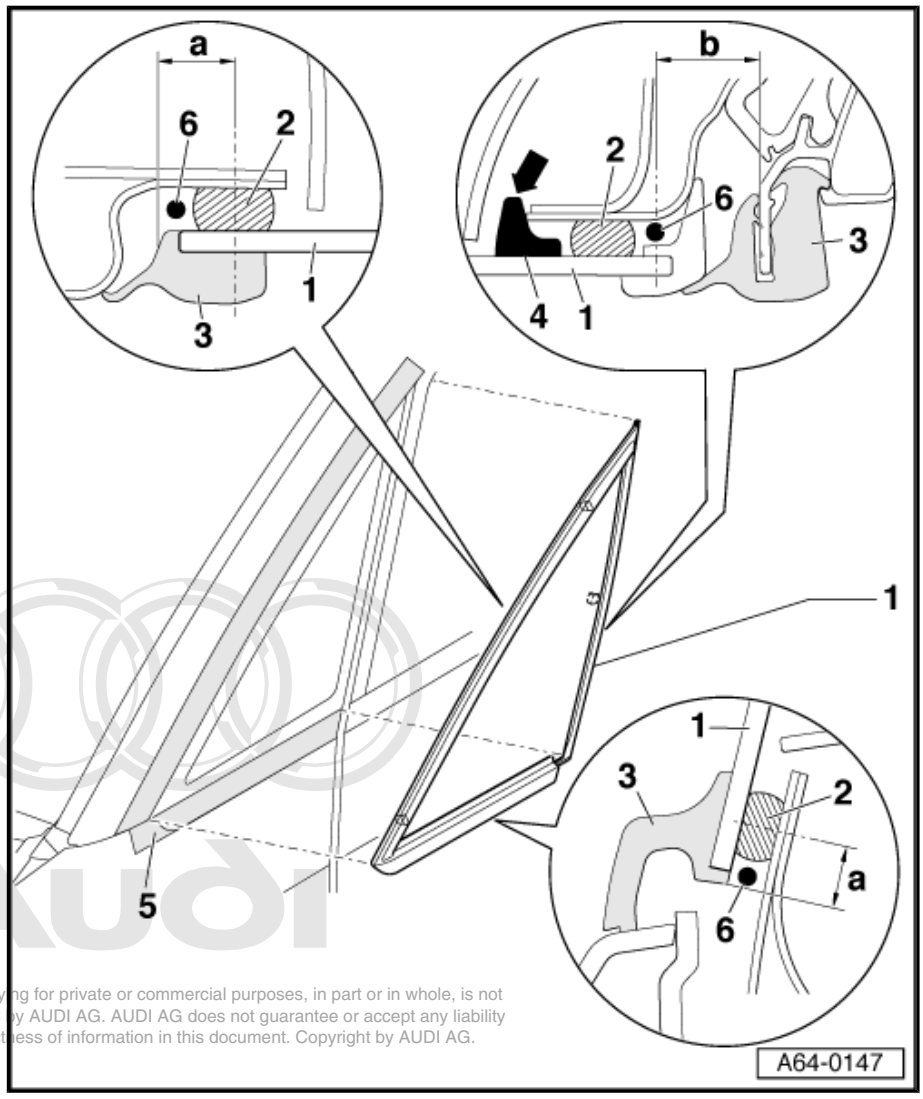

Protected by copyright. Copying for private or commercial purposes, in part or in whole, is not permitted unless authorised by AUDI AG. AUDI AG does not guarantee or accept any liability with respect to the correctness of information in this document. Copyright by AUDI AG.

3.2 Removing side window (front)

WARNING

When removing window glass, ALWAYS wear protective goggles and leather gloves.

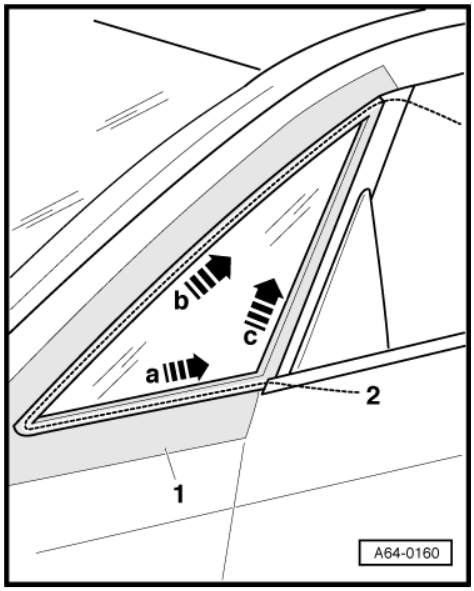

Removing undamaged window

- Trim for A-pillar is removed.

– Mask area all around edges of window with fabric-backed adhesive tape -1- to prevent damage to paintwork.

– To improve access to the window, first remove the trim surrounding the window using a blade.

– Position cutting thread around side window as shown.

– Insert ends of cutting thread (top and bottom) in two pull handles included with cutting tool -V.A.G 1351- .

– First pull cutting thread -2- through adhesive in direction of arrow -a-.

– Then pull cutting thread through adhesive on A-pillar, moving it in direction of arrow -b-.

– Finally pull cutting thread from bottom to top in direction of arrow -c- and cut out the complete window.

Note

Alternatively, you can use electric cutter -V.A.G 1561 A- and blade (U-shaped) -V.A.G 1561/3- to cut out the side window.

Removing damaged window

– When removing a damaged side window, follow the procedure for removing a damaged REAR window ⇒ page 95 .

Protected by copyright. Copying for private or commercial purposes, in part or in whole, is not permitted unless authorised by AUDI AG. AUDI AG does not guarantee or accept any liability with respect to the correctness of information in this document. Copyright by AUDI AG.

3.3 Installing new window

– Before installing a new window, cut back remaining adhesive bead on body flange for window, but do NOT remove completely.

Caution

The remaining sealant is required as a base for better adhesion of the new adhesive sealant. Keep bonding areas free of dirt and grease.

– Clean window in bonding area with cleaning fluid -D 009 401 04- and prime with glass and paint primer -D 009 200 02- .

– Note 10-minute flash-off period for primer.

– Note differing distances between adhesive bead and edge of window ⇒ Item 2 (page 88) .

– Apply adhesive.

- Adhesive bead height = 12 mm + 3 mm
- Width of bead = 8 mm ± 2 mm

Caution

Window must be fitted within 10 minutes, otherwise the adhesive properties of the adhesive sealant will be impaired.

– Fit window in window opening and push it towards the rear, so that stop -1- makes contact with B-pillar -2-.
– Insert window and secure in position with adhesive tape.
– Note minimum drying time ⇒ page 78 .

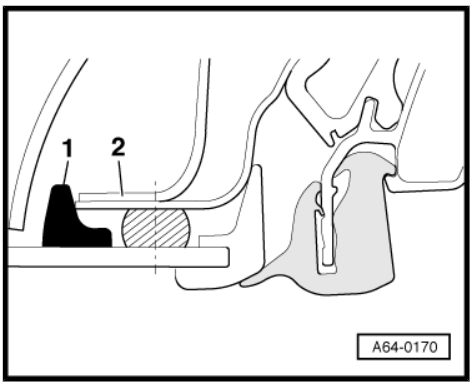

Protected by copyright. Copying for private or commercial purposes, in part or in whole, is not permitted unless authorised by AUDI AG. AUDI AG does not guarantee or accept any liability with respect to the correctness of information in this document. Copyright by AUDI AG.

4 Side window (rear)

4.1 Removing and installing side window (rear) - exploded view

Note

It is not possible to remove this window without destroying it.

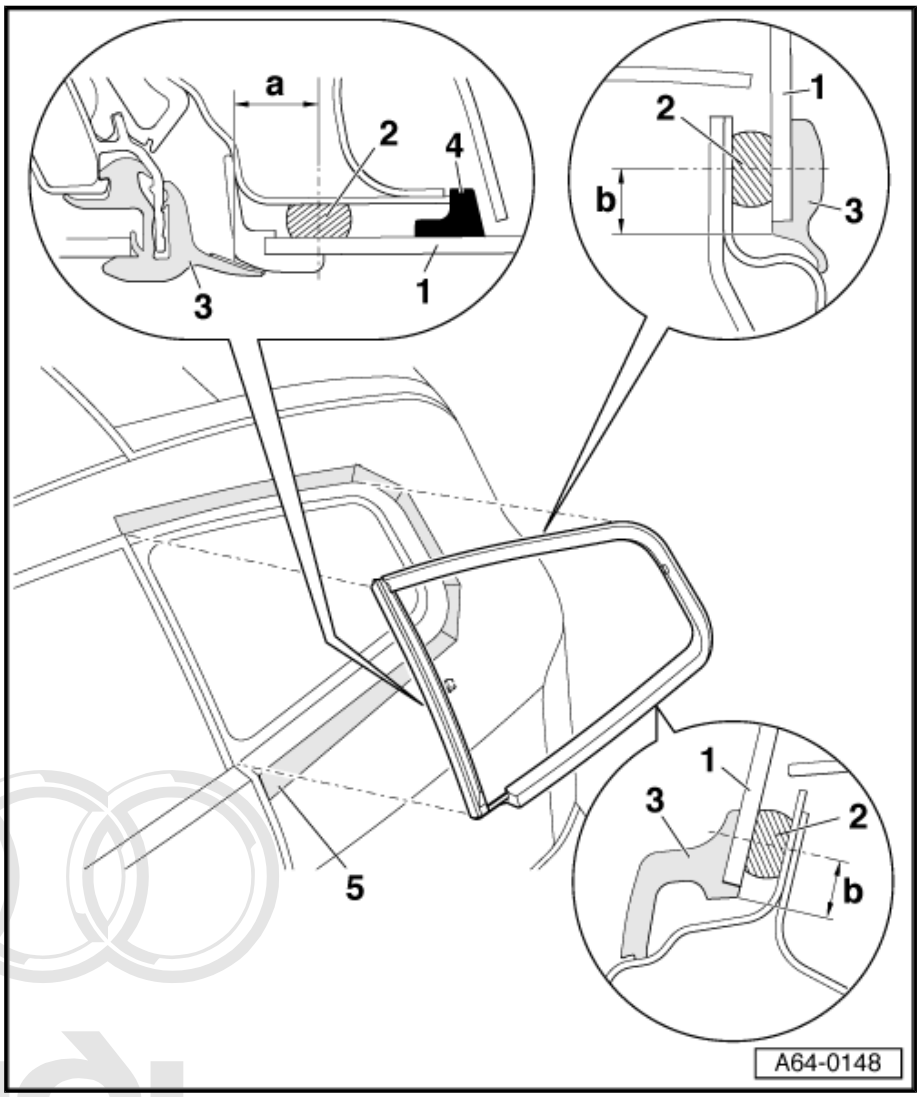

1 - Side window (rear)

- ❑ Removing ⇒ page 88 .
- ❑ Installing ⇒ page 90 .
- ❑ Before removing, insert protective foil - Audi A2 side window -V.A.G 1474/16- between trim parts and window flange (from inside), in order to protect trim parts.

2 - Adhesive bead

- ❑ Note differing distances between adhesive bead and edge of window.
- ❑ Dimension -a- at front edge of window = 15 mm ± 2 mm
- ❑ Dimension -b- at bottom, rear and top edge of window = 9 mm ± 2 mm

3 - Trim surrounding window

- ❑ Before removing window, cut off bottom section of trim surrounding window using a blade.

4 - Stop for C-pillar

- ❑ When installing, push window towards the rear, so that stop makes contact with C-pillar.

5 - Adhesive tape

- ❑ Mask window opening with fabric-backed adhesive tape to prevent damage to paintwork.

Protected by copyright. Copying for private or commercial purposes, in part or in whole, is not permitted unless authorised by AUDI AG. AUDI AG does not guarantee or accept any liability with respect to the correctness of information. Copyright by AUDI AG.

4.2 Removing side window (rear)

WARNING

When removing window glass, ALWAYS wear protective goggles and leather gloves.

Removing undamaged window

– Mask area all around edges of window with fabric-backed adhesive tape -1- to prevent damage to paintwork.

– To improve access to the window, first carefully remove the trim surrounding the window using a blade.

– Insert protective foil - Audi A2 side windows -V.A.G 1474/16- between window flange and trim parts (working from inside).

– Use electric cutter -V.A.G 1561 A- and blade (U-shaped) - V.A.G 1561/3- to first cut along bottom edge of window.

– Adhesive tape -1- affixed as shown to prevent damage to paintwork.

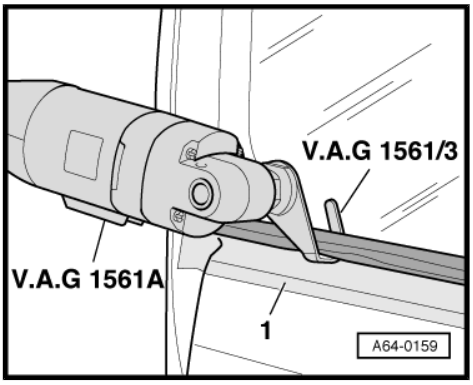

– Cut along rear edge of window.

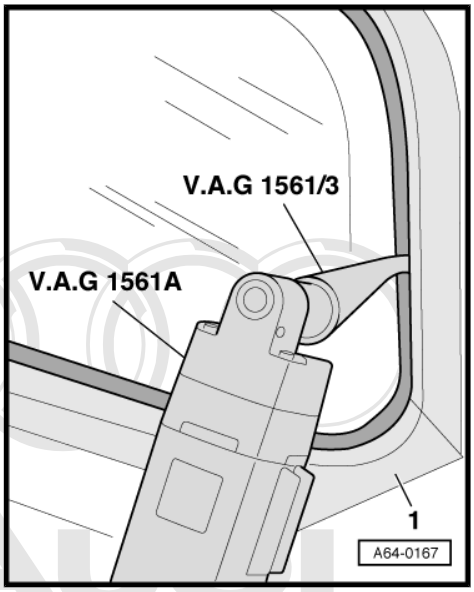

– Then cut along top edge of window.

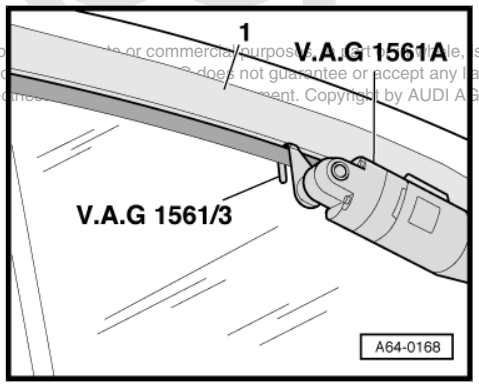

Protected by copyright. Copying for private or commercial purposes, in part or in whole, is not permitted unless authorised by AUDI AG. AUDI AG does not guarantee or accept any liability with respect to the correctness of information in this document. Copyright by AUDI AG.

– Cut from top to bottom on C-pillar to cut out complete window and remove window from window flange.

Removing damaged window

– When removing a damaged side window, follow the procedure for removing a damaged REAR window ⇒ page 95 .

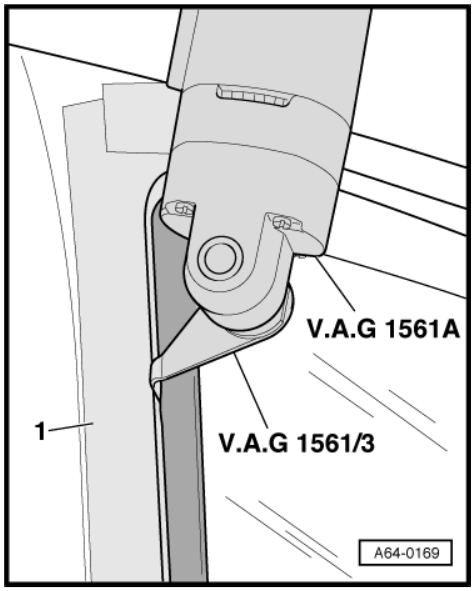

4.3 Installing new window

– Before installing a new window, cut back remaining adhesive bead on body flange for window, but do NOT remove completely.

Caution

The remaining sealant is required as a base for better adhesion of the new adhesive sealant. Keep bonding areas free of dirt and grease.

– Clean window in bonding area with cleaning fluid -D 009 401 04- and prime with glass and paint primer -D 009 200 02- .

– Note 10-minute flash-off period for primer.

– Note differing distances between adhesive bead and edge of window ⇒ Item 2 (page 88) .

– Apply adhesive.

- Adhesive bead height = 12 mm + 3 mm
- Width of bead = 8 mm ± 2 mm

Caution

Window must be fitted within 10 minutes, otherwise the adhesive properties of the adhesive sealant will be impaired.

Protected by copyright. Copying for private or commercial purposes, in part or in whole, is not permitted unless authorised by AUDI AG. AUDI AG does not guarantee or accept any liability with respect to the correctness of information in this document. Copyright by AUDI AG.

– Fit window in window opening and push it towards the front, so that stop -2- makes contact with C-pillar -1-.
– Fix window in position with adhesive tape.
– Note minimum drying time ⇒ page 78 .

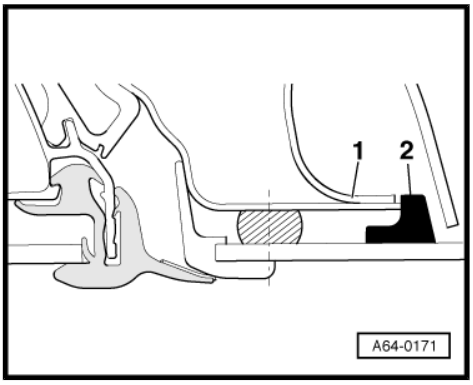

Protected by copyright. Copying for private or commercial purposes, in part or in whole, is not permitted unless authorised by AUDI AG. AUDI AG does not guarantee or accept any liability with respect to the correctness of information in this document. Copyright by AUDI AG.

5 Rear window

5.1 Removing and installing rear window - exploded view

1 - Rear window

- ❑ Removing undamaged window ⇒ page 92
- ❑ Removing damaged window ⇒ page 95

2 - Adhesive bead

- ❑ Note different distances from edge of window.
- ❑ Distance -a- between the second adhesive bead (top) to adhesive bead at side should be approx. 10 mm ⇒ page 96 .

3 - Locking plate

- ❑ In the area of the spoiler, half of the adhesive must be applied on the locking plate and half on the window glass.

4 - Adhesive stopper strip

- ❑ Is supplied together with rear window.
- ❑ Adhesive must not spread beyond the stopper strip.

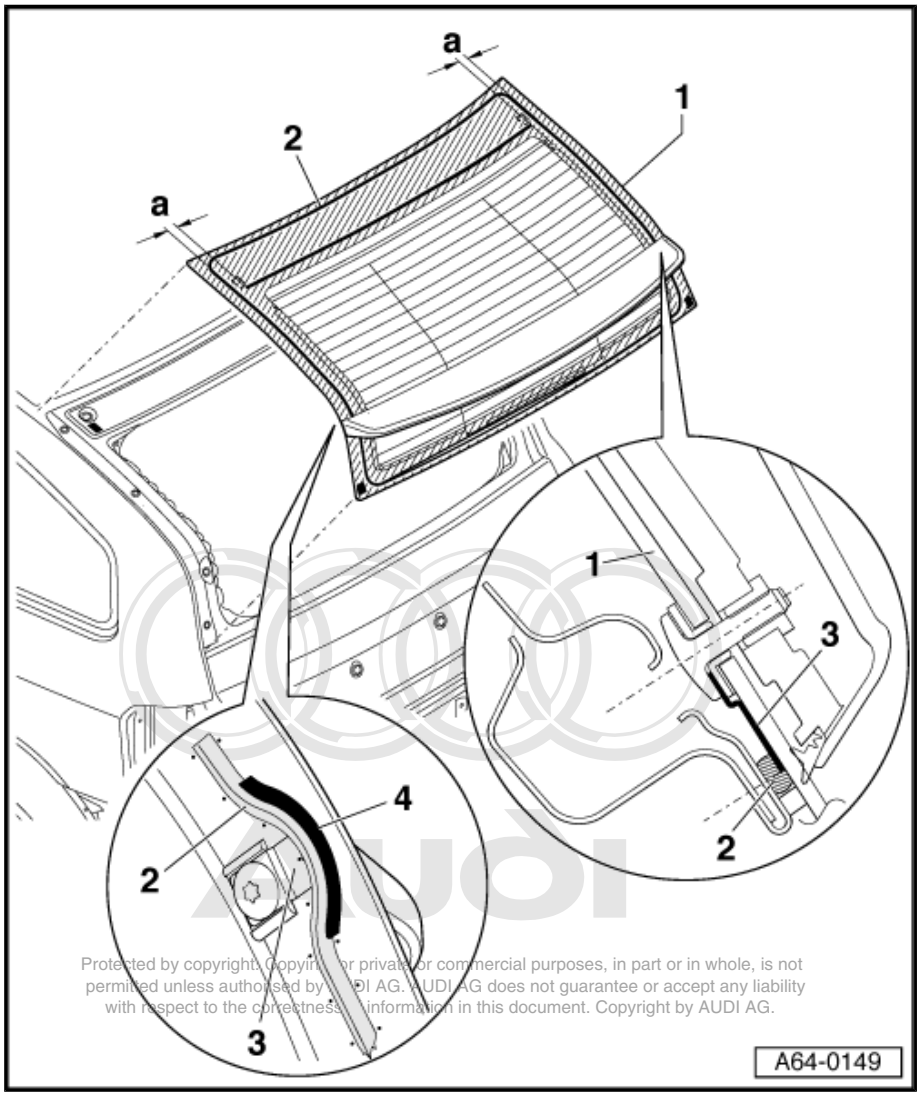

Protected by copyright. Copying for private or commercial purposes, in part or in whole, is not permitted unless authorised by AUDI AG. AUDI AG does not guarantee or accept any liability with respect to the correctness of information in this document. Copyright by AUDI AG.

5.2 Removing rear window

WARNING

When removing window glass, ALWAYS wear protective goggles and leather gloves.

Undamaged window

– Mask area along bottom edge of window with fabric-backed adhesive tape to prevent damage to paintwork.

– Also mask roof area along top edge of rear window with fabric-backed adhesive tape.

– Remove rear lid trim ⇒ General body repairs, interior; Rep. Gr. 70 .

– Unplug connectors for rear window heating and press connecting tabs onto window.
– Remove high-level brake light ⇒ Electrical system; Rep. Gr. 94 .
– Working from inside and starting at top left, cut along the second adhesive bead (top) using electric cutter -V.A.G 1561 A- and blade (58 mm) -V.A.G 1561/2- .

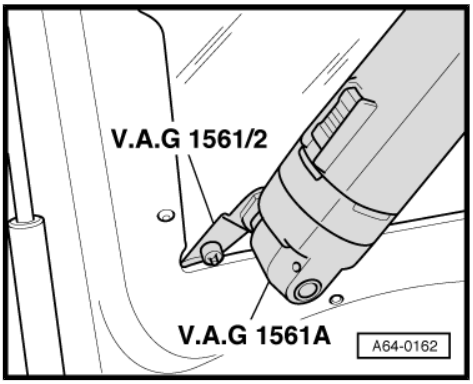

– Cut all along the rear window to the right.

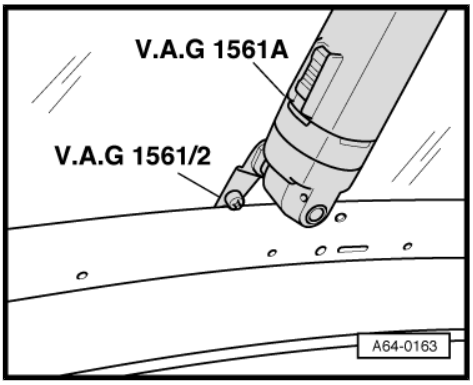

– Mask the roof area with fabric-backed adhesive tape.
– Working from outside, cut through adhesive beads -1- and -2- at top using an electric cutter.

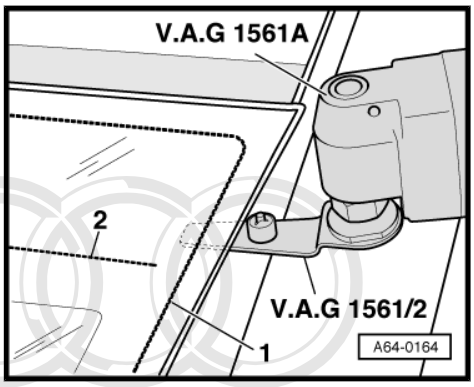

– Use awl -1- to pierce adhesive bead at top left of rear lid -2- from inside towards the outside.
– Thread cutting thread into awl and pull it through to the inside.

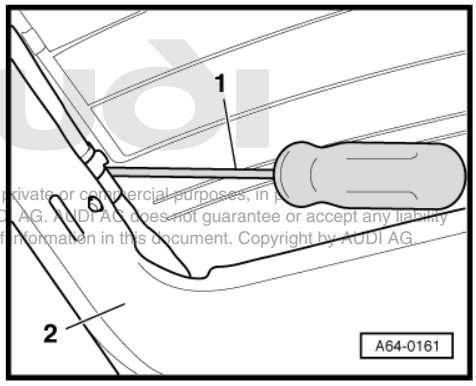

Protected by copyright. Copying for private or commercial purposes, in part, is not permitted unless authorised by AUDI AG. AUDI AG does not guarantee or accept any liability with respect to the correctness of information in this document. Copyright by AUDI AG.

– Thread cutting thread outside vehicle into pull handle -1- and clamp it in place at position -A-.
– Thread cutting thread inside vehicle into handle -2- and use clamping bolt to secure it in position -B-.

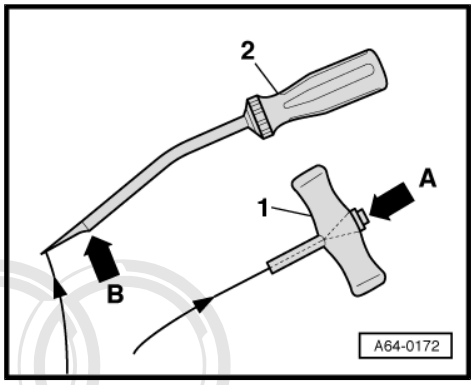

– A second mechanic then uses the handle -2- to pierce into the adhesive bead approx. 200 mm from the initial entry point of the cutting thread to obtain an anchorage point.
– The mechanic standing outside the vehicle then uses pull handle -1- to pull cutting thread through adhesive bead -3- as far as the anchorage point (position of handle -2-).
– The mechanic inside the vehicle pulls the cutting thread towards the inside and pierces into the adhesive bead once more approx. 200 mm beyond the first anchorage point.
– The mechanic outside the vehicle then pulls the cutting thread through the adhesive bead again.
– You may have to make sawing movements with the cutting thread to cut along lower radius sections.

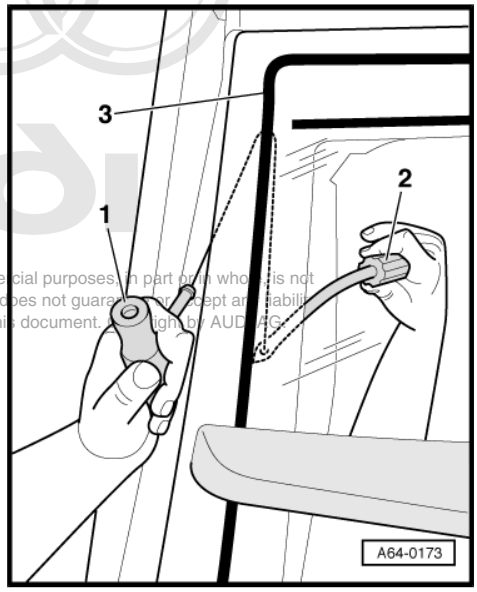

Protected by copyright. Copying for private or commercial purposes, in part or in whole, is not permitted unless authorised by AUDI AG. AUDI AG does not guarantee or accept any liability with respect to the correctness of information in this document. © Copyright by AUDI AG.

– Adhesive tape -4- to prevent damage to paintwork.
– After cutting through radius section use handle -2- to pierce adhesive bead -3- again from the inside. Then use pull handle -1- to pull cutting thread through adhesive bead from outside.
– Repeat these steps until you have cut out the complete window.

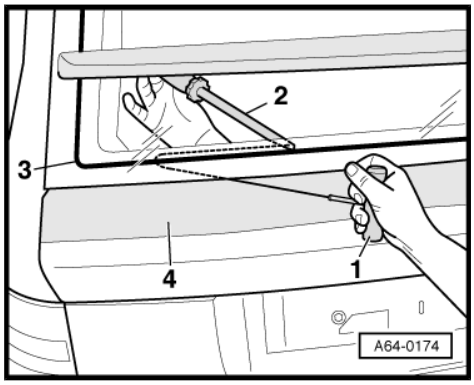

Removing damaged window

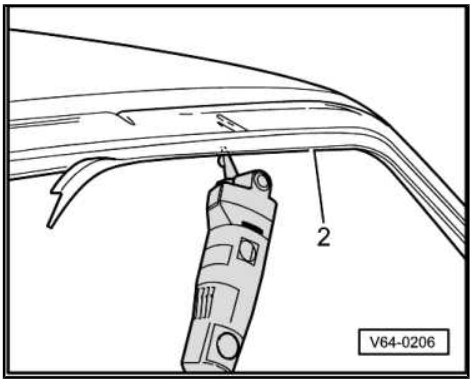

- Protect body and interior against glass splinters.
- Remove glass fragments down to adhesive sealant.
- Unplug connectors for rear window heating and aerial.
- Cover flange -2- all round with fabric-backed adhesive tape.

> **WARNING**
>
> *Always wear protective goggles and leather gloves.*

- Cut through adhesive sealant (with glass fragments) in window opening using electric cutter and blade (offset) -V.A.G 1561/10- (with stop roller).

5.3 Installing rear window

Applying adhesive bead; distances to edge of window

1 - Rear window

- ❑ Removing ⇒ page 92 .

2 - Adhesive bead

- ❑ Distance from top edge of window: dimension -a-= 23 mm ± 2 mm
- ❑ Distance from bottom edge of window: dimension -c-= 23 mm ± 2 mm
- ❑ Distance from side edges of window: dimension -d- = 12 mm ± 1 mm

Note

After you have applied the primer in the centre between the markings you must also apply the adhesive so that it is in the centre of the primer.

3 - Additional adhesive bead

- ❑ Distance from top edge of window: dimension -b-= 137 mm ± 2 mm (measured in centre of vehicle)
- ❑ Note correct distance to adhesive bead on the side ⇒ page 96 .

4 - Spacers

- ❑ Bond on in centre of markings ⇒ page 95 and ⇒ page 96 .

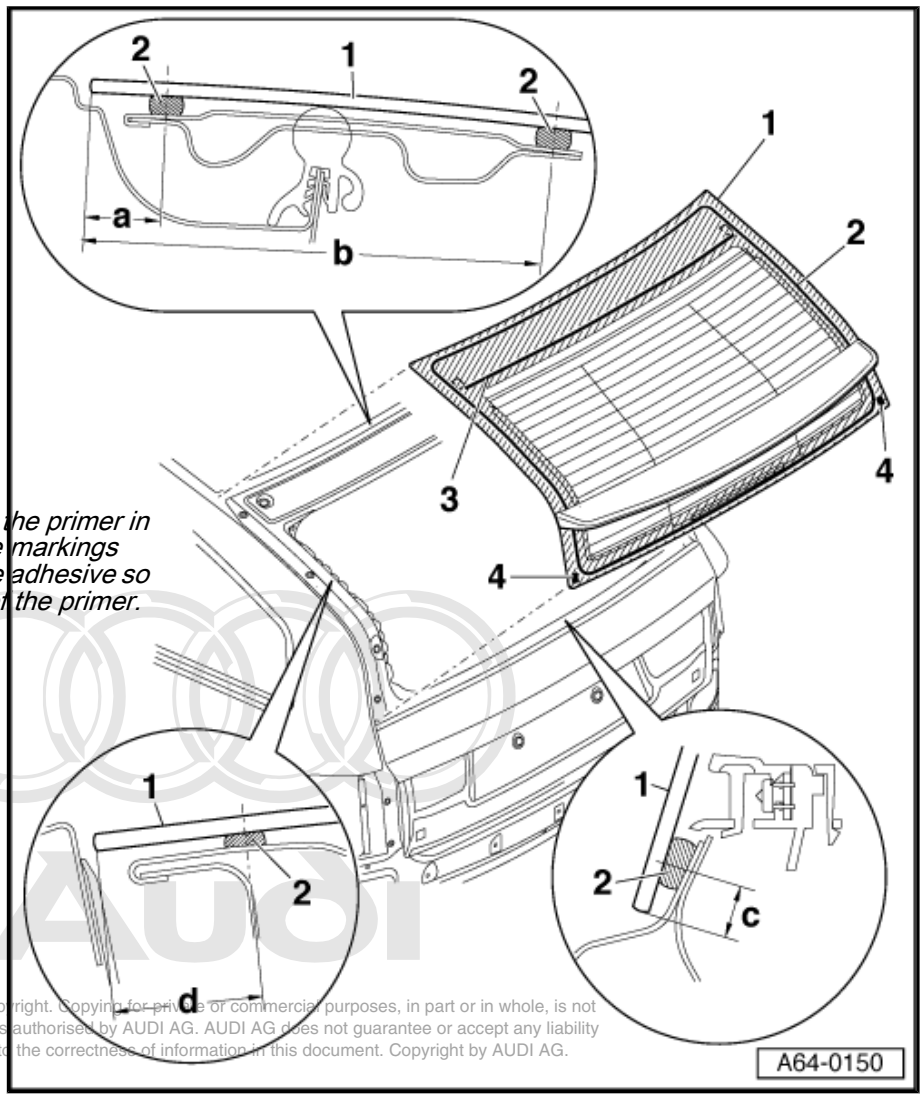

Protected by copyright. Copying for private or commercial purposes, in part or in whole, is not permitted unless authorised by AUDI AG. AUDI AG does not guarantee or accept any liability with respect to the correctness of information in this document. Copyright by AUDI AG.

Bonding on spacers

– Detach backing foil from spacers.

– Bond on spacers -2- in centre of markings on black ceramic band on window -1-.

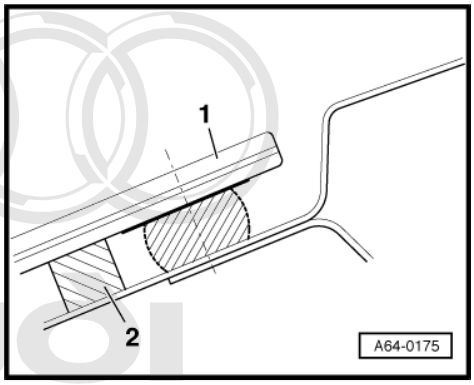

Distance between additional adhesive band and adhesive bead on the side

Protected by copyright. Copying for private or commercial purposes, in part or in whole, is not permitted unless authorised by AUDI AG. AUDI AG does not guarantee or accept any liability with respect to the correctness of information in this document. Copyright by AUDI AG

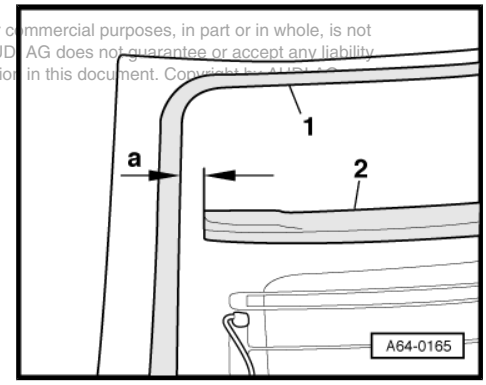

Note

To prevent condensation and to make sure that air can escape when installing, the second adhesive bead (at the top of the window) must be applied at distance -a- from adhesive beads on side.

– Distance -a- from adhesive bead -2- to adhesive bead -1- must be approx. 10 mm.

5.4 Preparations before installing a new window

Note

- *If the window flange was damaged, the paintwork must be restored according to specifications in the ⇒ Assessment of vehicle paintwork manual and anti-corrosion coating must be applied according to the ⇒ Surface Treatments/Chemical Materials manual.*
- *First clean restored area using cleaning solution -D 009 401 04- , then apply glass and paint primer -D 009 200 02- .*

If "old" rear window is undamaged

Note

- *When reusing an undamaged rear window, cut back adhesive sealant on the window glass and body flange until it is even using electric cutter -V.A.G 1561 A- and scraper (25 mm) - V.A.G 1561/8- . Do NOT remove adhesive sealing material completely.*
- *The remaining material is required as a base for better adhesion of the newly applied adhesive sealant.*
- *Keep bonding areas free of dirt and grease.*
- *Do not prime or use cleaning solution on bonding areas.*

– Detach backing foil from spacers.
– Bond on spacers -2- in centre of markings on black ceramic band on window -1-.
– Apply new adhesive to remaining adhesive all around.
– Use double suction lifters to fit window into window opening and press window in at bottom, as far as the spacers.

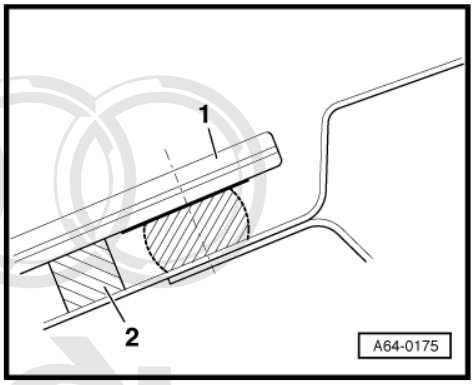

– Slide window -1- upwards to reach dimension -a- = 4.5 mm and fix window in this position with adhesive tape.

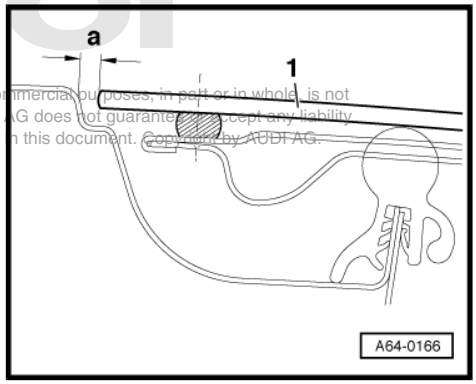

If installing a new rear window

Protected by copyright. Copying for private or commercial purposes, in part or in whole, is not permitted unless authorised by AUDI AG. AUDI AG does not guarantee or accept any liability with respect to the correctness of information in this document. Copyright by AUDI AG.

– Clean bonding areas all around using cleaning fluid -D 009 401 04- .
– Prime bonding areas using glass/paint primer -D 009 200 02- .
– Note different distances to edges of window ⇒ page 95 .
– Apply primer between markings on black ceramic band.

Note

The ceramic coating on the glass is not a primer. The glass must always be primed before applying adhesive sealant.

Caution

When applying primer, make sure primer/adhesive bead does NOT come into contact with busbar of rear window heating.

Note

Do not "rework" primer strip until it has dried completely.

Applying primer

– Use applicator -1- to apply primer -2- evenly in one stroke between markings on black ceramic band.
– Start application with fully soaked felt.
– Drying time approx. 10 minutes.
– Width of primer coat -a- = approx. 20 mm.

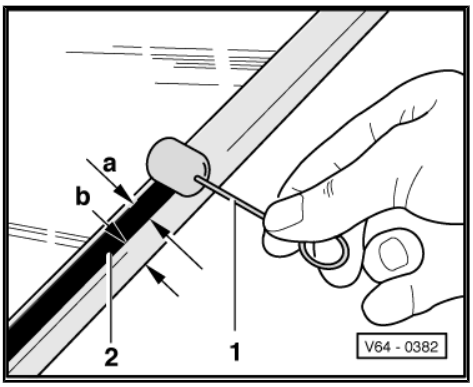

Dimensions for applying adhesive

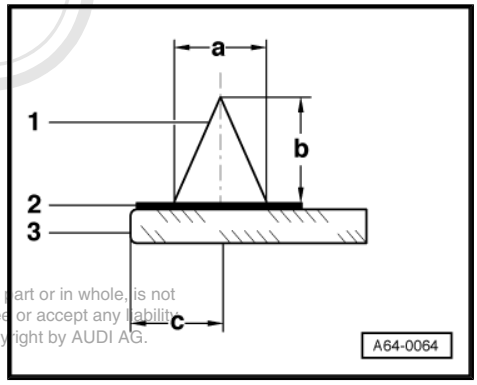

1 - Adhesive bead

2 - Primer

3 - Rear window

- Dimension -a- = 8 mm ± 2 mm.
- Dimension -b- = 13.5 mm ± 1.5 mm.
- Dimension -c-: note different distances from edge of windscreen ⇒ Item 2 (page 95) .

Copyright by Copyright Copyright Copyright Copyright Copyright purposes, in part or in whole, is not permitted unless authorised by AUDI AG. AUDI AG does not guarantee or accept any liability with respect to the correctness of information in this document. Copyright by AUDI AG.

– Apply adhesive in centre of primer.

– Use double suction lifters to fit window into window opening and press window in at bottom, as far as the spacers.

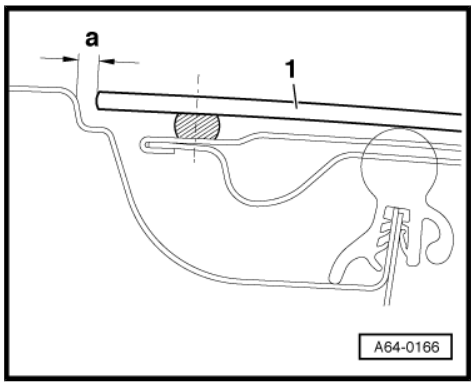

– Slide window -1- upwards to reach dimension -a- = 4.5 mm and fix window in this position with adhesive tape.

– Note minimum drying time ⇒ page 78 .

66 – Exterior equipment

1 Protective strips

1.1 Contact corrosion

- Contact corrosion can occur if unsuitable fasteners are used on the vehicle (bolts, nuts, washers etc.).
- For this reason, only fasteners with a special surface coating (Dachromet) have been fitted on the vehicle. These fasteners can be identified by their greenish colour.
- In addition, all rubber and plastic parts and all adhesives are made of non-conductive materials.
- Always renew parts if you are in any doubt as to whether the old part can be used again.

Protected by copyright. Copying for private or commercial purposes, in part or in whole, is not permitted unless authorised by AUDI AG. AUDI AG does not guarantee or accept any liability with respect to the correctness of information in this document. Copyright by AUDI AG.

Caution

- *Always use genuine replacement parts (same as original equipment). These have been tested and are aluminium-compatible.*
- *Accessories must be approved by AUDI AG.*
- *Damage caused by contact corrosion is not covered by the warranty.*

1.2 Renewing protective side strips (top)

Note

- *It is not possible to remove the protective side strips without destroying them.*
- *To facilitate removal, heat protective side strips using a hot-air blower.*
- *The surfaces to be bonded must be at least as warm as room temperature. If necessary, heat up with a hot-air blower.*

1 - Protective side strip (front)

- ❑ Bonding surface must be free of adhesive residue, dust and grease.
- ❑ First clean outer panel using a cleaning solvent.
- ❑ Apply silicon remover to the bonding area and rub it dry.
- ❑ Remove protective foil -arrow-.
- ❑ Fit protective side strip with guide pins onto door as shown.
- ❑ Press protective side strip on firmly all along.

2 - Protective side strip (rear)

- ❑ Installation as described for protective side strip (front).

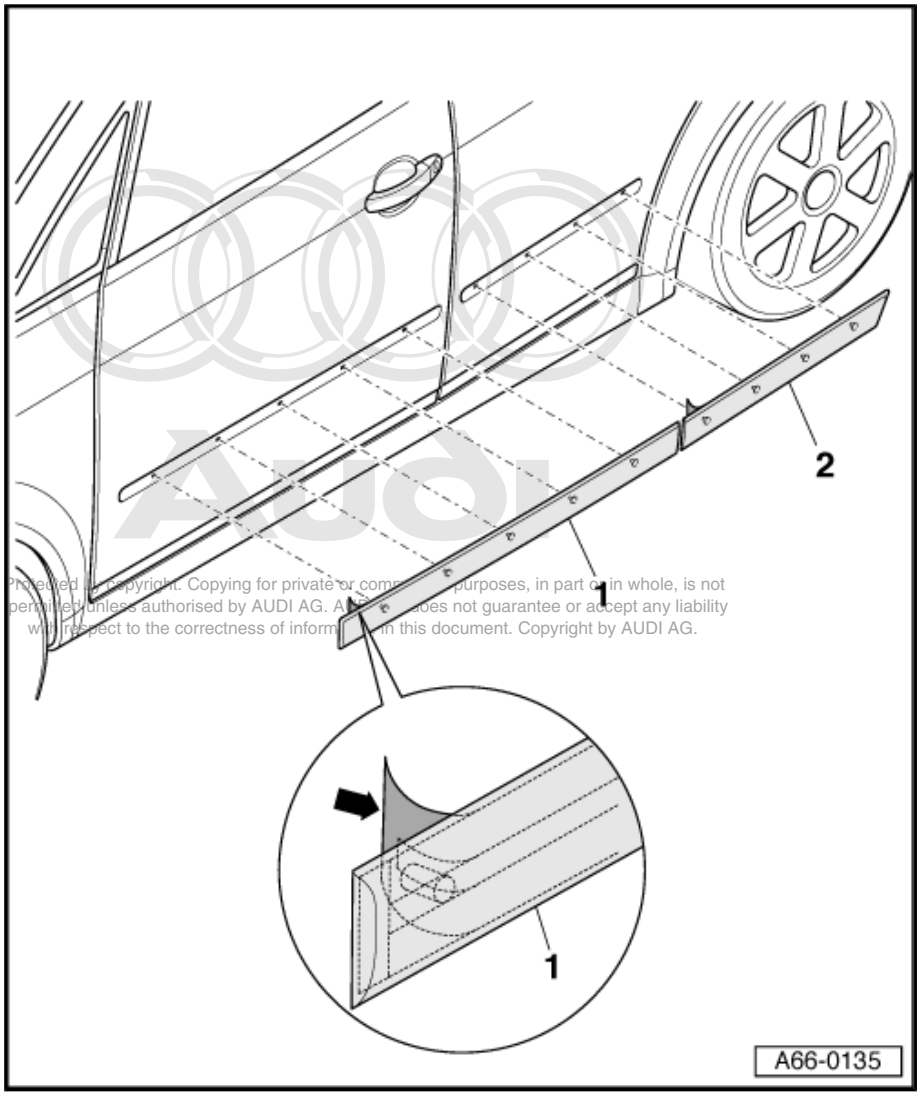

Protected by copyright. Copying for private or commercial purposes, in part or in whole, is not permitted unless authorised by AUDI AG. AUDI AG does not guarantee or accept any liability with respect to the correctness of information in this document. Copyright by AUDI AG.

1.3 Renewing protective side strips (bottom)

Note

- *To facilitate removal, heat protective side strips using a hot-air blower.*
- *The surfaces to be bonded must be at least as warm as room temperature. If necessary, heat up with a hot-air blower.*

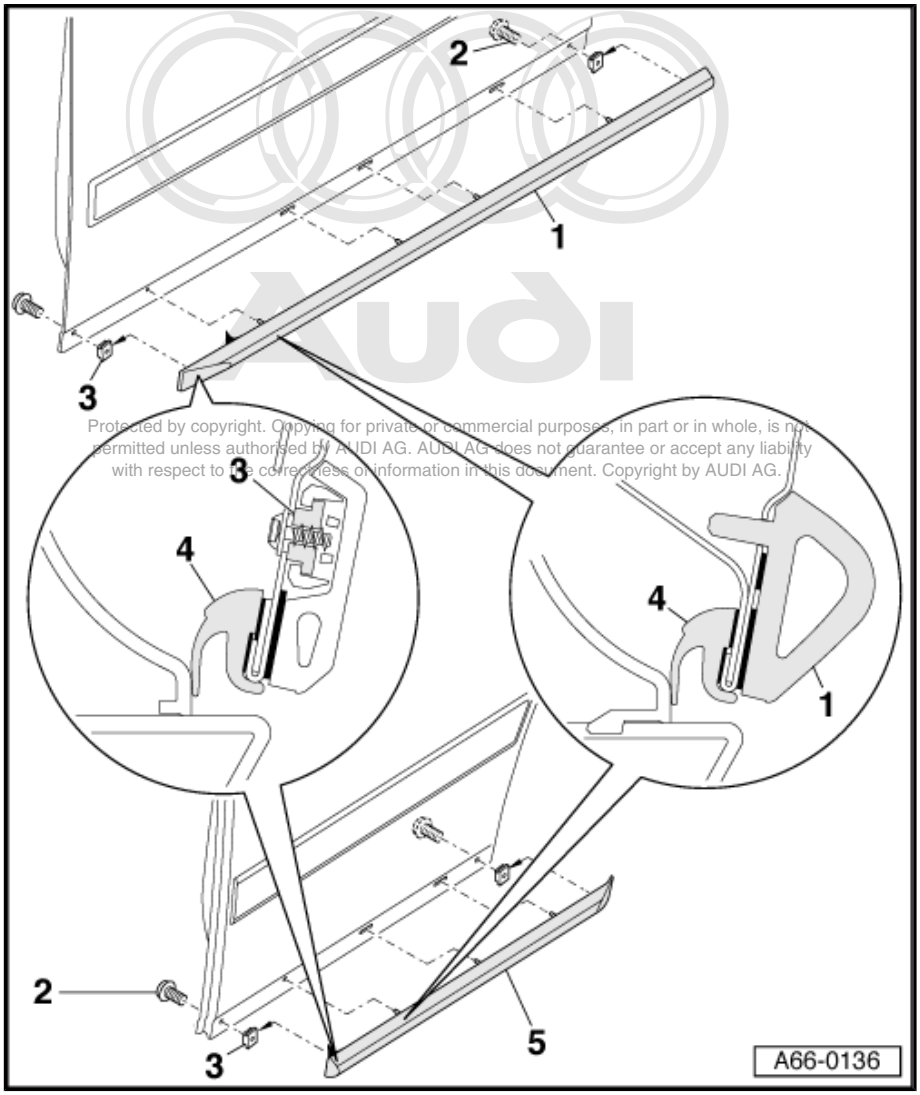

Protected by copyright. Copying for private or commercial purposes, in part or in whole, is not permitted unless authorised by AUDI AG. AUDI AG does not guarantee or accept any liability with respect to the correctness of information in this document. Copyright by AUDI AG.

1 - Protective side strip (front)

❑ Removing:

– Remove bolts ⇒ Item 2 (page 101) .

– Carefully pull protective side strip off door.

❑ Installing:

– Bonding surface must be free of adhesive residue, dust and grease.

– First clean outer panel using a cleaning solvent.

– Apply silicon remover to the bonding area and rub it dry.

– Remove protective foil from protective side strip.

– Fit protective side strip with guide pins onto door as shown.

– Press protective side strip on firmly all along.

– Fit bolt back in place and tighten to 2 Nm.

2 - Cross-head screw

❑ 2 Nm

3 - Threaded clip

❑ Pressed into side strip.

4 - Trim cover

❑ Installing ⇒ page 102 .

5 - Protective side strip (rear)

❑ Removal and installation as described for door (front).

1.4 Removing and installing trim cover for side member

Note

- *It is not possible to remove the trim covers without destroying them.*
- *To facilitate removal, heat trim covers using a hot-air blower.*
- *The surfaces to be bonded must be at least as warm as room temperature. If necessary, heat up with a hot-air blower.*

1 - Front door

2 - Trim cover (front)

- ❑ Pull off to remove.

3 - Protective side strip (front)

4 - Rear door

5 - Trim cover (rear)

- ❑ Pull off to remove.

6 - Protective side strip (rear)

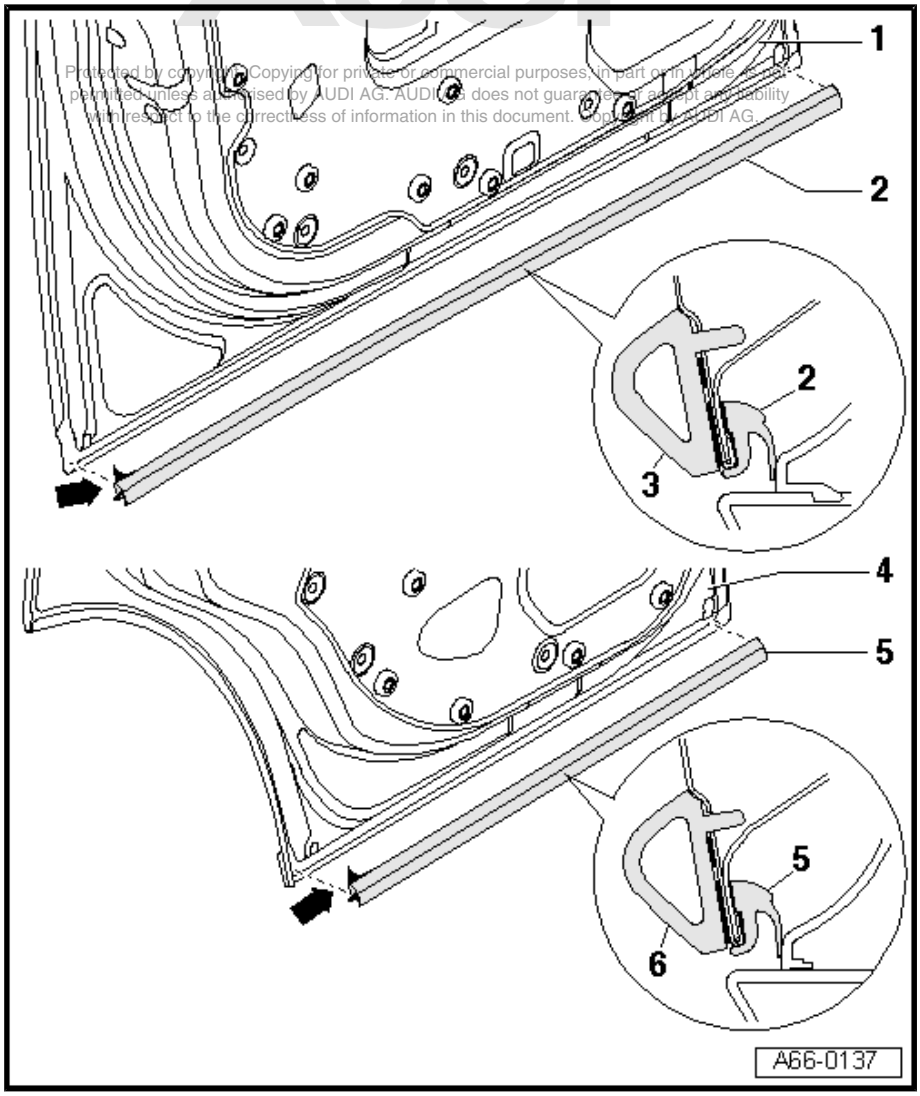

Protected by copyright. Copying for private or commercial purposes, in part or in whole, is not permitted unless authorised by AUDI AG. AUDI AG does not guarantee or accept any liability with respect to the correctness of information in this document. Copyright by AUDI AG.

2 Trim panels

2.1 Removing and installing trim panel for B-pillar

1 - Threaded sleeve (4x)

2 - Retainer

3 - Bolt with washer

❑ 1.5 Nm

4 - Bolt with washer

❑ 1.5 Nm

5 - Cover

6 - Threaded sleeve (2x)

7 - Trim panel for B-pillar

❑ Removing:

– Unclip cover ⇒ Item 5 (page 103) .

– Unclip cover ⇒ Item 10 (page 103) downwards.

– Unscrew bolts ⇒ Item 4 (page 103) and ⇒ Item 8 (page 103) out of threaded sleeves.

– Detach trim panel from B-pillar.

❑ Installing:

– Fit top of trim panel in retainer and slide trim panel onto roof frame so that dimension -a- = 0.7 mm.

– Screw in bolts ⇒ Item 8 (page 103) .

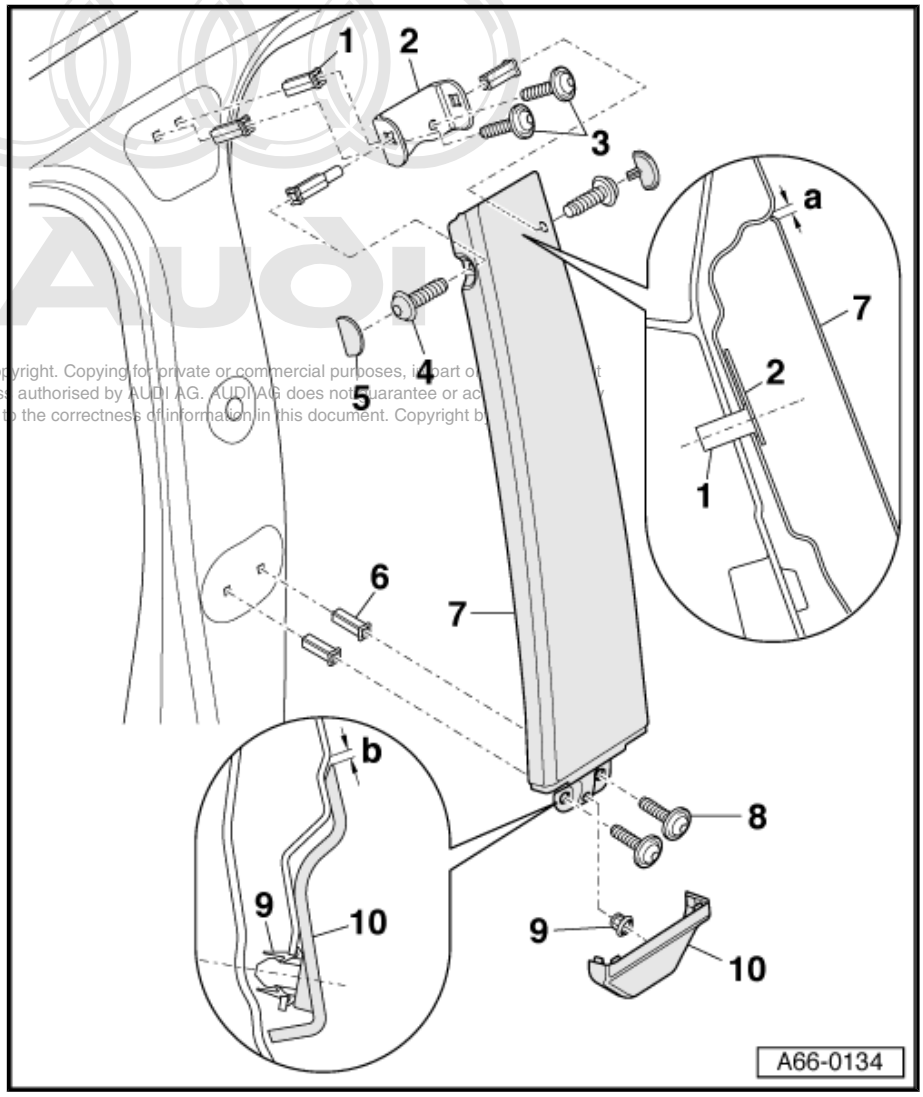

– Slide cover ⇒ Item 10 (page 103) on at bottom and press into clip ⇒ Item 9 (page 103) .

– Dimension -b- = 1.5 mm.

8 - Bolt with washer

❑ 1.5 Nm

9 - Clip

10 - Cover

❑ When installing, first slide cover into bottom of trim panel for B-pillar, then press it into clip ⇒ Item 9 (page 103) .

❑ Adjust trim panel ⇒ Item 7 (page 103) so that dimension -b- = 1.5 mm, making sure that dimension -a- (distance to roof frame) is no larger than 0.7 mm.

Protected by copyright. Copying for private or commercial purposes, in part or in whole, is not permitted unless authorised by AUDI AG. AUDI AG does not guarantee or accept any liability with respect to the correctness of information in this document. Copyright by AUDI AG.

3 Rear-view mirror

3.1 Removing and installing rear-view mirror

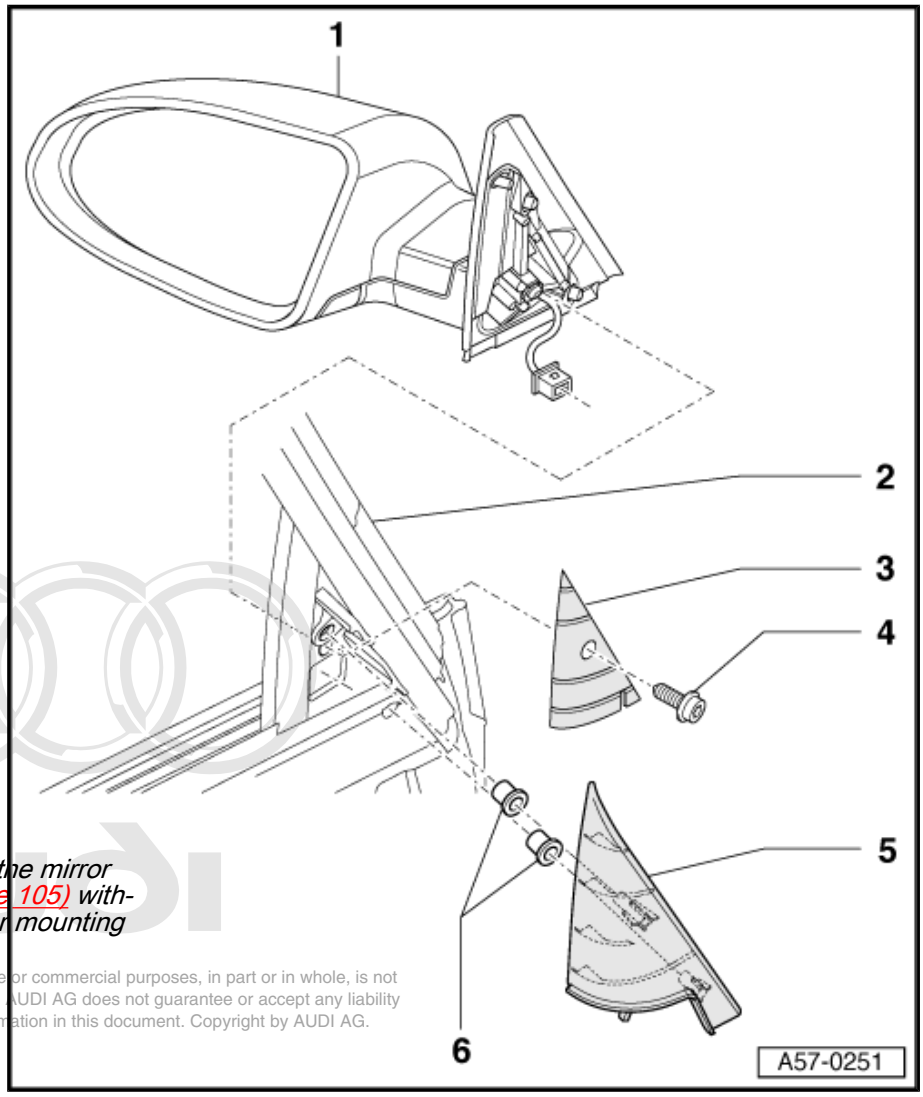

1 - Rear-view mirror

- ❑ To remove, first detach door trim ⇒ General body repairs, interior; Rep. Gr. 70 .
- ❑ Unclip cover ⇒ Item 5 (page 104) .
- ❑ Unplug electrical connector for mirror adjustment.
- ❑ Unscrew bolt ⇒ Item 4 (page 104) and remove seal ⇒ Item 3 (page 104) .
- ❑ Detach rear-view mirror from door.
- ❑ After installing rear-view mirror, seal off opening for wires in door subframe using butyl strip -AKL 450 005 05- . Use the butyl strip -AKL 450 005 05- from the kit “Fasteners and seals for mounting panel” ⇒ Parts Catalogue .

Note

It is possible to renew the mirror housing ⇒ Item 7 (page 105) without removing the mirror mounting frame.

Protected by copyright. Copying for private or commercial purposes, in part or in whole, is not permitted unless authorised by AUDI AG. AUDI AG does not guarantee or accept any liability with respect to the correctness of information in this document. Copyright by AUDI AG.

2 - Door subframe

3 - Seal

4 - Bolt with washer

- ❑ 12 Nm

5 - Cover

6 - Clip

3.2 Removing and installing mirror housing

1 - Torx bolts
- ❑ 1 Nm

2 - Cover

3 - Mirror glass
- ❑ Protect top and bottom of mirror housing from damage with fabric-backed adhesive tape.
- ❑ To unclip use removal lever -80-200- .

4 - Torx bolts
- ❑ 1 Nm

5 - Mirror mounting frame
- ❑ Removing ⇒ page 104 .

6 - Mirror adjustment unit

7 - Mirror housing
- ❑ Removing:

– Unscrew Torx bolts ⇒ Item 1 (page 105) and detach cover ⇒ Item 2 (page 105) .

– Unscrew Torx bolts from adjuster unit ⇒ page 105 and unplug electrical connector.

– Unscrew Torx bolts ⇒ Item 4 (page 105) and lift mirror housing off mirror mounting frame.

8 - Hexagon socket head bolt
- ❑ 12 Nm

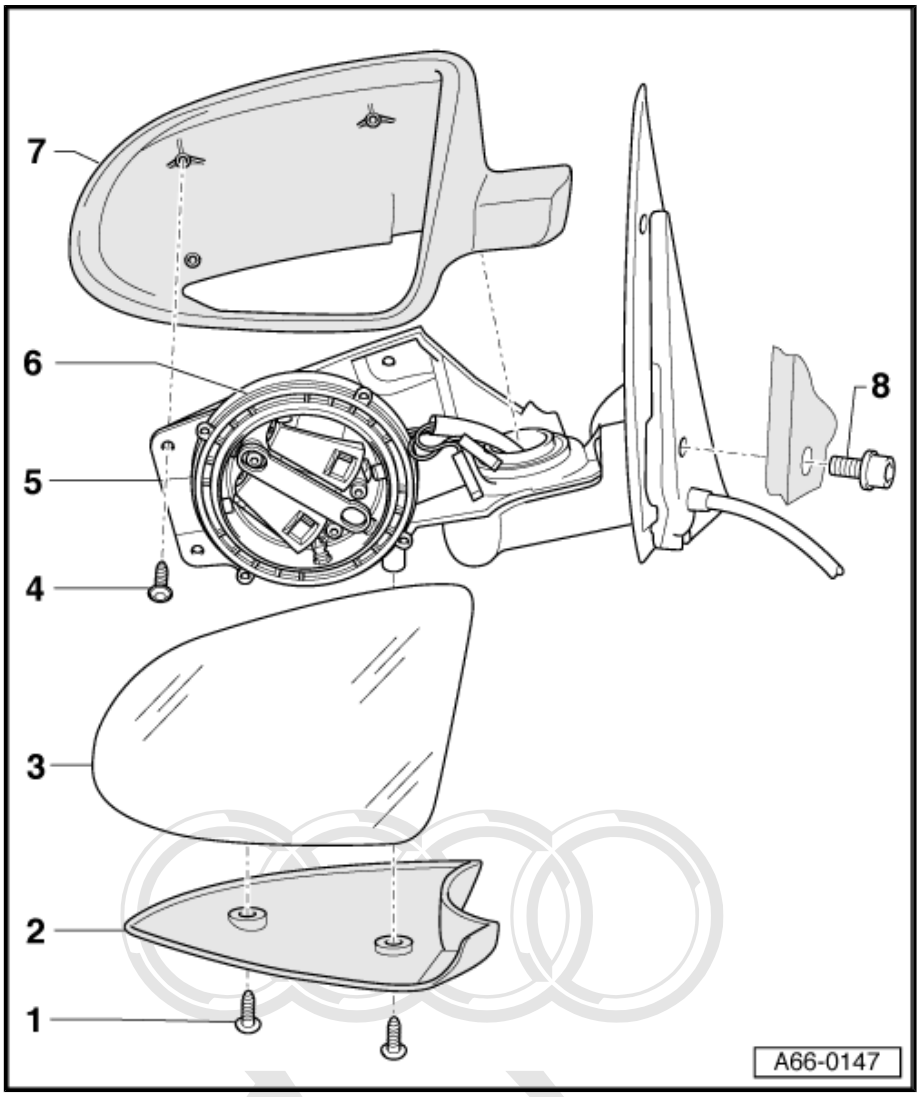

3.3 Renewing mirror glass and adjuster unit

Special tools and workshop equipment required

♦ Removal lever -80-200-

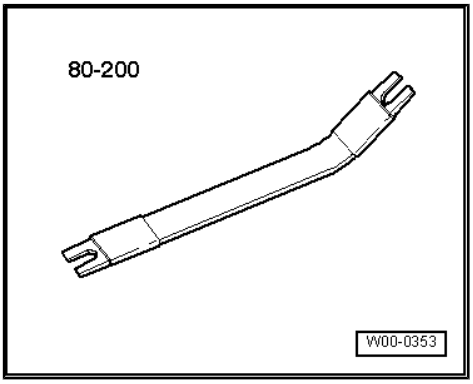

Protected by copyright. Copying for private or commercial purposes, in part or in whole, is not permitted unless authorised by AUDI AG. AUDI AG does not guarantee or accept any liability with respect to the correctness of information in this document. Copyright by AUDI AG.

– Before removing mirror glass mask mirror housing at top and bottom with adhesive tape.
– Use removal lever -80-200- to push mirror glass -3- off adjuster unit at top and bottom and unplug connector for mirror heating.
– To remove adjuster unit -2-, unscrew Torx bolts -arrows-.
– Detach adjuster unit from mirror mounting frame -1- and unplug connector for adjustment motors.

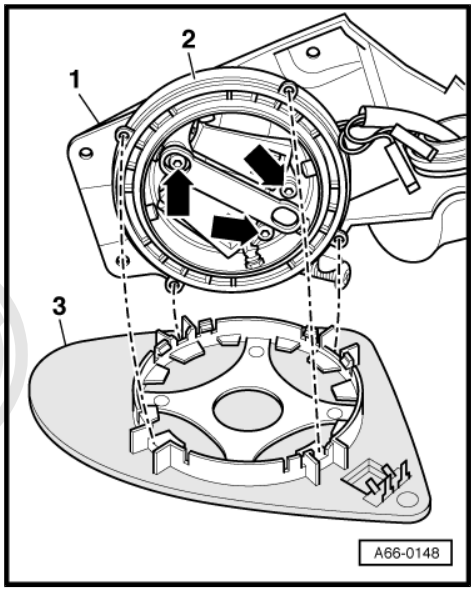

Protected by copyright. Copying for private or commercial purposes, in part or in whole, is not permitted unless authorised by AUDI AG. AUDI AG does not guarantee or accept any liability with respect to the correctness of information in this document. Copyright by AUDI AG.

4 Side member trim

4.1 Removing and installing side member trim

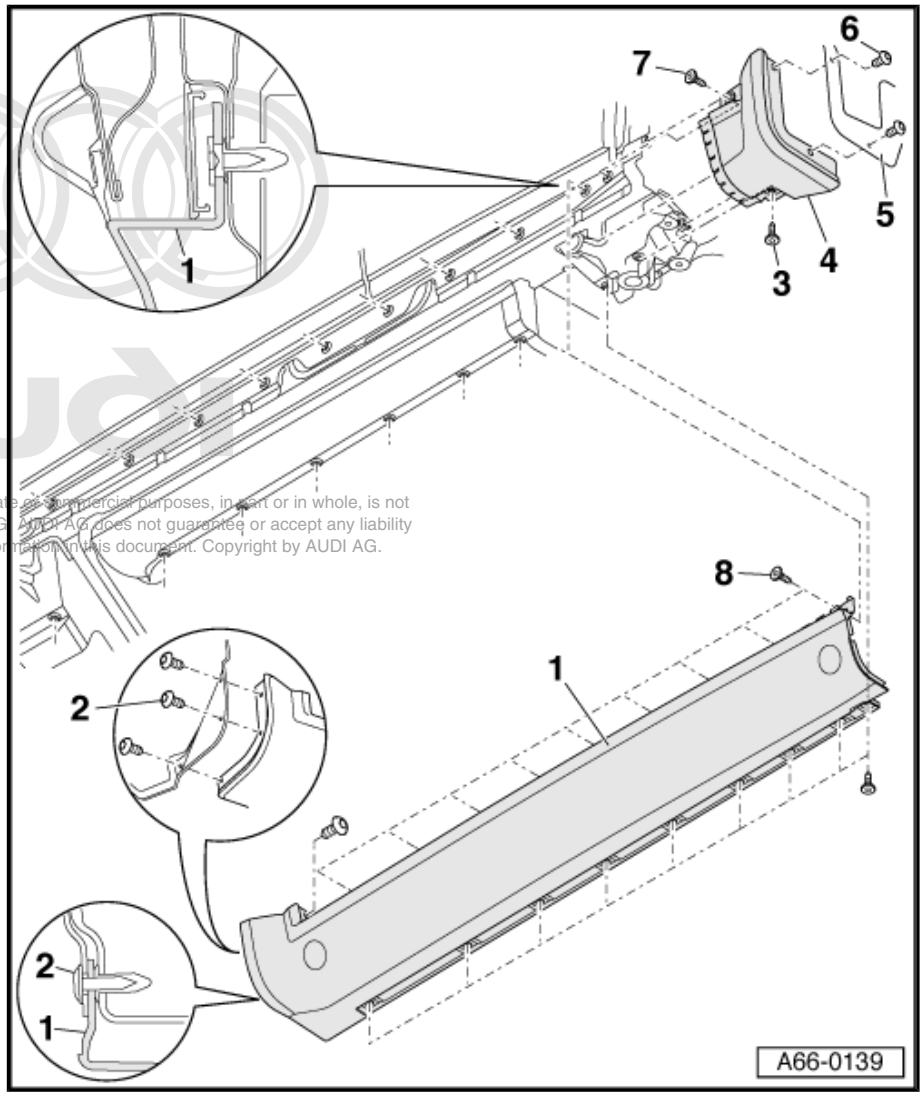

1 - Side member trim

- ❑ Remove cover (front and rear) for side member trim ⇒ page 108 .
- ❑ Remove bolts ⇒ Item 2 (page 107) on wheel housing liner (front).
- ❑ Unscrew bolts ⇒ Item 3 (page 107) , ⇒ Item 5 (page 107) and bolts ⇒ Item 6 (page 107) on wheel housing liner (rear).
- ❑ Pull off trim cap ⇒ Item 4 (page 107) towards the rear.
- ❑ Unscrew bolts ⇒ Item 8 (page 107) and remove side member trim from sill panel.

2 - Self-tapping screw

- ❑ 1.5 Nm

3 - Flange bolt

- ❑ 1.5 Nm

4 - Trim cap

- ❑ Remove cover (rear) for side member trim ⇒ page 108 .
- ❑ Unscrew bolts ⇒ Item 3 (page 107) , ⇒ Item 5 (page 107) and ⇒ Item 7 (page 107) and detach trim cap towards the rear.

5 - Wheel housing liner

6 - Flange bolt

- ❑ 1.5 Nm

7 - Flange bolt

- ❑ 1.5 Nm

8 - Flange bolt (18x)

Protected by copyright. Copying for private or commercial purposes, in part or in whole, is not permitted unless authorised by AUDI AG. AUDI AG does not guarantee or accept any liability with respect to the correctness of information in this document. Copyright by AUDI AG.

Cover for side member trim

– Push side member trim -3- downwards at point marked with -arrow- to disengage retainers on cover -1-.

– Gradually pull cover -1- out of side member trim -3-, first at bottom, then at top.

– When installing, make sure the retainers engage fully in the side member trim.

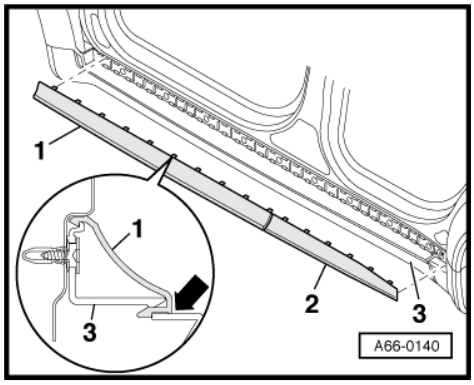

Protected by copyright. Copying for private or commercial purposes, in part or in whole, is not permitted unless authorised by AUDI AG. AUDI AG does not guarantee or accept any liability with respect to the correctness of information in this document. Copyright by AUDI AG.

5 Rear lid trim panel

5.1 Removing and installing trim panel

- Vehicle registration plate is removed.

– Remove trim for rear lid ⇒ General body repairs, interior; Rep. Gr. 70 .

– Unplug electrical connectors for microswitches and number plate light.

– Use a short screwdriver to unscrew bolts -1-.

– Tilt trim panel slightly towards the rear and lift it off out of the retainers.

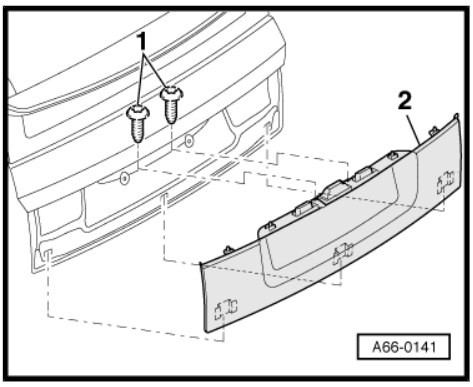

Protected by copyright. Copying for private or commercial purposes, in part or in whole, is not permitted unless authorised by AUDI AG. AUDI AG does not guarantee or accept any liability with respect to the correctness of information in this document. Copyright by AUDI AG.

6 Wheel housing liner

6.1 Removing and installing wheel housing liner (front)

Note

Depending on the equipment fitted, the wheel housing liners differ slightly regarding the position and number of fasteners.

1 - Wheel housing liner (front)

- ❑ Before removing, detach front wheel.
- ❑ Unscrew bolts ⇒ Item 3 (page 110)
- ❑ Press out pins of spreader rivets, pull spreader rivets out and take wheel housing liner out of opening.

2 - Spreader rivet

3 - Self-tapping screw

- ❑ 1.5 Nm

4 - Noise insulation

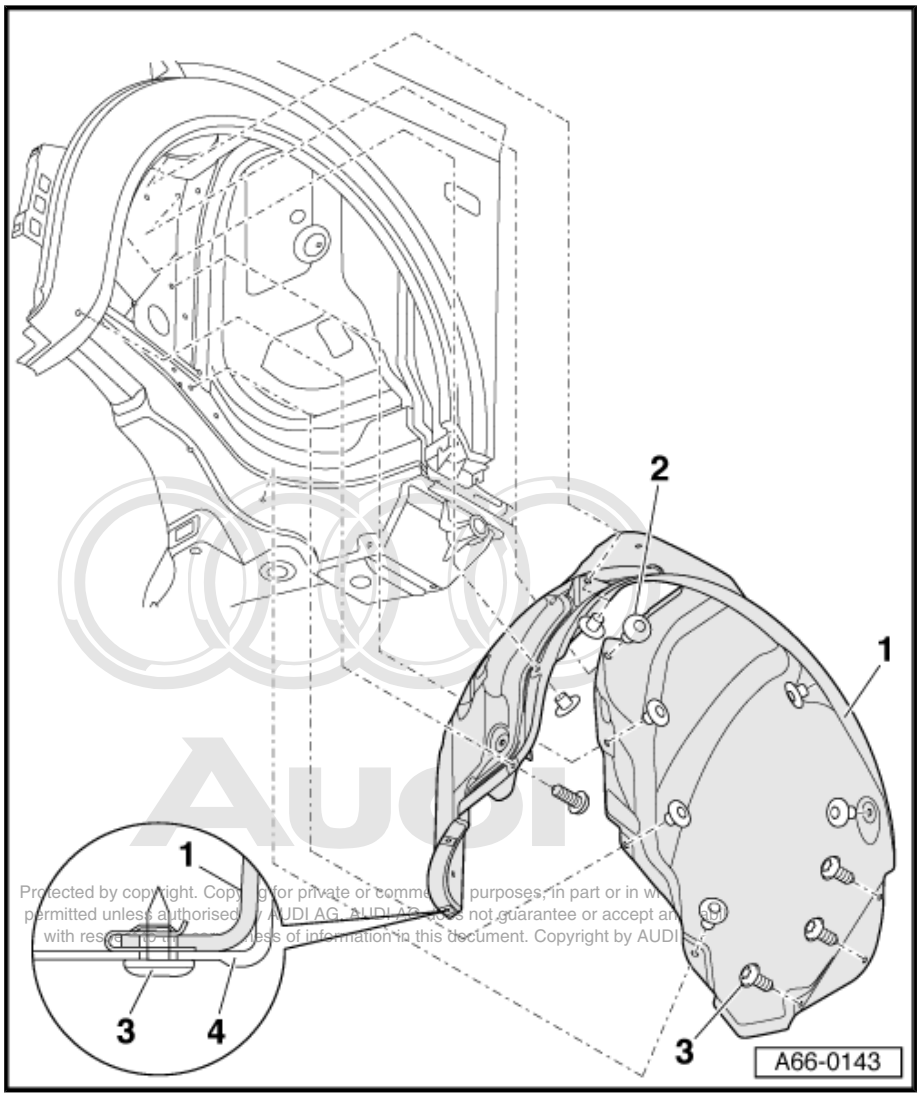

Protected by copyright. Copying for private or commercial purposes, in part or in whole, is not permitted unless authorised by AUDI AG. AUDI AG does not guarantee or accept any liability with respect to the correctness of information in this document. Copyright by AUDI AG.

6.2 Removing and installing wheel housing liner (rear)

Note

Depending on the equipment fitted, the wheel housing liners differ slightly regarding the position and number of fasteners.

1 - Wheel housing liner (rear)

- ❑ Before removing, detach rear wheel.
- ❑ Unscrew bolts ⇒ Item 3 (page 111) and ⇒ Item 5 (page 111) .
- ❑ Press out pins of spreader rivets ⇒ Item 2 (page 111) , pull spreader rivets out and take wheel housing liner out of opening.

2 - Spreader rivet

3 - Self-tapping screw

- ❑ 1.5 Nm

4 - Expanding nut

5 - Self-tapping screw

- ❑ 1.5 Nm

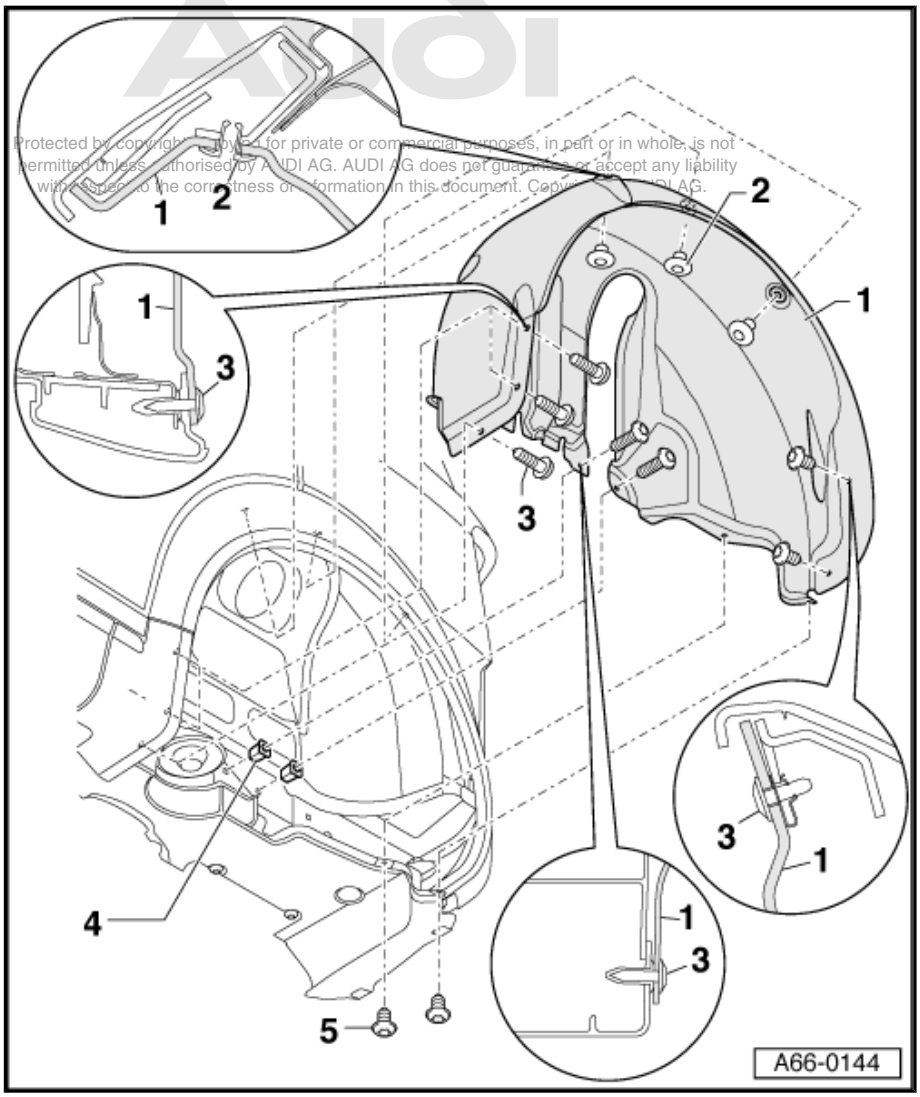

Protected by copyright. Copying for private or commercial purposes, in part or in whole, is not permitted unless authorised by AUDI AG. AUDI AG does not guarantee or accept any liability with respect to the correctness of information in this document. Copyright by AUDI AG.

7 Wheel arch trim

7.1 Removing and installing wheel arch trim

1 - Retaining bracket

2 - Bolt with washer

- ❑ 4 Nm

3 - Self-tapping screw

- ❑ 1.5 Nm

4 - Mounting bracket

5 - Bolt with washer

- ❑ 4 Nm

6 - Flange bolt

- ❑ 1.5 Nm

7 - Wheel arch trim

- ❑ Before removing, detach wheel housing liner.
- ❑ Remove bolts ⇒ Item 6 (page 112) .
- ❑ Slacken off bolts with washers ⇒ Item 5 (page 112) and detach wheel arch trim from mounting bracket.

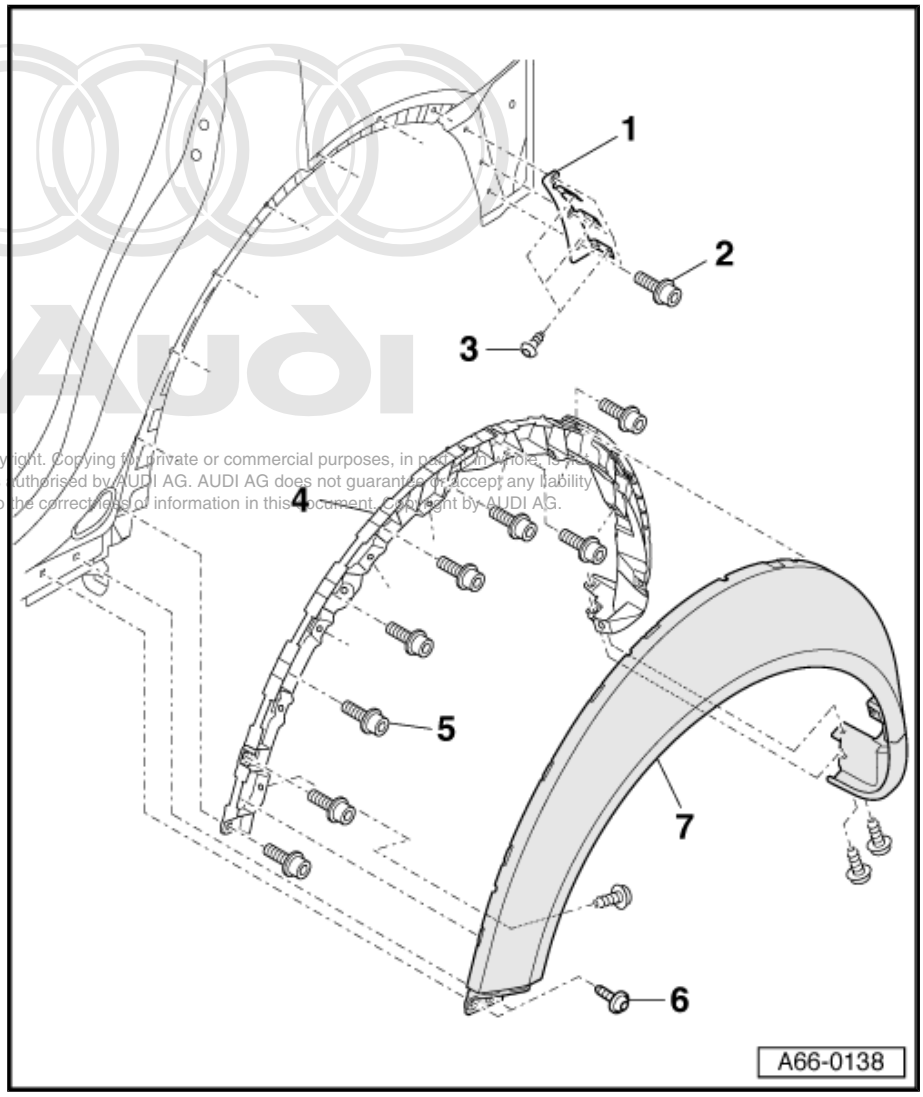

Protected by copyright. Copying for private or commercial purposes, in part or in whole, is not permitted unless authorised by AUDI AG. AUDI AG does not guarantee or accept any liability with respect to the correctness of information in this document. Copyright by AUDI AG.