POWER WINDOWS

Fig 1: Power Windows Circuit

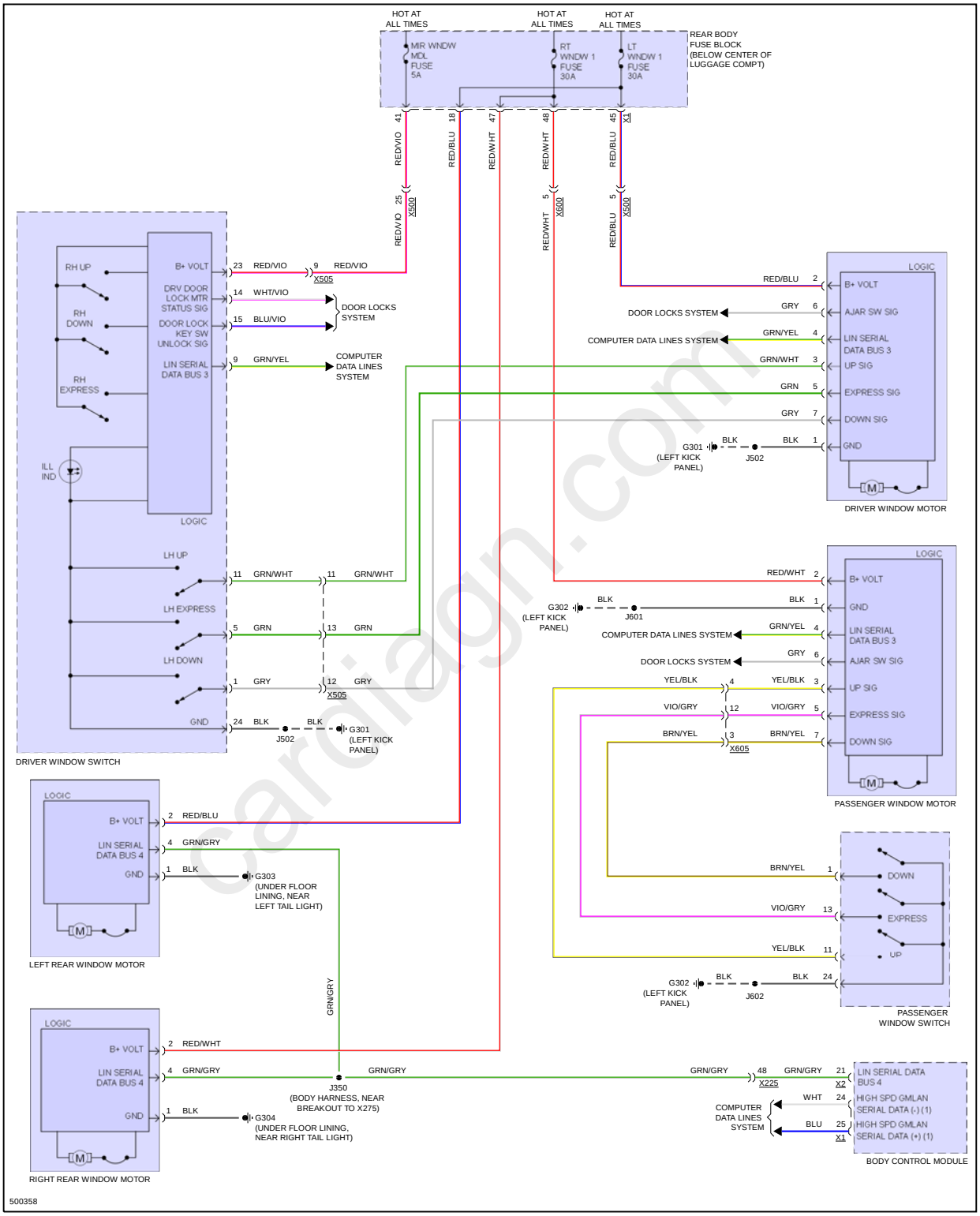

cardiagn.com