The

AUSTIN

A30 AND A35

SALOON : COUNTRYMAN VAN

WORKSHOP MANUAL

NOTE

Refer to the end of the appropriate Section for the latest instructions when carrying out work on the vehicle.

Additional copies of this publication (Part No. AKD991B) can only be obtained from an Austin Distributor.

Issued by

THE AUSTIN MOTOR COMPANY LIMITED

LONGBRIDGE · BIRMINGHAM · ENGLAND

PRINTED IN ENGLAND

INTRODUCTION

This Manual has been prepared to provide service operators with the necessary information for the correct maintenance and repair of the Austin A30/35. The Manual also serves as a ready reference book for service supervision and covers items of procedure for guidance of both fully qualified and the less experienced mechanic.

The early pages contain general data, general information and a summary of the maintenance attentions relating to this car.

The main body of the publication deals with dismantling, repair and reassembly and is grouped into Sections. The pages and illustrations are numbered consecutively within each Section and the Section title and letter are shown at the top of each page.

CONTENTS

	Section
Introduction	
General Data	
General Information	
Maintenance	
Engine	A
Ignition System	B
Cooling System	C
Fuel System	D
Clutch	E
Gearbox	F
Propeller Shaft	G
Rear Axle and Rear Suspension	H
Steering Gear	J
Front Suspension	K
Hydraulic Dampers	L
Braking System	M
Electrical Equipment	N
Wheels and Tyres	O
Lubrication	P
Body	R
Heater	S

The Austin A30 four door saloon.

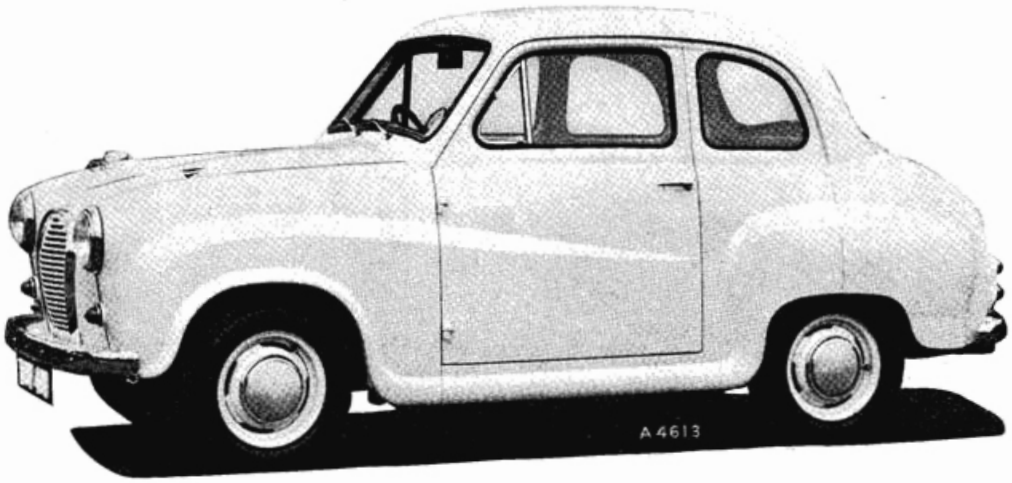

The Austin A35 two door saloon.

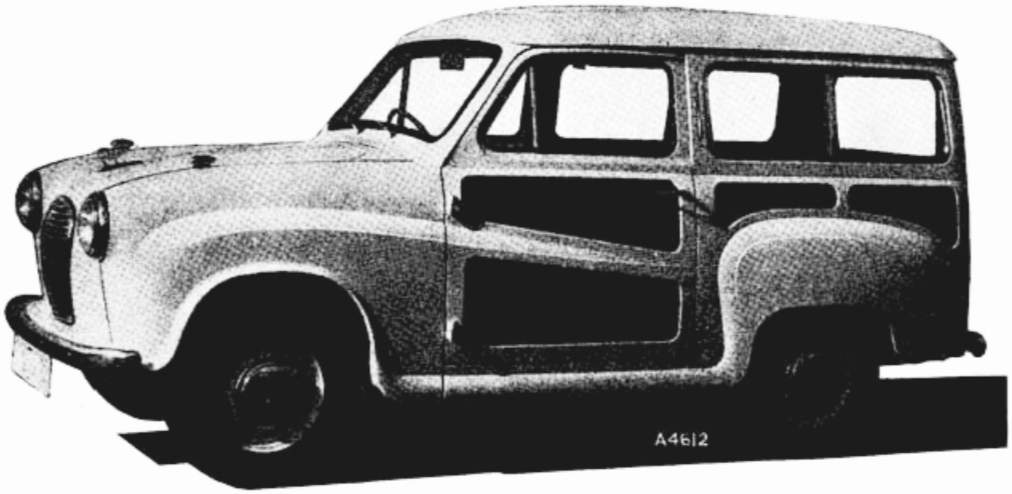

The Austin A30 Countryman.

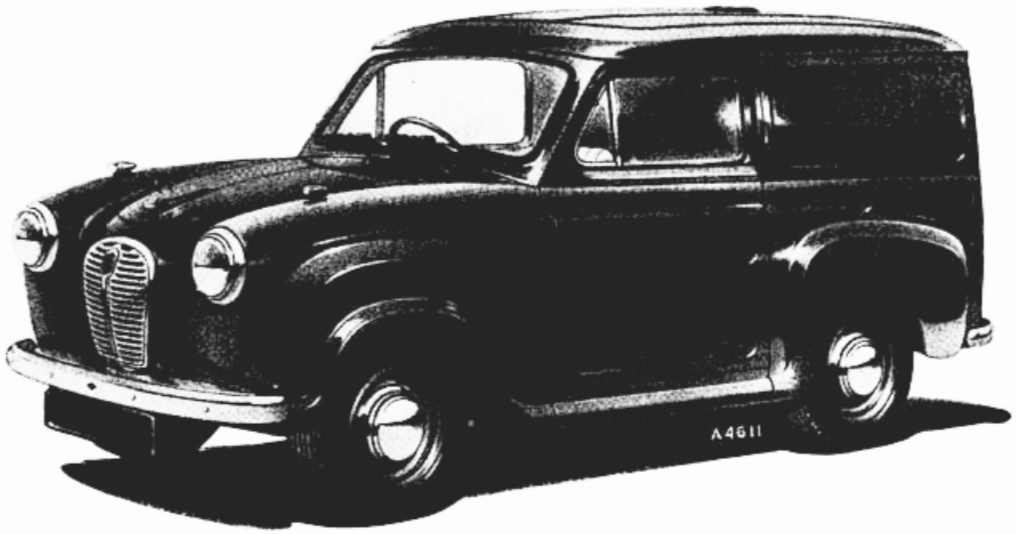

The Austin A35 Van.

GENERAL DATA

ENGINE (A30)

Number of cylinders	4
Bore	2·28 in. (58 mm.)
Stroke	3 in. (76·2 mm.)
Capacity	48·8 cu. in. (800 c.c.)
Firing order	1–3–4–2
Compression ratio	7·2:1
B.H.P.	28 at 4,800 r.p.m.
Torque	40 lb. ft. (5·53 kg.m.) at 2,200 r.p.m.
Valve operation	Overhead by push-rod
Bore oversizes	+·010 in., +·020 in., +·030 in., +·040 in. (+·254 mm., +·508 mm., +·762 mm., +1·02 mm.)

ENGINE (A35)

Number of cylinders	4
Bore	2·478 in. (62·94 mm.)
Stroke	3 in. (76·2 mm.)
Capacity	57·9 cu. in. (948 c.c.)
Firing order	1–3–4–2
Compression ratio	8·3:1 or 7·2:1
B.H.P.:	
High compression	34 at 4,750 r.p.m.
Low compression	32 at 4,600 r.p.m.
Torque:	
High compression	50 lb. ft. (6·91 kg.m.) at 2,000 r.p.m.
Low compression	48 lb. ft. (6·63 kg.m.) at 2,200 r.p.m.
Valve operation	Overhead by push-rod
Bore oversizes	+·010 in., +·020 in., +·030 in., +·040 in. (+·254 mm., +·508 mm., +·762 mm., +1·02 mm.)

CRANKSHAFT

Main journal diameter	1·7505 to 1·751 in. (44·463 to 44·475 mm.)
Regrind sizes	—·010 in., —·020 in., —·030 in., —·040 in. (—·254 mm., —·508 mm., —·762 mm., —1·02 mm.)
Minimum regrind diameter	1·7105 in. (43·447 mm.)
Crankpin journal diameter (A30)	1·4379 to 1·4384 in. (36·523 to 36·535 mm.)
Regrind sizes	—·010 in., —·020 in., —·030 in., —·040 in. (—·254 mm., —·508 mm., —·762 mm., —1·02 mm.)
Minimum regrind diameter (A30)	1·3979 in. (35·507 mm.)
Crankpin journal diameter (A35)	1·6254 to 1·6259 in. (41·285 to 41·298 mm.)
Regrind sizes	—·010 in., —·020 in., —·030 in., —·040 in. (—·254 mm., —·508 mm., —·762 mm., —1·02 mm.)
Minimum regrind diameter (A35)	1·5854 in. (40·269 mm.)

NOTE: Main bearing and connecting rod big end bearing shells are available to suit the main journal and crankpin undersizes above quoted.

MAIN BEARINGS

Number	3
Type	Shell
Material	Steel-backed white metal
Length	1·187 in. (30·16 mm.)
End clearance	·002 to ·003 in. (·051 to ·076 mm.)
End thrust	Taken on centre main bearing
Running clearance	·0005 to ·002 in. (·0127 to ·0508 mm.)

CONNECTING RODS

Length between centres	5·75 in. (146·05 mm.)

BIG END BEARINGS

Material:	
Earlier A30	Steel-backed white metal
Later A30 and A35	Steel-backed copper-lead with lead-indium or lead-tin plated surface
Bearing side clearance (A30)	·006 to ·010 in. (·152 to ·254 mm.)
Bearing side clearance (A35)	·008 to ·012 in. (·203 to ·305 mm.)
Bearing diametral clearance	·001 to ·0025 in. (·025 to ·063 mm.)

PISTONS

Type	Split skirt
Material	Aluminium alloy
Clearance at skirt (bottom)	·0006 to ·0014 in. (·015 to ·03 mm.)
Oversizes	+·010 in., +·020 in., +·030 in., +·040 in. (+·254 mm., +·508 mm., +·762 mm., +1·02 mm.)

PISTON RINGS

Compression	
Top ring	Plain
Second ring	Taper
Third ring (A30)	Plain (earlier engines) Taper (later engines)
Third ring (A35)	Taper
Width (plain and taper)	·069 to ·070 in. (1·753 to 1·778 mm.)
Fitted gap	·007 to ·012 in. ·(178 to ·305 mm.)
Clearance in groove	·0015 to ·0035 in. (·038 to ·089 mm.)
Oil control	
Fourth ring	Slotted scraper
Width	·124 to ·125 in. (3·15 to 3·175 mm.)
Fitted gap	·007 to ·012 in. (·178 to ·305 mm.)
Clearance in groove	·0015 to ·0035 in. (·038 to ·089 mm.)

GUDGEON PIN

Type	Clamped
Fit in piston	·0001 to ·0003 in. (·0025 to ·008 mm.)
Diameter (outer)	·6244 to ·6246 in. (15·86 to 15·865 mm.)

VALVES AND VALVE GEAR

Valves	
Seat angle:	
Inlet	45°
Exhaust	45°
Seat width (A30):	
Inlet	·063 in. (1·59 mm.)
Exhaust	·125 in. (3·18 mm.)
Seat width (A35):	
Inlet	·066 in. (1·68 mm.)
Exhaust	·088 in. (2·23 mm.)
Valve lift	·285 in. (7·239 mm.)
Stem to guide clearance (A30):	
Inlet	·0015 to ·0025 in. (·038 to ·064 mm.)
Exhaust	·001 to ·002 in. (·025 to ·048 mm.)
Stem to guide clearance (A35):	
Inlet	·0015 to ·0025 in. (·038 to ·064 mm.)
Exhaust	·002 to ·003 in. (·051 to ·076 mm.)

Rocker clearance:	
Running (hot or cold)	·012 in. (·305 mm.)
Timing	·019 in. (·48 mm.)
Timing markings	Dimples on timing wheels
Chain pitch	·375 in. (9·525 mm.)
Number of chain pitches	52
Inlet valve.	
Opens	5° B.T.D.C. } with ·019 in. (·48 mm.) rocker clearance (for checking only)
Closes	45° A.B.D.C.
Exhaust valve:	
Opens	40° B.B.D.C.
Closes	10° A.T.D.C.

VALVE GUIDES

Length (A30):	
Inlet	1·84 in. (46·83 mm.)
Exhaust	1·78 in. (45·24 mm.)
Length (A35):	
Inlet	1·687 in. (42·86 mm.)
Exhaust	1·687 in. (42·86 mm.)

VALVE SPRINGS

Free length	1·625 in. (41·275 mm.)
Fitted length and load	$1\frac{19}{64}$ in. at 37·5±2 lb. (3·3 cm. at 17·01 ± ·907 kg.)

VALVE ROCKERS

Rocker bore	·868 to ·687 in. (17·42 to 17·45 mm.)
Rocker bush:	
Outside diameter	·6885 to ·6895 in. (17·49 to 17·51 mm.)
Inside diameter (reamed in position)	·563 to ·5635 in. (14·3 to 14·313 mm.)

CAMSHAFT

Front journal diameter	1·6655 to 1·666 in. (42·304 to 42·316 mm.)
Centre journal diameter	1·62275 to 1·62325 in. (41·218 to 41·231 mm.)
Rear journal diameter	1·3725 to 1·3735 in. (34·862 to 34·887 mm.)
End thrust	Taken on front end
End float	·003 to ·007 in. (·076 to ·178 mm.)

CAMSHAFT BEARINGS

Number	3
Type:	
Front	Steel-backed white metal
Centre and rear	Direct in crankcase
Front shell:	
Inside diameter (reamed in position)	1·667 to 1·6675 in. (42·34 to 42·35 mm.)
Clearance:	
Front	·001 to ·002 in. (·0254 to ·0508 mm.)
Centre and rear	·00125 to ·00275 in. (·032 to ·07 mm.)

COOLING SYSTEM

Capacity	$8\frac{1}{2}$ pints (4·83 litres)
Circulation	Pump and thermostat

ENGINE LUBRICATION SYSTEM

Oil pump	
Type	Eccentric rotor or vane
Oil filter	
Type (A30)	By-pass
(A35)	Full-flow with expendable element
Capacity (full-flow)	1 pint (·57 litre)
Oil pressure (A30)	
Normal running	50 to 55 lb./sq. in. (3·5 to 3·9 kg./sq. cm.)
Idling (minimum)	15 lb./sq. in. (1·05 kg./sq. cm.)
Oil pressure (A35)	
Normal running	60 lb./sq. in. (4·2 kg./sq. cm.)
Idling (minimum)	15 lb./sq. in. (1·05 kg./sq. cm.)

FUEL SYSTEM

A30 (earlier models)	
Fuel pump	A.C. Sphinx, 'Y' type. Mechanical
Carburetter type	Zenith type 26JS. Downdraught
Standard settings:	
Choke	18
Main jet	95 or 113 c.c.
Main air jet	160
Slow running jet	40
Slow running air bleed	80
Needle and seating	1·5 mm.
Tank capacity	5¾ gallons (26·14 litres)
Air cleaner:	
Home	Oil wetted
Export	Oil bath
A30 (later models)	
Fuel pump	A.C. Sphinx, 'Y' type. Mechanical
Carburetter type	Zenith type 26VME. Downdraught
Standard settings:	
Choke	20
Main jet	70
Compensating jet	57
Slow running jet	50
Screw over capacity well	2·5 mm.
Needle and seating	1·5 mm.
Tank capacity	5¾ gallons (26·14 litres)
Air cleaner:	
Home	Oil wetted
Export	Oil bath
A35	
Fuel pump	A.C. Sphinx, 'Y' type. Mechanical
Carburetter type	Zenith type 26VME. Downdraught
Standard settings:	
Choke	22
Main jet	80
Compensating jet	57
Slow running jet	50
Screw over capacity well	2 mm.
Needle and seating	1·5 mm.
Progression	100
Tank capacity	5¾ gallons (26·14 litres)
Air cleaner:	
Home	Oil wetted
Export	Oil bath

IGNITION

Type	Lucas 12 volt coil
Distributor type	Lucas DM2
Direction of rotation	Clockwise at rotor arm
Contact breaker gap	·014 in. (·356 mm.) to ·016 in. (·406 mm.)
Static setting (A30):	
Premium fuel	11° B.T.D.C.
Commercial fuel	6½° B.T.D.C.
Static setting (A35):	
Premium fuel	5° B.T.D.C.
Commercial fuel	2° B.T.D.C.
Coil type (early A30)	Lucas Q12
(later A30 and A35)	Lucas LA12
Sparking plug type	Champion N5
Sparking plug gap	·024 in. (·620 mm.) to ·026 in. (·66 mm.)

CLUTCH

Make	Borg and Beck
Type	Single dry plate
Diameter	6¼ in. (16 cm.)
Total frictional area	15·075×2 sq. in. (97·258×2 sq. cm.)
Thickness of linings	⅛ in. (3·18 mm.)
Release bearing	Carbon
Number of springs	6
Total axial spring pressure	540 to 600 lb. (245 to 272 kg.)
Thrust plate travel to full release	·24 in. to ·27 in. (6·096 to 6·858 mm.)
Pedal free movement	⅜ in. (9·525 mm.)

GEARBOX

Type	Synchromesh on 2nd, 3rd and top
Type of gear	Helical constant mesh
Gear ratios (A30):	
First	4·09:1
Second	2·59:1
Third	1·68:1
Top	Direct
Reverse	5·18:1
Gear ratios (A35):	
First	3·627:1
Second	2·374:1
Third	1·412:1
Top	Direct
Reverse	4·666:1
Layshaft bearings:	
Type	Needle rollers
Length	·7796 in. (19·8 mm.)
Housing diameter	·8296 to ·8301 in. (2·1072 to 2·1085 cm.)
Inside diameter	·6315 to ·6320 in. (1·6040 to 1·6053 cm.)
Diameter of rollers	·0984 in. (2·5 mm.)
Number of rollers	23
Gearbox bearings:	
Make	R. and M. 2/LJ16–3 dot
Type	Ball journal
Size	1×2¼×⅝ in. (25·4×57·15×15·87 mm.)
Oil capacity	2⅓ pints (1·33 litres, 2·8 U.S. pints)

REAR AXLE (A30)

Type	¾ Floating
Ratio:	
Up to Chassis No. 1018	5·143:1 (7/36)
From Chassis No. 1019	5·125:1 (8/41)
Commercials	5·375:1 (8/43)
Oil capacity	1½ pints (·994 litres, 2·1 U.S. pints)
Final drive	Hypoid
Bearings:	
Pinion front:	
Make	Timken or Skefco
Type	Taper roller
Size	1×2·3125×·594×·762 in.
Pinion rear:	
Make	Timken or Skefco
Type	Taper roller
Size	1·125×2·745×·75×·745 in.
Differential:	
Make	R. and M.
Type	LJT35—3 dot
Size	35×72×17 mm.
Hub:	
Make	R. and M.
Type	LJ35—3 dot
Size	35×72×17 mm.
Commencing Chassis Numbers 43849 (A2S4), 43421 (A2S4L), 43898 (AS4) and 43431 (AS4L):	
Ratio	4·875:1 (8/39)
Oil capacity	1¾ pints (1 litre, 2·3 U.S. pints)
Bearings:	
Pinion front:	
Size	1×2·500×·625×·8125 in.
Pinion rear:	
Size	1×2·6875×·688×·875 in.

REAR AXLE (A35)

The rear axle on the A35 differs from that on the A30 as follows:

Ratio	4·55:1 (9/41)

REAR SPRINGS

Type	½ elliptic
Number of leaves	8
Thickness of leaves	5/32 in. (3·97 mm.)
Width	1½ in. (3·81 cm.)
Deflection	5¼ in. at 490 lbs. (13·34 cm. at 222·3 kg.)

REAR SPRINGS (Commercials)

Type	½ elliptic
Number of leaves	11
Thickness of leaves	5/32 in. (3·97 mm.)
Width	1½ in. (3·81 cm.)
Deflection	5¼ in. at 672 lbs. (13·34 cm. at 304·8 kg.)

STEERING

Type and ratio	Cam and peg, 12:1 Worm and nut, 11:1
Toe-in	1/16 in. to ⅛ in. (1·588 mm. to 3·175 mm.)

RONT SUSPENSION

Type	Independent by coil springs and wishbones
Spring:	
Free length	9·94 in. (25·25 cm.)
Inside diameter of coil	3·115 in. (7·912 cm.)
Number of working coils	7
Diameter of wire	·51 in. (1·295 cm.)
Castor angle	3°
Camber angle	1°
Swivel pin inclination	6½°
Shock absorbers	Lever hydraulic

BRAKES

Make	Lockheed
Footbrake:	Hydraulic (on front wheels) Hydraulically operated mechanical (on rear wheels)
Handbrake	Mechanical (on rear wheels only)
Drum diameter	7 in. (17·78 cm.)
Shoe lining length	6·11 in. (15·519 cm.)
Shoe lining thickness	·188 in. (4·76 mm.)
Shoe lining width	1·25 in. (3·175 cm.)
Total frictional area	61·1 sq. in. (394 sq. cm.)

ELECTRICAL

Battery (A30)	
Type (Home)	
Standard	GLTW7A
Special	GTW7A
Type (Export)	
Standard	GLTZ7A
Special	GTZ7A
Voltage	12
Capacity (10 hour rate)	
Standard	30 amp./hr.
Special	38 amp./hr.
Battery (earlier A35)	
Type (Home)	GTW7A
(Export)	GTZ7A
Voltage	12
Capacity (10 hour rate)	38 amp./hr.
Battery (later A35)	
Type (Home)	BT7A
(Export)	BTZ7A
Voltage	12
Capacity (20 hour rate)	43 amp./hr.
Dynamo: A30 and A35 (AS5, A2S5, earlier AP5 and AV5)	
Type	Lucas C39PV2
Cutting-in speed	1,050 to 1,200 r.p.m.
Maximum output	13·5 volts:19 amps.
Field resistance	6·1 ohms
Dynamo: A35 (later AP5 and AV5)	
Type	Lucas C40/1
Cutting-in speed	1,250 to 1,450 r.p.m.
Maximum output	13·5 volts:22 amps.
Field resistance	6 ohms
Starter motor	
Type	Lucas M35G1

Control box (used with Lucas earlier Type C39PV2 dynamo)

Type	Lucas RB 106/1
Cut-out	
Cut-in voltage	12·7 to 13·3 volts
Drop-off voltage	9 to 10 volts
Reverse current	3 to 5 amps.
Regulator	
Open circuit setting at 3,000 r.p.m. dynamo speed at:	
10°C. (50°F.)	16·1 to 16·7 volts
20°C. (68°F.)	15·8 to 16·4 volts
30°C. (86°F.)	15·6 to 16·2 volts
40°C. (104°F.)	15·3 to 15·9 volts

Control box (used with Lucas later Type C39PV2 dynamo)

Type	Lucas RB 106/2:37182

Control box (used with Lucas Type C40/1 dynamo)

Type	Lucas RB 106/2:37183
Cut-out	
Cut-in voltage	12·7 to 13·3 volts
Drop-off voltage	8·5 to 11 volts
Reverse current	3 to 5 amps.

Regulator

At 3,000 r.p.m. dynamo speed:

Open circuit setting at 20°C. (68°F.) 16 to 16·6 volts

When the dynamo speed is raised to 4,500 r.p.m., the voltage must not rise above 17·1 volts

For ambient temperatures other than 20°C. (68°F.), the following allowances should be made to the above setting:

For every 10°C. or 18°F. **above** 20°C. (68°F.) **subtract** 1 volt

For every 10°C. or 18°F. **below** 20°C. (68°F.) **add** 1 volt

Fuse unit

Type	SF6
Fuses	50 amp. (AUX) 35 amp. (AUX, IGN)

Trafficators: A30 and A35 (AV5 and AP5)

Type	SF80

Bulbs (A30)

Headlamps

R.H.D. (U.K. and export markets except Europe), left-hand dip

Type	Lucas No. 354. B.M.C. No. 3H1892
Voltage	12
Wattage	42/36

L.H.D. (except Europe), right-hand dip

Type	Lucas No. 355. B.M.C. No. 3H1893
Voltage	12
Wattage	42/36

R.H.D. and L.H.D. (Europe except France), vertical dip

Type	Lucas No. 370. B.M.C. No. 3H921
Voltage	12
Wattage	45/50

Sidelamps

Type	Lucas No. 989. B.M.C. No. 3H4817
Voltage	12
Wattage	6

Tail/Stoplamps

Type	Lucas No. 380. B.M.C. No. 1F9026
Voltage	12
Wattage	21/6

Number plate lamp

Type	Lucas No. 989. B.M.C. No. 2H4817
Voltage	12
Wattage	6

Trafficators

Type	Lucas No. 256. B.M.C. No. 4G867
Voltage	12
Wattage	3

Panel lamps

Type	Lucas No. 987. B.M.C. No. 2H4732
Voltage	12
Wattage	2·2

Bulbs (A35)

Headlamps, early type Duplo:

R.H.D. (U.K. and export markets except Europe), left-hand dip

Type	Lucas No. 354. B.M.C. No. 3H1892
Voltage	12
Wattage	42/36

L.H.D. (except Europe), right-hand dip

Type	Lucas No. 355. B.M.C. No. 3H1893
Voltage	12
Wattage	42/36

R.H.D. and L.H.D. (Europe except France), vertical dip

Type	Lucas No. 370. B.M.C. No. 3H921
Voltage	12
Wattage	45/40

Headlamps, European unified cap:

R.H.D. (except Sweden), left-hand dip

Type	Lucas No. 414. B.M.C. No. 13H140
Voltage	12
Wattage	50/40

L.H.D. (except Europe), right-hand dip

Type	Lucas No. 415. B.M.C. No. 13H141
Voltage	12
Wattage	50/40

R.H.D. and L.H.D. (Europe except France), vertical dip

Type	Lucas No. 410. B.M.C. No. 13H138
Voltage	12
Wattage	45/40

L.H.D. (France only), vertical dip

Type	Lucas No. 411. B.M.C. No. 13H139
Voltage	12
Wattage	45/40

Sidelamps

Type	Lucas No. 989. B.M.C. No. 2H4817
Voltage	12
Wattage	6

Tail/Stoplamps

Type	Lucas No. 380. B.M.C. No. 1F9026
Voltage	12
Wattage	21/6

Number plate lamp (not Pick-up)

Type	Lucas No. 989. B.M.C. No. 2H4817
Voltage	12
Wattage	6

Number plate lamp (Pick-up only)

Type	Lucas No. 207. B.M.C. No. 2H4442
Voltage	12
Wattage	6

Trafficators (Van and Countryman)

Type	Lucas No. 256. B.M.C. No. 4G867
Voltage	12
Wattage	3

Flashing direction indicator lamps	
Type	Lucas No. 382. B.M.C. No. 1F9012
Voltage	12
Wattage	21
Panel lamps	
Type	Lucas No. 987. B.M.C. No. 2H4732
Voltage	12
Wattage	2·2
Roof lamp	
Type	Lucas No. 254. B.M.C. No. 2H9504
Voltage	12
Wattage	6

WHEELS

Type	13 in. steel disc

TYRES

Size:	
Car	5·20–13
Commercial	5·90–13
Pressure:	
Car–front and rear	20 lb./sq. in. (1·4 kg./sq. cm.)
–rear (fully loaded)	23 lb./sq. in. (1·62 kg./sq. cm.)
Commercial–front (all conditions)	16 lb./sq. in. (1·13 kg./sq. cm.)
–rear (all conditions)	23 lb./sq. in. (1·17 kg./sq. cm.)

TORQUE WRENCH SETTINGS

Cylinder head nuts	40 lb. ft. (5·5 kg.m.)
Main bearing setbolts	60 lb. ft. (8·3 kg.m.)
Big end setscrews	35 lb. ft. (4·8 kg.m.)
Gudgeon pin clamp screws	25 lb. ft. (3·5 kg.m.)
Flywheel setscrews	40 lb. ft. (5·5 kg.m.)
Engine rear plate/crankcase setscrews	22 lb. ft. (3·042 kg.m.)
Rocker shaft pedestal nuts	25 lb. ft. (3·5 kg.m.)
Bevel pinion nut	140 lb. ft. (19·4 kg.m.)
Crown wheel/differential cage setscrews	60 lb. ft. (8·3 kg.m.)
Differential bearing cap nuts	65 lb. ft. (8·99 kg.m.)
Road wheel nuts	37 to 39 lb. ft. (5·02 to 5·4 kg.m.)

CAPACITIES

	Imp.	*U.S.*	*Litres*
Sump, including filter (A30)	6·5 pts.	7·8 pts.	3·69
Sump, including filter (A35)	7 pts.	8·4 pts.	3·98
Gearbox	2·3 pts.	2·8 pts.	1·33
Rear axle	1·75 pts.	2·1 pts.	1
Cooling system	8·5 pts.	10·2 pts.	4·83
Fuel tank	5·75 gal.	6·9 gal.	26·14

GENERAL INFORMATION

VEHICLE IDENTIFICATION

A30

The chassis number is stamped on a plate fixed to the scuttle. It consists of a group of letters and figures denoting the model and series, followed by a serial number. The same serial number, prefixed by '2A,' is stamped on the engine. For an example, see 'VEHICLE TYPE SYMBOLS.'

A35

Identification is by means of a group of letters and figures denoting the model and series, followed by three letters indicating the type of engine (compression), followed by a serial number. The plate containing this information will be found on the left-hand door pillar.

The engine carries its own identification plate and the B.M.C. code is used. For an example and explanation of the code, see 'POWER UNIT IDENTIFICATION.'

A30 VEHICLE TYPE SYMBOLS

AS.3	4-door Saloon, Right-hand drive (Series 3)
AS.3L	4-door Saloon, Left-hand drive (Series 3)
AS.4	4-door Saloon, Right-hand drive (Series 4)
AS.4L	4-door Saloon, Left-hand drive (Series 4)
A2S.4	2-door Saloon, Right-hand drive (Series 4)
A2S.4L	2-door Saloon, Left-hand drive (Series 4)
AV.4	Van, Right-hand drive (Series 4)
AV4.L	Van, Left-hand drive (Series 4)
AP.4	Countryman, Right-hand drive (Series 4)
AP4.L	Countryman, Left-hand drive (Series 4)

A30 CODE EXAMPLES

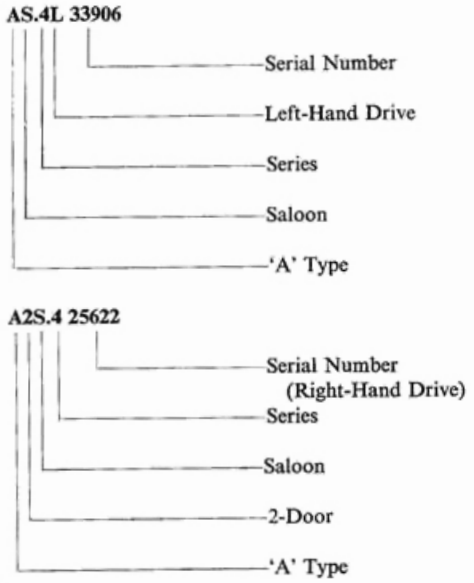

(In both instances the serial number is also that of the engine)

A35 VEHICLE TYPE SYMBOLS

AS.5L	4-door Saloon, Left-hand drive (Series 5)
A2S.5	2-door Saloon, Right-hand drive (Series 5)
A2S.5	2-door Saloon, Right-hand drive (Series 5)
A2S.5L	2-door Saloon, Left-hand drive (Series 5)
AV.5	Van, Right-hand drive (Series 5)
AV.5L	Van, Left-hand drive (Series 5)
AP.5	Countryman, Right-hand drive (Series 5)
AP.5L	Countryman, Left-hand drive (Series 5)
AK.5	Pick-up, Right-hand drive (Series 5)
AK.5L	Pick-up, Left-hand drive (Series 5)

A35 CODE EXAMPLES

A2S.5 305

- Serial Number (Right-hand Drive)
- Series
- Saloon
- 2-Door
- 'A' Type

AK.5L 7133

- Serial Number
- Left-Hand Drive
- Series 5 (Right-Hand Drive)
- Pick-Up
- 'A' Type

(*In both instances the serial number is also that of the engine*)

B.M.C. POWER UNIT IDENTIFICATION

Prefix number 9—950 c.c.
1st Prefix letter—Gearbox
N—Steering column gearchange
U—Centre gearchange

2nd Prefix letter—Compression
H—High
L—Low

Serial number

EXAMPLE

9—U—H 192118

- Serial number (also on Ch. No. plate)
- High Compression
- Centre Gear Change
- 950 c.c.

CONTROLS

Handbrake

Pull up lever-type, situated between the driver's seat and the door. Operates mechanically on rear wheels only.

Gear lever

Should always be in neutral when starting the engine. The gear positions are indicated on the top of the lever knob. Lift the lever before attempting to engage reverse gear (Series 3 and 4). Push hard to the right to overcome spring resistance, then move backwards (Series 5).

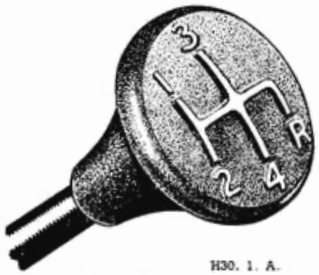

H30. 1. A.

Fig. 1. Gear positions.

Choke control

The control knob is situated to the left of the instrument panel and is indicated by the letter 'C' on its face.

When starting the engine from cold pull out to the limit until the engine fires and return to the half-way position for rapid warming up. The choke must be fully released at the earliest possible moment.

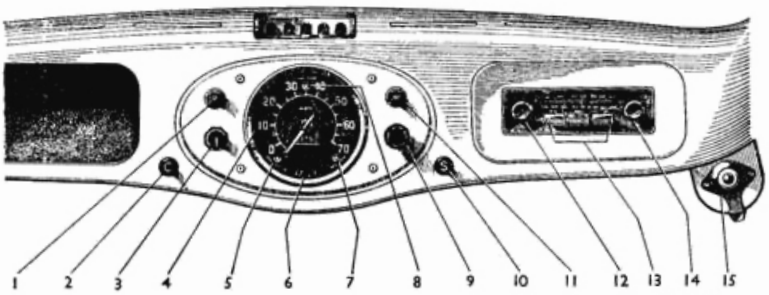

H30. 2. D.

Fig. 2. AS3 Fascia panel.

1. *Panel lights switch.*
2. *Choke control.*
3. *Ignition switch.*
4. *Speedometer.*
5. *Oil pressure warning light.*
6. *Fuel gauge.*
7. *Ignition warning light.*
8. *High beam warning light.*
9. *Heater control switch.*
10. *Starter switch.*
11. *Winsdcreen wiper switch.*
12. *Radio on/off switch.*
13. *Tuning push buttons.*
14. *Manual tuning control.*
15. *Trafficator switch.*

Accelerator

The right-hand pedal.

Brake

The centre pedal which operates the brakes on all four wheels.

Clutch

The left-hand pedal.

INSTRUMENTS AND SWITCHES

Ignition switch

On A30 (Series 3) models the switch is situated on the left of the speedometer. For later A30 (Series 4) models, the A35 (Series 5) and their left-hand drive models the ignition switch is below the instruments.

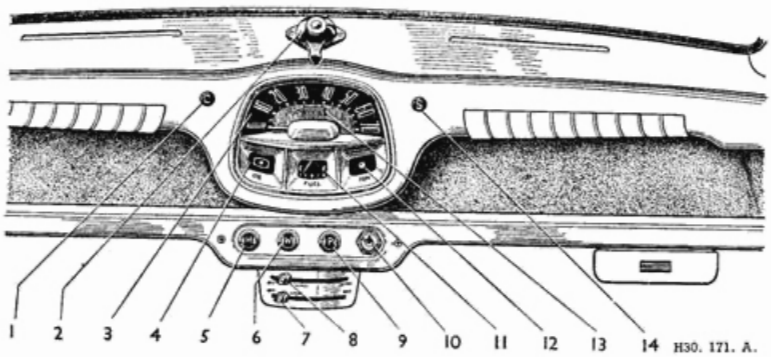

Fig. 3. A30 (Series 4) and Commercial Fascia Panel

1. *Choke control.*
2. *Trafficator switch*
3. *Speedometer*
4. *Oil pressure warning light*
5. *Heater switch*
6. *Windscreen wiper switch*
7. *Air control*
8. *Demister/defroster control.*
9. *Panel lights switch.*
10. *Ignition switch.*
11. *Fuel gauge.*
12. *Ignition warning light.*
13. *Mileage recorder.*
14. *Starter switch control.*

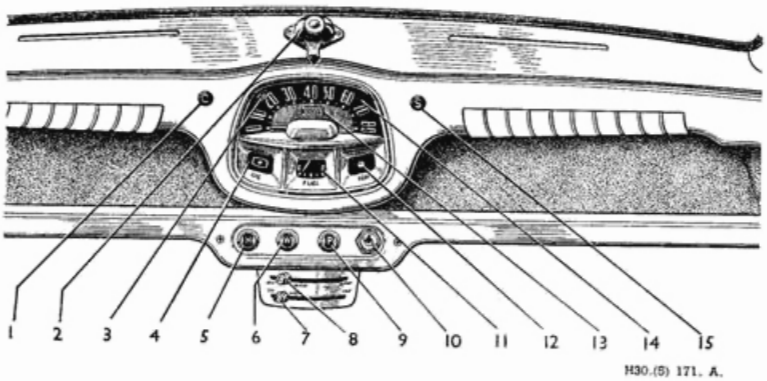

Fig. 4. Fascia panel (A35)

1. *Choke control.*
2. *Trafficator switch.*
3. *Main beam warning light.*
4. *Oil pressure warning light.*
5. *Heater switch.*
6. *Windscreen wiper switch.*
7. *Air control.*
8. *Demister/defroster control.*
9. *Panel light switch.*
10. *Ignition switch.*
11. *Fuel gauge.*
12. *Ignition warning light.*
13. *Mileage recorder.*
14. *Speedometer.*
15. *Starter switch control.*

Lighting and dip switch

The combined lighting and dip switch is mounted on the side of the steering column, close to the steering wheel rim. Turn clockwise to the first notch to put on the sidelights, the second to put on the headlights and to the third position to alter the headlights to the dipped position. On later models the second position on the switch is for dipped headlights and high beam is obtained by turning the switch to the third position.

Horn button

On the A30 the horn button is mounted at the end of the lighting and dip switch control. The position of the horn button for A30 commercials and A35 is in the centre of the steering wheel.

Starter switch knob

Pull out the control knob to start and release as soon as the engine fires. If the engine fails to start after a few revolutions do not operate the starter again until the engine is stationary.

The control knob is situated to the right of the instrument panel and is identified by the letter 'S' on its face.

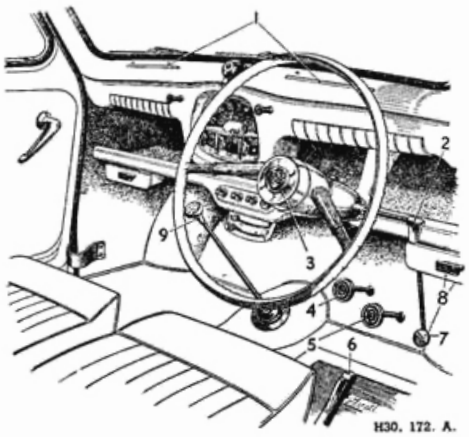

Fig. 5. A30 (Series 3 and 4) Driving Controls

1. *Demisting vents.*
2. *Light and dip switch.*
3. *Horn button.*
4. *Clutch pedal.*
5. *Brake pedal.*
6. *Handbrake lever.*
7. *Accelerator pedal.*
8. *Ashtray*
9. *Change speed lever.*

HEATER CONTROLS (later A30, Commercial and A35)

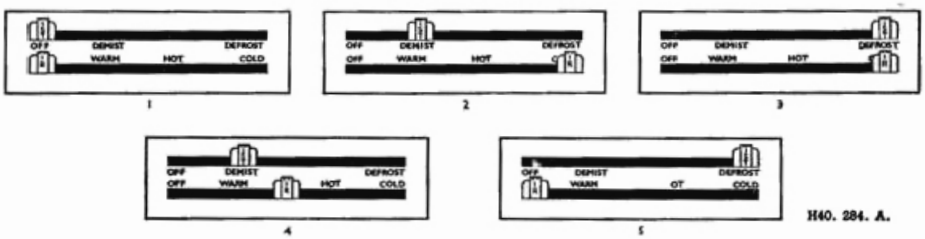

Fig. 6. The heater control positions.

Conditions	Heating/ventilating control lever position	"Demisting/defrosting" control lever position
1. No air supply to vehicle interior	"Off"	"Off"
2. Warm weather—cold ventilating air, cold air to windscreen ..	"Cold"	"Demist"
3. Warm weather—cold ventilating air, maximum air to windscreen	"Cold"	"Defrost"
4. Cold weather—hot ventilating air, warm air to windscreen ..	Between "Warm" and "Hot" according to heat required	"Demist"
5. Freezing weather—maximum hot air to windscreen	"Off"	"Defrost"

Trafficators

On A30 (Series 3) models the trafficator control switch is situated in the corner of the fascia panel, near the door, on the steering side of the vehicle. Later A30 (Series 4) models, A35 (Series 5) models and their left-hand drive counterparts have the control switch centrally above the speedometer.

To operate, move the switch to the left or right, according to which Indicator is required. A warning light incorporated with the switch glows for as long as the indicators are in use.

Heater control and demister

For A30 models turn to the right until a click is heard. This starts the heater fan. The further the control is turned the less will be the speed of the fan, due to the fact that there is a rheostat incorporated.

The control panel for later A30 models, Commercials and A35 models, is situated centrally beneath the parcel tray. Full operating instructions are given on page General Information 5.

Windshield wiper

To start the electric wiper, switch on the wiper control marked with the letter 'W' by turning it through 90°. To park, switch off when the arm comes to the end of its stroke. Do not try to push the arm across the windscreen by hand.

Panel light switch

Switch on the control by turning it through 90° to illuminate the instruments.

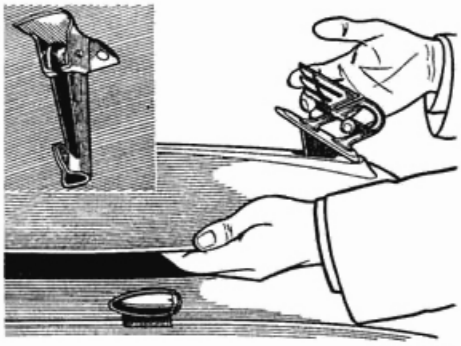

H30. 10. A.

Fig. 7. Method of Bonnet Opening. Inset shows safety catch.

GENERAL

Doors

The right side front door and the luggage compartment may be locked with the ignition key. The other doors may be locked by moving the inside door locking lever to the extreme forward position. This position also locks, automatically, the sliding front door windows when they are raised (A30 models).

Later A30, A35 and Commercial models have an internal door handle which takes the place of the lever used on early A30 models. The door windows may be locked in the closed position by moving the inside handle to the locked position before closing the door.

Bonnet catch

To open the bonnet pull upwards and forward on the handle formed by the 'Flying A' motif. This will have the effect of releasing the locking catch and it will then be possible to raise the bonnet an inch or so until it is held by a spring-loaded safety catch, which, when released will allow the bonnet to be lifted right up. The bonnet is held open by a stay clipped to its under-side, and a small locating cup is provided in the radiator top tank to keep the stay secure when in use.

The spring loaded safety catch is designed to hold down the bonnet while driving, in the event of the bonnet not having been properly locked. When closing the bonnet a slight pressure exerted downwards will help it to engage positively.

Speedometer

Registers the speed and total mileage.

Oil pressure warning light

Glows green when the ignition is switched on and fades out after the engine has been started. Low oil pressure or insufficient oil in the sump is indicated by a green glow when the engine is running.

Ignition warning light

Glows red when the ignition is switched on and fades out when the dynamo is charging the battery.

Headlight beam warning light

A red glow appears when the headlights are switched on with the two beams full ahead. The light goes out when the switch is operated.

Fuel gauge

Indicates the contents of the tank when the ignition is switched on. When the tank is being filled, switch off and stop the engine. Switch on again and the needle will indicate the amount of fuel entering the tank.

Spare wheel

The A30 has its spare wheel secured vertically behind the rear seat squab in the luggage compartment; later A30 models, and the A35 models have the wheel stowed vertically to the left of the luggage compartment.

On the Van and Countryman the wheel is housed under the floor at the rear of the vehicle, the wheel compartment being enclosed by the lower part of the rear door.

Front seats

Both seats are adjustable for reach. They also tilt forward, being hinged at the front end.

Fuel filler

Located on the right-hand side in all except 2-door Saloon and Commercial models.

Filling up with fuel

Considerable loss of fuel can occur as a result of filling the fuel tank until the fuel is visible in the filler tube. If this is done and the vehicle is left in the sun, expansion due to heat will cause leakage, with consequent loss of and danger from exposed fuel. When filling up therefore:

(1) Avoid filling the tank until the fuel is visible in the filler tube.
(2) If the tank is inadvertently overfilled, take care to park the vehicle in the shade and with the filler as high as possible.

Roof rack

The roof rack must be regarded as a means of carrying bulky rather than heavy articles of luggage, i.e., articles which by virtue of their shape or size cannot be stowed conveniently inside the vehicle. Any weight carried on the roof can have an adverse effect on the handling of the vehicle which must be driven with due discretion. A straight drive will not be affected to any great degree, although cornering and behaviour in a cross-wind will be different owing to the change in position of the centre of gravity and the centre of pressure.

Weight in excess of 50 lb. (22·7 kg.) must not be carried on the roof.

RUNNING-IN SPEEDS

The treatment given to a new car will have an important bearing on its subsequent life, and engine speeds during this early period must be limited. The following instructions should be strictly adhered to.

During the first 500 miles (800 km.)

DO NOT exceed 45 m.p.h. (72 km.p.h.).
DO NOT operate at full throttle in any gear.
DO NOT allow the engine to labour in any gear.

CLAIMS UNDER WARRANTY

Claims for the replacement of material or parts under Warranty must always be submitted to the supplying Distributor or Dealer, or, when this is not possible, to the nearest Distributor or Dealer, informing them of the Vendor's name and address.

PRESERVATIVE ON EXPORT CARS

To remove the hardfilm preservative from the external parts a cloth dipped in a solution of equal parts of white spirit and petrol (gasoline) should be used. Take care to keep this solvent away from anything other than the plated components.

LOCATION OF MAJOR COMPONENT SERIAL NUMBERS

The major components of the vehicle have serial numbers. When in communication with the Company or your Dealer always quote the car and engine numbers. The registration number is of no assistance and is not required. The engine number is stamped on a plate fixed to the cylinder block. Each major component has its serial number stamped upon it.

PART NAME ALTERNATIVES

	Part Name	*Alternatives*
Engine	Gudgeon pin	Piston pin. Small-end pin. Wrist pin.
	Scraper ring	Oil control ring.
	Core plug	Expansion plug. Welch plug. Sealing disc.
	Oil sump	Oil pan. Oil reservoir.
Controls	Mixture control	Choke. Strangler.
Gearbox	Gear lever	Shift lever.
	Change speed fork	Shift fork. Selector fork.
	First motion shaft	Clutch shaft. First reduction pinion. Main drive pinion. Drive gear.
	Layshaft	Countershaft.
Axle	Crown wheel	Ring gear. Spiral drive gear.
	Bevel pinion	Small pinion. Spiral drive pinion
	'U' bolts	Spring clips.
	Axle shaft	Half-shaft. Hub driving shaft. Jack driving shaft.
	Differential gear	Sun wheel.
	Differential pinion	Planet wheel.
Steering	Swivel pin	Pivot pin. Steering pin. King pin.
	Stub axle	Swivel axle.
	Track-rod	Cross-tube.
	Draglink	Side-tube. Steering connecting rod.
Electrical	Dynamo	Generator.
	Control box	Voltage regulator. Cut-out. Voltage control.
Exhaust	Silencer	Muffler.
Body	Bonnet	Hood.
	Wing	Mudguard. Fender.

FROST PRECAUTIONS

The water in the cooling system must be prevented from freezing during frosty weather. Water, when it freezes, expands, with the result that there is a very considerable risk of bursting either the radiator, heater element or the cylinder block by the pressure generated. Since no provision is made for draining the heater unit, draining the radiator and cylinder block is not a sufficient safeguard.

The cooling system is of the sealed type and relatively high temperatures are developed in the radiator upper tank. For this reason anti-freeze solutions having an alcohol base are unsuitable owing to their high evaporation rate producing a rapid loss of coolant and a consequent interruption of circulation.

Only anti-freeze of the ethylene glycol type incorporating the correct type of corrosion inhibitor is suitable and owners are recommended to use Bluecol, Shell Snowflake, or Esso Anti-freeze, or any anti-freeze to B.S.3151/3152.

The recommended quantities of anti-freeze for different degrees of frost are:

Down to	*Down to*
7° *F.* (—14° *C.*)	0° *F.* (—18° *C.*)
15% solution	20% solution
Quantity 1¼ pints (¾ litre)	Quantity 1¾ pints (1 litre)

Where temperatures below 0° F. (—18° C.) are likely to be encountered a solution of at least 25 per cent. of anti-freeze must be used to ensure immunity from trouble. Consult the Distributors on this matter.

First decide what degree of frost protection is required before adding the anti-freeze.

Make sure that the cooling system is watertight and examine all joints, renewing any defective rubber hose.

Before adding anti-freeze to the cooling system it is advisable to clean the cooling system thoroughly by swilling out the water passages with a hose inserted in the filler, and with the drain taps open.

Avoid excessive topping up, otherwise there is a risk of losing valuable anti-freeze due to expansion of the solution. Top up only when the system is at its normal running temperature.

Generally speaking, anti-freeze is not injurious to cellulose paint, provided it is wiped off in reasonable time.

Do not use radiator anti-freeze in the windshield washing equipment.

IDENTIFICATION OF UNIFIED SCREW THREADS

The general standardization of Unified screw threads makes it necessary to identify all nuts, bolts, and set screws with these threads in order to ensure their being matched with correspondingly threaded components and the fitting of correct replacements.

Identification has been standardized and is effected in the following manner:

Nuts. By a circular groove turned on the end face of the nut or by connected circles stamped on one flat of the hexagon.

Bolts and set screws. By a circular depression turned on the head or by connected circles stamped on one flat of the hexagon.

Wheel stud nuts. By a notch cut in all the corners of the hexagon.

It is of the utmost importance that any nuts, bolts, or set screws marked with the above indentifications should only be used in conjunction with associated components having Unified threads, and that only replacement parts with Unified threads are used, as these are *not* interchangeable with Whitworth, BSF, or Metric threads.

The Unified thread is, however, interchangeable with the American National Fine (ANF) thread for all practical purposes.

Spanners. Note that all ANF- and Unified-threaded nuts and hexagon-headed bolts are made to the standard American hexagon sizes and that spanners of the appropriate size must be used when tightening or loosening them.

KEY TO SPANNER SIZES (Nominal widths between jaws)

Diameter of screw thread (inches)	$\frac{1}{4}''$	$\frac{5}{16}''$	$\frac{3}{8}''$	$\frac{7}{16}''$	$\frac{1}{2}''$	$\frac{9}{16}''$	$\frac{5}{8}''$	$\frac{3}{4}''$	$\frac{7}{8}''$	$1''$
For BSF screws and nuts	·448	·529	·604	·705	·825	·925	1·016	1·207	1·309	1·489
For ANF screws and nuts	·440	·504	·566	·629	·755	·880	·944	1·132	1·320	1·508
For Unified screws	·440	·504	·566	**·630**	·755	**·817**	·943	1·132	1·321	1·509
For Unified nuts (normal)	·440	·504	·566	**·692**	·755	**·880**	·943	1·132	1·321	1·509
For Unified nuts (heavy)	—	—	—	—	—	—	**1·069**	**1·258**	**1·446**	—

NOTE.—In the case of some Unified-threaded components the size of the hexagon for the nut is different from that of the bolt. Where this occurs the spanner size is shown in heavy type in the above table.

MAINTENANCE ATTENTION

00 MILES (800 km.) FREE SERVICE

During the early life of the car, soon after it has completed 500 miles (800 km.), you are entitled to have it inspected free of charge by the Austin Dealer from whom you purchased it, or, if this should not be convenient, by any other Austin Dealer by arrangement. This attention given during the critical period in the life of the car makes all the difference to its subsequent life and performance.

This service includes:

1. Drain oil from engine, gearbox and rear axle and refill.
2. Oil and grease all points of the car.
3. Check steering gearbox and steering idler oil levels, and top up if necessary.
4. Tighten cylinder head and manifold nuts to recommended pressures.
5. Check tightness of valve rocker shaft brackets to recommended pressures.
6. Check valve rocker clearances and reset if necessary.
7. Tighten fan belt if necessary.
8. Check all water connections and tighten clips if necessary.
9. Examine and clean carburetter and reset slow-running adjustment if necessary.
10. Examine and adjust, if necessary, sparking plug and distributor points.
11. Check working of automatic ignition controls and, if necessary, reset ignition timing.
12. Check front wheel alignment and steering connections. Adjust if necessary.
13. Check tightness of universal joint nuts, wheel nuts, spring clips, hydraulic damper mounting bolts, and wing (fender) bolts.
14. Check clutch pedal for free movement and adjust if necessary.
15. Check fluid level in brake master cylinder and top up if necessary.
16. Check braking system functionally and bleed lines if necessary.
17. Check electrical system functionally.
18. Examine battery and top up to proper level with distilled water as may be required.
    Clean and tighten terminals.
19. Inspect hydraulic dampers for leaks and top up if necessary.
20. Test tyres for correct pressure.
21. Check doors for ease in opening and closing. If necessary, lightly smear with a suitable lubricating agent all dovetails and striking plates.

Regular servicing, as proven by presentation of completed voucher counterfoils, could well enhance the value of your vehicle in the eyes of a prospective purchaser.

ALL MATERIALS CHARGEABLE TO THE CUSTOMER

PERIODICAL

Daily

Check oil level in crankcase. Top up if necessary.
Check water level in radiator. Top up if necessary.

Weekly

Test tyre pressures and regulate if necessary.

1,000 miles (1600 km.) service

1. *Engine*
   Lubricate carburetter controls.
   Top up radiator.
   Check level of oil in air cleaner (oil bath type).
2. *Brakes*
   Check brake pedal travel and report if adjustment is required.
   Make visual inspection of brake lines and pipes.
   Check level of fluid in brake master cylinder.
3. *Hydraulic dampers*
   Examine all hydraulic dampers for leaks.
4. *Electrical*
   Check battery cell specific gravity readings and top up to correct level.
5. *Lubrication*
   Top up oil levels in engine, gearbox, rear axle, steering gearbox and steering idler.
   Lubricate all nipples.
   Lubricate steering column top bearing or felt bush.
   Lubricate clutch and brake linkages.
6. *Wheels and tyres*
   Check tyre pressures.
   Check wheel nuts for tightness.

2,000 miles (3200 km.) service

Carry out the **1,000 miles (1600 km.) service**

3,000 miles (4800 km.) service

1. *Engine*
   Lubricate carburetter controls.
   Top up radiator.
   Clean and re-oil air cleaner (oil bath type).
   Check dynamo drive belt tension.
2. *Ignition*
   Check and adjust, if necessary, distributor contact points.
   Clean and adjust sparking plugs.
3. *Clutch*
   Check clutch pedal free travel and adjust if necessary.
4. *Brakes*
   Check brakes and adjust if necessary.
   Make visual inspection of brake lines and pipes.
   Check level of fluid in brake master cylinder.
5. *Hydraulic dampers*
   Examine all hydraulic dampers for leaks.
6. *Body*
   Lubricate door hinges, bonnet lock and operating mechanism.
7. *Electrical*
   Check battery cell specific gravity readings and top up to correct level.
8. *Lubrication*
   Change engine oil.
   Top up oil levels in gearbox, rear axle, steering gearbox and steering idler.
   Lubricate all nipples.
9. *Wheels and tyres*
   Check tyre pressures.
   Change wheels round diagonally, including spare, to regularize tyre wear.

4,000 miles (6400 km.) service

Carry out the **1,000 miles (1600 km.) service**

5,000 miles (8000 km.) service

Carry out the **1,000 miles (1600 km.) service**

6,000 miles (9600 km.) service

1. *Engine*
   Lubricate carburetter controls.
   Top up radiator.
   Check dynamo drive belt tension.
   Lubricate water pump sparingly.
   Check valve rocker clearances and adjust if necessary.
   Clean and re-oil air cleaner (both types).
   Clean fuel pump and carburetter.
2. *Ignition*
   Check automatic ignition control, lubricating drive shaft, cam, and advance mechanism.
   Check and adjust, if necessary, distributor contact points.
   Clean and adjust sparking plugs.
3. *Clutch*
   Check clutch pedal free travel and adjust if necessary.
4. *Brakes*
   Check brakes and adjust if necessary.
   Make visual inspection of brake lines and pipes.
   Check level of fluid in brake master cylinder.
5. *Hydraulic dampers*
   Examine all hydraulic dampers for leaks and top up if necessary.
6. *General*
   Tighten rear road spring seat bolts.
7. *Body*
   Check and tighten, if necessary, door hinges and striker plate securing screws.
   Lubricate door hinges, bonnet lock and operating mechanism.
8. *Electrical*
   Check battery cell specific gravity readings and top up to correct level.
   Sparingly lubricate trafficator pivots (where fitted).
9. *Lubrication*
   Change oil in engine, gearbox and rear axle.
   Fit new oil filter element (A35) or new filter assembly (A30).

6,000 miles (9600 km.) service—*continued*

Check steering gearbox and steering idler oil levels and top up if necessary.
Lubricate all nipples.
Repack front hubs with grease.

10. *Wheels and tyres*
Check tyre pressures.
Check wheel alignment.
Change wheels round diagonally, including spare, to regularize tyre wear.

7,000 miles (11200 km.) service
Carry out the **1,000 miles (1600 km.) service**

8,000 miles (12800 km.) service
Carry out the **1,000 miles (1600 km.) service**

9,000 miles (14400 km.) service
Carry out the **3,000 miles (4800 km.) service**

10,000 miles (16000 km.) service
Carry out the **1,000 miles (1600 km.) service**

11,000 miles (17600 km.) service
Carry out the **1,000 miles (1600 km.) service**

12,000 miles (19200 km.) service

1. *Engine*
Lubricate carburetter controls.
Check valve rocker clearances and adjust if necessary.
Clean and re-oil air cleaner (both types).
Check dynamo drive belt tension.
Lubricate water pump sparingly.
Clean fuel pump and carburetter.
2. *Ignition*
Check automatic ignition control, lubricating drive shaft, cam and advance mechanism.
Check and adjust, if necessary, distributor contact points.
Fit new sparking plugs.
3. *Clutch*
Check clutch pedal free travel and adjust if necessary.
4. *Steering*
Check steering and suspension moving parts for wear.
5. *Brakes*
Check brakes and adjust if necessary.
Make visual inspection of brake lines and pipes.
Check level of fluid in brake master cylinder.
6. *Hydraulic dampers*
Examine all hydraulic dampers for leaks and top up if necessary.
7. *Radiator*
Drain, flush out and refill radiator.
8. *General*
Tighten rear road spring seat bolts.
9. *Body*
Check and tighten, if necessary, door hinges and striker plate securing screws.
Lubricate door hinges, bonnet lock and operating mechanism.
10. *Electrical*
Check battery cell specific gravity readings and top up to correct level.
Lubricate dynamo bearing.
Check headlamp beam settings and reset if necessary.
11. *Lubrication*
Drain and flush out engine, filling with fresh oil.
Change oil in gearbox and rear axle.
Fit new oil filter element (A35) or new filter assembly (A30).
Check steering gearbox and steering idler oil levels and top up if necessary.
Lubricate all nipples.
Repack front hubs with grease.
Lubricate speedometer cable.
12. *Wheels and tyres*
Check tyre pressures.
Check wheel alignment.
Change road wheels round diagonally, including spare, to regularize tyre wear.

24,000 miles (38400 km.) service
Carry out the **12,000 miles (19200 km.) service**, except engine flushing, with the following addition:

1. *Engine*
Remove engine sump and pick-up strainer, clean and reassemble, filling with fresh oil.

SECTION A

THE ENGINE

	Section
General description	
Lubrication	A.1
Adjustments in the vehicle	A.6
Camshaft and bearings	A.28
Connecting rods and bearings	A.23
Crankshaft and main bearings	A.31
Cylinder block	A.32
Cylinder head	A.17
Cylinder liners—fitting	A.33
Decarbonizing	A.22
Engine removal and refitting	A.7
Fault diagnosis	A.34
Flywheel and engine rear plate	A.29
Flywheel starter ring—fitting	A.30
Manifolds	A.16
Oil filter	A.2
Oil pressure release valve	A.5
Oil pump	A.4
Piston sizes and cylinder bores	A.25
Pistons, rings and gudgeon pins	A.24
Push rod removal	A.13
Rockers	
Clearance—adjusting	A.8
Forged steel	A.11
Pressed steel	A.12
Shaft	A.9
Shaft assembly	A.10
Service tools	End of Section
Sump and gauze strainer	A.3
Tappets	A.14
Timing chain and wheels	A.27
Timing cover	A.26
Valves	
Grinding	A.20
Guides	A.21
Removing and refitting	A.18
Seat inserts—fitting	A.19
Springs—renewing in position	A.15

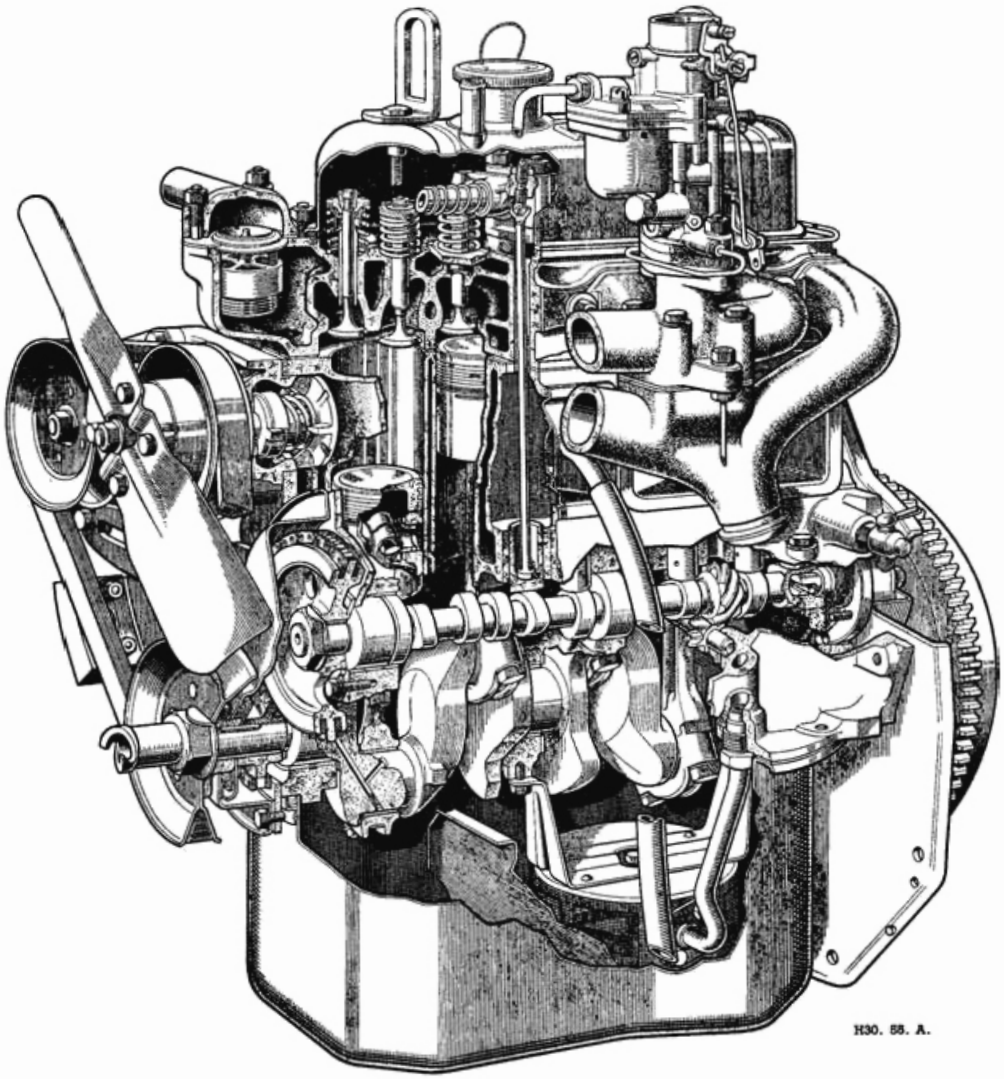

Fig. A.1.
Cut-away view of the engine.

GENERAL DESCRIPTION

The overhead valve engine has its four cylinders vertically in line and cast integral with the crankcase. The detachable cylinder head is of cast iron and carries the push rod operated valve gear.

Large area water circulating passages and full length water jackets enable the engine to be adequately cooled at all times.

The oil pump is dog-driven from the camshaft and the oil passes through an external filter.

The choice of oils is of great importance and those recommended in this manual have been tested under various running conditions and should be used in accordance with the schedule of maintenance attention.

Section A.1

LUBRICATION

Description

The engine unit is pressure lubricated throughout, either by a Hobourn-Eaton, co-axial, non-draining rotary type of pump, or by a Burman pump, mounted at the rear end of the camshaft.

The latter pump contains a rotor, with vanes slotted through it, which revolves within an eccentric housing. The vanes are in constant contact with the wall of the housing thus scooping oil from the inlet port and passing it pressurised through the outlet (Fig. A.6).

The oil circulation begins at the gauze filter and pick-up in the sump, oil is drawn through drillings and into the pump whence it is forced into the main gallery. This runs the length of the engine on the right-hand side, from which the main oil delivery is made. Some of the oil from the main gallery is circulated through the external filter. A spring loaded oil release valve, situated on the right-hand side towards the rear of the crankcase, is located between the pump and the main gallery. The oil release valve is accessible from the exterior of the crankcase (Fig. A.7) and the overflow through this valve is returned to the sump. The oil in the main gallery feeds the main bearings, big end and camshaft bearings. Oil from the cylinder head drains through the push rod holes thus filling the tappet bores. The tappet bearing surfaces are lubricated individually through a drilling in each tappet wall by this oil which finally returns to the sump.

Oil from the front camshaft bearing is forced vertically up a channel in the corner of the tappet chest, into a drilling in the cylinder head. This drilling leads the oil to another in the front pedestal bracket, into the hollow rocker shaft, through holes in this shaft to lubricate the rocker bearings and tappet adjusting screw ball ends. Oil is delivered to the rocker shaft under pressure, surplus oil from the rocker gear returning to the sump via the push rod holes.

The camshaft front journal is drilled right through and grooves cut on either side feed the camshaft gear and timing chain. Lubrication of the camshaft rear bearing is achieved through a small hole in the front face of the oil pump.

All cylinder bores are lubricated through small jets drilled in the top half of each connecting rod big end bearing.

The oil filler cap is situated in the valve rocker cover on top of the cylinder head and the oil level is checked by a dipstick in the right-hand side of the engine crankcase.

Draining the sump

The sump on new and reconditioned engines must be drained and then filled with new oil after the first 500 miles (800 km.) and at intervals of every 3,000 miles (4800 km.). The hexagon headed drain plug is at the rear of the sump on the right-hand side. The sump should be drained when the engine is hot as the oil will then flow more readily; allow it to drain for at least 10 minutes before the drain plug is replaced.

The sump capacity is given in **'GENERAL DATA.'**

On the A30 engine, which is fitted with a by-pass type filter, fit a new filter assembly and on the A35, which has a full-flow filter, change the element and wash the bowl in fuel every 6,000 miles (9600 km.) or every alternate oil change.

Oil pressure

The normal operating pressure is 50 to 55 lb./sq. in. (3·5 to 3·9 kg./cm.^{2}) for the A30 and 60 lb./sq. in. (4·2 kg./cm.^{2}) for the A35.

When the engine is idling oil pressure should not fall below 15lb./sq. in. (1·05 kg./cm.^{2}). Dangerously low oil pressure is indicated by the green warning light on the instrument panel. Should this lamp light while the engine is running, the engine must be stopped at once and the cause investigated.

NOTE: The automatic release valve in the lubrication system deals with any excessive oil pressure when starting from cold.

Check for low oil pressure

Check the level of the oil in the sump by means of the dipstick and top up if necessary. Ascertain that the gauze strainer in the sump is clean and not choked with sludge, also that there is no leakage at the strainer union on the suction side of the pump.

In the unlikely event of the oil pump being defective, remove the unit and rectify the fault, see Section A.4. The oil release valve should be examined, see Section A.5.

If the engine bearings are worn the oil pressure will be reduced. A complete bearing overhaul and the fitting of replacement parts is the only remedy, necessitating the removal of the engine from the vehicle.

Section A.2

OIL FILTER

The external oil filter (A30) is of the by-pass type and is shown in Fig. A.2.

The filter screws into the cylinder block on the right-hand side and it is held in place by a clip and pressed steel bracket.

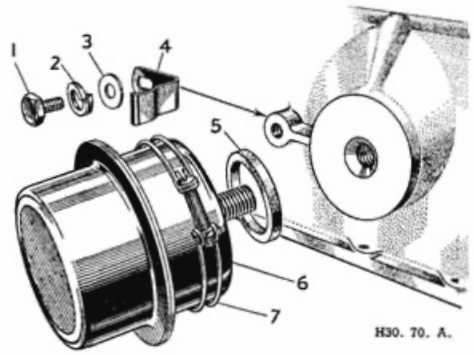

Fig. A.2.
The A30 oil filter exploded.

1. *Setscrews.*
2. *Spring washer.*
3. *Plain washer.*
4. *Oil filter bracket.*
5. *Rubber seal.*
6. *Oil filter.*
7. *Locking clip.*

To renew the filter assembly proceed as follows·

(1) Stop the engine, remove the pressed steel bracket securing setscrew and, after slackening the screw in the clip, slide the clip off.
(2) Unscrew the filter.
(3) Fit the new filter and, after ensuring that the rubber seal is sound and in position, screw the filter up tight by hand.
(4) Secure the filter with the clip and bracket.

The filter assembly must be changed at the mileages recommended in **'MAINTENANCE ATTENTION.'**

The external oil filter (A35) is of the full flow type, thus ensuring that all oil in the lubrication system passes through the filter before reaching the bearings.

The element of the filter is of star formation in which a special quality felt, selected for its filtering properties, is used.

Oil is passed to the filter from the pump at a pressure controlled at 60 lb./sq. in. by the release valve. This pressure will, of course, be somewhat higher until the oil reaches a working temperature. Some pressure is lost in passing the oil through the filter element, this will only be a pound or two per square inch with a new element, but will increase as the element becomes progressively contaminated by foreign matter removed from the oil.

Should the filter become completely choked due to neglect, a balance valve is provided to ensure that oil will still reach the bearings. This valve, set to open at a pressure difference of 15 to 20 lb./sq. in., is non-adjustable and is located in the filter head casting. When the valve is opened, unfiltered oil can by-pass the filter element and reach the bearings.

To renew the filter element proceed as follows:

(1) Stop the engine, extract the centre fixing bolt, remove the container and drain.
(2) Withdraw the contaminated element and carefully cleanse the container of all foreign matter.
(3) After ensuring that no fibres from the cleansing operation have been left in the container, put in a new element, hold the centre bolt firm, prime the filter, refit it to the head casting, tightening the centre fixing bolt sufficiently to make an oil-tight joint and then top up the engine with oil.

The filter container should not be disturbed other than for cleaning and fitting a new element at the recommended mileages; to do so invites the hazard of added contamination from accumulated dirt on the outside of the filter entering the container and thus being carried into the bearings on restarting the engine.

Section A.3

SUMP AND GAUZE STRAINER

Removing

(1) Drain off the oil into a suitable container and then extract the setscrews and washers, thus enabling the sump to be removed.
(2) Detach the oil suction pipe at its connection with the crankcase.
(3) Unscrew the two setpins securing the strainer support bracket to the main bearing caps.
(4) The strainer and support bracket may now be removed from the engine.

Refitting

(1) Rinse the strainer in petrol and thoroughly dry.

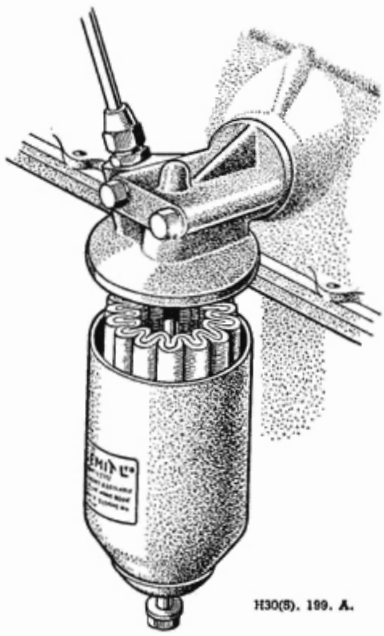

Fig. A.3.
The A35 oil filter container partly detached to show the filter element.

(2) Install the strainer and its securing bracket so that the oil suction pipe connection to the crankcase is correctly located.
(3) Tighten the suction pipe connection.
(4) Clean out the sump by washing it in paraffin, taking care to remove all traces of the paraffin and of the old jointing material on the sump and crankcase joint faces.
(5) Smear the faces of the joints with grease and fit new joint washers. The cork sealing washers for the main bearing caps, which should stand proud of the sump, may be used again only if they are sound.
(6) Lift the sump into position and insert the setscrews into the flange, tightening them up evenly.

Section A.4

OIL PUMP

To remove

(1) The detachment of the oil pump first entails the removal of the engine from the car. Details of this procedure are described in Section A.7.
(2) Remove both flywheel and engine rearplate as described in Section A.29 when access is gained to the oil pump.
(3) Tap back the locking washers and remove the three ¼ in. U.N.F. securing setscrews.
(4) Withdraw the pump noting the position of the slot in the driving shaft in order to assist replacement. If the paper joint washer is damaged in any way it must be renewed.

Dismantling the Hobourn Eaton pump

(1) Remove the oil pump cover after unscrewing its two securing setpins.
(2) The outer rotor and the combined oil pump shaft and inner rotor can now be removed (see Fig. A.4)

Dismantling the Burman pump

The procedure for dismantling the Burman pump is the same as for the Hobourn Eaton pump, except that the rotor, with its vanes, can be extracted after removal of the cover.

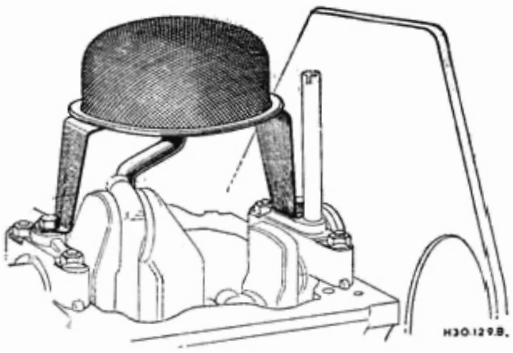

Fig. A.5.
The oil pump pick-up filter gauze.

Re-assembling the Hobourn Eaton pump

(1) Fit the outer rotor with its chamfered end towards the base of the body.
(2) Insert the slotted end of the drive shaft through the hole in the base of the body and bring the two rotors into mesh.
(3) Place the cover in position, tighten the two setpins and turn the drive shaft to check that the pump rotates freely.

Re-assembling the Burman pump

This procedure is similar to the re-assembly of the Hobourn Eaton pump but the rotor, with its vanes, can only be replaced one way into the pump body.

Replacing

The replacement of the oil pump is a reversal of the removal procedure; however, the operator must pay particular attention when positioning the paper joint washer to ensure that the intake and delivery ports are not obstructed.

Section A.5

OIL PRESSURE RELEASE VALVE

The oil release valve (Fig. A.7) is situated at the rear

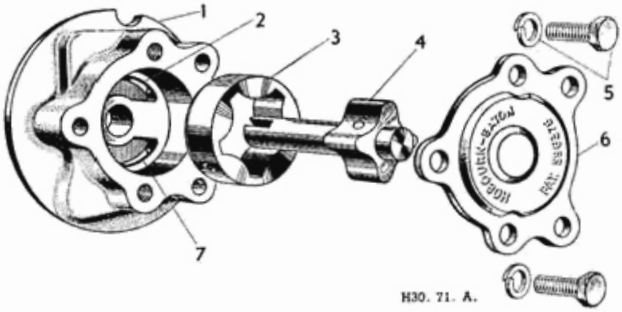

Fig. A.4.
The Hobourn Eaton oil pump.

1. *Pump body.*
2. *Delivery port.*
3. *Outer rotor.*
4. *Inner rotor and driving shaft.*
5. *Setscrew and washer.*
6. *Cover.*
7. *Suction port.*

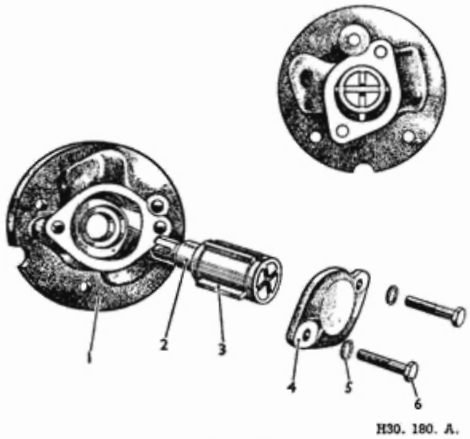

Fig. A.6.
The Burman oil pump.

1. *Oil pump flange.*
2. *Rotor.*
3. *Vane.*
4. *Pump cover.*
5. *Cover bolt washer.*
6. *Cover bolt.*

right-hand side of the cylinder block, alongside the distributor. It is non-adjustable and is held in position by a compressed coil spring. This compression is maintained by two fibre washers and a domed screw plug.

The function of the valve is to provide an extra return passage for the oil should the pressure become excessive.

A pre-determined spring rating allows release pressures as given in **'GENERAL DATA'** and these can be checked by measuring the length of the spring, the correct figure being 2⅞ in. Fit a new spring if the tension has been lost. Service Tool 18G 69 should be used to grind the valve into its seating.

Section A.6

ADJUSTMENTS IN THE VEHICLE

The purpose of the following adjustments is to maintain the performance of the engine at its maximum, and consists of a series of cleaning, inspecting and adjusting operations. A compression test of each cylinder should first be made to determine the general condition of the engine before proceeding with any adjustments. If a compression gauge is not available, a simple method to test the compression is to remove all the sparking plugs with the exception of the one in the cylinder being tested, and then rotate the engine with the starting handle through at least two complete revolutions. If the cylinder compression is satisfactory, proceed as detailed below, otherwise the specific fault should be diagnosed by referring to 'Fault Diagnosis,' Section A.34.

(1) Clean the engine generally and lubricate as indicated on the lubrication diagram.

(2) Adjust the fan belt tension in accordance with the instructions given in Section C.

(3) Remove the valve gear cover and test the cylinder head studs for tightness, using a torque spanner set to the figure quoted under **'GENERAL DATA.'**

(4) Check and adjust the rocker clearances as outlined in Section A.8.

(5) Check for evidence of cracked valve springs or scored or worn stems.

(6) Replace the valve gear cover, using a new gasket if necessary.

(7) Disconnect the high tension cables and remove the sparking plugs.

(8) Check to make sure that the correct type of sparking plug is being used.

(9) Clean the sparking plugs and examine the insulation for breaks or cracks.

(10) Adjust the sparking plug gaps as specified in **'GENERAL DATA'.**

(11) Test the sparking plugs and renew any found to be unfit for further service.

(12) Refit the sparking plugs, using new washers.

(13) Check the high tension cables for wear and deterioration before refitting.

(14) Remove the distributor head cover and clean it inside and out. Examine it for cracks and burned contacts and renew it if necessary.

(15) Inspect the contact breaker points to determine whether new points are needed. Follow the procedure given in Section B to clean and adjust the points.

(16) Check the distributor rotor arm, making sure the carbon brush makes contact. Check the capacitor terminal to make sure it is clean and tight.

(17) Check the ignition timing as outlined in Section B.

(18) Clean the air cleaner in accordance with the instructions in Section D.

(19) Make sure the fuel system is operating properly and clean all filters in the system as detailed in Section D.

(20) Check the carburetter manifold flange gasket for evidence of leakage.

(21) Adjust the carburetter if necessary, in accordance with the procedure given in Section D.

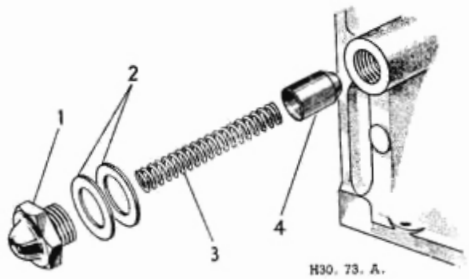

Fig. A.7.
The oil pressure release valve.

1. *Cap nut.*
2. *Washers.*
3. *Spring.*
4. *Valve.*

Section A.7

ENGINE REMOVAL AND REFITTING

To remove and refit (with gearbox)

To remove the engine complete with gearbox proceed as follows:

(1) Drain the cooling system and the gearbox.

(2) Disconnect the battery positive terminal.

(3) Disconnect the high tension leads at the sparking plugs and the high tension lead at the coil and remove the distributor cap and rotor.

(4) If the coil is located on the scuttle, disconnect the low tension (C.B.) lead at the distributor and if the coil is located on the dynamo, disconnect the low tension (S.W.) lead at the coil.

(5) Disconnect the electrical leads from the starter motor, dynamo and oil pressure indicator switch.

(6) If a heater is fitted, remove the two nuts securing the heater tap to the cylinder head and lift it out of the way. Slacken the two circlips and ease the rubber hoses off the heater return pipe. Disconnect the radiator top and bottom hoses at the outlet elbow and water pump respectively. Remove the four bolts (two each side), which screw into caged nuts, from the radiator mounting flange and remove the radiator.

(7) Disconnect the throttle linkage and the choke cable.

(8) Disconnect the fuel inlet pipe from the fuel pump.

(9) Release the exhaust pipe from the manifold and from its support stay on the engine back plate and tie it aside.

(10) From inside the car, lift off the rubber grommet through which the change speed lever passes. Take out the three setscrews and spring washers from the change speed lever seat and remove the lever along with its seat. On A35 cars, takecare to retain the thrust button and spring and to ensure that the anti-rattle plunger and spring (see Section F) do not drop into the remote control housing.

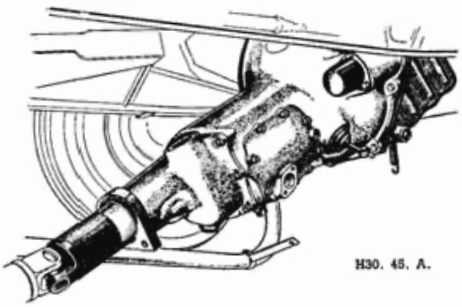

Fig. A.8.
The rear end of the A30 gearbox released before lowering the engine.

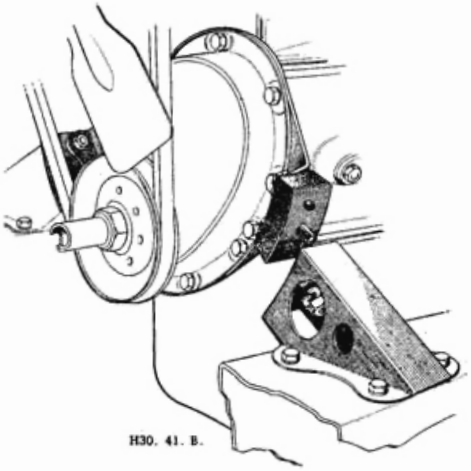

Fig. A.9.
The engine mounting bracket and rubber mounting.

(11) Disconnect the speedometer cable at the gearbox.

(12) Release the clutch pedal pull-off spring and take the nut, locknut and washers off the front end of the clutch operating rod.

(13) Release the two setscrews in the inner, and the two nuts and bolts in the outer, clutch pedal shaft support flanges, then slide the shaft away from the gearbox to free it. In the case of right-hand drive cars, the pin in the outer spherical bush must be removed before the shaft can be freed.

(14) Uncouple the propeller shaft from the rear axle by removing the bolts, nuts and lock washers and draw the front end of the shaft out of the gearbox.

(15) Remove the bonnet top after taking out the bolts which secure it to the hinge. Remove the air cleaner. Support the engine/gearbox as a unit by means of suitable lifting tackle on the engine sling brackets above the rocker cover.

(16) Remove the nut and washer securing each of the two front engine mounting rubbers to the mounting brackets. Raise the engine an inch or so and detach the mounting bracket from each side of the frame after removing four nuts and bolts. See Fig. A.9.

(17) On A30 cars, remove the two setcsrews from the clamping plate under the gearbox rear cover and on A35 cars, take out two setpins which pass through the transmission tunnel (one each side from inside the car) into the gearbox cross-member and from below the car, take off the nuts securing the cross-member.

(18) Lower the engine/gearbox as a unit on to a suitable trolley jack after ensuring that no obstruction remains.

(19) Raise the front wheels onto blocks high enough

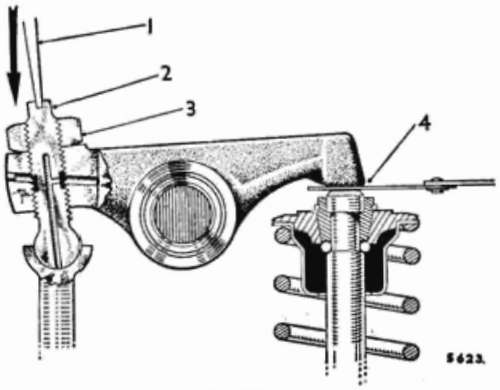

Fig. A.10.
Valve clearance adjustment.
1. *Screwdriver.*
2. *Adjusting screw.*
3. *Locknut.*
4. *Feeler gauge.*

to allow the engine/gearbox unit to be drawn out without fouling the front number plate but take care not to damage the exhaust tail pipe. Draw out the unit from beneath the vehicle.

(20) Separate the gearbox from the engine by removing the bolts, nuts and washers which secure it to the engine rear mounting plate and detach the starter motor which will be released by the removal of the two longer bolts, nuts and washers. Do not, under any circumstances, allow the gearbox to hang in the clutch by its first motion shaft.

(21) Refitting is a reversal of the removal procedure, but if the clutch driven plate has been disturbed it must be centralized by using a dummy first motion shaft or Service Tool 18G139. Reconnect all items of equipment and refill the engine and gearbox with oil (to Ref. A, page P.2) and the cooling system with coolant.

To remove and refit (without gearbox)

The procedure is as detailed under 'To remove (with gearbox)' except that the gearbox mountings need not be removed nor the speedometer drive cable, clutch linkage, gear lever and propeller shaft.

The gearbox must be supported before the bellhousing bolts are removed and the engine moved forward, before being lowered, to free the gearbox first motion shaft. The gearbox need not be drained.

When refitting the engine, manoeuvre it into position, apply the handbrake and engage top gear to lock the gearbox first motion shaft and then guide the clutch driven plate hub onto the first motion shaft, if necessary rotating the engine to allow the splines to engage.

Section A.8

ADJUSTING ROCKER CLEARANCE

Lift off the valve cover after removing the two cap nuts.

Between the rocker arm and the valve stem there must be a clearance of ·012 in. (·305 mm.) for both inlet and exhaust, clearance being set with the engine hot or cold.

(1) If adjustment is necessary slacken off the locknut (3 Fig. A.10) whilst pressure is applied, with a screwdriver, to the adjusting screw.

(2) Insert a ·012 in. feeler gauge between the valve stem and rocker arm and raise or lower the adjusting screw until the correct clearance is obtained.

(3) Tighten the locknut but re-check the clearance in case the adjustment has been disturbed during the locking process.

(4) When replacing the valve cover, take care that the joint washer (a new one if necessary) is properly seated to ensure an oil tight joint.

Section A.9

ROCKER SHAFT

Of hollow construction, the rocker shaft is mounted on the cylinder head and secured by means of four pedestal brackets.

It is supplied with oil through a drilling in the foremost pedestal bracket for lubrication to each rocker bearing.

The shaft is plugged at each end, one or both of the plugs being screwed in order that the shaft may be cleaned internally.

Section A.10

ROCKER SHAFT ASSEMBLY

Removal

(1) Drain the cooling system.

(2) Remove the air cleaner. Remove the rocker cover after unscrewing the two nuts securing it to the cylinder head; take care not to damage the cork gasket. On A30 engines prior to No. 52862 notice that there is a special locking plate above the front rocker shaft pedestal. Later A30 and A35 engines have four longer plates, one for each rocker shaft pedestal.

(3) Unscrew the eight rocker shaft pedestal fixing nuts and the five external cylinder head securing nuts gradually, a turn at a time, in the order shown in Fig. A.15, until all load has been released.

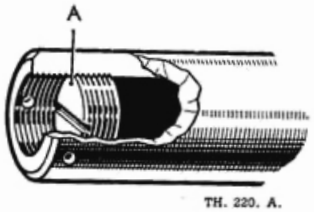

Fig. A.11.
The screwed plug 'A' can be removed to clean the inside of the rocker shaft.

NOTE: It is necessary to drain the radiator and slacken the five external cylinder head securing nuts because four of the rocker shaft pedestal fixing nuts also secure the cylinder head and, if the five external cylinder head fixing nuts are not slackened, distortion may result and water find its way from the cooling system into the cylinders and sump.

(4) Completely unscrew the eight rocker shaft pedestal nuts and remove the rocker assembly complete with brackets and rockers.

Dismantling

(1) Remove the grub screw which locates the rocker shaft in the rocker shaft front pedestal.

(2) Remove the split pins, flat washers and spring washers from each end of the shaft.

(3) Slide the rockers, pedestals and springs from the shaft.

Reassembly

When reassembling, lock the rocker shaft to the front pedestal by means of the grub screw and replace the three remaining pedestals, the rockers and springs in their original positions on the shaft. Do not forget to refit the grub screw lock plate over the rocker shaft front pedestal on earlier engines, or the four rocker pedestal plates on later engines. Replace the rocker cover with its vent pipe to the front and renew the two cap nut rubber bushes and the rocker cover cork gasket, if they are damaged.

Section A.11

FORGED STEEL ROCKERS

Rebushing of forged steel valve rockers is carried out as follows:

Remove and dismantle the rocker shaft assembly as detailed in Section A.10.

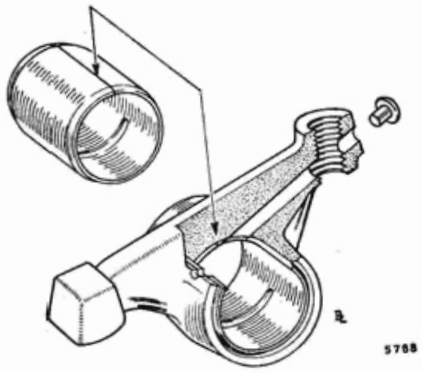

Fig. A.12.
When rebushing the forged type valve rocker make certain that the joint in the bush is in the position indicated.

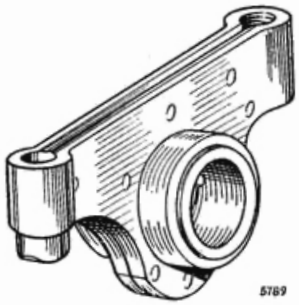

Fig. A.13.
The pressed steel type of valve rocker, which must not be rebushed.

To remove and replace worn bushes the use of Service Tools 18G226 and 18G226A comprising a drift and anvil is recommended. Bushes and rockers are very easily damaged by the use of improvised drifts.

The anvil is recessed to hold the rocker in position while the worn bush is driven or pressed out.

Press the new bush into the rocker bore with the butt joint of the bush positioned at the top of the bore as in Fig. A.12. The drift is recessed to prevent the bush opening when being driven into position.

It will be necessary to drill the oil holes in the bush to coincide with the oilways in the rocker. Should the oil hole to the adjuster end be drilled before the bush is fitted, extra care must be taken to keep the holes in the bush and rocker in line during the pressing-in operation. If the holes are drilled after fitting, the following procedure must be adopted. Remove the adjuster screw and use a No. 43 drill [·089 in. (2·26 mm.)] to drill out the end plug and to continue the oilway through the bush. Replug the end after the operation with a rivet (Part No. 5C2436) and weld it in position.

The hole in the top of the rocker barrel must be continued through the bush with a No. 47 [·0785 in. (1·98 mm.)] diameter drill. Finally, burnish-ream the bush to the dimensions given under **'GENERAL DATA'.**

Section A.12

PRESSED STEEL ROCKERS

Valve rockers of pressed steel construction (see Fig. A.13) have been introduced as alternatives to the forged type on later A35 engines.

Rebushing pressed steel valve rockers is not practicable and must not be undertaken. When bushes become worn new rocker assemblies must be fitted. If it becomes necessary to renew individual valve rockers, it is important that those of the pattern already fitted are used. Pressed steel and forged type valve rockers are interchangeable only in sets of eight.

This alternative type of valve rocker is fitted from the following engine numbers:

9-U-H 165986 to 166000 inclusive and then 166208 onwards.

9-U-L 165759 to 165800 inclusive and then 166053 onwards.

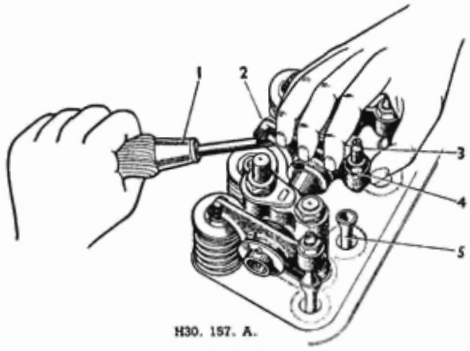

Fig. A.14.
Push rod removal.

1. *Screwdriver.*
2. *Valve rocker.*
3. *Adjusting screw.*
4. *Locknut.*
5. *Push rod.*

Section A.13

PUSH ROD REMOVAL

If the valve rocker assembly has already been removed all that remains is for the push rods to be lifted out. They may on the other hand be taken out without detaching the rocker assembly as described below:

(1) Remove the valve rocker cover as described in Section A.10 and slacken the valve adjustment screw to its full extent.
(2) Using a screwdriver, with the rocker shaft as fulcrum, depress the valve and slide the rocker sideways free of the push rod.
(3) Withdraw the push rod.
(4) In the case of an end push rod, it is necessary to extract the split pin at the end of the shaft and withdraw the rocker.
(5) When replacing the push rods, ensure that their ball ends register in the tappet cups.

Section A.14

TAPPETS

Removal

(1) Remove the push rods after detaching the valve rocker assembly as described in Section A.10.
(2) Release the engine side covers by withdrawing their securing setscrews and fibre washers. The front cover is removed together with its vent pipe.
(3) Lift out the tappets, if necessary rotating the camshaft to raise them, and maintain their relative positions for replacement. Inspect the tappet/cam contacting surfaces for wear. New tappets should be fitted by selective assembly so that they just fall into their guides under their own weight when lubricated.

Replacement

Assembly is a reversal of the above procedure, but care should be taken to see that the tappet cover joints are oil-tight and that the rockers are adjusted to give the correct valve clearance (see **'GENERAL DATA'**).

Section A.15

RENEWING VALVE SPRING IN POSITION

(1) In an emergency a new valve spring can be fitted without lifting the cylinder head, but it is advisable first to bring the piston to top dead centre, to ensure that the valve cannot fall into the cylinder during the process.
(2) Remove the sparking plug, and by means of a length of copper tubing or similar tool inserted through the plug hole, the valve can be held on its seat whilst the spring is compressed. The valve rocker shaft can be used as a fulcrum point by an operator using two screwdrivers to bear on the valve spring cup each side of the valve stem, whilst the cotters are removed.

Section A.16

MANIFOLDS

Removal and replacement

(1) Detach the air cleaner from the carburetter.
(2) Disconnect the exhaust down pipe.
(3) Disconnect the throttle and choke linkages to the carburetter, together with the vacuum control pipe and petrol feed pipe. Remove the carburetter.
(4) Unscrew and remove the six nuts and washers which secure the exhaust and inlet manifolds to the cylinder head. Four of these nuts bear on special clamping washers and secure the heater return pipe when a heater is fitted. The remaining two secure the end flanges of the exhaust manifold.
(5) The inlet and exhaust manifolds can now be drawn off their studs and lifted clear of the engine.
(6) The inlet and exhaust manifolds are separated by withdrawing the four connecting setscrews, noting the respective positions of the special hot spot and joint washer.
(7) When reassembling, locate but do not tighten the four setscrews which hold the two manifolds together. Fit the manifold assembly to the cylinder head using a new joint washer. Tighten the manifold nuts and then tighten the setscrews which secure the two manifolds together.

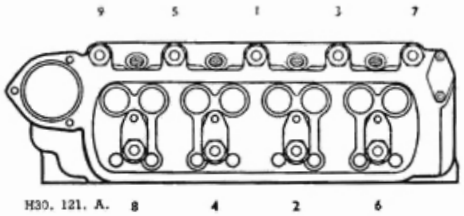

Fig. A.15.
The order of tightening cylinder head nuts.

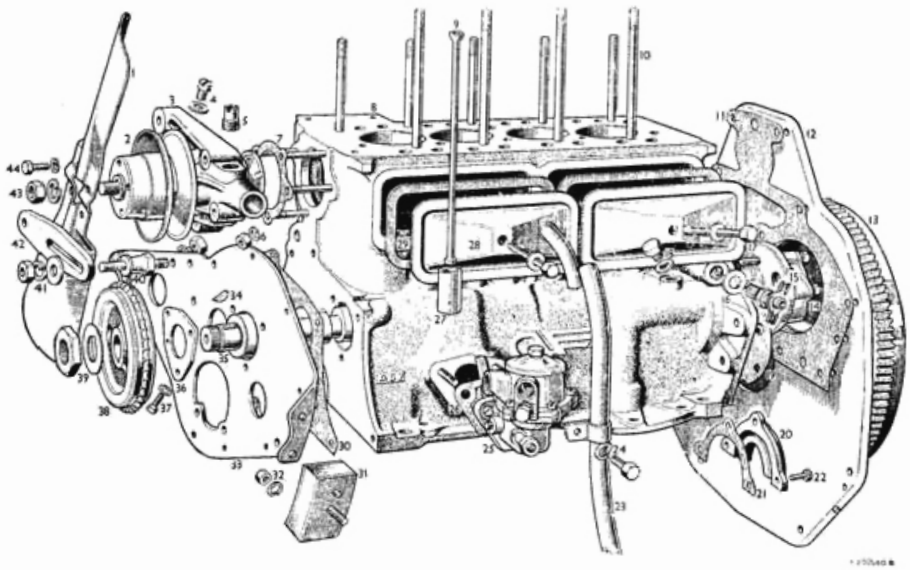

Fig. A.16. An exploded view of the crankcase assembly.

1. *Fan blade.*
2. *Water pump pulley.*
3. *Water pump.*
4. *Water pump screwed plug and washer.*
5. *Water pump by-pass tube.*
6. *Nut and washer for water pump stud.*
7. *Water pump joint washer.*
8. *Cylinder block.*
9. *Push rod.*
10. *Cylinder head studs in block.*
11. *Rear mounting plate joint washer.*
12. *Rear mounting plate.*
13. *Flywheel and starter ring.*
14. *Oil pump.*
15. *Cylinder block drain tap.*
16. *Washer for drain tap.*
17. *Setscrew and washer for side cover.*
18. *Oil priming plug and joint washer.*
19. *Oil pump joint washer.*
20. *Crankcase rear cover.*
21. *Joint washer for rear cover.*
22. *Rear cover setscrew.*
23. *Crankcase vent pipe.*
24. *Setscrew and washer.*
25. *Petrol pump.*
26. *Petrol pump joint washer.*
27. *Tappet.*
28. *Cylinder side cover, front.*
29. *Joint washer for side cover.*
30. *Front mounting plate joint washer.*
31. *Rubber mounting.*
32. *Nut and washer for rubber mounting.*
33. *Engine front mounting plate.*
34. *Woodruff key.*
35. *Camshaft.*
36. *Camshaft locating plate.*
37. *Setscrew and shakeproof washer.*
38. *Camshaft wheel and tensioner rings.*
39. *Nut and lockwasher.*
40. *Pillar for adjusting link.*
41. *Nut and washers for link.*
42. *Dynamo adjusting link.*
43. *Nut and washer for pulley.*
44. *Setscrew and washer for fan blade.*

Section A.17

CYLINDER HEAD

Removing

(1) Drain all water from the cooling system, if the water contains anti-freeze mixture, it should be run into a clean container and used again.

(2) Disconnect the top water hose and the thermostat by-pass hose from the cylinder head.

(3) Disconnect the high tension leads from the sparking plugs.

(4) Detach the inlet and exhaust manifolds as detailed in Section A.16.

(5) Remove rocker cover as described in Section A.10.

(6) Remove the suction advance pipe. When a heater is fitted, detach its inlet hose and water valve control cable (when fitted) and remove the heater return pipe.

(7) Remove the rocker assembly as described in Section A.10.

(8) Withdraw the push rods, keeping them in order of removal.

(9) Remove the five external cylinder head nuts together with their flat washers and lift off the cylinder head.

(10) If removal of the cylinder head presents difficulty, rotate the engine by means of a spanner applied to the crankshaft pulley nut, when the head will lift off its seating.

Replacing

(1) Replace the cylinder head gasket with the side marked 'Front' uppermost and to the front of the engine. Do not use jointing compound.

(2) Lower the cylinder head whilst guiding the by-pass hose into its metal tube and position the cylinder head stud nut washers. Ensure that the suction advance pipe clip is replaced in its original position on the cylinder head.

(3) Insert the push rods, ensuring that their ball ends are correctly located in the tappets.

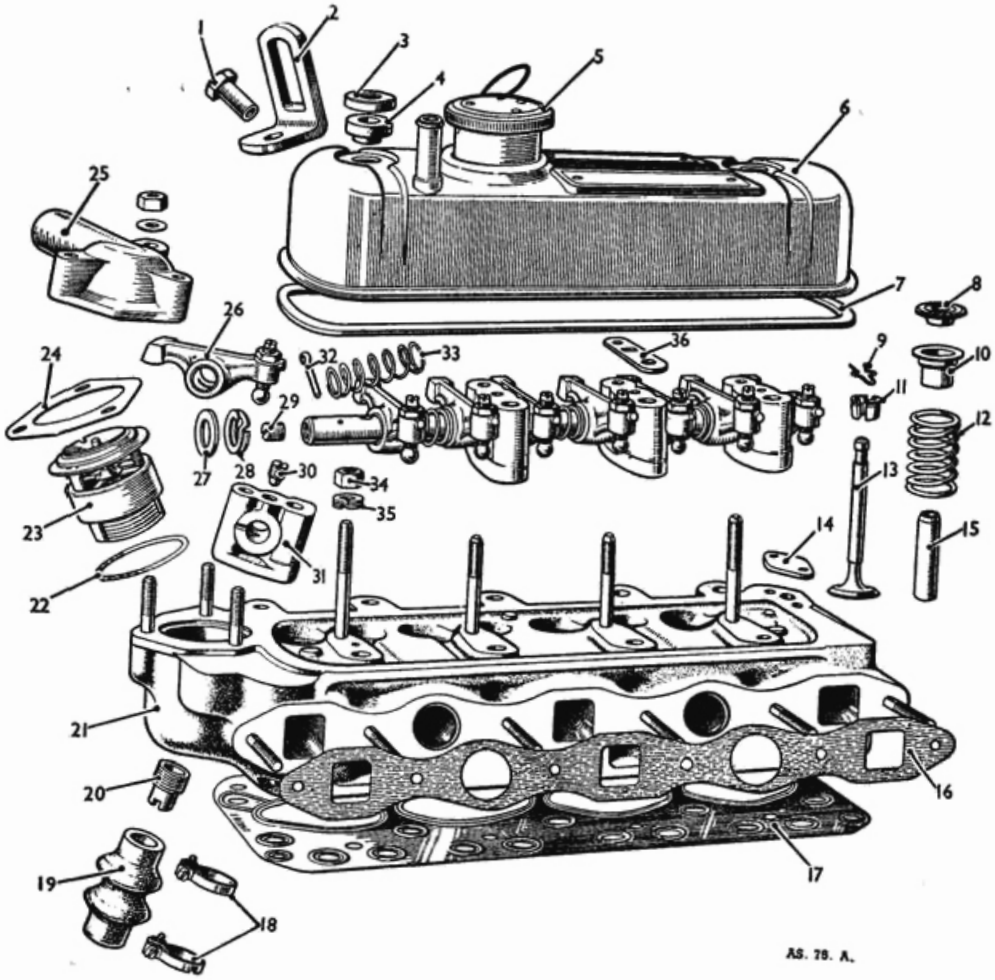

Fig. A.17.
Cylinder head assembly.

1. *Valve rocker cover cap nut.*
2. *Engine sling bracket.*
3. *Cup washer.*
4. *Rubber bush.*
5. *Oil filler cap.*
6. *Valve rocker cover.*
7. *Rocker cover joint washer.*
8. *Valve spring cup.*
9. *Valve cotter circlip.*
10. *Valve shroud.*
11. *Valve cotters.*
12. *Valve spring.*
13. *Valve.*
14. *Cover plate.*
15. *Valve guide.*
16. *Joint washer.*
17. *Gasket.*
18. *Hose clips.*
19. *By-pass hose.*
20. *By-pass tube.*
21. *Cylinder head.*
22. *Thermostat joint washer.*
23. *Thermostat.*
24. *Water outlet elbow joint washer.*
25. *Water outlet elbow.*
26. *Rocker.*
27. *Plain washer.*
28. *Spring washer.*
29. *Rocker shaft plug.*
30. *Locating grub screw.*
31. *Rocker shaft pedestal.*
32. *Split pin.*
33. *Rocker spacing spring.*
34. *Rocker bracket nut.*
35. *Rocker bracket washer.*
36. *Rocker bracket plate.*

(4) Replace the rocker gear as described in Section A.10.

(5) Fit the cylinder head nuts finger tight and then tighten them a turn at a time, in the order given in Fig. A.15, to the torque spanner reading given in **'GENERAL DATA.'** Tighten the by-pass hose on to its tube by means of the clip.

(6) Reset the valve clearance, and replace the rocker cover using a new joint washer if necessary.

(7) Replace the inlet and exhaust manifold and carburetter and connect up the petrol pipe, throttle and choke controls and heater outlet pipe, if fitted. Tighten the manifold nuts evenly ensuring that a good joint is made.

(8) Reconnect the heater inlet hose and water valve control cable (when fitted), the outlet hose from the thermostat housing to the radiator and the breather pipe.

(9) Refill the cooling system, replace the sparking plugs and their washers, and the high tension leads to their respective plugs.

(10) Check the tightness of the cylinder head nuts and reset the valve clearance after the vehicle has run about 100 miles (160 km.).

Section A.18

REMOVING AND REFITTING VALVES

Removal

(1) Remove the valve circlip. Compress the valve spring with Service Tool 18G 45, and remove the two valve cotters. Release the valve spring and remove the compressor, valve spring cup, shroud, and spring. Remove the valve packing ring from the cotter groove and withdraw the valve from its guide.

Proceed with the other seven valves.

(2) When removing the valves, place them in a rack, thus enabling them to be paired up with their correct combustion chambers.

Replacement

(1) Clean the carbon from the top and bottom of the valve heads, as well as any deposit that may have accumulated on the stems. The valve heads should, if necessary, be refaced at an angle of 45° for both exhaust and inlet valves.

(2) If the valve seats show signs of excessive pitting it is advisable to reface them. Service Tools are available for this purpose. Valve seat cutter handle 18G 27 should be used in conjunction with the pilot 18G 167D and cutters 18G 167, 18G 167A, 18G 167B and 18G 167C.

(3) The valves are made without any indentures or slots in the head. This necessitates the use of a rubber suction valve grinding tool.

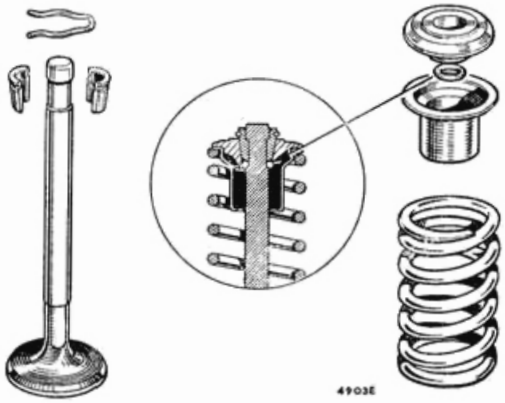

Fig. A.18.

Parts of the valve assembly showing the valve, cotters, circlip, spring, shroud, packing ring, and spring cup. The inset shows the valve packing ring fitted correctly at the bottom of the cotter groove below the cotters.

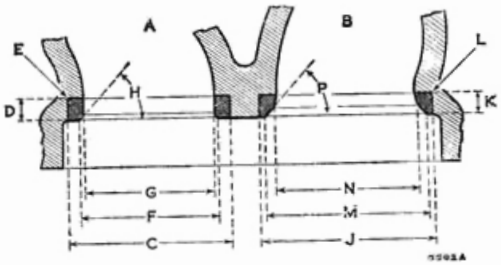

Fig. A.19.

Valve seat machining dimensions.

	Exhaust (A)		Inlet (B)
C.	1·124 to 1·125 in. (28·55 to 28·58 mm.).	J.	1·187 to 1·188 in. (30·16 to 30·17 mm.).
D.	·186 to ·188 in. (4·72 to 4·77 mm.).	K.	·186 to ·188 in. (4·72 to 4·77 mm.).
E.	Maximum radius ·015 in. (·38 mm.).	L.	Maximum radius ·015 in. (·38 mm.).
F.	1·0235 to 1·0435 in. (25·99 to 26·50 mm.).	M.	1·0855 to 1·1055 in. (27·58 to 28·07 mm.).
G.	·844 in. (21·43 mm.).	N.	1·000 to 1·006 in. (25·4 to 25·55 mm.).
H.	45°.	P.	45°.

(4) Place each valve into its guide and fit the springs, shrouds and cups. Compress the valve spring and push a new synthetic rubber packing ring over the tip of the valve stem down to the bottom of the cotter groove (see Fig. A.18.) Refit the two valve cotters and remove the compressor. Replace the valve circlip.

NOTE.—Do not fit old valve packing rings or oil sealing may suffer. The rings are fitted more easily if they have been soaked in clean engine oil for a short period before use.

Section A.19

FITTING VALVE SEAT INSERTS

Should the valve seatings become so badly worn or pitted that the normal workshop cutting and refacing tools cannot restore them to their original standard of efficiency, special valve seat inserts can be fitted.

The seatings in the cylinder head must be machined to the dimensions given in Fig. A.19. Each insert should have an interference fit of ·0025 to ·0045 in. (·063 to ·11 mm.) and must be pressed and not driven into the cylinder head.

After fitting grind or machine the new seating to the dimensions given in Fig. A.19. Normal valve grinding may be necessary to ensure efficient valve seating.

Section A.20

VALVE GRINDING

(1) For valve grinding a little grinding paste should be smeared evenly on the valve face, and the valve rotated backwards and forwards against its seat (using Service Tool 18G 29 with suction pad 18G29B), advancing it a step at short intervals until a clean and unpitted seating is obtained. The

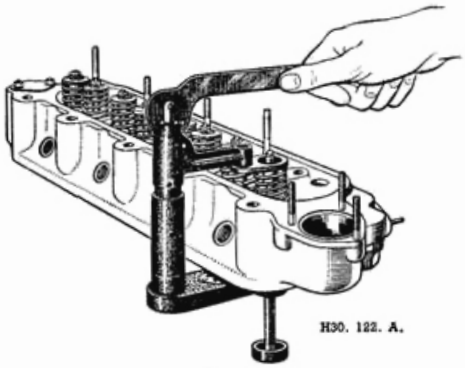

Fig. A.20.
Compressing a valve spring.

cutting action is facilitated by allowing a light spring, placed under the valve head, to periodically lift the valve from its seat. This allows the grinding compound to re-penetrate between the two faces after being squeezed out.

(2) On completion, all traces of compound must be removed from the valve and seating. It is essential that each valve is ground-in and refitted to its own seating.

(3) It is also desirable to clean the valve guides; this can be done by dipping the valve stem in petrol or paraffin and moving it up and down in the guide until it is free.

Section A.21

VALVE GUIDES

(1) The valve guides are of a one-piece design. They are pressed into the cylinder head to allow $\frac{19}{32}$ in. (15·0812 mm.) of the guide to protrude above the machined face when fitted.

(2) Valve guides should be tested for wear whenever valves are removed, and if excessive side play is present, a close check should be made of the valve stem and the guide. In the event of wear being noticeable, the defective components should be renewed. If a valve is at fault the wear will be evident on the stem. It should be borne in mind that the valve stem and guide should be a running fit to avoid the possibility of an air leak.

(3) If renewal is necessary due to wear, the valve guide may be driven out after removal of the valve, as shown in Fig. A.21.

(4) The drift is stepped in order to ensure location and to prevent it slipping off the guide and damaging the port. Knock out the guide in the direction shown.

(5) A new guide should be driven into position in the same direction.

(6) The final position of the guide is shown in Fig. A.21.

Section A.22

DECARBONIZING

(1) Remove the cylinder head as described in Section A.17.

(2) Scrape off all carbon deposit from the cylinder head and ports. Clean the carbon from the piston crowns, care being taken not to damage the pistons and not to allow dirt or carbon deposit to enter the cylinder barrels or push rod compartment.

When cleaning the top of the pistons do not scrape right to the edge as a little carbon left on the chamfer assists in keeping down oil consumption; with the pistons cleaned right to the edge or new pistons, oil consumption is often slightly, though temporarily, increased.

(3) Blow out the oil passages and swill out the water passages using a water hose. The gasket contacting surfaces of the head should be checked for flatness with a straight edge and the surfaces examined for scores. If the cylinder head is found to be badly out of true it should be renewed.

(4) Remove all carbon accumulation from the valves

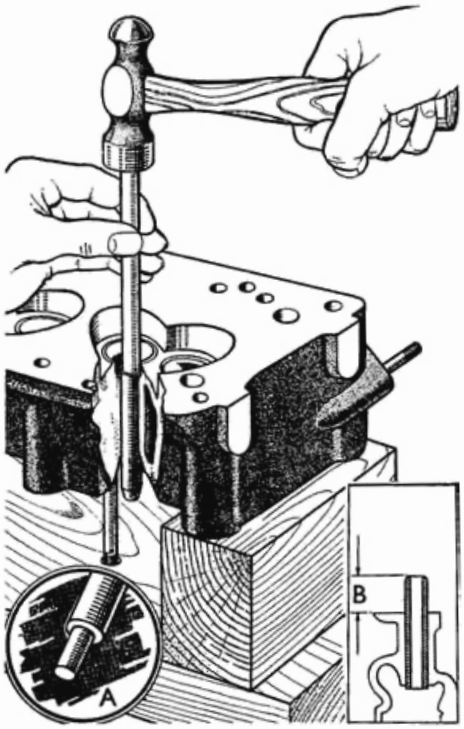

Fig. A.21.
Removing a valve guide.
Inset 'A' shows the form of the tool. Inset 'B': the valve guide should be $\frac{19}{32}$ in. above the cylinder head.

and thoroughly clean them. Inspect the valve faces and seats and if they are slightly pitted or rough, grind them in, as described in Section A.20. If the valves and seats show signs of excessive pitting, or the faces are not flat, the valves and seats should be refaced (see Section A.18).

(5) Examine the valve guides, as described in Section A.21.

(6) Broken or weak valve springs should be renewed. The other valve springs should be tested and the results compared with figures given in **'GENERAL DATA'**.

(7) Clean the rocker shaft and blow out the oil passages as described in Section A.9.

(8) Inspect the rocker shaft, rockers and bushes for wear. Renew any worn rocker bushes or complete rockers as described in Sections A.11 and A.12.

(9) Reassemble and install the cylinder head assembly.

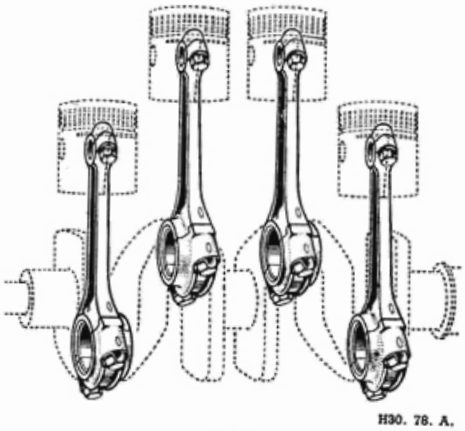

Fig. A.23.
Showing the correct method of assembly.

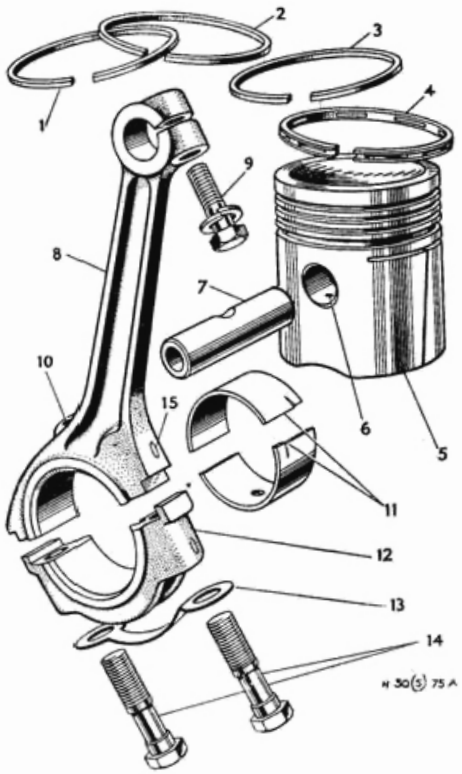

Fig. A.22.
A connecting rod and piston assembly.

1. *Piston ring, parallel.*
2. *Piston ring, taper.*
3. *Piston ring, taper (later engines).*
4. *Piston ring, scraper.*
5. *Piston.*
6. *Gudgeon pin lubricating hole.*
7. *Gudgeon pin.*
8. *Connecting rod, less cap.*
9. *Clamping screw and washer.*
10. *Cylinder wall lubricating jet.*
11. *Connecting rod bearings.*
12. *Connecting rod cap.*
13. *Lockwasher.*
14. *Setscrews.*
15. *Mark on rod and cap.*

Section A.23

CONNECTING RODS AND BEARINGS

Removal

(1) Remove the cylinder head assembly as described in Section A.17.

(2) Drain and remove the sump (see Section A.3).

(3) Unlock and remove the setscrews securing the caps and bearings to the connecting rods. Remove the caps and bearings.

(4) Withdraw the pistons and connecting rods upwards through the cylinder bores.

(5) It may be necessary to remove the carbon or ridge from the top of the bores prior to pushing the piston upwards, to avoid piston ring fracture.

(6) Remove the pistons from the connecting rods by unscrewing the clamp bolt from the small end of the connecting rod and pushing the gudgeon pin out.

(7) Ensure that each connecting rod, cap and bearing is marked with the cylinder number from which it was removed.

(8) The big ends are offset: rods in numbers 1 and 3 cylinders towards the front and in numbers 2 and 4 cylinders towards the rear.

(9) The alignment of the connecting rods should be checked on an alignment fixture. On no account must the rods or caps be filed.

(10) Examine the bearing shells for wear and pitting. Renew the bearing shells if necessary. Bearings are pre-finished with the correct diametral clearance and do not require bedding in.

(11) Check the crankpins with a micrometer; if they are worn oval or are scored, the crankshaft will have to be removed for regrinding, see Section A.31.

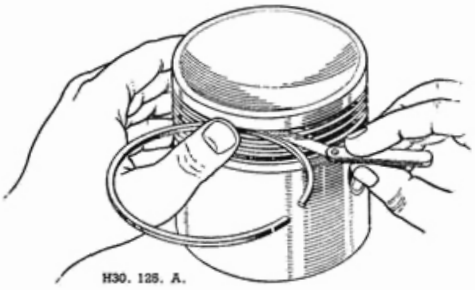

Fig. A.24.
Checking piston ring clearance in a groove.

Replacing

Before installing the connecting rods and bearings the pistons and rings must be serviced, see Section A.24.

The pistons and connecting rods must be refitted into the same cylinder bores and the same way round as originally fitted.

(1) Assemble the piston and the connecting rod to the gudgeon pin, so that the split in the piston skirt is adjacent to the split in the top of the connecting rod.

(2) Refit the piston rings very carefully, making quite sure that the pistons and bores are perfectly clean and smear the bores with clean engine oil.

(3) Use a piston ring clamp, Service Tool 18G 55A, when replacing the pistons from the top of the bore and make sure that the split in the piston faces the camshaft.

(4) Clean the crankpins and both sides of the shell bearings, locate the feathered ends of the latter in the connecting rod and its cap and smear the crankpins with engine oil.

(5) Before fitting the cap, check that the number stamped on the rod is the same as that on the cap. Note that the recess in the cap and rod must be on the same side. Tighten the setscrews to the torque figure given in **'GENERAL DATA'** and lock them. Turn the crankshaft after fitting each rod to ensure that the bearing is not binding on the crankpin. Also check the side clearance of each rod, as given under **'GENERAL DATA'.**

(6) Refit the cylinder head assembly, see Section A.17.

(7) Refit the sump and refill with the recommended grade of oil; see Section P.

Section A.24

PISTONS, RINGS AND GUDGEON PINS

Removal

The split skirt pistons are of aluminium alloy material. Four rings are fitted above the gudgeon pin, the bottom ring being of oil control type. The pistons are fastened to the connecting rods by gudgeon pins which are clamped rigidly in the small ends of the connecting rods. Bushes are not needed in the gudgeon pin bosses of the pistons because the aluminium alloy material serves as a suitable bearing for the gudgeon pins, the bearing surfaces of which are lubricated by means of splash through the two holes drilled in each boss. To remove the pistons see Section A.23.

To view and overhaul

(1) Remove the rings over the tops of the pistons.

(2) Scrape all accumulation of carbon off the piston crowns and, using a piston ring groove cleaning tool or an old ring section, carefully scrape all carbon out of the ring grooves of the pistons. Clean the carbon out of the oil holes in the piston ring grooves.

(3) Thoroughly clean all the dismantled components in paraffin.

(4) Examine all parts for wear and damage; renew if necessary.

(5) If cylinder reconditioning is required, determine the amount of material to be removed (refer to Section A.25 concerning oversize pistons available).

(6) When fitting new or oversize pistons and rings to reconditioned cylinder bores, the clearances should be controlled within the limits given under **'GENERAL DATA'.**

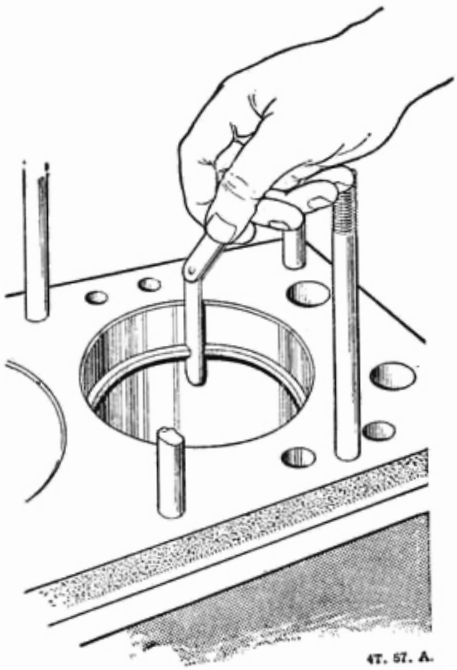

Fig. A.25.
Checking the piston ring gap.

(7) Piston rings should have a gap clearance (see **'GENERAL DATA'**) when installed in the cylinder bores. If new rings are being installed, each ring should be checked in the cylinder bore to determine whether its gap clearance is within the range specified. To do this, use the bottom of a piston to insert the ring part way into the bore. The ring will be squared up in the bore to measure the gap clearance as shown in Fig. A.25. To check the ring clearance in the piston grooves, install the rings on the pistons and determine the clearances with a feeler gauge. If the piston ring grooves, are worn excessively, as indicated when comparing the actual clearances with those given under **'GENERAL DATA'**, renew the rings and pistons.

(8) Gudgeon pins should be a hand push fit in the pistons. The fit can be checked after the rod has been assembled by holding the piston with the connecting rod in an approximately horizontal position. The weight of the large end of the connecting rod should be just insufficient to turn the gudgeon pin in the piston. On no account must gudgeon pin piston bosses be reamed out: oversize gudgeon pins are not supplied or allowed.

Replacement

See Section A.23.

Section A.25

PISTON SIZES AND CYLINDER BORES

In addition to the standard pistons there is a range of four oversize pistons available for service purposes. Oversize pistons are marked with the actual oversize dimensions enclosed in an ellipse. A piston stamped ·020 is suitable only for a bore ·020 in. (·508 mm.) larger than the standard bore, and similarly, pistons with other markings are suitable only for the oversize bore indicated.

The piston markings indicate the actual bore size to which they must be fitted, the requisite running clearance being allowed for in the machining.

After reboring an engine, or whenever fitting pistons differing in size from those removed during dismantling, ensure that the size of the piston fitted is stamped clearly on the top of the cylinder block alongside the appropriate cylinder bore.

Pistons are supplied in the sizes indicated in the following table for A30 and A35 engines.

Section A.26

TIMING COVER

Removal and replacement

(1) Drain the cooling system as described in Section C.

	A30		*A35*	
Piston marking	*Suitable bore size*	*Metric equivalent*	*Suitable bore size*	*Metric equivalent*
STANDARD	2·2807 in. to 2·2810 in.	57·930 mm. to 57·937 mm.	2·4778 in. to 2·4781 in.	62·935 mm. to 62·940 mm.
OVERSIZE				
+·010 in. (·254 mm.)	2·2907 in. to 2·2910 in.	58·184 mm. to 58·191 mm.	2·4878 in. to 2·4881 in.	63·189 mm. to 63·194 mm.
+·020 in. (·508 mm.)	2·3007 in. to 2·3010 in.	58·438 mm. to 58·445 mm.	2·4978 in. to 2·4981 in.	63·443 mm. to 63·448 mm.
+·030 in. (·762 mm.)	2·3107 in. to 2·3110 in.	58·692 mm. to 58·699 mm.	2·5078 in. to 2·5081 in.	63·697 mm. to 63·702 mm.
+·040 in. (1·016 mm.)	2·3207 in. to 2·3210 in.	58·946 mm. to 58·953 mm.	2·5178 in. to 2·5181 in.	63·951 mm. to 63·956 mm.

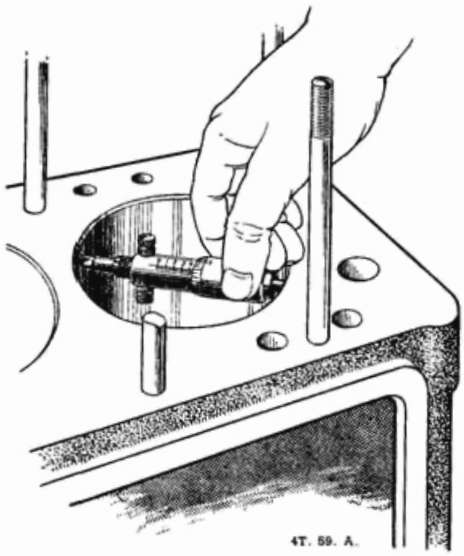

Fig. A.26.
Using an internal micrometer to check cylinder bore ovality.

(2) Remove the radiator (see Section C).
(3) Slacken the dynamo attachment bolts and remove the belt.
(4) Bend back the tab on the crankshaft pulley nut locking washer. Unscrew the nut using Service Tool 18G 98 as shown in Fig. A.27.
(5) Pull off the crankshaft pulley with an extractor or Service Tool 18G 2.
(6) The timing cover is secured by four $\frac{5}{16}$ in. and six $\frac{1}{4}$ in. UNF setscrews. Each setscre whas a shake-proof washer and a plain washer. Unscrew all ten setscrews and remove the timing cover.
(7) Take care not to damage the timing cover gasket. If it is damaged, clean the face of the cover flange and the engine front mounting plate and fit a new gasket when reassembling.
(8) The oil seal situated in the timing cover should also be renewed if necessary.

It should be noted that the oil thrower, which is located behind the crankshaft pulley, is fitted with its concave side facing forward.

(9) When the special aligning tool (Service Tool 18G 138) is not available the crankshaft pulley should be assembled to the cover before the cover is refitted to the engine. This will ensure that the timing cover and oil seal are concentric with the crankshaft. Lubricate the hub of the pulley and, with a rotating movement to avoid damage to the oil seal, insert it in the cover. Push the pulley and timing cover on to the crankshaft, lining up the pulley bore keyway with the Woodruff key fitted to the crankshaft. Replace the cover set-screws and tighten them up evenly.

Section A.27

TIMING CHAIN AND WHEELS

Removal

(1) Remove the timing cover and oil thrower as described in the previous Section.
(2) Unlock and remove the camshaft chain wheel nut and remove the nut and lockwasher. Note that the locating tag on the lockwasher fits into the keyway of the camshaft chain wheel.
(3) Remove the camshaft and crankshaft chain wheels, together with the timing chain, by easing each wheel forward a fraction at a time with immediately behind the crankshaft chain wheel.

The two camshaft chain wheel tensioners should be renewed if they are worn otherwise the chain will be unduly noisy.

Replacement

(1) Unless new camshaft or crankshaft components have been fitted, replace the same number of packing washers behind the crankshaft chain wheel.

If adjustment is necessary, however, it is required to determine the thickness of packing washers. This is achieved by placing a straight edge across the sides of the camshaft wheel teeth and measuring, with a feeler gauge, the gap between the straight edge and the crankshaft wheel.

(2) Assemble the wheels into the timing chain with the two marks on the chain wheels opposite each other, Fig. A.28.
(3) Keeping the wheels in this position, engage the crankshaft wheel keyway with the key on the crankshaft and rotate the camshaft until the camshaft wheel keyway and key are aligned.
(4) Push the wheels onto the shafts and secure the camshaft wheel with the lockwasher and nut.
(5) Replace the oil thrower, concave side forward, and the remaining components as detailed in Section A.26.

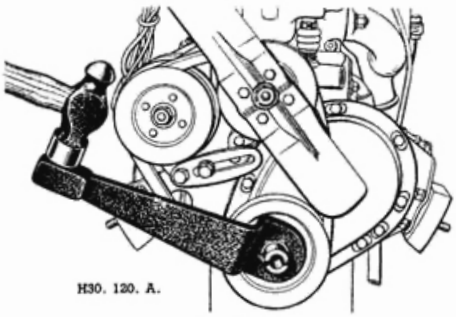

Fig. A.27.
Unscrewing the starter dog retaining nut.

Section A.28

CAMSHAFT AND BEARINGS

Removal

(1) Remove the engine from the chassis, having disconnected it from the gearbox (see Section A.7.)
(2) Remove the clutch (see Section E.3).
(3) Drain the sump and release it from the engine.
(4) Remove the rocker assembly (see Section A.10).
(5) Lift out the push rods and then remove the tappets (see Section A.14).
(6) Remove the timing cover (Section A.26) and the timing chain and wheels (Section A.27).
(7) Remove the flywheel and engine rear plate (Section A.29) and the oil pump (Section A.4).
(8) Remove the distributor and its drive spindle (Section B.5); do not slacken the clamping plate bolt or the ignition timing will be upset.
(9) Take out the three setscrews which secure the camshaft locating plate (Fig. A.16) to the cylinder block. The thickness of this locating plate controls the camshaft end float which is checked by means of a dial indicator set against the camshaft wheel; see **'GENERAL DATA'**. Note the position of the small lubricating hole in the locating plate which must be replaced with the hole on the dynamo side of the engine.
(10) Detach the engine front mounting plate after removing the dynamo swinging link and withdrawing the setscrews which secure the plate to the cylinder block and to the front main bearing cap. The two setscrews which secure the mounting plate to the bearing cap are locked by a lockplate.
(11) Withdraw the camshaft while slowly rotating it.
(12) Inspect the camshaft journals and cams for scoring and the distributor drive gears for wear. If the journals are not within the required diameter limits (see **'GENERAL DATA'**), the camshaft should be renewed.
(13) Examine the camshaft front bearing for scoring, pitting or evidence of failure. The existing bearing can, if necessary, be withdrawn and a new one installed, using Service Tool 18G 124A with adaptor 18G 124K.

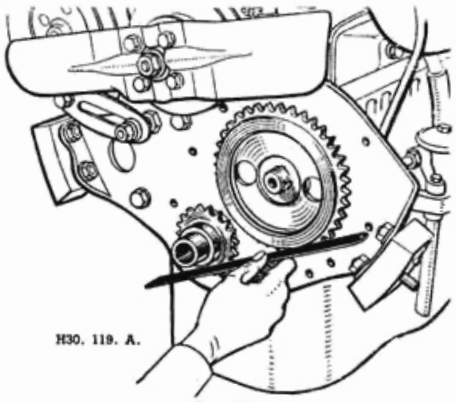

Fig. A.29.
Using a straight edge to line up crankshaft and camshaft wheel teeth.

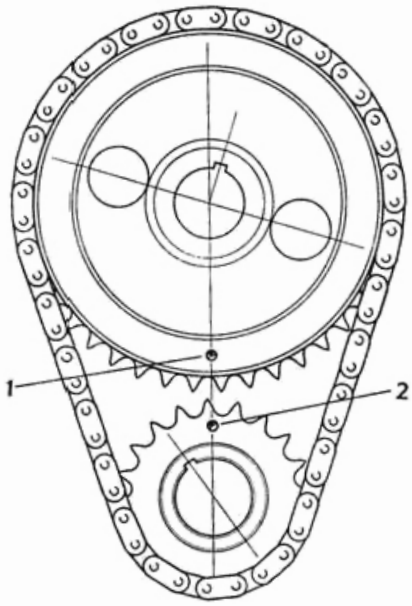

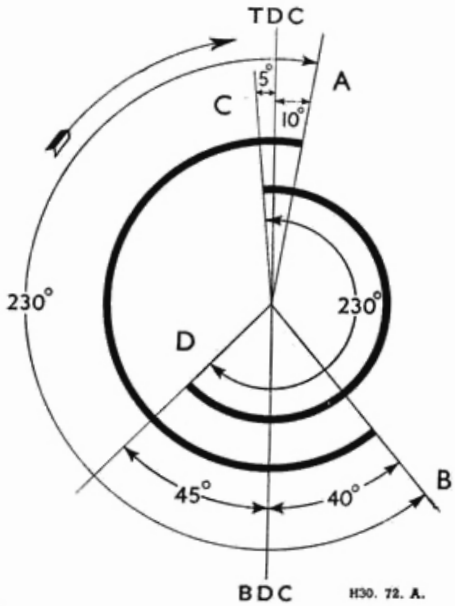

Fig. A.28.
The timing diagram and position of gears for timing. 1 and 2 are timing marks.
B to A exhaust valve open, C to D inlet valve open with the valve rocker clearance set at ·019 in. (for checking purposes only).

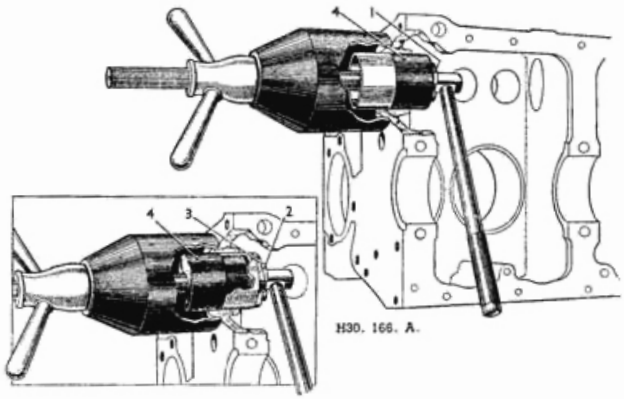

Fig. A.30.
Removing a camshaft front bearing using Adaptor 18G124K in conjunction with Service Tool 18G124A.
1. *'C' washer.*
2. *'C' washer.*
3. *'D' washer.*
4. *Adaptor 18G124K.*

Inset shows the bearing being replaced.

The oil holes must be lined up and the bearing reamed in line to give ·001 to ·002 in. (·025 to ·051 mm.) clearance, using Service Tool 18G 123A with pilots 18G 123 AH and 18G 123AJ and cutter 18G 123AN.

The centre and rear camshaft bearings are cast in the block and are, therefore, non- renewable.

(14) Inspect the tappet/cam contacting surfaces for wear. New tappets should be installed wherever evidence of excessive wear is found.

(15) The installation of the camshaft is a reversal of the removal procedure. Lubricate the camshaft journals with engine oil.

Camshaft liner removal

When reconditioning cylinder blocks it is usual to renew the camshaft liner. From within the cylinder block place adaptor 18G 124K inside the liner, pass the screw of 18G 124A through the body of the tool and adaptor from in front of the cylinder block.

Position the 'C' washer on the flat at the end of the screw, fit the handle into the hole (to prevent the screw from turning) and screw up the wing nut. Continued tightening of the wing nut will quickly withdraw the liner.

Camshaft liner replacement

Place the new liner on the smaller diameter of adaptor 18G 124K and from inside the cylinder block position the adaptor in the camshaft liner bore.

Line up the oil holes in the camshaft liner bore and liner, place the 'D' washer in position behind the liner, pass the screw of Tool 18G 124A through the adaptor, liner and 'D' washer, then fit the 'C' washer and tighten the screw. Secure the handle in the hole in the rear end of the screw to prevent it from turning; tighten the wing nut to draw the liner squarely into position.

Reaming the liner

Fit the two pilots 18G 123AH and 18G 123AJ into the centre and rear camshaft bores respectively, pass the cutter 18G 123AN on to the arbor of Tool 18G 123A and locate it in position '8'. A peg retained in the centre groove of the cutter by means of a spring clip, locates in a hole in the arbor, thus holding the cutter in the desired position.

As the tool is made up of roughing and finishing cutters, care must be taken to see that it is placed on the arbor with the roughing cutter towards the liner to be reamed.

Carefully pass the arbor through the camshaft bore and two pilots, then when the cutter comes up to the liner, commence to ream, always turning in a clockwise direction. Do not attempt to force the reamer through the liner, but proceed gently. Swarf should be frequently cleared away during the cutting operation.

When the cutter has passed right through the liner, disconnect it from the arbor and hold it inside the

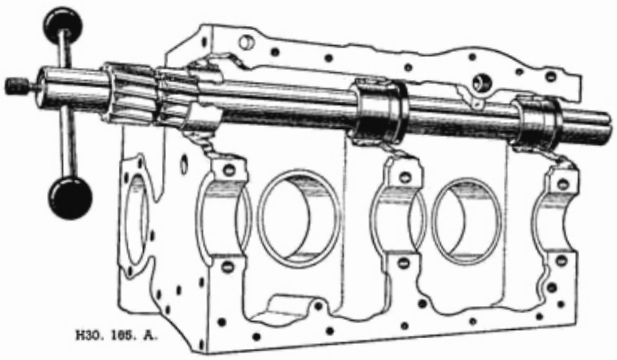

Fig. A.31.
Camshaft liner reamer and pilots, 18G123AH, being used in conjunction with the arbor of 18G123A to ream the front camshaft bearing shell in line with the centre and rear bearings.

cylinder block whilst the arbor is carefully withdrawn.

NOTE: On no account must the cutter be brought through the reamed hole on the arbor. Finally, before refitting the camshaft, thoroughly clean the block of all swarf.

Section A.29

FLYWHEEL AND ENGINE REAR PLATE

To remove

The flywheel complete with starter ring is secured to the flange on the rear of the crankshaft by four set bolts, which are locked in position by two lockplates. The engine rear plate is secured to the crankcase by set bolts and lockwashers. To remove the flywheel and rear plate, after the engine is removed from the vehicle, proceed as follows:

(1) Remove the gearbox from the engine (see Section A).

(2) Remove the clutch (see Section E).

(3) Knock back the tabs of the lockplates, unscrew the bolts and withdraw the flywheel.

(4) Unscrew the set bolts and withdraw the engine rear plate.

(5) Examine the friction face of the flywheel for excessive wear. If the teeth on the starter ring are damaged, or badly worn, fit a new ring (see Section A.30).

(6) Examine the engine rear plate for distortion and damage and clean the joint faces of the plate and crankcase.

To install

(1) Refit the engine rear plate to the crankcase, using a new joint washer. Tighten the securing bolts evenly and firmly with a torque wrench to 22 lb. ft. (3·042 kg. m.).

(2) Place the flywheel over the flange of the crankshaft so that the timing mark '1/4' is at T.D.C.

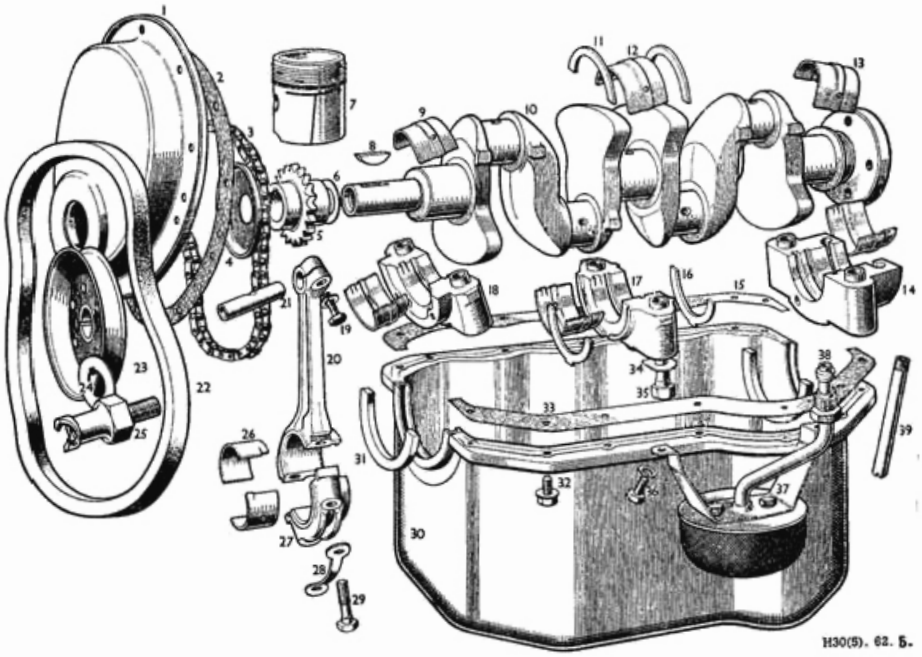

Fig. A.32.
The crankshaft and sump assembly.

1. *Engine front cover.*
2. *Joint washer for cover.*
3. *Timing chain.*
4. *Crankshaft oil thrower.*
5. *Crankshaft wheel.*
6. *Packing washers.*
7. *Piston.*
8. *Woodruff key.*
9. *Front main half bearing.*
10. *Crankshaft.*
11. *Thrust washer, upper.*
12. *Centre main half bearing.*
13. *Rear main half bearing.*
14. *Rear main bearing cap and dowels.*
15. *Oil sump joint washer, right.*
16. *Thrust washer, lower.*
17. *Centre main bearing cap and dowels.*
18. *Front main bearing cap and dowels.*
19. *Clamping screw and washer for* (20).
20. *Connecting rod, less cap.*
21. *Gudgeon pin.*
22. *Vee-belt for fan and pulley.*
23. *Crankshaft pulley.*
24. *Lockwasher.*
25. *Starting nut.*
26. *Connecting rod half bearing.*
27. *Connecting rod cap.*
28. *Lockwasher.*
29. *Setscrew for connecting rod.*
30. *Oil sump.*
31. *Cork sealing washer.*
32. *Setscrew and captive washer.*
33. *Oil sump joint washer, left.*
34. *Main bearing cap lockwasher.*
35. *Setscrew for main bearing cap.*
36. *Setscrew and shakeproof washer for strainer bracket.*
37. *Oil strainer.*
38. *Suction pipe.*
39. *Drain pipe for rear main bearing cap.*

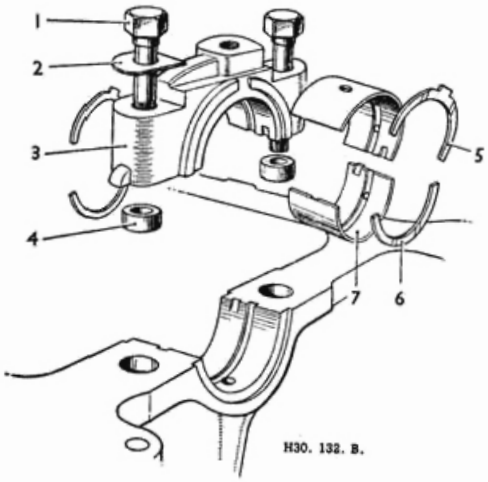

Fig. A.33.
Centre main bearing assembly.

1. *Main bearing setscrews.*
2. *Lockwasher.*
3. *Main bearing cap.*
4. *Dowels.*
5. *Thrust washer, lower.*
6. *Thrust washer, upper.*
7. *Main bearing shell.*

when the first throw of the crankshaft is at T.D.C. The joint faces should be perfectly clean. Fit the lockplates on to the bolts, tighten the latter in diagonal sequence with a torque wrench to 40 lb. ft. (5·5 kg. m.) and knock down the lockplates.

Section A.30

FITTING FLYWHEEL STARTER RING

To remove the old starter ring from the flywheel flange split the ring gear with a cold chisel taking care not to damage the flywheel. Make certain that the bore of the new ring and its mating surface on the flywheel are free from burrs and are perfectly clean.

To fit the new ring it must be heated to a temperature of 300° to 400° C. (575° to 752° F.) indicated by a light blue surface colour. If this temperature is exceeded the temper of the teeth will be affected. The use of a thermostatically controlled furnace is recommended. Place the heated ring on the flywheel with the lead of the ring teeth uppermost. The expansion will allow the ring to be fitted without force by pressing or tapping lightly until the ring is hard against its register.

This operation should be followed by natural cooling, when the shrink fit will be permanently established and no further treatment required.

Section A.31

CRANKSHAFT AND MAIN BEARINGS

To remove

The forged steel crankshaft is statically and dynamically balanced and is supported in the crankcase by three renewable main bearings of the steel-backed shell type. Crankshaft end float is controlled by thrust washers fitted on both sides of the centre main bearing.

(1) Drain the oil, remove the engine from the vehicle (see Section A.7) and place it upside down in a dismantling fixture.

(2) Remove the sump and oil strainer (see Section A.3).

(3) Remove the timing chain (see Section A.27).

(4) Remove the engine front mounting plate (see Section A.28).

(5) Remove the flywheel and engine rear plate (see Section A.29).

(6) Check the crankshaft end float to determine whether the renewal of the thrust washers is necessary, Fig. A.34.

(7) Remove the connecting rod bearing caps and shells, keeping the shells with their respective caps for correct replacement, and remove the connecting rods and pistons. Remove the sparking plugs from the cylinder head to facilitate the turning of the crankshaft.

(8) Withdraw the main bearing caps complete with the bearing bottom half shells. Caps and both bearing half shells should be kept together. Remove the screwed plug from the rear bearing cap oil return pipe and withdraw the pipe. Note that each main bearing cap is stamped with a number, which is also stamped on the web of the crankcase near the bearing cap. The bottom halves of the two thrust washers will be removed with the centre bearing cap.

(9) Remove the crankshaft, the two remaining halves of the thrust washers and the top half shells of the main bearings from the crankcase.

(10) Inspect the crankshaft main journals and crankpins for scoring and ovality. If necessary the crankshaft may be re-ground to the minimum limits shown under **'GENERAL DATA'**. Main bearings for re-ground crankshafts are available in sizes shown under **'GENERAL DATA'**.

(11) Clean the crankshaft thoroughly, ensuring that the connecting oilways between the journals and crankpins are perfectly clear. They can be

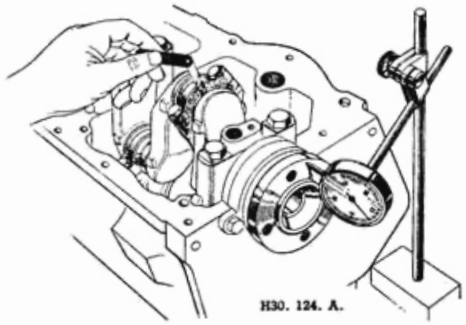

Fig. A.34.
A feeler gauge being used to measure connecting rod side clearance and a dial gauge to check crankshaft end float.

cleaned out by applying a pressure gun containing petrol or paraffin. When clean, inject a thin oil in the same manner.

(12) Thoroughly clean the bearing shells, caps and housings above the crankshaft.

(13) Examine the bearing shells for wear and pitting, and look for evidence of breaking away or picking-up. Renew the shells if necessary.

(14) Bearings are pre-finished with the correct diametral clearance and do not require bedding in. New bearing shells should be marked to match up with the marking on the cap and on no account must shells or caps be filed to take up wear or to reduce running clearance.

(15) Check the thrust washers for wear on their bearing surfaces and renew, if necessary, to obtain the correct end float.

To install

The installation of the crankshaft and main bearings is a reversal of the removal procedure: note the following points:

(1) Ensure that the thrust washers are replaced the correct way round; the oil grooves should face outwards. Locate the bottom half tab in the slot in the bearing cap.

(2) The bearing shells are notched to fit the recesses machined in the housing and cap.

(3) Remember to fit the packing washers behind the crankshaft timing chain wheel.

(4) Lubricate the bearings freely with engine oil.

(5) The main bearing caps must be re-fitted with the sides upon which the numbers are stamped facing towards the camshaft side of the engine.

(6) The rear main bearing cap horizontal joint surfaces should be thoroughly cleaned and lightly covered with WEL-SEAL (manufactured by Messrs. Wellworthy Ltd.) sealing compound before the cap is fitted to the crankcase. This will ensure a perfect oil seal when the cap is bolted down.

(7) Tighten the main bearing setbolts, beginning with the centre pair, to the torque figure given in **'GENERAL DATA'**. After each cap is tightened, rotate the crankshaft to see if it turns easily. If it is tight, remove the cap that was tightened last and examine the bearing and seating surfaces of the shells for foreign matter.

Section A.32

CYLINDER BLOCK

To remove and dismantle

(1) Remove the engine (Section A.7) and dismantle it.

(2) Remove the cylinder head studs.

(3) If an expansion plug has blown, or leaks, remove the plug by drilling a hole in its centre and levering it out with a suitable tool.

To view and overhaul

(1) Scrape as much sediment as possible from the water passages and thoroughly swill out with a water hose.

(2) Clean all gasket surfaces.

(3) Inspect for cracks and scores on gasket surfaces.

(4) Remove the ridges above the ring travel at the top of the cylinder bores before checking the fit of the pistons.

(5) Wipe the cylinder bores clean and examine them for scores, ovality and taper. If the cylinders are found to be oval or excessively tapered when measured with a dial test indicator, they should be reconditioned.

(6) If cylinder reconditioning is required, determine accurately the amount of material to be removed (refer to **'GENERAL DATA'** concerning oversize pistons available).

(7) Make sure that all traces of abrasives are cleaned from all parts of the cylinder block after the cylinder reconditioning operation is completed.

(8) Check the camshaft bearings (see Section A.28).

To reassmble and install

(1) Replace the cylinder head studs.

(2) When installing new expansion plugs, coat the edge of the plug with a sealing compound and insert the plug with the 'bulge' on the outside. A carefully aimed blow at the centre of the plug with a small hammer direct or with a blunt punch will expand the plug sufficiently to make a water-tight joint. If too heavy a blow is used, the plug will be useless and must be replaced by another new one.

(3) Reassemble, install (Section A.7) and test the engine.

Section A.33

FITTING CYLINDER LINERS

Should the condition of the cylinder bores be such that they cannot be cleaned up to accept standard oversize pistons, dry cylinder liners can be fitted. This operation may be carried out by the use of specialized equipment or with a power press using pilot adaptors to the dimensions shown in Fig. A.35. The press must be capable of 3 tons (3048kg.) pressure to fit new liners and 5 to 8 tons (5080 to 8128kg.) to remove old liners.

Remove the engine from the vehicle as detailed in Section A.7. Dismantle the engine and remove the cylinder head studs. If liners have not previously been fitted the bores must be machined and honed to the dimensions given in Fig. A.36.

To remove worn liners

Place the cylinder block face downwards on suitable wooden supports on the bed of the press, making sure that there is sufficient space between the block and the

bed of the press to allow the worn liner to pass down. Insert the pilot in the bottom of the liner and carefully press the liner from the bore.

To press in new liners

Thoroughly clean the inside of the bores and the outside of the liners. Stand the cylinder block upright on the bed of the press, insert the pilot guide in the top of the liner and position the liner with its chamfered end in the top of the bore. Make certain that the liner is square with the top of the block and that the ram of the press is over the centre of the pilot. Press the liner into the bore.

Each liner must be machined to the dimensions given in Fig. A.36 after pressing into position.

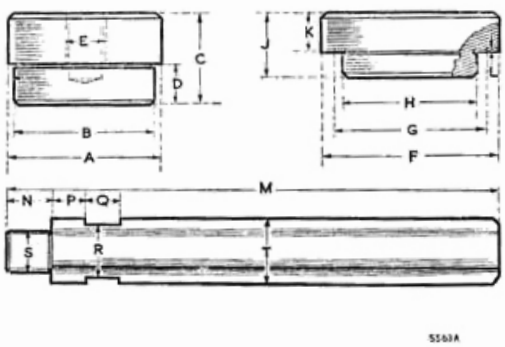

Fig. A.35.

Cylinder liner pilots should be made to the above dimensions from 55 ton hardening and tempering steel and hardened in oil at a temperature of 550° C. (1020° F.).

Dimensions for 803c.c. (A30) engines

Pressing out pilot

A. $2\frac{3}{8} \; {}^{+.005}_{-0}$ in. ($60{\cdot}33 \; {}^{+.127}_{-0}$ mm.).
B. $2{\cdot}270 \; {}^{+0}_{-.005}$ in. ($57{\cdot}75 \; {}^{+0}_{-.127}$ mm.).
C. $1\frac{3}{4}$ in. (44·45 mm.).
D. $\frac{3}{4}$ in. (19·05 mm.).
E. $\frac{3}{4}$ in. BSW thread.

Pressing in pilot

F. $2\frac{13}{16}$ in. (71·44 mm.).
G. $2\frac{7}{16}$ in. (61·91 mm.).
H. $2{\cdot}255 \; {}^{+0}_{-.005}$ in. ($57{\cdot}27 \; {}^{+0}_{-.127}$ mm.).
J. $1\frac{1}{4}$ in. (31·75 mm.).
K. $\frac{3}{4}$ in. (19·05 mm.).
L. ·015 in. (·38 mm.).

Pilot extension

M. $14\frac{1}{2}$ in. (36·83 cm.).
N. $\frac{7}{8}$ in. (22·22 mm.).
P. $\frac{5}{8}$ in. (15·87 mm.).
Q. $\frac{5}{8}$ in. (15·87 mm.).
R. 1 in. (25·4 mm.) flats.
S. $\frac{3}{4}$ in. BSW thread.
T. $1\frac{1}{4}$ in. (31·75 mm.).

Dimensions for 948 c.c. (A35) engines

Pressing out pilot

A. $2\frac{37}{64} \; {}^{+.005}_{-0}$ in. ($65{\cdot}48 \; {}^{+.127}_{-0}$ mm.).
B. $2{\cdot}465 \; {}^{+0}_{-.005}$ in. ($62{\cdot}61 \; {}^{+0}_{-.127}$ mm.).
C. $1\frac{3}{4}$ in. (44·45 mm.).
D. $\frac{3}{4}$ in. (19·05 mm.).
E. $\frac{3}{4}$ in. BSW thread.

Pressing in pilot

F. 3 in. (76·20 mm.).
G. $2\frac{5}{8}$ in. (66·68 mm.).
H. $2{\cdot}455 \; {}^{+0}_{-.005}$ in. ($62{\cdot}35 \; {}^{+0}_{-.127}$ mm.).
J. $1\frac{1}{4}$ in. (31·75 mm.).
K. $\frac{3}{4}$ in. (19·05 mm.).
L. ·015 in. (·38 mm.).

Pilot extension

M. $14\frac{1}{2}$ in. (36·83 cm.).
N. $\frac{7}{8}$ in. (22·22 mm.).
P. $\frac{5}{8}$ in. (15·87 mm.).
Q. $\frac{5}{8}$ in. (15·87 mm.).
R. 1 in. (25·4 mm.) flats.
S. $\frac{3}{4}$ in. BSW thread.
T. $1\frac{1}{4}$ in. (31·75 mm.).

Engine type	*Liner Part No.*	*Machine bores of cylinder block to this dimension before fitting liner*	*Outside diameter of liner*	*Interference fit of liner in cylinder block bore*	*Machine liner bore to this dimension after fitting*
'A' (803 c.c.)	2A518	2·406 to 2·4065 in. (61·11 to 61·125 mm.)	2·4085 to 2·40925 in. (61·176 to 61·194 mm.)	·002 to ·00325 in. (·05 to ·08 mm.)	2·2795 to 2·281 in. (57·899 to 57·937 mm.)
'A' (948 c.c.)	2A784	2·6035 to 2·604 in. (66·128 to 66·14 mm.)	2·606 to 2·60675 in. (66·19 to 66·21 mm.)	·002 to ·00325 in. (·05 to ·08 mm.)	2·477 to 2·4785 in. (62·915 to 62·954 mm.)

Fig. A.36.

Cylinder bore and liner dimensions.

Section A.34

FAULT DIAGNOSIS

Symptom	No.	Possible fault
(a) **Will not start**	1	Defective coil
	2	Faulty capacitor
	3	Dirty, pitted or incorrectly set contact breaker points (Sec. B)
	4	Ignition leads loose or shorting
	5	Water on sparking plug leads
	6	Corrosion of terminals or discharged battery
	7	Faulty starter (Section N)
	8	Wrongly connected plug leads
	9	Vapour lock in fuel line
	10	Defective fuel pump (Section D)
	11	Over-choking
	12	Under-choking
	13	Choked petrol filter or jets (Section D)
	14	Valves leaking
	15	Sticking valves (check j)
	16	Valve timing incorrect
	17	Ignition timing incorrect (Section B)
(b) **Engine stalls**		In (a), check 1, 2, 3, 4, 10, 11, 12, 13, 14, and 15
	1	Plugs defective or incorrect gap (Section B)
	2	Retarded ignition (Section B)
	3	Mixture too weak
	4	Water in fuel system
	5	Petrol tank breather choked
	6	Incorrect valve clearance
(c) **Poor idling**		In (b), check 1 and 6
	1	Air leak at manifold joints
	2	Incorect slow running adjustment (Section D)
	3	Air leak in carburetter
	4	Slow running jet choked
	5	Over-rich mixture
	6	Worn piston rings
	7	Worn valve stems or guides
	8	Weak exhaust valve springs
(d) **Misfiring**		In (a), check 1, 2, 3, 4, 5, 8, 10, 13, 14, 15, 16 and 17
		In (b), check 1, 2, 3 and 6
	1	Weak or broken valve springs
(e) **Overheating**		See Section C
(f) **Low compression**		In (a), check 14 and 15
		In (c), check 6 and 7
		In (d), check 1
	1	Worn piston ring grooves
	2	Scored or worn cylinder bores
(g) **Lack of power**		In (a), check 3, 10, 11, 13, 14, 15 and 16
		In (b), check 1, 2, 3 and 6
		In (c), check 6 and 7

Symptom	No.	Possible fault
(g) Lack of power		In (d), check 1
		Check (e) and (f)
	1	Leaking joint washers
	2	Fouled sparking plugs
	3	Automatic advance not functioning
(h) Burnt valves or seats		In (a), check 14 and 15
		In (b), check 6
		In (d), check 1
		Check (e)
	1	Excessive carbon around valve seat and head
(j) Sticking valves		In (d), check 1
	1	Bent valve stem
	2	Scored valve stem or guide
	3	Incorrect valve clearance
(k) Excessive cylinder wear		In (a), check 11
		Check (e)
	1	Lack of oil
	2	Dirty oil
	3	Dirty air cleaner (Section D)
	4	Gummed up or broken piston rings
	5	Badly fitting piston rings
	6	Misalignment of connecting rods
(l) Excessive oil consumption		In (c), check 6 and 7
		Check (k)
	1	Ring gap to wide
	2	Oil return holes in piston choked with carbon
	3	Scored cylinders
	4	Oil level too high
	5	External oil leaks
	6	Ineffective valve oil seal
(m) Crankshaft and connecting rod bearing failure		In (k), check 1
	1	Restricted oilways
	2	Worn journals on crankpins
	3	Loose bearing caps
	4	Extremely low oil pressure
	5	Bent connecting rod
(n) Internal water leakage		See Section C
(o) Poor circulation		See Section C
(p) Corrosion		See Section C
(q) Excessive fuel consumption		See Section D.10
(r) Engine vibration	1	Loose dynamo bolts
	2	Fan blades out of balance
	3	Collapsed or loose front mountings
	4	Collapsed or loose gearbox mountings

SERVICE TOOLS

18G2. Crankshaft Gear, Pulley and Propeller Shaft Flange Remover

A multi-purpose tool with alternative legs readily interchangeable; one pair with thin flat ends designed for removing crankshaft gears and propeller shaft and bevel pinion flanges; the other pair with tapered ends suitable for fan pulley grooves other than the later type fitted with narrow section fan belts.

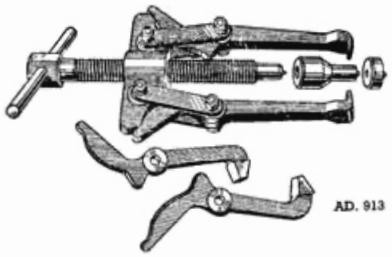

18G2

18G27. Valve Seat Cutter and Pilot Handle

For use with pilot 18G167D, cutters 18G167, 18G167B, 18G167C and glaze breaker 18G167A.

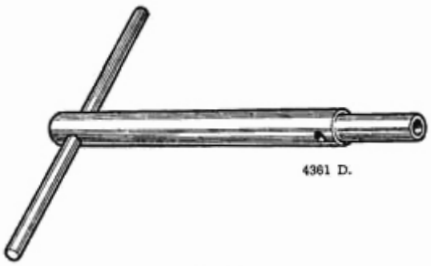

18G27

18G29. Valve Grinding in Tool

A metal handle complete with a detachable suction pad. Use alternative suction pad 18G29B.

18G29

SERVICE TOOLS

18G45. Valve Spring Compressor

This tool is designed for o.h.v. engines. It has a cam and lever action and screw adjustment. The adaptor ring is shaped to facilitate the fitting of cotters.

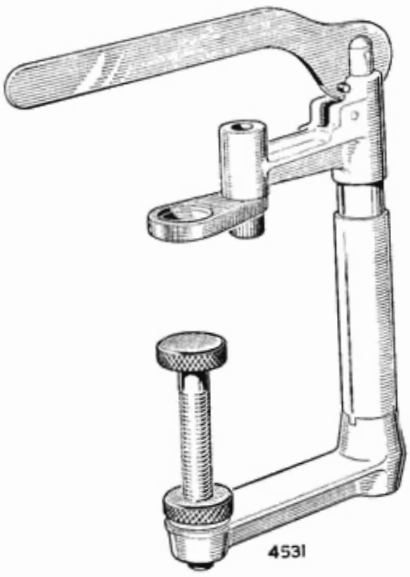

18G45

18G55A. Piston Ring Compressor

Designed to cover a wide range of pistons, it is easy to operate and will compress the strongest piston ring, making assembly to the bore a quick and easy operation.

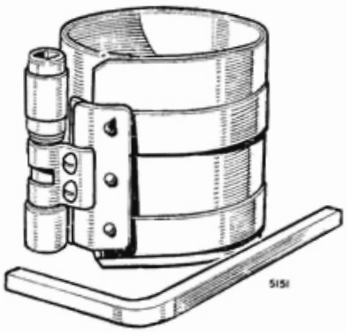

18G55A

18G60. Water Pump Bearing Remover and Replacer

To safeguard against broken pump bodies this specially designed tool should be used when removing and replacing bearings. Comprising a drift and two pilots, it aligns each bearing with its housing before the bearing is pressed into position.

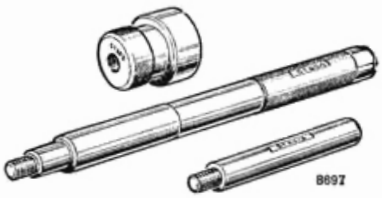

18G60

SERVICE TOOLS

18G69. Oil Pump Release Valve Grinding in Tool

Designed to facilitate the removal and grinding in of the engine oil release valve. Tightening the set screw expands the rubber plunger, which ensures that the tool is a tight fit when inserted into the hollow oil release valve.

18G69

18G98. Starter Nut Spanner

This shock type spanner enables the starter nut to be removed without the need for locking the crankshaft by improvised means, which may cause damage to the components.

18G98

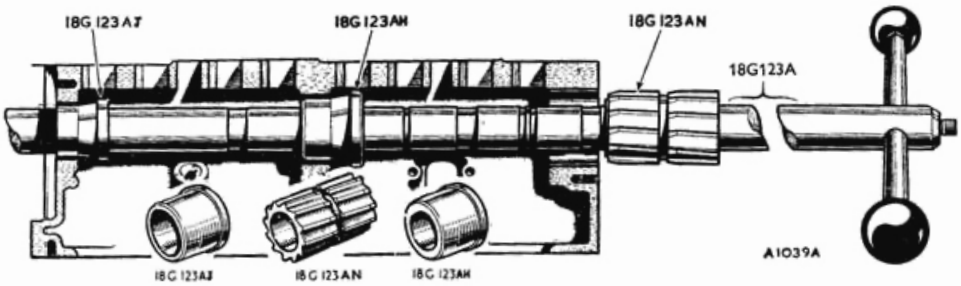

18G123A, 18G123AN, 18G123AH and 18G123AJ. Camshaft Liner Reamer

This equipment is essential when reconditioning cylinder blocks, otherwise camshaft liners cannot be reamed in line and in consequence the clearance between the camshaft journal and liner will be incorrect. This basic tool 18G123A must be used with the cutter 18G123AN and pilots 18G123AH and 18G123AJ. Full instructions for using the equipment will be supplied with each basic tool.

SERVICE TOOLS

18G123AL.
A fibre box for the storage of camshaft liner reamer cutters and pilots and partitioned to protect the edge of the cutters.

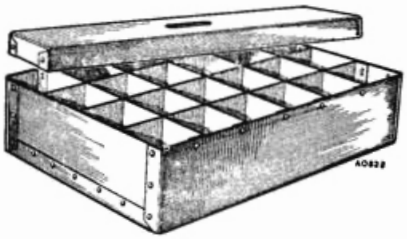

18G123AL

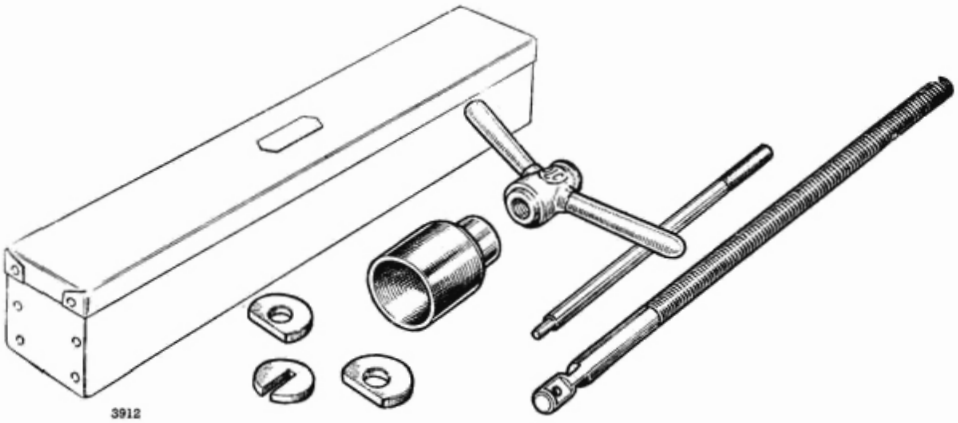

18G124A

18G124A. Camshaft Liner Remover and Replacer (Basic Tool)
The equipment consists of a basic tool 18G124A and various adaptors (supplied separately) for different types of engines. Liners can be renewed and replaced without the damage invariably associated with the use of improvised drifts. Full instructions for using the equipment will be supplied with each basic tool.

18G124K. Camshaft Liner Remover Adaptor
For use with 18G124A.

18G124K

SERVICE TOOLS

18G134. Bearing and Oil Seal Replacer (Basic Tool)
For use with 18G134B, 18G134C, 18G134L and 18G134Q.

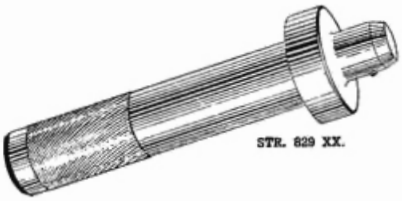

18G134

18G138. Crankshaft Gear, Pulley, and Propeller Shaft Flange Replacer
This tool is used for driving on the crankshaft gear and for lining up the timing cover.

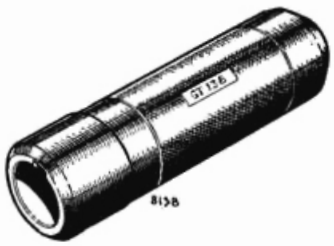

18G138

18G167. Valve Seat Finishing Cutter
Use with pilot 18G167D and handle 18G27.

18G167

18G167A. Valve Seat Glaze Breaker
For use with pilot 18G167D and handle 18G27.

18G167A

SERVICE TOOLS

18G167B. Valve Seat Narrowing Cutter—Top

Designed to enable seats to be maintained at their original dimensions. Use with pilot 18G167D and handle 18G27. These cutters must not be used on hardened valve seat inserts—the inserts must be renewed.

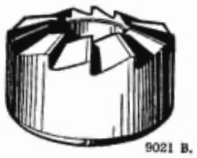

18G167B

18G167C. Valve Seat Narrowing Cutter—Bottom

Use with pilot 18G167D and handle 18G27.

18G167C

18G167D. Valve Seat Cutter Pilot

For use with glaze breaker 18G167A, cutters 18G167, 18G167B, 18G167C and handle 18G27.

18G167D

18G187. Radiator Reverse Flush Adaptors

The adaptors should be used in pairs, one for the radiator inlet hose and one for the outlet hose. The hose connection is 1 in. (25·4 mm.) diameter.

18G187

SERVICE TOOLS

18G226. Valve Rocker Bush Remover and Replacer

The flange of the drift (Service Tool 18G226A) is recessed to prevent the split bush from opening when being driven into position. The anvil is also recessed to retain the rocker during the operation. Use of a light press is desirable when using this tool, alternatively a vice or copper faced hammer may be used.

18G226

18G372. Torque Wrench—30 to 140 lb. ft. (4·15 to 19·35 kg. m.)

A universal torque spanner for use with standard sockets. This tool is essential if the recommended maximum torque for various studs is not to be exceeded.

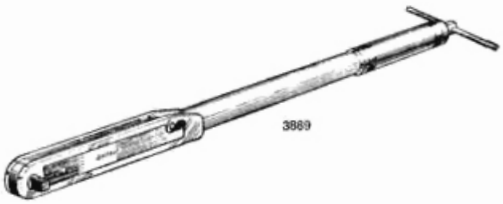

18G372

18G528. Tool Board Hook—2 in. (50·8 mm.)

A strongly made hook in mild steel with non-corrosive finish used for the display and storage of Service Tools. Supplied in packs of one dozen.

18G529. Tool Board Hook—3 in. (76·2 mm.)

A larger size of 18G528. Supplied in packs of one dozen.

SECTION B

THE IGNITION SYSTEM

	Section
Description	
Capacitor	B.6
Coil	B.7
Contact breaker	B.4
Distributor	
Dismantling	B.5
Reassembling	B.5
Removing and replacing	B.5
High-tension cables	B.3
Locating the cause of uneven firing	B.1
Sparking plugs	B.9
Testing the low-tension circuit	B.2
Timing the ignition	B.8

DESCRIPTION

At slow engine speeds the ignition point is retarded. At high speeds the ignition point is advanced by an automatic timing control mechanism operated by centrifugal force.

A vacuum-operated timing control is also fitted, designed to give additional advance under part-throttle conditions. The combined effects of the centrifugal and vacuum-operated timing controls give added efficiency over the full operating range of the engine with a corresponding economy in fuel consumption. A micrometer adjustment is fitted by which fine alterations to the timing can be made to allow for changes in running conditions as a result of carbonization or change of fuel.

A completely sealed, metalized paper capacitor is fitted to the distributor. This has the property of being self-healing in the event of a break-down, so that trouble arising from this source should be very infrequent.

The high-tension pick-up brush in the distributor cover is of composite construction, the top portion consisting of a resistive compound and the lower of softer carbon to prevent wear taking place on the rotor electrode.

The resistive portion of the brush is in circuit between the coil and distributor and gives a measure of radio interference suppression. Under no circumstances must a short, non-resistive brush be used as a replacement for one of the longer, resistive type.

Section B.1

LOCATING THE CAUSE OF UNEVEN FIRING

Start the engine and set it to run at a fairly fast idling speed.

Short-circuit each plug in turn by pulling the insulator sleeve up the cable and placing a hammer head or the blade of a screwdriver with a wooden or insulated handle between the terminal and the cylinder head. No difference in the engine performance will be noted when short-circuiting the plug in the defective cylinder. Shorting the other plugs will make uneven running more pronounced.

Having located the cylinder which is at fault, stop the engine and remove the cable from the terminal of the sparking plug. Restart the engine and hold the end of the cable about $\frac{3}{16}$ in. (4·8 mm.) from the cylinder head.

If the sparking is strong and regular, the fault probably lies in the sparking plug. Remove the plug, clean it, and adjust the gap to the correct setting (see **'GENERAL DATA'**), or alternatively fit a new plug.

If there is no spark or if it is weak and irregular examine the cable from the sparking plug to the distributor. After a long period of service the insulation may be cracked or perished, in which case the cable should be renewed.

Finally, examine the distributor moulded cap, wipe the inside and outside with a clean dry cloth, see that the carbon brush moves freely in its holder, and examine the moulding closely for signs of breakdown. After long service it may become tracked, that is, a conducting path may have formed between two or more of the electrodes or between one of the electrodes and some part of the distributor in contact with the cap. Evidence of a tracked cap is shown by the presence of a thin black line. A replacement distributor cap must be fitted in place of one that has become tracked.

Section B.2

TESTING THE LOW-TENSION CIRCUIT

Spring back the securing clips on the distributor and remove the moulded cap and rotor. If the rotor is a tight fit it can be levered off carefully with a screwdriver.

Check that the contacts are clean and free from pits, burns, oil, or grease. Turn the crankshaft and check that the contacts are opening and closing correctly and that the clearance is correct when the contacts are fully opened.

Correct the gap if necessary to between ·014 and ·016 in. (·36 and ·40 mm.).

Disconnect the cable at the contact breaker terminal of the coil and at the low-tension terminal of the distributor, and connect a test lamp between these terminals. If the lamp lights when the contacts close and goes out when the contacts open the low-tension circuit is in order. Should the lamp fail to light, the contacts are dirty or there is a broken or loose connection in the low-tension wiring.

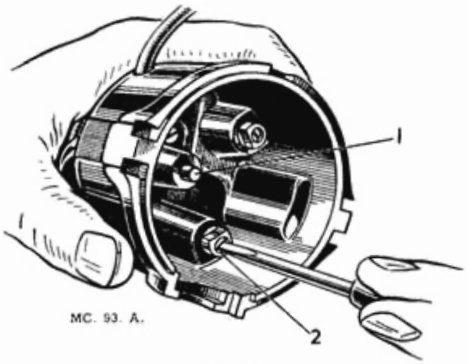

Fig. B.1.
Fitting H.T. leads to the distributor cap.

Section B.3

HIGH-TENSION CABLES

Examine the high-tension cables and renew any that have cracked or perished insulation.

To fit the cables to the terminal of the ignition coil thread the knurled moulded terminal nut over the lead, bare the end of the cable for about $\frac{1}{4}$ in. (6 mm.), thread the wire through the brass washer removed from the original cable, and bend back the strands over the washer, Finally, screw the terminal into the coil.

To make the connections to the terminals in the distributor moulded cap first remove the cap and slacken the screws on the inside of the moulding till they are clear

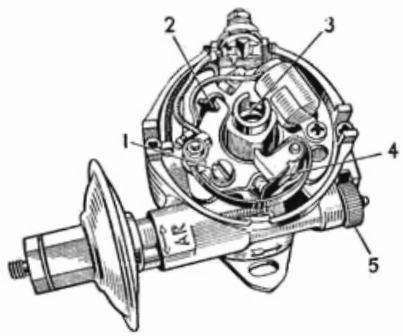

MC. 98. A.

Fig. B.2. Distributor Platform.

1. *Contact adjusting screws.*
2. *Contact adjusting slot*
3. *Cam and drive shaft oiling point.*
4. *Contact points.*
5. *Micrometer adjuster.*

of the cables. Cut the new cables off to the required length, fill the holes in the cap with Silicone grease, push the cables completely home, and tighten the securing screws.

The cables from the distributor to the sparking plugs must be connected up in the correct firing order, which is 1, 3, 4, 2. Secure them firmly to the connectors.

Smear the lip of the cap with Silicone grease and refit.

Section B.4

CONTACT BREAKER

The distributor has a pre-tilted contact breaker unit. The moving contact breaker plate is balanced on two nylon studs and the angle through which the plate may be tilted is controlled by a stud riveted to the moving contact breaker plate locating in a slot in the base plate. The plate carrying the fixed contact is secured by one screw only.

After the first 500 miles (800 km.) and subsequently every 3,000 miles (4800 km.) check the contact breaker as follows:

(1) Turn the crankshaft until the contact breaker points are fully opened and check the gap with a gauge having a thickness of ·014 to ·016 in. (·36 to ·40 mm.). If the gap is correct the gauge should be a sliding fit. Do not alter the setting unless the gap varies considerably from the gauge thickness.

To adjust the setting keep the crankshaft in the position which gives maximum opening of the contacts and then slacken the fixed contact plate securing screw and adjust the contact gap by inserting a screwdriver in the notched hole and turning clockwise to reduce the gap and anti-clockwise to increase it. Tighten the securing screw.

(2) If the contacts are dirty or pitted polish them with a fine carborundum stone, and afterwards wipe them with a cloth moistened with petrol (gasoline). The moving contact can be removed from its mounting in order to assist cleaning. Check and adjust the contact breaker setting after cleaning the contacts.

(3) Check that the moving arm is free on its pivot. If it is sluggish remove the arm and polish the pivot pin with a strip of fine cloth. Clean off all traces of emery dust and apply a spot of clean engine oil to the top of the pivot. The contact breaker spring tension should be between 20 and 24 oz. (567 and 680 gm.) measured at the contacts.

Section B.5

THE DISTRIBUTOR

Removal

Detach the distributor cover by releasing the two

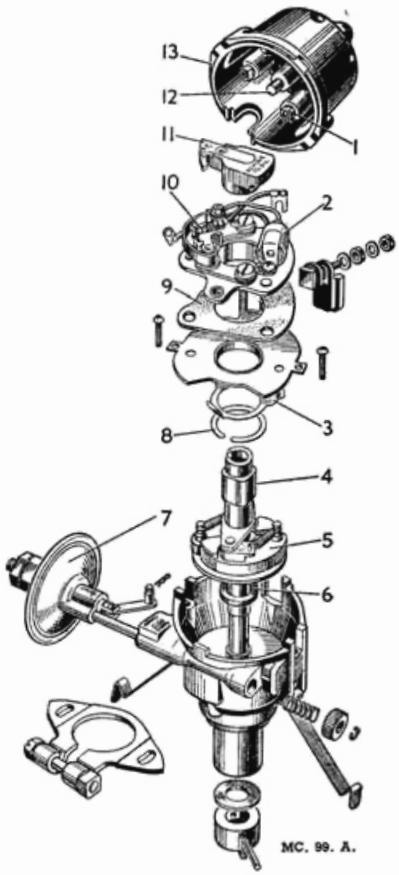

MC. 99. A.

Fig. B.3.

1. *Terminal.*
2. *Capacitor.*
3. *Contact breaker plate tension spring.*
4. *Cam.*
5. *Balance weights.*
6. *Distance collar.*
7. *Vacuum control.*
8. *Jump ring.*
9. *Contact breaker plate washer.*
10. *Contact breaker points.*
11. *Rotor.*
12. *Carbon brush.*
13. *Cover.*

spring clips; then, disconnect the low-tension wire and high-tension plug leads.

Uncouple the vacuum control suction pipe from the end of the vacuum chamber and loosen the pinch bolt of the distributor clamping plate. Lift out the distributor.

Normally it is not necessary to remove the distributor driving spindle. Should the occasion arise however (e.g. when the camshaft has to be removed), remove the clamping plate and the sleeve in the drive housing by releasing their respective setscrews. Insert a length of threaded $\frac{5}{16}$ in. B.S.F. rod in the end of the driving spindle and lift it out with a clockwise turning movement.

Replacement

When replacing, turn the crankshaft until No. 1 piston is at T.D.C. on its compression stroke, that is, with No. 7 and 8 valves rocking.

Insert the spindle, with the threaded rod still in it, into the distributor housing to mesh with the camshaft driving gear, in such a way as to take up a position of twenty minutes past ten o'clock when pushed home.

The slot in the distributor drive is off-set and when inserted, the smaller half of the spindle flange should be at the bottom and to the left. The key in the distributor is correspondingly off-set to engage the slot, thus ensuring that the distributor is correctly fitted.

The distributor contact breaker gap should be ·014 to ·016 in. (·3556 to ·4064 mm.) when fully opened by the cam.

Dismantling

The contact breaker plate may be removed as an assembly to give access to the centrifugal weights without completely dismantling the distributor. To do this first remove the rotor arm and then withdraw the slotted nylon low-tension terminal post from the distributor body.

Take out the two screws which secure the plate assembly to the distributor body, ease up the plate, and unhook the flexible actuating link connected to the contact breaker plate.

The following procedure is necessary if the distributor is to be completely stripped. Before dismantling make a careful note of the positions in which the various components are fitted in order that they may be replaced correctly.

(1) Spring back the clips and remove the moulded cap.
(2) Lift the rotor from the top of the spindle. If it is a tight fit lever it off carefully with a screwdriver.
(3) Remove the nut and washer from the moving contact anchor pin. Withdraw the insulating sleeve from the capacitor lead and low-tension lead connectors, noting the order in which they are fitted. Lift the moving contact from the pivot pin and remove the large insulating washer from the anchor pin.
(4) Take out the screw, spring washer and flat washer securing the fixed contact plate and remove the plate.
(5) Take out the securing screw and remove the capacitor.
(6) Extract the two screws securing the base plate to the distributor body, noting that one also secures the earthing lead, and lift out the base plate.

Unhook the flexible actuating link connecting the diaphragm in the vacuum unit with the moving contact breaker plate.

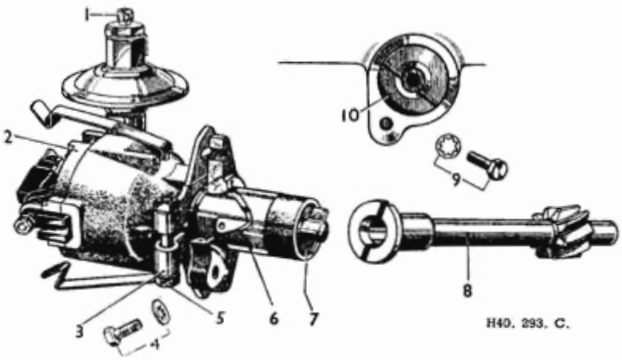

Fig. B.4.

1. *Vacuum unit.*
2. *Distributor body.*
3. *Distributor clamp.*
4. *and 9. Securing screws and washers.*
5. *Clamp bolt.*
6. *Housing.*
7. *Driving key.*
8. *Drive shaft.*
10. *Driving dog.*

IMPORTANT.—Note the relative positions of the rotor arm drive slot in the cam spindle and the offset drive dog at the driving end of the spindle. Ensure that the timing is not 180° out when the cam spindle is engaged with the centrifugal weights during assembly.

(7) Take out the cam retaining screw and remove the cam spindle.

(8) Take out the centrifugal weights. These may be lifted out as two assemblies, each complete with a spring and toggle.

(9) To release the suction advance unit remove the circlip, adjusting nut, and spring. Withdraw the unit. Take care not to lose the adjusting nut lock spring clip.

(10) To release the spindle from the body drive out the parallel driving pin passing through the collar of the driving tongue member at the lower end of the spindle.

Reassembling

Reassembly is a direct reversal of the dismantling procedure, although careful attention must be given to the following points:

(1) As they are assembled lubricate the components of the automatic advance mechanism, the distributor shaft, and the portion of the shaft on which the cam fits, with thin clean engine oil.

(2) Turn the vacuum control adjusting nut until it is in the half-way position when replacing the control unit.

(3) When engaging the cam driving pins with the centrifugal weights make sure that they are in their original positions. When seen from above, the small offset of the driving dog must be on the right and the driving slot for the rotor arm must be in the six o'clock position.

(4) Adjust the contact breaker to give a maximum opening of ·014 to ·016 in. (·36 to ·40 mm.).

Section B.6

CAPACITOR

A ·2 microfarad metalized capacitor is fitted and the eyelet on the cable connected to the contact breaker terminal post is squared and slotted to prevent it twisting round and short-circuiting against the distributor.

The best method of testing the capacitor is by substitution. Disconnect the original capacitor and connect a new one between the low-tension terminal of the distributor and earth.

Section B.7

COIL

The coil does not require any attention beyond ensuring that the terminal connections and the coil mounting bolts are tight, and that the exterior is kept clean and dry, particularly between the terminals.

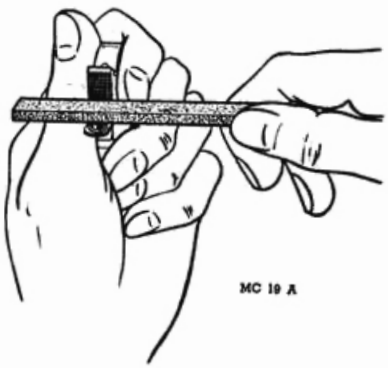

Fig. B.5.
Cleaning the contact breaker points.

Section B.8

TIMING THE IGNITION

The position at which the spark should occur varies with the compression ratio of the engine and the octane rating of the fuel in use. The different settings are listed below and in **'GENERAL DATA'**.

A.30 (before Eng. No. 93536).

Timing marks. The flywheel is marked for T.D.C. on numbers 1 and 4 pistons, but as there is no removable cover on the top of the housing the mark can not be used unless the engine and gearbox are separated.

Timing procedure with flywheel marks visible. Remove the distributor cap and adjust the contact points to the correct gap. Turn the crankshaft in the direction of rotation until No. 1 piston is at the top of its compression stroke. This point is found by watching the valves of No. 4 cylinder; when they are just rocking No. 1 piston will be in the required position. Turn the flywheel in the direction of rotation (if necessary) until the '1/4' mark lines up with the pointer on the housing. Now turn the flywheel backwards to bring the '1/4' mark $\frac{33}{64}$ in. (13·1 mm.) away from the pointer. The above measurement around the periphery of the flywheel corresponds to $6\frac{1}{2}$° of crankshaft rotation and is the recommended position when fuel with an octane rating of less than 80 is used. With premium fuels the angle recommended is 11° and the periphery measurement will then be $\frac{7}{8}$ in. (22·19 mm.).

Slacken the distributor clamp bolt.

With the rotor pointing in the direction of No. 1 segment of the distributor cap turn the distributor slightly until the points are just on the point of separating. Tighten the clamp bolt.

Final setting should be carried out on the road, slight adjustments being made with the vernier provided.

Timing procedure without timing marks. Remove the distributor cap. Turn the crankshaft until the valves of No. 4 cylinder are rocking thus bringing No. 1 piston to the top of the compression stroke. Slacken the distributor clamp bolt and turn the distributor head until the points are

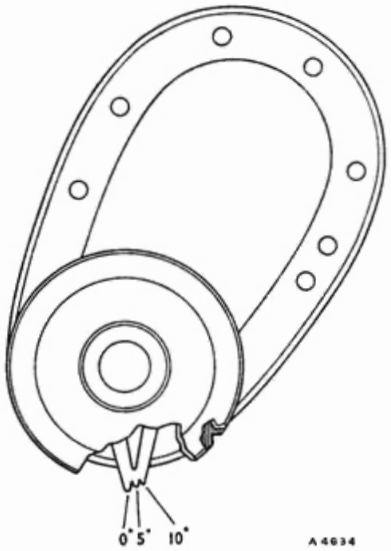

Fig. B.6.
Pulley notch and timing pointers.

just about to open with the rotor pointing to No. 1 electrode in the distributor cap. Tighten the clamp bolt replace the cap and take the car on the road.

With low octane fuel, the engine should pink slightly under load in top gear from 10 m.p.h. (16 k.p.h.) to 30 m.p.h. (48 k.p.h.) with the accelerator pressed right down. If pinking is violent or continues after 30 m.p.h. (48 k.p.h.) the ignition can be retarded by means of the vernier adjustment. If there is no pinking or if it dies out early, the ignition should be retarded.

Accuracy of setting is extremely important if running on premium fuel and since in this case there will be no pinking, the timing marks on the flywheel must be used.

A.30 (from Eng. No. 93536) and A.35

Procedure is the same as that detailed above except that T.D.C. is indicated by one of three pointers on the timing cover when it is in line with the groove in the crankshaft pulley. The remaining two pointers give 5° and 10°. These can be used to obtain the following recommended settings:

High Compression (premium fuels)	..	5° B.T.D.C.
Low Compression (premium fuels)	..	8° B.T.D.C.
Low Compression (commercial fuels)	..	2° B.T.D.C.

Section B.9

SPARKING PLUGS

It is recommended that the plugs be inspected, cleaned, and tested every 3,000 miles (4800 km.) and new ones fitted every 12,000 miles (19200 km.).

When sparking plugs are removed from the engine their gaskets should be removed with them and replaced on the plugs, which should be placed in a suitable holder.

It is advisable to identify each plug with the number of the cylinder from which it was removed so that any faults revealed on examination can be traced back to the cylinder concerned.

When examining the plugs place a new plug of the same type beside the others to afford a ready comparison of the relative condition of the used plugs.

Examine for signs of oil fouling. This will be indicated by a wet, shiny, black deposit on the insulator and is caused by oil pumping due to worn cylinders and pistons or gummed-up or broken rings. Under such conditions oil from the cylinder walls is forced up past the rings on the suction stroke of the piston and is eventually deposited on the plugs.

A permanent remedy for this cannot be effected, the only cure being the fitting of a new piston and rings; in extreme cases, a rebore may be necessary.

Next examine the plugs for signs of petrol (gasoline) fouling. This is indicated by a dry, fluffy, black deposit which is usually caused by over-rich carburation, although ignition system defects such as a run-down battery, faulty distributor, coil or condenser defects, or a broken or worn-out cable may be additional causes. If the plugs appear to be suitable for further use proceed to clean and test them.

First remove the plug gaskets and examine them for condition. A large proportion of the heat of the plug is normally dissipated to the cylinder head through the steel gaskets between the plug and the head. Plugs not screwed down tightly can thus easily become overheated so that they operate out of their proper heat range, thus producing pre-ignition, short plug life, and 'pinking'. On the other hand, it is unnecessary and unwise to

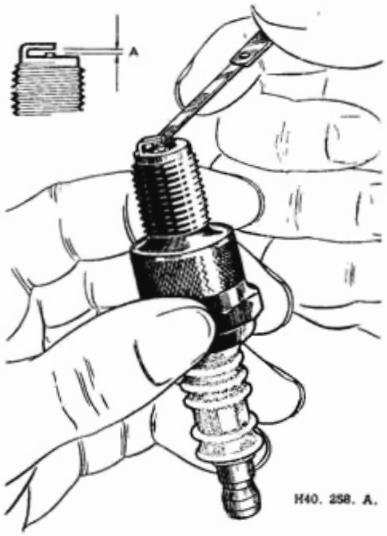

Fig. B.7.
Adjusting the gap between the sparking plug points.

tighten up the plugs too much. What is required is a reasonably good seal between the plug and the cylinder head and the use of a torque wrench is recommended to tighten the plugs to a figure of 30 lb. ft. (4·15 kg. m.).

If the plugs require cleaning it is preferable to make use of a proper plug cleaner of the type recommended by the plug manufacturers, and the makers' instructions for using the cleaner should be followed carefully.

Occasionally a blistered insulator or a badly burnt electrode may be noticed when examining the plugs.

If the plug is of the type normally recommended for the engine and it was correctly installed (down tightly on the gasket), this condition may have been brought about by a very lean mixture or an overheated engine. There is, however, a possibility that a plug of another type is required, but as a rule the recommended plug should be used.

After cleaning, examine the plugs for cracked insulators and wear of the insulator nose due to excessive previous cleaning. In such cases the plugs have passed their useful life and new plugs should be installed.

Examine the insulator for accumulated deposits underneath the side electrode which act as a 'hot spot' in service.

After cleaning the plugs in a special cleaner blow all surplus abrasive out of the body recesses, and the plug threads, by means of an air blast. Next examine the threads for carbon. Any deposits can be removed and the threads cleaned with a wire brush. A wire buffing wheel may also be utilized, but reasonable care must be used in both methods in order not to injure the electrodes or the tip of the insulator. The thread section of the plug body is often neglected when cleaning the plugs, owing to the fact that it is not generally realized that, like the gaskets, the threads are a means of heat dissipation and that when they are coated with carbon it retards the flow of the heat from the plug, producing overheating. This simple procedure will also ensure absence of binding on the threads on replacement and also avoid unnecessary use of the plug spanner.

When replacing a plug always screw it down by hand as far as possible and use the torque wrench for final tightening only. Whenever possible, use a socket to avoid possible fracture of the insulator.

Examine the electrodes for the correct gap (see **'GENERAL DATA'**). Avoid an incorrect reading in the case of badly pitted electrodes.

Remember that electrode corrosion and the development of oxides at the gap area vitally affects the efficiency of the plug. The special cleaner can remove the oxides and deposits from the insulator, but the cleaner stream does not always reach this area with full effect owing to its location, and cannot necessarily deal with corrosion effectively as this sometimes requires too strong a blast for proper removal.

When plugs appear worthy of further use it is good practice to dress the gap area on both centre and side electrodes with a small file before resetting them to the correct gap. The intense heat, pressure, explosion shock, and electrical and chemical action to which the plugs are submitted during miles of service are so intense that the molecular structure of the metal points is eventually affected. Plugs then reach a worn-out condition and resetting the points can no longer serve a good purpose. When points are burnt badly it is indicative that the plug has worn to such an extent that its further use is undesirable and wasteful.

Before replacing the plug in the engine test it for correct functioning under air pressure in a plug tester, following out the instructions issued by the makers of the plug tester. Generally speaking, a plug may be considered satisfactory for further service if it sparks continuously under a pressure of 100 lb. sq./in. (7 kg./cm.^{2}) with the gap between the points set at ·022 in. (·56 mm.). It is essential that the plug point should be reset to the recommended gap before the plug is refitted to the engine (see **'GENERAL DATA'**).

While the plug is under pressure in the tester it should be inspected for leakage by applying oil round the terminal. Leakage is indicated by the production of air bubbles, the intensity of which will serve to indicate the degree of leakage. The leakage gases have a 'blowtorch' effect when the engine is running which rapidly raises the temperature of the plug above its designed heat range, thus producing overheating, pre-ignition, and rapid electrode destruction.

The top half of the insulator is frequently responsible for poor plug performance due to the following faults: splashes, accumulation of dirt and dust, cracked insulators caused by a slipping spanner, overtightness of the terminals.

Examine for a cracked insulator at the shoulder and the terminal post and remove any accumulations of dirt and dust.

SECTION C

THE COOLING SYSTEM

Description	Section
Adjustments in vehicle	C.1
Draining and flushing the system	C.5
Fan and pump assembly	C.4
Fault diagnosis	C.7
Frost precautions	C.6
Radiator	C.2
Thermostat	C.3

DESCRIPTION

The circulation of the cooling water is effected by a centrifugal pump mounted in front of the cylinder block and driven by a belt from the crankshaft pulley. A thermostat is fitted in the water outlet pipe at the front end of the engine.

When filling or topping-up the radiator, do so when the engine is cold, and if possible use rain water or clean soft water. Fill up to the filler plug orifice.

The radiator filler cap, on later cars, incorporates a pressure valve which pressurizes the cooling system to 4 lb./sq. in. (·28 kg./sq. cm.).

Section C.1

ADJUSTMENTS IN VEHICLE

Overheating may be caused by a slack fan belt, excessive carbon deposit in the cylinders, running with the ignition too far retarded, improper carburetter adjustment, a partially choked radiator causing failure of the water to circulate or loss of water due to leakage or evaporation.

The belt should be just sufficiently tight to prevent slip, yet it should be possible to move it laterally about 1 in. (2·54 cm.). To make an adjustment, slacken the bolts which hold the generator in position, then raise or lower the generator until the desired tension of the belt is obtained. Securely lock the generator in position again when the adjustment has been made.

Section C.2

RADIATOR

To remove

(1) Drain the cooling system (see Section C.5).
(2) Slacken the hose clip, on the upper water hose, at the thermostat housing and with the aid of a screwdriver ease the pipe off the housing extension.
(3) Take off the radiator bottom hose by releasing the clips on the water pump and water outlet pipe if a heater is fitted.
(4) Remove the four bolts (two each side) which secure the radiator to its mounting frame. Lift out the radiator.
(5) Inspect the radiator core for damage and test it for water leaks. Solder at the points where leakage occurs or renew the core if necessary.
(6) Inspect the drain tap for leaks and renew it if necessary.
(7) Inspect the hoses for deterioration and renew them if necessary.

To replace

Installation is a reversal of the procedure 'To Remove.'

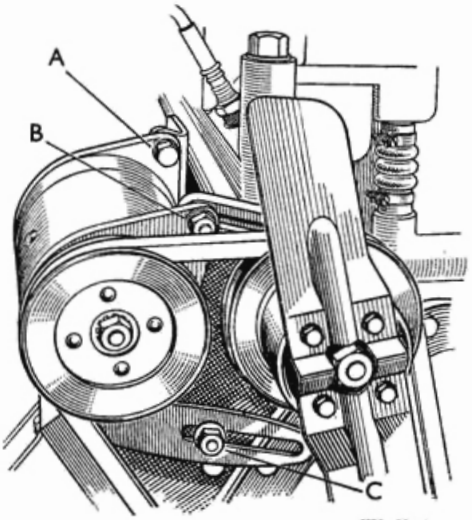

Fig. C.1.
Fan belt adjustment.
A. and B. Generator securing bolts.
C. Adjusting link lock nut.

Section C.3

THERMOSTAT

To remove

(1) Drain the cooling system (see Section C.5).
(2) Disconnect the outlet hose from the outlet elbow.
(3) Remove the three nuts and spring washers from the thermostat cover and lift the cover off its studs at the front of the cylinder head.
(4) Remove the paper joint washer and lift out the thermostat.
(5) Test the thermostat opening temperature by immersing it in water at a temperature between 158° and 167°F. (70° and 75°C.). If the thermostat valve does not start to open, or the valve sticks in the fully open position, the thermostat should be renewed. No attempt should be made to repair the thermostat.
(6) Clean the joint faces at the outlet elbow and at the housing in the cylinder head.

To replace

The installation of the thermostat is a reversal of the procedure 'To Remove.' Fit a new paper joint washer between the cover and the cylinder head. In an emergency the engine can be run with the thermostat removed.

Section C.4

FAN AND PUMP ASSEMBLY

To remove

(1) Remove the radiator as detailed in Section C.2

and slacken the top clip of the thermostat by-pass hose.

(2) Remove the generator as detailed in Section N.

(3) Withdraw the four nuts and washers securing the pump to the cylinder block and remove the pump together with the by-pass hose.

To dismantle (A30)

(1) Unscrew the four set bolts and remove the fan blades and belt pulley, when detachable, from the hub.

(2) Remove the nut and washer from the front end of the spindle, detach the fan hub with a suitable extractor and take out the Woodruff key.

(3) Hold the pump body and tap the spindle out towards the rear, using a hide hammer. The spindle will carry with it the vane and water seal assembly.

(4) Prise out the spring retaining ring (6, Fig. C.2) and remove the lubricant retainer (5).

(5) Place the pump body face downwards and use Service Tool 18G60 to tap out the front ball bearing (4) which will be followed by the tubular distance piece (3).

(6) Tap out the rear ball bearing (2) in the same direction as the front one, after having centralised it by means of the dummy bearing supplied as part of Service Tool 18G60.

(7) Remove the lubricant retaining assembly which consists of a felt ring (14) held between two retainers (1 and 15).

To dismantle (A35)

(1) Unscrew the four set bolts and remove the fan blades and belt pulley from the hub.

(2) Remove the fan hub with a suitable extractor.

(3) Pull out the bearing locating wire through the hole in the top of the pump body.

(4) Gently tap the spindle rearwards to release the combined spindle and bearing assembly together with the seal and vane.

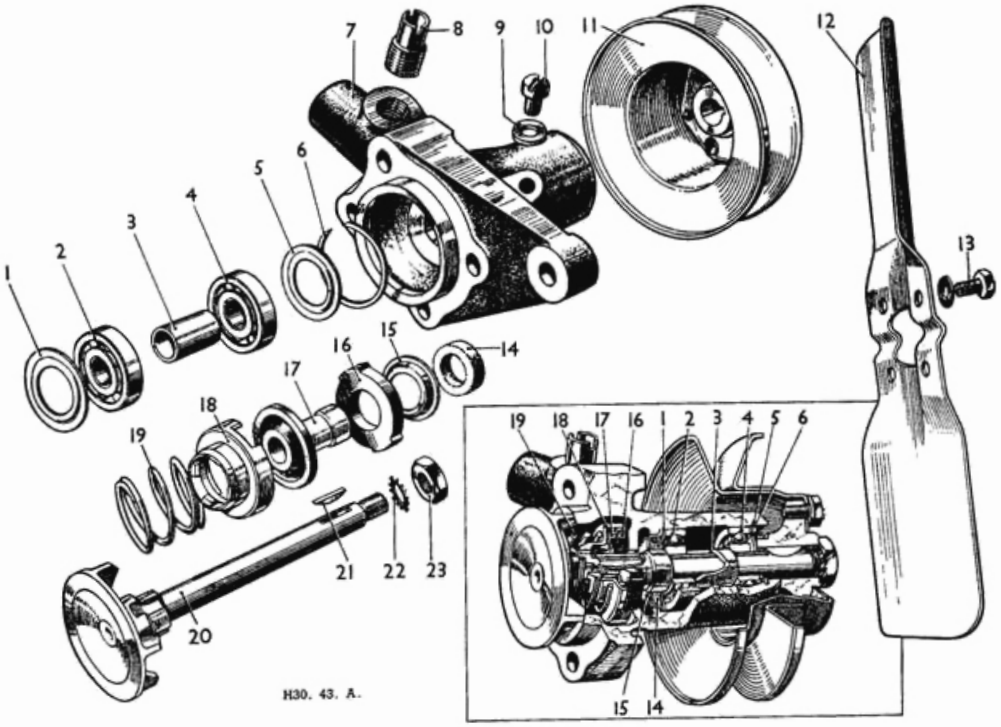

Fig. C.2. Water pump assembly (A30).

1. *Felt retainer, outer.*
2. *Bearing, rear.*
3. *Bearing, distance piece.*
4. *Bearing, front.*
5. *Lubricant retainer.*
6. *Spring ring.*
7. *Pump body.*
8. *By-pass tube.*
9. *Screwed plug washer.*
10. *Screwed plug.*
11. *Fan and pump pulley.*
12. *Fan blade.*
13. *Setscrew and washer.*
14. *Felt ring.*
15. *Felt retainer, inner.*
16. *Sealing ring.*
17. *Rubber seal and distance piece.*
18. *Locating cup.*
19. *Gland spring.*
20. *Spindle with vane.*
21. *Woodruff key.*
22. *Shakeproof washer.*
23. *Nut for spindle.*

(5) Withdraw the vane from the spindle with a suitable extractor and remove the pump seal assembly.

Should the bearing show signs of wear or damage, it must be replaced by a new bearing and spindle assembly, bearings alone are not serviced. The seal assembly should be replaced by a new seal if wear or damage is apparent or the pump leaking.

To reassemble (A30)

(1) Secure the pump body face upwards in a vice with protected jaws.

(2) Assemble the driver, dummy front bearing and pilot of Service Tool 18G60.

(3) Pass the rear bearing, outer felt ring retainer (1, Fig. C.2), felt ring (14) and inner felt ring retainer (15) on to the pilot and drive them into the pump body. The felt ring (14) must be renewed if it is inefficient.

(4) Fit the distance piece (3) and drive in the front bearing.

(5) Replace the lubricant retainer (5) and spring retaining ring (6).

(6) On engines prior to engine number 41992, fit the water seal assembly with reference to Fig. C.2. Renew the gland spring (19) if it has weakened and the sealing ring (16) if it is worn. A re-designed water pump, incorporating a modified water seal assembly, was fitted at engine number 41992. This assembly consists of a synthetic rubber seal into which is moulded a carbon ring, together with a tension spring and spring cup, which parts supersede the sealing ring (16), rubber seal, locating cup (18) and gland spring (19) on the earlier water pump. The new water pump assembly is interchangeable with the old one but the pump body, water seal assembly, distance piece (17), spindle with vane and lubricant retainer (5) are not separately interchangeable.

(7) Further reassembly is a reversal of the sequence of instructions given for dismantling.

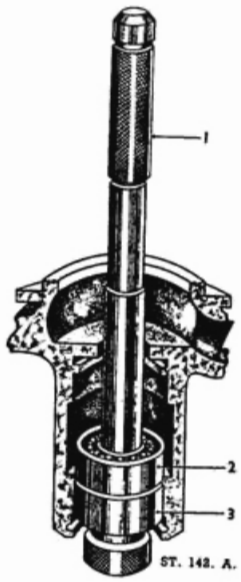

Fig. C.3.
Removal of A30 water pump rear bearing with Service Tool 18G60.
1. Driver. 2. Rear bearing.
3. Dummy bearing.

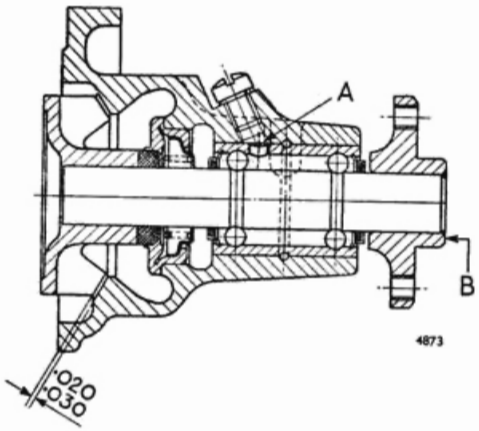

Fig. C.4.
A section through the A35 water pump showing the location of the components. When assembled the hole in the bearing must coincide with the lubricating hole in the water pump 'A' and the face of the hub 'B' must be flush with the end of the spindle.

To reassemble (A35)

Reassembly is a reversal of the dismantling procedure. Make certain that the hole in the bearing is lined up with the lubricating hole in the pump body before pressing the spindle and bearing into position. Should the interference fit of the fan hub have been impaired when the hub was withdrawn from the spindle, a new hub should be fitted.

To replace

The installation of the fan and pump assembly is a reversal of the procedure 'To Remove.' Particular note should be made of the following:

(1) Install a new paper joint washer between the pump body and the cylinder block.

(2) Adjust the fan belt (see Section C.1).

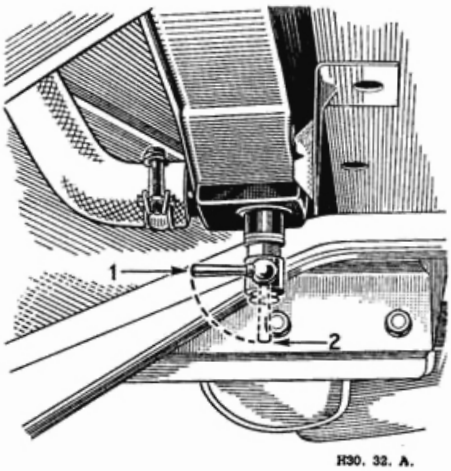

Fig. C.5.
Radiator drain tap (earlier models.)
1. *Open position.* 2. *Closed position.*

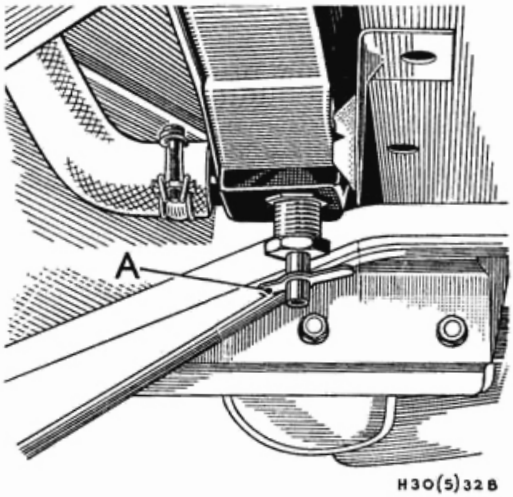

Fig. C.6.
Radiator drain tap (later models).
Turn the tap A in an anti-clockwise direction to drain the radiator.

(3) Lubricate the bearings sparingly, with S.A.E. 140 oil, through the orifice in the top of the pump body after removing the plug.

Section C.5

DRAINING AND FLUSHING THE SYSTEM

To drain the system

(1) With the vehicle standing on level ground, remove the radiator filler cap.

Caution.—As the system on later A30 cars and on the A35 is pressurized, do not remove the radiator filler cap while the engine is running and, if possible, avoid removing it while the engine is hot.

If it is necessary to remove the filler cap while the engine is hot, it is essential to remove it gradually and the filler neck is provided with a shaped cam to enable this to be done.

Unscrew the cap slowly until the retaining tongues are felt to engage the small lobes at the end of the filler neck cam and wait until the pressure in the radiator is fully released before finally removing the cap.

(2) Open the cylinder block and radiator drain taps. If the system contains anti-freeze mixture, it should be drained into clean containers, strained and preserved for re-use.

(3) To prevent the possibility of operating the vehicle with the system drained, make sure that a notice is placed on the vehicle or other suitable precautions taken.

To flush the system

Because there are impurities in the water in certain localities, deposits are left in the system. These deposits tend to clog the system and so impair cooling efficiency. It is therefore desirable to flush the radiator and water passages every 12,000 miles (19200 km.).

(1) Remove the filler cap and drain tap and allow the system to be thoroughly cleansed by flushing clean water through the filler orifice.

(2) Remove the radiator from the vehicle (Section C.2) turn it upside down and reverse flush by

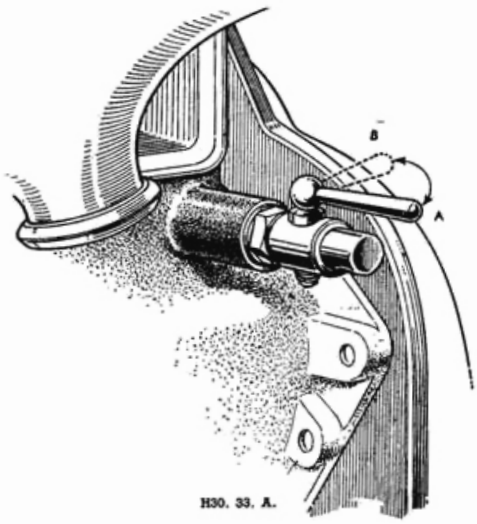

Fig. C.7.
Cylinder block drain tap.
A. Closed position. *B. Open position.*

feeding clean water through the elbow on the bottom tank and allowing waste water to escape through the filler orifice.

(3) Remove and clean the thermostat (Section C.3).

Section C.6

FROST PRECAUTIONS

In very low ambient temperatures, the correct strength of anti-freeze solution, as recommended by the manu facturers for the conditions likely to be encountered, must be used in the cooling systems of vehicles fitted with heaters, since it is not possible to fully drain the heater without removing it: see **'GENERAL INFORMATION.'** When not in use, vehicles without heaters must have their cooling systems drained (see Section C.5) unless the appropriate strength of anti-freeze solution is used.

Section C.7 FAULT DIAGNOSIS

Symptom	No.	Possible fault
(a) Internal water leakage	1	Cracked cylinder wall
	2	Loose cylinder head nuts
	3	Cracked cylinder head
	4	Faulty gasket
	5	Cracked tappet chest wall
(b) Poor circulation	1	Radiator core blockage
	2	Water jacket restriction
	3	Low water level
	4	Loose fan belt
	5	Defective thermostat
	6	Perished or collapsed radiator bottom hose
(c) Corrosion	1	Impurities in water
	2	Infrequent draining and flushing
(d) Overheating		In (b) check all items
	1	Sludge in crankcase
	2	Faulty ignition timing
	3	Low oil level in sump
	4	Tight engine
	5	Choked exhaust system
	6	Binding brakes
	7	Slipping clutch
	8	Valve timing incorrect
	9	Retarded ignition
	10	Mixture too weak

SECTION D

THE FUEL SYSTEM

	Section
Air cleaner	D.8
Carburetter	
Adjustment	D.5
Functioning	D.4
Service	D.6
Sources of trouble	D.7
Exhaust pipe	D.9
Fault diagnosis	D.10
Fuel tank	D.1
Fuel pump	
Description	D.2
Service	D.3

Section D.1

THE FUEL TANK

To remove and replace the tank

(1) Remove the drain plug from the tank and drain the petrol into a suitable receptacle.
(2) Undo the setpin securing the spare wheel in the luggage compartment and remove the wheel.
(3) Remove the four setpins (six on commercial vehicles) which secure the fuel tank in the floor of the luggage compartment.
(4) Disconnect the gauge unit wire (green with black) after removing its rubber protector.
(5) Disconnect the fuel outlet pipe at its union with the tank.
(6) Remove the rubber sleeve on the overflow pipe and on the filler pipe.
(7) Seal the tank openings against the entry of foreign matter and remove the tank.
(8) Replacement is a reversal of the sequence of operations for removal.

To remove and replace the gauge unit

(1) Remove the rubber cap which protects the gauge unit.
(2) Withdraw the six screws and remove the unit, taking care not to bend the float lever.
(3) When replacing the unit, ensure that the joint washer is in position and undamaged and, again, avoid bending the float lever.

Section D.2

FUEL PUMP

Description

The fuel pump is an AC-Sphinx 'Y' type mechanical pump operated off an eccentric on the engine camshaft. Fig. D.1 shows a sectional view of the pump.

As the engine camshaft (13) revolves, the eccentric (12) lifts the pump rocker arm (16) which is pivoted at (17). The rocker arm pulls the pull-rod (1) downwards together with the diaphragm (3) against the pressure o. the spring (2), thus creating a vacuum in the pump chamber (4). Petrol is drawn from the tank and enters at (6) into the sediment chamber (5), through gauze filter (9), inlet valve (11) into the pump chamber (4). On the return stroke the pressure of the spring (2) pushes the diaphragm (3) upwards, forcing petrol from the pump chamber (4) through the delivery valve (7) and port (8) into the carburetter.

When the carburetter bowl is full the float will shut the needle valve, thus preventing any flow of petrol from the pump chamber (4). This will hold the diaphragm (3) down, against the pressure of the spring (2) and it will remain in this position until the carburetter requires further petrol and the needle valve opens. The rocker arm (16), operates the connecting link by making contact at (15) and this construction allows idling movement of the rocker arm when there is no movement of the fuel pump diaphragm.

Spring (14) keeps the rocker arm (16) in constant contact with the pushrod and eccentric (12) to eliminate noise.

Section D.3

SERVICING THE PUMP

Cleaning the filter

The filter (see Fig. D.2) should be examined every 6,000 miles (9600 km.) and cleaned if necessary. Under extreme conditions of dust-laden atmosphere this mileage interval should be reduced as conditions dictate.

Access to the filter is gained by removing the dome cover, after unscrewing the retaining screw, when the gauze filter itself may be lifted off its seating. Clean out the sediment chamber and clean the gauze filter in an air jet or petrol.

The cork washer under the filter cover should be renewed if broken or if it has hardened.

When refitting the cover, make certain that the fibre washer is replaced under the head of the screw. Tighten the filter cover retaining screw just enough to make a

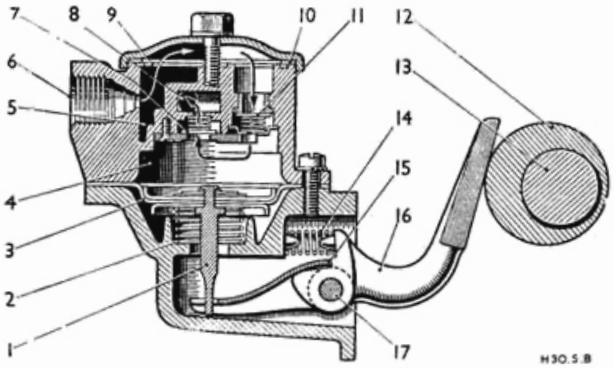

Fig. D.1.
Sectional view of the fuel pump.

1. *Diaphragm pull-rod.*
2. *Diaphragm return spring.*
3. *Diaphragm.*
4. *Pump chamber.*
5. *Sediment chamber.*
6. *Inlet union.*
7. *Delivery valve.*
8. *Delivery port.*
9. *Gauze filter.*
10. *Cork sealing washer.*
11. *Inlet valve.*
12. *Camshaft eccentric.*
13. *Camshaft.*
14. *Anti-rattle spring.*
15. *Connecting link.*
16. *Rocker arm.*
17. *Rocker arm pivot pin.*

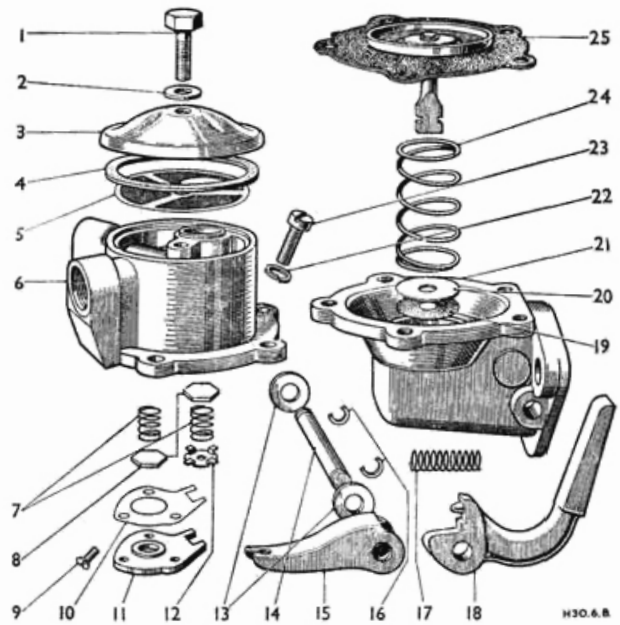

Fig. D.2.
Fuel pump exploded.

1. *Cover retaining screw.*
2. *Fibre washer.*
3. *Cover.*
4. *Cork sealing washer.*
5. *Gauze filter.*
6. *Upper casting.*
7. *Valve springs.*
8. *Inlet and delivery valves.*
9. *Valve plate screw.*
10. *Valve plate gasket.*
11. *Valve plate.*
12. *Retainer.*
13. *Packing washers.*
14. *Rocker arm pivot pin.*
15. *Connecting link.*
16. *Retaining clips.*
17. *Anti-rattle spring.*
18. *Rocker arm.*
19. *Fibre washer.*
20. *Metal washer.*
21. *Pump body.*
22. *Spring washer.*
23. *Upper chamber securing screw.*
24. *Diaphragm return spring.*
25. *Diaphragm assembly.*

petrol-tight joint. Over-tightening will either destroy the cork washer, crack the cover, or fracture the main casting.

Check the pump to crankcase mounting bolts for tightness; also check the petrol pipe unions.

To remove from engine

Start by disconnecting the pipe unions and then remove the two set screws which hold the petrol pump to the engine crankcase. The fuel pump will now readily come away.

To dismantle the pump (Fig. D.2)

(1) Unscrew the set bolt (1) and lift off the cover (3).
(2) Lift off the gauze filter (5) and cork sealing washer (4).
(3) Unscrew the five upper chamber securing screws (23) and separate the two halves of the pump body (6 and 21) after scribing a location mark across the flanges.
(4) Unscrew the three screws (9) and remove the valve plate (11), inlet and delivery valves (8), valve plate gasket (10), springs (7) and delivery valve spring retainer (12).
(5) Remove the diaphragm and pull rod assembly (25) by rotating it through 90° and pulling it out. This will release the diaphragm spring (24).
(6) Remove the metal washer (20) and fibre washer (19).
(7) Remove the two retaining circlips (16) and washers (13), push out the rocker arm pivot pin (14) which will release the rocker arm (18), link (15) and spring (17).

Reassembling the petrol pump

The following procedure should be adopted, dealing with the upper portion of the pump first (Fig. D.2).

All valves should be swilled in clean paraffin before reassembly. Apart from the cleaning effect this improves the sealing between the valve and seat.

(1) Place the delivery valve (8) on its spring (7). Place the inlet valve (8) on the valve seat located in the upper casting.
(2) Put valve spring (7) on the centre of the inlet valve (8).
(3) Position retainer (12) on top of the inlet valve spring (7)—this retainer is a small four-legged pressing which retains the inlet valve spring—taking care not to distort the legs.
(4) Lay valve plate gasket (10) in position.
(5) Locate valve plate (11) in position and secure it with three screws (9).
(6) Now use a piece of wire to ensure that the valves work freely.
(7) Place the gauze filter (5) in position on top of the casting, making certain that it fits snugly.
(8) Fit the cork sealing washer (4), cover (3), fibre washer (2) and retaining screw (1).
(9) To assemble the lower half proceed as follows: Assemble link (15), packing washers (13), rocker arm (18) and rocker arm spring (17) in the body (21). Insert rocker arm pin (14) through the hole in the body, at the same time engaging the packing washers (13), link and rocker arm. Then, spring the retaining clips (16) into the grooves on each end of the rocker arm pin. The

rocker arm pin should be a tap fit in the body, and if due to wear it is freer than this, the ends of the holes in the body should be burred over slightly.

Note: The fitting of the rocker arm pin can be simplified by first inserting a piece of ·240 in. (6·096 mm.) diameter rod through the pin hole in one side of the body far enough to engage the rocker arm washers and link, then pushing in the rocker arm pin from the opposite side, removing the guide rod as the pin takes up its proper position.

(10) To fit the diaphragm assembly to the pump body: Insert fibre washer (19) and metal washer (20) and place the diaphragm spring (24) in position in the pump body.

Place the diaphragm assembly (25) over the spring, the pull rod being downwards, and centre the upper end of the spring in the lower protector washer.

Press downwards on the diaphragm at the same time turning the assembly to the left in such a manner that the slots in the pull rod engage the fork in the link, ultimately turning the assembly a complete quarter turn to the left. This will place the pull rod in the proper working position in the link and at the same time permit the matching up of the holes in the diaphragm with those in the pump body flanges. When first inserting the diaphragm assembly into the pump body, the locating 'tab' on the outside of the diaphragm should be at the 12 o'clock position. After turning the diaphragm assembly a quarter of a turn to the left, the 'tab' should be at the 9 o'clock position.

Note: Under certain conditions it is possible to insert the diaphragm pull rod too far through the fork in the connecting link with the result that the link, instead of engaging the two small slots in the pull rod, rides on the pull rod shoulder.

The diaphragm is correctly fitted when the fork in the link engages the two slots in the diaphragm pull rod after the diaphragm has been turned through 90°.

Correct assembly can be checked by measuring the distance from the top of the pump body to the upper diaphragm protector when the diaphragm is held at the top of its stroke by the return spring. A measurement of approximately $\frac{9}{16}$ in. (14·29 mm.) indicates correct assembly, whereas one of $\frac{3}{16}$ in. (4·76 mm.) proves that the assembly is unsatisfactory.

(11) The two sub-assemblies of the pump are now ready for fitting together and this is carried out as follows:

Push the rocker arm towards the pump until the diaphragm is level with the body flanges.

Place the upper half of the pump into its assembled position, as shown by the mark made on the flanges before dismantling.

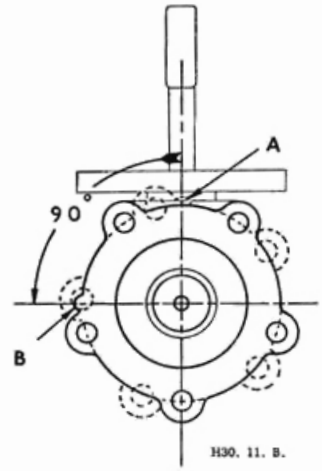

Fig. D.3.
When fitting the diaphragm to the pump body, the locating tab A should be in the position shown. Turn the diaphragm to the left, so that the pull rod slots engage in the connecting link fork, until it arrives at position B.

Install the securing screws and spring washers and tighten only until the heads of the screws just engage the washers.

Use a screwdriver to hold the rocker arm at its outward position and, while so held, securely tighten the securing screws diagonally.

Testing the pump

The best method of testing the pump is by using an AC-Sphinx bench test stand, on which the suction side of the pump is piped to a tin of paraffin at floor level and the outlet side of the pump connected to a stop tap and pressure gauge.

First, flush the pump through to wet the valves and seats, then completely empty it again by continuing to operate the rocker arm by hand with the suction pipe clear of the paraffin. Now, operate the pump again with the suction pipe in the paraffin. Not more than 20 strokes should be necessary to secure delivery of paraffin from the pump outlet.

Using the same apparatus a second test can be made by working the pump with the tap on the delivery side closed, pressure being recorded on the gauge. After ceasing to work the pump it should take several seconds for this pressure to return to zero, thus denoting that the valves are seating properly. Also, while there is pressure, the outer edge of the diaphragm—visible between the two clamping flanges—should be carefully examined for leakage and the securing screws tightened if necessary. When working the pump by hand a longer stroke is obtained and as a result of this the pressure developed is higher than when fitted to the engine.

When the above apparatus is not available the petrol pump should be tested as follows, using a can of clean paraffin.

First, flush the pump by immersing it in paraffin and working the rocker arm half a dozen times; then, empty the pump by continuing to operate it while held above the bath. With the pump still clear of the paraffin, place a finger over the inlet union (marked 'In') and work the rocker arm several times. Upon removing the finger a distinct suction noise should be heard, denoting that the pump has developed a reasonable degree of suction. Afterwards the finger should be placed over the outlet union and after pressing the rocker arm inwards, the air drawn into the pump chamber should be held under compression for two or three seconds. This should also be done with the pump immersed in paraffin and the clamping flanges of the diaphragm watched for any signs of air leakage.

Refitting to engine

Reverse the procedure outlined for removal from the engine. Ensure that the rocker arm is correctly positioned against the eccentric on the camshaft, as there is a possibility of inadvertently getting the rocker arm under the eccentric or to one side when damage will result on tightening the bolts. After refitting, the engine should be run for a short time and pipe unions and pump examined for fuel leakage.

Section D.4

THE CARBURETTER

Starting

To start the engine from cold the strangler control on the dashboard must be pulled to close off the air intake of the carburetter. The same action will cause the throttle to open slightly by means of the interconnection rod (See Figs. D.4 and D.6).

With the ignition switched on, the engine should now be turned over by means of the starter or by hand. Ensure that the accelerator pedal is not touched.

Most of the depression caused by the rotation of the engine is now concentrated upon the slow running outlet the progression outlet and upon the outlet of the emulsion tube. If the carburetter is not in a worn condition very little air enters at this stage and consequently the rich mixture, as required for cold starting purposes, is made available for the engine.

Immediately the engine fires a heavier depression will be created on the engine side of the strangler flap, and as this is held closed only by the tension of the automatic spring on the end of the extended spindle, the strangler flap will open and close rapidly against the pulsations of the engine.

This will provide the weaker mixture and greater volume needed to ensure that the engine continues to run at a good speed until the normal working temperature is attained. At this stage the strangler control must be returned to its normal position on the dashboard thus fully opening the strangler flap.

Normal operations (Type 26 J.S.)

With the throttle closed down to the idling position, the mixture will be supplied from the slow-running jet (4, Fig. D.4).

Depression will be concentrated upon the outlet (9) and will, in turn, be directed on to the slow-running jet (4). Here there is a controlled depression fall because of the leak at the slow-running air regulating screw (5).

On opening the throttle to increase engine speed the outlet (8) at the throttle edge assists in the transfer of fuel. This is the progression outlet and cannot be adjusted.

When the throttle is opened wider, the high depression now effective in the choke tube causes petrol to be drawn from the emulsion tube (12). This petrol joins the air entering the carburetter intake and the emulsion is drawn down the bore of the carburetter.

The emulsion tube (12), has a series of holes drilled throughout its length. As the level of petrol falls in the

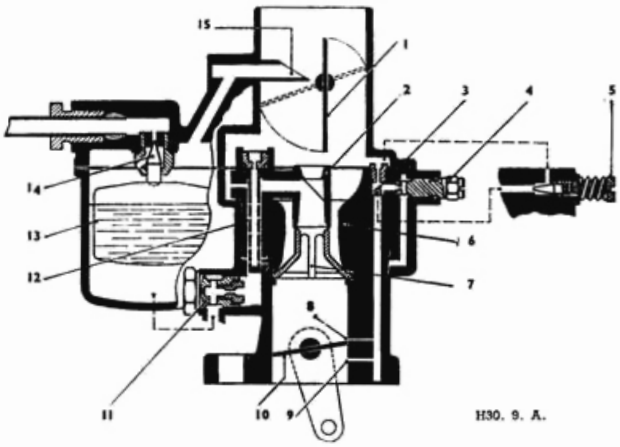

Fig. D.4.
A sectional view of the Zenith 26 J.S. carburetter.

1. *Strangler flap.*
2. *Inner venturi.*
3. *Air jet.*
4. *Slow running jet.*
5. *Air regulating screw.*
6. *Choke tube.*
7. *Deflector.*
8. *Progression outlet.*
9. *Slow running outlet*
10. *Throttle flap.*
11. *Main jet.*
12. *Emulsion tube.*
13. *Float.*
14. *Needle.*
15. *Air release tube.*

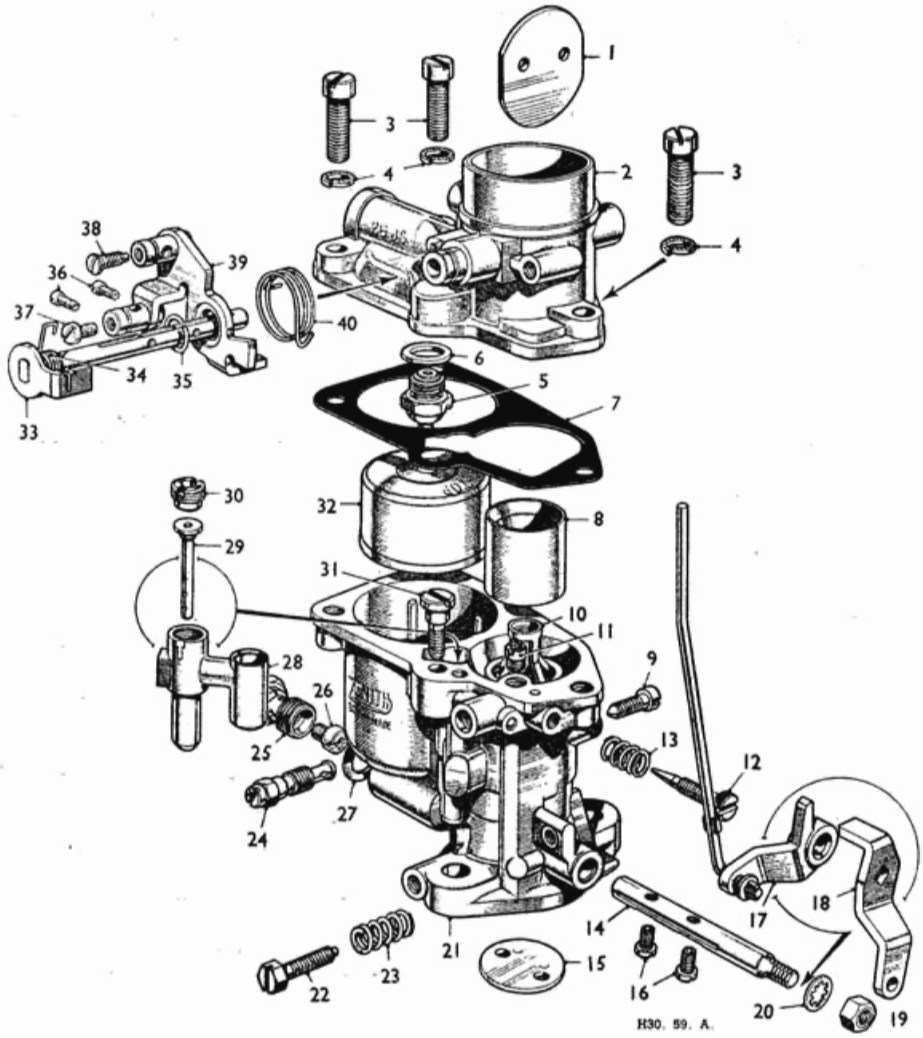

Fig. D.5. An exploded view of the Zenith 26 J.S. carburetter.

1. *Strangler flap.*
2. *Strangler body.*
3. *Strangler body to carburetter screw.*
4. *Spring washer.*
5. *Needle seating.*
6. *Washer.*
7. *Gasket.*
8. *Choke tube.*
9. *Choke tube fixing screw.*
10. *Deflector.*
11. *Slow running air bleed jet.*
12. *Air regulating screw.*
13. *Spring.*
14. *Throttle spindle.*
15. *Throttle.*
16. *Throttle fixing screws.*
17. *Floating lever and interconnection rod assembly.*
18. *Throttle lever.*
19. *Throttle lever fixing nut.*
20. *Shakeproof washer.*
21. *Carburetter body.*
22. *Throttle stop screw.*
23. *Throttle stop screw spring.*
24. *Slow running jet.*
25. *Main jet carrier.*
26. *Main jet.*
27. *Fibre washer for main jet carrier.*
28. *Inner venturi.*
29. *Emulsion tube.*
30. *Main air jet.*
31. *Inner venturi fixing screw.*
32. *Float.*
33. *Strangler spindle.*
34. *Strangler spring.*
35. *Strangler lever retaining clip.*
36. *Strangler flap fixing screws.*
37. *Interconnection swivel screw.*
38. *Strangler swivel screw.*
39. *Strangler lever.*
40. *Strangler lever spring.*

tube, the drillings are uncovered providing the necessary compensation for the main jet (11).

Normal operations (Type 26 V.M.E.)

With the throttle closed down to the idling position, the mixture will be supplied from the slow-running jet (9, Fig. D.6).

Depression will be concentrated upon the outlet (2) and will, in turn, be directed on to the slow-running jet (9). Here there is a controlled depression fall caused by the leak at the slow-running air regulating screw (5).

Petrol will be drawn from the well (12) beneath the jet, and measured on passing through, before continuing to the throttle edge.

At the throttle edge there is a further outlet (1) which breaks into the slow-running passage. Upon the throttle being opened from the idling position, depression will be concentrated here and a progressive getaway from slow running is assured.

Upon the throttle being opened still further the depression will be concentrated upon the nozzle (6) of the emulsion block which projects into the narrowest part of the choke tube. This will result in petrol being drawn from the passages (13 and 7), as there must be a ready reserve of petrol available for instant acceleration.

The source of petrol supply is eventually through the main and compensating jets (16 and 15). It will be observed that the petrol in the well (13) has been consumed, and as the top of the well is open to atmosphere, the compensating jet (15) becomes air bled. Petrol issuing from the main jet (16) will meet the emulsified petrol from the compensating jet in the common channel (7). This will tend to break up the petrol from the main jet also. The supply from both sources will then be drawn from the emulsion block nozzle into the choke tube.

It will be realised that as soon as petrol in the float chamber falls below the predetermined level, the float will fall, permitting the needle to drop from its seating (10) and petrol will pass into the chamber through the seating.

Section D.5

CARBURETTER ADJUSTMENT

Slow-running is adjusted by means of the throttle stop screw and the air regulating screw (see Figs. D.5 and D.7). The stop screw determines the speed of slow-running, i.e. it adjusts the throttle position for idling. To increase the slow-running speed the stop screw must be turned in a clockwise direction. If turned with the opposite rotation a slower tick-over will be given. If the engine is inclined to 'hunt' when running slowly, the mixture is too rich, and must be weakened by turning the air regulating screw in an anti-clockwise direction. This will cause a reduced depression upon the slow-running jet and result in reduced output from it.

If weakness at slow running speeds is suspected, then the air adjustment screw should be turned in a clockwise direction. This will reduce the air leak at the screw and give a greater depression upon the slow-running jet.

When the carburetter is worn it will be impossible to obtain good slow running, but it must be remembered that there are other factors, quite apart from the carburetter that have an influence upon slow-running, i.e. slow running when the engine is out of gear. These factors include non-airtight joints, worn valve guides, valves not seating, ignition over-advanced, incorrect setting of sparking plug points.

Slightly weaker settings may be found necessary on cars used in very hot climates; alternatively, slightly richer settings (larger jets) if used in very cold climates.

Section D.6

CARBURETTER SERVICING

Cleaning the jets

Do not push wire through the jets, clean with compressed air and petrol.

All jet sizes are clearly marked—the higher the number the larger the jet.

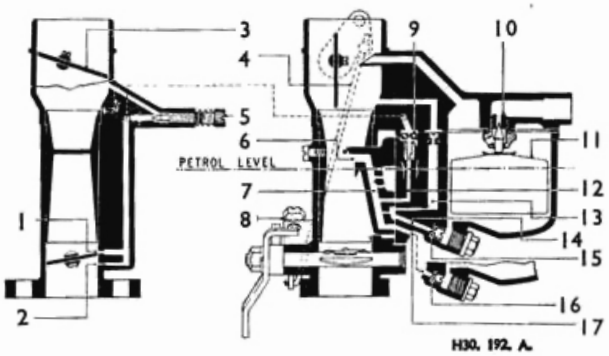

Fig. D.6.
A sectional view of the Zenith 26 V.M.E. carburetter.

1. *Progression outlet.*
2. *Slow running outlet.*
3. *Strangler flap.*
4. *Interconnecting rod.*
5. *Air regulating screw.*
6. *Emulsion block outlet nozzle.*
7. *Emulsion tube.*
8. *Throttle stop screw.*
9. *Slow running jet.*
10. *Needle seating.*
11. *Float.*
12. *Well (slow running).*
13. *Well (compensating jet).*
14. *Compensating jet tube.*
15. *Compensating jet.*
16. *Main jet.*
17. *Main jet tube.*

Fig. D.7.
An exploded view of the Zenith 26 V.M.E. carburetter.

1. *Strangler flap fixing screws.*
2. *Strangler flap.*
3. *Fixing screws (bowl to barrel).*
4. *Choke tube.*
5. *Carburetter body.*
6. *Air regulating screw.*
7. *Choke tube fixing screw.*
8. *Interconnection rod.*
9. *Floating lever.*
10. *Throttle lever.*
11. *Throttle lever fixing nut.*
12. *Spring washer.*
13. *Throttle spindle.*
14. *Throttle fixing screws.*
15. *Throttle.*
16. *Throttle stop screw spring.*
17. *Throttle stop screw.*
18. *Emulsion block fixing set screws.*
19. *Emulsion block.*
20. *Gasket for emulsion block.*
21. *Needle seating.*
22. *Washer for needle seating.*
23. *Compensating jet washer.*
24. *Compensating jet plug.*
25. *Main jet washer.*
26. *Main jet plug.*
27. *Float chamber.*
28. *Strangler lever.*
29. *Retaining clip for strangler lever.*
30. *Strangler spindle.*
31. *Strangler spring.*
32. *Spring for strangler lever.*
33. *Float.*
34. *Gasket (bowl to barrel).*
35. *Air release tube.*
36. *Slow running jet.*
37. *Screw over capacity well.*

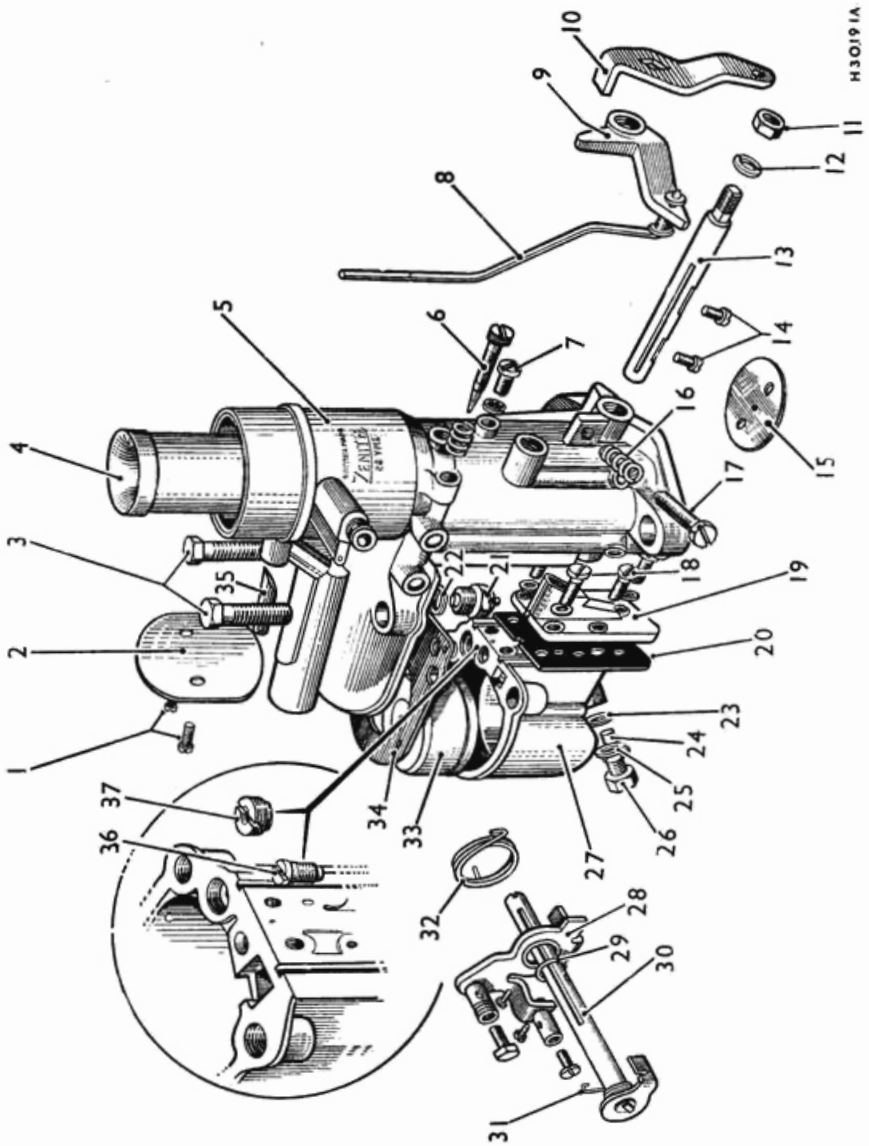

Fig. D.8.
Oil bath air cleaner (earlier models).

Dismantling the Carburetter (Type 26 J.S.)

Before dismantling the carburetter ensure that all parts, the hands and bench are thoroughly clean.

Begin by unscrewing the interconnection swivel screw (37, Fig. D.5.) enough to allow the strangler body (2) to be drawn off when the three screws securing it to the carburetter body are removed with their washers.

The float (32) should now be removed and put in a safe place. Hold the strangler body (2) firmly in one hand and with the help of a suitable spanner undo the needle seating (5) and aluminium alloy washer (6).

Remove the strangler flap (1) by unscrewing two screws (36). The strangler spindle (33) can now be withdrawn after 'unhooking' the strangler spring (34). **Note:** The strangler flap is bevelled along its two rounded edges; consequently special observation should be made before removing it, as it can only be refitted correctly in one way. The correct position of the strangler spindle and spring should also be noted with reference to the strangler lever (39).

A clip (35) holds the strangler lever (39) in position; undo this and the strangler lever will slip off along with its spring (40).

Having now dismantled the strangler body into its component parts, all that remains is to strip the carburetter body.

With the throttle (15) closed, make a note of the relative positions of the floating lever and interconnection rod assembly (17) and the throttle lever (18). Make a note also of the way in which the bevelled edges of the throttle (15) fit in the bore of the carburetter body. Alternatively observe the position of the dimples on the throttle (15). Now unscrew the two throttle fixing screws (16) and withdraw the throttle. The throttle spindle can then be taken out with the floating lever and interconnection rod assembly and the throttle lever, leaving the shakeproof washer (20) and nut (19) in position. Take out the throttle stop screw (22) and its spring (23).

Remove the main jet carrier (25) with a suitable spanner and take out the main jet (26). The air regulating screw (12), the slow running jet (24), the slow running air bleed (11) and the main air jet (30), which holds down the emulsion tube (29), can all be removed with a screwdriver.

On Type 26 J.S.-2 carburetters, the screw (31) which fixes the inner venturi (28) can be taken out allowing the venturi to be removed.

Screw (9) when detached will allow the choke tube (8) and deflector (10) to be taken out, leaving the carburetter body completely stripped down.

On Type 26 J.S.-3 carburetters, the screw (31) secures the discharge nozzle and screw (9) a modified choke tube. The inner venturi (28) and deflector (10) are deleted.

Reassembly (Type 26 J.S.)

Reassembling the carburetter is quite straight forward if the dismantling process is followed in reverse. On Type 26 J.S.-3 carburetters, it is important to ensure that the bar in the choke tube contacts the beak of the discharge nozzle before the choke tube fixing screw is fitted. Change the gasket (7) between the strangler body and carburetter body if it is damaged. Replace the float with the side marked 'TOP' uppermost.

Dismantling the Carburetter (Type 26 V.M.E.)

Before dismantling the carburetter ensure that all parts, the hands and bench are thoroughly clean.

The float chamber (27, Fig. D.7) should first be removed after unscrewing the two securing bolts (3). The float (33) should now be removed and put in a safe place. Remove the main and compensating jet plugs (26 and 24). Both are located on the underside of the float chamber. Take out the main and compensating jets with a screwdriver. The slow running jet (36) and the screw over the

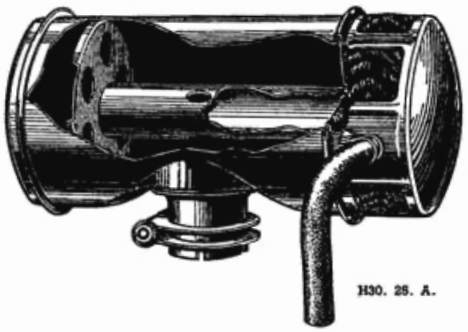

Fig. D.9.
Oil wetted type air cleaner (earlier models)

capacity well (37) may also be removed from the float chamber. Next unscrew the five setscrews (18) securing the emulsion block (19) to the float chamber, taking care not to damage the joint washer (20).

Hold the carburetter firmly in one hand and with the help of a suitable spanner remove the needle seating (21) and the aluminium alloy washer (22).

Remove the strangler flap (2) by unscrewing the two screws (1), the strangler spindle (30) can now be withdrawn after unhooking the strangler spring (31).

Note: The strangler flap is bevelled along its two rounded edges, consequently special observation should be made before removing it, as it can be fitted correctly only one way. The correct position of the strangler spring should also be noted with reference to the strangler lever (28).

The interconnection rod (8) should now be disconnected from its upper end.

A clip (29) holds the strangler lever in position, undo this and the strangler lever will slip off along with its spring (32) the correct assembled position of which should be observed.

With the throttle (15) closed take note of the relative positions of the floating lever and interconnection rod assembly (9 and 8) and the throttle lever (10). Make a note also of the way in which the bevelled edges of the throttle fit in the bore of the carburetter body. Alternatively observe the position of the dimples on the throttle. Now unscrew the two throttle fixing screws (14) and withdraw the throttle. The throttle spindle (13) can then be taken out with the floating lever and interconnection rod assembly and the throttle lever, leaving the spring washer (12) and nut (11) in position.

Take out the throttle stop screw (17) and its spring (16). Also the air regulating screw (6) together with its spring

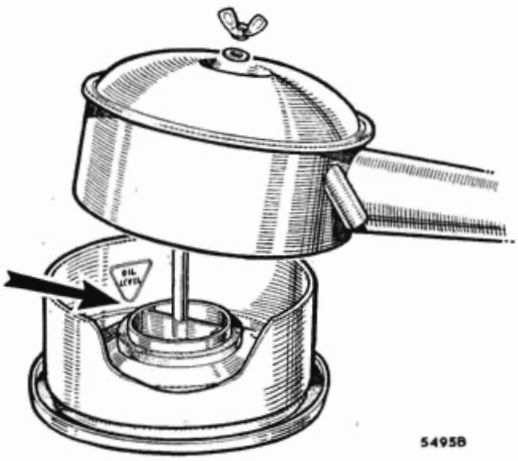

Fig. D.10.

Oil bath air cleaner (later models).
Showing the oil level mark and rubber sealing rings (1).

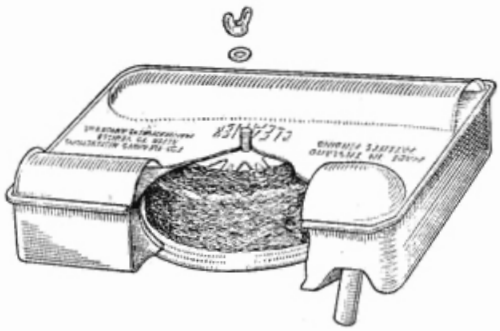

Fig. D.11.
Oil wetted type air cleaner (later models)

may be removed. Screw (7) when detached will allow the choke tube (4) to be taken out.

Thoroughly clean the float chamber and carburetter body by washing them in clean petrol and blowing compressed air through all drillings and crevices.

Reassembly (Type 26 V.M.E.)

Reassembling the carburetter is straightforward if the dismantling process is followed in reverse. Change the gasket (34) between the float chamber and the carburetter body if it is damaged. Ensure that the float is replaced with the side marked 'TOP' uppermost.

Section D.7

SOURCES OF CARBURETTER TROUBLE

High Fuel Consumption

This may be due to any one, or a combination of the following:

1. Over-rich mixture.
2. Dirty air cleaner.
3. Excessive vibration on engine mountings.
4. Flooding carburetter.
5. Incorrect jets.
6. Leaks in fuel supply line.
7. Strangler flap partially closed.

Acceleration

Poor acceleration may be due to faulty slow running adjustment, retarded ignition, heavy carbon deposits in the cylinder head, faulty fuel supply, dirt in carburetter, partially blocked jets, engine not correctly timed, poor compression, sticking or badly seating valves.

Popping back

Popping back while coasting down hill is usually due to weak mixture, faulty ignition or sticking valves.

If popping back occurs in the carburetter on pulling away, this may be due to restricted jets or weak mixture.

Section D.8

AIR CLEANER

Air cleaner

One of two types of air cleaner may be fitted. The normal air cleaner is of the oil wetted type (Figs. D.9 and D.11) fitted to cars for the Home Market. Apart from regular cleaning and re-oiling it requires no attention.

The oil bath type of air cleaner (Figs. D.8 and D.10) fitted to cars for the Export Market should be dismantled, cleaned and filled with oil up to the arrow mark every 3,000 miles (4800 km.). The level of oil in the container should also be checked every 1,000 miles (1600 km.) In countries with a heavily dust-laden atmosphere cleaning should be carried out at more frequent intervals.

To remove either type of air cleaner, slacken its clamp bolt, disconnect the breather pipe and lift it off.

The oil bath air cleaner can be dismantled by releasing the wing nut, when the strainer can be lifted out. Rinse the strainer in petrol and clean the oil container. Allow the strainer to drain and dry, before new oil is poured in up to the correct level and the cleaner re-assembled.

Section D.9

EXHAUST PIPE

To remove

(1) Disconnect the exhaust down pipe at the manifold.
(2) Disconnect the bracket anchoring the tail pipe.
(3) Disconnect the two brackets securing the exhaust pipe/silencer assembly to the engine back plate and the propeller shaft tunnel. The complete exhaust pipe/silencer assembly may now be withdrawn from the vehicle.
The longitudinal dimensions of the exhaust and tail pipes were altered at chassis number 14046: these two parts are interchangeable only as an assembly.

To install

The installation of the exhaust pipe/silencer assembly is a reversal of the removal procedure.

Section D.10 FAULT DIAGNOSIS

Symptom	No.	Possible fault
(a) Leakage or insufficient fuel delivery	1	Air vent restricted
	2	Pipes restricted or partially clogged
	3	Air leakage at pipe connections
	4	Fuel pump filter gauze clogged
	5	Fuel pump gasket damaged
	6	Fuel pump diaphragm damaged
	7	Fuel pump valves sticking or seating improperly
	8	Fuel vaporizing in pipe
	9	Carburetter jets choked
(b) Excessive fuel consumption	1	Carburetter out of adjustment
	2	Fuel leakage
	3	Controls sticking
	4	Air cleaner dirty
	5	Excessive engine temperature
	6	Brakes dragging
	7	Under-inflated tyres
	8	Excessive idling
	9	Vehicle overloaded
(c) Fast idling	1	Carburetter controls sticking
	2	Slow-running screw incorrectly adjusted.
(d) Fuel pump noise	1	Pump mountings loose
	2	Air leak on suction side
	3	Obstruction in pipe
	4	Filter obstructed
(e) Air leak on suction side of pump	1	Suction pipes, pump inlet or pump filter unions loose
	2	Insufficient fuel in the tank
	3	Faulty pipe

SECTION E

THE CLUTCH

	Section
General description	
Adjustment	E.1
Assembly	E.3
Fault diagnosis	E.4
Pedal linkage	E.2
Service tools	End of Section

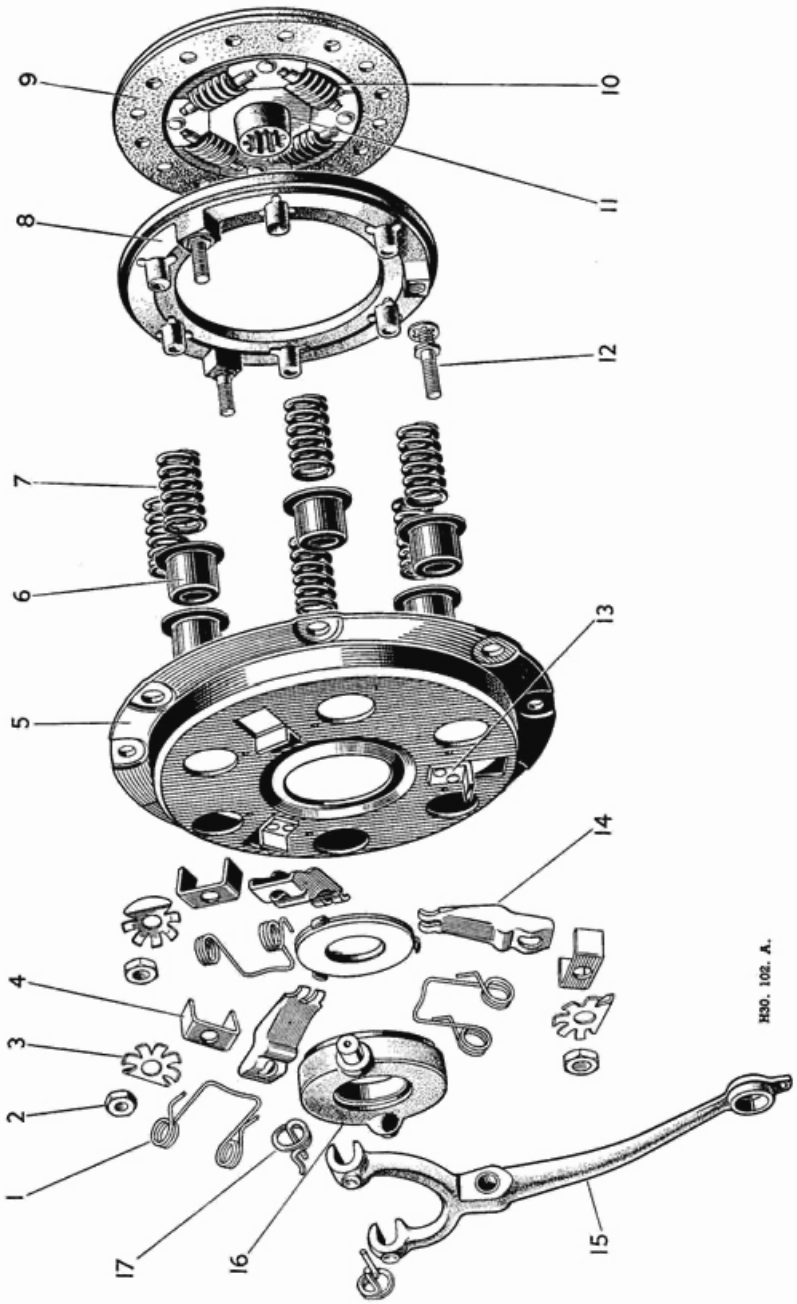

Fig. E.1.

The components of the clutch.

1. *Retaining spring.*
2. *Adjusting nut.*
3. *Tab washers.*
4. *Bearing plates.*
5. *Clutch cover.*
6. *Flanged cups.*
7. *Thrust springs.*
8. *Pressure plate.*
9. *Clutch driven plate.*
10. *Driven plate springs.*
11. *Splined hub.*
12. *Shoulder stud.*
13. *Fulcrum.*
14. *Release lever.*
15. *Clutch withdrawal lever.*
16. *Release bearing and cup assembly.*
17. *Retaining spring.*

GENERAL DESCRIPTION

The driven plate assembly (Fig. E.1) is of the flexible centre type in which the splined hub is directly attached to a disc, transmitting the power and over-run through a number of coil springs held in position by retaining wires. Two linings are riveted to the disc. The clutch is disengaged by means of a graphite release bearing operated by mechanical linkage from the clutch pedal.

Section E.1

ADJUSTMENT IN VEHICLE

The only adjustment necessary throughout the life of the driven plate facings is to periodically restore the free movement of the pedal (i.e., the distance travelled by the release bearing before it comes into contact with the release lever plate and commences to disengage the clutch). As the driven plate facings wear, the pressure plate moves closer to the flywheel and the outer ends of the release levers follow. This causes the inner ends of the release levers to travel further towards the gearbox and decreases the release bearing clearance and free pedal movement.

Adjustment is achieved by altering the effective length of the rod between the end of the clutch pedal shaft and the clutch withdrawal lever (Fig. E.3). To adjust this length, slacken the lock nut at the end of the rod and either lengthen or shorten it to have a free pedal movement of $\frac{3}{8}$ in. (9·525 mm.). Finally lock the two nuts together.

Always, adjustment must be such that it allows this free movement to be felt by the pressure of one finger on the clutch pedal.

To ascertain the amount of free movement, depress the pedal until the resistance of the clutch springs is felt.

Free movement of $\frac{3}{8}$ in. (9·525 mm.) at the pedal allows the release bearing to move forward a distance of $\frac{1}{16}$ in. (1·59 mm.) before contacting the release lever plate.

Excessive pedal clearance will make it difficult to disengage the clutch, whereas insufficient clearance may cause clutch slip.

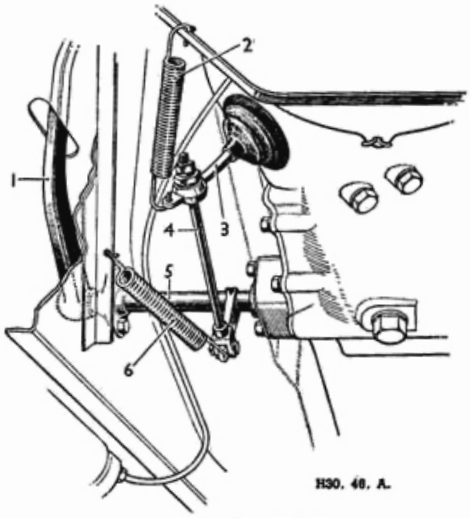

Fig. E.3. Clutch pedal linkage.

1. *Clutch pedal lever.*
2. *Pull-off spring.*
3. *Clutch withdrawal lever.*
4. *Clutch operating rod.*
5. *Clutch pedal shaft.*
6. *Anti-rattle spring (later models).*

Section E.2

CLUTCH PEDAL LINKAGE

To dismantle and reassemble

The pedal shaft assembly (Fig. E.5) consists of an inner oilite, or, from chassis No. 13675, brass lined rubber, spherical bush supported by the gearbox on the inside and a dished flange held in position by two

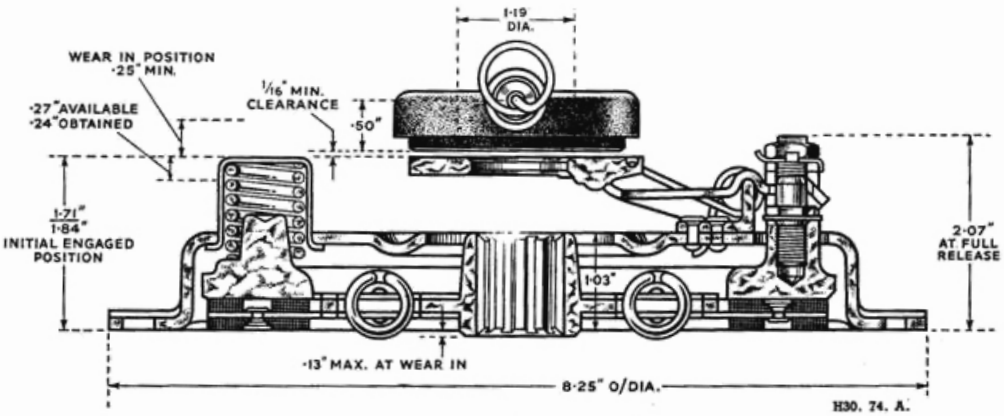

Fig. E.2.
A dimensioned sectional view of the clutch.

setscrews on the outside. The outer spherical bush is pinned to the shaft and supported in two dished flanges which are secured to a body member by two bolts and nuts.

(1) Detach the pull-off spring and anti-rattle spring, if fitted, and disconnect the clutch operating rod by removing the domed nut and locknut.

(2) Remove the cotter which secures the pedal lever to the shaft by slackening the nut a few turns and knocking the cotter loose before the nut is screwed off. On later models the pedal is secured to the shaft by a locating screw and locknut.

(3) Release the setscrews in the support flanges of the clutch pedal shaft and knock out the peg in the outer spherical bush.

(4) On cars with right-hand drive, withdraw the pedal shaft in the direction of the gearbox, after drawing off the lever with a suitable extractor. Alternatively, drift the shaft out of the lever.

(5) On cars with left-hand drive, the pedal shaft is longer and the pedal lever is secured to it between the two support flanges. Consequently, when the shaft is being guided out, drive a wedge into the slot in the pedal lever to allow the shaft to be withdrawn.

(6) When reassembling the clutch pedal linkage on a left-hand drive car, do not forget to fit the pedal lever before finally positioning the shaft. The peg in the outer spherical bush is fitted on the outside for left-hand drive and on the inside for right-hand drive cars.

(7) If the outer end of the pedal shaft, on left-hand drive cars, becomes burred as a result of the refitting operation, smooth it with emery paper otherwise difficulty will be experienced in fitting its outer spherical bush.

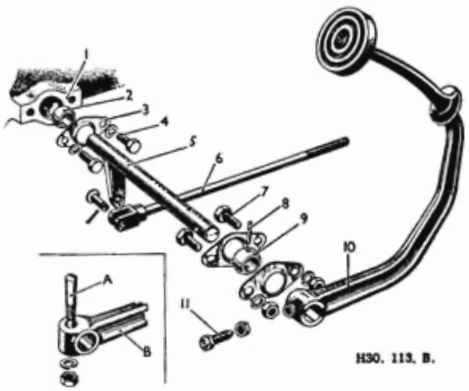

Fig. E.5. Clutch pedal assembly exploded.

1. *Shaft supporting boss.*
2. *Spherical bush.*
3. *Support flange.*
4. *Setscrews.*
5. *Clutch pedal shaft.*
6. *Clutch operating rod.*
7. *Setscrews, flange to body.*
8. *Peg.*
9. *Spherical bush.*
10. *Clutch pedal lever.*
11. *Locating screw.*

Note: *Inset shows part of previous type of assembly.*

A. *Cotter.* B. *Clutch pedal lever.*

Section E.3

CLUTCH ASSEMBLY

To remove

(1) Remove the gearbox as described in Section F.

(2) Slacken the clutch cover screws a turn at a time by diagonal selection until the spring pressure is relieved, when the screws can be taken out and the clutch and driven plate removed.

To dismantle

When dismantling the clutch cover assembly the following parts should be suitably marked so that they can be reassembled in exactly the same relative positions to each other to preserve the balance and adjustment—the cover, the lugs on the pressure plate, and the release levers.

The clutch Tool No. 18G99A provides an efficient and speedy means of dismantling, reassembling and adjusting the clutch with a high degree of accuracy. The tool is universal, and a chart detailing the sizes of spacing

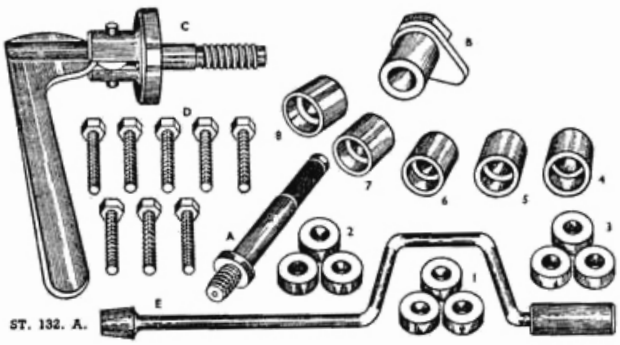

Fig. E.4.
Parts of clutch assembly tool.

A. *Centre pillar.*
B. *Height finger.*
C. *Actuating mechanism.*
D. *Setpins.*
E. *Speedbrace.*
1. 2. 3. } *Spacing washers.*
4. 5. 6. 7. 8. } *Distance pieces.*

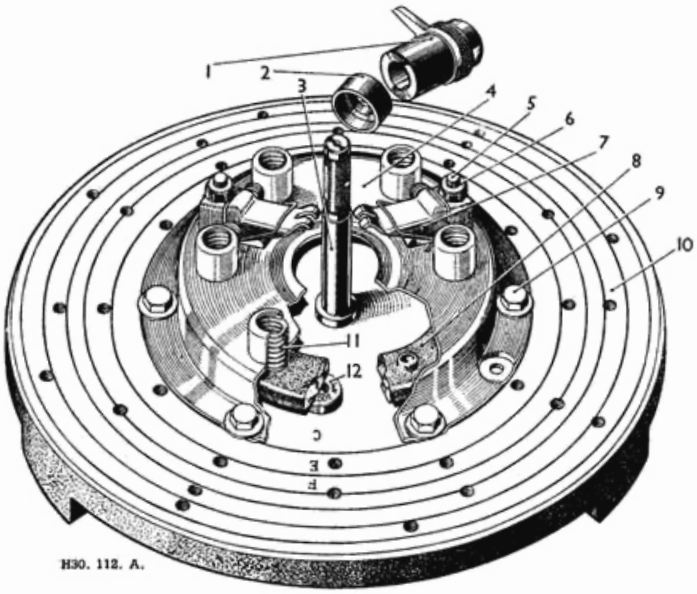

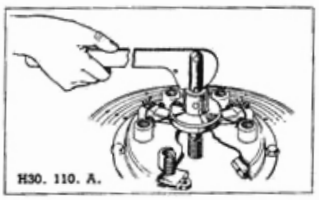

Fig. E.6.
Clutch assembly tool 18G99A.

1. *Height finger.*
2. *Distance piece.*
3. *Centre pillar.*
4. *Clutch cover.*
5. *Shoulder stud.*
6. *Adjusting nut.*
7. *Release lever.*
8. *Pressure plate.*
9. *Setpins.*
10. *Base plate.*
11. *Thrust spring.*
12. *Spacing washer.*

Inset shows the clutch actuating mechanism in use.

washers and distance pieces for particular types of clutch is provided on the inside of the metal container lid. Proceed as follows:

(1) Detach the retaining springs from the release lever plate and remove the springs and plate.

(2) Rest the tool base plate on a flat surface, ensure that it is clean, and place upon it spacing washers as directed by the chart. For this $6\frac{1}{4}$ in. (15·88 cm.) clutch select three washers and place them in position 'A' on the base plate.

(3) Position the clutch on the three spacing washers so that the holes in the clutch cover align with the tapped holes in the base plate.

(4) Insert the tool setscrews, tightening them a little at a time in a diagonal pattern, until the cover is firmly and evenly secured to the base plate. This is most important if the best results are to be achieved.

(5) Bend back the tab washers and remove the three shoulder stud adjusting nuts, bearing plates and release levers.

(6) Unscrew the setscrews, securing the clutch cover to the base plate, in a diagonal pattern, releasing the pressure on the clutch springs gradually and evenly. Lift off the cover and remove the thrust springs and cups.

(7) Clean the clutch parts carefully. If the linings are to be used again they should not be allowed to come into contact with cleaning fluids.

(8) Examine the friction linings for wear or loose rivets and check the driven plate for uneven or worn splines, distortion or signs of fatigue cracks. Generally, it is not desirable to fit new friction linings on the orginal driven plate because refaced driven plates are often distorted or otherwise impaired and produce unsatisfactory clutch action. If renewing worn linings, the rivets should be drilled out, not punched out.

(9) After refacing, mount the driven plate on a mandrel between centres and check for 'run-out' by means of a dial gauge, set as near to the edge as possible. Where the 'run-out' exceeds ·015 in. (·38 mm.), true the plate by prising it in the requisite direction after finding the high spots.

(10) Examine the machined face of the pressure plate. If this is badly grooved and rough, the surface may be reground to remove the grooves.

(11) Examine the machined surface of the release lever plate. If this is badly grooved, renew the plate. A new plate will also be necessary if the surfaces on the reverse side of the plate, which are in contact with the tips of the release levers, are worn down.

(12) Examine the tips of the release levers which bear on the back of the release lever plate. A small amount of worn flat surface is permissible, but if this is excessive the lever should be renewed. Carefully examine the 'U' shaped depressions in the release levers which rest on the fulcrums. If the metal here has worn at all thin, the lever must be renewed as there is a danger of it breaking under load.

(13) Examine the release bearing for cracks or bad pitting, also measure the amount of bearing standing proud of the metal cup. If the bearing is cracked or badly pitted, or there is $\frac{1}{16}$ in. (1·6 mm.) or less of graphite standing proud of the cup, the cup and bearing must be renewed.

(14) Examine the pressure springs for weakness or distortion and renew, if necessary, in sets only.

To Reassemble

Before reassembly note the positions of the marked parts and make sure to replace them in their original locations to preserve balance, unless the parts have been renewed. Using Tool No. 18G99A, proceed as follows:

(1) Position the pressure plate on the three spacing washers on the base plate as described under **'To dismantle.'**

(2) Place the thrust springs and cups on the pressure plate bosses.

(3) Slightly smear the 'U' shaped depressions in the release levers with grease and mount the levers on the fulcrums with their inner ends under the retaining springs.

(4) Slightly smear the three lugs on the pressure plate with grease and lower the clutch cover so that the thrust spring cups pass through their respective holes. In addition the pressure plate lugs must be directly under the slots in the cover through which they will pass when the thrust springs are compressed.

(5) Insert the tool setscrews through the cover holes and screw them into the base plate in a diagonal pattern, a little at a time, to prevent distortion. Guide the pressure plate lugs through the slots in the clutch cover, so that their shoulder studs pass through the slots in the outer ends of the release levers, and ensure that the thrust springs are not displaced during this gradual tightening down.

(6) Place the bearing plates over the release levers followed by the tab washers and screw the adjusting nuts down.

The clutch must now be adjusted still using the clutch assembly tool. With the clutch bolted to the tool base plate as on completion of assembly, proceed as follows:

(7) Screw the actuator into the base plate and pump the handle a dozen times to settle the clutch mechanism. Remove the actuator.

(8) Screw the tool centre pillar into the base plate and select a distance-piece, Code No. 4, as shown on the chart. Place the distance-piece over the centre pillar with its recessed face downwards.

(9) Place the gauge height finger over the centre pillar.

(10) Adjust the height of each release lever by tightening or loosening the adjusting nut until the height finger, when rotated, just contacts the highest point on the tip of each release lever. Press downwards on the height finger to ensure that it bears squarely on the adaptor while rotating.

(11) Remove the height finger and pillar, and screw in the actuator to the base plate. Operate the clutch several times to enable the components to settle. Remove the actuator and replace the centre pillar, distance-piece and height finger. Readjust the release levers if necessary. Repeat the procedure to ensure that the release levers are finally seated, and gauge once more.

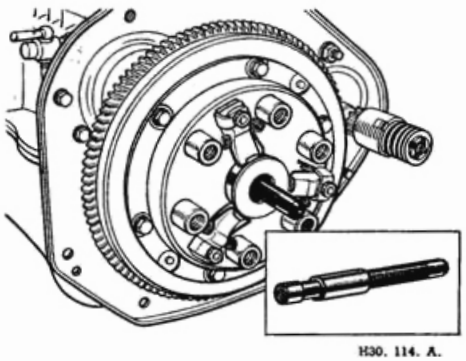

Fig. E.7.
Using Service Tool 18G139 to centralise the driven plate. Inset shows 18G139.

(12) Remove the centre pillar, distance-piece and height finger and secure the adjusting nuts with their tab washers.

(13) Fit the release lever plate on the tips of the release levers and secure it by the three retaining springs.

(14) Release the tool setscrews in diagonal sequence, a little at a time, relieving pressure slowly and evenly. Remove the clutch assembly from the base plate.

To replace

Before installing the clutch assembly the engine flywheel should be checked for misalignment (see Section A). To install the clutch proceed as follows:

(1) Hold the clutch cover assembly and driven plate on the flywheel and screw in the cover securing bolts finger-tight. Note that the splines in the hub of the driven plate are chamfered at one end to permit ready entry of the clutch shaft splines. The longer side of the driven plate hub, with the chamfered splines, should be toward the rear.

(2) Insert a pilot shaft Service Tool 18G139, through the clutch cover and driven plate hub so that the pilot enters the spigot bearing in the rear end of the engine crankshaft. This will centralise the driven plate.

(3) Tighten the clutch cover securing bolts a turn at a time in diagonal sequence to avoid distorting the cover.

(4) Remove the pilot shaft.

(5) Install the gearbox as detailed in Section F.

(6) Adjust the clutch pedal free travel (see Section E.1).

Section E.4 FAULT DIAGNOSIS

Symptom	No.	Possible fault
(a) Drag or spin	1	Oil or grease on driven plate linings
	2	Bent engine backplate
	3	Misalignment between engine and clutch shaft
	4	Incorrect pedal adjustment
	5	Driven plate hub binding on clutch shaft splines
	6	Clutch shaft binding on its spigot bush
	7	Distorted driven plate
	8	Warped or damaged pressure plate or clutch cover
	9	Damaged driven plate linings
	10	Dirt or foreign matter in clutch
(b) Fierceness or snatch		In (a), check 1, 2 and 3
	1	Binding clutch pedal linkage
	2	Worn driven plate linings
(c) Slip		In (a), check 1, 2, 3 and 4
		In (b), check 1
	1	Weak thrust springs
(d) Judder		In (a) check 1, 2 and 3
	1	Pressure plate out of parallel with flywheel face
	2	Friction facing contact area not evenly distributed
	3	Bent clutch shaft
	4	Buckled driven plate
	5	Faulty engine or gearbox rubber mountings
	6	Worn shackles
	7	Weak rear springs
	8	Propeller shaft bolts loose
	9	Loose rear spring clips
(e) Rattle		In (d), check 3
	1	Damaged driven plate, i.e. broken springs, etc.
	2	Worn parts of release mechanism
	3	Excessive transmission backlash
	4	Wear in transmission bearings
	5	Release bearing loose on fork
(f) Tick or knock	1	Worn clutch shaft bush
	2	Badly worn driven plate hub splines
	3	Release lever plate out of line
	4	Faulty bendix drive on starter
	5	Loose flywheel
(g) Driven plate fracture		In (a) check 2 and 3
	1	Drag and metal fatigue due to hanging gearbox in driven plate

SERVICE TOOLS

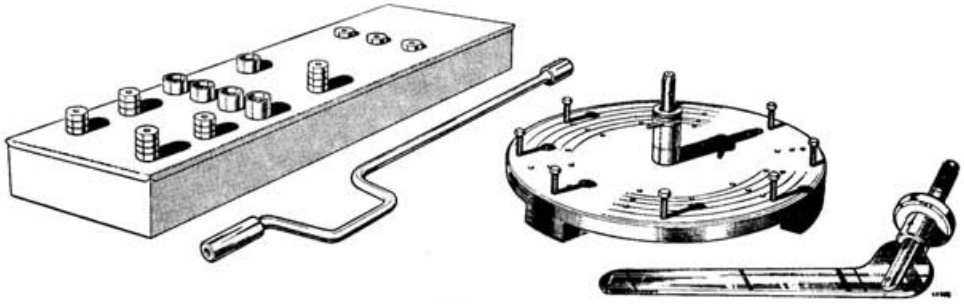

18G99A

18G99A. Clutch Assembly Gauging Fixture

With the use of this tool a clutch assembly can be quickly dismantled, rebuilt, and finally adjusted with a high degree of accuracy. This is a universal tool for clutch assembly from 6¼ in. to 11 in. diameter.

18G139. Clutch Centralizer

The driven plate in the clutch may readily be centralized with the aid of this tool.

9267

18G139

SECTION F

THE GEARBOX

(A30 and A35)

	Section
General description	
Dismantling	
A30	F.3
A35	F.10
Examination	F.7
First motion shaft	F.6
Laygear—dismantling	F.5
Lubrication	F.1
Mainshaft—dismantling	F.4
Modifications	F.11
Reassembly	F.8
Removal and replacement	
A30	F.2
A35	F.9
Service tools	End of Section

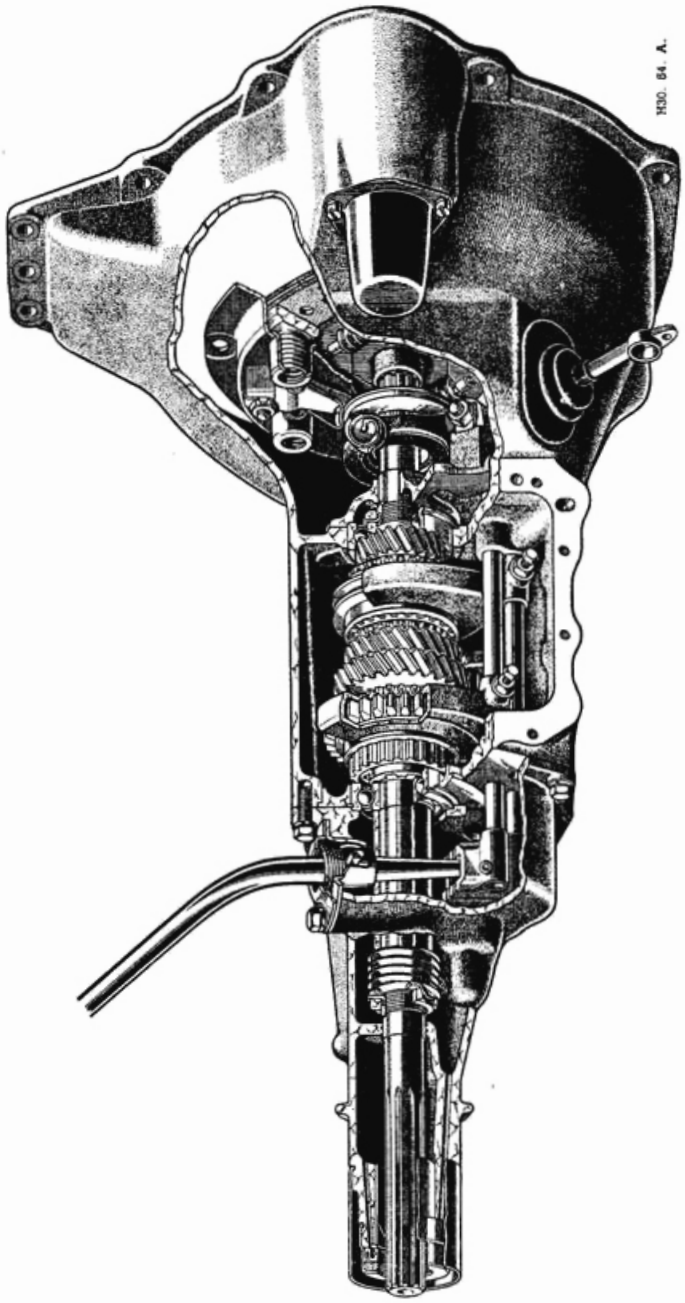

Fig. F.1.
Cutaway view of the A30 gearbox.

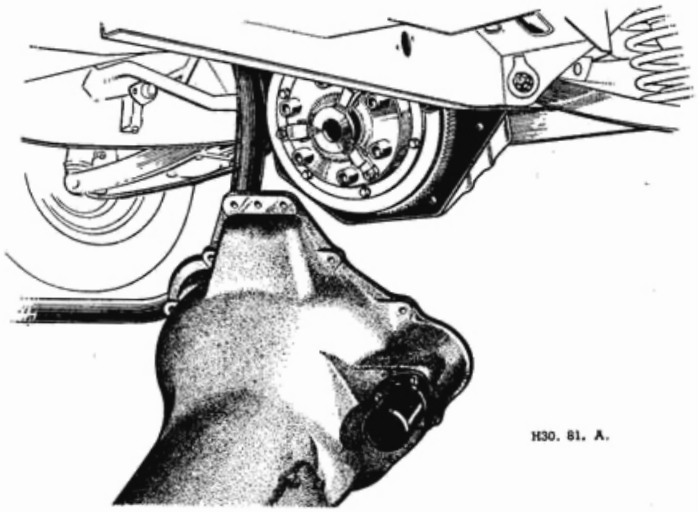

Fig. F.2.
Withdrawal of the A30 gearbox after lowering the rear of the engine on slings.

GENERAL DESCRIPTION

The gearbox has four forward speeds and one reverse, and synchromesh is incorporated on second, third and top gears.

Top gear is a direct drive; third and second are in constant mesh; first and reverse are obtained by sliding spur pinions.

Section F.1

LUBRICATION

Every 1,000 miles (1600 km.)

Check the oil level and top-up if necessary with oil to Ref. A (page P.2). To gain access remove the rubber plug on the left side of the gearbox covering. The filler plug is then accessible. Remove the plug and fill up to the bottom of the threads. This gives the correct level.

Every 6,000 miles (9600 km.)

Drain after a run when the oil is warm, and refill with new oil to Ref. A (page P.2). For the oil capacity see **'GENERAL DATA'.**

Section F.2

REMOVAL AND REPLACEMENT

(A30)

(1) Disconnect the battery.
(2) Withdraw the distributor cap and leads complete.
(3) Detach the starter cable at the starter.
(4) Part the wire from the oil pressure switch.
(5) Drain the radiator and disconnect the radiator top hose at the water outlet elbow. If a heater is fitted, drain the cylinder block and detach the heater drain tap and heater hoses.
(6) Release the choke pull-out wire at the carburetter, uncouple the throttle connection and accelerator control rod and part the exhaust down pipe from the manifold.
(7) From inside the car, lift off the rubber grommet through which the change speed lever passes. Take out the three setscrews and spring washers from the change speed lever seat and remove the lever along with its seat.
(8) If the car is not over a pit, jack up the front of the car with the rear wheels on blocks to avoid damage to the exhaust pipe.
(9) Uncouple the propeller shaft from the rear axle by removing the bolts, nuts and lock washers.
(10) Release the clutch pedal pull-off spring and take the nut, locknut and washers off the front end of the clutch operating rod.
(11) Free the exhaust pipe and tie it aside after removing the nut and bolt securing the exhaust pipe steady bracket to the gearbox flange.
(12) Disconnect the speedometer drive cable at the gearbox.
(13) Release the two setscrews in the inner and the two nuts and bolts in the outer clutch pedal shaft support flanges, then slide the shaft away from the gearbox to free it. In the case of right-hand drive cars, the pin in the outer spherical bush must be removed before the shaft can be freed.

GEARBOX COMPONENTS

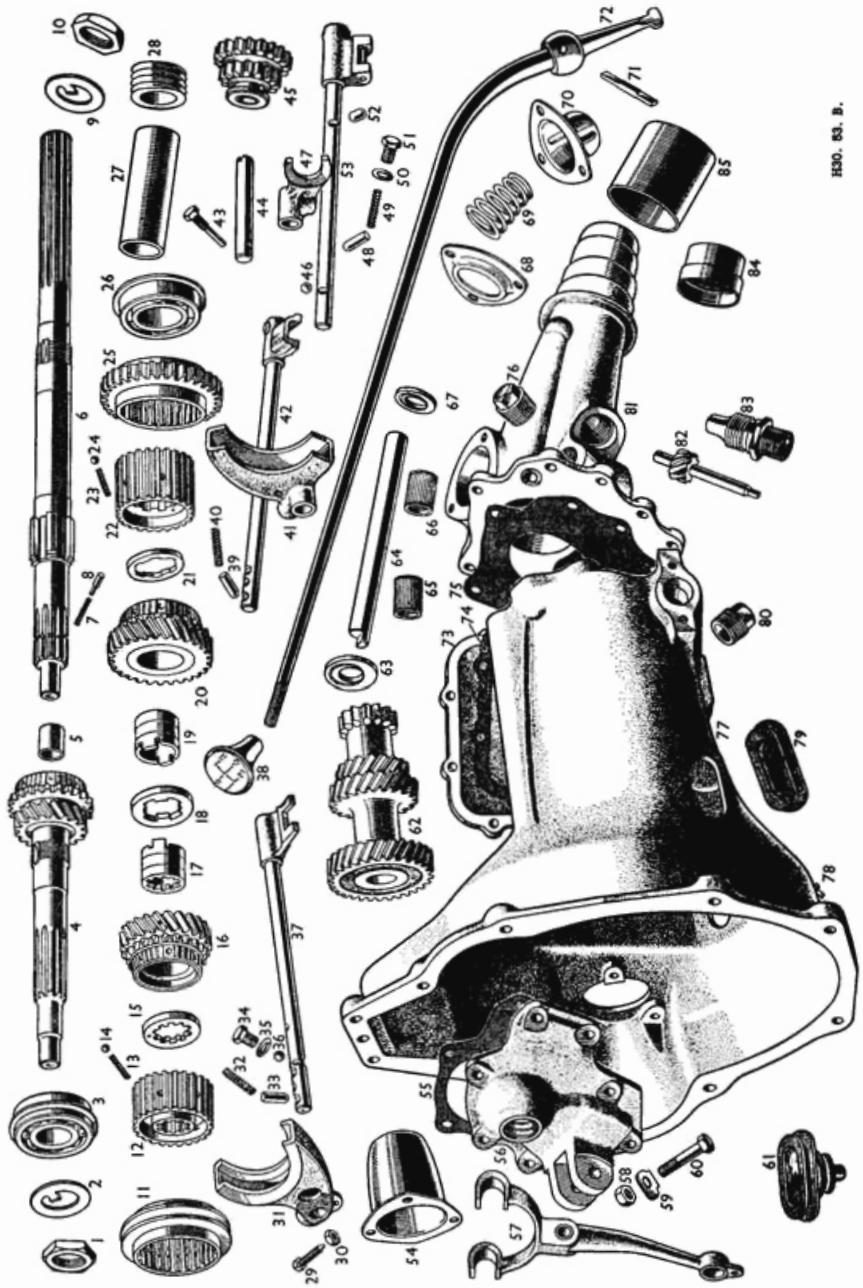

Fig. F.3.
The A30 gearbox exploded.

KEY TO GEARBOX COMPONENTS

1. *1st motion shaft nut.*
2. *Lockwasher.*
3. *1st motion shaft bearing.*
4. *1st motion shaft.*
5. *Bush for 3rd motion shaft.*
6. *3rd motion shaft.*
7. *Locking peg spring.*
8. *Locking peg.*
9. *3rd motion shaft lockwasher.*
10. *3rd motion shaft nut.*
11. *Third- and fourth-speed coupling sleeve.*
12. *Third- and fourth-speed synchronizer.*
13. *Synchronizer coupling sleeve spring.*
14. *Synchronizer coupling sleeve ball.*
15. *Splined thrust washer, front.*
16. *Third-speed mainshaft gear and cone.*
17. *Third-speed mainshaft gear bush.*
18. *Interlocking ring for bushes.*
19. *Second-speed mainshaft gear bush.*
20. *Second-speed mainshaft gear and cone.*
21. *Splined thrust washer, rear.*
22. *Second-speed synchronizer.*
23. *Second-speed synchronizer spring.*
24. *Second-speed synchronizer ball.*
25. *First-speed wheel.*
26. *3rd motion shaft bearing.*
27. *Distance piece.*
28. *Speedometer wheel.*
29. *Fork locating screw.*
30. *Locknut.*
31. *Third- and fourth-speed fork.*
32. *Plunger spring.*
33. *Plunger.*
34. *Plug.*
35. *Washer.*
36. *Ball.*
37. *Third- and fourth-speed fork rod.*
38. *Change speed lever knob.*
39. *Plunger for rod.*
40. *Spring.*
41. *First- and second-speed fork.*
42. *First- and second-speed fork rod.*
43. *Reverse shaft locking screw.*
44. *Reverse shaft.*
45. *Reverse wheel.*
46. *Ball.*
47. *Reverse fork.*
48. *Interlock plunger.*
49. *Spring.*
50. *Washer.*
51. *Plug for spring.*
52. *Interlock plunger.*
53. *Reverse fork rod.*
54. *Starter pinion cover.*
55. *Front cover joint washer.*
56. *Front cover.*
57. *Clutch withdrawal lever.*
58. *Nut.*
59. *Lockwasher.*
60. *Bolt.*
61. *Withdrawal lever dust cover.*
62. *Laygear.*
63. *Thrust washer, front.*
64. *Layshaft.*
65. *Needle roller bearing.*
66. *Needle roller bearing.*
67. *Thrust washer, rear.*
68. *Change speed lever seat, top.*
69. *Reverse spring.*
70. *Change speed lever seat, bottom.*
71. *Change speed lever, peg.*
72. *Change speed lever.*
73. *Side cover.*
74. *Joint washer for side cover.*
75. *Joint washer for rear cover.*
76. *Filler plug.*
77. *Gearbox case.*
78. *Split pin for clutch drain hole.*
79. *Dust cover.*
80. *Drain plug.*
81. *Rear cover.*
82. *Speedometer pinion.*
83. *Speedometer pinion sleeve.*
84. *Oil seal assembly.*
85. *Dust cover.*

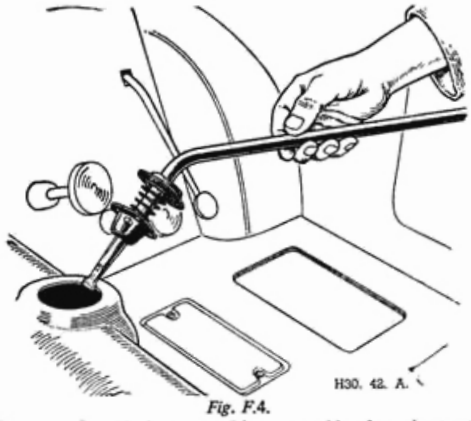

Fig. F.4.
Removing the A30 change speed lever assembly after releasing its securing setscrews.

(14) Take the weight of the rear of the engine by means of a sling through the engine rear sling bracket and then remove the two setscrews from the clamping plate under the gearbox rear cover.

(15) Lower the sling so that the engine pivots on its front mountings and clearance is obtained for the bellhousing flange to clear the body pressing when the gearbox is withdrawn.

(16) Support the gearbox and, after placing a clean tray beneath it, drain the oil and draw out the propeller shaft.

(17) Remove the bolts, nuts and washers which secure the gearbox to the engine rear mounting plate and detach the starter motor which will be released by the removal of the two longer bolts, nuts and washers.

(18) Withdraw the gearbox to the rear until the first motion shaft is clear of the clutch. Under no circumstances must the gearbox be allowed to hang in the clutch by its first motion shaft.

(19) Replacement is a reversal of the removal procedure, but if the clutch driven plate has been disturbed it must be centralized by using a dummy first motion shaft or Service Tool 18G139. Reconnect all items of equipment.

Section F.3

DISMANTLING

(A30)

(1) Unscrew the speedometer pinion sleeve from the left side of the gearbox rear cover, remove the joint washer and withdraw the speedometer pinion.

(2) Unscrew the nine set screws and spring washers securing the rear cover to the gearbox and then remove the cover. Collect the shim in the bearing recess and remove the joint washer. The nine set screws in the rear cover are longer than those in the side cover.

(3) Remove the clutch release bearing by levering out the two retaining springs.

(4) To remove the clutch withdrawal lever bend back the locking washer and remove the nut and washer. The bolt may then be unscrewed. Do not attempt to knock the bolt out, as it is threaded into the support bracket. To unscrew the bolt remove the rubber dust cover from the hole, opposite that through which the clutch withdrawal lever passes, and pass a suitable tool through the hole. On left-hand drive cars the clutch withdrawal lever passes through the hole on the left-hand side of the bellhousing.

(5) Remove the seven nuts and washers from the front cover, situated within the clutch bellhousing. The front cover may then be withdrawn by gripping the clutch withdrawal lever brackets with the finger and thumb and pulling. Remove the paper joint and packing shim.

(6) Unscrew the eight set screws or nuts in the side cover. Remove the side cover and joint washer. Remove the two springs from the front edge of the side cover joining face. Turn the gearbox on its side so that the two plungers fall out of the holes from which the springs were removed.

(7) Remove the two plugs situated near the clutch bellhousing on the side cover side of the gearbox casing (Fig. F.13). They each have a fibre washer and the lower of the two plugs covers the reverse plunger and spring, which may be removed by tilting the gearbox on its side. The other plug, which has a long shank, blocks the hole through which the interlock ball between the 1st/2nd and 3rd/4th selector rods is inserted.

(8) Select neutral by aligning the slots in the rear ends of the selector rods. Working on the gearbox, with the side cover facing upwards, unlock and remove the reverse fork locating screw, lock nut and shakeproof washer through the drain plug hole. Similarly remove the locating screw, lock nut and shakeproof washer from the 1st/2nd and 3rd/4th speed forks.

(9) Tap the 3rd/4th speed selector rod from the front end and draw it out through the back of the

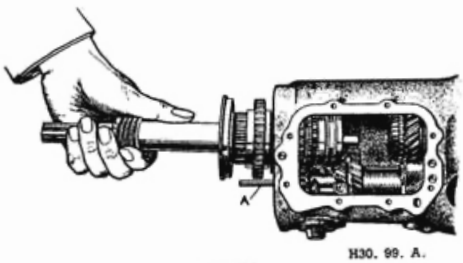

Fig. F.5.
Drawing out the third motion shaft assembly after lowering the laygear on to the dummy layshaft 'A'.

gearbox. Similarly remove the 1st/2nd speed selector rod (nearest side cover) and then the reverse selector rod.

(10) As the selector rods are being drawn out, care must be taken to remove the two interlock balls from the front end of the gearbox casing. Also the double-ended interlock plunger should be removed from the back end of the gearbox casing. The three selector forks may now be lifted out of the gearbox.

(11) Tap the layshaft out of the front of the gearbox with a bronze drift. On removing the drift the laygear cluster and thrust washers will drop into the bottom of the gearbox.

(12) Draw the main shaft assembly rearwards out of the gearbox case.

(13) Insert a long soft metal drift through the main shaft opening in the rear of the casing and drive the first motion shaft forwards out of the gearbox. The laygear cluster and thrust washers may now be removed.

(14) Remove the reverse shaft locking screw. Place a screwdriver on the slotted end of the reverse shaft and push it into the gearbox with a turning motion. The reverse shaft and gear may now be removed.

Section F.4

MAINSHAFT

(1) Slide off the third- and fourth-speed synchronizer assembly.

(2) Separate the third- and fourth-speed synchronizer from its coupling sleeve by finger pressure. The coupling sleeve is located on the synchronizer by three spring-loaded balls spaced at 120° and a cloth should be wrapped round the assembly to prevent the balls from flying out and getting lost when they are uncovered.

(3) Depress the small spring-loaded plunger which locks the splined thrust washer at the front end of the mainshaft and turn the washer with a peg spanner so that one of its splines covers the plunger.

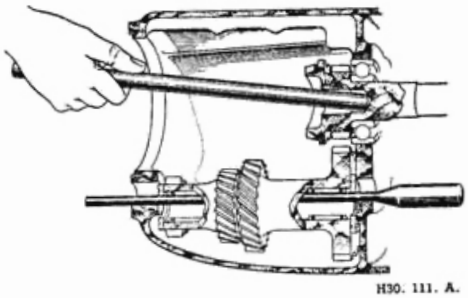

Fig. F.6.
Drifting the first motion shaft out of the gearbox casing.

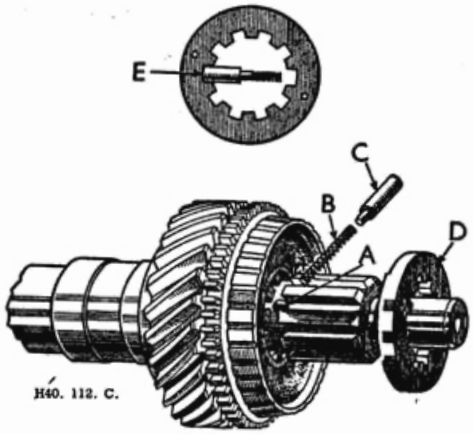

Fig. F.7.
Securing the third motion shaft gears.
A. Hole in shaft for locking plunger. B. Spring. C. Locking plunger. D. Thrust washer. E. Thrust washer with plunger engaged.

(4) Slide the splined washer and third-speed gear off the end of the shaft, remove the plunger and spring; slide the bush interlock ring and second-speed gear off the end of the shaft. If the second-speed gear bush is worn, chisel it out and sweat a new bush in.

(5) Draw the splined rear thrust washer and the first-speed wheel and second-speed synchronizer assembly off the end of the shaft.

(6) Separate the second-speed synchronizer from the first-speed wheel by finger pressure. The first-speed wheel is located on the synchronizer by three spring-loaded balls closely spaced in one arc and a cloth should be wrapped round the assembly to prevent the balls from flying out and getting lost when they are uncovered.

(7) At the other end of the shaft knock back the locking washer and unscrew the securing nut. The speedometer wheel and distance piece may now be removed.

(8) Draw the ball journal bearing off the end of the shaft with its housing and then drift the bearing out of its housing.

Section F.5

LAYGEAR

Twenty three needle roller bearings are fitted in each end of the laygear. The needles are held in position by their races (one at each end) and spring rings.

(1) Remove the spring rings from their locating grooves (one at each end of the laygear) and take

out the outer race, needle rollers and the inner race.

(2) Remove the inner spring ring from its groove in the large end of the laygear.

(3) Remove the distance piece and spring ring from the small end of the laygear.

Section F.6

FIRST MOTION SHAFT

(1) Place the 1st motion shaft in a dummy third- and fourth-speed coupling sleeve, knock back the lock washer and remove the nut.

(2) Remove the bearing with a suitable bearing extractor.

Section F.7

EXAMINATION

Bearings

The first and third motion shaft bearings become worn after a considerable length of service and should be renewed if there are signs of looseness between the inner and outer races.

Mainshaft spigot bush

The bush is fitted to give a clearance of ·002 to ·003 in. (·0508 to ·0762 mm.) with the mainshaft. Any appre-

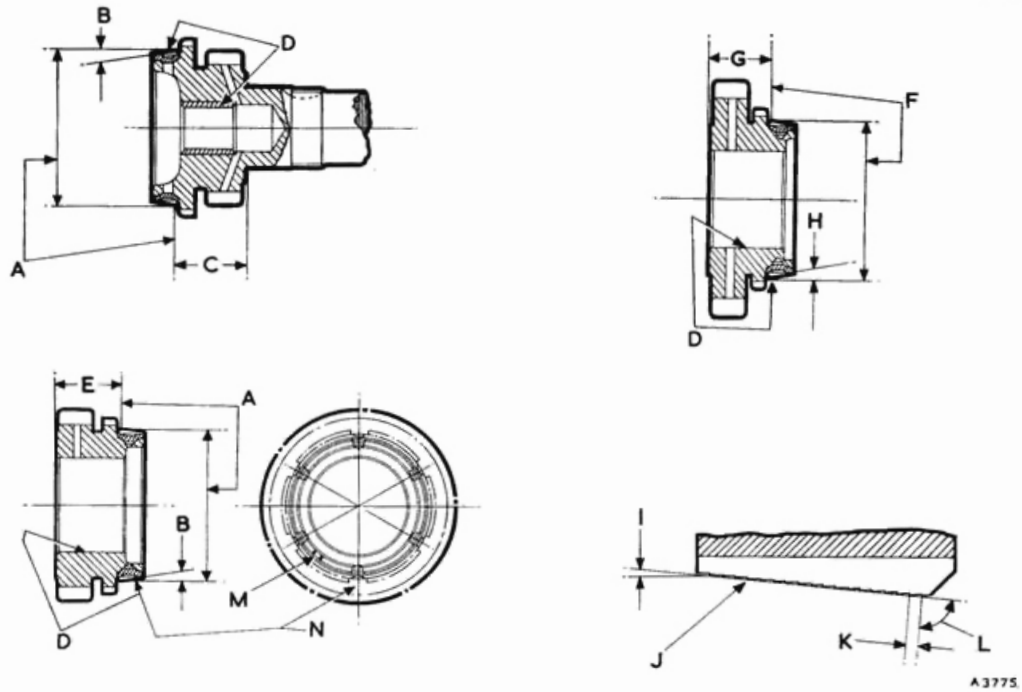

Fig. F.8.

Top left: 1st motion shaft. Bottom left: 3rd speed gear. Top right: 2nd speed gear. Bottom right: Cone.

KEY

A. *Taper* 1·997 *in.* (50·72 *mm.*) *dia. at this line to gauge.*

B. *Taper* 10° 10′ *to be true and concentric with bore to* ·001 *in.* (·025 *mm.*).

C. ·909 *to* ·912 *in.* (23·09 *to* 23·16 *mm.*).

D. *Taper to be true and concentric with bore to* ·001 *in.* (·025 *mm.*).

E. ·862 *to* ·865 *in.* (21·8 *to* 21·9 *mm.*).

F. *Taper* 1·966 *in.* (49·9 *mm.*) *dia. at this line to gauge.*

G. ·810 *to* ·813 *in.* (20·57 *to* 20·65 *mm.*).

H. 8° 20′.

I. 6°.

J. *Coarse turning may be either right- or left-hand.*

K. ·015 *in.* (·38 *mm.*).

L. 90°.

M. *One notch to be ground in position shown relative to grooves with indentations.*

N. *Synchronizing cone to be heated in oil, shrunk on to gear and punched into holes as shown with centre lines of holes and spaces in cone in line.*

ciable wear above this figure, necessitates examination of the bush and shaft and renewal where necessary.

Main gear bushes

The second- and third-speed main shaft gear bushes have an extremely low tolerance of ·00025 to ·0015 in. (·0064 to ·0381 mm.) with the shaft. They should be replaced if any appreciable wear occurs between these bushes and the 3rd motion shaft.

Gear synchronizing cones

These cones are shrunk on to the second-, third- and fourth-speed gears and are normally supplied as a complete unit for spares purposes. Where facilities exist for shrinking on and finally machining the cones, they can be supplied separately. If the gear is to operate satisfactorily, however, care must be taken in fitting them.

The internal machining of the cone is calculated to allow for a shrinkage fit on to the gear and the cone must be heat expanded before it can be fitted.

When heated in oil to approximately 250° F. (121·1° C.) expansion will allow the cone to be pressed home on to the gear without damage.

NOTE.—The six large recesses on the perimeter of the cone must line up with the holes in the boss of the gear.

After shrinking on, the unit should be immediately quenched in water to prevent the gear itself being softened. Punch mark the cone in each of the six recesses. This ensures resistance to displacement when changing gear.

When the cone is in position the final machining can be done in accordance with the dimensions given in Fig. F.8. The taper of the cone must be true and concentric with the bore to ·001 in. (·0254 mm.).

Laygear thrust washers

These washers are designed to permit a laygear end float of ·001 to ·003 in. (·0254 to ·0762 mm.). If the end float exceeds this amount, the thrust washers must be renewed. The smaller thrust washer, at the rear, is made in varying thicknesses to allow correct end float to be obtained.

Section F.8

REASSEMBLY

Synchromesh units

Before assembly the first-speed wheel and the third/fourth-speed coupling sleeve are lapped with their respective synchronizers and only mated pairs should, therefore, be fitted. The hub splines of both synchronizers are also lapped with the mainshaft. Consequently, if an odd synchromesh assembly or mainshaft is fitted, it must be lapped with the part(s) concerned.

A special ring (Service Tool 18G144) is available to facilitate reassembly of the three balls and springs into each synchronizer. The ring (Fig. F.9) is a sliding fit over the synchronizers. Slide the ring over the synchronizer and turn it until its hole coincides with one of the holes in the latter. Place a spring and ball in position and re-

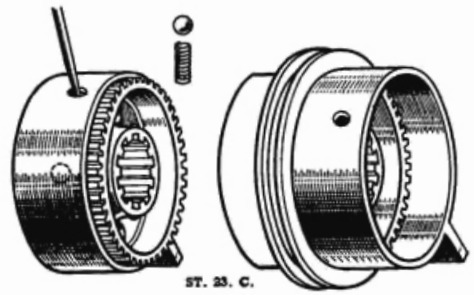

Fig. F.9.
Using Service Tool 18G144 to assemble the spring loaded balls to the synchronizer/coupling sleeve.

volve the ring to coincide with the other two holes in turn. Push the ring off with the coupling sleeve until the balls locate in the coupling sleeve groove.

When assembling the first-speed wheel to the second-speed synchronizer, ensure that the side of the first-speed wheel on which the teeth are chamfered faces towards the second-speed mainshaft gear (Fig. F.3) when assembled on the mainshaft.

Mainshaft

(1) The third motion shaft ball journal bearing outer race is grooved to take a spring ring. This spring ring registers in a recess in the bearing housing.
Press the bearing into the end of the housing with the larger diameter, so that the spring ring end of the bearing is trailing.

(2) Press the bearing and its housing on from the rear end of the shaft (the end with the long splines) in such a way that the larger diameter of the bearing housing (when fitted) is towards the rear of the shaft. Now fit the distance piece, speedometer drive, lock washer and lock the nut in position.

(3) Fit the first-speed gear and second-speed synchronizer assembly onto the shaft with the protruding end of the synchronizer towards the bearing. Place the large internally splined steel thrust washer behind the second-speed synchronizer.

(4) Follow the steel thrust washer with the bush for the second-speed mainshaft gear (largest of the

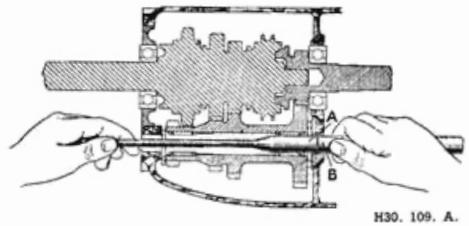

Fig. F.10.
A dummy layshaft Service Tool 18G471 being used to lift the laygear into position and to insert the layshaft.

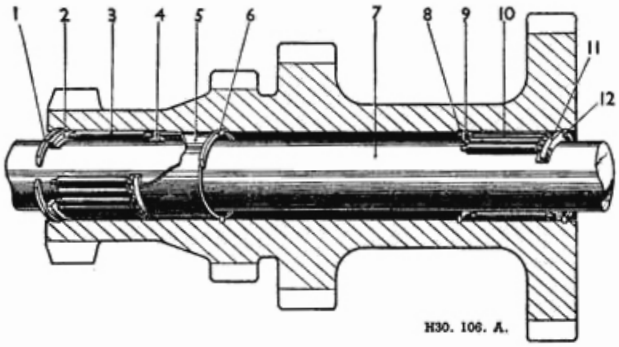

Fig. F.12.
Laygear sectioned to show needle roller bearing assembly.

1. *Spring ring (outer).*
2. *Outer race.*
3. *Needle rollers.*
4. *Inner race.*
5. *Distance piece.*
6. *Spring ring (inner).*

} *Small end.*

7. *Layshaft.*
8. *Spring ring (inner).*
9. *Inner race.*
10. *Needle rollers.*
11. *Outer race.*
12. *Spring ring (outer).*

} *Large end.*

remaining gears), so that its legs are away from the steel thrust washer. Slide the second-speed mainshaft gear over the bush with its cone towards the first-speed gear and second-speed synchronizer assembly. Locate the phosphor-bronze interlocking ring on the legs of the second-speed mainshaft gear bush and mate the legs of the third-speed mainshaft gear bush in the splines of the interlocking ring.

(5) Place the spring and plunger in their hole; depress the plunger and draw the third-speed mainshaft gear bush slightly forward to keep the plunger depressed, slide the third-speed mainshaft gear onto the bush with its cone away from the interlocking ring.

(6) Put the remaining steel thrust washer behind the third-speed mainshaft gear and push it as far as it will go.

(7) Slip a tube over the end of the shaft and lightly tap the thrust washer, turn the washer until the plunger is released and locks it.

(8) Slide the third/fourth-speed synchronizer/coupling sleeve assembly onto the shaft, with the boss on the synchronizer hub away from the thrust washer.

Laygear

(1) Locate the spring ring in the inner groove of the small end of the laygear. Drift the distance piece into the small end of the laygear making sure it is right home against the spring ring.

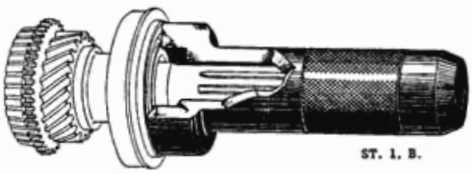

Fig. F.11.
Using Service Tool 18G140 to drift the bearing on to the first motion shaft.

(2) Put the laygear (small end upwards) over a guide shaft if available. Take the needle roller bearing which is supplied in a cage. Ease the retaining knicks in one end of the cage. Place the cage over the end of the guide rod, and press the needle rollers out of the cage into position (Service Tool 18G194).

(3) Take the upper roller race and spring ring out of the cage, place the race over the needle rollers and the spring ring in its groove.

(4) Similarly the needle rollers are assembled into the big end of the laygear.

First motion shaft

(1) Knock the self lubricating bush into the back of the first motion shaft with a drift.

(2) Drift the ball journal bearing onto the shaft with its spring ring away from the geared end.

(3) Position the geared end of the first motion shaft in a dummy third/fourth-speed coupling sleeve, put the washer over the bearing, tighten the nut and lock it in position.

Gearbox

(1) Reassemble the reverse gear onto its shaft in the gearbox. Align the hole in the shaft with the hole in the casing and lock the shaft with the locking screw and spring washer.

(2) Insert the thin end of a dummy layshaft (Service Tool 18G471) from the clutch housing and place the large thrust washer on it, taking care that it does not slip off. Take the laygear, large end first, through the hole in the rear of the gearbox casing and pass the dummy layshaft through it. As the shaft emerges through the small end of the laygear, slip on a suitable small thrust washer to give the laygear an end float of ·001 to ·003 in. (·0254 to ·0762 mm.). Thrust washers for the laygear small end are available in thicknesses of ·123 to ·124 in. (3·124 to 3·150 mm.), ·125 to ·126 in. (3·175 to 3·200 mm.), ·127 to ·128 in. (3·226 to 3·250 mm.) and ·130 to ·131 in. (3·302 to 3·327 mm.) to obtain the required end float. Let the laygear hang on the thin part of the dummy layshaft.

Fig. F.13.
Location of balls and plungers.

1. *Hole for interlock plunger between reverse and first- and second-speed fork rods.*
2. *Hole for ball between reverse and third- and fourth-speed fork rods.*
3. *Hole for first- and second-speed fork rod plunger.*
4. *Hole for third- and fourth-speed fork rod plunger.*
5. *Plug for first- and second-, and third- and fourth-speed ball hole.*
6. *Plug for reverse plunger hole.*

A, B and C are scrap views of sections AA, BB and CC respectively looking in the direction of the arrows.

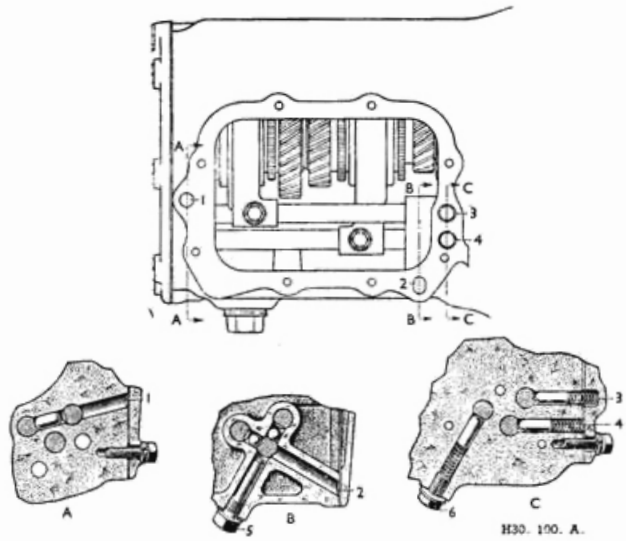

(3) Insert the third motion shaft into the back end of the gearbox and drift the bearing housing so that its flange is flush against the recess in the rear of the gearbox casing.

(4) Turn the gearbox casing to ensure that the lay-gear teeth are clear of the first motion shaft bearing housing. Now drift the first motion shaft into position from the front end (Service Tool 18G140) ensuring that the spring ring registers properly in the recess in the gearbox casing.

(5) By drawing the dummy layshaft rearwards slightly lift the laygears into mesh. Smear the layshaft with oil and follow the dummy.

When the layshaft is being pushed into position maintain contact between it and the dummy lay-shaft or one of the thrust washers will slip out of position. With the side cover end uppermost, the half-mooned end in the front of the layshaft should be in the U-position with its diameter horizontal.

(6) Place the reverse fork in position with its tapped hole towards the drain plug hole.

Fit the first- and second-speed fork over the first-speed wheel, and the third and fourth-speed fork over the third- and fourth-speed coupling sleeve.

(7) With the side cover facing upwards, push the reverse fork rod through the lowest hole in the rear of the gearbox casing, through the reverse fork, and through the clearance hole in the third- and fourth-speed fork. Align the hole in the rod with the tapped hole in the fork, screw in the locking screw and lock it up with the shakeproof washer and nut.

(8) Drop the double-ended plunger through the hole in the middle of the side cover rear face on the gearbox casing.

(9) Push the first- and second-speed fork rod through the uppermost selector rod hole in the rear of the gearbox casing, through its fork and into the front of the casing. As before, but through the side cover end of the casing, insert the locating screw and lock it in position.

(10) The third- and fourth-speed fork rod goes through the hole in the rear of the casing between the other two rods, through the fork and into the front of the gearbox casing.

Push it through until it just enters the hole in the front of the gearbox casing.

Drop a ball down the hole in the edge of the side cover on the drain plug side of the casing and see that it goes between the reverse and third and fourth fork rods. This can be done by looking from the clutch housing end. Place a rod down the same hole and push hard against the ball to centralize the slot in the selector rod. If this is not done the third and fourth fork rod will be damaged in trying to force it into position.

Turn the gearbox so that the drain plug is towards the top and drop a ball in the upper hole (in line with the drain plug hole) and see that it goes between the first and second and third and fourth fork rods. As before, guide a rod up the hole and push hard against the ball to centralize the slot in the rod. Push the third and fourth fork rod home and lock it in position.

Do not knock the selector rods in with a hammer. If any obstruction is felt when pushing the rods through the front of the gearbox casing,

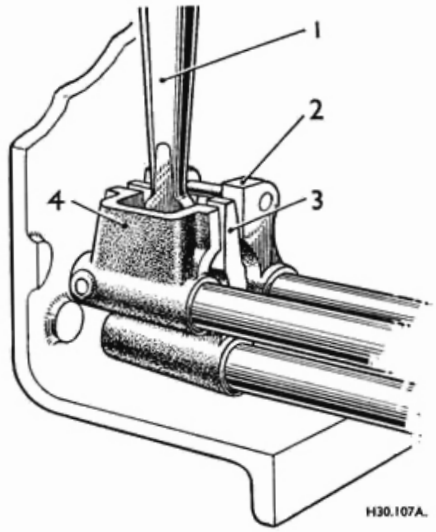

Fig. F.14.
Position of selector rods.

1. *Change speed lever.*
2. *Reverse rod.*
3. *Third- and fourth-speed rod.*
4. *First- and second-speed rod.*

it is an indication that the balls are not seating correctly in their slots. Centralize the slots in the rod as previously described, so that the balls do not stand proud of their holes. It will be found that they can now be pushed home quite easily, by hand.

(11) Put the reverse plunger (rounded end first) into the lower hole on the drain plug side, followed by a spring, and fill the hole with its plug and fibre washer. The upper hole is blocked by a long shanked aluminium plug and fibre washer. The two remaining plungers go into the two holes in the front edge of the side cover face of the gearbox casing. Drop one into each hole, rounded end first and follow each plunger with a spring.

(12) Locate the side cover and paper joint washer on the studs, screw on the eight nuts and spring washers and tighten up evenly by diagonal selection. Setscrews were used to secure the side cover to the gearbox casing on earlier chassis.

(13) Position the front cover joint washer; put the packing shim in the front cover bearing recess, holding it in position with grease; locate the front cover on the studs and secure it with the seven nuts and spring washers.

Although a ·006 in. (·1524 mm.) shim is usually found to be sufficient, use the following method to shim the front and rear covers. Measure the depth of the cover recess and the amount by which the bearing outer race protrudes from the casing, tighten the cover with only the paper joint washer in position to allow it to be compressed. Take off the cover, remove the paper joint washer and measure its thickness. Add the thickness of the joint washer to the depth of the cover recess and subtract the amount by which the bearing protrudes from the casing. The result gives the thickness of shims to be used. Use the least possible number of shims to achieve the correct thickness. Shims are available in various thicknesses.

(14) Hold the clutch withdrawal lever in position and screw in the pivot bolt.

Place the lockwasher on the bolt and tighten the withdrawal lever from the side opposite the steering. The leg of the clutch withdrawal lever bracket on the steering side of the car is threaded. Screw the bolt through the leg and tighten it sufficiently to take out all play. Lock it in position with the nut and spring washer and turn the lockwasher over.

Fit the rubber dust cover over the withdrawal lever and plug the other hole with a flat rubber grommet.

(15) Reassembly of the rear cover is effected by reversing the dismantling procedure.

Rear cover

(16) Position the paper joint washer, place a ·006 in. (·1524 mm.) shim in the rear cover bearing recess and fit the rear cover. Shims are also available in thicknesses of ·004 in. (·1016 mm.) and ·010 in. (·254 mm.). Tighten the rear cover (evenly by diametral selection) with the nine long setpins and spring washers. Correct shimming is done in exactly the same way as for the front cover.

(17) Flush the gearbox with flushing oil, replace the drain plug and fill with oil to Ref. A. (page P.2).

The servicing instructions for the gearbox of the A35, differing from those of the A30 which are detailed above, are given below.

Section F.9

REMOVAL AND REPLACEMENT

(A35)

(1) Disconnect the battery.

(2) Withdraw the distributor cap and leads complete.

(3) Detach the starter cable at the starter.

(4) Part the wire from the oil pressure switch.

(5) Drain the radiator and disconnect the radiator top hose at the water outlet elbow. If a heater is fitted, drain the cylinder block and detach the heater drain tap and heater hoses.

(6) Release the choke pull-out wire at the carburetter, uncouple the throttle connection and accelerator control rod and part the exhaust down pipe from the manifold.

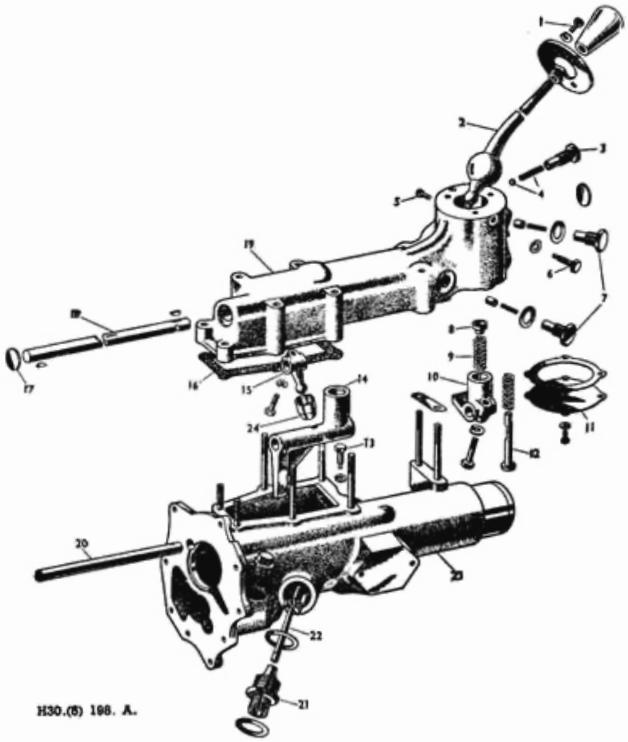

Fig. F.15. Exploded view of the A35 remote control assembly.

1. *Change speed lever cover set-pin.*
2. *Change speed lever.*
3. *Reverse plunger cap.*
4. *Reverse plunger detent spring and ball.*
5. *Reverse plunger locating pin.*
6. *Change speed lever locating pin.*
7. *Anti-rattle spring caps.*
8. *Thrust button.*
9. *Thrust button spring.*
10. *Selector lever rear.*
11. *Bottom cover.*
12. *Reverse selector plunger.*
13. *Control shaft locating screw.*
14. *Control lever.*
15. *Selector lever front.*
16. *Joint washer.*
17. *Welch plug.*
18. *Remote control shaft.*
19. *Remote control housing.*
20. *Control shaft.*
21. *Speedometer pinion sleeve.*
22. *Speedometer pinion.*
23. *Gearbox rear cover.*
24. *Tapered bush.*

(7) From inside the car lift off the rubber grommet through which the change speed lever passes. Unscrew the uppermost anti-rattle spring cap (7, Fig. F.15) and remove the spring and plunger. Take out the three setscrews and spring washers from the change speed lever seat and remove the lever along with its seat. Collect the thrust button and its spring.

(8) If the car is not over a pit, jack up the front of the car with the rear wheels on blocks to avoid damage to the exhaust pipe.

(9) Uncouple the propeller shaft from the rear axle by removing the bolts, nuts and lock washers.

(10) Release the clutch pedal pull-off spring and take the nut, locknut and washers off the front end of the clutch operating rod.

(11) Free the exhaust pipe and tie it aside after removing the nut and bolt securing the exhaust pipe steady bracket to the gearbox flange.

(12) Disconnect the speedometer drive cable at the gearbox.

(13) Release the two setscrews in the inner and the two nuts and bolts in the outer clutch pedal shaft support flanges, then slide the shaft away from the gearbox to free it. In the case of right-hand drive cars, the pin in the outer spherical bush must be removed before the shaft can be freed.

(14) Take the weight of the rear of the engine by means of a sling through the engine rear sling bracket.

(15) Take out the two setpins which pass through the transmission tunnel inside the car (one each side) into the gearbox cross-member. Access is by lifting the carpets.

(16) From below the car take off the two nuts securing the cross-member.

(17) Lower the sling so that the engine pivots on its front mountings and clearance is obtained for the bellhousing flange to clear the body pressing when the gearbox is withdrawn.

(18) Support the gearbox, and after placing a clean tray beneath it, drain the oil and draw out the propeller shaft.

(19) Remove the bolts, nuts and washers which secure the gearbox to the engine rear mounting plate and detach the starter motor which will be released by the removal of the two longer bolts, nuts and washers.

(20) Withdraw the gearbox to the rear until the first motion shaft is clear of the clutch. Under no circumstances must the gearbox be allowed to hang in the clutch by its first motion shaft.

(21) Replacement is a reversal of the removal procedure, but if the clutch driven plate has been

disturbed, it must be centralized by using a dummy first motion shaft or Service Tool 18G139. Reconnect all items of equipment.

Section F.10

DISMANTLING
(A35)
(REMOTE CONTROL HOUSING)

The operations involved in dismantling the gearbox of the A35 are generally the same as those for the A30. Differences due to the fitting of the remote control assembly are detailed in this Section and should be read in conjunction with the procedure described in Section F.3.

Removal and replacement

(1) Unscrew the speedometer pinion sleeve from the left side of the gearbox rear cover, remove the joint washer and withdraw the speedometer pinion.

(2) Remove the eight nuts securing the remote control housing and lift the housing off the rear cover.

(3) Unscrew the nine set-screws and spring washers securing the rear cover to the gearbox.

(4) Pull the rear cover back slightly and turn it in an anti-clockwise direction, as viewed from the rear, to enable the control lever to clear the fork rod ends and then remove the rear cover from the gearbox.

(5) Replacement is a reversal of the removal procedure. Position the paper joint washer, place a ·006 in. (·1524 mm.) shim in the rear cover bearing recess and fit the rear cover. Shims are also available in thicknesses of ·004 in (·1016 mm.) and ·010 in. (·254 mm..) Tighten the rear cover (evenly by diametral selection) with the nine set-screws and spring washers. Correct shimming is done in the same way as for the front cover (see 'Gearbox' sub-section 13 in Section F.8).

Dismantling and reassembly

(1) Remove the control shaft locating screw and screw it into the tapped front end of the control shaft. Slight pressure on the screw will facilitate the removal of the control shaft which is a push fit in the rear cover. The control lever will slip off the end of the shaft as the shaft is removed.

(2) Unscrew the four setscrews securing the bottom cover to the change-speed-lever tower. Retain the paper joint washer if undamaged.

(3) Unscrew and remove the change speed lever locating peg and the lower anti-rattle spring. The latter is removed by unscrewing the lower anti-rattle spring cap (7, Fig. F.15) and then tilting the remote control housing so that the spring and plunger drop out.

(4) Release the setscrews in the front and rear selector levers, remove the welch plug at each end of the remote control housing and, using a suitable drift, tap out the remote control shaft. The front and rear selector levers can then be removed.

(5) The circlip on the front selector lever bush should be removed and the two halves of the bush will then fall apart.

(6) To remove the reverse selector plunger, first unscrew the reverse plunger cap and remove the detent spring and ball, then remove the locating pin.

(7) Reassembly is a reversal of the dismantling procedure.

Section F.11

MODIFICATIONS

Synchronizers

Prior to chassis No. 599 for L.H. steering vehicles and chassis No. 601 for R.H. steering vehicles, the third- and fourth-speed synchronizer was bias loaded.

Commencing with the above chassis numbers the third- and fourth-speed synchronizer has been balance loaded, i.e. the three spring holes are equally spaced. In addition the lightening holes have been dispensed with and the synchronizer cone angles altered.

Interchangeability is affected as follows:

(*a*) A new 3rd motion shaft can be used to replace the old one.

(*b*) A new second-speed mainshaft gear, together with a new second-speed synchronizer can replace their old counterparts; separately they are not interchangeable.

(*c*) A new 1st motion shaft *cannot* be used to replace the old one, unless the following new parts are also fitted:

Third-speed mainshaft gear with cone.
Bush for third-speed mainshaft gear.
3rd motion shaft front thrust washer.
Third- and fourth-speed synchronizer.

Change speed fork rods

The notches in the change speed fork rods were modified from Chassis No. 906 for R.H. steering vehicles and chassis No. 903 for L.H. steering vehicles. New rods can be interchanged with the old ones only if they are used in sets.

First-speed wheel and second-speed synchronizer assembly and first- and second-speed fork rod and plunger.

Stage I: Commencing with chassis No. 9638 for R.H. steering vehicles and chassis No. 9635 for L.H. steering vehicles, the first-speed notch, in the first- and second-speed fork rod, was made angular instead of radial and the plunger was increased in length from $\frac{25}{32}$ in. (19·844 mm.) to $\frac{13}{16}$ in. (20·638 mm.). The longer plunger can be identified by a small recess in its shank end.

Stage II: Commencing with chassis No. 29437 for R.H. steering vehicles and chassis No. 29385 for L.H. steering vehicles, the radial notch was reintroduced in the first- and second-speed fork rod together with the shorter plunger. In addition, the second-speed synchronizer was modified.

Interchangeability: When replacing worn parts, the new first-speed wheel and synchronizer assembly must be fitted along with the first- and second-speed fork rod and plunger mentioned in Stage II. They must not be replaced individually.

Modified speedometer drive pinion and pinion bush

To reduce wear and noise, speedometer drive pinions manufactured from nylon material were fitted on later gearboxes, commencing at Gearbox No. AO2696. A nylon pinion complete with its steel spindle may be interchanged with a steel pinion and spindle.

Subsequently nylon speedometer pinion bushes were introduced in place of the brass bushes previously used. The oil feed hole in the nylon bush is of reduced diameter to diminish the oil flow to the speedometer drive cable. When removing or fitting a nylon bush, it is essential to use a socket or box spanner to prevent damage to the corners of the hexagon. The copper sealing washer fitted between the brass bush and the rear cover of the gearbox and the pinion oil seal retaining ring are not required with the nylon bush.

This modification was introduced at Gearbox No. AW7976. Interchangeability is not affected.

SERVICE TOOLS

18G134L. Gearbox Rear Oil Seal Replacer Adaptor

For the replacement of gearbox extension oil seals. Use with handle 18G134.

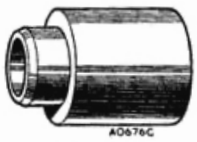

18G134L

18G140. First Motion Shaft Assembly Replacer

When threaded over the first motion shaft this tool registers with the outer race of the bearing which can then be driven home without damage.

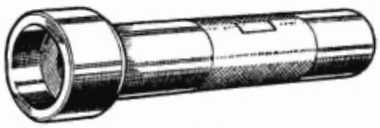

18G140

18G144. Synchromesh Assembly Ring

This tool retains the balls and springs in the synchronizer while it is being pushed into the sleeve or first speed wheel.

18G144

18G194. Needle-Roller Bearing Replacer

The replacement of needle-roller bearings in the laygear is greatly speeded up by the use of this replacing tool. It can also be used to fit the spring ring after the rollers have been fitted.

18G194

18G389. Gearbox Rear Oil Seal Remover (basic tool)

This basic tool, together with the appropriate adaptor, is essential for removing the gearbox extension oil seal easily and without damage to the extension.

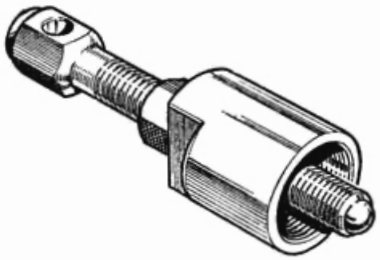

18G389

18G389A. Gearbox Rear Oil Seal Remover Adaptor

Use with basic tool 18G389.

18G389A

18G471. Dummy Layshaft

The fitting of a layshaft to the lay gear is simplified by the use of this tool.

18G471

18G488. Gearbox Oil Seal Clinching Tool

18G488

SECTION G

THE PROPELLER SHAFT

	Section
General description	
Fault diagnosis	G.3
Lubrication	G.1
Removal and refitting	G.2
Service tools	End of Section

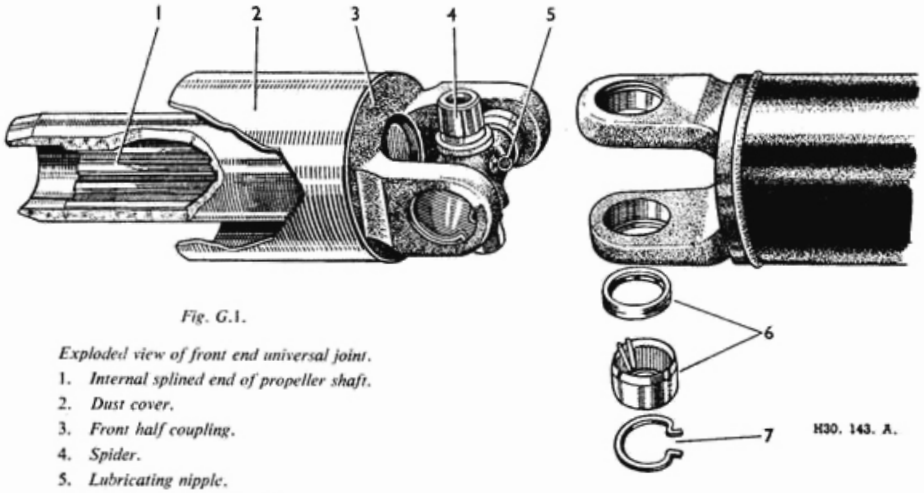

Fig. G.1.

Exploded view of front end universal joint.

1. *Internal splined end of propeller shaft.*
2. *Dust cover.*
3. *Front half coupling.*
4. *Spider.*
5. *Lubricating nipple.*
6. *Needle bearing assembly.*
7. *Spring ring.*

GENERAL DESCRIPTION

The propeller shaft and universal joints are manufactured by Hardy Spicer.

Fore and aft movement of the rear axle and other components is allowed for by a sliding spline between the front end of the propeller shaft and the rear of the gearbox. Each universal joint consists of a centre spider, four needle roller bearings and two yokes. Reference to the lubrication diagram at the end of this manual shows the locations of these joints.

The centre lubricant chamber is connected to the four reservoirs and to the needle roller bearing assemblies (see Fig. G.2). Access to the front nipple is through a hole, normally closed by a rubber plug or, on later models, by a metal plate secured by two setscrews, on the left of the propeller shaft tunnel.

The needle roller bearings are filled with lubricant on assembly. Oil from the gearbox lubricates the sliding splined joint between the propeller shaft and the gearbox. Before refitting the propeller shaft to the gearbox smear the splines with oil.

Section G.1

LUBRICATION

A nipple is fitted to each centre spider for lubricating the bearings. Use oil or grease to Ref. D (page P.2).

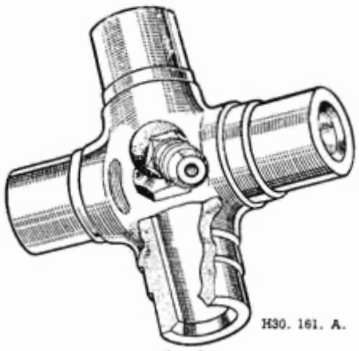

Fig. G.2.
Showing the lubricant channels in the spider.

Section G.2

REMOVAL AND REFITTING

Tests fowr ear

Wear on the thrust faces is located by testing the lift

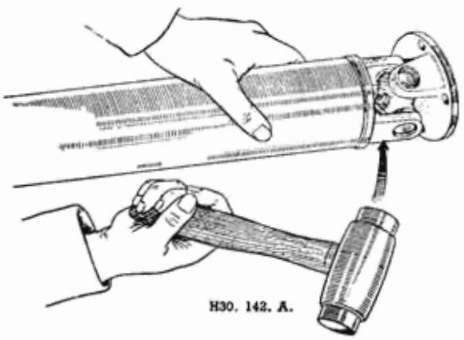

Fig. G.3.
Tapping the joint to extract bearing.

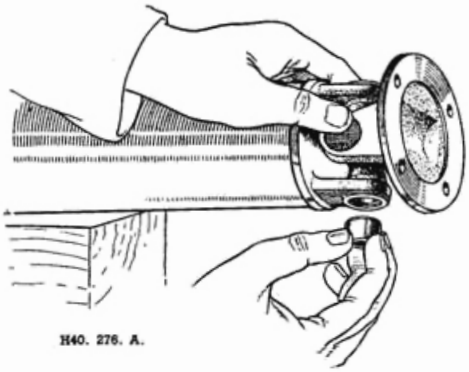

Fig. G.4.
Removing a bearing cap complete with needle rollers.

in the joint, either by hand or by using a length of wood suitably supported.

Any circumferential movement of the shaft relative to the flange yokes, indicates wear in the needle roller bearings or the sliding spline.

Removal

Separate the rear propeller shaft flange from the pinion flange by removing their securing nuts, bolts and lock washers.

Place a clean tray under the rear end of the gearbox to collect any surplus oil that may drain off. The operator should now take the weight of the propeller shaft and then draw the splined end out of the gearbox.

Dismantling

(1) Clean away the enamel from all the snap rings and bearing faces, to ensure easy extraction of the bearings.
(2) Remove the snap rings by pressing their ends together and prise out with a screwdriver. If the ring does not come out, tap the bearing face lightly to relieve the pressure against the ring.
(3) Hold the splined end of the shaft in one hand and tap the radius of the yoke with a lead or copper hammer (Fig, G.3) when the bearing will begin to emerge. If difficulty is experienced, use a small bar to tap the bearings from the inside, taking care not to damage the race itself. Turn the yoke over and extract the bearing with the fingers (Fig. G.4) being careful not to lose any of the needles.
(4) Repeat this operation for the other bearing, and the splined yoke can be removed from the spider.
(5) Using a support and directions as above remove the spider from the other yoke.

Examination and checking for wear

When the propeller shaft has been in use for a long time, the parts most likely to show signs of wear are the bearing races and the spider journals.

The complete assembly should be renewed if looseness or stress marks are observed, as no oversize journals or bearings are provided.

It is essential that bearing races are a light drive fit in the yoke trunnions. Any ovality in the trunnion bearing holes, shows the need to fit new yokes.

Reassembly

(1) See that the drilled holes in the journals of the universal joints are cleaned out and filled with lubricant.
(2) Assemble the needle rollers in the bearing races and fill with lubricant. Should difficulty be experienced in assembly, smear the walls of the races with petroleum jelly to retain the needle rollers in place.
(3) Insert the spider in the flange yoke.
(4) Using a soft-nosed drift about $\frac{1}{32}$ in. (·794 mm.) smaller in diameter than the hole in the yoke, tap the bearing into position. It is essential that the bearing races are a light drive fit in the yoke trunnion.
(5) Repeat this operation for the other bearings. The spider journal shoulders should be coated with shellac prior to fitting the retainers to ensure a good seal.
(6) If the joint appears to bind, tap lightly with a wooden mallet which will relieve any pressure of the bearings on the end of the journals. It is advisable to renew cork washers and washer retainers on spider journals, using a tubular drift.

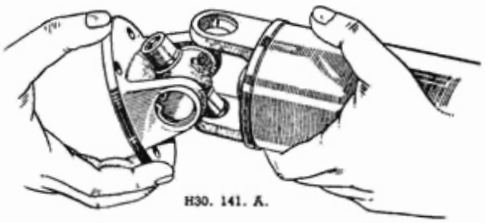

Fig. G.5.
Separating the joint.

Refitting the shaft assembly

Smear the propeller shaft splines with oil and slide the splines into mesh with those of the gearbox third motion shaft.

Wipe the rear companion flange and flange yoke faces clean, to ensure that the pilot flange registers properly and the joint faces bed evenly all round. Insert the bolts, evenly tighten the nuts all round and securely lock them in position with new lock washers.

Section G.3 FAULT DIAGNOSIS

Symptom	No.	Possible fault
(a) Vibration	1	Shaft bent or misaligned
	2	Worn universal joint bearings or spider bearing journals
	3	Sliding joint splines worn
	4	Loose flange bolts

SERVICE TOOLS

18G2. Crankshaft Gear, Pulley, and Propeller Shaft Flange Remover

A multi-purpose tool with alternative legs readily interchangeable: one pair with thin flat ends designed for removing crankshaft gears and propeller shaft and bevel pinion flanges, the other pair has tapered ends suitable for fan pulley grooves other than the later type models fitted with narrow section fan belts.

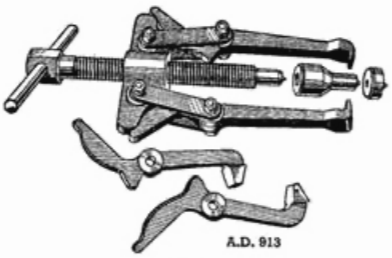

18G2

18G138. Crankshaft Gear and Pulley Replacer

This tool will replace the crankshaft gear and ensure that the engine front cover is correctly located. The felt oil seal and cover must be concentric with the crankshaft, thus safeguarding against oil leaks. The bevel pinion flange can also be replaced with this tool.

18G138

SECTION H

THE REAR AXLE AND REAR SUSPENSION

	Section
Axle	
Assembly	H.2
Dismantling	H.7
Shafts	H.3
Crown wheel and pinion	H.8
Dampers	H.10
Differential pinions	H.6
Hubs	H.4
Lubrication	H.1
Oil seal—pinion	H.5
Service tools	End of Section
Springs	H.9

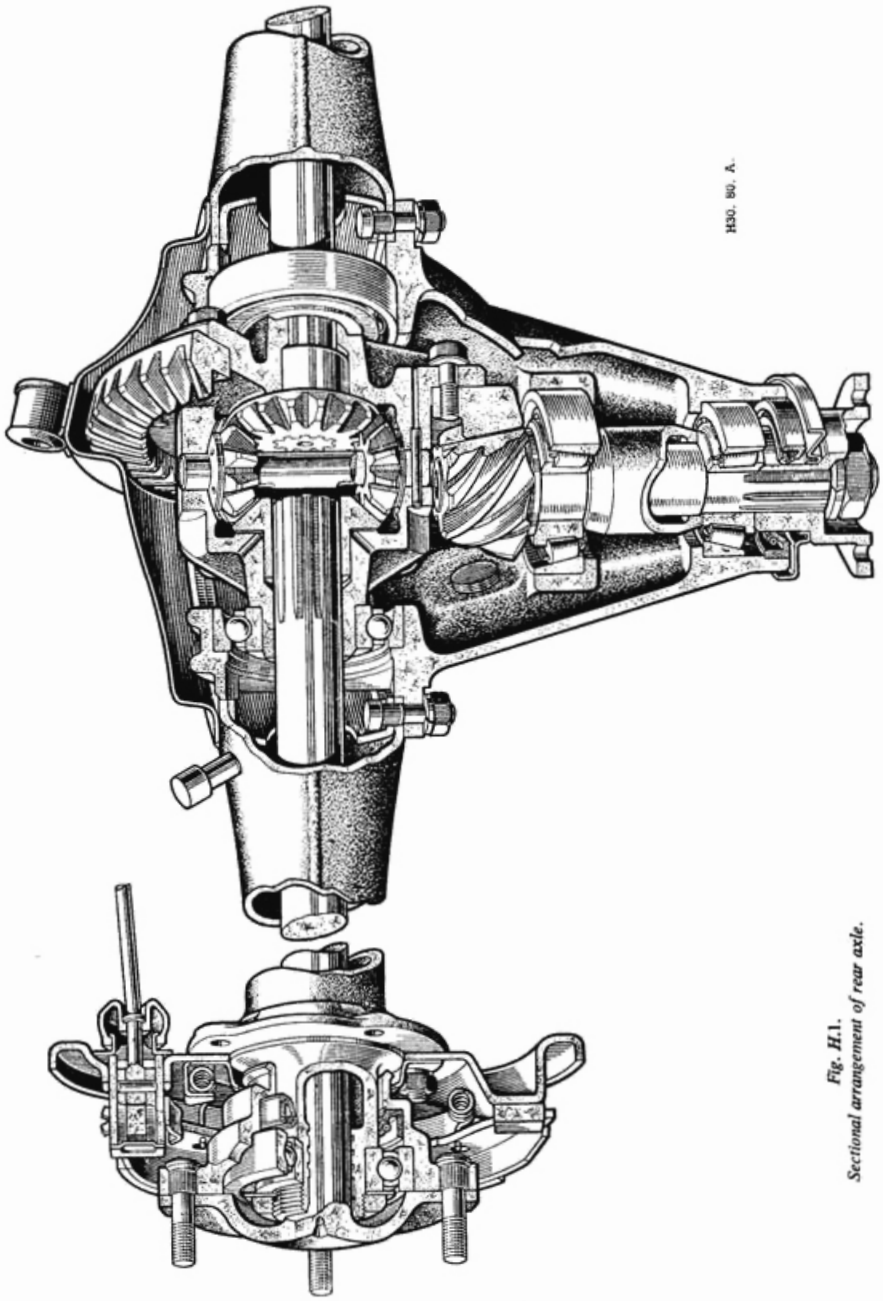

Fig. H.1.
Sectional arrangement of rear axle.

Section H.1

LUBRICATION

For the lubrication of the hypoid axle use lubricants only from approved sources, as tabulated in Section P. Do not use paraffin as a flushing medium. On a new vehicle the oil should be drained and the axle refilled at 500 miles (800 km.) **and subsequently every 6,000 miles (9600 km.). Failure to do this will eventually lead to axle breakdown.**

The filler plug is situated on the right-hand side of the carrier, and the drain plug in the bottom of the banjo casing.

Section H.2

AXLE UNIT

Removal

(1) See that the handbrake is in the released position; then disconnect the brake cable at the balance lever.

(2) Remove the propeller shaft bolts at the pinion flange and detach the shock absorber arms which are secured to the axle by nuts and spring washers.

(3) Jack up the car on both sides and remove the nuts from under the spring retaining plate. These nuts screw onto the ends of the 'U' bolts which hold the axle to the spring. All that now remains is to knock out the 'U' bolts. The axle can be taken out to be further dismantled.

(4) Carefully remove the pad from between the spring and the axle spring bracket.

Fig. H.2.
1. *Universal joint lubricating nipple.* 2. *Drain plug.* 3. *Filler plug.*

Replacement

(1) The pad between the spring and axle spring bracket has a locating hole which fits over the spring centre bolt. When reassembling make sure that this pad is properly located, so that the spring pin fits into the centre hole of the axle mounting bracket.

(2) Locate the hole in the axle spring bracket over the spring pin, fit the 'U' bolts, position the securing plate and tighten the nuts.

(3) Connect the brake cable to the balancing lever.

(4) Finally secure the shock absorber arms and bolt the propeller shaft and pinion flanges together.

Section H.3

AXLE SHAFTS

Removal

(1) Chock all the wheels not being operated upon, jack up the car, and remove the wheel.

(2) Using a screwdriver unscrew the drum locating screw, release the handbrake and tap the drum off with a hide or wooden mallet.

If the brake linings should hold the drum when the handbrake is released, slack off the brake shoe adjuster a few notches.

The operator will be well advised at this stage to drain the oil out of the axle, thus preventing oil from leaking onto the brake linings when the shaft is withdrawn.

(3) Remove the screw that holds the axle shaft to the hub and draw out the shaft (25, Fig. H.6) by gripping it outside the hub. Should it be tight, strike the shaft with a hide hammer until there is a gap between the shaft and hub. A screwdriver inserted in this gap will allow the shaft to be levered away and then drawn out. Renew the paper joint washer on assembly if it is damaged.

Replacement

(1) When replacing the axle shaft, do not omit the paper joint washer. An oil leak from the hub on to the brake linings may have serious consequences.

(2) The splines will in all probability have to be 'felt' or guided into mesh. Holes in the paper washer must be lined up with holes in the hub, and the screw securing the axle shaft to the hub casing must be placed in the **countersunk** hole.

(3) Finally, put back the brake drum and securing screw, readjust the brake shoes on both sides and replace the wheel.

Section H.4

HUBS

Withdrawal

(1) Take off the wheel and remove the axle shaft as described. Knock back the keyed lockwasher and unscrew the nut with a close fitting spanner or Service Tool 18G152.

(2) Tilt the lockwasher so that the peg disengages with its location in the threaded end of the axle case (Fig. H.4).

(3) Fit the thrust pad into the end of the axle case and use Service Tool 18G146 to draw off the hub. The extractor is fitted over the wheel studs and held in position by nuts screwed up tight. Screw in the central bolt. As the central bolt is tightened, the complete hub assembly will gradually be drawn off (Fig. H.3).

(4) The bearing and oil seal can now be drifted out using Service Tools 18G134 and 18G134Q for the bearing.

Assembly

The hub bearing is non-adjustable and is replaceable in one operation, by pressing it into place.

(1) When fitting the axle shaft it is essential that the paper joint washer between its flange and the hub is compressed before the abutment shoulder of the shaft pulls up against the bearing races. If, in an emergency, a paper joint washer is hand made, ensure that it is about ·010 in. (·254 mm.) thick. An oil leak will invariably result if this washer is too thin.

(2) If the oil seal has been removed, it must be drifted into position with Tool 18G14 (lip towards the bearing) before the bearing is inserted.

The hub is then drifted on to the axle casing with Service Tools 18G134 and 18G134Q followed by a new lock-washer, whose peg must register in its location, and nut.

(3) When the nut has been tightened, bend the lock-washer against one of its flats to lock it.

(4) Assemble the axle shaft, brake drum and wheel as previously described (Section H.3).

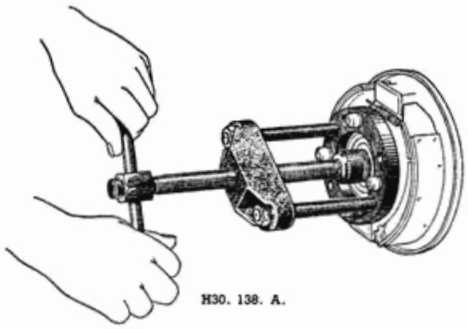

Fig. H.3.
Withdrawing the rear hub using Service Tool 18G146.

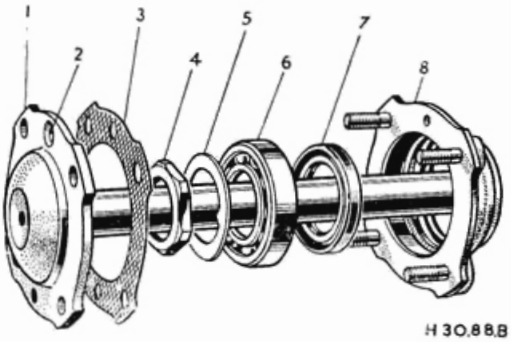

Fig. H.4.
Rear hub assembly exploded.

1. *Axle shaft flange.*
2. *Fixing screw countersunk hole.*
3. *Joint washer.*
4. *Hub securing nut.*
5. *Lockwasher.*
6. *Hub bearing.*
7. *Oil seal.*
8. *Hub casing.*

(5) During reassembly the hubs should be packed with fresh grease although they receive some lubricant from the axle during normal running.

Section H.5

PINION OIL SEAL

Removal

(1) Mark the propeller shaft and pinion shaft driving flanges so that they can be replaced in the same relative positions, and disconnect the propeller shaft, carefully supporting it.

(2) Using Service Tool 18G142 (A30 up to Car Number 49777) or 18G34A (A30 from Car Number 49778 and A35) to prevent the pinion flange from turning, remove the nut and spring washer. Withdraw the flange and pressed end-cover from the pinion shaft using Service Tool 18G2.

(3) Extract the oil seal from the casing.

Replacement

(1) Press a new seal into the casing with the sealing edge facing inwards.

(2) Replace the driving flange and end-cover, taking care not to damage the edge of the oil seal, and tighten the nut with a torque wrench to a reading of 140 lb. ft. (19·4 kg.m.).

(3) Reconnect the propeller shaft, taking care to fit the two flanges with the locating marks in alignment.

Section H.6

DIFFERENTIAL PINIONS

Removal

(1) Remove the axle shafts as detailed in Section H.3.

(2) Mark the propeller shaft and pinion driving flanges so that they can be replaced in the same relative positions, and disconnect the propeller shaft.
(3) Drain the oil from the axle.
(4) Remove the eight nuts and spring washers securing the gear carrier to the axle case, and withdraw the complete carrier assembly.
(5) Having marked the differential bearing housing caps so that they can be replaced in their original positions, remove the four nuts and spring washers. Withdraw the bearing caps and the differential cage from the carrier.
(6) Tap out the dowel pin locating the differential pinion shaft. The diameter of the pin is $\frac{1}{8}$ in. (3·18 mm.) and it must be tapped out from the crown wheel side of the differential cage as the hole into which it fits has a smaller diameter at the crown wheel end to prevent the pin passing right through. It may be necessary to clean out the metal peened over the entry hole with a $\frac{1}{8}$ in. drill in order to facilitate removal of the dowel pin.
(7) Drive out the differential pinion shaft and remove the pinions and thrust washers from the differential cage.

Replacement

Examine the pinions and thrust washers for wear and renew as required. Reassembly is a reversal of the above procedure. Care must be taken to peen over the dowel pin entry hole in order to retain the dowel pin securely in position. Refill the axle with oil to Ref. B (page P.2).

NOTE.—If it proves necessary to fit any new parts other than those detailed in this section the axle assembly must be set up as in Section H.8.

Section H.7

DISMANTLING THE AXLE

Remove the differential carrier from the axle case as detailed in **'DIFFERENTIAL PINIONS'** of Section H.6.

It is strongly recommended that operators should make use of the Service Tools that are available. These tools have been specially designed to render easy operation and to prevent damage to the parts concerned.

Crown wheel and bearing removal

(1) Remove the bearing caps, having marked them so that they can be replaced in their original positions. Lever out the differential cage and bearings (see Fig. H.5).
(2) Remove the lockplates and bolts, then take off the crown wheel.
(3) The ball races should be a tight fit on each end of the differential cage and if found to be loose, a new cage will be needed. Service Tool 18G47C and adaptor 18G47M should be used to remove them. Preserve the shims under each bearing for re-use.

Bevel pinion and bearing extraction

(1) Using Service Tool 18G142 (A30 up to Car Number 49777) or 18G34A (A30 from Car Number 49778 and A35) to keep the bevel pinion flange from turning, remove the nut and spring washer. Withdraw the flange using extractor 18G2.
(2) Drive out the bevel pinion rearwards through the carrier using a soft metal drift. The pinion will take the inner race and rollers of the rear bearing, distance piece and shims leaving the front bearing and oil seal in the carrier. Extractor 18G12A with adaptor 18G12F or Service Tool 18G285 can be used to draw the rear inner race and rollers off the bevel pinion. Retain the pinion head washer.
(3) Remove the oil seal from the gear carrier and extract the front pinion bearing inner race and rollers with the fingers. The outer races of both bearings can be withdrawn with Service Tool 18G264 using adaptors 18G264A, 18G264B and 18G264C [A30 up to Chassis Numbers 15778 (R.H.D.) and 15785 (L.H.D.)] or adaptors 18G264D and 18G264E [A30 from Chassis Numbers 15779 (R.H.D.) and 15786 (L.H.D.) and A.35].

Section H.8

ASSEMBLING AND SETTING THE CROWN WHEEL AND PINION

Apart from fitting parts as detailed in Sections H.3, H.4 and H.5 it is not permissible to fit any new parts (e.g. crown wheel and pinion, pinion bearings, differential bearings, etc.) to the axle assembly without working through the procedure given in this section. Furthermore, if a new crown wheel or a new pinion is needed, **a mated pair—crown wheel and pinion—must be fitted.**

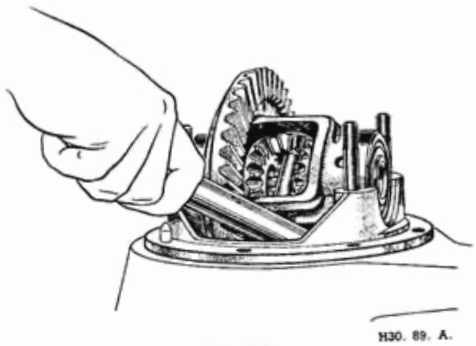

Fig. H.5.
Showing the method of levering out the differential unit.

Fig. H.6.
Rear axle exploded.

Key to Fig. H.6.

1. *Axle breather.*
2. *Gear carrier stud.*
3. *Axle case.*
4. *Differential bearing cap nut and washer.*
5. *Differential bearing cap.*
6. *Drain plug.*
7. *Gear carrier joint washer.*
8. *Filler and level plug.*
9. *Gear carrrier.*
10. *Gear carrier nut and washer.*
11. *Differential bearing packing shims.*
12. *Differential wheel.*
13. *Differential pinion shaft.*
14. *Differential shaft dowel pin.*
15. *Differential pinion.*
16. *Pinion thrust washer.*
17. *Wheel stud.*
18. *Backplate bolt, nut and washer.*
19. *Hub casing.*
20. *Hub oil seal.*
21. *Hub bearing.*
22. *Hub lockwasher.*
23. *Hub securing nut.*
24. *Axle shaft screw.*
25. *Axle shaft.*
26. *Joint washer.*
27. *Differential bearing.*
28. *Crown wheel setscrew.*
29. *Lockwasher.*
30. *Differential cage.*
31. *Crown wheel.*
32. *Bevel pinion.*
33. *Bevel pinion rear bearing.*
34. *Pinion bearing distance piece.*
35. *Bevel pinion shims.*
36. *Bevel pinion front bearing.*
37. *Oil seal.*
38. *Oil seal housing.*
39. *Bevel pinion flange.*
40. *Bevel pinion spring washer.*
41. *Bevel pinion nut.*

Replacing and adjustment

Fitting a new crown wheel and pinion involves four distinct operations:

(1) Setting the position of the pinion.
(2) Adjusting the pinion bearing pre-load.
(3) Adjusting the differential bearing pre-load.
(4) Adjusting the backlash between the gears.

To carry out these operations correctly, the following special tools are required: the bevel pinion and differential bearing setting gauge, Service Tool 18G191B, the pinion bearing outer race remover and replacer, Service Tool 18G264 with adaptors 18G264A, 18G264B and 18G264C [A30 up to Chassis Numbers 15778 (R.H.D.) and 15785 (L.H.D.)] or adaptors 18G264D and 18G264E [A30 from Chassis Numbers 15779 (R.H.D.) and 15786 (L.H.D.) and A35], the pinion bearing inner race remover and replacer, Service Tool 18G12A with adaptor 18G12F or Service Tool 18G285 and the pre-load checking tool, Service Tool 18G207.

Setting the pinion position

(1) Fit the bearing outer races to the gear carrier, using Service Tool 18G264 with adaptors 18G 264A, 18G264B and 18G264C [A30 up to Chassis Numbers 15778 (R.H.D.) and 15785 (L.H.D.)] or adaptors 18G264D and 18G264E [A30 from Chassis Numbers 15779 (R.H.D.) and 15786 (L.H.D.) and A35].

(2) Smooth off the pinion head with an oil stone, but do not erase any figures that are etched on the pinion head.

(3) Refit the pinion head washer; if the original washer is damaged or not available, select a washer from the middle of the range of thicknesses.

(4) Fit the inner race of the rear bearing to the pinion shaft, using Service Tool 18G12A with adaptor 18G12F or Service Tool 18G285, and position the pinion in the gear carrier without the shims, distance piece and oil seal. Fit the inner race of the front bearing.

(5) Refit the universal joint driving flange and tighten the nut gradually until a pre-load figure of 8 to 10 lb. in. (·092 to ·115 kg. m.) is obtained.

(6) Adjust the dial indicator to zero on the machined step 'A' setting block (Service Tool 18G191B).

(7) Remove the keep disc from the base of the magnet; clean the pinion head and place the magnet and dial indicator in position. Move the indicator arm until the foot of the gauge rests on the centre of the differential bearing bore at one side and tighten the knurled locking screw. Obtain the maximum depth reading and note any variation from the zero setting.

Repeat the check in the opposite bearing bore. Add the two variations together and divide by two to obtain a mean reading.

(8) Take into account any variation in pinion head thickness. This will be shown as an unbracketed figure etched on the pinion head and will always be minus (—). If no unbracketed figure is shown, the pinion head is of nominal thickness.

Using the mean clock gauge reading obtained and the unbracketed pinion head figure (if any), the following calculation can be made:

(*a*) **If the clock reading is minus** add the clock reading to the pinion head marking, the resulting sum being minus. **Reduce** the washer thickness by this amount.

Example:	Clock reading	—·002 in.
	Pinion marking	—·005 in.
	Variation from nominal	—·007 in.

Reduce the washer thickness by this amount.

(*b*) **If the clock reading is plus** and numerically less than the pinion head marking, **reduce** the washer thickness by the difference.

Example:	Pinion marking	—·005 in.
	Clock reading	+·003 in.
	Variation from nominal	—·002 in.

Reduce the washer thickness by this amount.

(*c*) **If the clock reading is plus** and numerically greater than the pinion head marking, **increase** the washer thickness by the difference.

Example:	Clock reading	+·008 in.
	Pinion marking	—·003 in.
	Variation from nominal	+·005 in.

Increase the washer thickness by this amount.

The only cases where no alterations are required to the washer thickness are when the clock reading is **plus** and **numerically equal** to the unbracketed pinion head marking, or when the clock reading is zero and there is no unbracketed marking on the pinion head.

(9) Allowance must finally be made for the mounting distance marked on the pinion head in a rectangular bracket. Proceed as follows:

If the marking is a **plus** figure, **reduce** the washer thickness by an equal amount.

If the marking is a **minus** figure, **increase** the washer thickness by an equal amount.

A tolerance of ·001 in. is allowed in the thickness of the washer finally fitted.

Fit a washer of this thickness to the pinion with the chamfer towards the pinion head.

Adjusting pinion bearing pre-load

(1) Assemble the pinion shaft bearings, distance piece, and shims to the gear carrier; fit the oil seal and driving flange.

(2) Tighten the flange nut gradually to a torque wrench reading of 140 lb. ft. (19·4 kg. m.), checking the pre-load at intervals to ensure that it does not exceed 13 lb. in. (·149 kg. m.), i.e. 3 lb. in. greater than the previous figure as the oil seal is now fitted.

(3) If the pre-load is too great more shims must be added, and if too small the thickness of the shimming must be decreased.

Adjusting the differential bearing pre-load

The differential bearings must be pre-loaded and this is done by 'pinching' them to the extent of ·002 in. on each bearing, the 'pinch' being obtained by varying the thickness of the shims fitted between each bearing inner ring and the differential cage. The shim thickness is calculated as shown below.

In making the necessary calculations, machining tolerances and variations in bearing width must be taken into account. Machining variations are stamped on the component; bearing width variations must be measured.

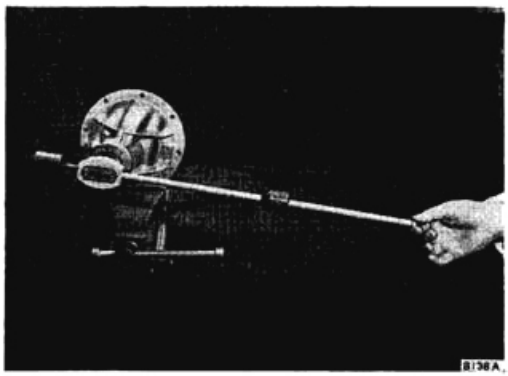

Fig. H.7.
Checking the bevel pinion bearing pre-load (Service Tool 18G207).

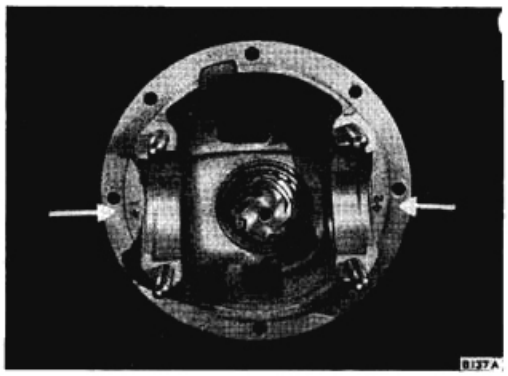

Fig. H.8.
Illustrating the machining tolerances for the differential bearing housings as marked by the factory inspector.

The dimensions involved in pre-loading the differential bearings are illustrated in Fig. H.9, and it is emphasised that it is the variation from nominal on each dimension which is important and referred to in the formula used.

The dimensions are:

(1) From the centre line of the differential to the bearing register on the left-hand side of the gear carrier.
Variation: stamped on the carrier.

(2) From the centre line of the differential to the bearing register on the right-hand side of the carrier.
Variation: stamped on the carrier.

(3) From the bearing register on one side of the differential cage to the register on the opposite side.
Variation: stamped on the cage.

(4) From the rear face of the crown wheel to the bearing register on the opposite side.
Variation: stamped on the cage.

To calculate the collar thickness:

Left-hand side:

Formula: A+D—C+·002 in. (·05 mm.)

Substitute the dimensional variations for the letters in the formula. The result is the thickness of the shims required at the left-hand side to compensate for machining variations and to give the necessary pinch, **with bearings of standard width.** The width of the bearing must now be checked and any variation from standard added to or subtracted from the shim thickness. If the bearing width is under standard, that amount must be added to the shim thickness, and *vice versa.*

To check bearing width

(1) Rest the bearing on the small surface plate of Tool No. 18G191B with the inner race over the recess and the thrust face downwards.

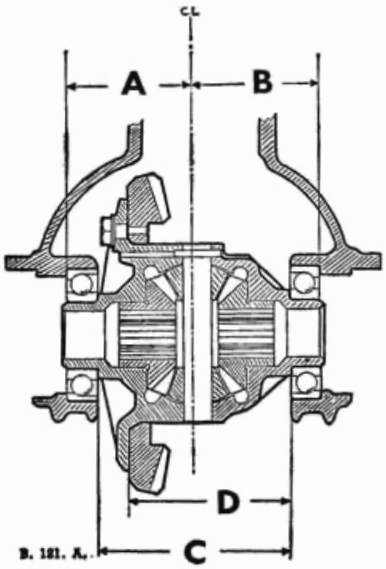

Fig. H.9.
Illustrates the points from which the calculations must be made to determine the shim thickness for the bearings on each side of the carrier.

(2) Place the magnet on the surface plate and set the dial indicator to zero on the step marked 'A' of the small gauge block; this is the width of a standard bearing. Transfer the indicator to the plain surface of the bearing inner race and, holding the race down against the balls, note the reading on the dial. A **negative** reading shows the additional thickness to be **added** to the shims at this side; a **positive** reading, the thickness to be **subtracted.**

Right-hand side:

Formula: B—D+·006 in. (·15 mm.)

The procedure is the same as that for the left-hand side.

When a framed number is marked on the back of the crown wheel, e.g.+2, it must be taken into account before assembling the shims and bearings to the differential cage. This mark assists in relating the crown wheel with the pinion.

If, for example, the mark is +2, then shims to the value of ·002 in. (·05 mm.) must be transferred from the left-hand side (the crown wheel side) to the right-hand side. If the marking is —2, then shims to the value of ·002 in. (·05 mm.) must be moved from the right-hand side to the left-hand side.

Adjusting backlash

(1) Assemble the bearings ('Thrust' side outwards) to the differential cage with the shims of calculated thickness, using Service Tool 18G134 and adaptor 18G134Q.

(2) Bolt the crown wheel to the cage, tightening alternately and evenly to a torque wrench reading of 60 lb. ft. (8·3 kg. m.), but do not turn over the lockwashers. The crown wheel must be checked for alignment (Fig. H.11) by placing the crown wheel, differential cage and bearings complete on a pair of vee blocks and using a dial indicator. As the bearings are resting in the vee blocks, the differential cage can be rotated by turning the crown wheel and readings taken off the face of the wheel. The crown wheel must not be more than ·002 in. (·0508 mm.) out of true. Any greater irregularity must be corrected. Detach the crown wheel from the differential cage and look for small particles of grit on the flanges. It will be found that the crown wheel will not often run out of true if the two surfaces have been thoroughly cleaned. Finally, turn over the lockwashers for the crown wheel securing bolts.

(3) Refit the differential to the gear carrier.

(4) Mount the dial indicator on the magnet bracket so that an accurate measurement of the backlash can be taken. The recommended backlash is etched on the crown wheel.

(5) Vary the backlash by decreasing the thickness of the shims at one side and increasing the thickness of the shims at the other side by the same amount, thus moving the crown wheel into or out of mesh as required. The total thickness of the shims must not be changed.

(6) The minimum allowable backlash is ·004 in. (·102 mm.) and the maximum is ·007 in.

Fig. H.10.
Checking differential bearing width with Service Tool 18G191B.

(·178 mm.). The correct figure for the backlash to be used with any particular crown wheel and pinion is etched on the rear face of the crown wheel concerned and must be strictly adhered to.

A movement of ·002 in. (·05 mm.) shim thickness from one side of the differential to the other will produce a variation in backlash of approximately ·002 in. (·05 mm.). Thus it should be possible to set up the differential, even though the backlash is incorrect, by removing the bearings on one occasion only.

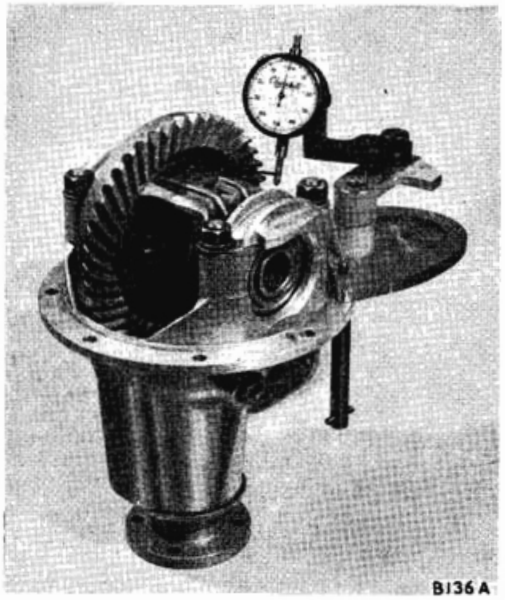

Fig. H.12.
Checking crown wheel to pinion backlash (Service Tool 18G191B).

Section H.9

REAR SPRINGS

Description

The rear semi-elliptic springs should be given regular attention to maintain riding comfort.

All spring eyes are fitted with detachable silentbloc bushes. The shackle bearing on the body is of the phosphor bronze type which requires periodic attention from the lubricating gun.

Occasional examinations should be made to ensure that the spring leaf clips are tight and that none of the spring leaves is fractured. At the same time examine the phosphor bronze bearing and silentbloc bushes for wear and the shackles for side play.

Maintenance

(1) Examine and tighten, if necessary the spring 'U' bolts.
(2) Examine the oil level in the rear spring dampers and top up if necessary.
(3) Clean the springs and wipe them with an oily rag.
(4) Examine the springs for fractures and the bushes for wear.

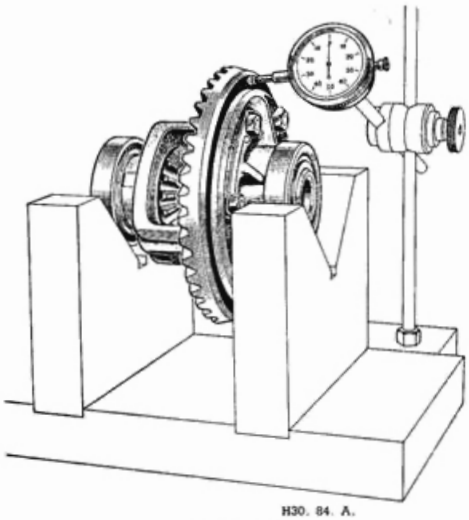

Fig. H.11.
Checking crown wheel run-out.

To remove

(1) Jack up the car on the side from which the spring is to be removed.
(2) Remove the brake cable clevis pin. Disconnect the cable to avoid straining the brake linkage when the load is removed from the axle.
(3) Pack up the chassis rear cross-member with suitable supports, placing the supports as near to the spring rear anchorage as possible.
(4) Place a screw jack under the centre of the spring to relieve the tension.
(5) Remove the road wheel.
(6) Using a box spanner release the four self-locking nuts from the 'U' bolts which secure the spring to the axle tube.
(7) Detach the locknut, nut and spring washer on the inside of the upper rear shackle, and the nut and spring washer on the inside of the lower rear shackle.
(8) Remove the shackle inside connecting link and extract the top and bottom shackle pins, together with the outside link.
(9) At the forward end of the spring detach the anchor pin by removing the nut and washer on the inside of the pin and drive the pin clear.
(10) Remove the supporting jack from under the spring to withdraw the latter from the car.

To dismantle

(1) Grip the spring in a vice with the jaws against the top and bottom leaves, adjacent to the centre bolt.
(2) Prise open the leaf clips.
(3) Unscrew the nut from the centre pin and withdraw the pin.
(4) Open the vice when the spring leaves, together with the zinc interleaving, will separate.
(5) Examine the zinc interleaves for signs of failure or cracks.
(6) Check the spring centre bolt for wear or distortion.

To reassemble

(1) Replace the spring in a vice.
(2) Utilising a rod of similar diameter to the clamping bolt and having a tapered end, position the leaves so that the clamping bolt can be readily replaced without risk of damage to the thread.
(3) Replace the centre bolt and secure by its nut and spring washer.
(4) Reposition the leaf clips.

To replace

Replacement is a reversal of the procedure given in **'To remove'** but attention must be given to the following:

(1) Ensure that the head of the spring centre bolt registers with the locating hole on the axle casing.
(2) The rear upper shackle pin self locking nut must not be fully tightened. The shackle pin must be allowed freedom to move in its phosphor bronze bush.
(3) Before tightening the spring shackle pin nuts, apply the normal working load to the spring. This will ensure that the silentbloc bushes are deflected equally in both directions during service. Failure to take this precaution will lead to rapid deterioration of the bushes.

Section H.10

DAMPERS

Description

Armstrong double-acting hydraulic dampers, offering resistance to both compression and recoil of the road springs, are fitted.

A special stabilising bar is fitted across the dampers, being firmly attached to the damper arms. The damper arms are in turn connected by a short link to a bracket on the rear axle.

Damper maintenance in position on the vehicle is confined to the periodical examination of its anchorage, the two bolts being tightened as required, inspection for leaks and regular topping up.

No adjustment is required or provided for, and any attempt to dismantle the piston assembly will seriously affect the performance of the damper. A damper that is suspected of being faulty must be removed for testing.

Testing

When there is any doubt that the rear suspension of the car is not adequately damped, the conditions of the road springs and tyre pressures should be borne in mind.

If the dampers do not appear to function satisfactorily, an indication of their resistance can be obtained by carrying out the following check:

Remove the dampers from their mountings. Place them individually in a vice, taking care to grip them by their fixing lugs to avoid any distortion of the cylinder body.

Move the lever arm up and down through its complete stroke. A moderate resistance throughout the full stroke should be felt.

If resistance is erratic, and free movement of the lever arm is noted, it may indicate lack of fluid. If the addition of fluid gives no improvement, a new or reconditioned unit must be fitted.

Too much resistance, when it is not possible to move the lever arm slowly by hand, may indicate a broken internal part or a seized piston in which case the unit will have to be replaced.

Topping-up with fluid

The dampers must have their oil levels checked and replenished if necessary every 6,000 miles (9600 km.). When topping-up the rear dampers in position on the car, access to the filler plugs can be gained by removing the rear seat cushion and then the two rubber sealing plugs adjacent to each wheel arch.

Before removing the filler plug carefully wipe clean the exterior of the damper body. This is most important, as it is vital that dirt or foreign matter on no account enters the interior of the unit.

The use of Armstrong Super (Thin) Damper Fluid No. 624 is recommended. When this is not available any good quality mineral oil to Specification S.A.E. 20/20W is acceptable. This alternative is not suitable for low temperature operation and is deficient in various other ways.

While adding fluid the lever arm must be worked throughout its full stroke to expel any air that might be present in the working chamber.

Fluid should be added to the bottom of the filler plug hole.

Refitting dampers

When handling dampers that have been removed from their mountings, it is important to keep the assemblies upright as far as possible, otherwise air may enter the working chamber and cause erratic resistance.

Always connect the anti-roll bar to the dampers before finally attaching the connecting link to the axle casing. It is advisable to leave connections loose until all points have been located and then tighten up.

Damper arm rubber bushes

The rubber bushes integral with both ends of the damper to axle connecting links cannot be renewed. When these bushes are worn renew the arm.

Stabilising bar

This is bolted between the two damper arms, being anchored to each arm by a bolt, nut and spring washer, and a 'U' bolt with nuts and spring washers.

SERVICE TOOLS

18G4. Rear Hub Bearing Replacer

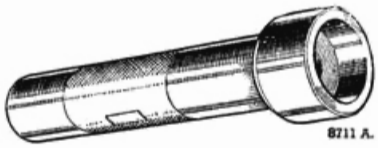

18G4

18G12A. Bevel Pinion Bearing Remover (basic tool)

For use with various adaptors to remove and replace bevel pinion bearings.

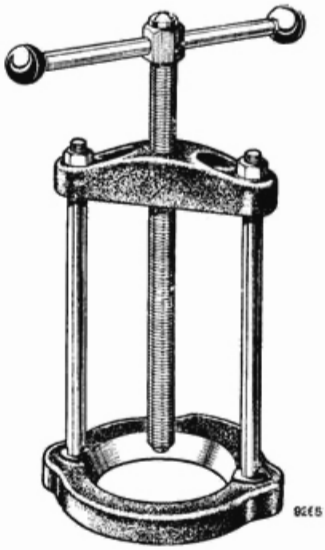

18G12A

18G12F. Bevel Pinion Inner Race Remover Adaptor

For use with 18G12A.

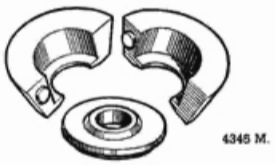

18G12F

18G14. Bevel Pinion and Rear Hub Oil Seal Replacer

This replacer is contoured to the exact shape of the oil seal, and bevelled at its leading edge to facilitate insertion of the seal, and fitting without damage.

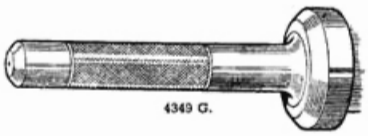

18G14

SERVICE TOOLS

18G34A. Bevel Pinion Flange Wrench

The two sets of tapered pins on this tool ensure that it will hold the propeller shaft flange against rotation while the flange nut is released or tightened on semi-floating or three-quarter-floating axles.

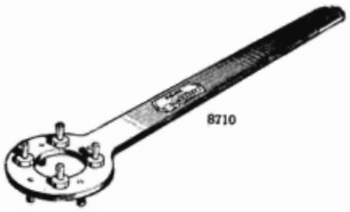

18G34A

18G47C. Differential Bearing Remover (basic tool)

A standardised basic tool; with various adaptors it will cover several models.

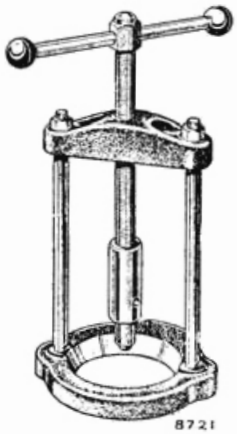

18G47C

18G47M. Differential Bearing Remover Adaptor

For use with 18G47C.

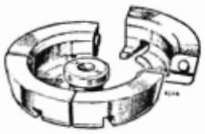

18G47M

SERVICE TOOLS

18G134Q. Rear Hub Replacer and Adaptor

Use with handle 18G134.

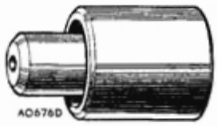

18G134Q

18G146. Front and Rear Hub Remover

The thrust pad supplied with the tool is for use only when removing the rear hubs.

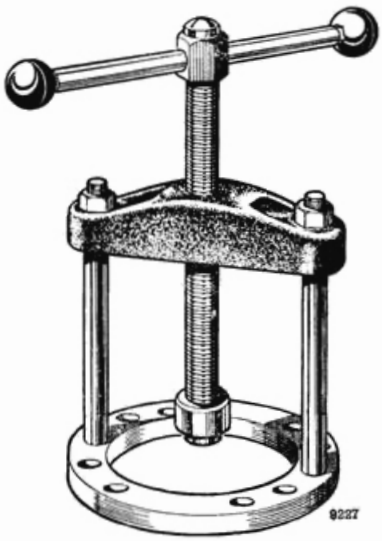

18G146

18G152. Rear Hub Nut Spanner

A reinforced tubular spanner complete with tommy-bar, designed to pilot in the axle tube with the axle shaft withdrawn.

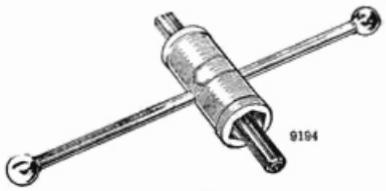

18G152

SERVICE TOOLS

18G191. Bevel Pinion Setting Gauge

A gauge block and dial indicator is essential to obtain accurate location of the pinion in the axle case.

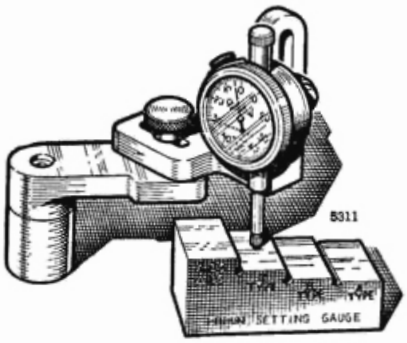

18G191

18G191A. Differential Bearing Gauge

This gauge used with the component parts of 18G191 is designed to check the bearing width. It can also be used to mount the clock gauge on the gear carrier to check crown wheel and bevel pinion backlash.

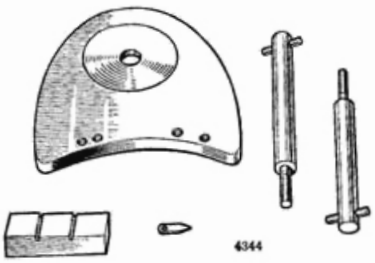

18G191A

18G207. Bevel Pinion Bearing Preload Gauge

The movable arms of the tool are located in opposite holes of the bevel pinion flange and the weight moved along the rod to the poundage required.

18G207

SERVICE TOOLS

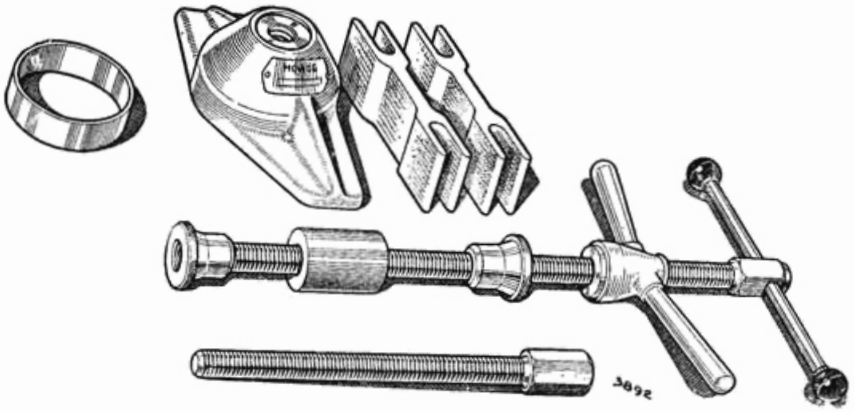

18G264

18G264. Bevel Pinion Bearing Outer Race Remover (basic tool)

Comprising a body, centre screw with extension and tommy bar, wing nut, guide cone, and two distance pieces. A plain ring is also included to serve as a pilot when the rear bearing outer races are being replaced. Use with adaptors 18G264D, 19G264E.

18G264A/B/C Bevel Pinion Bearing Outer Race Remover Adaptor

Use with 18G264 up to Chassis No. 15778 (RHD) and 15785 (LHD).

9154 A.

18G264A/B/C

18G264D/E Bevel Pinion Bearing Outer Race Remover Adaptor

Use with 18G264 from (A30) Chassis No. 15779 (RHD) and 15786 (LHD) and A35.

A. 1048 D.

18G264D/E

SECTION J

THE STEERING GEAR

	Section
General description	
Maintenance	J.1
Service tools	End of Section
Steering connections and idler	J.2
Steering faults	J.4
Steering gear	J.3

GENERAL DESCRIPTION

Cam and peg steering

The steering inner column revolves a cam which in turn engages with a taper peg fitted to a rocker shaft. The assembly is enclosed in an oil-tight casing, which carries two ball bearings at either end of the cam. These bearings are designed to carry radial and thrust loads.

When the steering wheel is turned the inner column revolves the cam, which in turn causes the taper peg to move over a predetermined arc, thus giving the rocker shaft its desired motion. Attached to the rocker shaft is a side and cross-tube lever which is connected to the steering linkage.

The steering linkage (Fig. J.1) consists of cross tube '3', steering side and cross-tube lever '4', steering side and cross-tube lever (for idler) '5' and side tubes '2' with the steering gearbox '1' and the steering idler '6'.

Worm and nut steering

The inner column is supported at its upper end by loose balls which are carried by a fixed and an adjustable ball cup, thus taking radial and thrust loads.

The worm is rigidly fixed to the lower end of the inner column; when the steering wheel is turned, the worm nut which is free to move along the axis of the inner column converts rotary motion into linear motion. This causes the taper peg of the rocker shaft, which is located in a U-slot at the top of the worm nut to move over a predetermined arc, thus giving the rocker shaft its desired movement.

A bushed trunnion, made oil tight by a rubber seal and retaining plate, supports the rocker shaft. An internally splined side and cross-tube lever is connected to the lower end of the rocker shaft and coupled to the steering linkage.

Section J.1

MAINTENANCE

Lubrication of the nipples on the steering linkage and swivel axle bearings is most important to maintain accurate steering.

Linkage ball joints without nipples are self-lubricating.

Lubricate the following points with grease or oil to Ref. D (page P.2) every 1,000 miles (1600 km.).

(*a*)	Steering side rods and cross tube ..	6 nipples
(*b*)	Swivel axle bushes	4 nipples
(*c*)	Lower outer fulcrum pins	2 nipples

Top up the steering gearbox and the steering idler with oil to Ref. B (page P.2) to the level of the filler plug openings every 1,000 miles (1600 km.).

On cars fitted with cam and peg steering the felt bush, and on cars with worm and nut steering, the bearing at the top of the column should be lubricated every 1,000 miles (1600 km.) with a few drops of oil to Ref. E (page P.2) applied through the hole in the steering wheel hub.

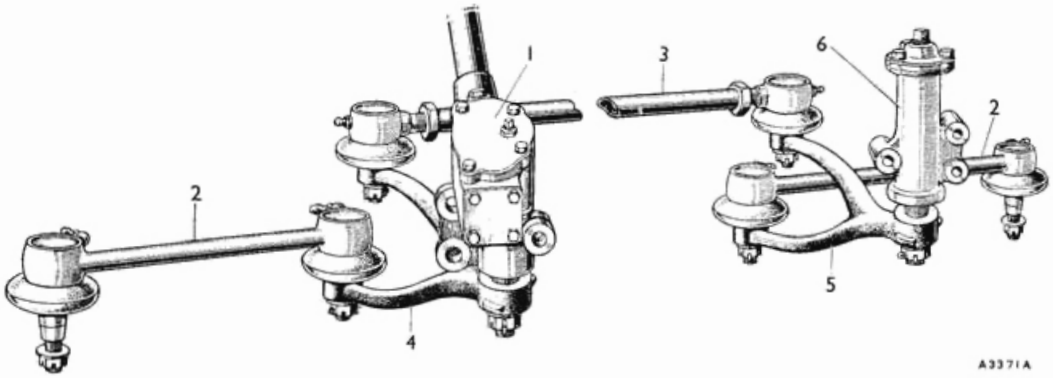

Fig. J.1. Steering layout

1. *Steering box.* 2. *Side tubes.* 3. *Cross tube.*
4. *Steering side and cross-tube lever.* 5. *Steering side and cross-tube lever.* 6. *Steering idler.*

Section J.2

STEERING CONNECTIONS AND IDLER

Adjusting the track

Front wheel alignment is governed by four factors—camber, castor, swivel pin inclination and wheel toe-in. The correct camber and swivel pin angles are built into the front suspension and will change only if the suspension is distorted by accidental damage. It is most important that the front wheels should toe-in $\frac{1}{16}$ in. (1·58 mm.) to $\frac{1}{8}$ in. (3 mm.), and this is governed by the angle of the steering and idler levers and the length of the cross tube. An adjustment is provided so that the cross tube may be lengthened or shortened to maintain the correct alignment. The cross tube should not be

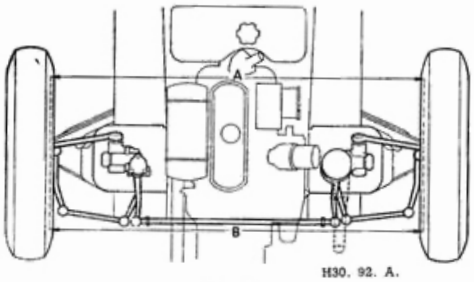

Fig. J.2.
The toe-in measured between wheel rims should be such that 'A' is $\frac{1}{16}$ to $\frac{1}{8}$ in. less than 'B'.

adjusted to correct a bent steering or idler lever.

The cross tube is threaded right-hand at one end and left-hand at the other, so that the track adjustment can be made by simply rotating the tube in the required direction after releasing the locknuts. Always re-tighten the locknuts at each end of the cross tube after an adjustment has been made.

The side-rods are non-adjustable.

When adjusting the track the following precautions should be observed:

(*a*) The car should have come to rest from a forward movement. This ensures as far as possible that the wheels are in their natural running position.

(*b*) It is preferable for alignment to be checked with the car laden.

(*c*) With conventional base-bar tyre alignment gauges, measurements in front of and behind the wheel centres should be taken at the same points on the tyres or rim flanges. This is achieved by marking the tyres where the first reading is taken and moving the car forwards approximately half a road wheel revolution before taking the second reading at the same points. With an optical gauge, two or three readings should be taken with the car moved forwards to different positions—180° road wheel turn for two readings and 120° for three readings. An average figure should then be calculated.

Wheels and tyres vary laterally within their manufacturing tolerances, or as the result of service, and alignment figures obtained without moving the car are unreliable.

Side and cross tubes

The side and cross-tubes are held in position by castellated nuts, washers and split pins on the levers. It is essential that the washers are replaced on reassembly.

Removal of the tubes can be effected by withdrawing the split pin, releasing the castle nut and sharply tapping the end of the lever into which the ball pin is inserted, or by using tool 18G59. Take care not to cause any damage when tapping the ends of the lever. Remove the castle nut and washer and lift out the side or cross tube.

When tapping the lever it is recommended that a block of metal or hard wood be firmly held behind it to prevent any shocks being transmitted to the steering gear.

Tube connections

Steering side and cross-tube connections on earlier chassis are either fitted with the Austin patent ball and socket adjustable type or the Lockheed self adjusting ball and socket connection (Fig. J.5).

The Austin type consists of a threaded castellated lower socket which is screwed into position and locked with a split pin. The body of the tube end has four split pin holes drilled, vernier pattern, at a different pitch from the castellations in the socket, thus permitting a very fine adjustment. **Adjustments should be made and checked regularly,** otherwise undue slackness will cause deformity of the ball pin making further adjustments impossible.

To make an adjustment, remove the split pin, tighten the socket up to the ball pin, and screw it back to the first alignment of the split pin hole and castellation to allow the ball to move freely in the socket.

Insert the split pin and ensure that the rubber boot fits snugly in its groove.

The Lockheed type, which is fitted exclusively from chassis number 39565, is self-adjusting and requires no attention other than regular lubrication at the prescribed intervals.

Detaching the idler

With the side and cross tubes disconnected, the idler can be removed from its mounting plate along with its side and cross-tube lever, by releasing three setscrews and washers.

Removing the side and cross-tube levers

These are secured to the steering rocker shaft and idler shaft by a nut and washer or castellated nut and split pin. When the nut and washer are removed, the side and cross-tube lever can be drawn off with an extractor. Never lever or hammer the side and cross-tube lever from the shaft.

Dismantling and assembling the idler (Fig. J.7)

The idler top cover is secured to the idler body by three setscrews and spring washers. Lubrication is effected by removing the oil plug in the cover and injecting oil into the body.

Internally, the body has a recess in its head and a plain

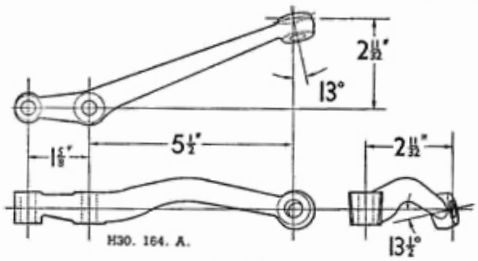

Fig. J.3.
The main dimensions of the steering side rod lever will enable the operator to ascertain whether or not it is damaged.

CAM AND PEG STEERING ASSEMBLY

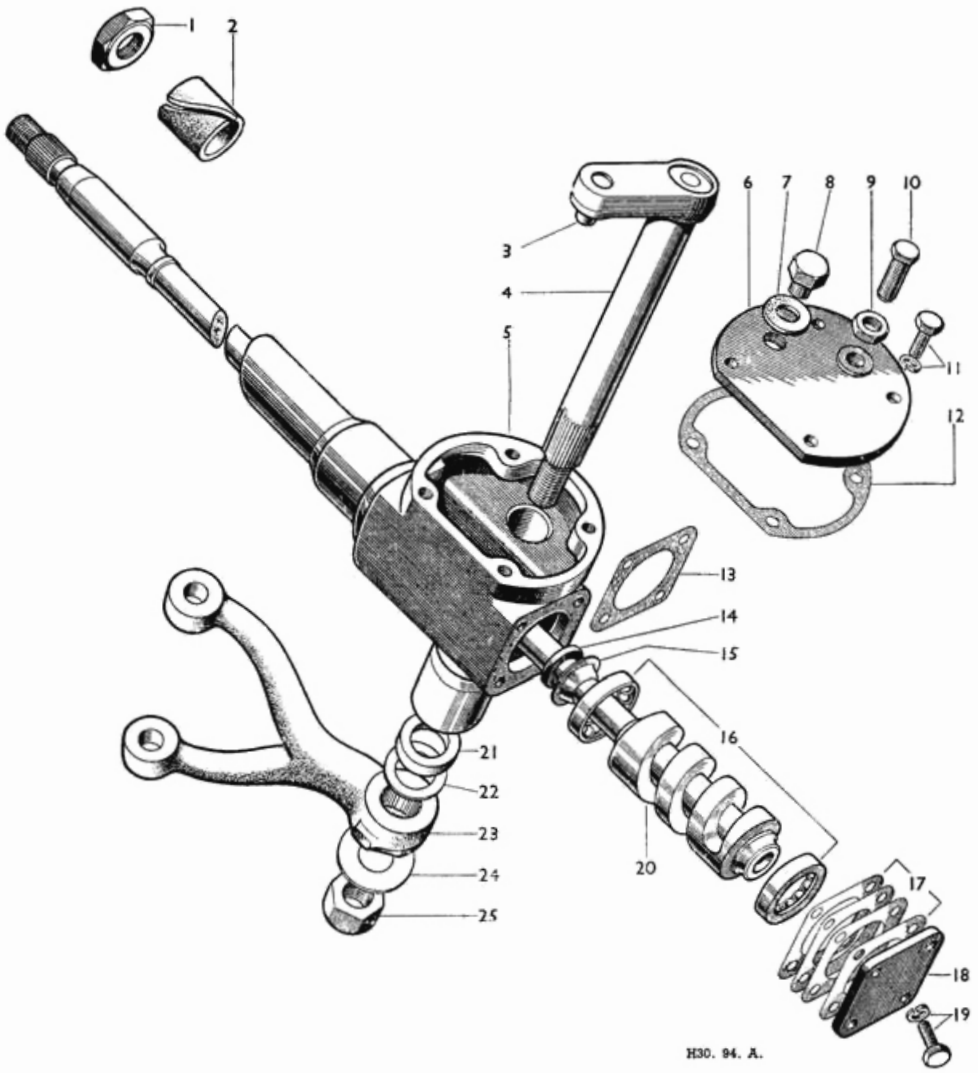

Fig. J.4.
Components of the steering unit.

1. *Steering wheel securing nut.*
2. *Felt bush for inner column.*
3. *Peg for rocker shaft.*
4. *Rocker shaft.*
5. *Housing for gear.*
6. *Side cover.*
7. *Washer for oil filler plug.*
8. *Oil filler plug.*
9. *Thrust screw locknut.*
10. *Thrust screw.*
11. *Cover setscrew and washer.*
12. *Side cover joint washer.*
13. *End cover joint washer.*
14. *Rubber ring for top bearing retaining cup (for assembly only).*
15. *Top bearing retaining cup (for assembly only).*
16. *Bearing ball cups and balls.*
17. *Shims for adjustment.*
18. *End cover.*
19. *Setscrew and washer.*
20. *Cam and inner column.*
21. *Cork sealing washer.*
22. *Retaining disc.*
23. *Steering side and cross-tube lever.*
24. *Plain washer.*
25. *Nut.*

Note: Item 25 replaced by a castellated nut and split pin on later chassis.

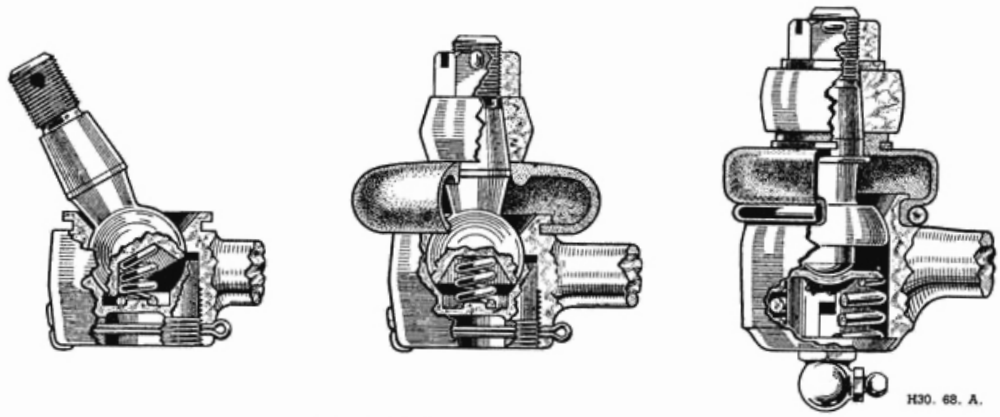

Fig. J.5. Steering side and cross tube connections.
On the left is a view of the Austin adjustable ball and socket connection showing the ball pin displaced. The illustration in the centre shows the ball pin vertical and on the right is a cut-away of the Lockheed non-adjustable type

bore right through. At the lower end of the body is a cork seal which is kept in position by a steel washer. This steel washer is retained by the idler body being 'peened' over it. To release the washer and seal, remove the burr with a hand scraper. The idler shaft runs directly in the body, there being no detachable bushes.

With the top cover removed, the idler shaft can be taken out. The idler shaft flange locates in the recess at the head of the body. At its lower end, the shaft is splined to take a side and cross-tube lever and threaded to take the lever securing nut.

Idler shaft end float is adjustable by means of joint washers fitted beneath the top cap. Fit sufficient joint washers to enable the idler shaft to turn freely without end-float when the top cap set screws are fully tightened.

Refitting the idler is a direct reversal of the removal procedure. Ensure that the idler is rigidly secured to its mounting plate.

Refitting the side and cross-tube levers

There are four locating splines in the splined bore of the side and cross-tube lever and four corresponding splines on the steering rocker shaft.

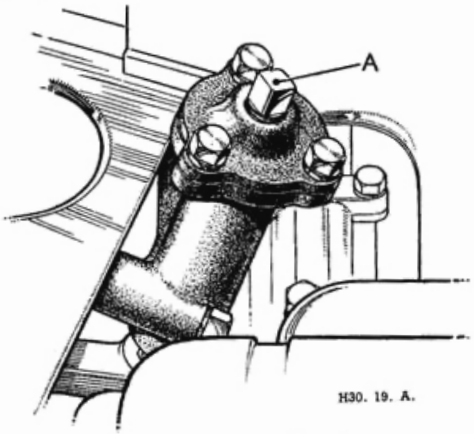

Fig. J.6. A. The idler filler plug.

To obtain the correct position for fitting the side and cross-tube lever, set the wheels of the car straight ahead and the steering wheel in its central position.

Hold the steering side and cross-tube lever with its arms pointing to the rear of the car; its longer arm should be nearest the car's centre line and above the shorter arm. This applies to either left-hand or right-hand drive cars. Now, press the side and cross-tube lever on to the steering rocker shaft and secure it with its nut and washer, or castellated nut and split pin.

The idler shaft lever, however, may be fitted in any position on the splines, provided that when the double lever is pointing to the rear of the car it is in the position set out in the preceding paragraph.

Refitting the side and cross-tubes

First connect the two side tubes to their respective steering arms and levers. Fit the cross tube to the steering and idler levers and ensure that both the side and cross-tube nuts are tight and split pinned. Adjust the track and lock the cross tube in position.

Section J.3

STEERING GEAR

Steering wheel removal

First take out the emblem cap which is set in the hub of the steering wheel. This can be achieved by gently prising the cap away from the hub with a small screw-driver.

Next unscrew the steering wheel nut and withdraw its shakeproof washer. The steering wheel can now be drawn off the steering column.

On later models a retaining ring, instead of a machined shoulder, is securely inserted and pinned into a corresponding recess in the steering wheel.

Steering gear removal

Remove the road wheel on the steering side of the car

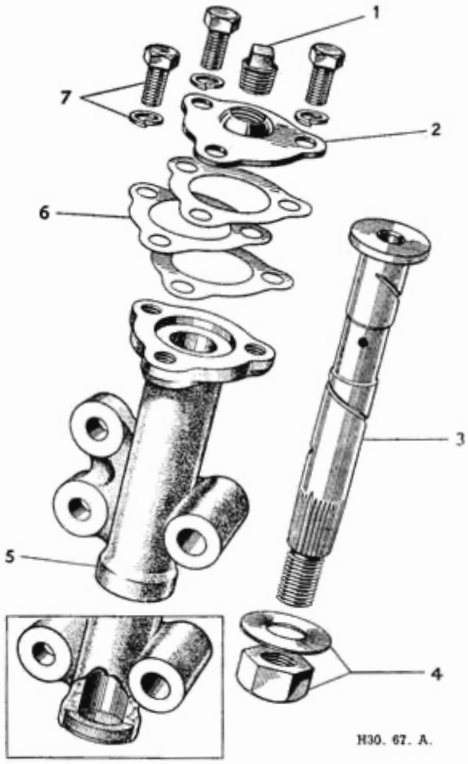

Fig. J.7.
The steering idler exploded.

1. *Idler filler plug.*
2. *Cover.*
3. *Idler shaft.*
4. *Nut and washer.*
5. *Idler body.*
6. *Joint washer.*
7. *Setscrew and washer for cover.*

Inset shows oil seal and retaining washer.
Note: Item 4, plain nut replaced by castellated nut and split pin on later chassis.

and, if the vehicle is equipped for right-hand steering take out the distributor.

Take off the steering wheel as detailed above.

Detach the side and cross-tubes from the steering side and cross-tube lever. Working from beneath, with the car jacked up or over a pit, release the nut and lock washer, or split pin nut and washer which secure the steering side and cross-tube lever, and draw it off.

From inside the car remove the two screws that hold the lighting switch strap to the column. In addition, withdraw the strap that fastens the column beneath the glove box.

Finally, from inside the bonnet take out the three setscrews which hold the steering box bracket to the body. Detach the steering box bracket and withdraw the steering gear and column complete through the bonnet opening.

Dismantling the steering gear (cam and peg)

The side cover should be removed after extracting the four securing setscrews and washers.

Turn the steering gear over and suitably support the top face leaving the rocker shaft free to be tapped out with a soft metal drift. The rocker shaft peg is a drive fit in the rocker shaft and should not be removed unless it is badly worn.

Unscrew the four setscrews which hold the end cover in position and release the end cover, shims and joint washer. Take out the ball cup and loose balls at the lower end of the inner column. Turn the whole column so that the steering box is uppermost, bump the steering wheel end of the column on a block of wood, and draw the inner column out. Retrieve the balls in the upper ball cup.

Extract the felt bush from the top of the column, by using a length of strong wire, bent into a hook at one end, to pull on the lower face of the bush. A new bush is easily fitted; smear the felt with heavy oil and press it into place at the top of the column.

Adjusting shims should be fitted beneath the end cover, after the inner column has been replaced, to take up end play in the column, but at the same time there should be no pre-loading, or damage to the bearings will result.

The rocker shaft may now be dropped into position. Ensure that it is a good fit in its housing and that the oil seal at the lower end of the trunnion is making good contact.

If the oil seal at the trunnion lower end is to be renewed, use a scraper to remove the metal that has been peened over, lever out the retaining disc and oil seal, replace with new parts and peen over.

Dismantling the steering gear (worm and nut)

Remove the top cover and joint washer and tap out the rocker shaft as detailed for the cam and peg unit.

Take out the four setscrews and spring washers to release the end cover and joint washer.

At the top of the steering column screw off the locknut, adjustable ball cup, and collect the loose balls.

Turn the column so that the steering box end is uppermost and bump the steering wheel end of the column on a block of wood. Withdraw the inner column and worm nut and retrieve the fixed ball cup.

Assembling the column is a straight-forward reversal of the dismantling procedure, but care must be taken in adjusting the bearing at the top of the column. The adjustable ball cup should be screwed up to the balls enough to just take out end play in the column. It is extremely important that there is no preloading. Complete the assembly including, if necessary, the fitting of a new oil seal as detailed for the cam and peg unit.

Adjusting the rocker shaft

Slacken the thrust screw in the top cover, by releasing the locknut and unscrew the thrust screw a few turns. Fit the cover and joint washer, making sure that an oil tight joint is obtained. Screw down the thrust

WORM AND NUT STEERING ASSEMBLY

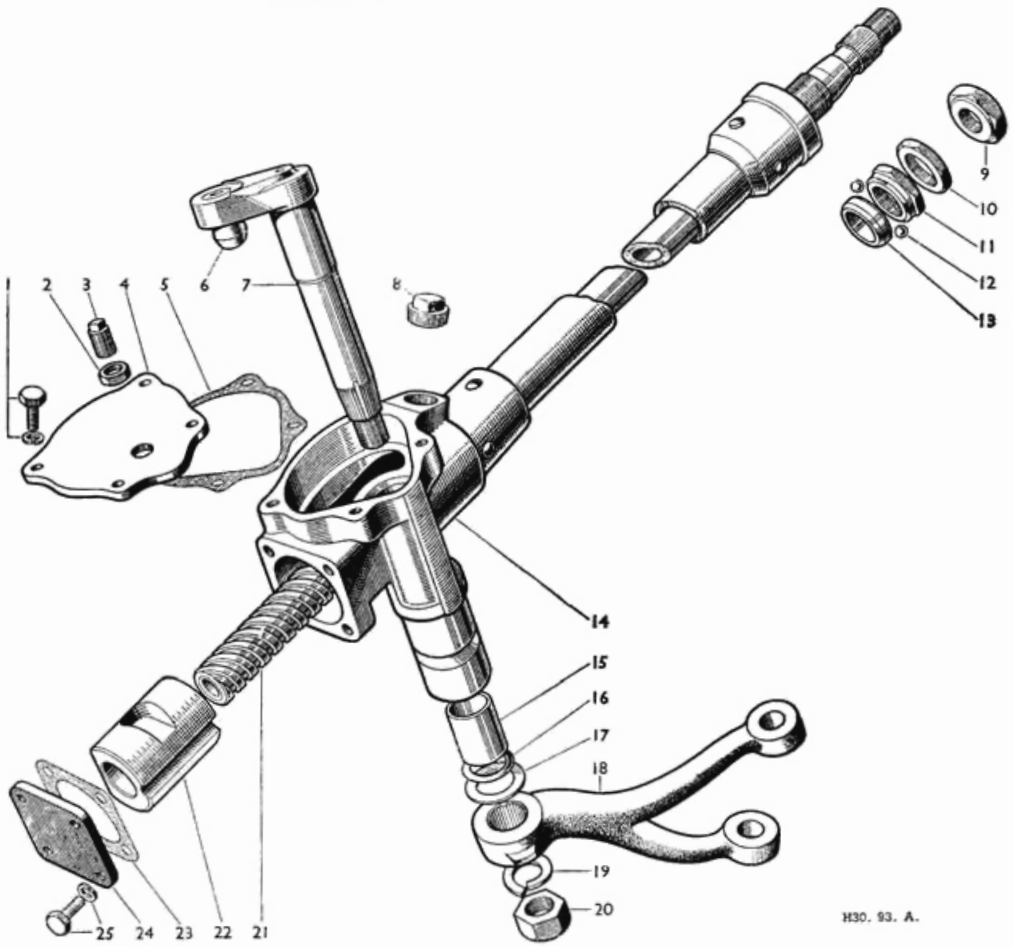

Fig. J.8.
Components of the steering unit.

1. *Setscrew and washer for top cover.*
2. *Locknut.*
3. *Thrust screw.*
4. *Top cover.*
5. *Joint washer.*
6. *Rocker shaft peg.*
7. *Rocker shaft.*
8. *Oil filler plug.*
9. *Steering wheel securing nut.*
10. *Adjustable cup locknut.*
11. *Adjustable cup.*
12. *Balls for top bearing.*
13. *Fixed ball cup.*
14. *Steering box and outer column.*
15. *Bush for rocker shaft.*
16. *Oil seal.*
17. *Washer for oil seal.*
18. *Side and cross-tube lever.*
19. *Washer.*
20. *Nut or castellated nut and split pin.*
21. *Inner column and worm.*
22. *Worm nut.*
23. *End cover joint washer.*
24. *End cover.*
25. *End cover setscrew and washer.*

NOTE—The worm nut 22 has not been shown in its correct position for assembly, in order that it may be better illustrated. When assembling, the internally-threaded end should be towards the filler plug, and the groove which runs the length of the nut must be away from the rocker shaft.

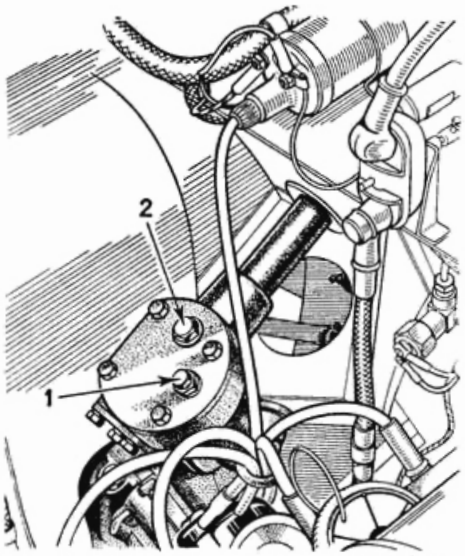

Fig. J.9.
The steering box in position.
1. *Thrust screw.* 2. *Oil filler plug.*

screw until all play is just taken out of the steering gear in the straight ahead position.

Final adjustment should be made when the steering gear has been fitted to the body. It should be noted that as wear is normally greater in the straight ahead position than on either lock, provision is made for this in the design of the cam or worm, and it will be found that there is a slight end play towards each lock. It is essential, therefore, that adjustment is made in the straight-ahead position to avoid tightness in the steering.

Fill the steering with recommended oil through the filler plug.

Section J.4

STEERING FAULTS

If steering faults are not attributed to adjustment of the rocker shaft, they may fall into one of the following categories.

Lost motion

The amount of lost motion reaches its maximum at either lock, but this is not normally felt at the steering wheel, since the geometry of the steering is such that it always tends to return the steering to the straight ahead position.

Excessive lost motion in the steering gear will result in unsteady steering, knocks and backlash, all of which can be felt at the steering wheel. This defect may be attributed to loose steering connections throughout the linkage.

Tight steering

If the steering is tight, disconnect the steering tubes and test the feel of the steering wheel. Stiffness may be due to the steering column being pulled out of line and this can be verified by loosening the column supporting bracket under the fascia and allowing the column to find its free position. If the steering is stiff in all positions the cause may be:

(*a*) The felt bush or bearing at the top of the column is too tight.

(*b*) The steering tube is bent.

Should the steering still be tight, remove the bush or bearing and check whether the steering column pulls heavily to one side. The inner column is fairly flexible and slight pulling to one side has little or no effect on the feel of the gear; if the column is found to be bent it will have to be renewed.

Loose steering

Loose steering is invariably attributed to end play of the inner column, which can be rectified by the removal of shims located behind the steering box end cover (cam and peg unit) or the adjustment of the top bearing (worm and nut unit) as detailed in Section J.3.

To check for this end float, disconnect the side and cross-tubes from the side and cross-tube lever and turn the steering partly to the right or left lock. Then with the steering wheel held to prevent it from turning, endeavour to turn the side and cross-tube lever. Should the steering wheel have a tendency to lift, it may be assumed that there is end float.

SERVICE TOOLS

18G59. Steering Ball Joint Separator

A tool designed on the shock and wedge principle to remove steering ball joints from their levers. On no account must the tool be used to lever the components apart; the handle is short to prevent the misuse of the tool in this way.

18G59

SERVICE TOOLS

18G70. Steering Wheel Remover

A movable leg enables the tool to be placed quickly in position and the soft plastic ring is proof against damage to the surface of the wheel. The centre screw incorporates a hardened steel ball to reduce friction when engaging the plug provided for insertion into the inner steering column. An adaptor plate 18G70A is available for use with this tool on the A30 up to Chassis Nos. 28420 (RHD) and 29852 (LHD).

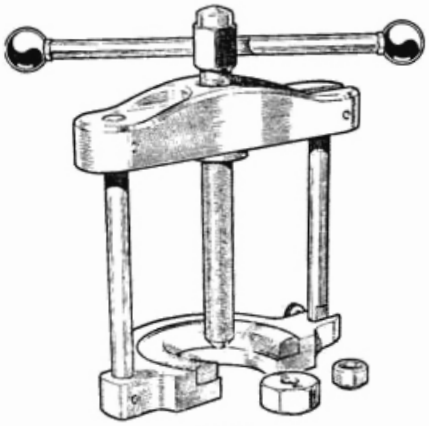

18G70

18G70A. Steering Wheel Remover Adaptor

For use with 18G70.

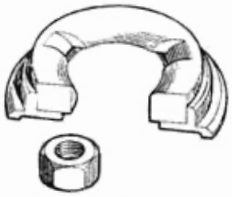

18G70A

18G312. Steering Tie-rod Pin Spanner

This tool is designed for use with the special C-spanner 18G313 for dismantling the steering tie-rod ball housing. In use it is clamped in a vice and the pins of the spanner are engaged with the holes in the housing. Use the spanner 18G313 to unscrew the housing cap.

18G312

18G313. Steering Tie-rod C-Spanner

Designed to engage the shallow splines of the steering rack ball housing cap and remove it without damage.

18G313

18G562. Steering Wheel Nut Spanner

Designed to enable the steering wheel nut to be tightened without damage to the ebonite horn switch contact.

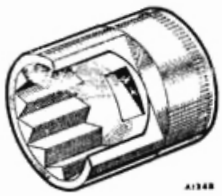

18G562

SECTION K

THE FRONT SUSPENSION

	Section
General description	
Dampers	K.7
Fault diagnosis	K.8
Geometry	K.5
Hubs	K.6
Service tools	End of Section
Springs—coil	K.1
Suspension	
Examination and rectification	K.3
Refitting	K.4
Removing	K.2

GENERAL DESCRIPTION

The independent suspension is of the 'wishbone' type. It consists of a single arm Armstrong double-acting damper, bolted to its support bracket, at its upper end. The single arm is to the front of the car and is secured to the swivel pin trunnion link by a fulcrum pin and Metalastik rubber bushes, The bottom end of the swivel pin is secured to the outer end of the lower links by a fulcrum pin which is cottered in position.

The inner arms of the lower links are fixed to brackets by Metalastik rubber bushes and fulcrum pins.

A rebound buffer is fitted to the bottom of the coil spring top bracket and a smaller rebound buffer under the damper arm.

A spring seat is secured to the lower links by four bolts, flat washers and nuts, thus keeping the spring compressed.

Section K.1

COIL SPRINGS

To remove

(1) Place a hard wood or metal block 1½ in. (2·86 cm.) long under the damper arm to keep the arm off its rubber rebound buffer when the car is jacked up.

(2) Jack up the car on the side concerned and use Service Tool 18G153 to screw up to the spring seat, after two diametrically opposite spring seat securing bolts have been withdrawn.

(3) Remove the nuts and washers, then screw back the centre bolt of the service tool to allow the spring to expand. When the spring has fully expanded lift off the tool and take out the spring, its seat and the bolts.

In the absence of Service Tool 18G153 two high tensile bolts about 4½ in. (11·43 cm.) long threaded their entire length, will be required to allow the spring to expand. Take out two diametrically opposite bolts in the spring seat, replace them with the long slave bolts which should be screwed up tight, release the two other bolts and nuts, and slacken the nuts on the slave bolts, a little at a time, until the spring is fully expanded. Now, the nuts and slave bolts can be taken out and the spring removed.

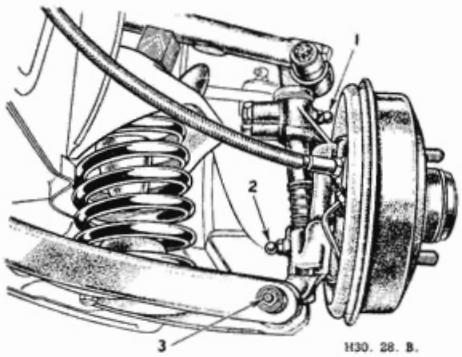

Fig. K.1.

Front suspension lubrication.
1. *Swivel pin top bush.* 2. *Swivel pin bottom bush.*
3. *Lower link outer bushes.*

Checking the spring

If the spring is cracked, weakened, broken or drastically differs from its specifications, it should be renewed.

Refitting a coil spring

Offer the spring and seat into position, fit the spring compressor, put two guide rods in diametrically opposite holes to bring the spring seat and wishbone lower links into line and compress the spring by turning the centre bolt.

When the spring has been compressed insert and tighten two of the bolts with their washers and nuts, withdraw the two guide rods and spring compressor, insert and finally tighten the two remaining bolts with their nuts and washers. Go over the four nuts to see that they have been fully tightened down.

Section K.2

REMOVING SUSPENSION

(1) Jack up the car, remove the wheel and the coil spring as already explained.

(2) Disconnect the steering side-tube from the steering arm by withdrawing the split pin and unscrewing the castellated nut. If the ball pin shank is tight in the steering arm, slacken the nut but do not take it off, sharply tap the steering arm at the side-tube end with a hammer, when it will be found to come away quite easily on removing the nut.

(3) Disconnect the flexible brake hose.

(4) Withdraw the split pins, undo the nuts, tap the fulcrum pins through the lower link inner ends and take away the two rubber bushes at the outer ends of the lower link inner brackets. The lower end of the suspension is now free.

(5) At the upper end remove the clamp bolt and shakeproof washer in the damper arm, withdraw the split pin and release the castellated nut on the fulcrum pin. Tap the fulcrum pin off, and retrieve the rubber bushes. The suspension unit is now free and can be lifted away.

To dismantle

(1) Secure the suspension by clamping the web of the lower links between a dummy base plate at the bottom and a solid metal disc and bolt at the top.

(2) Take out the drum securing screw and withdraw the brake drum.

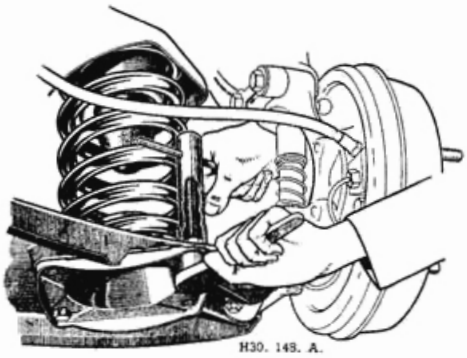

Fig. K.2.

Using a pair of slave bolts to remove or replace a coil spring.

(3) Draw off the hubs as detailed in Section K.6.
(4) Detach the backplate by removing its four bolts and shakeproof washers.
(5) Knock back the lockwasher and remove the two setscrews to release the steering lever.
(6) Extract the split pin and undo the castellated nut at the top of the swivel axle pin. Take off the trunnion and preserve the shims for use during assembly.
(7) Lift off the phosphor bronze oilite thrust washer and the swivel axle along with the dust excluder tubes and their spring, and the bevelled cork sealing ring at the bottom of the swivel axle pin.
(8) Slacken the nut on the cotter which is in the swivel pin lower trunnion and knock the cotter loose. Unscrew the nut, then remove the spring washer and cotter.
(9) Screw out the swivel pin lower trunnion lubrication nipple and its housing which also serves to plug the lower trunnion.
(10) Unscrew the swivel pin lower trunnion fulcrum pin, remove the swivel pin and cork sealing washers, and knock out the welch plug.

Section K.3

EXAMINATION AND RECTIFICATION

Swivel pin

(1) Carefully examine the swivel pin for wear by checking for ovality with a micrometer.
(2) If the pin does not show any appreciable wear renewal of the swivel bushes may effect a satisfactory cure. The bushes can easily be driven out or replaced with a suitable drift.

NOTE.—When refitting the bushes the lubrication holes must locate with those in the swivel housing. The second bush must be flush with the recessed housing and protrude about $\frac{1}{8}$ in. above the lower housing upper face.

(3) Broach the bushes from the bottom as necessary using Service Tool 18G155 for A30 cars up to Car Number 79638 and A35 cars and Service Tool 18G155 in conjunction with broach guide 18G155A for A30 cars from Car Number 79639.
(4) Check the efficiency of the dust covers and renew if necessary.

Lower link bushes

If it is found that the outer fulcrum pin can be moved backwards or forwards in the lower link threads the bushes should be renewed. First try a new fulcrum pin and if excessive play is still evident renew the bushes. The bushes are not renewable by themselves, but only by fitting new lower links.

The larger bushes at the inner end of the lower links can be renewed. They should be fitted and brazed in position.

Damper

The cross shaft bearings of the double acting hydraiulc damper may have worn sufficiently to permit vertical or horizontal movement of the cross shaft. If such wear is apparent, renew the damper complete.

The damper should also be carefully examined for any leaks and tested for effective damping. Damping can be tested by moving the damper arm up and down to the extremes of its stroke. Resistance should be felt throughout each stroke.

If the resistance is erratic it may mean either that the fluid level is low or that there are air locks. To rectify, remove the filler plug and restore the fluid level to just below the filler plug opening, while the arm is moved up and down through several full strokes. If this treatment does not effect a cure the damper must be renewed as a complete unit.

Removing worn bushes

Place the swivel axle on the anvil of Tool 18G154, larger diameter bush at the top, insert the drift and screw the adjusting plug up to the swivel axle to give it maximum support. Position the swivel axle and anvil on the table of a press and apply even pressure to remove both bushes.

Fitting and broaching new bushes

(1) As the top and bottom bushes differ in internal diameter, it is necessary to fit and broach one bush at a time.
(2) Using the anvil of 18G154, place the smaller guide bush (Code 3) flange downwards into the adjusting plug, the replacer pad on top of the anvil (recess upwards) and hold the swivel axle in position for fitting the larger diameter bush. Carefully position the bush (lining up oil holes) and pass the drift through the bush, swivel axle and anvil until it locates in the large guide bush at the bottom of the anvil.

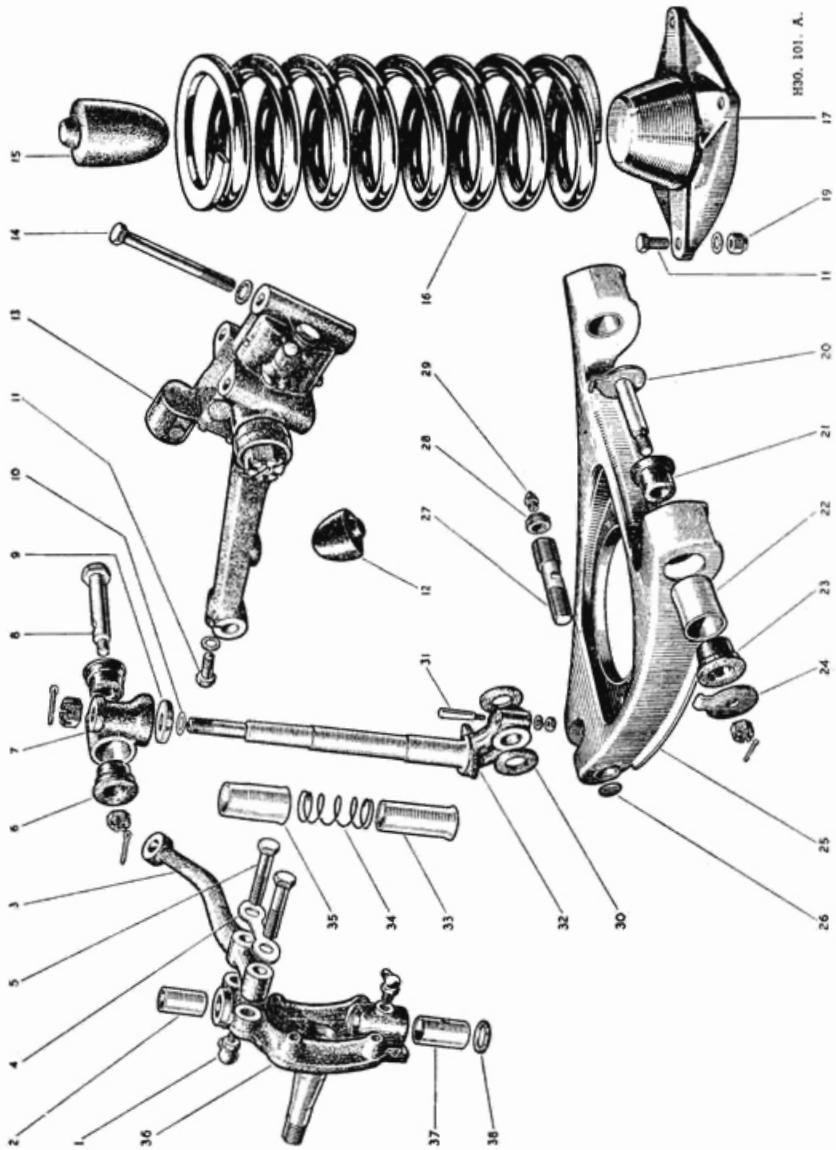

Fig. K.3.
Exploded view of the front suspension.

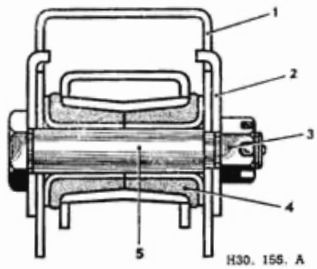

Fig. K.4.

Lower link mounting (inner end).

1. *Mounting bracket.*
2. *Special washer.*
3. *Castellated nut.*
4. *Rubber bush (bearing).*
5. *Fulcrum pin.*

NOTE.—The bushes have a lead ground off at one end to enable them to easily enter their housings.

Use a press to apply a steady pressure on the drift; the new bush will then be pressed squarely into position.

(3) This bush must now be broached; to do this, invert the swivel axle, position the larger bush support adaptor (Code 2) on the anvil of Tool 18G155 (see Para. (3) of **'Swivel pin'** in Section K.3) and hold the swivel axle in position so that the bush locates on the support adaptor. Insert the larger diameter broach through the small bush housing bore until it locates in the new bush. Now slide the smaller guide bush (Code 3) over the broach and position it in the small bush housing bore. Check alignment and correct positioning of components before broaching by the application of a steady pressure on top of the broach.

(4) The small bush must now be fitted using Tool 18G154. Place the smaller guide bush (Code 3) flange upwards, into the adjusting plug in the anvil and hold the swivel axle in position with the broached bush at the top. Place the new bush in position and pass the drift through the bushes and swivel axle. When it has been determined that the oil holes are in line apply a steady pressure to the drift, until the bush is in position.

(5) This bush must now be broached. With the small support adaptor (Code 4) in position on the anvil of 18G155 (see Para. (3) of **'Swivel pin'** in Section K.3) rest the swivel axle on the support adaptor with the bush to be broached lowermost.

Insert the smaller diameter broach from the top, so that it locates in the smaller diameter bush (at bottom), then pass the large guide bush (Code 1) over the broach until it locates in the larger diameter bush. Check that all components are in alignment and correctly positioned and press the broach through the bush.

Section K.4

REFITTING SUSPENSION

To reassemble

(1) File the lower link inner trunnion on both sides and see that the fulcrum pin is not tight in the threaded bushes or in the lower swivel pin trunnion.

(2) Position two new cork rings one on the inside of each lower link outer screwed bush. Cover each cork ring with a thin flexible metal disc to protect the cork rings from being damaged when the swivel pin is inserted. Now slide the swivel pin between the two metal discs with its cotter hole towards the lower link inner bushes, and draw the discs out by gripping with a pair of pliers.

(3) Screw the fulcrum pin in from the end of the lower link with the larger threaded bore, until its slot is in line with the cotter hole in the swivel pin; knock in the cotter pin and secure it with its nut and spring washer. If there is difficulty in knocking the cotter pin home, it is an indication that the slot and cotter hole are not properly lined up.

(4) Screw the threaded plug into the larger bore of the lower link outer bush and a lubricator into it. Put a welch plug in the other end and suitably punch its centre to firmly fix it. Test the leak-proof properties of this welch plug by pumping oil through the lubricator. If oil leaks through the welch plug remove it and fit a new one.

Key to Fig. K.3.

1. *Lubricator.*
2. *Swivel axle bush (top).*
3. *Steering side tube lever.*
4. *Lockwasher.*
5. *Setscrew.*
6. *Trunnion bush (bearing).*
7. *Trunnion link.*
8. *Trunnion fulcrum pin.*
9. *Oilite thrust washer.*
10. *Adjustment washer (shim).*
11. *Clamp bolt.*
12. *Rebound buffer.*
13. *Damper.*
14. *Setscrews.*
15. *Rubber buffer.*
16. *Coil spring.*
17. *Spring seat.*
18. *Bolts.*
19. *Simmonds nut.*
20. *Fulcrum pin.*
21. *Rubber bush (bearing).*
22. *Lower link bush (inner).*
23. *Rubber bush (bearing).*
24. *Special washer.*
25. *Lower link.*
26. *Welch plug.*
27. *Fulcrum pin (outer).*
28. *Screwed plug.*
29. *Lubricator.*
30. *Cork rings.*
31. *Cotter.*
32. *Swivel axle pin.*
33. *Dust excluder (bottom).*
34. *Spring.*
35. *Dust excluder (top).*
36. *Swivel axle.*
37. *Swivel axle bush (bottom).*
38. *Cork sealing ring.*

(5) Slip a new chamfered cork sealing ring over the swivel pin, chamfered end down, and smear the swivel pin with oil.

(6) Fit the two dust excluders and their spring, in the order in which they are shown in Fig. K.3, to the swivel axle.

(7) Screw the two nipples into the swivel axle so that they face the rear of the vehicle when the suspension is fitted.

(8) Slide the swivel axle on to the swivel pin and ensure that full lock is obtained on both sides. Place the phosphor bronze thrust washer over the swivel axle.

(9) Put an ·008 in. shim, ·008 in. (·2032 mm.) and ·012 in. (·3048 mm.) shims are supplied, on to the swivel pin, followed by the trunnion with its bore towards the hub when it is fitted. Tighten the castellated nut. Resistance should be just felt when the swivel axle is moved from lock to lock and there should be no vertical movement of the swivel axle. Increase the thickness of shims to loosen and remove to tighten, depending on whether there is too much or too little thrust.

(10) Now fit the back plate assembly to the swivel axle. The flexible brake hose is to the front and the bleeder nipple pointing upwards at the rear. The backplate is secured by four setscrews and shakeproof washers. Finally fit the hub, as detailed in Section K.6, and the brake drums.

To replace

(1) Wet the spring rebound bumper and push it into its hole in the bottom of the damper mounting plate and the damper arm rebound buffer in the top.

(2) Wet two of the large rubber bearings and put one from inside each lower link. Lift the two arms into position, insert the fulcrum pin from the inner end so that its washer registers, position the two remaining rubber bearings from outside the lower links, locate the special washer, tighten the castellated nuts, insert and turn back the split pins.

(3) With the block still under the damper arm proceed to connect the top end.

Insert the two small rubber bearings in the upper trunnion eye, tap the fulcrum pin from the rear to go through the bearings and damper arm, and see that the notch in the fulcrum pin is to the top. Tighten the castellated nut until the notch is in line with the clamp bolt hole in the damper arm, split pin the castellated nut and tighten the clamp bolt on to its shakeproof washer. Commencing with Chassis Numbers 14342 for R.H. and 14345 for L.H. steering vehicles, the shank of the clamp bolt was increased by $\frac{1}{8}$ in. (3·18 mm.) and the length of thread by $\frac{5}{32}$ in. (3·97 mm.). It is extremely important that the correct bolt is used for a particular arm.

(4) Replace the coil spring and wheel and lower the vehicle. The block can now be removed from under the damper arm. Connect the flexible brake hose and bleed the brakes.

Do not forget to check the castor and camber angles and swivel pin inclination. A wheel camber, castor and swivel pin inclination gauge should be used.

Section K.5

GEOMETRY

Description

The castor and camber angles and the swivel pin inclination are three design settings of the front suspension assembly. They have a very important bearing on the steering and general riding of the vehicle. Each of these settings is determined by the machining and assembly of the component parts during manufacture. They are not therefore adjustable.

However, should the vehicle suffer damage to the suspension, affecting these settings, the various angles must be verified to decide whether replacements are necessary.

Camber angle

This is the outward tilt of the wheel and a rough check can be made by measuring the distance from the outside wall of the tyre, immediately below the hub, to a plumb line hanging from the outside wall of the tyre above the hub. The distance must be the same on both wheels. Before making this test, it is very important to ensure that the tyres are in a uniform condition and at the same pressure; also that the vehicle is unladen and on level ground.

Damage to the damper arm and lower links may well affect the camber angle.

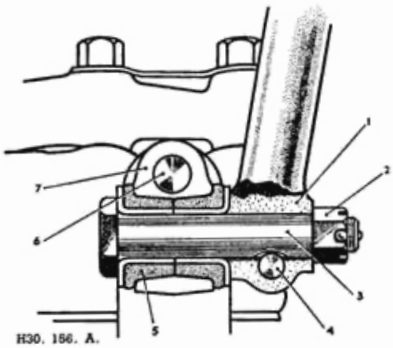

Fig. K.5.

Trunnion link/damper arm assembly.

1. *Damper arm.*
2. *Castellated nut.*
3. *Fulcrum pin.*
4. *Clamp bolt.*
5. *Rubber bush (bearing).*
6. *Swivel axle pin.*
7. *Trunnion link.*

Castor angle

This is the tilt of the swivel pin when viewed from the side of the car. This also is only likely to be affected by damage to the upper and lower links.

Swivel pin inclination

This is the tilt of the swivel pin when viewed from the front of the car and is only likely to be affected by damage to the lower links.

A useful service tool which can be used for checking these settings is a wheel camber, castor and swivel pin inclination gauge. With the vehicle standing on perfectly level ground this gauge will give readings enabling the castor, camber and swivel pin angles to be quickly checked.

Section K.6

HUBS

To check for wear

The inner and outer ball bearings of the front hub are non-adjustable, the amount of pre-load on the bearings being determined by a solid distance piece. Wear in the bearings can be checked by jacking up the front of the car until the wheel on the hub in question is clear of the ground. Remove the wheel cap and hub cap, and rock the wheel in a horizontal plane. Movement between the wheel and hub as one unit and the swivel axle nut at the centre of the hub indicates wear in the hub bearings. A positive movement shows the need for bearing renewal.

To remove and dismantle

Jack up the car, remove the wheel cap and wheel. Release the screw in the countersunk hole and draw off the brake drum.

Wipe away any excess grease, extract the split pin and release the castellated nut and washer. Employ extractor 18G146 to draw the complete hub assembly off the swivel axle.

Should the inner bearing remain on the swivel axle it should be carefully extracted. It is usually only the inner race of the inner bearing that is left behind and removal will be found easier if the backplate is first removed, and then Service Tool 18G8 with adaptor 18G8P employed.

With the hub removed, the outer bearing and distance piece can be taken out by inserting a drift through the inner bearing and carefully knocking the bearing clear of the hub. Similarly the inner bearing and oil seal can be detached by drifting them off from the other side of the hub.

Removal of the brake back plate is fully dealt with in Section M.

To assemble and replace

(1) When assembling the hub, press or drift in the outer bearing with the side marked 'thrust' towards the centre of the hub, using adaptor 18G134B with Service Tool 18G134.

(2) Turn the hub over, pack it with recommended grease, and place the distance piece in position with its domed end towards the outer bearing.

(3) As before press or drift in the inner bearing with the side marked 'thrust' towards the distance piece, using adaptor 18G134C with Service Tool 18G134. Then press in the oil seal with its lipped end towards the inner bearing. The oil seal should be renewed if it is damaged in any way. Commencing at Chassis Numbers 14342 for vehicles with R.H. steering and 14345 for those with L.H. steering, the depth of the hub oil seal seat was reduced from $\frac{3}{8}$ in. (9·53 mm.) to $\frac{12}{64}$ in. (7·54 mm.) and the oil seal from $\frac{3}{8}$ in. (9·53 mm.) to $\frac{5}{16}$ in. (7·94 mm.). It is important to fit the correct oil seal for a particular hub.

(4) Replace the hub on the swivel axle; place the drift (Service Tool 18G7) over the outer bearings so that the pressure is evenly distributed over the face of the bearing. Drift the hub into position until the inner race bears against the shoulder of the swivel axle. A good way of knowing when the hub is home is by listening for the change in tone when knocking the hub on. It is good policy

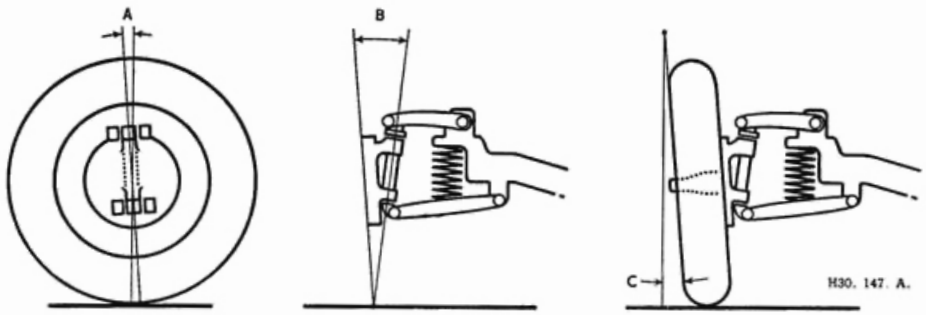

Fig. K.6.

A. Castor angle—3°. *B. Swivel pin inclination—6½°.* *C. Camber angle—1°.*

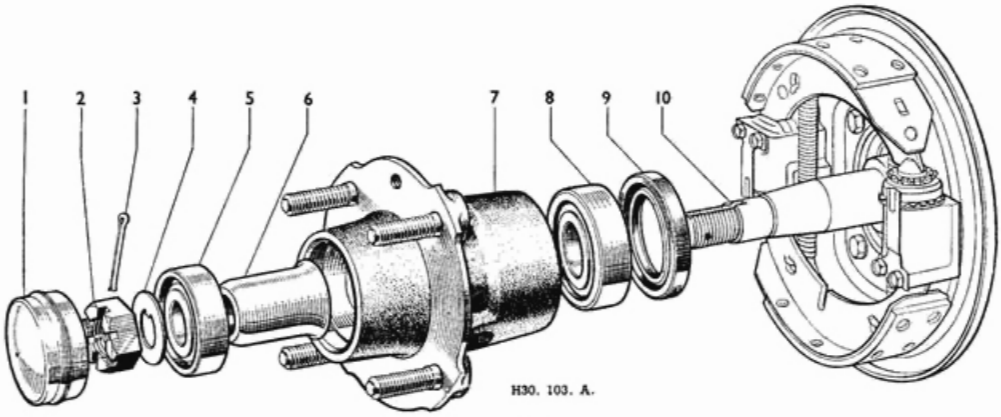

Fig. K.7.
Front hub assembly.

1. *Hub cap.*
2. *Castellated nut.*
3. *Split pin.*
4. *Locating washer.*
5. *Outer bearing.*
6. *Distance piece.*
10. *Locating slot.*
7. *Hub.*
8. *Inner bearing.*
9. *Oil seal.*

to place a pilot cap over the threaded end of the swivel axle to protect the thread and also to prevent the outer bearing inner race from striking the shoulder at the end of the threads.

(5) Place the pegged washer on the swivel axle so that its peg locates in the slot. Screw the castellated nut up to the flat washer.

(6) Put the brake drum on and tighten its securing screw in the countersunk hole. Tighten a pair of wheel nuts on diametrically opposite studs and see that the brake drum is quite free of the brake shoes.

(7) Tighten the castellated nut to a torque wrench reading of 50 to 55 lb. ft. (6·913 to 7·604 kg. m.). Line up the nearest slot in the nut with the hole in the swivel pin, insert the split pin and lock the nut.

(8) Charge the hub with grease, replace the hub cap and wipe off any grease that exudes through the hole at its centre. Replace the wheel, wheel nuts, lower the car, tighten the wheel nuts and position the wheel cap.

Section K.7

DAMPERS

For a general description and details of testing and topping-up dampers refer to Section H.10. See also Damper in Section K.3 for further information. A modified type of damper was fitted from Chassis Number 54827 and this type may be used in pairs for replacement.

To remove

Jack up the vehicle and place stands under the body in safe positions. Remove the road wheel and place a jack beneath the outer end of the lower wishbone arm and raise it until the damper arm is clear of its rebound rubber.

Remove the damper arm clamp bolt and its shakeproof washer. Withdraw the split pin and release the castellated nut on the fulcrum pin (see Fig. K.5). Withdraw the fulcrum pin and retrieve the trunnion link rubber bushes.

Once the three securing bolts and their shakeproof washers have been removed the damper may be taken from the vehicle.

NOTE.—The jack must be left in position under the suspension wishbone while the top link remains disconnected in order to keep the coil spring securely in position and to avoid straining the steering connections.

To replace

Replacement is a reversal of the above procedure, but attention must be given to the following points.

(1) The damper mounting bolts should not be tightened beyond a torque wrench loading of 30 lb. ft. (4·12 kg. m.). Overtightening beyond this point will be detrimental to the performance of the damper.

(2) Before fitting the upper trunnion fulcrum pin, work the damper arm three or four times through its full travel to expel any air which may have found its way into the operating chamber.

(3) The Metalastik fulcrum pin bushes must be renewed if softening of the rubber or side movement is evident.

Section K.8

FAULT DIAGNOSIS

Symptom	No.	Possible fault
(a) Wheel wobble	1	Unbalanced wheels and tyres
	2	Slack steering connections
	3	Incorrect steering geometry
	4	Excessive play in steering gear
	5	Loose damper mounting bolts
	6	Loose idler mounting or worn idler shaft
	7	Worn hub bearings
	8	Worn lower link bushes
(b) Wander		In (a), check 2, 3, 4, 5 and 8
	1	Front suspension and rear axle mounting points out of alignment
	2	Uneven tyre pressures
	3	Uneven tyre wear
	4	Weak damper or coil springs
(c) Heavy steering		In (a), check 3
	1	Excessively low tyre pressures
	2	Insufficient lubricant in steering box
	3	Insufficient idler lubrication
	4	'Dry' steering connections
	5	Out of track
	6	Incorrectly adjusted steering gear
	7	Misaligned steering column
(d) Tyre squeal		In (a), check 3 In (c), check 1

SERVICE TOOLS

18G7. Front Hub Outer Bearing Remover
Also used in replacing an A30 hub assembly.

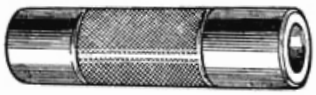

4346 F

18G7

TOOLS

18G8. Hub Assembly Remover (basic tool)
Internally threaded for attachment to the hub and the end of the centre screw provided with a hardened steel ball to reduce friction when engaging the stub axle. Provision is also made for the use of a tommy bar to prevent the tool turning in operation.

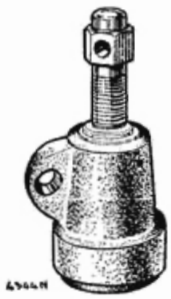

18G8

18G8P. Front Hub Bearing Inner Race Remover Adaptor
Used with hub remover 18G8: a peg and chain is included to retain the locking ring and half-ring when not in use.

18G8P

18G134. Bearing and Oil Seal Remover and Replacer (basic tool)

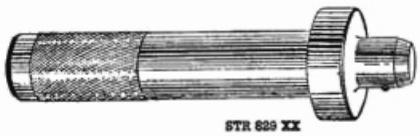

18G134

18G134B. Front Hub Outer Bearing Replacer Adaptor
For use with 18G134.

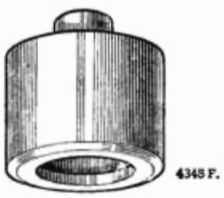

18G134B

SERVICE TOOLS

18G134C. Front Hub Inner Bearing Replacer Adaptor
For use with 18G134.

18G146. Front and Rear Hub Remover
The thrust pad supplied with the tool is for use only when removing rear hubs.

Four set screws are included for attaching the tool to the early A30 hub which had tapped holes in place of studs.

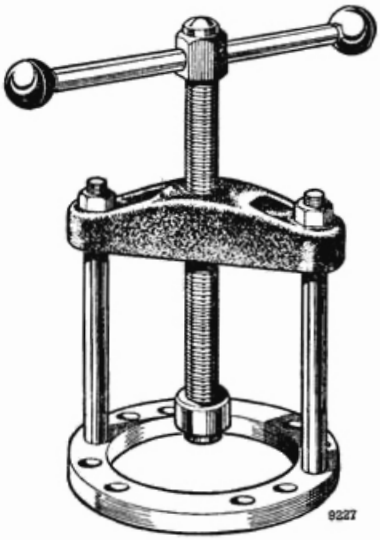

18G146

18G153. Front Suspension Spring Compressor
The spring compressor thrust pad is ball-mounted to assist in lining up the spring and spring seat.

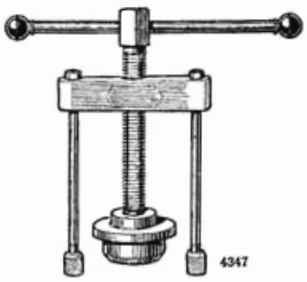

18G153

SERVICE TOOLS

18G154. Swivel Axle Bush Remover and Replacer

This tool enables the swivel axle bushes to be removed and fitted without the distortion which would occur if an improvised drift were used. The shoulder of the driver is recessed to prevent the split bushes from opening when being pressed into position. The tool is designed for use with a press.

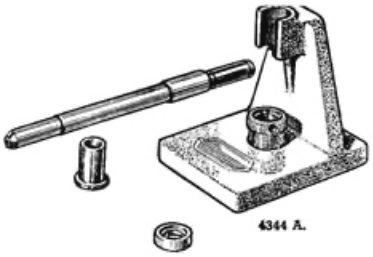

18G154

18G155. Swivel Axle Bush Broaching Equipment

Consisting of an anvil, two broaches, two guide bushes, and two support adaptors. They are for use with a light press, and will ensure highly finished bores. The worn bushes can be removed, and new bushes fitted with Tool No. 18G154.

(*Up to Car No.* 79638)

18G155

18G155A. Swivel Axle Bush Broach Guide

For use with 18G155.

(*From Car No.* 79639)

18G155A

18G253. Front Suspension Assembly Fixture

Designed to serve the dual purpose of accurately assembling a front suspension unit for fitting as a replacement to a vehicle and also as a means of checking a unit suspected of damage or misalignment.

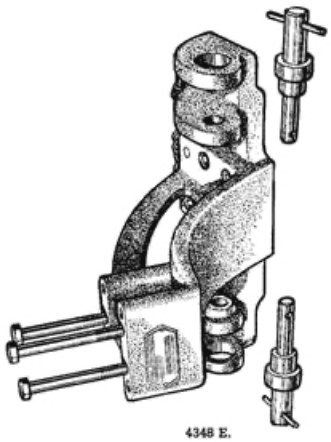

18G253

SERVICE TOOLS

18G260. Front Hub Outer Race Remover (basic tool)

The outer race of a front hub bearing often remains inside the hub when dismantling. This remover with the appropriate adaptor will ensure easy extraction from the hub.

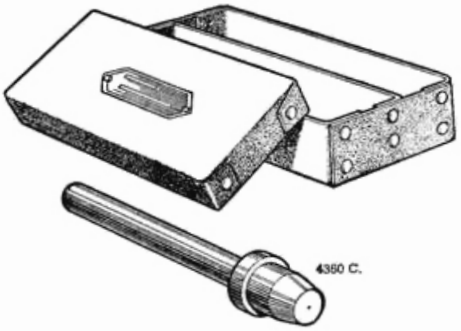

18G260

18G260A. Front Hub Outer Race Remover Adaptor

For use with 18G260 to remove the outer race of the outer bearing.

18G260A

18G260B. Front Hub Bearing Outer Race Remover Adaptor

For use with 18G260 to remove the outer race of the inner bearing.

SECTION L

THE HYDRAULIC DAMPERS

Double-acting hydraulic dampers are fitted at front and rear. All the working parts are submerged in oil and no adjustment is required or provided for. The dampers are set before despatch with special equipment and any attempt to dismantle the piston assembly will seriously affect the performance of the damper.

A faulty damper should be returned to the makers for attention.

For details of testing, maintenance, removal and replacement refer to Sections H.10 (rear) and K.7 (front).

SECTION M

THE BRAKING SYSTEM

	Section
General description	
Bleeding the hydraulic system	M.4
Brake-shoe adjustments	M.2
Front brakes	M.6
Hand brake	M.3
Maintenance	M.1
Master cylinder	M.5
Rear brakes	M.7
Rear cylinder	M.8
Relining	M.9
Removing the flexible hose	M.10

GENERAL DESCRIPTION

The Lockheed braking system employs hydraulically operated two leading shoes at the front and mechanically operated shoes at the rear, the mechanical linkage being actuated by means of a hydraulic cylinder and stirrup mounted under the body. A pull-up type handbrake operates directly on the mechanical linkage to the rear wheels.

The system consists of a $\frac{7}{8}$-in. (2·22 cm.) integral tank type master cylinder, two single-ended wheel cylinders on each front back plate and an expander on each rear back plate. Tubing and flexible hoses connect the master cylinder to the front wheel cylinders and to a $\frac{9}{16}$-in. (1·4288 cm.) rear cylinder, the latter unit being used to operate the rear brakes.

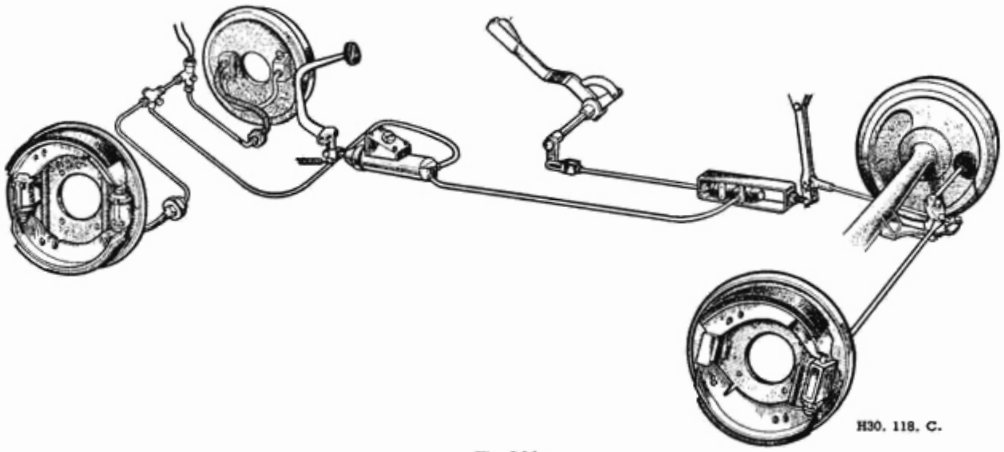

Fig. M.1.
The general layout of the braking system.

Section M.1

MAINTENANCE

The fluid level in the reservoir should be regularly checked and topped up. To gain access to the reservoir, pull back the carpet from under the foot controls to reveal a metal cover plate. Release the fixing screw, lift off the cover, unscrew the metal cap and fill with genuine Lockheed Brake Fluid (if this is not available a fluid conforming to S.A.E. Spec. 70R3 must be used) to $\frac{1}{2}$-in. (1·27 cm.) below the filler opening.

Adjust the brake-shoes to compensate for wear of the linings. The need for this is shown by the pedal going down almost to the floorboards before solid resistance is felt. For adjustments see Section M.2.

Section M.2

BRAKE-SHOE ADJUSTMENTS

As the brake linings wear, the foot pedal will travel nearer to the floorboards before the brakes come into operation. When the travel becomes excessive the brake-shoes must be adjusted to bring the linings closer to the brake-drum.

Front

Apply the handbrake and jack up one front wheel until it is free to revolve. Spin the wheel in a forward direction and apply the foot brake firmly to centralise the shoes in the drum. Remove the hub cover and align the hole in the wheel and the brake drum with the clicker wheel on one wheel cylinder. Insert a screwdriver or suitable lever and turn the clicker wheel in a clockwise direction, relative to the wheel cylinder until the brake shoe bears hard against the drum. Back off the adjustment the least possible amount (usually two or three clicks) until the wheel is free to revolve. Repeat this operation on the other wheel cylinder. Replace the wheel cap. Similarly adjust the brakes of the other front wheel. Check brake adjustment every 1,000 miles (1600 km.).

One adjustment hole has been deleted in each brake drum commencing at Chassis No. 40979. Therefore when adjusting the brakes the wheel must be rotated for access to each adjuster in turn.

Rear

Place chocks under the front wheels, release the handbrake and jack up one rear wheel until it is free to revolve.

Remove the hub cover and turn the single adjuster as described for the front brakes until the drum is locked. Back off the adjustment the least possible amount until the wheel can be revolved (the amount of backing off may be slightly more than was required for the front brakes). Replace the wheel cap and similarly adjust the opposite rear wheel. Check the brake adjustment at least every 1,000 miles (1600 km.).

Adjustment of the brake-shoes in the manner indicated also adjusts the handbrake automatically, and no separate adjustment is required or permitted.

Section M.3

HANDBRAKE

Dismantling

Remove the nut and washer from the rear end of the handbrake pull-rod, this in turn detaches the stirrup. Remove the stronger spring fitted between a hole in the rear of the lower flange and a hole in the front end of the sliding link. Also remove the weaker spring fitted between the handbrake operating lever at the inner end of the shaft and the pressed out vee in the top flange of the bracket. Disconnect the sliding link on the handbrake rod by removing the split pin, flat washer, and joint pin. From inside the car locate and release the countersunk screw in the top of the outer support flange; also release the outer support flange setscrews from beneath the car. Release, but do not remove, the nuts and bolts which secure the bush flanges to the inner bracket. When assembling ensure that the bracket on the inner end of the cross-shaft is fitted so that its flange, with the weld nuts (on the lower face of the bracket top flange) is towards the steering column side of the car. Its flanges and bush, together with the bracket, should be assembled as one unit with the bolts not tightened.

Remove the setscrew and washer securing the rear end of the quadrant to its bracket accessible from the inside of the car. The front end is similarly released from beneath the car. On assembly the riveted stop peg in the quadrant should face the door. The quadrant can now be removed from the slit in the pull-up lever.

Remove the setscrews, with their spring washers, passing through the support flange, bush flange, quadrant bracket and into the body. The pull-up lever can now be removed through the accommodating hole in the floor. Remove the quadrant support bracket and phosphor bronze bush. Remove also the felt washer from between the support bracket on the cross-shaft and the pull-up lever. This felt washer will have to be cut before re-assembly. All parts should now be thoroughly cleaned and renewed if necessary before assembly. The reverse procedure is required to reassemble the above.

During assembly, when the stirrup is fitted to the frame cylinder it will be found necessary to adjust the linkage. Carry out this adjustment from the stirrup, by manipulating the length of the pull-rods to take all slackness out of the linkage, without operating the rear brake expander pull-rods. Ensure that the adjustment is not taken too far, thus preventing any drag in the rear brakes. There must be a clearance of $\frac{1}{16}$ in. (1·5875 mm.) in the handbrake sliding link.

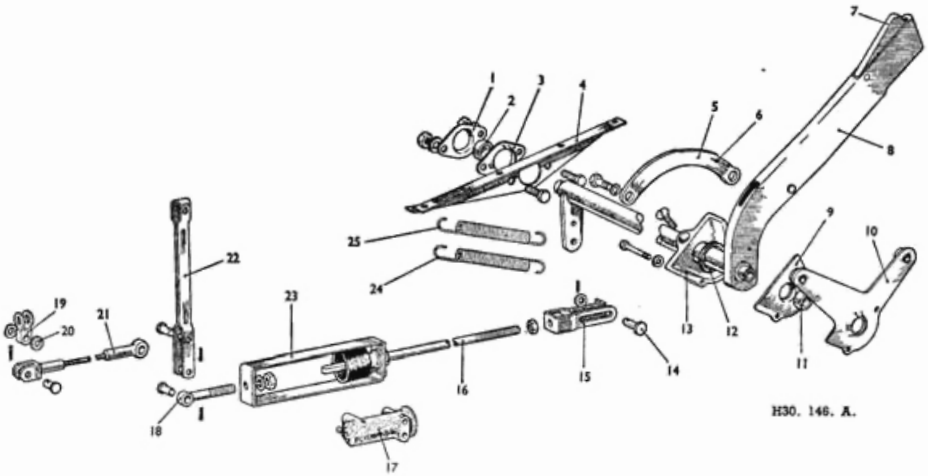

Fig. M.2
The handbrake assembly.

1. *Flange for spherical bush.*
2. *Spherical bush.*
3. *Flange for spherical bush.*
4. *Cross-shaft support bracket.*
5. *Quadrant.*
6. *Stop peg.*
7. *Trigger.*
8. *Handbrake lever.*
9. *Outer bush flange.*
10. *Quadrant bracket.*
11. *Spherical bush.*
12. *Felt washer.*
13. *Support flange.*
14. *Sliding link joint pin.*
15. *Sliding link.*
16. *Handbrake rod.*
17. *Rear cylinder body.*
18. *Eye-rod for stirrup.*
19. *Link to balance lever.*
20. *Felt washers.*
21. *Rear brake calbe.*
22. *Rear brake link.*
23. *Stirrup.*
24. *Rod pull-off srping.*
25. *Lever pull-off spring.*

Section M.4

BLEEDING THE HYDRAULIC SYSTEM
(Expelling Air)

Bleeding the braking system is not a routine main-

tenance job and should only be necessary when some portion of the hydraulic equipment has been disconnected or the fluid level allowed to fall so low that air has entered the system through the master cylinder.

Fill the fluid reservoir with Lockheed Genuine Brake Fluid (or if not available, with fluid to Specification S.A.E. 70.R3) and keep it at least half-full throughout the bleeding operation, otherwise air will be drawn into the system, necessitating a fresh start.

Attach the bleeder tube to the wheel cylinder bleeder screw and immerse the free end of the tube in a clean jar containing a little brake fluid.

Open the bleed nipple one full turn. Depress the brake pedal slowly and allow it to return without assistance. Repeat this pumping action with a slight pause before each depression of the pedal. When the fluid entering the jar is completely free of air bubbles hold the pedal firmly against the floorboards and tighten the bleeder screw.

Repeat this procedure at the other front wheel and at the rear cylinder. Always keep a careful check on the reservoir fluid level. Should air enter the system because the fluid level has been allowed to fall too low, the system will have to be completely re-bled.

After bleeding top up the fluid reservoir to its correct level.

NOTE.—Clean fluid bled from the system must be allowed to stand until it is clear of air bubbles (approximately 24 hours) before it is used again. Dirty fluid must be discarded.

Section M.5

MASTER CYLINDER

The master cylinder (Fig. M.3) consists of a body (5) which is bored to receive a piston (16). This piston carries a main cup (11) and a secondary cup (15); adhesion of the main cup to the piston is prevented by a piston washer (13) which is fitted between the two parts. A return spring (9) carrying a spring retainer (12) is interposed between the main cup and a combined inlet and outlet valve. This valve communicates with two tapped connections (3 and 4) at the end of the bore. The inlet and outlet valve consists of a valve body (7) containing a valve cup (8) and valve washer (6) on to which the valve body is pressed by the spring (9). Retention of the whole assembly in the bore is effected by a valve stop and a push rod (18) which is in turn held by a circlip (17). Dirt and moisture is prevented from entering the unit by a rubber boot (19) which is fitted to the push rod and master cylinder body. It is held in position by clips (22 and 23). The fluid reservoir is fitted with a cover plate (24) to which a thread plate, carrying a filler cap (25) and rubber pad (26), is welded.

Directly in front of the main cup (11) when the system is at rest, is a by-pass port (10) which ensures that the system is always maintained full of fluid; it also allows full compensation for expansion and contraction of the fluid due to temperature changes. Furthermore, it serves to release additional fluid drawn into the cylinder from the annular space formed by the reduced skirt of

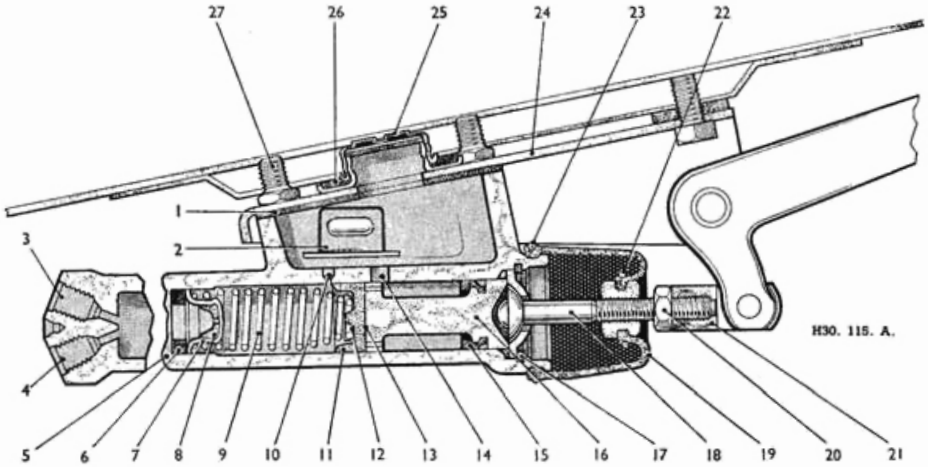

Fig. M.3.
The master cylinder.

1. *Gasket.*
2. *Baffle plate.*
3. *Pressure pipe to rear cylinder.*
4. *Pressure pipe to front wheels.*
5. *Body.*
6. *Valve washer.*
7. *Valve body.*
8. *Valve cup.*
9. *Return spring.*
10. *By-pass port.*
11. *Main cup.*
12. *Spring retainer.*
13. *Piston washer.*
14. *Supply port.*
15. *Secondary cup.*
16. *Piston.*
17. *Circlip.*
18. *Push rod.*
19. *Rubber boot.*
20. *Locknut.*
21. *Master cylinder fork.*
22. *Boot retaining clip (small).*
23. *Boot retaining clip (large).*
24. *Cover plate.*
25. *Filler cap.*
26. *Rubber pad.*
27. *Fixing studs.*

wheel (10) and a dust cover (11). On later models a dust-sealing ring is fitted under the dust cover. The toe, i.e. the more sharply tapered end of each shoe, enters the slot of the adjusting screws, whilst the heel finds a floating anchor in the slot at the closed end of the opposite wheel cylinder. Two pull-off springs (12) are fitted to retain the brake shoes on the backplate.

Wheel Cylinders and Shoes

Removal

Jack up the vehicle and remove the wheel, back off all adjustment and take off the brake drum. Pull one of the brake shoes (2) against the load of the pull-off springs (12), disengage the shoe from the slots in the adjuster screw (4) and the other wheel cylinder; the opposite shoe will fall away on releasing the tension of the pull-off springs. Remove the flexible hose (5). This is accomplished by detaching the flexible hose from the brake pressure piping and flitchplate; then unscrew the flexible hose from the cylinder. Also detach the bridge pipe (6) from the wheel cylinders (3), unscrew the fixing bolts, collect the washers and withdraw the wheel cylinders from the backplate.

Refitting

Offer up the wheel cylinders to the back plate and secure with the washers and fixing bolts. Attach the pull-off springs to the brake shoes and offer up the shoes to the backplate, engage the shoes in the slots of the adjuster screw and the opposed wheel cylinder. It is important that the pull-off springs be in the position shown in Fig. M.5 (behind the brake shoes). Refit the hose and the bridge pipe.

Wheel Cylinders

Each front wheel cylinder (Fig. M.4) consists of a body (6) formed with a blind bore to accommodate a piston (3) which carries a serrated dust cover (2), a dust sealing ring, and a toothed clicker wheel (1). The piston is grooved to admit a taper seal (7), and is formed with a tapped bore into which an adjusting screw (9) is threaded. A clicker spring (4) is attached to the body by two screws (5) and engages with the serrated dust cover to lock the adjustment in any desired position.

Dismantling

Detach the screws, collect the clicker spring and withdraw the piston, complete with adjusting screw, clicker wheel, dust cover and sealing ring; remove the adjusting screw from the piston, The dust cover and clicker wheel cannot be removed as the piston is peened over on to them. Ease the seal out of its groove in the piston.

Assembling

Ease the seal into its groove in the piston, ensuring that the larger diameter is towards the plain end and screw the adjusting screw in, fully. Insert the piston assembly into its bore, taking care not to turn back or nip the seal. Secure the clicker spring to the body with screws.

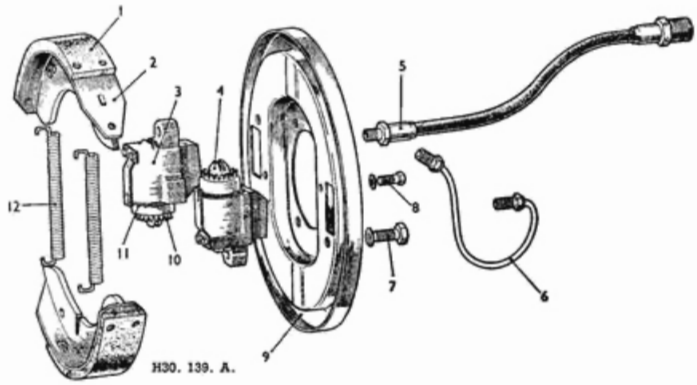

Fig. M.5.
A left-hand front brake assembly.

1. *Brake lining.*
2. *Brake shoe.*
3. *Wheel cylinder.*
4. *Slotted adjusting screw.*
5. *Flexible brake hose.*
6. *Cylinder interconnecting bridge pipe.*
7. *Cylinder fixing bolt (large).*
8. *Cylinder fixing bolt (small).*
9. *Backplate.*
10. *Clicker wheel.*
11. *Dust cover.*
12. *Pull-off springs.*

Section M.7

REAR BRAKES

The rear brake assembly (Fig. M.6) consists of a backplate (9) which carries an expander (12) to operate the brake shoes, a floating anchor being provided by an abutment pad (10) welded to the backplate. This expander is free to slide in projections formed on the backplate; it carries a lever, which is operated through pull rods and an adjuster wheel (4). An abutment for the toe of one of the brake shoes (2) is provided by a

the piston (16), through the small holes in the piston, after each brake application. Were this additional fluid not released to the reservoir through the by-pass port, due either to the hole being covered by the main cup as a result of incorrect pedal adjustment, or to the hole being blocked with foreign matter, pressure will build up in the system and all brakes will drag.

The function of the inlet and outlet valve is to prevent fluid pumped into the 'line' during the bleeding operation returning to the master cylinder. It is thus ensured that a fresh charge of fluid is delivered at each stroke of the brake pedal and that the air in the system is completely purged.

During normal operation, fluid returning under pressure assisted by the effort of the brake shoe pull-off springs, lifts the valve body (7) off the valve washer (6), thus permitting fluid to return to the master cylinder and the brake shoes to the 'off' position.

Removal

Disconnect the pressure pipes from connections (3 and 4), screw off the pedal pad, release the fixing nuts and remove the master cylinder assembly from the body. The brake pedal can now be easily detached.

Dismantling

Remove the studs and cover plate (24) drain the fluid into a clean container and disconnect the baffle plate (2) from the retaining lugs in the fluid reservoir. Prise away the outer and inner clips, ease the boot from the master cylinder body and push-rod (18), push the push-rod into the bore to relieve the load on the circlip (17) and take it (circlip) out of its groove.

Withdraw the push-rod assembly and the piston (16) and tip out the piston washer (13). Seal both fluid connections and expel the main rubber cup (11) from the body by applying a light air pressure at port (10). Shake out the return spring (9), the spring retainer (12), valve body (7) and withdraw the valve washer (6). A hooked brass rod will facilitate the removal of the valve washer. Only use the fingers to remove the valve cup (8) from the valve body (7) and the secondary cup (15) from the piston.

Reassembling

Clean all parts thoroughly, using Lockheed Genuine Brake Fluid for all rubber components. All traces of petrol (gasoline) or trichlor-ethylene used for cleaning the metal parts must be removed before assembly.

Examine all rubber parts for damage or distortion. It is usually advisable to renew the rubbers when rebuilding the cylinder. Dip all the internal parts in brake fluid and assemble them wet.

The operator is advised to follow Fig. M.3 to ensure correct assembly. Fit the valve cup (8) into the valve body (7) and the secondary cup (15) into the piston (16). Ease the valve washer (6) into the bore until it is arrested at the closed end. Insert the valve body (7) into one end of the spring (9) and the spring retainer (12) over the other end. Guide the spring into the bore with the valve body leading; follow it up with the main cup (11) lip leading, care being taken not to turn back or damage the lip in any way. Insert the piston washer (6) correctly with its curved edges towards the cup, and follow it up with the piston (16) drilled face leading. Locate the push rod (18) and the piston stop in the counterbore and fit the circlip (17). Ease the boot (19) over the master cylinder body and the push rod, and push on the clips. Spring the baffle plate (2) into position in the fluid reservoir so that it is retained by the lugs. Fill the reservoir with clean Lockheed Brake Fluid. Fix the cover plate to the master cylinder by using the four studs.

Test the master cylinder by pushing the push-rod and piston inwards, allowing them to return unassisted; after a few applications, fluid should flow from the outlet connections (3 and 4).

Refitting

Connect the brake pedal to the cylinder assembly, locate the rubber pad (26) on the cover, guide the brake pedal into position and offer up the master cylinder to the body floor. Let the studs protrude through the locating holes and tighten up the fixing nuts. Refit the pedal pad to the brake pedal and connect the pressure pipes to the outlet connections (3 and 4).

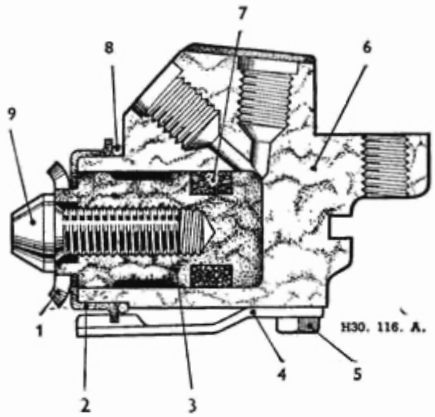

Fig. M.4.
A front wheel cylinder.

1. *Clicker wheel.*
2. *Dust cover.*
3. *Piston.*
4. *Clicker spring.*
5. *Screws.*
6. *Body.*
7. *Taper seal.*
8. *Dust sealing ring.*
9. *Slotted adjusting screw.*

Section M.6

FRONT BRAKES

The front brake (Fig. M.5) assembly is carried on a backplate (9) to which two diametrically opposed single-ended wheel cylinders (3) are rigidly attached. Each cylinder carries a clicker spring and contains a piston which mounts a slotted adjusting screw (4), a clicker

slot in the lever, while the heel of the other brake shoe is located in the slotted adjusting screw (3). Thus pull-off springs (13 and 14) retain the expander and the shoes on the backplate, the spring (14) being carried in a spring guide (11).

Expander and Shoes

Removal

Jack up the car and remove the wheel, back off all adjustment and detach the brake drum. Pull one shoe against the load of the pull-off spring, then disengage the shoe from the expander and the abutment pad. On releasing the tension of the pull-off springs the other shoe will fall away. Tap the pin (8) out of the pull-rod (6) and lever, then withdraw the expander from the backplate.

Refitting

Locate the expander, clicker spring facing inwards, in the projections formed on the backplate, fit the pin in the pull rod and the lever. Connect the pull-off springs to the brake shoes, ensuring that the toe, i.e. the more sharply tapered end, of each shoe, faces the heel of the other. Offer up the shoes to the backplate and engage the shoes within the slots in the lever (1, Fig. M.7,) the adjusting screw (11) and the abutment pad (10, Fig. M.6).

Note particularly, that the toe of one shoe enters the lever (1, Fig. M.7,) while the heel of the other engages the slotted adjusting screw. Ensure that the pull-off springs are in the position shown in Fig. M.6 (behind the brake shoes) with the pull-off spring (14) located within the spring guide and the coil formation of the spring (13) facing inward.

Brake Expander

The rear brake expander (Fig. M.7) consists of a body (8) housing two levers (6) which pivot on a pin (7) and are linked to an inner lever (1) by a pin (10); a pull rod (3) operates the levers (6) through a pin (2). It will be seen, therefore, that placing a load on the pull-rod (3) will cause the lever (1) to move outwards. An adjuster wheel (12), which carries an adjuster screw (11) is housed at the other end of the expander body and a clicker spring is riveted to the side of the body to engage in the adjuster wheel, thus locking the adjustment in any desired position. A rubber boot (4) is fitted to the pull rod and a dust cover (5) to prevent the ingress of dirt and moisture.

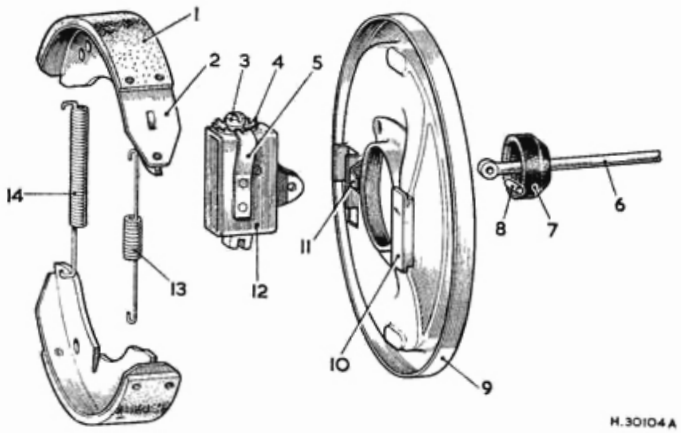

Fig. M.6.
A left-hand rear brake assembly.

1. *Brake lining.*
2. *Brake shoe.*
3. *Slotted adjusting screw.*
4. *Adjuster wheel.*
5. *Clicker spring.*
6. *Pull-rod.*
7. *Rubber boot.*
8. *Pin.*
9. *Backplate.*
10. *Abutment pad.*
11. *Spring guide.*
12. *Expander unit.*
13. *Pull-off spring (short coil).*
14. *Pull-off spring (long coil).*

Dismantling

Tap out the pin (7) and withdraw the outer (6) and inner (1) levers from the body. The inner lever will

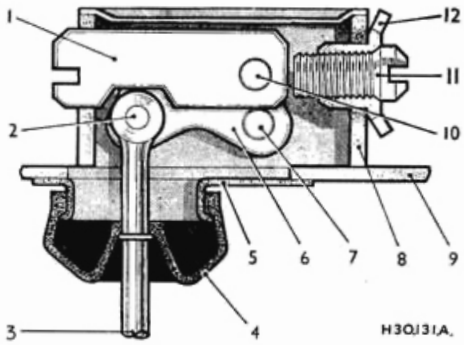

Fig. M.7. Rear brake expander unit.

1. *Inner lever.*
2. *Pull-rod pin.*
3. *Pull-rod.*
4. *Rubber boot.*
5. *Dust cover.*
6. *Outer levers.*
7. *Pin, lever to body.*
8. *Expander body.*
9. *Backplate.*
10. *Inner and outer lever securing pin.*
11. *Slotted adjuster screw.*
12. *Adjuster wheel.*

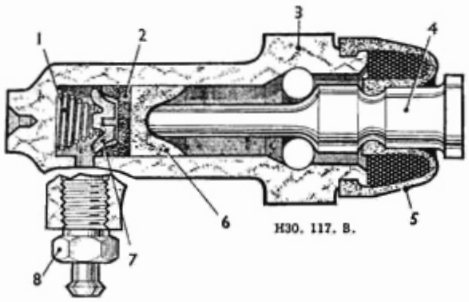

Fig. M.8.
Rear cylinder in section.

1. *Expander spring.*
2. *Rubber cup.*
3. *Cylinder body.*
4. *Push rod.*
5. *Rubber boot.*
6. *Piston.*
7. *Cup expander.*
8. *Bleeder screw.*

require a little manipulation before withdrawal can be effected. Spring back the clicker spring and withdraw the adjuster screw and adjuster wheel. Take off the screw from the adjuster wheel.

Assembling

Smear the internal parts with Lockheed Expander Lubricant. Assemble the outer (6) and inner (1) levers on the bench, using the pin (10) to secure the parts. Insert the assembly into the body and fit the pin (7). Thread the adjuster screw (11) fully into the adjuster wheel, spring back the clicker spring, and insert both parts into the body.

Section M.8

REAR CYLINDER

The rear cylinder (Fig. M.8) is rigidly fixed to a bracket on the underside of the body. Its push rod (4) is firmly fixed to the stirrup, so that when the foot pedal is pressed fluid pressure is transmitted through the push rod and stirrup to the rear brake rods to operate the rear brakes mechanically. For handbrake operation, however, the handbrake pull rod acts directly on the stirrup, thus allowing the rear brakes to be applied independently.

The rear cylinder itself consists of a body (3) with bleeder screw and pipe connections. It is bored to admit a push rod which abuts a piston (6) and is tapped to receive the handbrake pull rod. A rubber cup (2) housing a cup expander (7) is loaded on to the piston by a spring (1). The ingress of dirt and moisture to the unit is prevented by a rubber boot (5) which is secured to the push rod and the body.

Dismantling

Disconnect the rear cylinder unit from the body bracket and from the stirrup and linkage, then unscrew the brake fluid pipe connection. Release the boot (5) from the rear cylinder body and withdraw it with the push rod (4); roll the boot off the push rod. Apply a light air pressure to the brake fluid pipe connection to expel the piston (6), the cup (2) and cup expander (7); tip out the spring.

Assembling

Insert the spring (1), larger end leading into the bore and follow it up with the cup expander (7) and cup (lip leading). Take care not to turn back or damage the lip of the cup. Insert the piston (6), flat face leading. Fit the smaller end of the boot (5) into its groove in in the push rod (4), insert the stem of the push rod into the bore, and fit the larger end of the boot to the cylinder body. When the fixing bolts are passed through the body it may be necessary to pull the push rod back a little to provide clear passage for the bolts. Refit the rear cylinder.

Stirrup Adjustments

When the stirrup is fitted to the frame cylinder it will be found necessary to adjust the linkage. Carry out this adjustment from the stirrup, by manipulating the length of the pull-rods to take all slackness out of the linkage, without operating the rear brake expander pull-rods. Ensure that the adjustment is not taken too far, thus preventing any drag in the rear brakes. Remember that there must be a clearance of $\frac{1}{16}$-in. (1·5875 mm.) in the handbrake sliding link.

Section M.9

RELINING

If it becomes necessary to renew the full set of brake linings due to excessive wear it is essential that the material used for relining be the same as originally specified or of an approved alternative, otherwise the present front to rear brake balance will be adversely affected.

Under no circumstances can linings of varying manu-

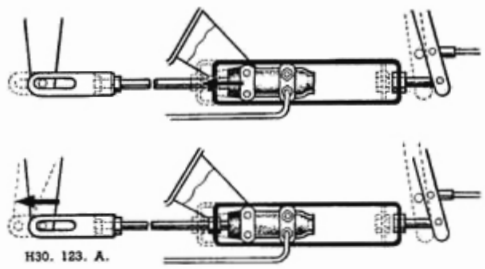

Fig. M.9.

Top: When the brake pedal is depressed hydraulic pressure causes the push rod to move the stirrup forward and thus operate the brakes.

Bottom: The handbrake operates directly on the stirrup as shown.

facture, type, or characteristic be tolerated at the different braking stations.

Any divergence from these stipulations may give rise to serious consequences due to out-of-balance braking.

For information as to approved lining materials refer to **'GENERAL DATA'.**

Do not reline the brake-shoes with different types of lining.

Owing to the need for the brake linings to be perfectly concentric with the brake-drums, special precautions must be taken when relining the shoes. It is not recommended that relining be undertaken unless all the specialist facilities are available. We advise the use of replacement shoes obtainable through our special Repair Service. Renewal should be carried out in axle sets to ensure even braking conditions.

After riveting the new linings to the brake shoes it is essential that any high-spots should be removed before replacement on the backplate.

When new linings are fitted considerable adjustment must be made to the foot brake mechanism; turn the adjusters to their fully 'off' position before attempting to refit the brake-drums over the new linings. The hand brake must also be in the fully released position.

Do not allow grease or paint to come into contact with the brake linings.

Do not clean the rubber parts with anything other than Lockheed Brake Fluid. All traces of petrol (gasoline), etc., used for cleaning metal parts must be removed before reassembly.

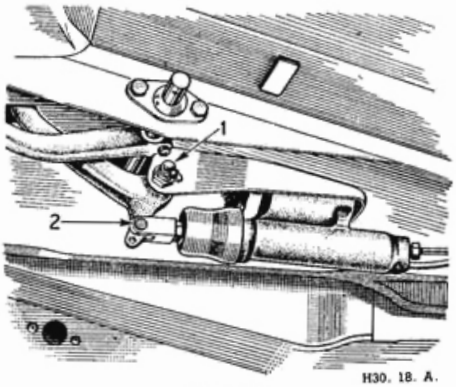

Fig. M.10.
Brake pedal lever lubrication points.

1. *Lubricator.* 2. *Joint pin.*

Section M.10

REMOVING THE FLEXIBLE HOSE

Do not attempt to release a flexible hose by turning either end with a spanner; it should be removed as follows:

Unscrew the metal pipe line union nut from its connection to the hose.

Hold the hexagon on the flexible hose and remove the locknut securing the flexible hose union to the bracket.

Unscrew the flexible hose from the cylinder.

SECTION N

THE ELECTRICAL SYSTEM

	Section
General description	
Battery	
Dry charged, preparation for service	N.2
Maintenance	N.1
New, unfilled, uncharged, preparation for service	N.3
Control box	N.6
Dynamo	N.4
Faults, location and remedy	N.8
Flashing direction indicator lamps	N.13
Flashing direction indicators	N.14
Fuel gauge	N.15
Fuses	N.7
Headlamps	N.17
Horn	N.11
Horn push	N.10
Ignition and warning light	N.16
Number plate lamp	N.22
Panel lamps	N.23
Sealed beam light units	N.18
Sealed beam light units, modified	N.19
Sidelamps	N.20
Starter	N.5
Tail/Stop lamps	N.21
Trafficators	N.12
Windshield wiper	N.9

GENERAL DESCRIPTION

The 12-volt electrical equipment incorporates compensated voltage control for the charging circuit. The positive earth system of wiring is employed.

Battery details may be found in **'GENERAL DATA'**

The dynamo is mounted on the right of the cylinder block and driven by an endless belt from the crankshaft pulley. A rotatable mounting enables the belt tension to be adjusted.

The voltage control unit adjustment is sealed and should not normally require attention. The fuses are carried in external holders mounted in an accessible position on the right hand side of thee ngine compartment together with spare fuses.

The starter motor is mounted on the flywheel housing on the right hand side of the engine unit and operates on the flywheel through the usual sliding pinion device.

The headlamps employ the double filament dipping system. Both lamps are fitted with double filament bulbs, both dipping according to the regulations existing in the countries concerned.

Section N.1

BATTERY MAINTENANCE

The battery is a 12 volt lead acid type, having six cells, each cell consisting of a group of positive and negative plates immersed in a solution of sulphuric acid (electrolyte).

The purpose of the battery is to provide a constant supply of current to the electrical equipment under normal operating conditions and when the consumption of the electrical equipment exceeds the output of the dynamo.

Adjustments in the vehicle

The purpose of the following operations is to maintain the performance of the battery at its maximum.

The battery and its surrounding parts should be kept dry and clean, particularly the tops of the cells, as any dampness could cause a leakage between the securing strap and the battery negative terminal, resulting in a partially discharged battery. Clean off any corrosion from the battery bolts, strap and tray with dilute ammonia, afterwards painting the affected parts with anti-sulphuric paint.

Remove the vent plugs and check that they are not perished or cracked, otherwise leakage of electrolyte will occur. Clean out the vent holes if necessary with a piece of wire.

The electrolyte levels should be maintained just above the tops of the separators by adding distilled water. Never add acid.

Check the terminal posts. If they are corroded remove the cables and clean with dilute ammonia. Smear the posts with petroleum jelly before remaking the connections and ensure that the cable terminal screws are secure.

Test the condition of the battery cells by using a hydrometer.

The specific gravity readings and their indications are as follow:

For climates below 90° *F.* (32° *C.*)	
Cell fully charged	1·270 to 1·290
Cell about half charged	1·190 to 1·210
Cell completely discharged ..	1·110 to 1·130
For climates above 90° *F.* (32° *C.*)	
Cell fully charged	1·210 to 1·230
Cell about half charged	1·130 to 1·150
Cell completely discharged ..	1·050 to 1·070

These figures are given assuming an electrolyte temperature of 60° F. (15·5° C.). If the temperature of the electrolyte exceeds this, ·002 must be added to hydrometer readings for each 5° F. rise to give the true specific gravity. Similarly, ·002 must be subtracted from hydrometer readings for every 5° F. below 60° F.

The readings of all the cells should be approximately the same. If one cell gives a reading very different from the rest, it may be that the electrolyte has been spilled or has leaked from the cell or there may be an internal fault. In this case it is advisable to have the battery examined by a specialist. Should a battery be in a low state of charge, it should be recharged by taking the car for a long daytime run or by charging from an external source of D.C. supply at a current rate of 3·5 amps. until the cells are gassing freely.

Removal

Disconnect both cables from the battery.

Release the battery clamp and lift out the battery.

Viewing

Place the battery on a lead covered bench or on a

MC. 25. A.

Fig. N.1.
Using a hydrometer to test the specific gravity of the battery acid.

wooden bench treated with anti-sulphuric paint and check the electrolyte levels.

Inspect the container for cracks, which may be indicated by external corrosion or extreme variation in the electrolyte levels. A cracked container must be renewed.

Test the condition of the battery cells by using a hydrometer. All readings should be uniform. The hydrometer values given indicate the state of charge of the battery.

If the electrolyte level is below the tops of the separators, it will not be possible to withdraw a sufficient amount to raise the hydrometer float. In such circumstances a high rate discharge tester should be used.

NOTE.—The use of a discharge tester is not recommended for normal testing, but only where a hydrometer reading cannot be obtained due to an excessively low electrolyte level.

Recharging from an external source

The length of time for a used battery to remain on charge before it can be accepted as fully charged depends entirely on the specific gravity before charging commences and the charging rate. The charging should continue at 3·5 amps. until all cells are gassing freely and evenly and the specific gravity in each of the six cells has reached a maximum, i.e., has shown no further rise in four hours. The specific gravity at the end of charging should be within the limits given and should not vary more than ·005 from the values given.

Do not allow the temperature of the electrolyte to exceed the maximum permissible temperature, i.e.
For climates below 90° F. (32° C.) .. 100° F. (37·7° C.).
For climates above 90° F. (32° C.) .. 120° F. (48·8° C.).

If this temperature is reached the charge should be suspended to allow the temperature to fall at least 10°, otherwise the life of the battery will tend to be shortened.

Installing

The installation of the battery is a reversal of the removal procedure. Smear the terminal posts and cable connections with petroleum jelly and tighten the terminal screws sufficiently to prevent the cables from moving on the terminal posts when tested by hand.

Section N.2

PREPARING DRY CHARGED BATTERIES FOR SERVICE

Dry charged batteries are supplied without electrolyte but with the plates in a charged condition. When they are required for service it is only necessary to fill each cell with sulphuric acid of the correct specific gravity. No initial charging is required. This procedure ensures that there is no deterioration of the efficiency of the battery during the storage period before the battery is required for use.

In these batteries porous rubber separators are used between the plates.

Preparation of electrolyte

The electrolyte is prepared by mixing together distilled water and concentrated sulphuric acid, taking the precautions given in Section N.3. The specific gravity of the filling electrolyte depends on the climate in which the battery is to be used.

The approximate proportions of acid and water are indicated in the following table:

For climates	*To obtain specific gravity (corrected to 60° F.) of*	*Add 1 vol. of acid to 1·835 S.G. (corrected to 60° F.) to*
Below 90° F. (32° C.)	1·270	2·8 volumes of water.
Above 90° F. (32° C.)	1·210	4·0 volumes of water.

Heat is produced by the mixture of acid and water and the electrolyte should be allowed to cool before pouring into the battery.

The total volume of electrolyte required to fill a two volt dry charged cell is ½ pint (·28 litre).

Filling the battery

Carefully break the seals in the cell filling holes and fill each cell with electrolyte to the top of the separators, **in one operation.** The temperature of the filling room, battery and electrolyte should be maintained between 60° and 100° F. (15·5° and 37·8°C.). If the battery has been stored in a cool place it should be allowed to warm up to room temperature before filling.

Putting into use

Batteries filled in this way are capable of giving a starting discharge **one hour after filling.** When time permits, however, a short freshening charge at the normal recharge rate (3·5 amps.) will ensure that the battery is fully charged.

During the charge the electrolyte must be kept level with the top edge of the separators by addition of distilled water. Check the specific gravity of the acid at the end of the charge; if 1·270 acid was used to fill the battery, the specific gravity should now be between 1·270 and 1·290. If 1·210 acid was used the specific gravity should now be between 1·210 and 1·230. After filling, a dry charged battery needs only the attention normally given to a lead acid battery.

Section N.3

PREPARING NEW, UNFILLED, UNCHARGED BATTERIES FOR SERVICE

Preparation of electrolyte

Batteries should not be filled with acid until required for initial charging. Electrolyte is prepared by mixing distilled water and concentrated sulphuric acid, usually of 1·835 S.G. The mixing must be carried out either in a lead lined tank or in suitable glass or earthenware vessels. Slowly add the acid to the water, stirring with a glass rod. **Never add the water to the acid,** as the resulting chemical reaction causes violent and dangerous spurting of the concentrated acid. The approximate proportions of acid and water are indicated in the following table:

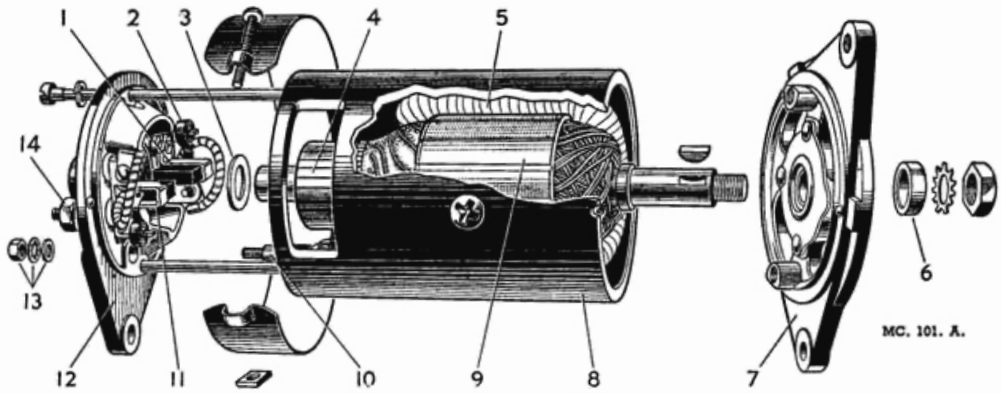

Fig. N.2.
The A30 dynamo

1. *Brush.*
2. *Brush spring.*
3. *Thrust collar.*
4. *Commutator.*
5. *Field coil.*
6. *Distance collar.*
7. *Driving end bracket.*
8. *Yoke.*
9. *Armature.*
10. *Field terminal.*
11. *Brush holder.*
12. *Commutator end bracket.*
13. *Field terminal nut and washers.*
14. *Terminal.*

For climates	*To obtain specific gravity (corrected to 60° F.) of*	*Add 1 vol. of acid of 1·835 S.G. (corrected to 60° F.) to*
Below 90° F. (32° C.)	1·270	2·8 volumes of water.
Above 90° F. (32° C.)	1·210	4·0 volumes of water.

Heat is produced by mixing acid and water, and the electrolyte should be allowed to cool before taking hydrometer readings—unless a thermometer is used to measure the actual temperature and a correction applied to the readings before pouring the electrolyte into the battery.

The total volume of electrolyte required to fill a two volt cell is ½ pint (·28 litre).

Filling the battery

The temperature of the acid, battery and filling room must not be below 32° F. (0° C.).

Carefully break the seals in the filling holes and **half fill** each cell with electrolyte of the appropriate specific gravity. Allow the battery to stand for at least six hours, in order to dissipate the heat generated by the chemical action of the acid on the plates and separators, and then add sufficient electrolyte to fill each cell to the top of the separators. Allow to stand for a further two hours and then proceed with the initial charge.

Initial charge

The initial charging rate is 2·0 amperes. Charge at this rate until the voltage and specific gravity readings show no increase over five successive hourly readings. This will take from 40 to 80 hours, depending on the length of time the battery has been stored before charging.

Keep the current constant by varying the series resistance of the circuit or the generator output. **This charge should not be broken by long rest periods.** If, however, the temperature of any cell rises above the permissible maximum, i.e.

For climates below 90° F. (32° C.) .. 100° F. (37·7° C.).
For climates above 90° F. (32° C.) .. 120° F. (48·8° C.),

the charge must be interrupted until the temperature has fallen at least 10° F. (5·5° C.) below that figure. Throughout the charge the electrolyte must be kept level with the tops of the separators by addition of acid solution of the same specific gravity as the original filling in acid until specific gravity and charge readings have remained constant for five successive hourly readings. If the charge is continued beyond that point, top up with distilled water.

At the end of the charge, carefully check the specific gravity in each cell to ensure that, when corrected to 60° F. (15·6° C.), it lies between the specified limits. If any cell requires adjustment, some of the electrolyte must be siphoned off and replaced either by distilled water or by acid of a strength originally used for filling in, depending on whether the specific gravity is too high or too low. Continue the charge for an hour or so to ensure adequate mixing of the electrolyte and again check the specific gravity readings. If necessary, repeat the adjustment process until the desired reading is obtained in each cell. Finally, allow the battery to cool and siphon off any electrolyte over the tops of the separators.

Section N.4

DYNAMO

Description

The dynamo is a shunt wound two pole, two brush machine arranged to work in conjunction with a compensated voltage control regulator unit. A fan integral with the driving pulley draws cooling air through the dynamo, inlet and outlet holes being provided in the end brackets of the unit.

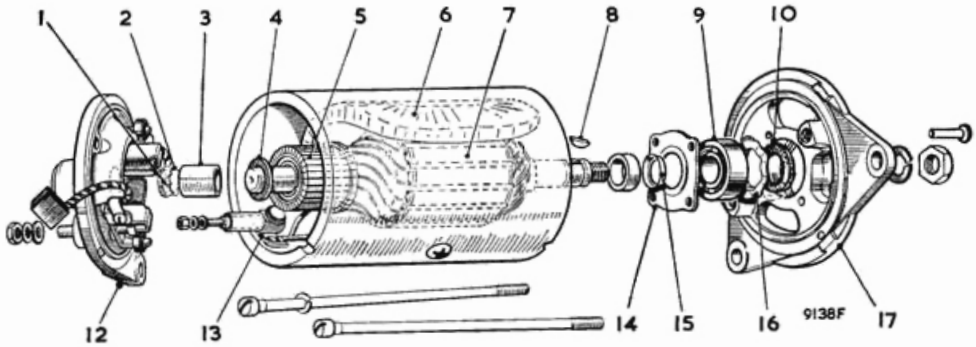

Fig. N.3.
The A35 dynamo.

1. *Felt pad.*
2. *Aluminium disc.*
3. *Bronze bush.*
4. *Fibre washer.*
5. *Commutator.*
6. *Field coils.*
7. *Armature.*
8. *Shaft key.*
9. *Bearing.*
10. *Felt washer.*
12. *Commutator end bracket.*
13. *Field terminal post.*
14. *Bearing retaining plate.*
15. *Cup washer.*
16. *Corrugated washer.*
17. *Driving end bracket.*

The output of the dynamo is controlled by the regulator and is dependent on the state of charge of the battery and the loading of the electrical equipment in use. When the battery is in a low state of charge, the dynamo gives a high output and if the battery is fully charged, the dynamo gives only sufficient output to keep the battery in good condition without any possibility of overcharging. In addition, an increase in output is given to balance the current taken by lamps and other accessories when in use. Further, a high boosting charge is given for a few minutes immediately after starting up to quickly restore to the battery the energy taken from it by the starter motor.

Testing on vehicle when dynamo is not charging

(1) Make sure that belt slip is not the cause of the trouble. It should be possible to deflect the belt approximately ½ in. (13 mm.) at the centre of its longest run between two pulleys with moderate hand pressure. If the belt is too slack tightening is effected by slackening the two dynamo suspension bolts and then the bolt of the slotted adjustment link. A gentle pull on the dynamo outwards will enable the correct tension to be applied to the belt and all three bolts should then be tightened firmly.

(2) Check that the dynamo and control box are connected correctly. The dynamo terminal 'D' should be connected to the control box terminal 'D' and the dynamo terminal 'F' connected to the control box terminal 'F.'

(3) After switching off all lights and accessories disconnect the cables from the dynamo terminals marked 'D' and 'F' respectively.

(4) Connect the two terminals with a short length of wire.

(5) Start the engine and set to run at normal idling speed.

(6) Clip the negative lead of a moving coil voltmeter, calibrated 0–20 volts, to one dynamo terminal and the other lead to a good earthing point on the dynamo yoke.

(7) Gradually increase the engine speed, when the voltmeter reading should rise rapidly and without fluctuation. Do not allow the voltmeter reading to reach 20 volts. Do not race the engine in an attempt to increase the voltage. It is sufficient to run the dynamo up to a speed of 1,000 r.p.m.

If there is no reading check the brush gear.

If the reading is low (approximately 1 volt) the field winding may be faulty.

If the reading is approximately 5 volts the armature winding may be faulty.

If the dynamo is in good order leave the temporary link in position between the terminals and restore the original connections, taking care to connect the dynamo terminal 'D' to the control box terminal 'D' and the dynamo terminal 'F' to the control box terminal 'F.' Remove the lead from the 'D' terminal on the control box and connect the voltmeter between this cable and a good earthing point on the vehicle. Run the engine as before. The reading should be the same as that measured directly on the dynamo. No reading on the voltmeter indicates a break in the cable to the dynamo. Carry out the same procedure for the 'F' terminal, connecting the voltmeter between cable and earth. Finally, remove the link from the dynamo. If the reading is correct test the control box (Section N.6).

Removal and replacement

To remove the dynamo disconnect the dynamo leads from the dynamo terminals and, where the coil is mounted on the dynamo, disconnect the high tension and two low tension leads from the coil.

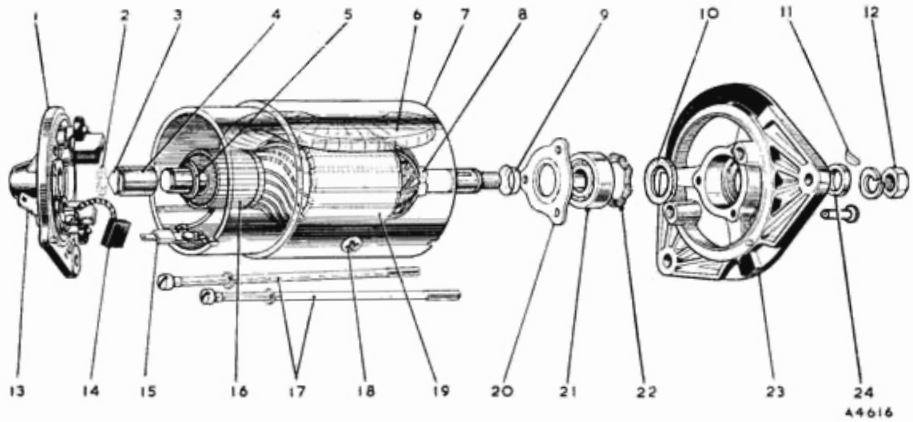

Fig. N.4.
The A35 (later AP5 and AV5) dynamo

1. *Commutator end bracket.*
2. *Felt ring.*
3. *Felt ring retainer.*
4. *Bronze bush.*
5. *Thrust washer.*
6. *Field coils.*
7. *Yoke.*
8. *Shaft collar.*
9. *Shaft collar retaining cup.*
10. *Felt ring.*
11. *Shaft key.*
12. *Shaft nut.*
13. *Output terminal 'D'.*
14. *Brushes.*
15. *Field terminal 'F'.*
16. *Commutator.*
17. *Through bolts.*
18. *Pole shoe securing screws.*
19. *Armature.*
20. *Bearing retaining plate.*
21. *Ball bearing.*
22. *Corrugated washer.*
23. *Driving end bracket.*
24. *Pulley spacer.*

Slacken all four attachment bolts and pivot the dynamo towards the cylinder block to enable the fan belt to be removed from the dynamo pulley. The dynamo can then be removed by withdrawing the two upper and one lower attachment bolts.

Where the coil is mounted on the dynamo, unscrew the nuts securing it to its bracket on the dynamo and remove it.

Replacement of the dynamo is an exact reversal of this procedure.

Dismantling

Remove the securing nut and take off the drive pulley.

Remove the Woodruff key from the commutator shaft.

Where applicable, remove the nut, spring washer and flat washer from the field terminal 'F.'

Unscrew and remove the two through bolts and take off the commutator end bracket. The driving end bracket, together with the armature and its ball bearing, can now be lifted out of the yoke. Unless the ball bearing is damaged or requires attention it need not be removed from the armature. Should it be necessary to remove the bearing, the armature must be separated from the end bracket by means of a hand press.

Servicing

Brushes

Test if the brushes are sticking. Clean them with petrol and, if necessary, ease the sides by lightly polishing with a smooth file. Replace the brushes in their original positions.

Test the brush spring tension using a spring scale; the correct tension is between 16 and 25 oz. (454 and 710 grm.) for springs on Type C39PV2 dynamos and between 18 and 26 oz. (511 and 738 grm.) for springs on Type C40/1 dynamos which are fitted to later A35 vans and Countrymen. Fit new springs if the tension is below limits.

If the brushes are worn to a minimum length of $\frac{11}{32}$ in. (8·73 mm.) on Type C39PV2 or $\frac{1}{4}$ in. (6·35 mm.) on Type C40/1 dynamos, new brushes must be fitted and bedded to the commutator.

Commutator

A commutator in good condition will be smooth and free from pits or burned spots. Clean the commutator with a petrol moistened cloth. If this is ineffective carefully polish with a strip of fine glass paper while rotating the armature. To remedy a badly worn commutator mount the armature (with or without the drive end bracket) in a lathe, rotate at high speed and take a

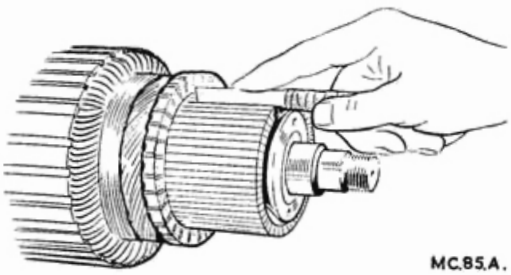

Fig. N.5.
Undercutting the commutator.

light cut with a very sharp tool. Do not remove more metal than is necessary. Polish the commutator with very fine glass paper. Undercut the mica insulation between the segments to a depth of $\frac{1}{32}$ in. (·8 mm.) with a hacksaw blade ground to the thickness of the mica.

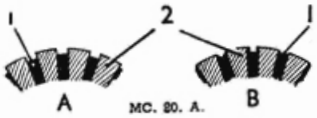

Fig. N.6.
Undercutting the commutator.
'A' is the correct and 'B' the incorrect method.
1. *Insulation.* 2. *Segments.*

Later type commutators are of the moulded type and may be reskimmed to a minimum diameter of 1·450 in. (36·8 mm.). The undercut must conform to the following dimensions:

Width	..	·040 in. (1·02 mm.)
Depth	..	·020 to ·035 in. (·51 to ·89 mm.)

It is important that the insulating material is cleared from the sides of the undercut to a minimum depth of ·015 in. (·381 mm.).

Field coils

Measure the resistance of the field coils, without removing them from the yoke, by means of an ohmmeter connected between the field terminal and the yoke.

The ohmmeter should read 6 ohms approximately.

If an ohmmeter is not available connect a 12 volt D.C. supply with an ammeter in series between the field terminal and dynamo yoke. The ammeter reading should be approximately 2 amperes. Zero on the ammeter or an ohmmeter reading of infinity indicate an open circuit in the field winding.

If the current reading is much more than 2 amperes or the ohmmeter reading much below 6 ohms, it is an indication that the insulation of one of the field coils has broken down.

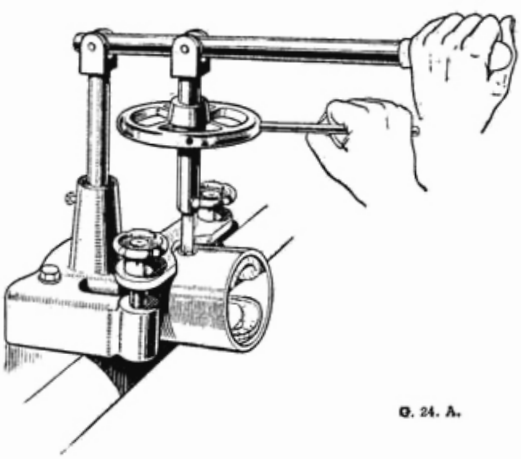

Fig. N.7.
Using a wheel operated screwdriver.

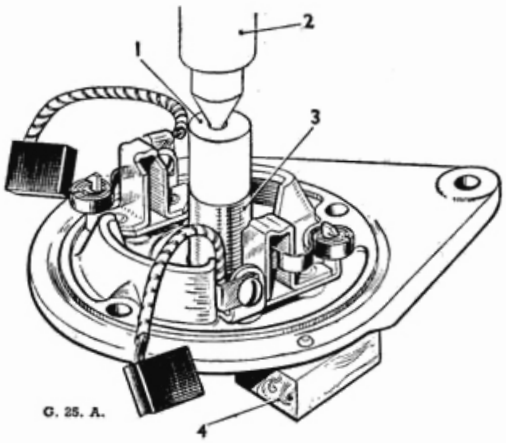

Fig. N.8.
1. *Shouldered mandrel.* 3. *Bearing bush.*
2. *Hand press.* 4. *Supporting block.*

In either case, unless a substitute dynamo is available, the field coils must be replaced. To do this carry out the procedure outlined below:

(1) Drill out the rivet securing the field coil terminal assembly to the yoke and unsolder the field coil connections.
(2) Remove the insulation piece which is provided to prevent the junction of the field coils from contacting the yoke.
(3) Mark the yoke and pole shoes in order that they can be refitted in their original positions.
(4) Unscrew the two pole shoe retaining screws by means of a wheel operated screwdriver.
(5) Draw the pole shoes and coils out of the yoke and lift off the coils.
(6) Fit the new field coils over the pole shoes and place them in position inside the yoke. Take care to ensure that the taping of the field coils is not trapped between the pole shoes and the yoke.
(7) Locate the pole shoes and field coils by lightly tightening the fixing screws.
(8) Fully tighten the screws using an expander and the wheel operated screwdriver and lock them by caulking.
(9) Replace the insulation piece between the field coil connections and the yoke.
(10) Re-solder the field coil connections to the field coil terminal tags and re-rivet the terminal assembly to the yoke.

Armature

The testing of the armature winding requires the use of a voltage drop test and growler. If these are not available the armature should be checked by substitution. No attempt should be made to machine the armature core or to true a distorted armature shaft.

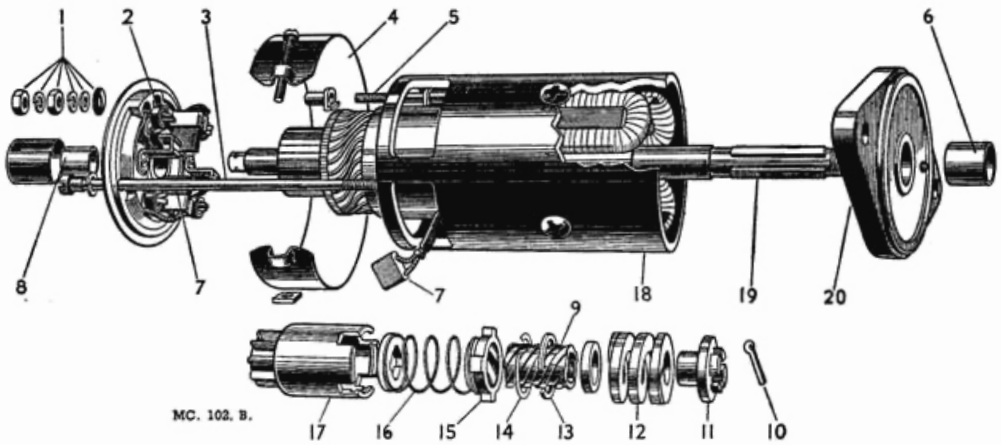

Fig. N.9.
The starter.

1. *Terminal nuts and washers.*
2. *Brush spring.*
3. *Through bolt.*
4. *Cover band.*
5. *Terminal post.*
6. *Bearing bush.*
7. *Brushes.*
8. *Bearing bush.*
9. *Sleeve.*
10. *Split pin.*
11. *Shaft nut.*
12. *Main spring.*
13. *Retaining ring.*
14. *Corrugated washer.*
15. *Control nut.*
16. *Restraining spring.*
17. *Pinion and barrel.*
18. *Yoke.*
19. *Armature shaft.*
20. *Driving end bracket.*

Bearings

Bearings which are worn to such an extent that they will allow side movement of the armature shaft must be replaced by new ones.

To fit a new bearing at the commutator end of the dynamo proceed as follows:

(1) Screw a $\frac{5}{16}$ in. tap squarely into the old bush and remove the bush.

(2) Press the new bearing bush into the end bracket, using a shouldered mandrel of the same diameter as the shaft which is to fit in the bearing.

Before fitting the new bearing bush allow it to stand completely immersed in thin engine oil for 24 hours to fill the pores of the bush with lubricant.

The ball bearing at the driving end is renewed as follows:

(1) Drill out the rivets which secure the bearing retaining plate to the end bracket and remove the plate.

(2) Press the bearing out of the end bracket and remove the corrugated washer, felt washer and, when fitted, the oil retaining washer.

(3) Before fitting the replacement bearing see that it is clean and pack it with a high melting point grease.

(4) Place the oil retaining washer (when fitted), the felt washer and the corrugated washer in the bearing housing in the end bracket.

(5) Locate the bearing in the housing and press it home by means of a hand press.

(6) Fit the bearing retaining plate. Insert the new rivets and open them by means of a punch to secure the plate rigidly in position.

Reassembling

The reassembly of the dynamo is a reversal of the dismantling sequence.

If the end bracket has been removed from the armature in dismantling, press the bearing end bracket onto the armature shaft, taking care to avoid damaging the end plate and armature winding. When assembling the commutator end bracket, the brushes must first be held clear of the commutator by partially withdrawing them from their boxes until each brush is trapped in position by the side pressure of its spring.

The brushes can be released onto the commutator through the band cover, or, in the case of windowless yoke type dynamos, by means of a small screwdriver or similar tool through the apertures in the end bracket after the latter has been assembled to the yoke. Ensure that the springs are in correct contact with the brushes.

Section N.5

STARTER

Testing on vehicle

Switch on the lamps and operate the starter control. If the lights go dim, but the starter is not heard to operate, an indication is given that current is flowing through the starter windings but that the starter pinion

is meshed permanently with the geared ring on the flywheel. This was probably caused by the starter being operated while the engine was still running. In this case the starter must be removed from the engine for examination.

Should the lamps retain their full brilliance when the starter switch is operated, check that the switch is functioning. If the switch is in order examine the connections at the battery, starter switch and starter and also check the wiring between these units. Continued failure of the starter to operate indicates an internal fault and the starter must be removed from the engine for examination.

Sluggish or slow action of the starter is usually caused by a poor connection in the wiring which produces a high resistance in the starter circuit. Check as described above.

Damage to the starter drive is indicated if the starter is heard to operate but does not crank the engine.

Removal and refitting

(1) Remove the distributor as described in Section B.
(2) Disconnect the cable from the battery positive terminal, release the starter cable from its terminal and unscrew the top starter securing bolt.
(3) Working beneath the vehicle release and withdraw the dirt deflector situated under the starter motor and unscrew the bottom starter securing bolt.
(4) Manoeuvre the starter forward and lift clear of the engine.
(5) Installation is a reversal of the removal procedure.

Examining commutator and brush gear

Remove the starter cover band (4, Fig. N.9) and examine the brushes (7, Fig. N.9) and the commutator. Hold back each of the brush springs (2, Fig. N.9) and move the brush by pulling gently on its flexible connector. If the movement is sluggish remove the brush from its holder and ease the sides by lightly polishing with a smooth file. Always replace brushes in their original

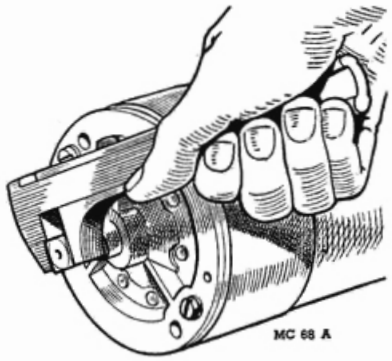

Fig. N.10
Turning the square end of the armature shaft extension to free a jammed starter.

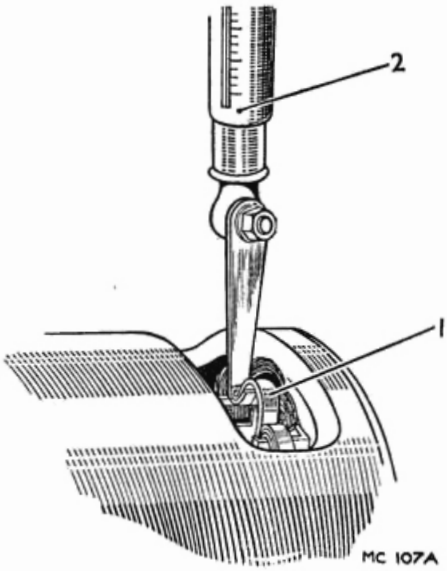

Fig. N.11.
Checking brush spring tension.
1. *Brush spring.* 2. *Spring scale.*

positions. If the brushes are worn so that they no longer bear on the commutator, or if the brush flexible leads have become exposed on the running face, the brushes must be renewed.

If the commutator is blackened or dirty, clean it by holding a petrol moistened cloth against it while the armature is rotated.

Secure the body of the starter in a vice and test by connecting it with heavy gauge cables to a battery of the correct voltage. One cable must be connected to the starter terminal and the other held against the starter body or end bracket. Under these light load conditions, the starter should run at a very high speed.

If the operation of the starter is still unsatisfactory it should be dismantled for detailed inspection and testing.

Dismantling

(1) Take off the cover band at the commutator end, hold back the brush springs and take out the brushes from their holders.
(2) Extract the split pin at the driving end.
(3) Unscrew the nut (R.H. thread) and take off the main spring. The complete drive can now be removed from the splined shaft by withdrawing it with a rotary movement.
(4) Remove the terminal nuts and washers from the terminal post on the commutator end bracket. Unscrew and withdraw the two through bolts and take off the commutator end bracket.
(5) Remove the driving end bracket complete with the armature.

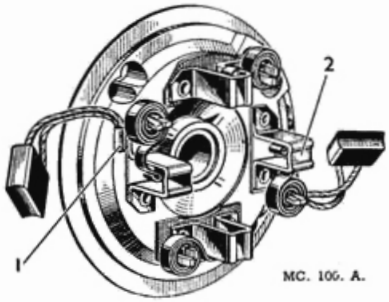

Fig. N.12
Commutator end bracket.
1. *Terminal eyelet.* **2.** *Brush holder.*

Servicing

Brushes

(1) Test the brush springs with a spring scale. The correct tension is 30 to 40 oz. (850 to 1134 grm.). Fit a new spring if the tension is low.

(2) If the brushes are worn so that they no longer bear on the commutator, or if their flexible connectors have become exposed on the running face, they must be renewed. Two of the brushes are connected to terminal eyelets attached to the brush boxes on the commutator end bracket; the other two brushes are connected to tappings (2, Fig. N.13) on the field coils.

The flexible connectors must be removed by unsoldering and the connectors of the new brushes secured in place by soldering. The brushes are preformed, so that bedding of their working faces to the commutator is unnecessary.

Drive

If the pinion is tight on the sleeve wash in paraffin; renew any worn or damaged parts.

To dismantle the drive extract the split pin and remove the shaft nut (11, Fig. N.9); withdraw the main spring and collar.

Rotate the barrel to push out the sleeve; remove the barrel and pinion.

The barrel and pinion are supplied as an assembly but the parts may be separated by extracting the retaining ring (13).

NOTE.—Should either the control nut or screwed sleeve be damaged, a replacement assembly, consisting of a screwed sleeve and control nut, must be fitted. These components must not be fitted individually.

Commutator

A commutator in good condition will be smooth and free from pits and burned spots. Clean the commutator with a cloth moistened in petrol. If this is ineffective carefully polish with a strip of fine glass paper while rotating the armature. To remedy a badly worn commutator, dismantle the starter drive as described above and remove the armature from the end bracket. Now mount the armature in a lathe, rotate it at a high speed and take a light cut with a very sharp tool. Do not remove any more metal than is absolutely necessary and finally polish with a very fine glass paper.

The mica on the **starter** commutator **must not be undercut.**

Field coils

The field coils can be tested for an open circuit by connecting a 12 volt battery, having a 12 volt bulb in one of the leads, to the tapping point of the field coils, to which the brushes are connected, and the field terminal post. If the bulb does not light there is an open circuit in the wiring of the field coils.

Lighting of the bulb does not necessarily mean that the field coils are in order, as it is possible that one of them may be earthed to a pole shoe or to the yoke. This may be checked by removing the lead from the brush connector and holding it on a clean part of the starter yoke. Should the bulb now light, then the field coils are earthed.

Should the above tests indicate that the fault lies in the field coils, they must be renewed. When renewing field coils carry out the procedure detailed in the dynamo Section N.4.

Armature

Examination of the armature will in many cases reveal the cause of failure, e.g. conductors lifted from the commutator due to the starter being engaged while the engine is running and causing the armature to be rotated at an excessive speed. A damaged armature must in all cases be renewed—no attempt should be made to machine the armature core or to true a distorted armature shaft.

Bearings (commutator end)

Bearings which are worn to such an extent that they will allow excessive side play of the armature shaft must be renewed. To renew the bearing bush proceed as follows.

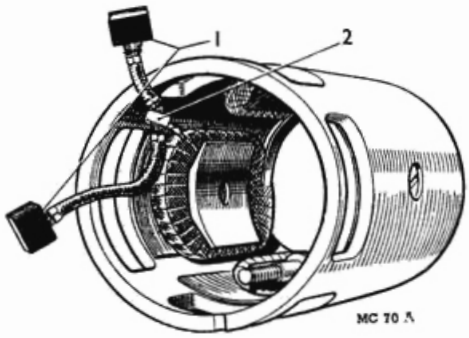

Fig. N.13.
The starter yoke.
1. *Brushes.* 2. *Tapping on field coil*

Press the new bearing bush into the end bracket, using a shouldered mandrel of the same diameter as the shaft which is to fit the bearing.

The bearing bush is of the porous phosphor-bronze type and, before fitting, **new bushes should be allowed to stand completely immersed for 24 hours in thin engine oil in order to fill the pores of the bush with lubricant.**

Reassembling

The reassembly of the starter is a reversal of the dismantling operations described in this section.

Section N.6

CONTROL BOX

Description

The control box contains two units—a voltage regulator and a cut-out. Although combined structurally, the regulator and cut-out are electrically separate (see Fig. N.14).

Both are accurately adjusted during manufacture and the cover protecting them should not be removed unnecessarily.

Regulator

The regulator is set to maintain the dynamo output between close limits at all speeds above the regulating point, the field strength being controlled by the automatic insertion and withdrawal of a resistance in the dynamo field circuit. When the dynamo output reaches a predetermined value the magnetic flux in the regulator core, induced by the shunt or voltage winding, becomes sufficiently strong to attract the armature to the core. This causes the contacts to open, thereby inserting the resistance in the dynamo field circuit.

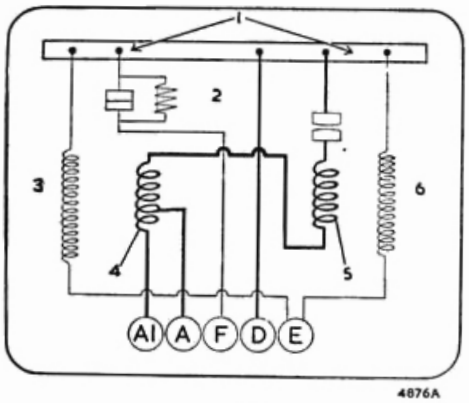

Fig. N.14.

The control box (regulator and cut-out) internal connections

1. *Regulator and cut-out frame.*
2. *Field resistance.*
3. *Shunt coil.*
4. *Tapped series coil.*
5. *Series coil.*
6. *Shunt coil.*

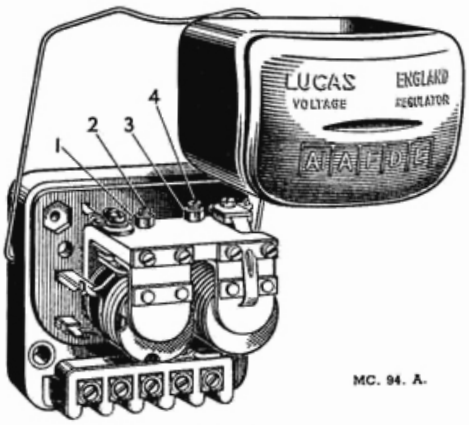

Fig. N.15.

The A30 control box.

1. *Locknut.*
2. *Regulator adjusting screw*
3. *Locknut.*
4. *Cut-out adjusting screw.*

The consequent reduction in the dynamo field current lowers the dynamo output and this in turn weakens the magnetic flux in the regulator core. The armature therefore returns to its original position and, with the contacts closed, the dynamo output rises again to its regulated maximum. This cycle is then repeated and an oscillation of the armature is maintained.

As the speed of the dynamo rises above that at which the regulator comes into operation, the periods of contact separation increase in length and, as a result, the mean value of the dynamo output undergoes practically no increase once this regulating speed has been attained.

The series or current winding provides a compensation on this system of control, for, if the control were arranged entirely on the basis of voltage, there would be a risk of seriously overloading the dynamo when the battery was in a low state of charge, particularly if the lamps were in use simultaneously.

Under these conditions, with a battery of low internal resistance, the dynamo output rises and, but for the series winding, would exceed its normal rating. The magnetism due to the series winding assists the shunt winding so that, when the dynamo is delivering a heavy current into a discharged battery, the regulator comes into operation at a somewhat reduced voltage, thus limiting the output accordingly. As shown in Fig. N.14, a split series winding is used, terminal 'A' being connected to the battery and terminal 'AI' to the lighting and ignition switch.

By means of a temperature compensation device, the voltage characteristic of the dynamo is caused to conform more closely to that of the battery under all climatic conditions. In cold weather the voltage required to charge the battery at a given rate increases, whilst in warm weather the voltage required is lower. The compensation device is in the form of a bi-metal spring located behind the tensioning spring of the regulator armature. By causing the operating voltage of the

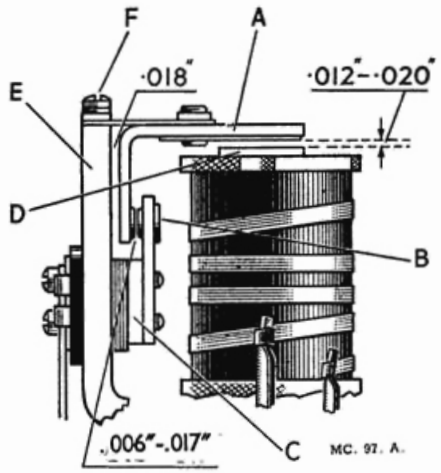

Fig. N.16.
A30 regulator mechanical setting.

A. Armature. *B. Fixed contact.*
C. Packing shims. *D. Bobbin core.*
E. Regulator frame. *F. Armature fixing screws.*

regulator to be increased in cold weather and reduced in hot weather, the bi-metal spring compensates for the changing temperature characteristics of the battery and prevents undue variation of the charging current which would otherwise occur. The bi-metal spring also compensates for effects due to increases in resistance of the copper windings from cold to working values.

Cut-out

The cut-out is an electro-magnetically operated switch connected in the charging circuit between the dynamo and the battery. It automatically connects the dynamo with the battery when the dynamo output exceeds that of the battery and disconnects the two when the dynamo output falls below that of the battery and so prevents the battery from discharging and possibly damaging the dynamo windings.

The cut-out consists of an electro-magnet fitted with an armature which operates a pair of contacts. The electro-magnet employs two windings—a shunt winding of many turns of fine wire and a series winding of a few turns of heavier gauge wire. The contacts are normally held open and are closed only when the magnetic pull from the armature is sufficient to overcome the tension of the adjusting spring.

The shunt coil is connected across the dynamo. When starting, the speed of the engine and thus the output of the dynamo rises until the electro-magnet is strong enough to overcome the spring tension and close the cut-out contacts. The effect of the charging current flowing through the cut-out windings creates a magnetic field in the same direction as that produced by the shunt winding. This increases the magnetic pull on the armature so that the contacts are firmly closed and cannot be separated by vibration. When the speed of the dynamo falls to a point where its output is lower than that of the battery, current flows from the battery through the cut-out series winding and dynamo in a reverse direction to the charging current. This reverse current through the cut-out will produce a differential action between the two windings and partly demagnetize the electro-magnet. The spring, which is under constant tension, then pulls the armature away from the magnet and so separates the contacts and opens the circuit.

Like the regulator, the operation of the cut-out is temperature controlled by means of a bi-metal tensioning spring.

Regulator adjustment

The regulator is carefully set before leaving the Works to suit the normal requirements of the standard equipment and, in general, it should not be necessary to alter it. If, however, the battery does not keep in a charged condition or if the dynamo output does not fall when the battery is fully charged, it may be advisable to check the setting and, if necessary, to readjust it.

It is important, before altering the regulator setting, when the battery is in a low state of charge, to check that its condition is not due to a battery defect or to the dynamo belt slipping.

Electrical setting (with unit cold)

The electrical setting of the control unit can be checked without removing the cover. Use a good quality moving coil voltmeter (0-20 volts).

Withdraw the cables from the control box terminals 'A' and 'A1' and connect these cables together.

Connect the negative lead of the voltmeter to the control box terminal 'D' and connect the other lead to terminal 'E'.

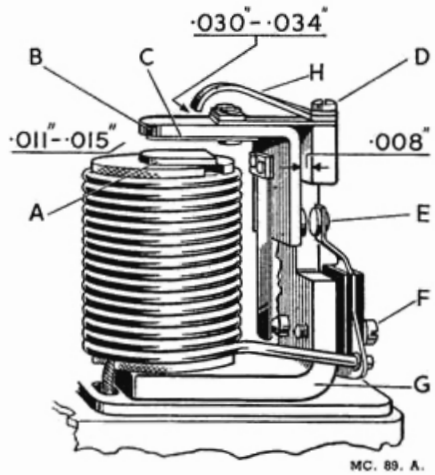

Fig. N.17.
A30 cut-out mechanical setting.

A. Bobbin core. *D. Armature fixing screws.*
B. Armature. *E. Fixed contact.*
C. ·005 in. Brass shim. *F. Fixed contact screws.*
G. Cut-out frame.

Slowly increase the speed of the engine until the voltmeter needle flicks and then steadies. This should occur at a voltmeter reading between the limits given for the appropriate ambient temperature (see **'GENERAL DATA'**).

If the voltage at which the reading becomes steady occurs outside these limits the regulator must be adjusted.

Switch off the engine and remove the control box cover.

Slacken the locknut (when fitted) of the voltage adjusting screw and turn the screw in a clockwise direction to raise the setting or in an anti-clockwise direction to lower the setting. Turn the screw only a fraction of a turn at a time and then tighten the locknut (when fitted). Repeat as above until the correct setting is obtained.

The adjustment of the regulator open circuit voltage should be completed within 30 seconds, otherwise heating of the shunt winding will cause false settings to be made.

A dynamo run at high speed on open circuit will build up a high voltage. Therefore, when adjusting the regulator, increase the engine speed slowly until the regulator operates, otherwise a false setting may be made.

Reconnect the leads.

Mechanical setting

The mechanical or air gap settings of the regulator are accurately adjusted before leaving the Works and, provided that the armature carrying the moving contact is not removed, these settings must not be altered. If, however, the armature has been removed the regulator will have to be reset.

On regulators fitted in Lucas Type RB 106/1 *control boxes proceed as follows:*

Slacken the two armature fixing screws (F, Fig. N.16) and insert a ·018 in. (·457 mm.) feeler gauge between the back of the armature (A) and the regulator frame.

Press back the armature against the regulator frame

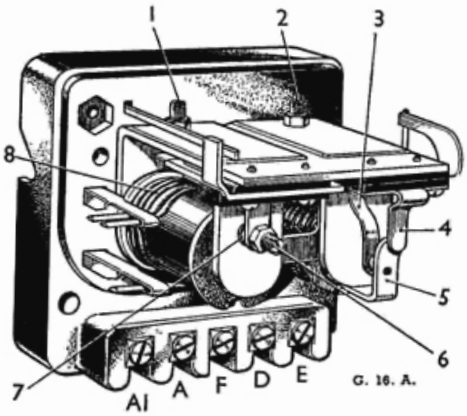

Fig. N.18.
The A35 control box.
Key as for Fig. N.19

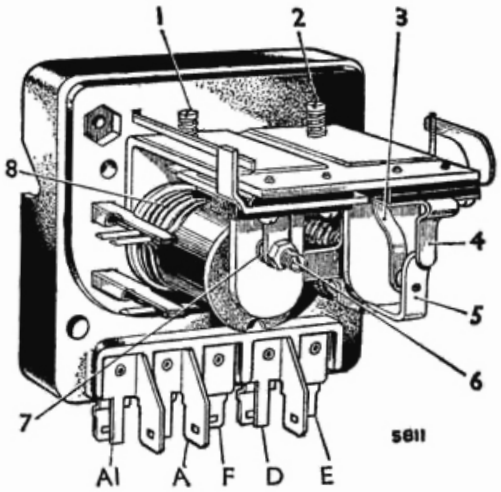

Fig. N.19.
The A35 (later AP5 and AV5) control box.

1. *Regulator adjusting screw.*
2. *Cut-out adjusting screw.*
3. *Fixed contact blade.*
4. *Stop arm.*
5. *Armature tongue and moving contact.*
6. *Regulator fixed contact screw.*
7. *Regulator moving contact.*
8. *Regulator series windings.*

and down on to the top of the bobbin core with the gauge in position and lock the armature.

Remove the ·018 in. (·457 mm.) feeler gauge and check the gap between the underside of the armature and the top of the bobbin core; this should be ·012 to ·020 in. (·305 to ·508 mm.). If the gap is outside these limits, correct by adding or removing shims (C) at the rear of the fixed contact.

Remove the gauge and press the armature down when the gap between the contacts should be ·006 to ·007 in. (·152 to ·432 mm.).

On regulators fitted in Lucas Type RB 106/2 *control boxes proceed as follows:*

Slacken the fixed contact locking nut and unscrew the contact screw until it is quite clear of the armature moving contact.

Slacken the voltage adjusting screw locking nut (when fitted) and unscrew the adjuster until it is well clear of the armature tension spring.

Slacken the two armature assembly securing screws.

Using a ·015 in. (·381 mm.) feeler gauge, wide enough to cover completely the core face, insert the gauge between the armature and the core shim, taking care not to turn up or damage the edge of the shim.

Press the armature **squarely** down against the gauge and retighten the two armature assembly securing screws.

With the gauge still in position, screw the adjustable contact down until it just touches the armature contact. Retighten the locking nut.

Reset the voltage adjusting screw as described under '*Electrical setting*'.

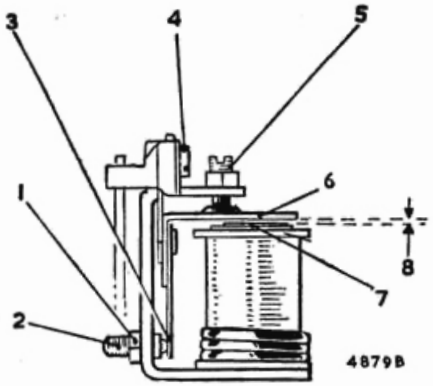

Fig. N.20.
Mechanical setting of the A35 regulator

1. *Locknut.*
2. *Voltage adjusting screw.*
3. *Armature tension spring.*
4. *Armature securing screws.*
5. *Fixed contact adjustment screw.*
6. *Armature.*
7. *Core face and shim.*
8. ·015 *in.* (·381 *mm.*).

Cleaning contacts

After long periods of service it may be found necessary to clean the regulator contacts. Clean the contacts by means of a fine carborundum stone or fine emery cloth.

Carefully wipe away all traces of dust or other foreign matter, using a clean fluffless cloth moistened with methylated spirits.

On regulators fitted in Lucas Type RB 106/1 control boxes, the contacts become accessible by slackening the securing plate carrying the fixed contact and swinging the contact plate outwards. After cleaning the contacts, re-tighten the securing plate screws.

Cut-out adjustment

Electrical setting

If the regulator is correctly set, but the battery is still not being charged, the cut-out may be out of adjustment. To check the voltage at which the cut-out operates, remove the control box cover and connect the voltmeter between terminals 'D' and 'E.' Start the engine and slowly increase its speed until the cut-out contacts are seen to close, noting the voltage at which this occurs. It should be 12·7 to 13·3 volts.

If the cut-out operates outside these limits it will be necessary to adjust it to within the limits. To do this slacken the locknut (when fitted) securing the cut-out adjusting screw and turn the screw in a clockwise direction to raise the voltage setting or in an anti-clockwise direction to reduce the setting. Turn the screw only a fraction of a turn at a time and then tighten the locknut (when fitted). Test after each adjustment by increasing the engine speed and noting the voltmeter readings at the instant of contact closure. Electrical settings of the cut-out, like the regulator, must be made as quickly as possible because of the temperature rise effects.

If the cut-out does not operate there may be an open circuit in the wiring of the cut-out and regulator unit, in which case the units should be removed for examination.

Mechanical setting

If for any reason the cut-out armature has to be removed from the frame care must be taken to obtain the correct air gap settings on reassembly.

On cut-outs fitted in Lucas Type RB 106/1 *control boxes, proceed as follows:*

Slacken the two armature fixing screws and also the two screws securing the fixed contact.

Insert a ·008 in. (·203 mm.) gauge between the back of the armature and the cut-out frame and a ·011 to ·015 in. (·279 to ·381 mm.) gauge between the core face and the armature. A ·005 in. (·127 mm.) brass shim is fitted to the underside of the armature and the gap must be measured between the core face and the underside of the shim.

Press the armature down and back against the two gauges and tighten the armature fixing screws.

With the gauges still in position, set the gap between the armature and the stop plate arm to ·030 to ·034 in. (·762 to ·864 mm.) by carefully bending the arm.

Remove the gauges and tighten the screws securing the fixed contact. Insert a ·025 in. (·635 mm.) gauge between the core face and the armature.

Press the armature down on to the gauge. The gap between the contacts should now measure ·002 to ·006 in. (·051 to ·152 mm.).

Adjust the gap, if necessary, by adding or removing shims beneath the fixed contact plate.

On cut-outs fitted in Lucas Type RB 106/2 *control boxes, proceed as follows:*

Slacken the adjusting screw locknut (when fitted) and

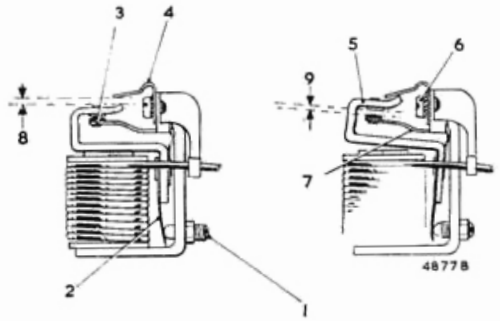

Fig. N.21.
Mechanical setting of the A35 cut-out

1. *Cut-out adjusting screw.*
2. *Armature tension spring.*
3. '*Follow through*'—·010 *to* ·020 *in.* (·254 *to* ·508 *mm.*).
4. *Stop arm.*
5. *Armature tongue and moving contact.*
6. *Armature securing screws.*
7. *Fixed contact blade.*
8. ·030 *in.* (·762 *mm.*).
9. ·010 *to* ·020 *in.* (·254 *to* ·508 *mm.*).

unscrew the cut-out adjusting screw until it is well clear of the armature tension spring.

Slacken the two armature securing screws.

Press the armature **squarely** down against the copper sprayed core face and retighten the armature securing screws.

Using a pair of thin nosed pliers, adjust the gap between the armature stop arm and the armature tongue by bending the stop arm. The gap must be ·030 in. (·762 mm.) when the armature is pressed **squarely** down against the core face.

Similarly, the fixed contact blade must be bent so that when the armature is pressed **squarely** down against the core face there is a 'follow through' or blade deflection of ·010 to ·020 in. (·254 to ·508 mm.). See 3, Fig. N.21.

Reset the cut-out adjusting screw in accordance with the instructions already given.

Cleaning contacts

Do not use emery cloth or a carborundum stone for cleaning cut-out contacts. If the contacts appear dirty, rough or burnt, place a strip of fine glass paper between them and then, with the contacts closed by hand, draw the paper through. This should be done two or three times with the rough side of the glass paper towards each contact.

Wipe away all dust or other foreign matter, using a clean, fluffless cloth moistened with methylated spirits.

Section N.7

FUSES

Fuse marked 'A1-A2'

This fuse protects those accessories which operate irrespective of the ignition being on or off. The horn is in this category.

Fuse marked 'A3-A4'

This fuse protects the accessories which are connected so that they operate only when the ignition is switched on, namely petrol gauge, trafficators or flashers, stop lamp and windshield wiper motor.

Blown fuses

A blown fuse is indicated by the failure of all the units protected by it and is confirmed by examination of the fuse, which can easily be withdrawn from the spring clips. If it has blown, the fused state of the wire will be visible inside the glass tube. Before renewing a blown fuse, inspect the wiring of the units that have failed for evidence of a short circuit or other faults which may have caused the fuse to blow and remedy the cause of the trouble.

Section N.8

LOCATION AND REMEDY OF FAULTS

Although every precaution is taken to eliminate possible causes of trouble, failure may occasionally develop through lack of attention to the equipment or damage to the wiring. The following pages set out the recommended procedure for a systematic examination to locate and remedy the causes of some of the more usual faults encountered.

The sources of trouble are by no means always obvious and in some cases a considerable amount of deduction from the symptoms is needed before the cause is disclosed.

For instance, the engine might not respond to the starter switch; a hasty inference would be that the starter motor is at fault. However, as the motor is dependent on the battery, it may be that the battery is exhausted.

This in turn may be due to the dynamo failing to charge the battery and the final cause of the trouble may be a loose connection in some part of the charging circuit.

If, after carrying out an examination, the cause of the trouble is not found, the equipment should be checked by the nearest Lucas Service Depot or Agent.

CHARGING CIRCUIT

1. Battery in a low state of charge

(*a*) This state will be shown by lack of power when starting, poor light from the lamps and hydrometer readings below 1·200. It may be due to the dynamo not charging or giving low or intermittent output. The ignition warning light will not go out if the dynamo fails to charge and will flicker on and off in the event of intermittent output.

(*b*) Examine the charging and field circuit wiring, tighten any loose connection and renew any broken cable. Pay particular attention to the battery connections.

(*c*) Examine the dynamo driving belt; take up any undue slackness by swinging the dynamo outwards on its mounting after slackening the attachment bolts.

(*d*) Check the regulator setting and adjust if necessary.

(*e*) If, after carrying out the above, the trouble is still apparent have the equipment examined by a Lucas service depot or agent.

2. Battery overcharged

This will be indicated by burnt out bulbs, very frequent need for topping up the battery and high hydrometer readings. Check the charge reading with an ammeter when the car is running. It should be only 3 to 4 amps.

If the ammeter reading is in excess of this value, check the regulator setting and adjust if necessary.

STARTER MOTOR

1. Starter motor lacks power or fails to turn engine

(*a*) See if the engine can be turned over by hand. If not, the cause of the stiffness in the engine must be located and remedied.

(*b*) If the engine can be turned by hand, first check that the trouble is not due to a discharged battery.

(*c*) Examine the connections to the battery, starter and starter switch, making sure that they are tight, and that the cables connecting these units are not damaged.

(*d*) It is also possible that the starter pinion may have jammed in mesh with the flywheel. To disengage the pinion rotate the squared end of the starter shaft with a spanner.

2. Starter operates but does not crank the engine

This fault will occur if the pinion of the starter drive is not allowed to move along the screwed sleeve into engagement with the flywheel, due to dirt having collected on the screwed sleeve. Remove the starter and clean the sleeve carefully with paraffin.

3. Starter pinion will not disengage from flywheel when engine is running

Stop the engine and see if the starter pinion is jammed in mesh with the flywheel, releasing it if necessary by rotation of the squared end of the starter shaft. If the pinion persists in sticking in mesh have the equipment examined at a Service Depot. Serious damage will result to the starter if it is driven by the flywheel.

LIGHTING CIRCUITS

1. Lamps give insufficient illumination

(*a*) Test the state of charge of the battery, recharging it if necessary from an independent supply.
(*b*) Check the setting of the lamps.
(*c*) If the bulbs are discoloured as the result of long service they should be renewed.

2. Lamps light when switched on but gradually fade out

As paragraph 1 (*a*).

3. Brilliance varies with speed of car

(*a*) As paragraph 1 (*a*).
(*b*) Examine the battery connections, making sure that they are tight and renew any faulty cables.

Section N.9

WINDSHIELD WIPER

Normally the windshield wiper will not require any servicing apart from the occasional renewal of the rubber blades.

Should any trouble be experienced, first check for loose connections, worn insulation, etc., before dismantling the motor.

To replace an arm

The screw securing the arm to the wiper spindle is designed so that it also takes the form of an extractor. To remove the arm, slacken the fixing screw until the arm is freed from the wiper spindle.

To detach the cable rack from the motor and gearbox

Unscrew the pipe union nut and remove the gearbox cover.

Remove the retaining washer from the crankpin and lift off the connecting link.

Commutator dirty

Remove the connecting leads to the terminals and withdraw the screws securing the cover at the commutator end. Lift off the cover. Clean the commutator with a cloth moistened with petrol and carefully remove any carbon dust from between the commutator segments.

Brush levers stiff or brushes not bearing on commutator

Check that the brushes bear freely on the commutator. If they are loose and do not make contact a replacement tension spring is necessary. The brush levers must be free on their pivots. If they are stiff they should be freed by working them backwards and forwards by hand and by applying a trace of thin machine oil. Packing shims are fitted beneath the legs of the brushes to ensure that the brushes are central and that there is no possibility of the brush boxes fouling the commutator. If the brushes are considerably worn they must be replaced by new ones.

Motor operates but does not transmit motion to spindles

Remove the cover of the gearbox. A push-pull motion should be transmitted to the inner cable of the flexible rack. If the cross-head moves sluggishly between the guides lightly smear a small amount of medium grade engine oil in the groove formed in the die cast housing. When overhauling, the gear must be lubricated by lightly packing the gearbox with a grease to Ref. C (page P.2).

Thrust screw adjustments

The thrust screw is located on the top of the cross-head housing. To adjust, slacken the locknut, screw down the thrust screw until it contacts the armature and then turn back a fraction of a turn. Hold the thrust screw with a screwdriver and tighten the locknut.

To remove the motor

Detach the cable rack from the motor and gearbox as detailed above. Disconnect the leads and finally remove the nuts securing the motor to the bulkhead.

Section N.10

HORN PUSH

Description

The horn push is located on the steering wheel hub and comprises an aluminium alloy body containing a brass ring mounted behind an insulating disc in which there are three equally spaced holes. The push button consists of a steel disc faced with perspex and is held clear of the cross ring by a helical spring. Current is conducted from the horn via a brown with black wire to an insulated contact ring mounted in the steering column surround. A spring loaded contact plunger mounted in the steering wheel hub connects the contact ring with the brass ring in the horn push body by passing through one of the holes in the insulating ring.

On pressing the horn push button the brass ring is

connected to earth via the steel disc of the push button and the helical spring, thus energising the horn circuit.

To test in the vehicle

If the horn will not sound when the push button is depressed, remove the horn push and short the contact plunger direct to earth. If the horn now sounds, the push button is faulty.

To remove

The horn push is held in position by three spring clips and may be removed by pulling it off the steering wheel hub.

To replace

When replacing the horn push, align the three spring clips with the depressions in the steering wheel hub so that the contact plunger will pass through one of the holes in the insulating disc.

Section N.11

HORN

To remove

The horn is located at the front of the vehicle being mounted on the left hand flitch plate.

(1) Disconnect the wires (brown with green and brown with black) at their two snap fasteners.
(2) Unscrew the two cross head bolts and nuts and remove the horn.

To replace

Replacement is a reversal of the removal procedure. Reconnect the leads according to the colour code given in the wiring diagram.

Maintenance

No internal maintenance is required, externally all that is required is an occasional inspection of the horn circuit cables and the fixing bolts.

If the horn fails to operate, or operates unsatisfactorily, first carry out the following external checks:

(1) Examine the cables of the horn circuit, renewing any that are badly worn or chafed. Ensure that all connections are clean and tight and that the connecting nipples are firmly soldered to the cables.
(2) Check that the bolts securing the horn bracket are tight and that the horn body does not foul any other fixture.
(3) Check the current consumption which should be 3 to 3½ amps. when the horn is operating correctly.

After making a thorough external check, remove the horn cover, secured by a single screw, and examine the cable connections inside the horn. Examine the contact breaker contacts. If they are burnt or blackened clean them with a fine file, then wipe with a petrol moistened cloth.

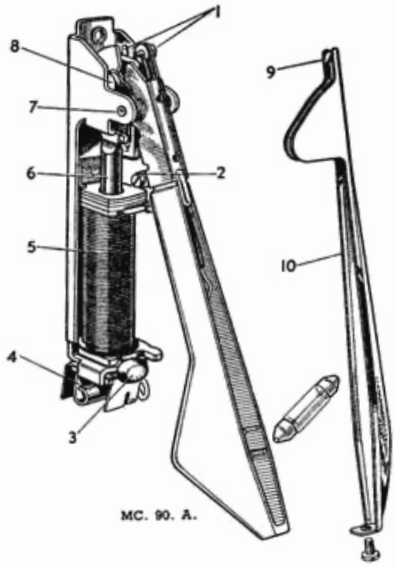

Fig. N.22.
The trafficator

1. *Bulb contact.*
2. *Arm securing screw.*
3. *Rubber buffer stop.*
4. *Terminal sleeve.*
5. *Solenoid.*
6. *Plunger.*
7. *Arm pivot.*
8. *Arm catch pin.*
9. *Securing tongue.*
10. *Arm cover.*

Section N.12

TRAFFICATORS

The Lucas trafficator is a solenoid operated unit (see Fig. N.22). When the switch is moved to the left or right, the appropriate indicator arm is raised and the bulb, which is incorporated in the arm of the indicator, automatically illuminates the arm.

In order to raise the arm of the indicator for replacement of a bulb or lubricating, switch on the trafficator and then, supporting the arm in a horizontal position, move the switch to the 'off' position.

Replacement of a bulb

Withdraw the screw at the end of the arm and lift the metal plate; the burnt out bulb may then be replaced. Lower the plate and secure it by means of its fixing screw.

The bulb is a festoon type, details of which are given in **'GENERAL DATA'**.

Section N.13

FLASHING DIRECTION INDICATOR LAMPS

Access to the bulb for removal and replacement is obtained by folding back the rubber retaining flange and gently prising out the bezel and lens from the lamp body. Use the fingers only to fold back the rubber retaining flange.

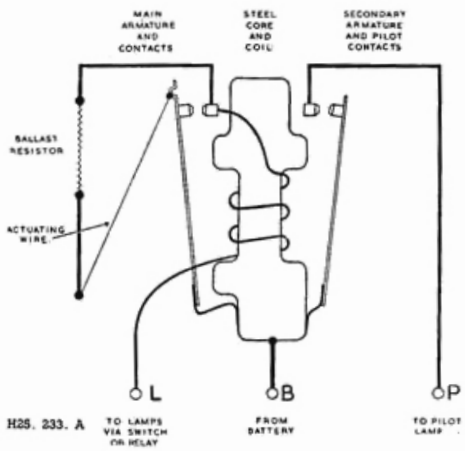

Fig. N.23.
Symbolic representation of flasher unit model FL.5.

To remove the lamp body, extract the three self-tapping screws, securing the body to the wing, pull the body forward to separate it from the rubber cover and release the leads from their connections on the body. When refitting, make certain that the spring nuts are positioned over the screw holes in the wing to accept and retain the three self-tapping screws.

Ensure that the lens is seating correctly in the rubber body before refitting the retaining bezel.

Section N.14

FLASHING DIRECTION INDICATORS

Description

The Lucas flasher unit is operated by a switch centrally mounted on the fascia panel, a warning light being incorporated in the switch.

The unit is contained in a small cylindrical metal container, one end of which is rolled over on to an insulated plate carrying the mechanism and three terminals. The unit depends for its operation on the linear expansion of a length of wire which becomes heated by an electric current flowing through it. This actuating wire controls the movement of a spring loaded armature attached to a central steel core and carrying a moving contact—the sequence of operation being as follows:

When the direction indicator switch is turned either to the left or right, current flows through the actuating wire, ballast resistor and coil wound on the central core and hence to earth via the flasher lamp filaments. This current is limited by the ballast resistor to a value which will ensure that the flasher lamp filaments do not light at this stage. The actuating wire grows in length under the heating influence of the current and allows the armature to move inwards to its alternative position, thereby closing a pair of contacts in the supply circuit to the flasher lamps and, at the same time, short circuiting the actuating wire. The increased electro-magnetic attraction of the armature to the core, due to the full lamp current now flowing through the coils, serves to hold the closed contacts firmly together. At the same time a secondary spring loaded armature is attracted to the core and closes a pilot warning lamp circuit, so that now both flasher lamps and warning lamp are illuminated.

Since, however, heating current no longer flows through the short circuited actuating wire, the latter cools and consequently contracts in length. The main armature is therefore pulled away from the core, the contacts opened and the light signals extinguished. The consequent reduction of electro-magnetism in the core allows the secondary armature to return to its original position and so extinguish the pilot warning light. The above sequence of operations continues to be repeated until the indicator switch is returned to the off position. A diagram of the flasher circuit is shown in Fig. N.23.

Functions of warning lamp

The warning lamp not only serves to indicate that the flasher unit is functioning correctly but also gives a warning of any bulb failure occuring in the external direction indicator lamps—since a reduction in bulb current flowing through the coil reduces the electro-magnetic effect acting on the secondary armature and so prevents closure of the pilot light contacts.

Checking faulty operation

In the event of failure, carry out the following procedure:

(1) Check bulbs for broken filaments.
(2) Refer to the wiring diagram and check over flasher circuit connections.
(3) Switch on the ignition and check that terminal 'B' on the flasher is at 12 volts with respect to earth.
(4) Connect together terminals 'B' (or 'X') and 'L' at the flasher unit and operate the direction indicator switch. If the flasher lamps light up, the flasher unit is at fault and must be renewed. If the lamps do not light a further check of the circuit and the switch must be undertaken.

Maintenance

Flasher units cannot be dismantled for subsequent reassembly. A defective unit must therefore be renewed, care being taken to connect as the original.

Replacement of flasher unit

When replacing a flasher unit, or installing a flashing light system, it is advisable to test the circuits before connections to flasher terminals are made. When testing, join the cables normally connected to those terminals (green, green with brown and light green) together and operate the direction indicator switch. In the event of a wrong connection having been made, the ignition auxiliaries fuse will blow, but no damage will be done to the flasher unit.

Section N.15

FUEL GAUGE

Description

The fuel gauge circuit consists of an instrument panel gauge, a tank unit and the necessary cables. Its operating current is controlled by the ignition switch.

The tank unit is attached by six screws to a flange in the top of the fuel tank and consists of a float and float arm mounted to a zinc base die casting enclosing a wound resistance. The float arm carries a contact arm which travels over the resistance taking up a position which corresponds to the quantity of fuel in the tank and this varies the current flowing through the meter.

To test in the vehicle

If the gauge fails to register or registers incorrectly, with current available at the 'B' terminal of the gauge the fault should be diagnosed by tests as follows:

(1) Disconnect the green with black cable from the fuel gauge terminal marked 'T'. If the gauge does not register 'FULL' or over with the ignition switched on, then the gauge is faulty. If the gauge registers 'FULL' or over, proceed with test (2) as follows:

(2) With the green with black cable still disconnected, connect a temporary cable between the fuel gauge terminal marked 'T' and earth. If the gauge does not register 'EMPTY' or lower with the ignition switched on, then the gauge is faulty. If the gauge registers 'EMPTY' or lower, proceed with test (3) as follows:

(3) Disconnect the green with black cable from the fuel tank unit and connect a temporary cable from the fuel gauge terminal marked 'T' to the tank unit terminal. If the gauge does not register according to the position of the float in the tank, or registers 'FULL' irrespective of the float position with the ignition switched on, then the tank unit is at fault.

If the contents of the tank are registered correctly with the test cable, but register 'EMPTY' when in normal circuit, then the cable between the gauge and the tank unit is earthed.

Important: In no circumstances should the battery supply be connected directly to the terminal of the tank unit.

Section N.16

IGNITION AND WARNING LIGHT

The ignition switch, besides forming a means of stopping the engine, is provided for the purpose of preventing the battery being discharged by the current flowing through the coil windings when the engine is stopped. A warning lamp is provided on the instrument panel which gives a red light when the ignition is switched on and the engine is running very slowly or is stationary, thus reminding the driver to switch off.

Should the warning lamp bulb burn out, this will not in any way affect the ignition system, but it should be renewed as soon as possible in order to safeguard the battery and coil.

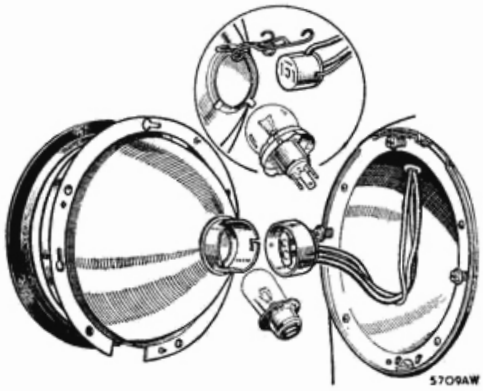

Fig. N.24.
The headlamp light unit removed, showing the bulb holder and back-shell, etc., with the European lamp inset.

Section N.17

HEADLAMPS

The headlamp bulb is correctly positioned in relation to the reflector and no focusing is required when a replacement bulb is fitted.

The double filament bulbs are controlled by a hand operated dipping switch deflecting both headlamp beams downwards to avoid dazzle.

Certain countries have lighting regulations to which the foregoing arrangements do not conform and cars exported to such countries have suitably modified lighting equipment.

Removing the light unit

To remove the light unit for bulb replacement, unscrew the retaining screw at the bottom of the plated lamp rim and lift the rim away from the dust excluding rubber.

Remove the dust excluding rubber which will reveal the three spring loaded screws. Press the light unit inwards against the tension of the springs and turn it in an anti-clockwise direction until the heads of the screws can pass through the enlarged ends of the keyhole slots in the lamp rim.

This will enable the light unit to be withdrawn sufficiently to give attention to the wiring and bulb.

Bulb replacement—R.H.D. and L.H.D. (except European type)

With the light unit withdrawn, twist the back shell anti-clockwise and pull it off. Withdraw the bulb from the holder.

Insert the replacement bulb in the holder, making sure that the slot in the periphery of the bulb flange engages the projection in the holder.

Engage the projections on the back shell with the slots

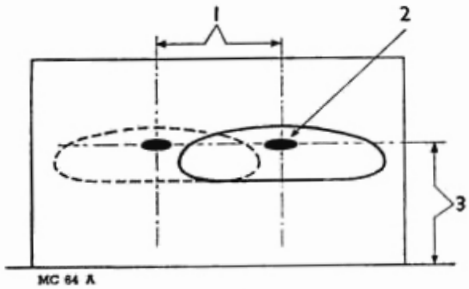

Fig. N.25.
Headlamp beam setting.
1. *Distance between lamp centres.*
2. *Concentrated area of light.*
3. *Height of lamp centres from ground.*

of the holder, press it on and twist it clockwise until it engages with its catch.

Bulb replacement (European type)

The headlamps fitted to left hand drive cars for use in European countries are fitted with special front lenses giving an asymmetrical light beam to the right hand side. Access to the bulb is achieved in the same way as with right hand drive cars, but the bulb is released from the reflector by withdrawing the three pin socket and pinching the two ends of the wire retaining clip to clear the bulb flange. When replacing the bulb make certain that the rectangular pip on the bulb flange engages the slot in the reflector seating.

Replace the spring clip with its coils resting in the base of the bulb flange and engaging the two retaining lugs on the reflector seating.

Refitting the light unit

Position the light unit so that the heads of the adjusting screws coincide with the enlarged ends of the attachment slots. Push the light unit towards the wing to compress the springs and turn the unit to the right as far as it will go, that is approximately ½ in. (13 mm.).

Replace the dust excluding rubber on the light rim with its flanged face forward and refit the plated rim.

Setting

The lamps should be set so that the main driving beams are straight ahead and parallel with the road surface and with each other. If adjustment is required, remove the rim as previously described. Set each lamp to the correct position in the vertical plane by means of the vertical adjustment screw at the top of the reflector unit. Turn the screw in a clockwise direction to raise the beam and in an anti-clockwise direction to lower it. Horizontal adjustment can be altered by turning the adjustment screws on each side of the light unit.

The setting of the lamps can best be carried out by placing the car in front of a blank wall at a distance of 25 feet, taking care, of course, that the surface on which the car is standing is level and not sloping relative to the wall. It will be found an advantage to cover one lamp while setting the other.

Section N.18

SEALED BEAM LIGHT UNITS

Cars exported to the U.S.A. are fitted with headlamps that incorporate sealed beam light units.

To change a sealed beam light unit, remove the plated headlamp rim, slacken the three screws that secure the light unit rim, then rotate the rim anti-clockwise to disengage the slotted holes from the heads of the retaint ing screws. Pull the light unit forward and disconnec- the three pin socket from the back of the lamp unit.

Section N.19

MODIFIED SEALED BEAM LIGHT UNITS

An improved type of sealed beam light unit is fitted to later A35 Vans and Countrymen exported to the U.S.A.

Headlamps that embody the improved light unit can be identified by a number 2 moulded into the lens at the 12 o'clock position.

When setting these headlamps, they must be aimed and set in the dip position in accordance with the regulations of the States in which the vehicle is used.

Section N.20

SIDELAMPS

To gain access to the bulb, slacken the screw at the rear of the lamp body, then the front rim and bulb holder assembly may be withdrawn. Squeeze the legs of the lamp holder bracket together to release the rim, rubber washer and lens. Remove the defective bulb and replace with a new bulb of the correct type, see **'GENERAL DATA'**. Reassembly is a reversal of the above instructions.

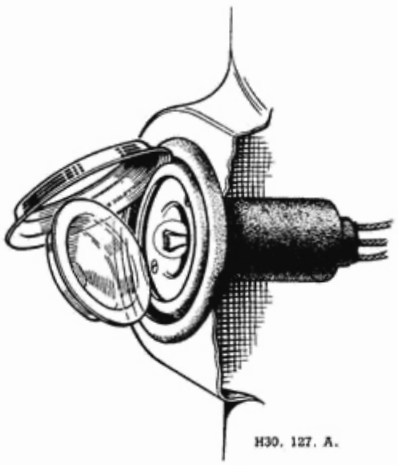

Fig. N.26.
Showing how the stop/tail lamp glass is secured.

Section N.21

TAIL/STOPLAMPS

To gain access to the bulb, pull back the outer rubber lip to release the rim and the inner rubber lip to release the lens.

Remove the defective bulb and replace with a new bulb of the correct type, see **'GENERAL DATA'**. The bulb is manufactured with offset securing pins, thus ensuring that it is fitted into the holder the correct way round. First, refit the lens and secondly, the rim to the inner and outer rubber lips respectively.

Prior to chassis No. 2847 on R.H. drive cars and 2790 on L.H. drive cars a combined tail/stoplamp and number plate illumination lamp was fitted centrally behind the boot.

Section N.22

NUMBER PLATE LAMP

To gain access to the bulb, slacken the securing screw and remove the cover. Remove the defective bulb and replace with a new bulb of the correct type, see **'GENERAL DATA'**.

Section N.23

PANEL LAMPS

It is a simple matter to remove and replace the instrument panel light bulbs. Two of these are fitted and should either bulb become defective the first step is to remove, by a straight pull, the bulb holder.

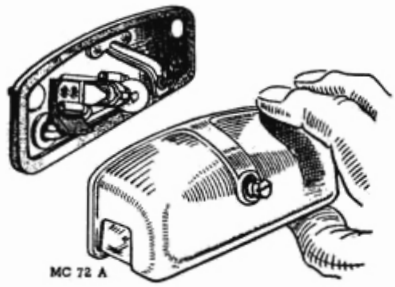

Fig. N.27.
Number plate illumination lamp.

These holders are spring loaded in position and locate into circular holes, one at each end, in the back of the panel.

Identification is easy as the electrical leads to each holder are coloured red and white. Take out the defective bulb and replace it with one of the same type (see **'GENERAL DATA'**), after which the holder can be pushed back into position so that it is securely located by its spring.

The remaining bulbs of the instrument panel—oil pressure, ignition and the main beam indicators—are all secured in a similar manner to the panel lights and are removed and replaced in the same way. It will be noticed that the two lower holders which contain the ignition and oil pressure warning lights are each provided with a protective rubber sleeve.

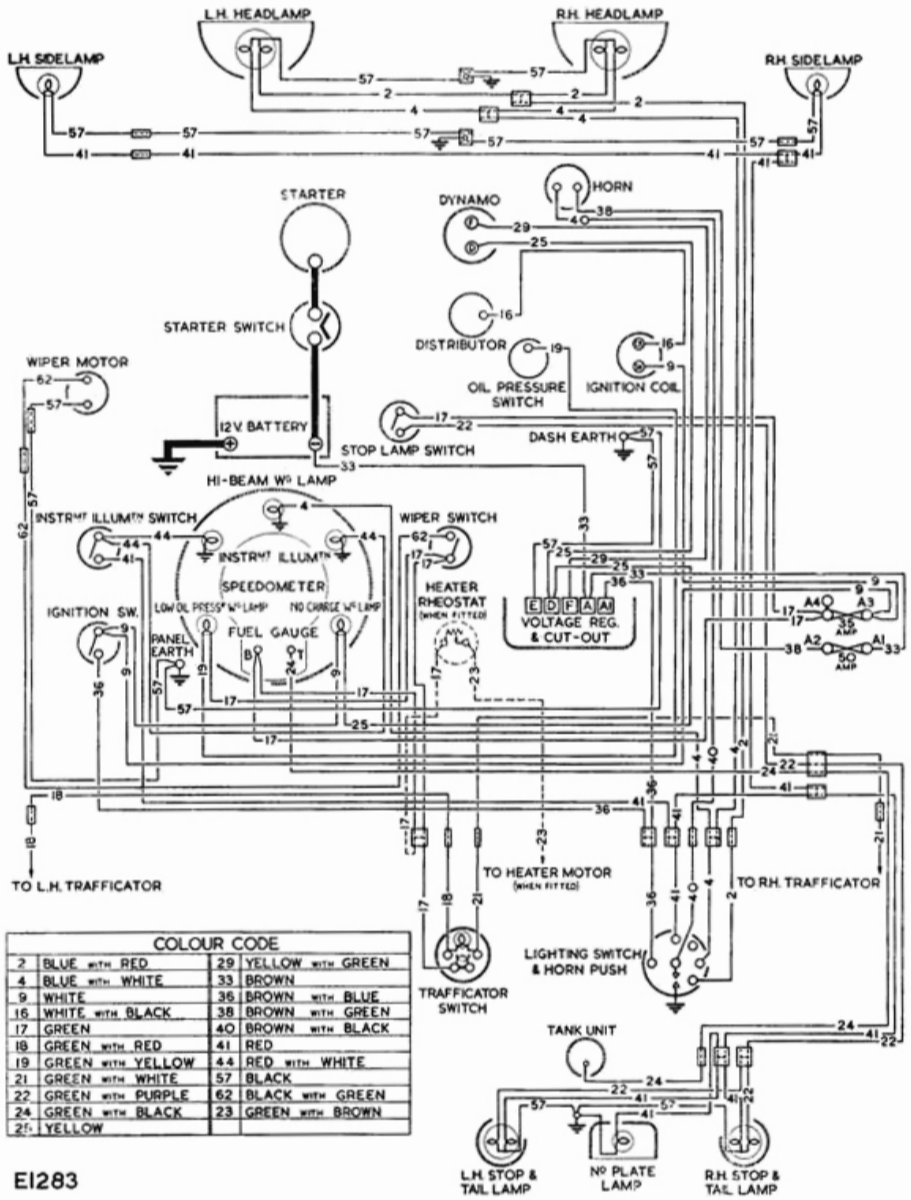

COLOUR CODE			
2	BLUE WITH RED	29	YELLOW WITH GREEN
4	BLUE WITH WHITE	33	BROWN
9	WHITE	36	BROWN WITH BLUE
16	WHITE WITH BLACK	38	BROWN WITH GREEN
17	GREEN	40	BROWN WITH BLACK
18	GREEN WITH RED	41	RED
19	GREEN WITH YELLOW	44	RED WITH WHITE
21	GREEN WITH WHITE	57	BLACK
22	GREEN WITH PURPLE	62	BLACK WITH GREEN
24	GREEN WITH BLACK	23	GREEN WITH BROWN
25	YELLOW		

Fig. N.28.
Wiring diagram A30 (AS3).

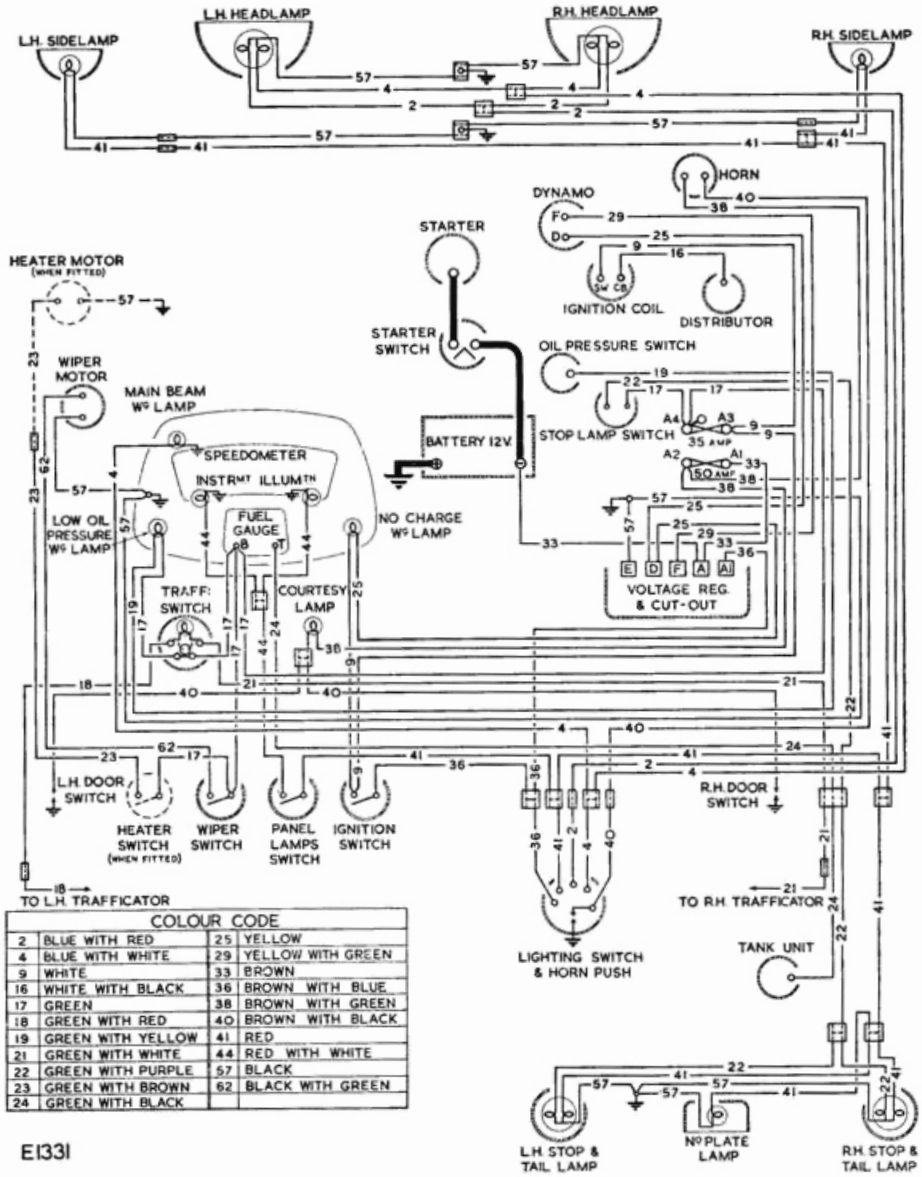

COLOUR CODE			
2	BLUE WITH RED	25	YELLOW
4	BLUE WITH WHITE	29	YELLOW WITH GREEN
9	WHITE	33	BROWN
16	WHITE WITH BLACK	36	BROWN WITH BLUE
17	GREEN	38	BROWN WITH GREEN
18	GREEN WITH RED	40	BROWN WITH BLACK
19	GREEN WITH YELLOW	41	RED
21	GREEN WITH WHITE	44	RED WITH WHITE
22	GREEN WITH PURPLE	57	BLACK
23	GREEN WITH BROWN	62	BLACK WITH GREEN
24	GREEN WITH BLACK		

Fig. N.29.
Wiring diagram A30 (A2S4, AS4, AP4 and AV4) and A35 (AP5 and AV5).

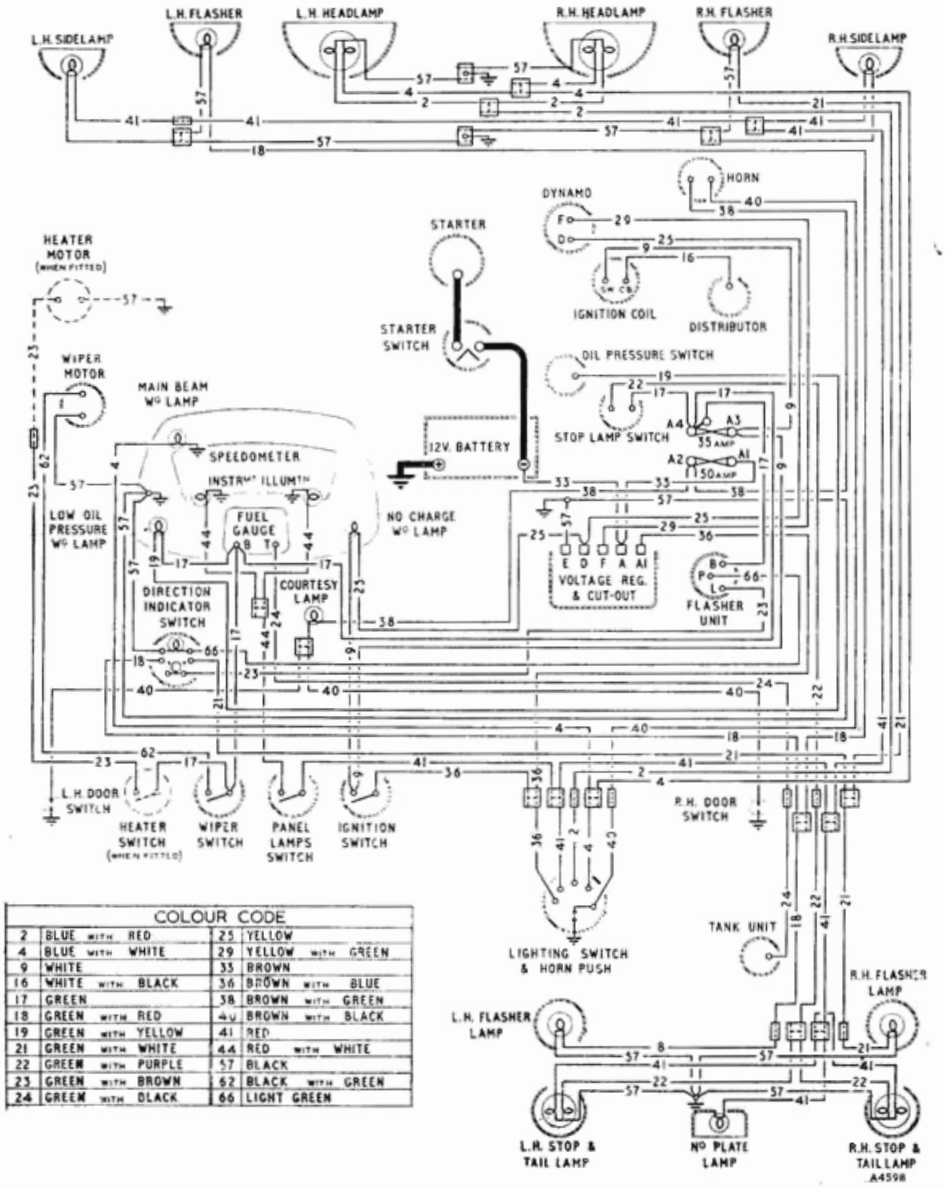

COLOUR CODE			
2	BLUE WITH RED	25	YELLOW
4	BLUE WITH WHITE	29	YELLOW WITH GREEN
9	WHITE	33	BROWN
16	WHITE WITH BLACK	36	BROWN WITH BLUE
17	GREEN	38	BROWN WITH GREEN
18	GREEN WITH RED	40	BROWN WITH BLACK
19	GREEN WITH YELLOW	41	RED
21	GREEN WITH WHITE	44	RED WITH WHITE
22	GREEN WITH PURPLE	57	BLACK
23	GREEN WITH BROWN	62	BLACK WITH GREEN
24	GREEN WITH BLACK	66	LIGHT GREEN

Fig. N.30.
Wiring diagram A35 (A2S5, AS5 and AK5).

SECTION O

WHEELS AND TYRES

	Section
Tyre	
Balance	O.5
Fitting	O.6
Maintenance	O.1
Removal	O.4
Repairing	O.7
Valves	O.2
Wheel—removing	O.3

Section O.1

MAINTENANCE

Even tyre wear is promoted by changing the positions of the tyres on the car at intervals of 3,000 miles (4800 km.). The spare tyre should be brought into use with the others. See Fig. O.2.

Attention should be paid to the following points with a view to obtaining the maximum mileage from the tyres.

Test the tyre pressures every week by means of a suitable gauge and restore any air lost. It is not sufficient to make a visual inspection of the tyre for correct inflation. Inflate the spare wheel tyre to the correct rear wheel pressure.

Keep the treads free from grit and stones and carry out any necessary repairs. Clean the wheel rims and keep them free from rust. Paint the wheels if necessary.

It is essential that oil (paraffin particularly) and grease should not be allowed to collect on the garage floor, as their presence is injurious to rubber. If oil is discovered on the tyres it must be wiped away with a petrol moistened cloth.

Misalignment plays havoc with the front tyres and a periodical check with an alignment gauge, as detailed in Section J, is highly recommended. Flat spots, feathering, or unexpected rapid wear on the tyres will indicate incorrect wheel alignment or bad brake adjustment.

Should a tyre appear to lose an appreciable amount of air between short intervals, it should be examined at the earliest moment and the fault remedied, or a new tube or cover fitted.

Section O.2

VALVES

A mushroom-headed rubber valve is used with tubeless tyres. The valve is secured in the wheel by a small stepped flange on the rubber valve and by the pressure of air inside the tyre.

A simple but effective tool for fitting the valve can be made up from a 7 in. (177·8 mm.) length of ½ in. (12·7 mm.) steel bar or 13 SWG steel tubing. Using a letter 'S' (8·83 mm.) drill, in one end drill a hole to a depth of approximately ⅝ in. (15·87 mm.).

Obtain an ordinary valve dust cap and solder the cap in the drilled hole.

Drill a hole about ½ in. (12·7 mm.) from the opposite end to accept a short piece of ¼ in. (6·35 mm.) diameter rod to provide a handle.

To fit the valve with the aid of the tool, first liberally coat the rubber valve and the perimeter of the valve hole in the wheel with soapy water. Insert the valve in the hole and screw on the special tool. A sharp pull will seat the valve correctly.

The valves may be tested for airtightness by rotating the wheel until the valve is at the top and inserting the end of the valve in a small container of water. If bubbles appear the seating is faulty and the valve interior should be replaced by a new one.

It is advisable to change the valve interiors every12 months.

Valve caps, in addition to preventing dirt entering the valve, form a secondary air seal and should always be fitted.

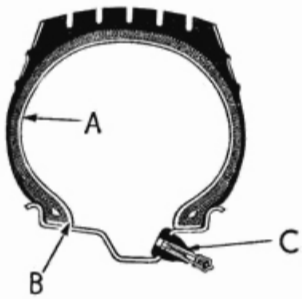

O. 1.
Section through a tubeless tyre.
A. *Air-retaining liner.* B. *Rubber air seal.*
C. *Rubber-sealed valve.*

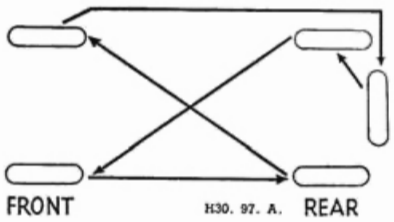

Fig. O.2.
Illustrating the tyre changing sequence.

Section O.3

REMOVING A WHEEL

Remove the hub cover by inserting the blade of a screwdriver in the recess provided adjacent to the securing lobes. Employ a twisting motion to the screwdriver, not a levering movement.

Slacken the four nuts securing the road wheel to the hub. Lift the vehicle with the jack, remove the nuts, which have right-hand threads, and lift the wheel from the hub.

Refitting a wheel is a reversal of these instructions, but ensure that the wheel nuts are fitted with the tapered side towards the wheel and tighten them in the order 1, 3, 4, 2, imagining them to be numbered 1 to 4 in rotation.

Section O.4

TYRE REMOVAL

It is as well to remember that for removing or replacing

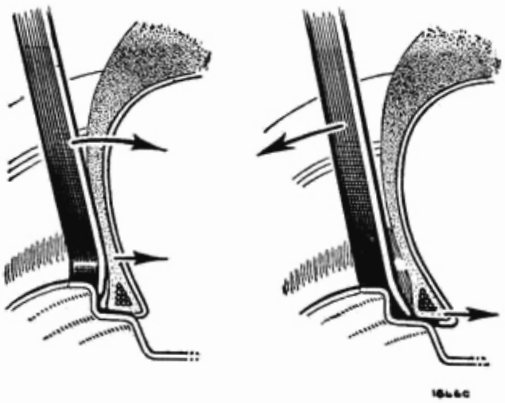

Fig. O.3.
The use of levers in tyre removal.

a tyre, force is unnecessary and can be dangerous, as it merely tends to damage the cover beads.

To remove a tyre, first withdraw all valve parts to deflate it, then push both tyre beads off the rim seats.

Commence to remove the bead on the valve side of the cover by inserting a lever at the valve position and, while pulling on this lever, push the bead into the well of the rim diametrically opposite the valve. Insert a second lever about 2 in. (50·8 mm.) away from the first and gradually prise the bead over the rim flange.

Continue round the rim, prising the bead over the rim with one lever while holding the removed portion of the bead with the other.

With one bead thus freed from the wheel rim the tube can now be withdrawn.

Next, stand the cover upright with the freed bead nearest the operator and insert a lever from the front, between the second bead and the flange. Pull the cover back over the flange. Should the operation prove difficult, keep the strain on the lever and tap the tyre off with a rubber mallet.

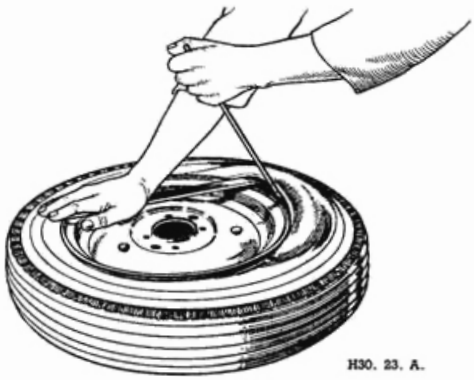

Fig. O.4.
Using a pair of tyre levers to remove a tyre

Tubeless tyres

Demounting tubeless tyres differs in no way from the demounting of conventional tyre and tube assembly, except that there is no tube to remove.

However, extra care should be taken when breaking the bead away from the rim flange and on lifting the bead to ensure that it is not damaged. When using ordinary tyre levers or bead breaking tools be sure that they are in good condition and used properly, so that they will not damage the bead rubber. On normal type tyres superficial damage to the bead rubber in no way affects their performance, but on tubeless tyres it may cause air leaks.

Keep the levers moistened with water.

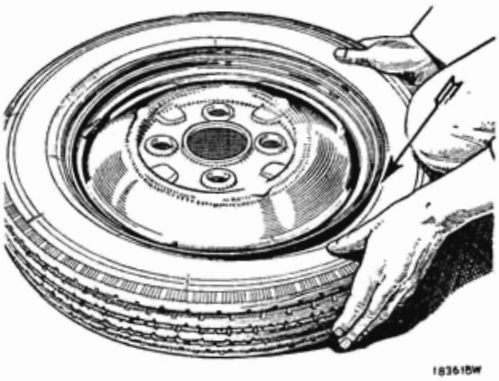

Fig. O.5.
Push the cover bead into the well-base of the wheel as indicated by the arrow.

Section O.5

TYRE BALANCE

For good steering it is important that the wheels and tyres should be correctly balanced. To assist this, the tyre manufacturers are now marking their tyres with a white or coloured spot in the neighbourhood of the bead at the lightest point of the cover. When fitting tyres to the wheels ensure that they are assembled with the white or coloured spot on the cover in line with the valve.

Special balance weights, covering a range from ½ to 3½ oz. (14·2 to 99 gm.) in steps of ½ oz. are supplied by the Dunlop Rubber Co. under Part Nos. WBW/1 to 7 for attachment to the wheel rim. The balance weights are fitted to the outside rim of the wheel.

Wheels must be balanced to within 12 in. oz. (0·85 kg. cm.).

Section O.6

TYRE FITTING

Tubeless tyres are fitted and removed in the same

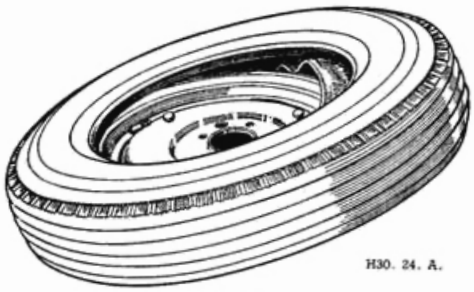

Fig. O.6.
Replacing a tube.

manner as conventional tyres.

The tubeless tyre relies primarily on a good air seal between the tyre bead and the rim, and also between the rim and the valve. Great care is therefore necessary to avoid the slightest damage to the tyre bead, and the following instructions are of great importance.

Rim preparation

(*a*) Clean the flange and rim seat with steel wool, emery or other cleaning medium and remove all foreign matter, rust, rubber, etc. Paint need not be removed but irregularities in the surface should be smoothed out. In extreme cases of rusting, it may be necessary to use a wire brush or a file.

(*b*) File or buff away any high-spot at the butt-weld joint.

(*c*) Wipe the flange and bead seat with a water-moistened cloth.

Before fitting, moisten the beads of the tyre, the rim flange, and the tyre levers with water; **do not use petrol (gasoline).** Mount the tyre on the rim and push one edge of the cover over the edge of the rim; continue working round the tyre towards the valve position. The portion of the tyre first fitted should be kept pushed into the well-base of the wheel rim and then no difficulty will be encountered in fitting the last portion of the cover. Do not forget that the balance spot on the tyre must be in line with the valve position.

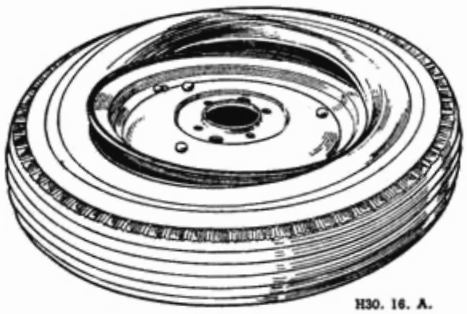

Fig. O.7.
Fitting a tyre.

Before inflation, bounce the crown of the tyre on the ground at various points to snap home the beads of the tyre against the rim of the wheel and provide a partial seal.

With the wheel in an upright position inflate the tyre. If a seal cannot be obtained at the first rush of air bounce the tyre again with the air-line attached. In cases of difficulty apply a tourniquet of strong cord around the circumference of the tyre and tighten. When a seal is obtained inflate until the beads are completely forced against both rim flanges. Remove the air-line, insert the valve interior, and inflate to 50 lb./sq. in. (3·52 kg./cm.^{2}) for testing.

Allow the tyre to stand for a few minutes so that any

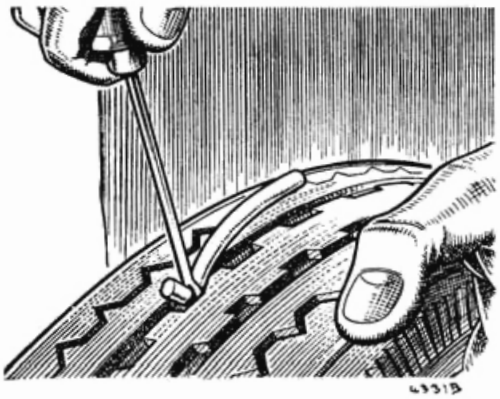

Fig. O.8.
Inserting a plug through the hole in the tyre.

free air trapped between the flange and the bead clinch can escape. Test the complete assembly in a water tank, paying special attention to the areas at the beads, valve, and wheel rivets.

Sealing leaks located during testing

Loss of air may occur at any or all of the following points:

(*a*) The area of the bead seat, showing as a leak at the top of the flange.

This is normally due to a high-spot on the rim and can usually be cured by holding the bead away from the rim to allow further cleaning.

(*b*) The wheel rivets. In this case, and in extreme cases of leakage in the area of the bead seat (*a*), it is necessary to remove the tyre. Before doing so mark the position of the leak on the tyre and rim. Loss of air at the rivets can be cured by peening over the rivet heads.

(*c*) The base of the valve or the valve interior. Provided the valve is correctly fitted, this may be due only to dirt under the valve seat. Clean the area of the valve seat on the wheel and fit a new valve interior.

Inflate the tyre to the correct pressure before using the vehicle.

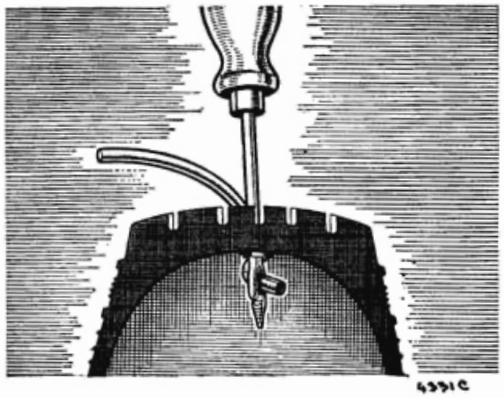

Fig. O.9.
The plug is inserted and the needle about to be withdrawn.

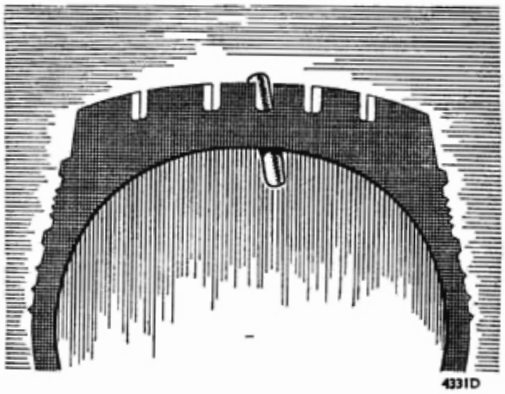

Fig. O.10.
The plug cut off to the correct length.

Section O.7

REPAIRING TYRES

Penetrations

Normally a tubeless tyre will not leak as the result of penetration by a nail or other puncturing object provided that it is left in the tyre. It is necessary to examine the tyres after every 3,000 miles (4800 km.) and to withdraw such objects at a time when loss of air pressure will cause least inconvenience.

Use of plugging kit—location and preparation

If a hole fails to seal, mark the spot and extract the puncturing object, taking note of the direction of penetration. If the tyre is leaking and the puncturing object cannot be located by sight, it is necessary to immerse the inflated tyre in water.

Dip the plugging kit needle into the flask of solution and insert it into the hole in the tyre, following the same direction as the penetration.

Repeat the operation until the hole is well lubricated with solution.

Repair

Select a plug about twice the diameter of the puncturing object, stretch it, and roll it into the eye of the needle ¼ in. (6·35 mm.) from the end. After dipping the plug into the solution insert the needle into the hole and push the plug through the tyre (Figs. O.8 and O.9).

Withdraw the needle and cut off surplus plug about ⅛ in. (3·18 mm.) from the surface of the tread (Fig. O.10). The tyre can now be inflated and used immediately. More severe injuries which are outside the scope of simple puncture repair methods are dealt with in nearly the same way as similar injuries to conventional covers.

If the tyre deflates on the road following an unusually large penetration a tube can be fitted to enable the owner to remain on the road until it is convenient for the necessary repairs to be carried out. (The valve used for the tubeless tyre must be removed before the fitting of the tube.)

Repairing tubes

Punctures or injuries must be vulcanized. Ordinary patches should only be used for emergencies and cannot be relied upon.

Patches are quite useless in the case of synthetic tubes. These must be vulcanized if punctured or otherwise damaged.

SECTION P

LUBRICATION

	Section
250 miles (400 km.) service	P.1
Engine	
1,000 miles (1600 km.) service	P.2
Steering box	
Steering idler	
Propeller shaft	
Greasing points	
Gearbox	
Rear axle	
Carburetter controls	
Air cleaner (oil bath type only)	
3,000 miles (4800 km.) service	P.3
Engine oil change	
Air cleaner (oil bath type only)	
Miscellaneous items	
6,000 miles (9600 km.) service	P.4
Engine oil filter	
Air cleaner (gauze type)	
Gearbox oil change	
Rear axle oil change	
Front wheel hubs	
Water pump	
Distributor	
12,000 miles (19200 km.) service	P.5
Engine-flushing	
Dynamo	
Speedometer cable	

RECOMMENDED LUBRICANTS

A ENGINE AND OIL BATH AIR CLEANER

Climatic conditions	Esso	Mobil	Shell	BP Energol	Filtrate	Sternol	Duckham's	Castrol
Tropical and temperate down to 32° F. (0° C.)	Esso Extra Motor Oil 20W 30	Mobiloil A	Shell X—100 30	Energol S.A.E. 30	Medium Filtrate 30	Sternol W.W.30	Duckham's NOL Thirty	Castrol X.L.
Extreme cold down to 10° F. (—12° C.)	Esso Extra Motor Oil 20W/30	Mobiloil Arctic	Shell X—100 20/20W	Energol S.A.E. 20W	Zero Filtrate 20	Sternol W.W.20	Duckham's NOL Twenty	Castrolite
Arctic consistently below 10° F. (—12° C.)	Esso Motor Oil 10	Mobiloil 10W	Shell X—100 10W	Energol S.A.E. 10W	Sub-Zero Filtrate 10W	Sternol W.W. 10	Duckham's NOL Ten	Castrol Z
GEARBOX								
All conditions	Esso Extra Motor Oil 20W/30	Mobiloil A	Shell X—100 30	Energol S.A.E. 30	Medium Filtrate 30	Sternol W.W. 30	Duckham's NOL Thirty	Castrol X.L.

B REAR AXLE STEERING BOX AND IDLER

All conditions down to 10° F. (—12° C.)	Esso Gear Oil G.P.	Mobilube G.X. 90	Shell Spirax 90 E.P.	Energol E.P. S.A.E. 90	Hypoid Filtrate Gear 90	Ambroleum E.P.90	Duckham's Hypoid 90	Castrol Hypoy
Arctic consistently below 10° F. (—12° C.)	Esso Gear Oil G.P.	Mobilube G.X. 80	Shell Spirax 80 E.P.	Energol E.P. S.A.E. 80	Hypoid Filtrate Gear 80	Ambroleum E.P. 80	Duckham's Hypoid 80	Castrol Hypoy Light

C WHEEL HUBS

All conditions	Esso Multi-purpose Grease H	Mobilgrease M.P.	Shell Retinax A	Energrease L. 2	Super Lithium Filtrate Grease	Ambroline L.H.T.	Duckham's L.B. 10 Grease	Castrolease L.M.

D STEERING CONNECTIONS, SWIVEL PINS, PROPELLER SHAFTS, CLEVIS PINS, AND LEVER FULCRUMS

All conditions	Esso Multi-purpose Grease H	Mobilgrease M.P.	Shell Retinax A	Energrease L. 2	Super Lithium Filtrate Grease	Ambroline L.H.T.	Duckham's L.B. 10 Grease	Castrolease L.M.
All conditions	Esso Gear Oil G.P.	Mobilube G.X. 140	Shell Spirax 140 E.P.	Energol E.P. S.A.E. 140	E.P. Filtrate Gear 140	Ambroleum E.P. 140	Duckham's NOL E.P. 140	Castrol Hi-Press

E UTILITY LUBRICANT, OILCAN POINTS, ETC.

All conditions	Esso Extra Motor Oil 20W/30	Mobiloil Arctic	Shell X—100 20/20W	Energol S.A.E. 20W	Zero Filtrate 20	Sternol W.W. 20	Duckham's NOL Twenty	Castrolite

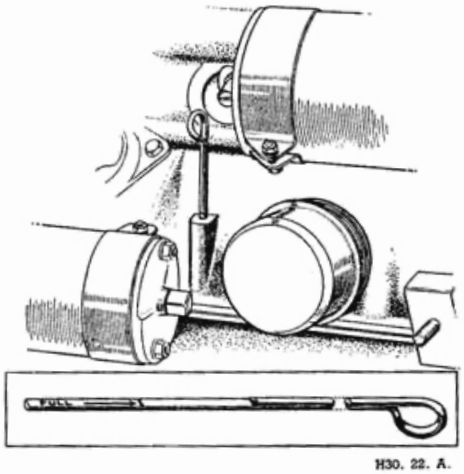

Fig. P.1.
Dipstick location.

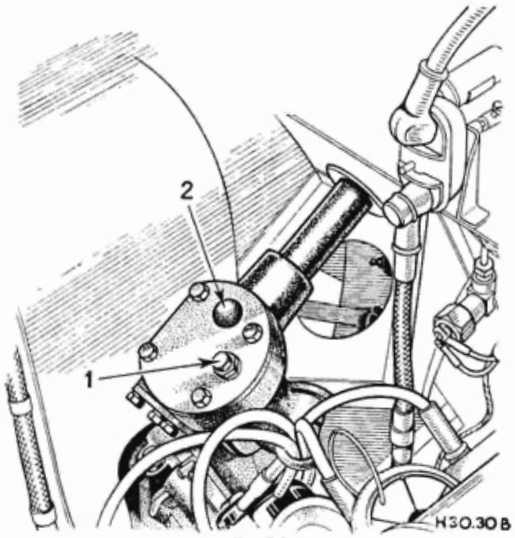

Fig. P.3.
1. *Adjusting screw.* 2. *Oil filler plug.*

Section P.1

DAILY SERVICE

ENGINE (A)

Inspect the oil level in the engine and refill if necessary to the 'MAX' mark on the dipstick. The oil filler cap is on top of the engine valve cover and is released by turning it anti-clockwise.

STEERING GEARBOX (B)

Check the oil level, and top up if necessary with oil to Ref. B (see page P.2). The correct level is flush with the bottom of the filler hole. Ensure that no dirt or grit enters the steering gearbox when removing or replacing the filler plug.

STEERING IDLER (B)

Check the level of the oil, and top up if necessary with oil to Ref. B (see page P.2).

NOTE.—On no account should the steering idler be overlooked as the resulting load imposed on the steering gearbox would be very severe and might well cause serious damage to the gearbox.

Section P.2

1,000 MILES (1600 Km.) SERVICE

Carry out the instructions detailed in Section P.1 and then continue with the following:

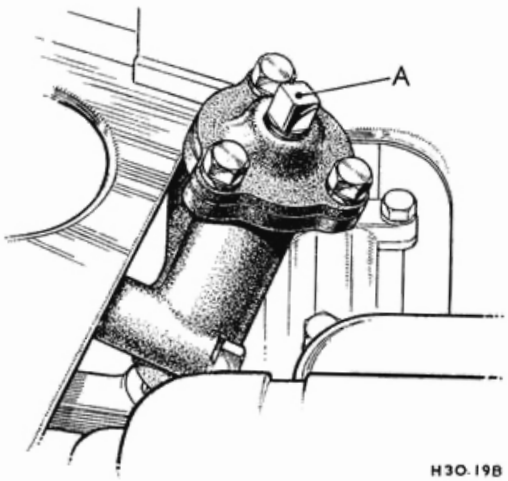

Fig. P.2.
A. Steering idler filler plug.

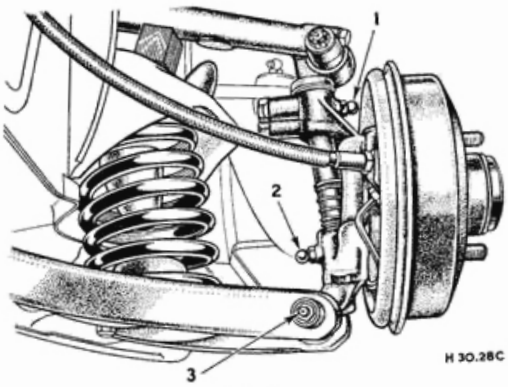

Fig. P.4.
Front suspension (L.H. Steering).
1. *Swivel axle pin top bush.* 2. *Swivel axle pin bottom bush.*
3. *Suspension lower link bushes.*

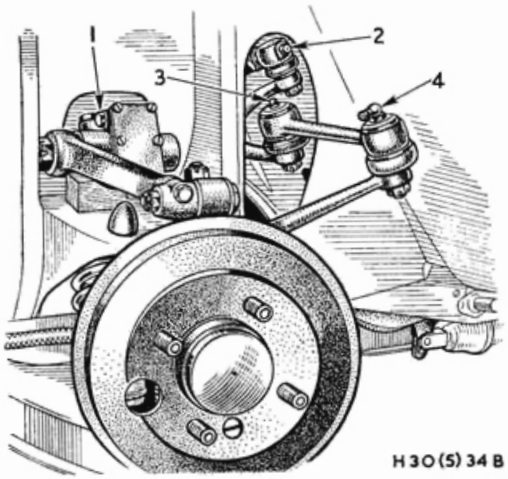

Fig. P.5.
Steering connection (L.H. steering).
1. *Shock absorber filler plug.* 2. *Steering cross tube connection.*
3 *and* 4. *Steering side tube connections.*

GREASING POINTS (D)

Grease nipples are situated at the points listed below and should receive several strokes of the grease gun filled with grease to Ref. D (page P.2):

(1) Front suspension outer fulcrum pins (one nipple each side).
(2) Swivel pins (two nipples each side). This is best done when the vehicle is partly jacked up as the lubricant is then able to penetrate properly around the bushes.
(3) Steering track-rod and draglink ball joint nipples (one on each joint—six in all).
(4) Rear spring shackle pins (one nipple on each rear shackle).
(5) Brake balance lever nipple.
(6) Propeller shaft universal joint (two nipples).

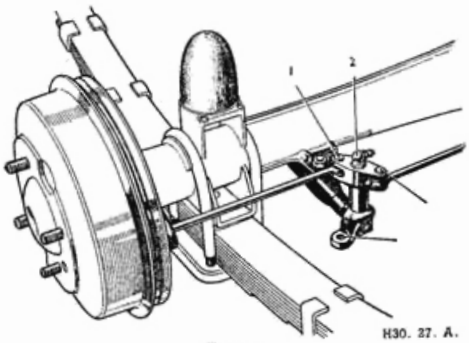

Fig. P.6.
Rear brake linkage.
1. *L.H. pull rod joint pin.* 2. *Balance lever nipple.*
3. *R.H. pull rod joint pin.* 4. *Balance lever arm joint.*

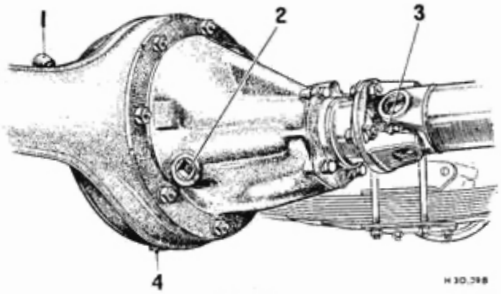

Fig. P.7.
The rear axle.
1. *Breather.* 2. *Filler plug.*
3. *Universal joint nipple.* 4. *Drain plug.*

GEARBOX (A)

Check the level, and top up if necessary. To reach the combined filler plug and dipstick lift the carpet and remove the rubber cover on the top of the gearbox covering. Remove the combined level and filler plug and fill up with oil to Ref. A (page P.2).

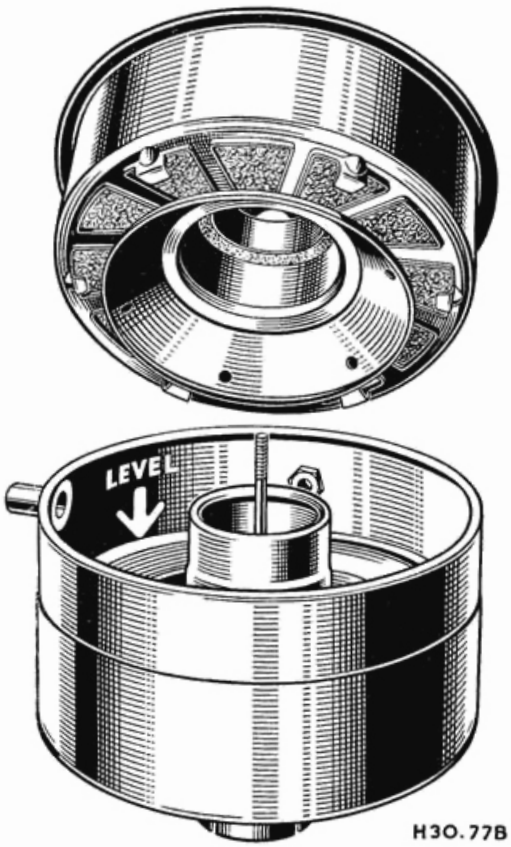

Fig. P.8.
Oil bath type air cleaner exploded (1st type).

REAR AXLE (B)

The combined filler and level plug situated on the front of the axle case is reached from below the rear of the car. The oil level should be replenished if necessary to the level of the filler plug hole.

NOTE.—It is essential that only Hypoid oil be used in the rear axle.

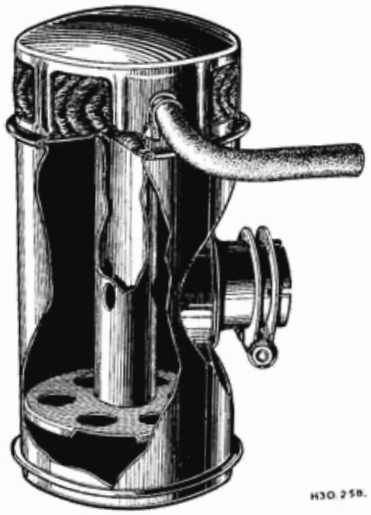

Fig. P.9.
Oil wetted air cleaner cut away (1st type).

CARBURETTER CONTROLS (E)

Using an oil to Ref. E (page P.2), lubricate lightly all carburetter linkage.

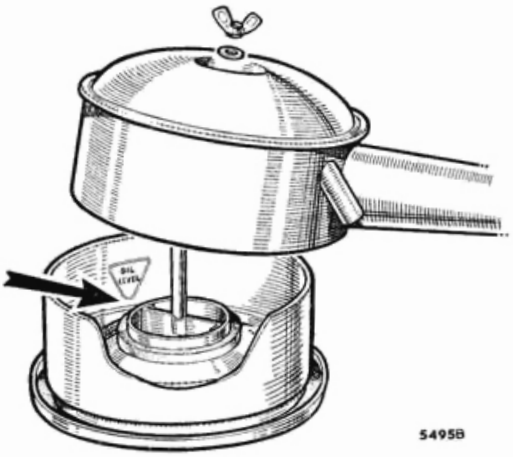

Fig. P.10.
The oil bath air cleaner (2nd type).
Showing the oil level mark and 1, the rubber sealing rings.

AIR CLEANER (A)

Oil bath type only

Inspect the oil level and top up as required with oil to Ref. A.

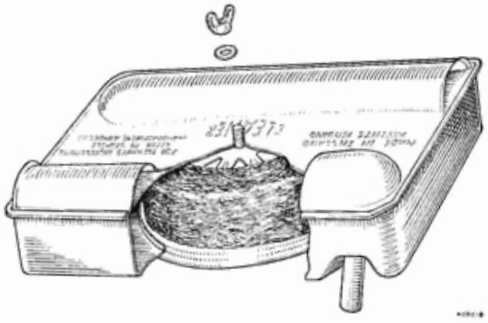

Fig. P.11.
Oil wetted air cleaner (2nd type).

Section P.3

3,000 MILES (4800 Km.) SERVICE

Carry out the instructions detailed in Section P.2 and continue with the following:

ENGINE OIL CHANGE (A)

Drain the oil from the engine by removing the drain plug on the right-hand side of the engine sump after a journey when the oil is still warm.

AIR CLEANER (A)

Oil bath only (1st and 2nd types)

Release the clip and disconnect the rubber breather pipe from the air cleaner.

Uncrew the clip securing the air cleaner to the air intake manifold and lift off the air cleaner with an up and sideways movement to clear the locating spigot from its rubber bush.

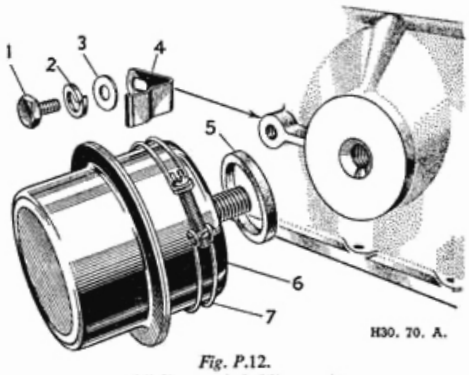

Fig. P.12.
Oil filter exploded (1st type).

1. *Setscrews.*
2. *Spring washer.*
3. *Plain washer.*
4. *Oil filter bracket.*
5. *Rubber seal.*
6. *Oil filter.*
7. *Locking clip.*

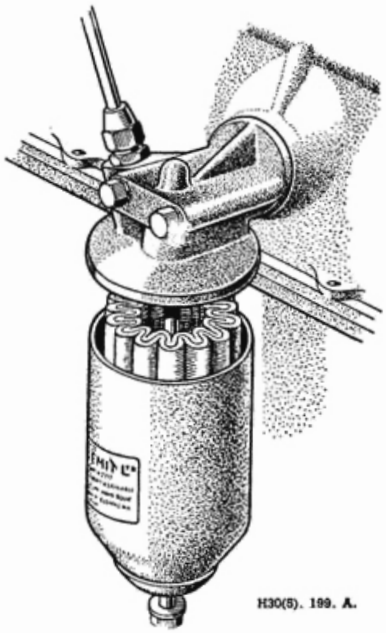

Fig. P.13.
The full-flow oil filter (2nd type)

Remove the wing nut from the centre of the top cover. Lift off the top cover and filter element.

Wash the filter element in a bowl of paraffin (kerosene), and allow it to drain and dry **thoroughly.**

Lift out the oil container, empty the oil, and scrape out the accumulated sludge. Wash the oil container in kerosene and fill to the level indicated on the side of the bowl with engine oil. It is not necessary to re-oil the filter element; it is done automatically as soon as the engine starts up.

Make sure that the cork gasket in the cover is in good condition, reassemble the cleaner, and refit on the engine.

Gauze type

Remove the gauze and wash it in petrol. Allow it to dry and immerse it in engine oil before reassembling.

Section P.4

6,000 MILES (9600 Km.) SERVICE

Carry out the instructions detailed in Sections P.2 and P.3 except those under 'GEARBOX' and 'REAR AXLE' (Section P.2), and continue with the following:

ENGINE OIL FILTER

By-pass type

It maintains the cleanliness of the circulating engine oil, thus helping to prolong the life of the engine.

The filter screws into the cylinder block on the right side of the engine and is held in place by a clip and pressed steel bracket.

Renewing the filter

Remove the pressed steel bracket securing setscrew, slack off the screw in the clip and slide it off. Finally unscrew the filter.

Ensure that the rubber ring, situated on the face that screws into the cylinder block, is stuck in position prior to assembly. Failure to take this precaution will invariably result in an oil leak. Screw the filter right up by hand, finally securing it with the clip and bracket. The bracket is secured to the block by a setscrew and spring washer.

Full-flow type

Fit a new external engine oil filter element. The filter element is released by unscrewing the centre-fixing bolt and withdrawing the filter. Fit a new felt-type element and replace the filter bowl, ensuring that the joint washer is correctly positioned, clean, and serviceable.

GEARBOX OIL CHANGE (A)

Drain the gearbox oil, using a square key to remove the drain plug.

When the gearbox has been drained completely, refill. The oil should be poured in through the combined filler and level plug hole.

REAR AXLE OIL CHANGE (B)

Remove the drain plug with the square key and drain out the oil. Refill with Hypoid oil (Ref. B, page P.2) to the level of the filler plug hole.

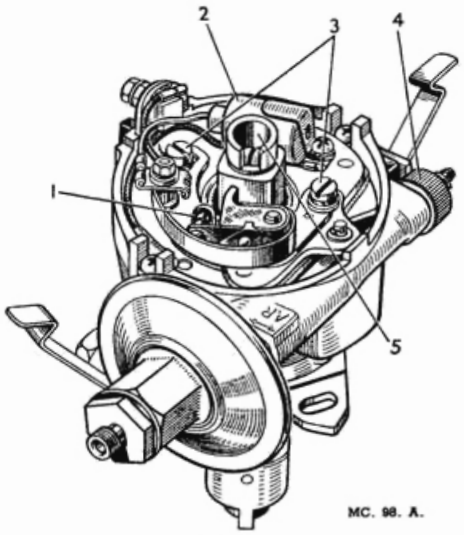

Fig. P.14.
Distributor platform.
1. *Contact points.* 2. *Capacitor.*
3. *Contact adjusting screws.* 4. *Micrometer adjuster.*
5. *Cam and drive shaft oiling point.*

DISTRIBUTOR

Cam bearing (E)

Lift the rotor from the top of the spindle by pulling it squarely and add a few drops of thin engine oil (Ref. E, page P.2) to the cam bearing. Do not remove the screw which is exposed.

There is a clearance between the screw and the inner face of the spindle for the oil to pass.

Replace the rotor with its drive lug correctly engaging the spindle slot and push it onto the shaft as far as it will go.

Cam (C)

Lightly smear the cam with a very small amount of grease (Ref. C, page P.2), or if this is not available clean engine oil can be used.

Automatic timing control (E)

Carefully add a few drops of thin engine oil (Ref. D, page P.2) through the hole in the contact breaker base through which the cam passes. Do not allow the oil to get on or near the contacts. Do not over-oil.

Contact breaker pivot (E)

Add a spot of engine oil (Ref. D, page P.2) to the moving contact pivot pin.

FRONT WHEEL HUBS (C)

Remove the front wheel hub covers and prise off the grease-retaining cap from the end of each hub.

Refill with grease (Ref. C, page P.2) and replace.

WATER PUMP

Every 6,000 miles (9600 km.) remove the water pump oiling plug on the water pump casing and add a small quantity of S.A.E. 140 oil. The oiling of the pump must be done very sparingly, otherwise oil will flow past the bearings onto the face of the carbon sealing ring and impair its efficiency.

Section P.5

12,000 MILES (19200 Km.) SERVICE

Carry out the instructions detailed in Section P.4 and continue with the following.

ENGINE-FLUSHING (A)

Remove the engine sump drain plug and allow the old oil to drain completely. Replace the drain plug and partially refill the engine with flushing oil manufactured by one of the approved oil companies on page P.2. Run the engine at a fast idling speed for three minutes. After stopping the engine special care must be taken to ensure complete drainage of the flushing oil. Replace the sump drain plug and fill the engine with oil to Ref. A (page P.2).

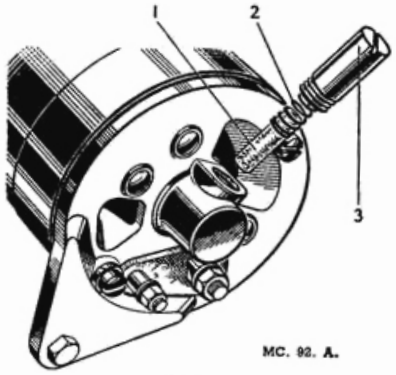

Fig. P.15.
Dynamo lubrication (1st type).
1. *Wick lubricator.* 2. *Spring.* 3. *Adjuster screw.*

DYNAMO

1st type

Unscrew the wick lubricator with slotted end and refill the cup with high melting point grease.

2nd type

Inject a few drops of S.A.E. 30 oil through the lubricating hole in the end bearing.

SECTION R

THE BODY

	Section
Body	
Alignment	R.19
Care	R.1
Panels	R.18
Shell	R.13
Bonnet	R.3
Boot	R.4
Bumpers	R.11
Doors	R.5
Headlining	R.9
Instrument panel	R.10
Parcel shelf	R.12
Radiator grille	R.2
Repair procedure	R.14
Seats	R.7
Service tools	End of Section
Torch soldering	R.17
Welding	
Methods	R.15
Technique	R.16
Window glasses	R.6
Wings	R.8

Section R.1

BODY CARE

Coachwork, wings and windshield

Regular attention and care to the body finish is necessary if the new appearance of the car exterior is to be maintained against the effect of air pollution, rain and mud.

Frequent washing of the bodywork, using a soft sponge with plenty of water containing a mild detergent, is recommended. Large deposits of mud must be softened with water before using the sponge. When clean dry the surface of the car with a damp chamois leather. Any damaged parts should immediately be covered with paint and a complete repair effected as soon as possible. When 'touching-in' light scratches and abrasions with paint ensure that all traces of wax polish are removed from the affected area beforehand.

Methylated spirits (denatured alcohol) should be used to remove spots of grease or tar from the body work, windshield and bright parts of the car.

The application of a good quality polish is recommended to give added lustre to the paintwork. Do not allow silicone wax based polishes to come into contact with the windshield, they have been known to have a detrimental effect on the wiper blades and are difficult to remove.

Bright trim

Metal polish must not be used to clean chromium, plastic, stainless steel or anodised aluminium bright parts. Wash them frequently with soap and water and when the dirt has been removed, polish the surface with a clean dry cloth or chamois leather until bright. Never use an abrasive.

A slight tarnish may be found on stainless steel that has not been washed regularly and this can be removed with impregnated wadding such as is used on silverware.

Surface deposits on chromium parts may be removed with a chromium cleaner.

An occasional application of wax polish or light oil to metal trim will help to preserve the finish, particularly during winter when salt has been applied to the roads, but these protectives should not be applied to plastic finishers.

Upholstery

The upholstery has in general an impermeable surface, which can be kept clean and looking fresh by occasionally wiping it down with a damp cloth and saddle soap. The upholstery, which is of leather cloth, should be finished off with a good leather cream when the surface is dry.

Carpets

Keep the carpets free from dust and grit by using a vacuum cleaner or by vigorously brushing the surface with a stiff brush. Periodically, the carpets should be removed and thoroughly beaten, after which the body floor should be inspected.

If the body floor shows any signs of rust, it should be thoroughly cleaned and painted over with a quick-drying enamel before the carpets are replaced.

Section R.2

Radiator grille removal (A30)

To remove the chromium-plated pressing that forms the radiator grille, it is first necessary to remove the radiator (Section C.2); the spire nuts which hold the grille in place will then be accessible.

With the radiator out of the way, it will be found possible to insert a small screwdriver in turn under each of the eight spire nuts and spring them free of the grille studs with a sharp twist.

Adopt the above procedure to dismantle the centre moulding and trade mark. The heraldic badge is held in position by the centre moulding, which must first be released, before it can be removed.

When refitting the grille see that its contour fits closely around the cowl. If necessary, the grille can be set to shape a little before being finally fixed in position.

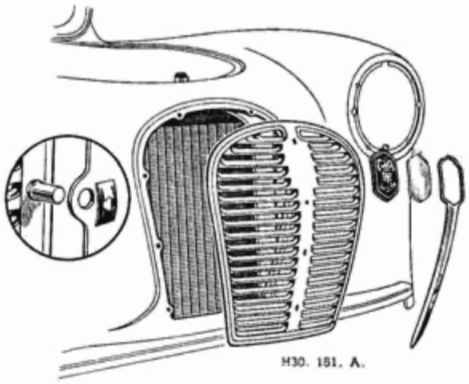

Fig. R.1.
The method of securing the grille with spire nuts (A30)

Radiator grille removal (A35)

(1) Remove the radiator as described in Section C.2.
(2) Unscrew the seven nuts securing the chrome bezel and remove the bezel.
(3) The grille can now be removed by releasing the spring clips securing it to the body.
(4) Replacement of the grille is the reverse of the above procedure.

Section R.3

Bonnet top

The bonnet is a single pressing reinforced by cross braces and stiffeners. It is hinged at the rear and is fitted with a prop rod and lock. A safety catch is fitted to prevent it blowing back and obscuring the driver's vision.

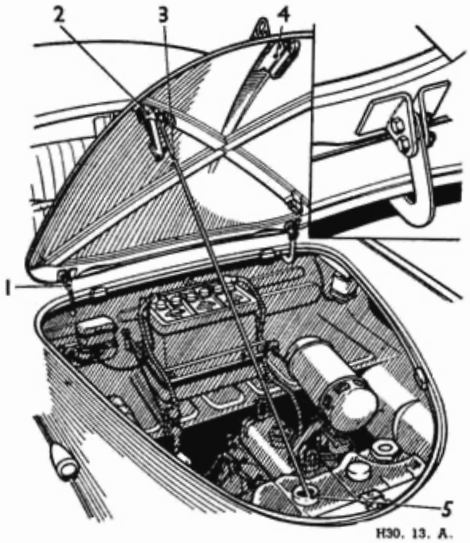

Fig. R.2.

1. *Bonnet hinge.*
2. *Safety catch.*
3. *Prop rod.*
4. *Lock assembly.*
5. *Prop support bracket.*

Inset shows the method of securing the hinge to the bonnet top.

To remove the bonnet top, open it and take out the two bolts which secure the pressing to the hinge, then lift off the bonnet as a unit.

Bonnet lock and safety catch

The bonnet lock is a single assembly welded to the bonnet top. It can, therefore, only be removed by breaking the weld along the edges by which it is secured. The 'Flying A' monogram will come away from the bonnet lock when its two securing screws are released.

A bracket welded inside the bonnet top carries the safety catch. When the pivot pin which is secured by a split pin is withdrawn, the safety catch and its spring can be taken out.

Section R.4

Boot

Each hinge is secured to the body and lid respectively by two screws (Fig. R.3). To remove, release the two screws on each side of the lid and lift it off.

The screws to the body pass through elongated slots, which allow the boot lid a limited amount of movement, to be positioned.

If the boot lid has been damaged or distorted, it will probably have to be reset by straining it against a block of wood resting on the edge of the body.

Boot lock

The lock is held in position by a recessed head screw at each side and two more on the inner side of the boot lid. The lock escutcheon is secured by two screws.

Security of the lock is dependent upon the outward movement of the boot lid as it is opened. It is therefore important to position the lid so that it cannot be opened without a key.

Section R.5

DOORS

Door locks and hinges

Occasionally apply a few drops of oil on the moving parts of all door locks and hinges. A light touch of grease smeared on the lock striker plates will ensure free movement and reduce wear of the locks.

In addition, periodically check the security of door hinges, locks, dovetails and striker plates with a screw-driver.

Door removal

First release the check strap from the bottom of the door.

The upper and lower portions of each door hinge are secured by a hinge pin with a ball cone, spring, special nut and lockwasher. Remove the nut and lockwasher and tap the hinge pin until it is clear of the lower portion. Repeat this operation for the second hinge and lift the door off.

Door replacement

Doors that have been removed by the simple process of extracting the hinge pin, can be replaced with little trouble; when new doors are fitted, however, or if the hinges have been removed, greater care will have to be taken to ensure that the door hangs square and seats flush with the body sides.

Test the door position before the hinge screws are finally tightened. In some cases it may be necessary to give the door a slight 'set' to ensure a good fit.

Door handle

To remove the outer handle, first extract the rubber grommet on the inside of the door, level with the handle, and withdraw the screw and washer which hold the handle in place.

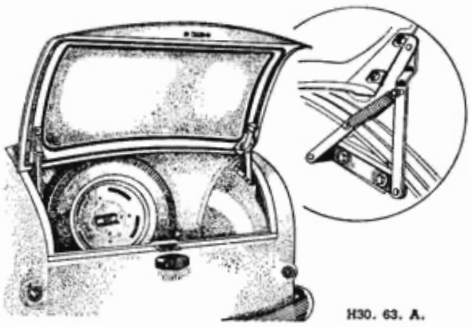

Fig. R.3.
The method of securing the boot lid hinges (inset).

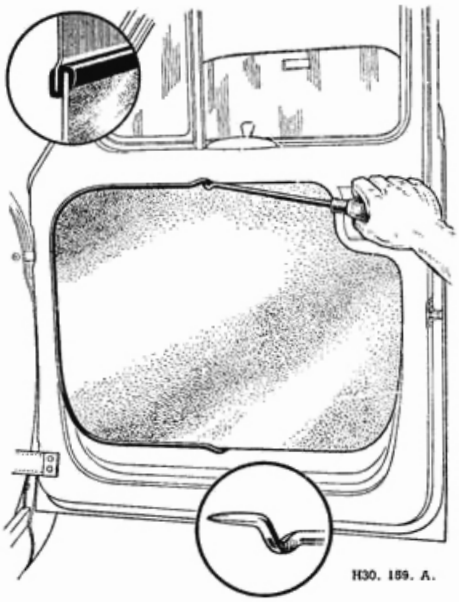

Fig. R.4.
Fitting an inner panel with specially shaped tool (inset).

Door trim (A30)

The door trim fits into a rubber channel. Removal of the trim is done by inserting a screwdriver or tool (see Fig. R.4) behind the edge of the trim; this can then be progressively worked free. Refitting is accomplished by holding the door trim in position and peeling the rubber lip over its edge.

Door trim (late A30 and A35 cars)

Before the trim of the door can be removed the inner lock-operating handle must be withdrawn from its spindle. In addition the door pull strap must be removed.

The trim is held to the door frame by a number of spring clips situated around the inside edge of the trim pad. Insert a screwdriver between the trim and the door shell and prise the clips out of the holes in the door shell.

Finally thread the trim over the lock spindle away from the door and lift it out of the channel at the bottom of the door.

Outer sealing rubbers

The outer sealing rubber around the edge of each door is secured by rubber adhesive. If the sealing rubber has to be removed, any remaining rubber or adhesive must be cleaned off before a new one is fitted.

Should any portion of a sealing rubber be suspected of not effectively sealing out draught, it can be tested by inserting a strip of thin paper between the body and the door as the door is shut. If the paper can be withdrawn when the door is fastened, faulty sealing is indicated at that point.

This defect may be remedied by peeling back the rubber at that spot and sticking a thin strip of rubber behind it.

On later models sealing rubbers are secured by means of clips.

Dovetails

The male dovetail fitting on the door is secured by two recessed head screws which can be readily extracted.

The buffers of the female dovetail can be removed from the body side by inserting a screwdriver under the tip of one buffer and working it out of its socket. In the rear door pillar a metal tongue is bent over the mouth of the dovetail; this should be bent outwards to facilitate removal and replacement.

Private lock

The outside locking device is held in position by a spring at each side of the barrel. These clip against the inside of the outer door panel; in order to withdraw the private lock these clips must be depressed from within the door panels as the lock is prised out.

When refitting a private lock it is imperative that the square socket, in which the spindle operates, is first turned as far as it will go in a clockwise direction. The lock, together with the rubber washer behind the lockplate, can then be pushed into its aperture until the springs clip into position.

Door locks and remote control

To remove the escutcheon from around the door lock remote control lever, take out the two screws at the top. Extract the four screws securing the remote control and take the knob off the remote control lever. Unscrew the four screws holding the bolt plate and withdraw the lock assembly as a unit.

Beginning with Body Number 1299, a new type door lock and remote control lever (Fig. R.5), described in Section R.6 under 'Front door windows,' has been incorporated.

Door hinges

The hinges are positioned in the body and door in such a way as to allow the door to hang properly; it

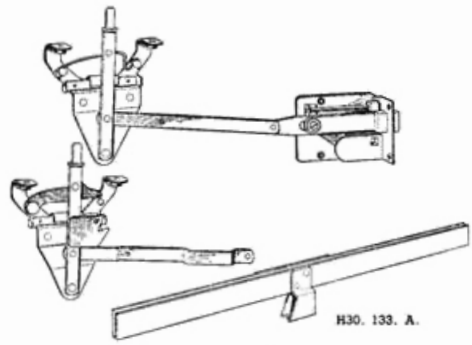

Fig. R.5.
Old type (upper) door lock; new type (centre) and glass channel.

is therefore recommended that the hinges are removed only when it is absolutely necessary. Extraction of the hinges is effected by releasing their recessed head securing screws and drawing the hinges out.

NOTE: Take care that the hinges do not drop inside the body panels, when the screws are released.

Section R.6

WINDOW GLASSES

Front door windows

Before it is possible to gain access to the front door window glass, the door trim must be removed, a procedure which has already been described. Withdraw the two screws just above the spring of the window lift assembly and extract the window lift arm from the channel at the base of the glass. A small hole in the end of the window lift arm carries a steel ball.

The glass guide channels, which the window runs in, must be freed from the door shell by removing the five fixing screws which fasten them to the side and top of the window frame, and freeing the channels from the fixing brackets at their lower end.

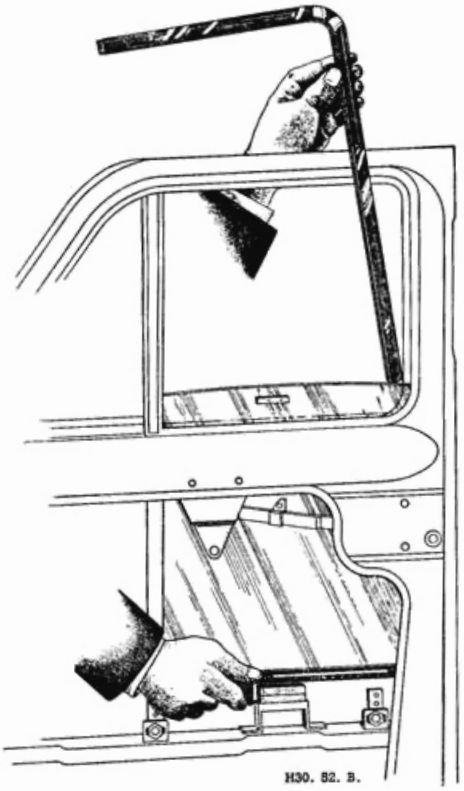

Fig. R.6.
A rear glass channel being worked free to enable a front door window glass to be removed.

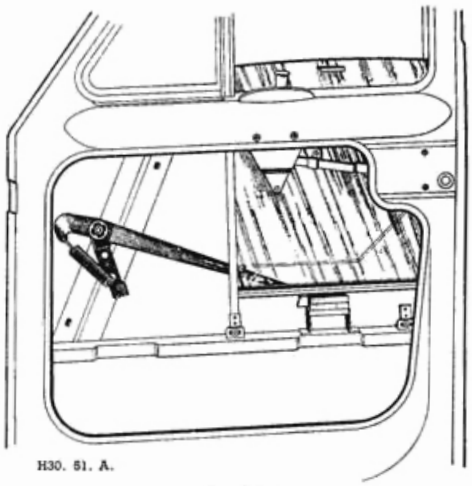

Fig. R.7.
Door window lift and remote control.

Work the glass out from below and at the same time work the rear channel out from above (Fig. R.6). The other channel can then be removed.

Replacement of the front door window glass is effected by reversing the dismantling procedure; there are one or two points, however, that require noting. The channels should be adjusted at their lower ends until the glass slides smoothly and evenly. The glass stop channel must engage with the stop bracket on the remote control device when the remote control lever is in the locking position. From the closed position the window should open one inch before engaging the stop bracket on bodies before Body Number 1299, and when the lock is released the window should open fully under a slight downward pressure. When fully open the window lift arm should rest on the rubber stop of the door stiffener. From Body Number 1299 onwards a new type door lock remote control linkage, which allows the front door glasses to be locked in the fully closed position and also when partially open, has been incorporated (Fig. R.5).

Front and rear door louvres

Both the front and rear door louvres can be quite easily removed from position by adopting the following procedure:

First open the louvre concerned and withdraw its three securing screws from inside the sealing rubber. Then close the louvre and support the glass on the inside with the palm of the hand. If the outside of the glass is now struck sharply, at the top, with the flat of the free hand, the assembly will be forced free at its upper end, thus allowing it to be lifted out.

To remove the louvre catch, release the screw in the centre of the catch handle and take off the spring, stop washer, spigot and shakeproof washer.

The glass channel is pivoted to the frame at the top and bottom. Removal of the glass and channel can be effected by withdrawing the screws which secure the upper pivot to the frame and releasing the bolts through the bottom pivot plates. When the upper pivot is removed the glass can be lifted out from the top.

To replace a louvre first thread a thin cord round the outer groove in the seating rubber so that the ends protrude at the top. Place the louvre in position on the inside of the door and press it against the flange over which it fits. Draw one end of the cord from the outside, thus pulling the rubber over the flange.

Work the louvre into position as the fitting proceeds and finally smooth the rubber neatly round the frame. Refit the three screws through the sealing rubber into the door.

Quarter lights (A30/35)

As an optional extra two door models may be fitted with a swivelling rear quarter window.

To remove the window it must first be opened and the catch released by removal of the two screws which secure the catch to the door shell. This will allow the hinge to open to its fullest extent and bring into view four screws, which when removed, will allow the window to be taken out of the car.

Rear door windows

The rear door windows are non-adjustable and are extracted in a manner similar to that already detailed for the door louvres, that is, by supporting them on the inside and striking them sharply at the top from the outside with the flat of the hand. Once the top is released, the glass and the weatherstrip can be lifted out from inside.

Refitting is again accomplished by employing a cord seated in the outer groove of the rubber. Press the glass and weatherstrip against the inside of the window aperture and draw the cord from the outside. As the rubber pulls over the flange, work the window into position and finally smooth the rubber neatly round the frame. This method of glass fitting is fully described under the heading 'Windshield removal and replacement.'

Windshield removal and replacement

First lift the windshield wiper arms clear of the windshield glass, then run the blade of a knife around the weatherstrip between the rubber and the frame to break the strip of adhesive.

H30. 58. A.

Fig. R.8.
A. *Windscreen glass.*
B. *Rubber moulding.*
C. *Cord pulling rubber over scuttle.*

Support the windshield glass, on the outside with the palm of one hand, and with the flat of the other, strike a sharp blow from the inside near the top of the glass. This will force the weatherstrip away from the top of the frame at one point, thus allowing the glass and weatherstrip to be easily removed.

If the glass has been broken, remove any pieces which may remain in the channel of the weatherstrip before fitting the strip to a new glass.

Insert the glass into the inner channel of the weatherstrip at one point and progressively work the rubber over the edge of the glass. Thread two thin cords round the outer channel of the weatherstrip and offer the glass into position from outside the car.

Lightly press the glass and weatherstrip against the flange of the windshield panel and draw out one end of one cord from the inside and the other from the outside; the rubber will then peel over the flange of the windshield panel. As the cords are unwound, work the glass slightly so as to correctly position it.

Finally feed a suitable adhesive between the rubber and frame, and rubber and glass on the outside to ensure a watertight joint.

Backlight

The backlight can be removed and refitted by positioning it from the outside. Use only one cord and draw it inwards as set out for the windshield. Before fitting the backlight, however, ascertain that the headlining is firmly stuck all round the backlight aperture.

Section R.7

SEATS

Front seat removal

At its forward end the seat is bolted to the adjustment tube and can be lifted out when the bolt has been released from the bracket beneath each side of the seat pan.

The seat cushion is secured to the seat pan by four clips under the seat, which must be bent back to free the cushion assembly.

At its lower edge the squab cover is stuck down and secured by two screws; it is also secured by one screw at each side and three along the back of the seat. When the screws are taken out the squab cover can be pulled away from the seat pan and lifted off the seat squab.

Commencing with Body Number 2202 the front seat mountings and adjustment mechanism, have been increased in width.

Front seat adjustment

The front seats are pivoted on an adjustment tube which carries a peg that locates in one of three notches on the adjustment plate.

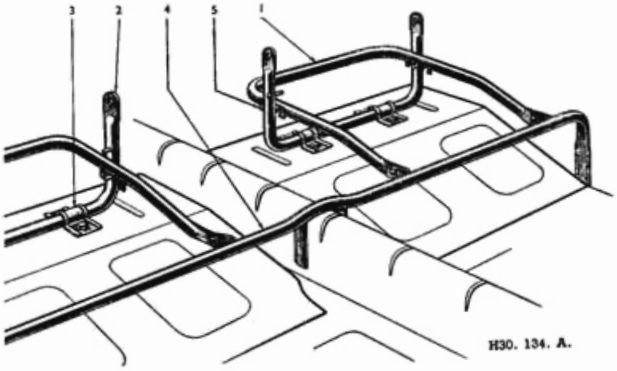

Fig. R.9.
Front seat mounting (early models).

1. *Adjustment tube.*
2. *Seat pivot tube.*
3. *Pivot tube securing bracket.*
4. *Seat support tube.*
5. *Notches for seat adjustment.*

Tilt the seat forward as far as it will go and release the coil spring from the adjustment tube. Move the peg forward or backward to obtain the desired adjustment and then replace the spring.

Front seats (late A30/35 cars)

Commencing Body Nos. A2S4 77918 and AS4 451860 a redesigned front seat has been fitted.

The seats are mounted on two adjusting racks, one either side at the front of the seat, and are held in position by two spring clips. After removal of the spring clips the seat may be taken out of the car or adjusted to any one of four positions.

Rear seat

The rear cushion assembly which rests on the rear seat pan is located by a spigot at each side of its front edge, and can be lifted straight up and removed.

To take out the rear squab assembly, first lift out the rear seat and unscrew the six screws which fasten the lower edge of the squab assembly to the seat pan; then from within the boot take out the two screws which secure it to the parcel shelf.

From inside the car pull away the lower edge of the squab from the seat pan, to which it is fastened with adhesive.

When refitting or renewing the rear squab, push the parcel shelf casing well back against the rear headlining before inserting the two screws from inside the boot. Before the lower edge of the squab is finally secured with adhesive and screws, it should be well smoothed into the seat pan.

Section R.8

WINGS

Front wing

The front wing is bolted in position and can therefore easily be detached from the body.

First take out the headlamp and sidelamp concerned.

Four ¼ in. pan-head screws secure the front wing to the front door hinge pillar; of the wing fixing screws these should be removed first. Next release the hexagonally headed nut and spring washer and take out the screw and 'D' washer from beneath the front apron.

Two more screws just below the headlamp opening hold the front of the wing to the flitch plate. Withdraw these screws and the screw at the rear bottom edge of the wing, below the sill, which is easily overlooked. Access to the screws at the top of the flitch plate, which must also be removed, can be gained from inside the bonnet. The wing and its plastic joint moulding may now be lifted clear of the body.

When refitting the wing, the screws in the door hinge pillar should be fitted first and the wing eased into position so that it fits snugly around the windshield and bonnet surround. Once positioned, the screws along the door hinge pillar and flitchplate can be tightened. Lastly, secure the screws in the sill and front apron.

It should be remembered that the three-piece plastic jointing must be fitted between the wing and bonnet surround before the flitchplate securing points are made fast. A tapered wooden peg inserted into the sidelamp aperture will keep the gap sufficiently wide to allow the jointing to be fed into place. When neatly fixed the side and head lamps can be fitted.

Rear wing

When a rear wing has been damaged to the extent that it requires replacing, the procedure entails the cutting away of the damaged area, care being taken not to damage any of the adjacent panels during the process.

On the side of the body concerned, first remove the rear door, rear wheel and rear lamp, withdrawing the leads from the lamp into the boot. Drain the fuel tank and if the damaged side is that which houses the fuel filler cap, the cap must be removed.

Section R.9

HEADLINING

The lining of the roof interior is made up in two assemblies (Fig. R.10), each consisting of a spring frame on which the lining is trimmed. Do not attempt to remove the headlinings unless new ones are to be fitted, as it is difficult not to damage them in the process.

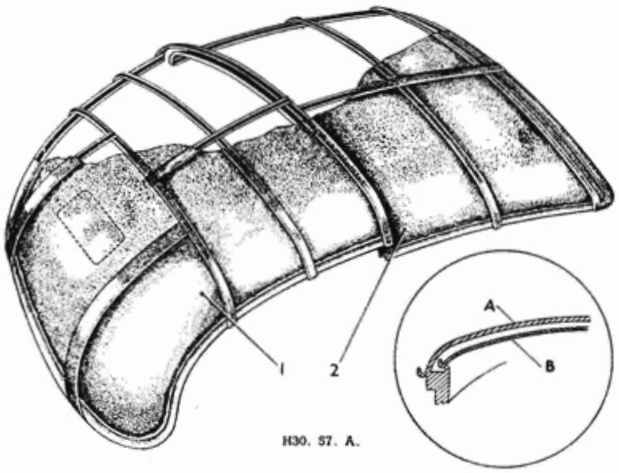

Fig. R.10.
The headlining has been cut away to expose the frame. Inset: location of the frame.

1. *Rear section.*
2. *Front section.*

A. *Roof of car.*
B. *Headlining frame positioned on the cantrail.*

Removal: Commence headlining removal by taking out the front lining first. Start at the point where the two linings overlap above the rear seat. The linings are secured by adhesive at this point and it may be necessary to cut along the joint to separate the two halves.

Next, starting at the rear of the front headlining where it is sprung over the cantrails, insert a thin-bladed screwdriver under the side and prise it out of position. When one side has been freed, the whole assembly can be withdrawn.

On later models, three clips have been added to the front cross member of the rear half. The rearmost cross member of the front half is pushed forward to be supported by these clips. This type requires no adhesive at the point where the two linings overlap and can be identified by feeling for the clips. When removing the front headlining on this type, slide it backwards to free it from the clips and proceed in the usual manner.

To remove the rear headlining take out the rear cushion, squab and backlight, then detach the fabric from around the edge of the backlight aperture. Prise out the rear headlining in a manner similar to that set out for the front, but starting at its foremost end.

Replacement: Before replacing the headlinings ensure that the insulating felt is secure on the roof panel.

Fit the rear headlining first by slipping one side behind the top edge of the cantrail, then spring the other side in by pressing it towards the roof. Work the assembly into position so that the fabric can be pulled taut to the edge of the backlight aperture. Fit the front lining in a similar manner. Coat the inside of the backlight flange with a suitable adhesive and press the lining on to it.

When it is secure, cut the lining round the edge of the aperture with a sharp knife and stick down any free pieces of fabric. Stick the front and rear headlinings together along their overlapping edges and refit the backlight, rear squab and cushion.

On later models where the rear headlining has three clips, fit the rear half as before; the front half, however, must be fitted in such a way that its rearmost cross member is behind the three clips. Now push it forward so that the rear cross member slides into the clips and the front headlining is neatly positioned. No adhesive is needed to stick the overlapping edges of the front and rear headlinings together on this type. Continue from this point onwards with the previous procedure.

Section R.10

INSTRUMENT PANEL

A30

The instrument panel is held in position by four Phillips type screws and four spire nuts behind the panel. All the instruments and their electrical connections are accessible on releasing the instrument panel.

Later A30 and A35

The instrument panel itself can be removed by unscrewing the two knurled nuts which are situated one at each side of the panel behind the fascia, thus releasing the securing clips. The panel can now be drawn forward from its housing and, with the electrical cables and speedometer drive detached, removed from the car.

Before removal of the fascia can commence, the side fillets covering the windshield pillars must be removed. These are secured in place by crosshead screws.

The starter pull cable must be released from the starter switch situated on the bulkhead underneath the bonnet. Also release the choke cable at the carburetter and the outer cable at the engine bulkhead. The trafficator control should be detached by removing the two setpins and releasing the three electrical connections.

The fascia itself is fixed to the scuttle by two hexagonal headed bolts, at each lower corner, and four crosshead screws underneath. When these are removed the fascia

may be lifted off four clips which secure it along the upper edge.

If a heater is fitted the demister pipes must also be released.

Section R.11

BUMPERS

Two brackets on each side of the front bumper are secured to body members by nuts, bolts and spring washers. A bolt, distance washer, spring washer and nut secure the bumper bar to each bracket.

The rear bumper bar is similarly made fast to its brackets, which in turn are secured to the body by two nuts, bolts and washers at each side. These bolts run through the bracket support member from the outside into the boot where the brackets are secured by their nuts and spring washers.

Section R.12

PARCEL SHELF

To remove the parcel shelf, first slide the trim towards the bulkhead, lift its front edge over the shelf rail and pull it out of the two clips on the bulkhead.

If a heater is fitted the control quadrant must be released from the shelf rail, it is secured by two nuts and bolts. The control panel should also be detached by removing the two crosshead screws.

The shelf rail is fixed by means of eight crosshead screws situated on the underside of the rail.

Section R.13

THE BODY SHELL

Now that the detachable components of the body have been removed, all that remains is the body shell. The body shell consists of six major units welded together. Each of these major units is in itself made up of several small pressings welded together.

It is impossible to deal with body repair in detail as the manner in which it is carried out is dictated by the nature and extent of the damage; consequently, for the purpose of this account it will only be dealt with generally (Section R.14), the detailed work being left to the skill and ingenuity of the operator.

Section R.14

REPAIR PROCEDURE

Body jack

The specially designed body jack, obtainable under Part No. 18G308B, is an essential item when rectifying any misalignment of the body construction. The jack is provided with a ratchet turnscrew, and the pitch of the centre spindle thread is such that considerable force (either pulling or pushing) can be exerted. The extension pieces are made from solid drawn steel tubes and their lengths are such that the effective length of the jack can be made to vary between 21 and 94 in. (546 and 2362 mm.).

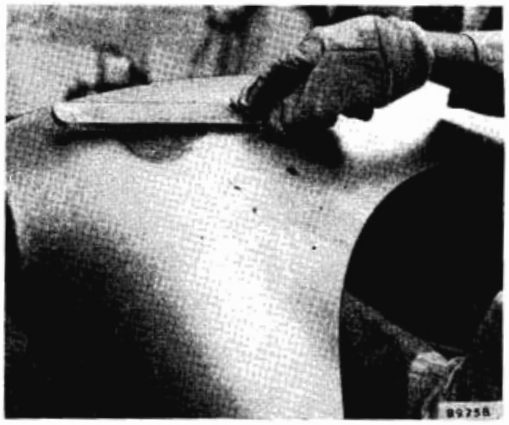

Fig. R.11.
Removing a dent by tapping with a spoon; a dolly is held below the dent.

When using the jack care must be taken to use it in the correct positions to rectify the fault or misalignment. Reference should be made to pages R.20 and R.21 for details of the necessary alignment checks.

With the addition of a suitable oxy-acetylene outfit (Section R.16) any type of mono-construction repair can be effected. The initial outlay need only be small and, considering the wide range of operations covered, there should be no hesitation in deciding that the kit must figure as part of the equipment of your repair shop.

Rectification of buckled panels or underframe

Experience shows that parts of the body which, at first sight might have been considered beyond repair, can be rectified easily by the use of a body jack.

It is of paramount importance to return the damaged

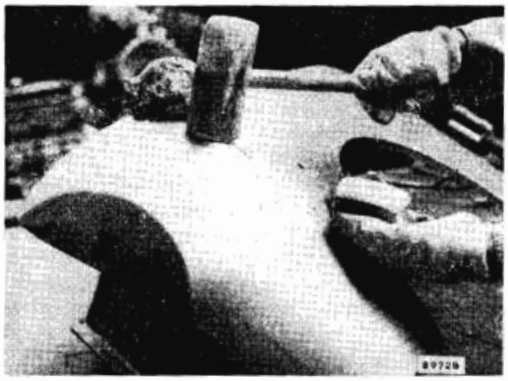

Fig. R.12.
A dolly block and mallet.

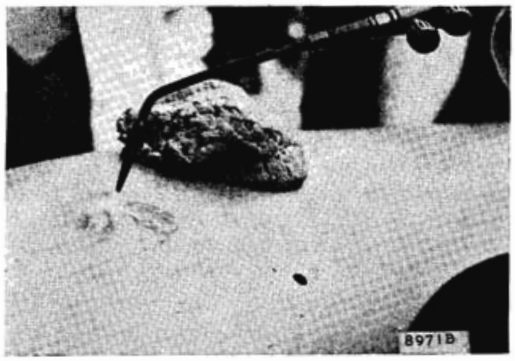

Fig. R.13.
Heating the damaged area before tapping with a mallet.

portion of the body to its original position before deciding whether replacement panels are necessary or not.

With the use of the special jack this method enables a buckled or damaged structure to be returned to its original relative position without straining the surrounding metal, which would be the inevitable result if the damaged portion were pounded by means of a hammer. At this stage a decision can be reached as to whether any damaged panel is to be repaired or renewed.

Spoon for removal of small dents

To remove small dents a spoon which is made from a coarse-cut file, specially shaped and having the teeth intact, is used in conjunction with a suitably shaped dolly block (Fig. R.11).

The use of a hammer to remove small dents is to be deprecated, as hammer-blows tend to stretch the surrounding metal, giving rise to further complications. It is for this reason that the spoon is recommended, as by its use a depression can be raised to its original level without stretching.

On panel work such as doors, or where inside reinforcements prevent the use of a dolly block, a hole can be punched or drilled through the inside panel and a suitable drift pin, about ½ in. (13 mm.) in diameter, used in conjunction with the spoon in place of the dolly block.

Sharper dents or a dent or collection of dents covering a large area will require the use of heat, a dolly, and a spoon in the following manner.

With the welding torch heat a small area at the outside of the collection of dents, then, holding the dolly below, hammer the raised portion with a wooden mallet. When the metal cools remove the dolly and place a large handful of wet asbestos over the heated area to prevent the heat spreading. Continue to heat and tap, working from the outside of the damaged area, until something like the original contour and level is attained.

Lightly file the surface to show up the high-spots and remove these with the dolly and spoon without further heating.

Take care when using the file not to thin the metal more than is necessary to show up the high-spots.

Alternative checking by filing and raising with the dolly block and spoon will eventually produce a flat and clean surface without weakening the metal unduly, provided excessive filing is avoided. Care should be exercised to reduce filing to a minimum as otherwise the thickness of the panel will be seriously reduced.

On completion, the surface may be tinned and any small indentations filled with plumber's solder.

Preservation of paintwork

A special spoon, having the teeth removed and its surface planished and polished, is required to enable small dents to be removed without damage to paintwork. Where it is possible to preserve paintwork when rectifying comparatively large dents a sandbag should be placed against the painted surface of the panel and the dent removed from the under side by the use of a wooden mallet. A suitable sandbag for this operation may be made from a leather oval bag 8 in. (203 mm.) long, 6 in. (152 mm.) wide and 4 in. (102 mm.) thick which is packed tightly with sand.

Stretched panels

Stretched panels which are liable to cause drumming can be rectified by local shrinking. A liberal heap of wet asbestos is placed over the stretched panel at the point of greatest resiliency, and a hole just large enough to apply the flame of an oxy-acetylene torch is made with a finger through the centre of the asbestos. The portion of the panel which is visible is heated to a cherry-red colour and is afterwards cooled off by the wet asbestos which surrounds it. For large panels it may be necessary to repeat this operation several times at different locations over the area.

Where a panel is stretched over a fairly extensive area and produces what is known as an 'oilcan' effect, the following shrinking method should be used to restore the original contour.

Mix a quantity of wet asbestos sufficient to cover the damaged area with a thickness as shown in Fig. R.15. Press the asbestos down firmly to ensure that no air is

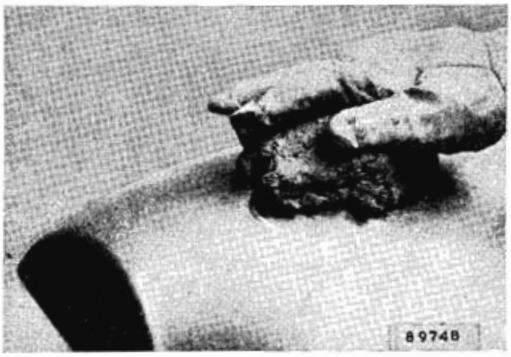

Fig. R.14.
Cooling the damaged area with wet asbestos.

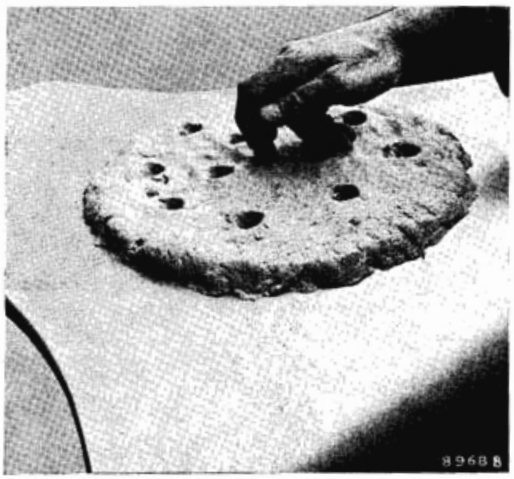

Fig. R.15.
Piercing holes in wet asbestos prior to heating.

trapped below, as it is important to confine the applied heat to the points of application.

With a finger pierce a series of holes in the asbestos extending to the surface of the metal. Direct the flame of the welding torch to one of the holes near the perimeter of the asbestos and heat the metal to cherry red, remove the torch and immediately press the surrounding asbestos into the hole (Fig. R.16).

Carry out the same procedure with the remaining holes, working around the asbestos and inwards towards the centre. When the asbestos is removed the surface is cleaned up in the usual manner.

Patching

It is frequently more economical to patch an extensively damaged panel than to renew the entire assembly.

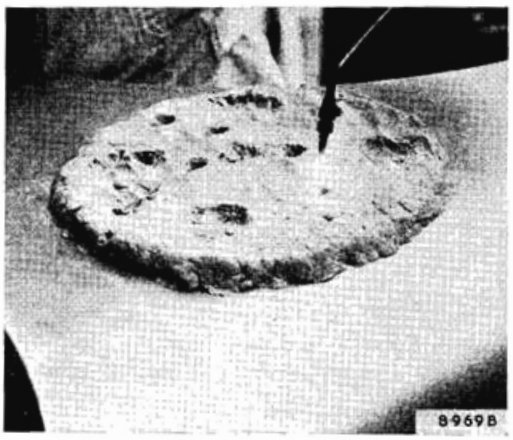

Fig. R.16.
Heating a stretched panel through holes in the asbestos.

This type of repair does not in the least weaken the surrounding structure, as a patch which is correctly gas-welded in position is equal in strength to the original structure. A patch can be introduced so efficiently that it is impossible to trace its presence.

The damaged portion of the panel should be cut out with a cold chisel or, if possible, by means of a hacksaw. The edges of the opening should then be filed until an even contour is obtained (Fig. R.17).

The patch to be fitted should preferably be cut from sheet metal of similar gauge and specification to that being repaired. First, it is rough-shaped to the contour of the panel, after which it is fitted to the opening to allow a clearance on all sides equal to the gauge of the metal.

In all probability, particularly during welding operations, difficulty will be experienced in holding the patch

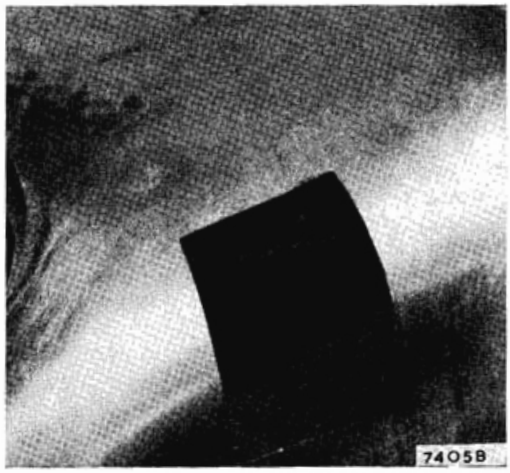

Fig. R.17.
A damaged panel with piece removed for patching.

in place. This can be overcome satisfactorily by welding one or two short pieces of welding wire to act as convenient handles.

The patch is now fastened at intervals of 2 to 3 in. (51 to 76 mm.) to the panel by means of gas-weld tacks (Fig. R.18). During the tacking operation it should be re-shaped to the panel to ensure that the contour is correct.

To prevent expansion and possible buckling of the surrounding panel during the welding operation a liberal quantity of wet asbestos must be placed on the panel round the patch, approximately ¼ in. (6 mm.) away from the joint (Fig. R.19). The joint is now gas-welded between the tacks, whilst precautions are taken to keep the patch to the correct contour by using a suitable dolly block and bumping hammer. On completion, any excrescences in the welding are removed by filing and,

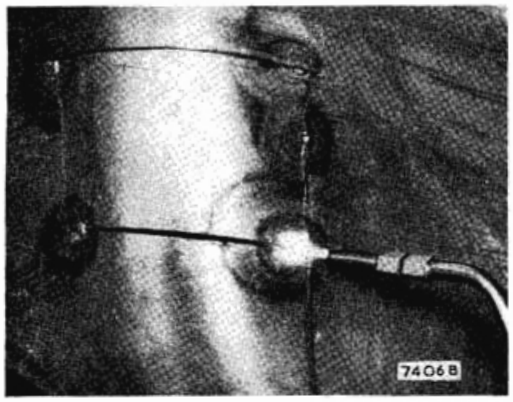

Fig. R.18.
The formed patch held in position by gas-weld tacks.

after straightening with the dolly block and bumping hammer, the patching is finally finished by tinning and solder-filling as described in Section R.17.

Patch forming

Where it is necessary to 'form' a patch from the flat sheet to any particular contour, a wooden or lead raising block is generally employed. The raising block should have several elliptical depressions of varying depths and diameters.

The patch is placed over the selected depression and is raised by hammering with the ball-peen end of a hammer, starting from the outer edges and gradually working towards the centre. A mistake frequently made is to strike too hard whilst raising the centre, with the result that the curve is of too great depth.

Repair of beadings and mouldings

Where difficulty is experienced in straightening or renewing a beading, moulding or corner, the original contour may be obtained by careful tinning and filling with plumber's solder. The finished work will be equal in appearance and equal in strength, whilst the substitution of soldering for straightening or renewing, will render unnecessary the removal of inside trimmings, etc.

Filing

It should be clearly understood that in every case filing must be reduced to a minimum owing to the thinness of the material. Wrinkles or ridges should be removed by the spoon or dolly block, as explained in this section, and finished finally by tinning and solder-filling.

Replacing panels

In cases of extreme damage it will be found more economical to remove the damaged portions and replace them with new panels which are obtainable from B.M.C. Service Ltd.

Owing to the fact that damage is usually localized, it will only infrequently be found necessary to remove a complete panel or unit. In the great majority of cases the damaged portion can be removed and a corresponding part cut from a replacement unit and located in position by gas-welding.

Section R.15

WELDING METHODS

Spot-welds

This form of welding is used extensively throughout the assembly of the mono-construction body.

The units to be joined are pressed together between two copper electrodes through which an electric current of low voltage and high amperage is passed. The resistance of the steel to the electric current raises the metal to welding temperature and the pressure between the electrodes produces complete fusion. The resulting joint is as strong as the surrounding structure and a correctly made spot-weld will not break or become loose by vibration.

Spot-welds cannot be broken satisfactorily by inserting a cold chisel or lever between the two panels. Each weld must be carefully drilled in the centre, using a drill approximately $\frac{3}{16}$ in. (4·76 mm.) in diameter. There is no need to drill through both panels: it is sufficient if the point of the drill merely penetrates the second panel. The weld is finally broken by inserting a thin, sharp, cold chisel between the joint and tapping it lightly with a hammer.

On panels where the spot-welds are covered by paint, it is necessary to use a suitable paint remover to clean

Fig. R.19.
Surround the joint with wet asbestos to prevent buckling during welding.

the paint from the joints. The spot-welds will easily be located by the discoloration of the metal. Reference to the body build-up illustrations will facilitate tracing the various joints.

Gas-welds

A gas-weld may be broken either by cutting with a hacksaw or, alternatively, with a sharp cold chisel. Place a suitable support at the back of the panel to act as an anvil whenever possible.

Lap-welds

Most lap-welds used in the mono-construction body are hidden from view by solder-filling. Reference should be made to the illustrations showing the build-up of the body in order to find the location of the various lap joints. This will enable the operator to direct the flame of the oxy-acetylene blowpipe onto the joint so that the solder filling can be melted and removed by the use of a duster. A lap-weld is broken by drilling out the spot-welds as previously explained.

Butt-welds

A butt-weld can be broken by the use of a hammer and chisel, the blows being directed against the panel which is to be renewed. If this method does not quickly break the weld, heat applied from the oxy-acetylene torch will soften the fused edges, thus assisting the operation. Alternatively, the joint may be cut by a hacksaw.

Remaking welds

The special section of this Manual devoted to welding should be studied carefully before any attempt is made to re-weld a joint on the body by an operator who has not had the necessary experience in this class of work.

When a joint is remade it is necessary, prior to painting, to clean the surface of the weld. During this operation, as previously mentioned, care should be taken to see that the structure is not unnecessarily weakened by excessive grinding or filing. It is preferable to hammer the joint so that it lies slightly lower than the surrounding metal and to flow solder into the depression. No amount of filing on the surface of the solder can reduce the strength of the joint below.

When placing a new panel in position it should be joined where possible by gas-welding through the holes drilled in breaking the original spot-welds. During the welding operations a liberal heap of wet asbestos should be placed over the surrounding panels to prevent buckling and distortion due to heat.

Section R.16

WELDING TECHNIQUE

The following apply to equipment supplied by the British Oxygen Co. Ltd., although they also apply, in the main, to other similar equipment.

Welding equipment

High-pressure oxy-acetylene welding equipment using dissolved acetylene is recommended. This consists of:

(1) Supply of acetylene in cylinders.
(2) Supply of oxygen in cylinders.
(3) Blowpipe with necessary nozzles.
(4) Acetylene pressure regulator.
(5) Oxygen pressure regulator.
(6) Two lengths of rubber-canvas hose.
(7) Set of spanners and spindle key.
(8) Welding goggles and spark lighter.
(9) Welding rods.
(10) Welding fluxes.
(11) Trolley for accommodating complete equipment and cylinders.

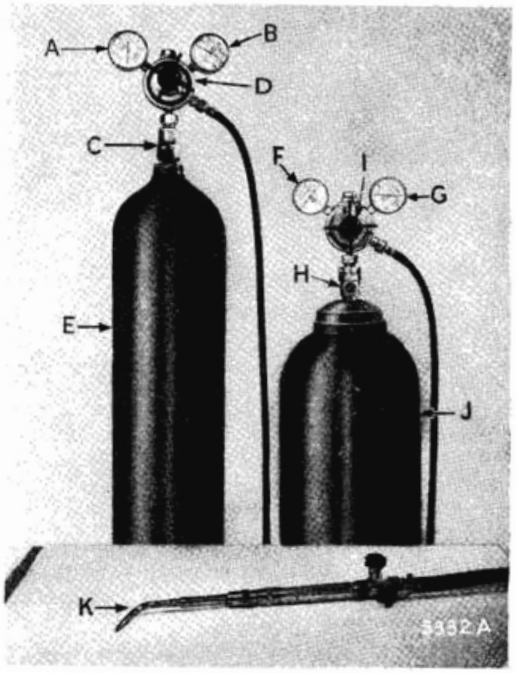

Fig. R.20
High-pressure oxy-acetylene welding outfit

A. Outlet pressure gauge (O).
B. Cylinder contents gauge (O).
C. Valve.
D. Pressure regulating screw.
E. Oxygen cylinder (BLACK)
F. Outlet pressure gauge (A).
G. Cylinder contents gauge (A).
H. Valve.
I. Pressure regulating screw.
J. Acetylene cylinder (MAROON).
K. Blowpipe (interchangeable nozzles).

Assembly

(1) Stand both cylinders vertically on the ground or on a trolley. Oxygen cylinders are painted BLACK. Acetylene cylinders are painted MAROON. **NEVER ATTEMPT TO INTERFERE WITH THE COLOUR OF CYLINDERS OR TO REPAINT THEM.**
(2) See that jointing surfaces in cylinder valves and regulators are free from oil or grease.

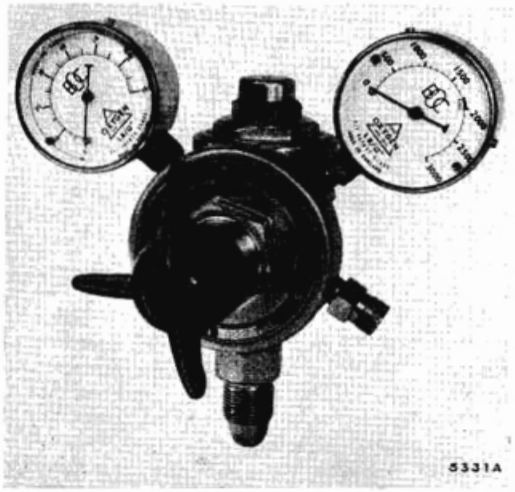

Fig. R.21.
Type B.O.R.12A oxygen regulator.

(3) Open the valve on the oxygen cylinder momentarily in order to dislodge dirt or obstruction in the cylinder valve, then close.

(4) Screw the oxygen regulator (painted BLACK) into the oxygen cylinder valve. The oxygen cylinder valve outlet and oxygen regulator connection have **right-hand** screw threads.

(5) Screw the acetylene regulator (painted MAROON) into the acetylene cylinder valve. The acetylene cylinder valve outlet and acetylene regulator connection have **left-hand** screw threads.

(6) Tighten the regulator in the cylinder valve. Do not use excessive force, but make certain that the joints are gastight.

(7) Connect the hose (acetylene RED, oxygen BLACK) to the screwed outlets of the regulators by means of the screwed connections secured in the ends of the hose. Blow the hose through before attaching to the regulator or blowpipe in order to remove dust or dirt and to remove chalk when the hose is new.

(8) Connect the other end of the hose, that fitted with a hose protector, to the blowpipe—the acetylene hose to the connection marked 'A', the oxygen to the connection marked 'O'. Keep the blowpipe control valves closed. (A high- or low-pressure blowpipe can be used with the dissolved acetylene. If a low-pressure blowpipe is used the acetylene pressure should never exceed 2 lb./sq. in. [·14 kg./cm.^{2}].)

(9) Fix the appropriate nozzle to the blowpipe. (See the table on page R.15).

(10) Open the cylinder valves very slowly by means of the cylinder key. Do not open suddenly or there may be serious damage to the regulator and the possibility of an accident. Open the cylinder valve spindle one turn only.

(11) Set the regulators at the correct working pressures. (See the table.)

(12) Open the acetylene control valve on the blowpipe, wait a few seconds until air is blown out and pure acetylene is coming from the blowpipe nozzle, then light, preferably by means of a spark lighter, type S.L.1.

(13) Reduce or increase the acetylene supply by the blowpipe valve until the flame just ceases to smoke.

(14) Turn on the oxygen by the blowpipe control valve until the white inner cone in the flame is sharply defined, with the merest trace of an acetylene haze.

The blowpipe is now adjusted for welding steel and work may be commenced.

The size of nozzle given for a particular thickness of steel is for general guidance only and will vary according to the skill of the welder, mass of metal, etc. The capacity of each nozzle overlaps the capacities of those next in size to it. The values given are for downhand butt-welds in mild steel. For other techniques, nozzle size and pressure may have to be varied slightly, e.g. for copper, select a larger nozzle, for aluminium, a smaller nozzle.

On thin-gauge steel up to and including $\frac{1}{16}$ in. (1·59 mm.) thickness, tacks should be slightly closer together—say, 1 to $1\frac{1}{2}$ in. (25 to 38 mm.) apart—to keep the edges in alignment and minimize distortion.

For the same reason patches should, wherever possible, be oval or circular. Before welding, these should be slightly 'dished' below the level of the surface to be patched, since welding—even by the correct 'sequence'—will cause them to expand and rise.

Do not light the blowpipe until everything else has been prepared for welding in accordance with the instructions given above. On completion of the job proceed as follows:

Fig. R.22.
Type B.A.R.9 acetylene regulator.

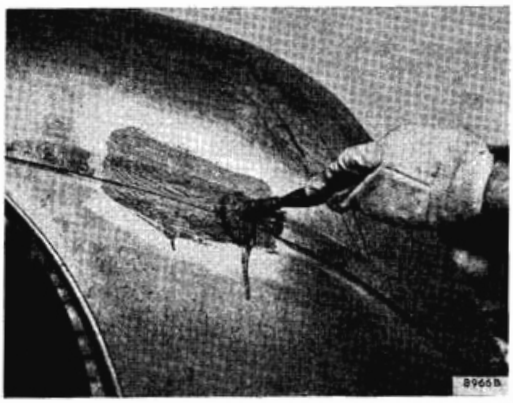

Fig. R.23.
Painting the hollow area with flux.

(1) Turn off the acetylene first, by the blowpipe control valve, and then the oxygen.
(2) Close the cylinder valves.
(3) Open the blowpipe valves one at a time to release the pressure in the hose—open the oxygen valve and shut it, open the acetylene valve and shut it.
(4) Unscrew the pressure regulating screws on the oxygen and acetylene regulators.
(5) In the case of **backfire** turn off the **oxygen** first.

Section R.17

TORCH-SOLDERING

Torch-soldering is the method employed to obtain the desired contour of a panel without weakening the structure and with the minimum amount of straightening, filing and polishing.

The solder used is an alloy of lead and tin. Lead melts at a temperature of 621° F. (327° C.) and tin at 450° F. (232° C.). Alloys of the two metals change from a solid to a liquid state over this range of temperature within

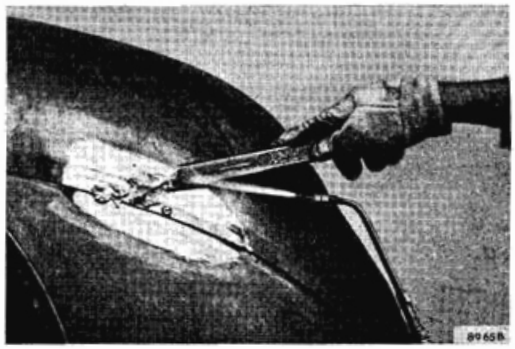

Fig. R.24.
Applying the solder.

which they are in a plastic condition. The alloys used for torch-soldering are known as tinman's solder (which contains 60 per cent. lead and 40 per cent. tin) and plumber's solder (which contains 70 per cent. lead and 30 per cent. tin). Tinman's solder, as a result of its higher tin content, alloys more readily with the surface of the sheet steel and is applied as a 'base' to which the plumber's solder adheres firmly. Plumber's solder remains plastic over a wide range of temperature (from 509° to 358° F. [265° to 181° C.[), and within this range can be moulded to any desired shape. For this reason it is used to obtain the required contours.

Where it is desired to build up a contour with solder, the surface of the steel must first of all be cleaned thoroughly. Rust, scale, welding oxide or any other impurity must be removed by means of a wire brush, file and emery-cloth. A polishing wheel, if available, is useful for this operation.

The surface of the metal is heated gently with a blowlamp or gas-torch and soldering flux applied with a brush (see Fig. R.23).

The flux will melt and act upon the heated surface so

HIGH-PRESSURE BLOWPIPES

Nozzle sizes, working pressures and gas consumptions for various metal thicknesses

M.S. plate thickness		*Nozzle size*	*Regulator pressures, oxygen and acetylene Saffire equipment*		*Approximate consumption of each gas*	
in.	*mm. (approx.)*		*lb./sq. in.*	*kg./cm².*	*cu. ft./hr.*	*m.³/hr.*
1/32	·8	1	2	·14	1	·028
3/64	1·2	2	2	·14	2	·056
1/16	1·6	3	2	·14	3	·084
3/32	2·4	5	2	·14	5	·140
1/8	3·2	7	2	·14	7	·196
5/32	4·0	10	3	·21	10	·283
3/16	4·8	13	3	·21	13	·367
1/4	6·4	18	3	·21	18	·504
5/16	8·0	25	4	·28	25	·700

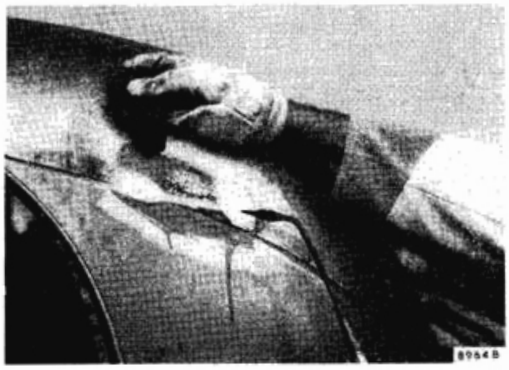

Fig. R.25.
Tinning by heating the flux-painted area.

Fig. R.26.
Spreading the solder.

that when tinman's solder is applied and rubbed with a wad of hemp the metal will become evenly coated with a thin layer of solder, or 'tinned' (Fig. R.25). The secret of successful torch-soldering lies in the thoroughness with which the tinning operation is carried out as it is the foundation on which the plumber's solder is to be built up.

A second application of flux should be made and gently heated by means of the torch. When wiped by the wad of hemp the entire surface of the metal should have a spotlessly clean and bright appearance.

Plumber's solder is now melted onto the surface (Fig. R.24) and maintained by careful use of the torch in the plastic condition whilst it is moulded to the desired contour with a hardwood paddle coated with palm oil (Fig. R.26). During the moulding operation frequent immersion of the paddle in palm oil assists in the manipulation of the solder. If palm oil is not available boiled linseed, lard or machine oil will be found satisfactory.

The final contour is obtained by filing or, if available, by the use of a polishing wheel. If the work is carefully carried out it should be impossible to trace the presence of the filing.

Section 18 and Section 19
BODY PANELS and ALIGNMENT DIAGRAMS

Section R.18

BODY PANELS

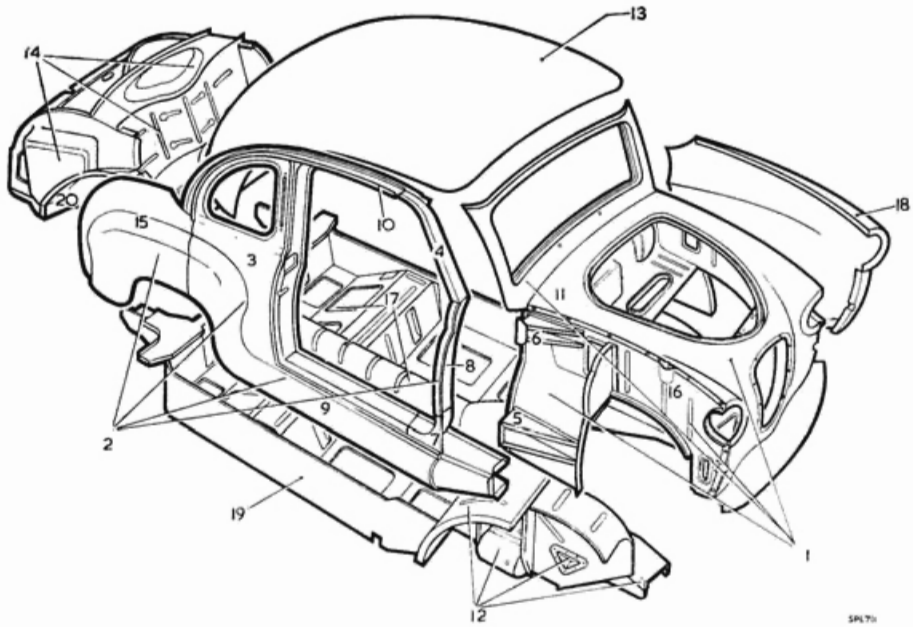

1. *Front end assembly.*
2. *Body side assembly.*
3. *Outer quarter panel.*
4. *Cantrail.*
5. *'A' post bottom hinge reinforcement bracket and channel assembly.*
6. *'A' post top hinge reinforcement and bracket assembly.*
7. *Lower 'A' post assembly.*
8. *Upper 'A' post assembly.*
9. *Outer body side sill panel.*
10. *Drip moulding.*
11. *Bonnet surround assembly.*
12. *Front wheelarch and suspension mounting assembly.*
13. *Roof and rear quarter assembly.*
14. *Tonneau assembly.*
15. *Tonneau panel.*
16. *Front flitchplate assembly.*
17. *Floor assembly.*
18. *Front wing assembly.*
19. *Sill inner panel assembly.*
20. *Rear wheelarch panel assembly.*

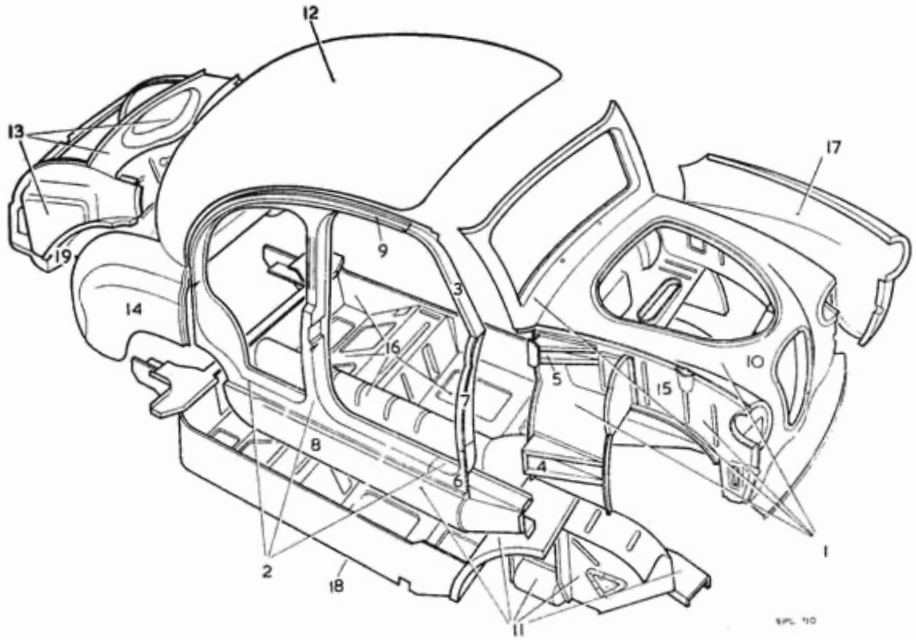

1. *Front end assembly.*
2. *Body side assembly.*
3. *Cantrail.*
4. *'A' post bottom hinge reinforcement bracket and channel assembly.*
5. *'A' post top hinge reinforcement and bracket assembly.*
6. *Lower 'A' post assembly.*
7. *Upper 'A' post assembly.*
8. *Outer body side sill panel.*
9. *Drip moulding.*
10. *Bonnet surround assembly.*
11. *Front wheelarch and suspension mounting assembly.*
12. *Roof and rear quarter assembly.*
13. *Tonneau assembly.*
14. *Tonneau panel.*
15. *Front flitchplate assembly.*
16. *Floor assembly.*
17. *Front wing assembly.*
18. *Sill inner panel assembly.*
19. *Rear wheelarch panel assembly.*

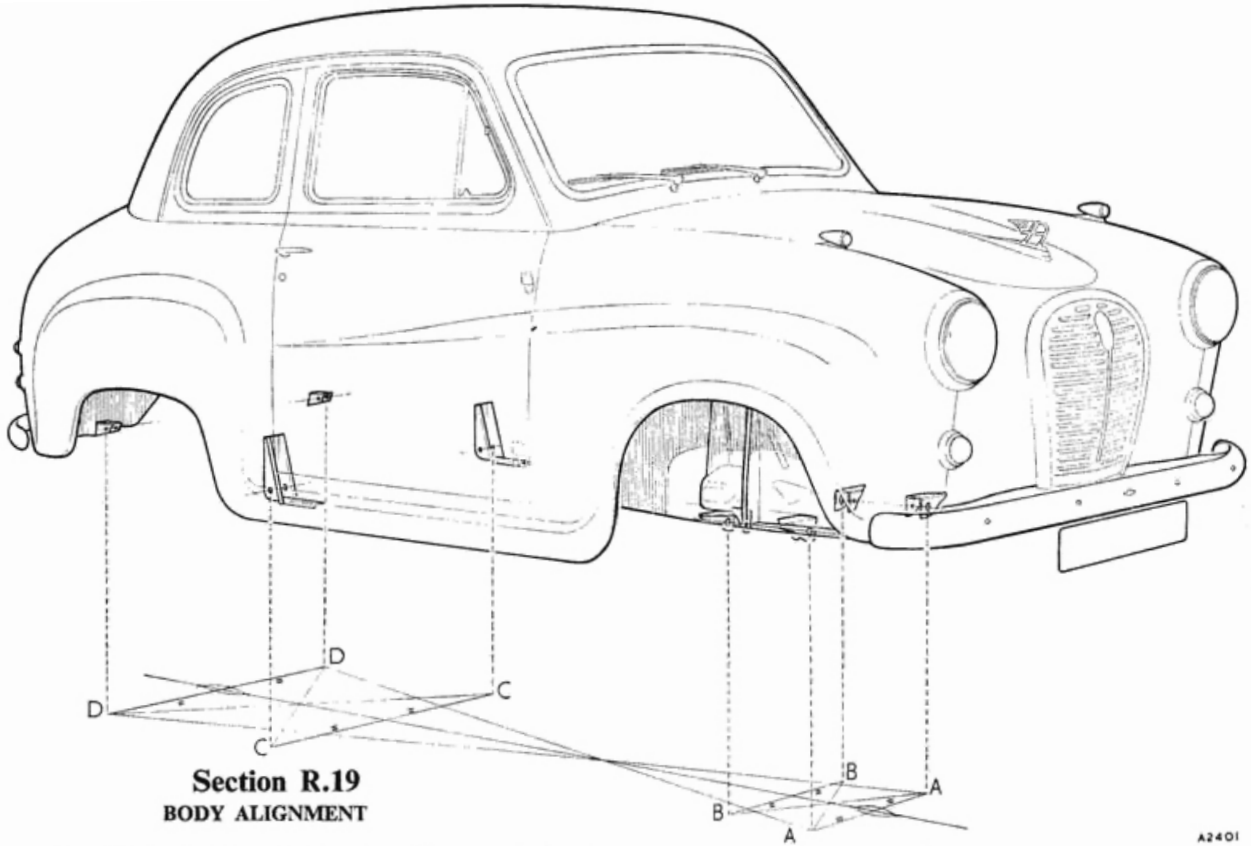

Section R.19

BODY ALIGNMENT

To check the body alignment of a car which has been damaged, a system of diagonal and measurement checks from points projected from the underframe onto a level floor is used.

To ensure that the alignment check is performed accurately the car must first be raised so that its datum line is parallel with the floor. Use the comparative measurements given on page 21 to achieve this condition. Elevate the rear of the car to a convenient working height and then adjust the height of the front of the vehicle until the points given on page 21 for the front and rear on both sides of the car are in the correct vertical position *relative to each other*, e.g. if the rear point is 36 in. from the floor and is quoted as 2 in. above the vehicle datum line, the front point quoted as 1 in. below the datum line must be 33 in. above the floor.

At the same time it will be helpful to check the *relative* heights of all the intermediate points given on page 21 so that any distortion of the car in the vertical plane will be ascertained.

Chalk over the area of the floor directly below the points shown on this page. Using a plumb line project the points from the car onto the floor marking the positions with a pencilled cross. The centre between each pair of points can be established by means of a large pair of compasses and the central points marked on the floor. In addition diagonals can be determined between any two pairs of points and the points of intersection marked on the floor. At this stage a length of thin cord covered with chalk can be held by two operators in such a position that it passes through as many of the central points and intersections marked as possible. While the cord is held taut a third operator raises the centre of it and then allows it to spring back smartly to the floor. If the resulting white line passes through all the points the body alignment is satisfactory. Any points through which the white line does not pass will be in a position where the underframe is out of alignment.

Considerable deviations in the longitudinal measurements given on page 21 confirm body misalignment. It should be understood that allowance must be made for normal manufacturing tolerances and that a reasonable departure from nominal dimensions can be permitted without detriment to road performance.

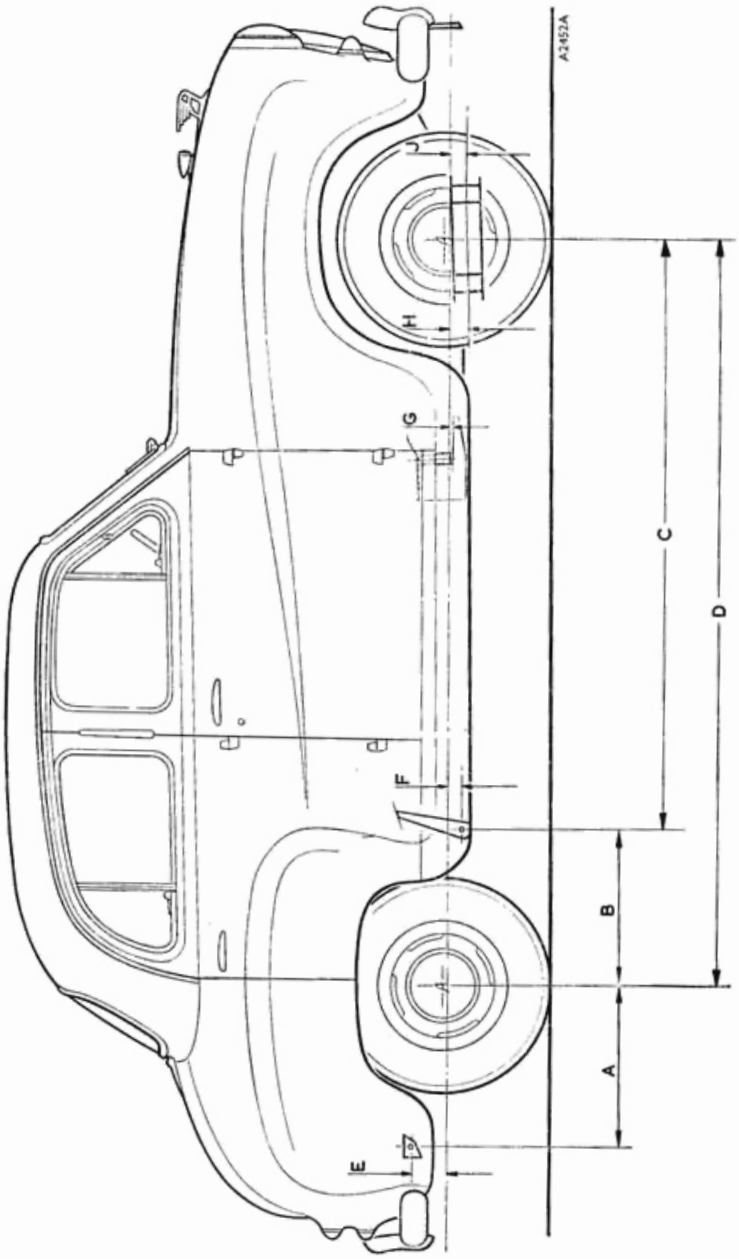

KEY TO DIAGRAM

A. 16$\frac{31}{32}$ *in.* (43·1 *cm.*)
17$\frac{5}{16}$ *in.* (43·42 *cm.*) [*A30* (*AS 3*) *only*]
B. 17$\frac{13}{16}$ *in.* (45·54 *cm.*)
C. 61$\frac{5}{16}$ *in.* (156·37 *cm.*)
D. 79$\frac{1}{8}$ *in.* (201·91 *cm.*)
E. 1$\frac{1}{8}$ *in.* (3·02 *cm.*)
$\frac{3}{32}$ *in.* (2·14 *cm.*)
F. 2$\frac{1}{16}$ *in.* (5·64 *cm.*)

G. $\frac{3}{32}$ *in.* (·714 *cm.*)
H. 1$\frac{11}{32}$ *in.* (4·88 *cm.*)
J. 1$\frac{1}{8}$ *in.* (3·5 *cm.*)

$\frac{3}{8}$ *Front* (*view transverse*)
A. A. 17$\frac{3}{4}$ *in.* (45·38 *cm.*)
B. B. 17$\frac{3}{4}$ *in.* (45·38 *cm.*)
C. C. 38$\frac{3}{16}$ *in.* (96·56 *cm.*)
D. D. 38$\frac{3}{16}$ *in.* (96·56 *cm.*)

SERVICE TOOLS

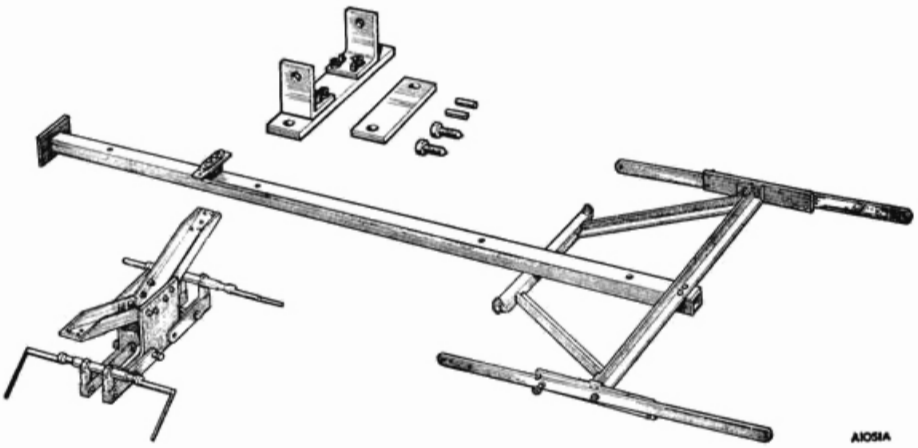

18G524. Body Alignment Jig
With adaptors 18G524A/B/C/D for front and rear suspension

SECTION S

THE HEATER

	Section
Description	S.1
Fitting a heater	S.2

Section S.1

DESCRIPTION

Two types of heater are available as optional extras.

First type

The heater unit is mounted centrally beneath the fascia panel. It consists of a water radiator and an electric motor driven fan. Water from the engine cooling system passes through the heater radiator, the fan draws air through this radiator, and disperses it through flexible ducts to the interior face of the windshield, for demisting and warming the car's interior.

Warm water is fed into the heater unit from the rear of the cylinder head and returned to the main cooling system through a pipe which runs along the cylinder head on the carburetter side of the engine.

A rheostat switch controls the speed of the fan and hence the rate of heat liberation into the car interior. The heater feed tap at the rear of the cylinder head can be turned to the off position in the summer, to prevent hot water circulating through the heater, and the heater fan can be used to circulate unheated air.

It is important that cars fitted with a heater unit use an anti-freeze mixture in the cooling system during winter months. This precaution is necessary as the heater radiator cannot be completely drained.

To remove the heater, first drain the cooling system, then disconnect the hose clip on the heater tap and heater return pipe and detach the two rubber hoses. Now remove the battery and battery tray, and unscrew the four bolts and flat washers in the bulkhead. The heater is now released and can be removed from within the car after a few minor operations.

Pull the heater wire out of its rubber connection, which will be found tucked under the panel beneath the fascia. Then, pull the flexible tubing off its connection beneath the windshield demister slots and lift away the heater unit complete.

Second type

From the outset of production on AS4 and A2S4 models the heater unit described below was introduced.

The air distribution of the heater is regulated by fascia controls which enable the car heating and screen demisting to be used together or independently, while in warm weather these same controls can turn off the heat to enable the system to be used as a fresh air ventilator.

Fresh air is drawn from outside the car, heated by hot water from the engine cooling system and then distributed inside the car.

The fascia controls are in quadrant form and their correct use ensures complete comfort for the driver and passengers. The danger of poor visibility caused by frost on the windshield can also be overcome. To meet extreme conditions an electric fan is fitted to the system which considerably increases the amount of air fed into the heater. The fan can be used when the car is stationary to compensate for the lack of the ram effect into the air intake caused by the car's forward motion. When in dense traffic, the air supply to the car interior can be shut off if desired thus preventing the entry of exhaust fumes, etc.

A quadrant control having two levers—a demisting/defrosting control lever and a heating/ventilating control lever—is fitted beneath the fascia. The former is attached by a flexible cable to the demister/defroster valve of the unit; the latter to the interior air valve and to the water valve. There is an on/off switch for the fan motor.

An 'extra air' control knob is situated on the left of the quadrant. This control is in no way connected to the heater; when operated it merely allows extra fresh air into the car interior, the force of the air being dependent on the car's forward motion and the amount of valve opening. For the operation of the controls, see Fig. S.1.

Adjustment of heating/ventilating control

(*a*) Move the ventilating control lever on the fascia panel to the 'off' position—the air valve lever on the heater unit should now be at its extreme forward position and negligible air should enter the car with the fan motor running (i.e. only reasonable valve leakage).

(*b*) Move the ventilating control lever to the 'hot' position—the lever on the heater unit should now be at its extreme rearward position with the water valve about to commence closing (i.e. with only slight movement of the water valve lever towards the closed position).

(*c*) If the correct operation in (*a*) or (*b*) is not being obtained, the length of the inner member of the control cable must be adjusted. This may be done at the control end or the heater end, whichever is more convenient. Slacken the clamping screw in the cable trunnion, slide the cable through by an appropriate amount and re-tighten the screw. Re-check as in (*a*) and (*b*) above.

(*d*) Move the ventilating control lever to the 'cold' position—the lever on the water valve should now be in the vertical position with the water flow to the heater cut off. After 2-3 minutes (with fan motor and engine running) air entering the car should be cold. If this is not so, it indicates that water is still flowing through the heater core. This may be checked by removing the top (return) water connection hose and observing whether water is issuing from the heater core when the engine is running at normal speed, the open end of the hose being closed manually during running.

(*e*) If the water flow is not entirely cut off as in (*d*) proceed as follows: With the ventilating control lever still in the 'cold' position, slacken the clamping screw holding the water valve operating rod (beneath cable attachment). Move the water valve independently of the heater valve—a slight resistance to motion should be felt as the lever approaches and passes the vertical position—indicating that the valve is seating correctly. If

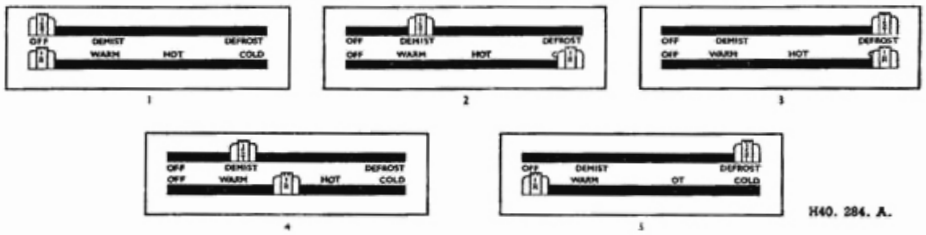

Fig. S.1. Operation of heater controls (Second type).

Condition to be met	Heating/Ventilating lever position	Demisting/Defrosting lever position
1. No ventilating and no screen air supply	'Off'	'Off'
2. Warm Weather—cold ventilating air supply, cold supply to screen	'Cold'	'Demist'
3. Warm Weather—some ventilating air, maximum cold supply at head level	'Cold'	'Defrost'
4. Cold weather—hot ventilating air supply, warm air to screen	Between 'Warm' and 'Hot' according to heat required.	'Demist'
5. Freezing Conditions—some hot ventilating air, maximum hot supply to screen	'Off'	'Defrost'

this resistance is not felt an adjustment should be made to the centre screw on the water valve lever—one quarter of a turn clockwise is usually sufficient. With the ventilating lever still in the 'cold' position as in (*d*) refit the water valve operating rod and, holding the water valve lever in the vertical position, re-tighten the clamping screw.

Adjustment of demisting/defrosting control

(*a*) Move the demisting control lever on the fascia panel to the 'off' position—the demist valve lever on the heater unit should now be at its extreme forward position and no air should pass through the windshield nozzles with the fan motor running.

(*b*) Move the demisting control lever to the 'defrost' position—the lever on the heater unit should now be at its extreme rearward position.

Heater removal

Before withdrawing the four setscrews which hold the heater to the scuttle, there are other items of heater equipment that have to be disconnected.

The Bowden cables operating the air valve and demister valves should be disconnected at the heater unit. Then the demister pipes should be disconnected from the unit by releasing their clips at the heater end. The two hot water pipes are each secured to the heater connections by clips. These must be released and in the same manner the main air pipe must be dismantled from the heater box.

The fan motor does not normally require servicing as the bearings are packed with lubricant on assembly. To remove the fan from its mounting, however, merely entails first releasing the hose clips and pulling the hose free of the fan outlet. Then disconnect the single electrical lead at its local snap joint connection and finally remove the two setscrews and washers from the fan mounting. The motor and fan as a combined unit can now be removed.

Replacing the heater unit, or fan and motor, is achieved by simply reversing the given removal instructions.

Section S.2

FITTING A HEATER

First type—Kit No. 28-G-50

Fitting the heater

Disconnect the battery. Drain the cooling system.

Remove the blanking plate adjacent to the battery in the angle of bulkhead, replace by metal retainer (17, Fig. S.2) and rubber seal (20, Fig. S.2) and secure with four P.K. screws (24, Fig. S.2).

Assemble the demist "Y" piece (2, Fig. S.4) to the heater (6, Fig. S.4), drill through the heater take-off and 'Y' piece, secure with P.K. screw (23, Fig. S.4).

Remove from the heater the three hexagonal nuts and washers on the support pillars, assemble the mounting bracket (14, Fig. S.4) to the heater, with the radiator pipes projecting through the slot, and secure with the large washers, spring washers and nuts previously removed. Earth the heater lead with the tag to one of the support pillars.

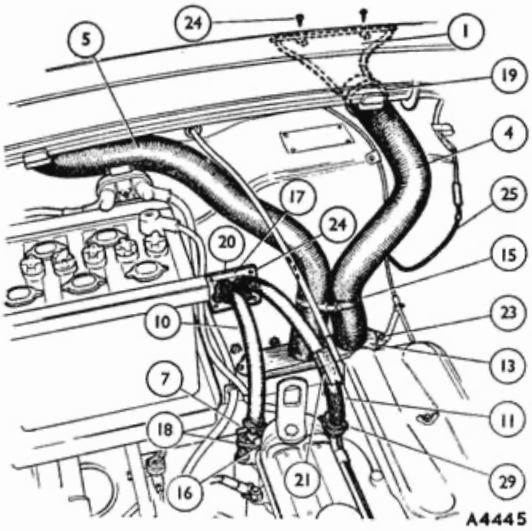

Fig. S.2.

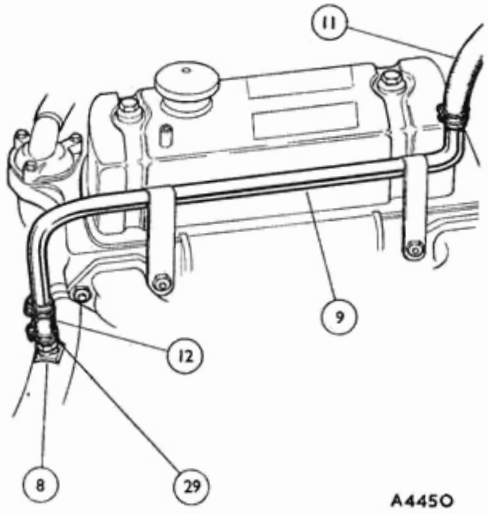

Fig. S.3.

Push the two $1\frac{1}{4}''$ diameter demister hoses (3, Fig. S.4) over the demist "Y" piece tubes, pass the hoses behind the heater and place the heater in position (Fig. S.4). Two holes which will accept the weld studs on the heater bracket will be found in the battery platform, and the holes in the front of the mounting bracket will line up with two weld nuts under the parcel shelf. Secure the heater with two $\frac{1}{4}''$ U.N.F. screws (26, Fig. S.4) and nuts (27, Fig. S.4) and four washers (28, Fig. S.4).

Air hoses and demist nozzles

Remove the blanking plate on the battery platform. Fit the heater cover plate (13, Fig. S.2) with the $1\frac{1}{4}''$ diameter tubes facing downwards into the driver's compartment, secure with two P.K. screws (23, Fig. S.4).

Position the demist nozzles (1, Fig. S.2) under the slots in the fascia and secure each nozzle with two P.K. screws (24, Fig. S.2).

Remove the blind grommets from the rear bulkhead panel and replace with the large grommets supplied (19, Fig. S.2).

Push the two $1\frac{1}{2}''$ diameter air hoses (4 and 5, Fig. S.2) over the tubes projecting from the heater cover plate, pass them through the bulkhead grommets and push the ends over the demist nozzles. Clip the two air hoses together with the clip supplied (15, Fig. S.2).

Assemble the two $1\frac{1}{4}''$ diameter demist air hoses (3, Fig. S.4) to the heater cover plate.

Water hose connections

Assemble the water tap (7, Fig. S.2) to the flange (18, Fig. S.2) and remove the blanking plate from the rear of the cylinder head and replace with the flange and tap assembly and also the gasket (16, Fig. S.2) supplied, the lever to face the rear of the car.

Assemble the copper heater return pipe (9, Fig. S.3) to the manifold securing studs.

With the hose cutter cut a hole in the bottom radiator hose and assemble the universal hose connector (8, Fig. S.3), with internal aperture facing away from the engine.

Connect the universal hose connector to the copper heater return pipe with the short length of rubber hose (12, Fig. S.3) and secure with hose clips.

Connect the remaining end of the copper tube to the L.H. heater pipe and the tap to the R.H. heater pipe with the two lengths of rubber hose and secure with hose clips. Attach the 'Caution' label to one of the rubber hoses in a prominent position.

Electrical connections

Remove the switch panel and cut a $\frac{3}{16}''$ diameter hole and assemble the rheostat switch (30, Fig. S.4) to the panel, ensuring that the switch knob is on the correct position when the switch is 'Off.'

Connect the green lead and the green lead with brown tracer issuing from the harness below the parcel shelf to the rheostat switch.

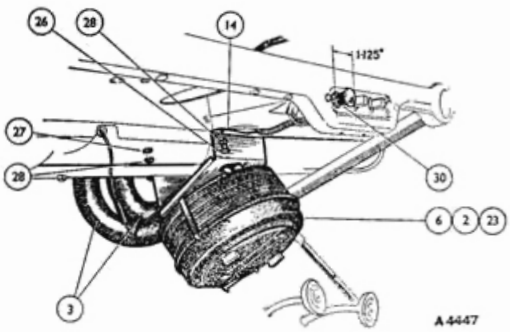

Fig. S.4.

Connect the remaining heater lead to the wire supplied (25, Fig. S.2), pierce the blind grommet in the bulkhead (L.H.S. of heater), pass the wire through the grommet and connect it to the green lead with brown tracer issuing from the loom in the L.H. corner of the upper bulkhead panel.

Reconnect the battery and refill the cooling system, run the engine at a fast tick-over and switch on the heater.

NOTE: If the water return hose does not warm up in a few minutes, an airlock may be present in the system and to clear it the procedure is as follows:

Switch off the engine, remove the hose from the universal connector and extend by temporary hose so that the water will flow back into the radiator via the filler cap, temporarily plug the lower union.

Start the engine and note the water flow into the radiator, when this is smooth and bubble free, remake the hose to union connection and tighten as quickly as possible.

When draining the cooling system the heater may not be completely emptied therefore, in cold weather it is recommended that Bluecol, Esso Anti-freeze, and Shell 'Snowflake', or any Anti-freeze conforming to B.S.3151 or B.S.3152 should be used.

First type—Kit No. 28-G-50

LIST OF PARTS

Ref.	*Description*	*Quan.*	*Part No.*
1	Demist nozzles	2	14A1355
2	Demist "Y" piece	1	14A152
3	Air hose 1¼" dia. × 14½" lg.	2	14A3495
4	Air hose 1½" dia. × 22½" lg.	1	14A3494
5	Air hose 1½" dia. × 27½" lg.	1	14A3493
6	Heater unit	1	14A3490
7	Water tap	1	17H1636
8	Universal hose connector	1	17H1632
9	Copper pipe	1	2A444
10	Water hose ½" bore × 13½" lg.	1	1H308
11	Water hose ½" bore × 16½" lg.	1	1H401
12	Water hose ½" bore × 2½" lg.	1	AHH5434
13	Air hose adaptor plate	1	14A2415
14	Heater bracket	1	14A2413
15	Clip	1	14A3496
16	Gasket	1	1G2342
17	Retainer	1	14A4546
18	Water tap flange	1	17H1633
19	Grommet	2	14A2599
20	Seal	1	14A4547
21	Caution label	1	4G6826
22	Hose cutter	1	301144
23	Screw No. 6 P.K. × ⅜" lg.	3	53K2992
24	Screw No. 6 P.K. × ½" lg.	8	6K9713
25	Wiring harness	1	17H1635
26	Screw ¼" U.N.F. × ½" lg.	2	HPZ0404
27	Nut ¼" U.N.F.	2	FNZ104
28	Washer ¼" spring	4	LWZ204
29	Hose clip	6	8G531
30	Rheostat switch	1	4K5887

Second type—Kit No. C.4-107

LIST OF PARTS

Ref.	*Description*	*Quan.*	*Part No.*
1	Self-tapping screws to fascia panel	4	6K9713
2	Demister elbow assemblies	2	14A1355
3	Demister hose (long)	1	14A2608
4	Rubber grommets in dash for demister hoses	2	14A2599
5	Demister hose (short)	1	14A2609
6	Heater control cable	1	14G1709
7	Heater switch	1	2A449
8	Demister control cable	1	14G1710
9	Rubber grommets in dash for cables	2	3F90
10.	Cable clamps	4	4G8621
11	Screws for clamps	4	14B720
12	Heater control lever unit, less knobs	1	14A2604
13	Demister control knob	1	4G8606
14	Bolts to heater control bracket	2	52K134
15	Nuts	2	FNZ103
16	Spring washers	2	LWN203
17	Bolts, bracket to parcel shelf moulding	2	53K134
18	Spring washers	2	LWN203
19	Nuts	2	FNZ103
20	Heater control bracket	1	14A175
21	Air control knob	1	4G8607
22	Guard for blower	1	4G8612
23	Blower unit with guard	1	14A2605
24	Clips for hose	2	P29650
25	Hose, front bulkhead to blower unit	1	14A2612
26	Spring washers	2	LWN204
27	Metal threads, blower fixing	2	HZS0404
28	Water valve assembly	1	14G900
	Drum and lever	1	14G901
	Rubber diaphragm	1	14G963
29	Hose clips	4	CHS2223/1
30	Air hose, heater to blower	1	CHS4971/8
31	Hose connector	1	CHS2924/1
32	Rubber water hose (short)	1	CHS4093/60
33	Water outlet pipe on cylinder head	1	2A441
34	Joint washer for outlet pipe	1	2A179
35	Heater outlet deflector	1	14G933
36	Heater base seal	1	4B9713
37	Heater unit	1	14A2606
	Demister elbows, rubber	2	14G3499
	Metal threads, heater to dash panel	4	HZS0404
	Plain washers	2	PWZ104
	Spring washers	4	LWN204
38	Rubber water hose (long)	1	CHS4093/108
39	Hose cleat	1	CHS1543

Controls and demister to fascia (Fig. S.5)

(1) Assemble the control lever unit (12) to the heater control bracket (20), using the two bolts (14), spring washers and nuts. Attach the demister and air control knobs (13 and 21) to their levers.

NOTE: It is important to set the levers and knobs at the fully open position. Secure the two cables (6 and 8), for controlling the heater and demister, to the lever control unit, with the two clamps (10) and screws (11).

Fix the assembly to the panel shelf moulding, using the two bolts (17) spring washers (16) and nuts (15).

(2) Unbolt the windshield pillar mouldings, one each side above the fascia panel, and fascia panel itself.

Disconnect the starter and choke cables (from engine side) and speedometer cables (from fascia side), to enable the fascia to be pulled away. Drill four suitably placed holes in the fascia panel above the demister slots, and secure the two demister elbows (2) with the two self-tapping screws (1). Dispense with the filler plug, disc and spire fix, as fitted in the switch panel for non-heater cars, and fit the heater switch connecting it to the existing main harness.

Demister hose to body

(1) Discard the plugs fitted to non-heater cars, in dash panel, and fit the grommets (4). Thread the long flexible demister hose (3) into the right-hand grommet, and short flexible demister hose (5) into the left-hand grommet. Replace the two plugs normally fitted in the dash, with the two grommets (9) and pass the heater control cables (6 and 8) through.

(2) Remove the cover plate from the dash panel. Position the heater outlet deflector (35) complete with base seal (36) into the slotted hole in the dash panel. Place the heater unit (37) on the dash, in position. After securing the demister hoses (3 and 5) to the elbows at the rear of the heater, fix the heater to the dash panel with the four screws, spring washers and plain washers.

Connect the control cables (6 and 8) to the heater unit (37), using the two cable clamps and screws for the cable clamps.

(3) Assemble the blower unit (23) together with the guard (22) and short air hose (30) which connects the blower to the heater to dash panel and alongside the heater unit. Secure with the two screws (27) and spring washers (26). Connect the flexible hose (25) with the hose clip (24) to the blower unit and flange on the nearside of the radiator. Connect

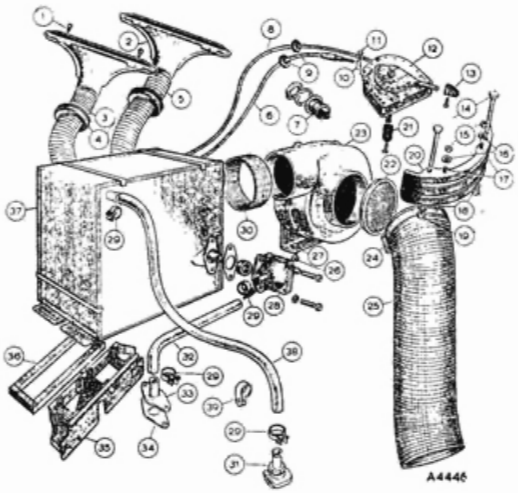

Fig. S.5.

the lead with tag, from blower to the existing Phillips head screw, which retains the carburetter choke control cable and the cable with the green and brown rubber sleeve from the blower unit to the green and brown striped cable (from the wiper motor).

Heater unit connections to engine

(1) Drain radiator.

(2) Remove the existing bottom hose, connecting the radiator to the water pump, and fit hose connector (31), use cutter supplied to cut correct size hole. The inner clamp passes through the hole from the inside of the hose, the outer clamp fitting over it, then secure firmly by screwing the hose connector union, with washer, tight home. Replace the bottom hose.

(3) Connect the long water hose (38) from the top water pipe of the heater to the hose connector (31), and secure with clips (29). Secure hose to side valance with hose retaining cleat (39).

(4) Replace the blanking plate on the cylinder head (rear, left-hand side) with the water outlet pipe (33) and the joint washer (34) using the original blanking plate bolts.

(5) Connect the short water hose (32) from the water valve on the heater to the water outlet pipe (33) on the cylinder head, and secure with clips (29).

(6) After checking the installation to ensure correct fitment, refill the radiator, run the engine until a reasonable running temperature is attained.

NOTE: Check heater water system for leaks.

LUBRICATION DIAGRAM

KEY TO THE LUBRICATION DIAGRAM

DAILY

(1) ENGINE. Inspect the oil level with the dipstick and top up if necessary. Ref. A.

AFTER THE FIRST 500 MILES (800 km.)

(2) ENGINE. Drain off the old oil and refill with fresh. Ref. A.

(3) GEARBOX. Drain off the old oil and refill with fresh. Ref. A.

(4) REAR AXLE. Drain off the old oil and refill with fresh. Ref. B.

EVERY 1,000 MILES (1600 km.)

(5) GEARBOX. Remove the filler plug and top up if necessary to the filler plug level. Ref. A.

(6) REAR AXLE. Remove the filler plug and top up if necessary to the filler plug level.

(7) STEERING GEARBOX. Check the oil level and top up if necessary. Ref. B.

(8) STEERING IDLER. Check the oil level and top up if necessary. Ref. B.

(9) STEERING BALL JOINTS. Lubricate with a grease gun. Ref. D.

(10) STEERING COLUMN FELT BUSH. Add a few drops of oil through the hole in the top of the column. Ref. E.

(11) SWIVEL AXLES AND SUSPENSION LOWER JOINTS. Lubricate with a grease gun. Ref. D.

(12) UNIVERSAL JOINTS. Lubricate with a grease gun. Ref. D.

(13) SPRING SHACKLES. Lubricate with a grease gun. Ref. D.

(14) BRAKE PEDAL PIVOT. Lubricate with a grease gun. Ref. D.

(15) REAR BRAKE COMPENSATOR. Lubricate with a grease gun. Ref. D.

(16) HANDBRAKE MECHANISM. Lubricate all joints with an oil can. Ref. E.

(17) CLUTCH AND FOOTBRAKE LINKAGE. Lubricate all joints with an oil can. Ref. E.

(18) CARBURETTER CONTROLS. Lubricate all joints with an oil can. Ref. E.

(19) AIR CLEANER (oil bath type only). Check oil level and top up if necessary. Ref. A.

(20) MASTER CYLINDER. Check fluid level and top up if necessary. Lockheed Genuine Brake Fluid or a fluid conforming to SAE 70R3.

EVERY 3,000 MILES (4800 km.)

(21) ENGINE. Drain off the old oil and refill with fresh. Ref. A.

(22) AIR CLEANER (oil bath type only). Drain and wash out the bowl. Refill to level with fresh oil. Ref. A.

EVERY 6,000 MILES (9600 km.)

(23) DISTRIBUTOR. Remove the rotor arm and add a few drops of oil to the cam bearing and advance mechanism through the hole around the cam spindle. Ref. E. Lightly smear the cam with grease. Ref. C.

(24) OIL FILTER. Fit a new filter assembly (A30, by-pass type). Wash bowl in fuel and fit a new element (A35, full-flow type).

(25) GEARBOX. Drain off old oil and refill with fresh. Ref. A.

(26) REAR AXLE. Drain off old oil and refill with fresh. Ref. B.

(27) WATER PUMP. Remove the plug and add a few drops of SAE 140 oil.

(28) FRONT HUBS. Remove the hub covers and grease caps. Fill the caps with **grease**. Ref. C.

(29) & (30) FRONT AND REAR SHOCK ABSORBERS. Thoroughly clean externally, check the fluid levels and top up if necessary with the correct fluid.

(31) AIR CLEANER (gauze type). Wash and dry the gauze and moisten with oil. Ref. A.

EVERY 12,000 MILES (19200 km.)

(32) DYNAMO (early type). Unscrew the lubricator, take out the pad and spring, half fill the cup with **HMP** grease, refit. (later type). Add a few drops of oil through the hole in the dynamo end bearing. Ref. E.

MULTIGRADE MOTOR OILS

In addition to the recommended lubricants listed on page P.2, we approve the use of multigrade motor oils, as produced by the companies there indicated, for all climatic temperatures unless the engine is in poor mechanical condition.

NOTE.—Oil and grease references are to be found on page P.2.

LUBRICATION DIAGRAM
(A30 and A35)

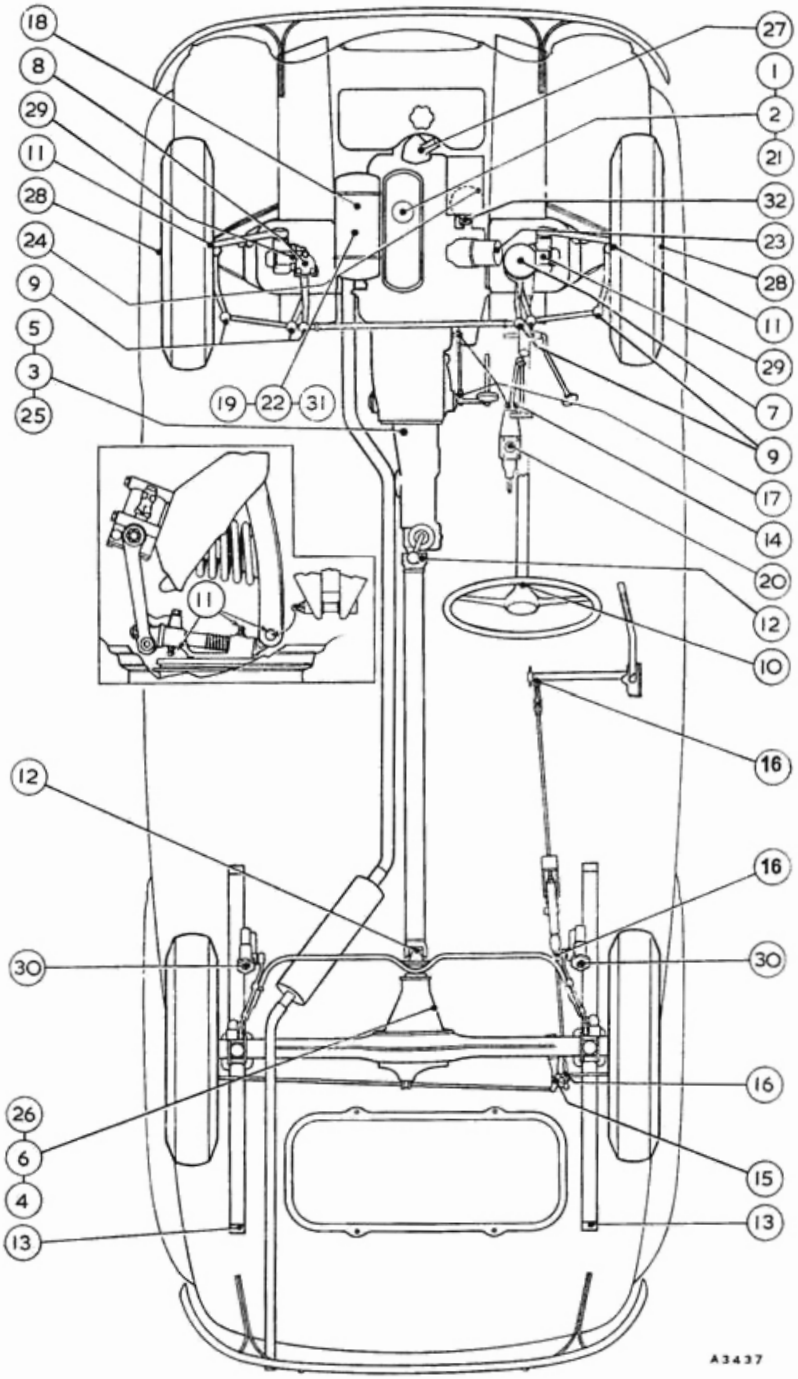

Printed in England by
The Nuffield Press Ltd.,
Cowley, Oxford.
(21489) 10M 2/61