STEERING

Power Steering - Escalade, Suburban, Tahoe, Yukon

SPECIFICATIONS

FASTENER SPECIFICATIONS

Application	Specification	
	Metric	English
Pitman Arm Nut (Heavy Duty)	370 N.m	273 lb ft
Power Brake Booster Inlet Hose (Heavy Duty)	34 N.m	25 lb ft
Power Brake Booster Outlet Hose (Heavy Duty)	34 N.m	25 lb ft
Power Steering Assist Motor Bolt (Light Duty) **(Requires a NEW bolt.)**	10 N.m	89 lb in
Power Steering Fluid Cooler Bracket Bolt (Heavy Duty)	9 N.m	80 lb in
Power Steering Fluid Reservoir Stud (Heavy Duty)	58 N.m	43 lb ft
Power Steering Gear Inlet Hose (Heavy Duty)	34 N.m	25 lb ft
Power Steering Gear Outlet Pipe (Heavy Duty)	34 N.m	25 lb ft
Power Steering Pump Bolt (Heavy Duty)	59 N.m	44 lb ft
Power Steering Pump Fitting (Heavy Duty)	75 N.m	55 lb ft
Power Steering Pump Rear Bracket Bolt (Heavy Duty)	59 N.m	44 lb ft
Power Steering Pump Rear Bracket Nut (Heavy Duty)	59 N.m	44 lb ft
Power Steering Wiring Harness Extension Harness Ground Bolt (Light Duty)	6 N.m	53 lb in
Steering Gear Bolt (Heavy Duty)	165 N.m	122 lb ft
Steering Gear Bolt - Left Side (Light Duty)	220 N.m	162 lb ft
Steering Gear Bolt - Right Side (Light Duty)	100 N.m	74 lb ft
Steering Gear Pitman Shaft Housing Cover Bolt (Heavy Duty)	57 N.m	42 lb ft
Steering Gear Pitman Shaft Lash Adjuster Nut (Heavy Duty)	85-102	63-75 lb ft
Steering Gear Valve Housing Bolt (Heavy Duty)	62 N.m	46 lb ft
Steering Linkage Inner Tie Rod (Light Duty)	120 N.m	89 lb ft
Steering Linkage Outer Tie Rod Nut (Light Duty)		

cardiagn.com

Application	Specification	
	Metric	English
• First Pass:	35 N.m	26 lb ft
• Final Pass:	85-100 degrees	

POWER STEERING PUMP SPECIFICATIONS

Vehicle	Engine Size	High Flow (Liters per Minute)	High Flow (Gallons per Minute)	Pressure Relief (kPa)	Pressure Relief (PSI)
C/K 2500/3500	6.0L	13.5/14.8	3.6/3.9	11722/12411	1700/1800

APPROXIMATE FLUID CAPACITIES

Application	Specification	
	Metric	US English
Power Steering System (Heavy Duty)	0.95 L	2.0 pt

ADHESIVES, FLUIDS, LUBRICANTS, AND SEALERS

Application	Type of Material	GM Part Number	
		United States	Canada
Power Steering Fluid	GM Power Steering Fluid	89021184	89021186

SCHEMATIC WIRING DIAGRAMS

POWER STEERING WIRING SCHEMATICS

Electric Power Steering

cardiagn.com

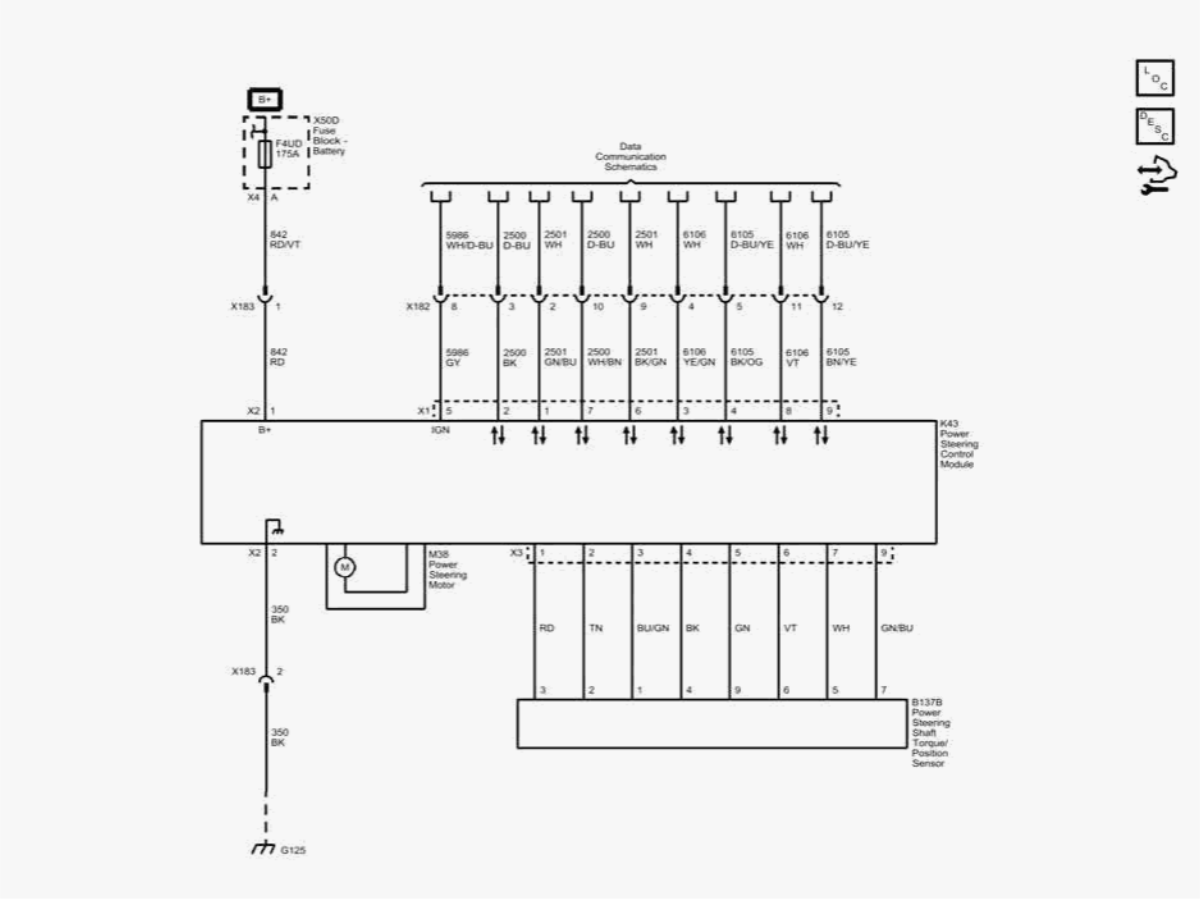

Fig. 1: Electric Power Steering
Courtesy of GENERAL MOTORS COMPANY

DIAGNOSTIC INFORMATION AND PROCEDURES

DTC C0176: CONTROL MODULE TEMPERATURE SENSOR HIGH TEMPERATURE

Diagnostic Instructions

- Perform the **Diagnostic System Check - Vehicle** prior to using this diagnostic procedure.
- Review **Strategy Based Diagnosis** for an overview of the diagnostic approach.
- **Diagnostic Procedure Instructions** provides an overview of each diagnostic category.

cardiagn.com

DTC Descriptor

DTC C0176 54

Control Module Temperature Sensor High Temperature

Circuit/System Description

The power steering control module monitors the temperature of the power steering system. The power steering control module monitors amperage output and input from an internal temperature sensor to calculate an estimated system temperature. If the power steering control module detects a high system temperature event is occurring, the amount of assist is decreased to reduce system temperature, in effort to prevent thermal damage to the power steering components.

Conditions for Running the DTC

- Ignition ON, engine running.
- Power steering system voltage is 9-16 V.

Conditions for Setting the DTC

- The power steering control module detects a high system temperature.
- The maximum amperage output exceeds a calibrated value within the limited commanded output amperage range.
- The DIC will display "Steering Assist is Reduced Drive with Care" message.

Action Taken When the DTC Sets

- DTC C0176 54 is stored in memory.
- Steering assist is reduced.

Conditions for Clearing the DTC

- A current DTC will clear on the next malfunction-free ignition cycle.
- A history DTC will clear after 50 consecutive malfunction free ignition cycles.
- The fault will be considered not present once the output amperage value returns to the expected range. The power steering control module will resume normal operation once the fault is no longer present.

Diagnostic Aids

cardiagn.com

- DTC C0176 54 does not indicate that a malfunction has occurred. Rather that the power steering control module had to limit current to the power steering motor to avoid thermal damage to the power steering system components. Discuss with the customer about driving conditions when the steering assist was reduced.
- Ensure that no steering components downstream of the power steering column assembly, such as ball joints, tie rod ends, universal joints, or the steering gear assembly, are mechanically binding.
- Cycling the ignition from ON to OFF will cause the DTC to be stored as a history DTC. Verify that the DTC does not reset by operating the vehicle within the Conditions for Running the DTC. You may also operate the vehicle within the conditions you observe from the Freeze Frame/Failure Records data.

Reference Information

Schematic Reference

Power Steering Schematics

Connector End View Reference

COMPONENT CONNECTOR END VIEWS - INDEX

Description and Operation

Power Steering System Description and Operation (Hydraulic Power Steering)Power Steering System Description and Operation (Electric Power Steering)

Electrical Information Reference

- **Circuit Testing**
- **Connector Repairs**
- **Testing for Intermittent Conditions and Poor Connections**
- **Wiring Repairs**

Scan Tool Reference

Control Module References for scan tool information.

Circuit/System Verification

cardiagn.com

1. Verify that the DTC sets outside of the conditions for running and setting. Since most occurrences of this DTC are caused by excessive driver inputs, review with the customer the conditions under which the DTC set.
   - **If the DTC did not set outside of the conditions for running and setting**
   1. Ignition ON.
   2. Operate the vehicle within the conditions that the customer experienced, avoiding excessive inputs, and verify the DTC does not reset.
      - If the DTC is set
      1. Verify that no steering components down stream of the power steering column assembly are mechanically binding. Refer to **Steering Effort Hard in One or Both Directions (Heavy Duty)Steering Effort Hard in One or Both Directions (Light Duty)**
         - If steering components are mechanically binding, replace the mechanically binding steering components.
         - If no steering components are mechanically binding, replace the M38 Power Steering Assist Motor.
      - If the DTC is not set
   3. All OK.
   - **If the DTC set outside of the conditions for running and setting**
2. All OK. The power steering is operating as designed.

Repair Instructions

Perform the **Diagnostic Repair Verification** after completing the repair.

- **Power Steering Assist Motor Replacement (Light Duty)**
- **Control Module References** for Power Steering Control Module replacement, programming and setup.

DTC C044B: STEERING ASSIST SMOOTH ROAD SHAKE COMPENSATION DISABLED TOO MANY TRANSITIONS

Diagnostic Instructions

- Perform the **Diagnostic System Check - Vehicle** prior to using this diagnostic procedure.
- Review **Strategy Based Diagnosis** for an overview of the diagnostic approach.
- **Diagnostic Procedure Instructions** provides an overview of each diagnostic category.

DTC Descriptors

DTC C044B 56

cardiagn.com

Steering Assist Smooth Road Shake Compensation Disabled Too Many Transitions

Circuit/System Description

The power steering control module has a software feature that monitors the front wheels for vibration while operating on smooth roads at speeds higher than 75 kph (46.6 mph.) The electronic power steering provides damping to minimize oscillations of the steering wheel from disturbances from the tire/wheel assemblies.

Conditions for Running the DTC

- Ignition ON, engine running.
- The power steering system voltage is 9-16 V.

Conditions for Setting the DTC

The power steering control module output required to compensate for wheel imbalance exceed a calibrated limit.

Action Taken When the DTC Sets

- DTC C044B is stored in memory.
- Smooth road shake feature will be disabled.

Conditions for Clearing the DTC

- A history DTC will clear after 50 consecutive malfunction free ignition cycles.
- The wheel imbalance detected is within the allowable range.

Diagnostic Aids

A new calibration has been released to eliminate this DTC. If this DTC is set reprogram the module.

Reference Information

Schematic Reference

Power Steering Schematics

Connector End View Reference

cardiagn.com

COMPONENT CONNECTOR END VIEWS - INDEX

Description and Operation

Power Steering System Description and Operation (Hydraulic Power Steering)Power Steering System Description and Operation (Electric Power Steering)

Electrical Information Reference

- **Circuit Testing**
- **Connector Repairs**
- **Testing for Intermittent Conditions and Poor Connections**
- **Wiring Repairs**

Scan Tool Reference

Control Module References for scan tool information.

Circuit/System Verification

1. Ignition ON.
2. Verify that no other DTCs are set.
   - **If any other DTCs are set**

     Refer to **Diagnostic Trouble Code (DTC) List - Vehicle**

   - **If no other DTCs are set**
3. Verify that DTC C044B is set.
   - **If DTC C044B is set**

     Program the K43 Power Steering Control Module.

   - **If DTC C044B is not set**
4. All OK.

Repair Instructions

cardiagn.com

Perform the **Diagnostic Repair Verification** after completing the repair.

DTC C0475: ELECTRIC STEERING MOTOR

Diagnostic Instructions

- Perform the **Diagnostic System Check - Vehicle** prior to using this diagnostic procedure.
- Review **Strategy Based Diagnosis** for an overview of the diagnostic approach.
- **Diagnostic Procedure Instructions** provides an overview of each diagnostic category.

DTC Descriptors

DTC C0475 00

Electric Steering Motor Circuit Malfunction

DTC C0475 64

Electric Steering Motor Circuit Slip Detected

Circuit/System Description

The power steering control module monitors for a motor signal mismatch and excessive rack travel.

Conditions for Running the DTC

- Ignition ON.
- The motor trim position has been performed at power up.

Conditions for Setting the DTC

C0475 00

- The power steering control module has determined that the motor position is outside of an allowed tolerance.
- The motor sensor trim has not been configured by manufacturer.

C0475 64

The power steering control module has determined that there is excessive rack travel.

cardiagn.com

Action Taken When the DTC Sets

- The DTC is stored in memory.
- No steering assist.
- The DIC will display "Service Power Steering" message.

Conditions for Clearing the DTC

C0475 00

- A history DTC will clear after 50 consecutive malfunction free ignition cycles.
- The Motor Sensor Trim has been successfully performed.

C0475 64

Rack travel has not exceeded its threshold.

Diagnostic Aids

- Cycling the ignition from ON to OFF will cause the DTC to be stored as a history DTC. Verify that the DTC does not reset by operating the vehicle within the Conditions for Running the DTC. You may also operate the vehicle within the conditions you observe from the Freeze Frame/Failure Records data.
- If C0475 00 DTC sets upon installation of a power steering assist motor or steering gear replacement, the power steering assist motor needs to be returned to manufacturer. A road test may be necessary for the DTC to set.

Reference Information

Schematic Reference

Power Steering Schematics

Connector End View Reference

COMPONENT CONNECTOR END VIEWS - INDEX

Description and Operation

Power Steering System Description and Operation (Hydraulic Power Steering)Power Steering System Description and Operation (Electric

cardiagn.com

Power Steering)

Electrical Information Reference

- **Circuit Testing**
- **Connector Repairs**
- **Testing for Intermittent Conditions and Poor Connections**
- **Wiring Repairs**

Scan Tool Reference

Control Module References for scan tool information.

Circuit/System Testing

DTC C0475 00

1. Ignition ON.

   Verify that DTC C0475 00 is not set.

   - **If the DTC C0475 00 is set**

     Replace the K43 Power Steering Control Module.

   - **If the DTC C0475 00 is not set**
2. All OK.

DTC C0475 64

1. Ignition ON.
2. Verify that DTC C0475 64 is not set.
   - **If the DTC C0475 64 is set**

     Replace the steering gear.

   - **If the DTC C0475 64 is not set**

cardiagn.com

3. All OK.

Repair Instructions

Perform the **Diagnostic Repair Verification** after completing the repair.

- **Power Steering Assist Motor Replacement (Light Duty)**
- **Electric Belt Drive Rack and Pinion Steering Gear Replacement (Light Duty)**
- **Control Module References** for power steering control module replacement, programming and setup.

DTC C0544: STEERING WHEEL ANGLE SENSOR SIGNAL NOT PLAUSIBLE

Diagnostic Instructions

- Perform the **Diagnostic System Check - Vehicle** prior to using this diagnostic procedure.
- Review **Strategy Based Diagnosis** for an overview of the diagnostic approach.
- **Diagnostic Procedure Instructions** provides an overview of each diagnostic category.

DTC Descriptor

DTC C0544 5A

Steering Wheel Angle Sensor Signal Not Plausible

Circuit/System Description

The power steering control module continuously monitors the steering wheel angle rationality data received from the electronic brake control module. The electronic brake control module determines the validity of the steering angle data.

Conditions for Running the DTC

Ignition ON, engine running.

Conditions for Setting the DTC

The power steering control module receives serial data message that indicates a problem with the steering angle sensor from the electronic brake control module.

Action Taken When the DTC Sets

cardiagn.com

- DTC C0544 is stored in memory.
- The DIC will display "Steering Assist is Reduced Drive with Care" message.

Conditions for Clearing the DTC

- A history DTC will clear after 50 consecutive malfunction free ignition cycles.
- The Steering Angle Sensor Polarity Rationality signal indicates a value of PASSED from the electronic brake control module.

Diagnostic Aids

Cycling the ignition from ON to OFF will cause the DTC to be stored as a history DTC. Verify that the DTC does not reset by operating the vehicle within the Conditions for Running the DTC. You may also operate the vehicle within the conditions you observe from the Freeze Frame/Failure Records data.

Reference Information

Schematic Reference

Power Steering Schematics

Connector End View Reference

COMPONENT CONNECTOR END VIEWS - INDEX

Description and Operation

Power Steering System Description and Operation (Hydraulic Power Steering)Power Steering System Description and Operation (Electric Power Steering)

Electrical Information Reference

- **Circuit Testing**
- **Connector Repairs**
- **Testing for Intermittent Conditions and Poor Connections**
- **Wiring Repairs**

Scan Tool Reference

cardiagn.com

Control Module References for scan tool information.

Circuit/System Verification

1. Ignition ON.
2. Verify that no other DTCs are set except for C0544.
   - **If any other DTCs are set**

     Refer to **Diagnostic Trouble Code (DTC) List - Vehicle**

   - **If no other DTCs are set**

NOTE: **Wheel misalignment can cause incorrect Steering Wheel Angle parameter reading.**

3. With a scan tool, verify that the Steering Wheel Angle parameter is zero degrees or near zero degrees with the front tire/wheels in the straight ahead position.
   - **If the Steering Wheel Angle parameter is not zero degrees or near zero degrees**
   1. Perform the Steering Angle Sensor Centering. Refer to **Steering Wheel Angle Sensor Centering**
   2. All OK.
   - **If the Steering Wheel Angle parameter is zero degrees or near zero degrees**
4. All OK.

Repair Instructions

Perform the **Diagnostic Repair Verification** after completing the repair.

- **Steering Angle Sensor Replacement**
- **Control Module References** for Power Steering Control Module replacement, programming and setup.

DTC C0545: STEERING WHEEL TORQUE SENSOR

Diagnostic Instructions

- Perform the **Diagnostic System Check - Vehicle** prior to using this diagnostic procedure.
- Review **Strategy Based Diagnosis** for an overview of the diagnostic approach.
- **Diagnostic Procedure Instructions** provides an overview of each diagnostic category.

cardiagn.com

DTC Descriptor

DTC C0545 00

Steering Wheel Torque Sensor Malfunction.

DTC C0545 4B

Steering Wheel Torque Sensor Calibration Not Learned.

Circuit/System Description

The power steering control module continuously monitors the steering wheel torque sensor. As the steering wheel is turned and torsional twist is applied to the steering shaft the signal is processed by the power steering control module to calculate the steering torque.

Conditions for Running the DTC

Ignition ON.

Conditions for Setting the DTC

C0545 00

The power steering control module detects a short to ground, short to voltage, or an open/high resistance on any of the torque sensor circuits.

C0545 4B

The power steering control module has not been programmed

Action Taken When the DTC Sets

C0545 00

- DTC C0545 is stored in memory.
- The DIC will display "Steering Assist is Reduced Drive with Care" message.

C0545 4B

- No steering assist.

cardiagn.com

- The DIC will display "Service Power Steering" message.

Conditions for Clearing the DTC

A history DTC will clear after 40 consecutive malfunction-free ignition cycles.

Diagnostic Aids

Cycling the ignition from ON to OFF will cause the DTC to be stored as a history DTC. Verify that the DTC does not reset by operating the vehicle within the Conditions for Running the DTC. You may also operate the vehicle within the conditions you observe from the Freeze Frame/Failure Records data.

Reference Information

Schematic Reference

Power Steering Schematics

Connector End View Reference

COMPONENT CONNECTOR END VIEWS - INDEX

Description and Operation

Power Steering System Description and Operation (Hydraulic Power Steering)Power Steering System Description and Operation (Electric Power Steering)

Electrical Information Reference

- **Circuit Testing**
- **Connector Repairs**
- **Testing for Intermittent Conditions and Poor Connections**
- **Wiring Repairs**

Scan Tool Reference

Control Module References for scan tool information.

Circuit/System Testing

cardiagn.com

DTC C0545 00

1. Ignition ON.
2. Verify the scan tool Torque Sensor parameter changes when turning the steering wheel.
   - **If the parameter does not change**
   1. Verify that the X3 connector is installed properly at the K43 Power Steering Control Module.
   2. If the X3 connector is not installed properly, connect the X3 connector properly.
   3. Verify the DTC does not set.
      - If the DTC sets, replace the Steering Gear.
      - If the DTC does not set
   4. All OK.
   - **If the parameter changes**
3. Ignition OFF, disconnect the harness connector at the B137 Power Steering Shaft Torque Sensor.
4. Test for less than 35 Ω between the ground circuit terminal 4 and ground.
   - **If 35 Ω or greater**
   1. Ignition OFF.
   2. Test for less than 2 Ω in the ground circuit end to end.
      - If 2 Ω or greater, repair the open/high resistance in the circuit.
      - If less than 2 Ω, replace the Steering Gear.
   - **If less than 35 Ω**
5. Ignition ON.
6. Test for 4.8-5.2 V between the signal circuit terminal 3 and ground.
   - **If less than 4.8 V**
   1. Ignition OFF, disconnect the X3 connector at the K43 Power Steering Control Module.
   2. Test for infinite resistance between the signal circuit and ground.
      - If less than infinite resistance, repair the short to ground on the circuit.
      - If infinite resistance
   3. Test for less than 2 Ω in the signal circuit end to end.
      - If 2 Ω or greater, repair the open/high resistance in the circuit.

cardiagn.com

- If less than 2 Ω, replace the Steering Gear.

- **If greater than 5.2 V**

1. Ignition OFF, disconnect the X3 connector at the K43 Power Steering Control Module.
2. Test for 0 V between the signal circuit and ground.
    - If greater than 0 V, repair the short to voltage on the circuit.
    - If 0 V, replace the K43 Power Steering Control Module.

- **If within 4.8-5.2 V**

Replace the Steering Gear.

DTC C0545 4B

1. Ignition ON.
2. Verify the scan tool Torque Sensor parameter changes when turning the steering wheel.
    - **If the parameter does not change**

    1. Program the K43 Power Steering Control Module.
    2. Verify the DTC does not set.
        - If the DTC sets, replace the Steering Gear.
        - If the DTC does not set

    3. All OK.

    - **If the parameter changes**

3. All OK.

Repair Instructions

Perform the **Diagnostic Repair Verification** after completing the repair.

- **Electric Belt Drive Rack and Pinion Steering Gear Replacement (Light Duty)**
- **Control Module References** for power steering control module replacement, programming and setup.

DTC C056D: ELECTRONIC CONTROL UNIT HARDWARE (POWER STEERING CONTROL MODULE)

Diagnostic Instructions

cardiagn.com

- Perform the **Diagnostic System Check - Vehicle** prior to using this diagnostic procedure.
- Review **Strategy Based Diagnosis** for an overview of the diagnostic approach.
- **Diagnostic Procedure Instructions** provides an overview of each diagnostic category.

DTC Descriptor

DTC C056D

Electronic Control Unit Hardware

For symptom byte information, refer to **Symptom Byte List** .

Circuit/System Description

The internal fault detection is handled inside the power steering control module. The symptom byte information is for engineering reference only. No external circuit diagnosis is involved.

Conditions for Running the DTC

The power steering control module runs the program to detect an internal fault when power up is commanded. The only requirements are voltage and ground. This program runs even if the voltage is out of the valid operating range.

Conditions for Setting the DTC

The power steering control module has detected an internal malfunction.

Action Taken When the DTC Sets

The power steering control module refuses all additional inputs.

Conditions for Clearing the DTC

- A current DTC clears when the malfunction is no longer present.
- A history DTC clears when the power steering control module ignition cycle counter reaches the reset threshold of 50, without a repeat of the malfunction.

Diagnostic Aids

- This DTC may be stored as a history DTC without affecting the operation of the power steering control module.

cardiagn.com

- If stored only as a history DTC and not retrieved as a current DTC, do not replace the power steering control module.
- If this DTC is retrieved as both a current and history DTC, replace the power steering control module.

Reference Information

Schematic Reference

- **Data Communication Schematics**
- **Control Module References**

Connector End View Reference

COMPONENT CONNECTOR END VIEWS - INDEX

Description and Operation

Data Link Communications Description and Operation

Electrical Information Reference

- **Circuit Testing**
- **Connector Repairs**
- **Testing for Intermittent Conditions and Poor Connections**
- **Wiring Repairs**

Scan Tool Reference

Control Module References for scan tool information

Circuit/System Verification

1. Ignition ON.
2. Verify DTC C056D is not set.
   - **If DTC C056D is set**

NOTE: **Check power and ground on the engine wiring harness for faulty connections or corrosion before replacing the K43 Power Steering Control Module.**

cardiagn.com

Replace the K43 Power Steering Control Module.

- **If DTC C056D is not set**

3. All OK

Repair Instructions

Perform the **Diagnostic Repair Verification** after completing the repair.

Control Module References for power steering control module replacement, programming and setup

SYMPTOMS - POWER STEERING SYSTEM

IMPORTANT: Review the system description and operation in order to familiarize yourself with the system functions. Refer to **Power Steering System Description and Operation (Hydraulic Power Steering)Power Steering System Description and Operation (Electric Power Steering)**.

Visual/Physical Inspection

- Inspect for aftermarket devices which could affect the operation of the power steering system.
- Inspect the easily accessible or visible system components for obvious damage or conditions which could cause the symptom.
- Inspect for leaking power steering components. If necessary, refer to **Power Steering Fluid Leaks**.
- Verify the power steering reservoir for the proper operating specification. Refer to **Checking and Adding Power Steering Fluid**.
- Inspect the power steering fluid for the following indications of contamination:
  - Milky fluid - water
  - Brown fluid - burnt
  - Debris in fluid - plastic or dirt
- If necessary, flush the power steering system. Refer to **Power Steering System Flushing**.

Symptoms List

Refer to a symptom diagnostic procedure from the following list in order to diagnose the symptom:

- **Power Steering Fluid Leaks**
- **Rattle, Clunk, Pop or Shudder Noise from the Power Steering System (Light Duty)Rattle, Clunk, Pop or Shudder Noise from the**

cardiagn.com

Power Steering System (Heavy Duty)

- Whine or Growl Noise from the Power Steering System (Light Duty)Whine or Growl Noise from the Power Steering System (Heavy Duty)
- Poor Return of Steering Wheel (Light Duty)Poor Return of Steering Wheel (Heavy Duty)
- Steering Wheel Surges/Jerks While Turning (Light Duty)Steering Wheel Surges/Jerks While Turning (Heavy Duty)
- Steering Effort Hard in One or Both Directions (Heavy Duty)Steering Effort Hard in One or Both Directions (Light Duty)

POWER STEERING SYSTEM TEST

Recirculating Ball System

cardiagn.com

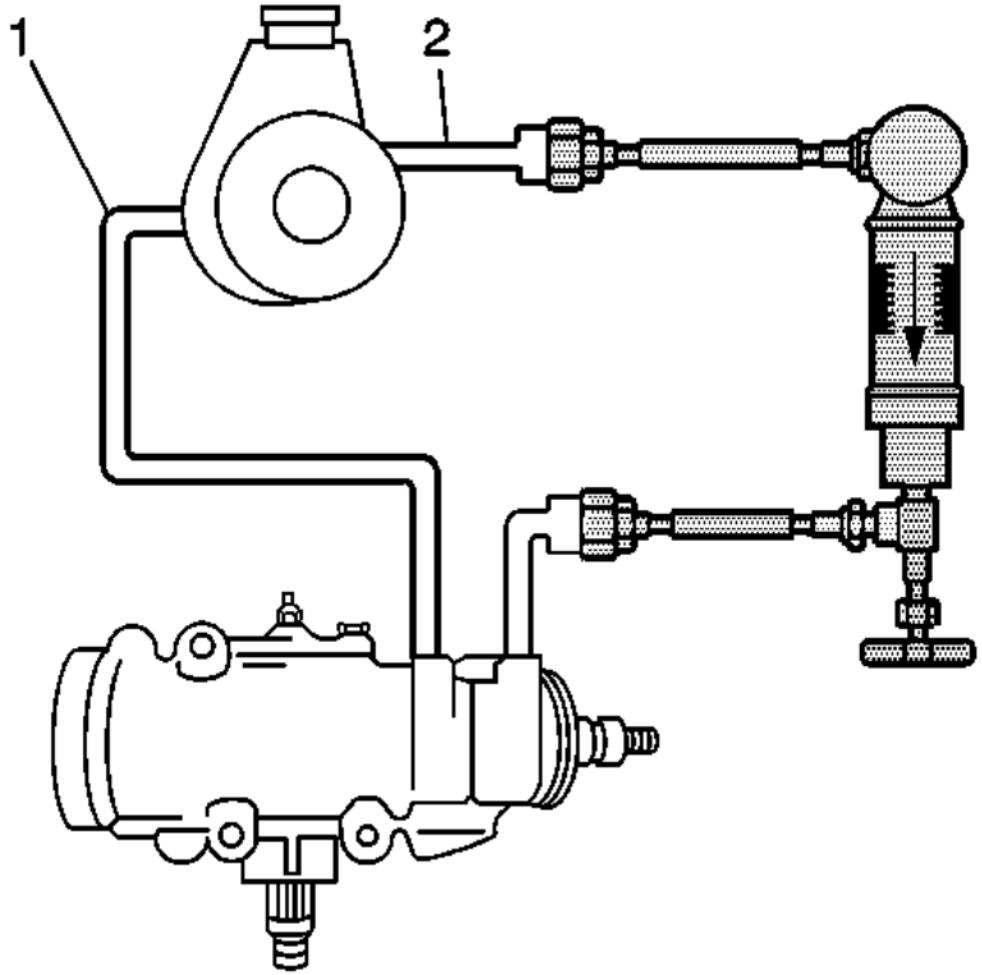

Fig. 2: Testing Recirculating Ball System Pressures
Courtesy of GENERAL MOTORS COMPANY

Callout	Component Name
1	Power Steering Return Hose
2	Power Steering Pressure Hose

Test Description

cardiagn.com

The numbers below refer to the step numbers on the diagnostic table.

5

This step tests the system for restrictions.

7

This step tests the following components for the following conditions:

- The pump for internal leaks

NOTE: **Power steering hoses may not look kinked, but have a layer separation causing the inner hose to collapse and restrict power steering fluid flow.**

- The power steering pipes and hoses for kinks

8

This step tests the ability of the pump to regulate flow at maximum pressure.

10

This step tests the ability of the pump to regulate flow under normal operating conditions.

12

This step tests the internal components of the pump and the gear.

Step	Action	Value(s)	Yes	No
DEFINITION: The Power Steering System Test Procedure will perform the following functions: • Test the operation of the hydraulic power steering system. • Test the operation of the power steering pump and power steering gear. • Identify restrictions in the system.				
1	Inspect the power steering fluid for the following indications of contamination:	-	Go to **Step 3**	Go to **Step 2**

cardiagn.com

Step	Action	Value(s)	Yes	No
	• Milky fluid - water • Brown fluid - burnt • Debris in fluid - plastic or dirt Is the fluid free of contamination?			
2	Flush the power steering system. Refer to **Power Steering System Flushing**. Did you complete the procedure?	-	Go to **Step 3**	-
3	**NOTE:** **In order to accurately diagnose the system, the malfunction must be present during the test procedure.** Attempt to duplicate the condition.Is the condition present?	-	Go to **Step 4**	System OK
4	1. Turn the ignition switch to the OFF position. 2. Place a drain pan under the vehicle in order to catch any power steering fluid. 3. Disconnect the power steering pressure pipe/hose from the power steering pump or the power steering gear as necessary. 4. Install the **J 44721** power steering system analyzer. 5. Fill the power steering system. Refer to **Checking and Adding Power Steering Fluid**.	-	Go to **Step 5**	-

cardiagn.com

Step	Action	Value(s)	Yes	No
	Did you complete the installation?			
5	1. Fully open the **J 44721** power steering system analyzer valve. 2. Start the engine. **CAUTION:** **Refer to Steering Wheel in the Full Turn Position Caution .** 3. Turn the steering wheel and BRIEFLY hold the steering wheel against the steering stop in order to release any trapped air from the system. 4. Inspect and ensure that all of the power steering pipe/hose connections are not leaking. 5. Make sure the steering wheel is OFF the steering stop, observe the pressure reading. Is the pressure reading greater than the specified value?	1525 kPa (221 psi)	Go to **Step 6**	Go to **Step 7**
6	**NOTE:** **A restriction may be present in the power steering system. Turn OFF the engine IMMEDIATELY.**	-	Go to **Step 18**	-

cardiagn.com

Step	Action	Value(s)	Yes	No
	Locate and repair the restriction.Did you complete the repair?			
7	1. Allow the engine to run until the engine reaches full operating temperature. 2. Record the pressure reading and flow reading. 3. Partially close the **J 44721** power steering system analyzer valve until the system pressure reaches the specified value, then record the FLOW reading. 4. Subtract second flow reading from the first flow reading. Is the flow DECREASE greater than 3.8 L (1 gal) per minute?	4827 kPa (700 psi)	Go to **Step 13**	Go to **Step 8**
8	**CAUTION:** **Do not leave the valve fully closed for more than 5 seconds, or the pump could be damaged internally.** Fully close then open the **J 44721** power steering system analyzer valve 3 times. Record all of the high pressure readings. Refer to **Power Steering Pump Specifications** for power steering system pressure relief specifications.Are the 3 high pressure readings within specifications?	-	Go to **Step 9**	Go to **Step 15**
9	Are the three high pressure readings within 245 kPa (50 psi) of each other?	-	Go to **Step 10**	Go to **Step 14**
10	1. Increase the engine speed to approximately 1, 500 RPM. 2. Record the flow reading. Refer to **Power Steering Pump Specifications** for power steering system pressure	-	Go to **Step 11**	Go to **Step 13**

cardiagn.com

Step	Action	Value(s)	Yes	No
	specifications. Is the actual flow reading within specifications?			
11	Is the difference between the actual flow reading and the maximum flow specification more than 3.8 L (1 gal) per minute?	-	Go to **Step 16**	Go to **Step 12**
12	**CAUTION:** **Refer to Steering Wheel in the Full Turn Position Caution .** Turn the steering wheel from steering stop to steering stop and record the FLOW readings at each stop.Is the flow LOWER than 3.8 L (1 gal) per minute?	-	Go to **Step 18**	Go to **Step 17**
13	Replace the power steering pump. Refer to **Power Steering Pump Replacement (Heavy Duty)**. Did you complete the replacement?	-	Go to **Step 18**	-
14	Replace the power steering pump. Refer to **Power Steering Pump Replacement (Heavy Duty)**. Did you complete the replacement?	-	Go to **Step 18**	-
15	Replace the power steering pump. Refer to **Power Steering Pump Replacement (Heavy Duty)**. Did you complete the replacement?	-	Go to **Step 18**	-
16	Replace the power steering pump. Refer to **Power Steering Pump Replacement (Heavy Duty)**. Did you complete the replacement?	-	Go to **Step 18**	-
17	The power steering gear is leaking across the piston or bypassing the valve circuit. Replace the power steering gear. Refer to **Hydraulic Recirculating Ball Steering Gear Replacement (Heavy Duty)**. Did you complete the replacement?	-	Go to **Step 18**	-

cardiagn.com

Step	Action	Value(s)	Yes	No
18	Test the power steering system for the original condition. Does the original condition still exist?	-	Go to **Step 5**	Go to **Step 19**
19	1. Disconnect and remove the **J 44721** power steering system analyzer from the vehicle. 2. Connect the vehicle power steering pipes/hoses. 3. Bleed the power steering system and add fluid as necessary. Refer to **Power Steering System Bleeding**. Did you complete the repair?	-	System OK	-

POWER STEERING FLUID LEAKS

Special Tools

GE-28431-6 Fluorescent Dye

For equivalent regional tools, refer to **Special Tools**.

NOTE:

- **If fluid is found on a manual steering gear or on an electronic power steering gear, do not replace steering gear. Vehicles equipped with these systems do not use hydraulic power steering fluid. The fluid may be assembly fluid or another system fluid.**
- **Clean the components and identify the sources of the leaks before attempting to repair or replace any power steering components. Clearly mark all locations of leaks with paint, marker, or equivalent for warranty identification and engineering root cause analysis.**

Some customers may comment on a fluid LEAK or NOISY power steering pump. Upon inspection, the technician may find power steering fluid leaking from the hydraulic power steering system. Use the following inspection procedure in order to diagnose the source of the leak and take appropriate action to correct the condition.

1. Inspect the fluid level in the power steering fluid reservoir. Refer to **Checking and Adding Power Steering Fluid**. If the fluid level is NOT low, a careful analysis of the condition is necessary to confirm that the type of fluid is actually power steering fluid.
2. Visually inspect the power steering system and components where the fluid has accumulated.

cardiagn.com

CAUTION: Do not clean using brake cleaner or other reactive solvents as these solvents can damage rubber gaskets, seals and bushings.

3. Use a clean towel or a rag in order to completely clean off all residual fluid from the power steering components.
4. Add 30 cc (1 oz) of **GE-28431-6** dye to the power steering fluid.
5. Start the vehicle and warm the steering system by turning to the left steering stop and to the right steering stop 10 times with the weight of the vehicle on the front tires.
6. Turn vehicle engine OFF.
7. Shine a black light on the area where the residual fluid accumulated. Identify the sources of the leaks. If equipped with hydroboost, refer to **Hydraulic Brake Booster Leak Inspection** .
8. Mark all locations of leaks with paint, marker, or equivalent.
9. Repair or replace all affected components.

RATTLE, CLUNK, POP OR SHUDDER NOISE FROM THE POWER STEERING SYSTEM (LIGHT DUTY)

Step	Action	Yes	No
1	Did you review the Power Steering System Description and Operation and perform the necessary inspections?	Go to **Step 2**	Go to **Symptoms - Power Steering System**
2	Road test the vehicle in order to verify the complaint. It may be necessary to compare to a like vehicle. Is a rattle, clunk, popping or shudder noise present?	Go to **Step 3**	System OK
3	Inspect the power steering gear bushings for wear or damage. Are the power steering gear bushings worn or damaged?	Go to **Step 9**	Go to **Step 4**
4	Inspect the power steering gear fasteners for looseness. Are the power steering gear fasteners loose?	Go to **Step 10**	Go to **Step 5**
5	Inspect the steering linkage inner and outer tie rods for looseness. Refer to **Steering Linkage Inner Tie Rod Inspection**, and **Steering Linkage Outer Tie Rod Inspection**. Did you find and correct the condition?	Go to **Step 14**	Go to **Step 6**
6	Inspect the front suspension components for damage or wear. Are the front suspension components damaged or worn?	Go to **Step 11**	Go to **Step 7**
7	Inspect the upper and lower intermediate steering shafts for proper installation and loose or missing fasteners.	Go to **Step 12**	Go to **Step 8**

cardiagn.com

Step	Action	Yes	No
	Are the upper and lower intermediate steering shafts installed incorrectly or do they have loose or missing fasteners?		
8	For a popping noise, inspect the steering gear shaft dampener rings by performing the following steps: 1. Raise the vehicle. Refer to **Lifting and Jacking the Vehicle** . 2. Rotate the steering wheel until the power steering gear reaches its end of travel. Repeat in both directions. Was a popping noise present near the end of travel in one or both directions?	Go to **Step 13**	Go to **Step 2**
9	Replace the power steering gear. Refer to **Electric Belt Drive Rack and Pinion Steering Gear Replacement (Light Duty)**. Did you complete the repair?	Go to **Step 14**	-
10	Install the power steering gear fasteners correctly. Refer to **Fastener Specifications**.	Go to **Step 14**	-
11	Replace the damaged or worn front suspension components. Did you complete the repair?	Go to **Step 14**	-
12	Install the upper and lower intermediate steering shafts and/or fasteners correctly. Refer to **Upper Intermediate Steering Shaft Replacement** , or **Intermediate Steering Shaft Replacement** . Did you complete the repair?	Go to **Step 14**	-
13	Replace the steering gear shaft dampener ring(s). Refer to **Steering Gear Shaft Dampener Ring Replacement (Light Duty)**.	Go to **Step 14**	-
14	Operate the system in order to verify the repair. Did you correct the condition?	System OK	Go to **Step 3**

RATTLE, CLUNK, POP OR SHUDDER NOISE FROM THE POWER STEERING SYSTEM (HEAVY DUTY)

Step	Action	Yes	No
1	Did you review the Power Steering System Description and Operation and perform the necessary inspections?	Go to **Step 2**	Go to **Symptoms - Power Steering System**

cardiagn.com

Step	Action	Yes	No
2	Road test the vehicle in order to verify the complaint. It may be necessary to compare to a like vehicle. Is a rattle, clunk or shudder noise present?	Go to **Step 3**	System OK
3	Inspect the power steering hoses for proper routing and clearance. Is the routing or clearance of the power steering hoses incorrect?	Go to **Step 11**	Go to **Step 4**
4	Inspect the engine drive belt for cracking or excessive wear. Refer to **Drive Belt Falls Off and Excessive Wear Diagnosis** . Is the drive belt cracked or excessively worn?	Go to **Step 12**	Go to **Step 5**
5	Inspect the power steering pump pulley for damage. Is the power steering pump pulley damaged?	Go to **Step 13**	Go to **Step 6**
6	Inspect the power steering pump, the power steering pump mounting bracket and any brace(s) for the proper installation. Refer to **Power Steering Pump Replacement (Heavy Duty)**. Is the power steering pump installation incorrect?	Go to **Step 14**	Go to **Step 7**
7	Inspect the power steering gear for the proper installation. Refer to **Hydraulic Recirculating Ball Steering Gear Replacement (Heavy Duty)**. Is the power steering gear installation incorrect?	Go to **Step 15**	Go to **Step 8**
8	Inspect the steering linkage. Refer to **Steering Linkage Inspection** . Is the steering linkage worn?	Go to **Step 16**	Go to **Step 9**
9	Inspect the front suspension components for damage or wear. Are the front suspension components damaged or worn?	Go to **Step 17**	Go to **Step 10**
10	Inspect the upper and lower intermediate steering shafts for proper installation and loose or missing fasteners. Are the upper and lower intermediate steering shafts installed incorrectly or do they have loose or missing fasteners?	Go to **Step 18**	Go to **Step 3**
11	Adjust or replace the hoses. Refer to the appropriate procedure: • **Power Steering Fluid Cooler Replacement (Chevrolet, GMC, Heavy Duty)Power Steering Fluid Cooler Replacement (Cadillac, Heavy Duty)** • **Power Steering Gear Inlet Pipe/Hose Replacement (Heavy Duty)** • **Power Steering Gear Outlet Pipe/Hose Replacement (Heavy**	Go to **Step 19**	-

cardiagn.com

Step	Action	Yes	No
	Duty) • Power Brake Booster Inlet Hose Replacement (Heavy Duty) • Power Brake Booster Outlet Hose Replacement (Heavy Duty) Did you complete the repair?		
12	Replace the engine drive belt. Refer to Drive Belt Replacement - Accessory . Did you complete the repair?	Go to **Step 19**	-
13	Replace the power steering pump pulley. Refer to Power Steering Pump Pulley Replacement (Heavy Duty). Did you complete the repair?	Go to **Step 19**	-
14	Install the power steering pump correctly. Refer to Power Steering Pump Replacement (Heavy Duty). Did you complete the repair?	Go to **Step 19**	-
15	Install the power steering gear correctly. Refer to Hydraulic Recirculating Ball Steering Gear Replacement (Heavy Duty). Did you complete the repair?	Go to **Step 19**	-
16	Replace the worn steering linkage. Refer to Steering Linkage Inspection . Did you complete the repair?	Go to **Step 19**	-
17	Replace the damaged or worn front suspension components. Did you complete the repair?	Go to **Step 19**	-
18	Install the upper and lower intermediate steering shafts and/or fasteners correctly. Refer to Upper Intermediate Steering Shaft Replacement , or Intermediate Steering Shaft Replacement . Did you complete the repair?	Go to **Step 19**	-
19	Operate the system in order to verify the repair. Did you correct the condition?	System OK	Go to **Step 3**

WHINE OR GROWL NOISE FROM THE POWER STEERING SYSTEM (LIGHT DUTY)

Step	Action	Yes	No

cardiagn.com

Step	Action	Yes	No
1	Did you review the Power Steering System General Description and Operation and perform the necessary inspections?	Go to **Step 2**	Go to **Symptoms - Power Steering System**
2	Road test the vehicle in order to verify the complaint. Is a whine or growl noise present?	Go to **Step 3**	System OK
3	Inspect the power steering assist motor for a whine or growl noise using the **J-39570** chassis ear. Is the noise present at the power steering assist motor?	Go to **Step 5**	Go to **Step 4**
4	Inspect the power steering gear for a whine or growl noise using the **J-39570** chassis ear. Is the noise present at the power steering gear?	Go to **Step 6**	Go to **Step 3**
5	Replace the power steering assist motor. Refer to **Power Steering Assist Motor Replacement (Light Duty)**. Did you complete the repair?	Go to **Step 7**	-
6	Replace the power steering gear. Refer to **Electric Belt Drive Rack and Pinion Steering Gear Replacement (Light Duty)**. Did you complete the repair?	Go to **Step 7**	-
7	Operate the system in order to verify the repair. Did you correct the condition?	System OK	Go to **Step 3**

WHINE OR GROWL NOISE FROM THE POWER STEERING SYSTEM (HEAVY DUTY)

Step	Action	Yes	No
1	Did you review the Power Steering System General Description and Operation and perform the necessary inspections?	Go to **Step 2**	Go to **Symptoms - Power Steering System**
2	Road test the vehicle in order to verify the complaint. Is a whine or growl noise present?	Go to **Step 3**	System OK
3	Inspect the power steering fluid for the following indications of contamination: • Milky fluid - water • Brown fluid - burnt • Debris in fluid - plastic or dirt	Go to **Step 5**	Go to **Step 4**

cardiagn.com

Step	Action	Yes	No
	Is the fluid free of contamination?		
4	Flush the power steering system. Refer to **Power Steering System Flushing**. Did you complete the procedure?	Go to **Step 13**	Go to **Step 5**
5	Inspect the power steering gear for a whine or growl noise using the **J-39570** chassis ear. Is the noise present at the power steering gear?	Go to **Step 9**	Go to **Step 6**
6	Inspect the power steering pump for a whine or growl noise using the **J-39570** chassis ear. Is the noise present at the power steering pump?	Go to **Step 10**	Go to **Step 7**
7	Inspect the power steering hoses for a whine or growl noise using the **J-39570** chassis ear. Is the noise present at the power steering hoses?	Go to **Step 11**	Go to **Step 8**
8	Inspect the hydraulic brake booster for a whine or growl noise using the **J-39570** chassis ear. Is the noise present at the hydro boost?	Go to **Step 12**	-
9	Replace the power steering gear. Refer to **Hydraulic Recirculating Ball Steering Gear Replacement (Heavy Duty)**. Did you complete the repair?	Go to **Step 13**	-
10	Replace the power steering pump. Refer to **Power Steering Pump Replacement (Heavy Duty)**. Did you complete the repair?	Go to **Step 13**	-
11	Adjust the routing of the power steering hoses. Did you complete the repair?	Go to **Step 13**	-
12	Diagnose the hydraulic brake booster. Refer to **Symptoms - Hydraulic Brakes** . Did you correct the condition?	Go to **Step 13**	-
13	Operate the system in order to verify the repair. Did you correct the condition?	System OK	Go to **Step 3**

POOR RETURN OF STEERING WHEEL (LIGHT DUTY)

cardiagn.com

Step	Action	Yes	No
DEFINITION: After completing a turn, extra steering input is required for the steering wheel to return to center.			
1	Did you review the Power Steering System Description and Operation and perform the necessary inspections?	Go to **Step 2**	Go to **Symptoms - Power Steering System**
2	Road test the vehicle in order to verify the complaint. It may be necessary to compare to a like vehicle. Does the system operate normally?	System OK	Go to **Step 3**
3	1. Raise and support the vehicle. Refer to **Lifting and Jacking the Vehicle** . 2. Lubricate the tie rod ends and ball joints, if applicable. 3. Inspect the steering and suspension systems for worn or damaged components. 4. Repair as necessary. Did you find and correct the condition?	Go to **Step 14**	Go to **Step 4**
4	**NOTE:** **The effort required to turn the belt driven electric steering gear will be harder than a hydraulic system, but the gear should rotate smoothly.** Inspect the steering system for unequal effort. The vehicle must be suspended on a hoist, the engine running, and the transmission in park or neutral. Grasp the tire and wheel assembly and manually simulate a turn	Go to **Step 5**	Go to **Step 11**

cardiagn.com

Step	Action	Yes	No
	from the left of center and the right of center observing whether more force is needed to turn to the left or to the right.Was the tire and wheel assembly abnormally difficult to turn or was there a binding condition while turning in either direction?		
5	**NOTE:** **Position the wheels straight ahead. Do NOT rotate the steering wheel more than one complete revolution from center.** 1. Lower the vehicle, but do not allow the tires to contact the ground. 2. Disconnect the intermediate steering shaft from the upper intermediate steering shaft. Refer to **Intermediate Steering Shaft Replacement** . 3. Note the position of the steering wheel and rotate the steering wheel ONE revolution in both directions. 4. Rotate the steering wheel back to the original position. Was the steering wheel abnormally difficult turn or was there a binding condition while turning in either direction?	Go to **Step 12**	Go to **Step 6**
6	1. Disconnect intermediate steering shaft from the steering gear. Refer to **Intermediate Steering Shaft Replacement** . 2. Inspect the intermediate steering shaft for stiff or binding joints. Replace as necessary. Did you find and complete the repair?	Go to **Step 14**	Go to **Step 7**

cardiagn.com

Step	Action	Yes	No
7	**NOTE:** **The effort required to turn the belt driven electric steering gear will be harder than a hydraulic system, but the gear should rotate smoothly.** Grasp the tire and wheel assembly and manually simulate a turn from the left of center and the right of center observing whether more force is needed or a binding condition exists while turning to the left or to the right.Was the tire and wheel assembly abnormally difficult to turn or was there a binding condition while turning in either direction?	Go to **Step 8**	Go to **Step 2**
8	1. Remove the front tire and wheel assemblies. Refer to **Tire and Wheel Removal and Installation (6-Lug Wheel)** **Tire and Wheel Removal and Installation (8-Lug Wheel)** . 2. Disconnect both steering linkage outer tie rod ends from the steering knuckles. Refer to **Steering Linkage Outer Tie Rod Replacement (Light Duty)**. 3. Use your hands in order to move the tie rod end studs. 4. If abnormally difficult to move, replace the tie rod end. Did you find and complete the repair?	Go to **Step 14**	Go to **Step 9**
9	Using hand's, manually simulate a turn from the left of center and the right of center observing whether more force is needed or a binding condition	Go to **Step 14**	Go to **Step 10**

cardiagn.com

Step	Action	Yes	No
	exists to inspect the strut, strut bearings, ball joints, or axle drive shafts for binding. Replace as necessary. Did you find and complete the repair?		
10	**NOTE:** **The effort required to turn the belt driven electric steering gear will be harder than a hydraulic system, but the gear should rotate smoothly.** Using a wrench, turn the steering gear input shaft from the left of center and the right of center observing whether more force is needed or a binding condition exists.Was the steering gear abnormally difficult to turn or binding?	Go to **Step 13**	Go to **Step 2**
11	Inspect the wheel alignment and adjust as necessary. Refer to **Wheel Alignment Measurement** . Did you find and complete the repair?	Go to **Step 14**	-
12	Inspect the steering column and front of dash seal for a binding. If a binding is present, repair or replace the steering column or front of dash seal as necessary. Did you find and complete the repair?	Go to **Step 14**	-
13	Replace the steering gear. Refer to **Electric Belt Drive Rack and Pinion Steering Gear Replacement (Light Duty)**. Did you complete the repair?	Go to **Step 14**	-

cardiagn.com

Step	Action	Yes	No
14	Operate the system in order to verify the repair. Did you correct the condition?	System OK	Go to **Step 3**

POOR RETURN OF STEERING WHEEL (HEAVY DUTY)

Step	Action	Yes	No
DEFINITION: After completing a turn, extra steering input is required for the steering wheel to return to center.			
1	Did you review the Power Steering System Description and Operation and perform the necessary inspections?	Go to **Step 2**	Go to **Symptoms - Power Steering System**
2	Road test the vehicle in order to verify the complaint. It may be necessary to compare to a like vehicle. Does the system operate normally?	System OK	Go to **Step 3**
3	1. Raise and support the vehicle. Refer to **Lifting and Jacking the Vehicle** . 2. Lubricate the tie rod ends and ball joints, if applicable. 3. Inspect the steering and suspension systems for worn or damaged components. 4. Repair as necessary. Did you find and correct the condition?	Go to **Step 14**	Go to **Step 4**
4	Inspect the steering system for unequal effort. The vehicle must be suspended on a hoist, the engine running, and the transmission in park or neutral. Grasp the tire and wheel assembly and manually simulate a turn from the left of center and the right of center observing whether more force is needed to turn to the left or to the right. Was the tire and wheel assembly abnormally difficult to turn or was there a binding condition while turning in either direction?	Go to **Step 5**	Go to **Step 11**
5	**NOTE:** **Position the wheels straight ahead. Do**	Go to **Step 12**	Go to **Step 6**

cardiagn.com

Step	Action	Yes	No
	NOT rotate the steering wheel more than one complete revolution from center. 1. Lower the vehicle, but do not allow the tires to contact the ground. 2. Disconnect the intermediate steering shaft from the upper intermediate steering shaft. Refer to **Intermediate Steering Shaft Replacement** . 3. Note the position of the steering wheel and rotate the steering wheel ONE revolution in both directions. 4. Rotate the steering wheel back to the original position. Was the steering wheel abnormally difficult turn or was there a binding condition while turning in either direction?		
6	1. Disconnect intermediate steering shaft from the steering gear. Refer to **Intermediate Steering Shaft Replacement** . 2. Inspect the intermediate steering shaft for stiff or binding joints. Replace as necessary. Did you find and complete the repair?	Go to **Step 14**	Go to **Step 7**
7	Grasp the tire and wheel assembly and manually simulate a turn from the left of center and the right of center observing whether more force is needed or a binding condition exists while turning to the left or to the right. Was the tire and wheel assembly abnormally difficult to turn or was there a binding condition while turning in either direction?	Go to **Step 8**	Go to **Step 2**
8	1. Remove the front tire and wheel assemblies. Refer to **Tire and Wheel Removal and Installation (6-Lug Wheel)** **Tire and Wheel Removal and Installation (8-Lug Wheel)** .	Go to **Step 14**	Go to **Step 9**

cardiagn.com

Step	Action	Yes	No
	2. Disconnect both steering linkage outer tie rod ends from the steering knuckles. Refer to **Steering Linkage Outer Tie Rod Replacement (Heavy Duty)** . 3. Use your hands in order to move the tie rod end studs. If abnormally difficult to move, replace the tie rod end. 4. Use your hands in order to move the idler and pitman arm joints. If abnormally difficult to move, replace the idler and/or pitman arm(s). Did you find and complete the repair?		
9	Using hand's, manually simulate a turn from the left of center and the right of center observing whether more force is needed or a binding condition exists to inspect the strut, strut bearings, ball joints, or axle drive shafts for binding. Replace as necessary. Did you find and complete the repair?	Go to **Step 14**	Go to **Step 10**
10	Using a wrench, turn the steering gear input shaft from the left of center and the right of center observing whether more force is needed or a binding condition exists. Was the steering gear abnormally difficult to turn or binding?	Go to **Step 13**	Go to **Step 2**
11	Inspect the wheel alignment and adjust as necessary. Refer to **Wheel Alignment Measurement** . Did you find and complete the repair?	Go to **Step 14**	-
12	Inspect the steering column and front of dash seal for a binding. If a binding is present, repair or replace the steering column or front of dash seal as necessary. Did you find and complete the repair?	Go to **Step 14**	-
13	Replace the steering gear. Refer to **Hydraulic Recirculating Ball Steering Gear Replacement (Heavy Duty)**. Did you complete the repair?	Go to **Step 14**	-
14	Operate the system in order to verify the repair. Did you correct the condition?	System OK	Go to **Step 3**

STEERING WHEEL SURGES/JERKS WHILE TURNING (LIGHT DUTY)

cardiagn.com

Step	Action	Yes	No
DEFINITION: After completing a turn, extra steering input is required for the steering wheel to return to center.			
1	Did you review the Power Steering System Description and Operation and perform the necessary inspections?	Go to **Step 2**	Go to **Symptoms - Power Steering System**
2	Road test the vehicle in order to verify the complaint. Does the system operate normally?	System OK	Go to **Step 3**
3	1. Raise and support the vehicle. Refer to **Lifting and Jacking the Vehicle** . 2. Lubricate the tie rod ends and ball joints, if applicable. 3. Inspect the steering and suspension systems for worn or damaged components. 4. Repair as necessary. Did you find and correct the condition?	Go to **Step 12**	Go to **Step 4**
4	**NOTE:** **Position the wheels straight ahead. Do NOT rotate the steering wheel more than one complete revolution from center.** 1. Lower the vehicle, but do not allow the tires to contact the ground. 2. Disconnect the intermediate steering shaft from the upper intermediate steering shaft. Refer to **Intermediate Steering Shaft Replacement** . 3. Note the position of the steering wheel and rotate the steering wheel ONE revolution in both directions.	Go to **Step 10**	Go to **Step 5**

cardiagn.com

Step	Action	Yes	No
	4. Rotate the steering wheel back to the original position. Was the steering wheel abnormally difficult to turn or was there a binding condition while turning in either direction?		
5	1. Disconnect intermediate steering shaft from the steering gear. Refer to **Intermediate Steering Shaft Replacement** . 2. Inspect the intermediate steering shaft for stiff or binding joints. Replace as necessary. Did you find and complete the repair?	Go to **Step 12**	Go to **Step 6**
6	**NOTE:** **The effort required to turn the belt driven electric steering gear will be harder than a hydraulic system, but the gear should rotate smoothly.** Grasp the tire and wheel assembly and manually simulate a turn from the left of center and the right of center observing whether more force is needed or a binding condition exists while turning to the left or to the right.Was the tire and wheel assembly abnormally difficult to turn or was there a binding condition while turning in either direction?	Go to **Step 7**	Go to **Step 2**
7	1. Remove the front tire and wheel assemblies. Refer to **Tire and Wheel Removal and Installation (6-Lug Wheel)** **Tire and Wheel Removal and Installation (8-Lug Wheel)** .	Go to **Step 12**	Go to **Step 8**

cardiagn.com

Step	Action	Yes	No
	2. Disconnect both steering linkage outer tie rod ends from the steering knuckles. Refer to **Steering Linkage Outer Tie Rod Replacement (Light Duty)**. 3. Use your hands in order to move the tie rod end studs. 4. If abnormally difficult to move, replace the tie rod end. Did you find and complete the repair?		
8	Using hand's, manually simulate a turn from the left of center and the right of center observing whether more force is needed or a binding condition exists to inspect the strut, strut bearings, ball joints, or axle drive shafts for binding. Replace as necessary. Did you find and complete the repair?	Go to **Step 12**	Go to **Step 9**
9	**NOTE:** **The effort required to turn the belt driven electric steering gear will be harder than a hydraulic system, but the gear should rotate smoothly.** Using a wrench, turn the steering gear input shaft from the left of center and the right of center observing whether more force is needed or a binding condition exists.Was the steering gear abnormally difficult to turn or binding?	Go to **Step 11**	Go to **Step 2**
10	Inspect the steering column and front of dash seal for a binding. If a binding is present, repair or replace the steering column or front of dash	Go to **Step 12**	-

cardiagn.com

Step	Action	Yes	No
	seal as necessary. Did you find and complete the repair?		
11	Replace the steering gear. Refer to **Electric Belt Drive Rack and Pinion Steering Gear Replacement (Light Duty)**. Did you complete the repair?	Go to **Step 12**	-
12	Operate the system in order to verify the repair. Did you correct the condition?	System OK	Go to **Step 3**

STEERING WHEEL SURGES/JERKS WHILE TURNING (HEAVY DUTY)

Step	Action	Yes	No
DEFINITION: After completing a turn, extra steering input is required for the steering wheel to return to center.			
1	Did you review the Power Steering System Description and Operation and perform the necessary inspections?	Go to **Step 2**	Go to **Symptoms - Power Steering System**
2	Road test the vehicle in order to verify the complaint. Does the system operate normally?	System OK	Go to **Step 3**
3	1. Raise and support the vehicle. Refer to **Lifting and Jacking the Vehicle** . 2. Lubricate the tie rod ends and ball joints, if applicable. 3. Inspect the steering and suspension systems for worn or damaged components. 4. Repair as necessary. Did you find and correct the condition?	Go to **Step 12**	Go to **Step 4**
4	**NOTE:** **Position the wheels straight ahead. Do NOT rotate the steering wheel more**	Go to **Step 10**	Go to **Step 5**

cardiagn.com

Step	Action	Yes	No
	than one complete revolution from center. 1. Lower the vehicle, but do not allow the tires to contact the ground. 2. Disconnect the intermediate steering shaft from the upper intermediate steering shaft. Refer to **Intermediate Steering Shaft Replacement** . 3. Note the position of the steering wheel and rotate the steering wheel ONE revolution in both directions. 4. Rotate the steering wheel back to the original position. Was the steering wheel abnormally difficult to turn or was there a binding condition while turning in either direction?		
5	1. Disconnect intermediate steering shaft from the steering gear. Refer to **Intermediate Steering Shaft Replacement** . 2. Inspect the intermediate steering shaft for stiff or binding joints. Replace as necessary. Did you find and complete the repair?	Go to **Step 12**	Go to **Step 6**
6	**NOTE:** **The effort required to turn the belt driven electric steering gear will be harder than a hydraulic system, but the gear**	Go to **Step 7**	Go to **Step 2**

cardiagn.com

Step	Action	Yes	No
	should rotate smoothly. Grasp the tire and wheel assembly and manually simulate a turn from the left of center and the right of center observing whether more force is needed or a binding condition exists while turning to the left or to the right.Was the tire and wheel assembly abnormally difficult to turn or was there a binding condition while turning in either direction?		
7	1. Remove the front tire and wheel assemblies. Refer to **Tire and Wheel Removal and Installation (6-Lug Wheel)** **Tire and Wheel Removal and Installation (8-Lug Wheel)** . 2. Disconnect both steering linkage outer tie rod ends from the steering knuckles. Refer to **Steering Linkage Outer Tie Rod Replacement (Heavy Duty)** . 3. Use your hands in order to move the tie rod end studs. 4. If abnormally difficult to move, replace the tie rod end. Did you find and complete the repair?	Go to **Step 12**	Go to **Step 8**
8	Using hand's, manually simulate a turn from the left of center and the right of center observing whether more force is needed or a binding condition exists to inspect the strut, strut bearings, ball joints, or axle drive shafts for binding. Replace as necessary. Did you find and complete the repair?	Go to **Step 12**	Go to **Step 9**
9	**NOTE:** **The effort required to turn the belt driven electric steering gear will be harder than**	Go to **Step 11**	Go to **Step 2**

cardiagn.com

Step	Action	Yes	No
	a hydraulic system, but the gear should rotate smoothly. Using a wrench, turn the steering gear input shaft from the left of center and the right of center observing whether more force is needed or a binding condition exists.Was the steering gear abnormally difficult to turn or binding?		
10	Inspect the steering column and front of dash seal for a binding. If a binding is present, repair or replace the steering column or front of dash seal as necessary. Did you find and complete the repair?	Go to **Step 12**	-
11	Replace the steering gear. Refer to **Hydraulic Recirculating Ball Steering Gear Replacement (Heavy Duty)**. Did you complete the repair?	Go to **Step 12**	-
12	Operate the system in order to verify the repair. Did you correct the condition?	System OK	Go to **Step 3**

STEERING EFFORT HARD IN ONE OR BOTH DIRECTIONS (HEAVY DUTY)

Step	Action	Yes	No
1	Did you review the Power Steering System General Description and perform the necessary inspections?	Go to **Step 2**	Go to **Symptoms - Power Steering System**
2	Verify that the steering effort is hard in one or both directions. Does the system operate normally?	System OK	Go to **Step 3**
3	Perform the power steering test procedure. Refer to **Power Steering System Test**. Did you complete the procedure?	Go to **Step 4**	-
4	Operate the system in order to verify the repair. Did you correct the condition?	System OK	Go to **Step 3**

cardiagn.com

STEERING EFFORT HARD IN ONE OR BOTH DIRECTIONS (LIGHT DUTY)

Step	Action	Yes	No
1	Did you review the Power Steering System Description and Operation and perform the necessary inspections?	Go to **Step 2**	Go to **Symptoms - Power Steering System**
2	Road test the vehicle in order to verify the complaint. It may be necessary to compare to a like vehicle. Is the steering effort hard in one or both directions?	Go to **Step 3**	System OK
3	1. Raise and support the vehicle. Refer to **Lifting and Jacking the Vehicle** . 2. Lubricate the tie rod ends and ball joints, if applicable. 3. Inspect the steering and suspension systems for worn or damaged components. 4. Repair as necessary. Did you find and correct the condition?	Go to **Step 12**	Go to **Step 4**
4	**NOTE:** **Position the wheels straight ahead. Do NOT rotate the steering wheel more than one complete revolution from center.** 1. Lower the vehicle, but do not allow the tires to contact the ground. 2. Disconnect the intermediate steering shaft from the upper intermediate steering shaft. Refer to **Intermediate Steering Shaft Replacement** . 3. Note the position of the steering wheel and rotate the steering wheel	Go to **Step 10**	Go to **Step 5**

cardiagn.com

Step	Action	Yes	No
	ONE revolution in both directions. 4. Rotate the steering wheel back to the original position. Was the steering wheel abnormally difficult to turn or was there a binding condition while turning in either direction?		
5	1. Disconnect lower intermediate steering shaft from the steering gear. 2. Inspect the lower intermediate steering shaft for stiff or binding joints. Replace as necessary. Did you find and complete the repair?	Go to **Step 12**	Go to **Step 6**
6	**NOTE:** **The effort required to turn the belt driven electric steering gear will be harder than a hydraulic system, but the gear should rotate smoothly.** Grasp the tire and wheel assembly and manually simulate a turn from the left of center and the right of center observing whether more force is needed or a binding condition exists while turning to the left or to the right.Was the tire and wheel assembly abnormally difficult turn or was there a binding condition while turning in either direction?	Go to **Step 7**	Go to **Step 2**
7	1. Remove the front tire and wheel assemblies. Refer to **Tire and Wheel Removal and Installation (6-Lug Wheel)** **Tire and Wheel**	Go to **Step 12**	Go to **Step 8**

cardiagn.com

Step	Action	Yes	No
	Removal and Installation (8-Lug Wheel) . 2. Disconnect both steering linkage outer tie rod ends from the steering knuckles. Refer to **Steering Linkage Outer Tie Rod Replacement (Light Duty)**. 3. Use your hands in order to move the tie rod end studs. 4. If abnormally difficult to move, replace the tie rod end. Did you find and complete the repair?		
8	Using hand's, manually simulate a turn from the left of center and the right of center observing whether more force is needed or a binding condition exists to inspect the strut, strut bearings, ball joints, or axle driveshafts for binding. Replace as necessary. Did you find and complete the repair?	Go to **Step 12**	Go to **Step 9**
9	**NOTE:** **The effort required to turn the belt driven electric steering gear will be harder than a hydraulic system, but the gear should rotate smoothly.** Using a wrench, turn the steering gear input shaft from the left of center and the right of center observing whether more force is needed or a binding condition exists.Was the steering gear abnormally difficult to turn or binding?	Go to **Step 11**	Go to **Step 2**

cardiagn.com

Step	Action	Yes	No
10	Inspect the steering column and front of dash seal for a binding. If a binding is present, repair or replace the steering column or front of dash seal as necessary.	Go to **Step 12**	-
11	Replace the steering gear. Refer to **Electric Belt Drive Rack and Pinion Steering Gear Replacement (Light Duty)**. Did you complete the repair?	Go to **Step 12**	-
12	Operate the system in order to verify the repair. Did you correct the condition?	System OK	Go to **Step 3**

REPAIR INSTRUCTIONS

WIRE TO WIRE REPAIR - STEERING

Special Tools

- **EL-38125-10** Splice Sleeve Crimping Tool (non GMNA)
- **J-38125-5A** Ultra Torch Special Tool
- **J-38125-8** Splice Sleeve Crimping Tool (GMNA)

For equivalent regional tools, refer to **Special Tools** .

WARNING: **In order to reduce the risk of personal injury, loss of high voltage isolation to ground and higher system impedance, do not attempt to repair any HV wiring, connector, or terminal that is damaged. High voltage coaxial type cables are not repairable. Never attempt to repair a coaxial type cable. The entire cable/harness or component must be replaced. In order to maintain system integrity and personal safety, never attempt to repair any high voltage wiring, cables, or terminals. Performing this procedure on high voltage circuits may result in serious injury or death.**

NOTE: **If the wiring harness internal to the transmission is damaged, the wiring harness must be replaced. The use of splice sleeves in an attempt to repair the internal transmission wires, connectors, or terminals could result in performance issues.**

NOTE: **Do not splice wires in Door Harness Grommets.**

cardiagn.com

NOTE: **The DuraSeal splice sleeves have the following 2 critical features:**

- **A special heat shrink sleeve environmentally seals the splice. The heat shrink sleeve contains a sealing adhesive inside.**
- **A cross hatched (knurled) core crimp provides the necessary low resistance contact integrity for these sensitive, low energy circuits.**

Use only DuraSeal splice sleeves to form a one-to-one splice on all types of insulation except high voltage and specialty cables. Use DuraSeal splice sleeves where there are special requirements such as moisture sealing. Follow the instructions below in order to splice copper wire using DuraSeal splice sleeves.

Splice Sleeve Selection

Splice Sleeve Color	Crimp Tool Nest Color		Wire Gauge mm^2 / (AWG)
	3 Crimp Nests	4 Crimp Nests	
Salmon (Yellow-Pink) 19300089	Red (1) or Red/Green (1)	Red (2)	0.22-0.8/(18-26)
Blue 19168447	Blue (2)	Blue (3)	1.0-2.0/(14-16)
Yellow 19168448	Yellow (3)	Yellow (4)	3.0-5.0/(10-12)

NOTE: **You must perform the following procedures in the listed order. Repeat the procedure if any wire strands are damaged. You must obtain a clean strip with all of the wire strands intact.**

1. Open the harness by removing any tape:
   - Use a sewing seam ripper, available from sewing supply stores, in order to cut open the harness in order to avoid wire insulation damage.
   - Use the DuraSeal splice sleeves on all types of insulation except Tefzel and coaxial.
   - Do not use the crimp and DuraSeal splice sleeve to form a splice with more than 2 wires coming together.
2. Cut as little wire off the harness as possible. You may need the extra length of wire in order to change the location of a splice.

   Adjust splice locations so that each splice is at least 40 mm (1.5 in) away from the other splices, harness branches, or connectors.

3. Strip the insulation:

cardiagn.com

- When adding a length of wire to the existing harness, use the same size wire as the original wire.
- Perform one of the following items in order to find the correct wire size:
  - Find the wire on the schematic and convert to regional wiring gauge size.
  - If you are unsure of the wire size, begin with the largest opening in the wire stripper and work down until achieving a clean strip of the insulation.
- Strip approximately 5.0 mm (0.20 in) of insulation from each wire to be spliced.
- Do not nick or cut any of the strands. Inspect the stripped wire for nicks or cut strands.
- If the wire is damaged, repeat this procedure after removing the damaged section.

4. For high temperature wiring, slide a section of high temperature SCT1 shrink tubing down the length of wire to be spliced. Ensure that the shrink tubing will not interfere with the splice procedure.
5. Select the proper DuraSeal splice sleeve according to the wire size. Refer to the above table at the beginning of the repair procedure for the color coding of the DuraSeal splice sleeves and the crimp tool nests.

cardiagn.com

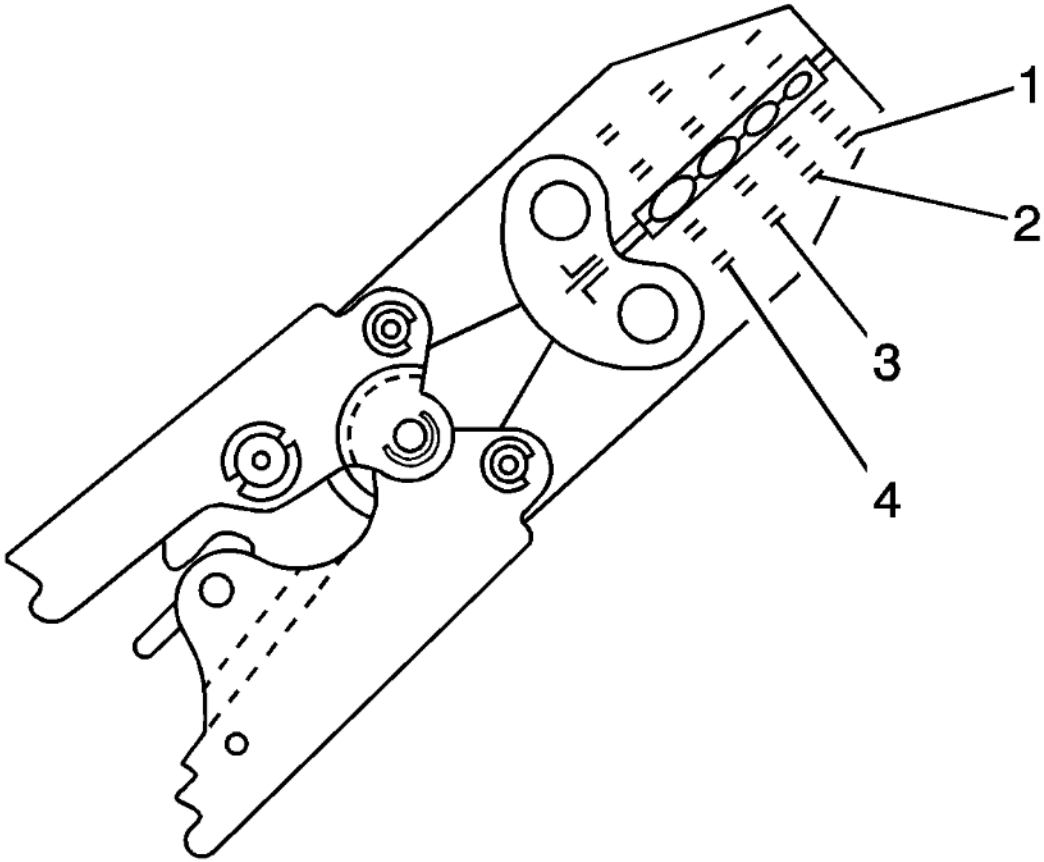

Fig. 3: Splice Sleeve Crimping Tool With 4 Crimp Nests
Courtesy of GENERAL MOTORS COMPANY

6. The **EL-38125-10** splice sleeve crimping tool has four crimp nests. The largest crimp nest (4) is used for crimping 10 and 12 gauge wires. The second largest crimp nest (3) is used for crimping 14 and 16 gauge wires. The third largest crimp nest (2) is used for crimping 18 and 20 gauge wires. The smallest crimp nest (1) is used for crimping 22 to 26 gauge wires. The crimp nests are referenced in the table (farther above) under the crimp tool nest color.

cardiagn.com

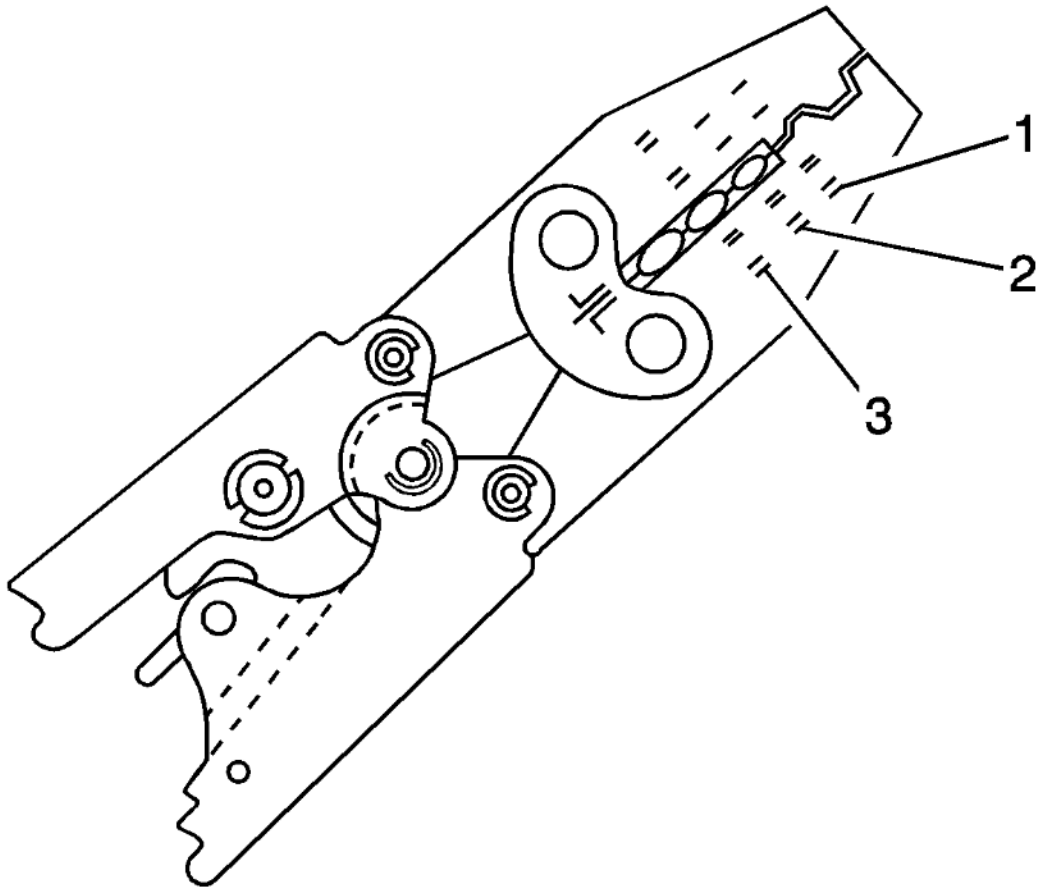

Fig. 4: Splice Sleeve Crimping Tool With 3 Crimp Nests
Courtesy of GENERAL MOTORS COMPANY

7. The **J-38125-8** splice sleeve crimping tool has three crimp nests. The largest crimp nest (3) is used for crimping 10 and 12 gauge wires. The second largest crimp nest (2) is used for crimping 14 and 16 gauge wires. The smallest crimp nest (1) is used for crimping 18 to 20 gauge wires. The crimp nests are referenced in the table (farther above) under the crimp tool nest color.
8. Use the splice sleeve crimp tool in order to position the DuraSeal splice sleeve in the proper color nest of the splice sleeve crimp tool. For the four crimp nest tool, use the three largest crimp nests to crimp the splice sleeves. For the three crimp nest tool, use all three crimp nests to

cardiagn.com

crimp the splice sleeves. Use the four and three crimp tool diagrams (above) and the table (farther above) to match the splice sleeve with the correct crimp nest. The crimp tool diagram callout numbers match the numbers in the table (under crimp tool nest color).

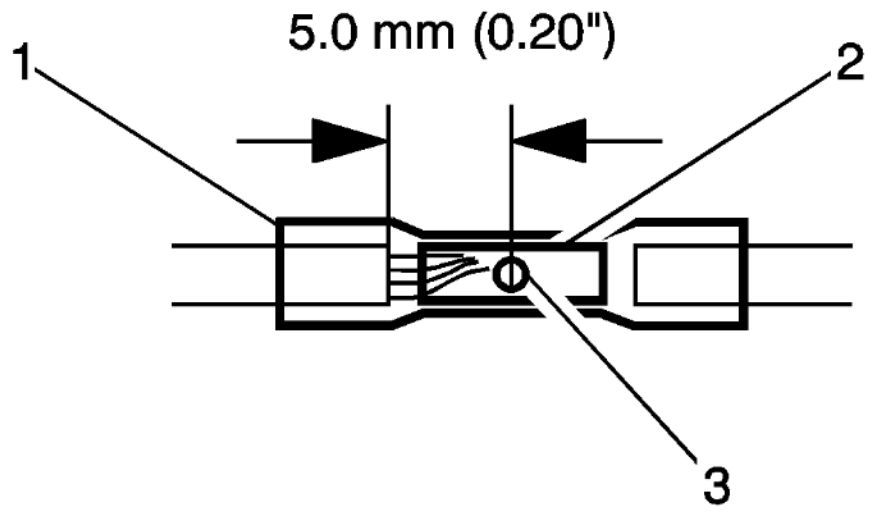

Fig. 5: Identifying Duraseal Splice Sleeve
Courtesy of GENERAL MOTORS COMPANY

9. Place the DuraSeal splice sleeve in the nest. Ensure that the crimp falls midway between the end of the barrel and the stop. The sleeve has a stop (3) in the middle of the barrel (2) in order to prevent the wire (1) from going further. Close the hand crimper handles slightly in order to

cardiagn.com

firmly hold the DuraSeal splice sleeve in the proper nest.

Fig. 6: Crimped Duraseal Splice Sleeve
Courtesy of GENERAL MOTORS COMPANY

cardiagn.com

10. Insert the wire into the splice sleeve barrel until the wire hits the barrel stop. Refer to **Folded-Over Wire Repair** for splicing wires of 0.35 mm or less (22, 24, 26 gauge sizes) and for splicing wires of different gauges.
11. Tightly close the handles of the crimp tool until the crimper handles open when released.

    The crimper handles will not open until you apply the proper amount of pressure to the DuraSeal splice sleeve. Repeat steps 4 and 6 for the opposite end of the splice.

cardiagn.com

Fig. 7: Crimped Duraseal Splice Sleeve
Courtesy of GENERAL MOTORS COMPANY

12. Using the heat torch, apply heat to the crimped area of the barrel.
13. Start in the middle and gradually move the heat barrel to the open ends of the tubing:

cardiagn.com

- The tubing will shrink completely as the heat is moved along the insulation.
- A small amount of sealant will come out of the end of the tubing when sufficient shrinkage is achieved.

Weatherpack™ Wiring Repair

NOTE: **Some replacement pigtail connectors may be delivered without the terminated leads installed into the connector. For Weatherpack™ connectors, all terminated leads included in the package should to be installed into the connector. If the connector end view shows that a terminal is not occupied, the extra terminated lead(s) need to be installed and the end(s) sealed using a DuraSeal splice sleeve and taped back into the harness.**

1. Insert the wire into the splice sleeve barrel until the wire hits the barrel stop. Refer to **Folded-Over Wire Repair** for splicing wires of 0.35 mm or less (22, 24, 26 gauge sizes) and for splicing wires of different gauges.

cardiagn.com

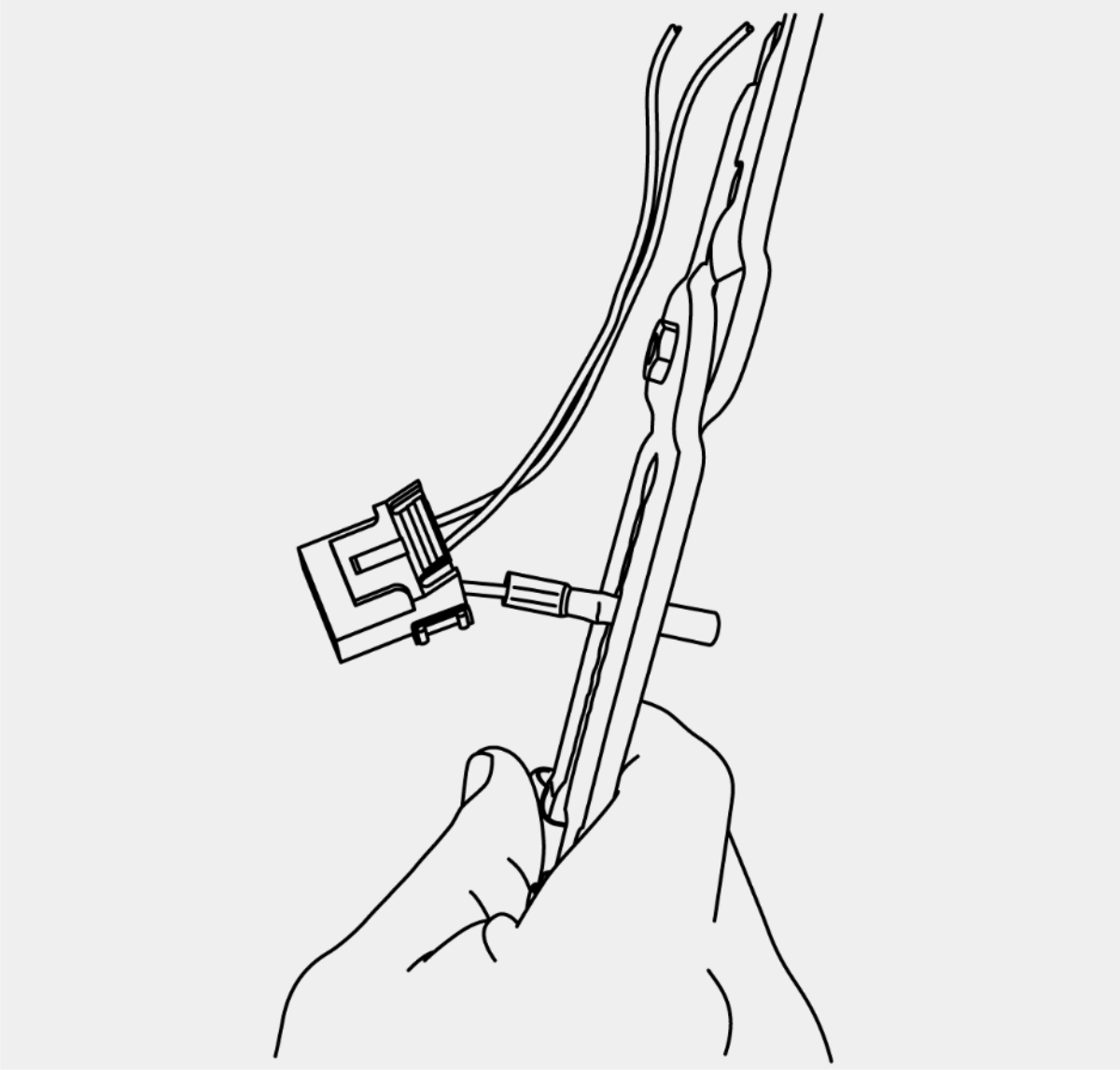

Fig. 8: Tightly Close Handles Of Crimp Tool
Courtesy of GENERAL MOTORS COMPANY

2. Tightly close the handles of the crimp tool until the crimper handles open when released.

   The crimper handles will not open until you apply the proper amount of pressure to the DuraSeal splice sleeve. Holding the DuraSEAL with

cardiagn.com

one hand gently tug on the wire to ensure it is crimped in the DuraSeal.

3. Using the heat torch, apply heat to the crimped area of the barrel.

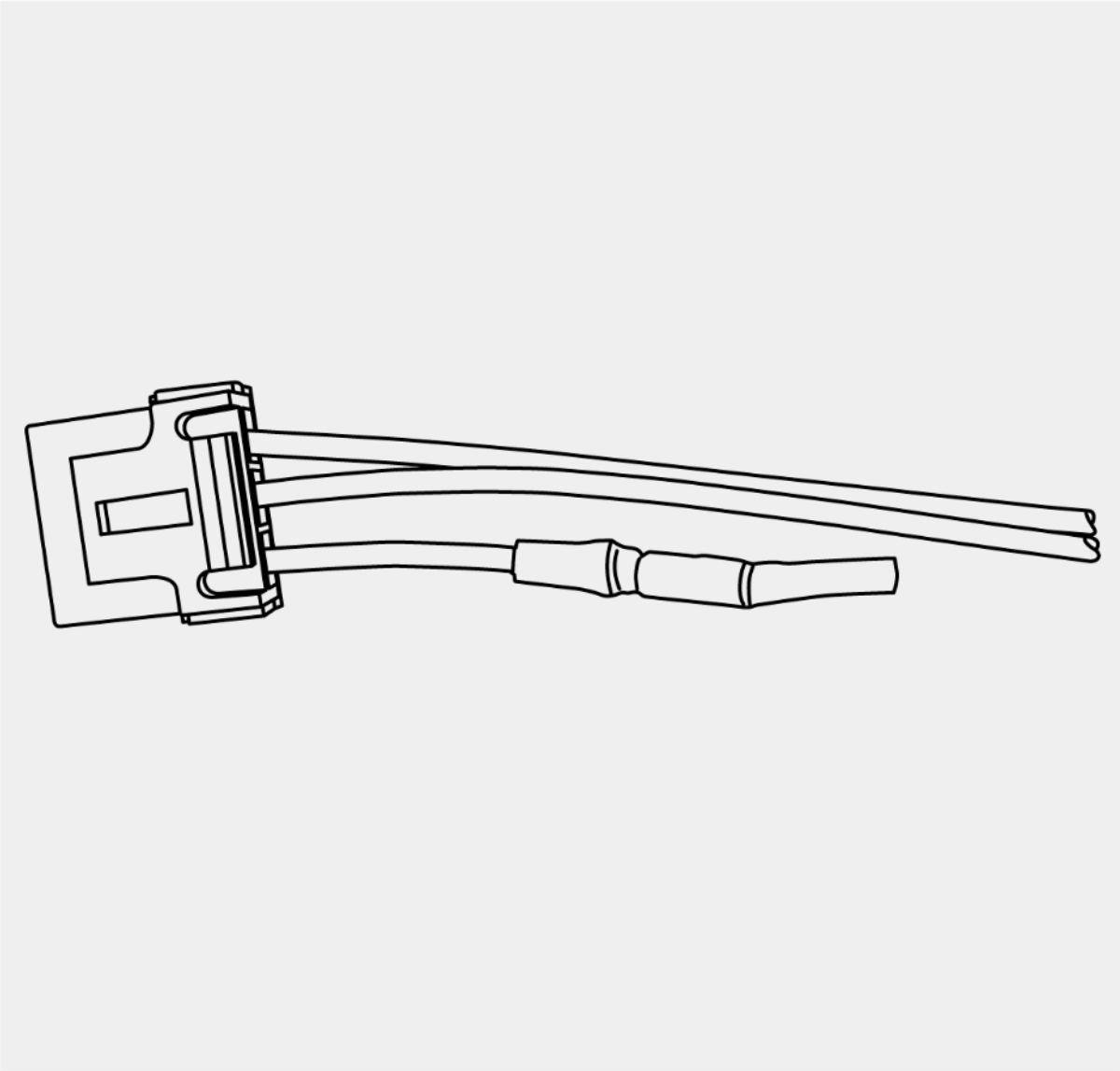

Fig. 9: Applying Heat To Crimped Area Of Barrel
Courtesy of GENERAL MOTORS COMPANY

cardiagn.com

4. Start in the middle and gradually move the heat barrel to the open ends of the tubing:
    - The tubing will shrink completely as the heat is moved along the insulation.
    - A small amount of sealant will come out of the end of the tubing when sufficient shrinkage is achieved.

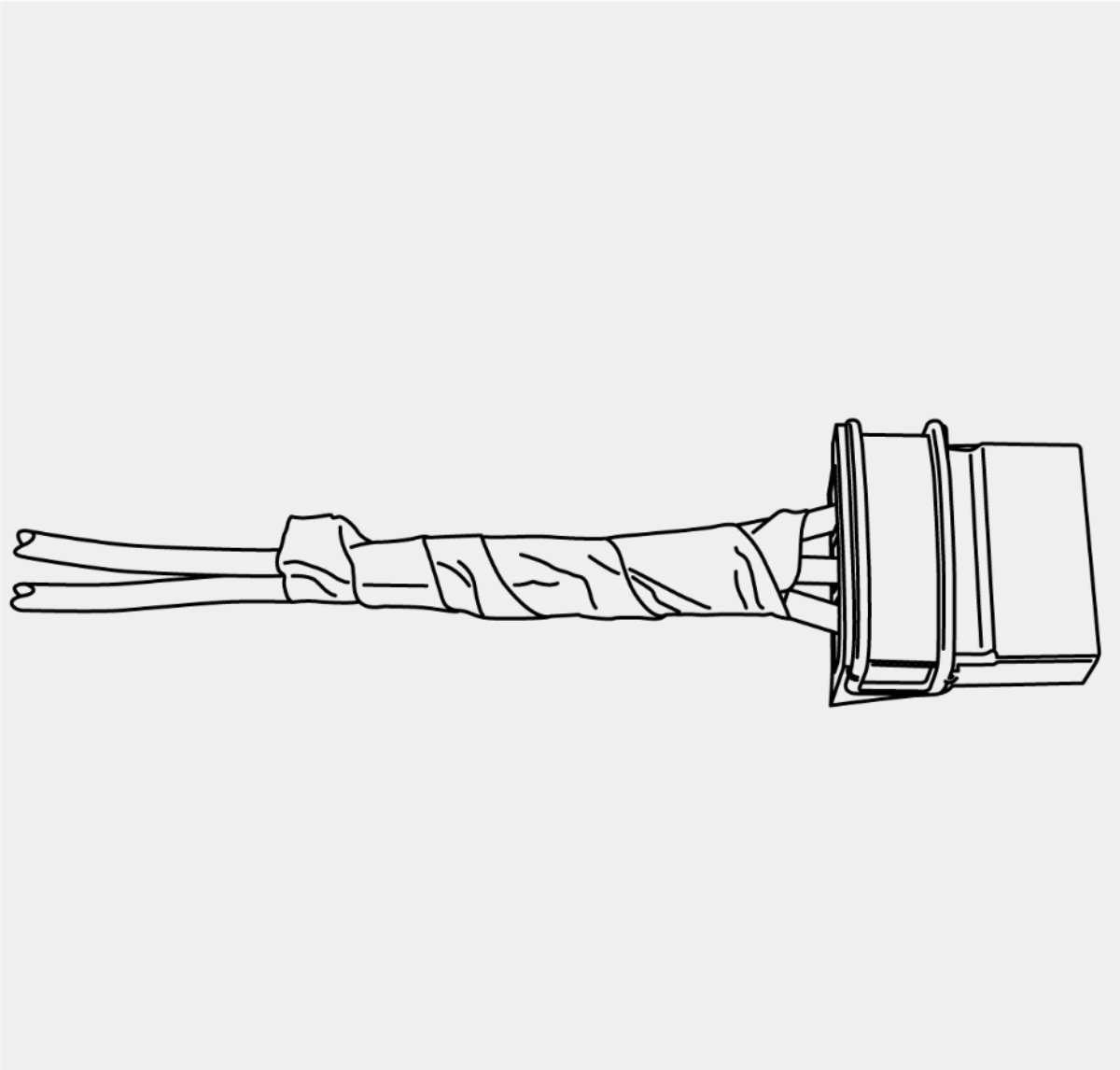

Fig. 10: Taping Extra Terminated Leads Back Into Harness
Courtesy of GENERAL MOTORS COMPANY

cardiagn.com

5. Tape the extra terminated lead(s) back into the harness.

High Temperature Wiring Repairs

Use the following procedures to perform high temperature wiring repairs:

1. Center the high temperature SCT1 shrink tube over the DuraSeal splice sleeve.
2. Using the heat torch, apply heat to the high temperature heat shrink tubing.
3. Gradually move the heat from the center to the open end of the tubing:
    - The tubing will shrink completely as the heat is moved along the insulation.
    - A small amount of sealant will come out of the end of the tubing when sufficient shrinkage is achieved.
4. Replace any reflective tape and clips that may have been removed during the repair.

CONNECTOR RECONNECTION - STEERING

Special Tools

EL-35616 Terminal Test Probe Kit

For equivalent regional tools, refer to **Special Tools** .

When the condition is not currently present, but is indicated in DTC history, the cause may be intermittent. An intermittent may also be the cause when there is a customer complaint, but the symptom cannot be duplicated. Refer to the Symptom Table of the system that is suspect of causing the condition before trying to locate an intermittent condition.

Most intermittent conditions are caused by faulty electrical connections or wiring. Inspect for the following items:

- Wiring broken inside the insulation
- Poor connection between the male and female terminal at a connector
- A terminal not seated all the way into the connector body
- Poor terminal to wire connection - Some conditions which fall under this description are poor crimps, poor solder joints, crimping over the wire insulation rather than the wire itself, and corrosion in the wire to terminal contact area, etc.
- Pierced or damaged insulation can allow moisture to enter the wiring causing corrosion. The conductor can corrode inside the insulation, with little visible evidence. Look for swollen and stiff sections of wire in the suspect circuits.
- Wiring which has been pinched, cut, or its insulation rubbed through may cause an intermittent open or short as the bare area touches other

cardiagn.com

wiring or parts of the vehicle.

- Wiring that comes in contact with hot or exhaust components
- Refer to **Inducing Intermittent Fault Conditions** in order to duplicate the conditions required, in order to verify the customer concern.
- Refer to **Testing for Electrical Intermittents** for test procedures to detect intermittent open, high resistance, short to ground, and short to voltage conditions.
- Refer to **Scan Tool Snapshot Procedure** for advanced intermittent diagnosis and Vehicle Data Recorder operation.

Testing for Terminal Fretting

Some intermittent conditions can be caused by wire terminal fretting corrosion. Fretting corrosion is a build-up of insulating, oxidized wear debris that can form when there is a small motion between electrical contacts. The oxidized wear debris can pile up enough at the electrical contact spots that the electrical resistance across the connection increases. Movement between the contacting surfaces as small as 10 to 100 microns can cause fretting. To put this in perspective, a sheet of paper is about 100 microns thick, so fretting motion is small and hard to see. Vibration and thermal expansion/contraction are the main sources that create fretting motion. Since vehicles vibrate and can experience large temperature swings, they are a good source for fretting motion. Tin, copper, nickel, and iron surfaces are all susceptible to fretting corrosion. Fretting corrosion can be difficult to see but it looks like small, dark smudges on the terminals contact surface.

To correct a fretting condition disconnect the suspect connector and add dielectric grease / lubricant (Nyogel 760G or equivalent, meeting GM specification 9986087) to both sides of the connector terminals. Then reconnect the connector and wipe away any excess lubricant. This will correct the additional terminal contact resistance due to the terminal fretting corrosion.

Testing for Proper Terminal Contact

It is important to test terminal contact at the component and any inline connectors before replacing a suspect component. Mating terminals must be inspected to ensure good terminal contact. A poor connection between the male and female terminal at a connector may be the result of contamination or deformation.

Contamination may be caused by the connector halves being improperly connected. A missing or damaged connector seal, damage to the connector itself, or exposing the terminals to moisture and dirt can also cause contamination. Contamination, usually in the underhood or underbody connectors, leads to terminal corrosion, causing an open circuit or intermittently open circuit.

Deformation is caused by probing the mating side of a connector terminal without the proper adapter. Always use the **EL-35616** kit when probing connectors. Other causes of terminal deformation are improperly joining the connector halves, or repeatedly separating and joining the connector halves. Deformation, usually to the female terminal contact tang, can result in poor terminal contact causing an open or intermittently open circuit.

Testing for Proper Terminal Contact in Bussed Electrical Centers

cardiagn.com

It is very important to use the correct test adapter when testing for proper terminal contact of fuses and relays in a bussed electrical center. Use the **EL-35616** kit to test for proper terminal contact. Failure to use the **EL-35616** kit can result in improper diagnosis of the bussed electrical center.

Follow the procedure below in order to test terminal contact:

1. Separate the connector halves.
2. Visually inspect the connector halves for contamination. Contamination may result in a white or green build-up within the connector body or between terminals. This causes high terminal resistance, intermittent contact, or an open circuit. An underhood or underbody connector that shows signs of contamination should be replaced in its entirety: terminals, seals, and connector body.
3. Using an equivalent male terminal/terminated lead, verify that the retention force is significantly different between a known good terminal and the suspect terminal. Replace the female terminal in question.

Flat Wire Connectors

There are no serviceable parts for flat wire connectors on the harness side or the component side.

Follow the procedure below in order to test terminal contact:

1. Remove the component in question.
2. Visually inspect each side of the connector for signs of contamination. Avoid touching either side of the connector as oil from your skin may be a source of contamination as well.
3. Visually inspect the terminal bearing surfaces of the flat wire circuits for splits, cracks, or other imperfections that could cause poor terminal contact. Visually inspect the component side connector to ensure that all of the terminals are uniform and free of damage or deformation.
4. Insert the appropriate adapter into the flat wire harness connector in order to test the circuit in question.

Control Module/Component Voltage and Grounds

Poor voltage or ground connections can cause widely varying symptoms.

- Test all control module voltage supply circuits. Many vehicles have multiple circuits supplying voltage to a control module. Other components in the system may have separate voltage supply circuits that may also need to be tested. Inspect connections at the module/component connectors, fuses, and any intermediate connections between the voltage source and the module/component. A test lamp or a DMM may indicate that voltage is present, but neither tests the ability of the circuit to carry sufficient current. Operate the component to test the ability of the circuit to carry sufficient current. Refer to **Circuit Testing** , and **Power Distribution Schematics** .
- Test all control module ground and system ground circuits. The control module may have multiple ground circuits. Other components in the system may have separate grounds that may also need to be tested. Inspect grounds for clean and tight connections at the grounding point.

cardiagn.com

Inspect the connections at the component and in splice packs, where applicable. Operate the component to test the ability of the circuit to carry sufficient current. Refer to **Circuit Testing** , and **Ground Distribution Schematics** .

Temperature Sensitivity

- An intermittent condition may occur when a component/connection reaches normal operating temperature. The condition may occur only when the component/connection is cold, or only when the component/connection is hot.
- Freeze Frame, Failure Records, Snapshot, or Vehicle Data Recorder data may help with this type of intermittent condition, where applicable.
- If the intermittent is related to heat, review the data for a relationship with the following:
  - High ambient temperatures
  - Underhood/engine generated heat
  - Circuit generated heat due to a poor connection, or high electrical load
  - Higher than normal load conditions, towing, etc.
- If the intermittent is related to cold, review the data for the following:
  - Low ambient temperatures - In extremely low temperatures, ice may form in a connection or component. Inspect for water intrusion.
  - The condition only occurs on a cold start.
  - The condition goes away when the vehicle warms up.
- Information from the customer may help to determine if the trouble follows a pattern that is temperature related.
- If temperature is suspected of causing an intermittent fault condition, attempt to duplicate the condition. Refer to **Inducing Intermittent Fault Conditions** in order to duplicate the conditions required.

Electromagnetic Interference and Electrical Noise

Some electrical components/circuits are sensitive to electromagnetic interference or other types of electrical noise. Inspect for the following conditions:

- A mis-routed harness that is too close to high voltage/high current devices such as secondary ignition components, motors, generator etc. - These components may induce electrical noise on a circuit that could interfere with normal circuit operation.
- Electrical system interference caused by a malfunctioning relay, or a control module driven solenoid or switch - These conditions can cause a sharp electrical surge. Normally, the condition will occur when the malfunctioning component is operating.
- Installation of non-factory or aftermarket add on accessories such as lights, 2-way radios, amplifiers, electric motors, remote starters, alarm systems, cell phones, etc. - These accessories may create interference in other circuits while operating and the interference would disappear when the accessory is not operating. Refer to **Checking Aftermarket Accessories** .

cardiagn.com

- Test for an open diode across the A/C compressor clutch and for other open diodes. Some relays may contain a clamping diode.
- The generator may be allowing AC noise into the electrical system.

Incorrect Control Module

- There are only a few situations where reprogramming a control module is appropriate:
  - A new service control module is installed.
  - A control module from another vehicle is installed.
  - Revised software/calibration files have been released for this vehicle.

NOTE: **DO NOT re-program the control module with the SAME software/calibration files that are already present in the control module. This is not an effective repair for any type of concern.**

- Verify that the control module contains the correct software/calibration. If incorrect programming is found, reprogram the control module with the most current software/calibration. Refer to **Control Module References** for replacement, setup, and programming.

STEERING LINKAGE INNER TIE ROD INSPECTION

Special Tools

J-8001 Dial Indicator Set

For equivalent regional tools, refer to **Special Tools**.

NOTE: **This inspection procedure does not supersede local government required inspections that have more stringent requirements.**

1. Turn the ignition key to the ON position with the engine OFF.
2. With the aid of an assistant, turn the steering wheel to the full stop position and hold the steering wheel in that position until the test is complete. The tie rod being tested should be inside the steering gear housing seated against the steering stop.
3. Raise and support the vehicle. Refer to **Lifting and Jacking the Vehicle** .
4. If there is not a good location for the **J-8001** Dial Indicator pointer at the steering gear housing, install a large worm gear hose clamp to the steering gear housing over the larger steering gear boot clamp and align the clamp so that the screw can be a location for the **J-8001** Dial Indicator pointer.

cardiagn.com

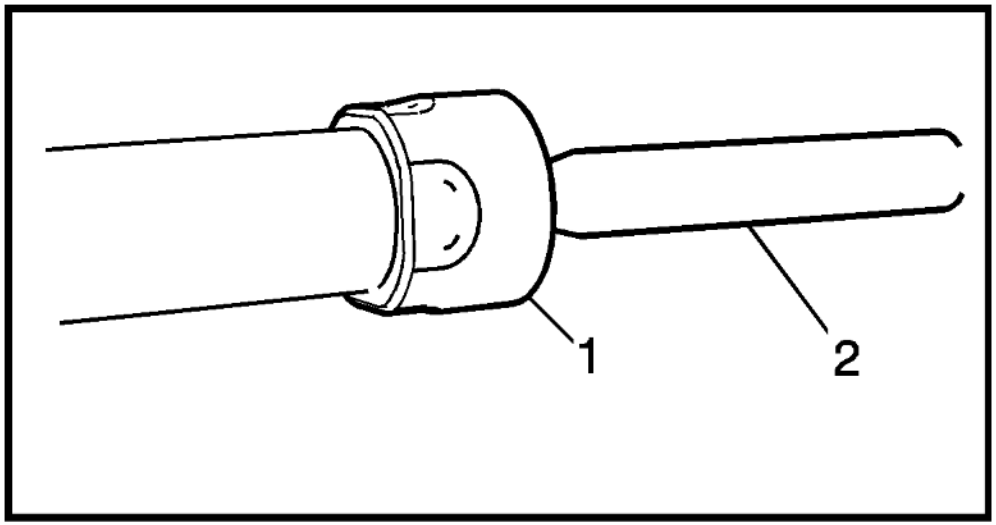

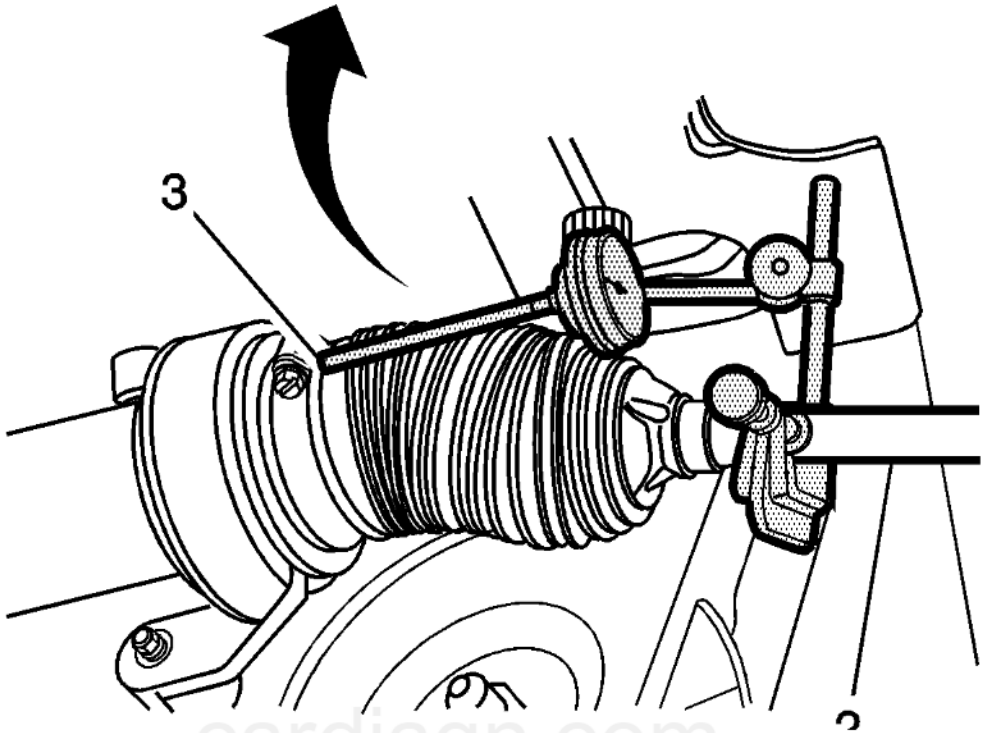

cardiagn.com

Fig. 11: Measuring Lash Between Inner Tie Rod & Steering Gear Housing
Courtesy of GENERAL MOTORS COMPANY

5. Install the **J-8001** Dial Indicator between the inner tie rod (2) and the steering gear housing or the worm gear clamp in such a way as to measure the lash between the inner tie rod and the steering gear housing.

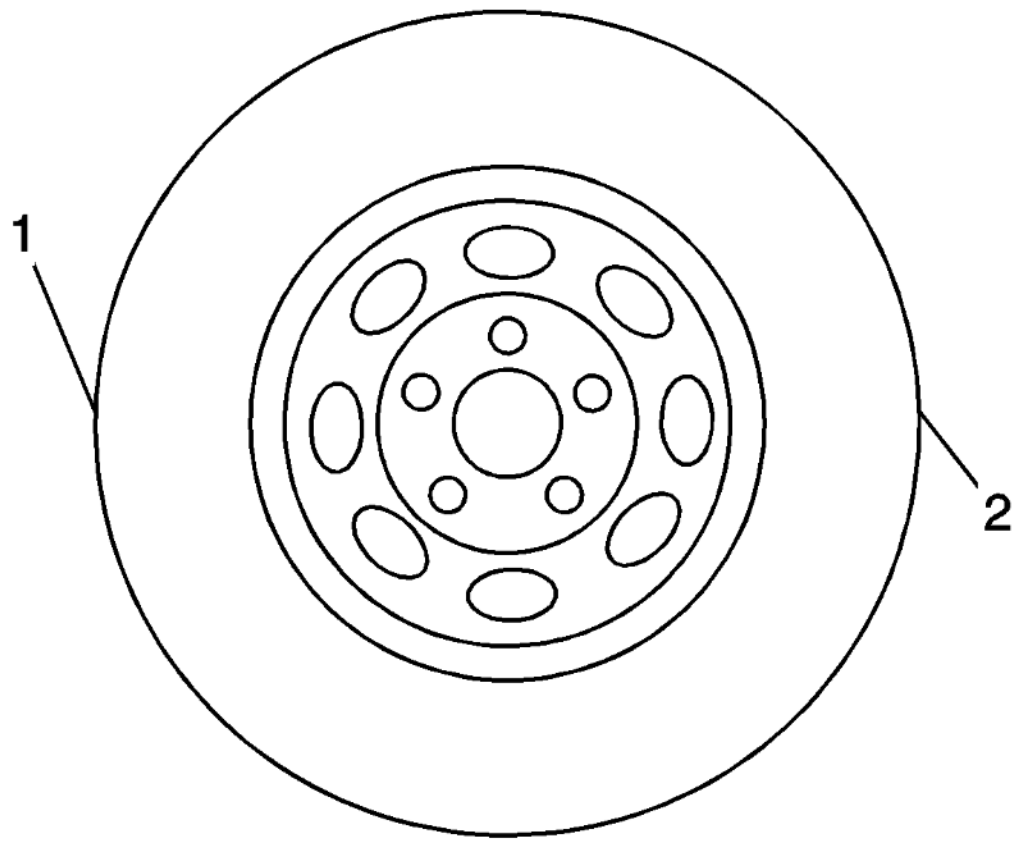

Fig. 12: Identifying Tire Grasping Positions
Courtesy of GENERAL MOTORS COMPANY

cardiagn.com

NOTE: **Only move the tire enough to feel any lash between the inner tie rod and the inner tie rod housing without moving the steering gear rack.**

6. Grasping the tire at the 3 o'clock (2) and 9 o'clock (1) positions, gently push in on one side of the tire in order to remove any lash.
7. Zero the **J-8001** Dial Indicator.
8. On the same side of the tire previously pushed in, gently pull out and measure the lash.
9. Record the measurement seen on the **J-8001** Dial Indicator.
10. If the measured value exceeds 0.5 mm (0.02 in), replace the inner tie rod. Refer to **Steering Linkage Inner Tie Rod Replacement (Light Duty)**.
11. Repeat the procedure for the other side.

STEERING LINKAGE OUTER TIE ROD INSPECTION

Special Tools

J-8001 Dial Indicator Set

For equivalent regional tools, refer to **Special Tools**.

NOTE: **This inspection procedure does not supersede local government required inspections that have more stringent requirements.**

1. Inspect the outer tie rod end seal. If the outer tie rod end seal is torn, replace the outer tie rod end. Refer to **Steering Linkage Outer Tie Rod Replacement (Light Duty)**.
2. Raise the side of the vehicle being inspected with a floor jack while maintaining contact between the opposite wheel and the shop floor. Support the lower control arm with a floor jack stand as far outboard as possible and remove the floor jack. Refer to **Lifting and Jacking the Vehicle** .

cardiagn.com

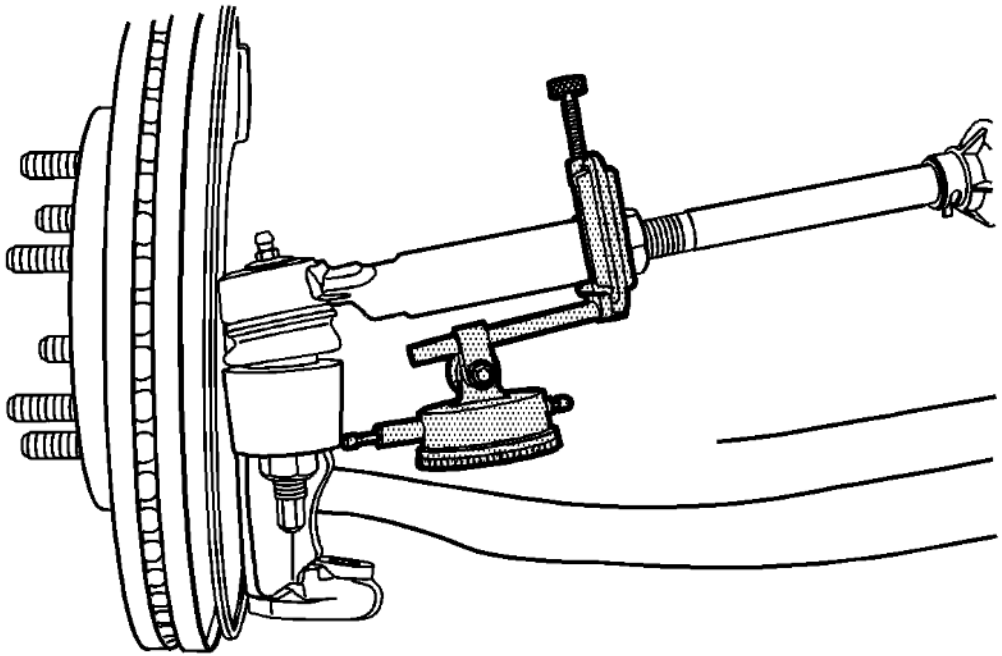

Fig. 13: Checking Tie Rod-To-Steering Knuckle Lash
Courtesy of GENERAL MOTORS COMPANY

3. Install the **J-8001** Dial Indicator between the outer tie rod end and the steering knuckle as shown in the graphic. Note that the tire and wheel assembly is shown removed only for clarification of the dial indicator position.

cardiagn.com

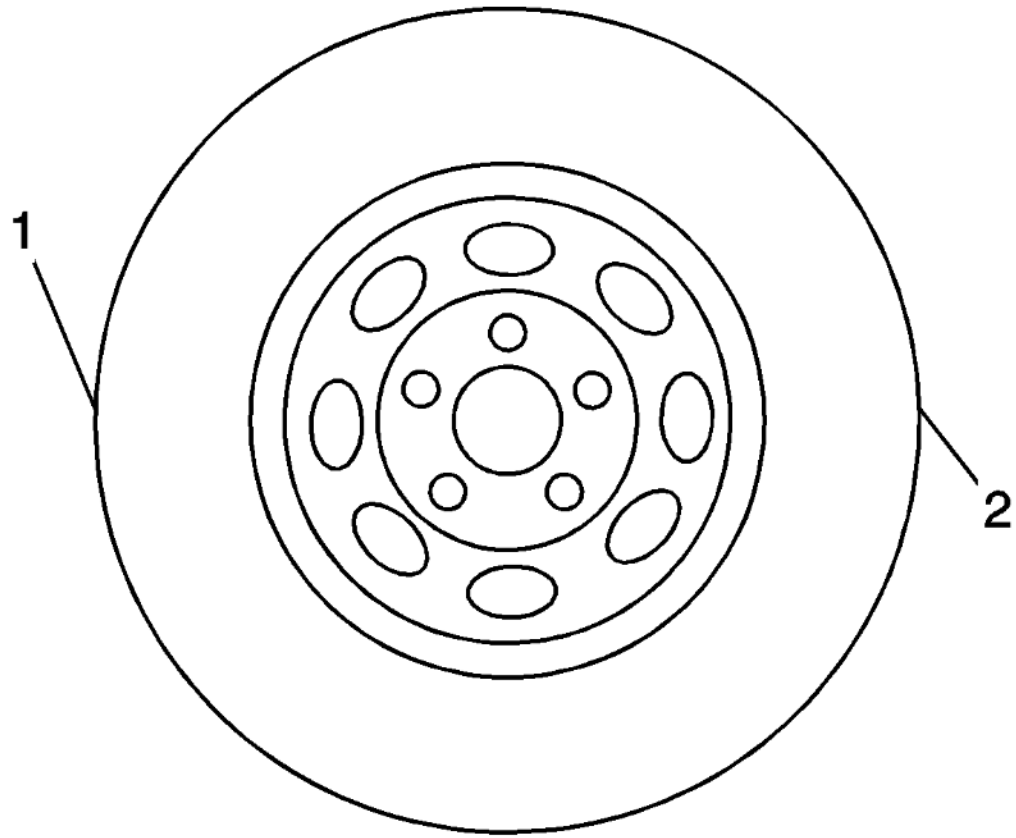

Fig. 14: Identifying Tire Grasping Positions
Courtesy of GENERAL MOTORS COMPANY

4. Grasping the tire at the 3 o'clock (2) and 9 o'clock (1) positions, gently push in on one side of the tire to remove any lash.
5. Zero the **J-8001** Dial Indicator.
6. On the same side of the tire previously pushed inwards, gently pull outwards and measure the lash.
7. Record the measurement seen on the **J-8001** Dial Indicator.

cardiagn.com

8. If the measured value exceeds 1 mm (0.04 in) then replace the outer tie rod. Refer to **Steering Linkage Outer Tie Rod Replacement (Light Duty)**.
9. Repeat the procedure for the other side.

POWER STEERING SYSTEM BLEEDING

IMPORTANT:
- Use clean, new power steering fluid type only. See the Maintenance and Lubrication subsection for fluid specifications. Refer to **Adhesives, Fluids, Lubricants, and Sealers**.
- Hoses touching the frame, body or engine may cause system noise. Verify that the hoses do not touch any other part of the vehicle.
- Loose connections may not leak, but could allow air into the steering system. Verify that all hose connections are tight.

IMPORTANT: Power steering fluid level must be maintained throughout bleed procedure.

1. Fill pump reservoir with fluid to minimum system level, FULL COLD level, or middle of hash mark on cap stick fluid level indicator.

   IMPORTANT: With hydro-boost only, the oil level will appear falsely high if the hydro-boost accumulator is not fully charged. Do not apply the brake pedal with the engine OFF. This will discharge the hydro-boost accumulator.

2. If equipped with hydro-boost, fully charge the hydro-boost accumulator using the following procedure:
   1. Start the engine.
   2. Firmly apply the brake pedal 10-15 times.
   3. Turn the engine OFF.
3. Raise the vehicle until the front wheels are off the ground. Refer to **Lifting and Jacking the Vehicle** .
4. Key on engine OFF, turn the steering wheel from stop to stop 12 times.

   Vehicles equipped with hydro-boost systems or longer length power steering hoses may require turns up to 15 to 20 stop to stops.

5. Verify power steering fluid level per operating specification. Refer to **Checking and Adding Power Steering Fluid**.
6. Start the engine. Rotate steering wheel from left to right. Check for sign of cavitation or fluid aeration (pump noise/whining).
7. Verify the fluid level. Repeat the bleed procedure, if necessary.

CHECKING AND ADDING POWER STEERING FLUID

cardiagn.com

CAUTION: **When adding fluid or making a complete fluid change, always use the proper power steering fluid. Failure to use the proper fluid will cause hose and seal damage and fluid leaks.**

1. If the power steering system has been serviced, bleed the power steering system to remove any trapped air from the system. Refer to **Power Steering System Bleeding**.

NOTE: **The oil level will appear falsely high if the hydro-boost accumulator is not fully charged. Do not apply the brake pedal with the engine off, this will discharge the hydro-boost accumulator.**

2. Fully charge the hydro-boost accumulator using the following procedure:
   1. Start the engine.
   2. Firmly apply the brake pedal 2 to 3 times.
   3. Turn the engine OFF.

NOTE: **The Add and Cold Full marks on the capstick are calculated for oil at ambient temperature. If the oil is hot, the oil level may appear slightly high.**

3. Clean the area surrounding the reservoir cap.
4. Remove the reservoir cap.

NOTE: **The ideal oil level is between the Add and the Full Cold marks. Since overfilling is just as undesirable as underfilling, there is no reason to fill all the way up to the Full Cold mark.**

5. Inspect the power steering pump fluid level at regular intervals.

   Add fluid when required. Refer to **Adhesives, Fluids, Lubricants, and Sealers**.

6. Install the reservoir cap.
7. When checking the fluid level after servicing the steering system, bleed the air from the system. Refer to **Power Steering System Bleeding**.

POWER STEERING SYSTEM FLUSHING

NOTE: **Do not reuse any drained power steering fluid regardless of appearance or condition.**

1. Raise the vehicle until the front wheels are off the ground. Refer to **Lifting and Jacking the Vehicle** .

cardiagn.com

2. Place a large drain pan under the vehicle in order to collect the draining fluid.
3. Remove the fluid return hose at the power steering fluid reservoir or the pump inlet connection, as applicable.
4. Plug the reservoir return hose inlet connection on the power steering fluid reservoir or the pump, as applicable.

NOTE: **This step may require 4 L (4 qt) of power steering fluid until the draining fluid appears clear.**

5. Have an assistant maintain the minimum fluid level in the reservoir using clean, new power steering fluid. Refer to **Checking and Adding Power Steering Fluid**.
6. With the key in the ON position and with the engine OFF, turn the steering wheel fully to the left and to the right. Continue until the fluid from the return hose runs clear.
7. Remove the plug and install the fluid return hose to the power steering fluid reservoir or the pump inlet connection, as applicable.
8. Bleed the power steering system. Refer to **Power Steering System Bleeding**.
9. Inspect the power steering fluid for the following indications of contamination:
   - Milky fluid - water
   - Brown fluid - burnt
   - Plastic debris or dirt chunks
10. If the fluid is contaminated, repeat steps 3-9.
11. Remove the drain pan.
12. Lower the vehicle.

POWER STEERING PUMP PULLEY REPLACEMENT (HEAVY DUTY)

Special Tools

- **CH-25033-C** Pulley Installer
- **CH-25034-C** Pulley Remover

Equivalent regional tools:**Special Tools**

Removal Procedure

1. Remove Accessory Drive Belt **Drive Belt Replacement - Accessory**

cardiagn.com

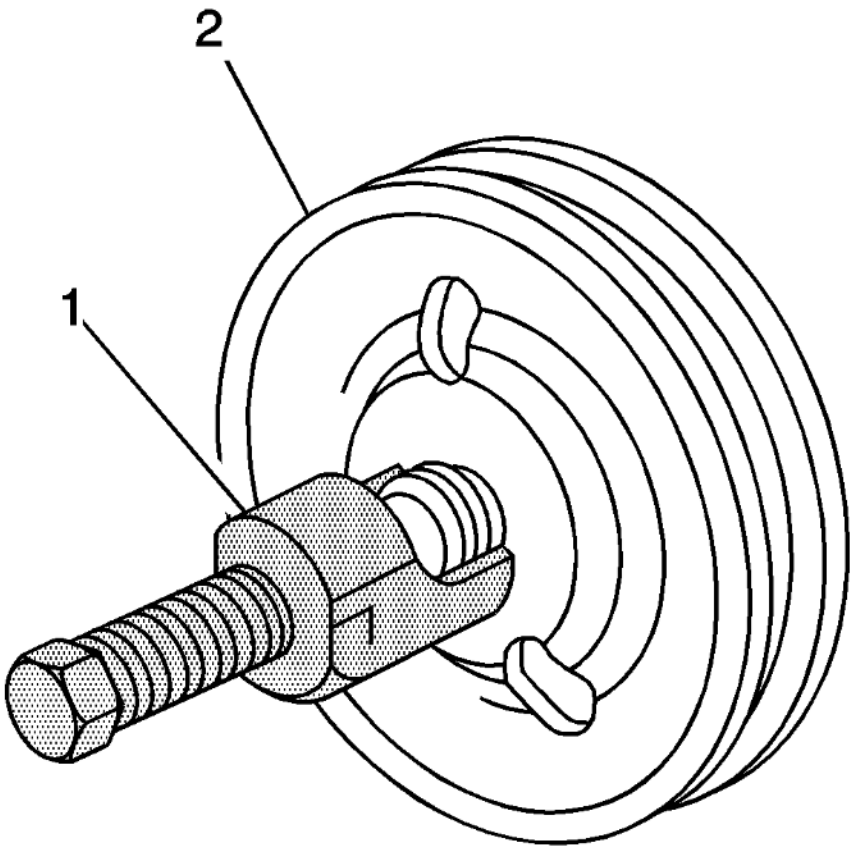

Fig. 15: View Of Power Steering Pump Pulley Remover
Courtesy of GENERAL MOTORS COMPANY

2. Use the **CH-25034-C** remover (1) to remove the power steering pump pulley (2).

Installation Procedure

cardiagn.com

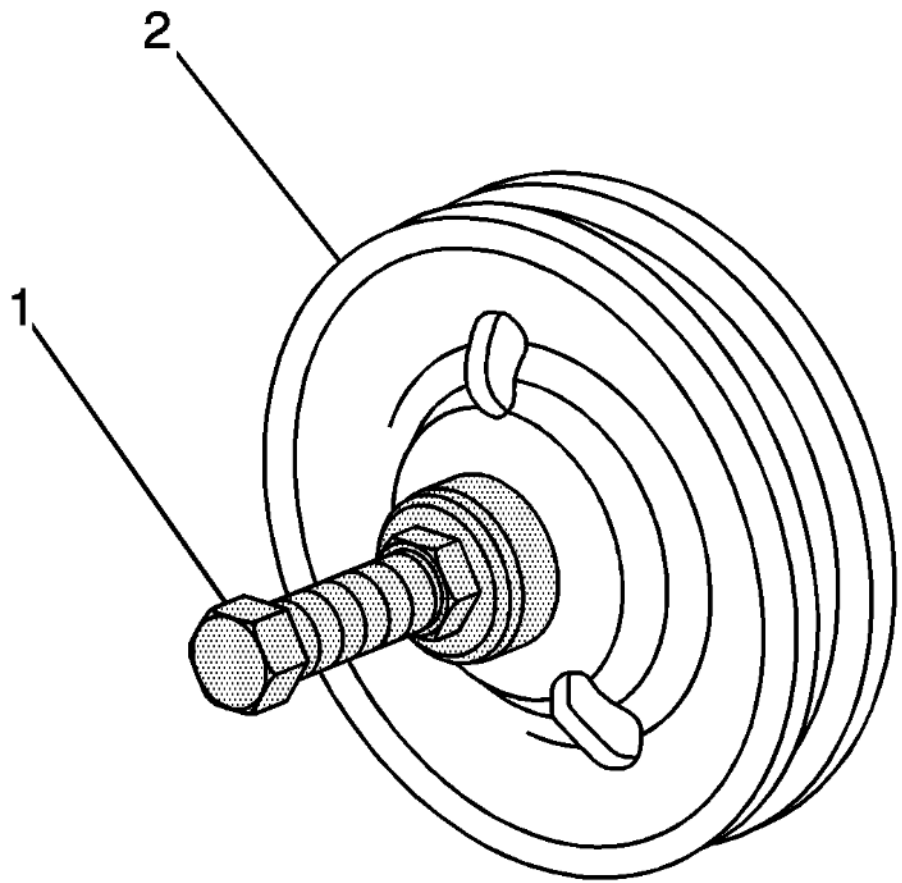

Fig. 16: View Of Power Steering Pump Pulley Installer
Courtesy of GENERAL MOTORS COMPANY

1. Place the power steering pump pulley on the end of the power steering pump shaft.<p01>
2. Use the **CH-25033-C** installer (1) to install the power steering pump pulley.

cardiagn.com

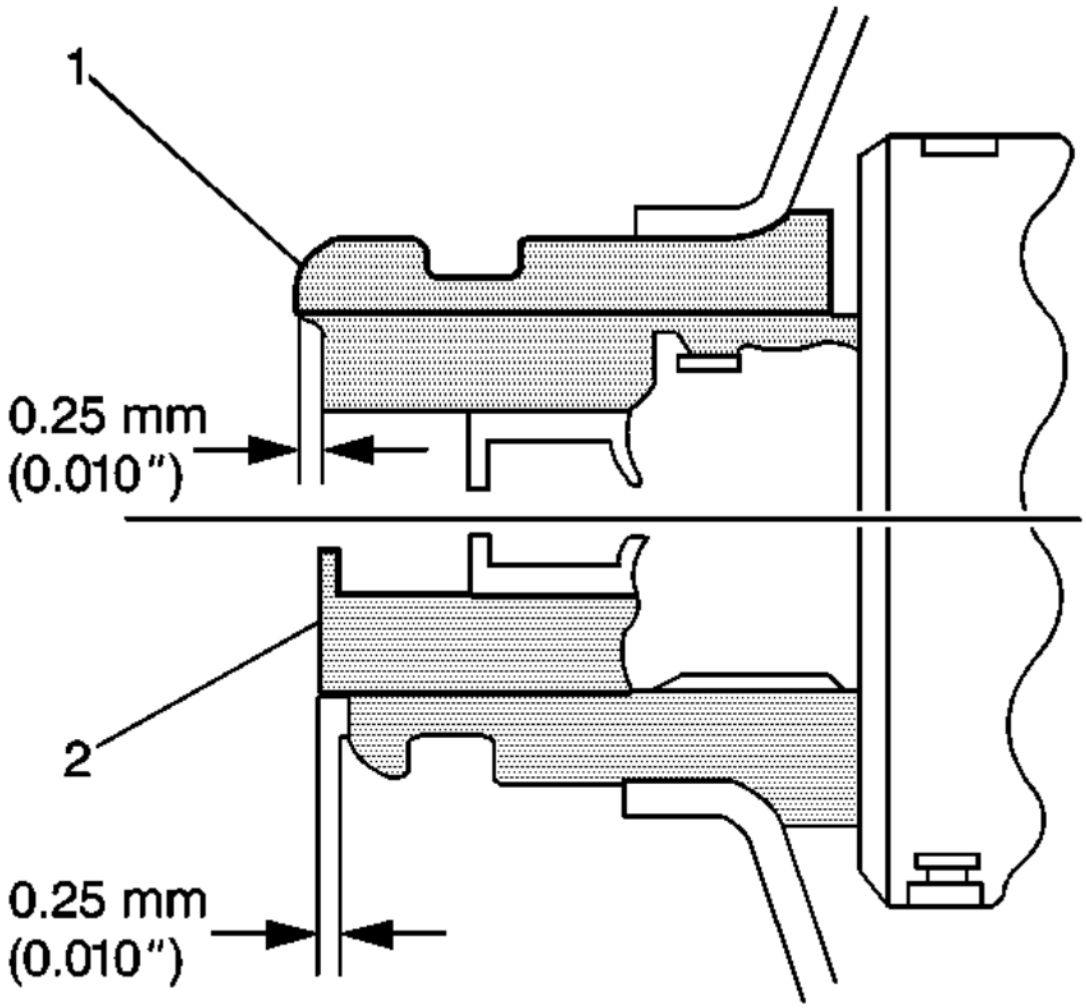

Fig. 17: Checking Power Steering Pump Pulley Installed Depth
Courtesy of GENERAL MOTORS COMPANY

3. Ensure the power steering pump pulley (1) is flush against the power steering pump shaft (2) with an allowable variance of 0.25 mm (0.010 in).
4. Install Accessory Drive Belt **Drive Belt Replacement - Accessory**

POWER STEERING PUMP REPLACEMENT (HEAVY DUTY)

cardiagn.com

Removal Procedure

1. Remove as much power steering fluid from the power steering fluid reservoir as possible.
2. Remove Power Steering Pump Pulley **Power Steering Pump Pulley Replacement (Heavy Duty)**

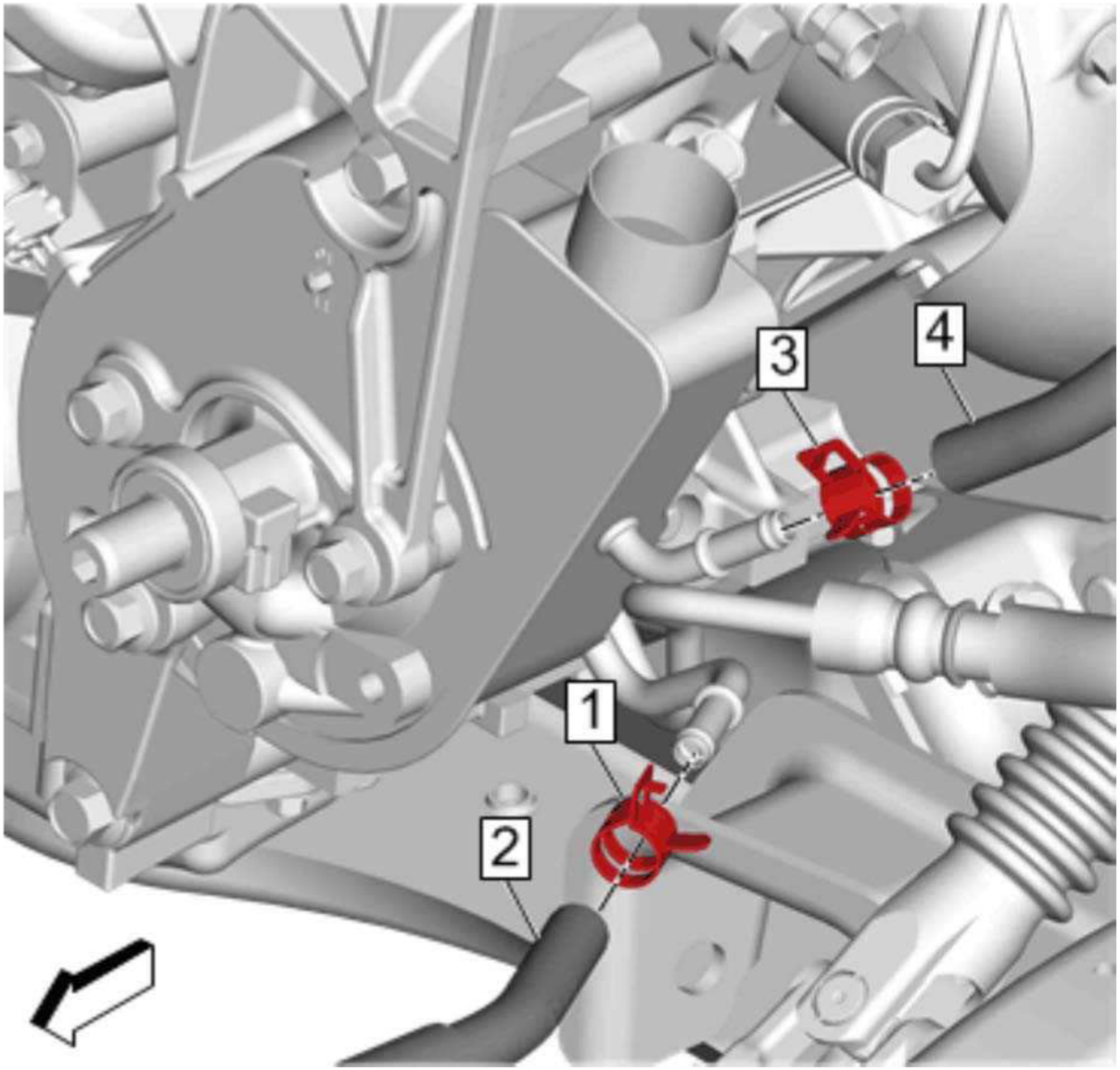

Fig. 18: Power Steering Fluid Cooler Hose And Clamp

cardiagn.com

Courtesy of GENERAL MOTORS COMPANY

3. Disengage Power Steering Fluid Cooler Hose Clamp (1) @Power Steering Fluid Reservoir
4. Separate Power Steering Fluid Cooler Hose (2) @Power Steering Fluid Reservoir
5. Disengage Power Brake Booster Outlet Hose Clamp (3) @Power Steering Fluid Reservoir
6. Separate Power Brake Booster Outlet Hose (4) @Power Steering Fluid Reservoir
7. Remove Underbody Skid Shield **Underbody Skid Shield Replacement**

cardiagn.com

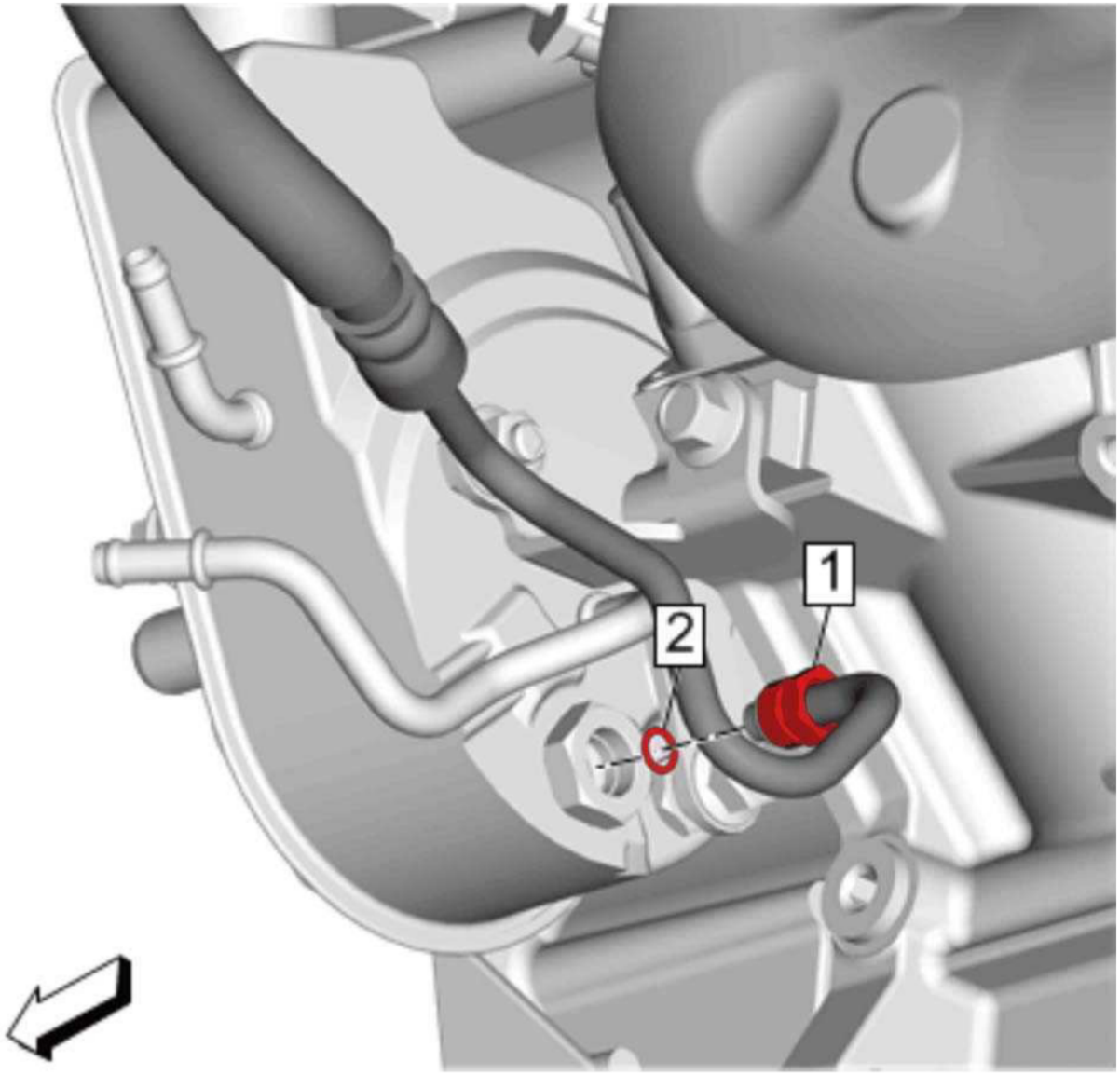

Fig. 19: Power Brake Booster Inlet Hose
Courtesy of GENERAL MOTORS COMPANY

8. Remove Power Brake Booster Inlet Hose (1) @Power Steering Fluid Reservoir
9. Remove Power Brake Booster Inlet Hose Seal (2).

cardiagn.com

DISCARD the seal.

10. Lower the vehicle.

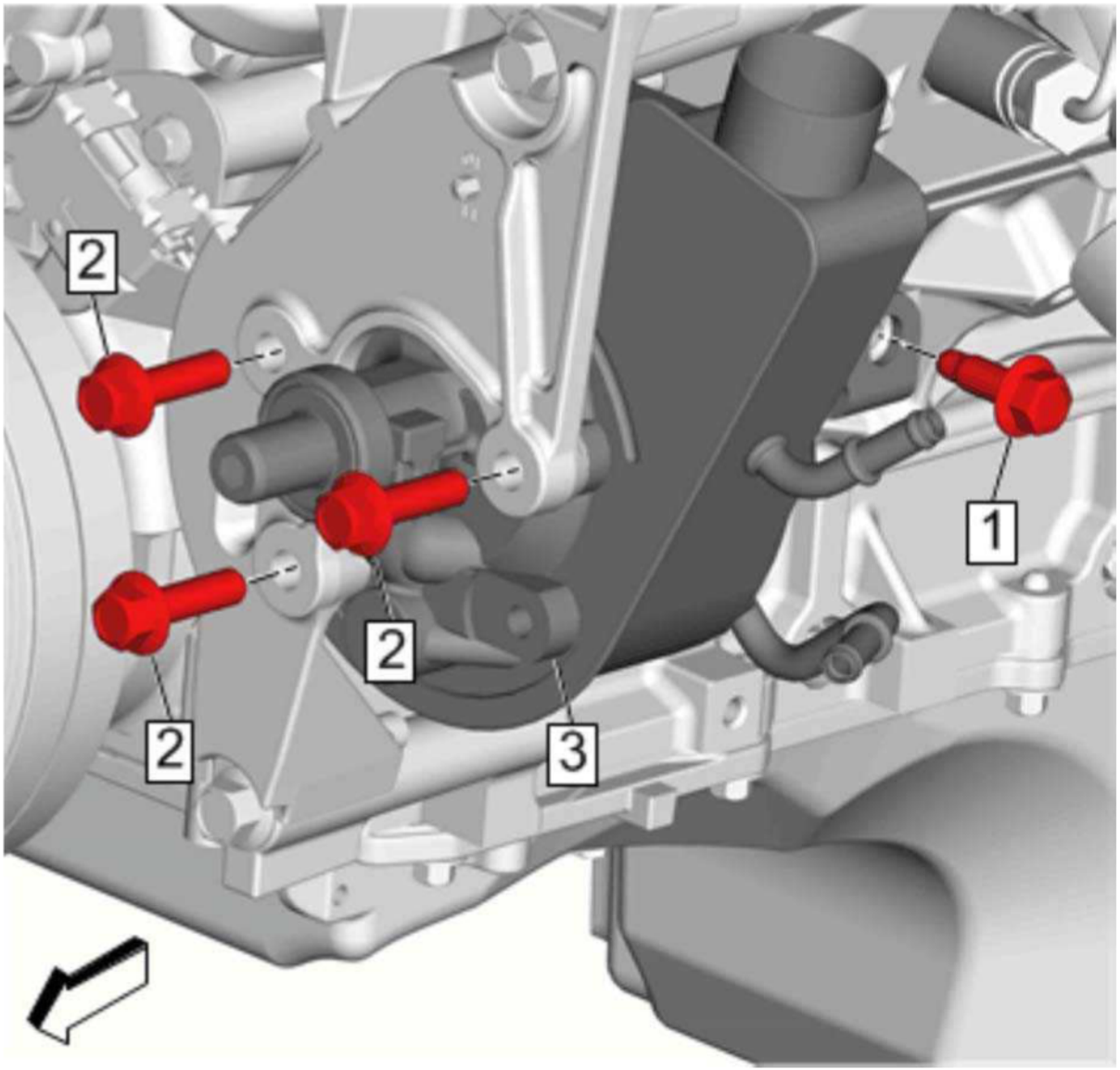

Fig. 20: Power Steering Pump Rear Bracket Bolt
Courtesy of GENERAL MOTORS COMPANY

cardiagn.com

11. Remove Power Steering Pump Rear Bracket Bolt (1).
12. Remove Power Steering Pump Bolt (2).
13. Remove the power steering pump assembly (3) from the vehicle.

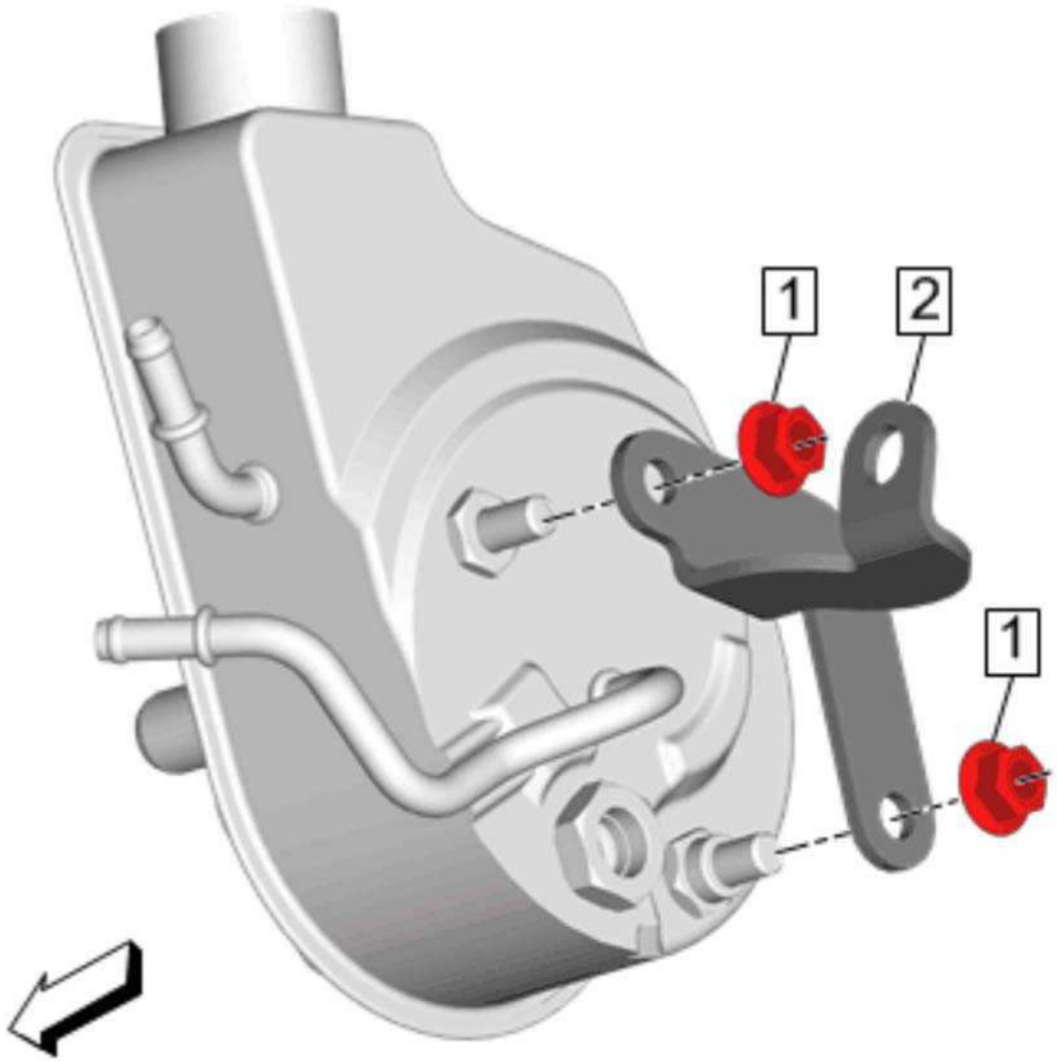

Fig. 21: Power Steering Pump Rear Bracket Nut
Courtesy of GENERAL MOTORS COMPANY

cardiagn.com

14. Remove Power Steering Pump Rear Bracket Nut (1).
15. Remove the power steering pump rear bracket (2) from the power steering fluid reservoir.

Installation Procedure

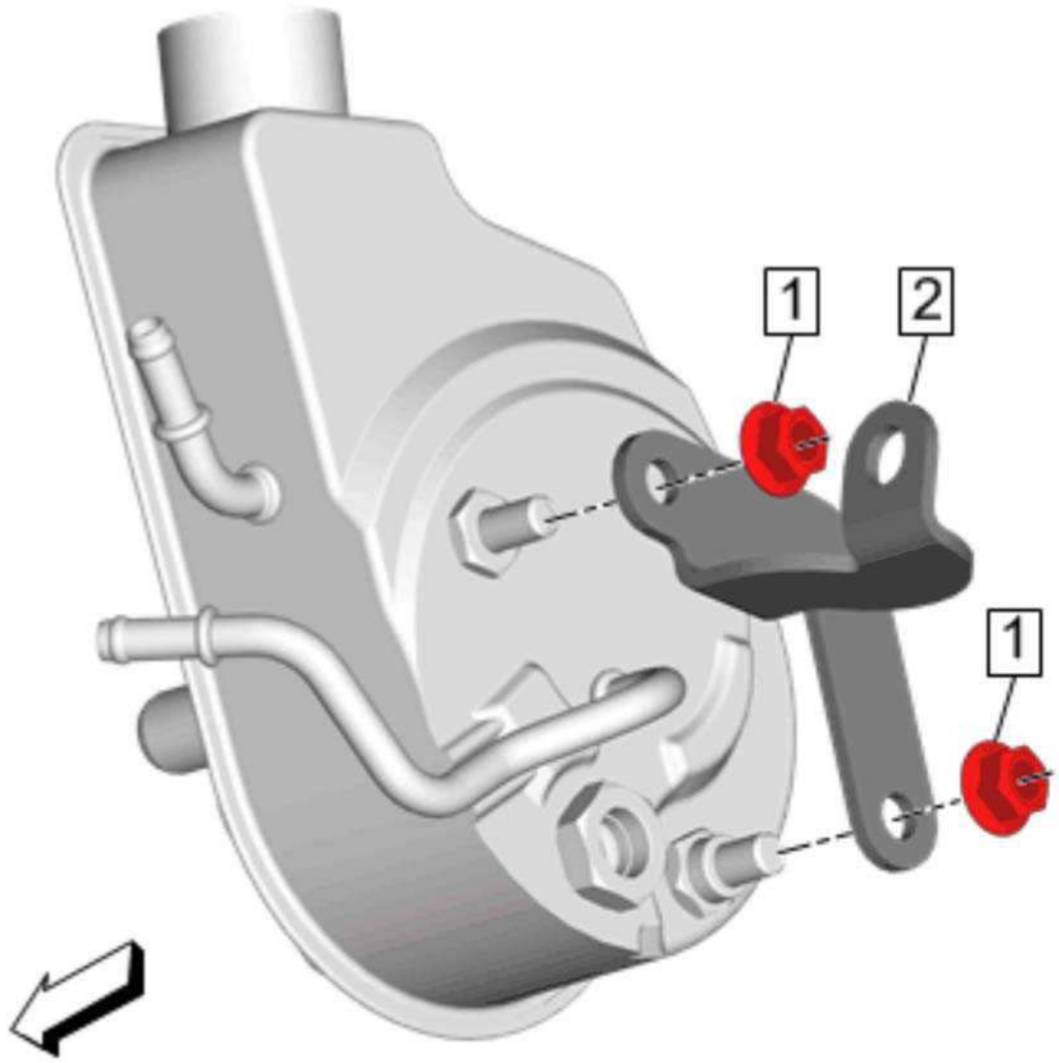

Fig. 22: Power Steering Pump Rear Bracket Nut

cardiagn.com

Courtesy of GENERAL MOTORS COMPANY

1. Position the power steering pump rear bracket (2) on the power steering fluid reservoir.

CAUTION: Refer to Fastener Caution .

2. Install Power Steering Pump Rear Bracket Nut (1) and tighten 59 N.m (44 lb ft)

cardiagn.com

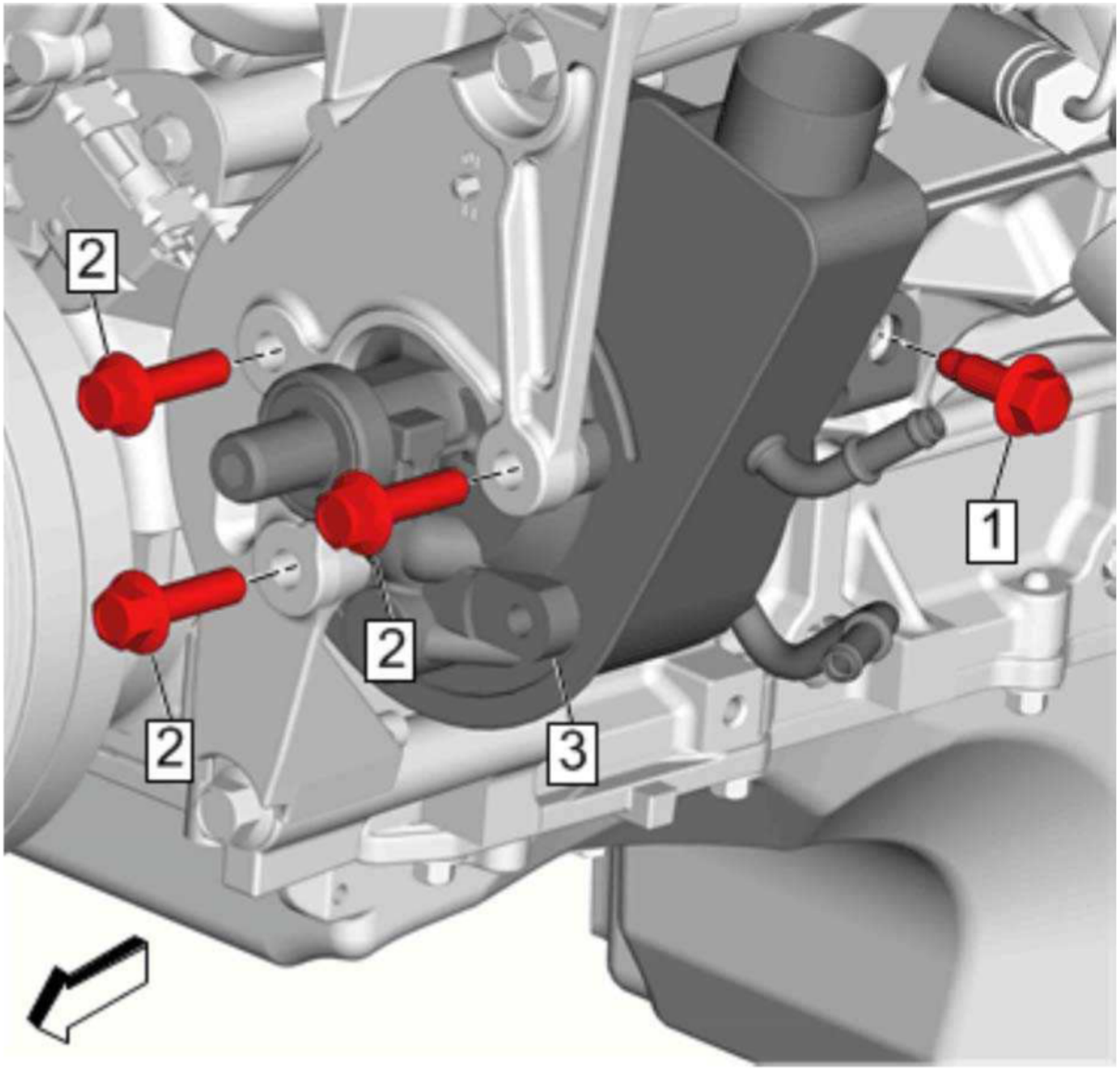

Fig. 23: Power Steering Pump Rear Bracket Bolt
Courtesy of GENERAL MOTORS COMPANY

3. Position the power steering pump assembly (3) on the vehicle.

NOTE: **Start the power steering pump bolts and the power steering pump rear bracket bolt by hand before**

cardiagn.com

tightening any fasteners to specification.

4. Install Power Steering Pump Bolt (2) and tighten 59 N.m (44 lb ft)
5. Install Power Steering Pump Rear Bracket Bolt (1) and tighten 59 N.m (44 lb ft)
6. Raise the vehicle.

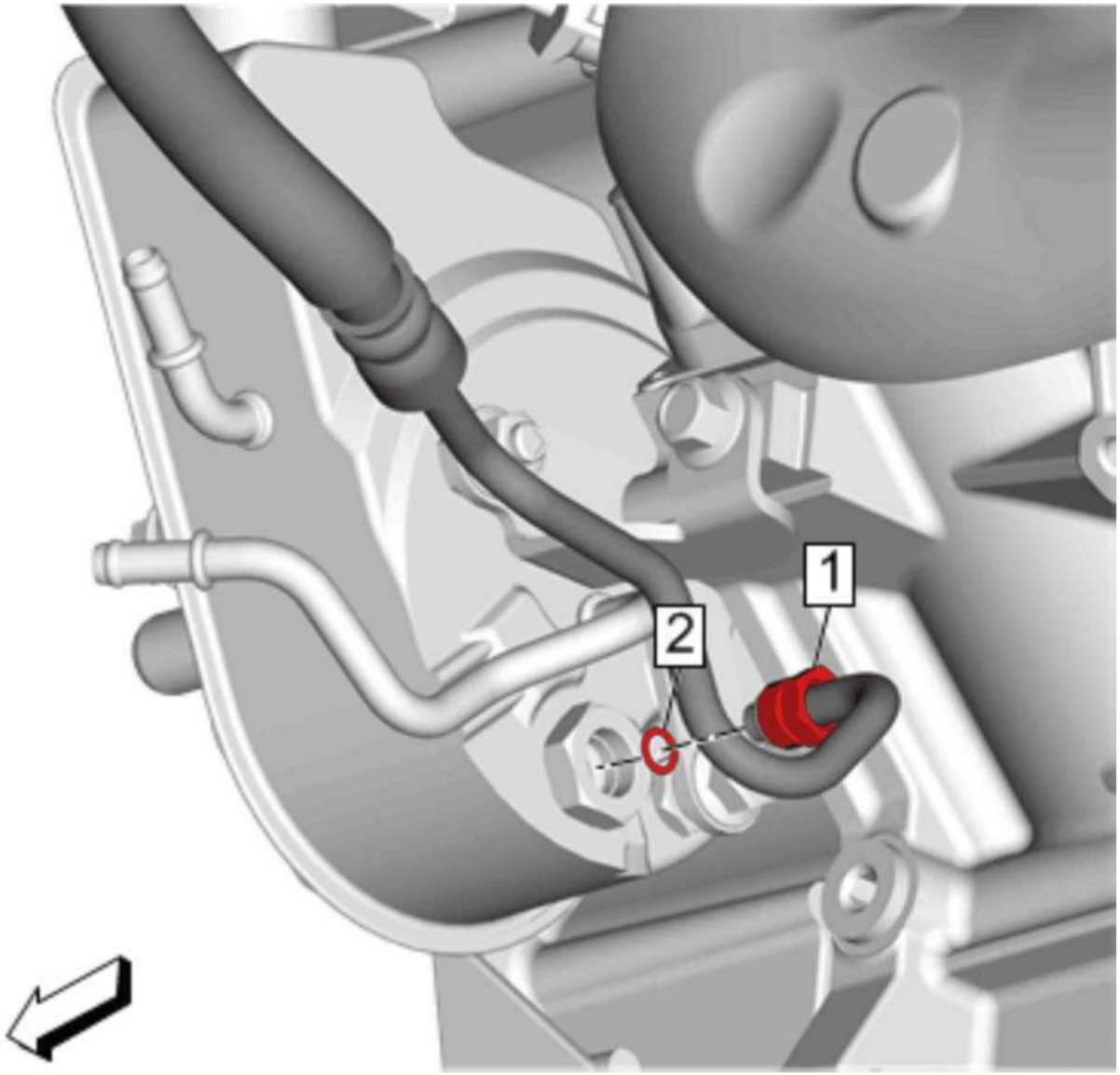

cardiagn.com

Fig. 24: Power Brake Booster Inlet Hose
Courtesy of GENERAL MOTORS COMPANY

NOTE: **Apply NEW power steering fluid to the power brake booster inlet hose seal to aid in installation.**

7. Install Power Brake Booster Inlet Hose Seal (2).

   Install a NEW seal.

CAUTION: **Refer to Component Fastener Tightening Caution .**

8. Install Power Brake Booster Inlet Hose (1) @Power Steering Fluid Reservoir and tighten 34 N.m (25 lb ft)
9. Install Underbody Skid Shield **Underbody Skid Shield Replacement**
10. Lower the vehicle.

cardiagn.com

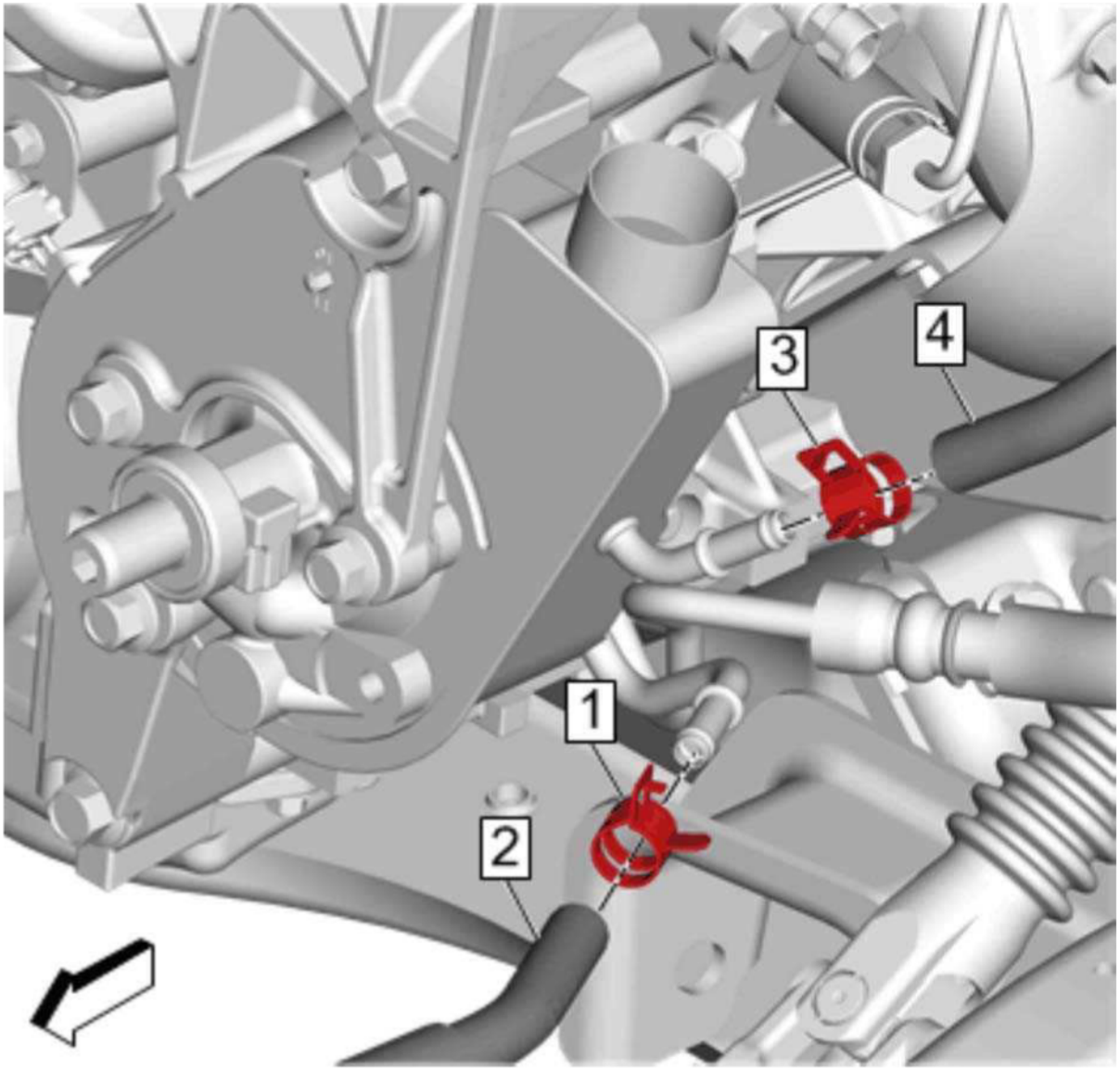

Fig. 25: Power Steering Fluid Cooler Hose And Clamp
Courtesy of GENERAL MOTORS COMPANY

11. Install Power Brake Booster Outlet Hose (4) @Power Steering Fluid Reservoir
12. Engage Power Brake Booster Outlet Hose Clamp (3) @Power Steering Fluid Reservoir
13. Install Power Steering Fluid Cooler Hose (2) @Power Steering Fluid Reservoir

cardiagn.com

14. Engage Power Steering Fluid Cooler Hose Clamp (1) @Power Steering Fluid Reservoir
15. Install Power Steering Pump Pulley. **Power Steering Pump Pulley Replacement (Heavy Duty)**
16. Fill and bleed the power steering system. **Power Steering System Bleeding**

POWER STEERING PUMP FITTING AND SEAL REPLACEMENT (HEAVY DUTY)

Removal Procedure

1. Remove as much power steering fluid from the power steering fluid reservoir as possible.
2. Remove Underbody Skid Shield **Underbody Skid Shield Replacement**

cardiagn.com

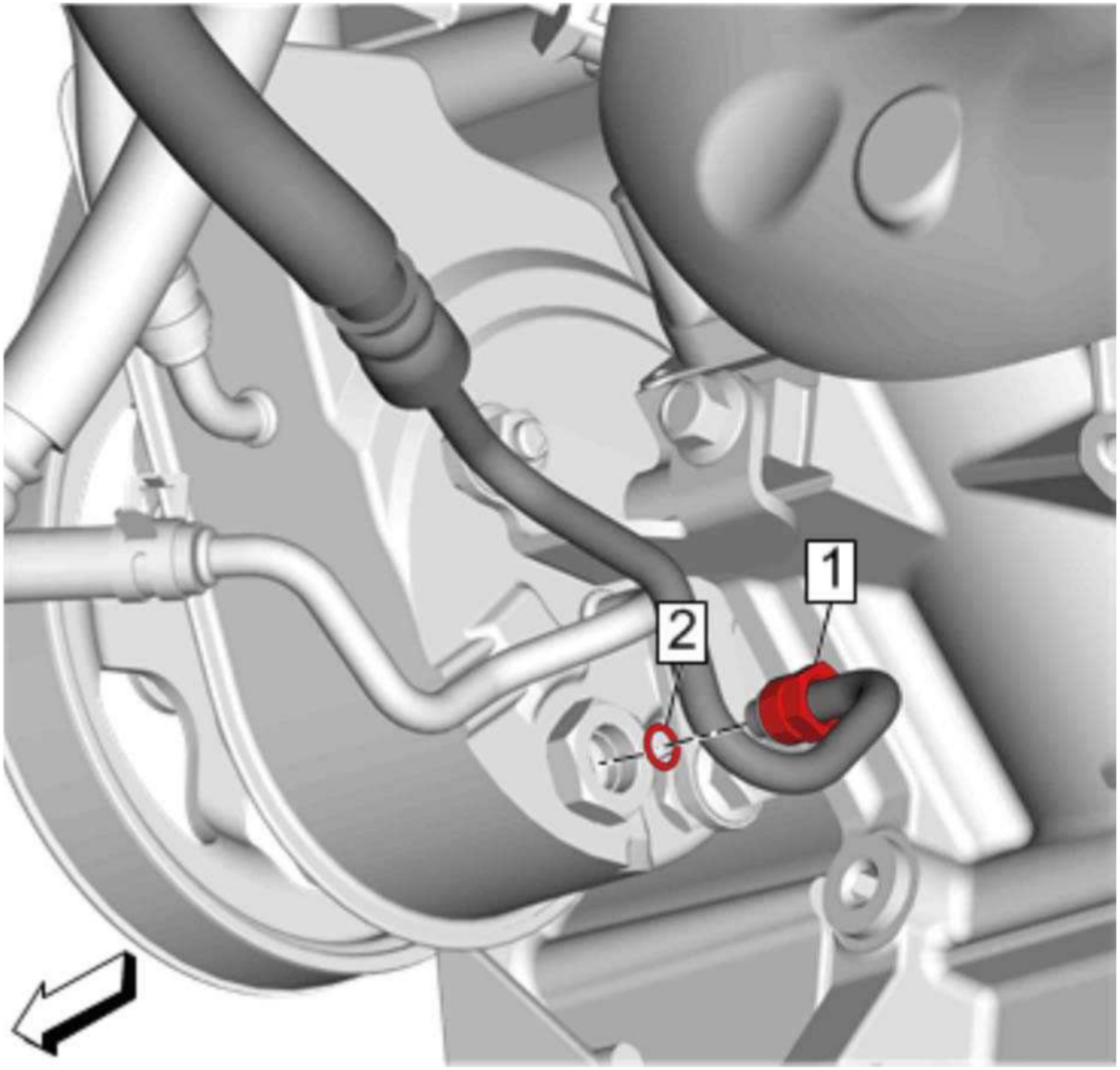

Fig. 26: Power Brake Booster Inlet Hose
Courtesy of GENERAL MOTORS COMPANY

CAUTION: **Refer to Power Steering Hose Disconnected Caution .**

3. Remove Power Brake Booster Inlet Hose (1) @Power Steering Fluid Reservoir.

cardiagn.com

4. Remove Power Brake Booster Inlet Hose Seal (2).

   DISCARD the seal.

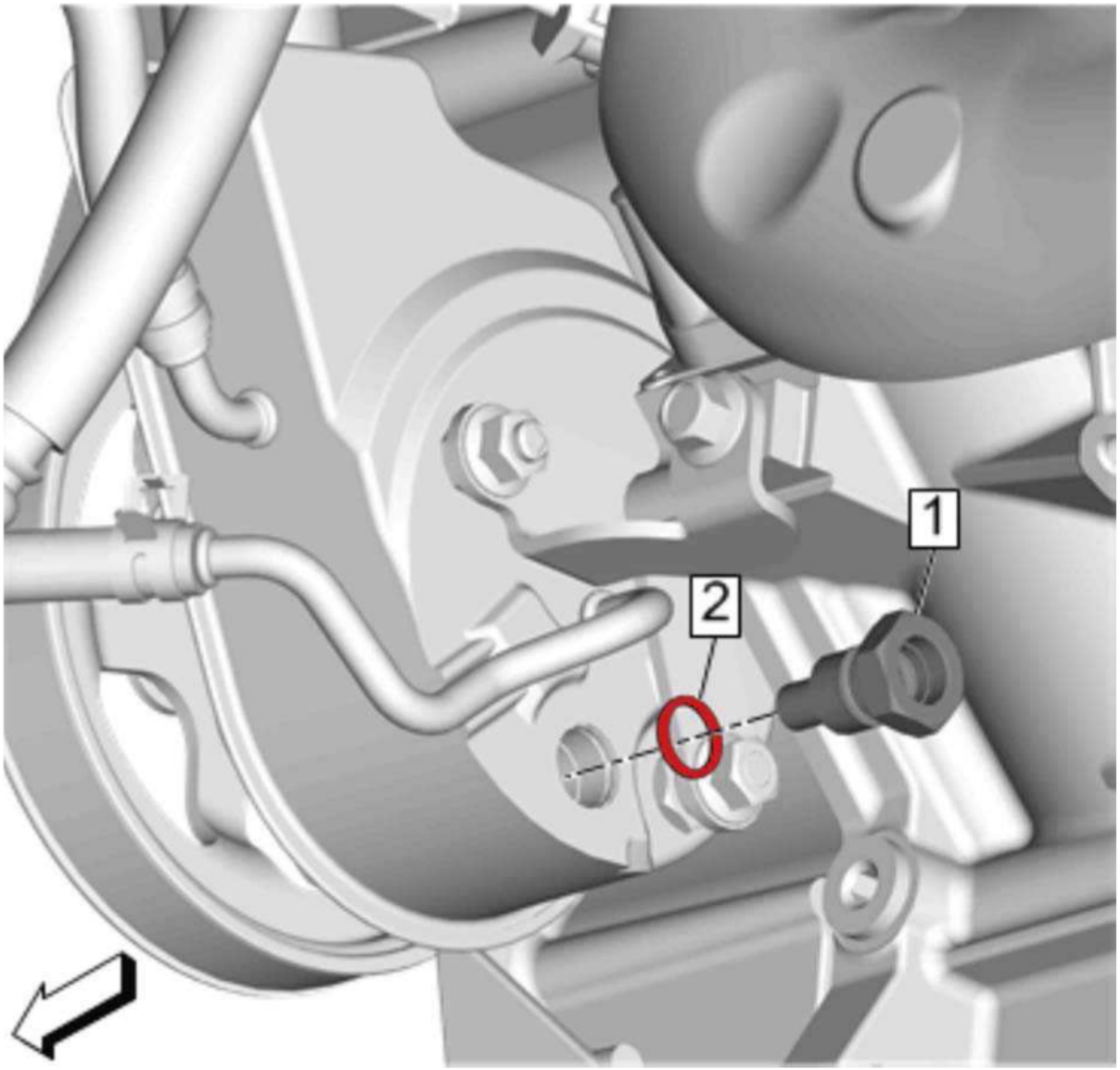

Fig. 27: Power Steering Pump Fitting
Courtesy of GENERAL MOTORS COMPANY

cardiagn.com

5. Remove Power Steering Pump Fitting (1) @Power Steering Fluid Reservoir.
6. Remove Power Steering Pump Fitting Seal (2).

   DISCARD the seal.

Installation Procedure

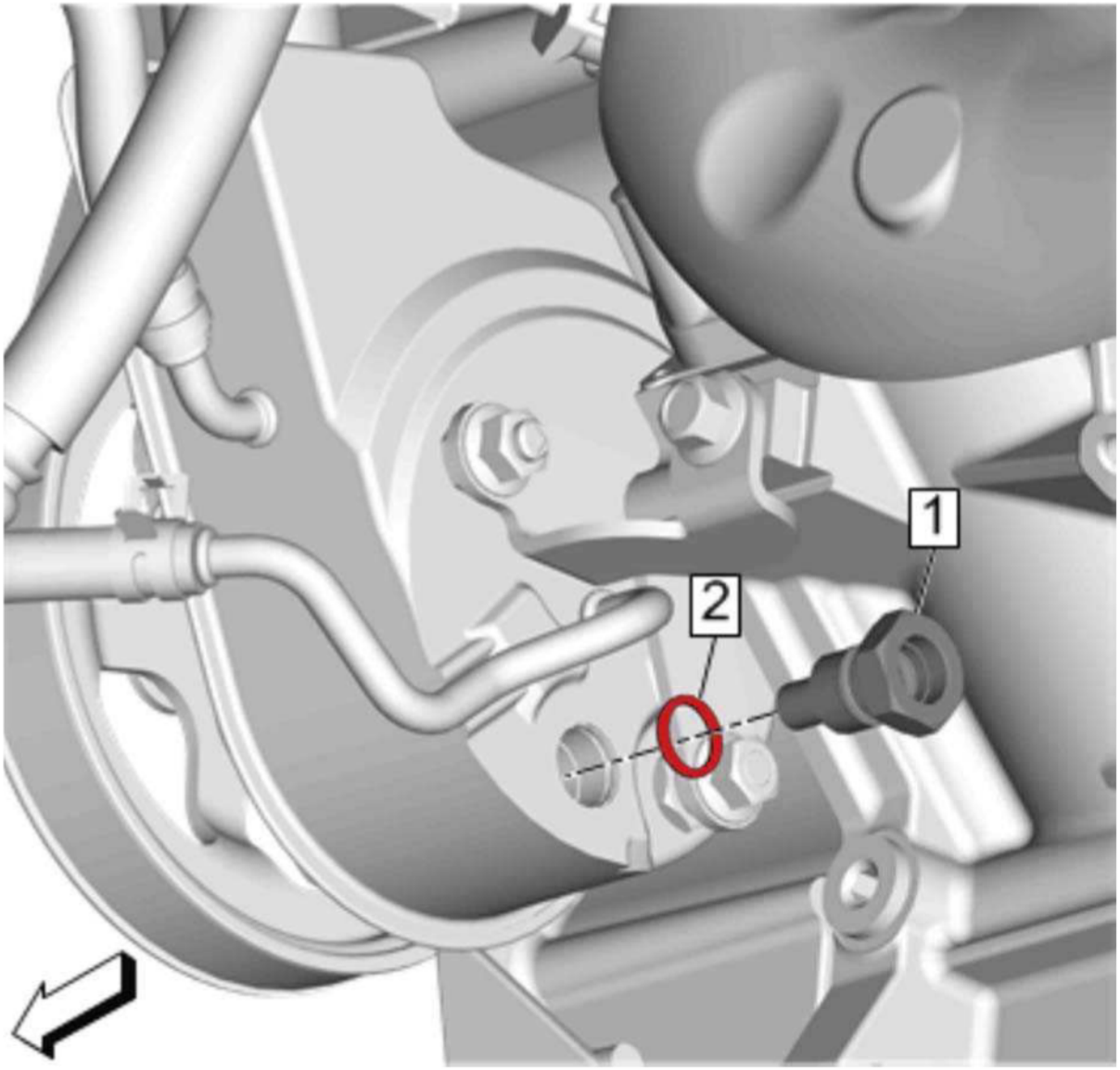

cardiagn.com

Fig. 28: Power Steering Pump Fitting
Courtesy of GENERAL MOTORS COMPANY

NOTE: **Apply NEW power steering fluid to the power steering pump fitting seal to aid in installation.**

1. Install Power Steering Pump Fitting Seal (2).

   Install a NEW seal.

   CAUTION: **Refer to Component Fastener Tightening Caution .**

2. Install Power Steering Pump Fitting (1) @Power Steering Fluid Reservoir and tighten 75 N.m (55 lb ft)

cardiagn.com

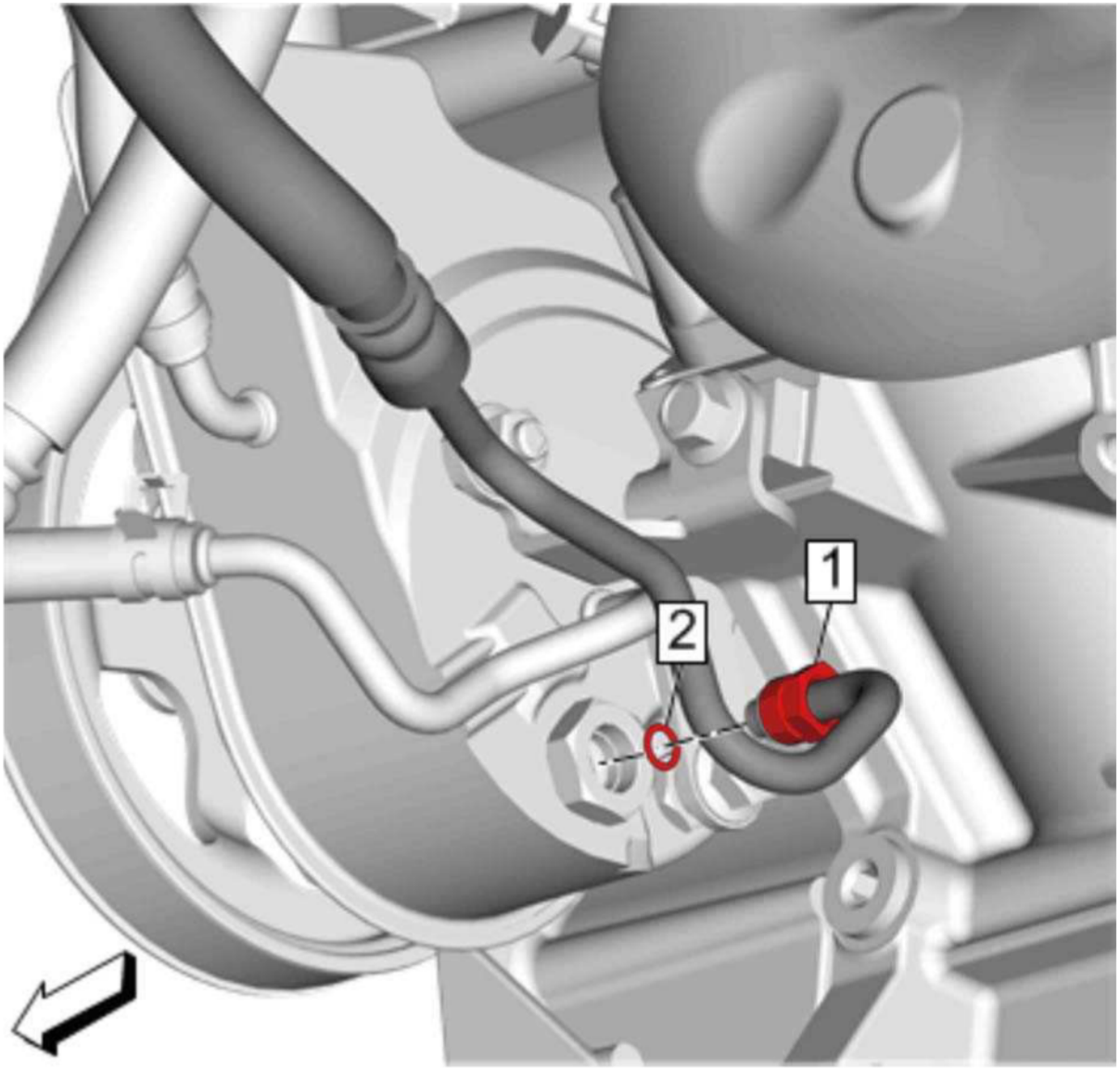

Fig. 29: Power Brake Booster Inlet Hose
Courtesy of GENERAL MOTORS COMPANY

NOTE: **Apply NEW power steering fluid to the power brake booster inlet hose seal to aid in installation.**

3. Install Power Brake Booster Inlet Hose Seal (2).

cardiagn.com

Install a NEW seal.

4. Install Power Brake Booster Inlet Hose (1) @Power Steering Fluid Reservoir and tighten 34 N.m (25 lb ft)
5. Install Underbody Skid Shield **Underbody Skid Shield Replacement**
6. Fill and bleed the power steering system. **Power Steering System Bleeding**

POWER STEERING FLUID RESERVOIR REPLACEMENT - OFF VEHICLE (HEAVY DUTY)

Disassembly Procedure

1. Remove Power Steering Pump **Power Steering Pump Replacement (Heavy Duty)**

cardiagn.com

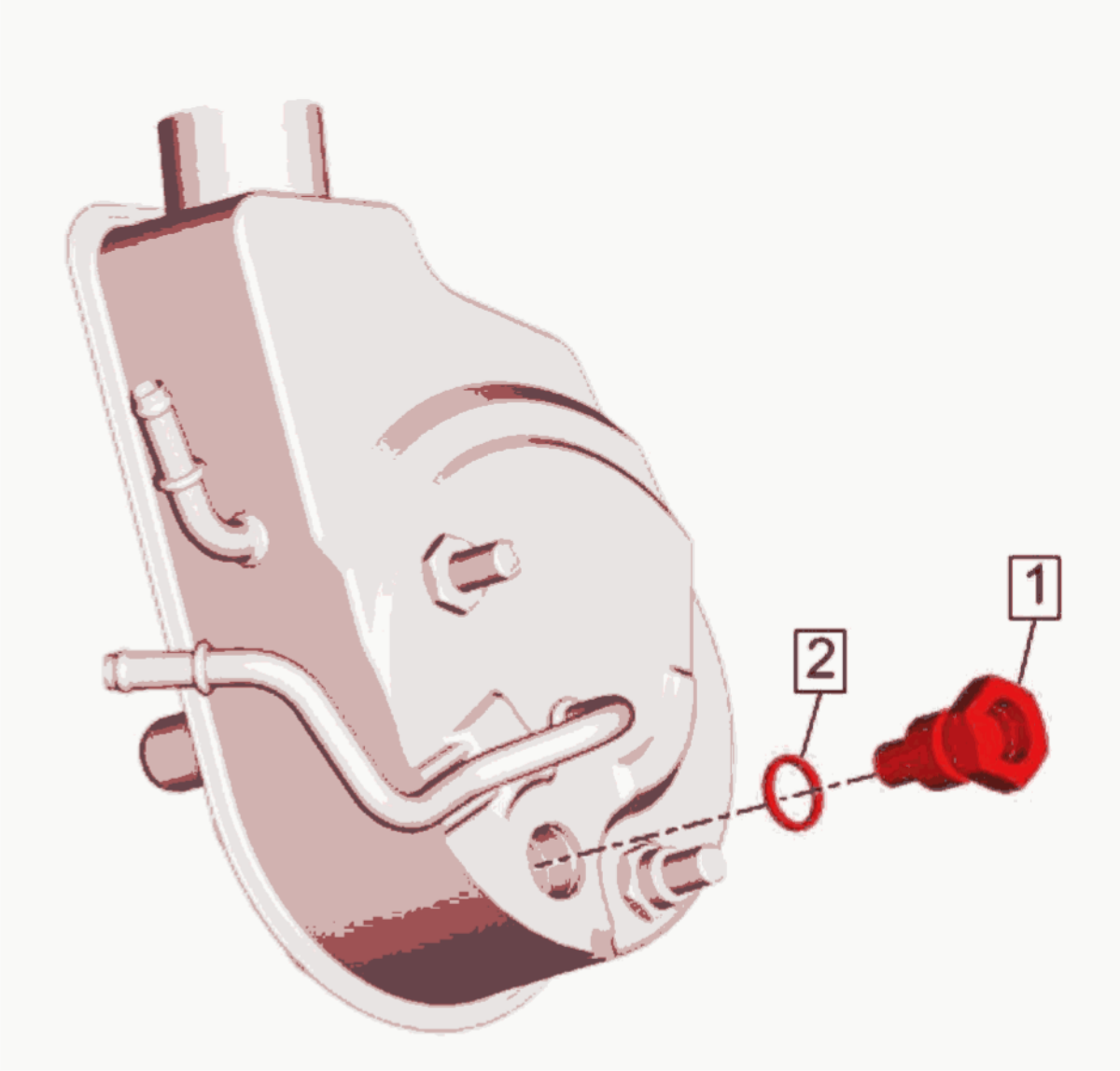

Fig. 30: Power Steering Pump Fitting
Courtesy of GENERAL MOTORS COMPANY

2. Remove Power Steering Pump Fitting (1).
3. Remove Power Steering Pump Fitting Seal (2).

cardiagn.com

DISCARD the seal.

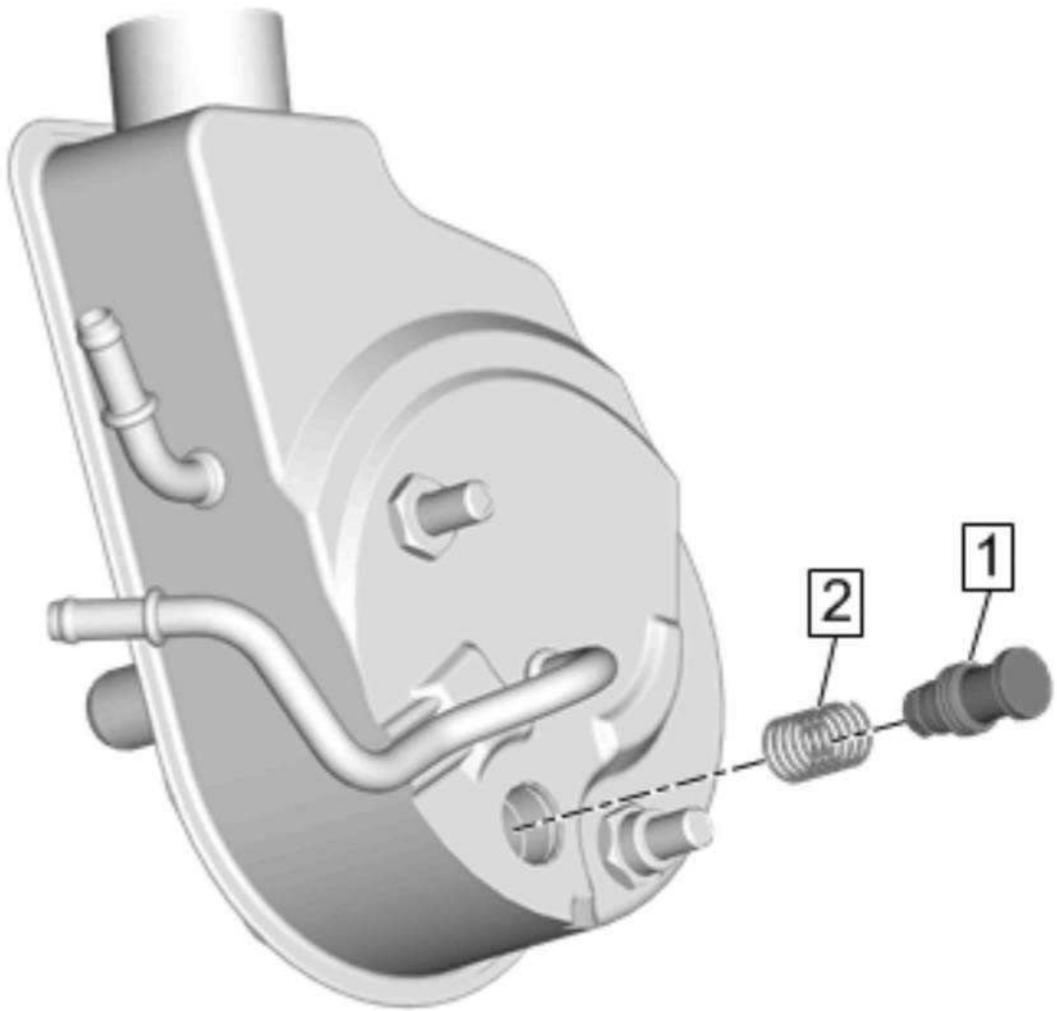

Fig. 31: Power Steering Pump Flow Control Valve
Courtesy of GENERAL MOTORS COMPANY

4. Remove Power Steering Pump Flow Control Valve (1).

cardiagn.com

5. Remove Power Steering Pump Flow Control Valve Spring (2).

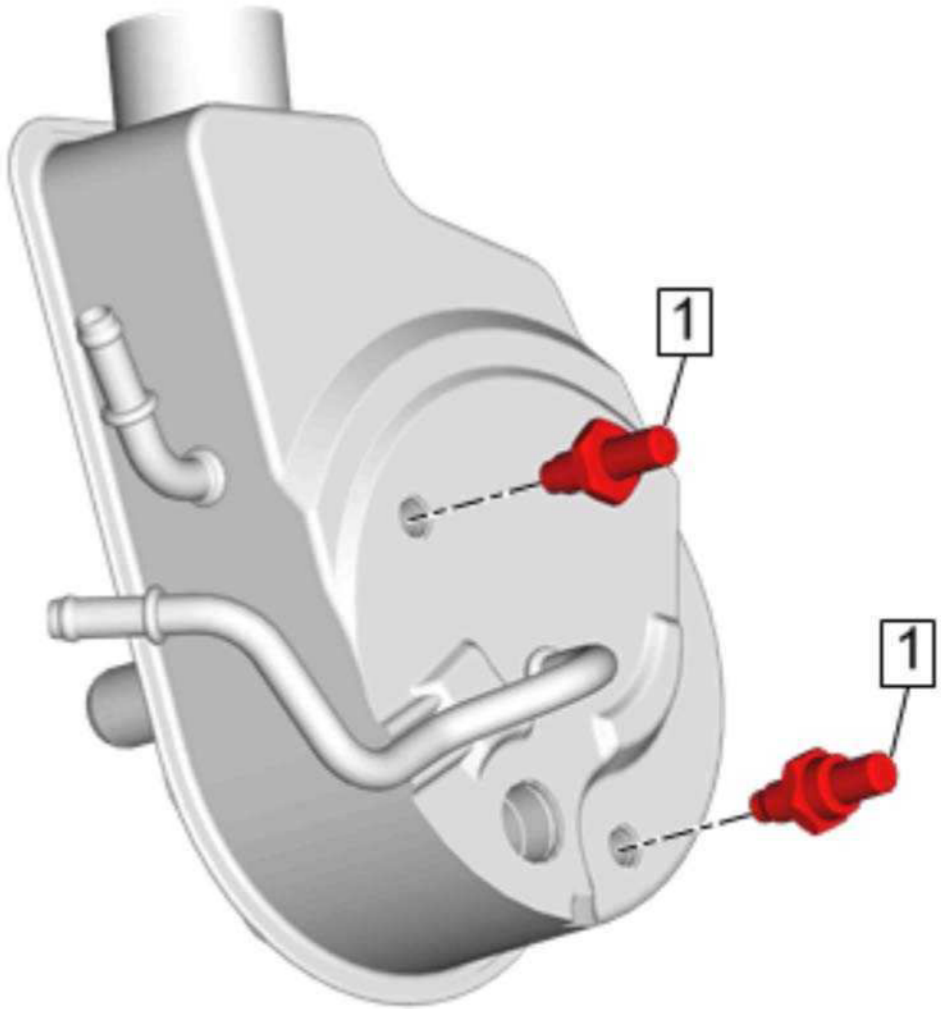

Fig. 32: Power Steering Fluid Reservoir Stud
Courtesy of GENERAL MOTORS COMPANY

6. Remove Power Steering Fluid Reservoir Stud (1).

cardiagn.com

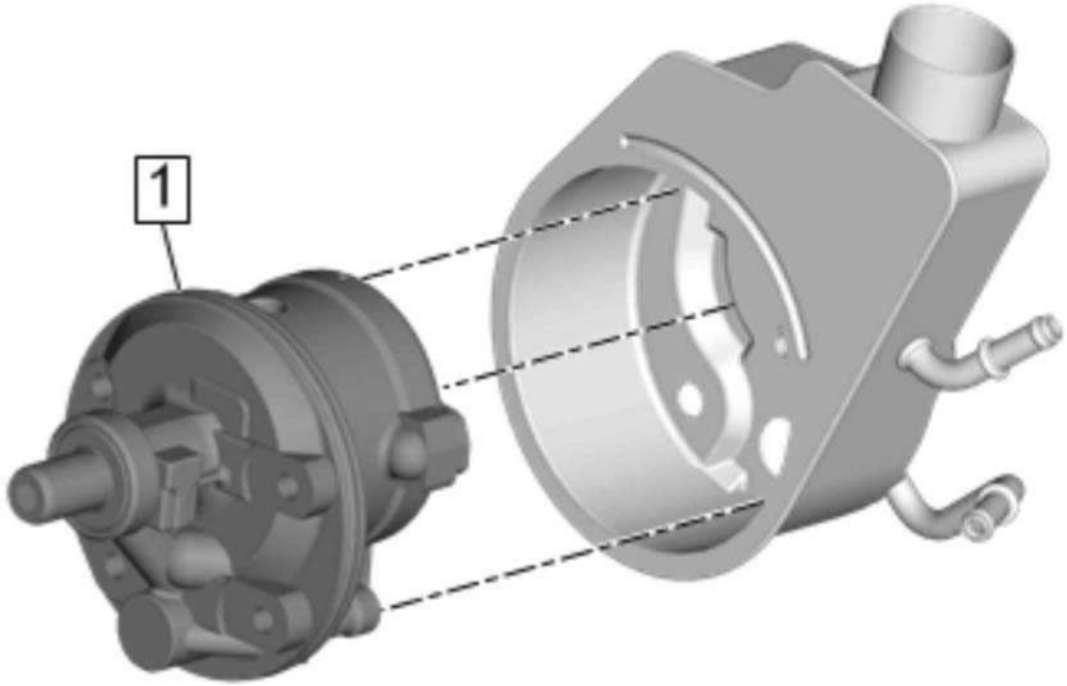

Fig. 33: Power Steering Pump
Courtesy of GENERAL MOTORS COMPANY

7. Remove the power steering pump (1) from the power steering fluid reservoir.

cardiagn.com

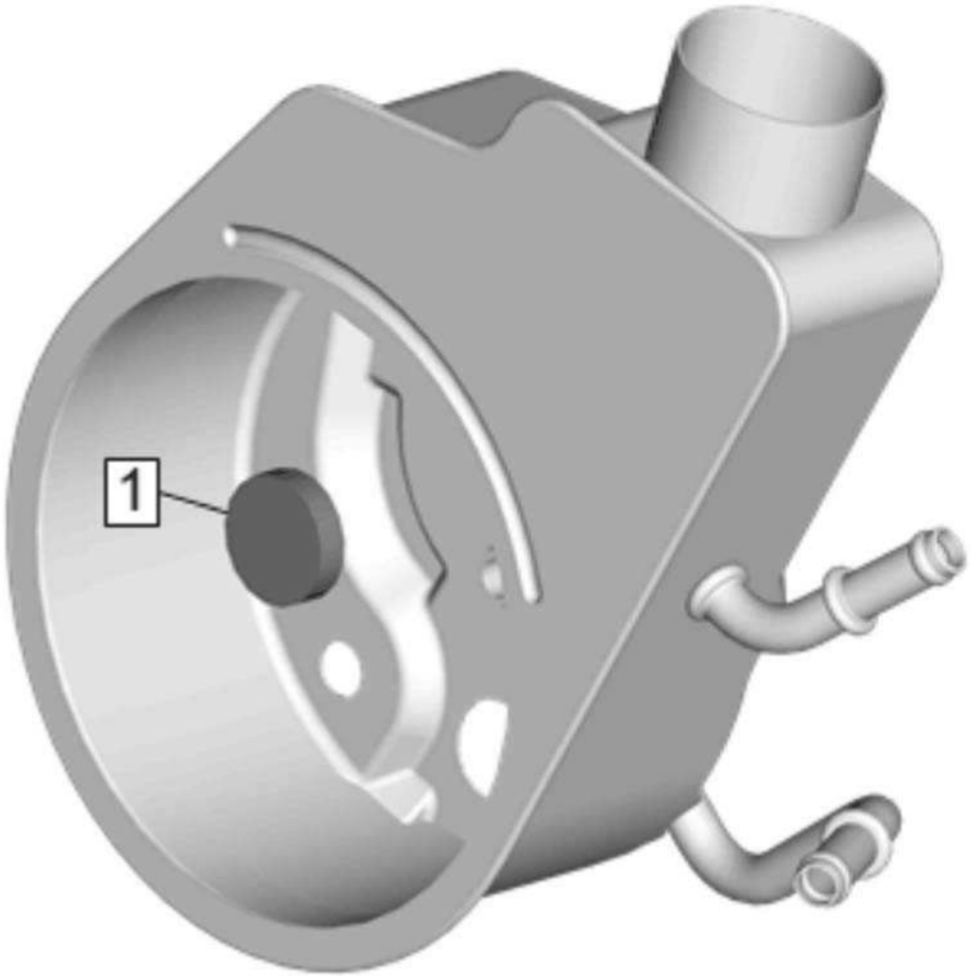

Fig. 34: Power Steering Fluid Reservoir Magnet
Courtesy of GENERAL MOTORS COMPANY

8. Remove the power steering fluid reservoir magnet (1) from the power steering fluid reservoir.

   Clean the magnet.

cardiagn.com

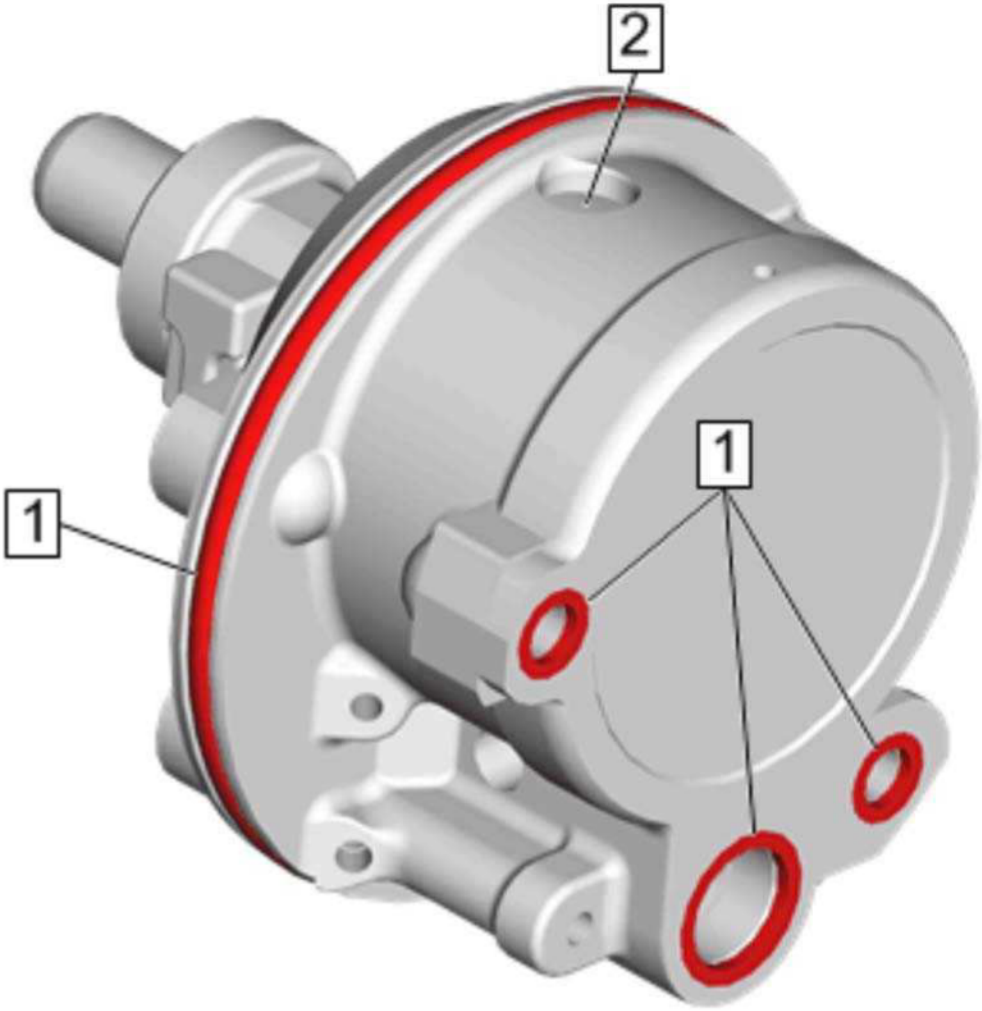

Fig. 35: Power Steering Pump Seals
Courtesy of GENERAL MOTORS COMPANY

9. Remove the power steering pump seals (1) from the power steering pump.

   DISCARD the seals.

cardiagn.com

10. Inspect but do NOT remove the welch plug (2).

    If the plug is deformed or dislodged, replace the power steering pump assembly.

Assembly Procedure

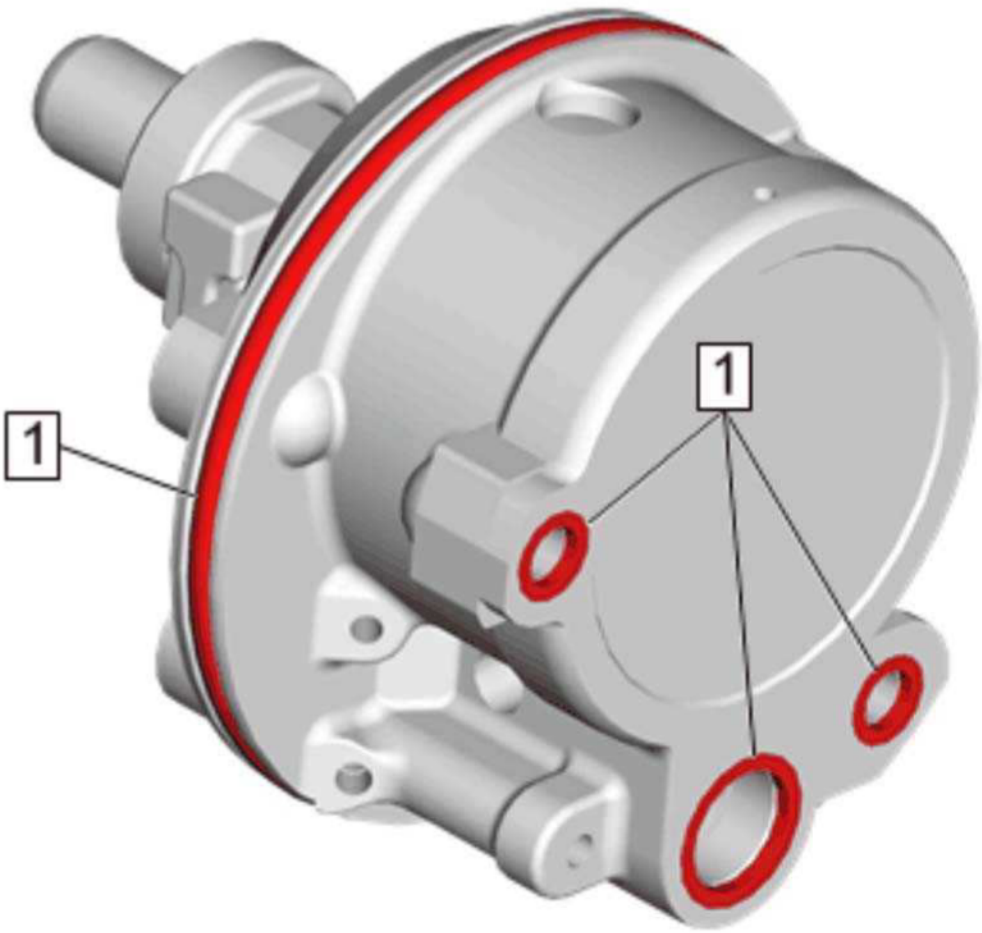

Fig. 36: Power Steering Pump Seals

cardiagn.com

Courtesy of GENERAL MOTORS COMPANY

NOTE: **Apply NEW power steering fluid to the power steering pump seals to aid in installation.**

1. Install the power steering pump seals (1) on the power steering pump.

   Install NEW seals.

cardiagn.com

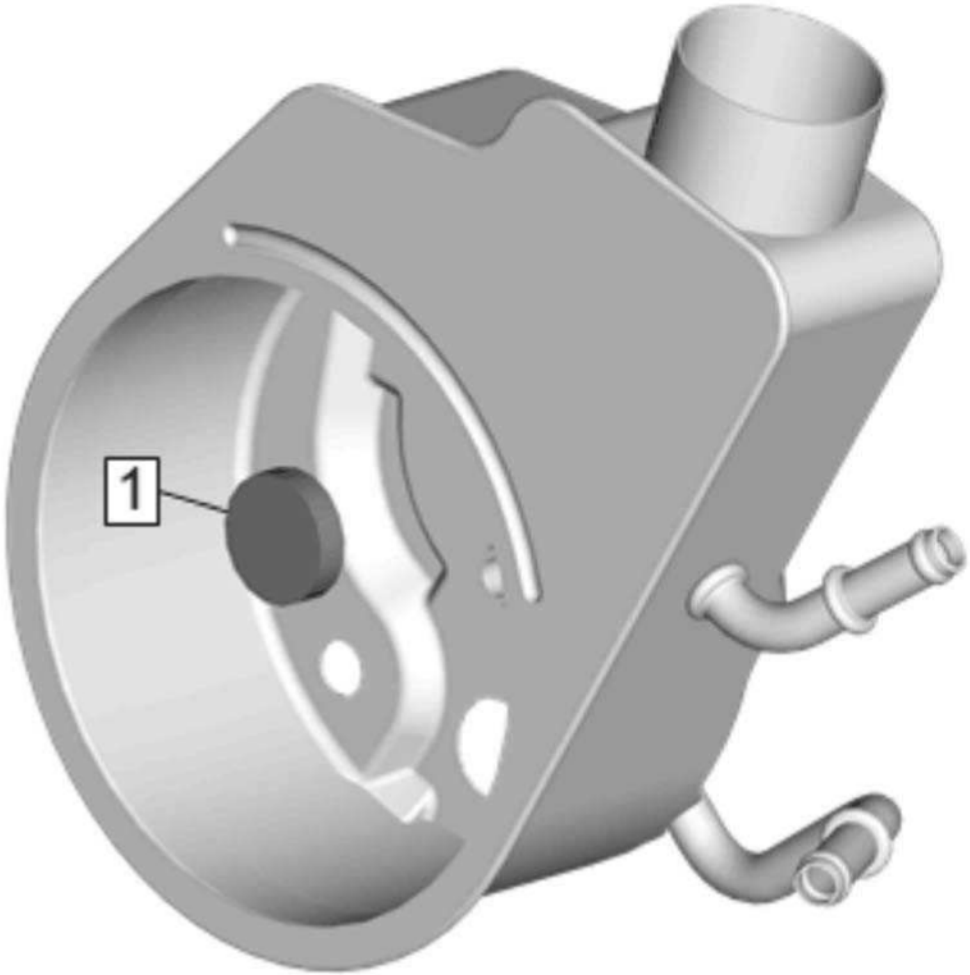

Fig. 37: Power Steering Fluid Reservoir Magnet
Courtesy of GENERAL MOTORS COMPANY

2. Install the power steering fluid reservoir magnet (1) in the power steering fluid reservoir.

cardiagn.com

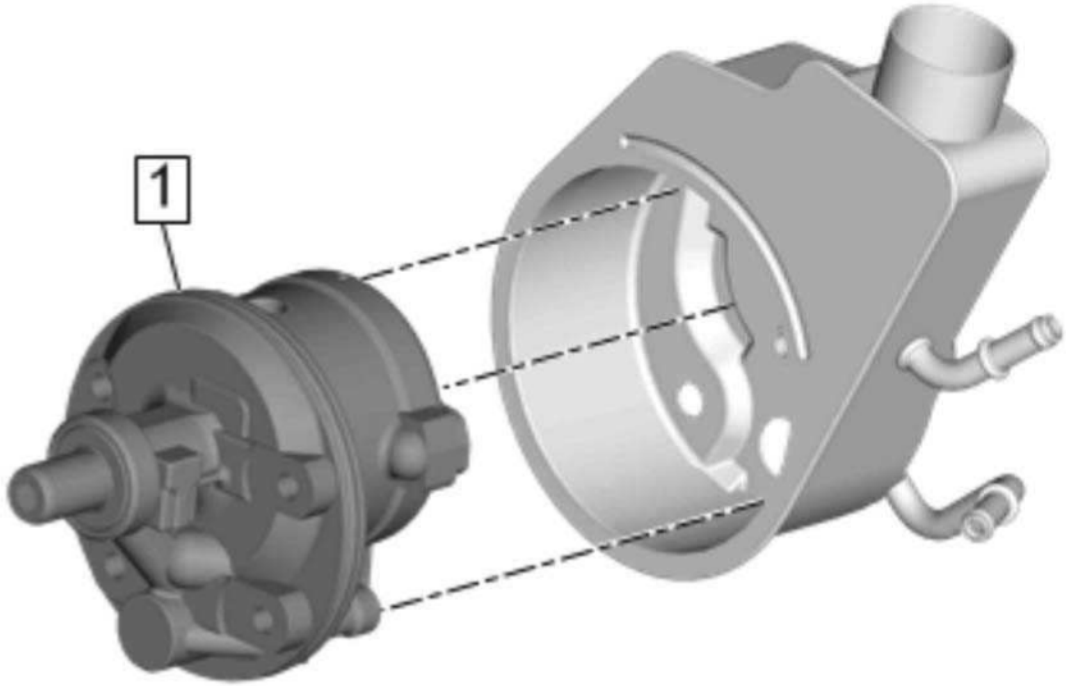

Fig. 38: Power Steering Pump
Courtesy of GENERAL MOTORS COMPANY

3. Position the power steering pump (1) in the power steering fluid reservoir.

cardiagn.com

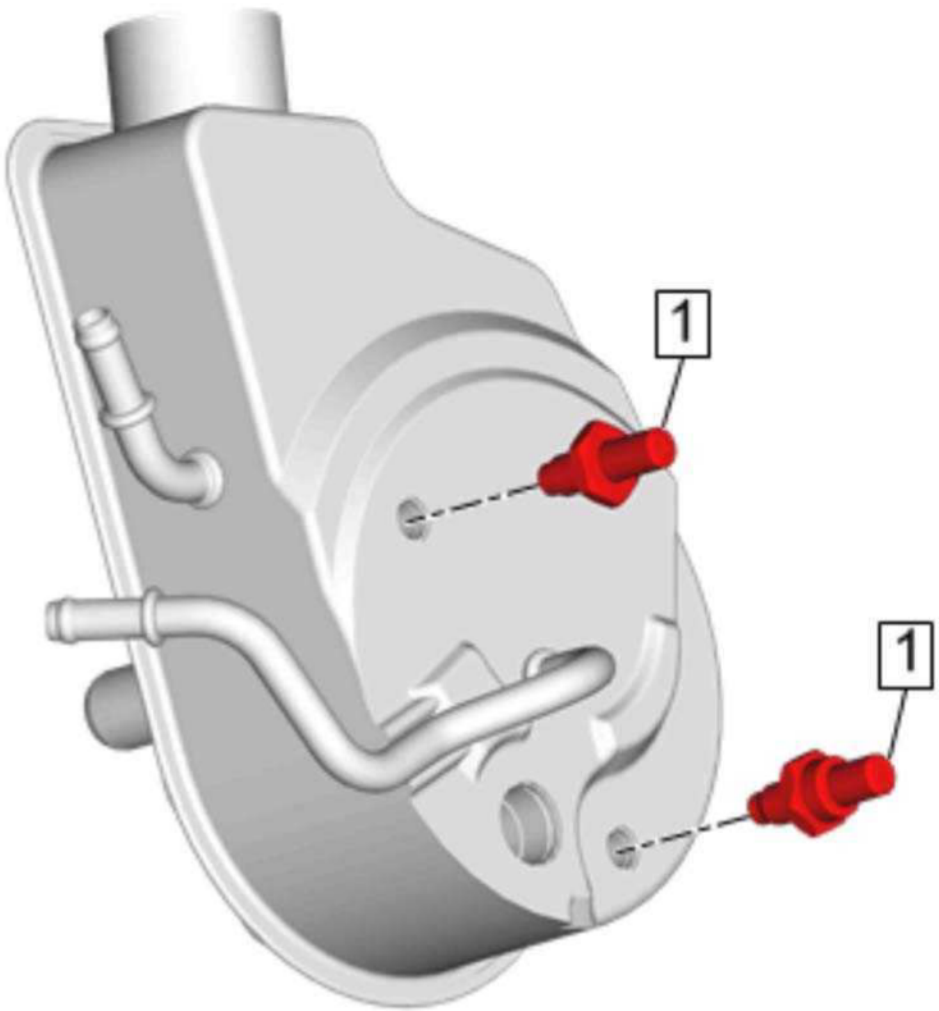

Fig. 39: Power Steering Fluid Reservoir Stud
Courtesy of GENERAL MOTORS COMPANY

CAUTION: Refer to Fastener Caution .

NOTE: Start the power steering fluid reservoir studs and the power steering pump fitting by hand before

cardiagn.com

tightening any fasteners to specification.

4. Install Power Steering Fluid Reservoir Stud (1) and tighten 58 N.m (43 lb ft)

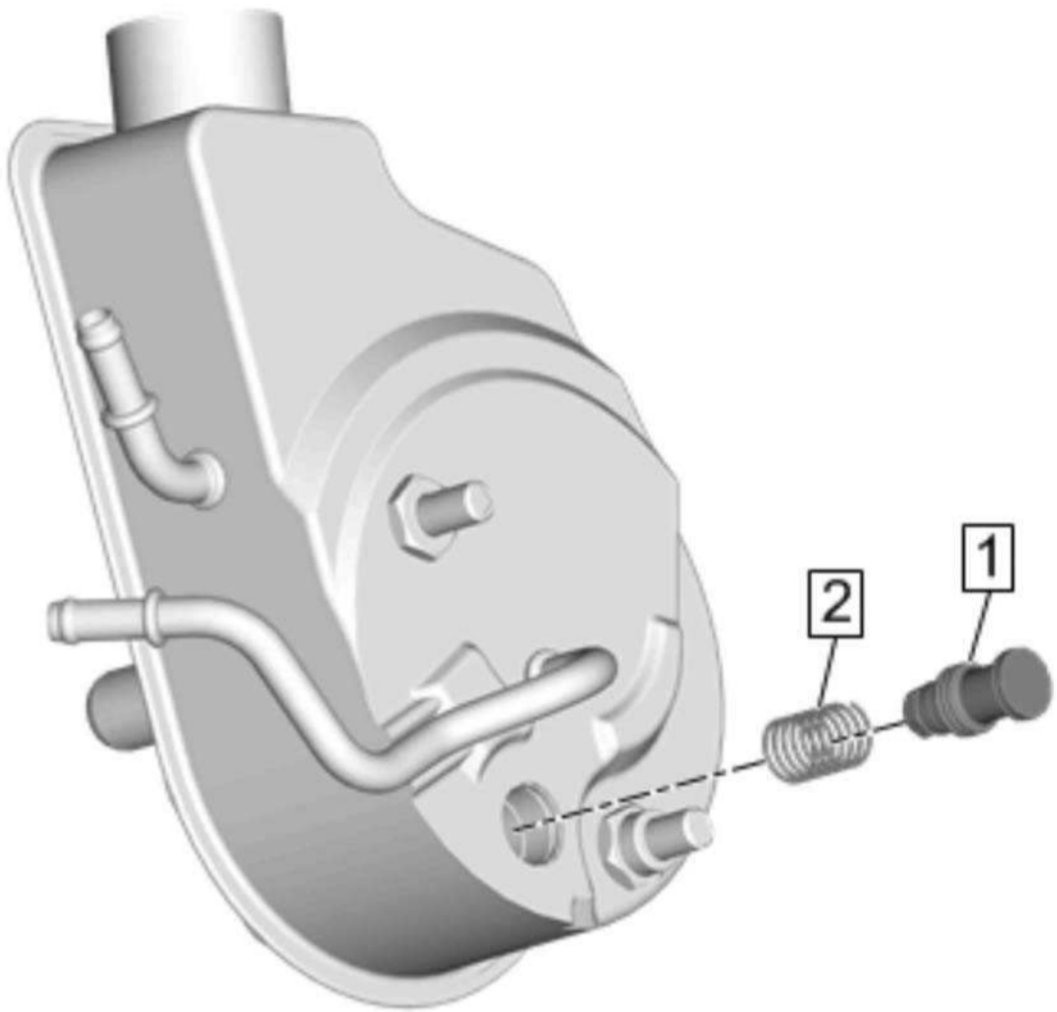

Fig. 40: Power Steering Pump Flow Control Valve
Courtesy of GENERAL MOTORS COMPANY

cardiagn.com

5. Install Power Steering Pump Flow Control Valve Spring (2).
6. Install Power Steering Pump Flow Control Valve (1).

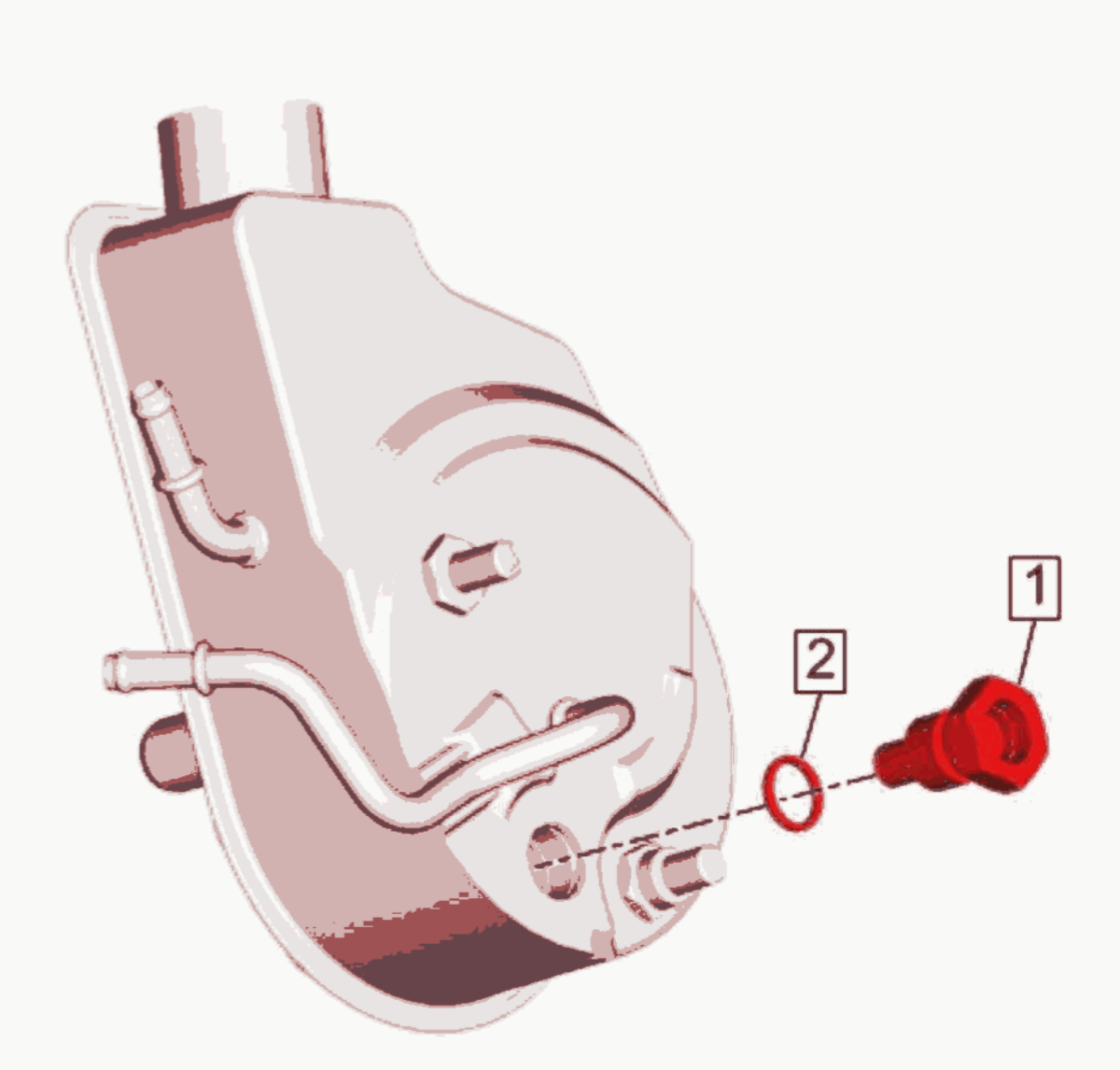

Fig. 41: Power Steering Pump Fitting
Courtesy of GENERAL MOTORS COMPANY

cardiagn.com

NOTE: **Apply NEW power steering fluid to the power steering pump fitting seal to aid in installation.**

7. Install Power Steering Pump Fitting Seal (1).

   Install a NEW seal.

CAUTION: **Refer to Component Fastener Tightening Caution .**

8. Install Power Steering Pump Fitting (1) and tighten 75 N.m (55 lb ft)
9. Install Power Steering Pump Power Steering Pump Replacement (Heavy Duty)

POWER STEERING PUMP FLOW CONTROL VALVE REPLACEMENT - OFF VEHICLE

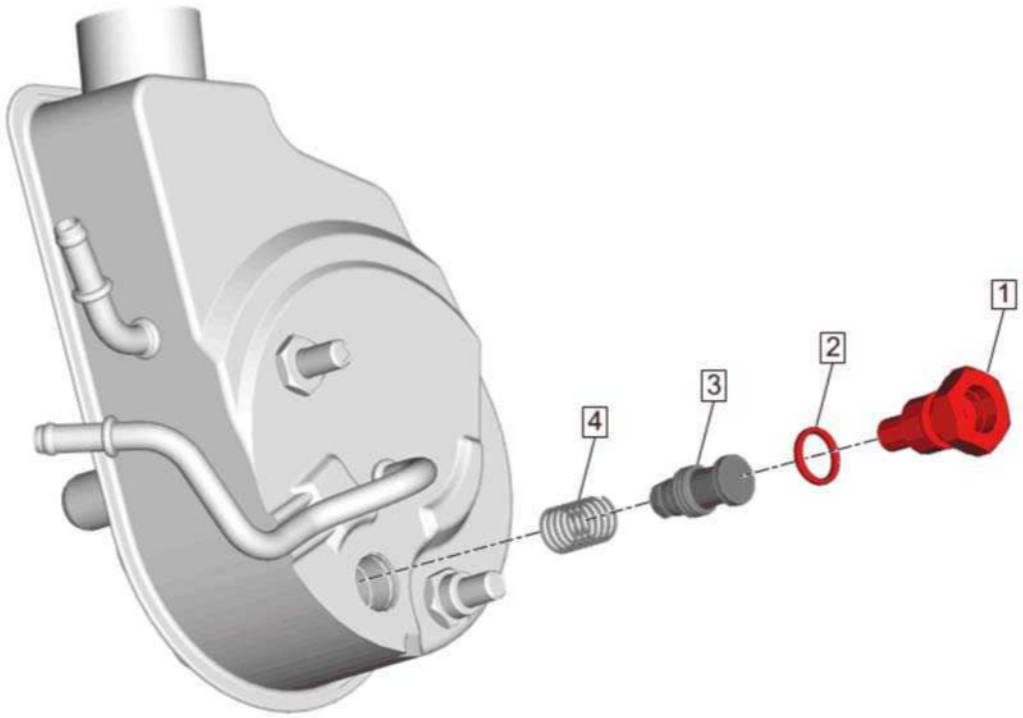

Fig. 42: Power Steering Pump Flow Control Valve - Off Vehicle
Courtesy of GENERAL MOTORS COMPANY

cardiagn.com

Callout	Component Name
Preliminary Procedure **Power Steering Pump Replacement (Heavy Duty)**	
1	Power Steering Pump Fitting **CAUTION:** **Refer to Component Fastener Tightening Caution .** **Tighten** 75 N.m (55 lb ft)
2	Power Steering Pump Fitting Seal **Procedure** 1. DISCARD the seal. 2. Install a NEW seal. **NOTE:** **Apply NEW power steering fluid to the power steering pump fitting seal to aid in installation.**
3	Power Steering Pump Flow Control Valve
4	Power Steering Pump Flow Control Valve Spring

cardiagn.com

POWER STEERING PUMP SHAFT SEAL REPLACEMENT

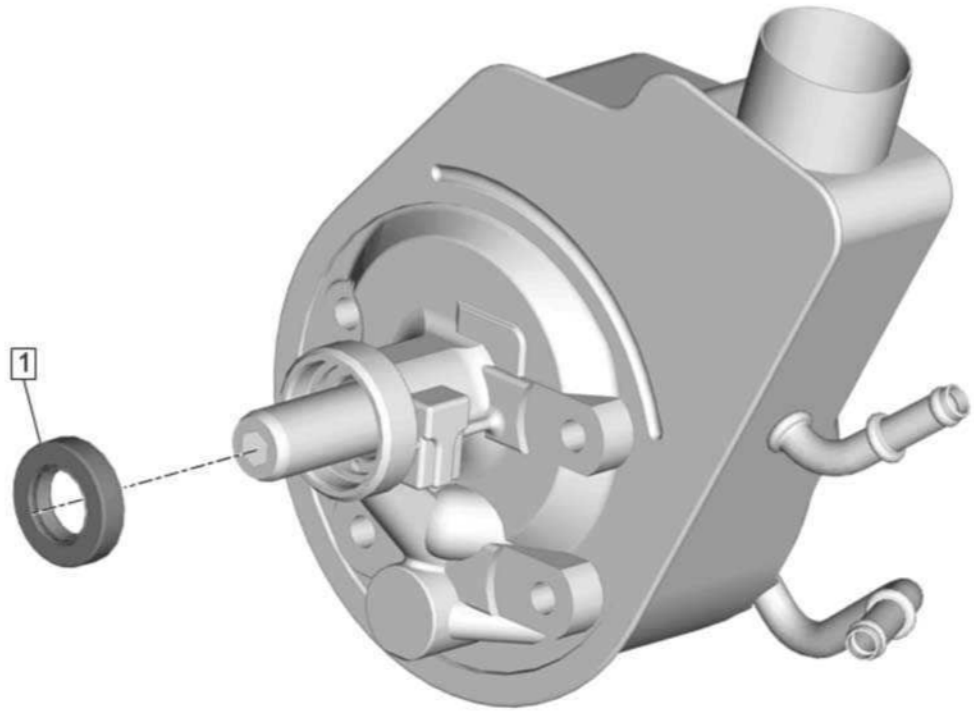

Fig. 43: Power Steering Pump Shaft Seal
Courtesy of GENERAL MOTORS COMPANY

Callout	Component Name
Preliminary Procedure **Power Steering Pump Replacement (Heavy Duty)**	
1	Power Steering Pump Shaft Seal **Procedure** 1. Use a chisel in order to cut and remove the power steering pump shaft seal. 2. Use a 1 inch, deep socket to install the NEW power steering pump shaft seal.

cardiagn.com

Callout	Component Name
	NOTE:

- To help protect the power ste pur wh ren the ste pur sea app siz ove sha nec
- App pov ste flui pov ste pur seal to aid in installation

STEERING GEAR PITMAN SHAFT SEAL REPLACEMENT (HEAVY DUTY)

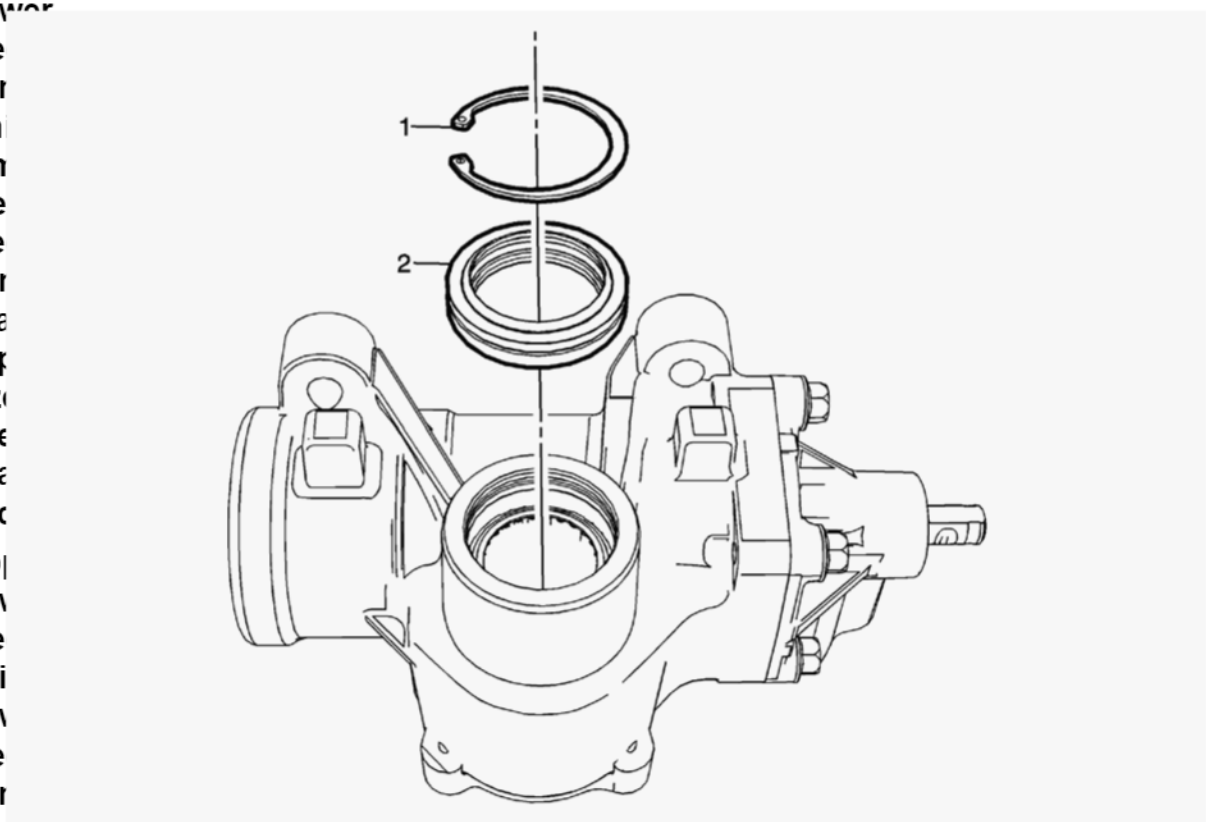

Fig. 44: Steering Gear Pitman Shaft Seal (Heavy Duty)
Courtesy of GENERAL MOTORS COMPANY

Callout	Component Name
Preliminary Procedures 1. Hydraulic Recirculating Ball Steering Gear Replacement (Heavy Duty) 2. Pitman Arm Replacement (Heavy Duty) 3. Steering Gear Pitman Shaft Replacement (Heavy Duty)	

cardiagn.com

STEERING LINKAGE OUTER TIE ROD REPLACEMENT (LIGHT DUTY)

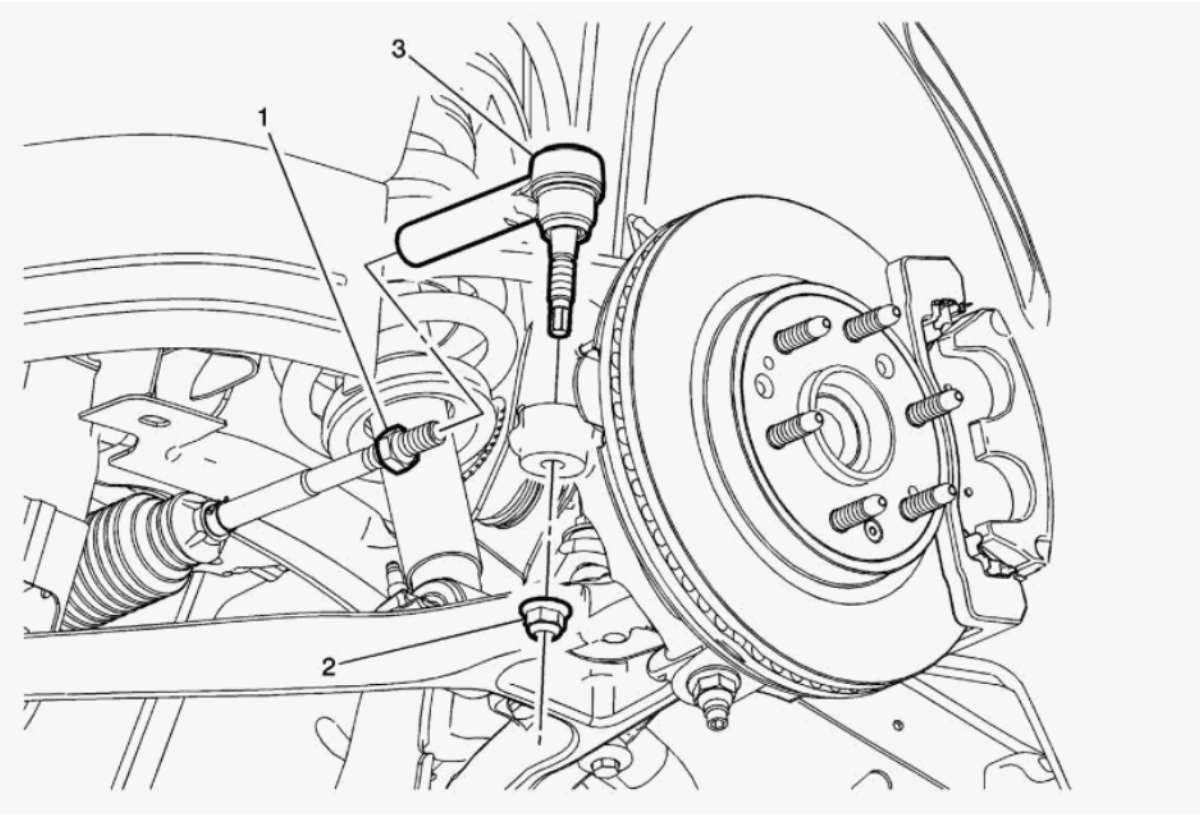

Fig. 45: Steering Linkage Outer Tie Rod (Light Duty)
Courtesy of GENERAL MOTORS COMPANY

Callout	Component Name
Preliminary Procedure Remove the front tire and wheel assembly. **Tire and Wheel Removal and Installation (6-Lug Wheel)** **Tire and Wheel Removal and Installation (8-Lug Wheel)**	
1	Steering Linkage Outer Tie Rod Nut **CAUTION:** **Refer to** **Fastener**

cardiagn.com

Callout	Component Name
	Caution . **Tighten** First Pass: 35 N.m (26 lb ft) Final Pass: (85-100 degrees)
2	Steering Linkage Inner Tie Rod Nut **Procedure** Place match marks on the steering linkage inner tie rod nut and the steering linkage inner tie rod. **NOTE:** **Do NOT tighten the steering linkage inner tie rod nut during installation. Tighten the nut after adjusting the front toe.**
3	Steering Linkage Outer Tie Rod **CAUTION:** **Do not attempt to disconnect a steering linkage joint by driving a wedge between the joint and the**

cardiagn.com

Callout	Component Name
	attached part. Seal damage may result which will cause premature failure of the joint. **CAUTION:** **Ensure the Outer Tie Rod Boot is not twisted or deformed during assembly. If the boot is twisted or deformed, damage to the boot will occur.** **Procedure** 1. Use the **CH-24319-B** puller to separate the steering linkage outer tie rod from the steering knuckle. 2. Clean the tapered surface of the steering knuckle. 3. Inspect the steering linkage inner tie rod for bent or damaged threads.If necessary, replace the steering linkage inner tie rod. **Steering Linkage Inner Tie Rod Replacement (Light Duty)** 4. Lubricate the steering linkage inner tie rod threads with chassis lubricant. 5. Measure and adjust the front toe. **Wheel Alignment - Steering Wheel Angle and/or Front Toe Adjustment**

cardiagn.com

Callout	Component Name
	Special Tools **CH-24319-B** Universal Steering Linkage and Tie Rod Puller Equivalent regional tools:**Special Tools**

STEERING GEAR BOOT REPLACEMENT (LIGHT DUTY)

Special Tools

CH-22610 Keystone Clamp Pliers

Equivalent regional tools:**Special Tools**

Removal Procedure

1. Remove Steering Linkage Outer Tie Rod **Steering Linkage Outer Tie Rod Replacement (Light Duty)**

cardiagn.com

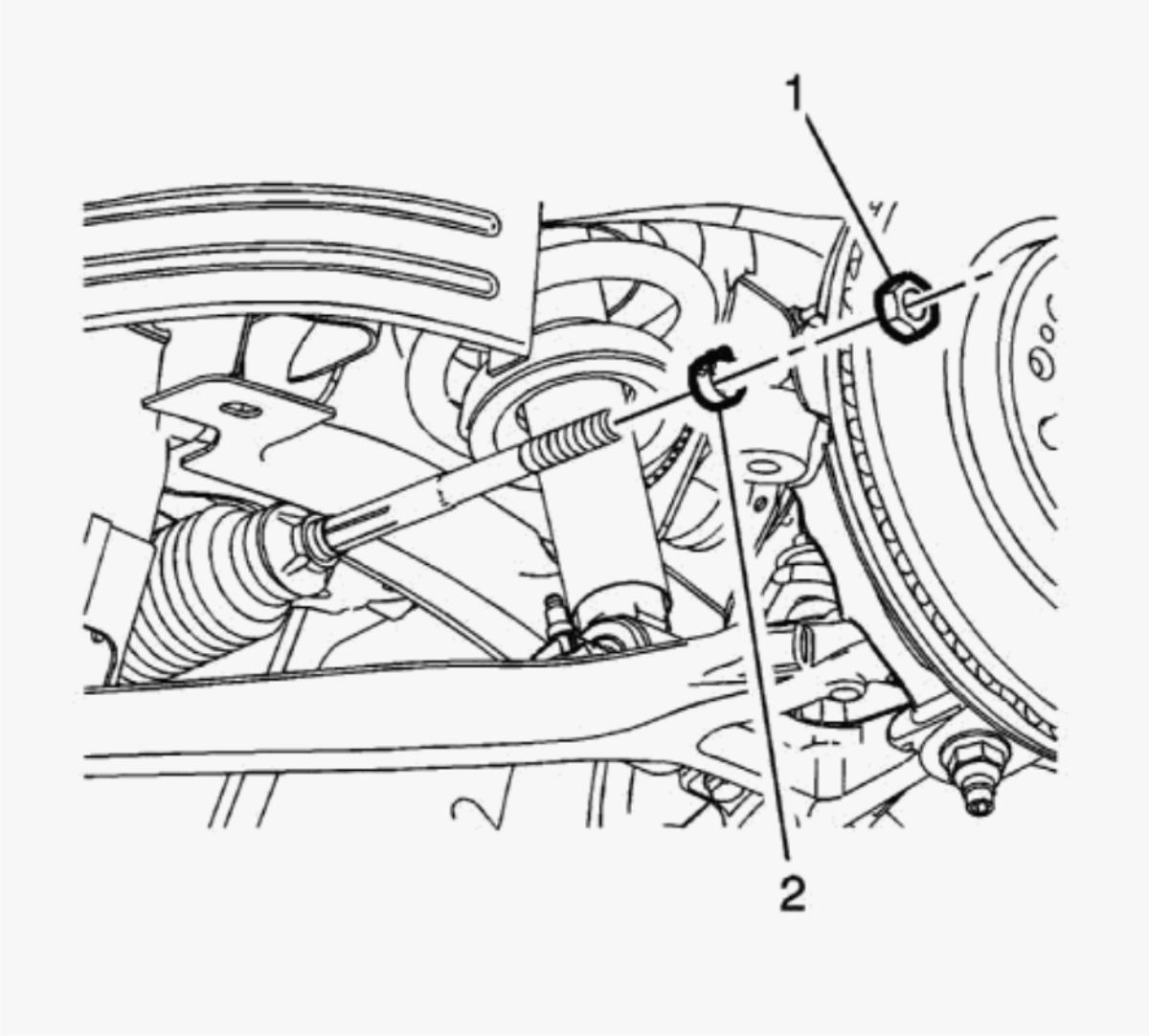

Fig. 46: Steering Linkage Inner Tie Rod Nut
Courtesy of GENERAL MOTORS COMPANY

NOTE: **Place match marks on the steering linkage inner tie rod nut and the steering linkage inner tie rod.**

2. Remove Steering Linkage Inner Tie Rod Nut (1).
3. Remove Steering Gear Boot Outer Clamp (2).

cardiagn.com

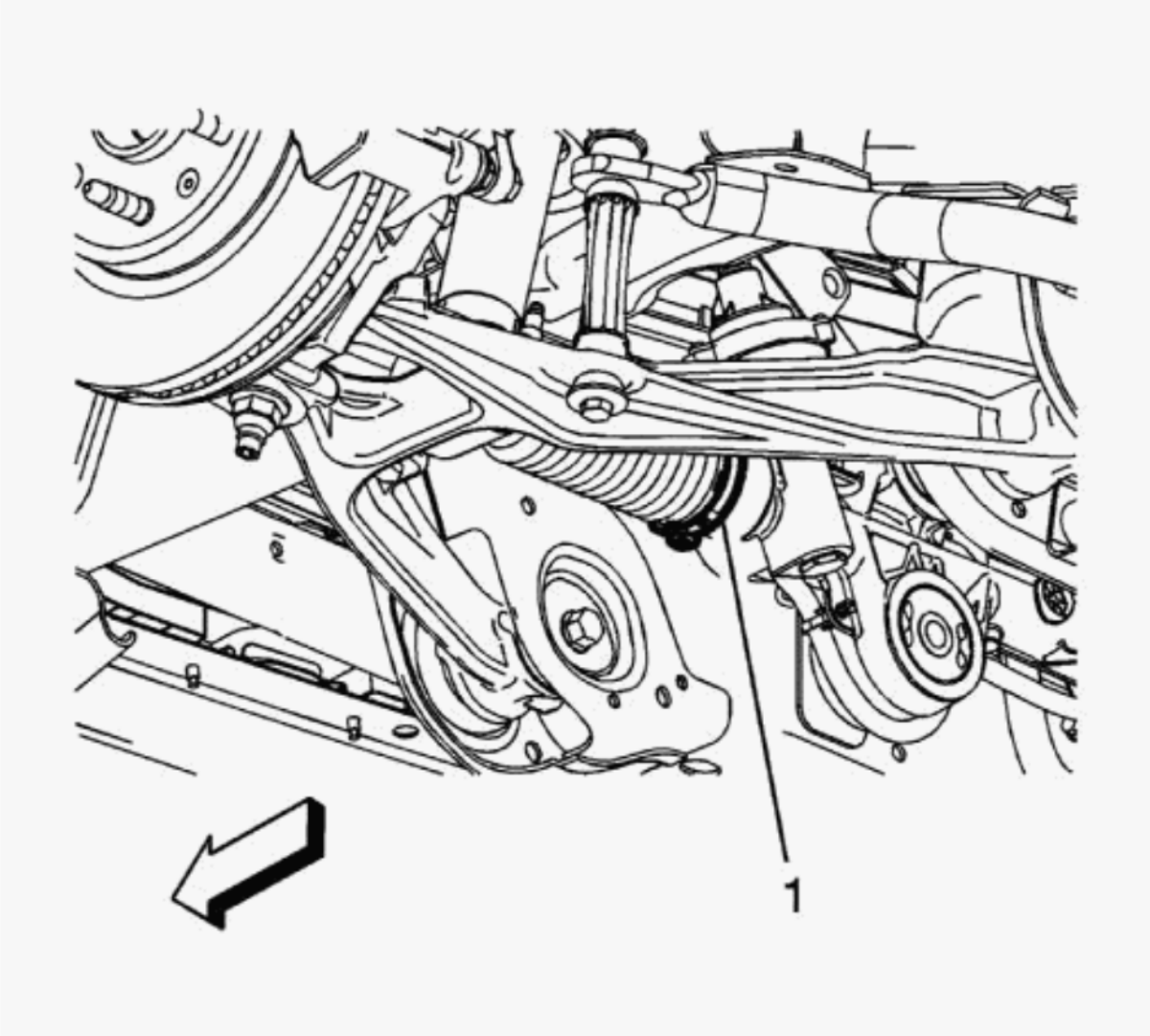

Fig. 47: Steering Gear Boot Inner Clamp And Steering Gear Boot
Courtesy of GENERAL MOTORS COMPANY

4. Remove Steering Gear Boot Inner Clamp (1).

   DISCARD the clamp.

cardiagn.com

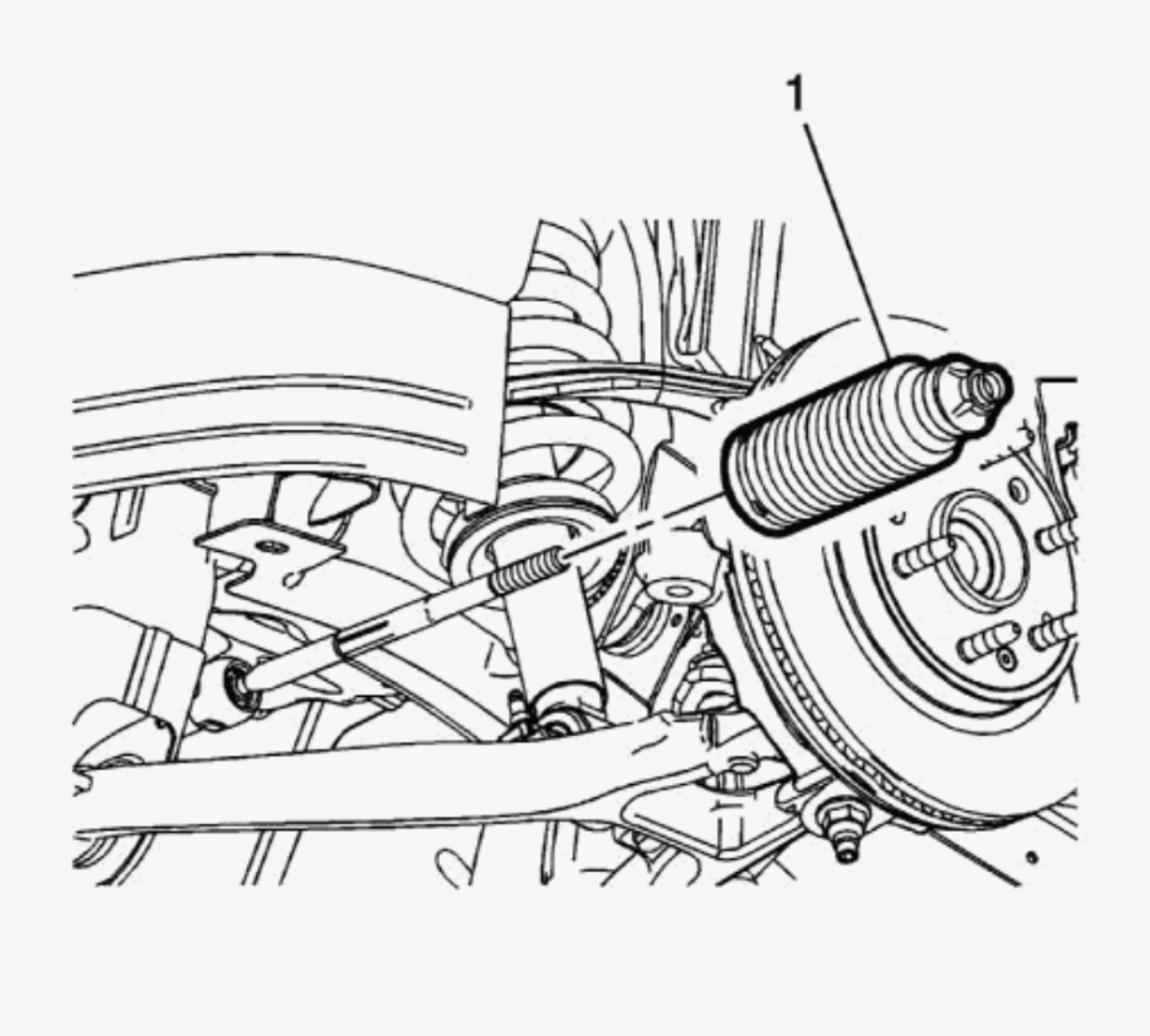

Fig. 48: Steering Gear Boot And Steering Gear
Courtesy of GENERAL MOTORS COMPANY

5. Remove Steering Gear Boot (1).

Installation Procedure

1. Position a NEW steering gear boot inner clamp on the steering gear boot.

cardiagn.com

2. Apply a small amount of grease on the steering linkage inner tie rod and the steering gear housing where the steering gear boot sits.

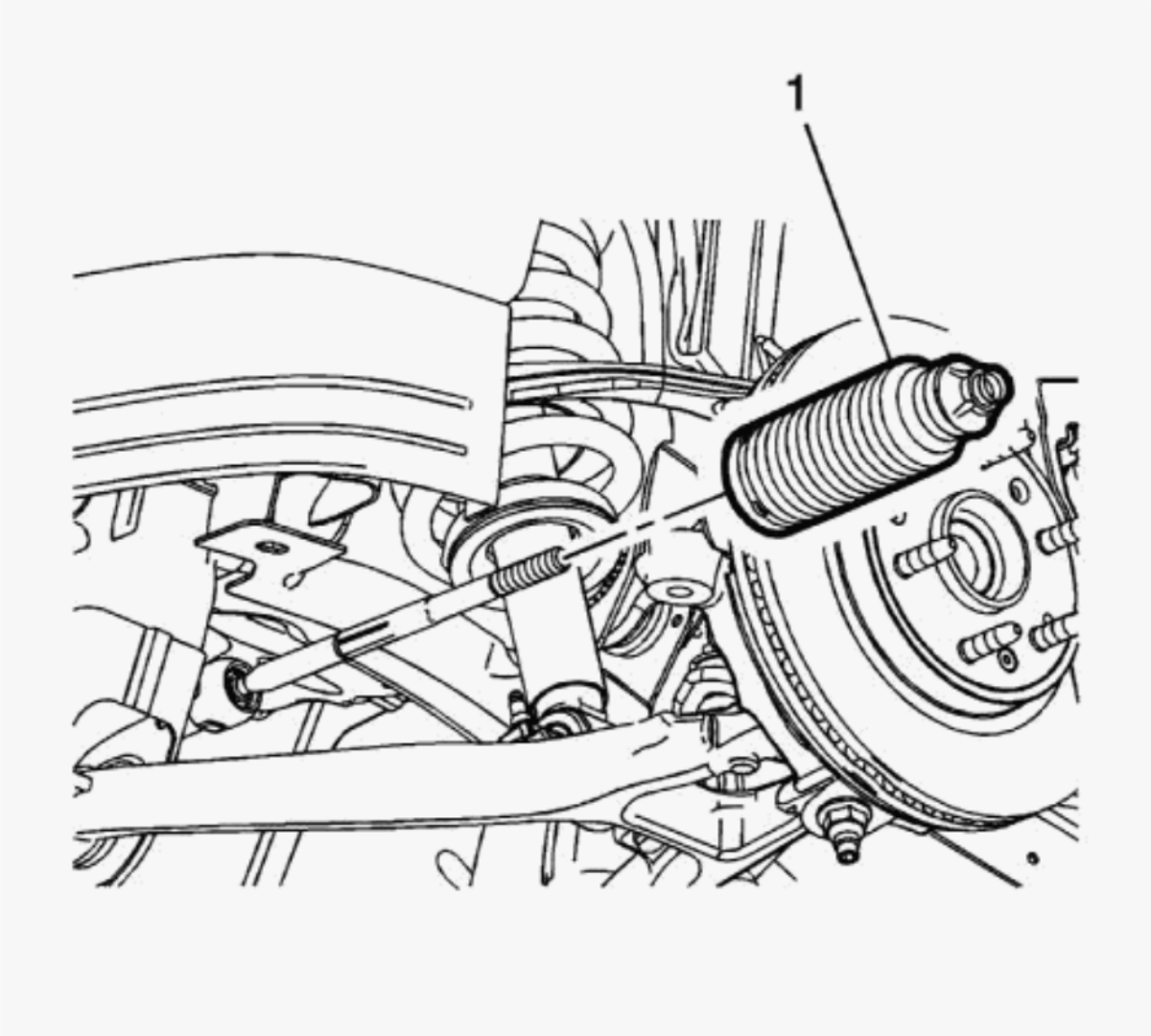

Fig. 49: Steering Gear Boot And Steering Gear
Courtesy of GENERAL MOTORS COMPANY

3. Install Steering Gear Boot (1).

cardiagn.com

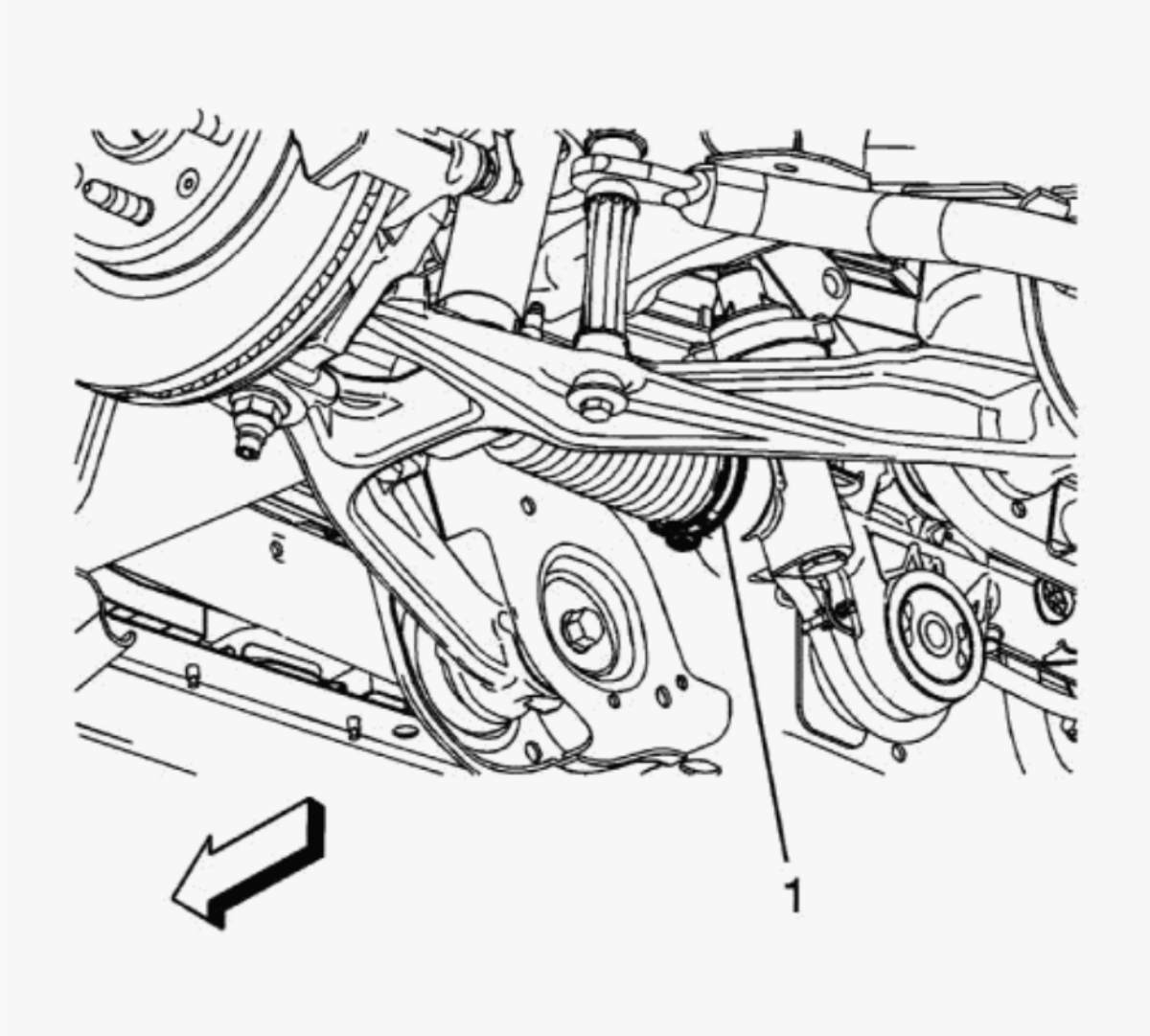

Fig. 50: Steering Gear Boot Inner Clamp And Steering Gear Boot
Courtesy of GENERAL MOTORS COMPANY

4. Use the **CH-22610** pliers to tighten the steering gear boot inner clamp (1).

cardiagn.com

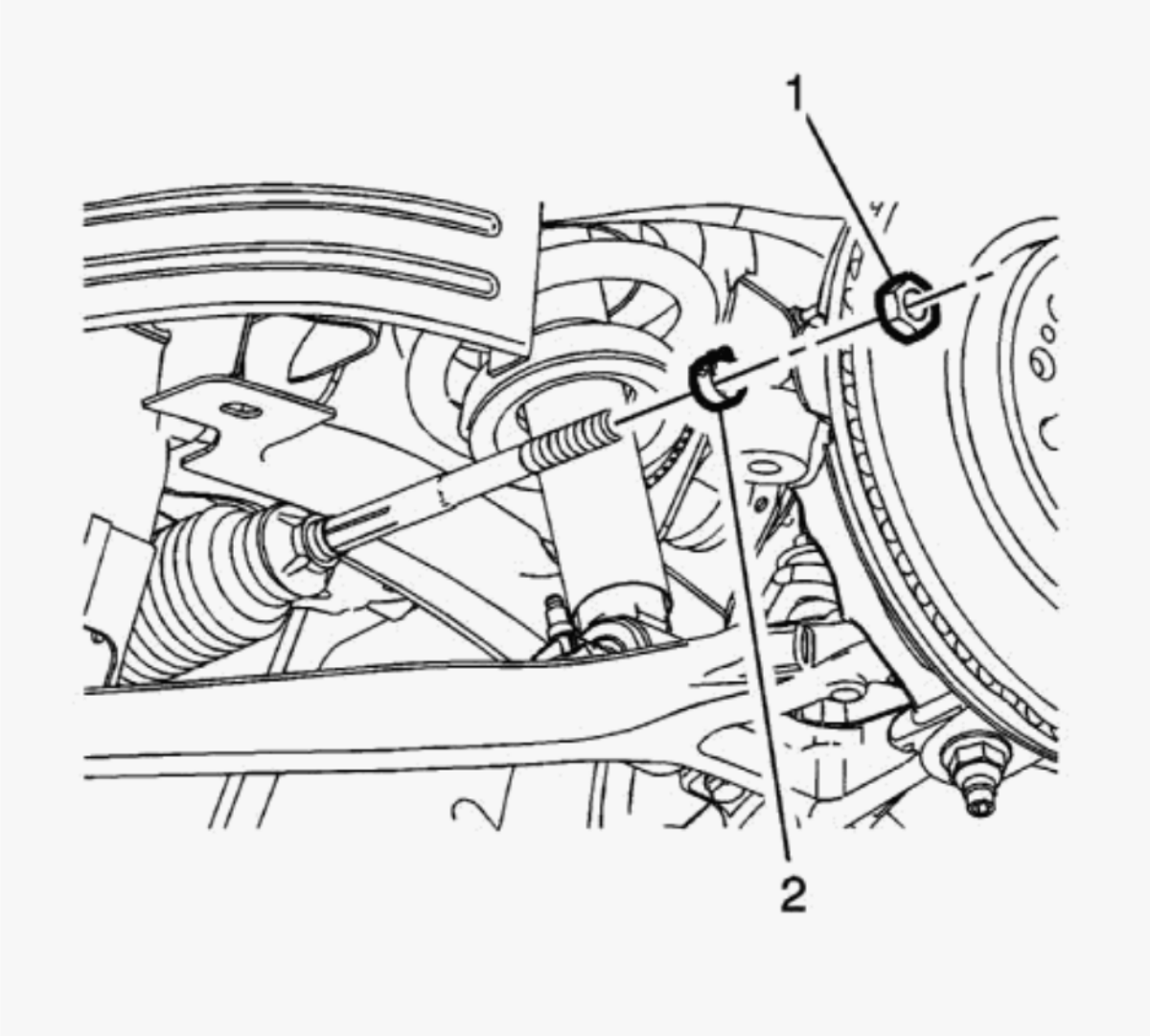

Fig. 51: Steering Linkage Inner Tie Rod Nut
Courtesy of GENERAL MOTORS COMPANY

5. Install Steering Gear Boot Outer Clamp (2).
6. Install Steering Linkage Inner Tie Rod Nut (1).
7. Install Steering Linkage Outer Tie Rod **Steering Linkage Outer Tie Rod Replacement (Light Duty)**
8. Measure and adjust the front toe. **Wheel Alignment - Steering Wheel Angle and/or Front Toe Adjustment**

cardiagn.com

STEERING GEAR SHAFT DAMPENER RING REPLACEMENT (LIGHT DUTY)

Removal Procedure

1. Raise and support the vehicle. **Lifting and Jacking the Vehicle**
2. Remove the steering gear outer and inner boot clamps and slide the steering gear boot onto the steering linkage inner tie rod. **Steering Gear Boot Replacement (Light Duty)**

   DISCARD the steering gear boot inner clamp.

3. Separate Steering Linkage Inner Tie Rod@Steering Gear **Steering Linkage Inner Tie Rod Replacement (Light Duty)**
4. Turn the front wheels all the way opposite of the side being serviced.

cardiagn.com

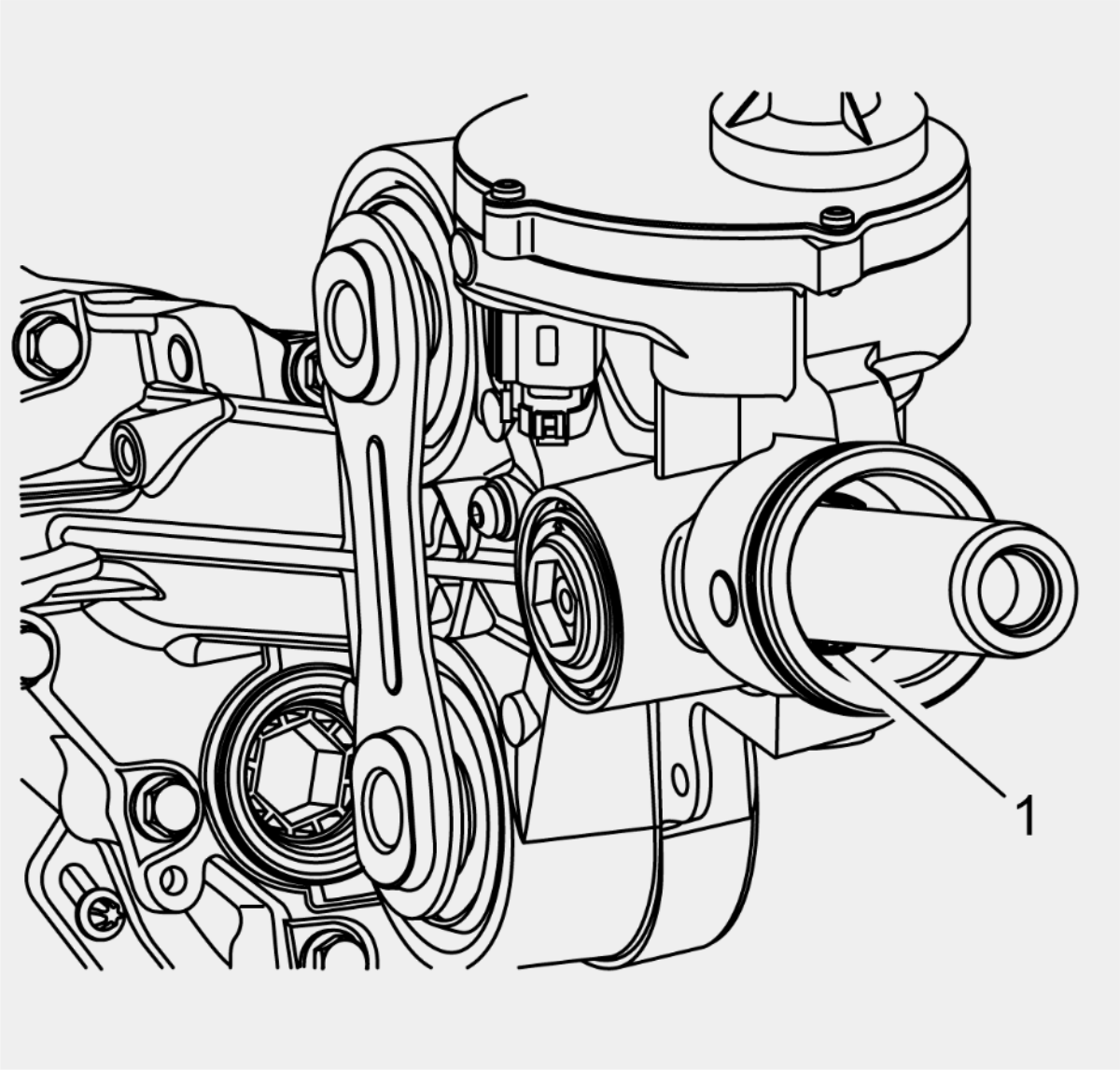

Fig. 52: Steering Gear Shaft Dampener Ring
Courtesy of GENERAL MOTORS COMPANY

5. Use a small pick tool to grasp the steering gear shaft dampener ring (1) inside the steering gear housing.

cardiagn.com

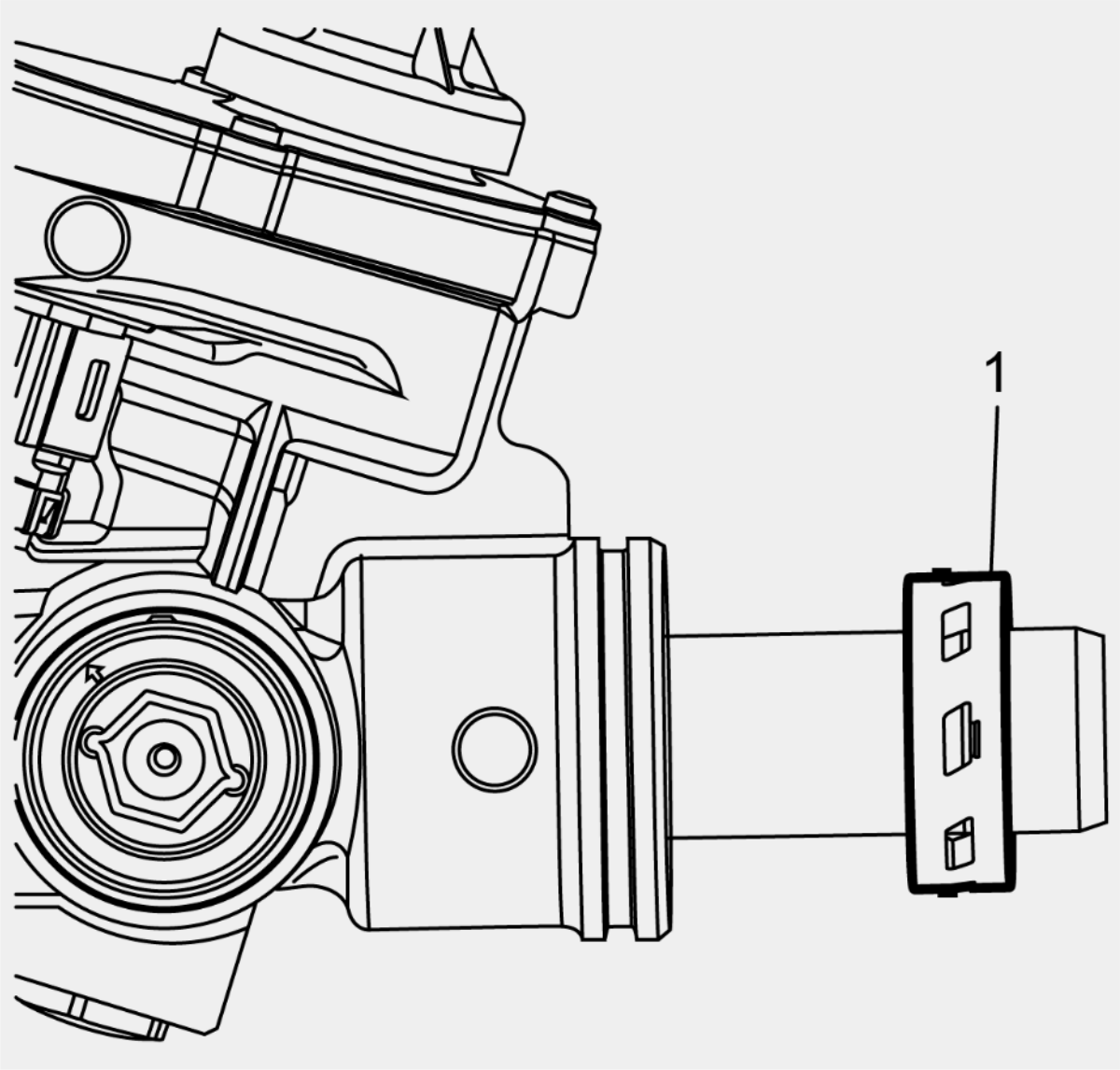

Fig. 53: Steering Gear Shaft Dampener Ring
Courtesy of GENERAL MOTORS COMPANY

6. Remove the steering gear shaft dampener ring (1) from the steering gear housing.

   DISCARD the ring.

cardiagn.com

Installation Procedure

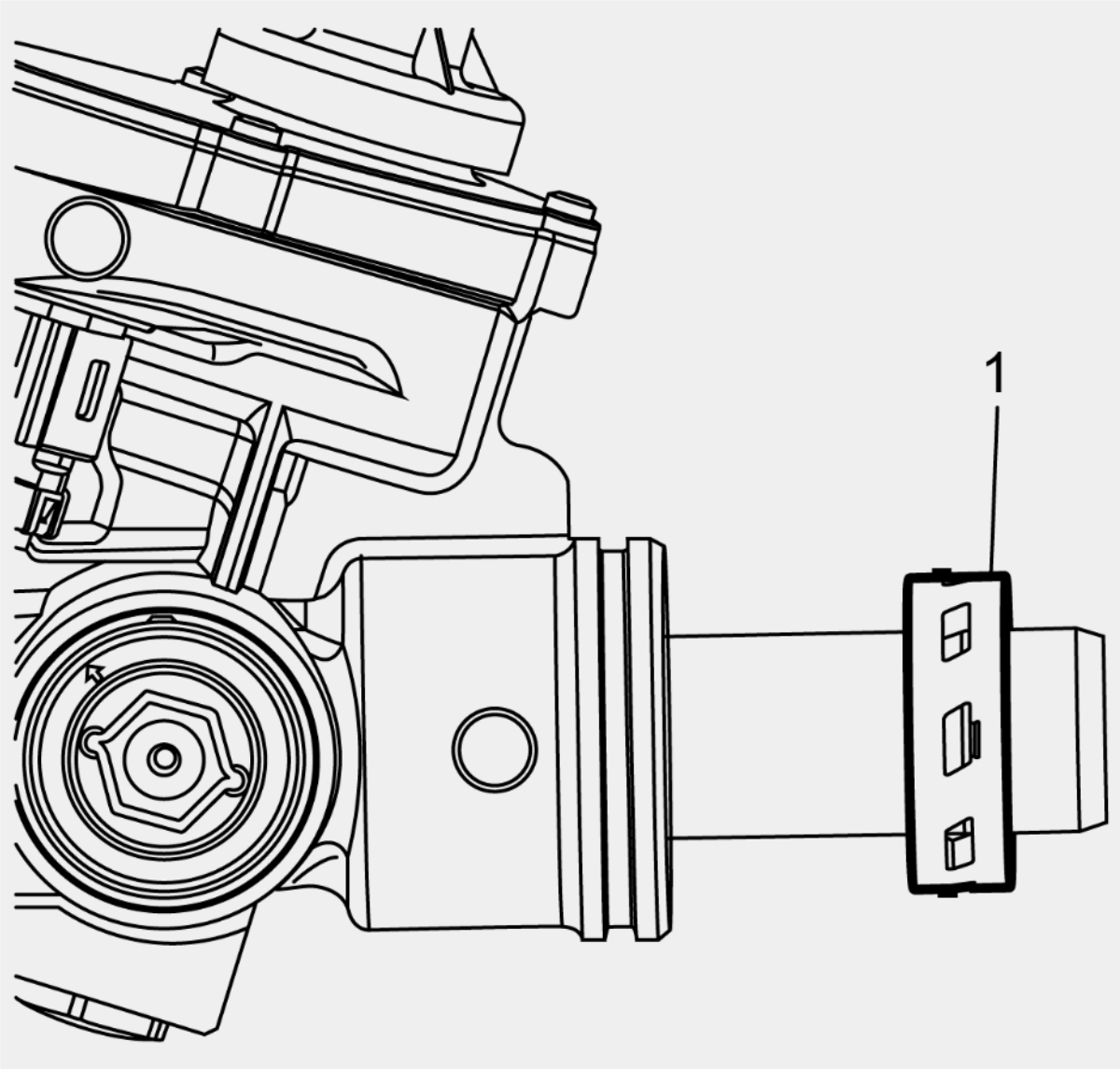

Fig. 54: Steering Gear Shaft Dampener Ring
Courtesy of GENERAL MOTORS COMPANY

NOTE: After the steering linkage inner tie rod and steering gear boot are installed, rotate the front tires all the

cardiagn.com

way to the side being serviced to finish seating the steering gear shaft dampener ring.

1. Position the NEW steering gear shaft dampener ring (1) in the steering gear housing.

   Push the seal in as far as it will go by hand.

   NOTE: **The NEW steering gear boot inner clamp MUST be positioned on the steering gear boot while the steering linkage inner tie rod is disconnected from the steering gear.**

2. Install Steering Linkage Inner Tie Rod@Steering Gear **Steering Linkage Inner Tie Rod Replacement (Light Duty)**
3. Slide the steering gear boot into place on the steering gear and install the steering gear boot inner and outer clamps. **Steering Gear Boot Replacement (Light Duty)**

   Use a NEW steering gear boot inner clamp.

4. Measure and adjust the front toe. **Wheel Alignment - Steering Wheel Angle and/or Front Toe Adjustment**

POWER STEERING FLUID COOLER REPLACEMENT (CHEVROLET, GMC, HEAVY DUTY)

Removal Procedure

1. Remove as much power steering fluid from the power steering fluid reservoir as possible.
2. Remove Front Bumper Fascia **Front Bumper Fascia Replacement (GMC)** **Front Bumper Fascia Replacement (Chevrolet)**
3. Remove Radiator Assembly **Radiator Replacement (L83 L86)** **Radiator Replacement (L96)**

cardiagn.com

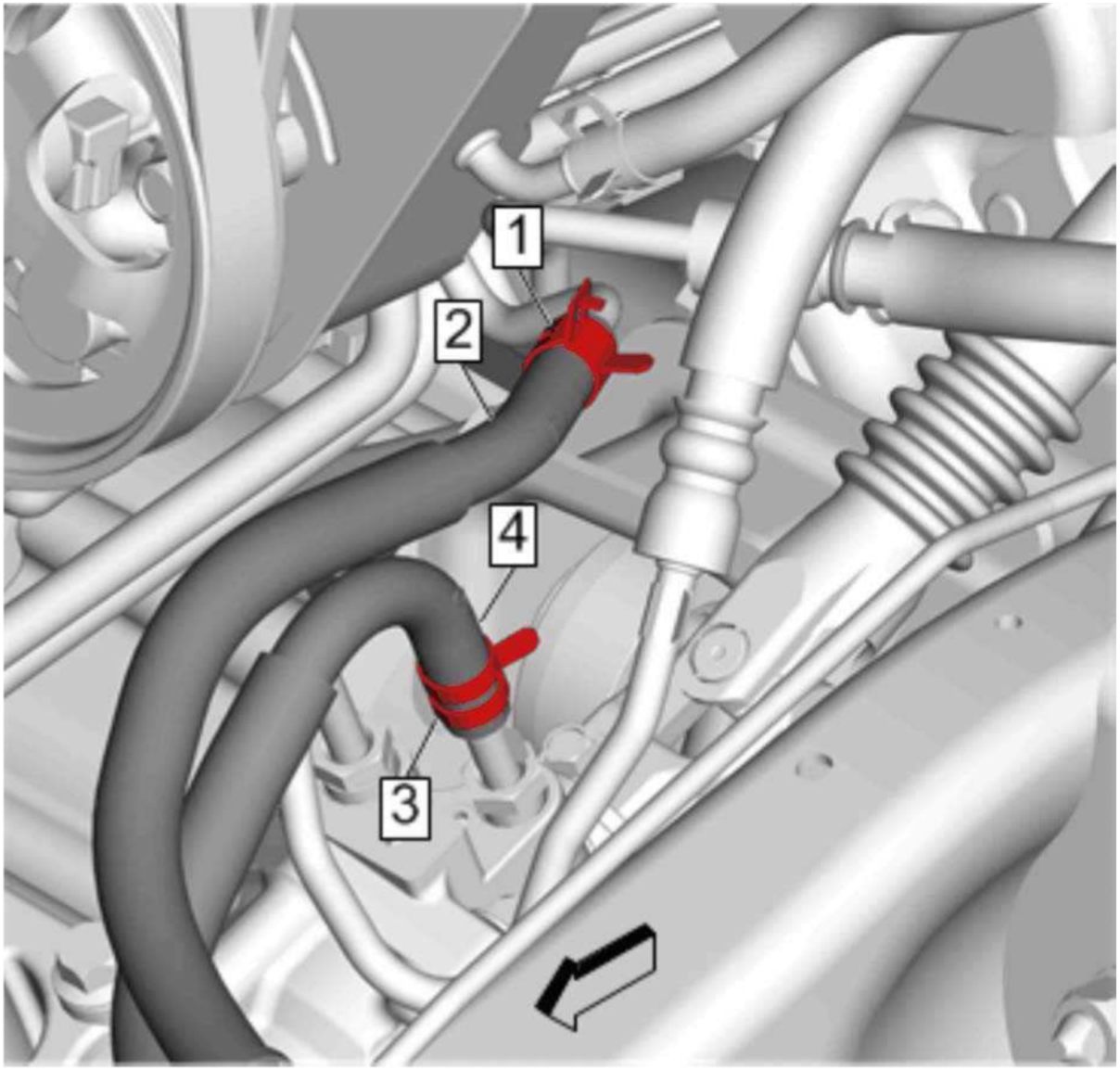

Fig. 55: Power Steering Fluid Cooler Hose And Clamp
Courtesy of GENERAL MOTORS COMPANY

CAUTION: **Refer to Power Steering Hose Disconnected Caution .**

4. Disengage Power Steering Fluid Cooler Hose Clamp (1) @Power Steering Fluid Reservoir

cardiagn.com

5. Remove Power Steering Fluid Cooler Hose (2) @Power Steering Fluid Reservoir
6. Disengage Power Steering Fluid Cooler Hose Clamp (3) @Power Steering Gear Outlet Pipe
7. Remove Power Steering Fluid Cooler Hose (4) @Power Steering Gear Outlet Pipe

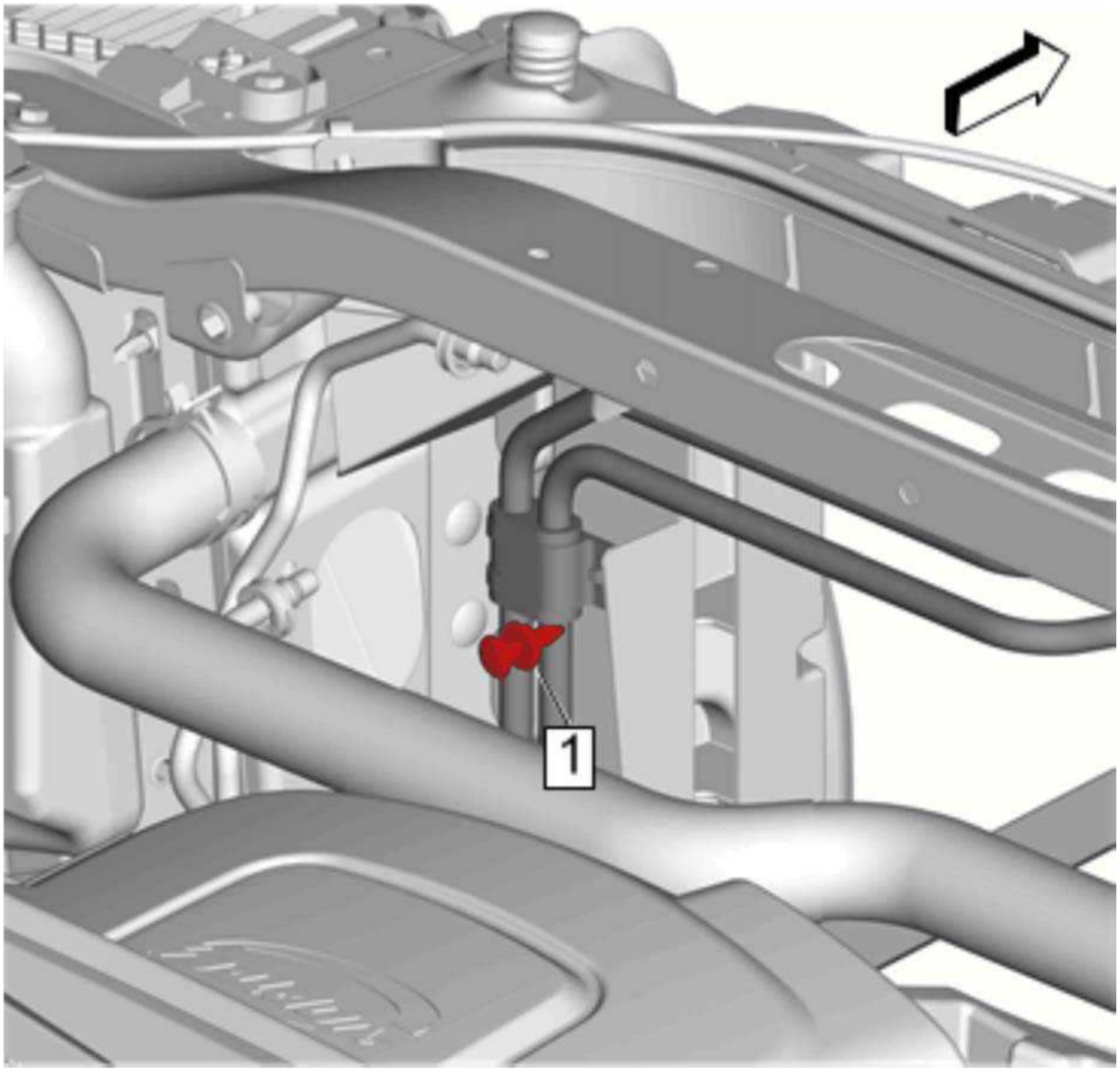

Fig. 56: Power Steering Fluid Cooler Hose Bracket
Courtesy of GENERAL MOTORS COMPANY

cardiagn.com

8. Remove Retainer (1) @Power Steering Fluid Cooler Hose Bracket

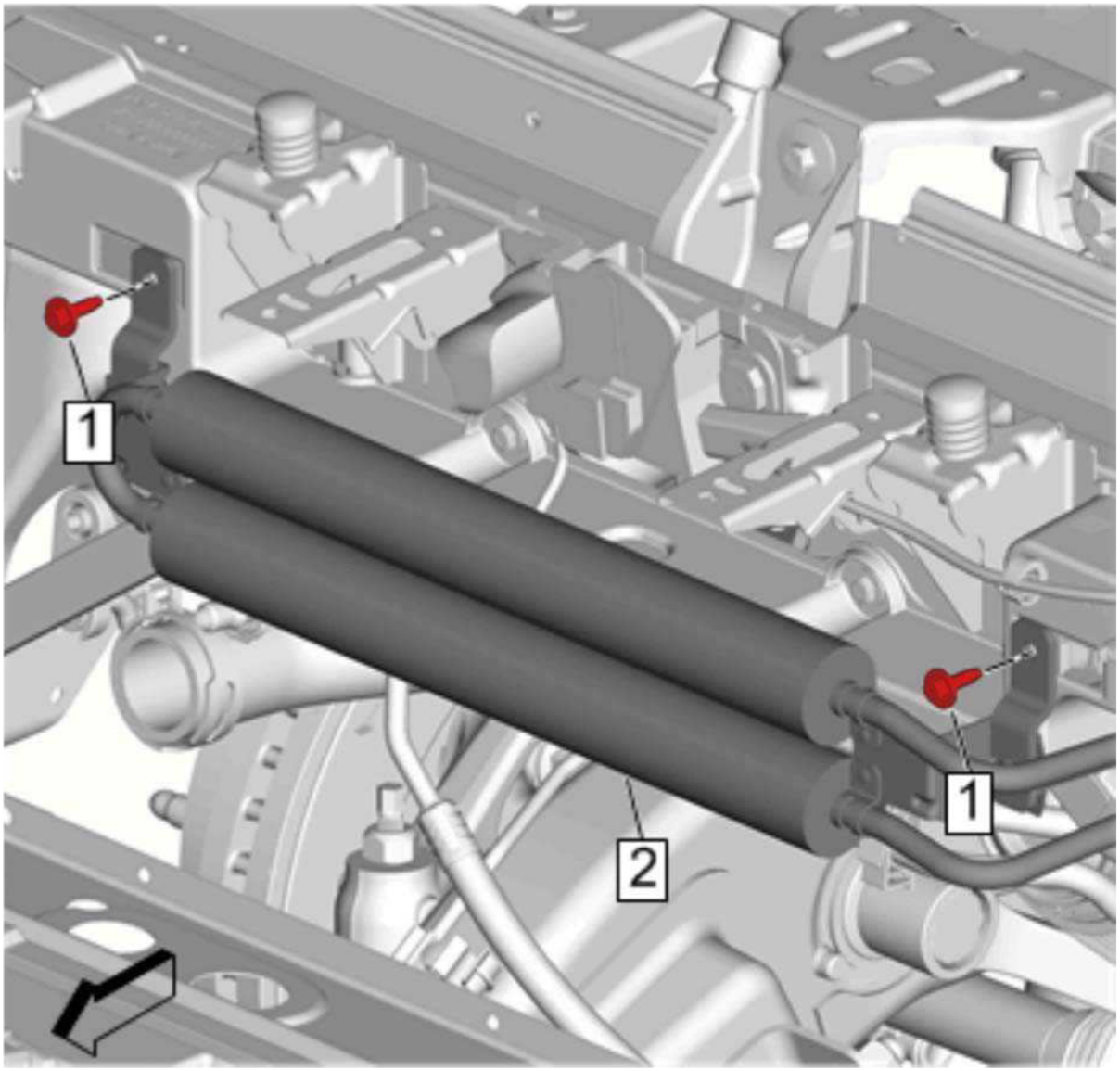

Fig. 57: Power Steering Fluid Cooler Bracket Bolt
Courtesy of GENERAL MOTORS COMPANY

9. Remove Power Steering Fluid Cooler Bracket Bolt (1).

cardiagn.com

10. Remove the power steering fluid cooler (2) from the vehicle.

Installation Procedure

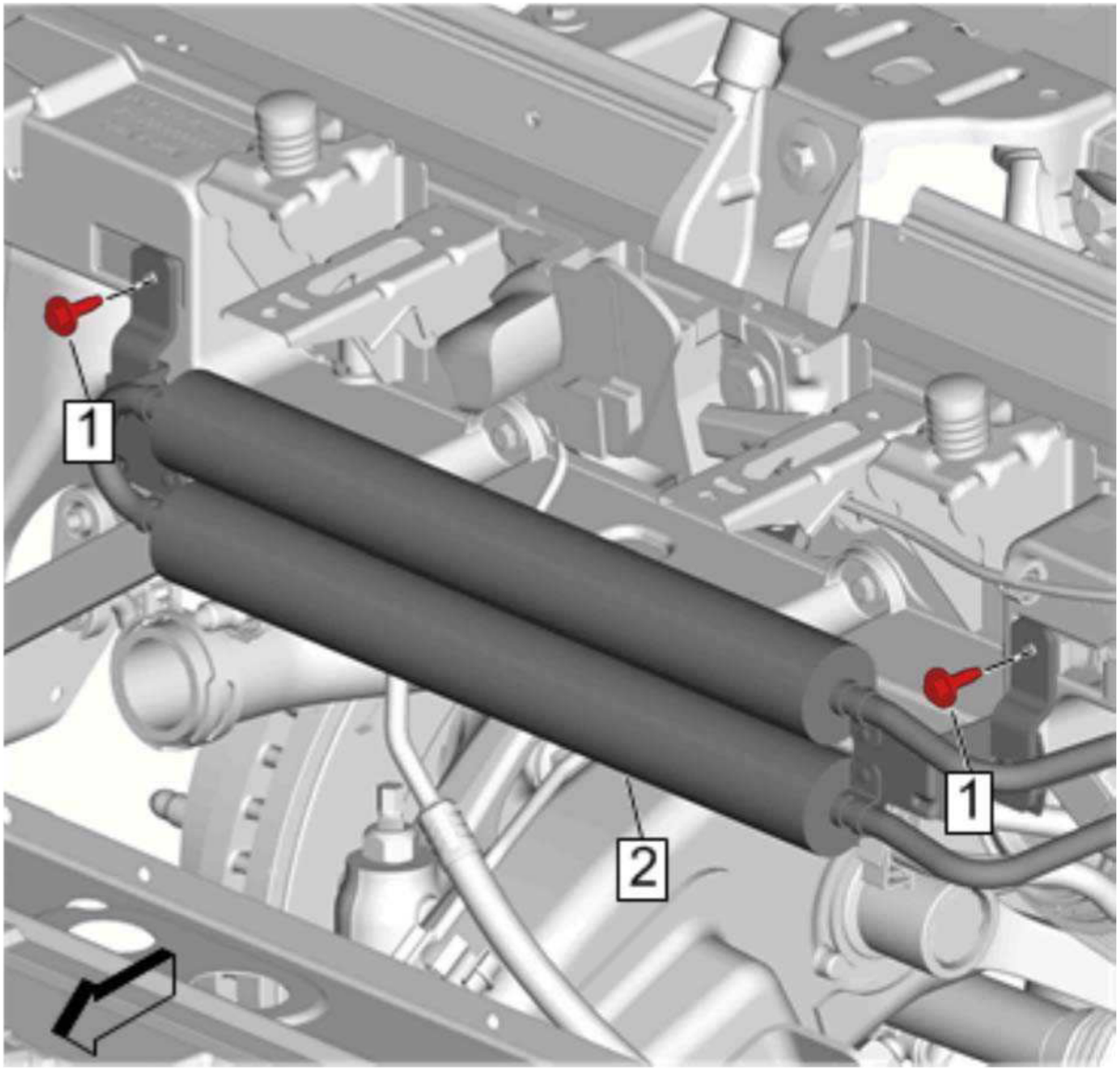

Fig. 58: Power Steering Fluid Cooler Bracket Bolt
Courtesy of GENERAL MOTORS COMPANY

cardiagn.com

1. Position the power steering fluid cooler (2) on the vehicle.

CAUTION: **Refer to Fastener Caution .**

2. Install Power Steering Fluid Cooler Bracket Bolt (2) and tighten 9 N.m (80 lb in)

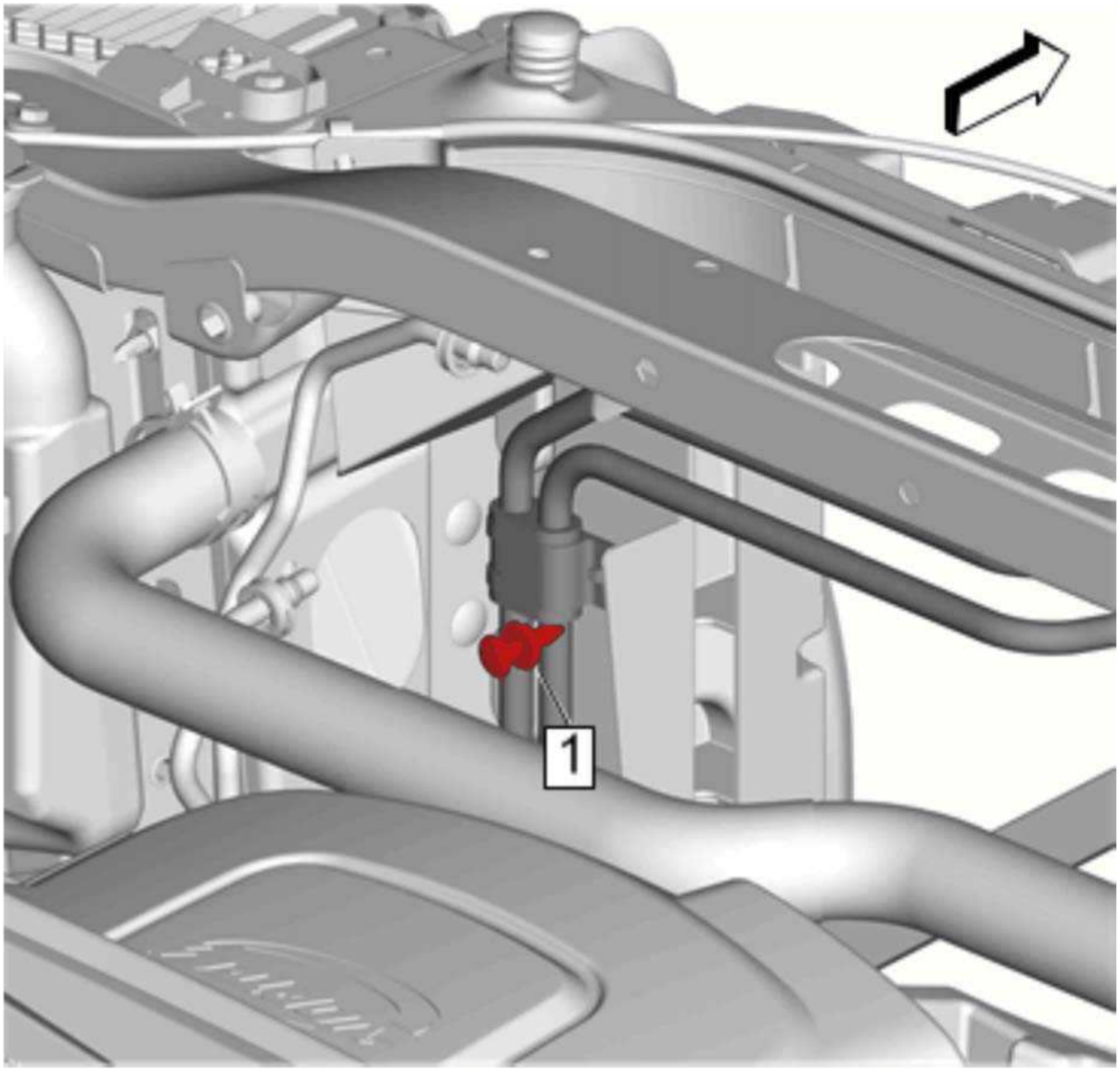

cardiagn.com

Fig. 59: Power Steering Fluid Cooler Hose Bracket
Courtesy of GENERAL MOTORS COMPANY

3. Install Retainer (1) @Power Steering Fluid Cooler Hose Bracket

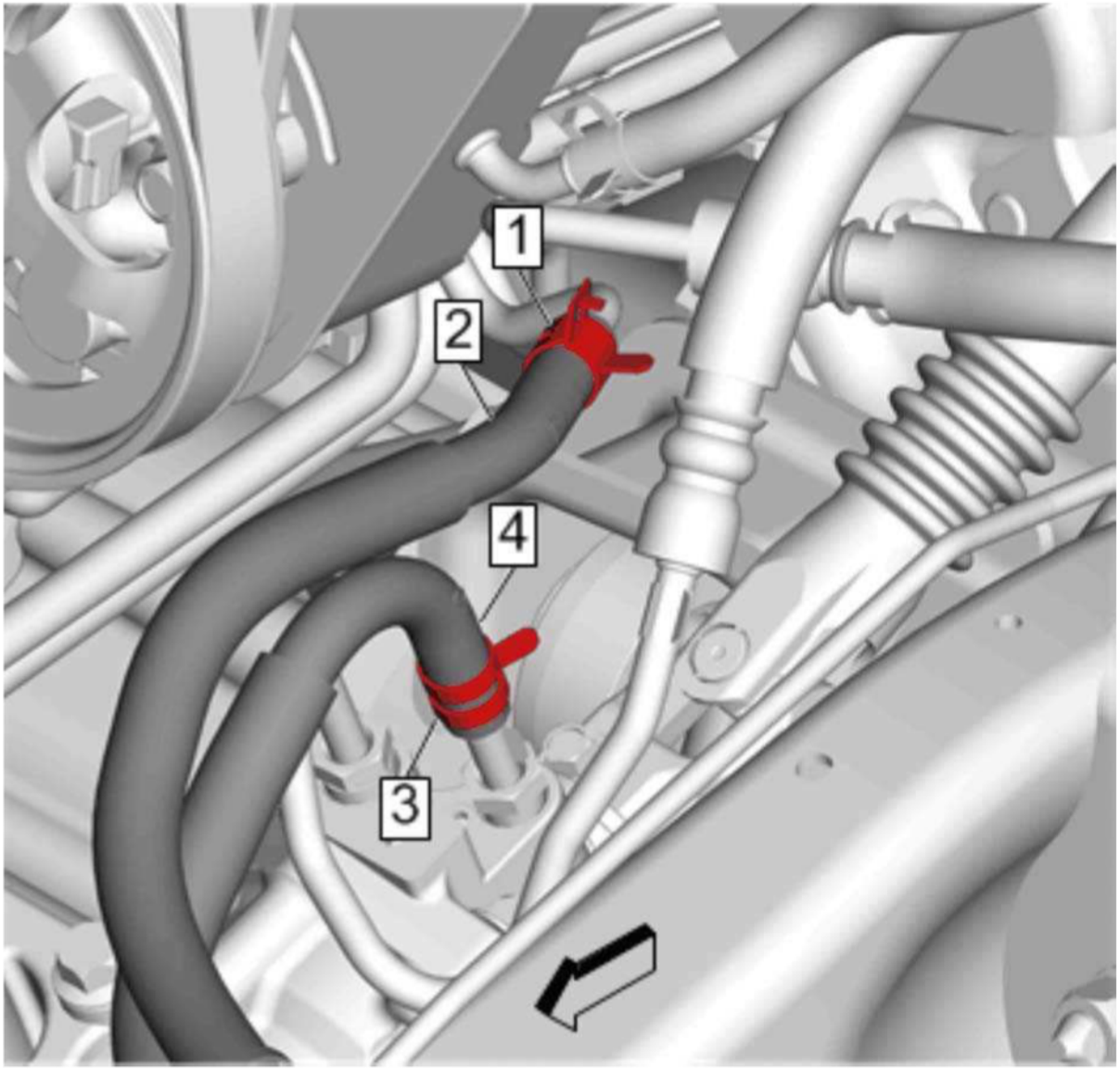

Fig. 60: Power Steering Fluid Cooler Hose And Clamp

cardiagn.com

Courtesy of GENERAL MOTORS COMPANY

4. Install Power Steering Fluid Cooler Hose (4) @Power Steering Gear Outlet Pipe
5. Engage Power Steering Fluid Cooler Hose Clamp (3) @Power Steering Gear Outlet Pipe
6. Install Power Steering Fluid Cooler Hose (2) @Power Steering Fluid Reservoir
7. Engage Power Steering Fluid Cooler Hose Clamp (1) @Power Steering Fluid Reservoir
8. Install Radiator Assembly **Radiator Replacement (L83 L86)** **Radiator Replacement (L96)**
9. Install Front Bumper Fascia **Front Bumper Fascia Replacement (GMC)** **Front Bumper Fascia Replacement (Chevrolet)**
10. Fill and bleed the power steering system. **Power Steering System Bleeding**

POWER STEERING FLUID COOLER REPLACEMENT (CADILLAC, HEAVY DUTY)

Removal Procedure

1. Remove as much power steering fluid from the power steering fluid reservoir as possible.
2. Remove Front Bumper Shutter **Front Bumper Shutter Replacement (Mechanical, Cadillac)**
3. Remove Radiator Assembly **Radiator Replacement (L83 L86)** **Radiator Replacement (L96)**

cardiagn.com

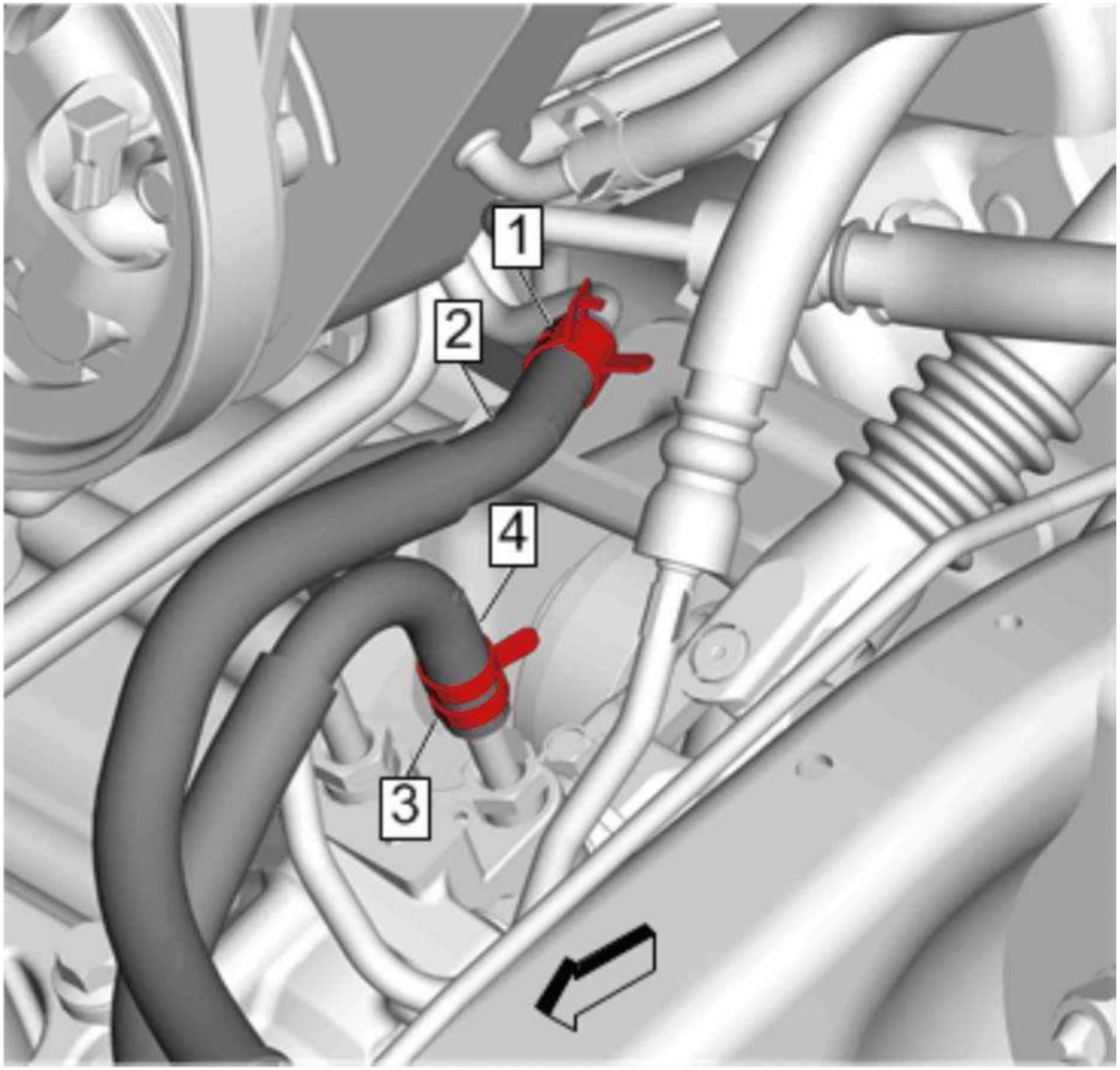

Fig. 61: Power Steering Fluid Cooler Hose And Clamp
Courtesy of GENERAL MOTORS COMPANY

CAUTION: **Refer to Power Steering Hose Disconnected Caution .**

4. Disengage Power Steering Fluid Cooler Hose Clamp (1) @Power Steering Fluid Reservoir

cardiagn.com

5. Remove Power Steering Fluid Cooler Hose (2) @Power Steering Fluid Reservoir
6. Disengage Disengage Power Steering Fluid Cooler Hose Clamp (3) @Power Steering Gear Outlet Pipe
7. Remove Power Steering Fluid Cooler Hose (4) @Power Steering Gear Outlet Pipe

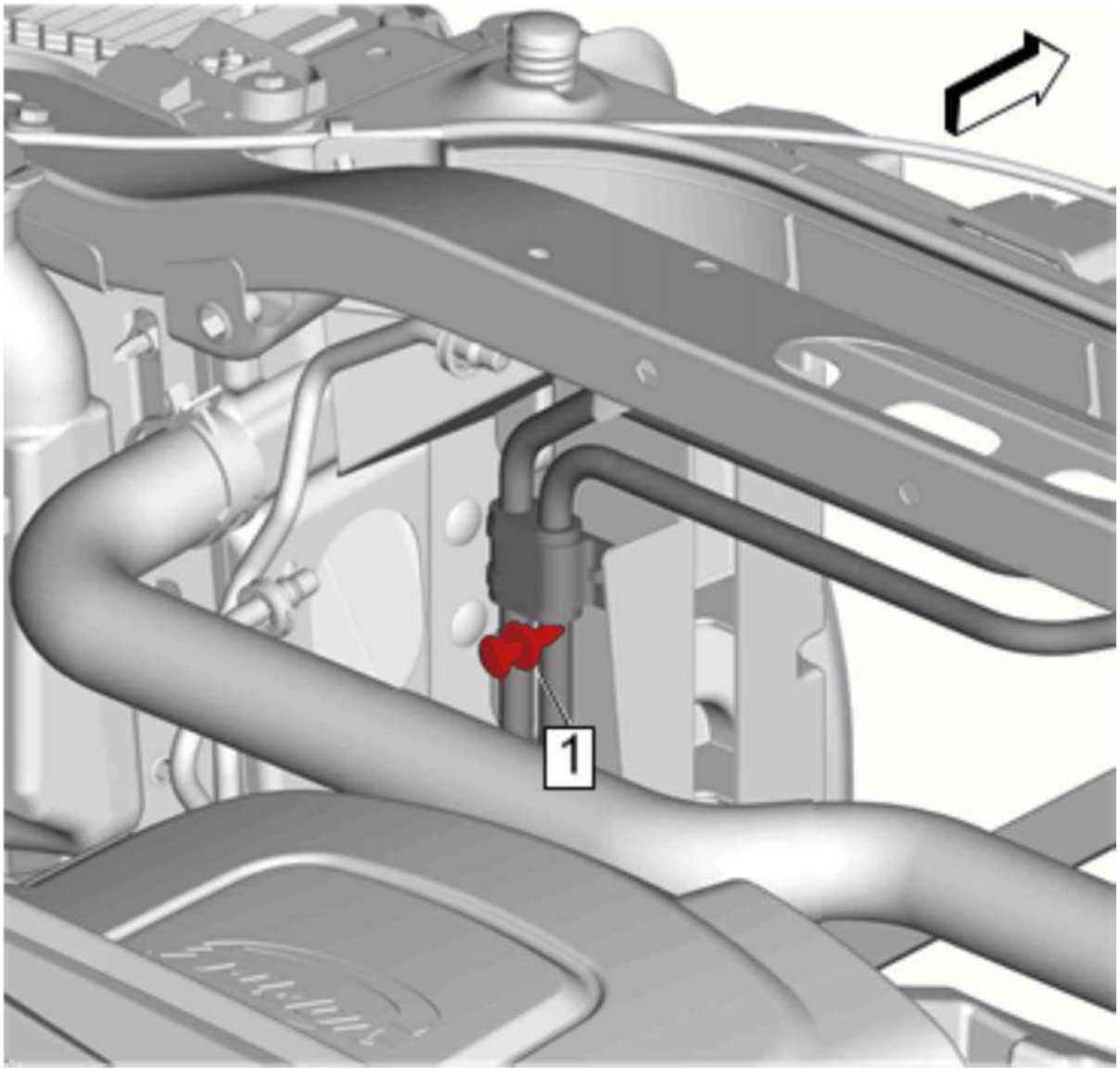

Fig. 62: Power Steering Fluid Cooler Hose Bracket
Courtesy of GENERAL MOTORS COMPANY

cardiagn.com

8. Retainer (1) @Power Steering Fluid Cooler Hose Bracket.

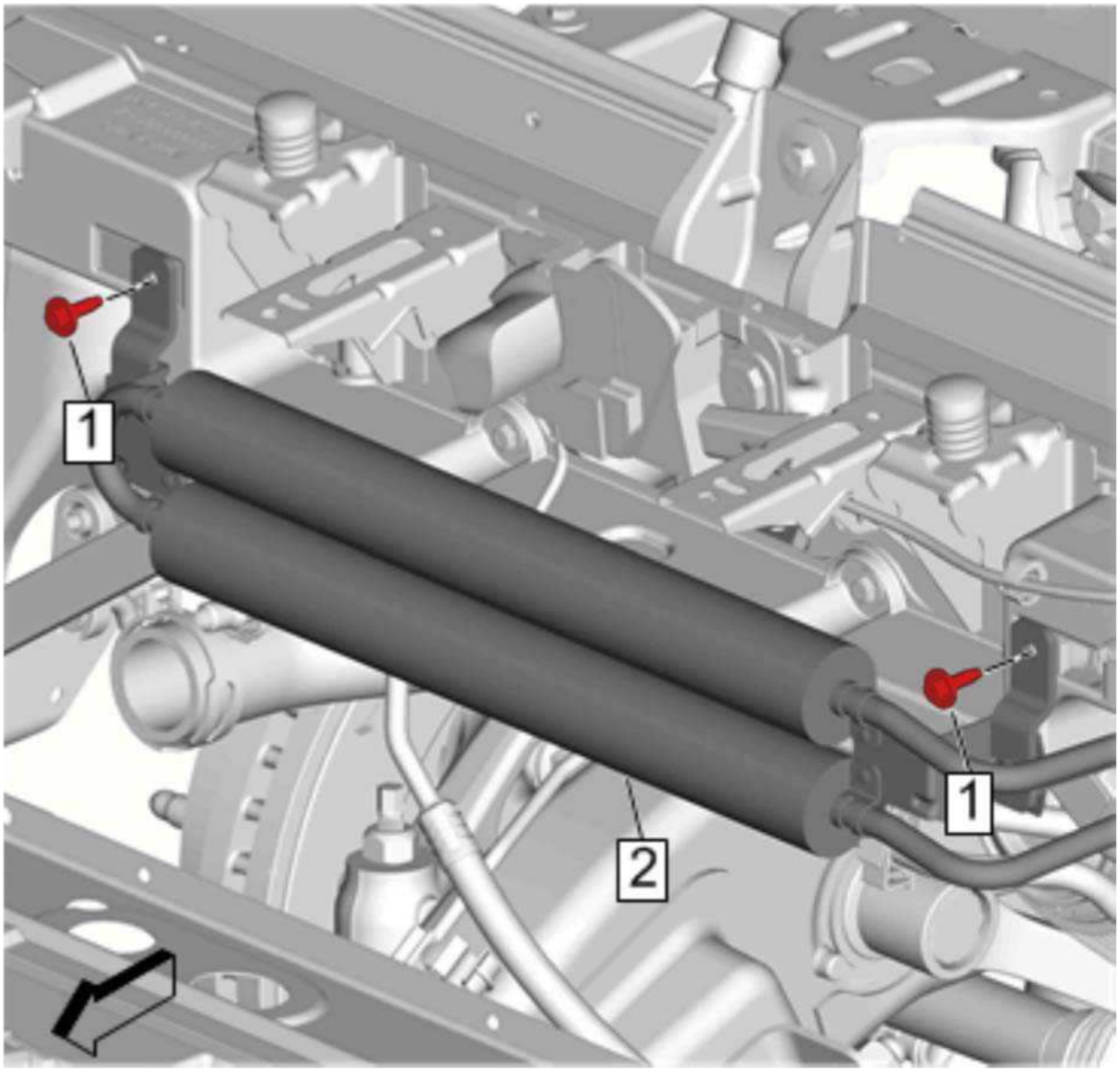

Fig. 63: Power Steering Fluid Cooler Bracket Bolt
Courtesy of GENERAL MOTORS COMPANY

9. Power Steering Fluid Cooler Bracket Bolt (1).

cardiagn.com

10. Remove the power steering fluid cooler (2) from the vehicle.

Installation Procedure

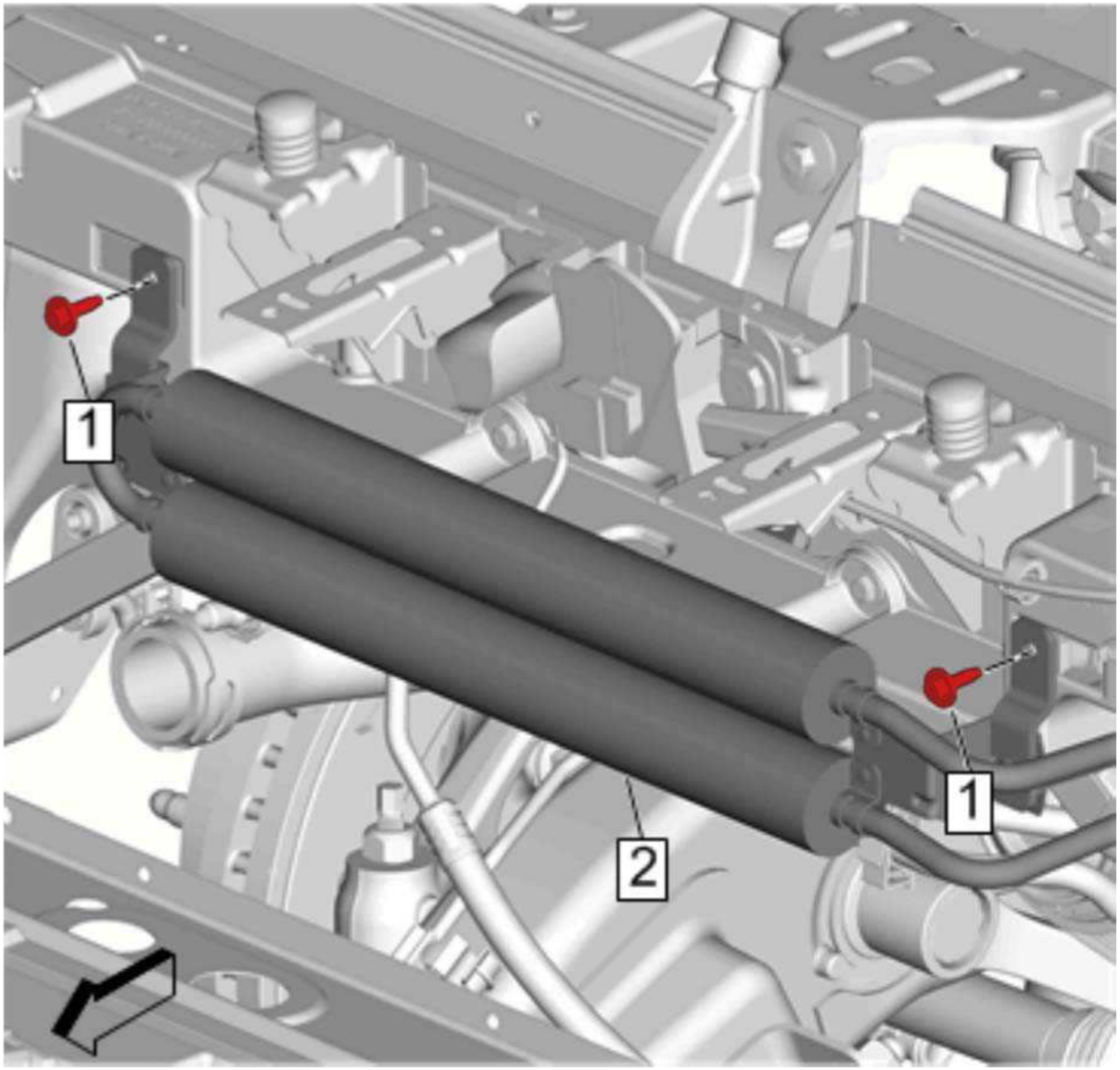

Fig. 64: Power Steering Fluid Cooler Bracket Bolt
Courtesy of GENERAL MOTORS COMPANY

cardiagn.com

1. Position the power steering fluid cooler (2) on the vehicle.

CAUTION: **Refer to Fastener Caution .**

2. Install Power Steering Fluid Cooler Bracket Bolt (1) and tighten 9 N.m (80 lb in)

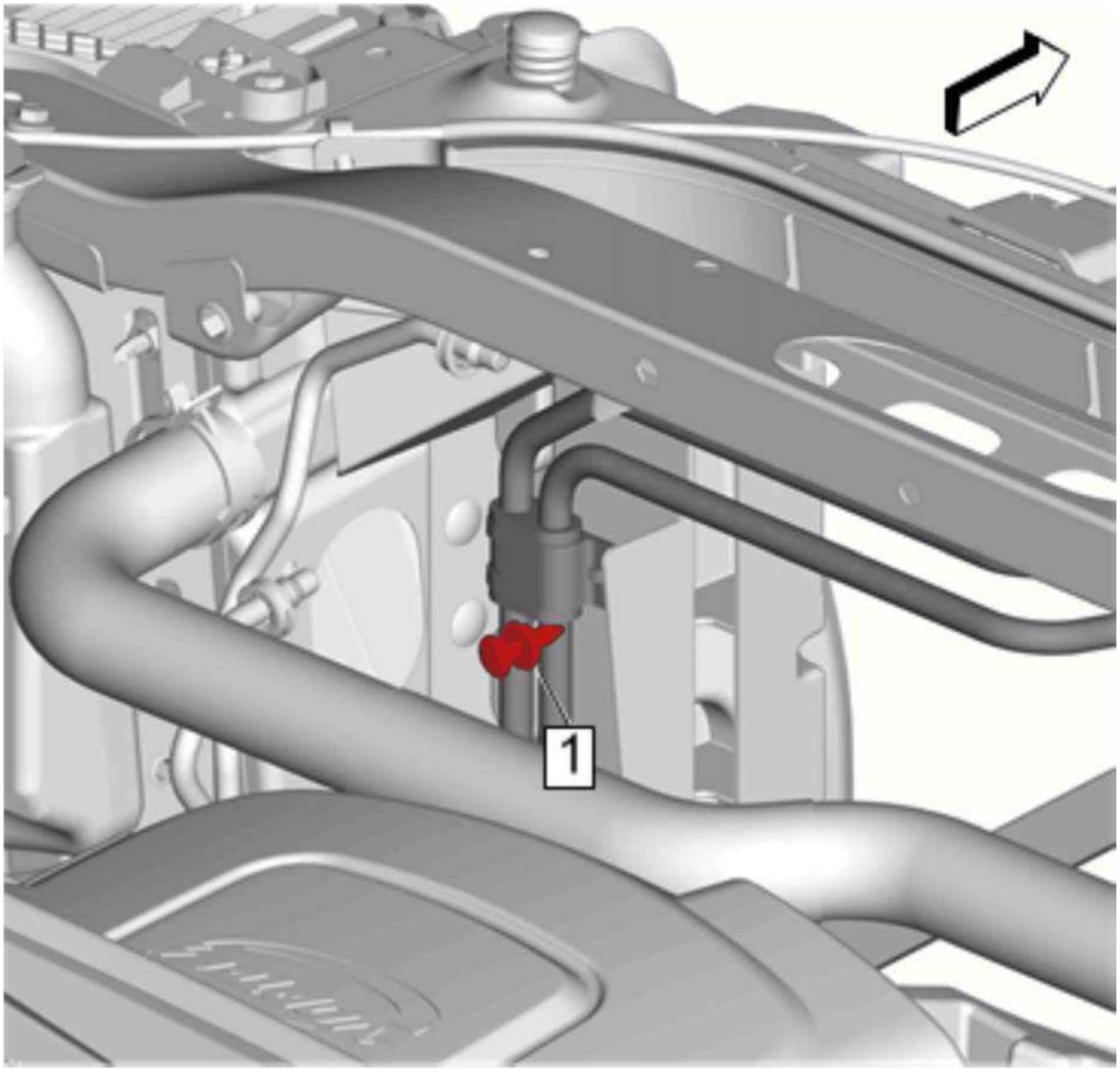

cardiagn.com

Fig. 65: Power Steering Fluid Cooler Hose Bracket
Courtesy of GENERAL MOTORS COMPANY

3. Install Retainer (1) @Power Steering Fluid Cooler Hose Bracket

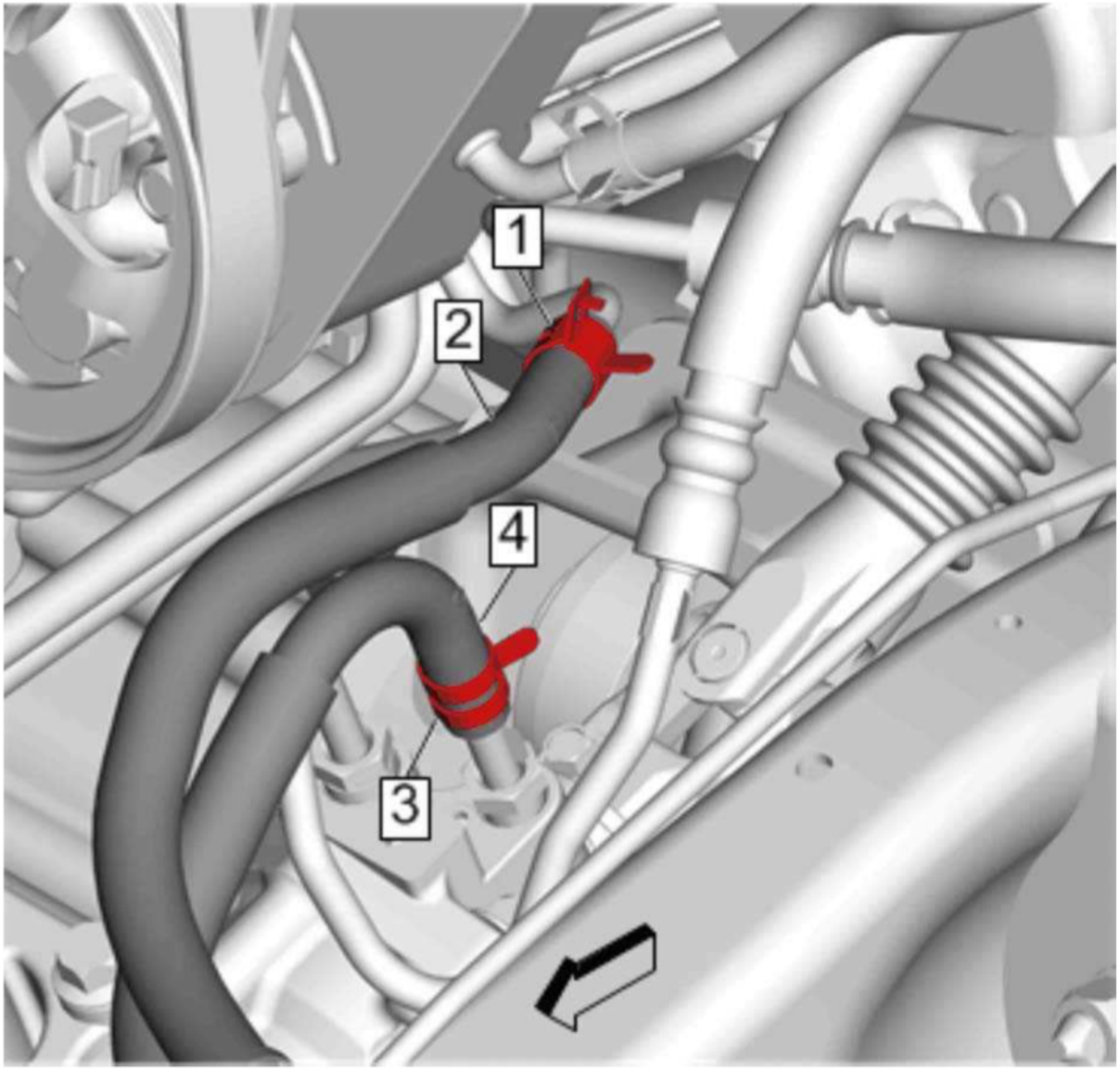

Fig. 66: Power Steering Fluid Cooler Hose And Clamp

cardiagn.com

Courtesy of GENERAL MOTORS COMPANY

4. Install Power Steering Fluid Cooler Hose (4) @Power Steering Gear Outlet Pipe
5. Engage Power Steering Fluid Cooler Hose Clamp (3) @Power Steering Gear Outlet Pipe
6. Install Power Steering Fluid Cooler Hose (2) @Power Steering Fluid Reservoir
7. Engage Power Steering Fluid Cooler Hose Clamp (1) @Power Steering Fluid Reservoir
8. Install Radiator Assembly **Radiator Replacement (L83 L86)** **Radiator Replacement (L96)**
9. Install Front Bumper Shutter **Front Bumper Shutter Replacement (Mechanical, Cadillac)**
10. Fill and bleed the power steering system. **Power Steering System Bleeding**

POWER STEERING GEAR INLET PIPE/HOSE REPLACEMENT (HEAVY DUTY)

Removal Procedure

cardiagn.com

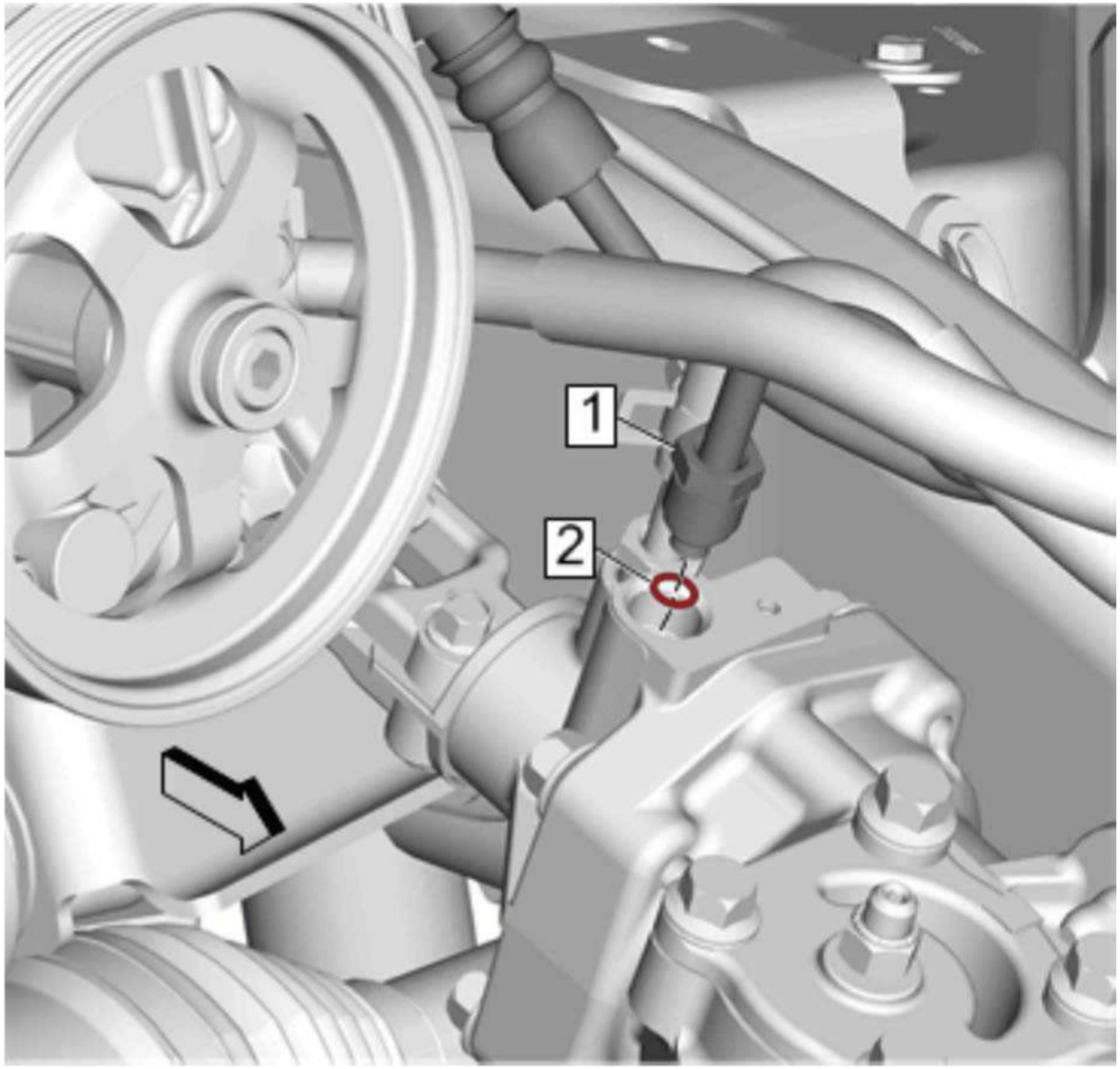

Fig. 67: Power Steering Gear Inlet Hose
Courtesy of GENERAL MOTORS COMPANY

CAUTION: **Refer to Power Steering Hose Disconnected Caution .**

1. Remove Power Steering Gear Inlet Hose (1) @Steering Gear

cardiagn.com

2. Remove Power Steering Gear Inlet Hose Seal (2) @Steering Gear

   DISCARD the seal.

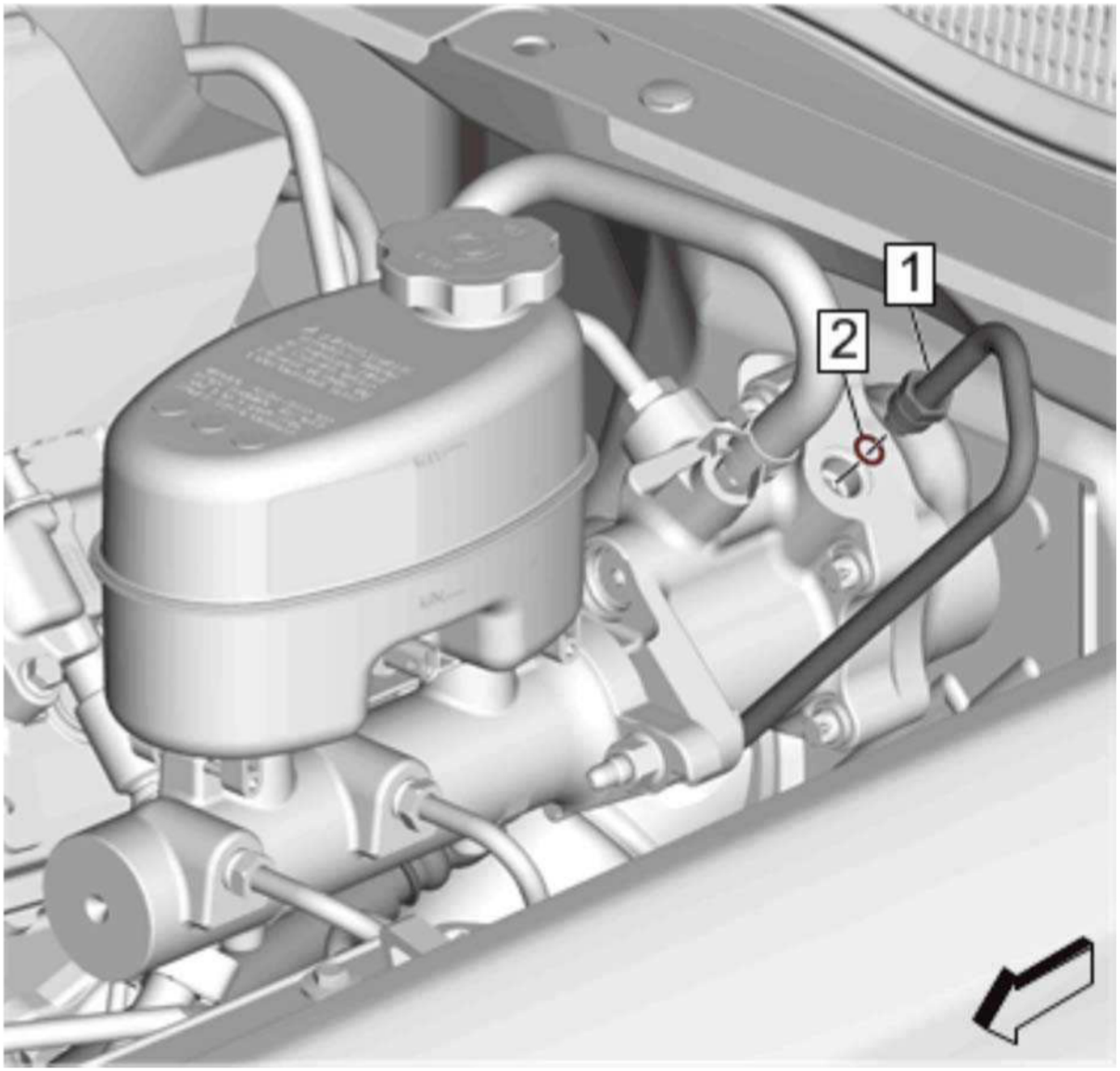

Fig. 68: Power Steering Gear Inlet Hose
Courtesy of GENERAL MOTORS COMPANY

cardiagn.com

3. Remove Power Steering Gear Inlet Hose (1) @Power Brake Booster
4. Remove Power Steering Gear Inlet Hose Seal (2).

   DISCARD the seal.

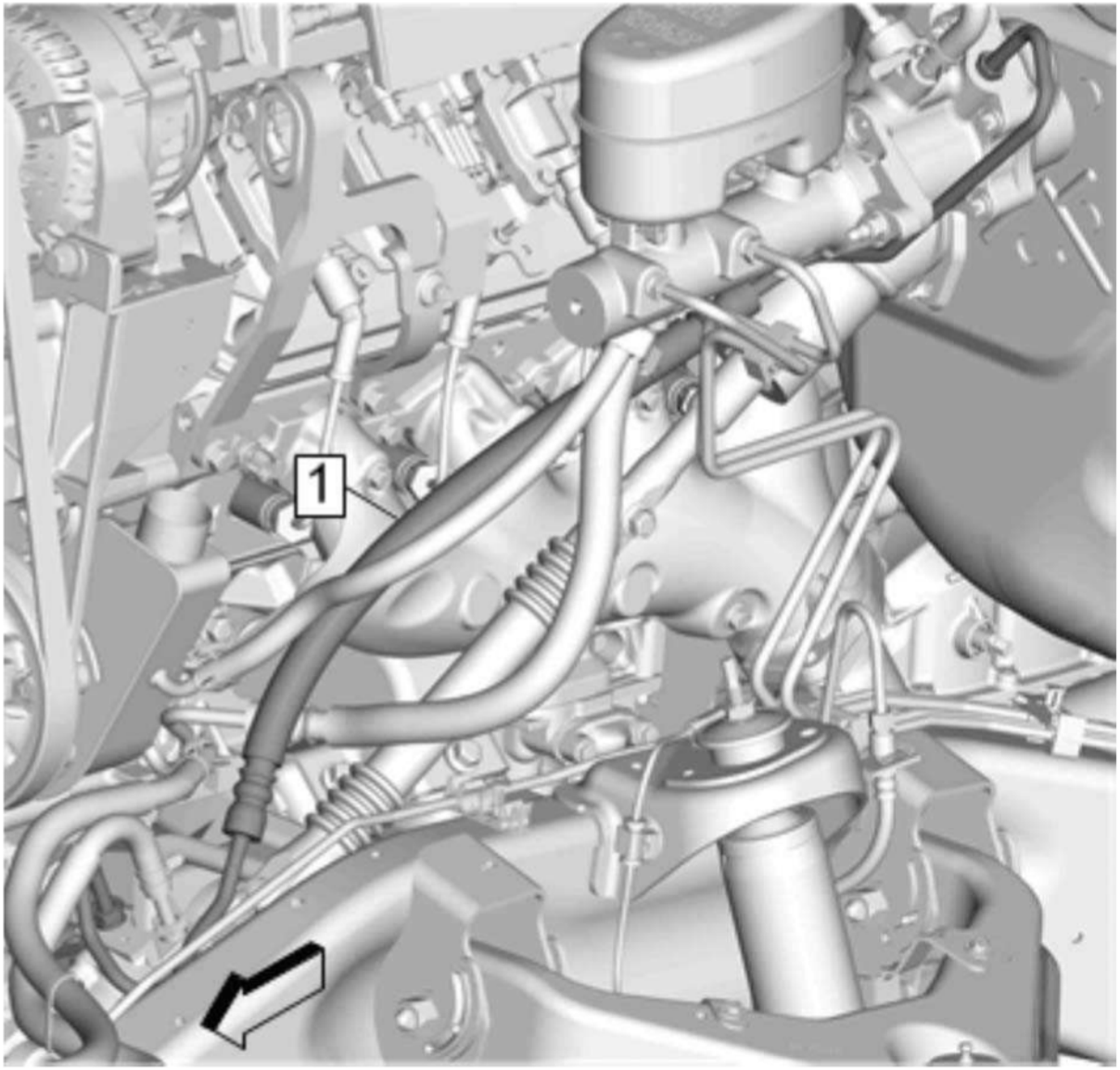

Fig. 69: Power Steering Gear Inlet Hose

cardiagn.com

Courtesy of GENERAL MOTORS COMPANY

5. Remove the power steering gear inlet hose (1) from the vehicle.

Installation Procedure

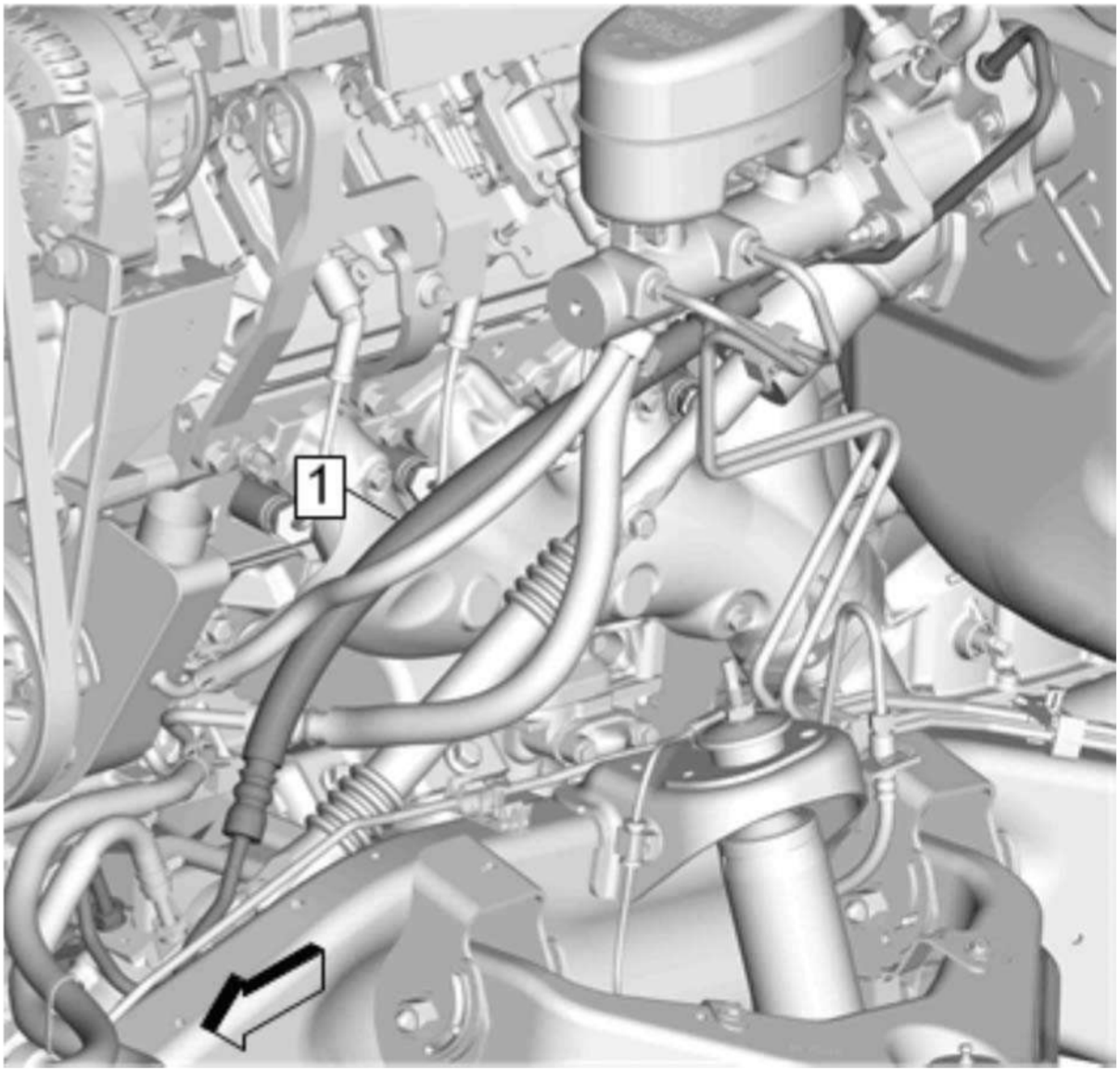

Fig. 70: Power Steering Gear Inlet Hose

cardiagn.com

Courtesy of GENERAL MOTORS COMPANY

1. Position the power steering gear inlet hose (1) on the vehicle.

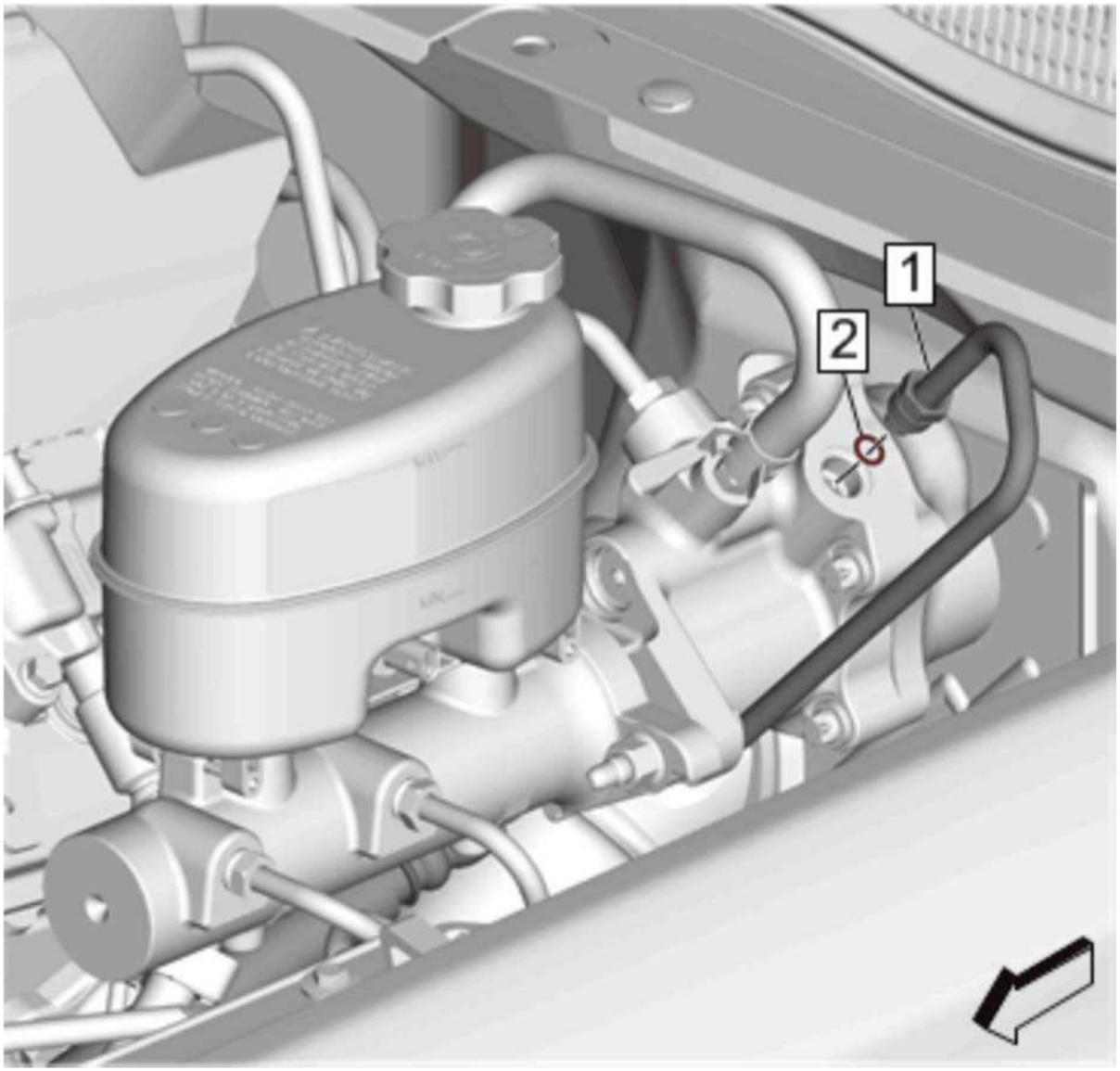

Fig. 71: Power Steering Gear Inlet Hose
Courtesy of GENERAL MOTORS COMPANY

cardiagn.com

NOTE: **Apply NEW power steering fluid to the power steering gear inlet hose seal to aid in installation.**

2. Install Power Steering Gear Inlet Hose Seal (2).

   Install a NEW seal.

CAUTION: **Refer to Component Fastener Tightening Caution .**

NOTE: **Start both power steering gear inlet hose fittings by hand before tightening either fitting to specification.**

3. Install Power Steering Gear Inlet Hose (1) @Power Brake Booster and tighten 34 N.m (25 lb ft)

cardiagn.com

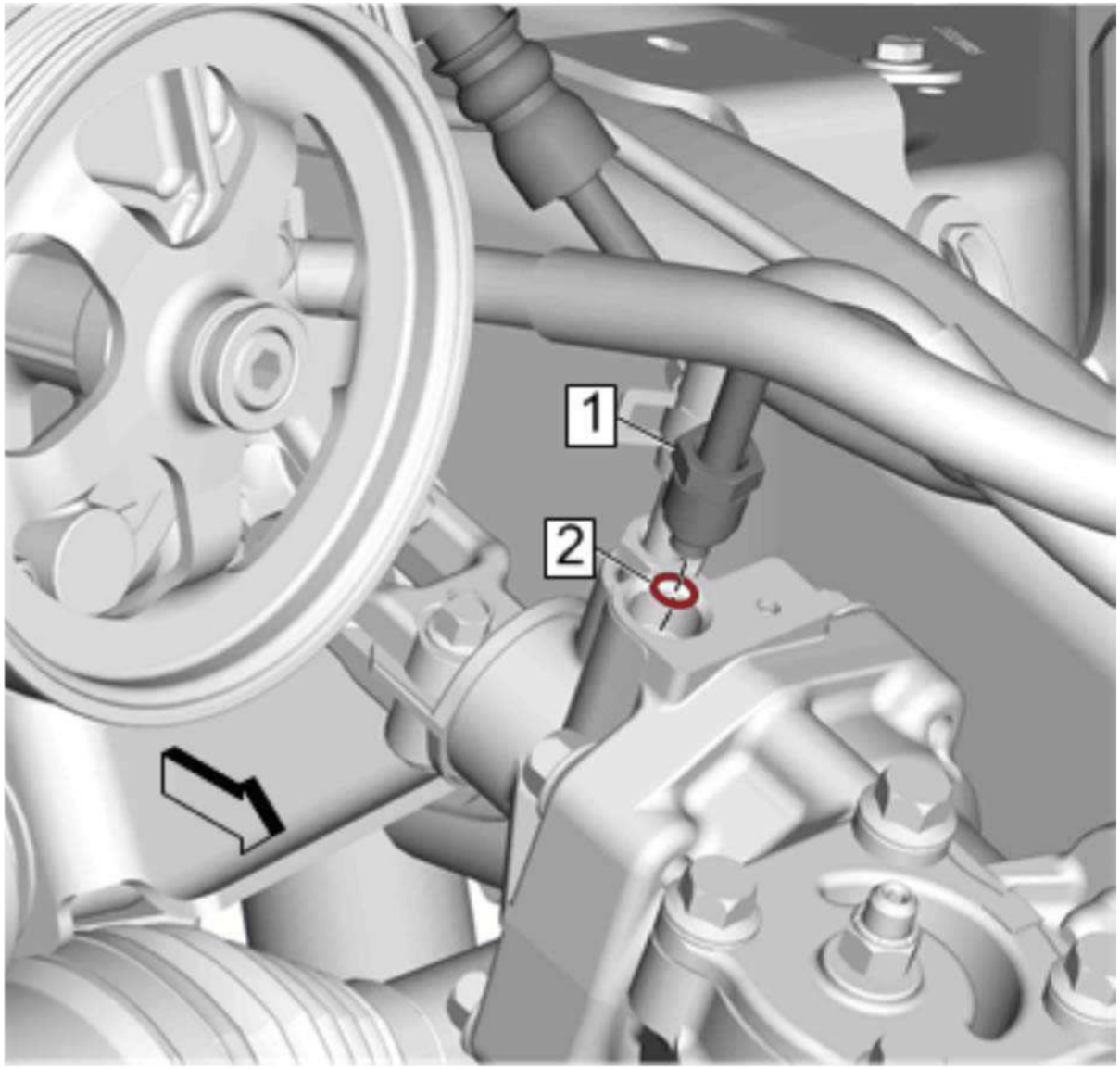

Fig. 72: Power Steering Gear Inlet Hose
Courtesy of GENERAL MOTORS COMPANY

NOTE: **Apply NEW power steering fluid to the power steering gear inlet hose seal to aid in installation.**

4. Install Power Steering Gear Inlet Hose Seal (2).

cardiagn.com

Install a NEW seal.

5. Install Power Steering Gear Inlet Hose (1) @Steering Gear and tighten 34 N.m (25 lb ft)
6. Fill and bleed the power steering system. **Power Steering System Bleeding**

POWER STEERING GEAR OUTLET PIPE/HOSE REPLACEMENT (HEAVY DUTY)

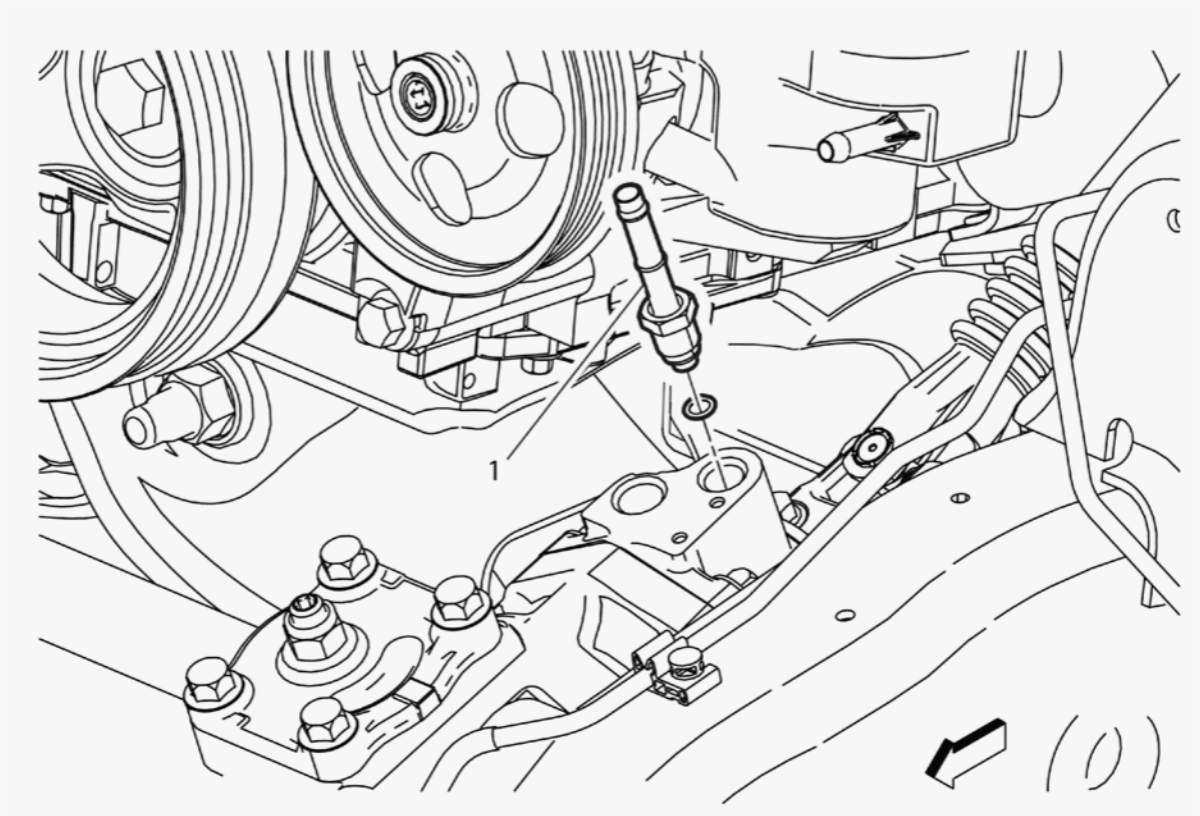

Fig. 73: Power Steering Gear Outlet Pipe/Hose (Heavy Duty With L96, LC8, LML)
Courtesy of GENERAL MOTORS COMPANY

Callout	Component Name
Preliminary Procedure	
Remove Power Steering Fluid Cooler Hose@Steering Gear **Power Steering Fluid Cooler Replacement (Chevrolet, GMC, Heavy Duty)Power Steering Fluid Cooler Replacement (Cadillac, Heavy Duty)**	

cardiagn.com

Callout	Component Name
	Power Steering Gear Outlet Pipe **CAUTION:** **Refer to Component Fastener Tightening Caution .** **CAUTION:** **Refer to Power Steering Hose Disconnected Caution .**
1	**Procedure** 1. DISCARD the seal. 2. Install a NEW seal. 3. Fill and bleed the power steering system. **Power Steering System Bleeding** **NOTE:** • **The power steering system hoses are not shown for clarity. It is NOT necessary to disconnect**

cardiagn.com

Callout	Component Name
	any hoses other than the power steering fluid cooler hose attached to the power steering gear outlet pipe. • Apply NEW power steering fluid to the power steering gear outlet pipe seal to aid in installation. **Tighten** 34 N.m (25 lb ft)

ELECTRIC BELT DRIVE RACK AND PINION STEERING GEAR REPLACEMENT (LIGHT DUTY)

Special Tools

CH-42640 Steering Column Anti-Rotation Pin

Equivalent regional tools:**Special Tools**

Removal Procedure

cardiagn.com

CAUTION: **Electrostatic discharge (ESD) can damage many solid-state electrical components. ESD susceptible components may or may not be labeled with the ESD symbol. Handle all electrical components carefully. Use the following precautions in order to avoid ESD damage:**

- **Touch a metal ground point in order to remove your body's static charge before servicing any electronic component; especially after sliding across the vehicle seat.**
- **Do not touch exposed terminals. Terminals may connect to circuits susceptible the ESD damage.**
- **Do not allow tools to contact exposed terminals when servicing connectors.**
- **Do not remove components from their protective packaging until required to do so.**
- **Avoid the following actions unless required by the diagnostic procedure:**
  - **Jumpering or grounding of the components or connectors.**
  - **Connecting test equipment probes to components or connectors. Connect the ground lead first when using test probes.**
- **Ground the protective packaging of any component before opening. Do not rest solid-state components on metal workbenches, or on top of TVs, radios, or other electrical devices.**

CAUTION: **During removal and installation, all EPS components including mechanical and/or electrical is extremely susceptible to damage. Dropping or prying on any EPS component may cause internal damage. If damage occurs or a part is dropped, the EPS component must be replaced.**

CAUTION: **Care must be taken during removal and installation of the Electronic Power Steering (EPS) components to not hit or break the EPS motor/controller module or module harness connectors. If the EPS motor/ controller module or module connectors are damaged, the complete component must be replaced.**

CAUTION: **With wheels of the vehicle facing straight ahead, secure the steering wheel utilizing steering column anti-rotation pin, steering column lock, or a strap to prevent rotation. Locking of the steering column will prevent damage and a possible malfunction of the SIR system. The steering wheel must be secured in position before disconnecting the following components:**

- **The steering column**
- **The intermediate shaft(s)**
- **The steering gear**

cardiagn.com

After disconnecting these components, do not rotate the steering wheel or move the front tires and wheels. Failure to follow this procedure may cause the SIR coil assembly to become un-centered and cause possible damage to the SIR coil. If you think the SIR coil has become un-centered, refer to your specific SIR coil's centering procedure to re-center SIR Coil.

1. With the front wheels of the vehicle in the straight ahead position, use the **CH-42640** anti-rotation pin to lock the steering column.
2. Raise and support the vehicle. **Lifting and Jacking the Vehicle**
3. Remove the front tire and wheel assemblies. **Tire and Wheel Removal and Installation (6-Lug Wheel)** **Tire and Wheel Removal and Installation (8-Lug Wheel)**
4. Remove the steering gear skid shield and shield brackets. **Steering Gear Skid Shield Replacement**
5. Separate Intermediate Steering Shaft@Steering Gear **Intermediate Steering Shaft Replacement**

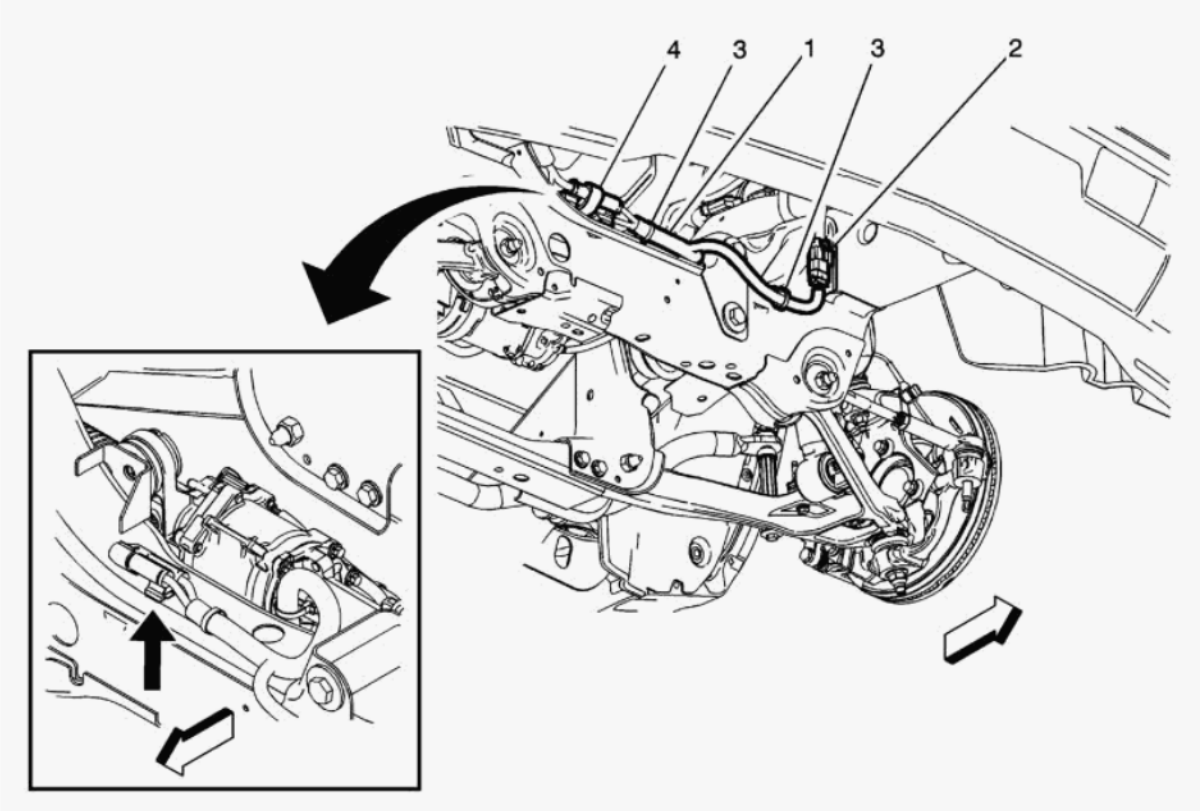

Fig. 74: Power Steering Control Module Wiring Harness
Courtesy of GENERAL MOTORS COMPANY

cardiagn.com

6. Before removing the power steering control module wiring harness (1), inspect the harness for damage. The harness is NOT repairable. Do NOT attempt to repair the harness under any circumstances. If the harness is damaged then the harness MUST be replaced. **Power Steering Control Module Wiring Harness Replacement (Light Duty)**

NOTE: **Do NOT remove the control module wiring harness connector retainers from the front frame crossmember at either connector position. Instead, after disconnecting the vehicle body wiring harness connectors from the control module wiring harness connectors, depress the tab on the retainers and slide the control module wiring harness connectors off of the retainers.**

7. Disconnect the vehicle body wiring harness connector (2) located on the left side of the front frame crossmember from the control module wiring harness (1). **CPA Connectors**
8. Disconnect the vehicle body wiring harness connector (4) located on the right side of the front frame crossmember from the control module wiring harness (1).
9. Depress the tabs on the control module wiring harness connector retainers and slide the connectors off of the retainers leaving the retainers in the front frame crossmember.

NOTE: **If the steering gear or control module wiring harness is being replaced then it is NOT necessary to mark the position and orientation of the control module wiring harness tie strap clips. The NEW steering gear or control module wiring harness will come with NEW clips already installed correctly.**

10. Before removing the control module wiring harness tie strap clips (3) from the front frame crossmember, mark the position of each clip on the wiring harness. Once the wiring harness is removed, the clips cannot be reused. Use NEW clips only and place the NEW clips in the same position and orientation as the old clips.
11. Remove the control module wiring harness tie strap clips (3) from the front frame crossmember.
12. Separate Steering Linkage Outer Tie Rod@Steering Knuckle **Steering Linkage Outer Tie Rod Replacement (Light Duty)**
13. Support the steering gear with adjustable stands.

cardiagn.com

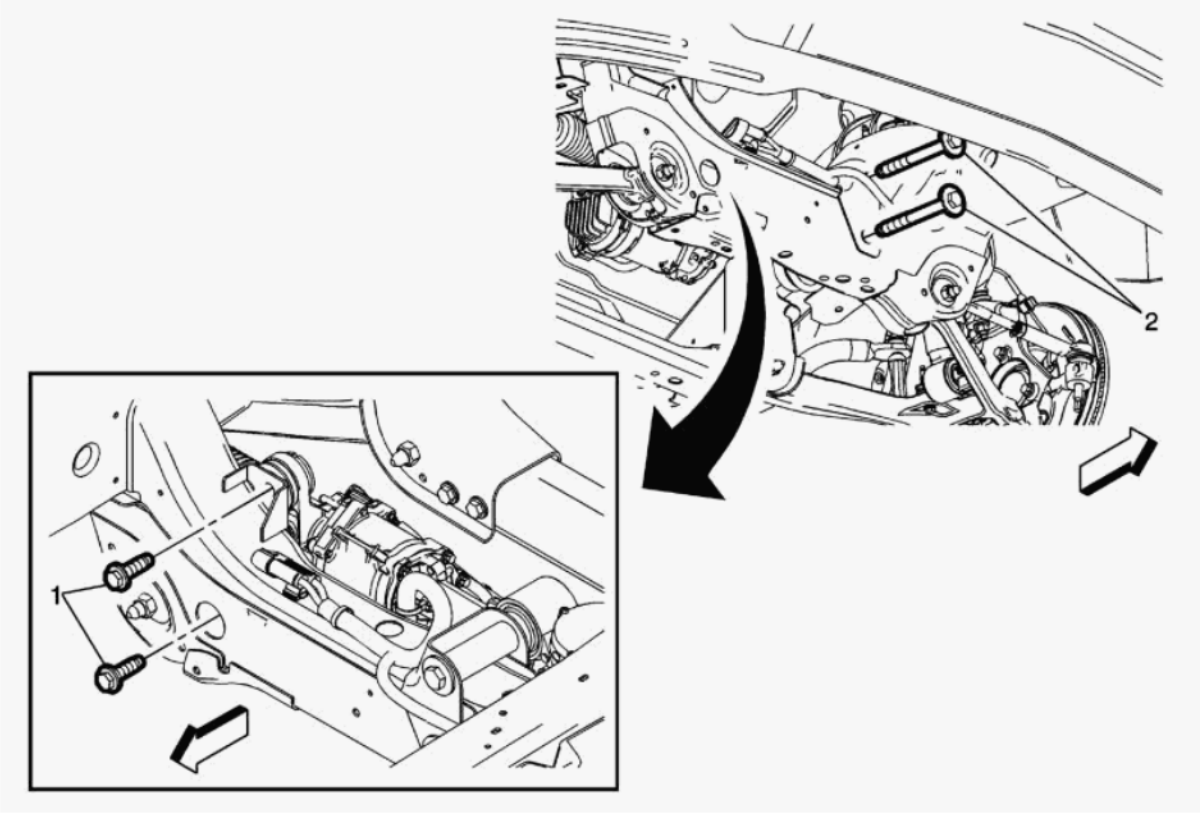

Fig. 75: Steering Gear Bolts
Courtesy of GENERAL MOTORS COMPANY

14. Remove the steering gear bolts (1) from the right side of the front frame.
15. Remove the steering gear bolts (2) from the left side of the front frame.

cardiagn.com

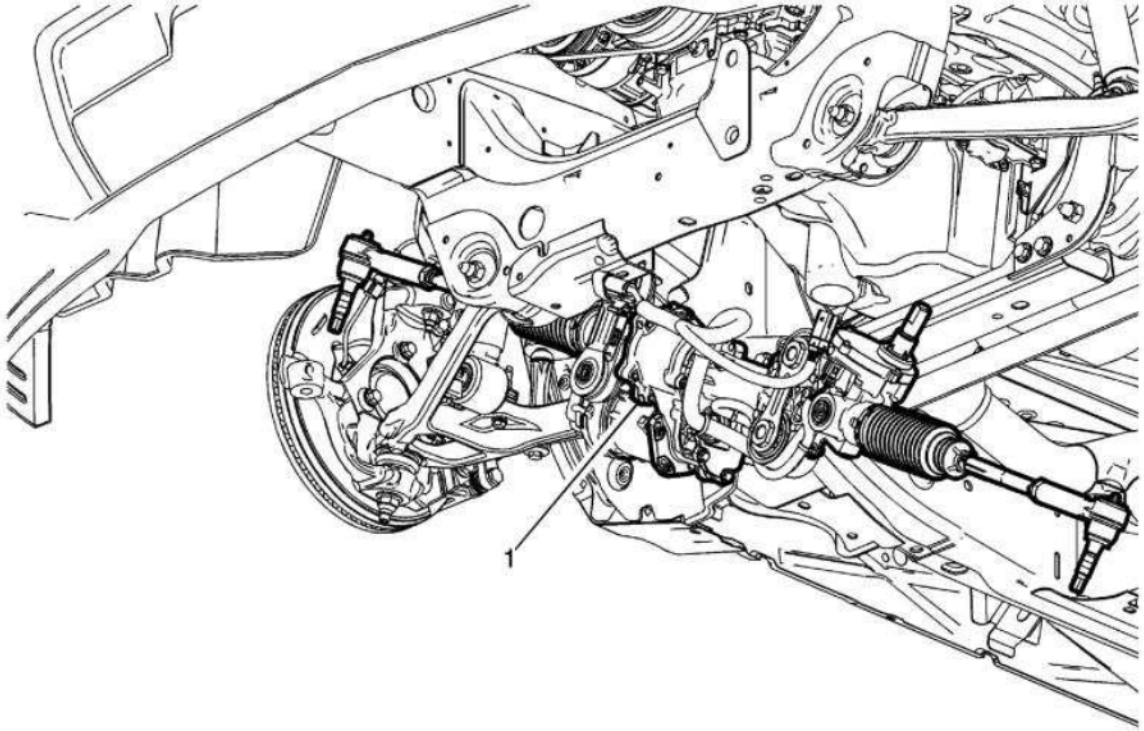

Fig. 76: Electric Belt Drive Rack And Pinion Steering Gear
Courtesy of GENERAL MOTORS COMPANY

16. Move the steering gear (1) as far to the right side of the vehicle as possible. Once the left side steering linkage outer tie rod clears the left side front lower control arm, tilt the steering gear downward through the front frame and remove the steering gear from the vehicle.
17. Once removed from the vehicle, inspect the steering gear housing for signs of physical damage. If ANY physical damage to the steering gear housing is present, replace the steering column. **Steering Column Replacement (N33, N37)** **Steering Column Replacement (N38)**

Installation Procedure

CAUTION: During removal and installation, all EPS components including mechanical and/or electrical is extremely susceptible to damage. Dropping or prying on any EPS component may cause internal damage. If damage occurs or a part is dropped, the EPS component must be replaced.

CAUTION: Care must be taken during removal and installation of the Electronic Power Steering (EPS) components to not

cardiagn.com

hit or break the EPS motor/controller module or module harness connectors. If the EPS motor/ controller module or module connectors are damaged, the complete component must be replaced.

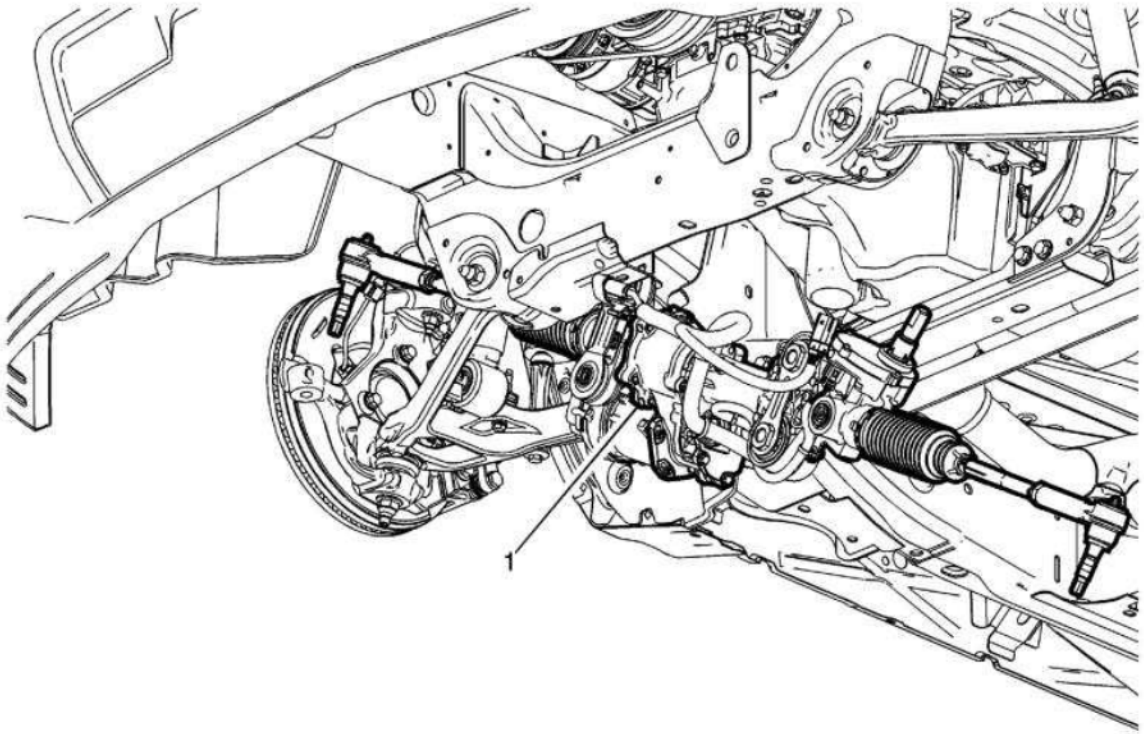

Fig. 77: Electric Belt Drive Rack And Pinion Steering Gear
Courtesy of GENERAL MOTORS COMPANY

NOTE: **Ensure the power steering control module wiring harness is NOT trapped between the steering gear and the front frame crossmember while installing the steering gear. The wiring harness should be positioned on top of the steering gear during installation and then set on top of the front frame crossmember before the steering gear bolts are installed.**

1. Tilt the steering gear (1) upward and move the steering gear through the front frame toward the right side of the vehicle as far as possible until the left side steering linkage outer tie rod clears the left side front lower control arm. Then move the steering gear toward the left side of the vehicle until the steering gear is in the correct position against the front frame.

cardiagn.com

2. Support the steering gear with adjustable stands.

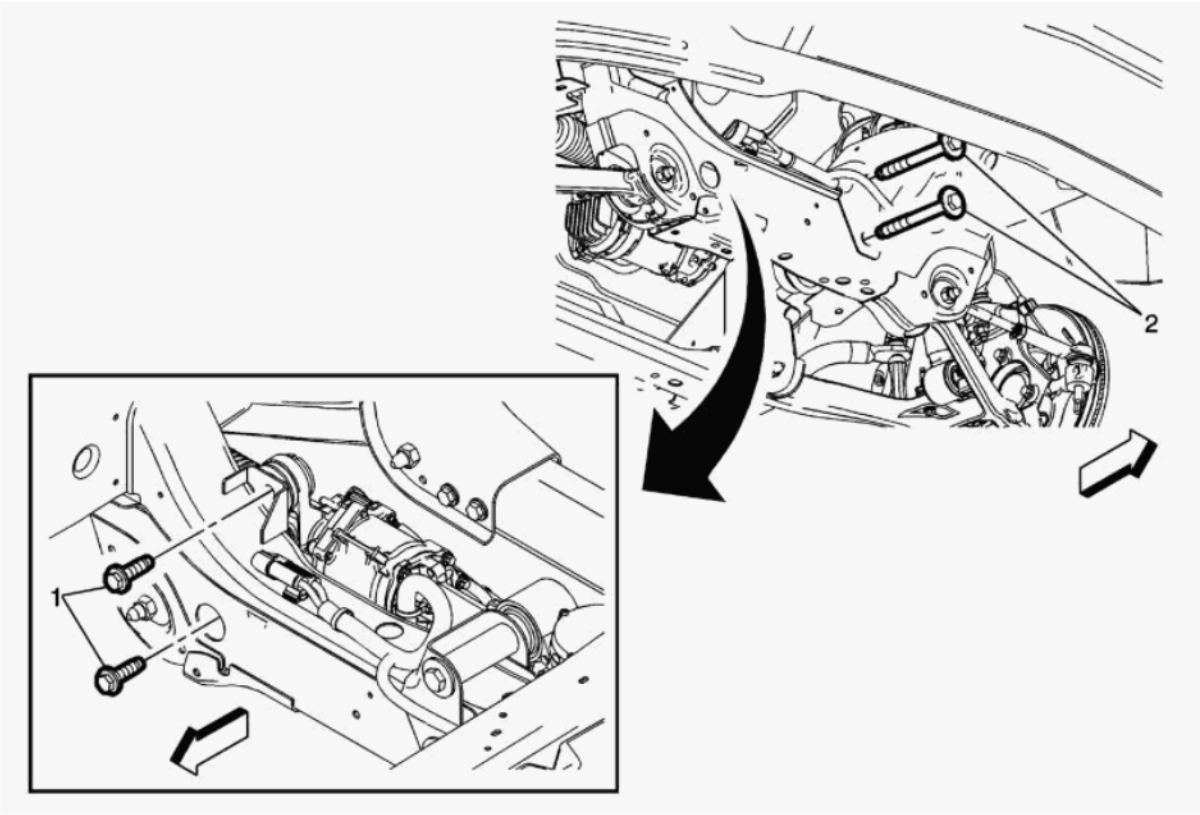

Fig. 78: Steering Gear Bolts
Courtesy of GENERAL MOTORS COMPANY

NOTE: **Start all steering gear bolts by hand before tightening to specification.**

3. Start the steering gear bolts (2) at the left side of the front frame.
4. Start the steering gear bolts (1) at the right side of the front frame.

CAUTION: **Refer to Fastener Caution**

5. Tighten the steering gear bolts (2) at the left side of the front frame to 220 N.m (162 lb ft).
6. Tighten the steering gear bolts (1) at the right side of the front frame to 100 N.m (74 lb ft).

cardiagn.com

7. Remove the adjustable stands from underneath the steering gear.
8. Install Steering Linkage Outer Tie Rod@Steering Knuckle **Steering Linkage Outer Tie Rod Replacement (Light Duty)**

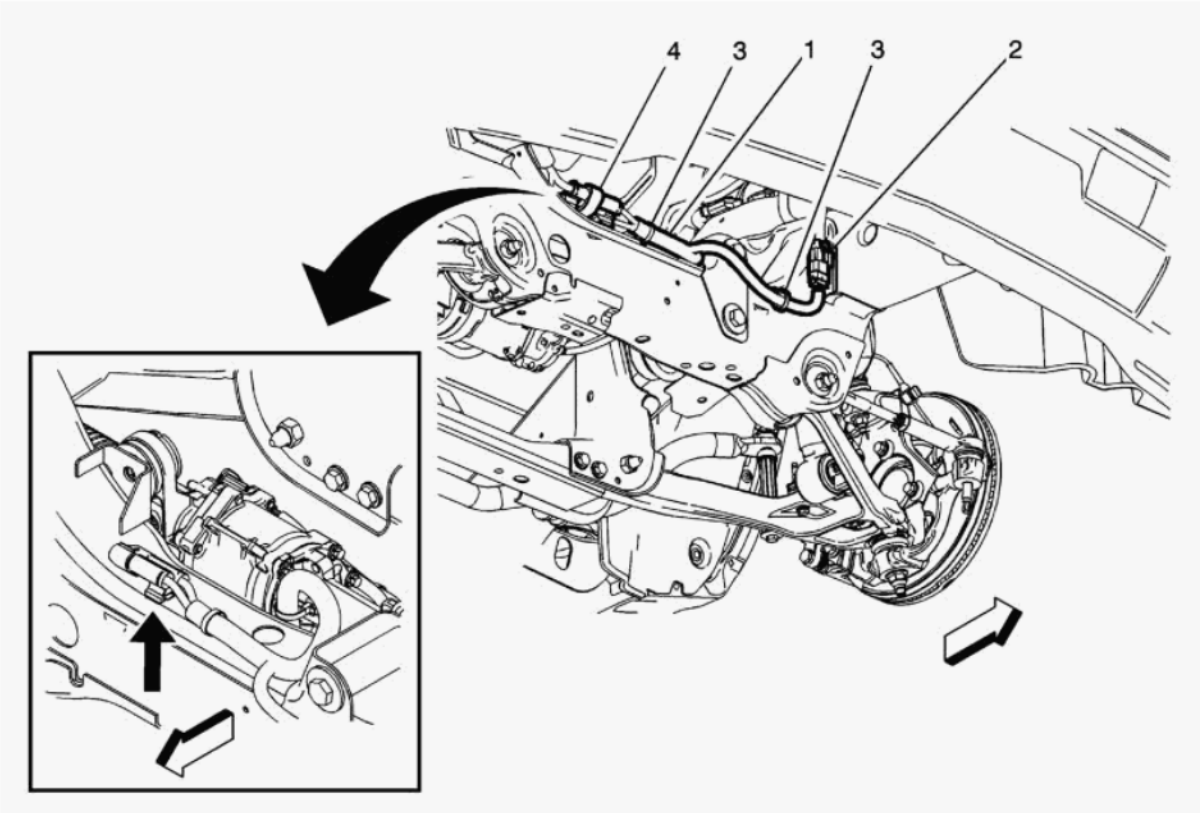

Fig. 79: Power Steering Control Module Wiring Harness
Courtesy of GENERAL MOTORS COMPANY

9. Route the power steering control module wiring harness (1) as previously noted during removal and install the control module wiring harness tie strap clips (3) in the front frame crossmember.
10. Slide the control module wiring harness connectors onto the retainers that were left in the front frame crossmember until they lock.
11. Connect the vehicle body wiring harness connector (4) located on the right side of the front frame crossmember to the control module wiring harness (1).
12. Connect the vehicle body wiring harness connector (2) located on the left side of the front frame crossmember to the control module wiring harness (1). **CPA Connectors**
13. Install Intermediate Steering Shaft@Steering Gear **Intermediate Steering Shaft Replacement**

cardiagn.com

14. Install the steering gear skid shield brackets and shield. **Steering Gear Skid Shield Replacement**
15. Install the front tire and wheel assemblies. **Tire and Wheel Removal and Installation (6-Lug Wheel)** **Tire and Wheel Removal and Installation (8-Lug Wheel)**
16. Program the power steering control module. **Power Steering Control Module Programming and Setup**
17. Measure and adjust the front toe. **Wheel Alignment - Steering Wheel Angle and/or Front Toe Adjustment**

HYDRAULIC RECIRCULATING BALL STEERING GEAR REPLACEMENT (HEAVY DUTY)

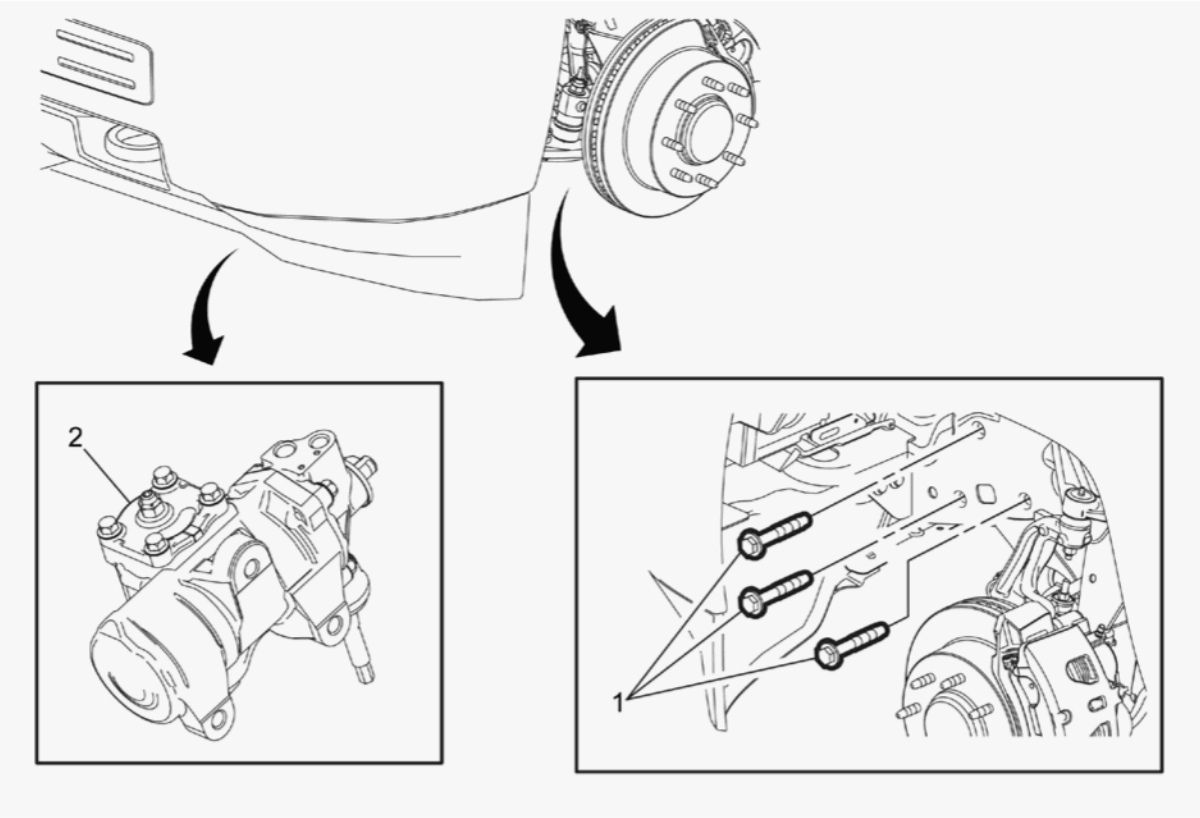

Fig. 80: Hydraulic Recirculating Ball Steering Gear (Heavy Duty)
Courtesy of GENERAL MOTORS COMPANY

Callout	Component Name
Preliminary Procedures	

cardiagn.com

Callout	Component Name
1. Separate Intermediate Steering Shaft@Steering Gear **Intermediate Steering Shaft Replacement** 2. Remove Power Steering Gear Inlet Hose@Steering Gear **Power Steering Gear Inlet Pipe/Hose Replacement (Heavy Duty)** 3. Remove Power Steering Gear Outlet Pipe @Steering Gear **Power Steering Gear Outlet Pipe/Hose Replacement (Heavy Duty)** 4. **Front Wheelhouse Liner Replacement - Left Side (Cadillac)** **Front Wheelhouse Liner Replacement - Left Side (GMC)** **Front Wheelhouse Liner Replacement - Left Side (Chevrolet)** 5. **Stabilizer Shaft Replacement (Heavy Duty)** 6. Separate Steering Linkage Relay Rod@Pitman Arm **Relay Rod Replacement (Heavy Duty)**	
1	Steering Gear Bolt (Qty: 3) **CAUTION:** **Refer to Fastener Caution .** **CAUTION:** **When re-installing or replacing the steering gear, it MUST be supported prior to tightening the steering gear fasteners. Failure to do so may result in incorrect installation**

cardiagn.com

Callout	Component Name
	of the steering gear, which will lead to inaccurate steering feedback for the driver. **Procedure** Support the steering gear prior to installing the steering gear bolts. **Tighten** 165 N.m (122 lb ft)
2	Hydraulic Recirculating Ball Steering Gear **Procedure** 1. Transfer components as necessary. 2. Fill and bleed the power steering system. **Power Steering System Bleeding** 3. Measure and adjust the front toe. **Wheel Alignment - Steering Wheel Angle and/or Front Toe Adjustment**

STEERING LINKAGE INNER TIE ROD REPLACEMENT (LIGHT DUTY)

cardiagn.com

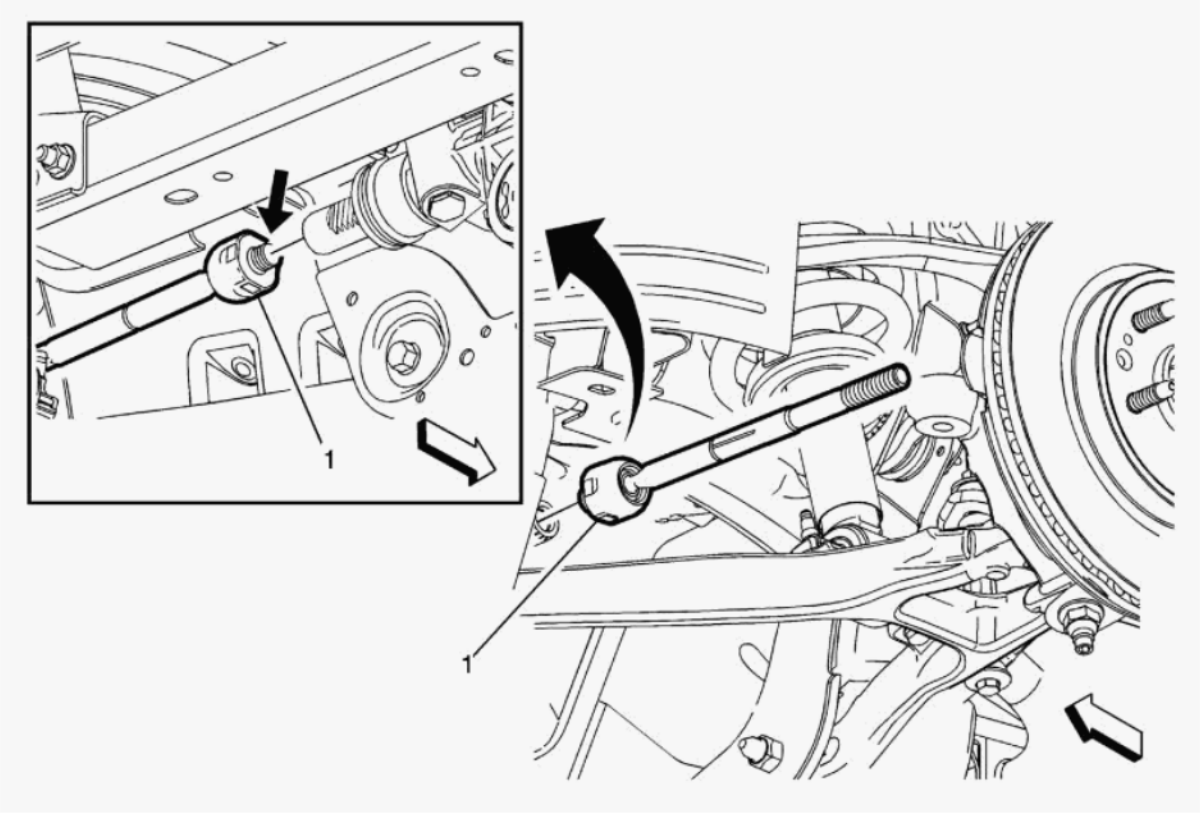

Fig. 81: Steering Linkage Inner Tie Rod (Light Duty)
Courtesy of GENERAL MOTORS COMPANY

Callout	Component Name
Preliminary Procedures 1. **Steering Gear Boot Replacement (Light Duty)** 2. After removing the steering gear boot, inspect the steering linkage inner tie rod for evidence of corrosion or contamination.If corrosion or contamination is evident, replace the steering gear. **Electric Belt Drive Rack and Pinion Steering Gear Replacement (Light Duty)**	
1	Steering Linkage Inner Tie Rod **CAUTION:**

cardiagn.com

Callout	Component Name
	Refer to Component Fastener Tightening Caution . **CAUTION:** **The pipe wrench must be placed at the input shaft end of the steering gear and positioned up against the inner tie rod housing. Placing the pipe wrench in any other location will cause damage to the steering gear.** **Procedure** 1. Place a pipe wrench on the input shaft end of the steering gear rack next to the steering linkage inner tie rod housing and the appropriate size wrench on the flats of the inner tie rod housing. 2. Rotate the steering linkage inner tie rod housing counterclockwise while holding the steering gear rack stationary until the inner tie rod separates from the rack. 3. Rotate the steering linkage inner tie rod housing clockwise while holding the steering gear rack stationary until the

cardiagn.com

Callout	Component Name
	inner tie rod tightens to the rack. **Tighten** 120 N.m (89 lb ft)

STEERING GEAR PITMAN SHAFT OVER-CENTER PRELOAD ADJUSTMENT - OFF VEHICLE (HEAVY DUTY)

1. Remove Steering Gear **Hydraulic Recirculating Ball Steering Gear Replacement (Heavy Duty)**
2. Remove Pitman Arm@Steering Gear **Pitman Arm Replacement (Heavy Duty)**

cardiagn.com

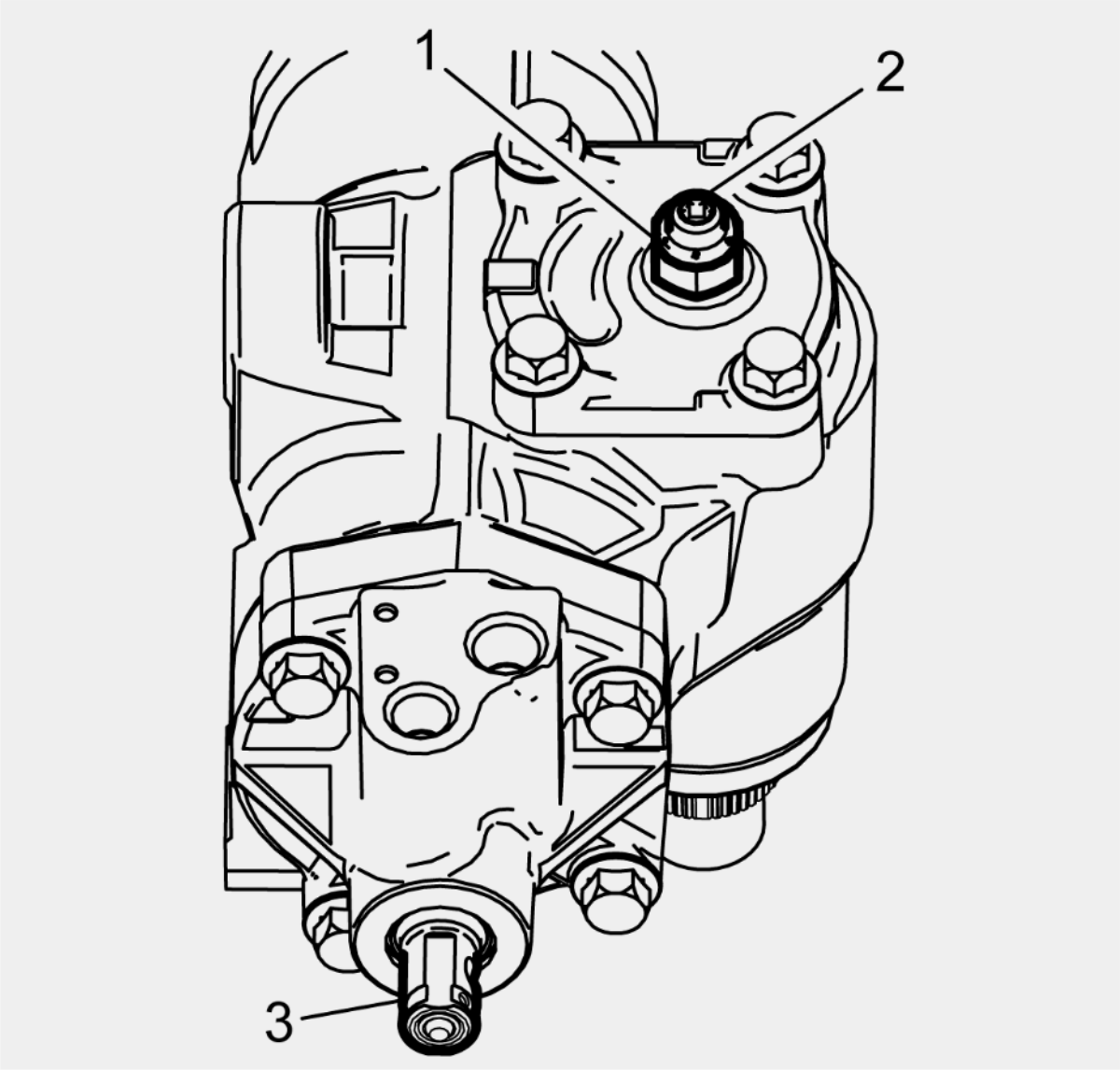

Fig. 82: Steering Gear Pitman Shaft Lash Adjuster Nut
Courtesy of GENERAL MOTORS COMPANY

3. Loosen the steering gear pitman shaft lash adjuster nut (1).
4. Turn the steering gear pitman shaft lash adjuster screw (2) counterclockwise until fully extended.
5. Turn the steering gear pitman shaft lash adjuster screw (2) clockwise 1 full turn.

cardiagn.com

6. Rotate the steering gear input shaft (3) from stop to stop using a ratchet and an appropriate socket or an appropriate crowfoot wrench while counting the number of turns.
7. Starting at either stop, turn the steering gear input shaft (3) back half the total number of turns counted previously.

   This is the "Center Position".

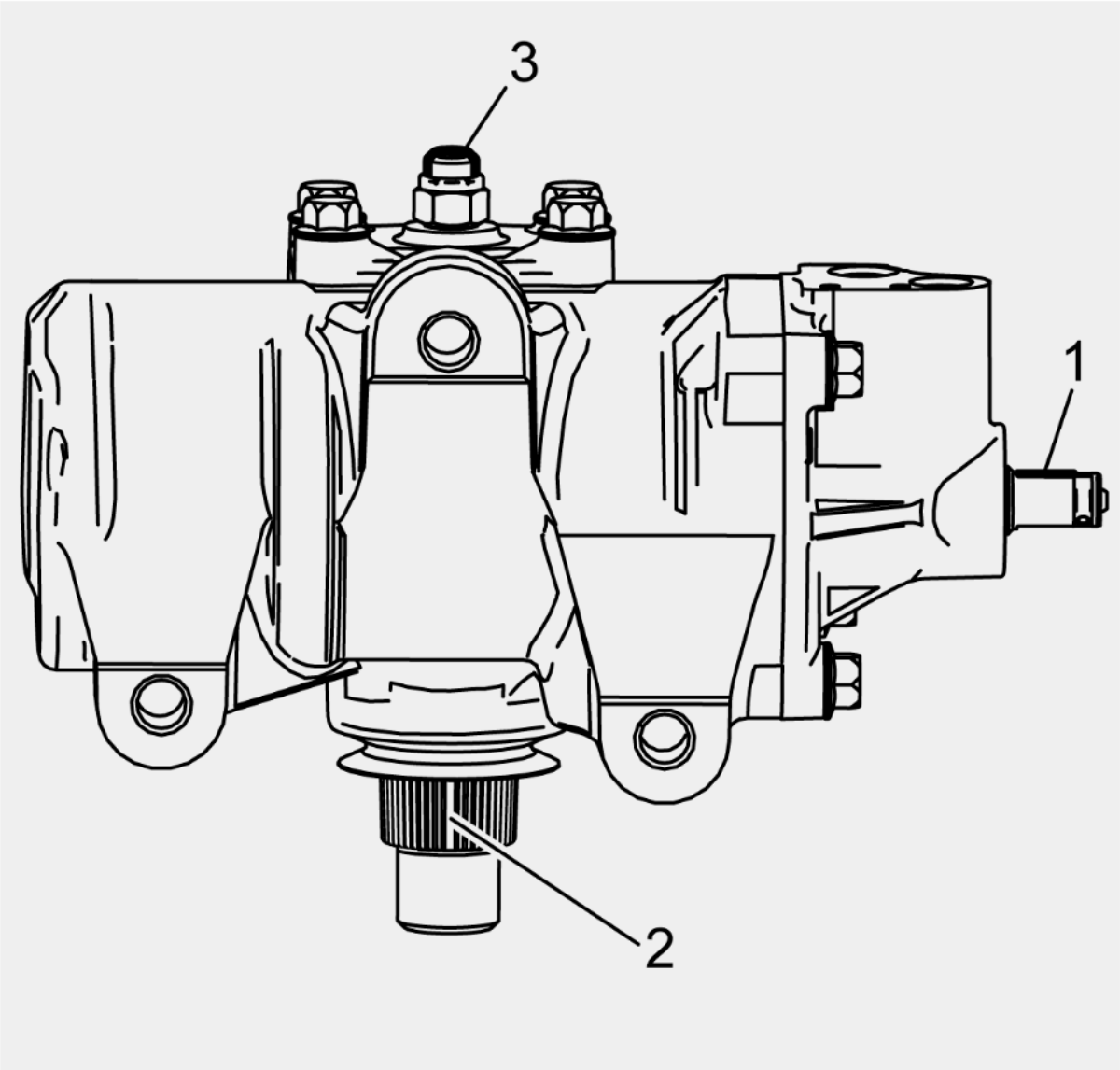

cardiagn.com

Fig. 83: Flat, Master Spline And Lash Adjuster Screw
Courtesy of GENERAL MOTORS COMPANY

8. Ensure the steering gear pitman shaft is in the "Center Position" by inspecting the following items:
    - The flat on the steering gear input shaft (1) faces upward.
    - The flat on the steering gear input shaft (1) is parallel with the steering gear side cover.
    - The master spline (2) on the steering gear pitman shaft is in line with the steering gear pitman shaft lash adjuster screw (3).

cardiagn.com

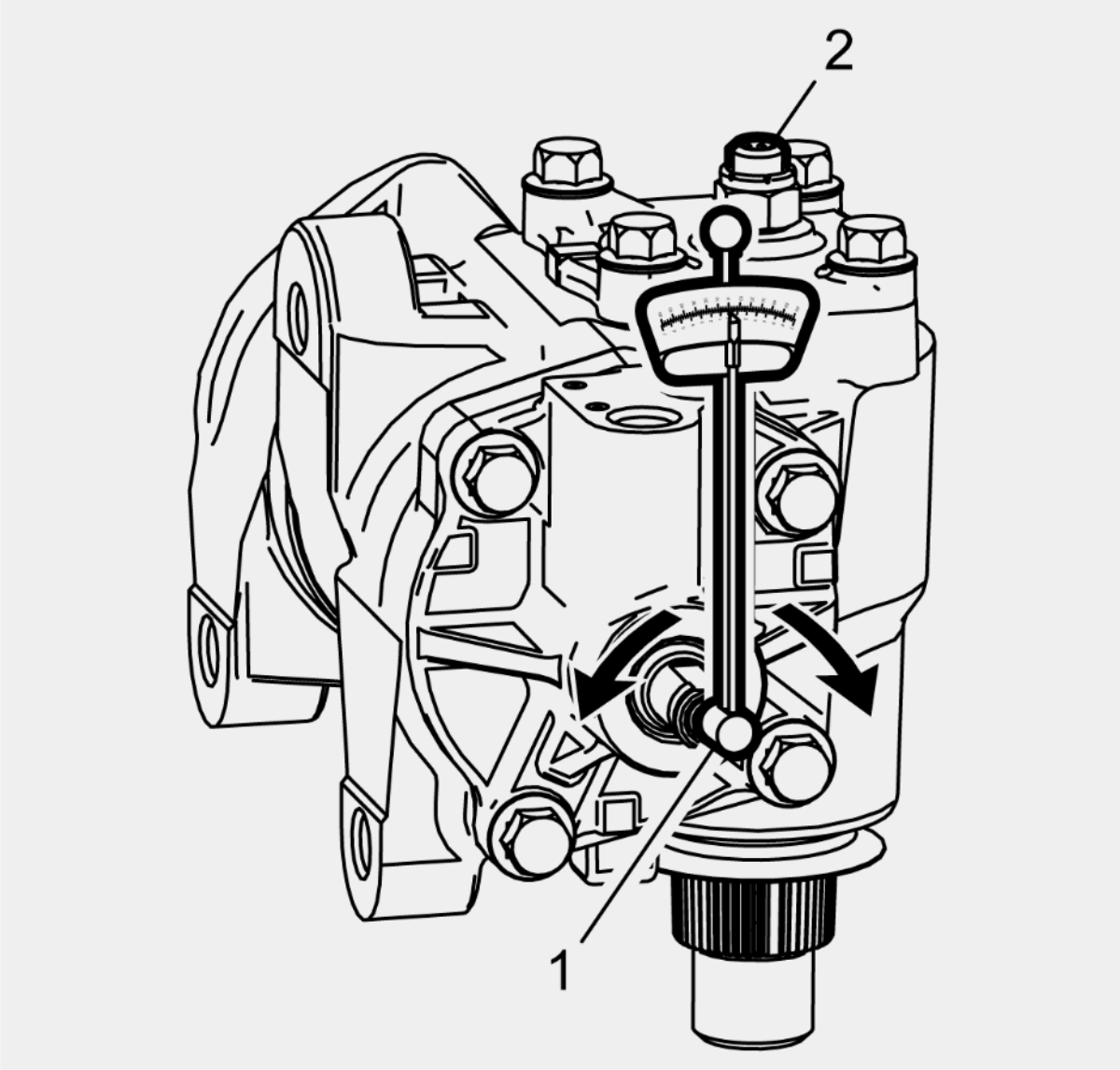

Fig. 84: Torque Wrench And Steering Gear Input Shaft
Courtesy of GENERAL MOTORS COMPANY

9. Place a torque wrench (1) on the steering gear input shaft with the handle in the vertical position.

NOTE: **The steering gear input shaft MUST rotate smoothly and MUST NOT stick or bind.**

cardiagn.com

10. Rotate the steering gear input shaft 300 degrees from each side of the input shaft "Center Position".
11. Record the average turning torque from the -300 degree to +300 degree sweep. This reading is called the "Off-Center Friction".
12. The "Off-Center Friction" reading MUST be 0.4-1.1 N.m (4-10 lb in).

    If the reading is outside of this range, replace or repair the steering gear assembly.

13. To increase the "Over-Center Preload Torque", turn the steering gear pitman shaft lash adjuster screw (2) clockwise.
14. Continue adjusting the lash adjuster screw (2) until the "Over-Center Preload Torque" reading is 0.65-1.1 N.m (6-10 lb in) above the average "Off-Center Friction" reading.

    EXAMPLE: If the recorded value in step 11 was.8 N.m (7 lb in) then adjust the lash adjuster screw (2) until the "Over-Center Preload Torque" is 1.45-1.9 N.m (13-17 lb in).

cardiagn.com

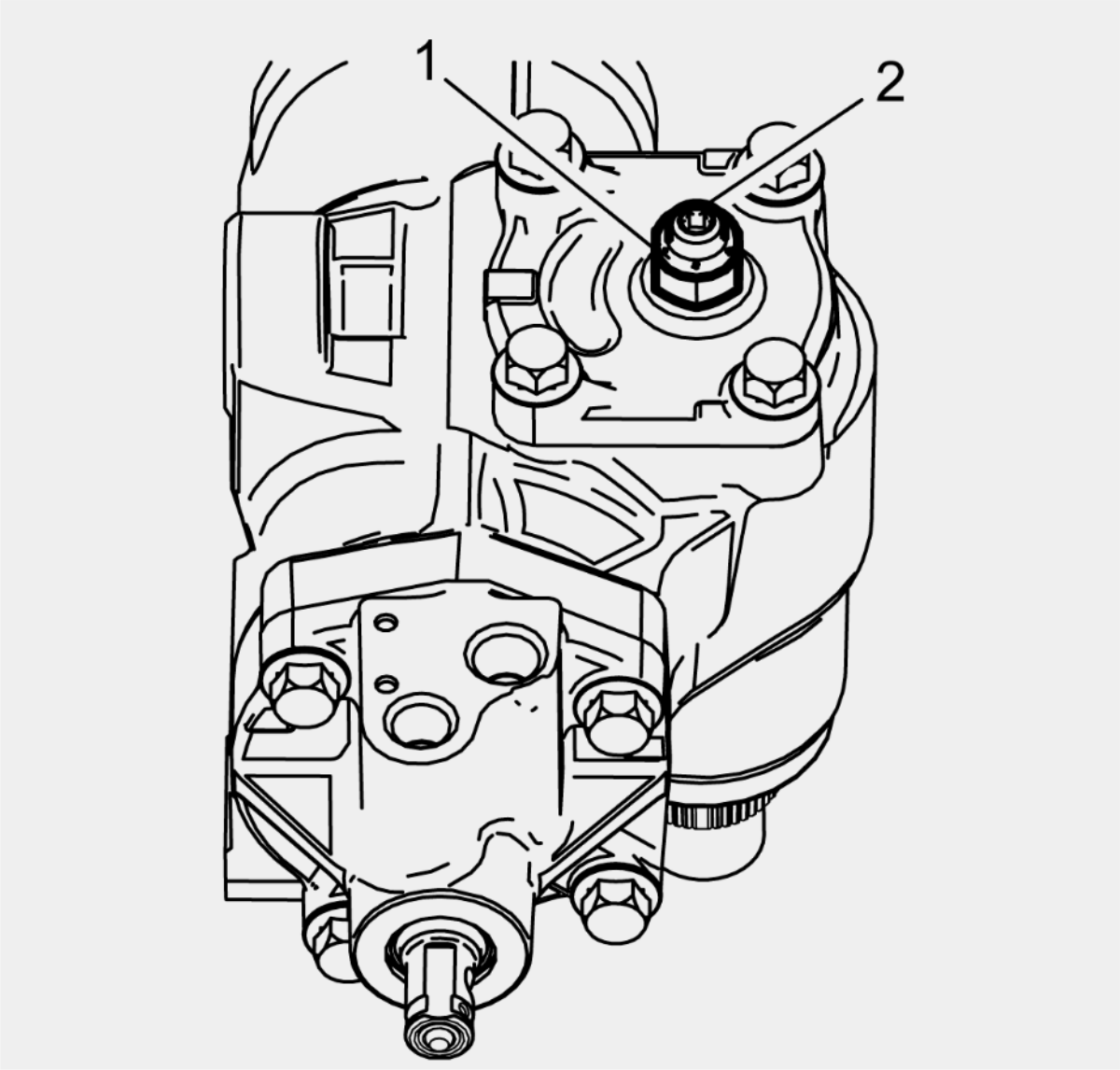

Fig. 85: Adjuster Screw And Nut
Courtesy of GENERAL MOTORS COMPANY

CAUTION: Refer to Fastener Caution .

NOTE: Prevent the steering gear pitman shaft lash adjuster screw (2) from turning while tightening the steering

cardiagn.com

gear pitman shaft lash adjuster nut (1).

15. Tighten the steering gear pitman shaft lash adjuster nut (1) to 85-103 N.m (63-75 lb ft).
16. Install Pitman Arm@Steering Gear **Pitman Arm Replacement (Heavy Duty)**
17. Install Steering Gear **Hydraulic Recirculating Ball Steering Gear Replacement (Heavy Duty)**

STEERING GEAR PITMAN SHAFT REPLACEMENT (HEAVY DUTY)

Disassembly Procedure

1. Remove Steering Gear **Hydraulic Recirculating Ball Steering Gear Replacement (Heavy Duty)**

cardiagn.com

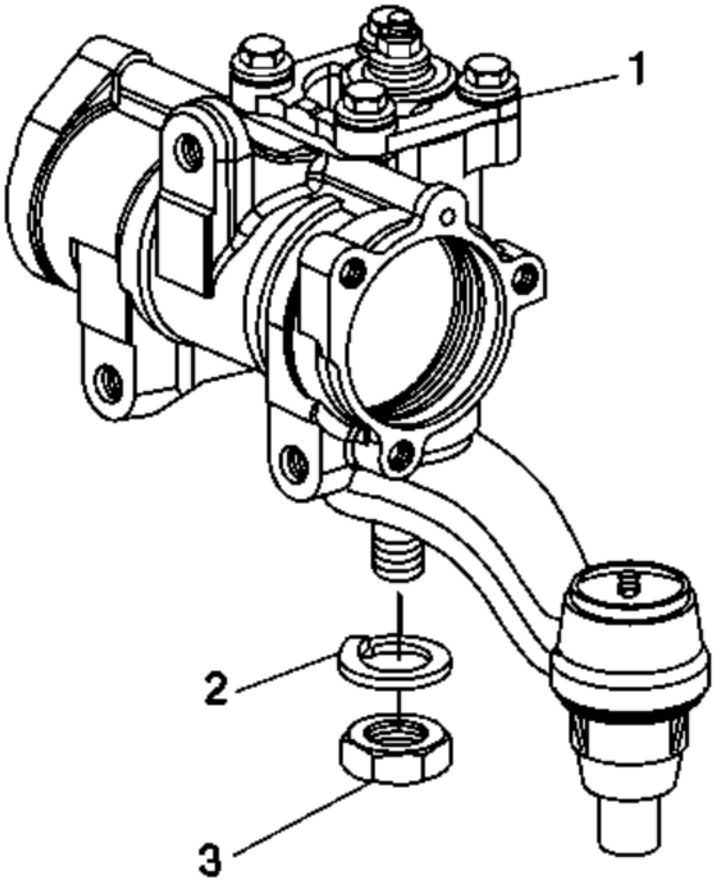

Fig. 86: Steering Gear Housing, Lock Washer And Nut
Courtesy of GENERAL MOTORS COMPANY

NOTE: Cleaning the entire steering gear of dirt and debris will ensure no contaminants enter the steering gear.

cardiagn.com

2. Remove any dirt or debris from the steering gear (1).
3. Remove the pitman arm nut (3).
4. Remove the pitman arm washer (2).
5. Clean the exposed end of the steering gear pitman shaft.
6. Use a wire brush to clean the steering gear pitman shaft splines.

cardiagn.com

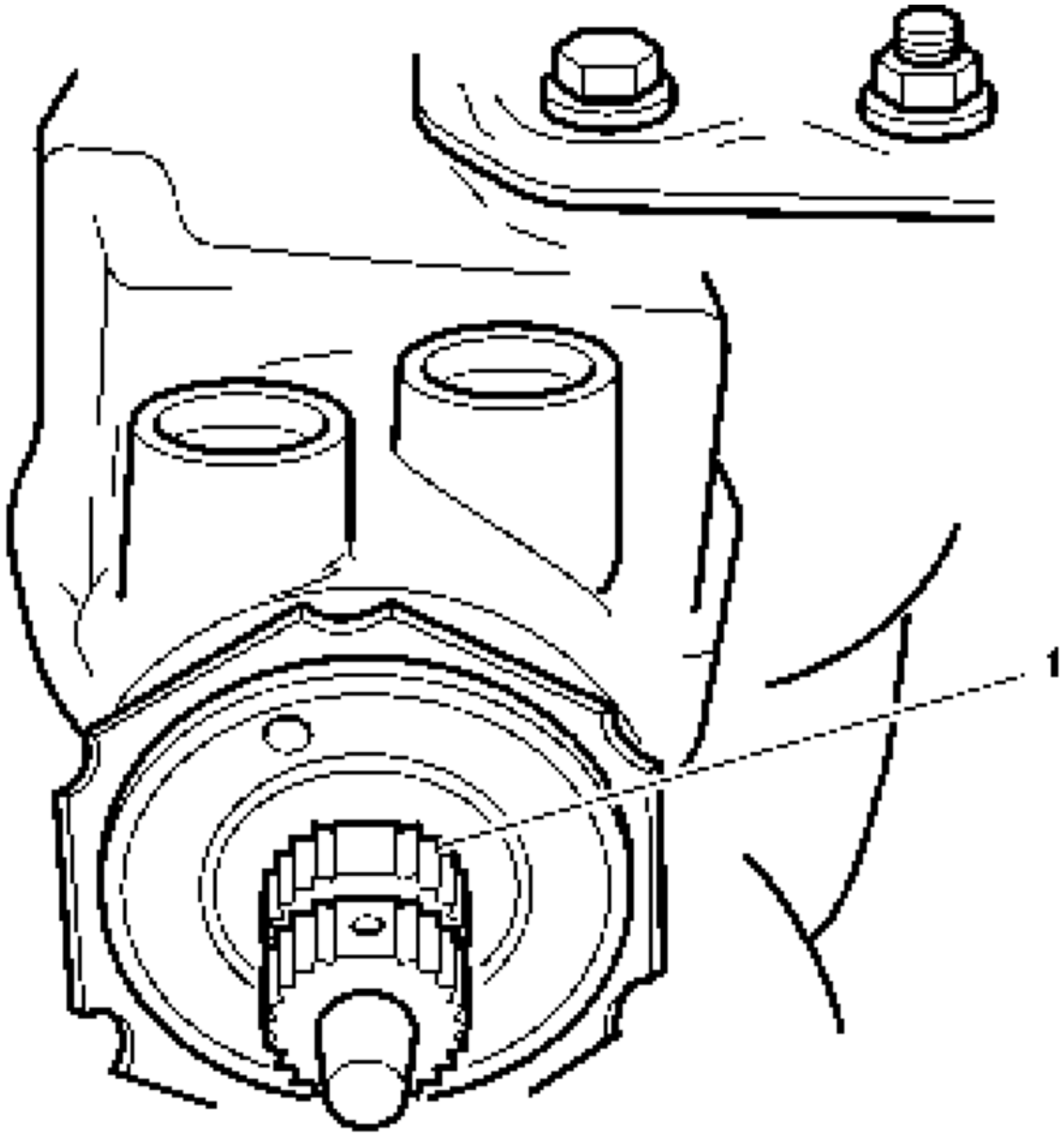

Fig. 87: Centering The Stub Shaft (670 Gear)
Courtesy of GENERAL MOTORS COMPANY

NOTE: **The steering gear pitman shaft will NOT clear the steering gear housing if the steering gear stub shaft is not centered.**

cardiagn.com

7. Use the following procedure to center the steering gear stub shaft (1):
    1. Rotate the steering gear stub shaft with a wrench from stop to stop.
    2. Count the total number of turns from stop to stop.
    3. Rotate the steering gear stub shaft back 1/2 of the total amount of turns.

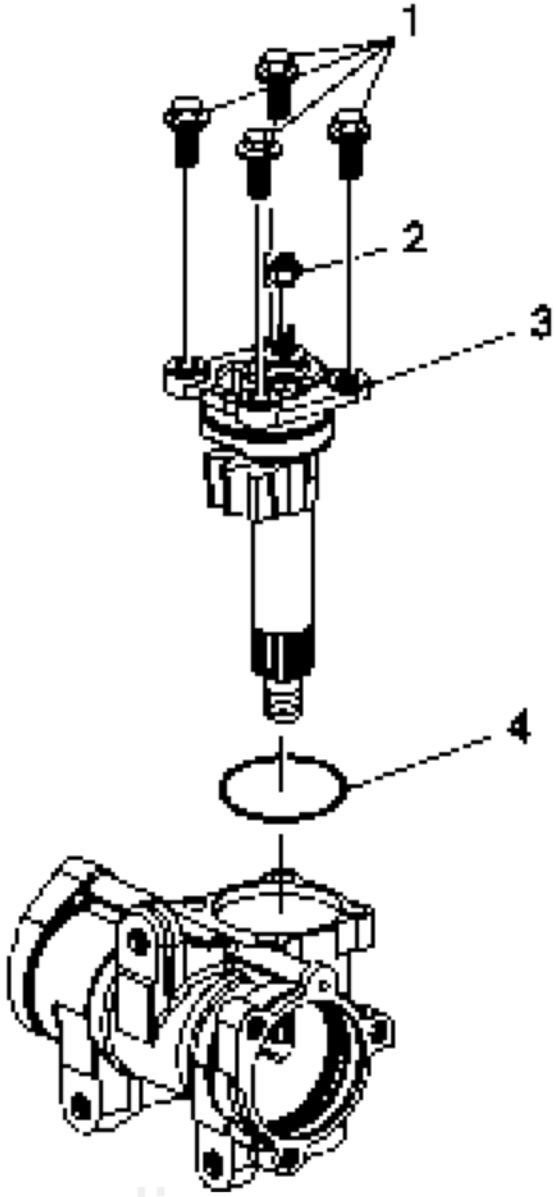

cardiagn.com

Fig. 88: View Of Pitman Shaft & Cover Assembly
Courtesy of GENERAL MOTORS COMPANY

NOTE: **When removing the steering gear pitman shaft, the pitman arm and the pitman arm components may fall from the steering gear housing. Support the pitman arm and the pitman arm components while removing the steering gear pitman shaft.**

8. Remove the steering gear pitman shaft housing cover bolts (1).
9. Remove the steering gear pitman shaft lash adjuster nut (2).
10. Remove the steering gear pitman shaft housing cover (3).
11. Remove the steering gear pitman shaft housing cover O-ring seal (4).

DISCARD the O-ring seal.

Assembly Procedure

cardiagn.com

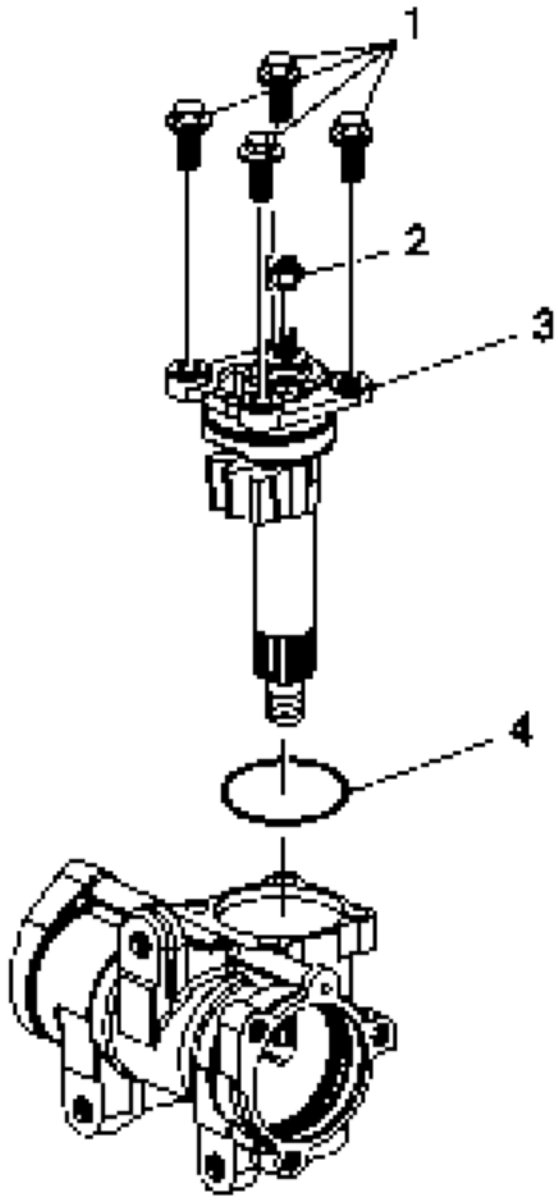

Fig. 89: View Of Pitman Shaft & Cover Assembly
Courtesy of GENERAL MOTORS COMPANY

1. Install a NEW steering gear pitman shaft housing cover O-ring seal (4).
2. Install the steering gear pitman shaft housing cover (3).

cardiagn.com

3. Install the steering gear pitman shaft lash adjuster nut (2).

CAUTION: **Refer to Fastener Caution .**

4. Install the steering gear pitman shaft housing cover bolts (1) and tighten to 57 N.m (42 lb ft).

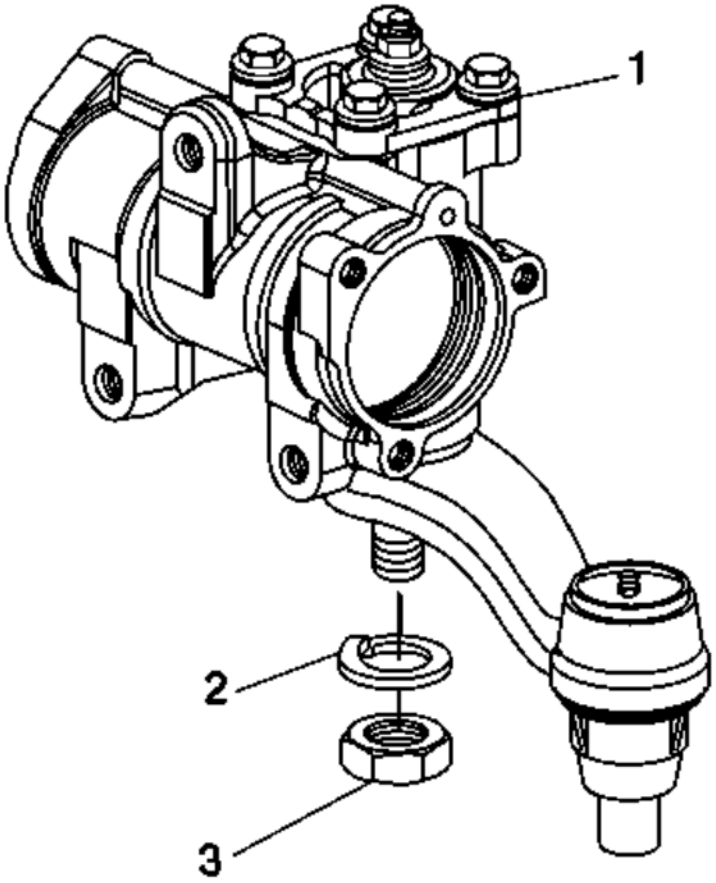

cardiagn.com

Fig. 90: Steering Gear Housing, Lock Washer And Nut
Courtesy of GENERAL MOTORS COMPANY

5. Install the pitman arm washer (2).
6. Install the pitman arm nut (3) and tighten to 370 N.m (273 lb ft).
7. Measure and adjust the steering gear pitman shaft over-center preload. **Steering Gear Pitman Shaft Over-Center Preload Adjustment - Off Vehicle (Heavy Duty)**
8. Install Steering Gear **Hydraulic Recirculating Ball Steering Gear Replacement (Heavy Duty)**

STEERING GEAR VALVE HOUSING REPLACEMENT (HEAVY DUTY)

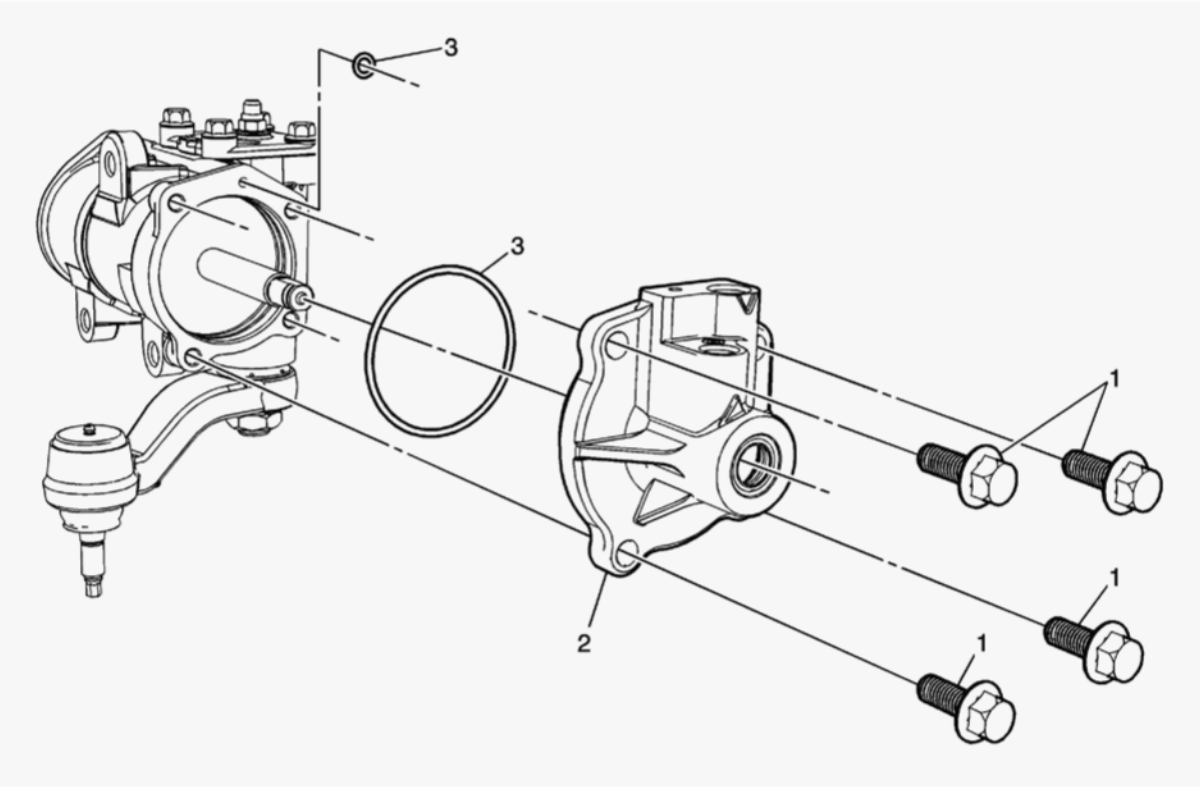

Fig. 91: View Of Stub Shaft Housing, O-Ring & Bolt
Courtesy of GENERAL MOTORS COMPANY

Callout	Component Name

cardiagn.com

Callout	Component Name
Preliminary Procedure Hydraulic Recirculating Ball Steering Gear Replacement (Heavy Duty)	
1	Steering Gear Valve Housing Bolt (Qty: 4) **CAUTION:** **Refer to** **Fastener Caution** . **Tighten** 62 N.m (46 lb ft)
2	Steering Gear Valve Housing **Procedure** Remove the steering gear coupling shaft seal.
3	Steering Gear Valve Housing O-Ring (Qty: 2) **Procedure** Grease the steering gear valve housing O-rings with the special grease supplied in the service kit.

POWER STEERING WIRING HARNESS EXTENSION HARNESS REPLACEMENT (LIGHT DUTY)

Removal Procedure

CAUTION: **Electrostatic discharge (ESD) can damage many solid-state electrical components. ESD susceptible components may or may not be labeled with the ESD symbol. Handle all electrical components carefully. Use the following precautions in order to avoid ESD damage:**

- **Touch a metal ground point in order to remove your body's static charge before servicing any electronic component; especially after sliding across the vehicle seat.**
- **Do not touch exposed terminals. Terminals may connect to circuits susceptible the ESD damage.**
- **Do not allow tools to contact exposed terminals when servicing connectors.**
- **Do not remove components from their protective packaging until required to do so.**
- **Avoid the following actions unless required by the diagnostic procedure:**
  - **Jumpering or grounding of the components or connectors.**

cardiagn.com

- **Connecting test equipment probes to components or connectors. Connect the ground lead first when using test probes.**
- **Ground the protective packaging of any component before opening. Do not rest solid-state components on metal workbenches, or on top of TVs, radios, or other electrical devices.**

1. Remove Steering Gear **Electric Belt Drive Rack and Pinion Steering Gear Replacement (Light Duty)**

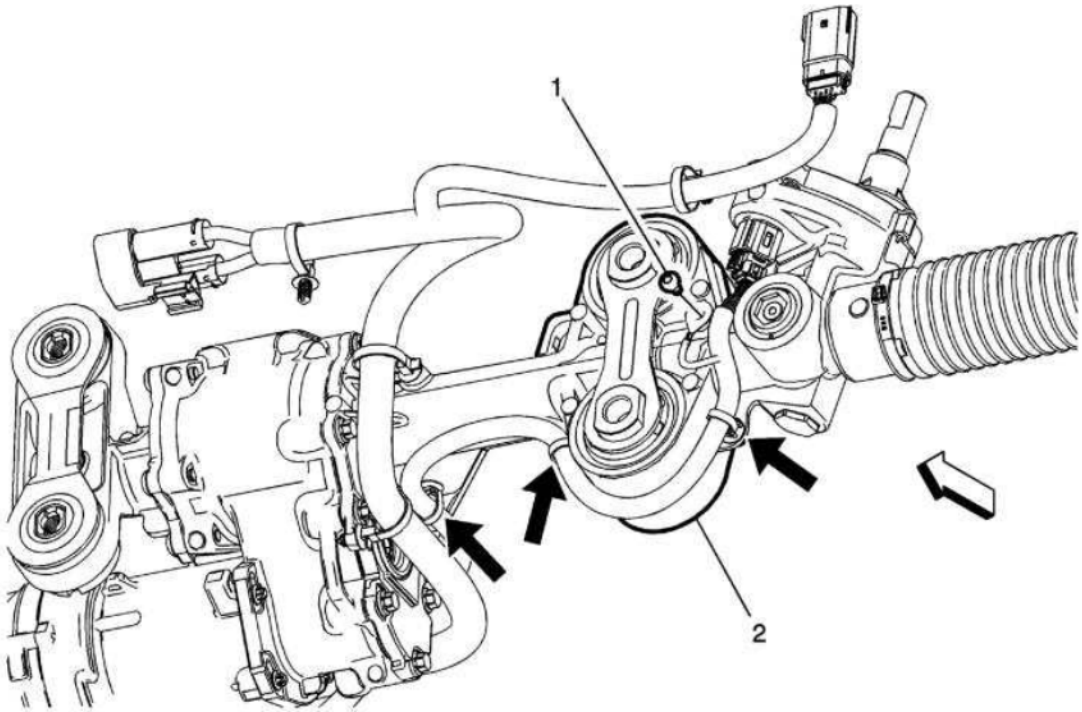

Fig. 92: Power Steering Wiring Harness Extension Harness
Courtesy of GENERAL MOTORS COMPANY

NOTE: **The extension harness is NOT repairable. Do NOT attempt to repair the harness under any circumstances. If the harness is damaged then the harness MUST be replaced.**

2. Remove the extension harness ground screw (1) from the front of the steering gear.

cardiagn.com

3. Disconnect the extension harness connector from the steering gear.

NOTE: **Once the extension harness is removed, the retainers CANNOT be reused. Use NEW retainers only and place the NEW retainers in the same position and orientation as the old retainers. A NEW harness will come with NEW retainers already in place.**

4. Mark the position and orientation of each extension harness retainer where the extension harness (2) mounts on the front of the steering gear. Remove the extension harness retainers from the front of the steering gear.

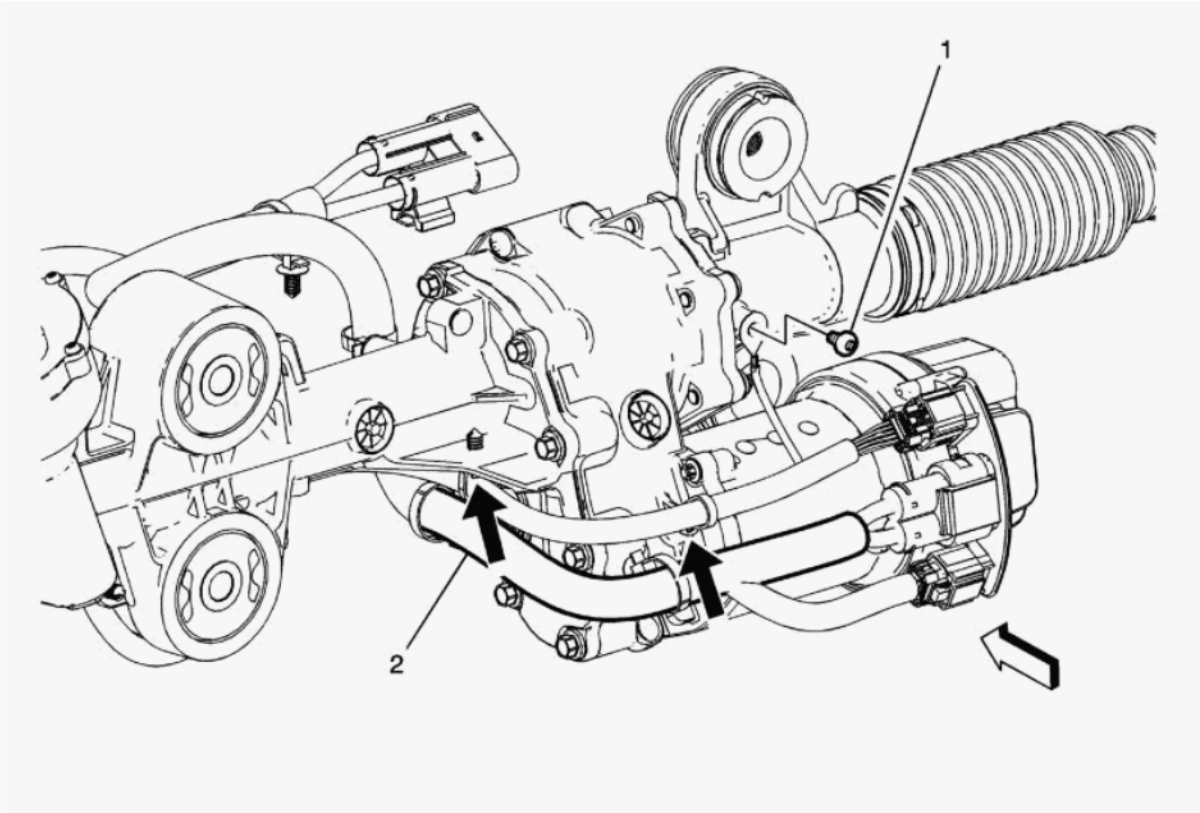

Fig. 93: Extension Harness Ground Screw
Courtesy of GENERAL MOTORS COMPANY

5. Remove the extension harness ground screw (1) from the rear of the steering gear.
6. Mark the position and orientation of each extension harness retainer where the extension harness (2) mounts on the rear of the steering gear. Disconnect the extension harness connector and remove the extension harness retainers from the rear of the steering gear.

cardiagn.com

7. Remove the extension harness (2) from the steering gear.

Installation Procedure

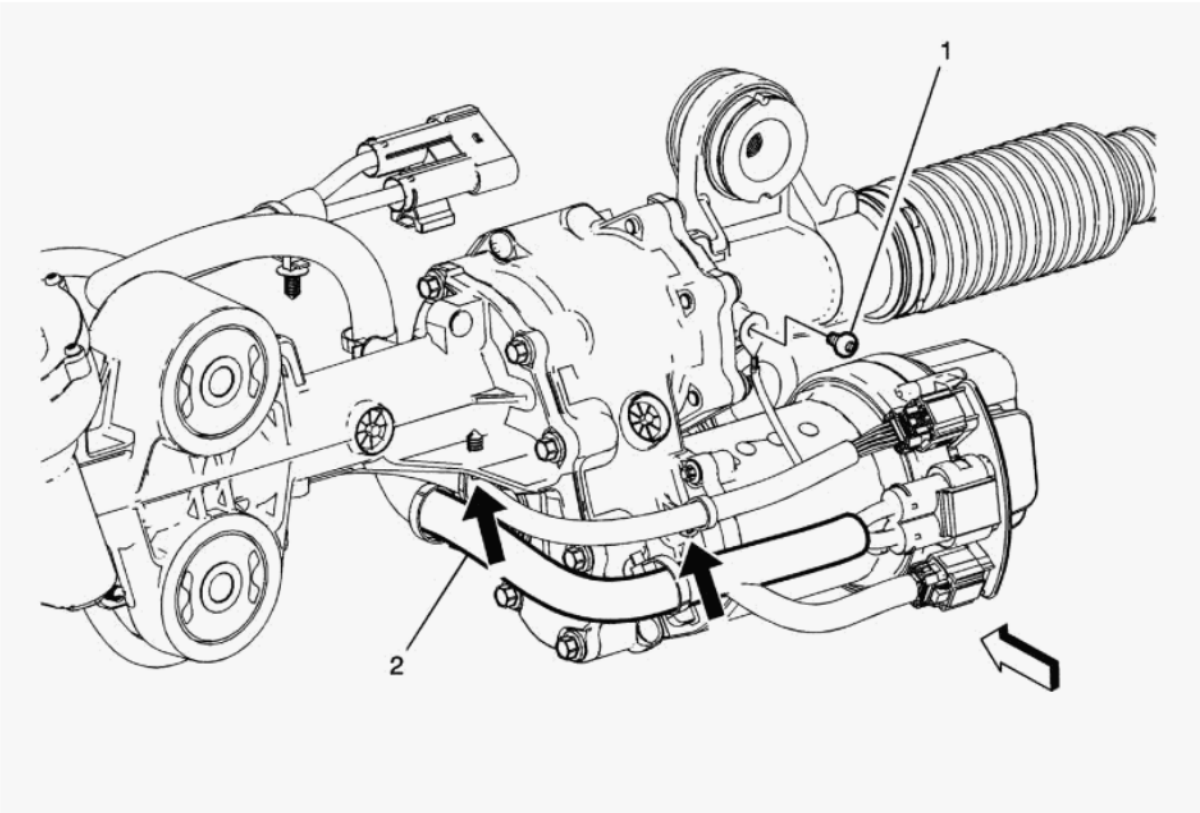

Fig. 94: Extension Harness Ground Screw
Courtesy of GENERAL MOTORS COMPANY

1. Position the extension harness (2) on the rear of the steering gear.
2. Connect the extension harness connector to the steering gear.

NOTE: **Ensure the position and orientation of each extension harness retainer before securing them.**

3. Install the extension harness retainers on the rear of the steering gear where previously noted.
4. Position the extension harness ground on the rear of the steering gear.

cardiagn.com

CAUTION: Refer to Fastener Caution .

5. Install and tighten the extension harness ground bolt (1) to 6 N.m (53 lb in).

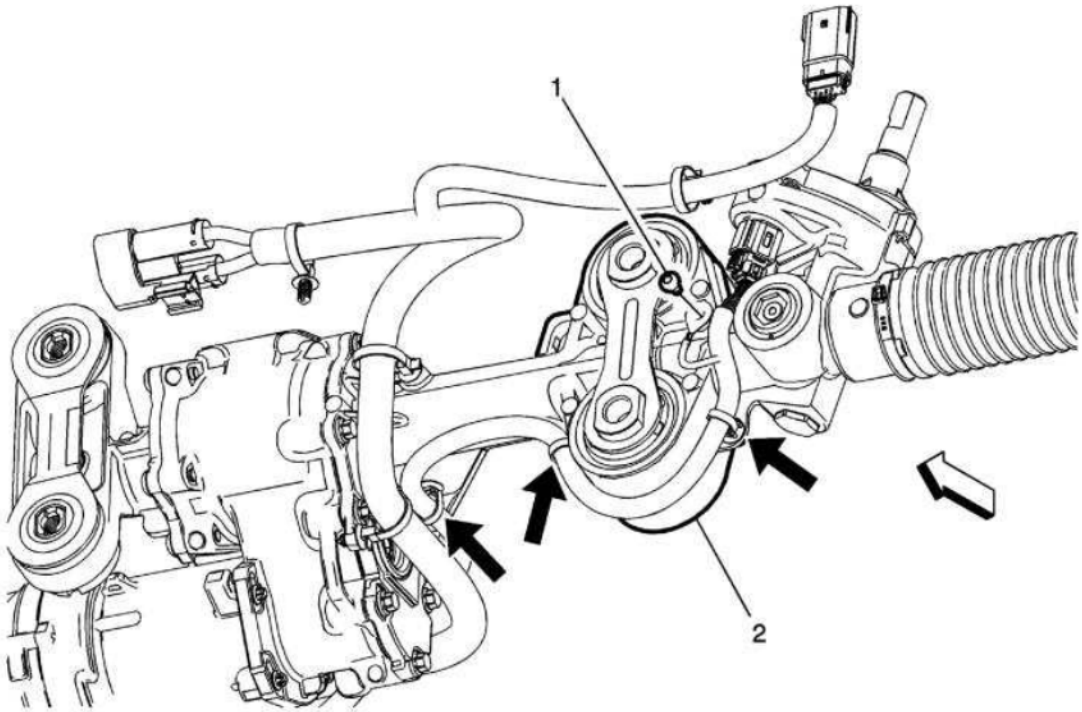

Fig. 95: Power Steering Wiring Harness Extension Harness
Courtesy of GENERAL MOTORS COMPANY

6. Position the extension harness (2) on the front of the steering gear.
7. Connect the extension harness connector to the steering gear.
8. Install the extension harness retainers on the front of the steering gear where previously noted.
9. Position the extension harness ground on the rear of the steering gear.
10. Install and tighten the extension harness ground bolt (1) to 6 N.m (53 lb in).
11. Install Steering Gear **Electric Belt Drive Rack and Pinion Steering Gear Replacement (Light Duty)**

cardiagn.com

POWER STEERING CONTROL MODULE WIRING HARNESS REPLACEMENT (LIGHT DUTY)

Removal Procedure

CAUTION: **Electrostatic discharge (ESD) can damage many solid-state electrical components. ESD susceptible components may or may not be labeled with the ESD symbol. Handle all electrical components carefully. Use the following precautions in order to avoid ESD damage:**

- **Touch a metal ground point in order to remove your body's static charge before servicing any electronic component; especially after sliding across the vehicle seat.**
- **Do not touch exposed terminals. Terminals may connect to circuits susceptible the ESD damage.**
- **Do not allow tools to contact exposed terminals when servicing connectors.**
- **Do not remove components from their protective packaging until required to do so.**
- **Avoid the following actions unless required by the diagnostic procedure:**
  - **Jumpering or grounding of the components or connectors.**
  - **Connecting test equipment probes to components or connectors. Connect the ground lead first when using test probes.**
- **Ground the protective packaging of any component before opening. Do not rest solid-state components on metal workbenches, or on top of TVs, radios, or other electrical devices.**

1. Remove Steering Gear **Electric Belt Drive Rack and Pinion Steering Gear Replacement (Light Duty)**

cardiagn.com

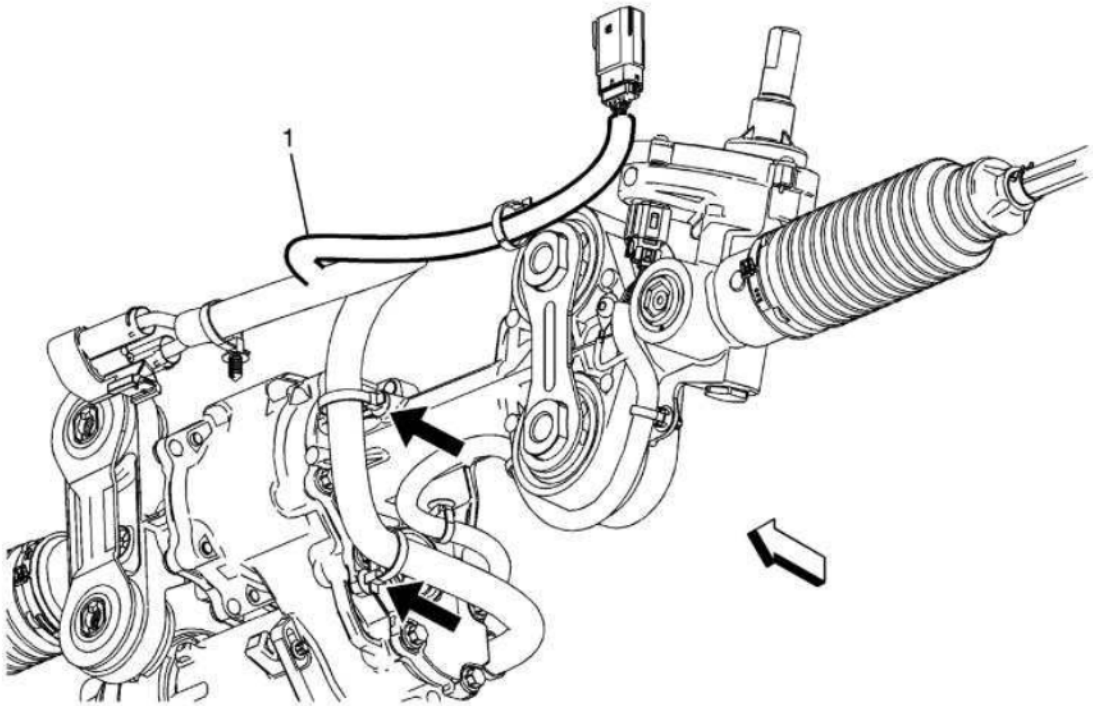

Fig. 96: Wiring Harness Retainer
Courtesy of GENERAL MOTORS COMPANY

NOTE:

- **The wiring harness is NOT repairable. Do NOT attempt to repair the harness under any circumstances. If the harness is damaged then the harness MUST be replaced.**
- **Once the wiring harness is removed, the retainers CANNOT be reused. Use NEW retainers only and place the NEW retainers in the same position and orientation as the old retainers. A NEW harness will come with NEW retainers already in place.**

2. Mark the position and orientation of each wiring harness retainer where the wiring harness (1) mounts on the front of the steering gear. Remove the wiring harness retainers from the front of the steering gear.

cardiagn.com

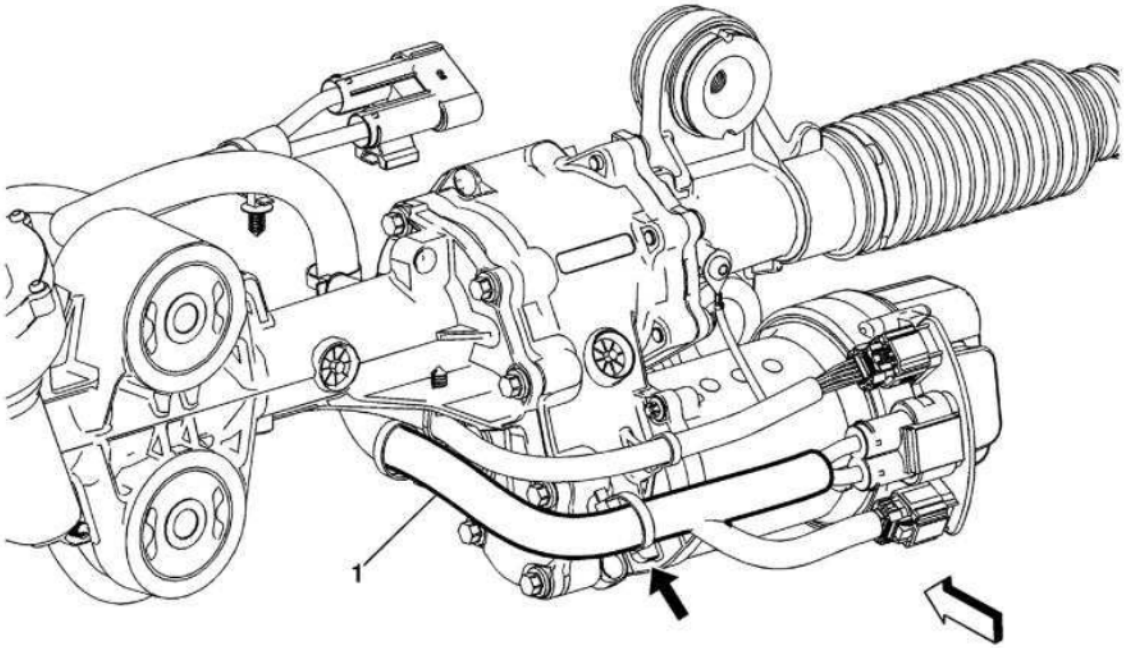

Fig. 97: Power Steering Control Module Wiring Harness
Courtesy of GENERAL MOTORS COMPANY

3. Mark the position and orientation of each wiring harness retainer where the wiring harness (1) mounts on the rear of the steering gear. Disconnect the wiring harness connectors and remove the wiring harness retainers from the rear of the steering gear.
4. Remove the wiring harness (1) from the steering gear.

Installation Procedure

cardiagn.com

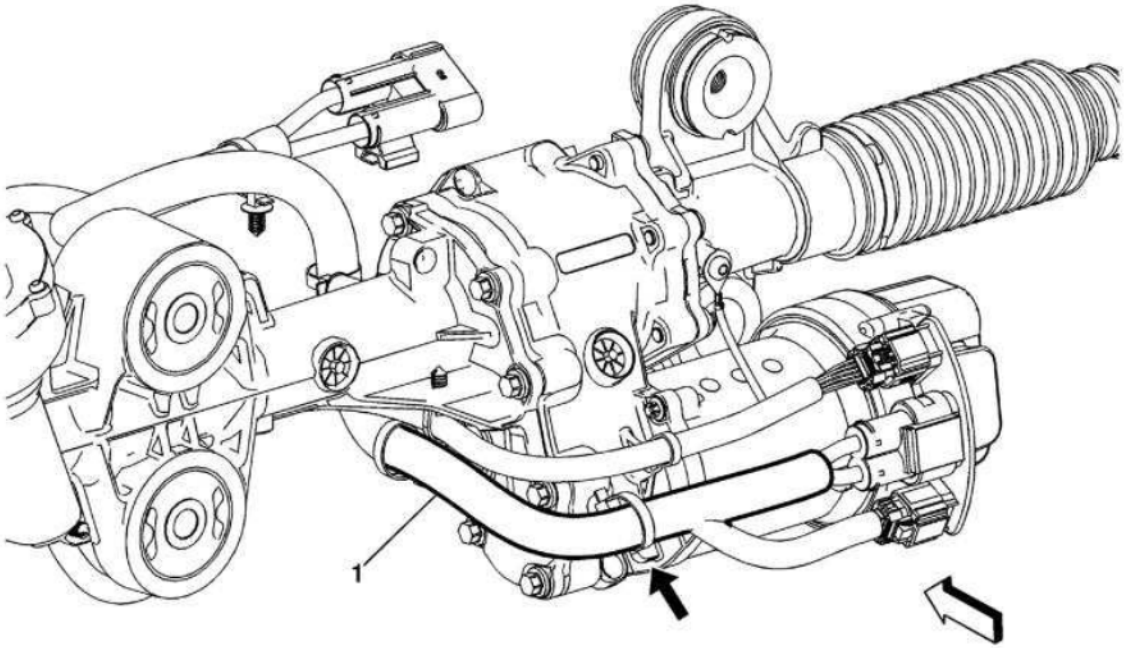

Fig. 98: Power Steering Control Module Wiring Harness
Courtesy of GENERAL MOTORS COMPANY

1. Position the wiring harness (1) on the rear of the steering gear.
2. Connect the wiring harness connectors to the steering gear.

NOTE: **Ensure the position and orientation of each wiring harness retainer before securing them.**

3. Install the wiring harness retainers on the rear of the steering gear where previously noted.

cardiagn.com

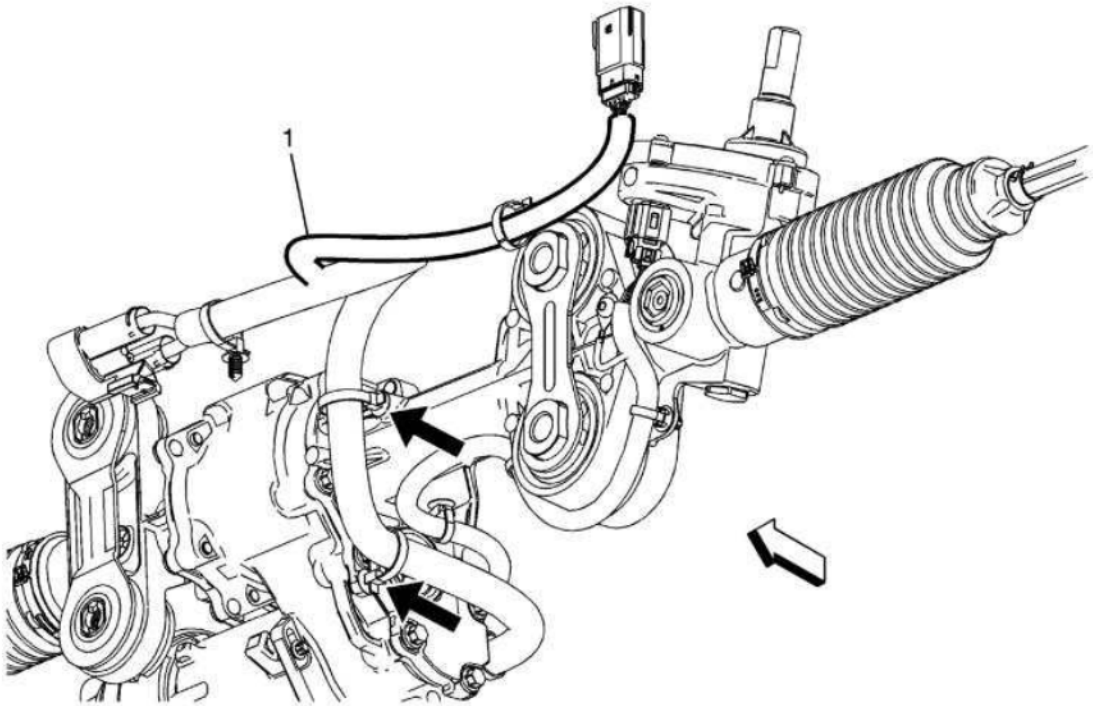

Fig. 99: Wiring Harness Retainer
Courtesy of GENERAL MOTORS COMPANY

4. Position the wiring harness (1) on the front of the steering gear.
5. Install the wiring harness retainers on the front of the steering gear where previously noted.
6. Install Steering Gear **Electric Belt Drive Rack and Pinion Steering Gear Replacement (Light Duty)**

POWER STEERING ASSIST MOTOR REPLACEMENT (LIGHT DUTY)

Special Tools

GE-50576-A Acoustic Belt Tension Tester

Equivalent regional tools:**Special Tools**

Removal Procedure

cardiagn.com

CAUTION: **Electrostatic discharge (ESD) can damage many solid-state electrical components. ESD susceptible components may or may not be labeled with the ESD symbol. Handle all electrical components carefully. Use the following precautions in order to avoid ESD damage:**

- **Touch a metal ground point in order to remove your body's static charge before servicing any electronic component; especially after sliding across the vehicle seat.**
- **Do not touch exposed terminals. Terminals may connect to circuits susceptible the ESD damage.**
- **Do not allow tools to contact exposed terminals when servicing connectors.**
- **Do not remove components from their protective packaging until required to do so.**
- **Avoid the following actions unless required by the diagnostic procedure:**
  - **Jumpering or grounding of the components or connectors.**
  - **Connecting test equipment probes to components or connectors. Connect the ground lead first when using test probes.**
- **Ground the protective packaging of any component before opening. Do not rest solid-state components on metal workbenches, or on top of TVs, radios, or other electrical devices.**

CAUTION: **During removal and installation, all EPS components including mechanical and/or electrical is extremely susceptible to damage. Dropping or prying on any EPS component may cause internal damage. If damage occurs or a part is dropped, the EPS component must be replaced.**

CAUTION: **Care must be taken during removal and installation of the Electronic Power Steering (EPS) components to not hit or break the EPS motor/controller module or module harness connectors. If the EPS motor/ controller module or module connectors are damaged, the complete component must be replaced.**

1. Raise and support the vehicle. **Lifting and Jacking the Vehicle**
2. Remove Steering Gear Skid Shield **Steering Gear Skid Shield Replacement**

cardiagn.com

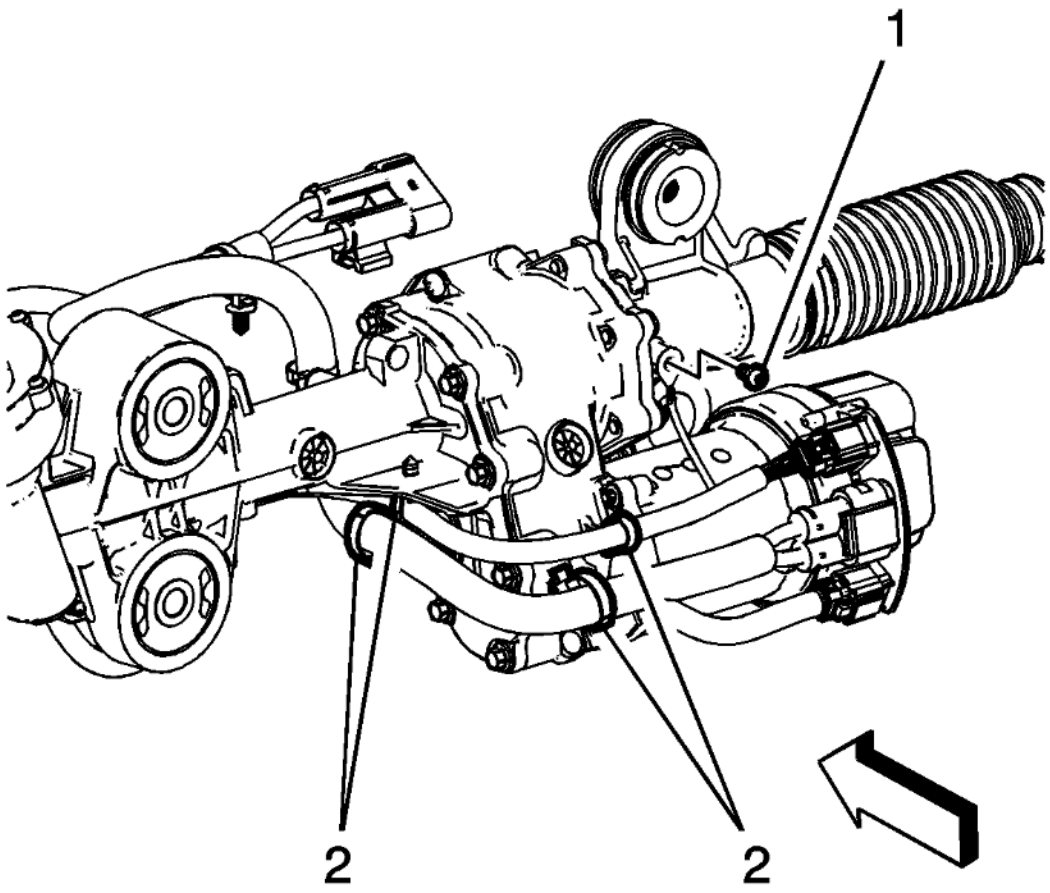

Fig. 100: Harness Retainers
Courtesy of GENERAL MOTORS COMPANY

NOTE:

- **The wiring harness and extension harness are NOT repairable. Do NOT attempt to repair the harnesses under any circumstances. If either harness is damaged then that harness MUST be replaced.**
- **Once the wiring harness and extension harness are removed, the harness retainers CANNOT be**

cardiagn.com

reused. Use NEW harness retainers only and place the NEW harness retainers in the same position and orientation as the old harness retainers. A NEW harness will come with NEW harness retainers already in place.

3. Remove the extension harness ground screw (1) from the rear of the steering gear.
4. Remove the wiring harness and extension harness retainers (2) from the steering gear.

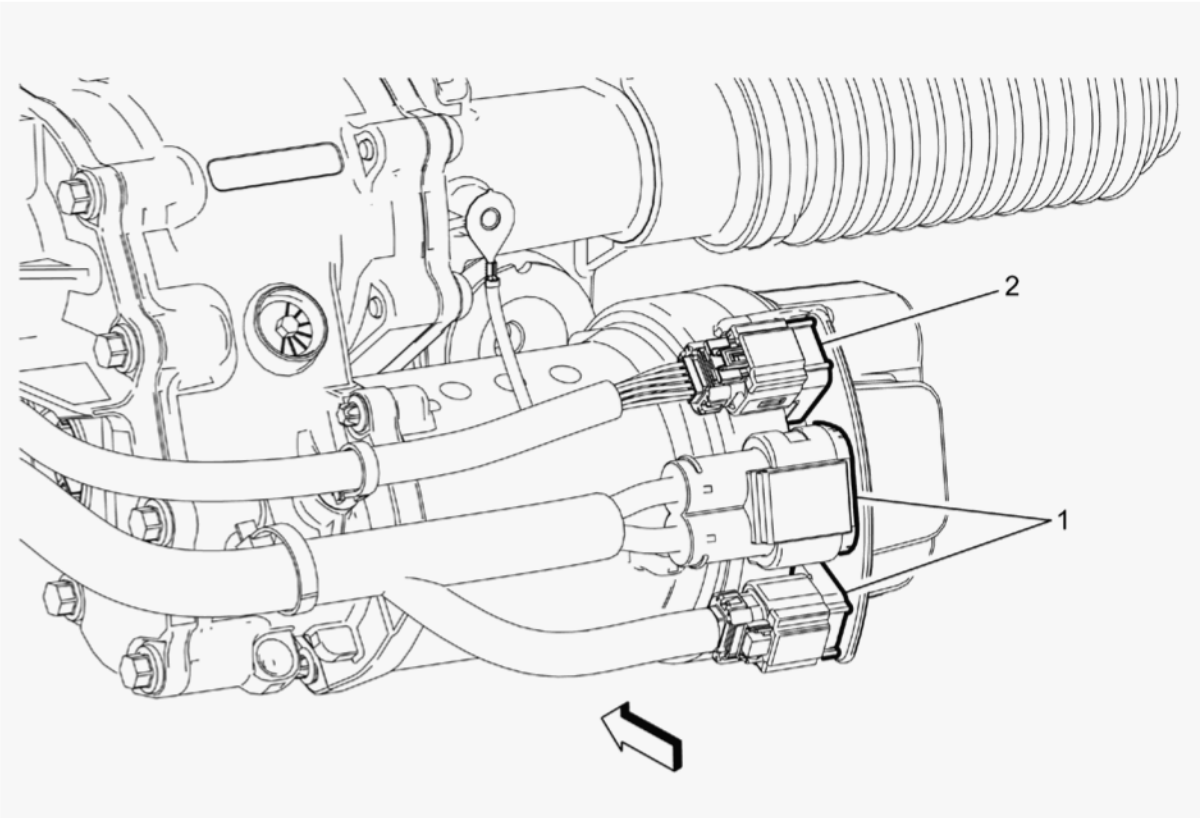

Fig. 101: Extension Harness Connector
Courtesy of GENERAL MOTORS COMPANY

5. Disconnect the wiring harness connectors (1) and extension harness connector (2) from the power steering assist motor.

cardiagn.com

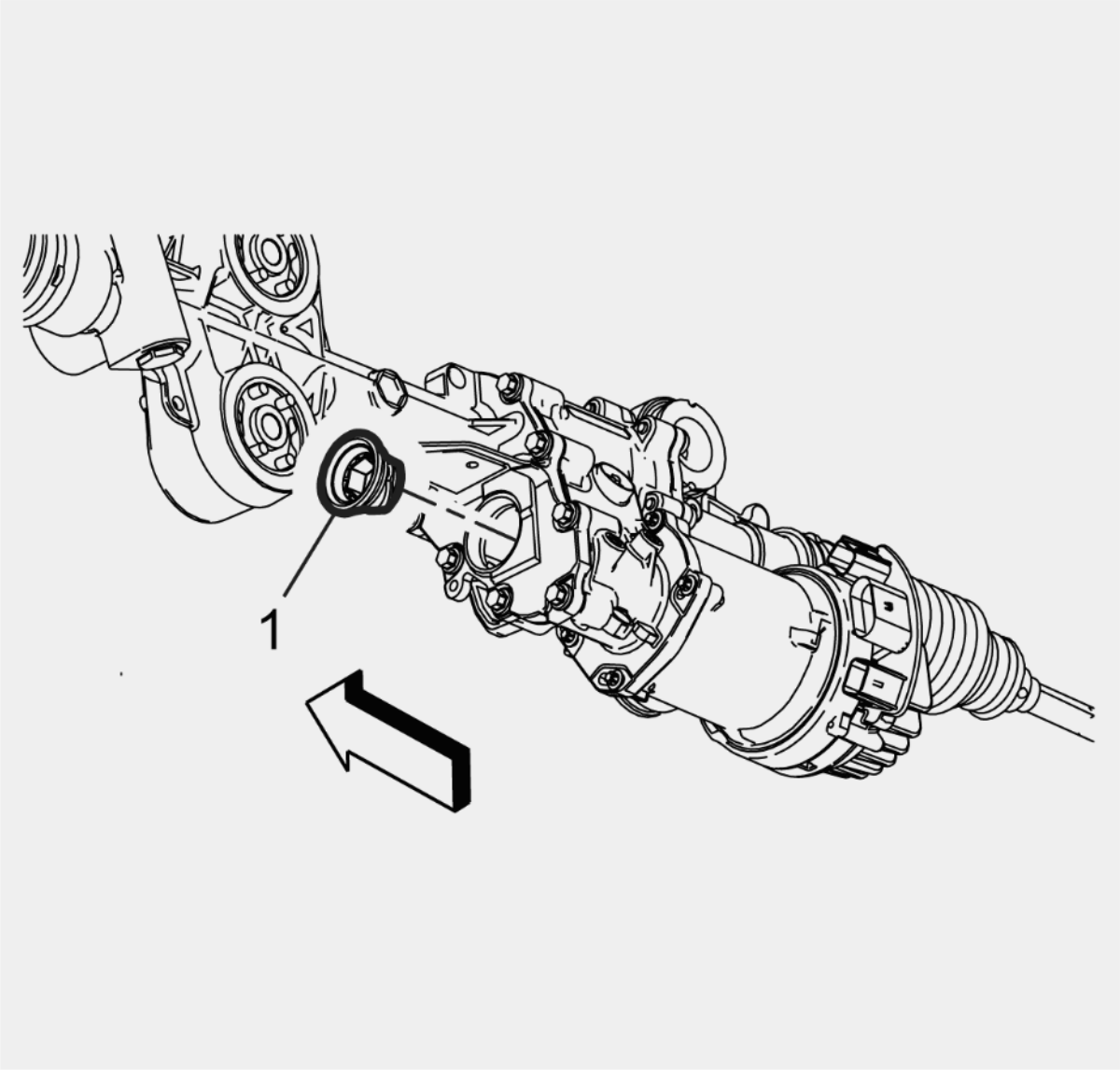

Fig. 102: Steering Gear Belt Access Plug
Courtesy of GENERAL MOTORS COMPANY

6. Unscrew the steering gear belt access plug (1) from the steering gear housing.

cardiagn.com

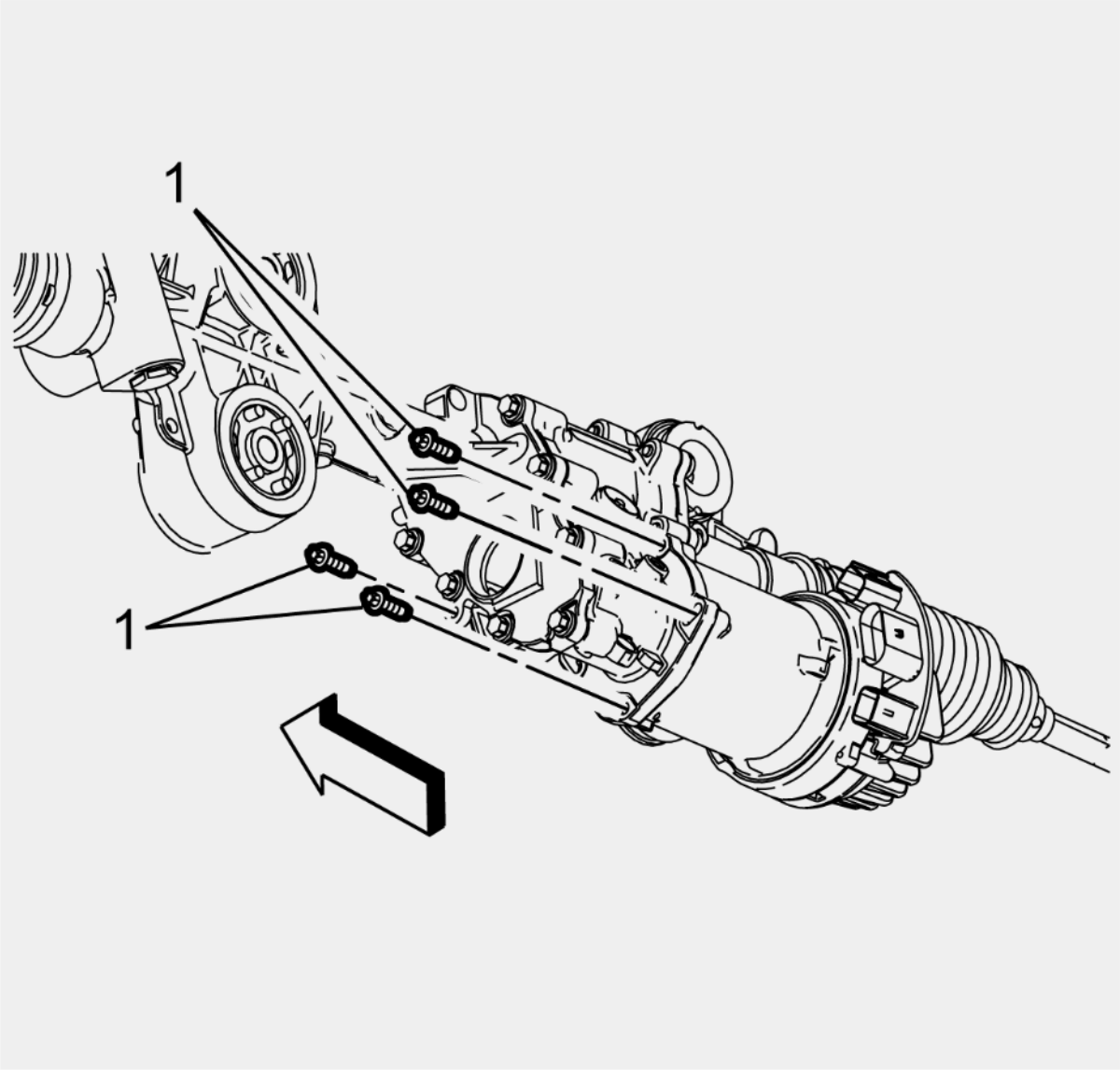

Fig. 103: Power Steering Assist Motor Bolts
Courtesy of GENERAL MOTORS COMPANY

7. Remove the power steering assist motor bolts (1).

   DISCARD the bolts.

cardiagn.com

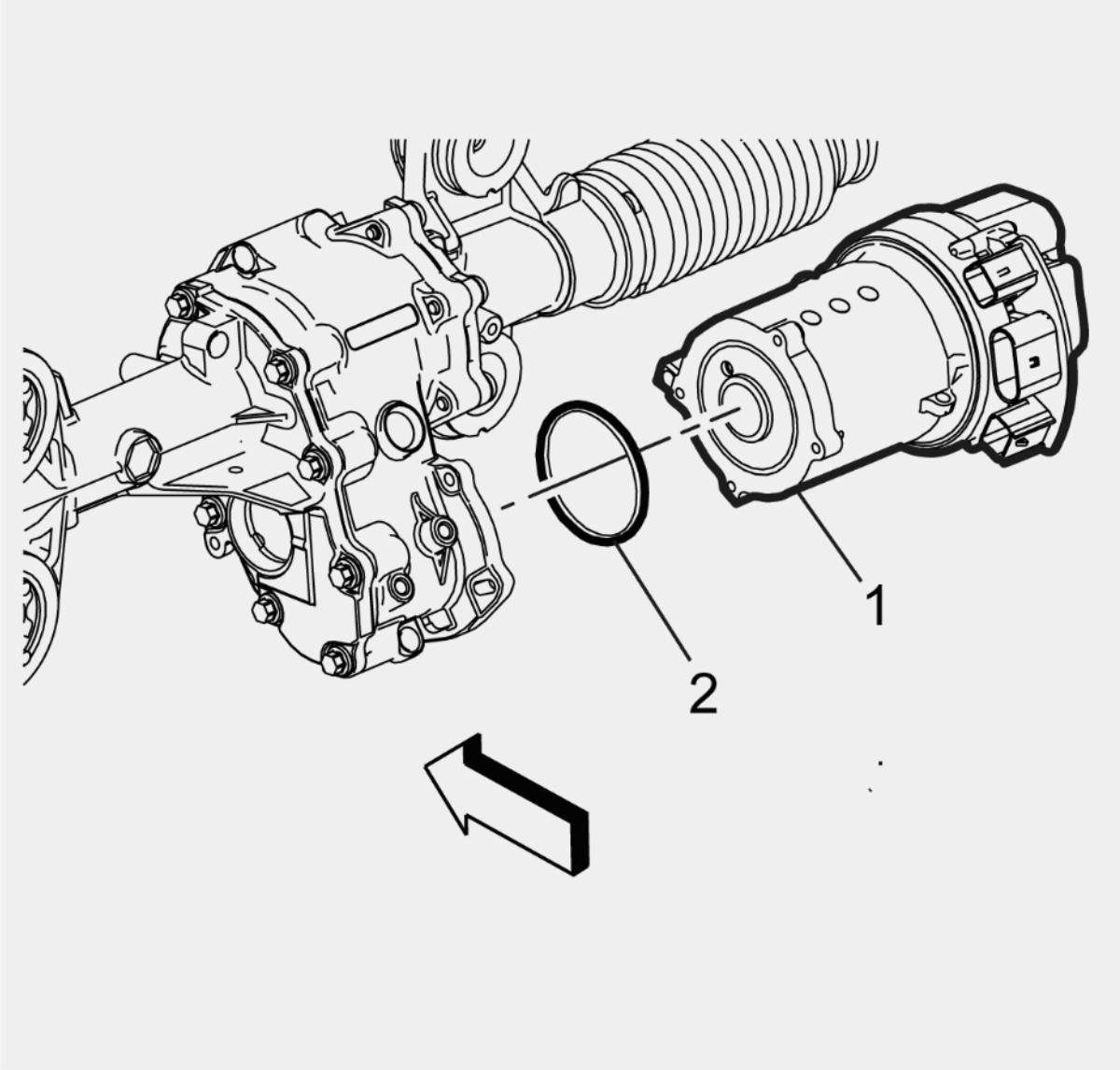

Fig. 104: Power Steering Assist Motor
Courtesy of GENERAL MOTORS COMPANY

8. Remove the power steering assist motor (1) and power steering assist motor seal (2).

   DISCARD the seal.

cardiagn.com

CAUTION: Water intrusion or corrosion can cause premature power steering assist motor failure. If signs of water intrusion or corrosion are present, replace the entire steering gear.

9. Inspect the steering gear housing and the power steering assist motor shaft for signs of water intrusion or corrosion.

   If signs of water intrusion or corrosion are present, replace the entire steering gear. **Electric Belt Drive Rack and Pinion Steering Gear Replacement (Light Duty)**

10. Inspect the steering gear belt for damage. If the belt is damaged, replace the steering gear. **Electric Belt Drive Rack and Pinion Steering Gear Replacement (Light Duty)**

Installation Procedure

cardiagn.com

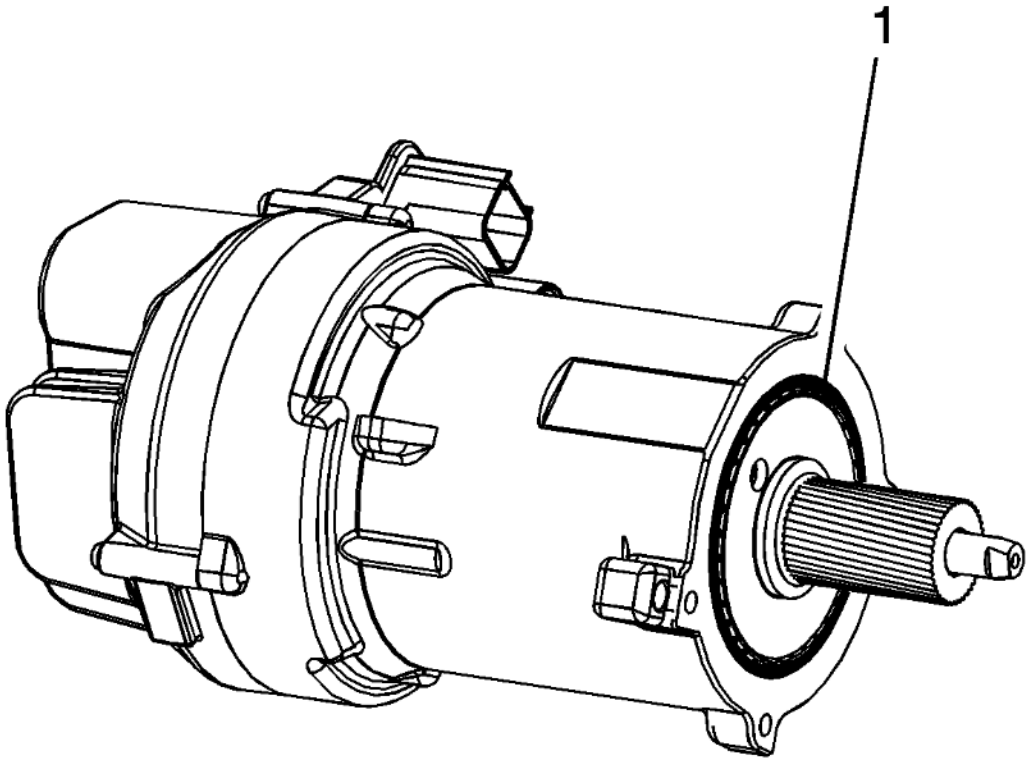

Fig. 105: Power Steering Assist Motor Seal
Courtesy of GENERAL MOTORS COMPANY

1. Install a NEW power steering assist motor seal (1) on the power steering assist motor.

   After the seal is in place, apply a thin layer of grease on the seal.

cardiagn.com

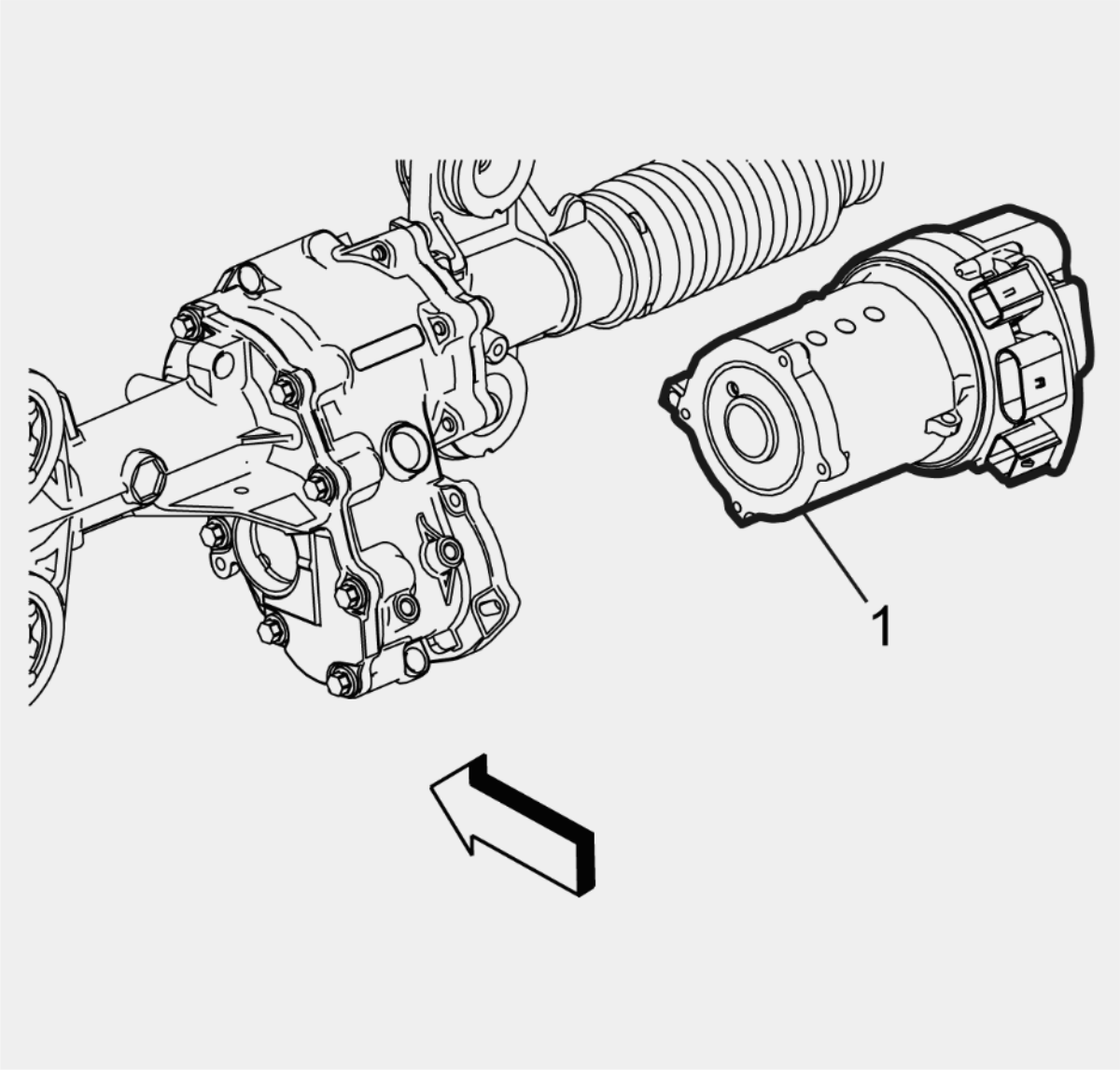

Fig. 106: Power Steering Assist Motor
Courtesy of GENERAL MOTORS COMPANY

CAUTION: **Ensure that the belt is completely installed on to the power steering assist motor pulley. Misalignment of the belt on the pulley will damage the belt and the electric belt drive rack and pinion steering gear will need to be replaced.**

cardiagn.com

NOTE:

- **It may be necessary to turn the steering wheel half a turn in both directions while installing the power steering assist motor for the steering gear belt to completely mesh with the steering gear.**
- **If the power steering assist motor is installed at an angle to the steering gear housing or misaligned then the proper belt tension will NOT be achieved. After alignment and installation, ensure the assist motor is completely flush with the steering gear housing and no gaps are present.**

2. Install the power steering assist motor (1) into the steering gear while positioning the steering gear belt onto the assist motor pulley.

cardiagn.com

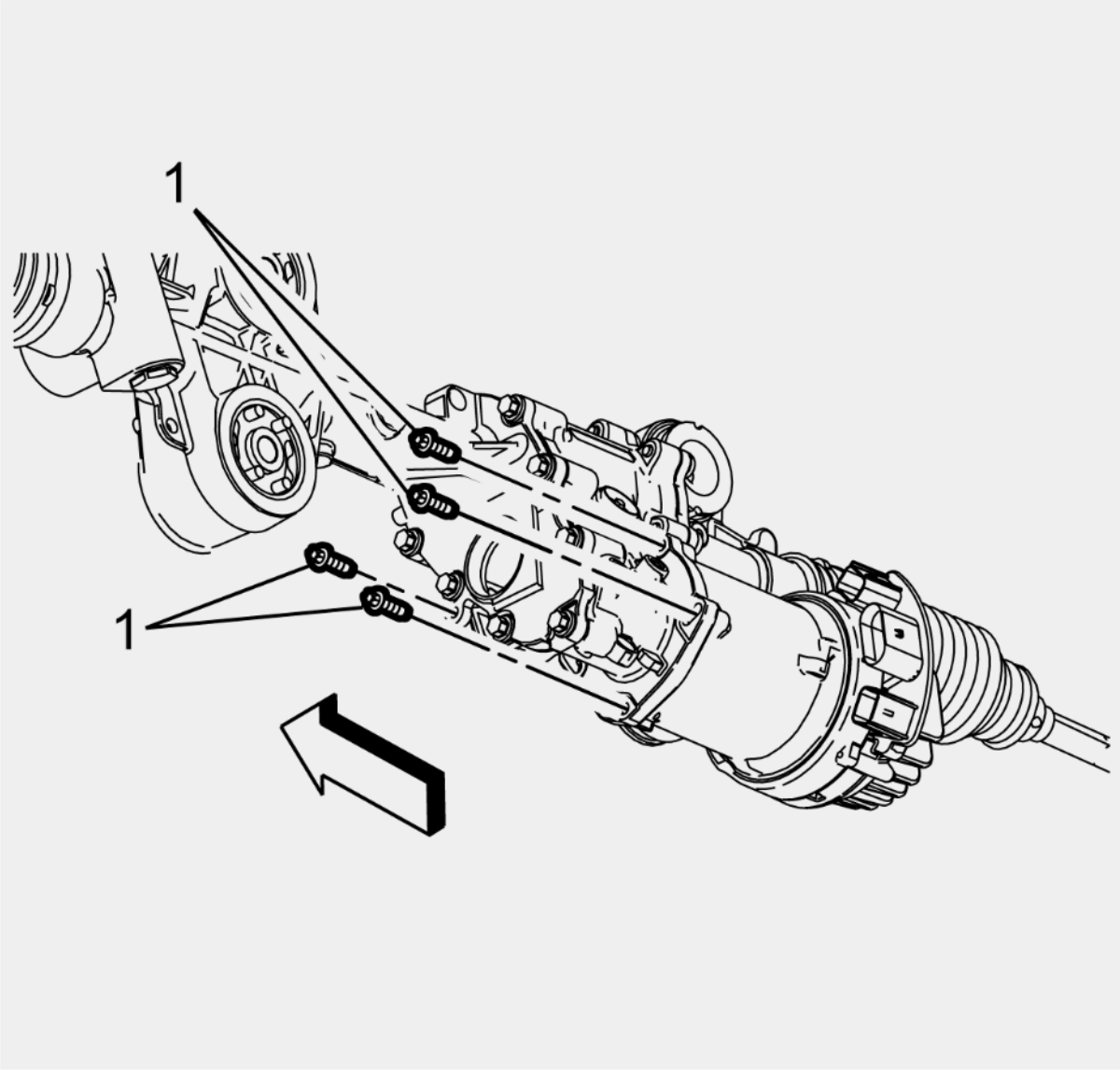

Fig. 107: Power Steering Assist Motor Bolts
Courtesy of GENERAL MOTORS COMPANY

NOTE: **When tightening the NEW power steering assist motor bolts, ensure the assist motor is completely flush with the steering gear housing and no gaps are present.**

cardiagn.com

3. Turn the power steering assist motor clockwise to apply a small amount of tension to the steering gear belt and install the NEW power steering assist motor bolts (1) in small, equal increments until all the bolts are tightened by hand.

   Ensure there are no gaps between the assist motor and the steering gear housing.

4. Turn the steering wheel half a turn in both directions to seat the steering gear belt.

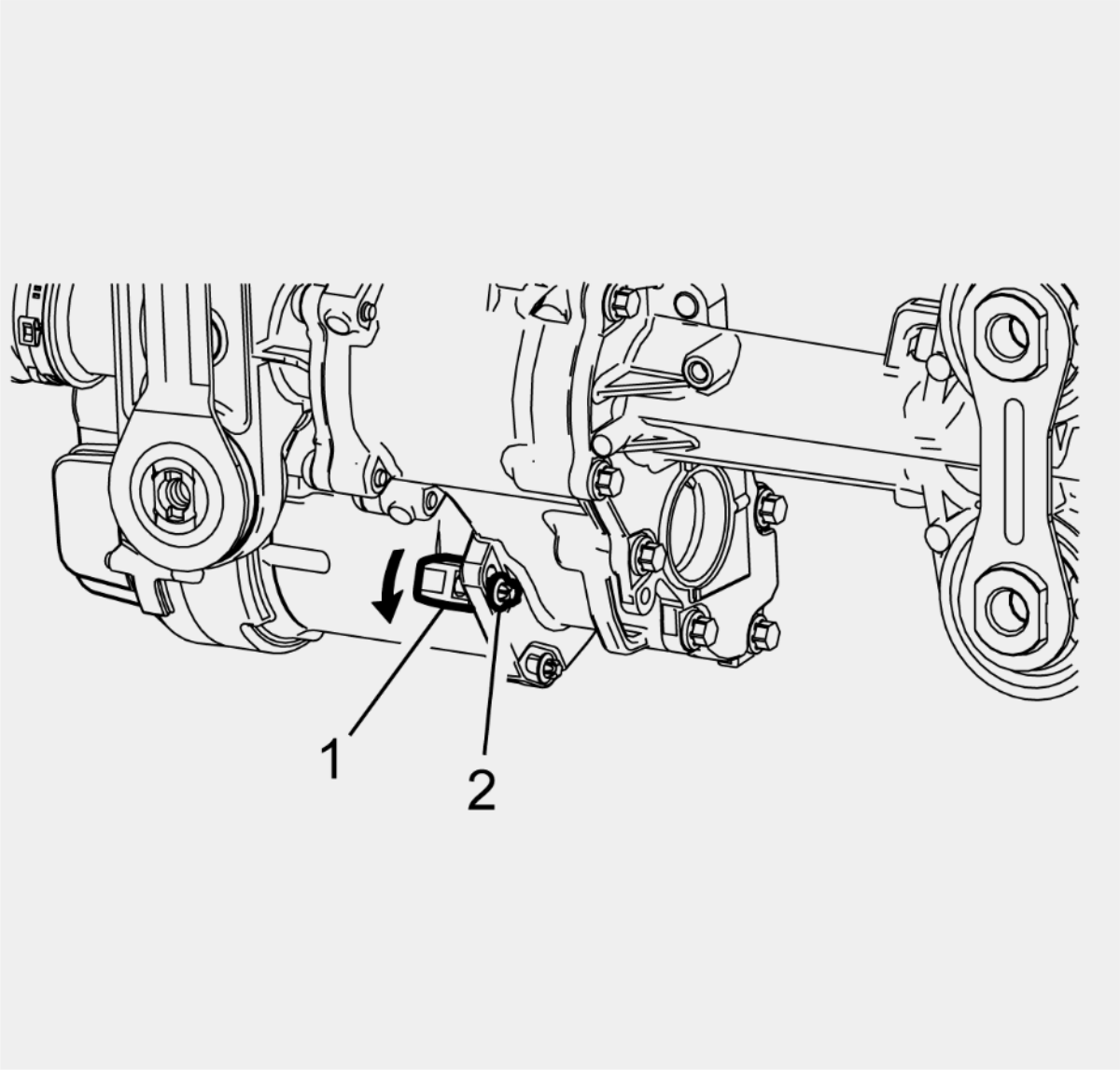

cardiagn.com

Fig. 108: Power Steering Assist Motor Pivot Bolt
Courtesy of GENERAL MOTORS COMPANY

CAUTION: Refer to Fastener Caution .

5. Use a torque wrench and crow foot wrench to turn the power steering assist motor housing flat (1) and rotate the assist motor clockwise to 10 N.m (89 lb in).
6. Tighten the power steering assist motor pivot bolt (2) to 10 N.m (89 lb in).

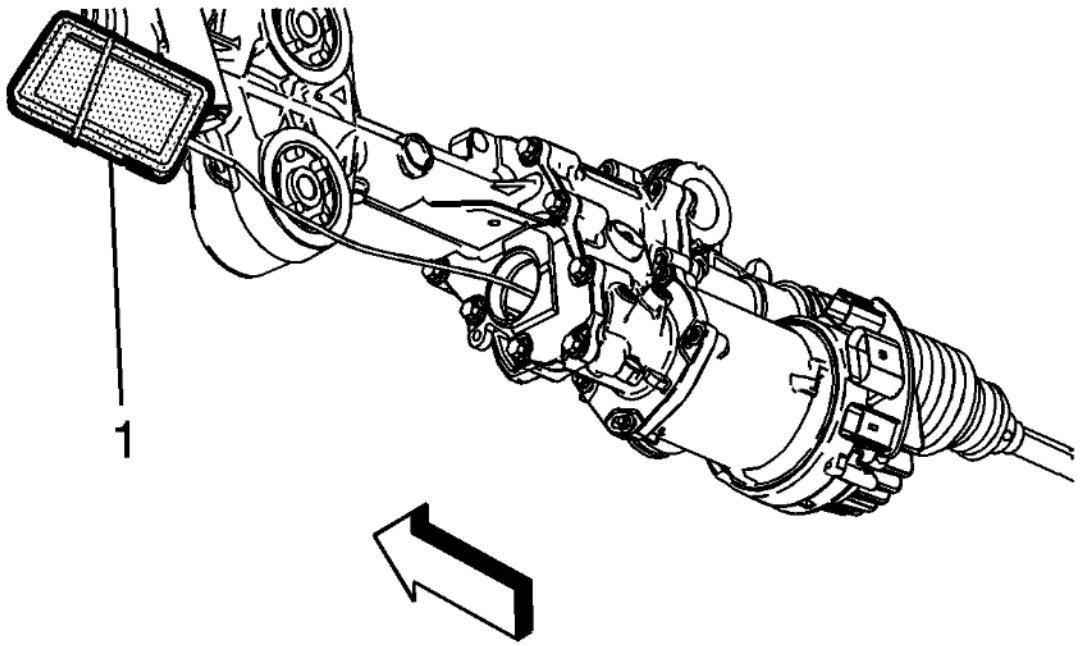

cardiagn.com

Fig. 109: Tension Tester
Courtesy of GENERAL MOTORS COMPANY

7. Place the body of the **GE-50576-A** tension tester (1) on a flat surface or secure it to the steering gear housing.

   NEVER hold the tester by hand while taking measurements or the readings will be inaccurate.

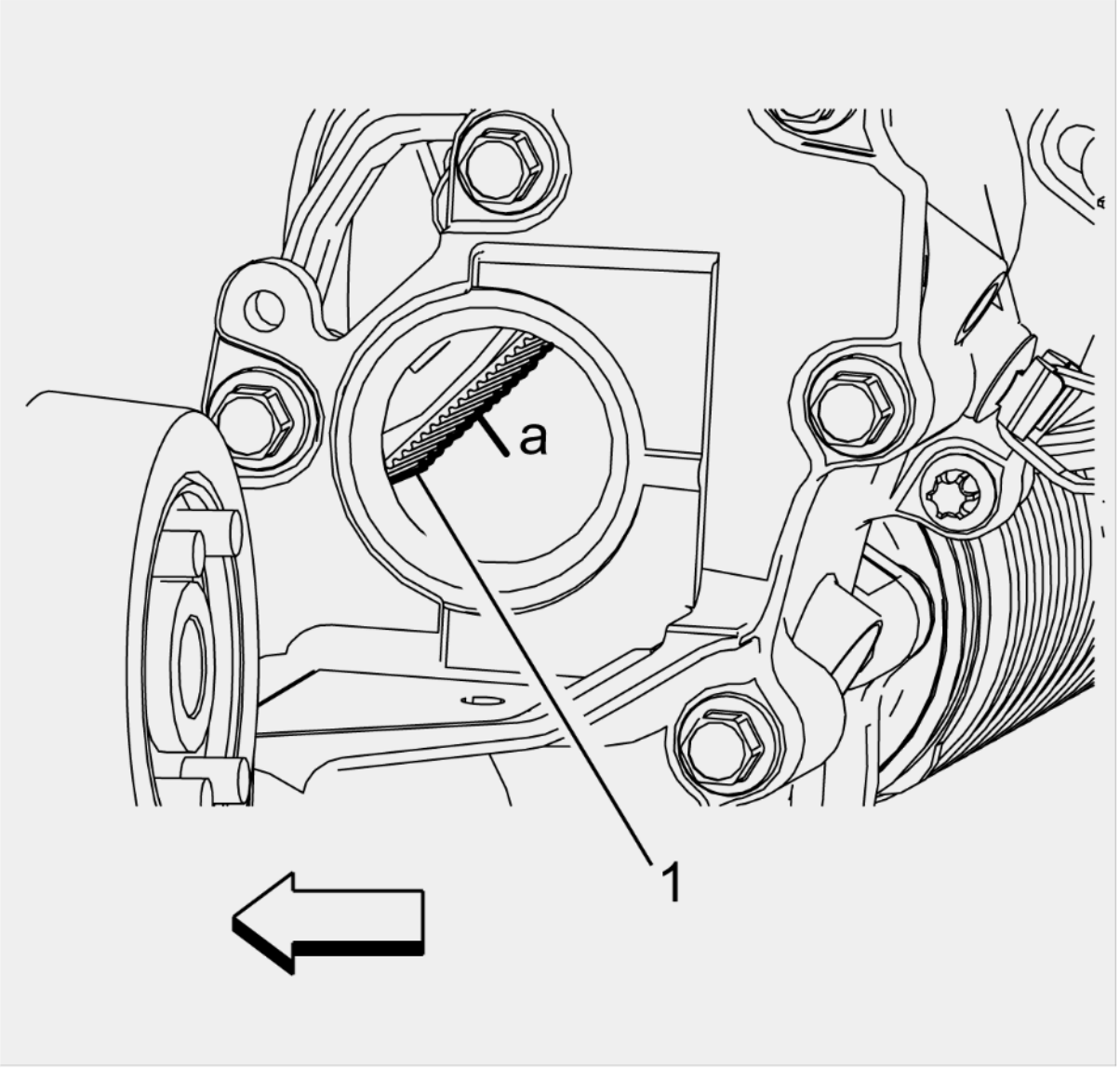

cardiagn.com

Fig. 110: Steering Gear Belt Access Hole
Courtesy of GENERAL MOTORS COMPANY

8. Position the microphone of the **GE-50576-A** tension tester in the steering gear belt access hole approximately 6 mm (0.25 in) (a) from the steering gear belt (1).

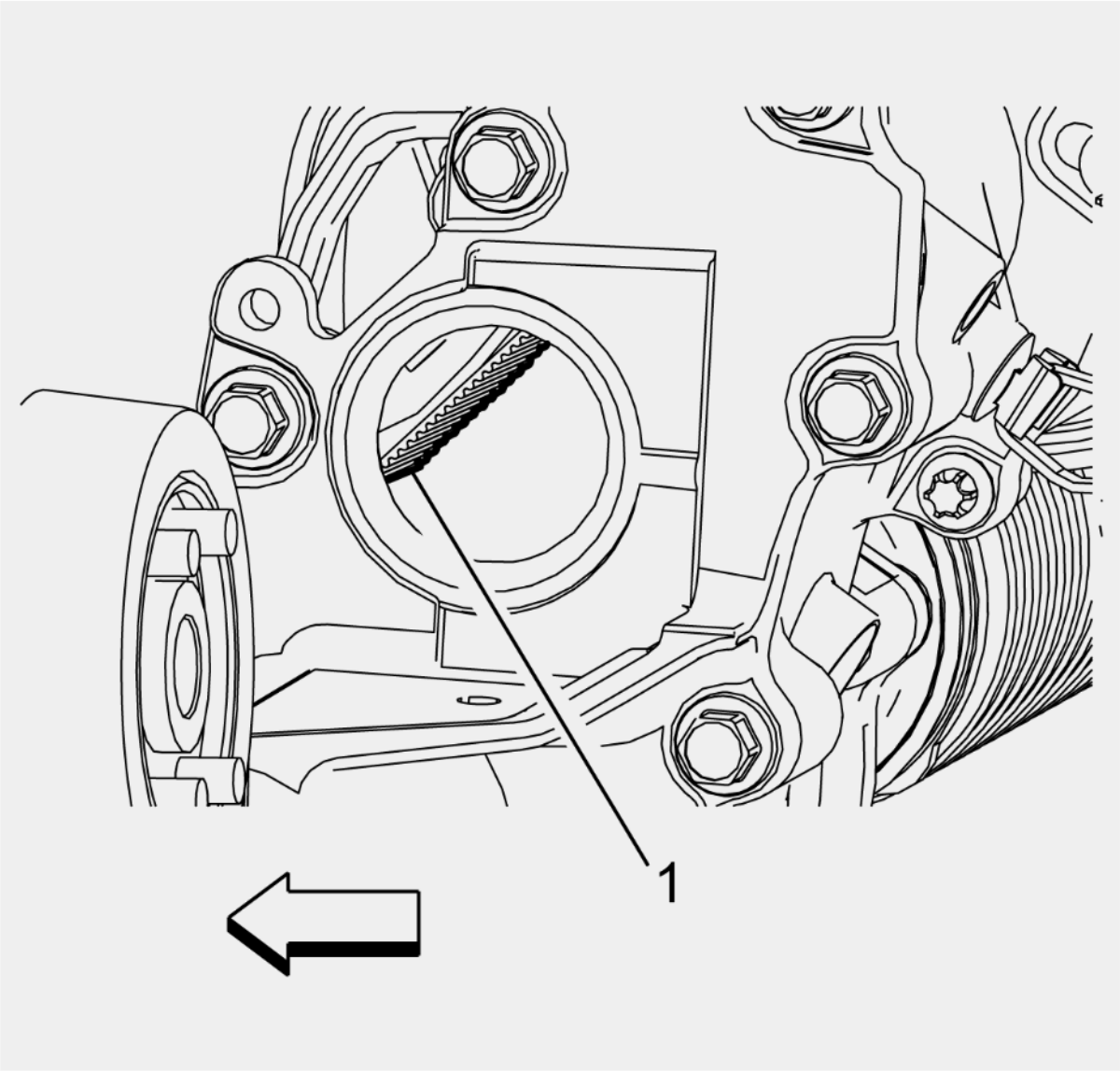

cardiagn.com

Fig. 111: Steering Gear Belt
Courtesy of GENERAL MOTORS COMPANY

CAUTION: **Never use a sharp object to strum the belt as belt damage may occur. If the belt is damaged, the electric belt drive rack and pinion steering gear will need to be replaced.**

NOTE: **Strum the steering gear belt as close as possible to the center position between the two steering gear pulleys to achieve the most accurate readings.**

9. Use an allen wrench or finger to strum the steering gear belt (1) at the center location between the two pulleys three times to get an average belt tension reading.
10. If the average steering gear belt tension reading is between 235 Hz-275 Hz, tighten all the power steering assist motor bolts to 10 N.m (89 lb in) and continue with the procedure.
11. If the average steering gear belt tension reading is above or below 235 Hz-275 Hz, perform the following steps:
    1. Loosen the assist motor pivot bolt and rotate the assist motor clockwise to increase the tension or counterclockwise to reduce the tension on the belt.
    2. Tighten the assist motor pivot bolt to 10 N.m (89 lb in) and test the average belt tension three times.
    3. If the average belt tension reading is between 235 Hz-275 Hz, tighten all the assist motor bolts to 10 N.m (89 lb in).
    4. Continue the process until the average belt tension reading is between 235 Hz-275 Hz. Once the correct tension is achieved, tighten all the assist motor bolts to 10 N.m (89 lb in) and continue with the procedure.
12. Remove the **GE-50576-A** tension tester.

cardiagn.com

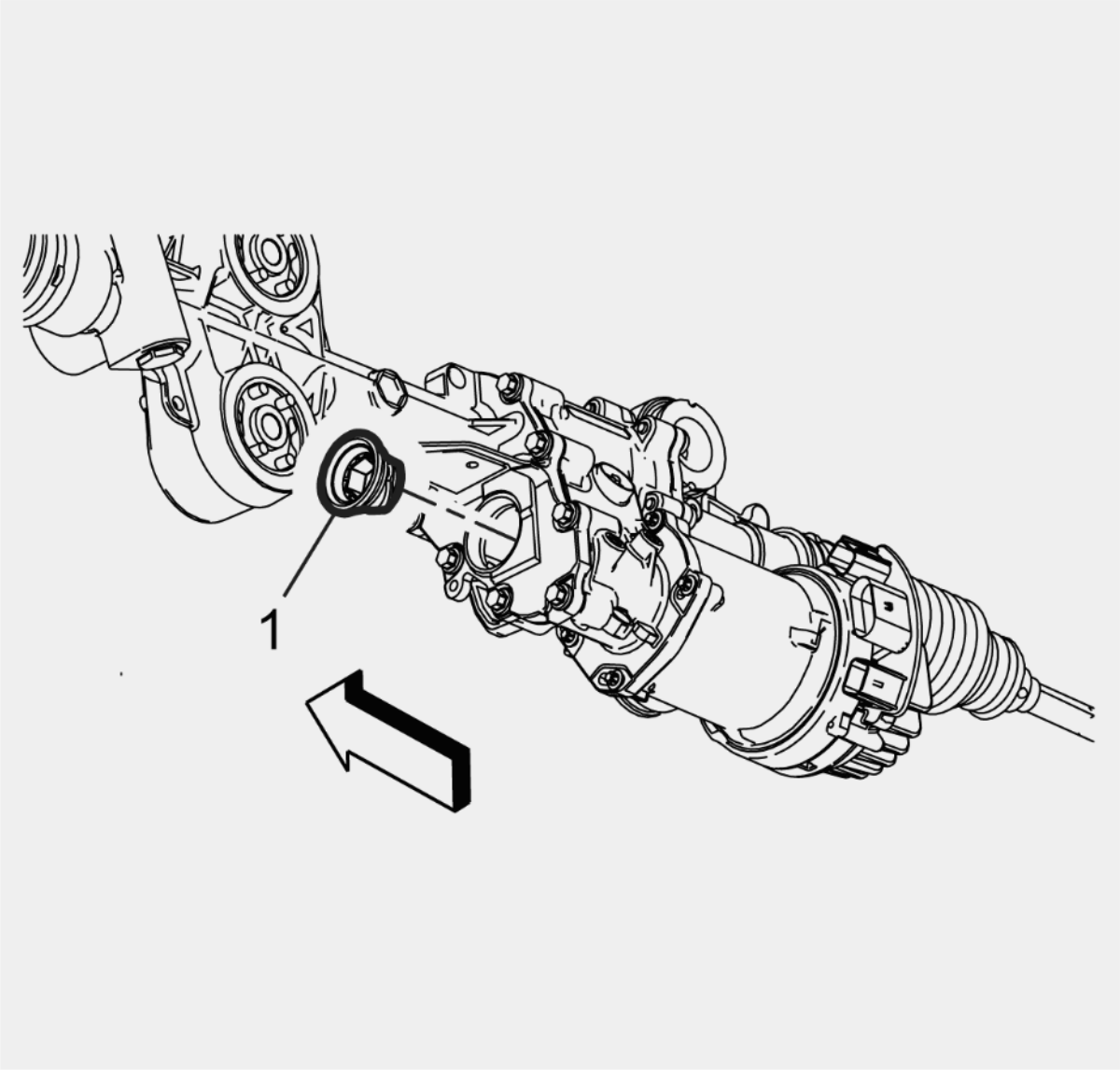

Fig. 112: Steering Gear Belt Access Plug
Courtesy of GENERAL MOTORS COMPANY

13. Screw the steering gear belt access plug (1) into the steering gear housing until snug.

cardiagn.com

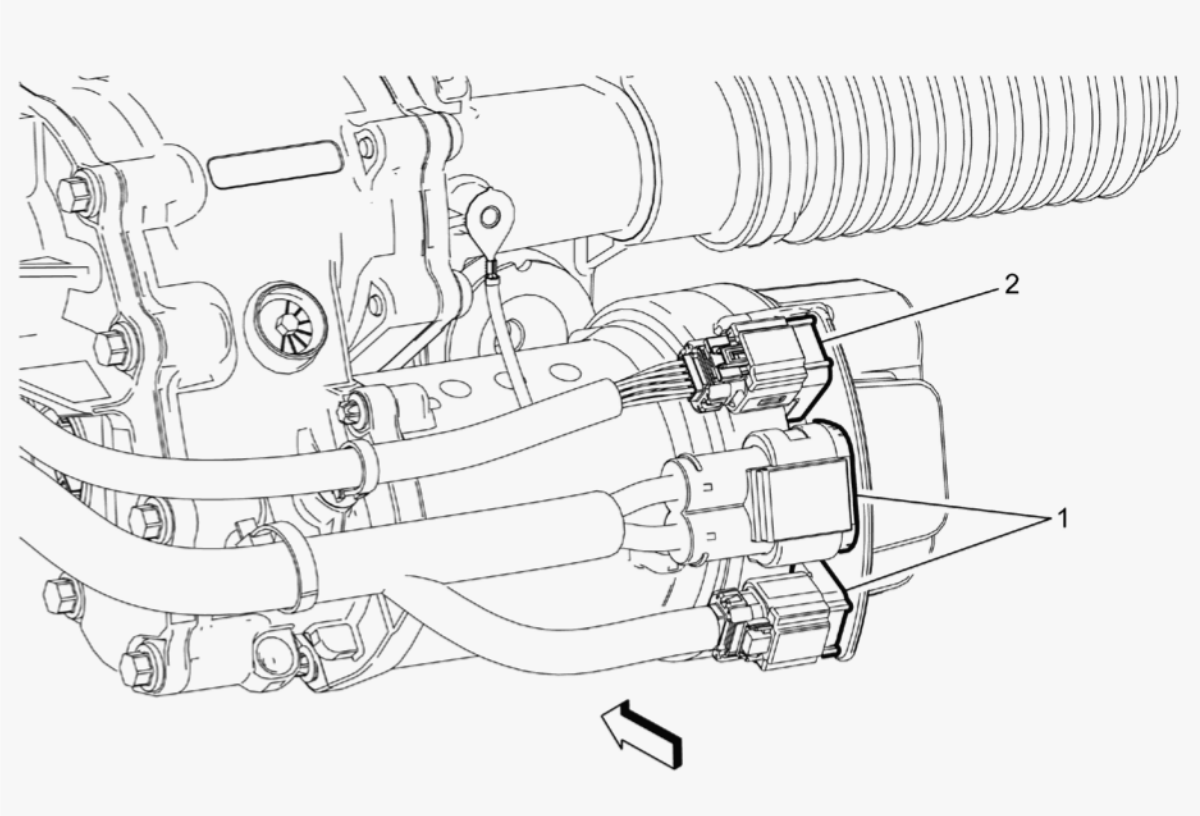

Fig. 113: Extension Harness Connector
Courtesy of GENERAL MOTORS COMPANY

NOTE: **The wiring harness connectors and extension harness connector should engage smoothly when connected. Do NOT force the connectors onto the power steering assist motor.**

14. Connect the wiring harness connectors (1) and extension harness connector (2) to the power steering assist motor.

cardiagn.com

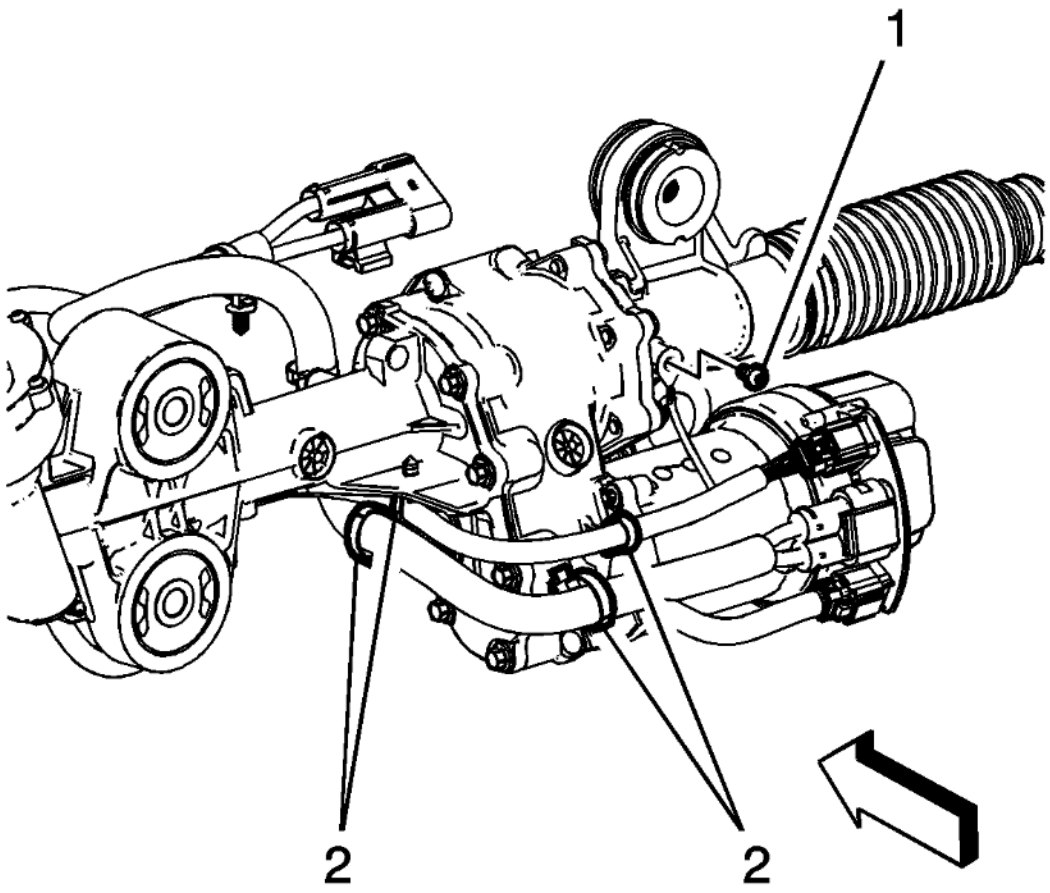

Fig. 114: Harness Retainers
Courtesy of GENERAL MOTORS COMPANY

NOTE: **Once the wiring harness and extension harness are removed, the harness retainers CANNOT be reused. Use NEW harness retainers only and place the NEW harness retainers in the same position and orientation as the old harness retainers. A NEW harness will come with NEW harness retainers already in place.**

cardiagn.com

15. Mark the position and orientation of each old harness retainer on the wiring harness and extension harness and replace them with NEW harness retainers (2).
16. Install the wiring harness and extension harness retainers (2) in the steering gear.
17. Install and tighten the extension harness ground bolt (1) to 6 N.m (53 lb in).
18. Install Steering Gear Skid Shield **Steering Gear Skid Shield Replacement**
19. Program the power steering control module. **Power Steering Control Module Programming and Setup**

POWER BRAKE BOOSTER INLET HOSE REPLACEMENT (HEAVY DUTY)

Removal Procedure

1. Remove as much power steering fluid from the power steering fluid reservoir as possible.
2. Remove Underbody Skid Shield **Underbody Skid Shield Replacement**

cardiagn.com

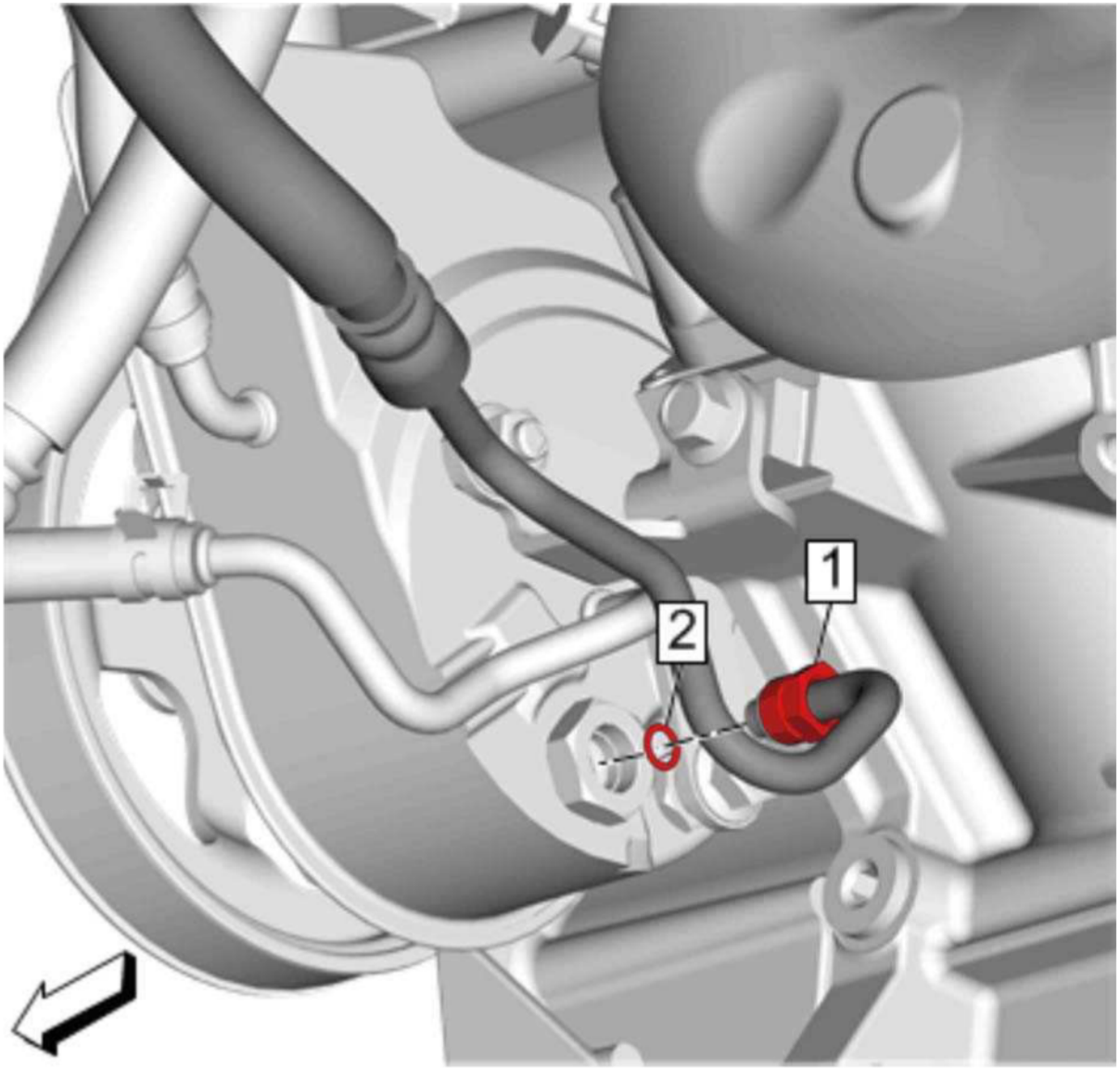

Fig. 115: Power Brake Booster Inlet Hose
Courtesy of GENERAL MOTORS COMPANY

CAUTION: **Refer to Power Steering Hose Disconnected Caution .**

3. Remove Power Brake Booster Inlet Hose (1) @Power Steering Fluid Reservoir

cardiagn.com

4. Remove Power Brake Booster Inlet Hose Seal (2)

   DISCARD the seal.

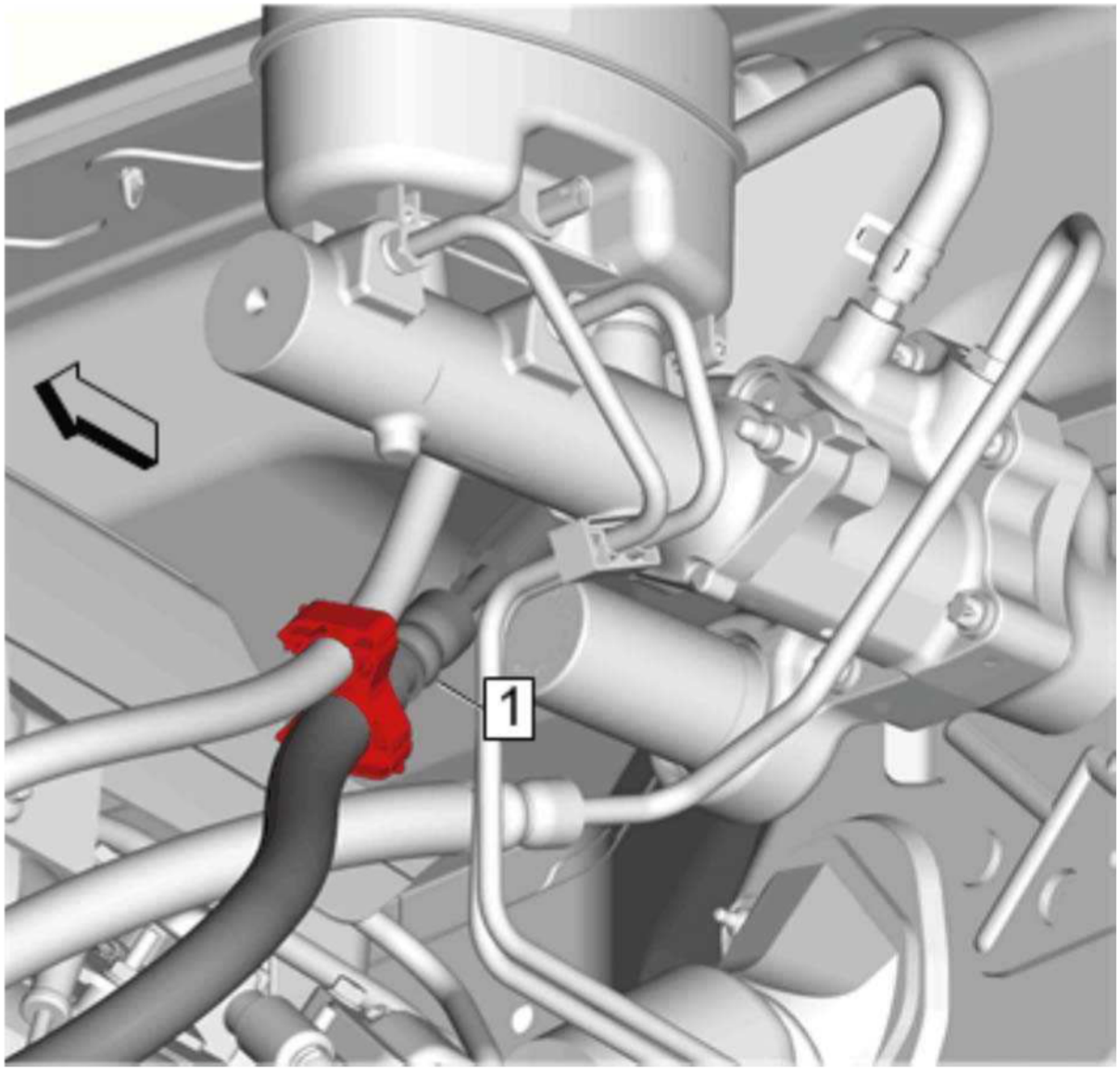

Fig. 116: Power Brake Booster Inlet Hose
Courtesy of GENERAL MOTORS COMPANY

cardiagn.com

5. Remove Power Brake Booster Inlet Hose (1) @Retaining Clip

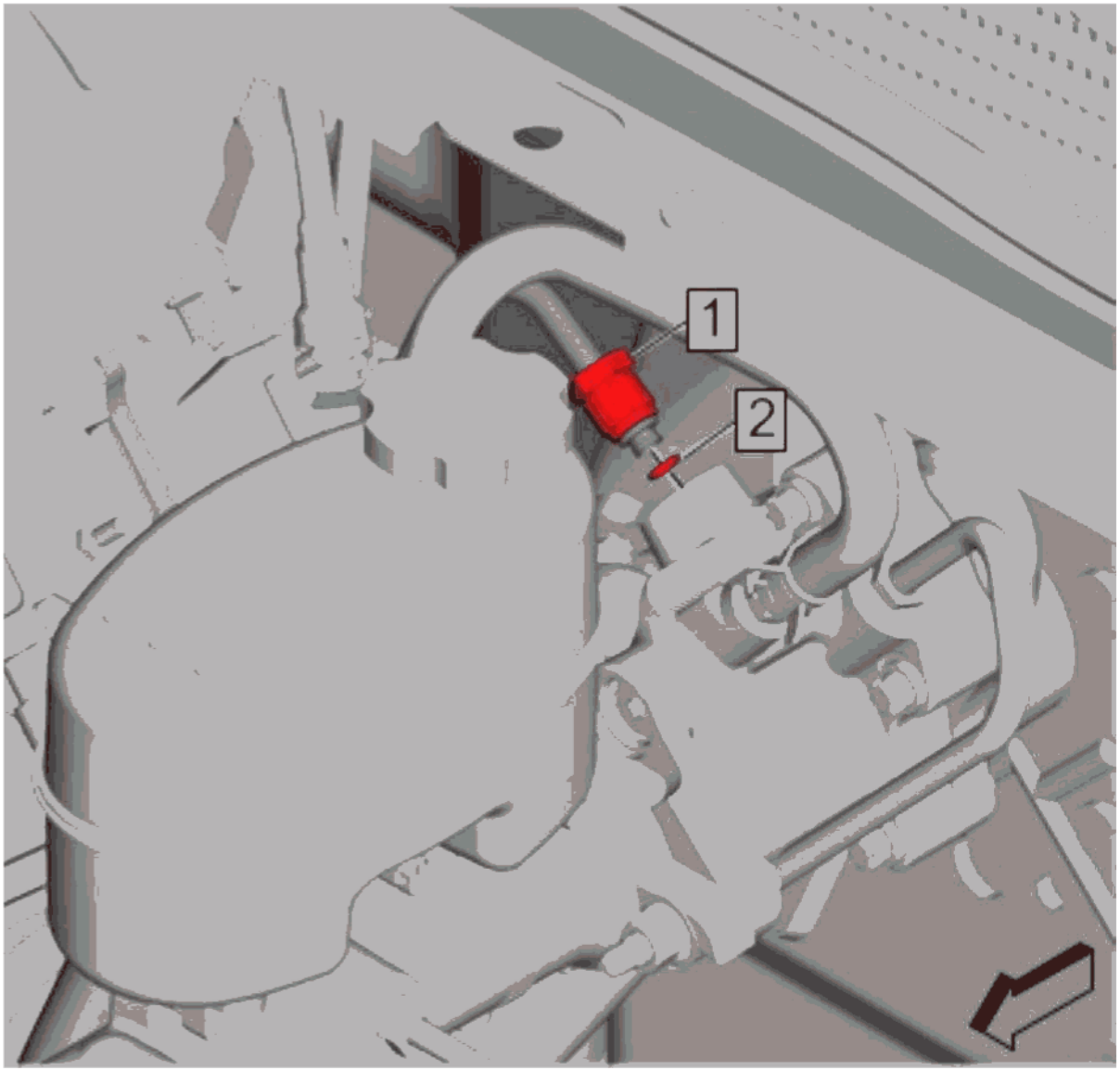

Fig. 117: Power Brake Booster Inlet Hose
Courtesy of GENERAL MOTORS COMPANY

6. Remove Power Brake Booster Inlet Hose (1) @Power Brake Booster

cardiagn.com

7. Remove Power Brake Booster Inlet Hose Seal (2).

   DISCARD the seal.

8. Remove the power brake booster inlet hose (1) from the vehicle.

Installation Procedure

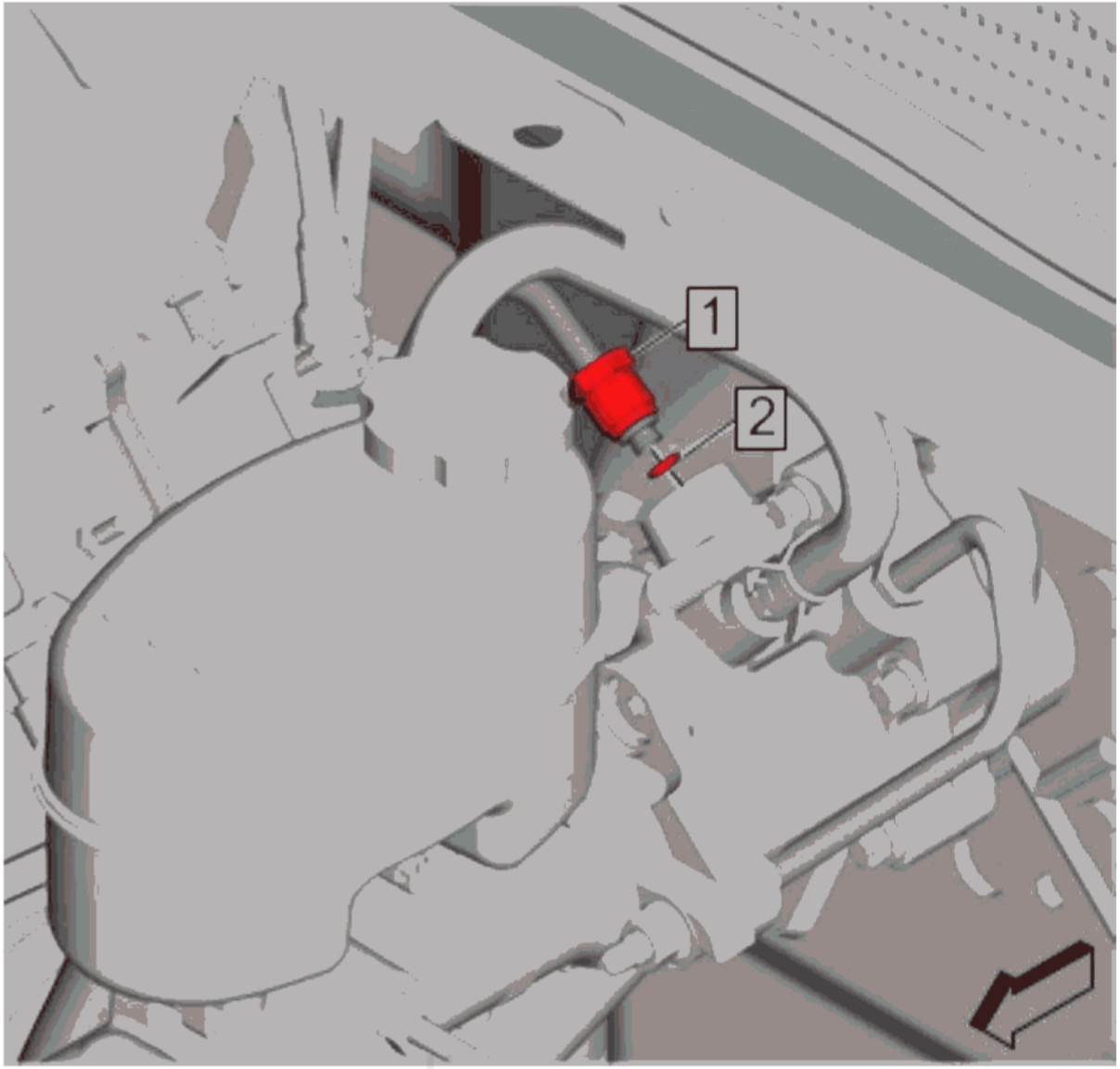

cardiagn.com

Fig. 118: Power Brake Booster Inlet Hose
Courtesy of GENERAL MOTORS COMPANY

CAUTION: The inlet and outlet hoses must not be twisted during installation. Do not bend or distort the inlet or outlet hoses to make installation easier. Failure to follow these procedures could result in component damage.

1. Position the power brake booster inlet hose (1) on the vehicle.

NOTE: Apply NEW power steering fluid to the power brake booster inlet hose seal to aid in installation.

2. Install Power Brake Booster Inlet Hose Seal (2).

Install a NEW seal.

CAUTION: Refer to Component Fastener Tightening Caution .

NOTE: Start both power brake booster inlet hose fittings by hand before tightening either fitting to specification.

3. Install Power Brake Booster Inlet Hose (1) @Power Brake Booster and tighten 34 N.m (25 lb ft)

cardiagn.com

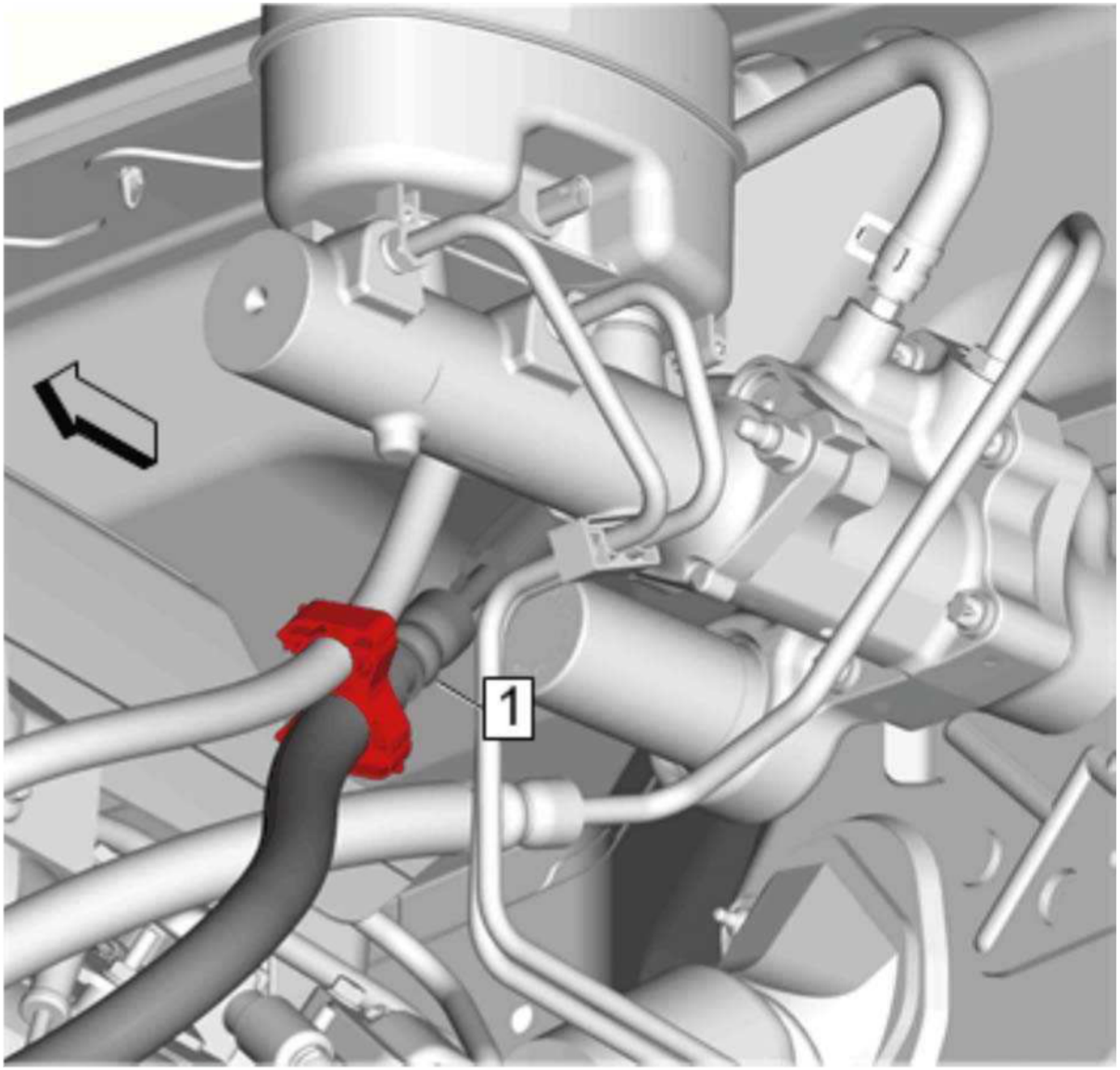

Fig. 119: Power Brake Booster Inlet Hose
Courtesy of GENERAL MOTORS COMPANY

4. Install Power Brake Booster Inlet Hose (1) @Retaining Clip

cardiagn.com

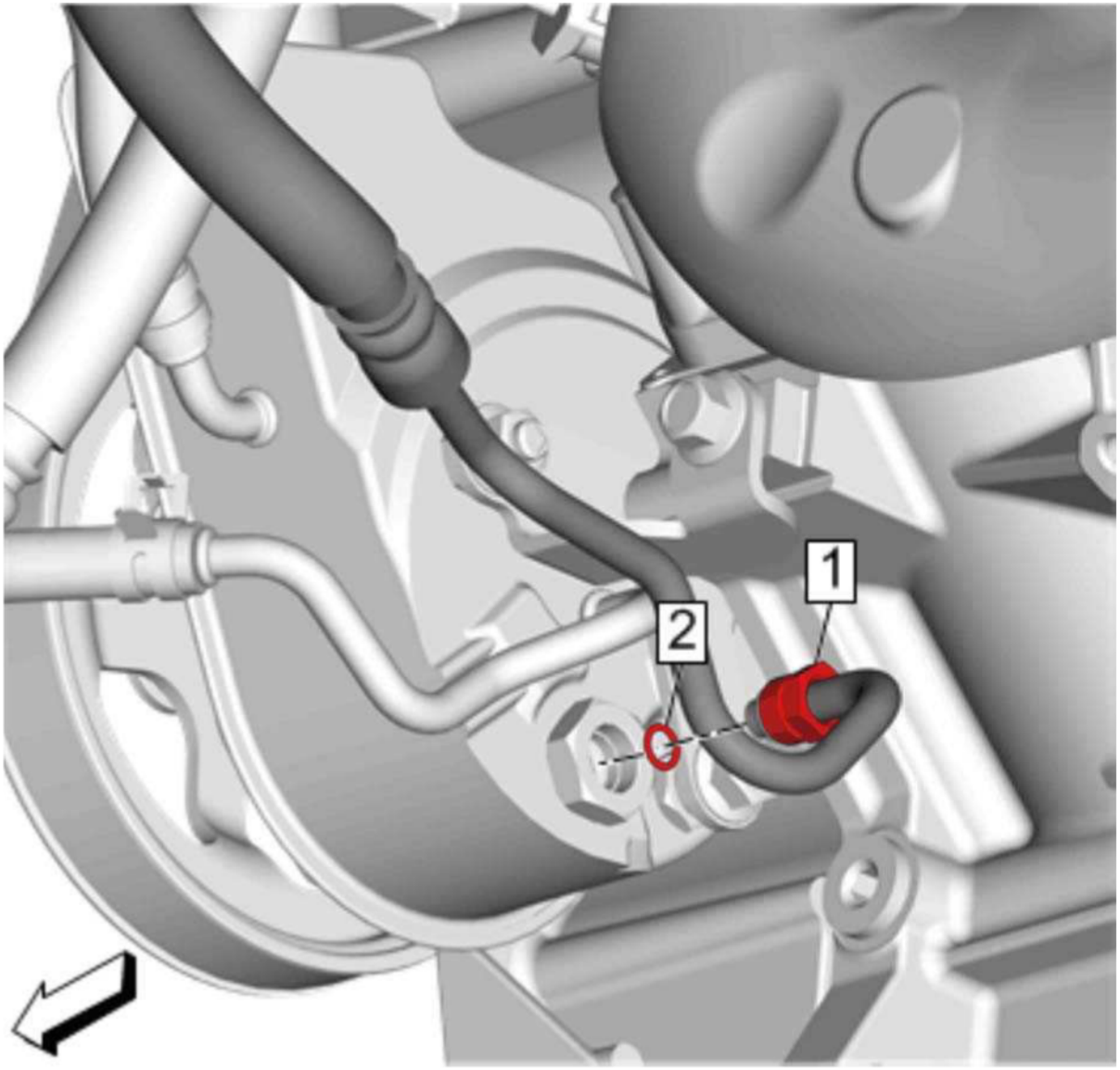

Fig. 120: Power Brake Booster Inlet Hose
Courtesy of GENERAL MOTORS COMPANY

NOTE: **Apply NEW power steering fluid to the power brake booster inlet hose seal to aid in installation.**

5. Install Power Brake Booster Inlet Hose Seal (2)

cardiagn.com

Install a NEW seal.

6. Install Power Brake Booster Inlet Hose (1) @Power Steering Fluid Reservoir and tighten 34 N.m (25 lb ft)
7. Install Underbody Skid Shield **Underbody Skid Shield Replacement**
8. Fill and bleed the power steering system. **Power Steering System Bleeding**

POWER BRAKE BOOSTER OUTLET HOSE REPLACEMENT (HEAVY DUTY)

Removal Procedure

1. Remove as much power steering fluid from the power steering fluid reservoir as possible.

cardiagn.com

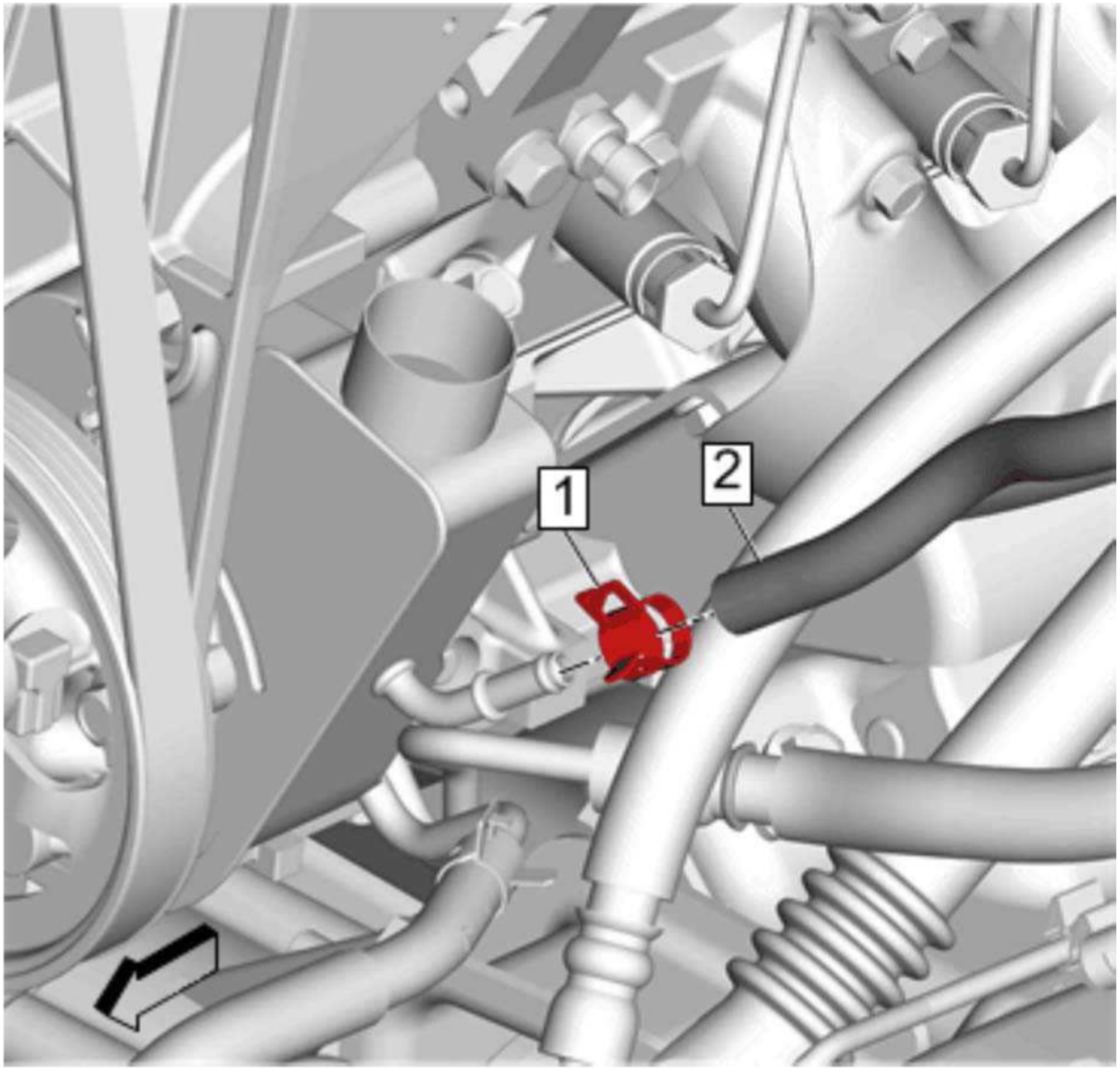

Fig. 121: Power Brake Booster Outlet Hose Clamp
Courtesy of GENERAL MOTORS COMPANY

CAUTION: **Refer to Power Steering Hose Disconnected Caution .**

2. Disengage Power Brake Booster Outlet Hose Clamp (1) @Power Steering Fluid Reservoir

cardiagn.com

3. Separate Power Brake Booster Outlet Hose (2) @Power Steering Fluid Reservoir

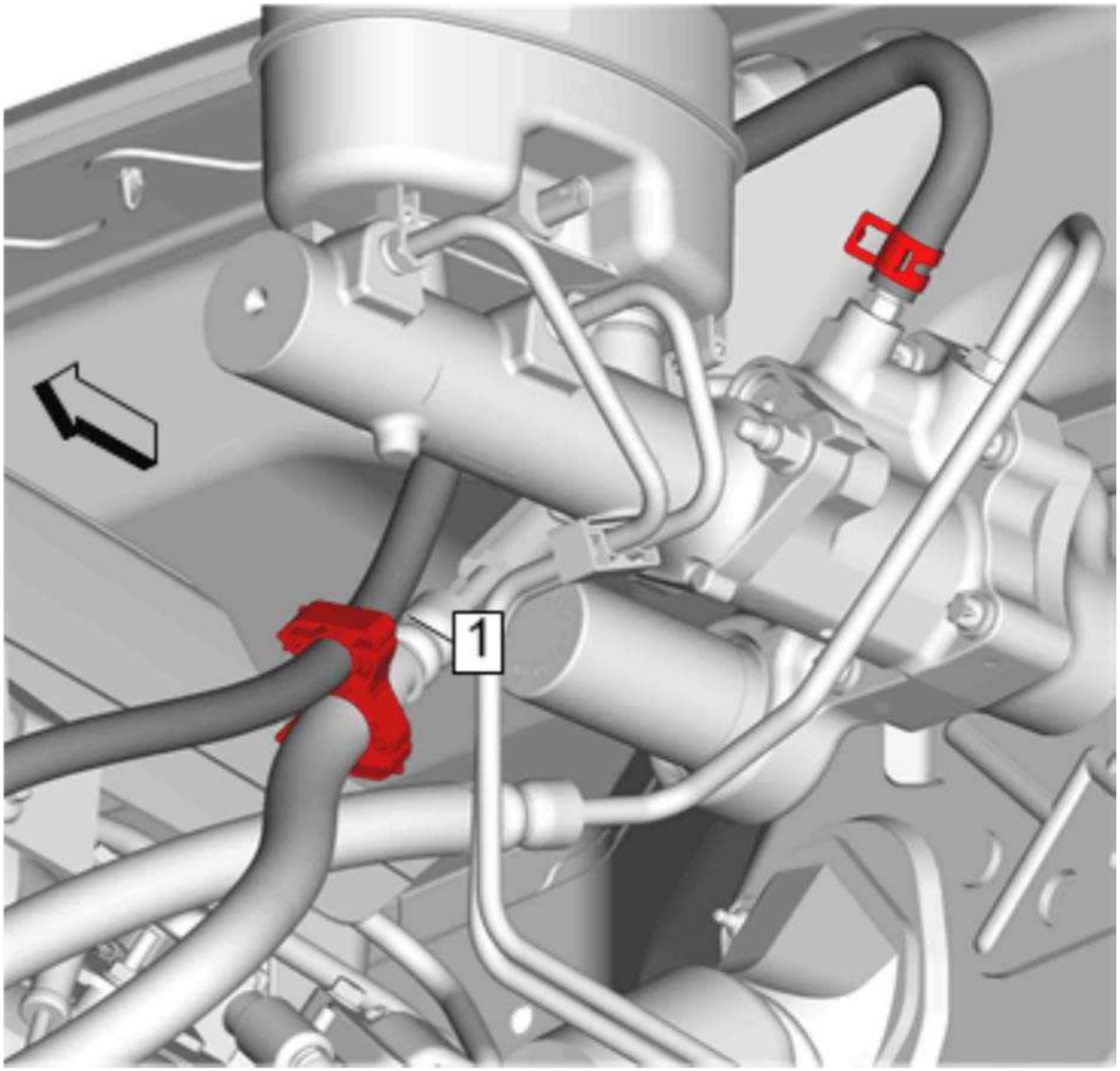

Fig. 122: Power Brake Booster Outlet Hose
Courtesy of GENERAL MOTORS COMPANY

4. Remove Power Brake Booster Outlet Hose (1) @Retaining Clip

cardiagn.com

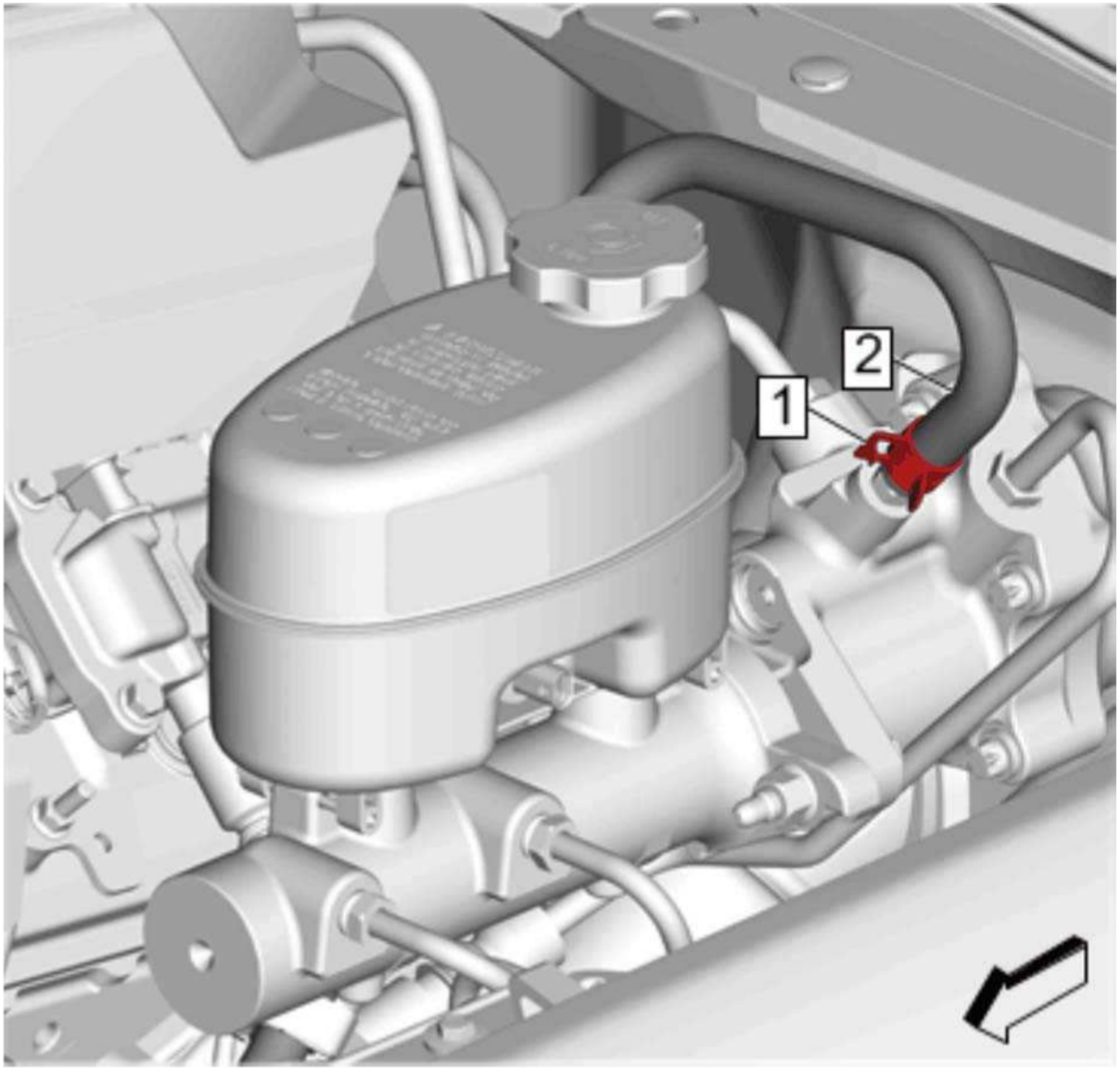

Fig. 123: Power Brake Booster Outlet Hose Clamp
Courtesy of GENERAL MOTORS COMPANY

5. Disengage Power Brake Booster Outlet Hose Clamp (1) @Power Brake Booster
6. Separate Power Brake Booster Outlet Hose (2) @Power Brake Booster
7. Remove the power brake booster outlet hose (2) from the vehicle.

cardiagn.com

Installation Procedure

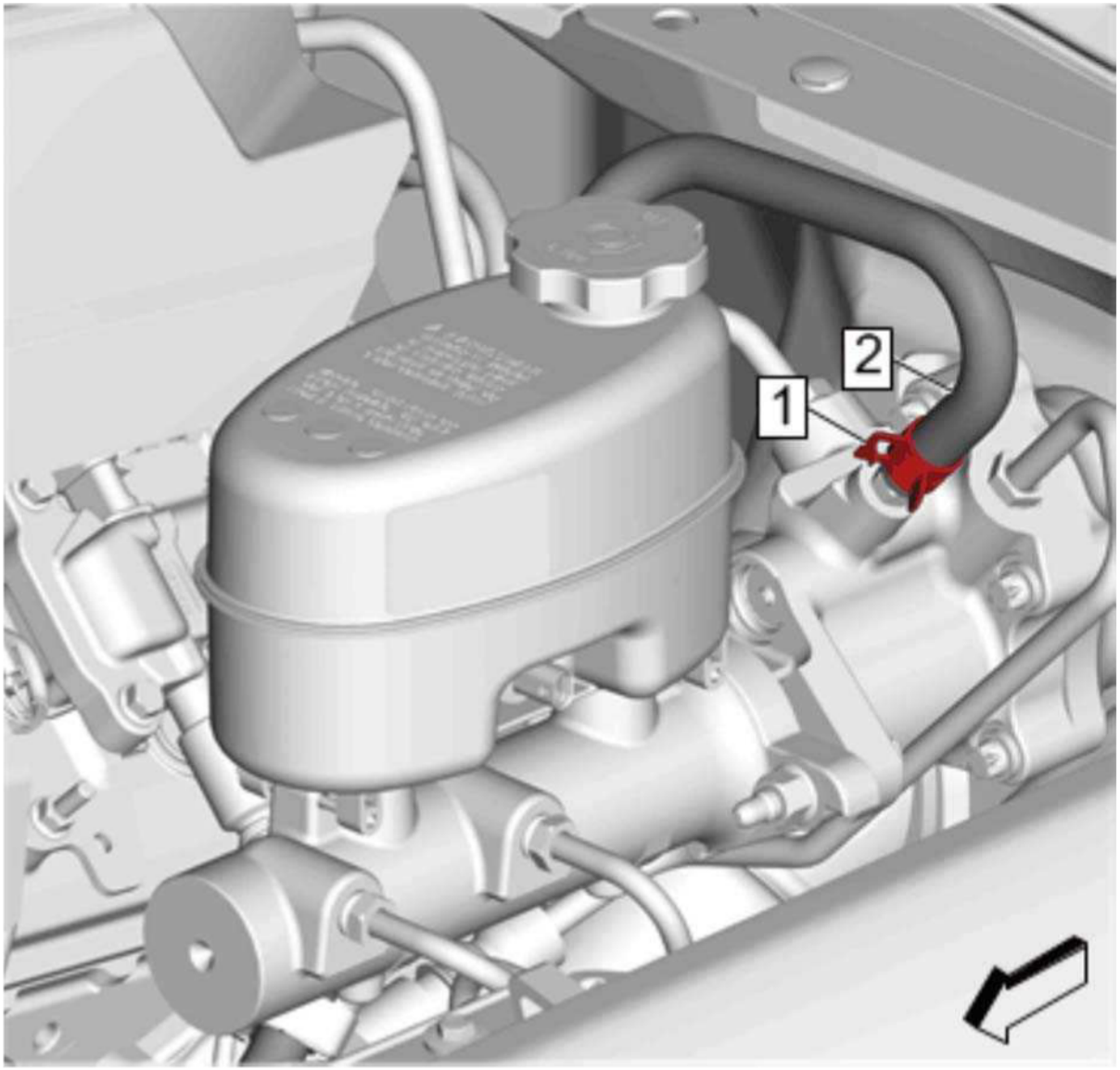

Fig. 124: Power Brake Booster Outlet Hose Clamp
Courtesy of GENERAL MOTORS COMPANY

CAUTION: **The inlet and outlet hoses must not be twisted during installation. Do not bend or distort the inlet or outlet**

cardiagn.com

hoses to make installation easier. Failure to follow these procedures could result in component damage.

1. Position the power brake booster outlet hose (2) on the vehicle.
2. Install Power Brake Booster Outlet Hose (2) @Power Brake Booster
3. Engage Power Brake Booster Outlet Hose Clamp (1) @Power Brake Booster

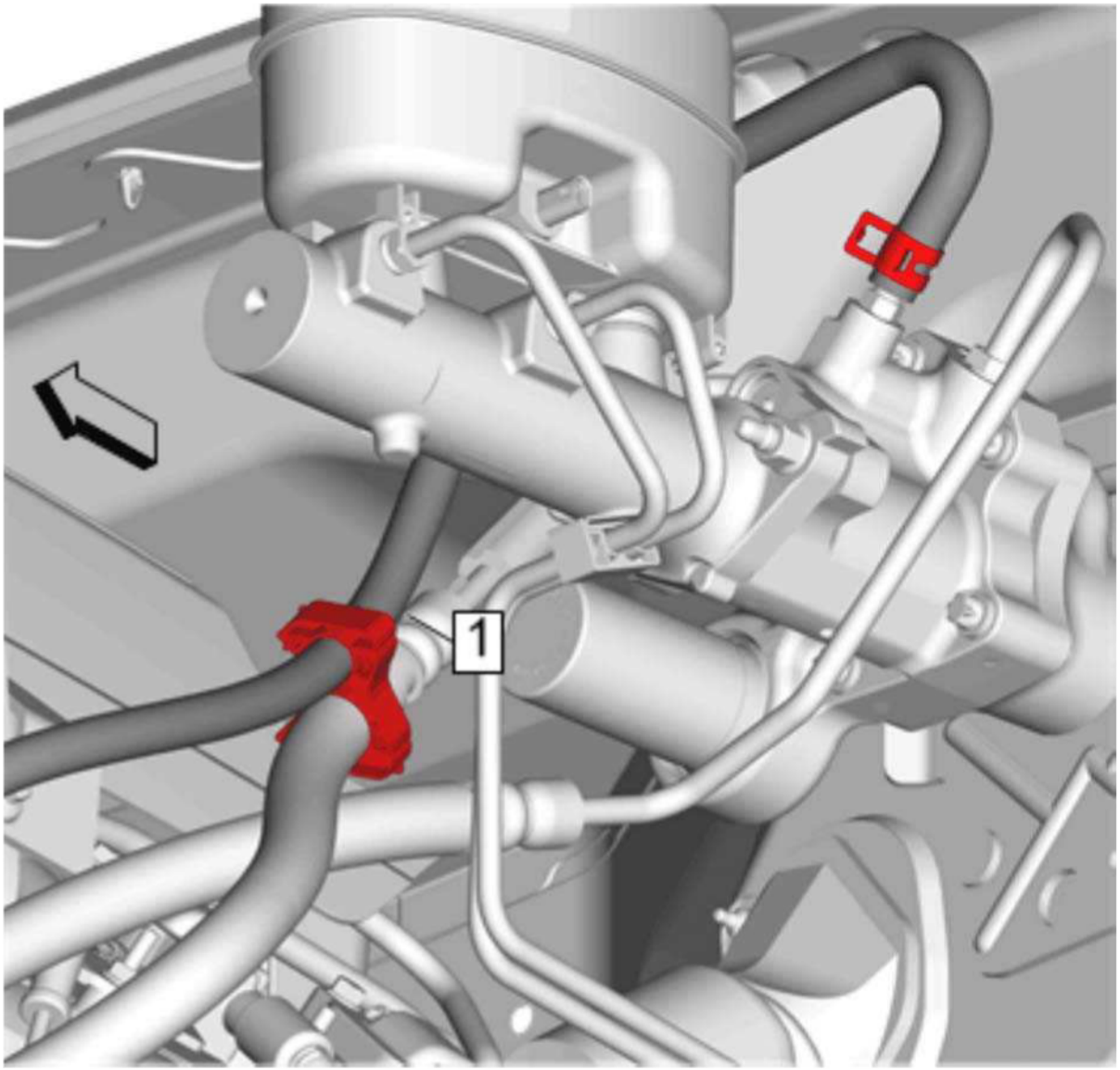

cardiagn.com

Fig. 125: Power Brake Booster Outlet Hose
Courtesy of GENERAL MOTORS COMPANY

4. Install Power Brake Booster Outlet Hose (1) @Retaining Clip

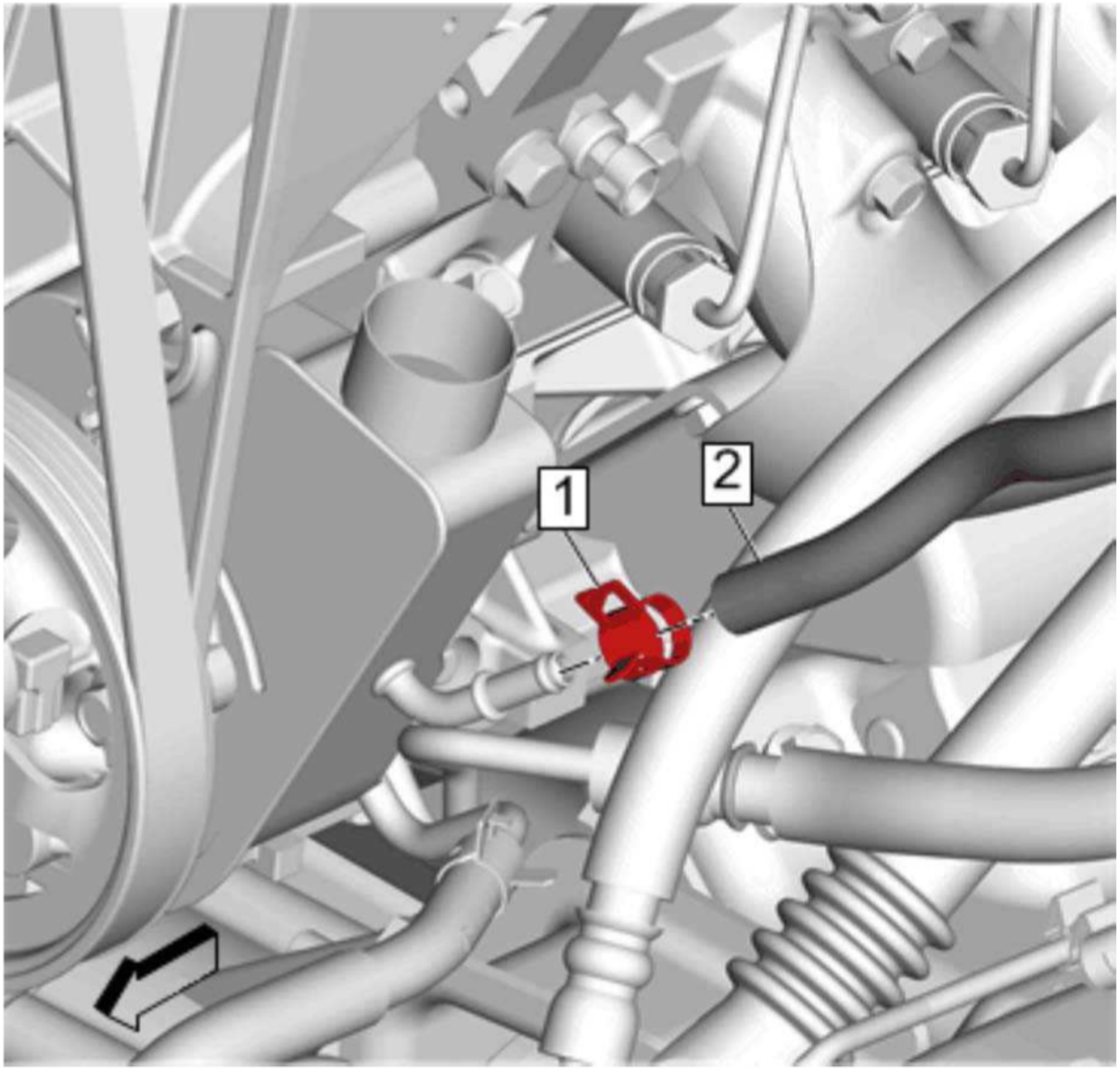

Fig. 126: Power Brake Booster Outlet Hose Clamp

cardiagn.com

Courtesy of GENERAL MOTORS COMPANY

5. Install Power Brake Booster Outlet Hose (2) @Power Steering Fluid Reservoir
6. Engage Power Brake Booster Outlet Hose Clamp (1) @Power Steering Fluid Reservoir
7. Fill and bleed the power steering system. **Power Steering System Bleeding**

DESCRIPTION AND OPERATION

POWER STEERING SYSTEM DESCRIPTION AND OPERATION (HYDRAULIC POWER STEERING)

The hydraulic power steering pump is a constant displacement vane-type pump that provides hydraulic pressure and flow for the power steering gear. The hydraulic power steering pump is belt-driven.

The power steering fluid reservoir holds the power steering fluid and may be integral with the power steering pump or remotely located. The following locations are typical locations for the remote reservoir:

- Mounted to the front of the dash panel
- Mounted to the inner fender
- Mounted to a bracket on the engine

The 2 basic types of power steering gears are listed below:

- A recirculating ball system
- A rack and pinion system

In the recirculating ball system, a worm gear converts steering wheel movement to movement of a sector shaft. A pitman arm attached to the bottom of the sector shaft actually moves one tie rod and an intermediate rod move the other tie rod.

In the rack and pinion system, the rack and the pinion are the 2 components that convert steering wheel rotation to lateral movement. The steering shaft is attached to the pinion in the steering gear. The pinion rotates with the steering wheel. Gear teeth on the pinion mesh with the gear teeth on the rack. The rotating pinion moves the rack from side to side. The lateral action of the rack pushes and pulls the tie rods in order to change the direction of the vehicle's front wheels.

The power steering pressure hose connects the power steering pump union fitting to the power steering gear and allows pressurized power steering fluid to flow from the pump to the gear.

cardiagn.com

The power steering return hose returns fluid from the power steering gear back to the power steering fluid reservoir. The power steering return line may contain an integral fin-type or line-type power steering fluid cooler.

In a typical power steering system, a pump generates hydraulic pressure, causing fluid to flow, via the pressure hose, to the steering gear valve assembly. The steering gear valve assembly regulates the incoming fluid to the right and left chambers in order to assist in right and left turns.

Turning the steering wheel activates the valve assembly, which applies greater fluid pressure and flow to 1 side of the steering gear piston, and lower pressure and flow to the other side of the piston. The pressure assists the movement of the gear piston. Tie rods transfer this force to the front wheels, which turn the vehicle right or left.

POWER STEERING SYSTEM DESCRIPTION AND OPERATION (ELECTRIC POWER STEERING)

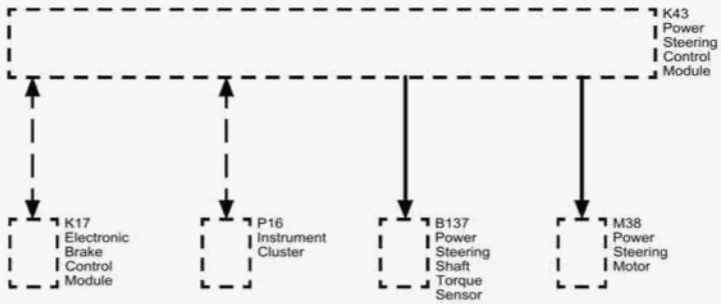

Fig. 127: Power Steering System Diagram
Courtesy of GENERAL MOTORS COMPANY

cardiagn.com

Callout	Component Name
K43	K43 Power Steering Control Module
K17	K17 Electronic Brake Control Module
P16	P16 Instrument Cluster
B137	B137 Power Steering Shaft Torque Sensor
M38	M38 Power Steering Motor

The belt driven electronic power steering system consists of the following components:

- The integrated electromechanical power steering unit, containing the power steering control module, its sensors, the power steering motor, a belt drive and a ball nut mechanism.
- The steering gear (rack and pinion)

The power steering control module is part of the power steering assist motor assembly and is replaceable as a complete unit independent of the steering gear assembly. The torque sensor is integrated with the steering gear pinion and is serviced as part of the steering gear.

The belt driven electric power steering system reduces the amount of effort needed to steer the vehicle utilizing the power steering control module to control the power steering motor to maneuver the steering gear. The power steering control module also uses a combination of the torque sensor, motor rotational sensor, battery voltage circuit and serial data circuit to perform the system functions. At low speeds more assist is provided for easy turning during parking maneuvers. At higher speeds less assist is provided for improved road feel and directional stability.

The power steering control module continuously monitors the digital torque sensor's torque and index current signals. As the steering wheel is turned and torque is applied to the steering shaft, the steering input and output shafts are monitored via the torque signal circuit and then processed by the power steering control module to calculate the steering torque. The voltage signals of the motor position sensor and the digital torque sensor's index current signal are both processed by the power steering control module to detect and calculate the steering wheel angle.

The power steering control module responds to the change in the digital torque sensor signals as well as the motor rotational sensor's voltage signals by commanding current to the power steering motor. The power steering control module controls the motor drive circuit to drive the alternating current motor. The power steering control module and motor assembly is attached to the base of the steering gear housing and applies power assist directly to the rack with a belt drive and a ball nut mechanism to maneuver the rack laterally depending on the direction the steering wheel is turned.

The power steering control module has advanced software features referred to as Active Pull Compensation and Smooth Road Shake Compensation.

Active Pull Compensation constantly measures steering wheel torque being applied by the driver to maintain the vehicle's path. When the software detects extra effort being used, the steering assist motor adds torque in the proper direction to prevent the driver from having to make corrections to keep the vehicle on course. The torque assistance reduces driver fatigue and effort and makes steering easier. The software automatically resets itself

cardiagn.com

to compensate for changing road conditions or the vehicle turning on curves. This software feature will compensate for a specific range of lead/pull up to its maximum limit within a set of parameters. The feature can be disabled during diagnostics for appropriate root cause of a complaint vehicle.

Smooth Road Shake Compensation reduces steering wheel rotational vibration caused by an imbalance from the front tire/wheel assemblies. The rotational vibration transmitted to the steering wheel is referred to as Smooth Road Shake and is a phenomenon that occurs only at highway speeds and on smooth roads. The power steering control module employs active controls to sense and reduce the periodic torque component applied to the steering wheel caused by the wheel imbalance force. This software feature will compensate for a specific range of imbalance. If the imbalance is above a certain level, the power steering control module will disable the smooth road shake compensation software feature and set a DTC C044B to indicate that it has been disabled.

The power steering control module has the ability to calculate an internal system temperature to protect the power steering system from potential damage. To reduce a high system temperature, the power steering control module will reduce the amount of current commanded to the power steering motor, which reduces the amount of steering assist and will set DTC C0176.

The power steering control module has the ability to detect malfunctions within the electric power steering system. Any malfunction detected that disables steering assist will cause the SERVICE POWER STEERING or STEERING ASSIST IS REDUCED DRIVE WITH CARE message to be displayed on the driver information center.

SPECIAL TOOLS AND EQUIPMENT

SPECIAL TOOLS

Illustration	Tool Number/ Description

cardiagn.com

Illustration	Tool Number/ Description
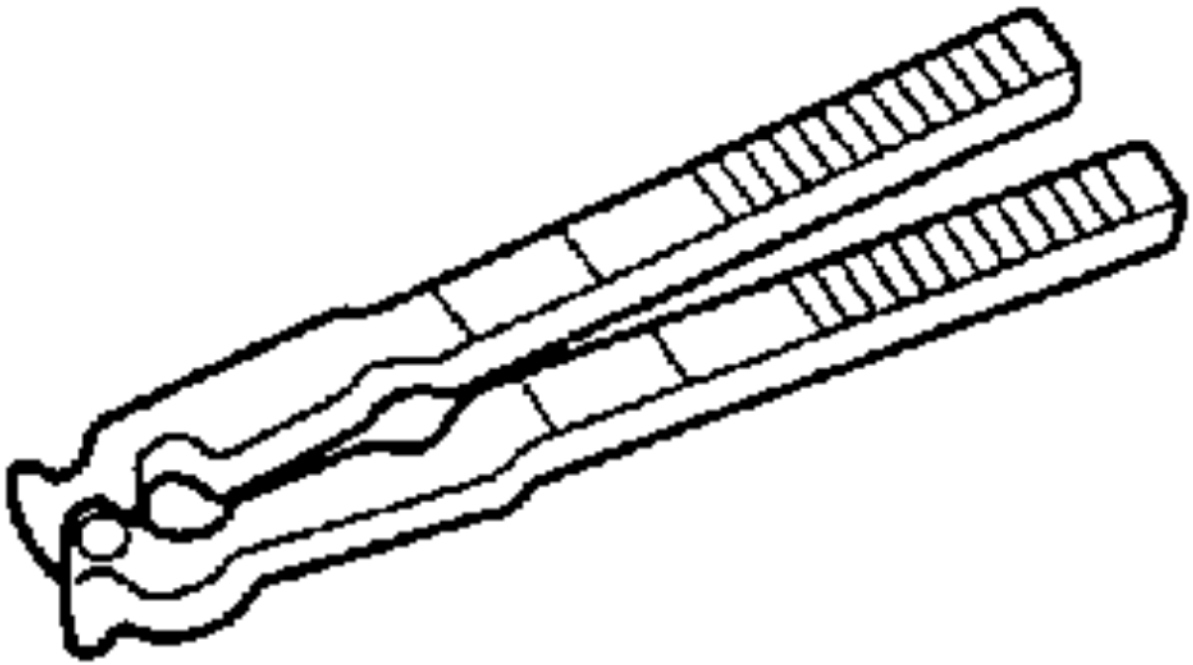	CH-22610 J-22610 KM-J-22610 SA9164C Keystone Clamp Pliers

cardiagn.com

Illustration	Tool Number/ Description
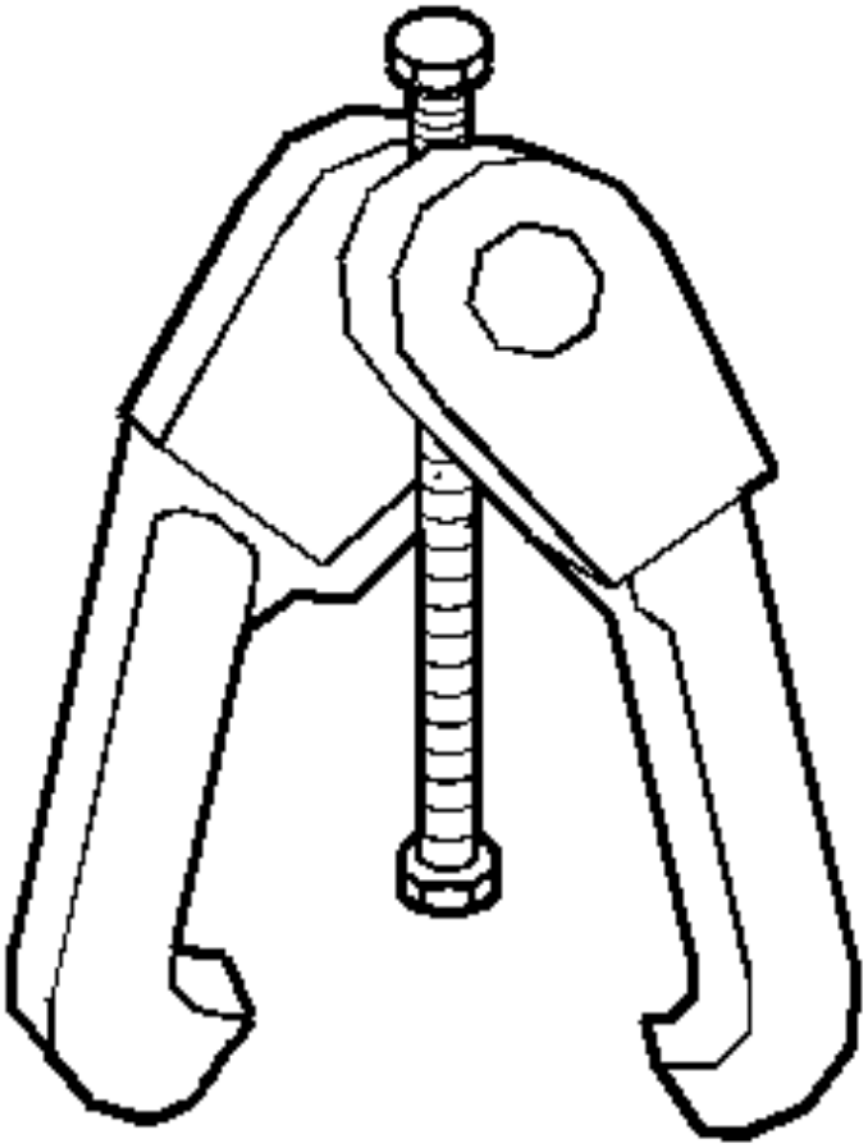	CH-24319-B J-24319-B SA91100C 7503 Universal Steering Linkage and Tie Rod Puller

cardiagn.com

Illustration	Tool Number/ Description
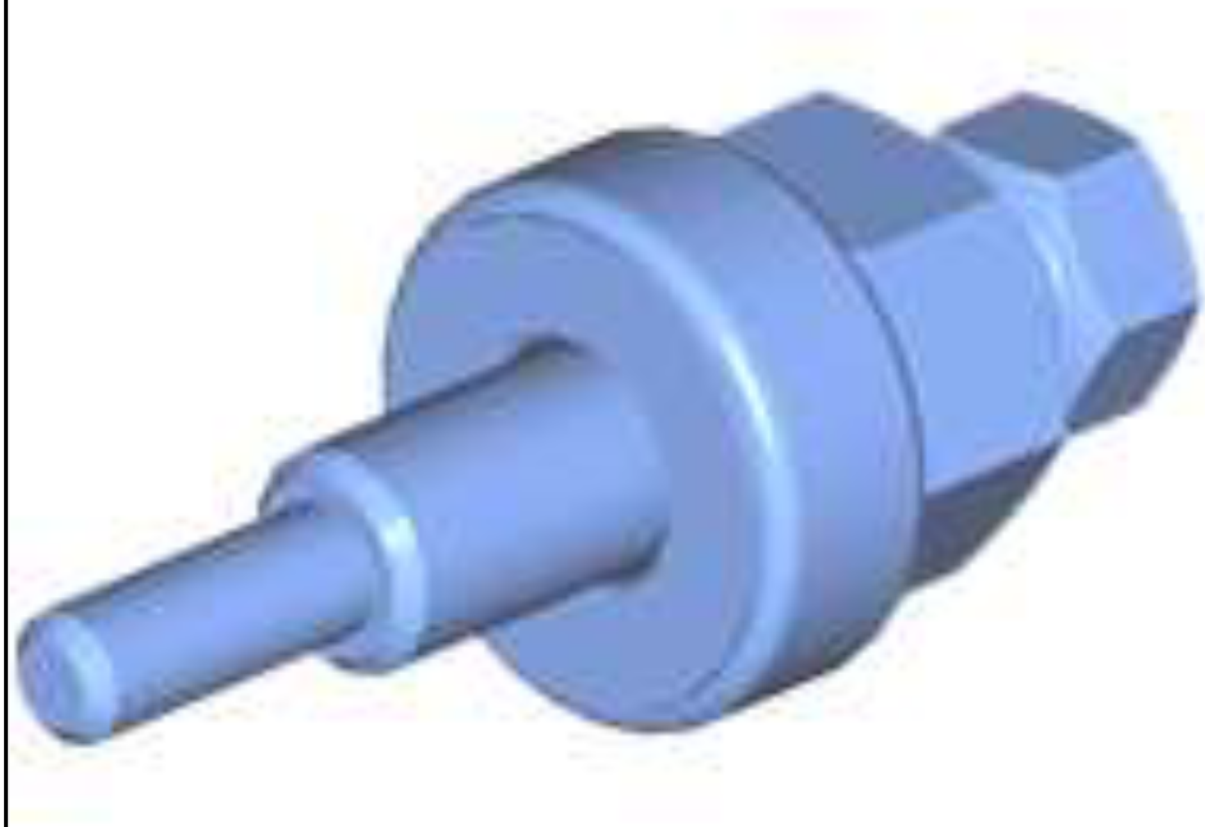	CH-25033-C J-25033-C KM-J-25033-C 8996415 Pulley Installer

cardiagn.com

Illustration	Tool Number/ Description
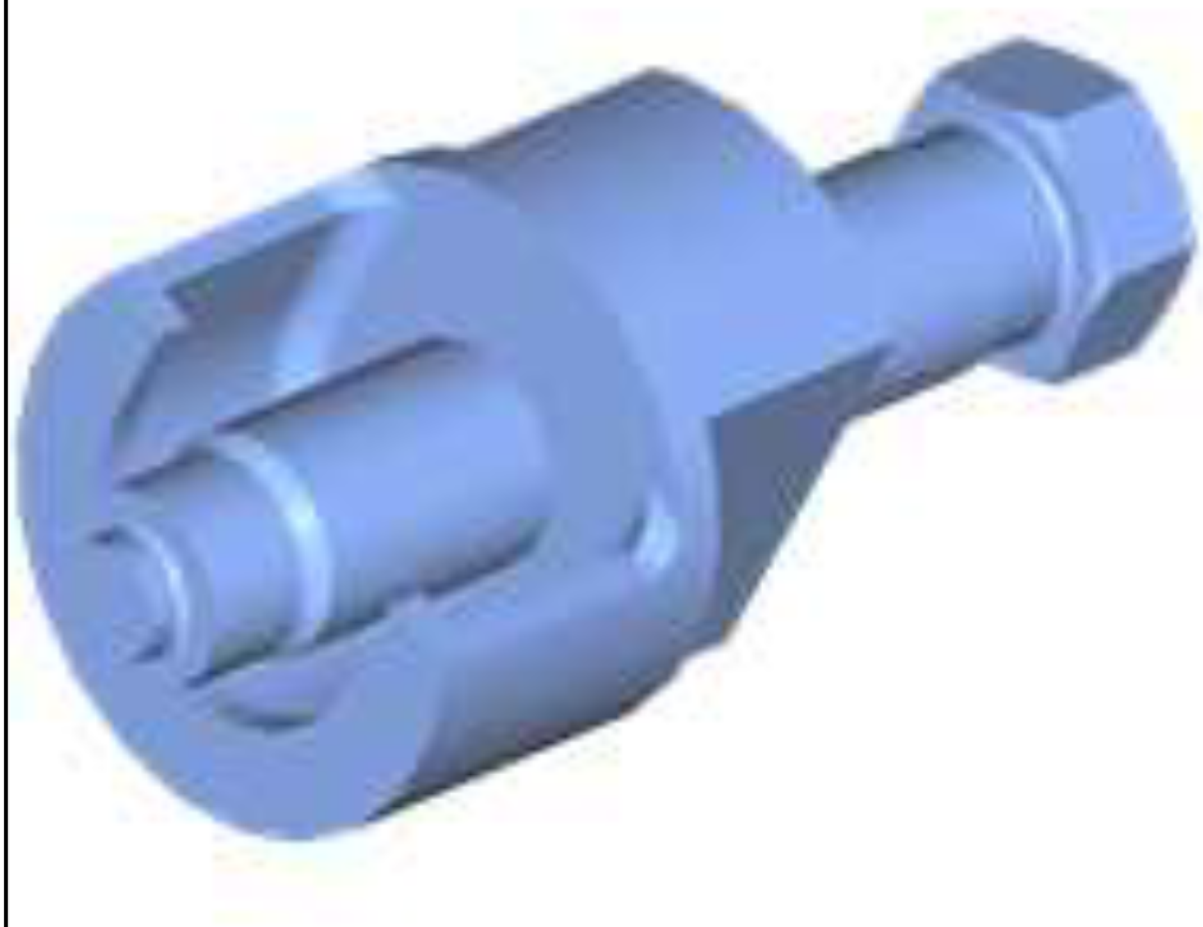	CH-25034-C J-25034-C KM-J-25034-C Pulley Remover

cardiagn.com

Illustration	Tool Number/ Description
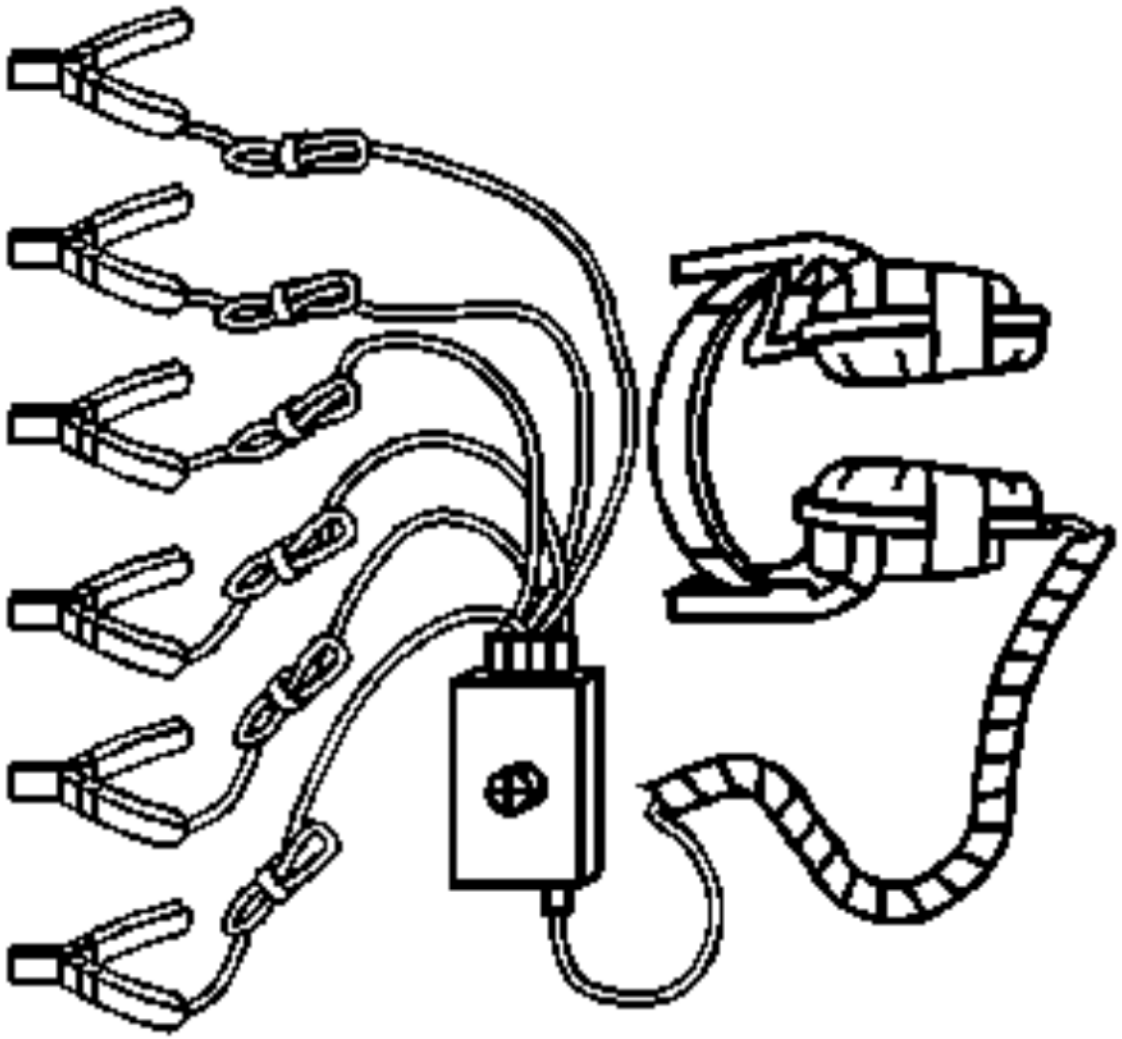	CH-39570 J-39570 SA9217NE Chassis Ear

cardiagn.com

Illustration	Tool Number/ Description
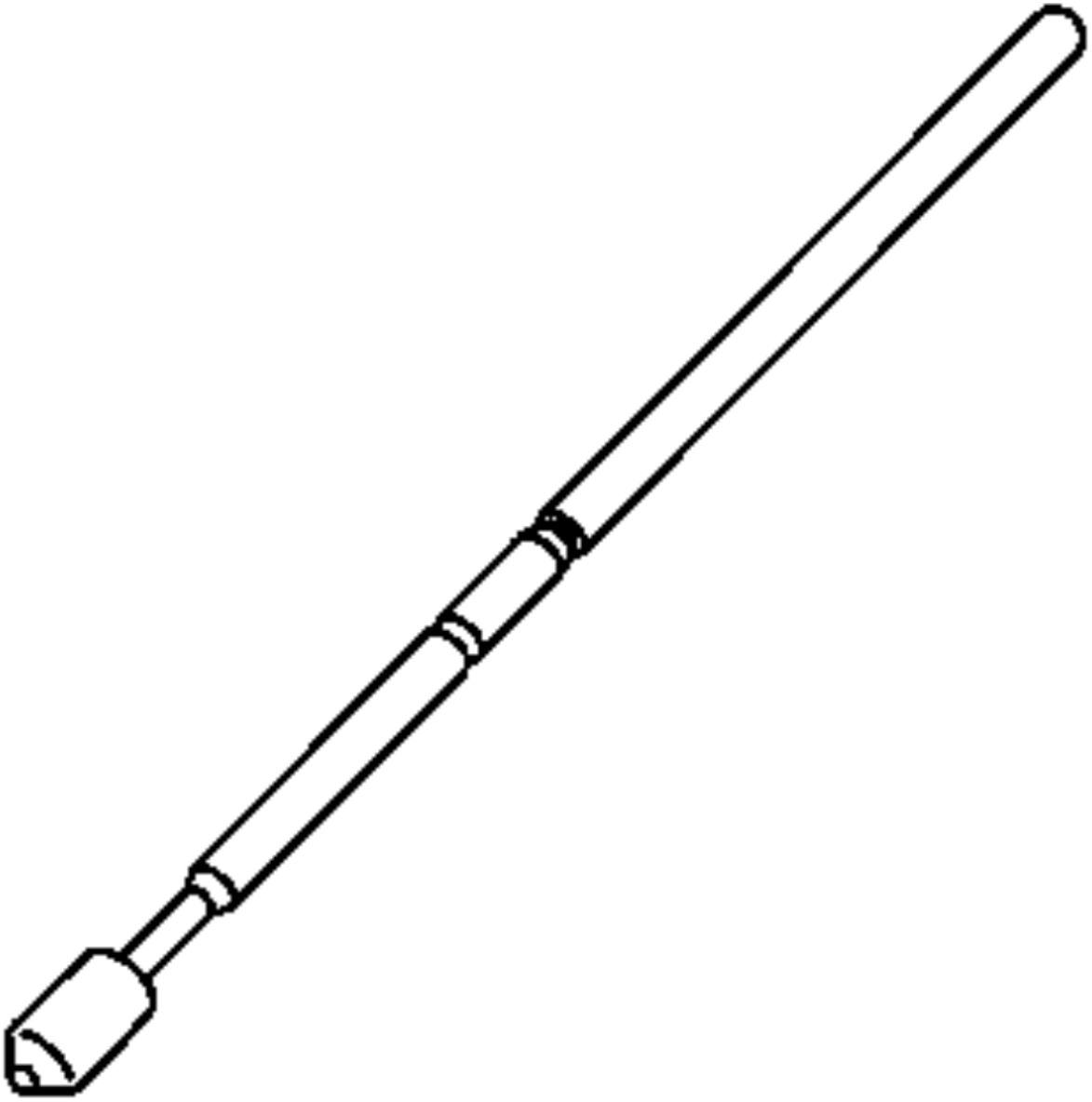	CH-42640 J-42640 Steering Column Anti-Rotation Pin

cardiagn.com

Illustration	Tool Number/ Description
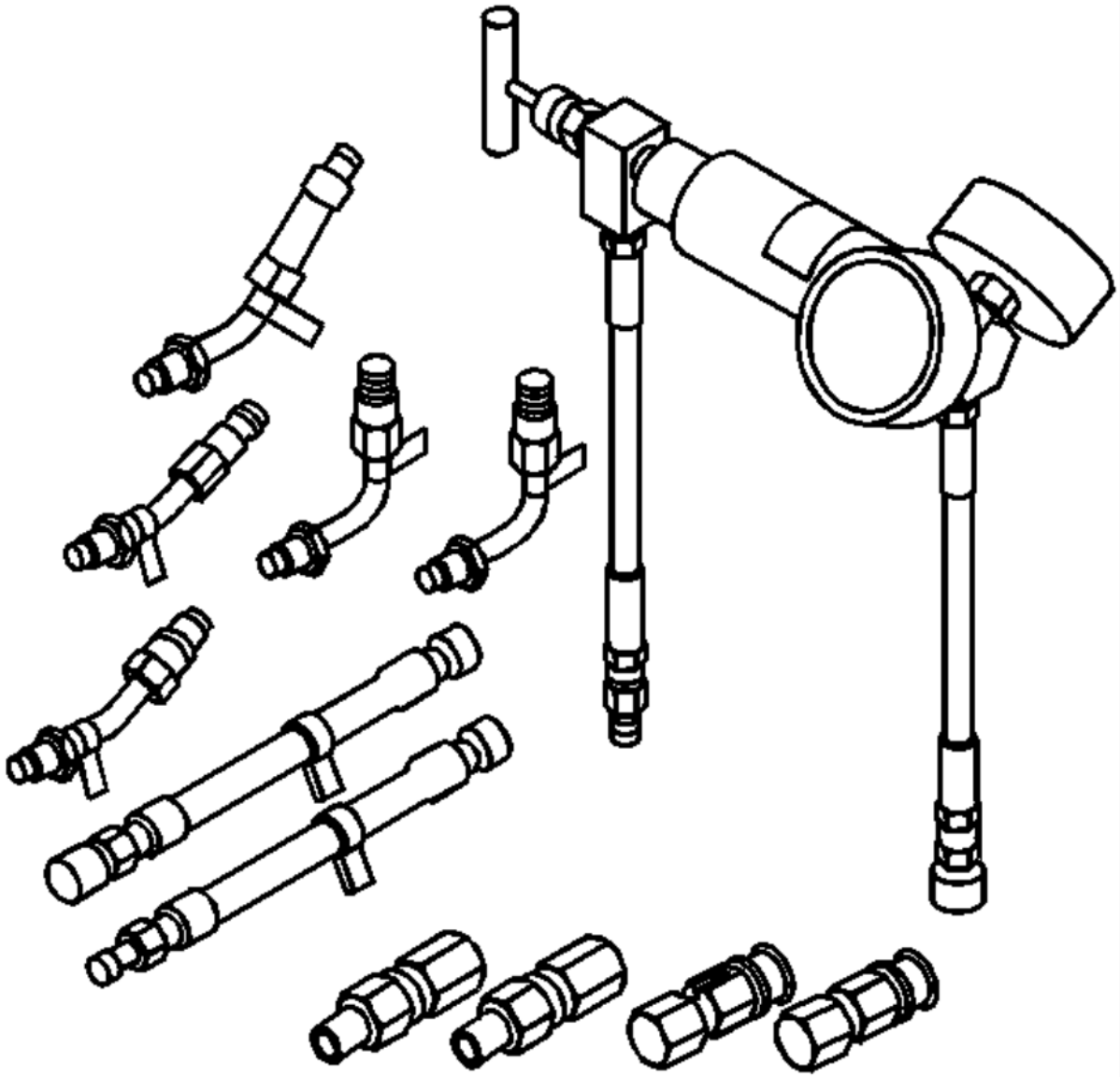	CH-44721 J-44721 Power Steering Analyzer

cardiagn.com

Illustration	Tool Number/ Description
	DT-24433 J-24433 Pinion Bearing Installer

cardiagn.com

Illustration	Tool Number/ Description
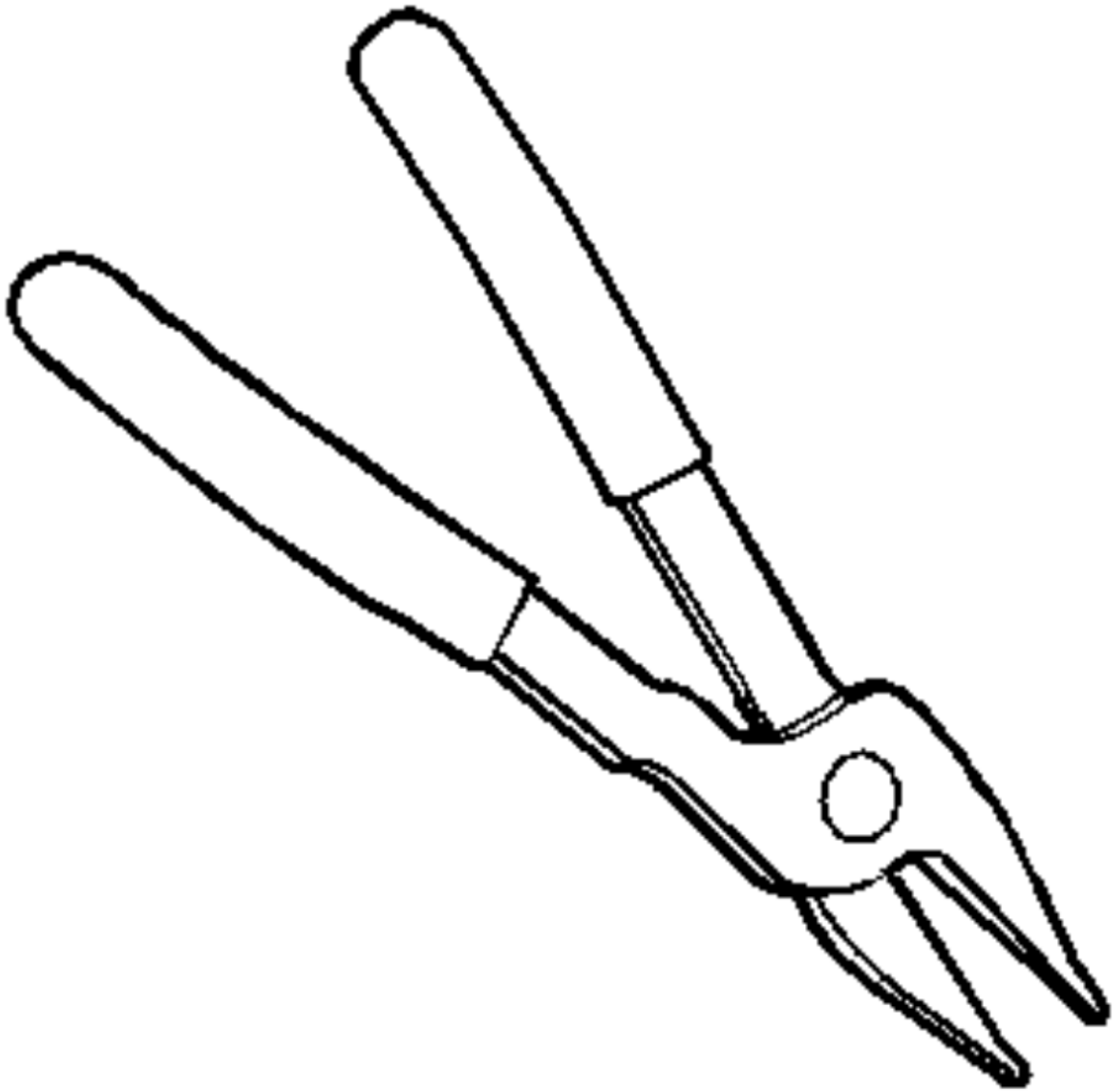	GE-4245 J-4245 KM-J-4245 Internal Snap Ring Pliers

cardiagn.com

Illustration	Tool Number/ Description
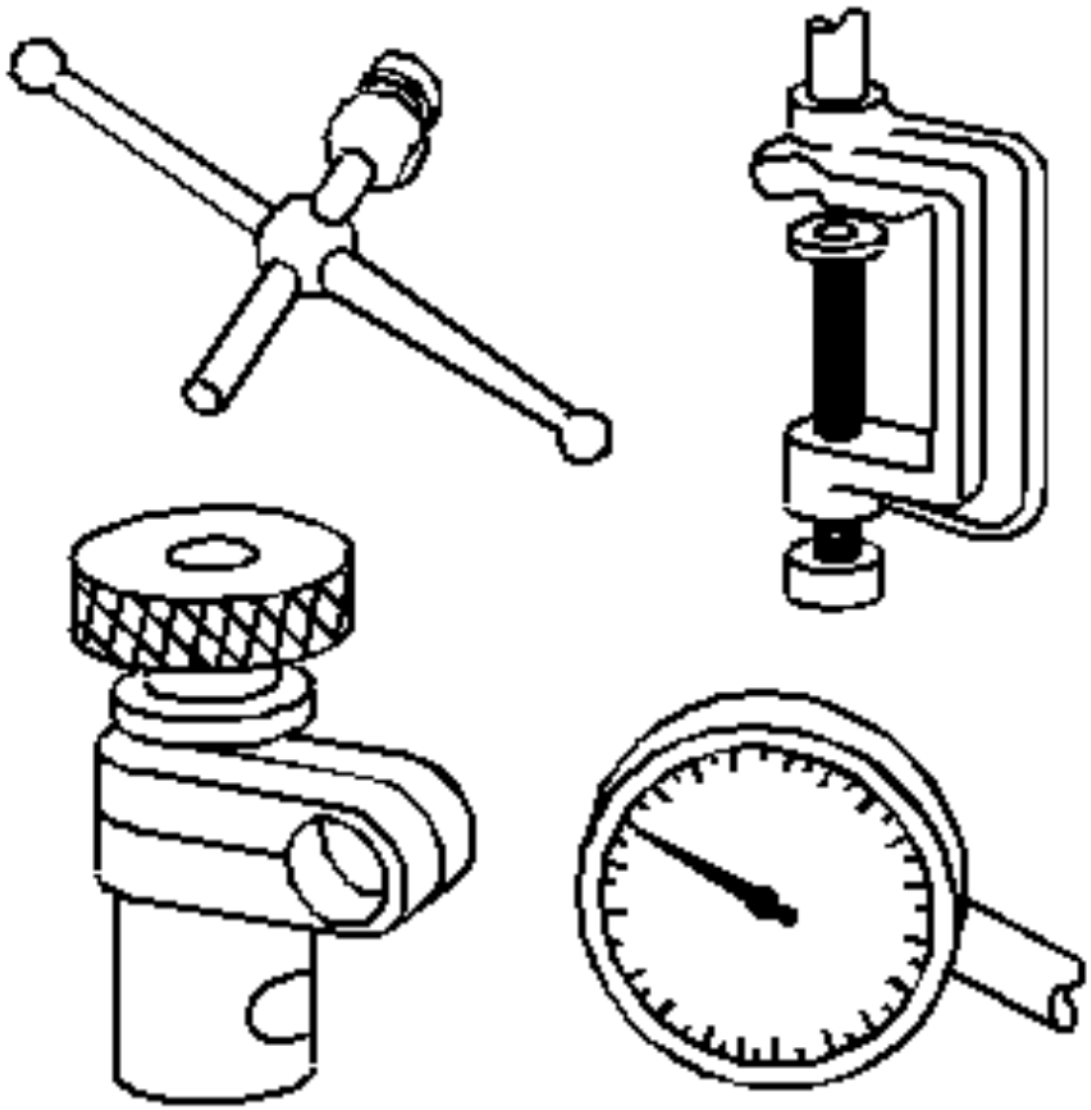	GE-8001 J-8001 Dial Indicator Set

cardiagn.com

Illustration	Tool Number/ Description
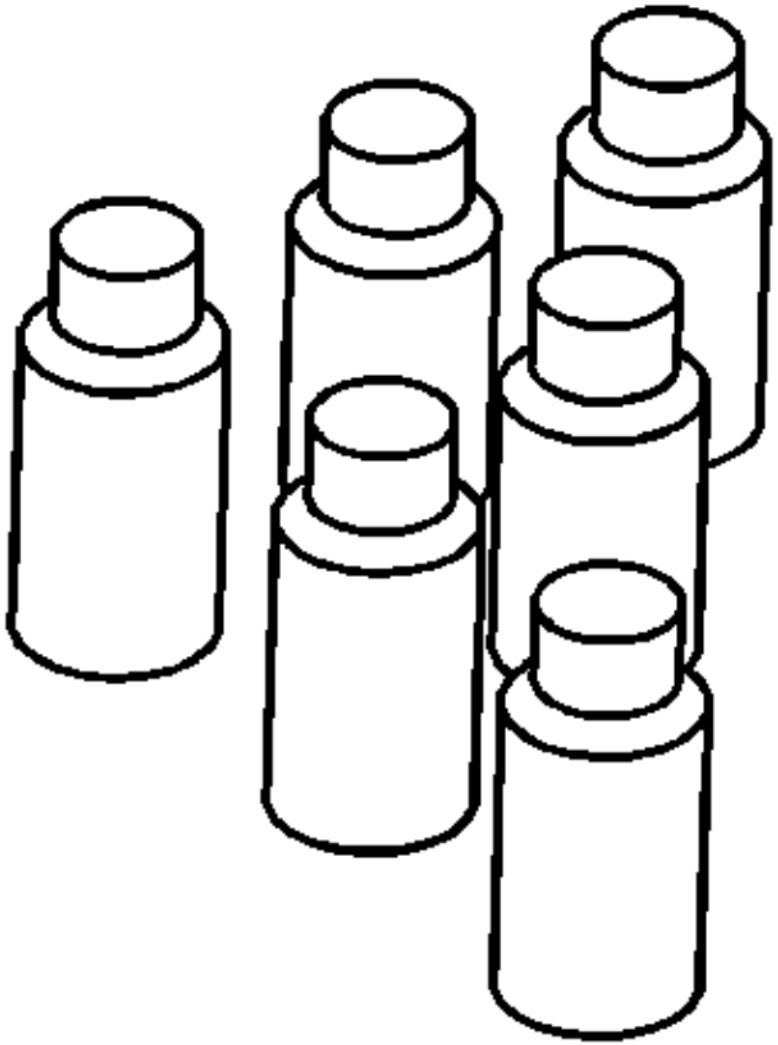	GE-28431-6 J-28431-6 SA9176NE Fluorescent Oil Dye

cardiagn.com

Illustration	Tool Number/ Description
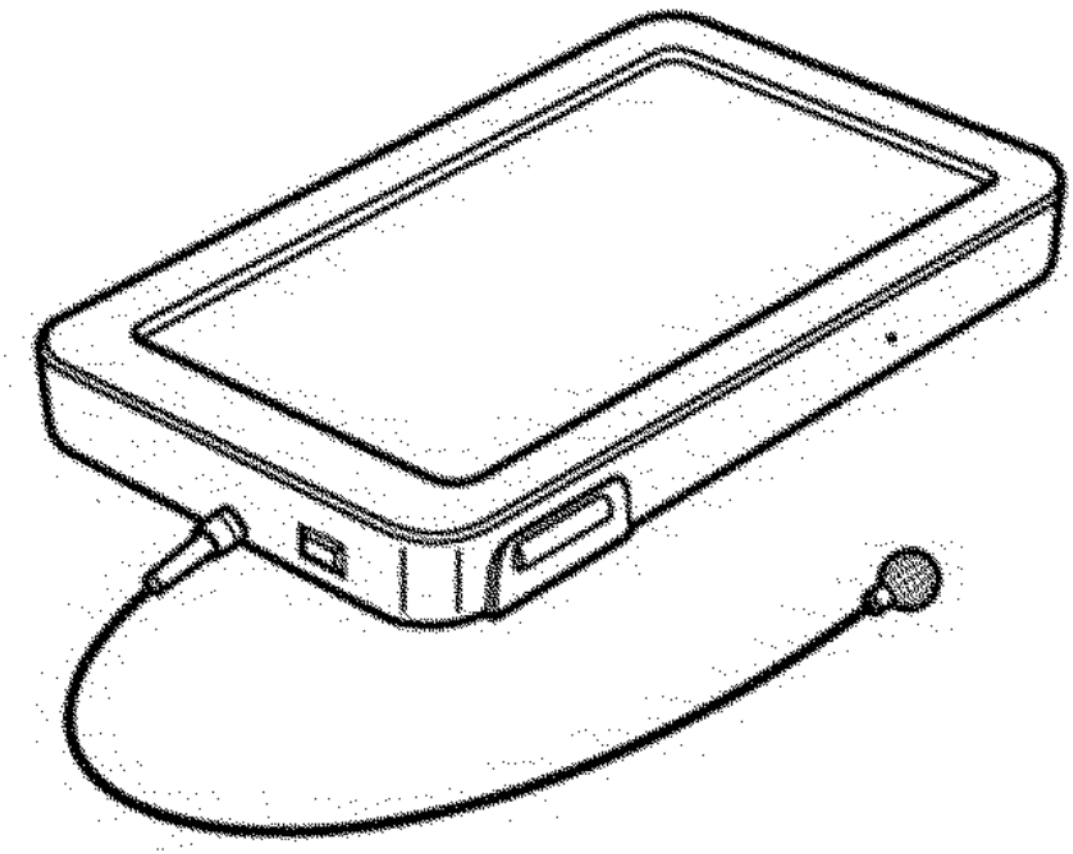	GE-50576-A Acoustic Belt Tension Tester

Article GUID: A00797778

cardiagn.com