REPAIR INSTRUCTIONS

DRIVE BELT REPLACEMENT - ACCESSORY

Removal Procedure

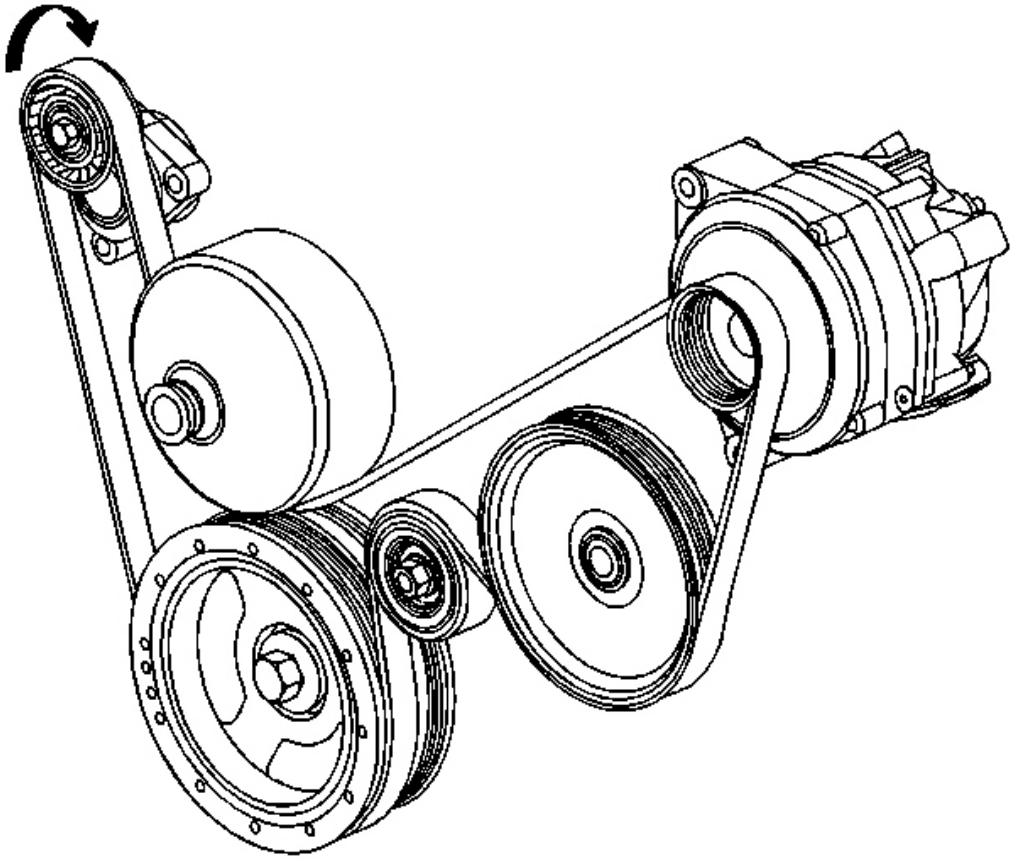

Fig. 1: Accessory Drive Belt
Courtesy of GENERAL MOTORS CORP.

1. Remove the air intake duct, if necessary. Refer to **Air Cleaner Assembly Replacement** in Engine Controls - 5.7 L.

cardiagn.com

2. Install a breaker bar with hex-head socket to the drive belt tensioner bolt.
3. Rotate the drive belt tensioner clockwise in order to relieve tension on the accessory drive belt.
4. Remove the accessory drive belt from the pulleys and tensioner.
5. Slowly release tension on the drive belt tensioner.
6. Remove the breaker bar and socket from the drive belt tensioner bolt.
7. Clean and inspect the drive belt surfaces of all the pulleys.

Installation Procedure

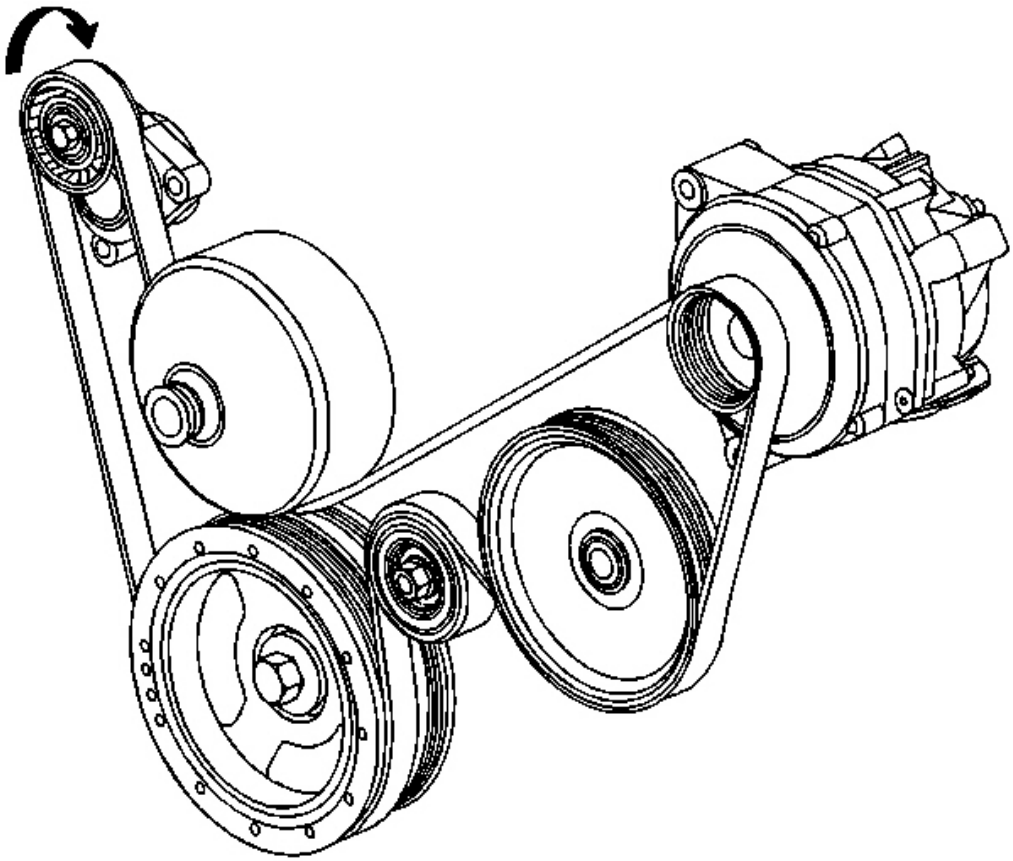

Fig. 2: Accessory Drive Belt
Courtesy of GENERAL MOTORS CORP.

1. Route the accessory drive belt around all the pulleys except the water pump pulley and tensioner.
2. Install a breaker bar with hex-head socket to the drive belt tensioner bolt.

cardiagn.com

3. Rotate the drive belt tensioner clockwise in order to relieve tension on the drive belt tensioner.
4. Install the accessory drive belt under the water pump pulley.
5. Install the accessory drive belt onto the drive belt tensioner.
6. Slowly release the tension.
7. Remove the breaker bar and socket from the drive belt tensioner bolt.
8. Install the air intake duct, if necessary. Refer to **Air Cleaner Assembly Replacement** in Engine Controls - 5.7 L.
9. Inspect the accessory drive belt for correct alignment.

DRIVE BELT REPLACEMENT - AIR CONDITIONING

Removal Procedure

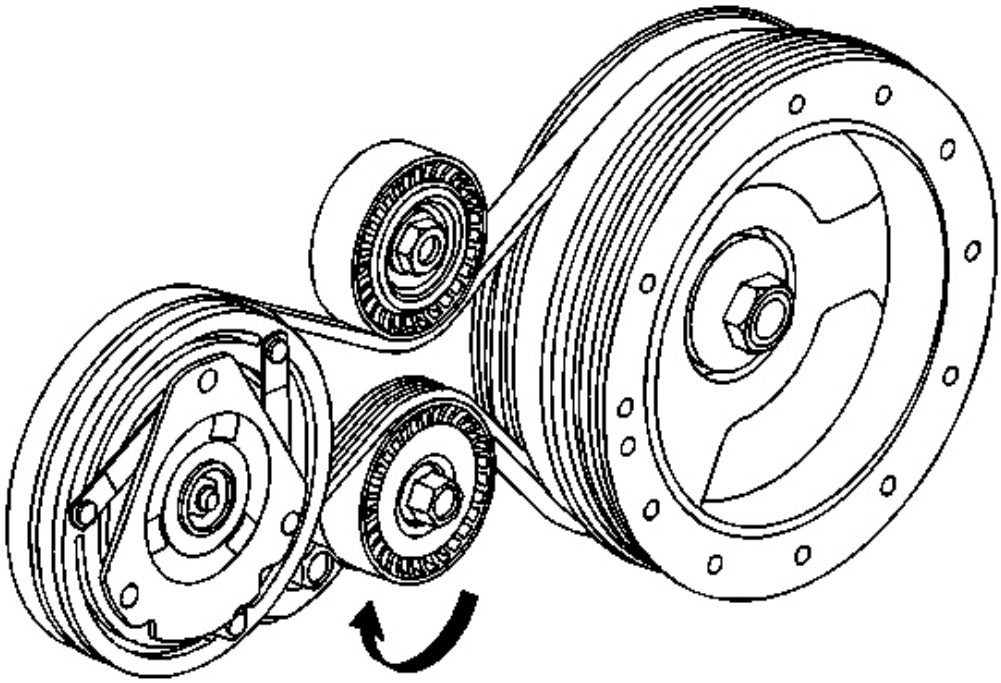

Fig. 3: Accessory Drive Belt & Breaker Bar
Courtesy of GENERAL MOTORS CORP.

1. Remove the accessory drive belt. Refer to **Drive Belt Replacement - Accessory** .
2. Install a breaker bar with hex-head socket to the air conditioning (A/C) drive belt tensioner bolt.

cardiagn.com

3. Rotate the A/C drive belt tensioner clockwise in order to relieve tension on the drive belt.
4. Remove the A/C drive belt from the pulleys.
5. Slowly release tension on the A/C drive belt tensioner.
6. Remove the breaker bar and socket from the A/C drive belt tensioner bolt.
7. Clean and inspect the drive belt surfaces of the pulleys.

Installation Procedure

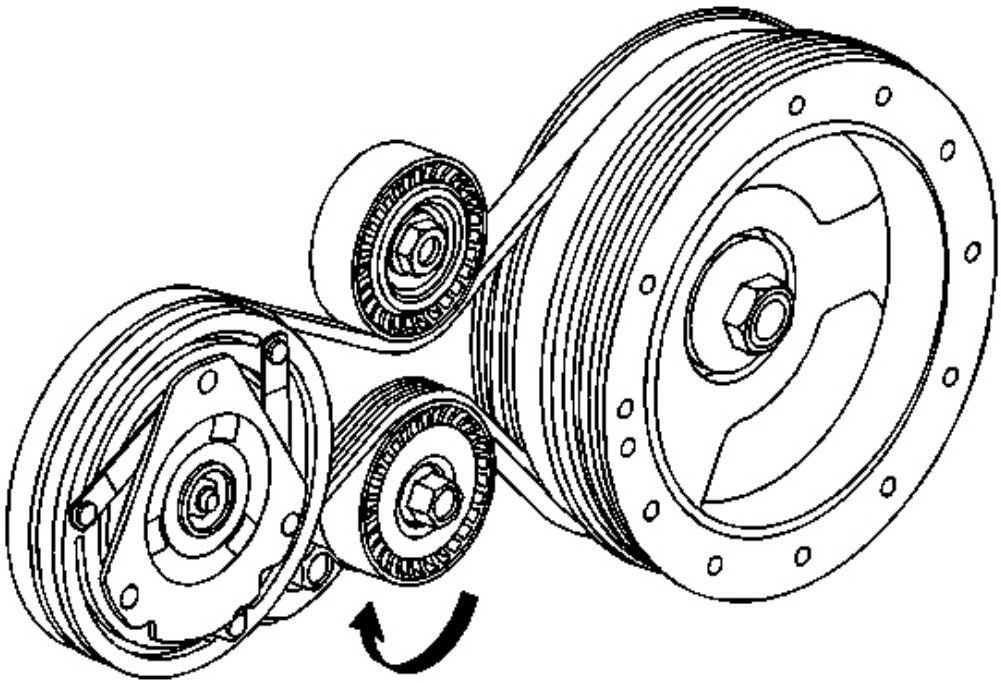

Fig. 4: Accessory Drive Belt & Breaker Bar
Courtesy of GENERAL MOTORS CORP.

1. Install the A/C drive belt around the crankshaft balancer.
2. Install a breaker bar with hex-head socket to the A/C drive belt tensioner bolt.
3. Rotate the A/C drive belt tensioner clockwise in order to relieve tension on drive belt tensioner.
4. Install the A/C drive belt under the idler pulley.
5. Install the A/C drive belt over the A/C compressor pulley.
6. Slowly release tension on the A/C belt tensioner.

cardiagn.com

7. Remove the breaker bar and socket from the A/C drive belt tensioner bolt.
8. Inspect the A/C drive belt for correct alignment.
9. Install the accessory drive belt. Refer to **Drive Belt Replacement - Accessory** .

DRIVE BELT IDLER PULLEY REPLACEMENT - ACCESSORY

Removal Procedure

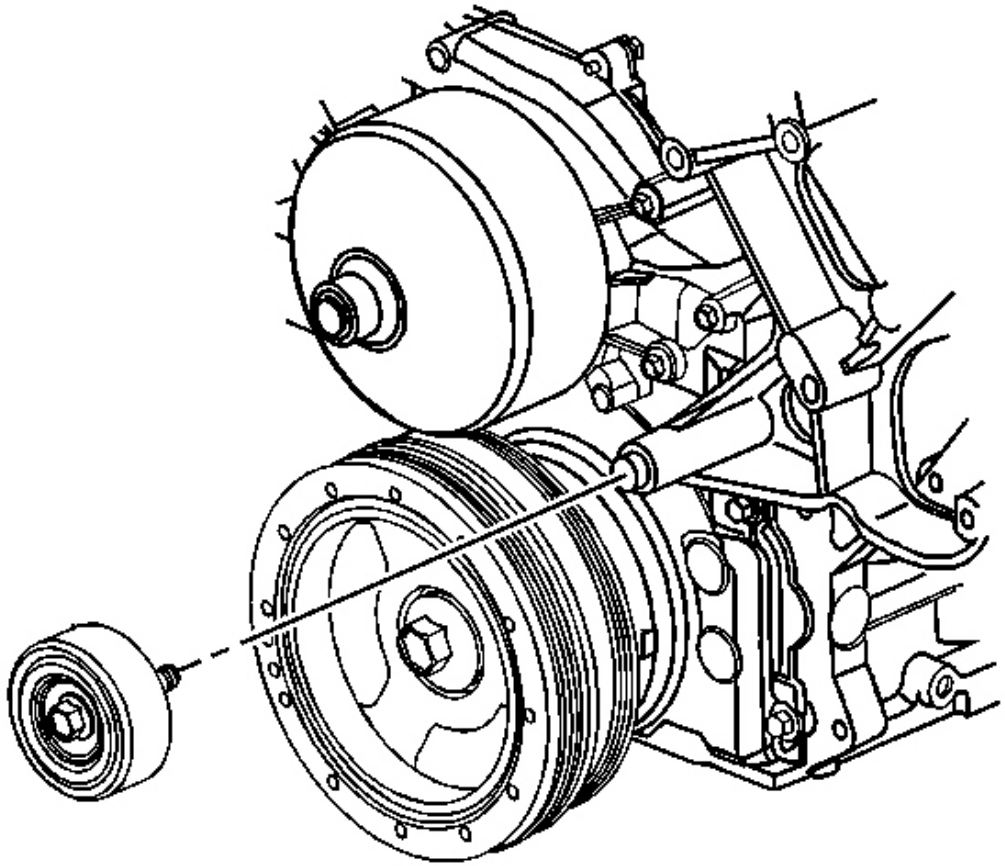

Fig. 5: Accessory Drive Belt Idler Pulley Bolt
Courtesy of GENERAL MOTORS CORP.

1. Loosen the accessory drive belt idler pulley bolt.
2. Remove the accessory drive belt. Refer to **Drive Belt Replacement - Accessory** .
3. Remove the accessory drive belt idler pulley.

cardiagn.com

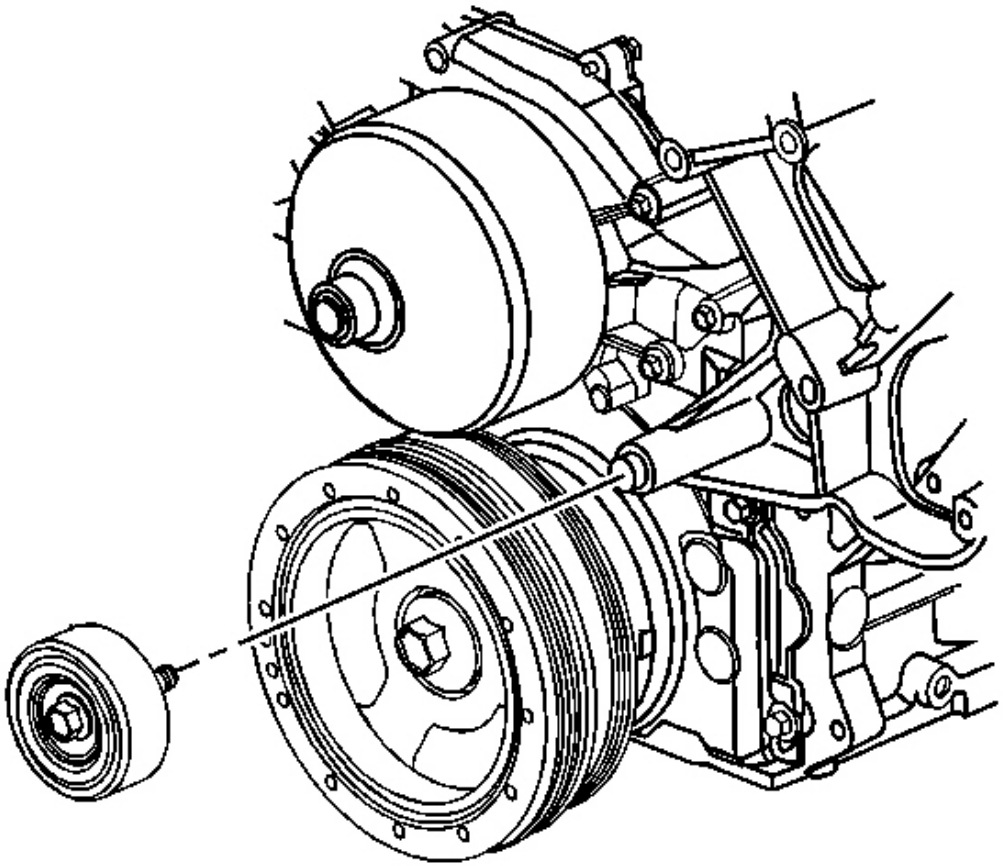

Fig. 6: Accessory Drive Belt Idler Pulley Bolt
Courtesy of GENERAL MOTORS CORP.

IMPORTANT: Ensure that the idler pulley and dust shield are fully seated against the shoulder on the bracket before tightening the bolt.

1. Install the accessory drive belt idler pulley bolt until snug.
2. Install the accessory drive belt. Refer to **Drive Belt Replacement - Accessory** .

CAUTION: Refer to Battery Disconnect Caution in Cautions and Notices.

cardiagn.com

3. Tighten the accessory drive belt idler pulley bolt.

   Tighten: Tighten the accessory drive belt idler pulley bolt to 50 N.m (37 lb ft).

DRIVE BELT IDLER PULLEY REPLACEMENT - AIR CONDITIONING

Removal Procedure

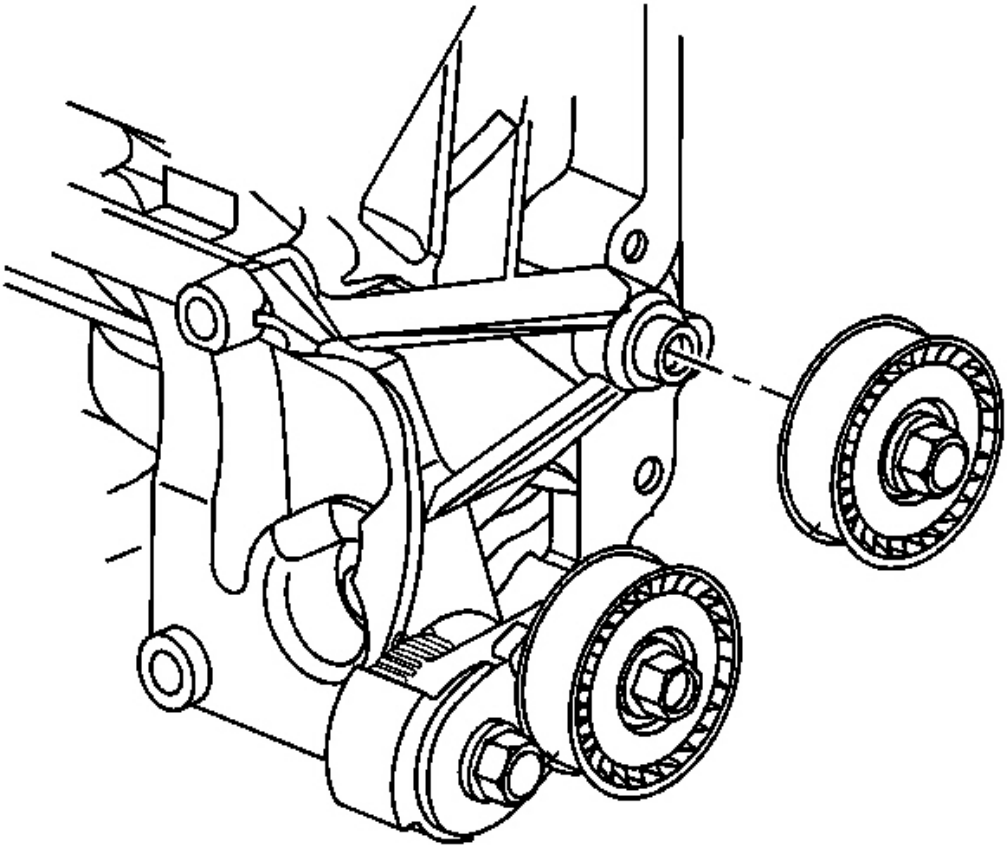

Fig. 7: A/C Drive Belt Idler Pulley
Courtesy of GENERAL MOTORS CORP.

1. Loosen the air conditioning (A/C) drive belt idler pulley bolt.
2. Remove the A/C drive belt. Refer to **Drive Belt Replacement - Air Conditioning** .
3. Remove the A/C drive belt idler pulley.

cardiagn.com

Installation Procedure

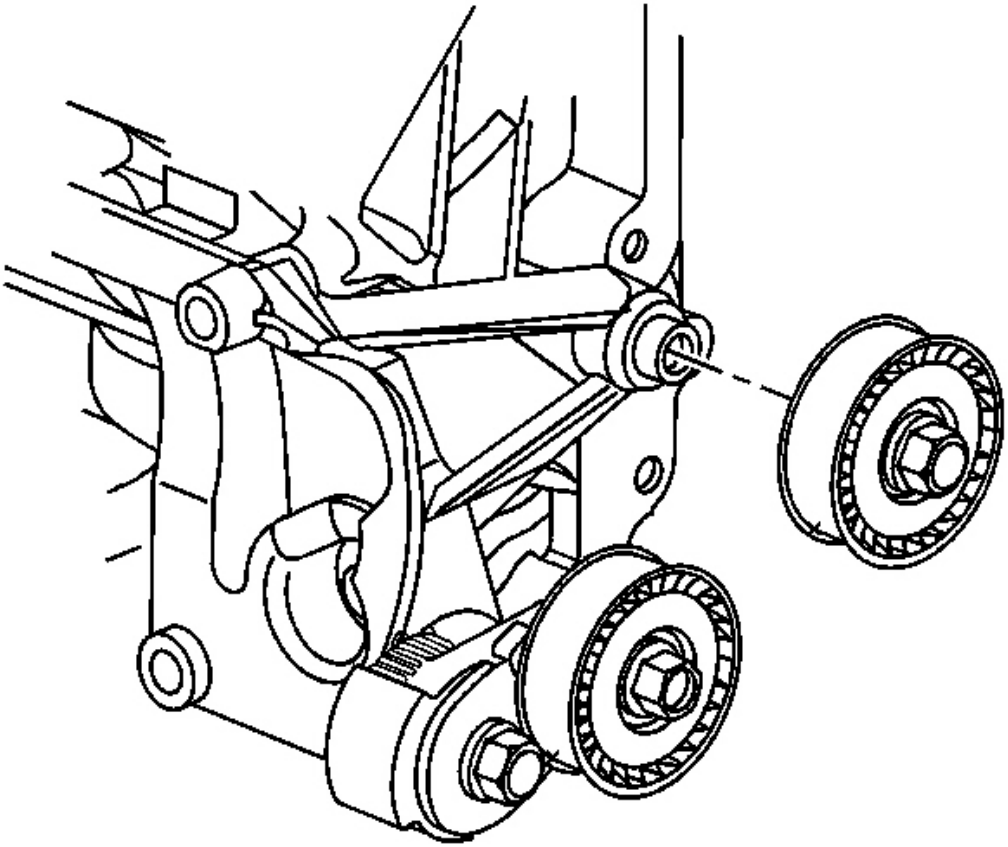

Fig. 8: A/C Drive Belt Idler Pulley
Courtesy of GENERAL MOTORS CORP.

1. Install the idler pulley bolt.
2. Install the A/C drive belt idler pulley bolt until snug.

IMPORTANT: Ensure that the idler pulley is fully seated against the shoulder on the bracket before tightening the bolt.

3. Install the A/C drive belt. Refer to **Drive Belt Replacement - Air Conditioning** .

NOTE: Refer to Fastener Notice in Cautions and Notices.

cardiagn.com

4. Tighten the A/C drive belt idler pulley bolt.

   Tighten: Tighten the A/C drive belt idler pulley bolt to 50 N.m (37 lb ft).

DRIVE BELT TENSIONER REPLACEMENT - ACCESSORY

Removal Procedure

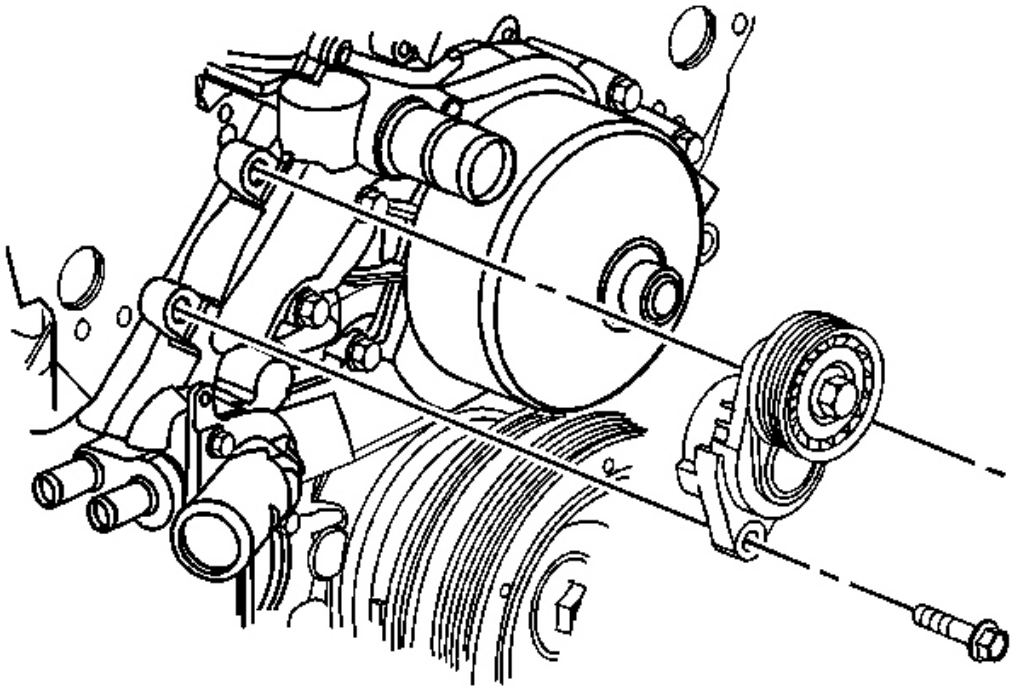

Fig. 9: Accessory Drive Belt Tensioner & Bolts
Courtesy of GENERAL MOTORS CORP.

1. Remove the accessory drive belt. Refer to **Drive Belt Replacement - Accessory** .
2. Remove the accessory drive belt tensioner bolts.
3. Remove the accessory drive belt tensioner.

Installation Procedure

cardiagn.com

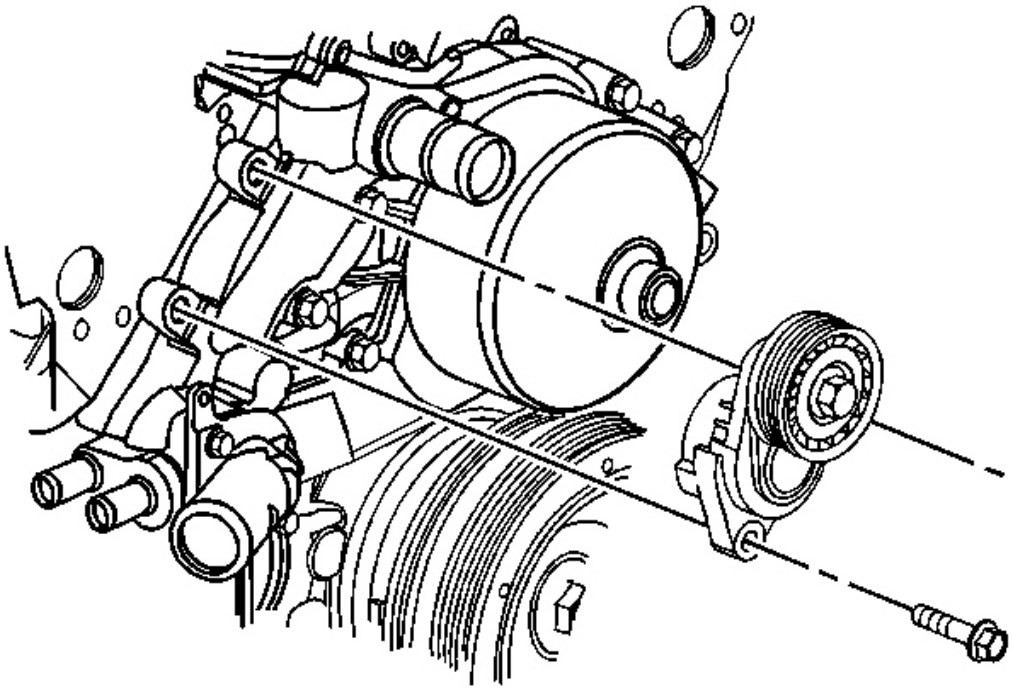

Fig. 10: Accessory Drive Belt Tensioner & Bolts
Courtesy of GENERAL MOTORS CORP.

NOTE: Refer to Fastener Notice in Cautions and Notices.

1. Install the accessory drive belt tensioner.
2. Install the accessory drive belt tensioner bolts.

   Tighten: Tighten the accessory drive belt tensioner bolts to 50 N.m (37 lb ft) starting with the lower bolt first.

3. Install the accessory drive belt. Refer to **Drive Belt Replacement - Accessory** .

DRIVE BELT TENSIONER REPLACEMENT - AIR CONDITIONING

Removal Procedure

cardiagn.com

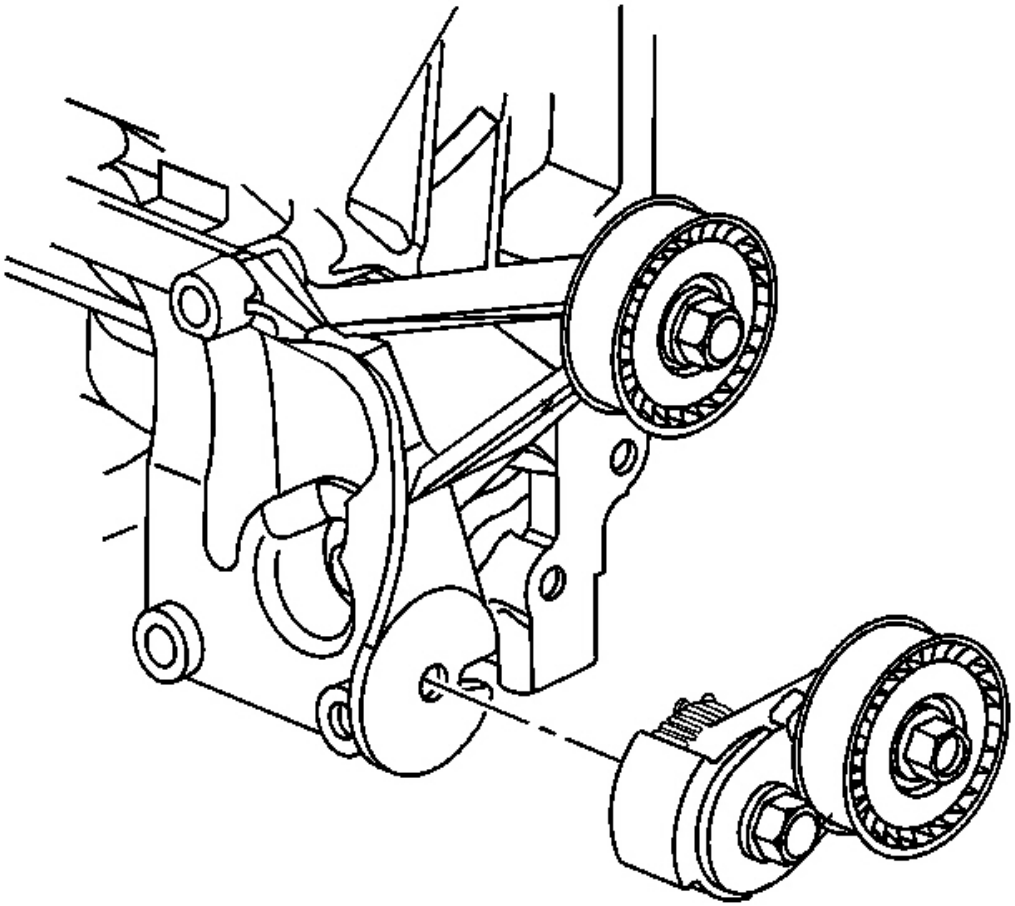

Fig. 11: A/C Drive Belt Tensioner
Courtesy of GENERAL MOTORS CORP.

1. Remove the air conditioning (A/C) drive belt. Refer to **Drive Belt Replacement - Air Conditioning** .
2. Raise and suitably support the vehicle. Refer to **Lifting and Jacking the Vehicle** in General Information.
3. Loosen the A/C drive belt tensioner bolt.
4. Remove the A/C drive belt tensioner.

Installation Procedure

cardiagn.com

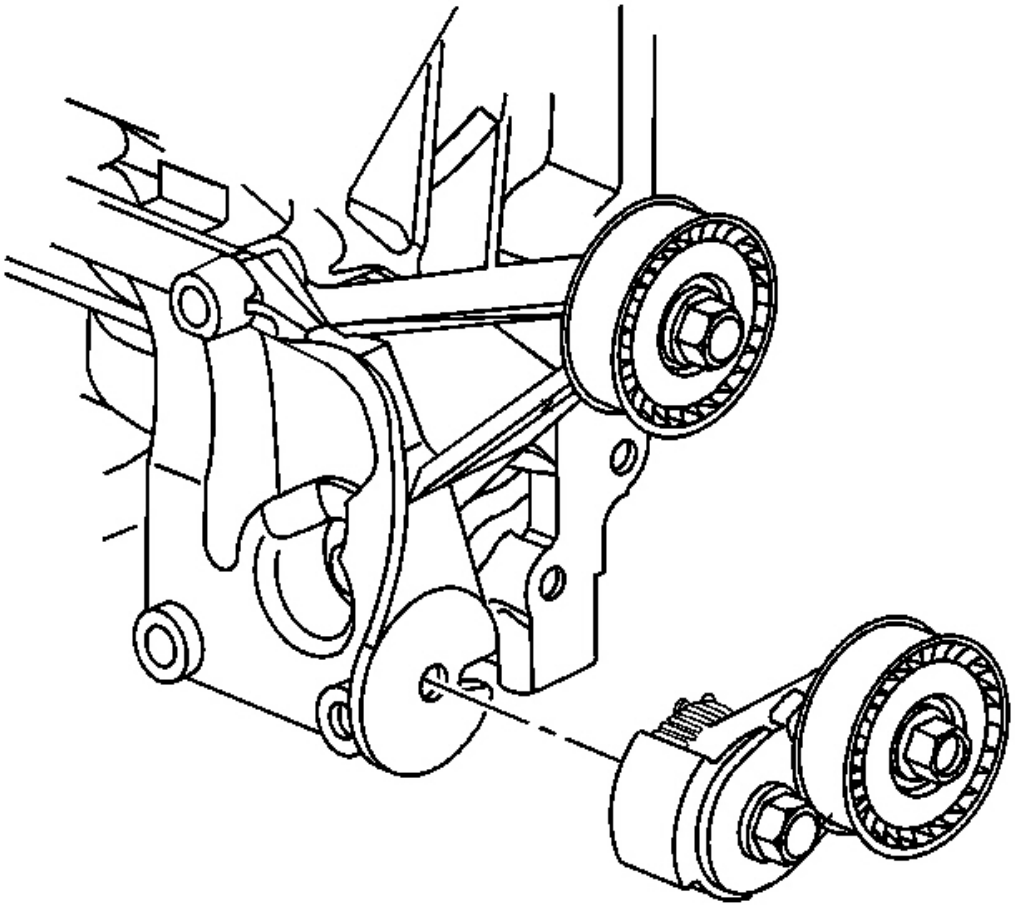

Fig. 12: A/C Drive Belt Tensioner
Courtesy of GENERAL MOTORS CORP.

1. Install the A/C drive belt tensioner.

NOTE: **Refer to Fastener Notice in Cautions and Notices.**

2. Tighten the A/C drive belt tensioner bolt.

   Tighten: Tighten the A/C drive belt tensioner bolt to 50 N.m (37 lb ft).

3. Lower the vehicle.
4. Install the A/C drive belt. Refer to **Drive Belt Replacement - Air Conditioning** .

cardiagn.com

ENGINE MOUNT INSPECTION

NOTE: **Broken or deteriorated mounts can cause misalignment and destruction of certain drive train components. When a single mount breaks, the remaining mounts are subjected to abnormally high stresses.**

NOTE: **When raising or supporting the engine for any reason, do not use a jack under the oil pan, any sheet metal, or the crankshaft pulley. Due to the small clearance between the oil pan and the oil pump screw, jacking against the oil pan may cause the pan to be bent against the pump screw. This will result in a damaged oil pickup unit.**

1. Measure the engine movement at the engine mount in order to check for damage to the rubber portions of the mount.
    1. Apply the park brake.
    2. Start the engine.
    3. Firmly apply and hold the primary brakes.
    4. Have an assistant stand to the side of the vehicle in order to observe for engine movement.
    5. Slightly load the engine shifting from drive to reverse a few times.
    6. If the engine moves more than 24 mm (0.945 in) from the at rest position, in either direction, check for loose engine mount or engine mount bracket attachments.
2. If the engine mount and engine mount bracket bolt torque is at specifications, check the condition of the engine mount.
3. Replace the engine mount if any of the following conditions exist:
    - Heat check cracks cover the rubber cushion surface.
    - The rubber cushion is separated from the metal plate of the mount.
    - There is a split through the rubber cushion.

ENGINE MOUNT BRACKET REPLACEMENT - LEFT

Removal Procedure

cardiagn.com

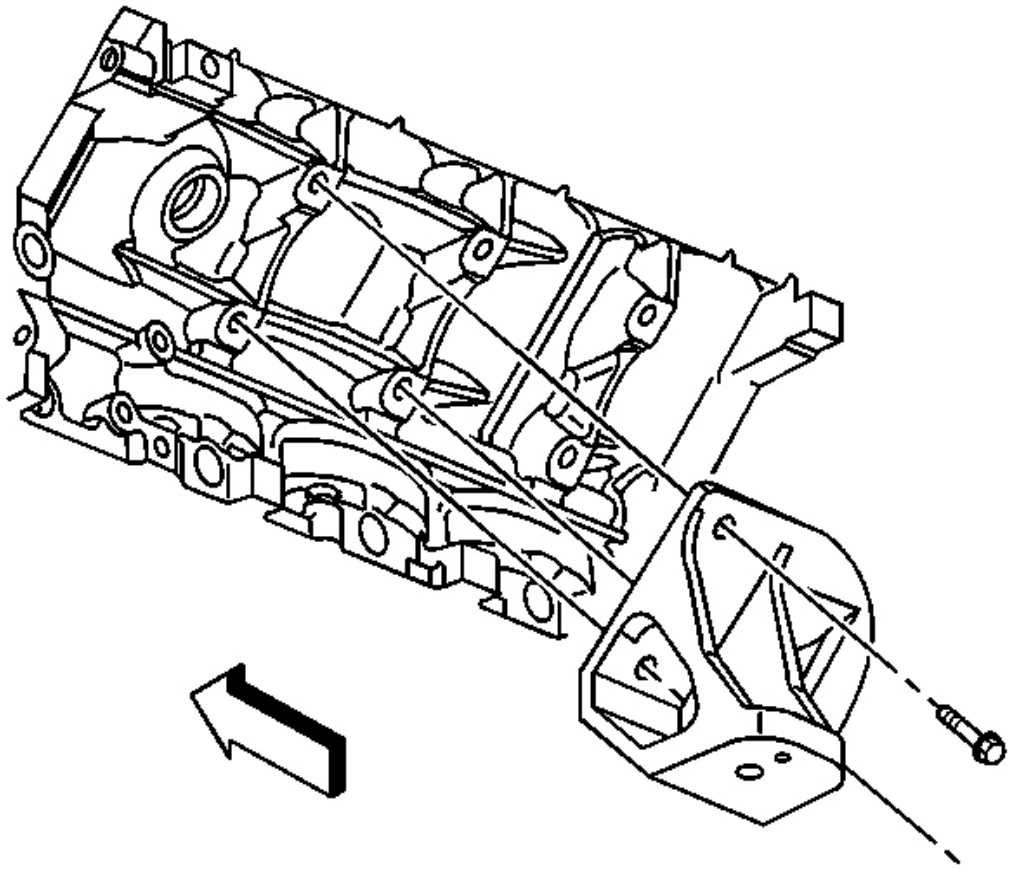

Fig. 13: Left Engine Mount Bracket & Bolts
Courtesy of GENERAL MOTORS CORP.

1. Remove the left engine mount. Refer to **Engine Mount Replacement - Left** .
2. Remove the engine mount bracket bolts.
3. Remove the engine mount bracket.

Installation Procedure

cardiagn.com

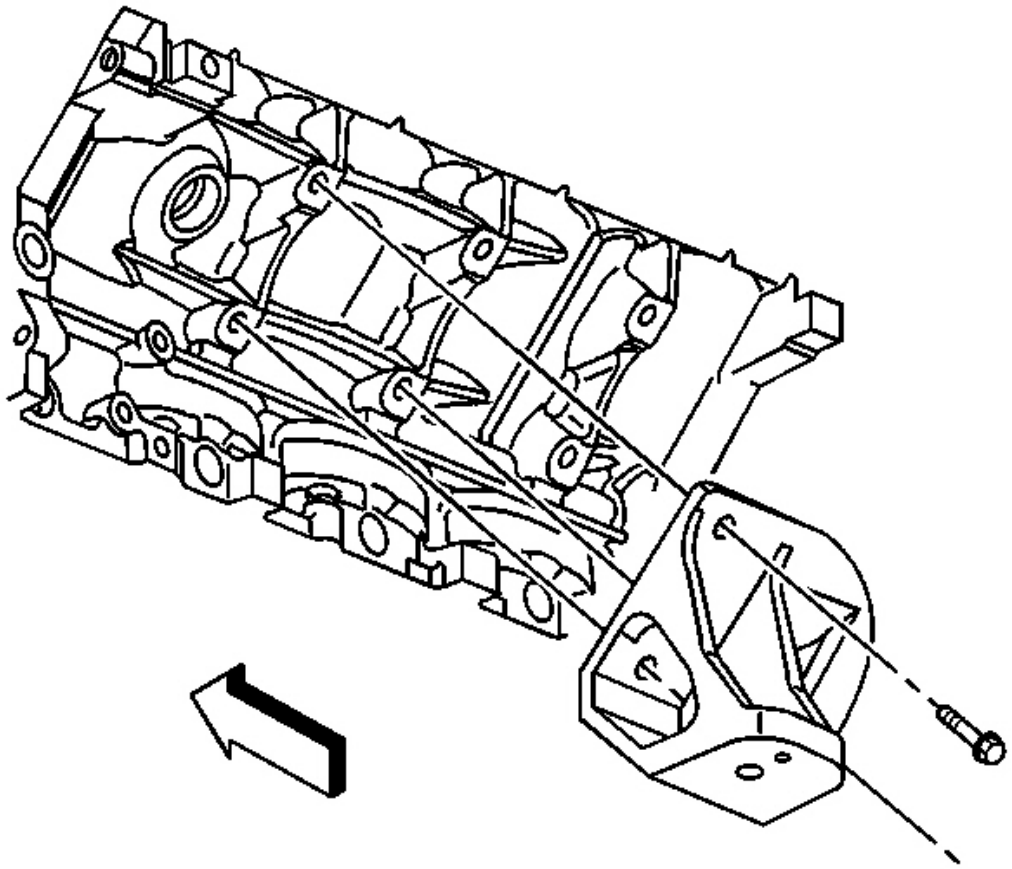

Fig. 14: Left Engine Mount Bracket & Bolts
Courtesy of GENERAL MOTORS CORP.

NOTE: Refer to Fastener Notice in Cautions and Notices.

1. Install the engine mount bracket.
2. Install the engine mount bracket bolts.

   Tighten: Tighten the engine mount bracket bolts to 50 N.m (37 lb ft).

3. Install the left engine mount. Refer to **Engine Mount Replacement - Left** .

ENGINE MOUNT BRACKET REPLACEMENT - RIGHT

Removal Procedure

cardiagn.com

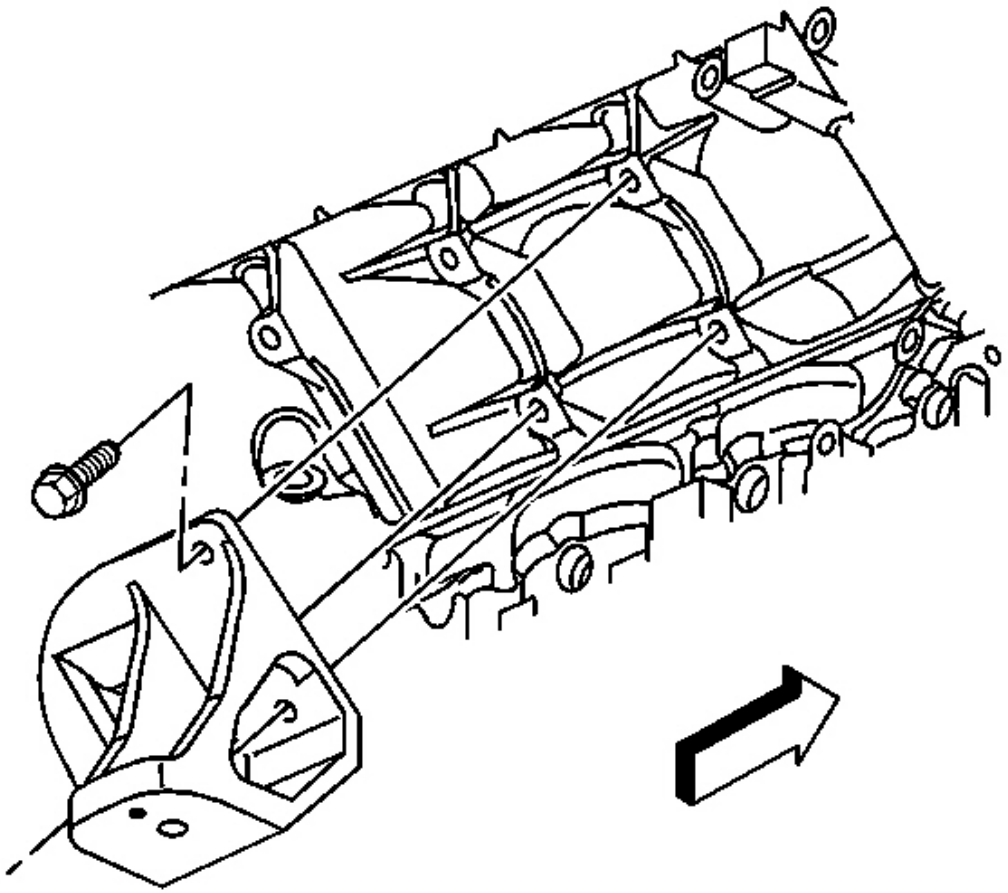

Fig. 15: Right Engine Mount Bracket & Bolts
Courtesy of GENERAL MOTORS CORP.

1. Remove the right engine mount. Refer to **Engine Mount Replacement - Right** .
2. Remove the engine mount bracket bolts.
3. Remove the engine mount bracket.

Installation Procedure

cardiagn.com

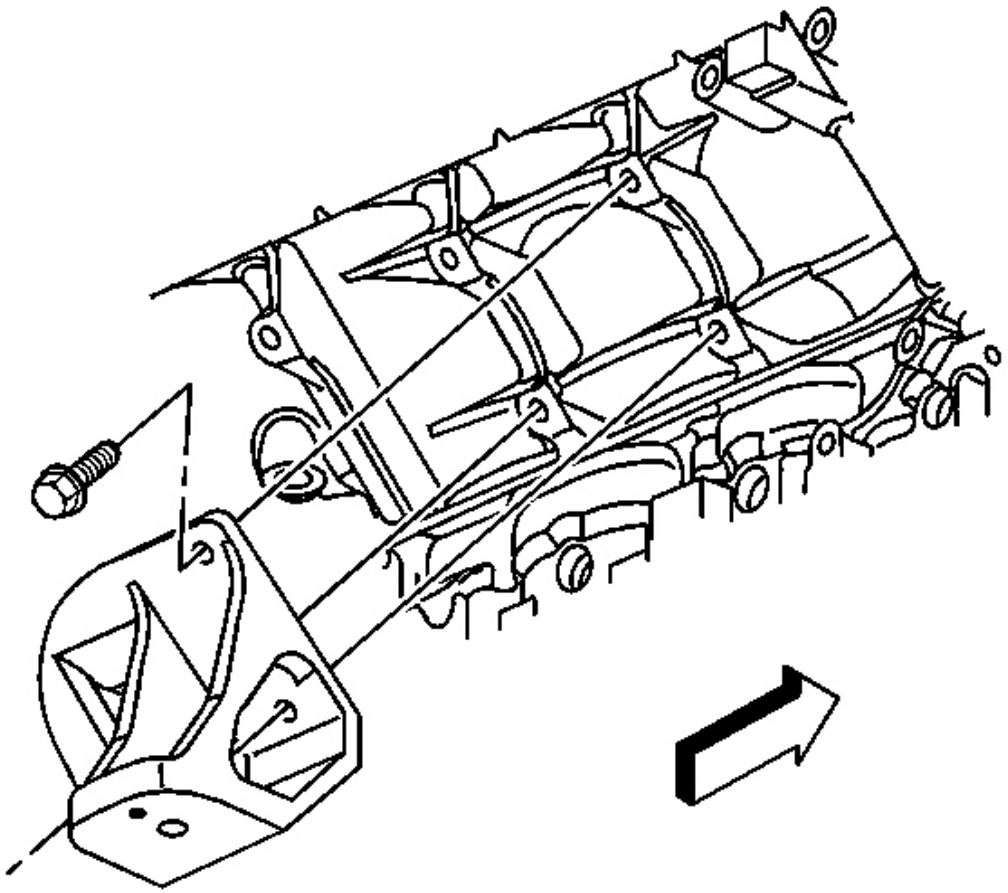

Fig. 16: Right Engine Mount Bracket & Bolts
Courtesy of GENERAL MOTORS CORP.

NOTE: Refer to Fastener Notice in Cautions and Notices.

1. Install the engine mount bracket.
2. Install the engine mount bracket bolts.

   Tighten: Tighten the engine mount bracket bolts to 50 N.m (37 lb ft).

3. Install the right engine mount. Refer to **Engine Mount Replacement - Right** .

ENGINE MOUNT REPLACEMENT - LEFT

cardiagn.com

Removal Procedure

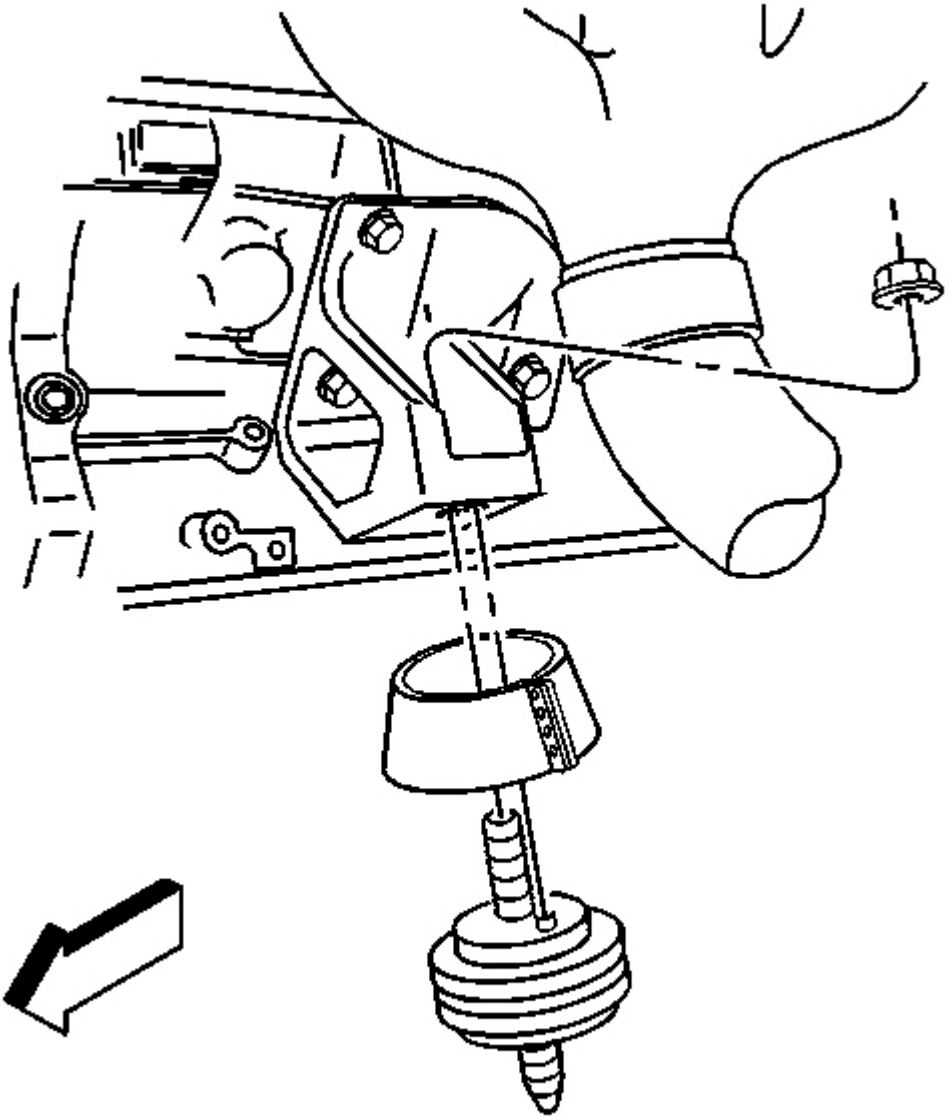

Fig. 17: Engine Mount-To-Engine Mount Bracket & Nuts
Courtesy of GENERAL MOTORS CORP.

1. Remove the front suspension crossmember. Refer to **Crossmember Replacement - Front Suspension** in Front Suspension.

cardiagn.com

2. Remove the engine mount-to-engine mount bracket nut.
3. Remove the engine mount.
4. Remove the engine mount heat shield from the engine mount, if necessary.

Installation Procedure

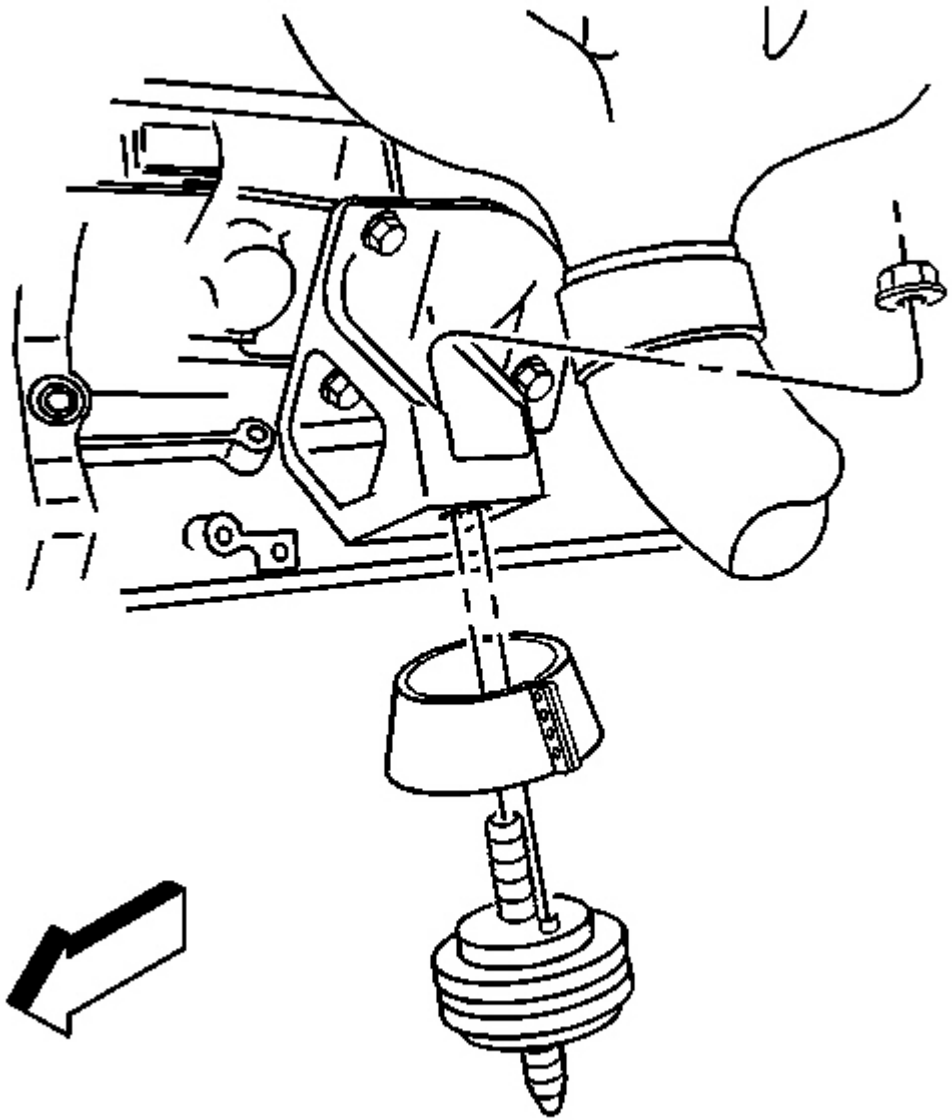

Fig. 18: Engine Mount-To-Engine Mount Bracket & Nuts

cardiagn.com

Courtesy of GENERAL MOTORS CORP.

1. Install the engine mount heat shield to the engine mount, if necessary.
2. Install the engine mount.

NOTE: Refer to Fastener Notice in Cautions and Notices.

3. Install the engine mount-to-engine mount bracket nut.

   Tighten: Tighten the nut to 65 N.m (48 lb ft).

4. Install the front suspension crossmember. Refer to **Crossmember Replacement - Front Suspension** in Front Suspension.

ENGINE MOUNT REPLACEMENT - RIGHT

Removal Procedure

cardiagn.com

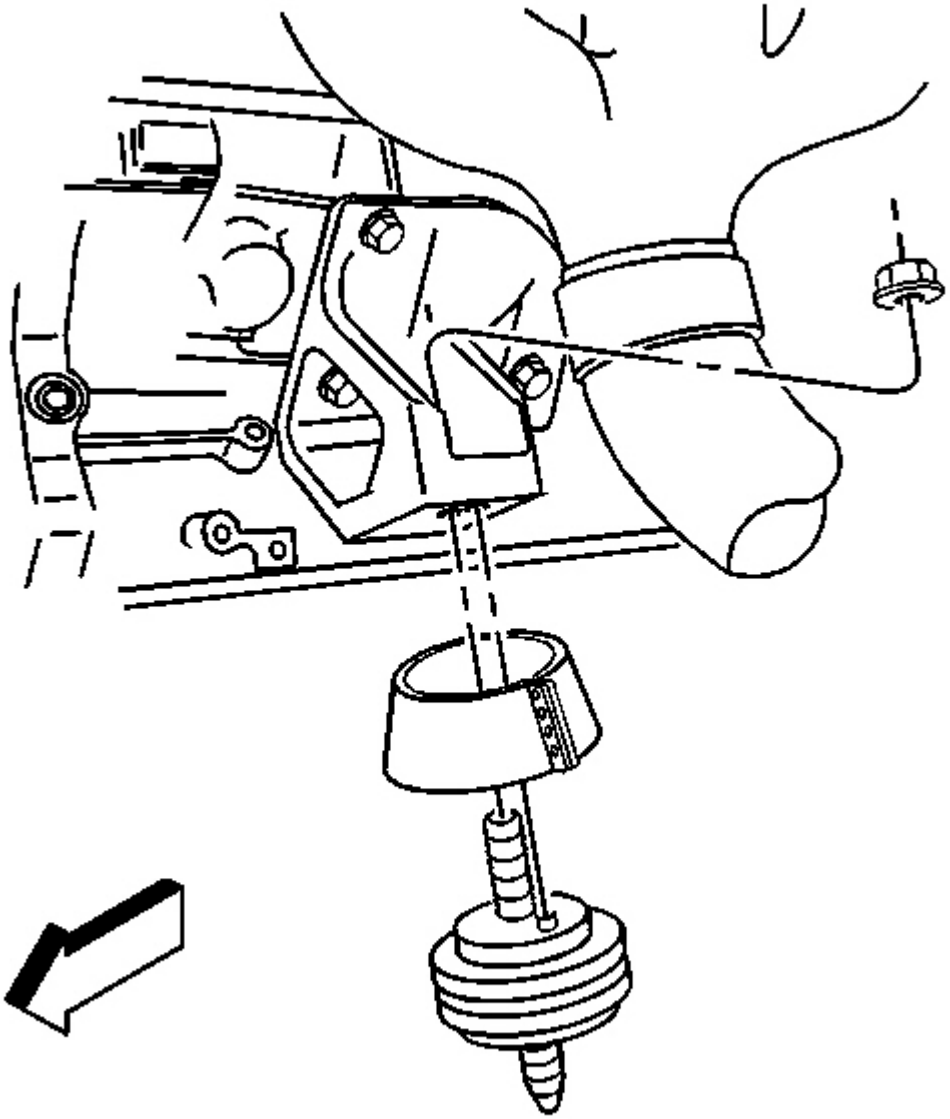

Fig. 19: Engine Mount-To-Engine Mount Bracket & Nuts
Courtesy of GENERAL MOTORS CORP.

1. Remove the front suspension crossmember. Refer to **Crossmember Replacement - Front Suspension** in Front Suspension.
2. Remove the engine mount-to-engine mount bracket nut.
3. Remove the engine mount (left side shown, right side similar).

cardiagn.com

4. Remove the engine mount heat shield from the engine mount, if necessary.

Installation Procedure

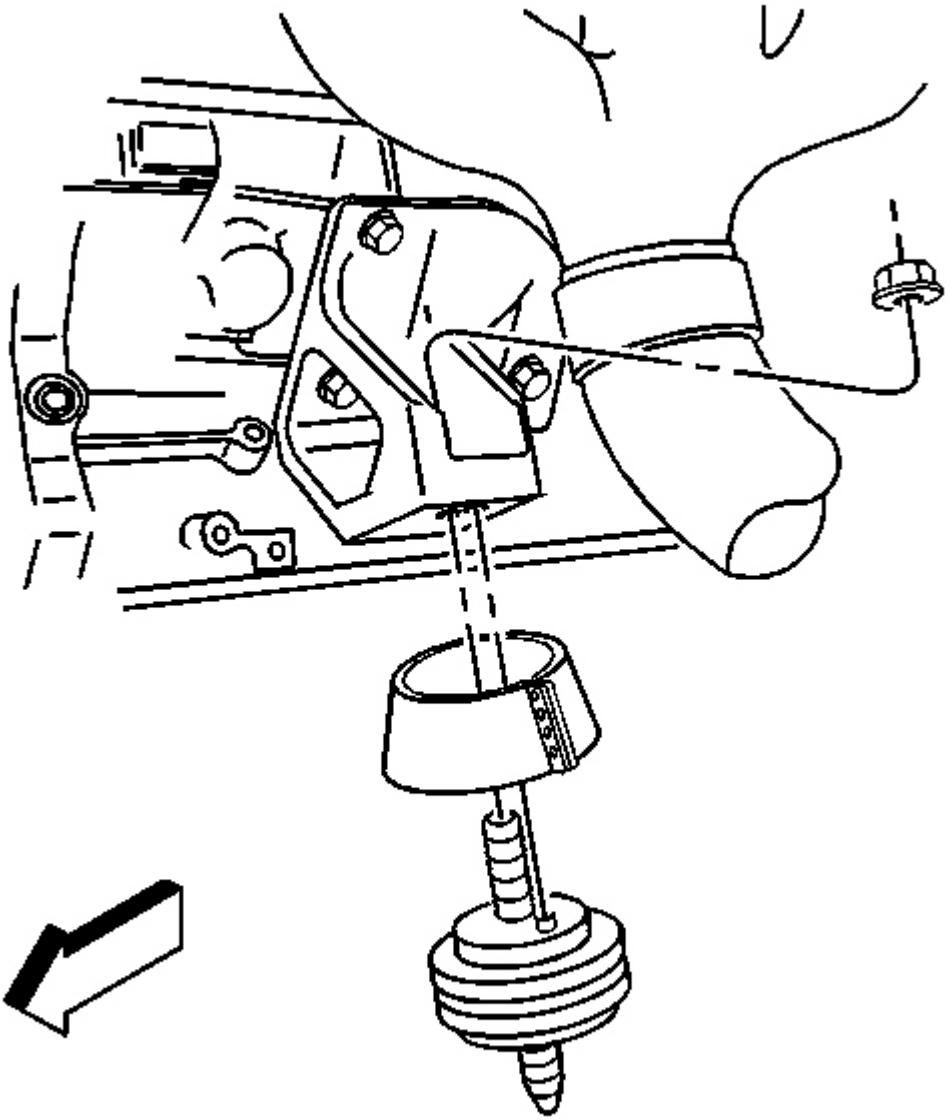

Fig. 20: Engine Mount-To-Engine Mount Bracket & Nuts
Courtesy of GENERAL MOTORS CORP.

cardiagn.com

1. Install the engine mount heat shield to the engine mount, if necessary.

IMPORTANT: When installing the engine mount be sure to have the locating dowel in the correct position.

NOTE: Refer to Fastener Notice in Cautions and Notices.

2. Install the engine mount (left side shown, right side similar).
3. Install the engine mount-to-engine mount bracket nut.

   Tighten: Tighten the engine mount-to-engine mount bracket nut to 65 N.m (48 lb ft).

4. Install the front suspension crossmember. Refer to **Crossmember Replacement - Front Suspension** in Front Suspension.

POSITIVE CRANKCASE VENTILATION (PCV) VALVE REPLACEMENT (LS1 ENGINE)

Removal Procedure

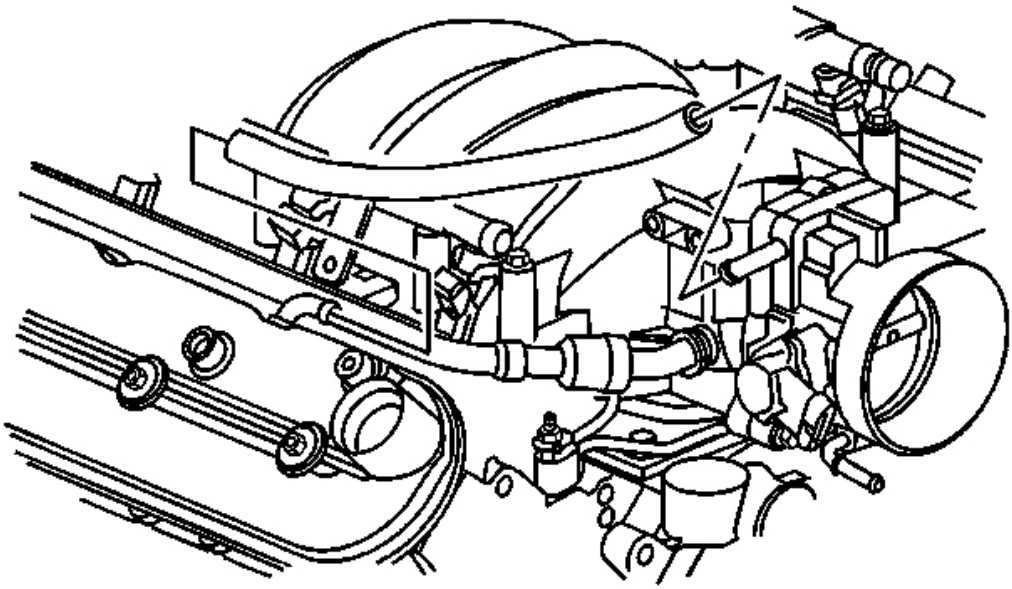

Fig. 21: PCV Tube & Rocker Arm Cover
Courtesy of GENERAL MOTORS CORP.

cardiagn.com

1. Remove the positive crankcase ventilation (PCV) tube from the right rocker arm cover and intake manifold, if necessary.

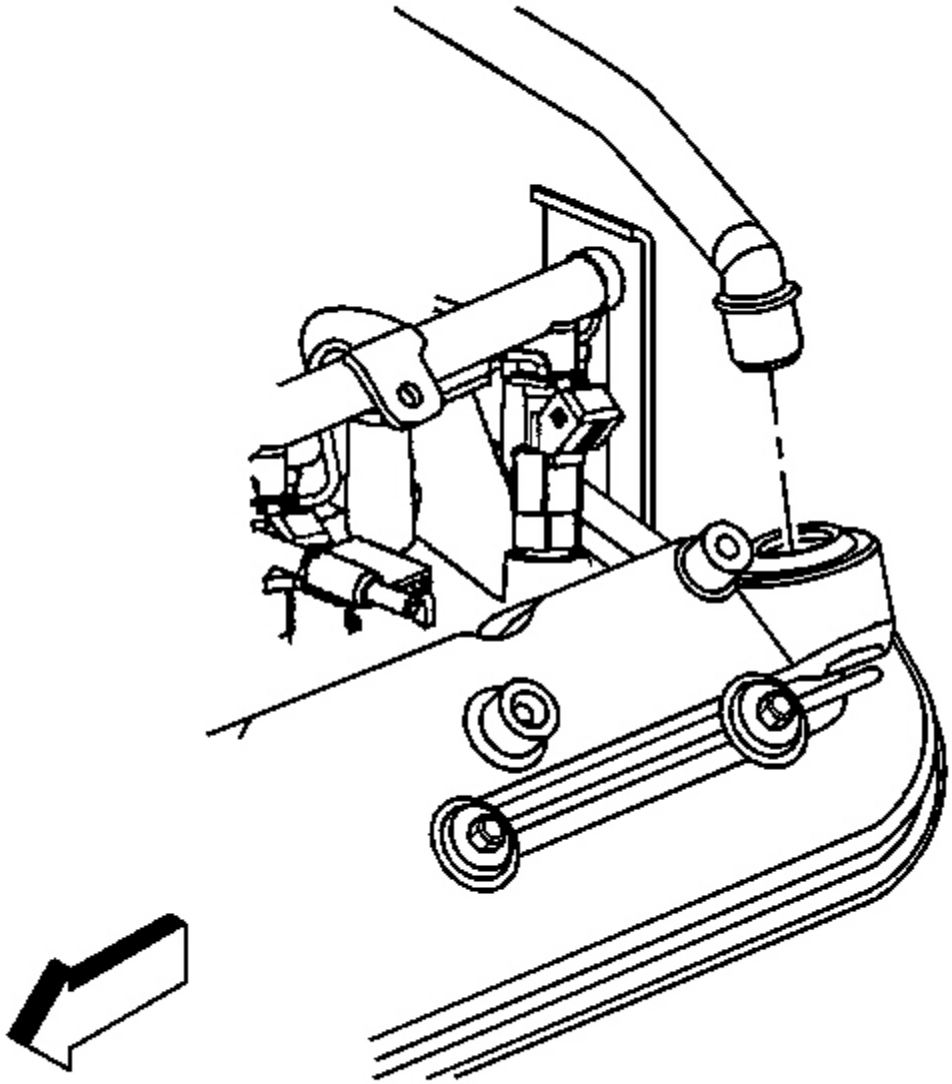

Fig. 22: Left Rocker Arm Cover & PCV Valve Pipe
Courtesy of GENERAL MOTORS CORP.

2. Remove the PCV valve pipe from the left rocker arm cover.

cardiagn.com

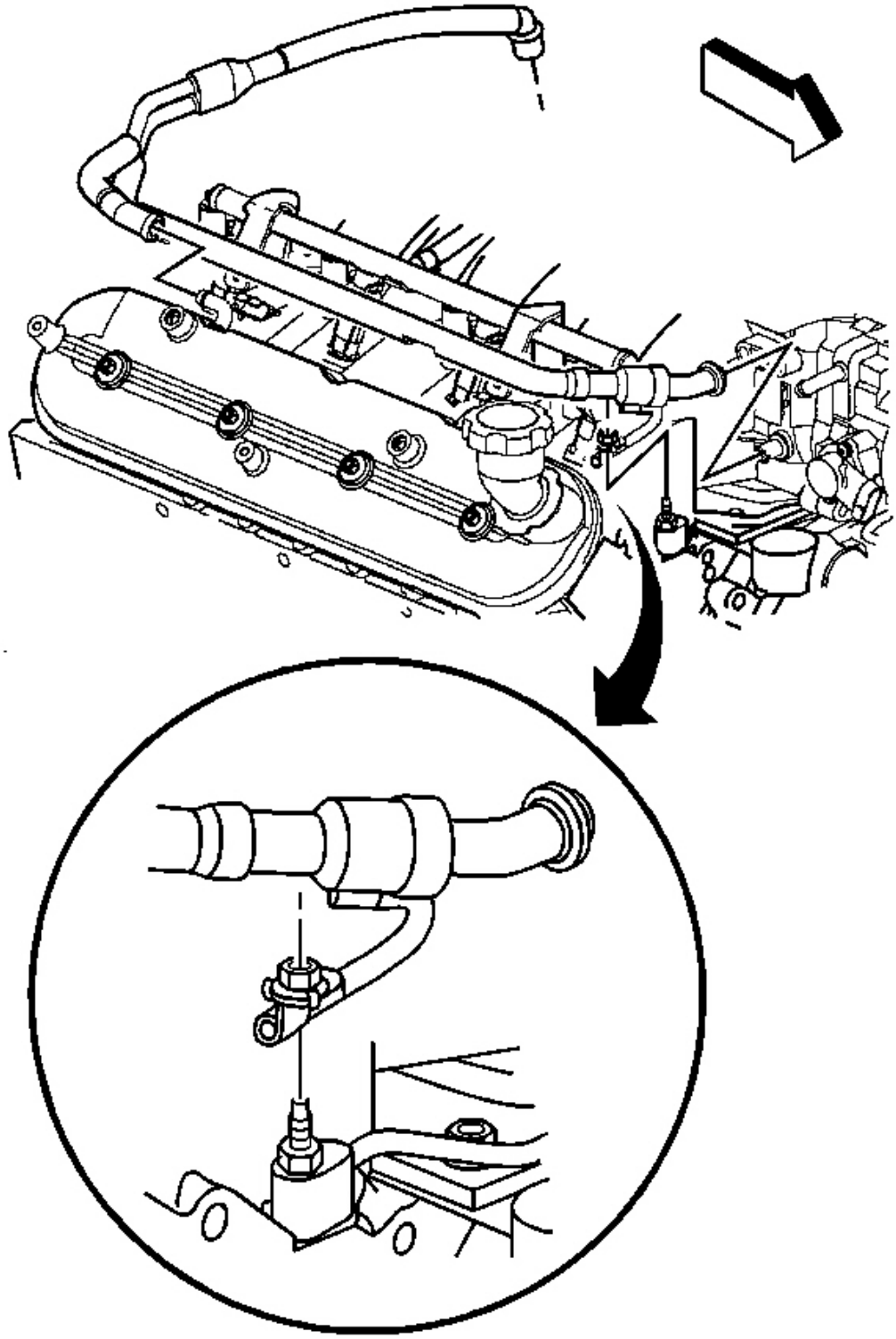

cardiagn.com

Fig. 23: Right Rocker Arm Cover & PCV Valve Pipe
Courtesy of GENERAL MOTORS CORP.

3. Remove the PCV valve pipe strap nut.
4. Remove the PCV valve pipe from the right rocker arm cover and intake manifold.
5. Remove the PCV valve from the valve pipe.

Installation Procedure

cardiagn.com

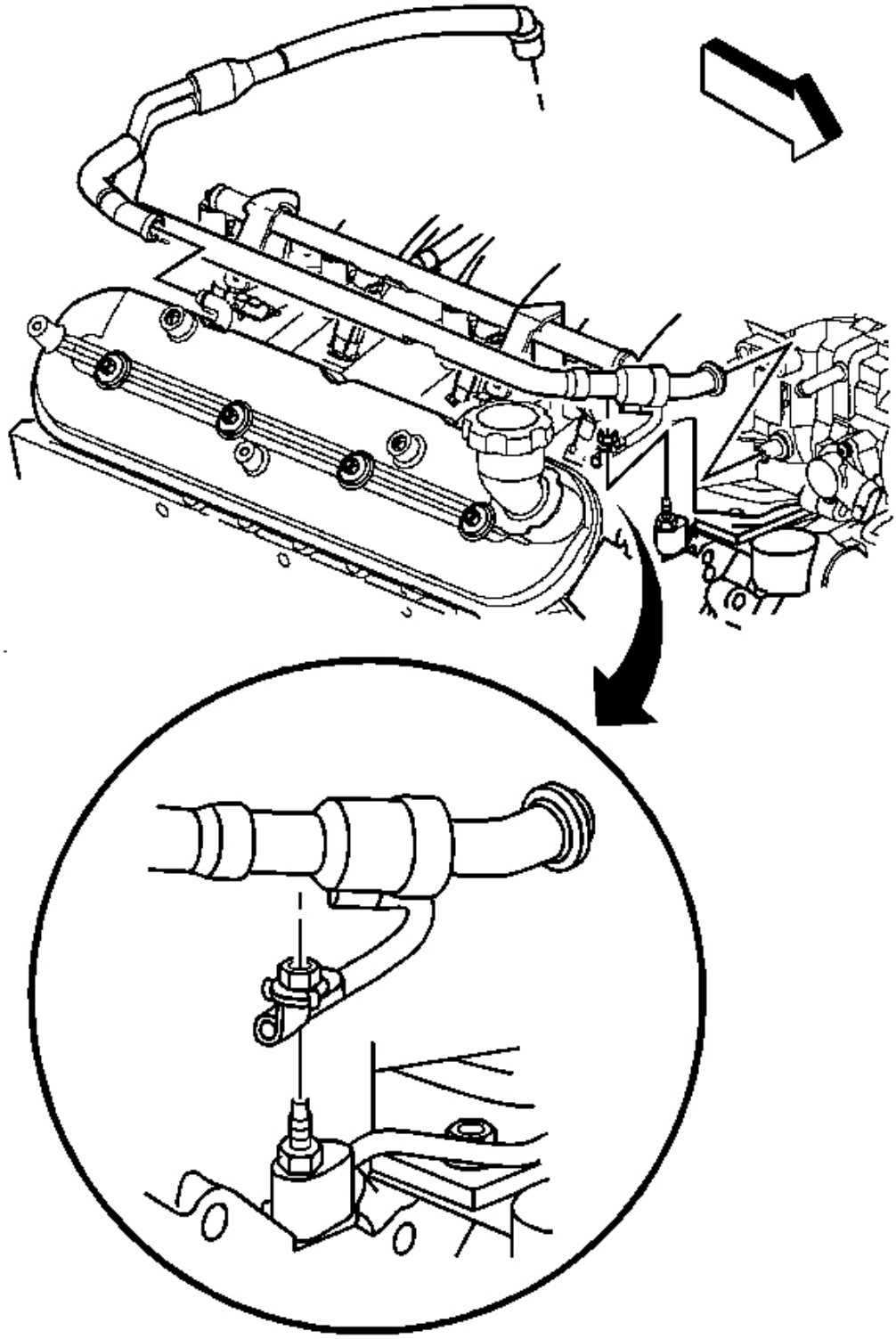

cardiagn.com

Fig. 24: Right Rocker Arm Cover & PCV Valve Pipe
Courtesy of GENERAL MOTORS CORP.

1. Install the PCV valve to the valve pipe.
2. Install the PCV valve pipe to the right rocker arm cover and intake manifold.

NOTE: Refer to Fastener Notice in Cautions and Notices.

3. Install the PCV valve pipe strap nut.

   Tighten: Tighten the PCV valve pipe strap nut to 12 N.m (106 lb in).

cardiagn.com

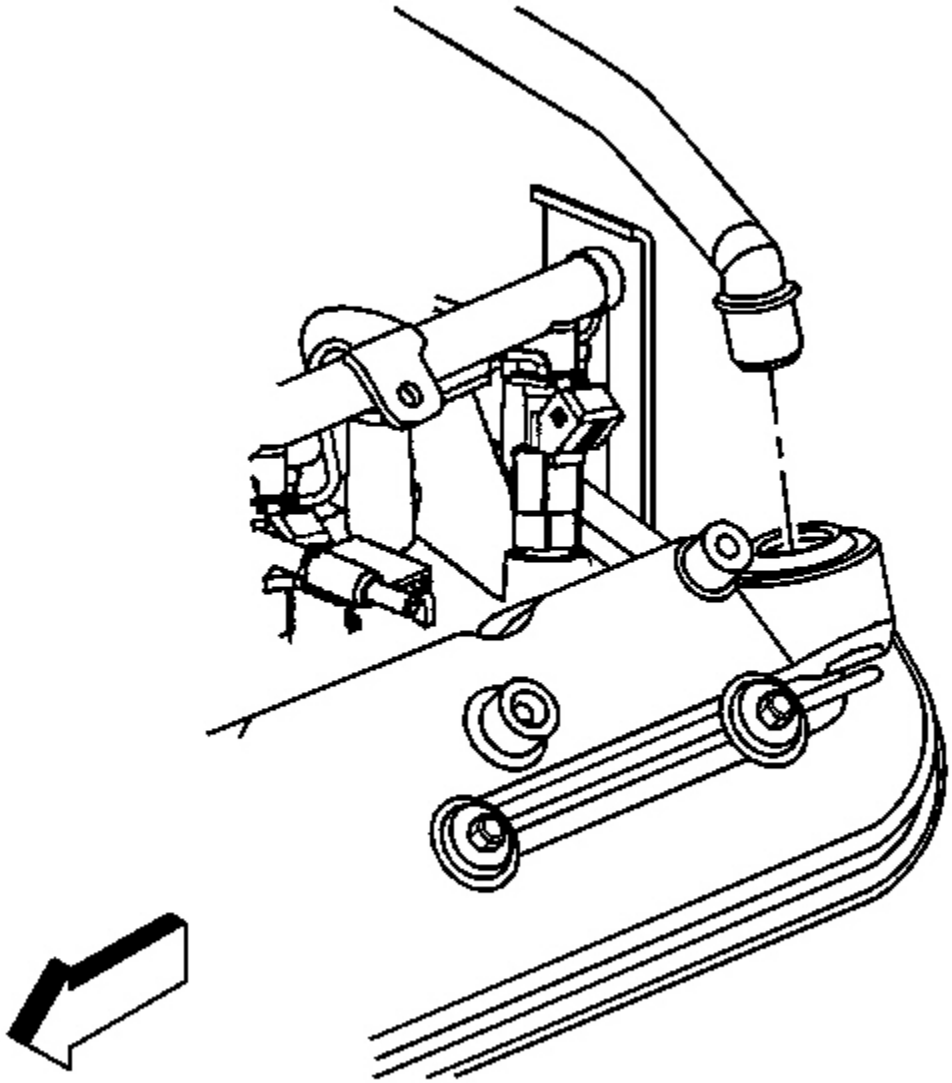

Fig. 25: Left Rocker Arm Cover & PCV Valve Pipe
Courtesy of GENERAL MOTORS CORP.

4. Install the PCV valve pipe to the left rocker arm cover.

cardiagn.com

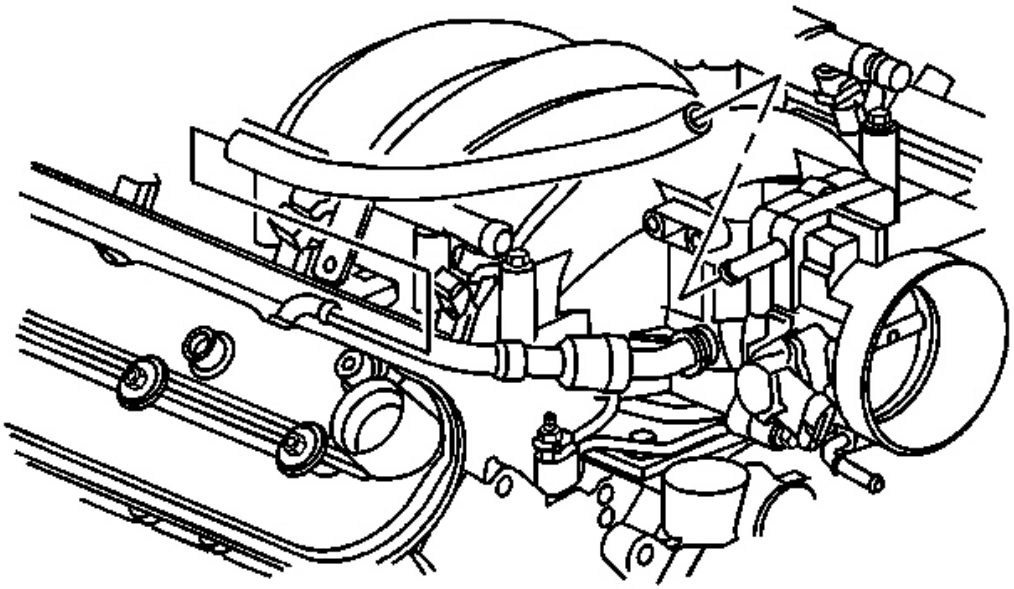

Fig. 26: PCV Tube & Rocker Arm Cover
Courtesy of GENERAL MOTORS CORP.

5. Install the PCV tube to the right rocker arm cover and intake manifold, if necessary.

POSITIVE CRANKCASE VENTILATION (PCV) VALVE REPLACEMENT (LS6 ENGINE)

Removal Procedure

cardiagn.com

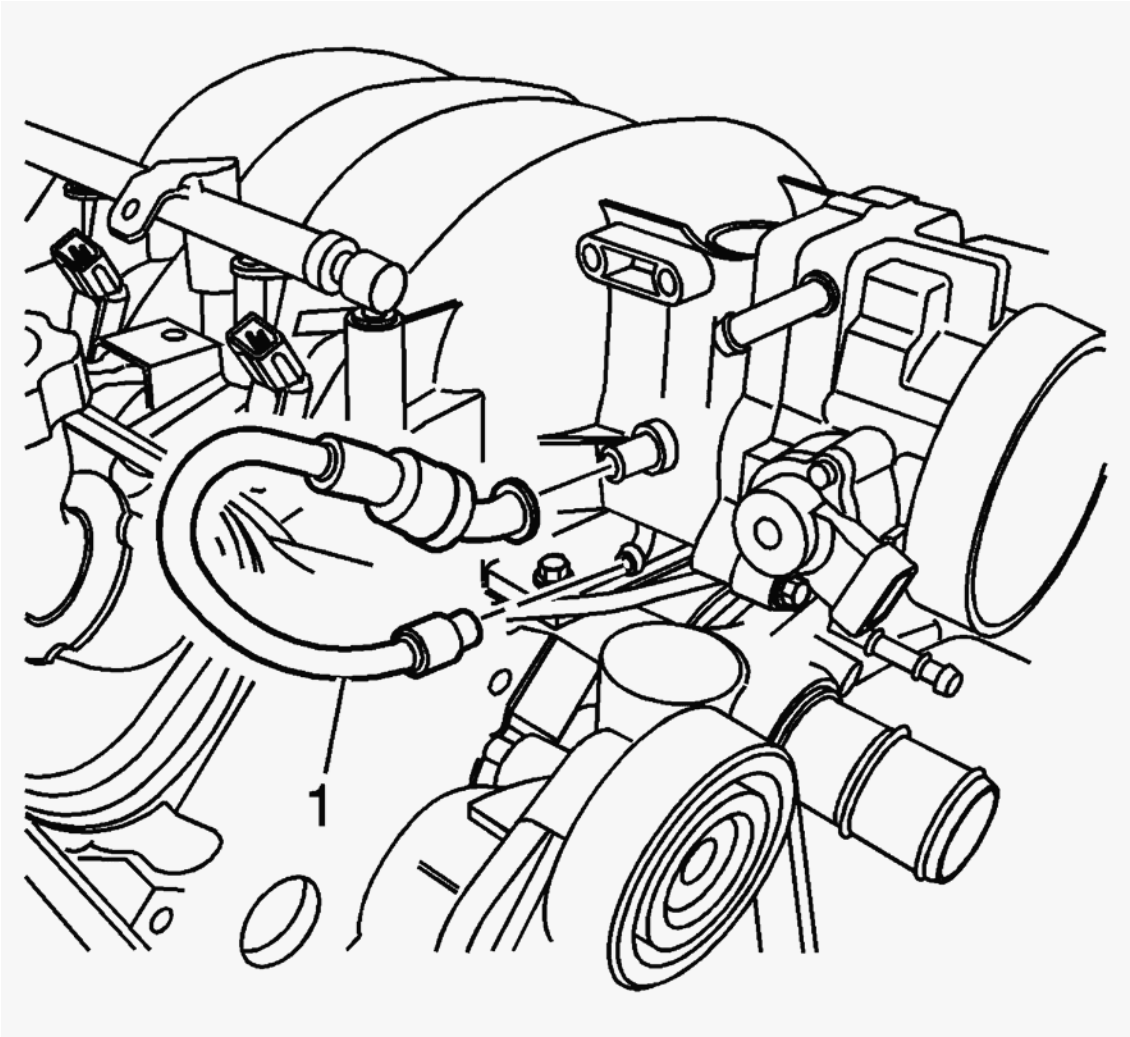

Fig. 27: PCV Valve Hose
Courtesy of GENERAL MOTORS CORP.

1. Remove the positive crankcase ventilation (PCV) valve hose (1) from the intake manifold.
2. Remove the positive crankcase ventilation (PCV) valve hose (1) from the valley cover.
3. Remove the PCV valve from the valve hose.

Installation Procedure

cardiagn.com

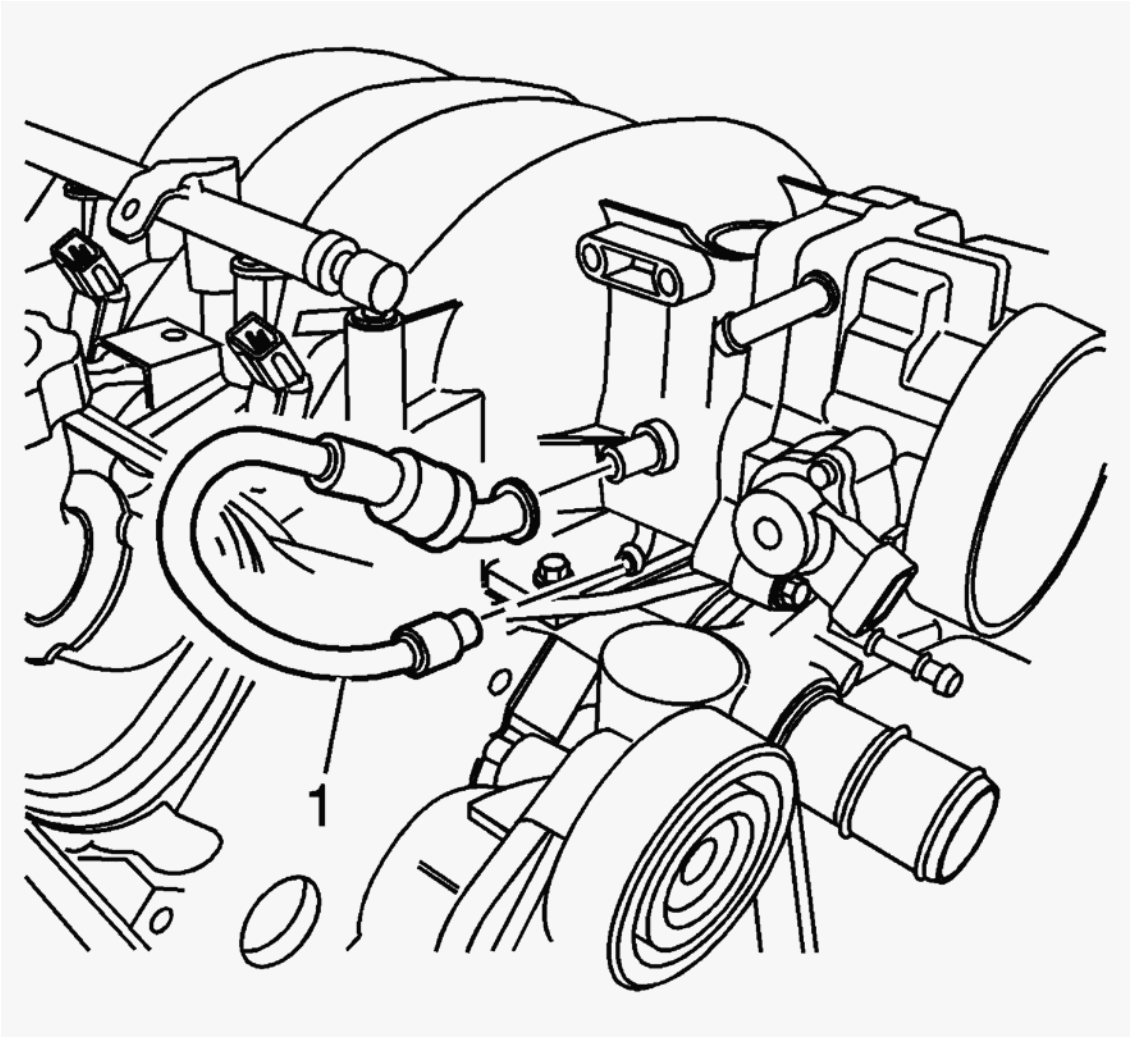

Fig. 28: PCV Valve Hose
Courtesy of GENERAL MOTORS CORP.

1. Install the PCV valve to the valve hose.
2. Install the PCV valve hose (1) to the valley cover.
3. Install the PCV valve hose (1) to the intake manifold.

CRANKCASE VENTILATION HOSES/PIPES REPLACEMENT

Removal Procedure

cardiagn.com

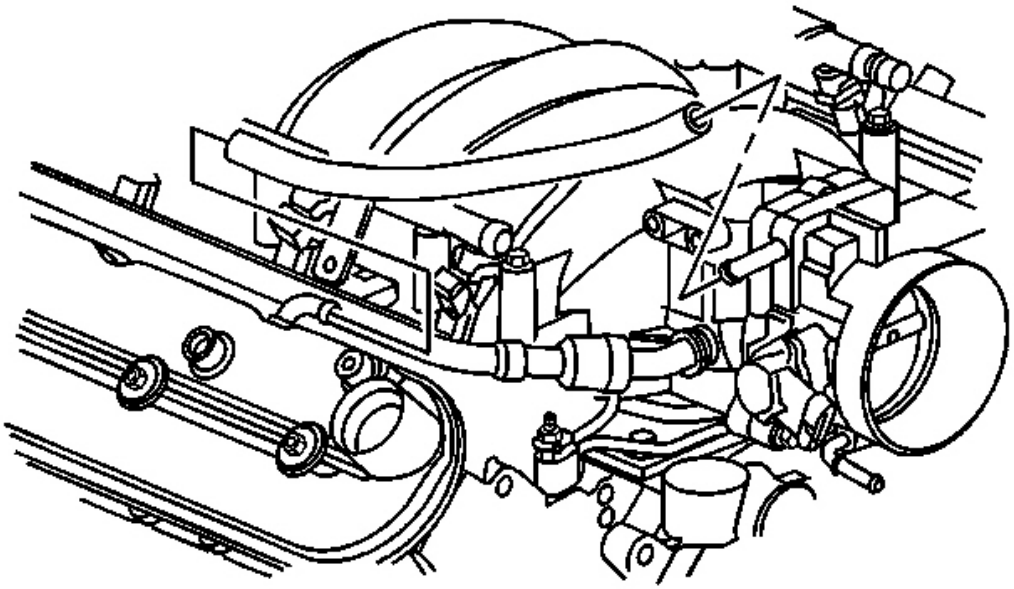

Fig. 29: PCV Tube & Rocker Arm Cover
Courtesy of GENERAL MOTORS CORP.

1. Remove the throttle position (TP) sensor harness clip from the positive crankcase ventilation (PCV) tube.
2. Remove the PCV tube from the right rocker arm cover and throttle body, if necessary.

cardiagn.com

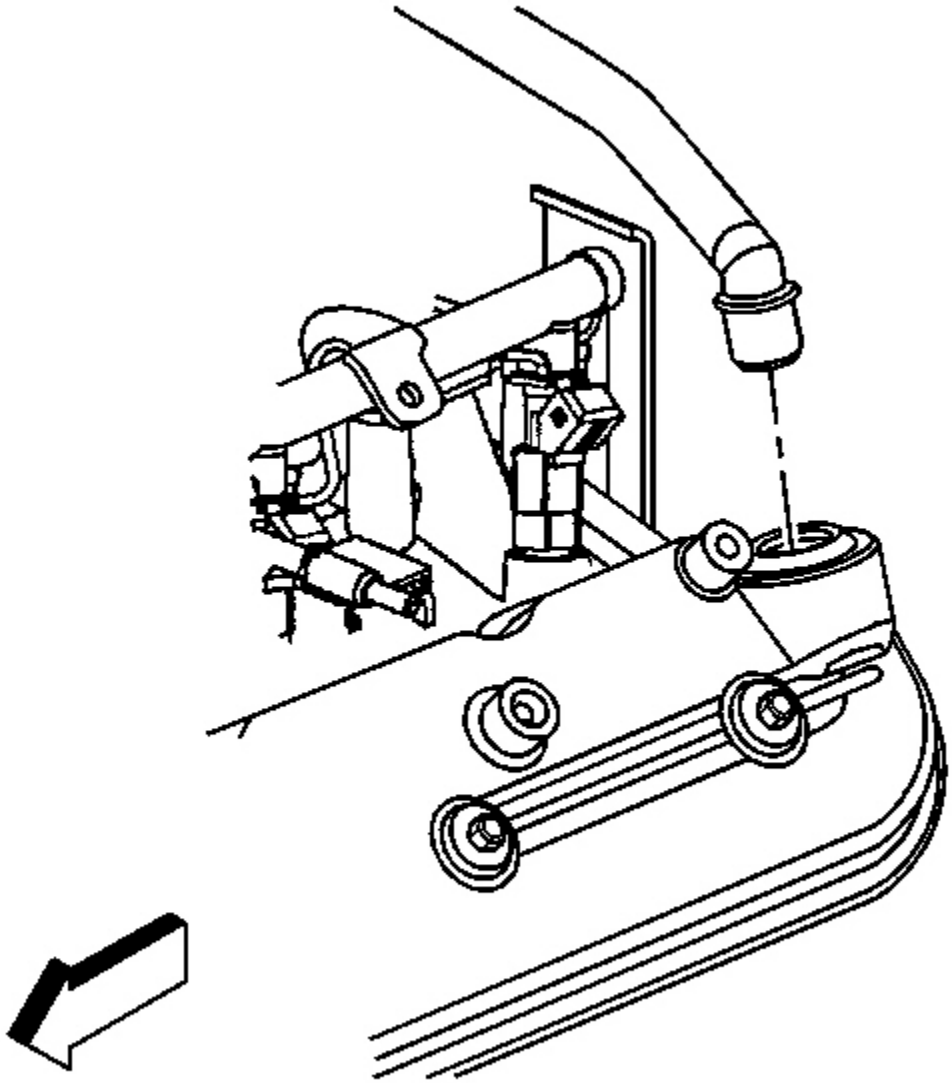

Fig. 30: Left Rocker Arm Cover & PCV Valve Pipe
Courtesy of GENERAL MOTORS CORP.

3. If equipped with the regular production option (RPO) LS1 engine, remove the PCV valve pipe from the left rocker arm cover.

cardiagn.com

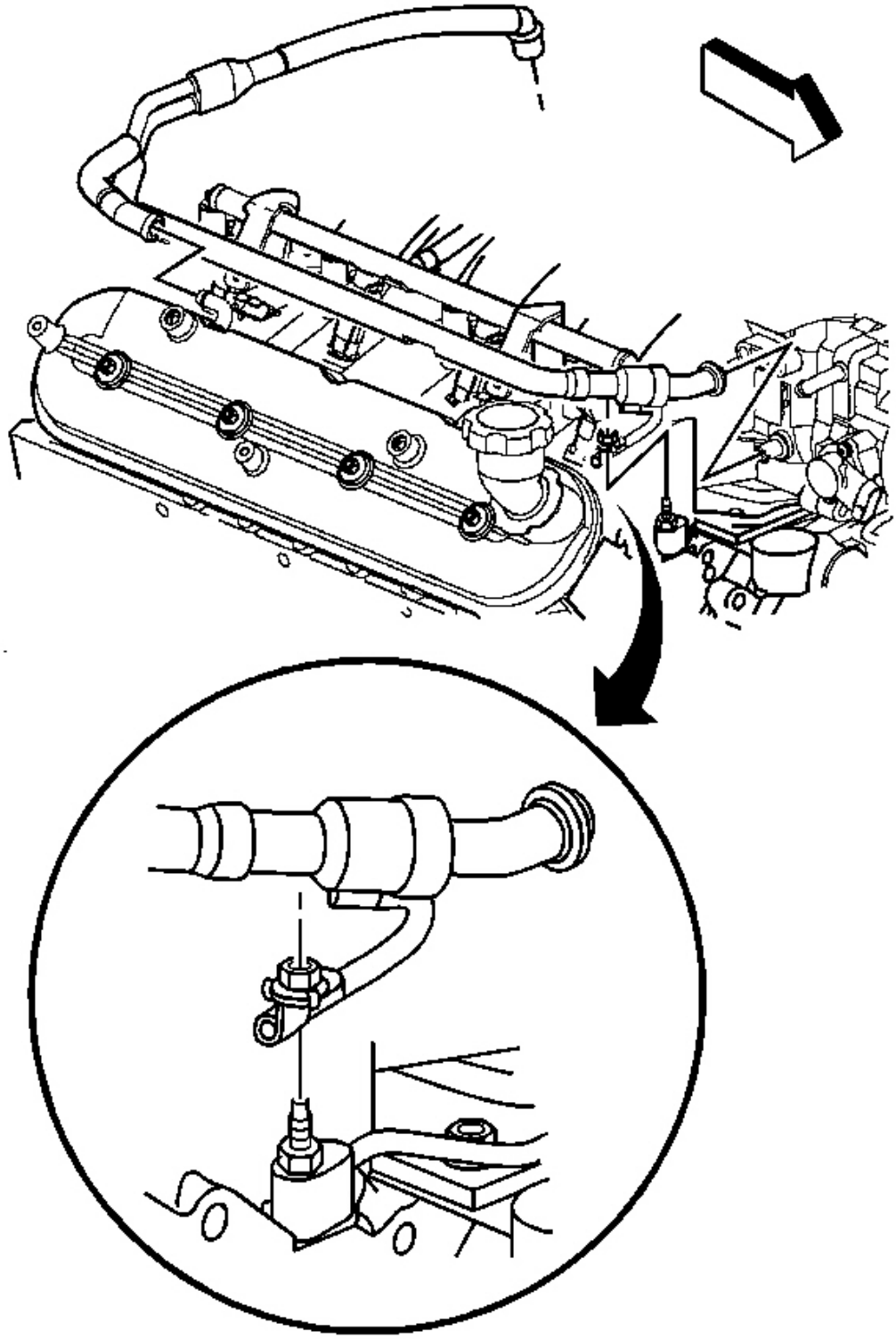

cardiagn.com

Fig. 31: Right Rocker Arm Cover & PCV Valve Pipe
Courtesy of GENERAL MOTORS CORP.

4. If equipped with the RPO LS1 engine, remove the PCV valve pipe strap nut.
5. Remove the PCV valve pipe from the right rocker arm cover and intake manifold.
6. If replacing the PCV valve pipe, remove the PCV valve from the pipe.

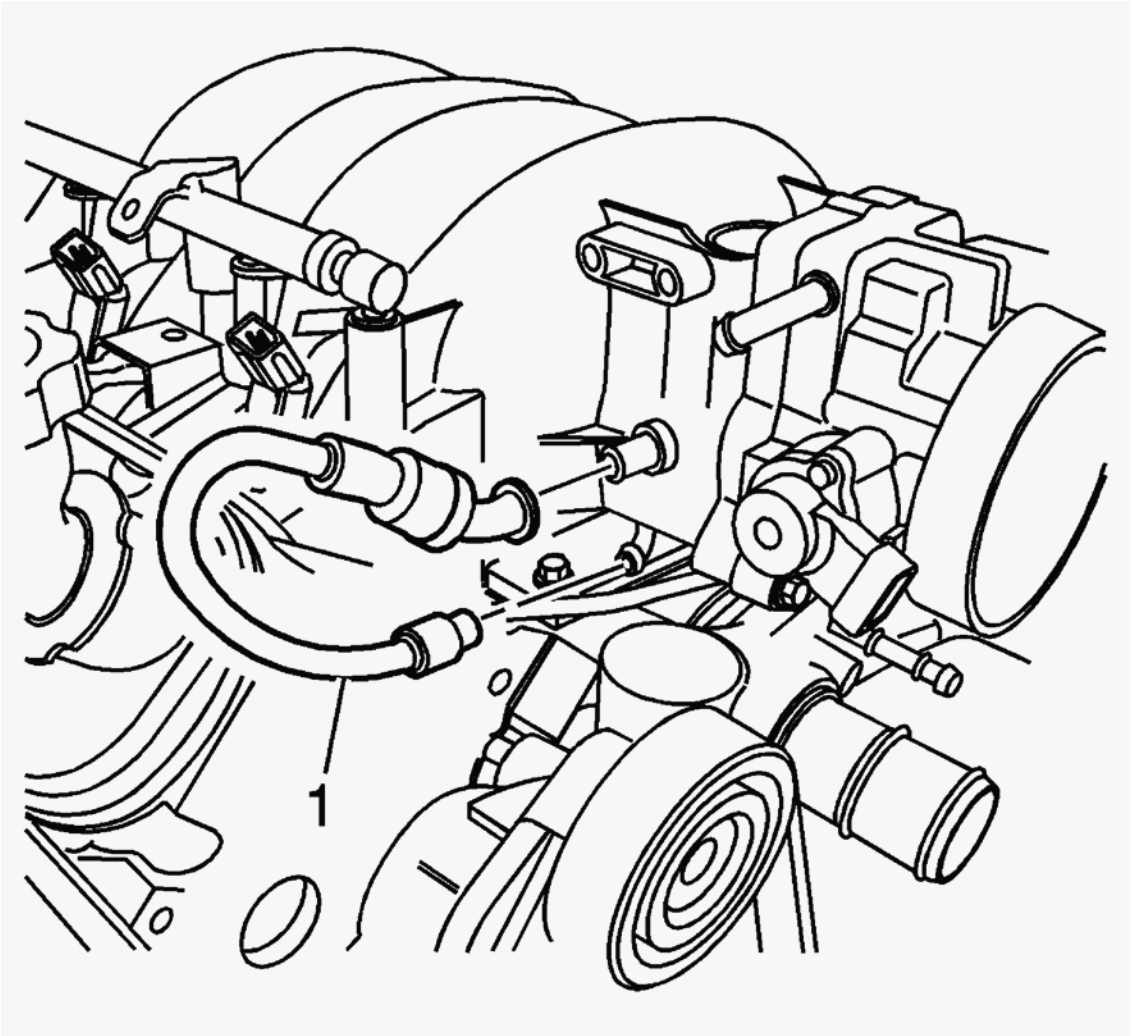

Fig. 32: PCV Valve Hose
Courtesy of GENERAL MOTORS CORP.

7. If equipped with the RPO LS6 engine, remove the PCV valve hose (1) from the valley cover and intake manifold.
8. If replacing the PCV valve hose, remove the PCV valve from the hose.

Installation Procedure

cardiagn.com

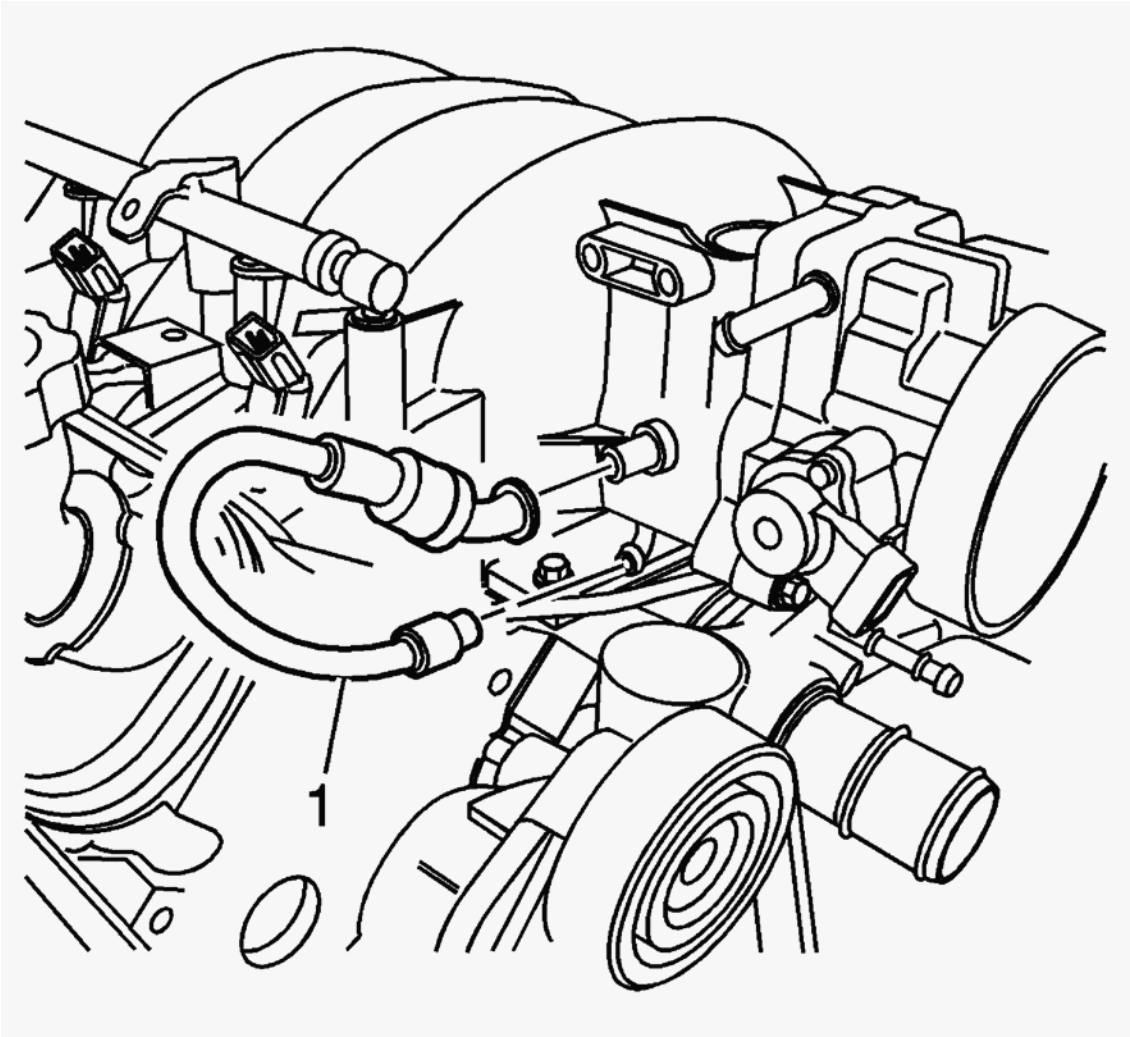

Fig. 33: PCV Valve Hose
Courtesy of GENERAL MOTORS CORP.

1. If equipped with the RPO LS6 engine, install the PCV valve to the hose, if necessary.
2. Install the PCV valve hose (1) to the valley cover and intake manifold.

cardiagn.com

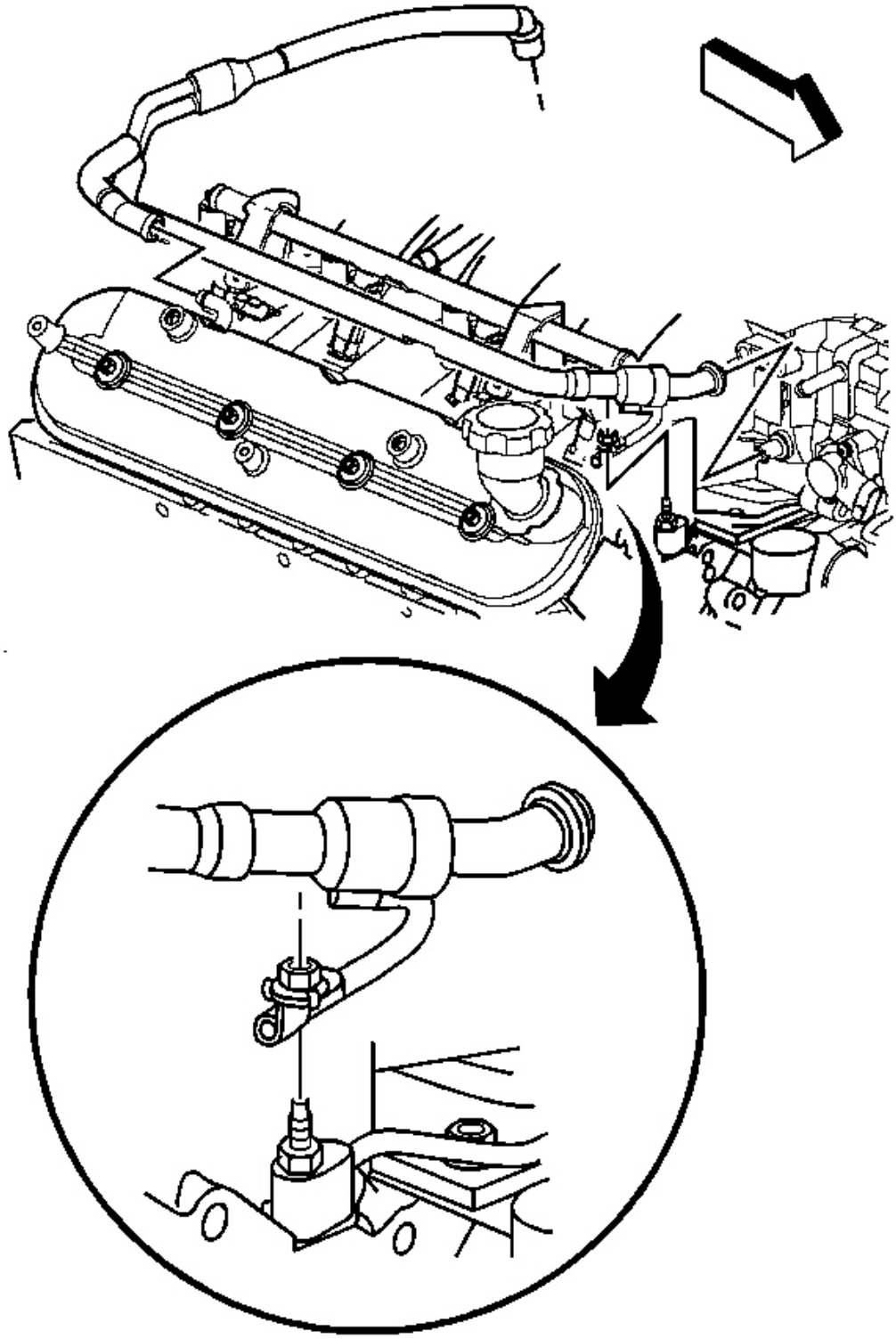

cardiagn.com

Fig. 34: Right Rocker Arm Cover & PCV Valve Pipe
Courtesy of GENERAL MOTORS CORP.

3. If equipped with the RPO LS1 engine, install the PCV valve to the valve pipe, if necessary.
4. Install the PCV valve pipe to the right rocker arm cover and intake manifold.

NOTE: **Refer to Fastener Notice in Cautions and Notices.**

5. Install the PCV valve pipe strap nut

   Tighten: Tighten the PCV strap nut to 12 N.m (106 lb in).

cardiagn.com

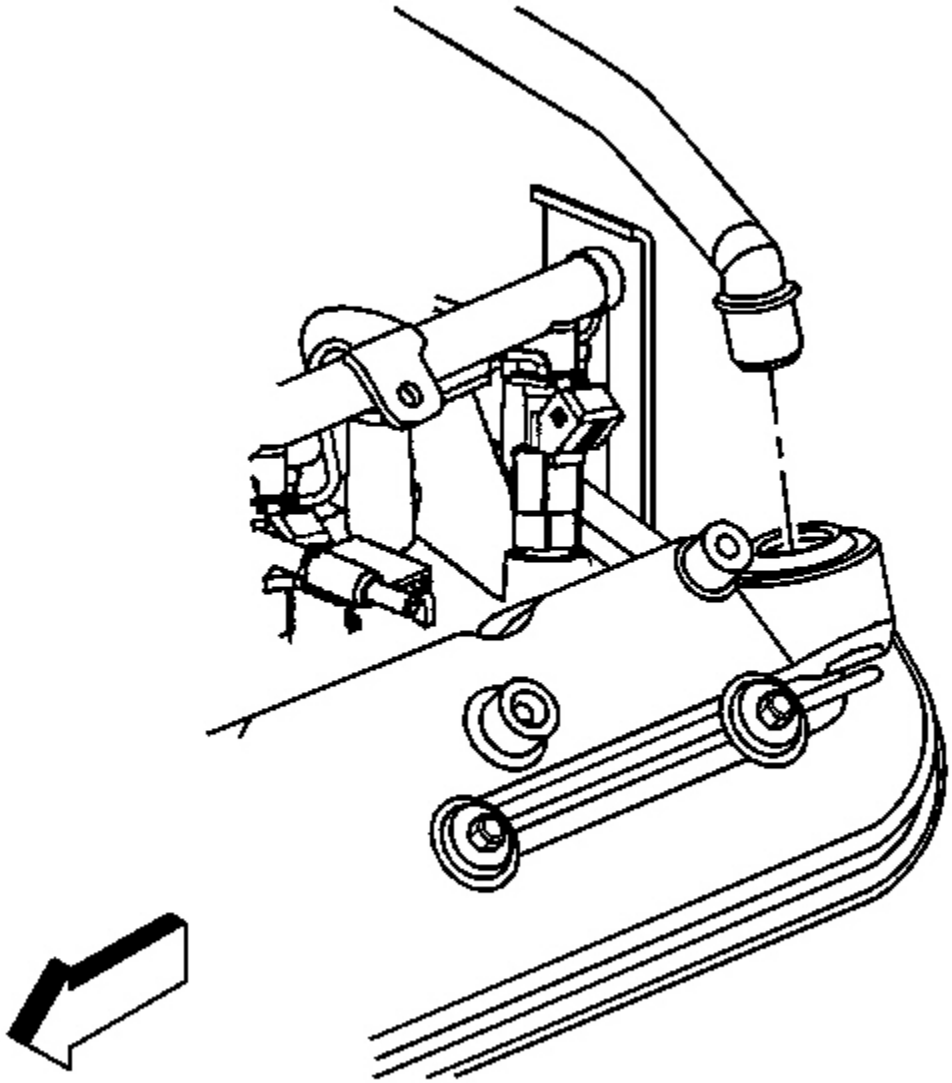

Fig. 35: Left Rocker Arm Cover & PCV Valve Pipe
Courtesy of GENERAL MOTORS CORP.

6. If equipped with the RPO LS1 engine, install the PCV valve pipe to the left rocker arm cover.

cardiagn.com

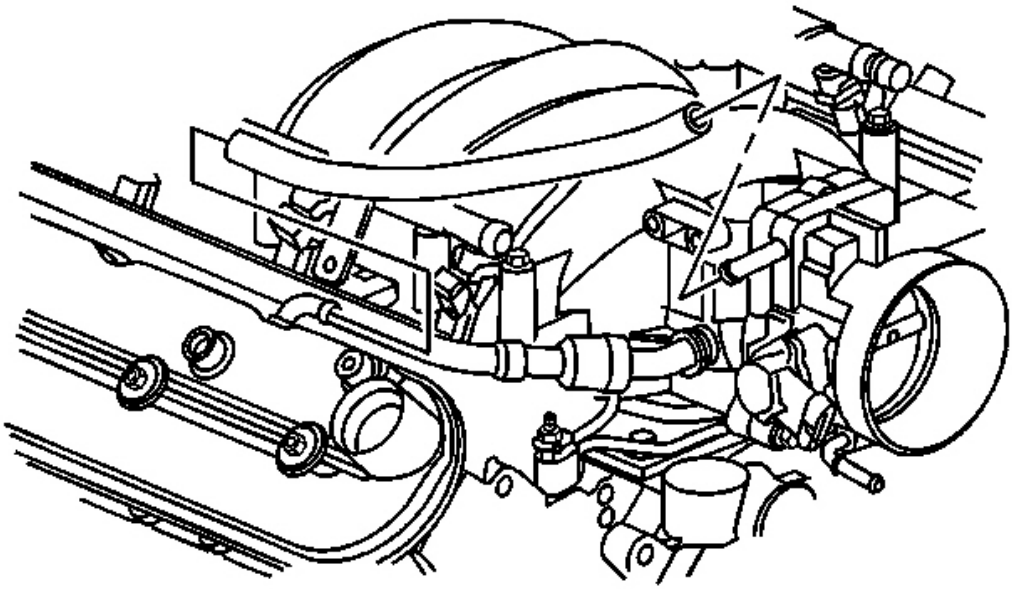

Fig. 36: PCV Tube & Rocker Arm Cover
Courtesy of GENERAL MOTORS CORP.

7. Install the PCV tube to the right rocker arm cover and throttle body, in necessary.
8. Install the TP sensor harness clip to the PCV tube.

INTAKE MANIFOLD REPLACEMENT

Removal Procedure

IMPORTANT: The intake manifold, throttle body, fuel injection rail, and injectors may be removed as an assembly. If not servicing the individual components, remove the manifold as a complete assembly.

cardiagn.com

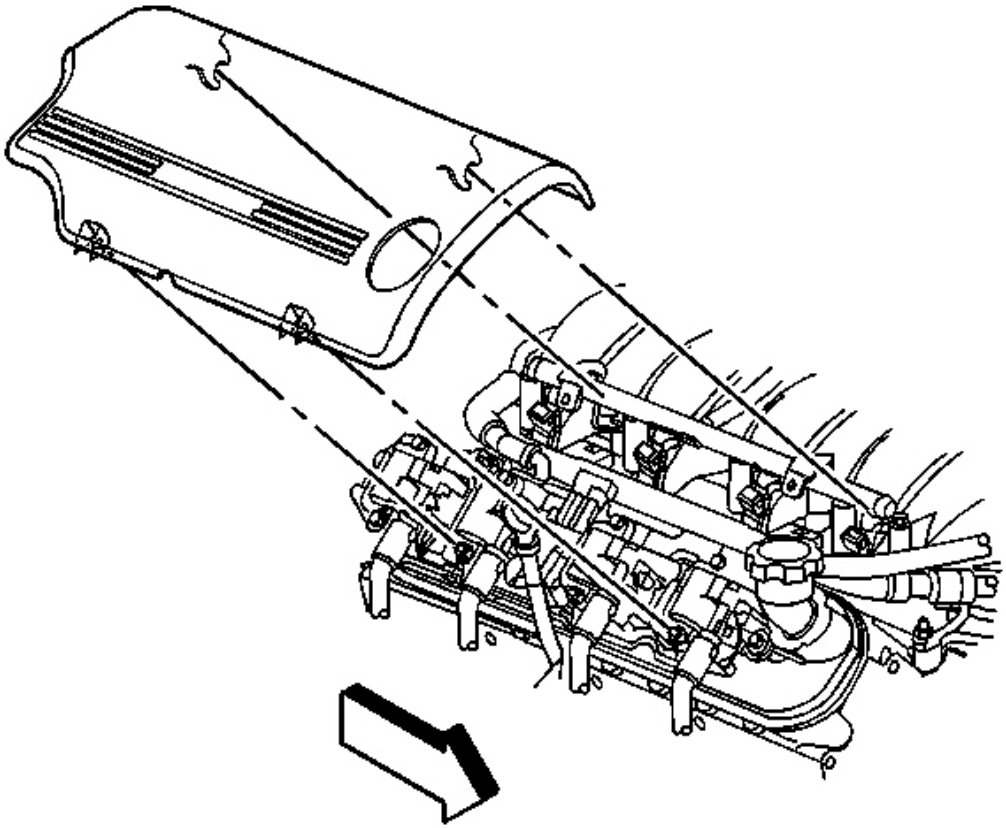

Fig. 37: Right Fuel Injection Rail Cover
Courtesy of GENERAL MOTORS CORP.

1. Drain the cooling system. Refer to **Draining and Filling Cooling System** in Engine Cooling.
2. If replacing the intake manifold, perform the following:
   - Remove the throttle body. Refer to **Throttle Body Assembly Replacement** in Engine Controls - 5.7 L.
   - Remove the fuel injectors. Refer to **Fuel Injector Replacement** in Engine Controls - 5.7 L.
3. Remove the right fuel rail cover.

cardiagn.com

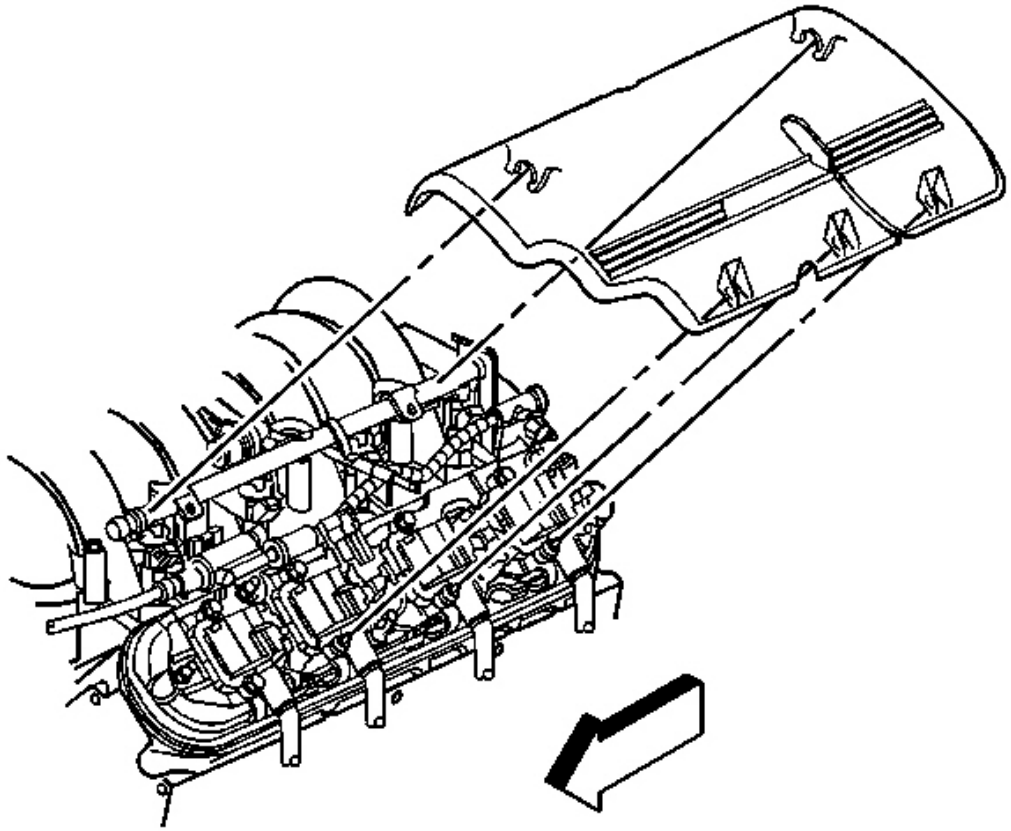

Fig. 38: Left Fuel Rail Cover
Courtesy of GENERAL MOTORS CORP.

4. Remove the left fuel rail cover.

cardiagn.com

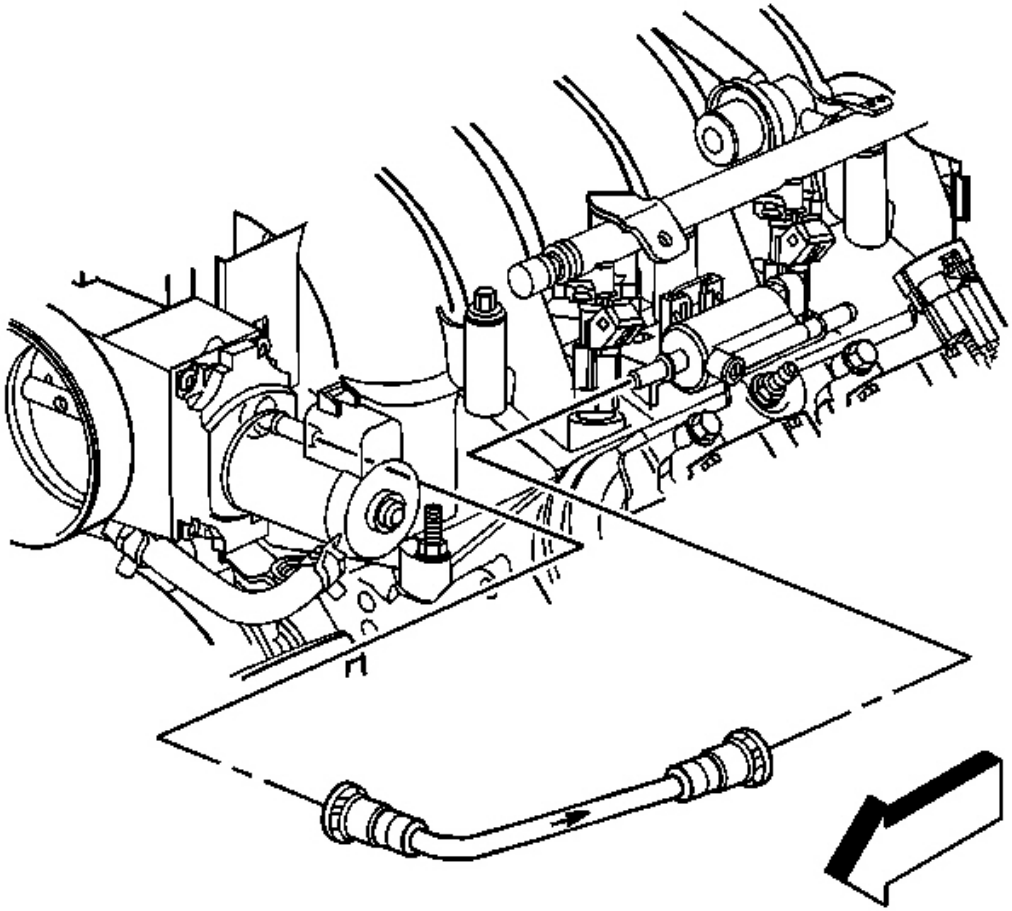

Fig. 39: EVAP Canister Purge Tube
Courtesy of GENERAL MOTORS CORP.

5. Remove the fuel feed hose. Refer to **Fuel Hose/Pipes Replacement - Engine Compartment** in Engine Controls - 5.7 L.
6. Disconnect the evaporative emission (EVAP) canister purge tube from the intake manifold.
7. Disconnect the EVAP canister purge tube from the EVAP canister purge solenoid valve.
8. Remove the EVAP canister purge tube.

cardiagn.com

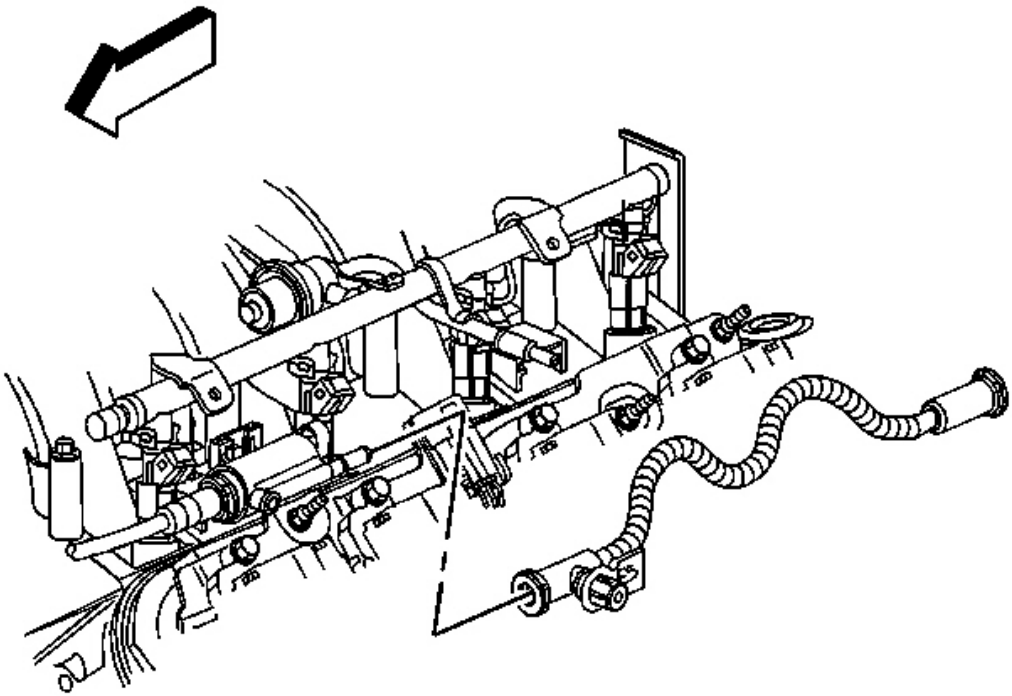

Fig. 40: Fuel Feed Pipe
Courtesy of GENERAL MOTORS CORP.

9. Disconnect the EVAP canister purge tube from the EVAP canister purge solenoid valve.
10. Disconnect the EVAP canister purge tube from the fuel feed pipe.
11. Remove the EVAP canister purge tube.

cardiagn.com

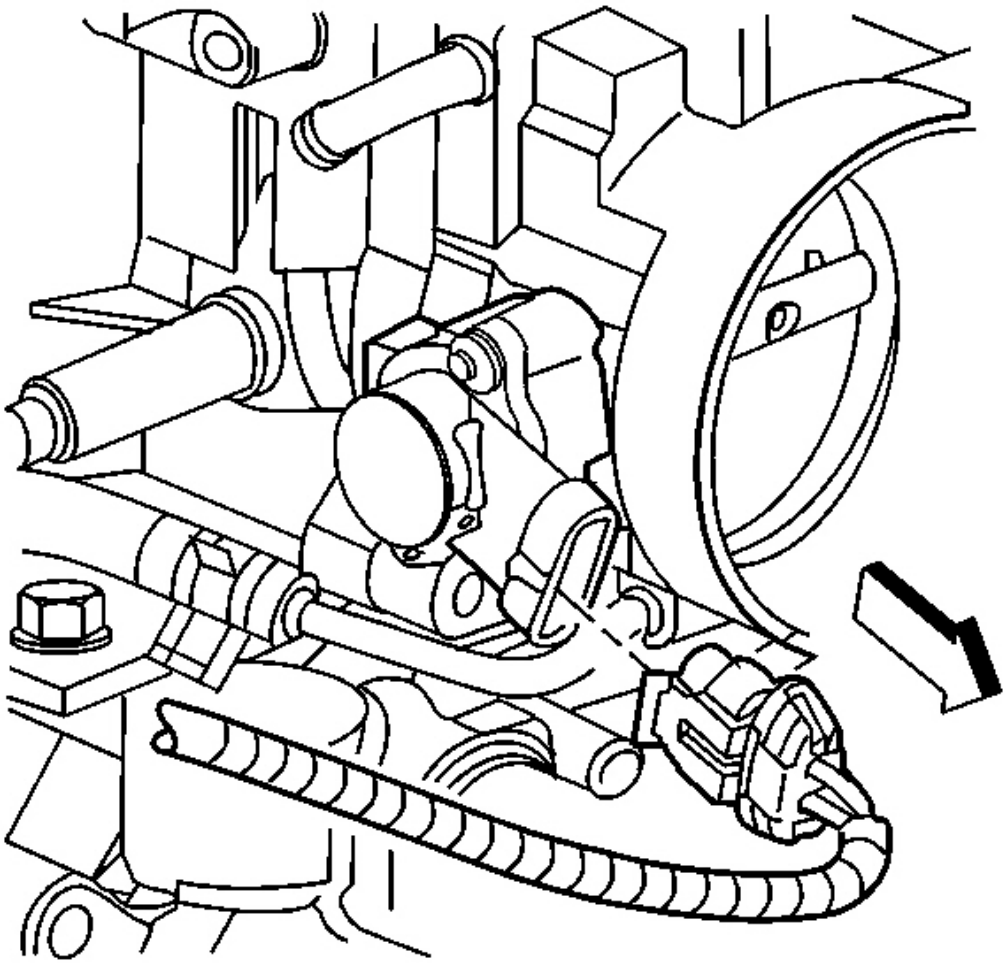

Fig. 41: TP Sensor Electrical Connector
Courtesy of GENERAL MOTORS CORP.

12. Disconnect the throttle position (TP) sensor electrical connector.
13. Remove the coolant air bleed hose. Refer to **Coolant Air Bleed Hose Replacement** in Engine Cooling.

cardiagn.com

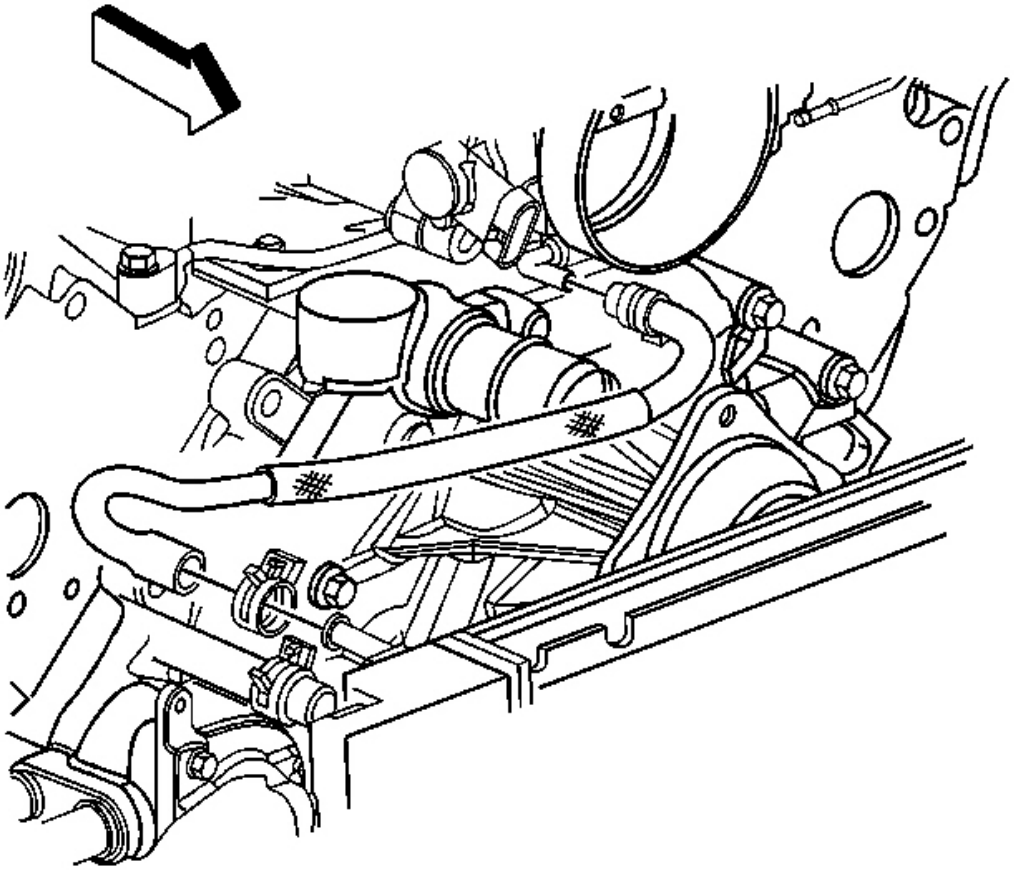

Fig. 42: Throttle Body Heater Outlet Hose & Clamp
Courtesy of GENERAL MOTORS CORP.

14. Reposition the throttle body heater outlet hose clamp at the throttle body.
15. Remove the throttle body heater outlet hose from the throttle body.
16. Remove the throttle body heater outlet hose.

cardiagn.com

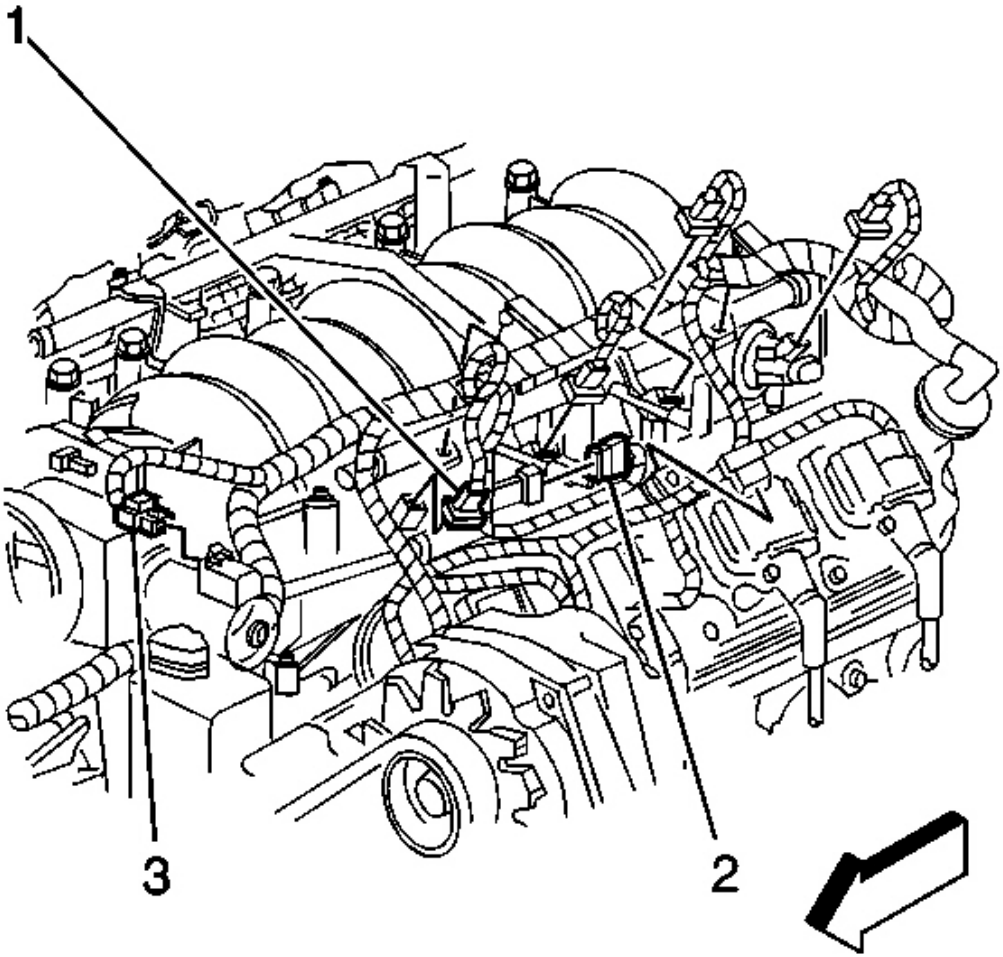

Fig. 43: Electrical Connectors
Courtesy of GENERAL MOTORS CORP.

17. Disconnect all the fuel injector electrical connectors (1).
18. Disconnect the EVAP canister purge solenoid valve electrical connector (2).
19. Disconnect the electronic throttle control (ETC) electrical connector (3).

cardiagn.com

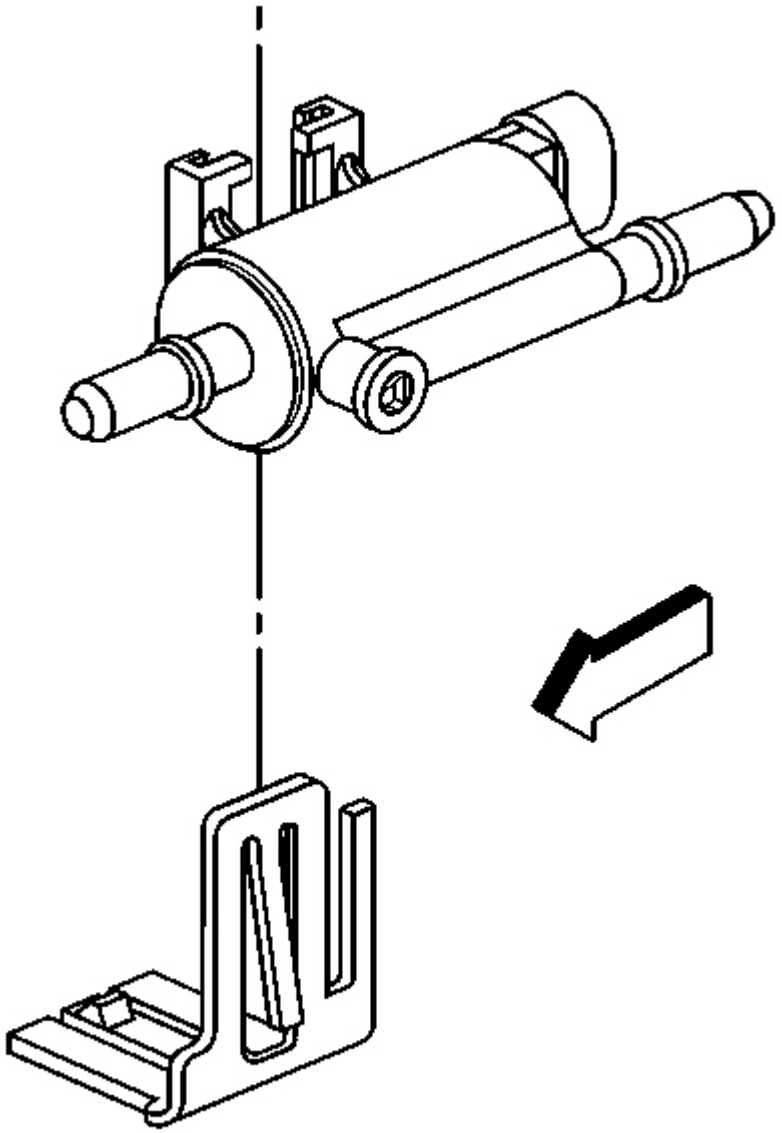

Fig. 44: EVAP Canister Purge Solenoid Valve & Bracket
Courtesy of GENERAL MOTORS CORP.

20. Remove the EVAP canister purge solenoid valve from the bracket.
21. Disconnect the harness clips at the fuel rails.
22. Reposition the intake manifold branches of the wiring harness.

cardiagn.com

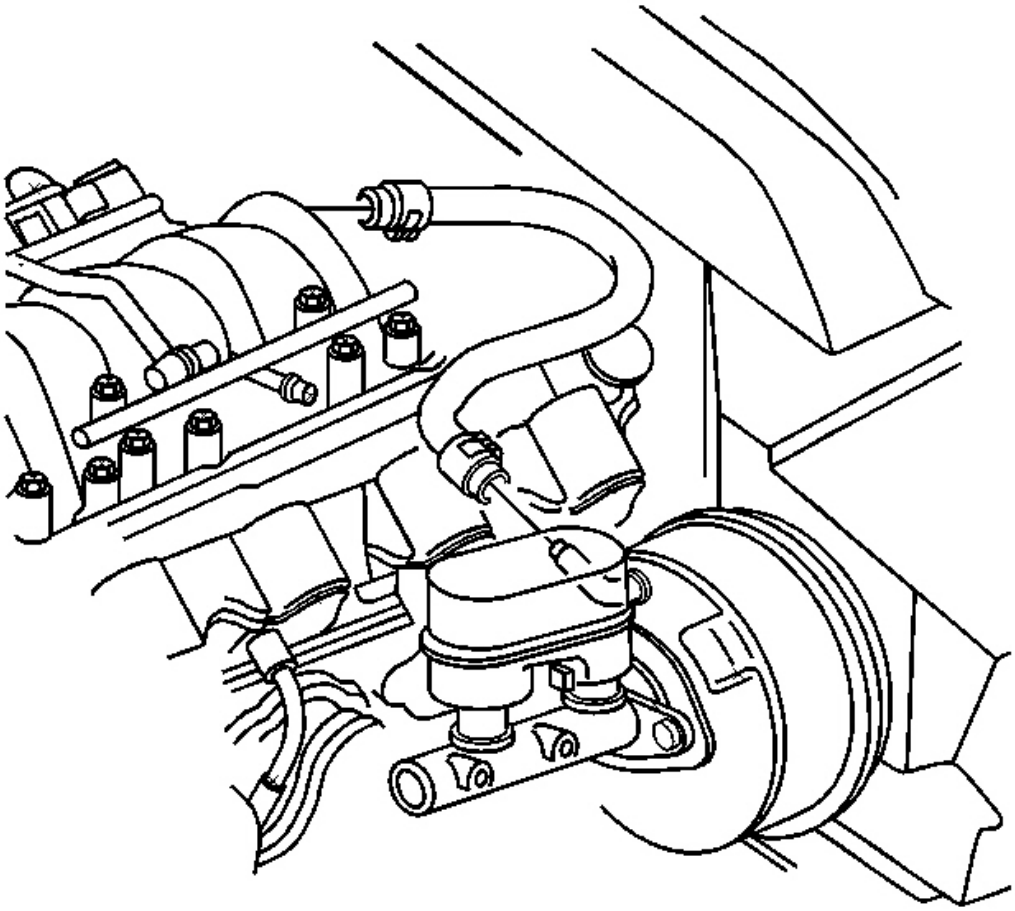

Fig. 45: Vacuum Booster Hose
Courtesy of GENERAL MOTORS CORP.

23. Disconnect the power brake booster vacuum hose at the booster.

cardiagn.com

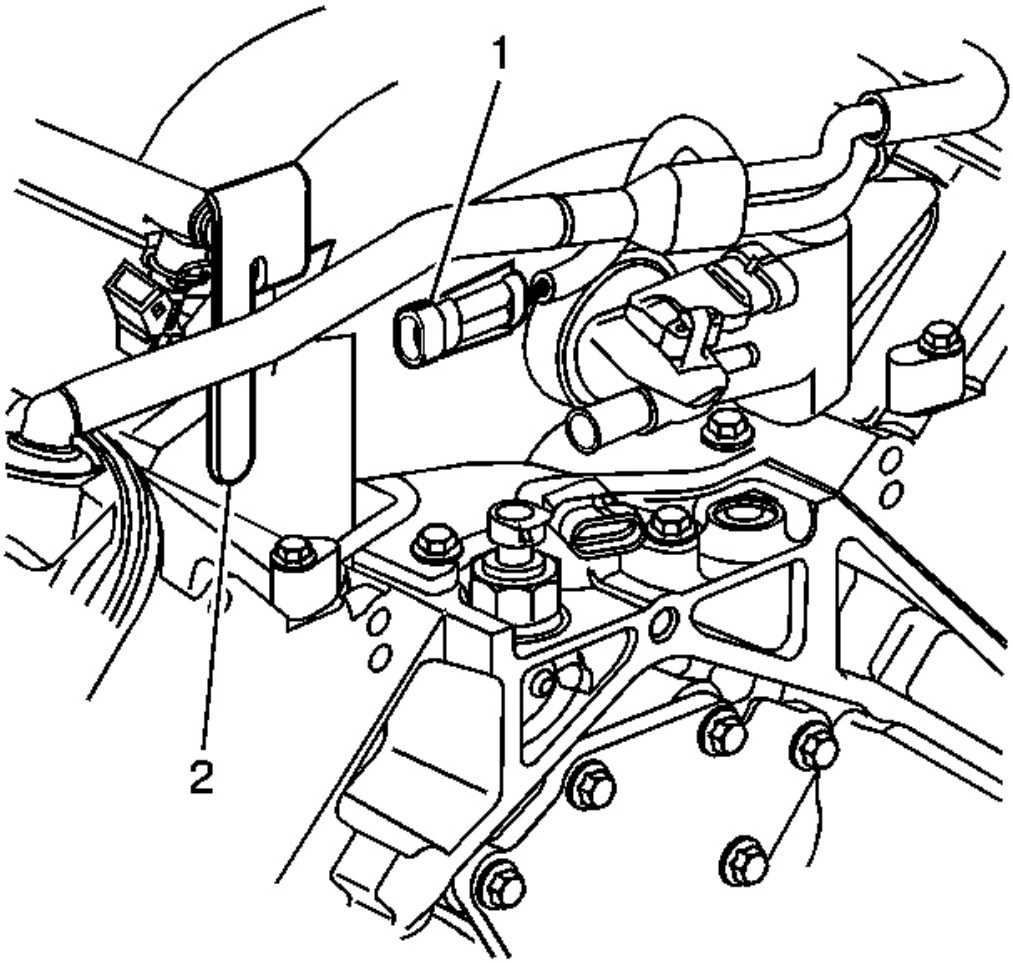

Fig. 46: Knock Sensor Wire Harness Clip & Fuel Rail Stop Bracket
Courtesy of GENERAL MOTORS CORP.

24. Remove the knock sensor wire harness (1) clip from the fuel rail stop bracket (2).

cardiagn.com

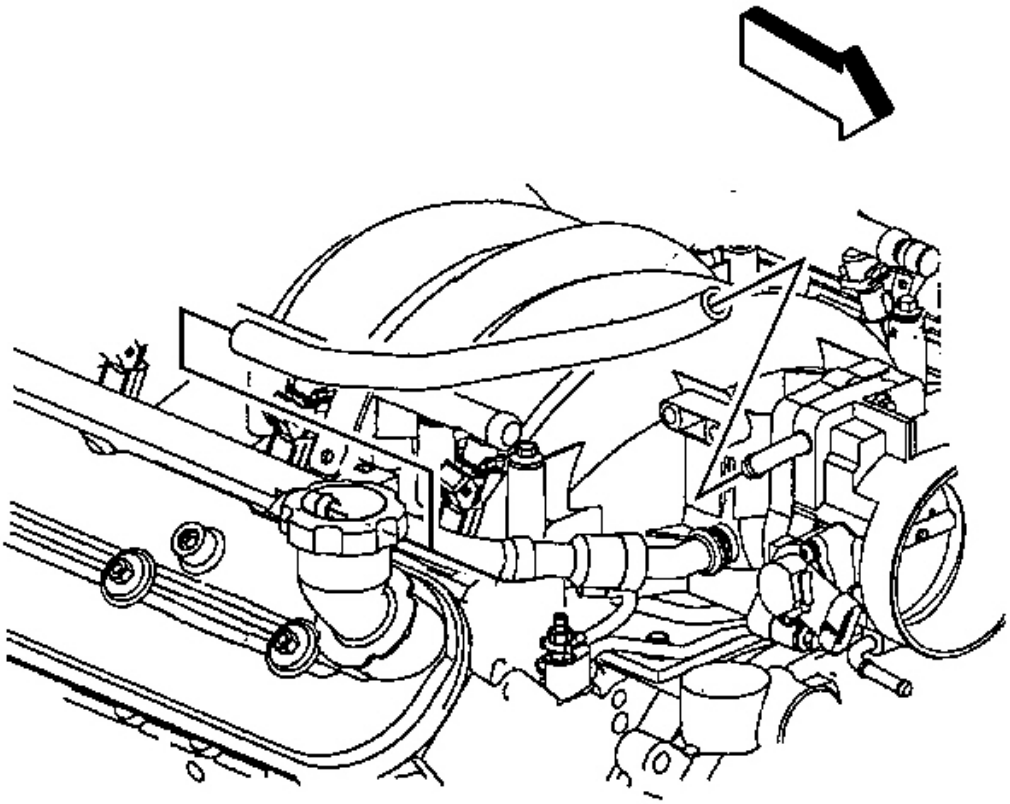

Fig. 47: TP Sensor Harness Clip & PCV Tube
Courtesy of GENERAL MOTORS CORP.

25. Remove the TP sensor harness clip from the positive crankcase ventilation (PCV) tube.
26. Remove the PCV tube from the right rocker arm cover and throttle body.

cardiagn.com

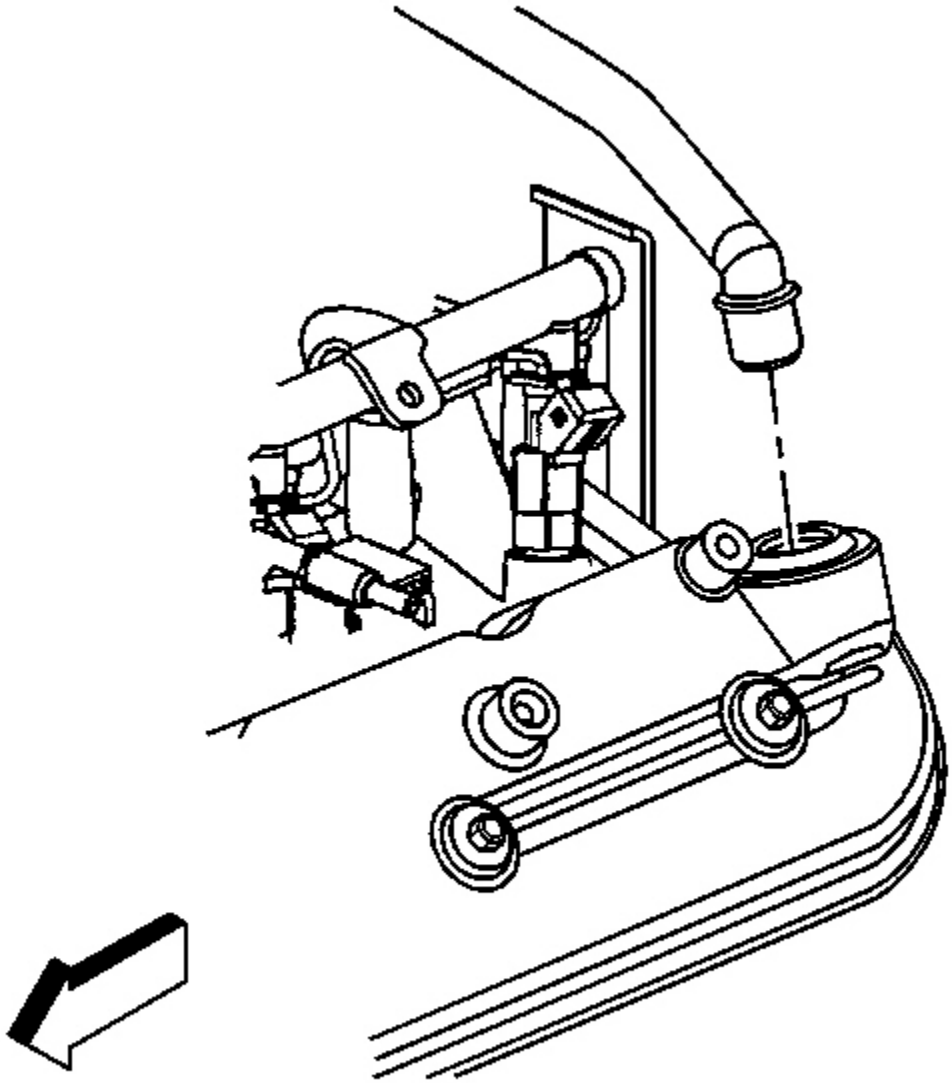

Fig. 48: Left Rocker Arm Cover & PCV Valve Pipe
Courtesy of GENERAL MOTORS CORP.

27. If equipped with the regular production option (RPO) LS1 engine, remove the PCV valve pipe from the left rocker arm cover.

cardiagn.com

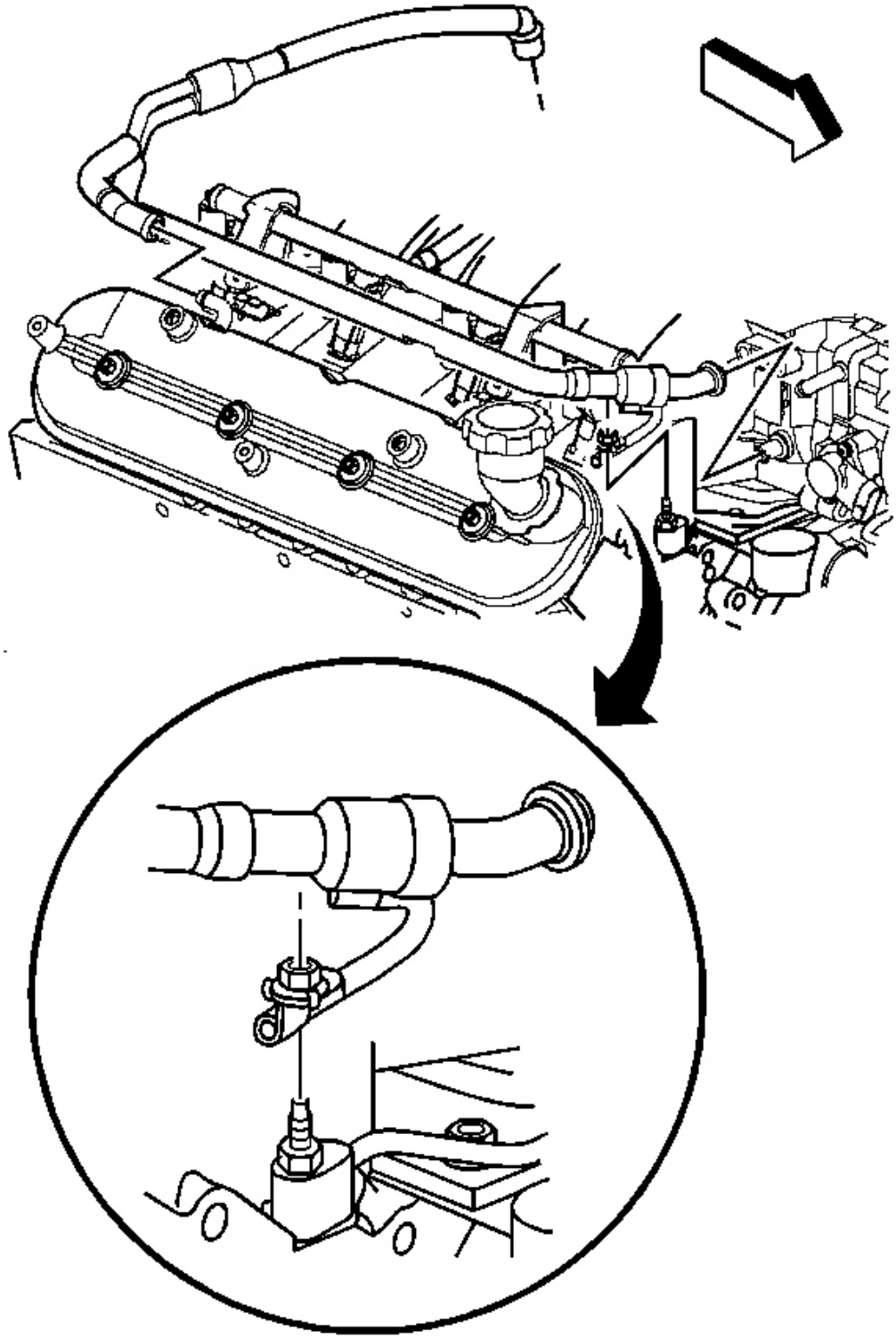

cardiagn.com

Fig. 49: Right Rocker Arm Cover & PCV Valve Pipe
Courtesy of GENERAL MOTORS CORP.

28. If equipped with the RPO LS1 engine, remove the PCV valve pipe strap nut.
29. Remove the PCV valve pipe from the right rocker arm cover and intake manifold.

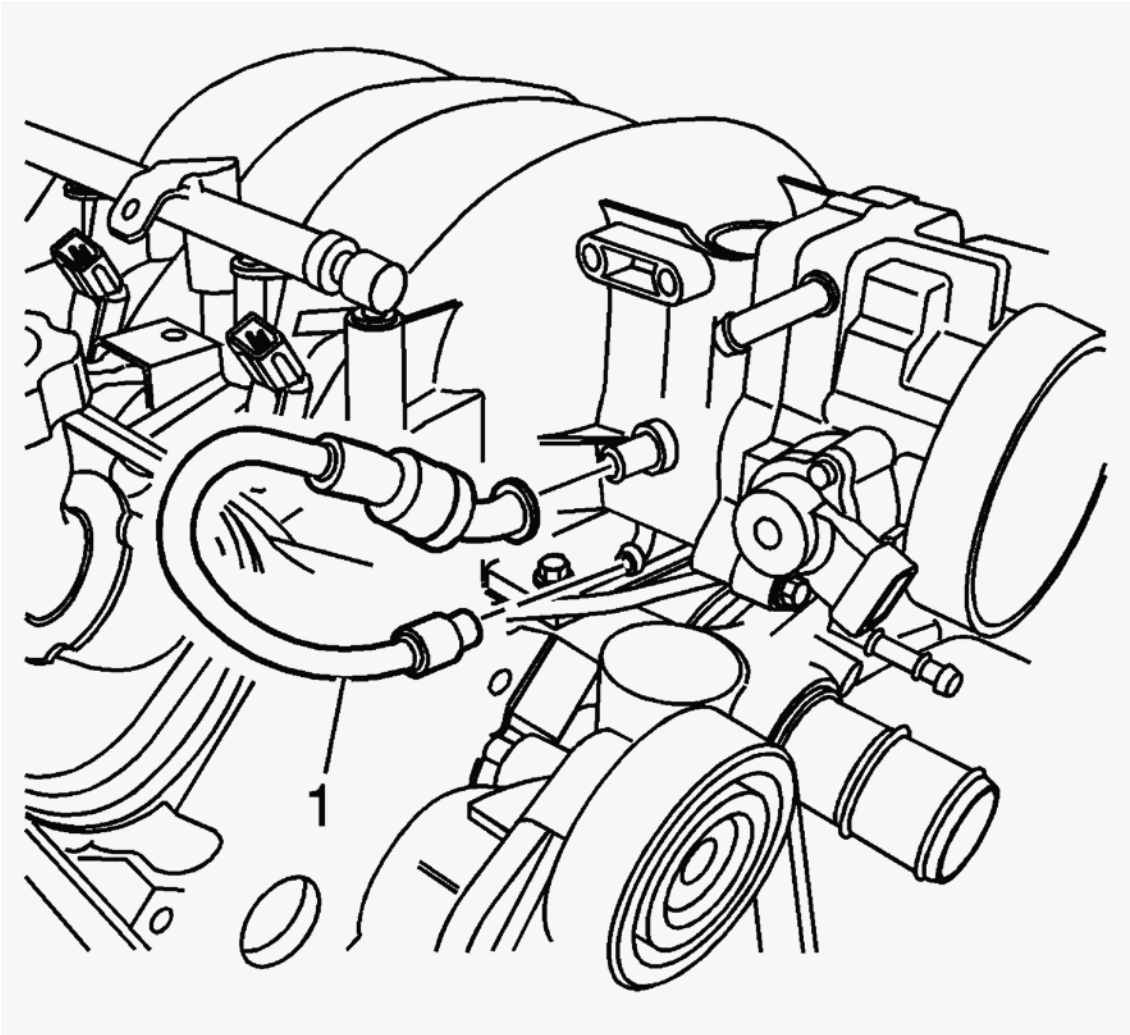

Fig. 50: PCV Valve Hose
Courtesy of GENERAL MOTORS CORP.

30. If equipped with the RPO LS6 engine, remove the PCV valve hose (1) from the valley cover and intake manifold.

cardiagn.com

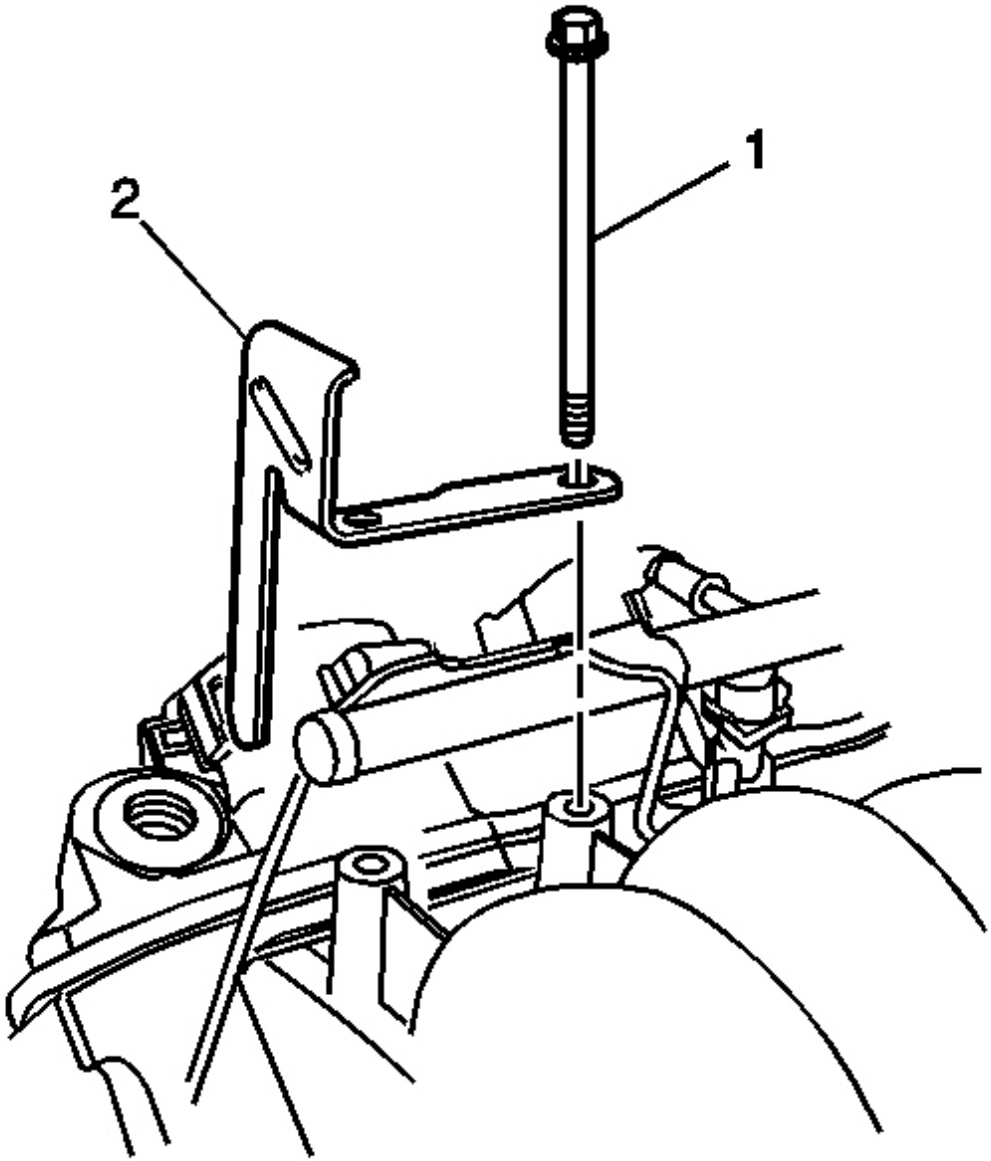

Fig. 51: Intake Manifold Bolts & Fuel Rail Stop Bracket
Courtesy of GENERAL MOTORS CORP.

31. Remove the intake manifold bolts (1) and fuel rail stop bracket (2).
32. Position the intake manifold forward.

cardiagn.com

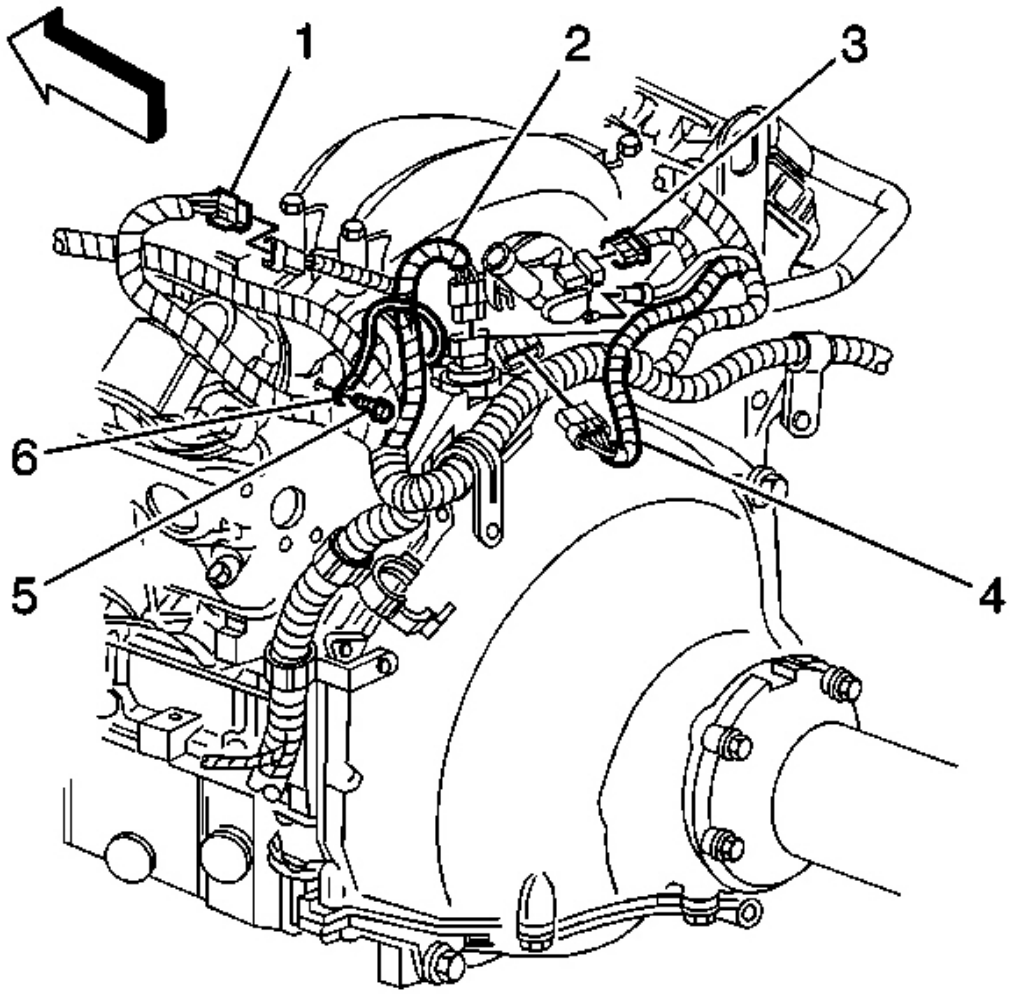

Fig. 52: MAP Sensor Vacuum Hose & MAP Sensor Electrical Connector
Courtesy of GENERAL MOTORS CORP.

33. Disconnect the manifold absolute pressure (MAP) sensor vacuum hose.
34. Disconnect the MAP sensor (3) electrical connector.

cardiagn.com

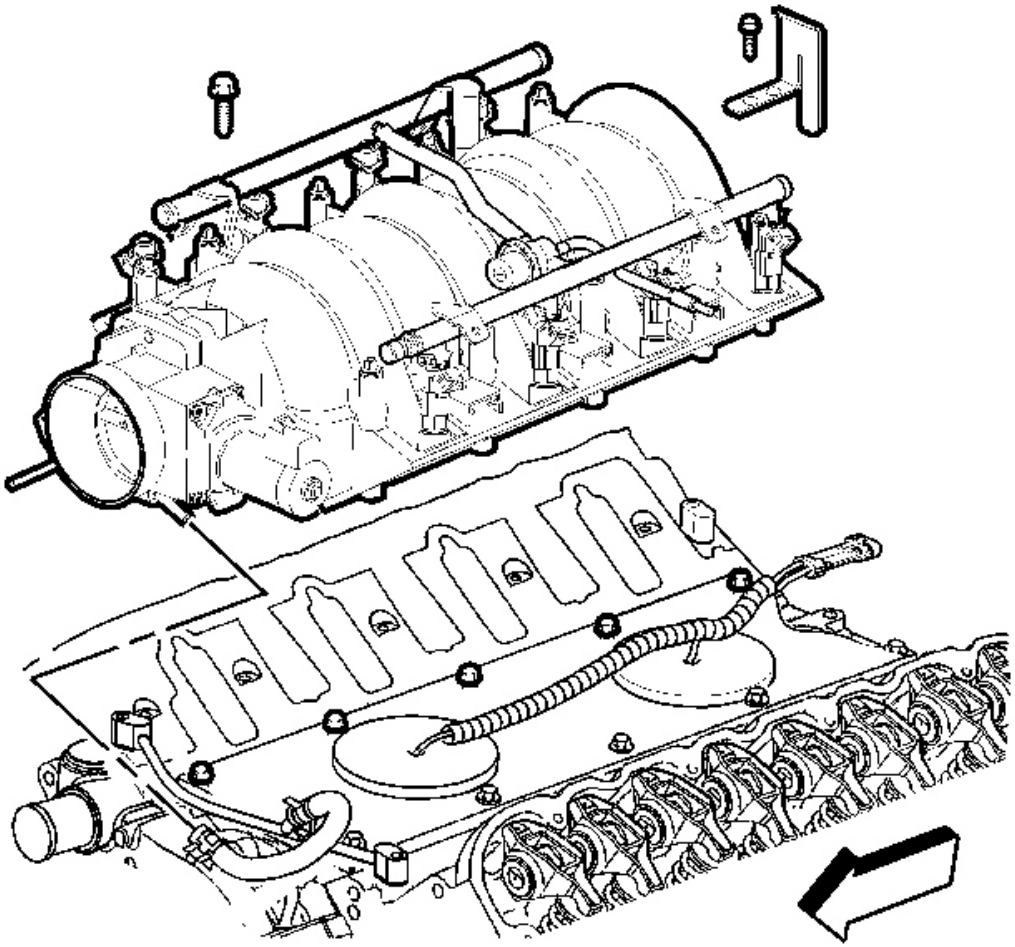

Fig. 53: Intake Manifold
Courtesy of GENERAL MOTORS CORP.

35. Remove the intake manifold.

cardiagn.com

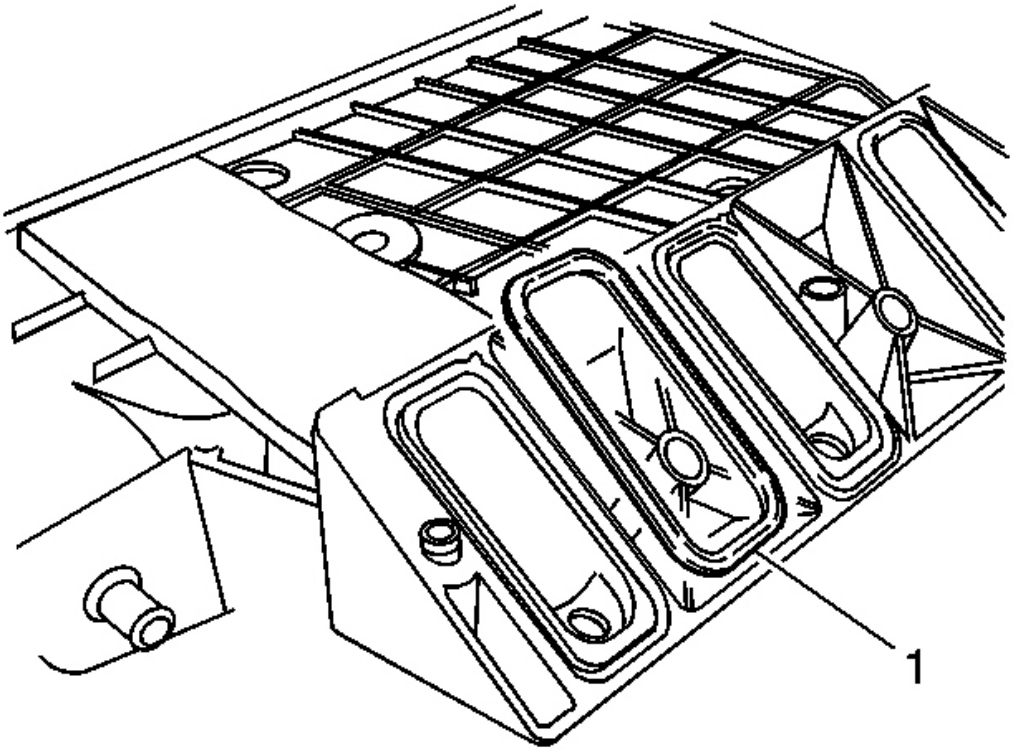

Fig. 54: Intake Manifold Gaskets
Courtesy of GENERAL MOTORS CORP.

36. Remove the intake manifold gaskets (1). Discard the old gaskets.
37. Clean and inspect the intake manifold. Refer to **Intake Manifold Cleaning and Inspection** .

Installation Procedure

IMPORTANT: DO NOT reuse the intake manifold gaskets. Install NEW intake manifold gaskets.

cardiagn.com

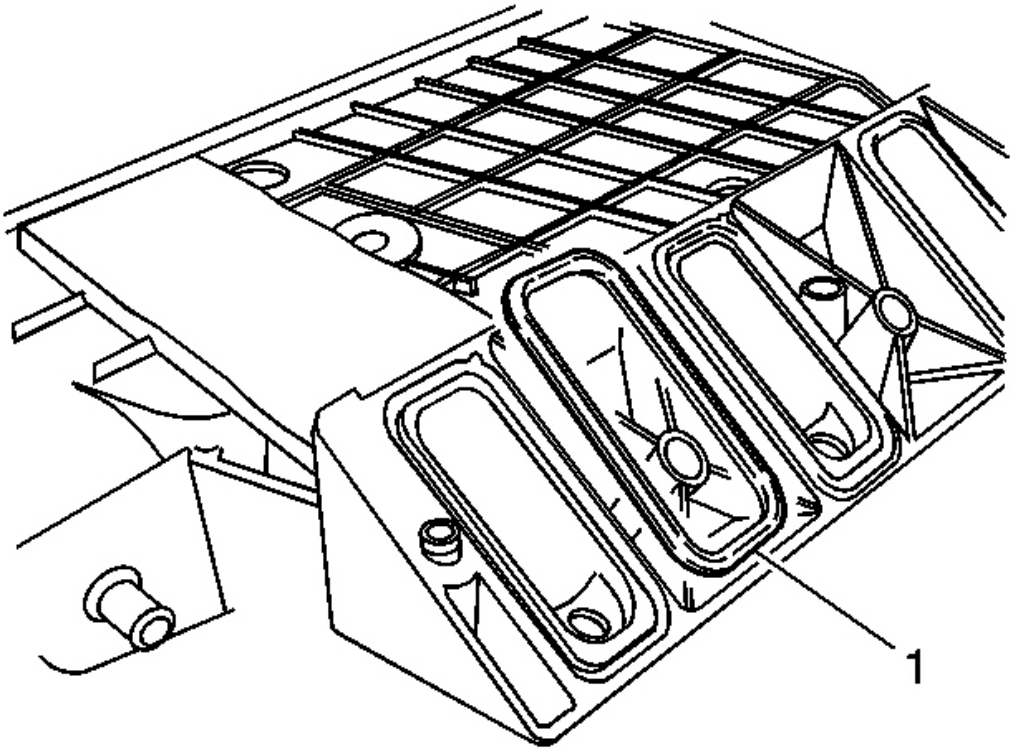

Fig. 55: Intake Manifold Gaskets
Courtesy of GENERAL MOTORS CORP.

1. Install NEW intake manifold gaskets (1) to the manifold.

cardiagn.com

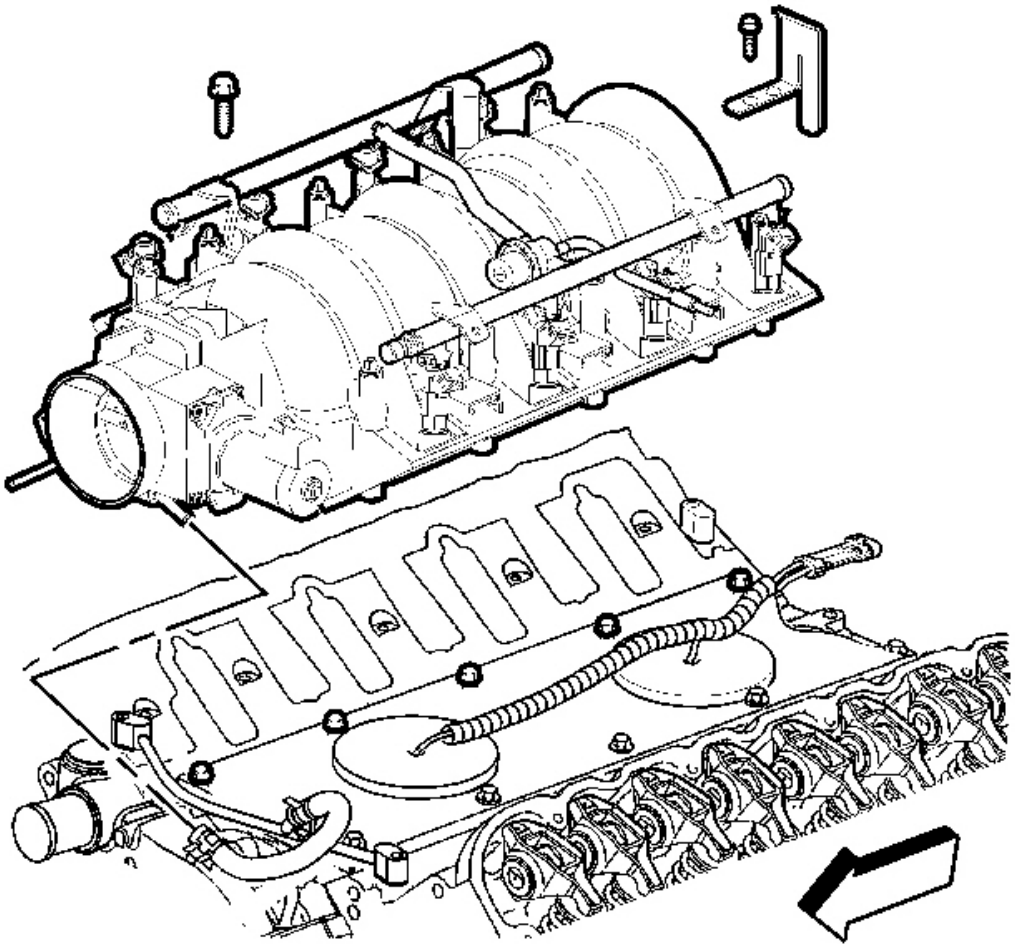

Fig. 56: Intake Manifold
Courtesy of GENERAL MOTORS CORP.

2. Install intake manifold.
3. Position the intake manifold forward.

cardiagn.com

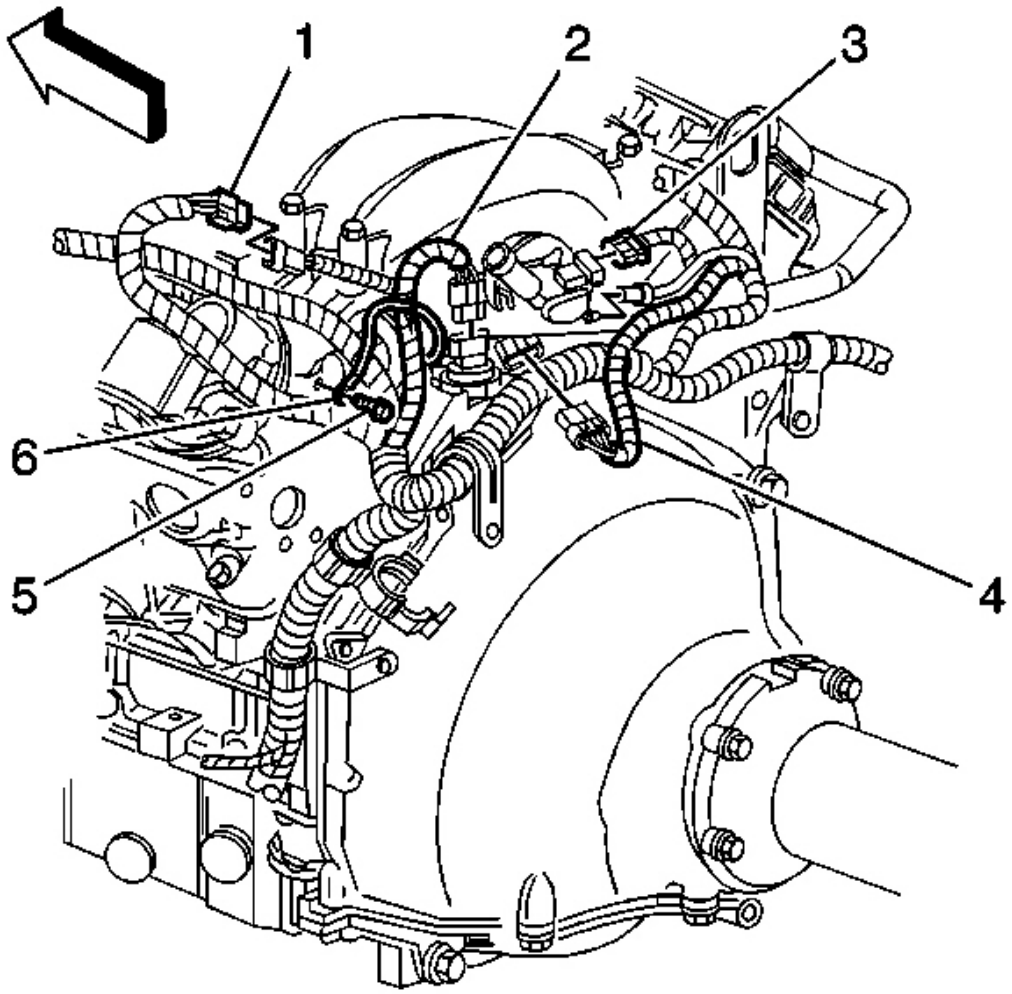

Fig. 57: MAP Sensor Vacuum Hose & MAP Sensor Electrical Connector
Courtesy of GENERAL MOTORS CORP.

4. Connect the MAP sensor vacuum hose.
5. Connect the MAP sensor (3) electrical connector.
6. Position the intake manifold into place.

cardiagn.com

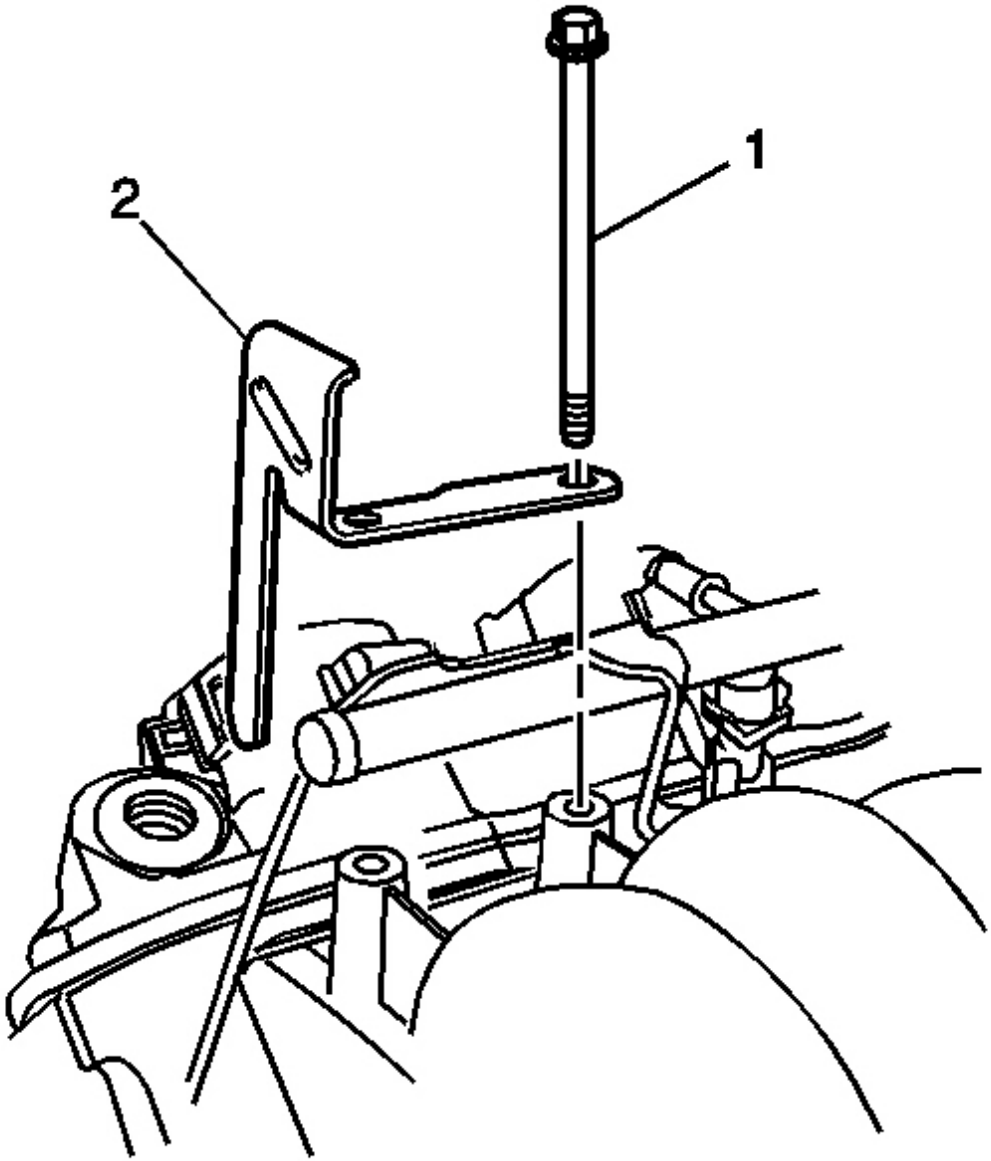

Fig. 58: Intake Manifold Bolts & Fuel Rail Stop Bracket
Courtesy of GENERAL MOTORS CORP.

CAUTION: The fuel rail stop bracket must be installed onto the engine assembly. The stop bracket serves as a protective shield for the fuel rail in the event of a vehicle frontal crash. If the fuel rail stop bracket

cardiagn.com

is not installed and the vehicle is involved in a frontal crash, fuel could be sprayed possibly causing a fire and personal injury from burns.

7. Apply threadlock GM P/N 12345382 (Canadian P/N 10953489), or equivalent to the threads of the intake manifold bolts (1).
8. Install the fuel rail stop bracket (2).
9. Install the intake manifold bolts (1).

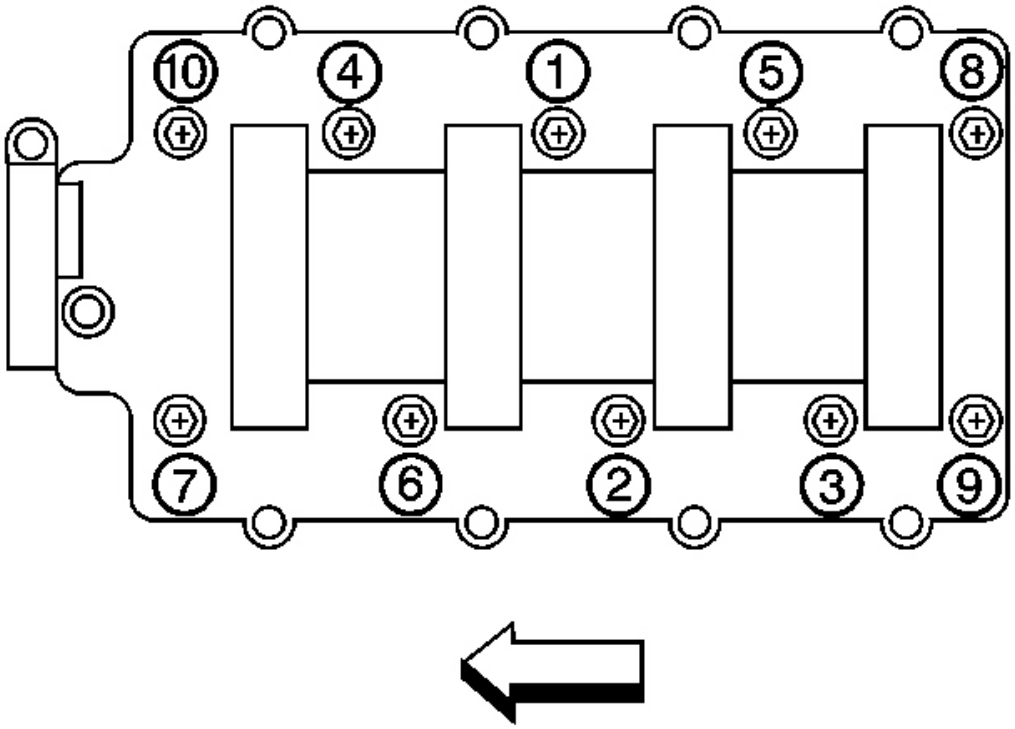

Fig. 59: Intake Manifold Bolt Tightening Sequence
Courtesy of GENERAL MOTORS CORP.

NOTE: Refer to Fastener Notice in Cautions and Notices.

10. Tighten the intake manifold bolts.

Tighten:

1. Tighten the intake manifold bolts a first pass in sequence to 5 N.m (44 lb in).

cardiagn.com

2. Tighten the intake manifold bolts a final pass in sequence to 10 N.m (89 lb in).

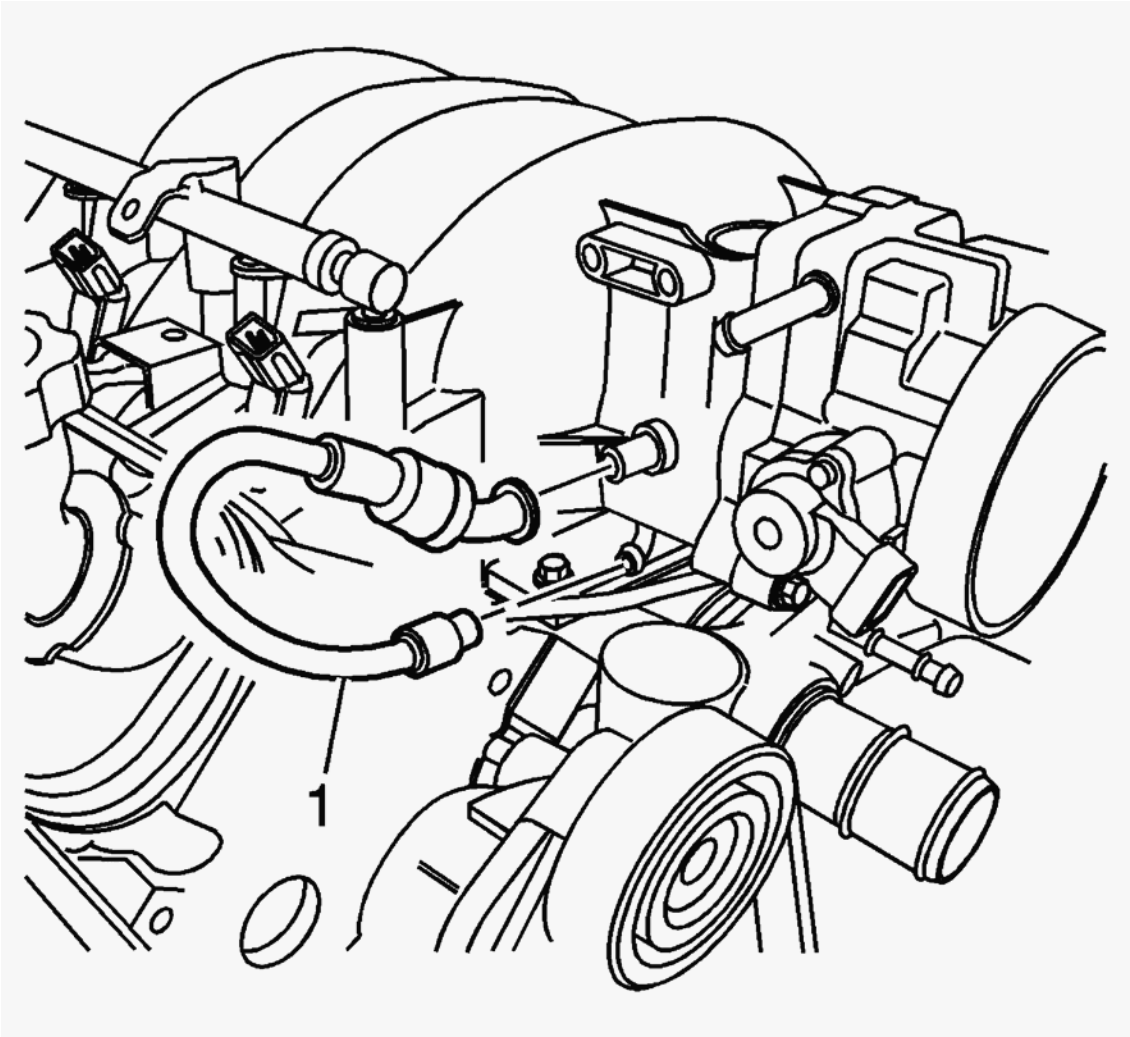

Fig. 60: PCV Valve Hose
Courtesy of GENERAL MOTORS CORP.

11. If equipped with the RPO LS6 engine, install the PCV valve hose (1) to the valley cover and intake manifold.

cardiagn.com

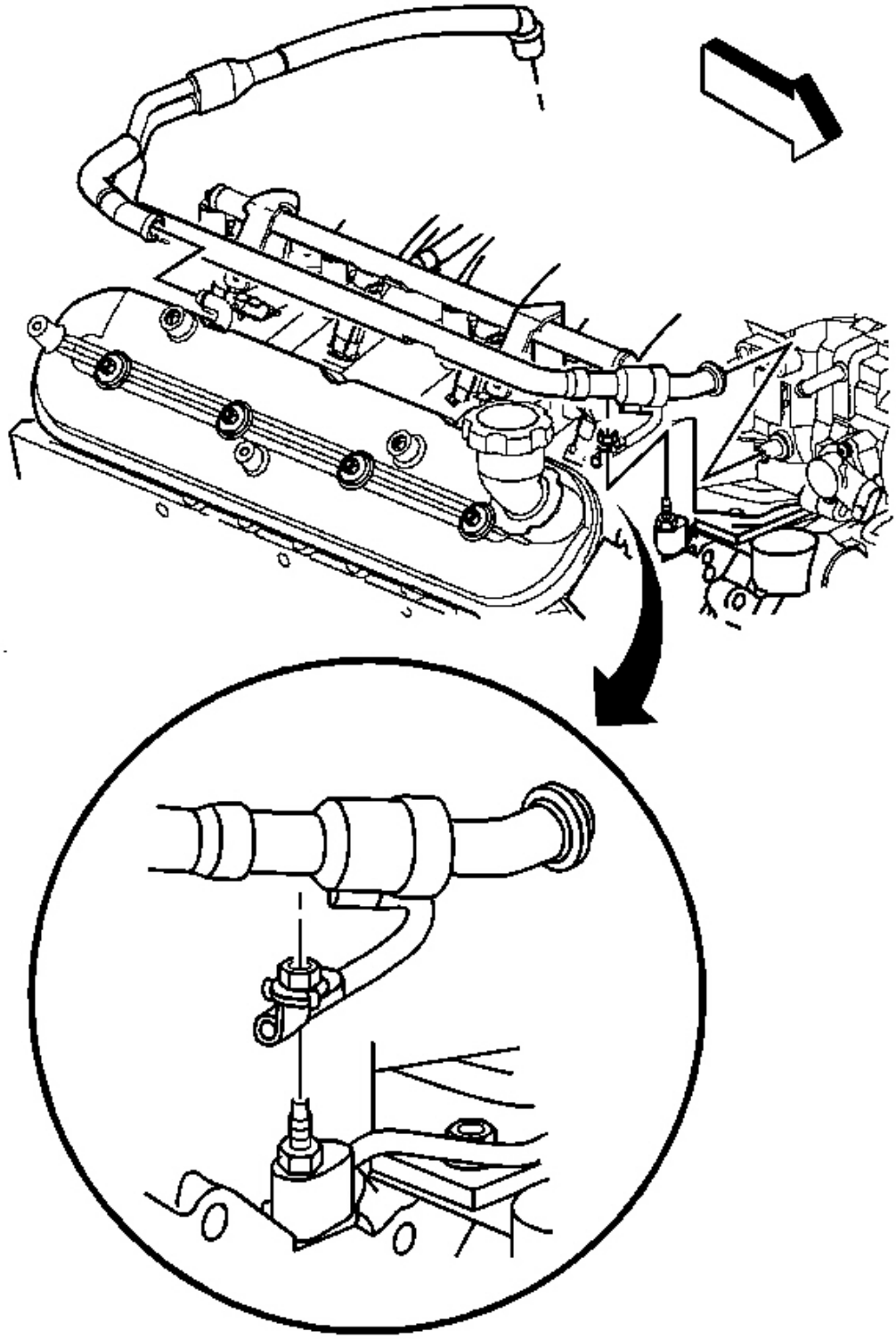

cardiagn.com

Fig. 61: Right Rocker Arm Cover & PCV Valve Pipe
Courtesy of GENERAL MOTORS CORP.

12. If equipped with the RPO LS1 engine, install the PCV valve pipe to the right valve rocker arm cover and intake manifold.
13. Install the PCV pipe strap nut.

    Tighten: Tighten the PCV pipe strap nut to 12 N.m (106 lb in).

cardiagn.com

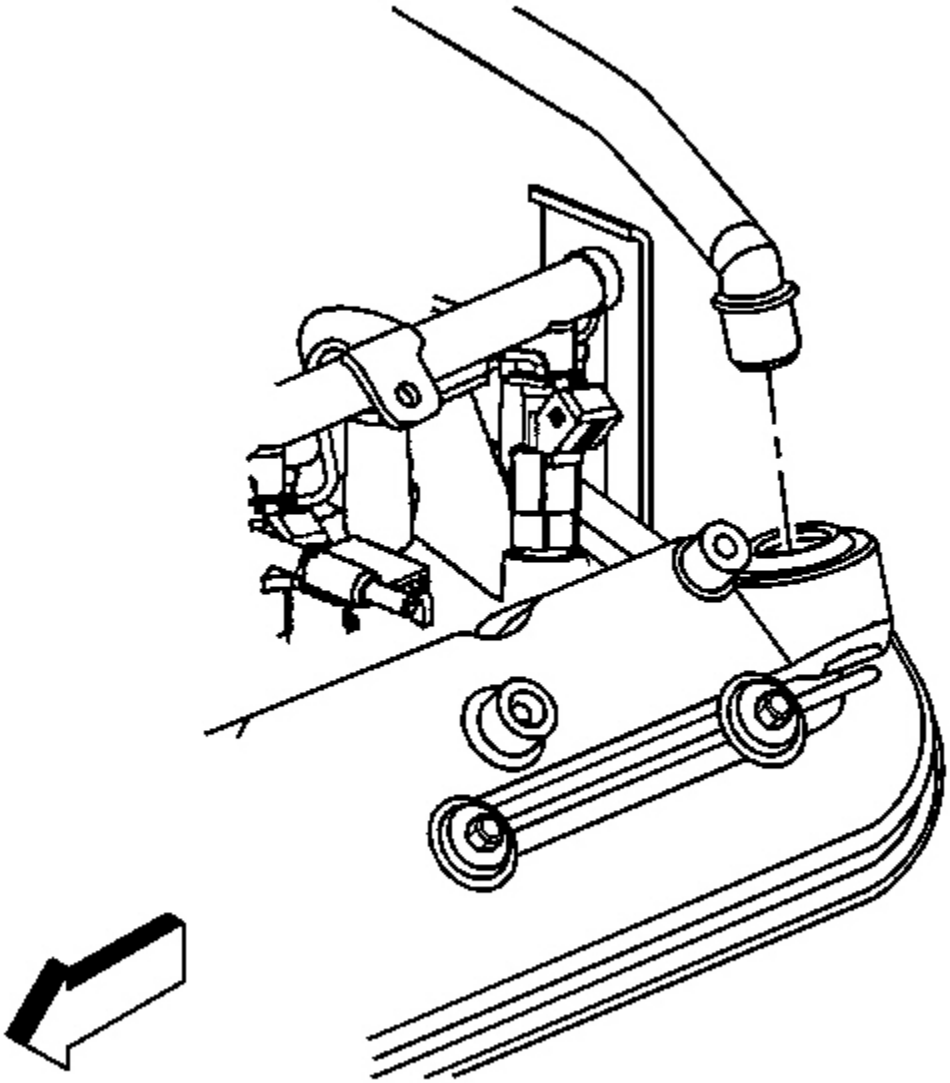

Fig. 62: Left Rocker Arm Cover & PCV Valve Pipe
Courtesy of GENERAL MOTORS CORP.

14. If equipped with the RPO LS1 engine, install the PCV valve pipe to the left rocker arm cover.

cardiagn.com

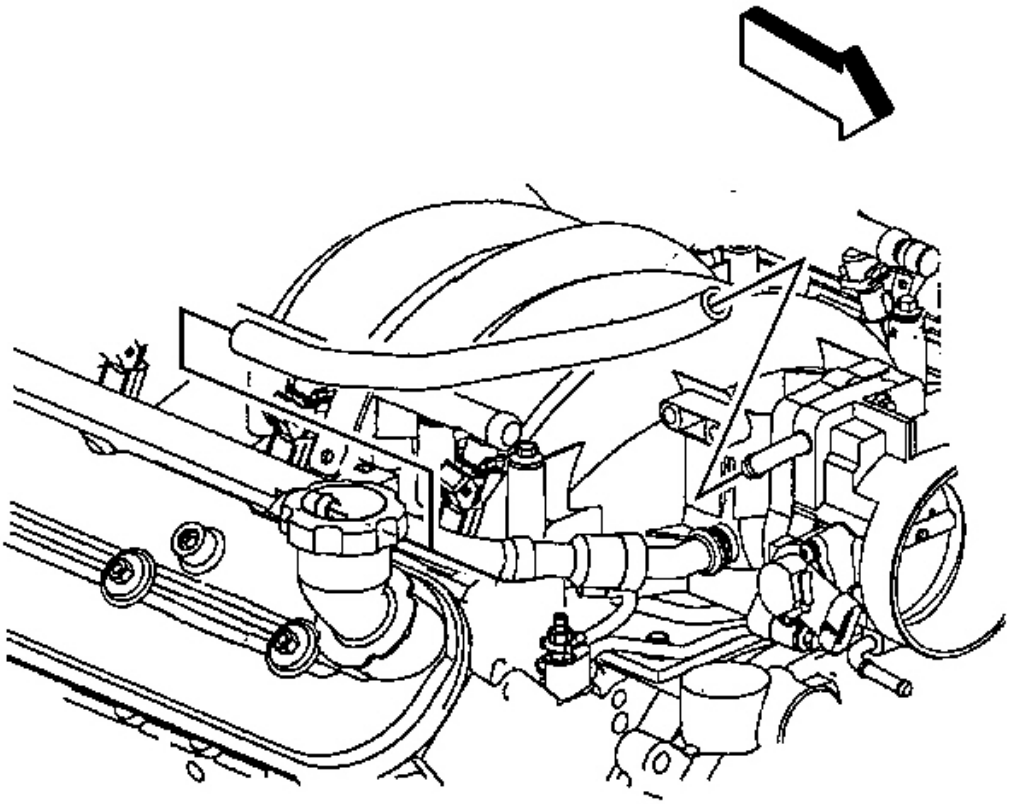

Fig. 63: TP Sensor Harness Clip & PCV Tube
Courtesy of GENERAL MOTORS CORP.

15. Install the PCV tube to the right rocker arm cover.
16. Install the TP sensor harness clip to the PCV tube.

cardiagn.com

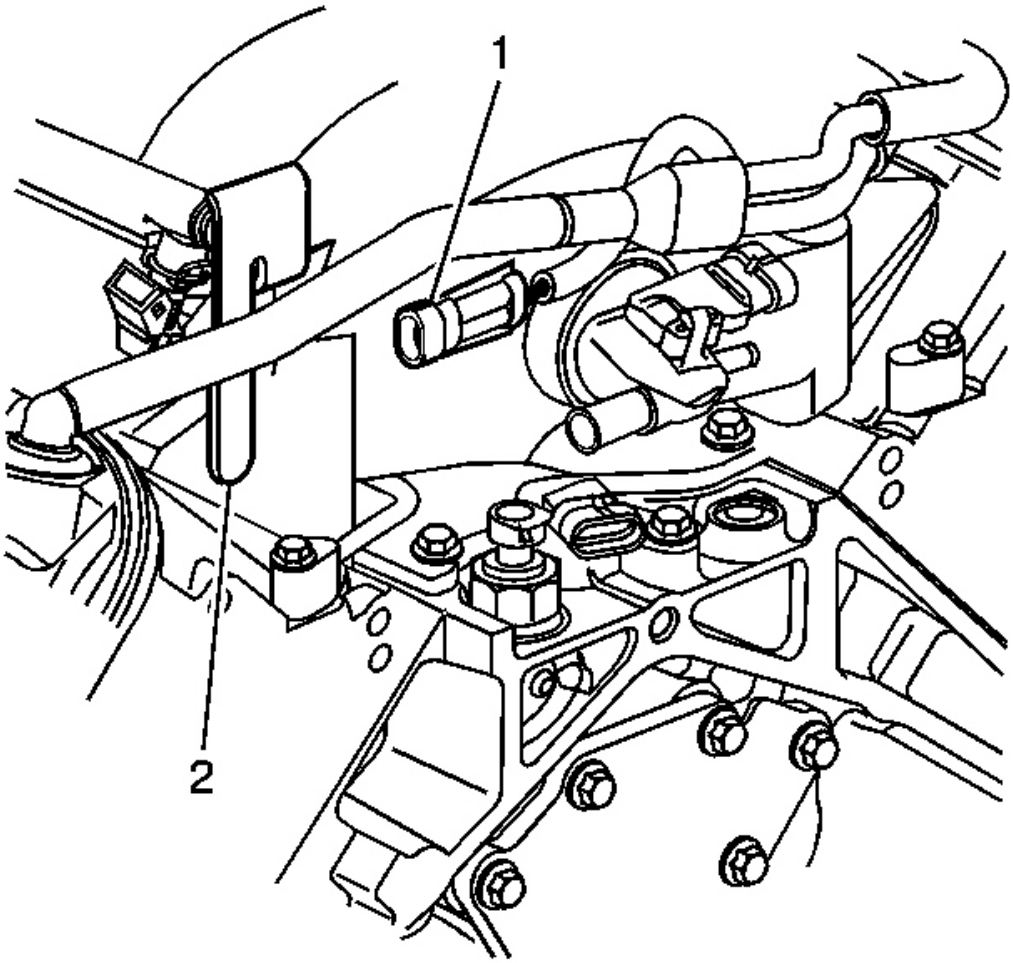

Fig. 64: Knock Sensor Wire Harness Clip & Fuel Rail Stop Bracket
Courtesy of GENERAL MOTORS CORP.

17. Install the knock sensor wire harness (1) to the fuel rail stop bracket (2).

cardiagn.com

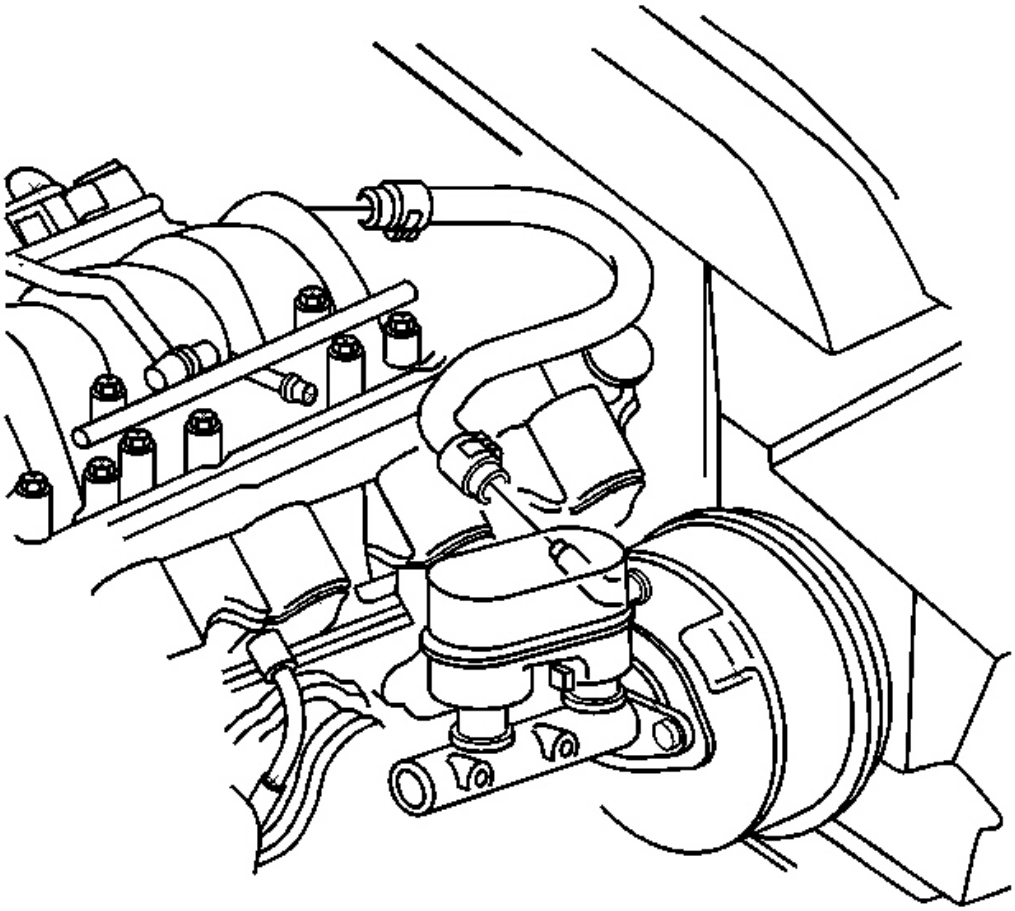

Fig. 65: Vacuum Booster Hose
Courtesy of GENERAL MOTORS CORP.

18. Connect the power brake booster vacuum hose to the booster.

cardiagn.com

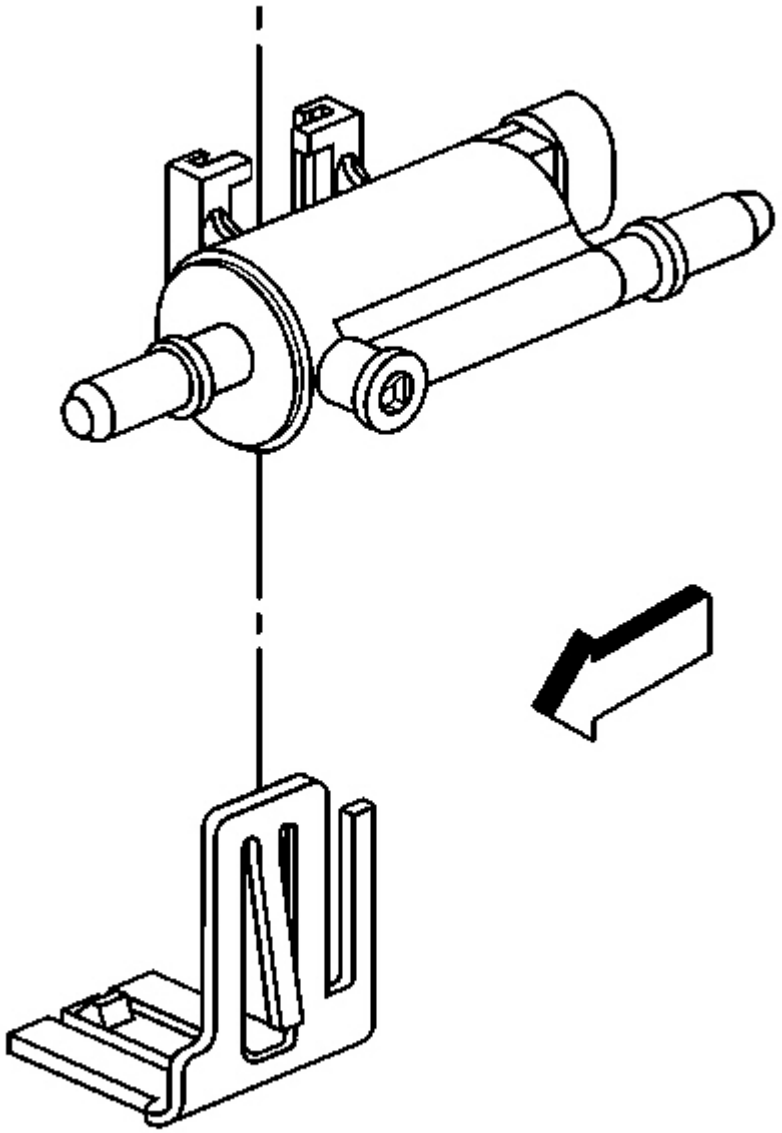

Fig. 66: EVAP Canister Purge Solenoid Valve & Bracket
Courtesy of GENERAL MOTORS CORP.

19. Position the intake manifold branches of the wiring harness.
20. Connect the harness clips at the fuel rails.
21. Install the EVAP canister purge solenoid valve from the bracket.

cardiagn.com

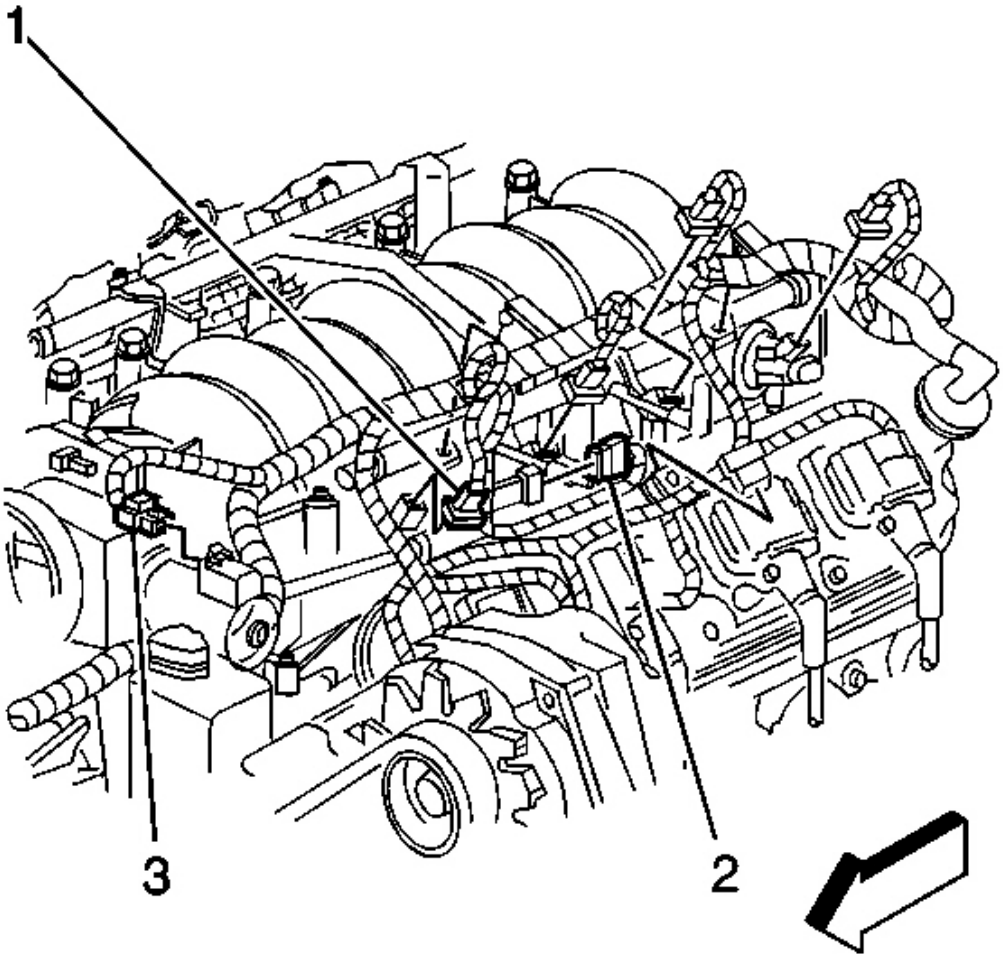

Fig. 67: Electrical Connectors
Courtesy of GENERAL MOTORS CORP.

22. Connect the ETC electrical connector (3).
23. Connect the EVAP canister purge solenoid valve electrical connector (2).
24. Connect all the fuel injector electrical connectors (1).

cardiagn.com

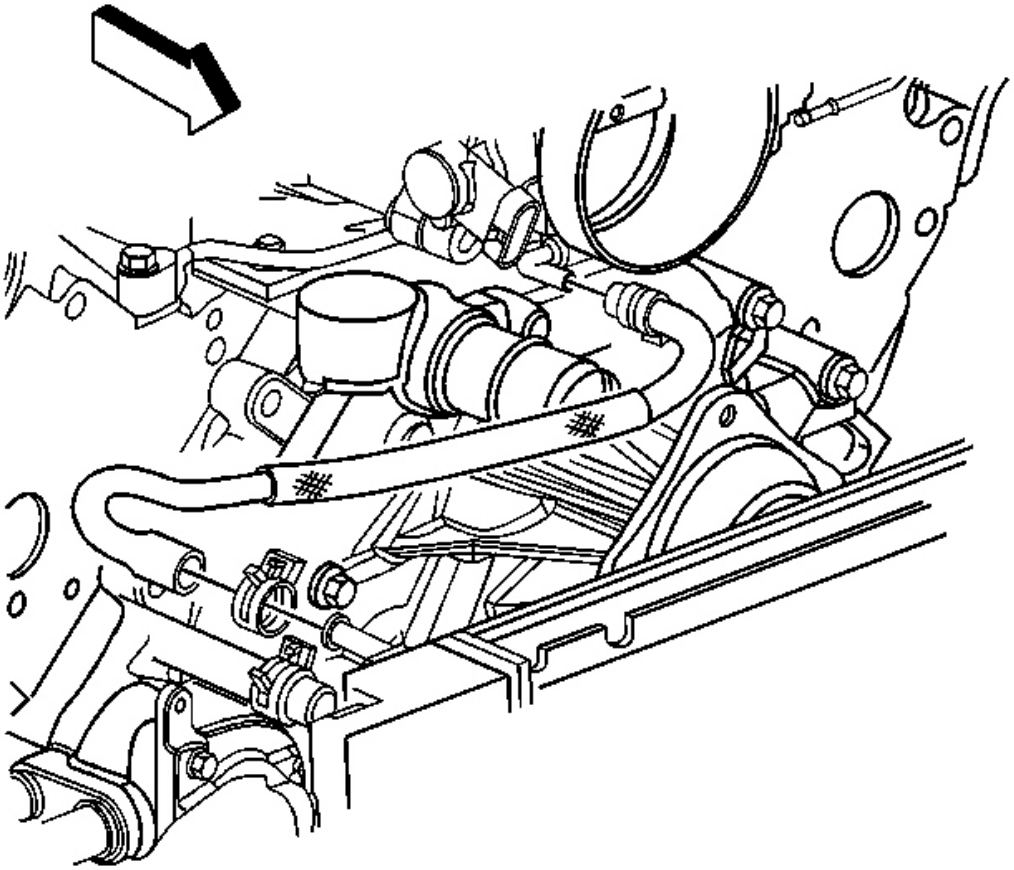

Fig. 68: Throttle Body Heater Outlet Hose & Clamp
Courtesy of GENERAL MOTORS CORP.

25. Install the throttle body heater outlet hose.
26. Install the throttle body heater outlet hose to the throttle body.
27. Position the throttle body heater outlet hose clamp at the throttle body.
28. Install the coolant air bleed hose. Refer to **Coolant Air Bleed Hose Replacement** in Engine Cooling.

cardiagn.com

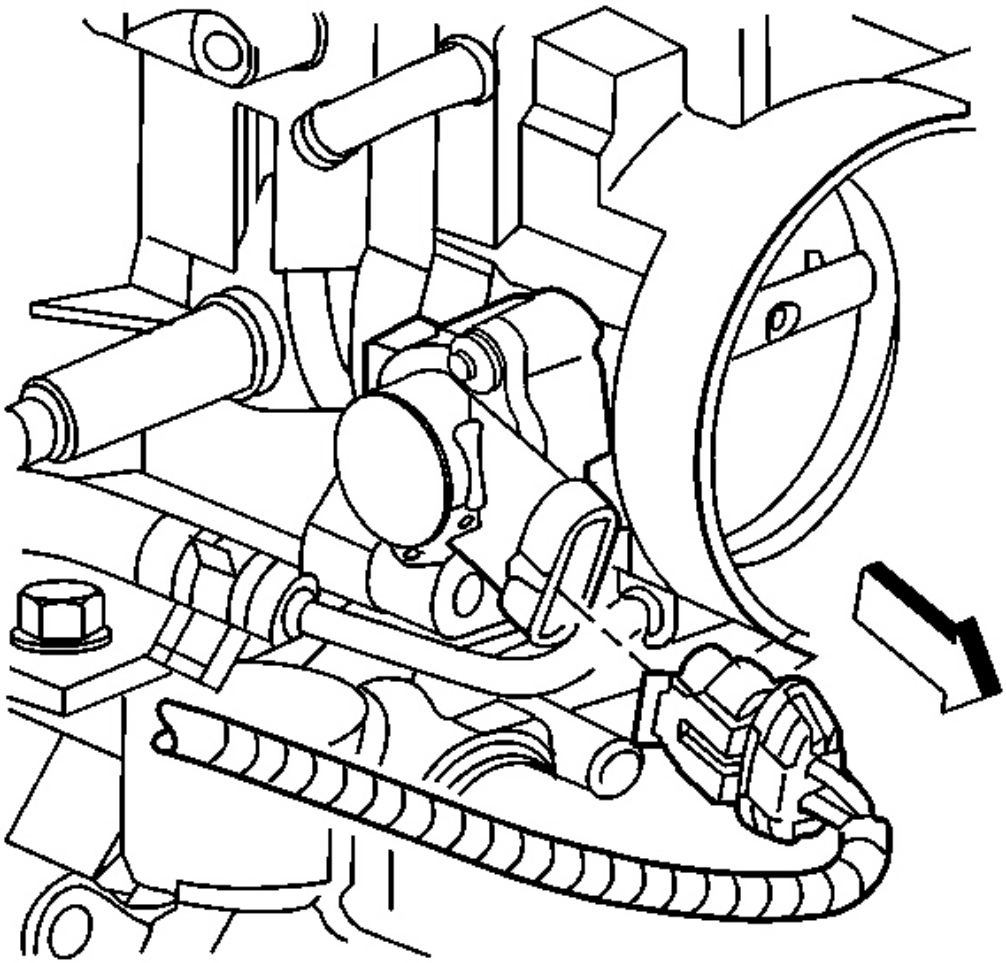

Fig. 69: TP Sensor Electrical Connector
Courtesy of GENERAL MOTORS CORP.

29. Connect the TP sensor electrical connector.

cardiagn.com

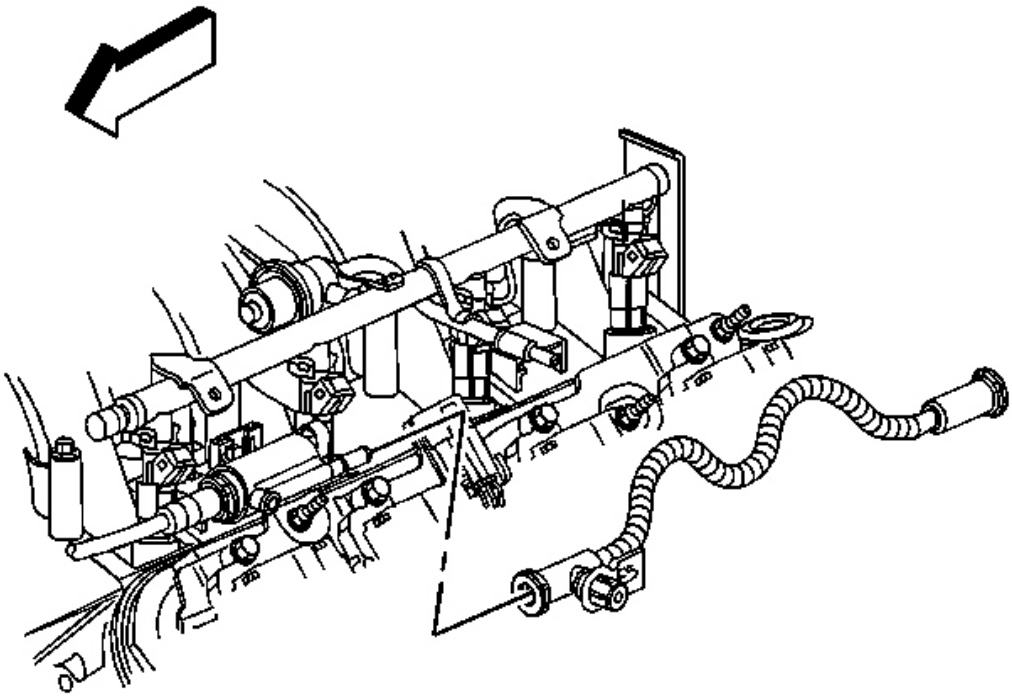

Fig. 70: Fuel Feed Pipe
Courtesy of GENERAL MOTORS CORP.

30. Install the EVAP canister purge tube.
31. Connect the EVAP canister purge tube to the fuel feed pipe.
32. Connect the EVAP canister purge tube to the EVAP canister purge solenoid valve.

cardiagn.com

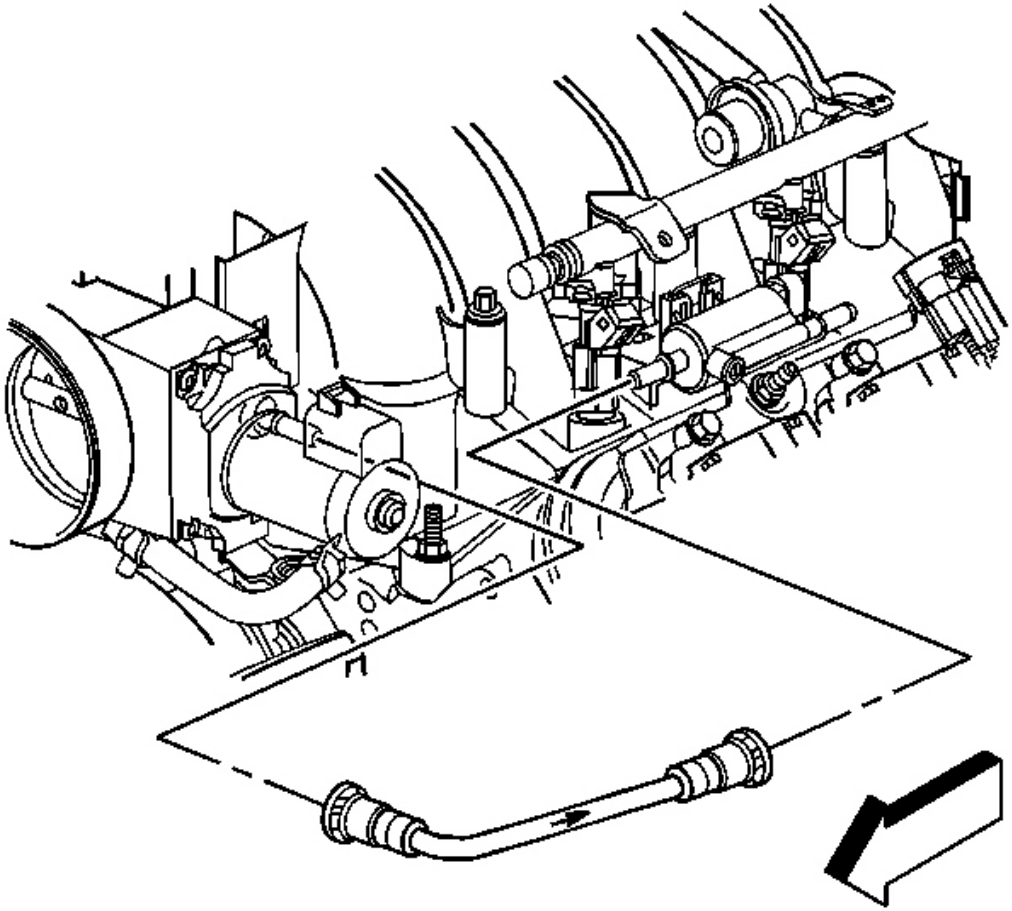

Fig. 71: EVAP Canister Purge Tube
Courtesy of GENERAL MOTORS CORP.

33. Install the EVAP canister purge tube.
34. Connect the EVAP canister purge tube to the EVAP canister purge solenoid valve.
35. Connect the EVAP canister purge tube to the intake manifold.
36. Install the fuel feed hose. Refer to **Fuel Hose/Pipes Replacement - Engine Compartment** in Engine Controls - 5.7 L.

cardiagn.com

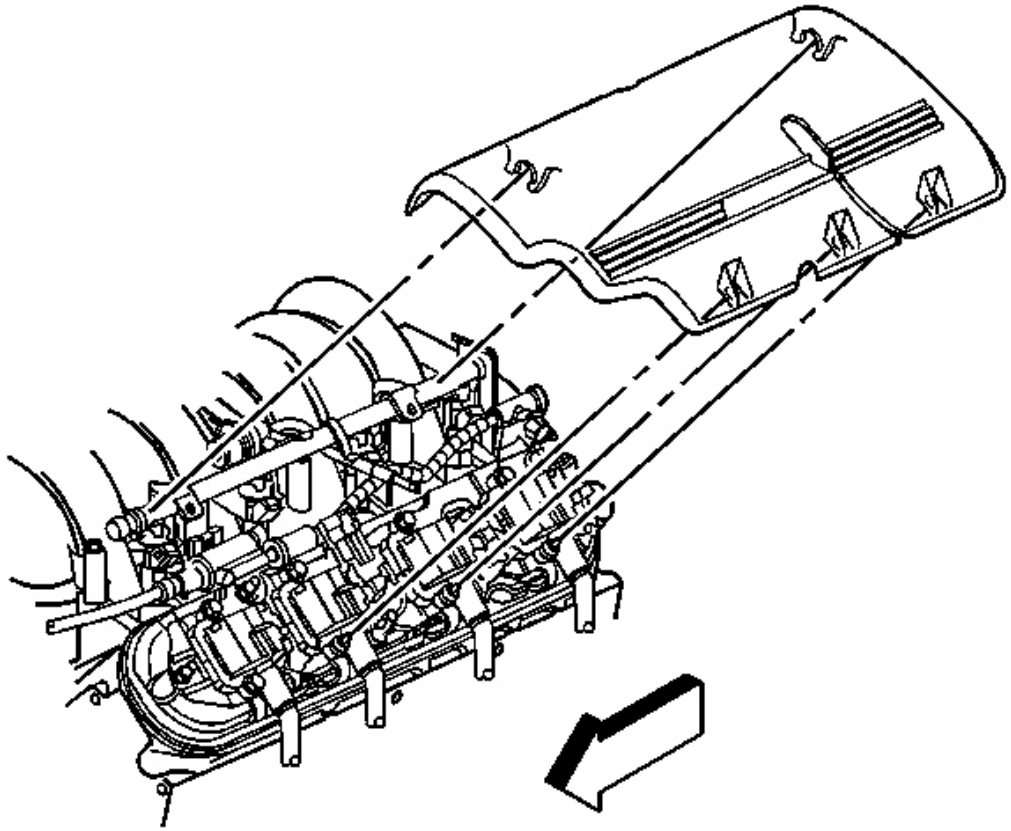

Fig. 72: Left Fuel Rail Cover
Courtesy of GENERAL MOTORS CORP.

37. Install the left fuel rail cover.

cardiagn.com

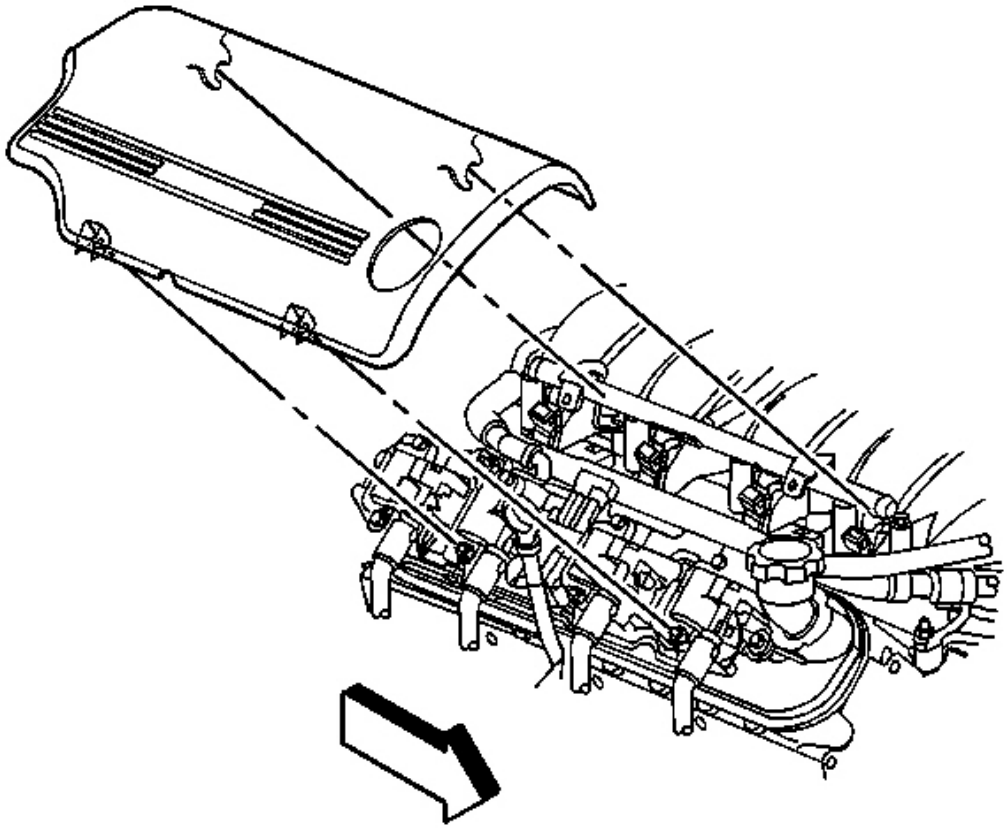

Fig. 73: Right Fuel Injection Rail Cover
Courtesy of GENERAL MOTORS CORP.

38. Install the right fuel rail cover.
39. If replacing the intake manifold, perform the following:
    - Install the throttle body. Refer to **Throttle Body Assembly Replacement** in Engine Controls - 5.7 L.
    - Install the fuel injectors. Refer to **Fuel Injector Replacement** in Engine Controls - 5.7 L.
40. Fill the cooling system. Refer to **Draining and Filling Cooling System** in Engine Cooling.

ENGINE VALLEY COVER REPLACEMENT

Removal Procedure

cardiagn.com

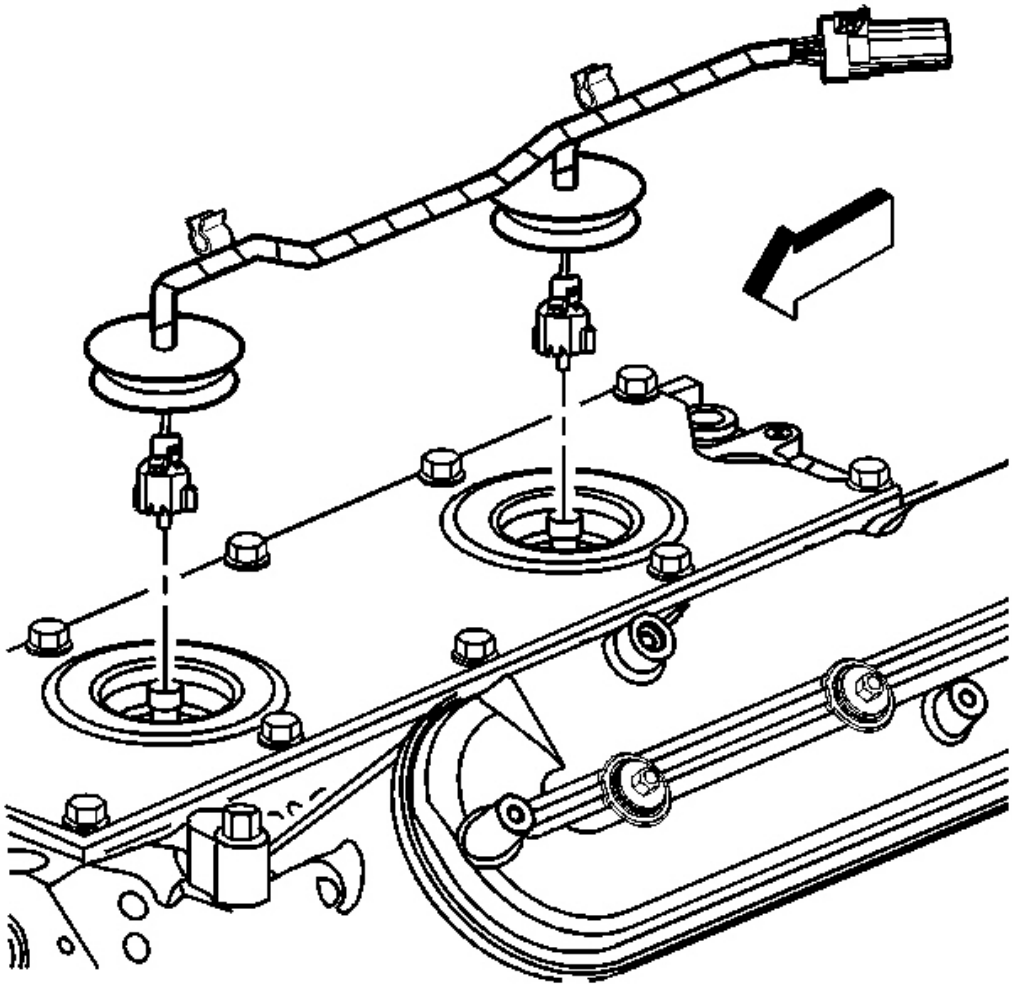

Fig. 74: View Of Knock Sensor Wire Harness
Courtesy of GENERAL MOTORS CORP.

1. Remove the intake manifold. Refer to **Intake Manifold Replacement** .
2. Gently pry up the rubber grommets.
3. Disconnect the knock sensor wire harness electrical connectors.

cardiagn.com

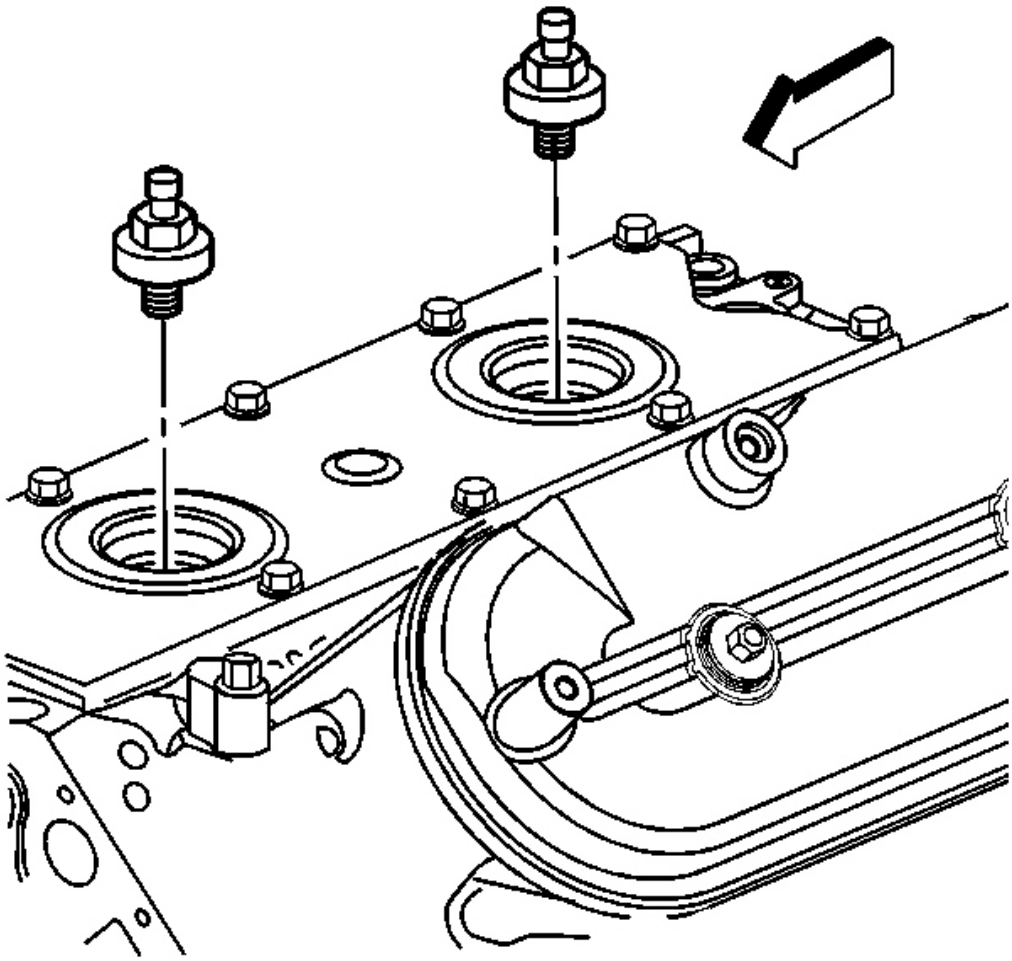

Fig. 75: View Of Knock Sensors
Courtesy of GENERAL MOTORS CORP.

4. Remove the knock sensors.

cardiagn.com

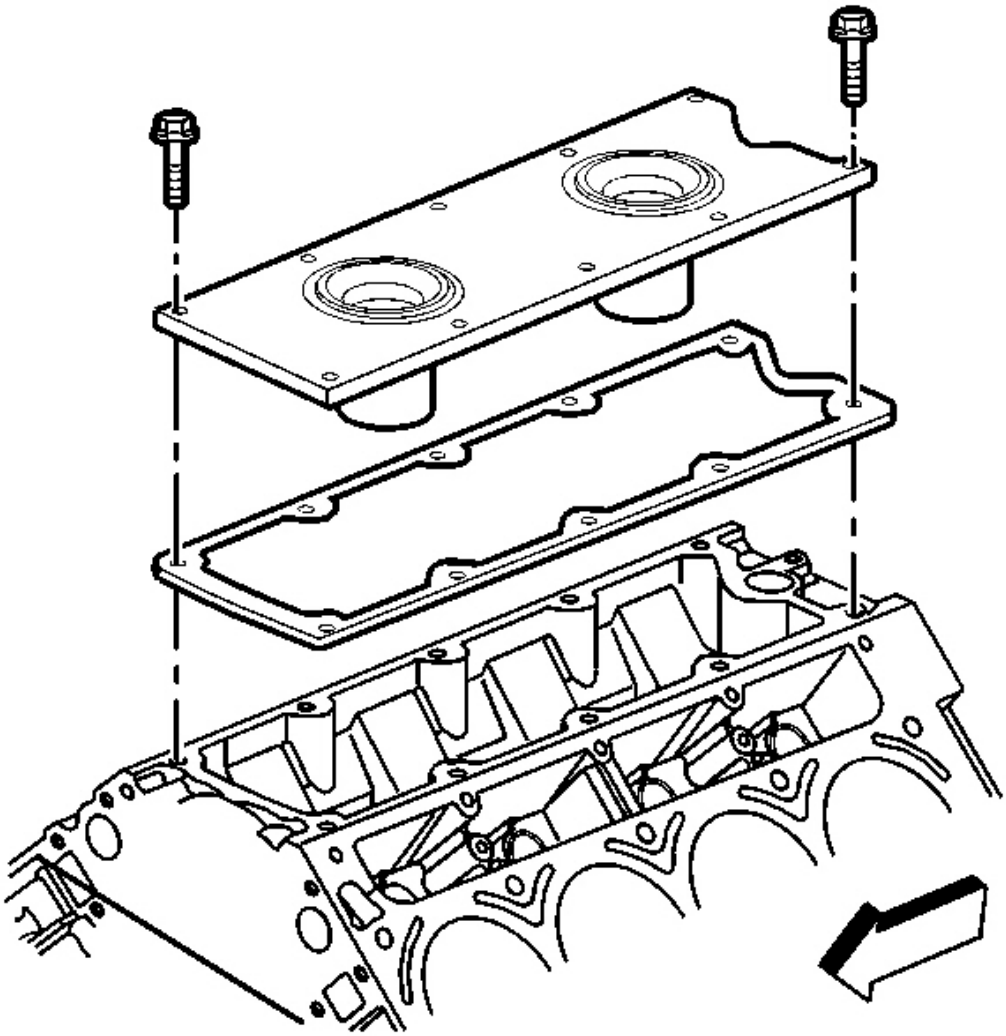

Fig. 76: View Of Engine Valley Cover, Gasket & LS1 Engine
Courtesy of GENERAL MOTORS CORP.

5. If equipped with the 5.7 L, regular production option (RPO) LS1 engine, remove the engine valley cover bolts.

cardiagn.com

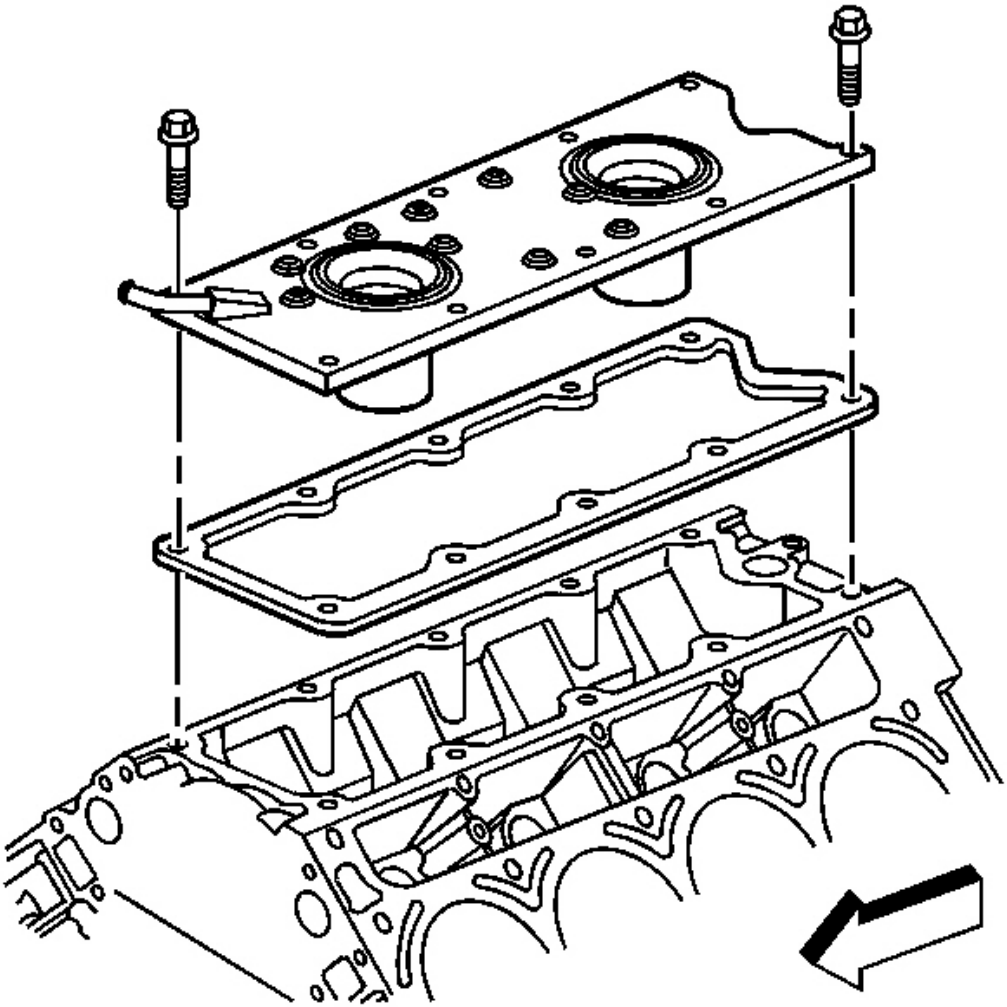

Fig. 77: Engine Valley Cover, Gasket, Bolts & LS6 Engine
Courtesy of GENERAL MOTORS CORP.

6. If equipped with the 5.7 L, RPO LS6 engine, remove the engine valley cover bolts.
7. Remove the engine valley cover and gasket.
8. Discard the engine valley cover gasket.

cardiagn.com

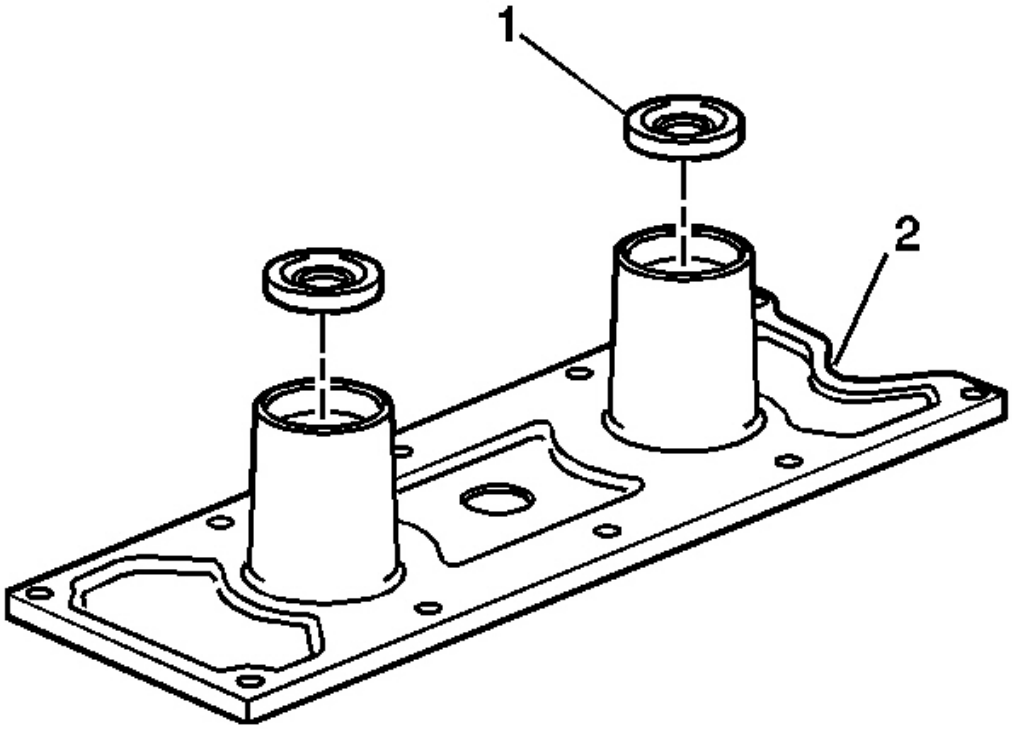

Fig. 78: View Of Knock Sensor Oil Seals & Cover
Courtesy of GENERAL MOTORS CORP.

9. Remove the knock sensor oil seals (1) from the cover (2).
10. Clean and inspect the engine valley cover. Refer to **Engine Valley Cover Cleaning and Inspection** .

Installation Procedure

IMPORTANT: All gasket surfaces should be free of oil or other foreign material during assembly.

cardiagn.com

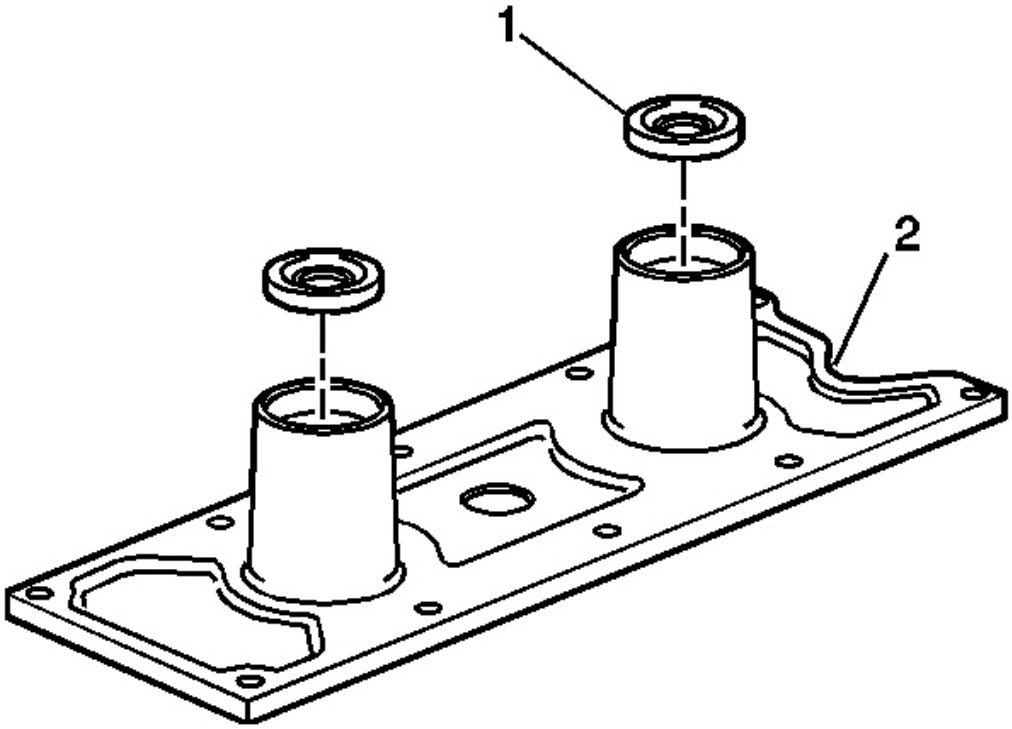

Fig. 79: View Of Knock Sensor Oil Seals & Cover
Courtesy of GENERAL MOTORS CORP.

1. Install NEW knock sensor oil seals (1) into the valley cover (2).

   Lubricate the seal surfaces with clean engine oil.

cardiagn.com

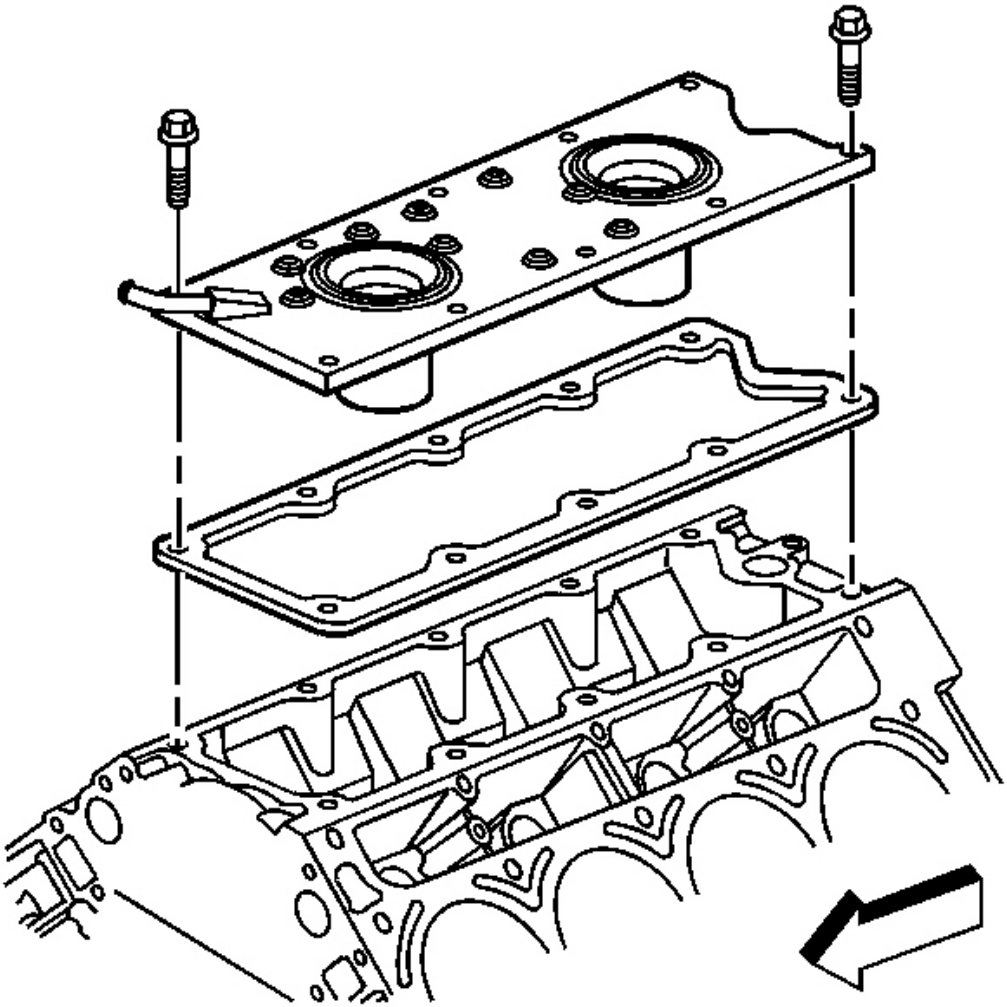

Fig. 80: Engine Valley Cover, Gasket, Bolts & LS6 Engine
Courtesy of GENERAL MOTORS CORP.

2. If equipped with the 5.7 L, RPO LS6 engine, install the engine valley cover and a NEW gasket.

cardiagn.com

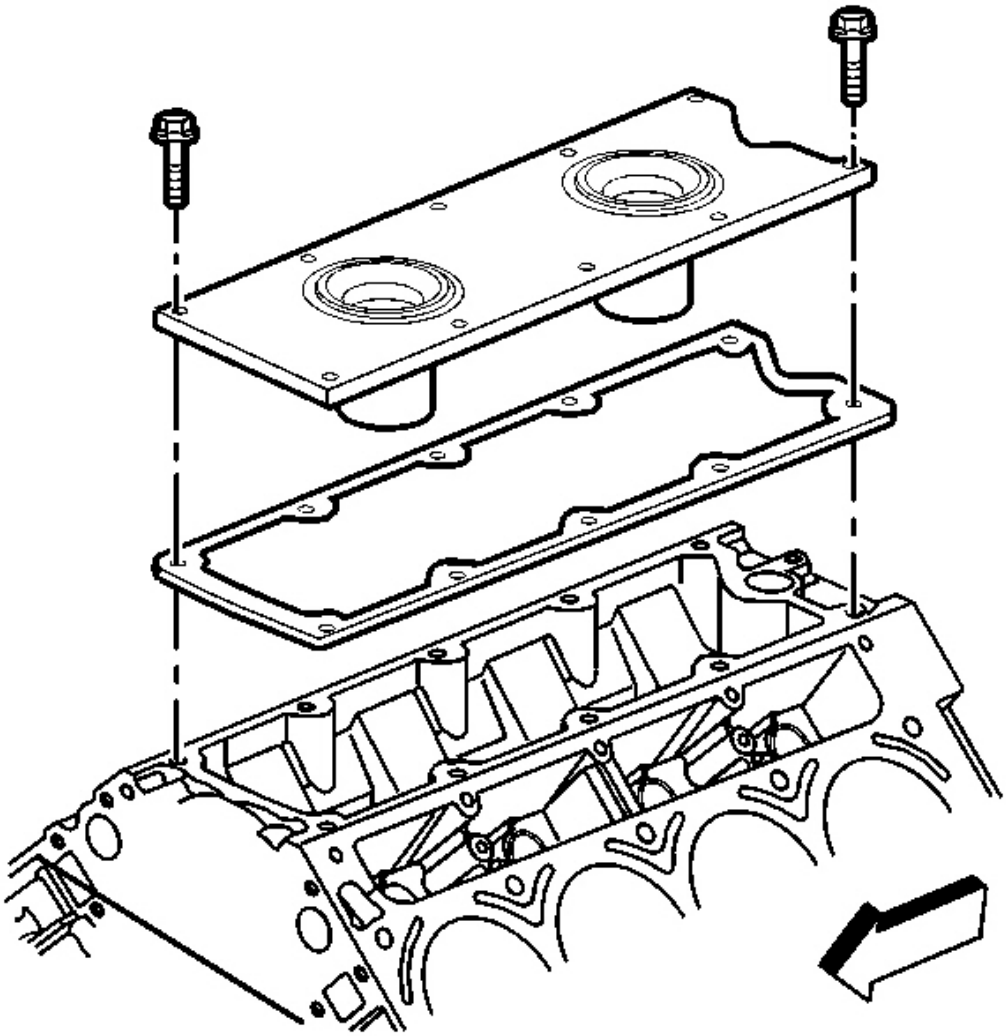

Fig. 81: View Of Engine Valley Cover, Gasket & LS1 Engine
Courtesy of GENERAL MOTORS CORP.

NOTE: Refer to Fastener Notice in Cautions and Notices.

3. If equipped with the 5.7 L, RPO LS1 engine, install the engine valley cover and NEW gasket.
4. Install the engine valley cover bolts.

Tighten: Tighten the engine valley cover bolts to 25 N.m (18 lb ft).

cardiagn.com

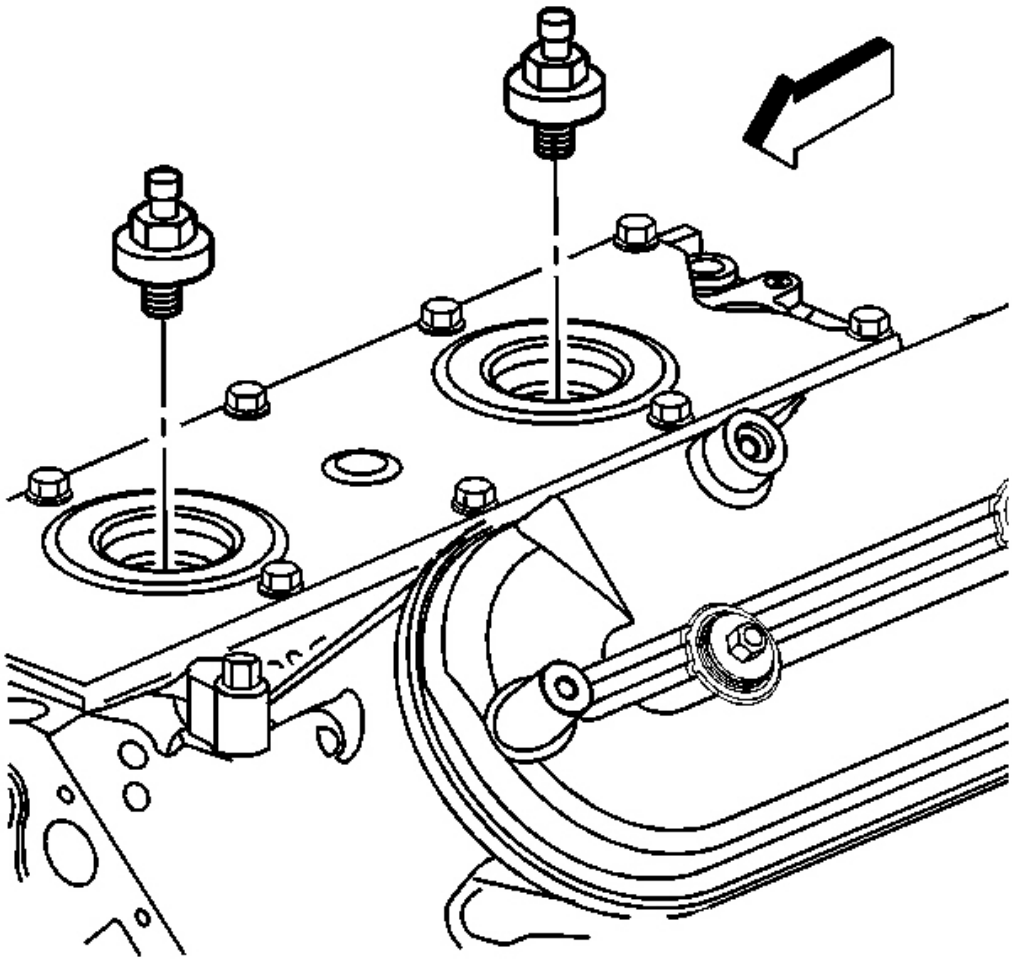

Fig. 82: View Of Knock Sensors
Courtesy of GENERAL MOTORS CORP.

5. Install the knock sensors.

   Tighten: Tighten the knock sensors to 20 N.m (15 lb ft).

cardiagn.com

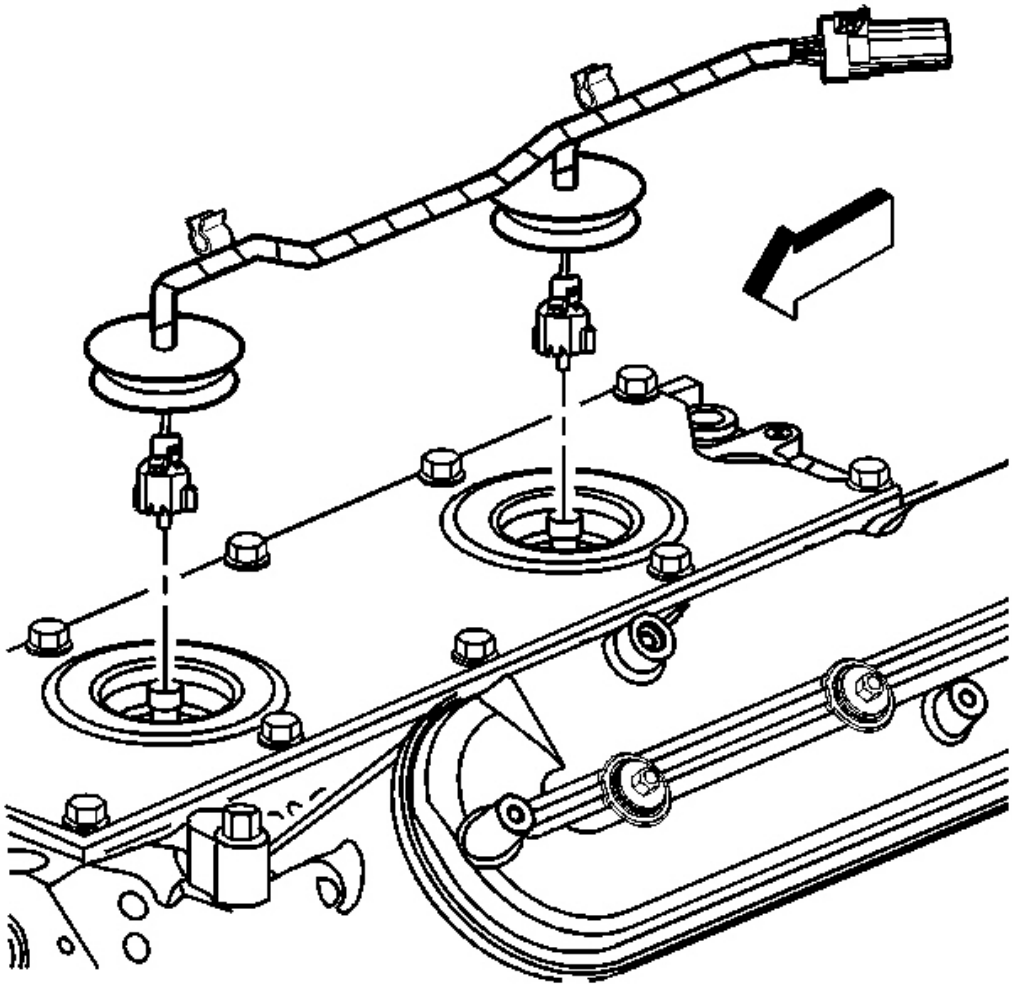

Fig. 83: View Of Knock Sensor Wire Harness
Courtesy of GENERAL MOTORS CORP.

6. Connect the knock sensor wire harness electrical connectors.
7. Install the rubber grommets into the valley cover.
8. Install the intake manifold. Refer to **Intake Manifold Replacement** .

VALVE ROCKER ARM COVER REPLACEMENT - LEFT

Removal Procedure

cardiagn.com

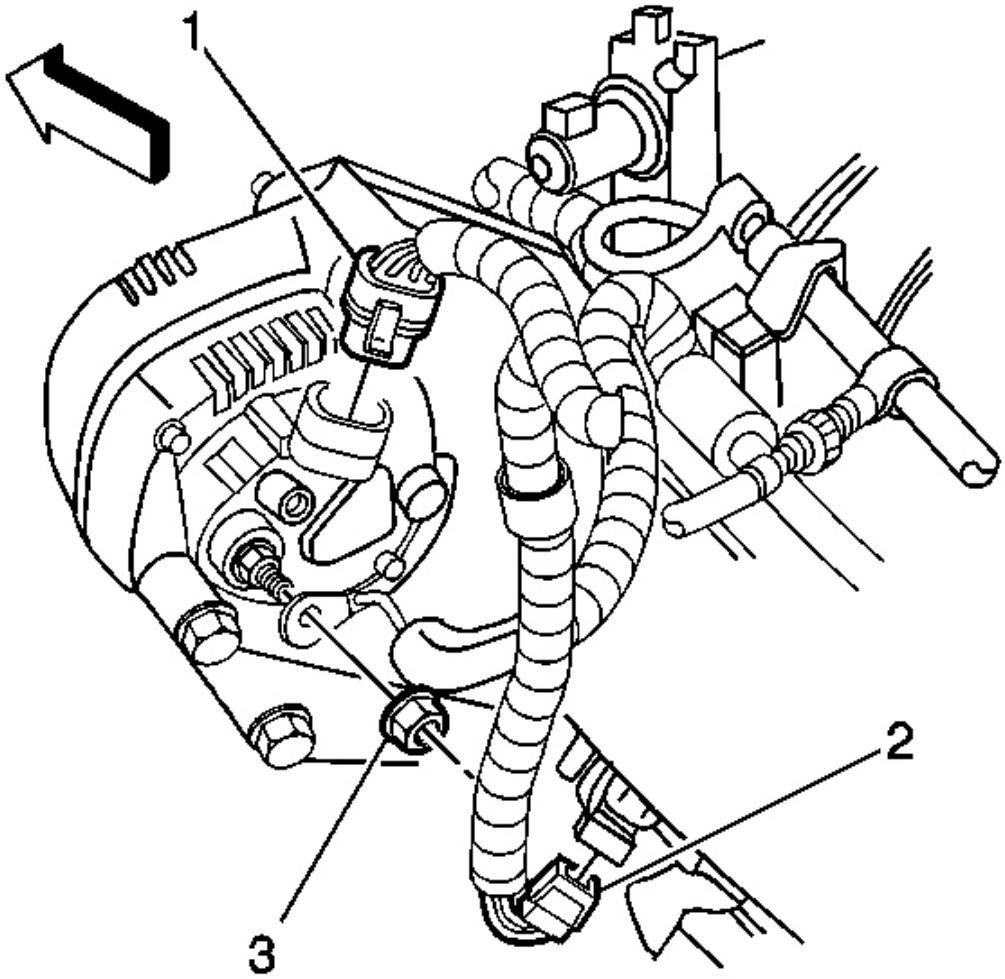

Fig. 84: Engine Wiring Harness Generator Lead Nut & Generator Electrical Connector
Courtesy of GENERAL MOTORS CORP.

1. Remove the fuel feed hose. Refer to **Fuel Hose/Pipes Replacement - Engine Compartment** in Engine Controls - 5.7 L.
2. Disconnect the generator electrical connector (1).
3. Remove the engine wiring harness generator lead nut (3) and lead.

cardiagn.com

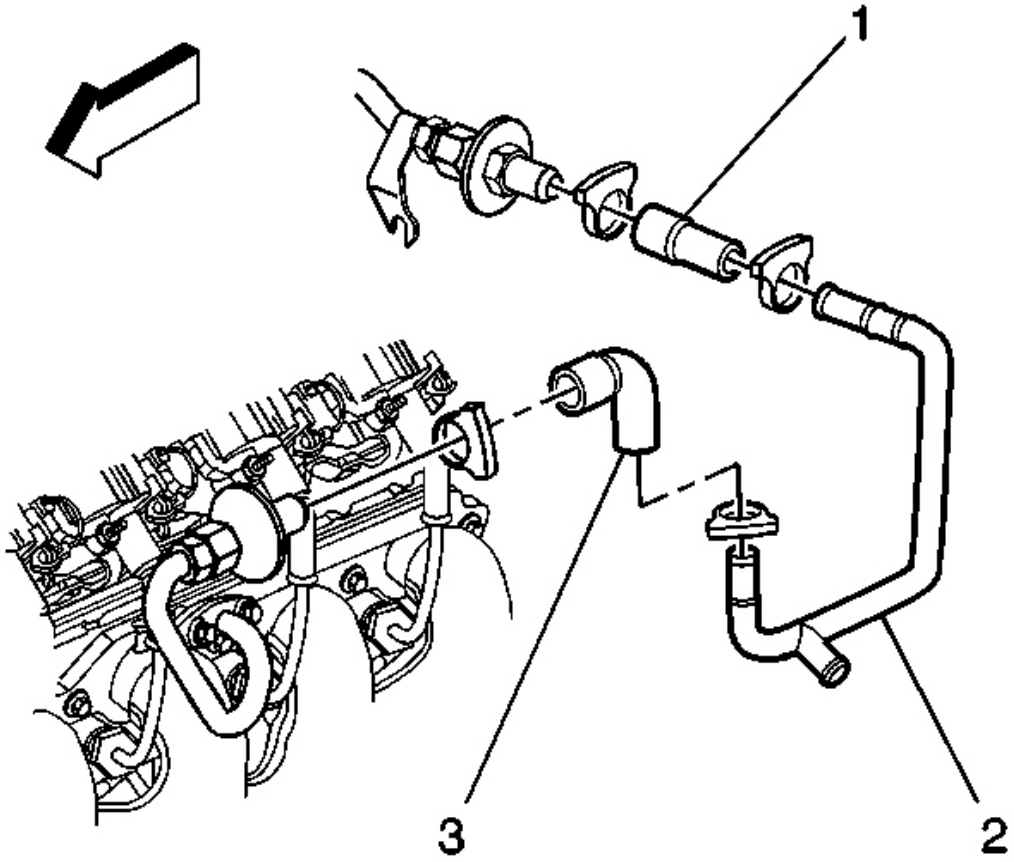

Fig. 85: AIR Hose Clamp & Check Valve
Courtesy of GENERAL MOTORS CORP.

4. Remove the secondary air injection (AIR) hose clamp.
5. Disconnect the AIR hose (3) from the check valve.

cardiagn.com

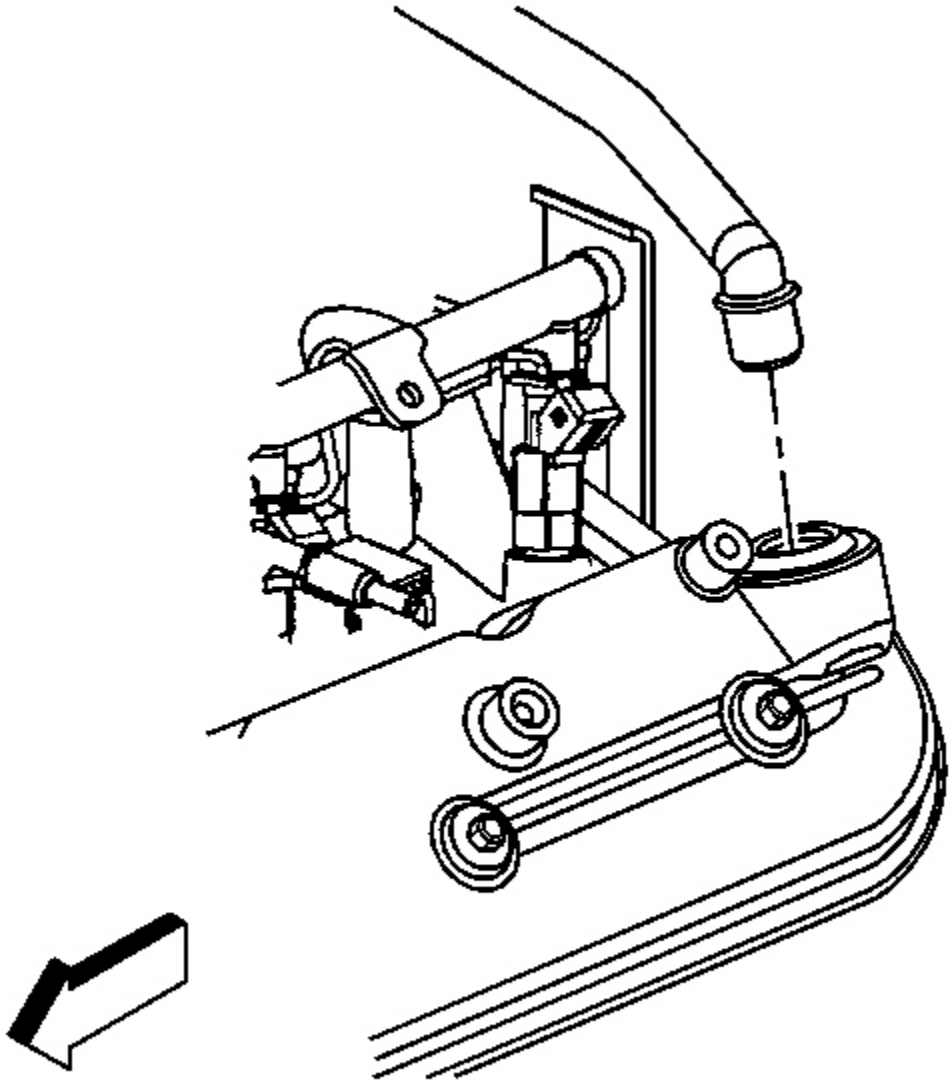

Fig. 86: Left Rocker Arm Cover & PCV Valve Pipe
Courtesy of GENERAL MOTORS CORP.

6. If equipped with the regular production option (RPO) LS1 engine, remove the positive crankcase ventilation (PCV) valve pipe from the left rocker cover.

cardiagn.com

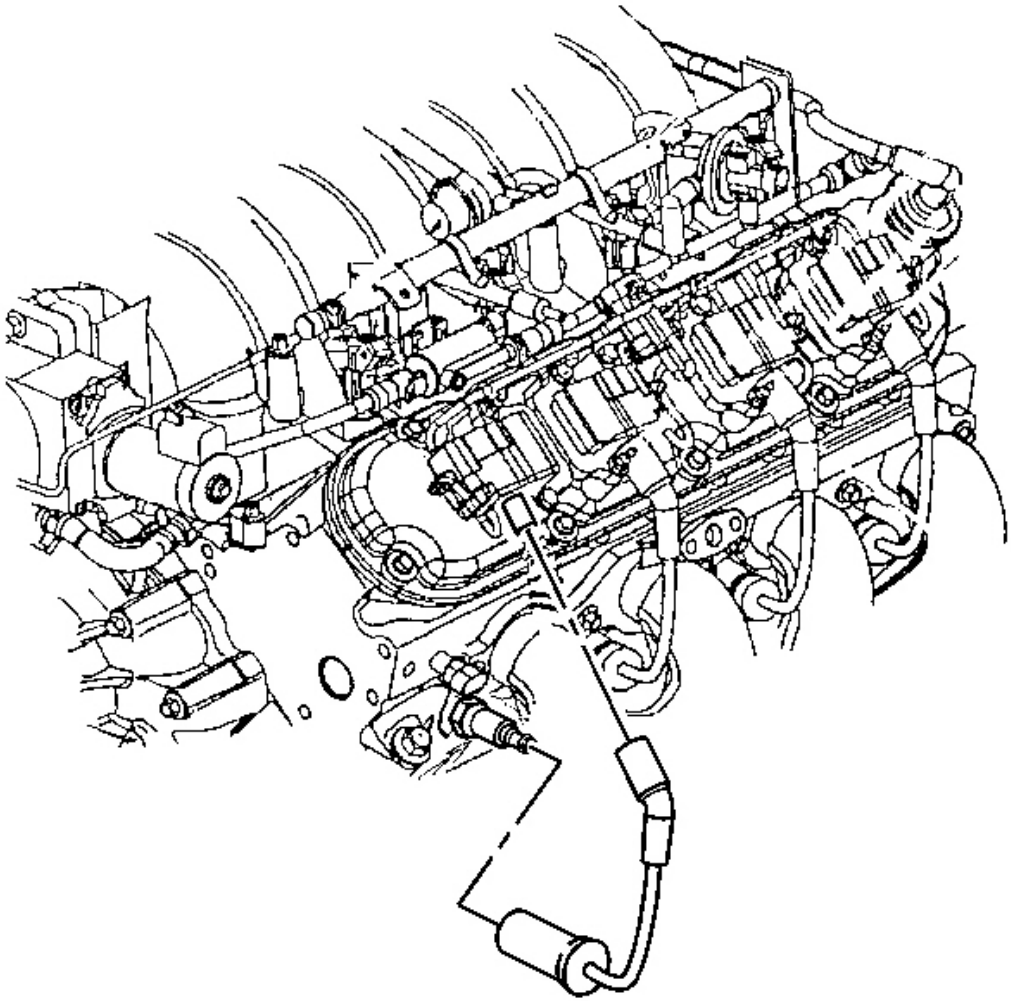

Fig. 87: Spark Plug Wire
Courtesy of GENERAL MOTORS CORP.

7. Disconnect the spark plug wires from the ignition coils.
    - Twist the spark plug wire boot 1/2 turn.
    - Pull only on the boot in order to remove the wire from the ignition coil.
8. Disconnect the ignition coil wire harness main electrical connector.

cardiagn.com

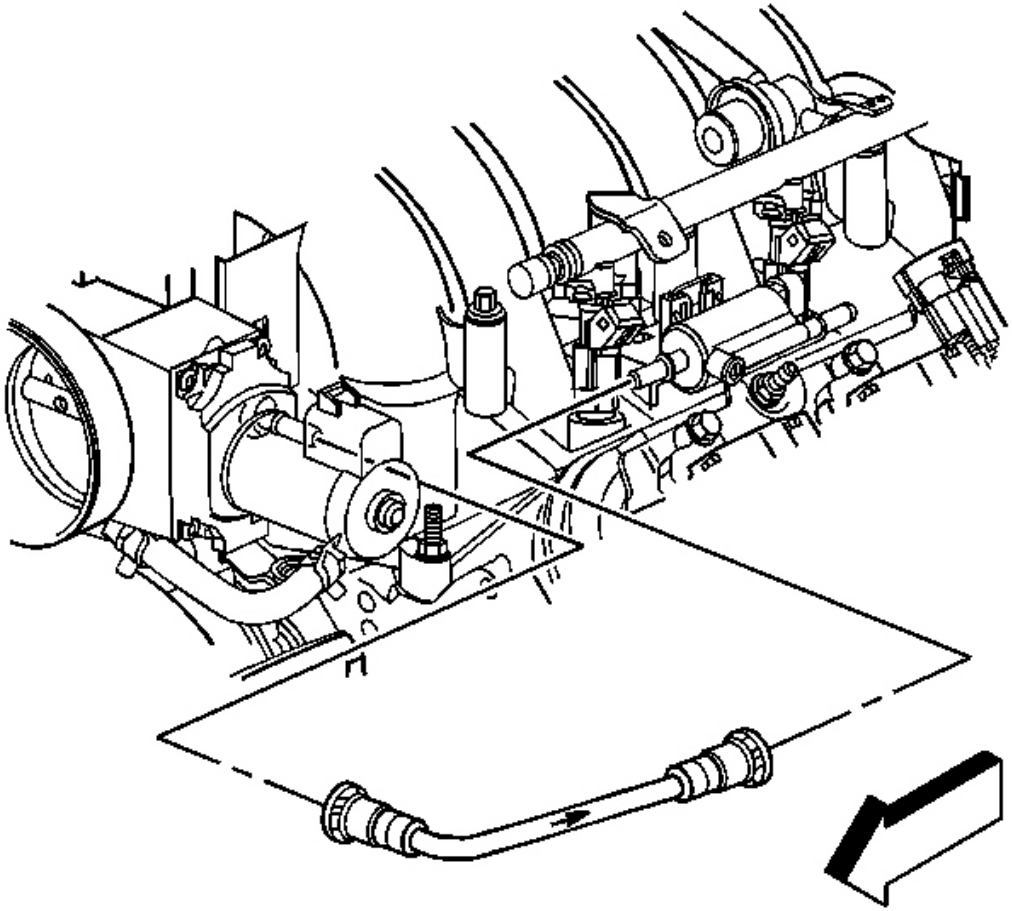

Fig. 88: EVAP Canister Purge Tube
Courtesy of GENERAL MOTORS CORP.

9. Remove the evaporative emission (EVAP) canister purge tube from the intake manifold.
10. Remove the EVAP canister purge tube from the EVAP canister purge solenoid valve.
11. Remove the EVAP canister purge tube.

cardiagn.com

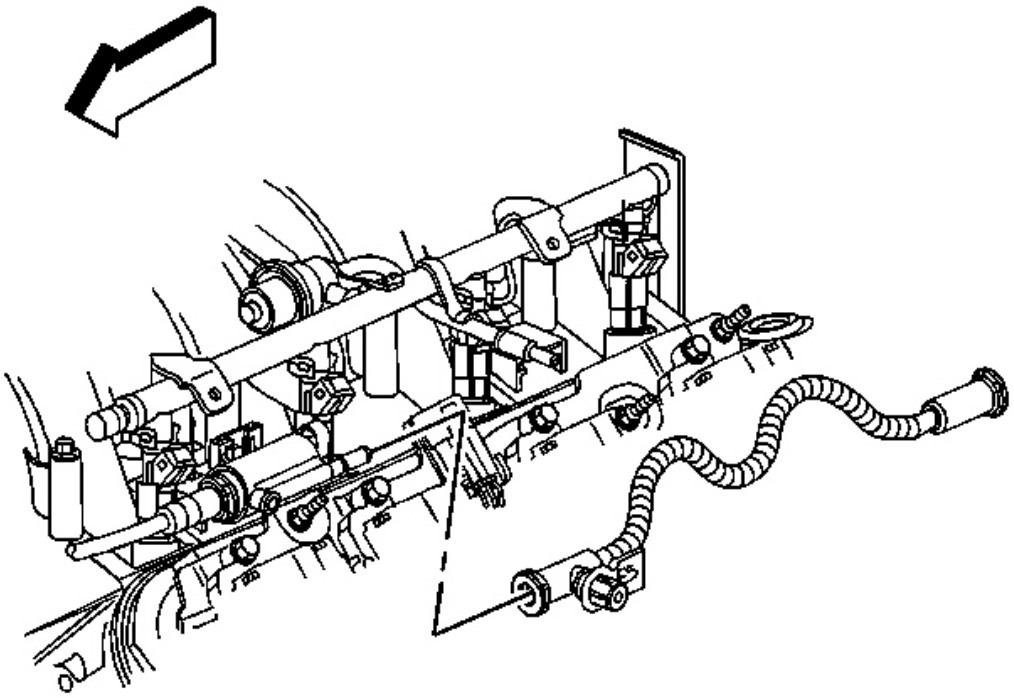

Fig. 89: Fuel Feed Pipe
Courtesy of GENERAL MOTORS CORP.

12. Disconnect the EVAP canister purge tube from the EVAP canister purge solenoid valve.
13. Disconnect the EVAP canister purge tube from the fuel feed pipe.
14. Remove the EVAP canister purge tube.

cardiagn.com

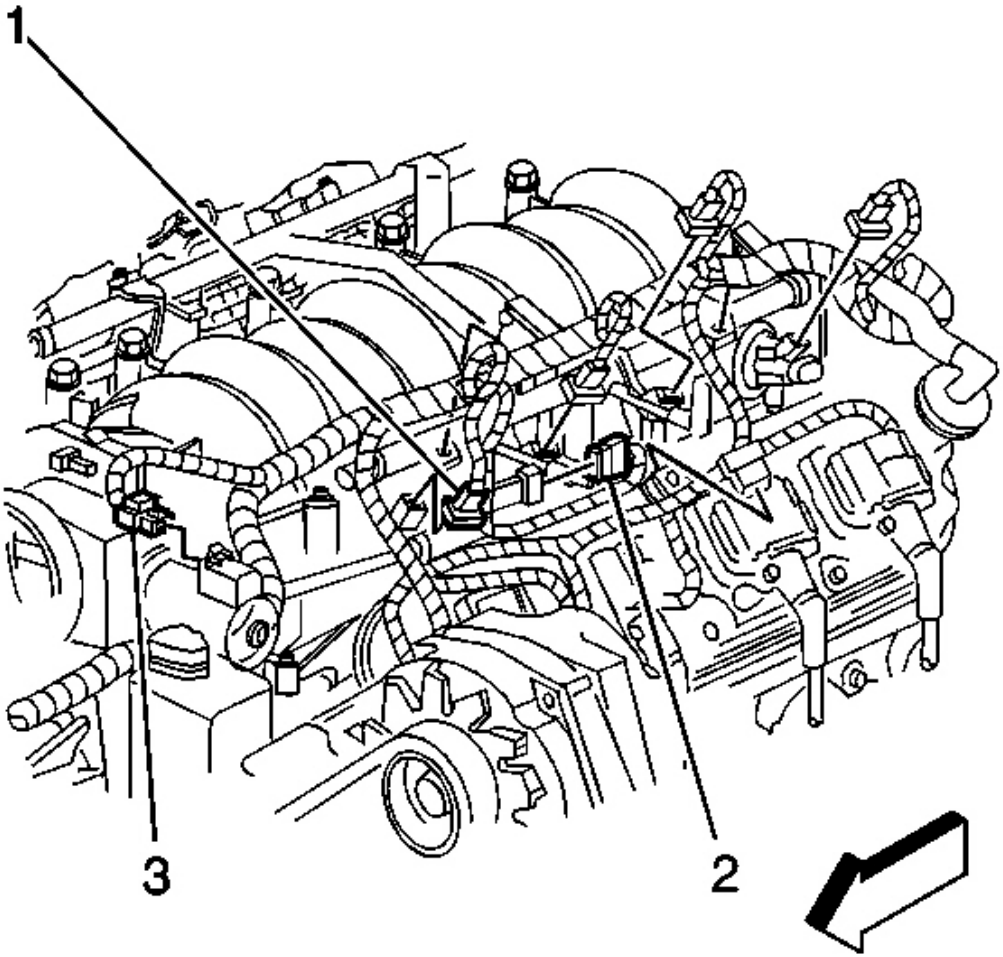

Fig. 90: Electrical Connectors
Courtesy of GENERAL MOTORS CORP.

15. Disconnect the EVAP canister purge solenoid valve electrical connector (2).

cardiagn.com

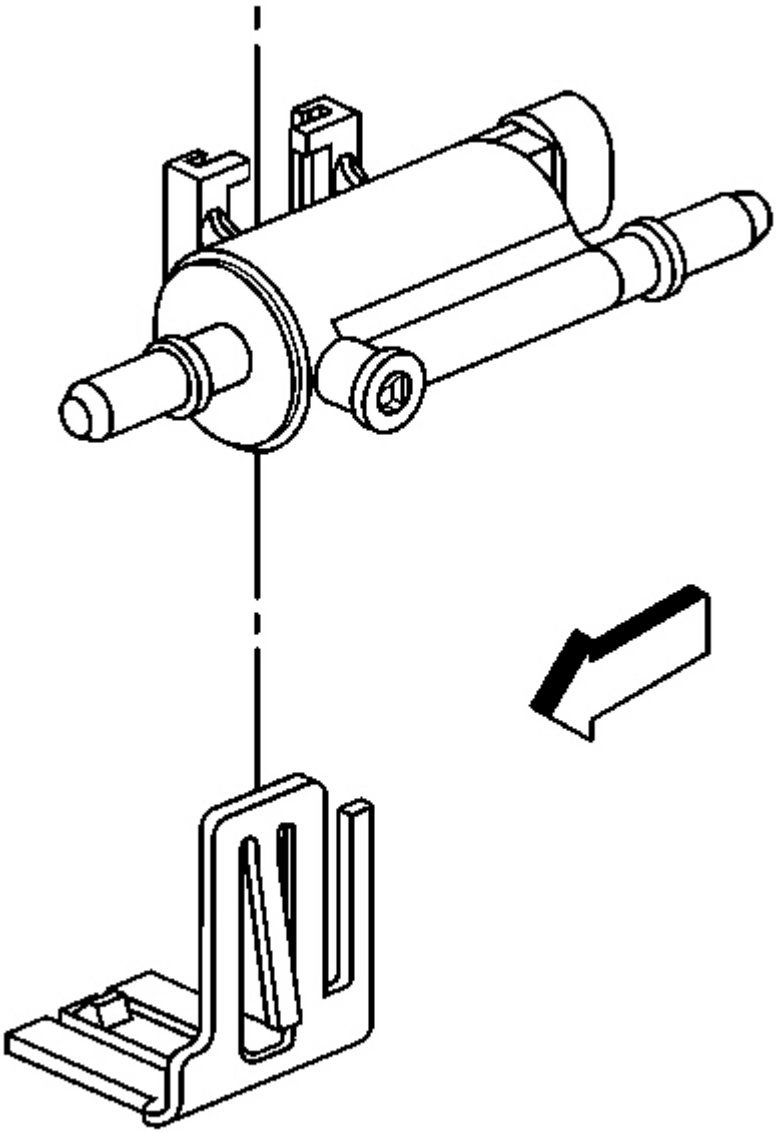

Fig. 91: EVAP Canister Purge Solenoid Valve & Bracket
Courtesy of GENERAL MOTORS CORP.

16. Remove the EVAP canister purge solenoid valve from the bracket.

cardiagn.com

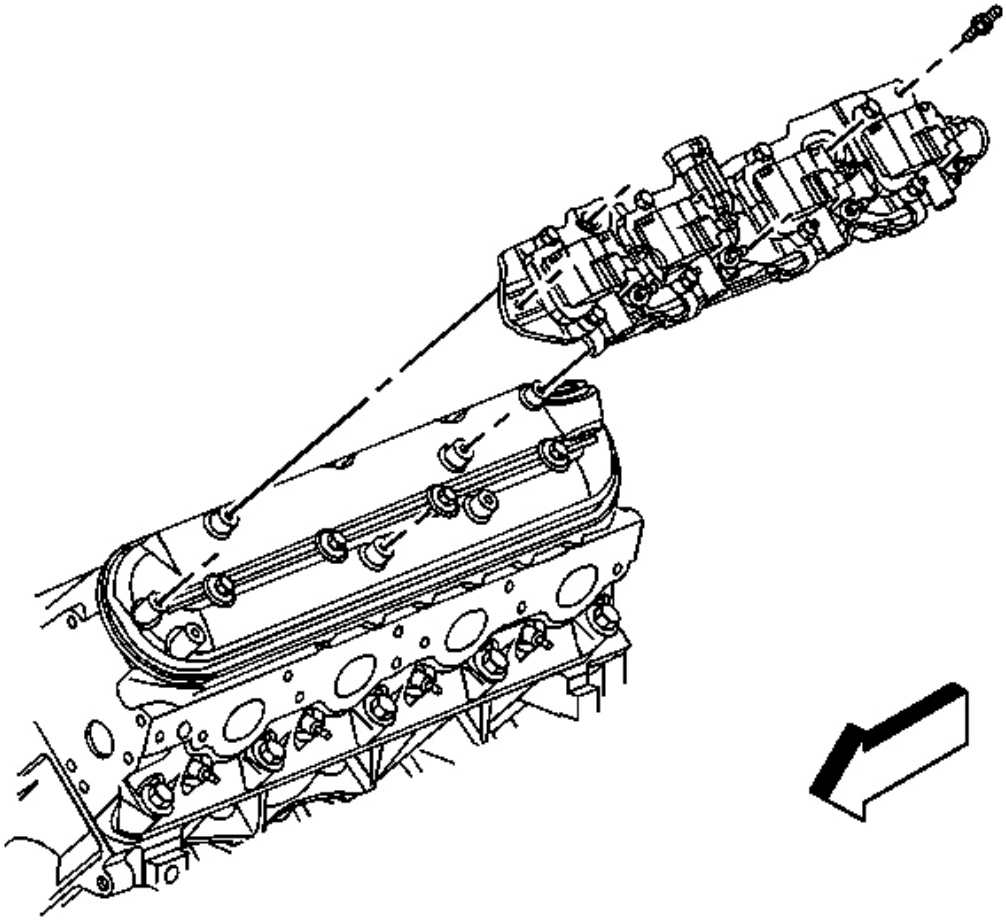

Fig. 92: Ignition Coil Bracket & Studs
Courtesy of GENERAL MOTORS CORP.

17. Remove the ignition coil bracket studs.
18. Remove the ignition coil bracket.

cardiagn.com

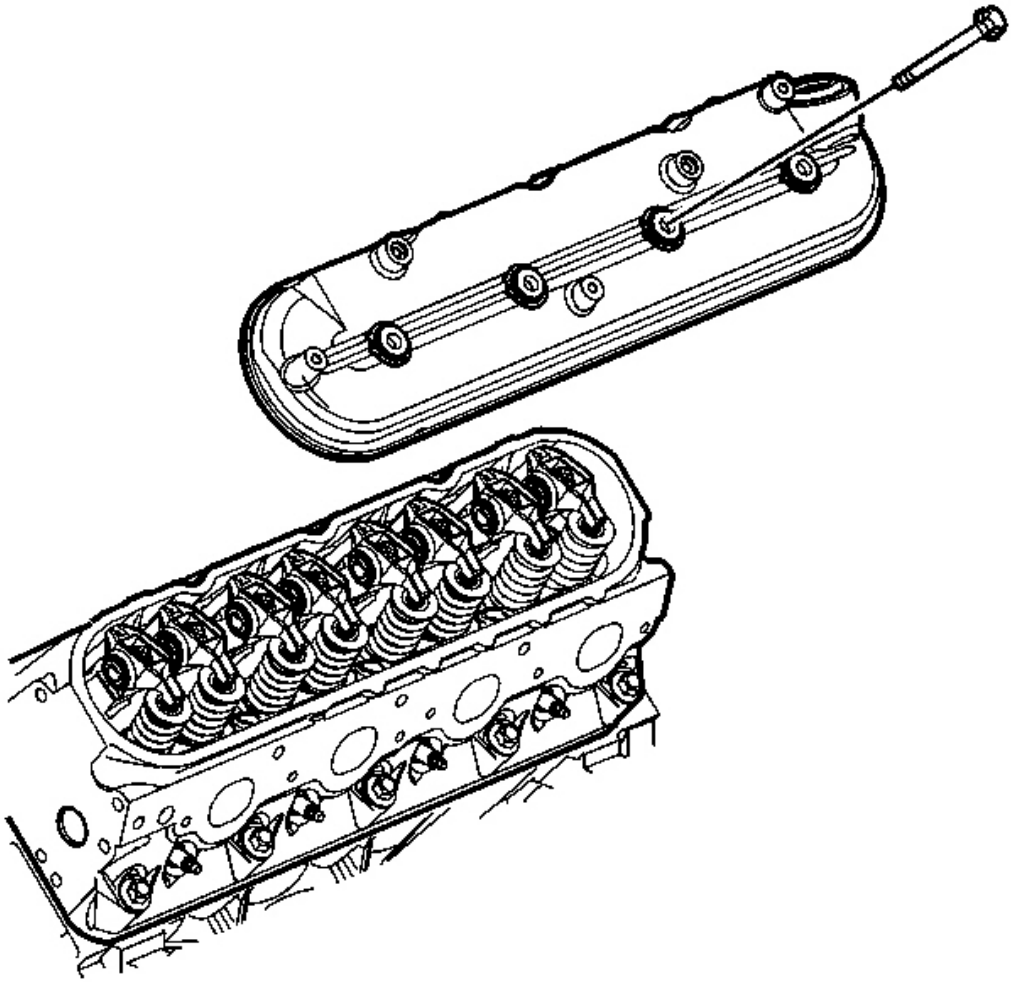

Fig. 93: Valve Rocker Arm Cover & Bolts
Courtesy of GENERAL MOTORS CORP.

19. Loosen the valve rocker arm cover bolts.
20. Remove the valve rocker cover.

cardiagn.com

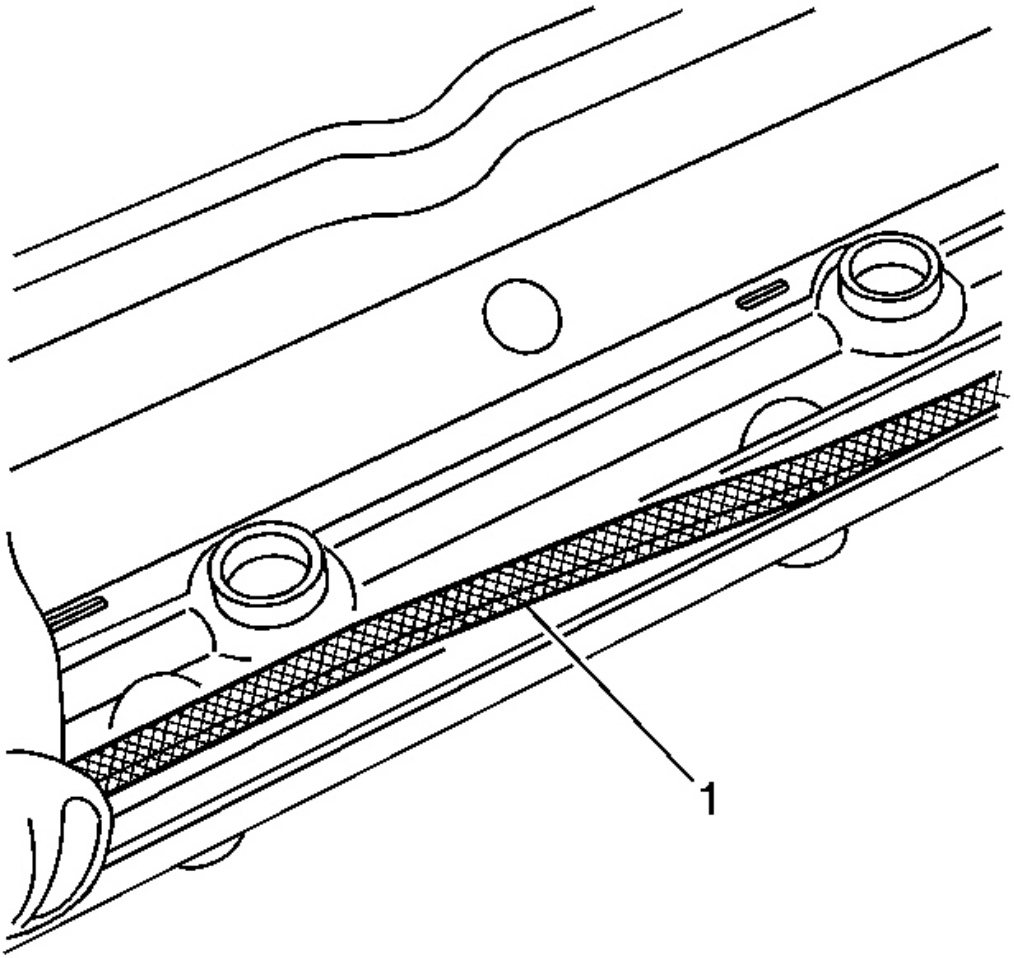

Fig. 94: Rocker Arm Cover & Gasket
Courtesy of GENERAL MOTORS CORP.

21. Remove the gasket (1) from the rocker cover. Discard the OLD gasket.
22. Clean and inspect the rocker arm cover. Refer to **Valve Rocker Arm Cover Cleaning and Inspection** .

Installation Procedure

IMPORTANT:

- **All gasket surfaces should be free of oil and other foreign material during assembly.**
- **DO NOT reuse the valve rocker arm cover gasket.**
- **The valve rocker arm cover bolt grommets may be reused.**

cardiagn.com

- **If the PCV valve grommet has been removed from the rocker arm, install a NEW grommet during assembly.**

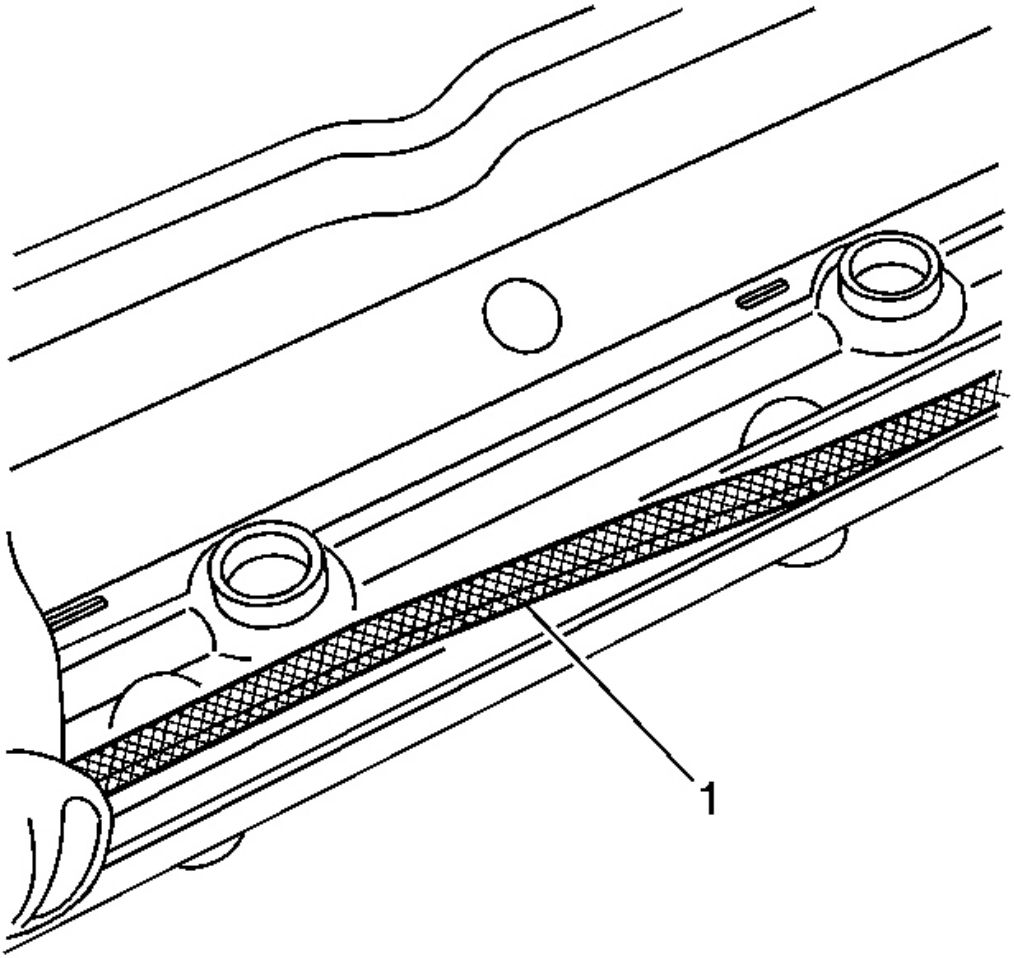

Fig. 95: Rocker Arm Cover & Gasket
Courtesy of GENERAL MOTORS CORP.

1. Install a NEW rocker cover gasket (1) into the valve rocker cover lip.

cardiagn.com

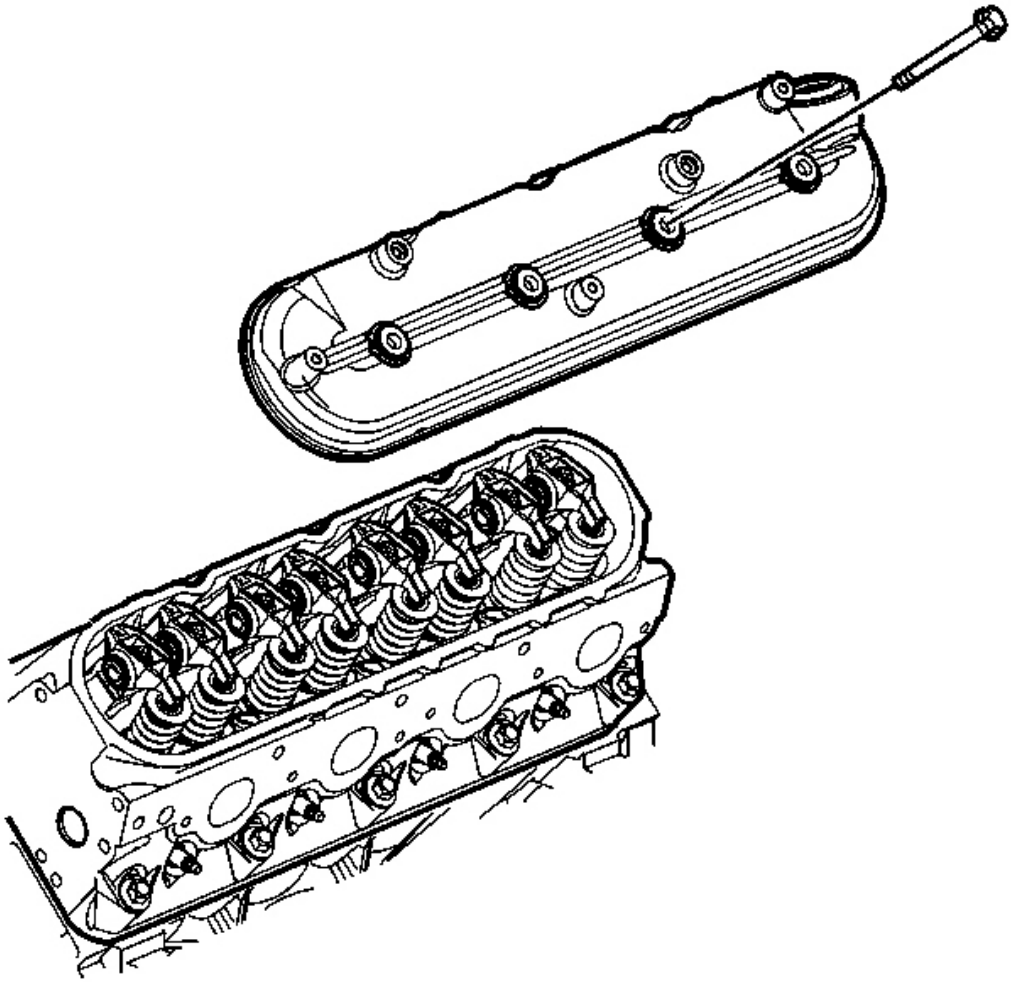

Fig. 96: Valve Rocker Arm Cover & Bolts
Courtesy of GENERAL MOTORS CORP.

NOTE: Refer to Fastener Notice in Cautions and Notices.

2. Install the valve rocker arm cover.
3. Tighten the valve rocker cover bolts.

Tighten: Tighten the valve rocker arm cover bolts to 12 N.m (106 lb in).

cardiagn.com

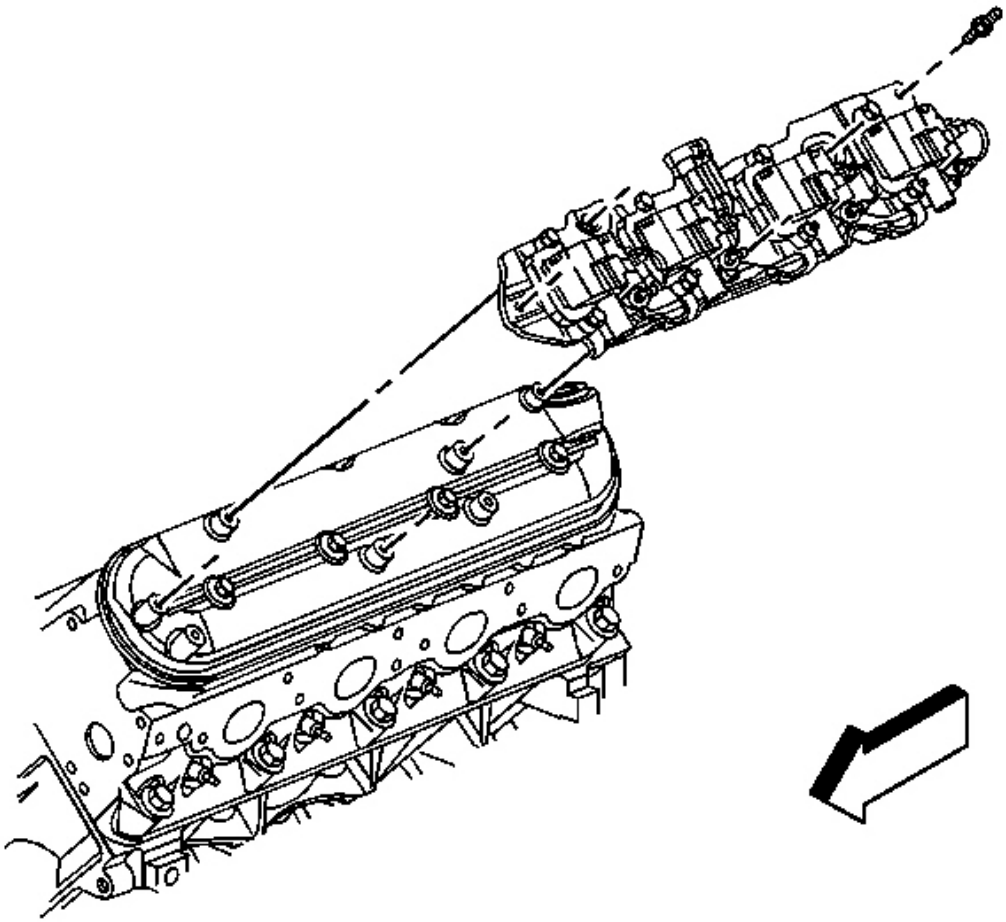

Fig. 97: Ignition Coil Bracket & Studs
Courtesy of GENERAL MOTORS CORP.

4. Install the ignition coil bracket.
5. Apply threadlock GM P/N 12345382 (Canadian P/N 10953489), or equivalent to the threads of the ignition coil bracket studs.
6. Install the ignition coil bracket studs.

Tighten: Tighten the ignition coil bracket studs to 12 N.m (106 lb in).

cardiagn.com

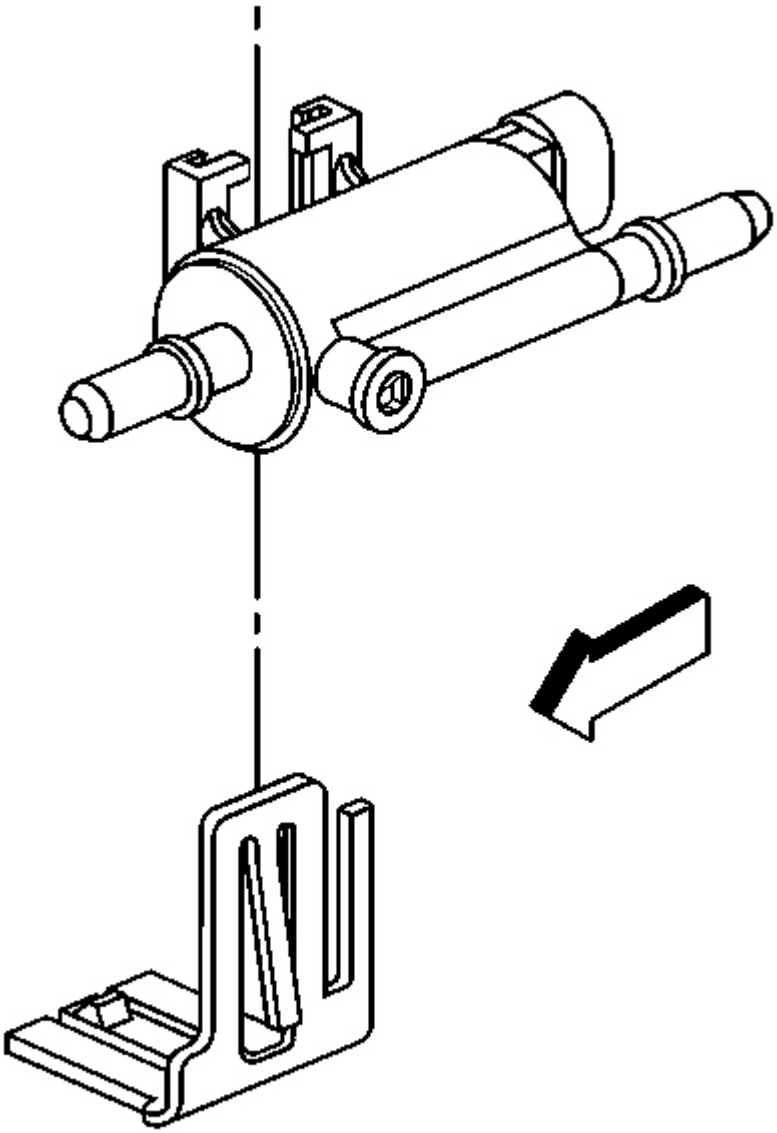

Fig. 98: EVAP Canister Purge Solenoid Valve & Bracket
Courtesy of GENERAL MOTORS CORP.

7. Remove the EVAP canister purge solenoid valve from the bracket.

cardiagn.com

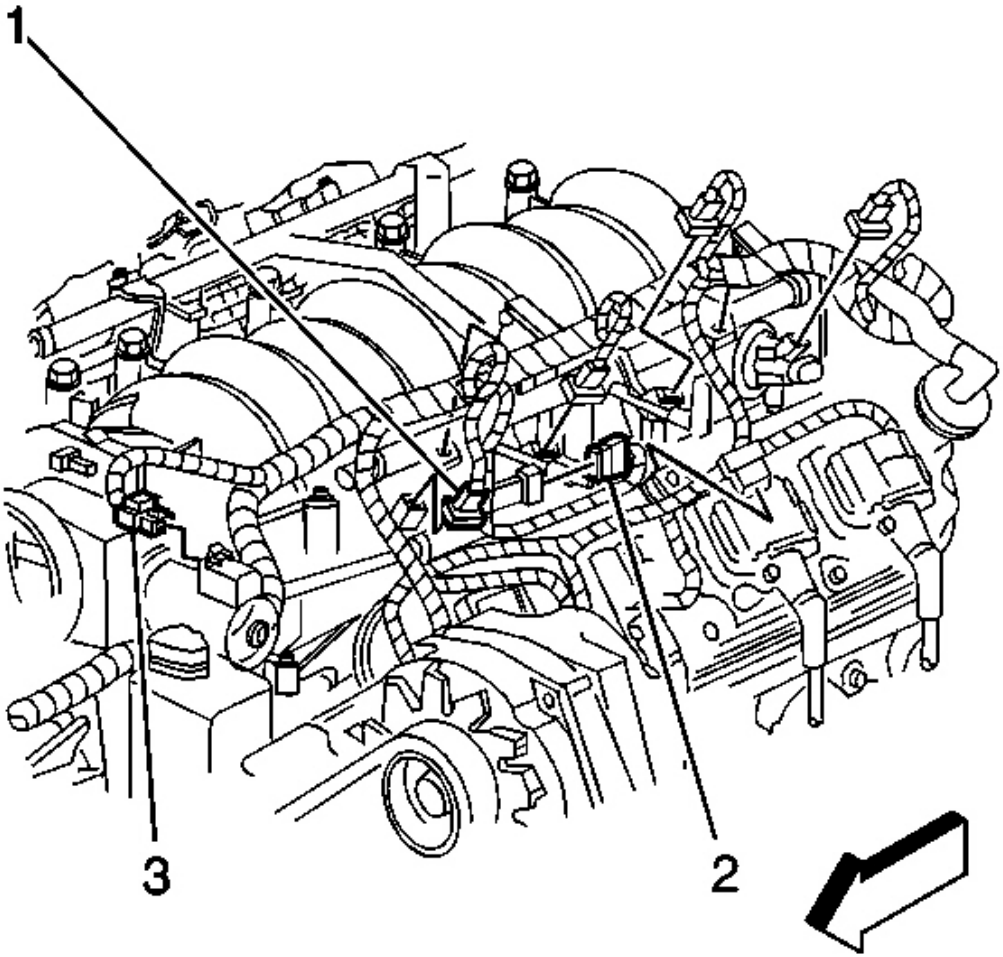

Fig. 99: Electrical Connectors
Courtesy of GENERAL MOTORS CORP.

8. Connect the EVAP canister purge solenoid valve electrical connector (2).

cardiagn.com

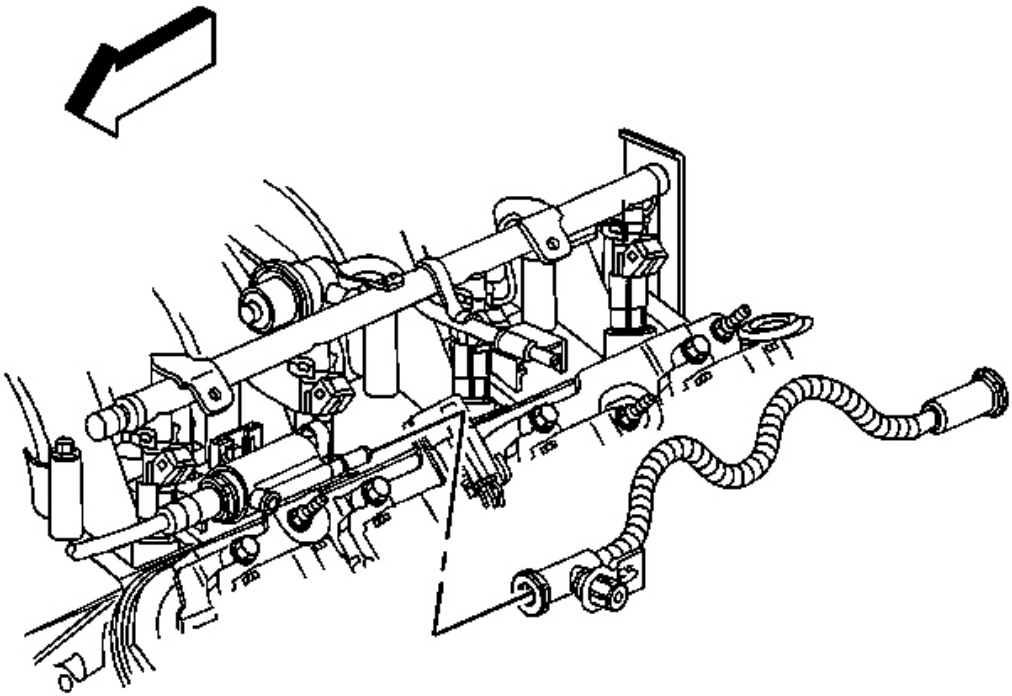

Fig. 100: Fuel Feed Pipe
Courtesy of GENERAL MOTORS CORP.

9. Disconnect the EVAP canister purge tube from the EVAP canister purge solenoid valve.
10. Disconnect the EVAP canister purge tube from the fuel feed pipe.
11. Remove the EVAP canister purge tube.

cardiagn.com

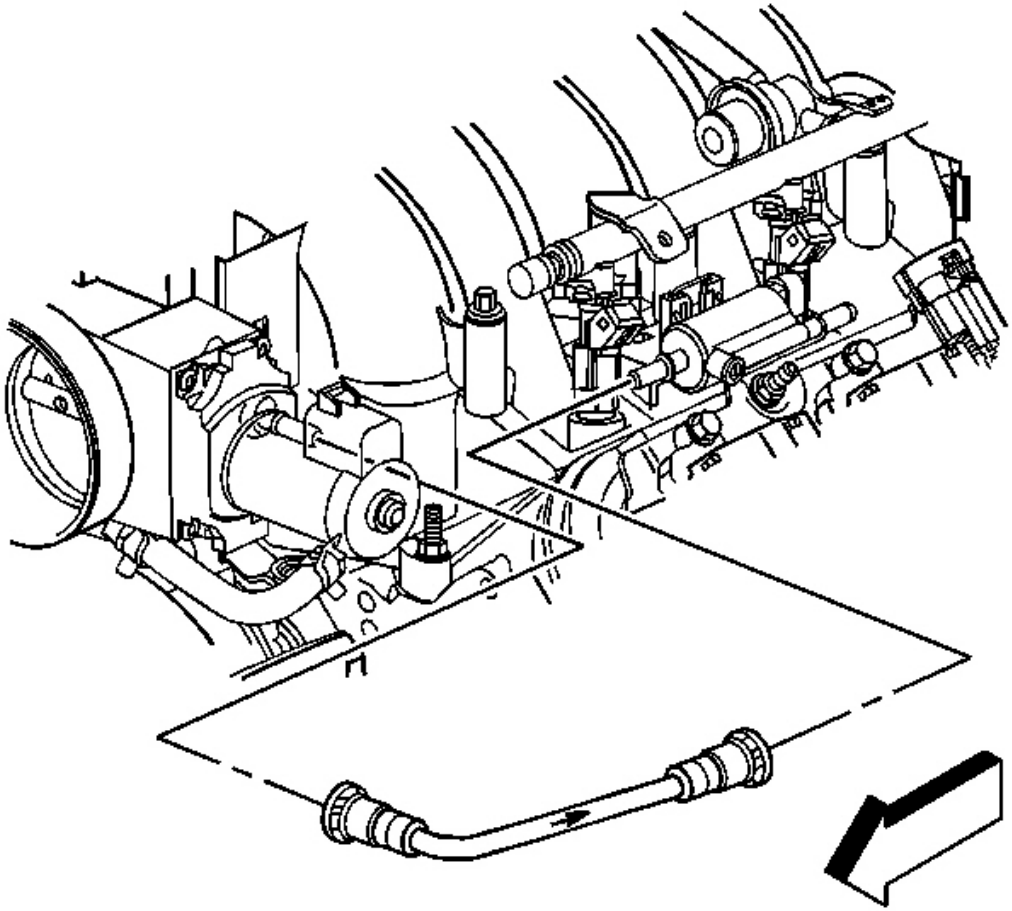

Fig. 101: EVAP Canister Purge Tube
Courtesy of GENERAL MOTORS CORP.

12. Remove the EVAP canister purge tube from the intake manifold.
13. Remove the EVAP canister purge tube from the EVAP canister purge solenoid valve.
14. Remove the EVAP canister purge tube.

cardiagn.com

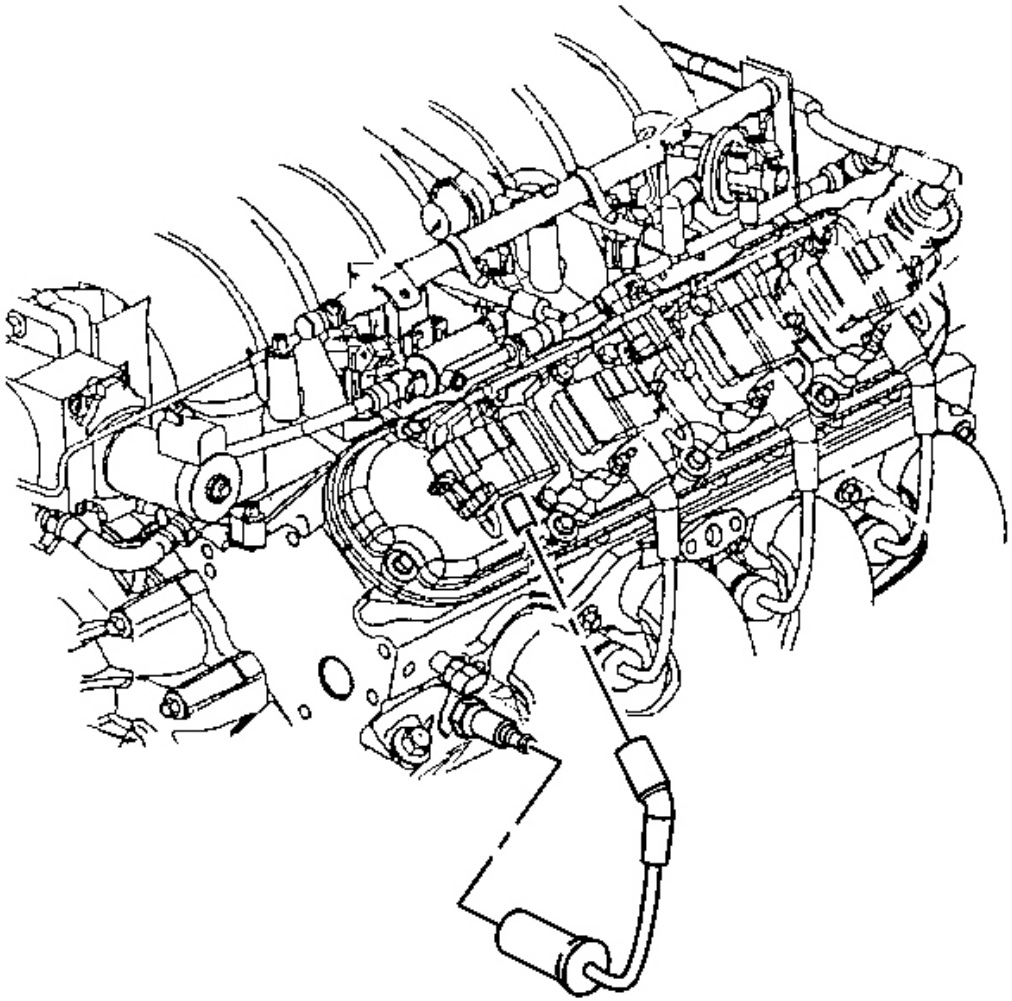

Fig. 102: Spark Plug Wire
Courtesy of GENERAL MOTORS CORP.

15. Connect the ignition coil wire harness main electrical connector.
16. Install the spark plug wires to the ignition coils.

cardiagn.com

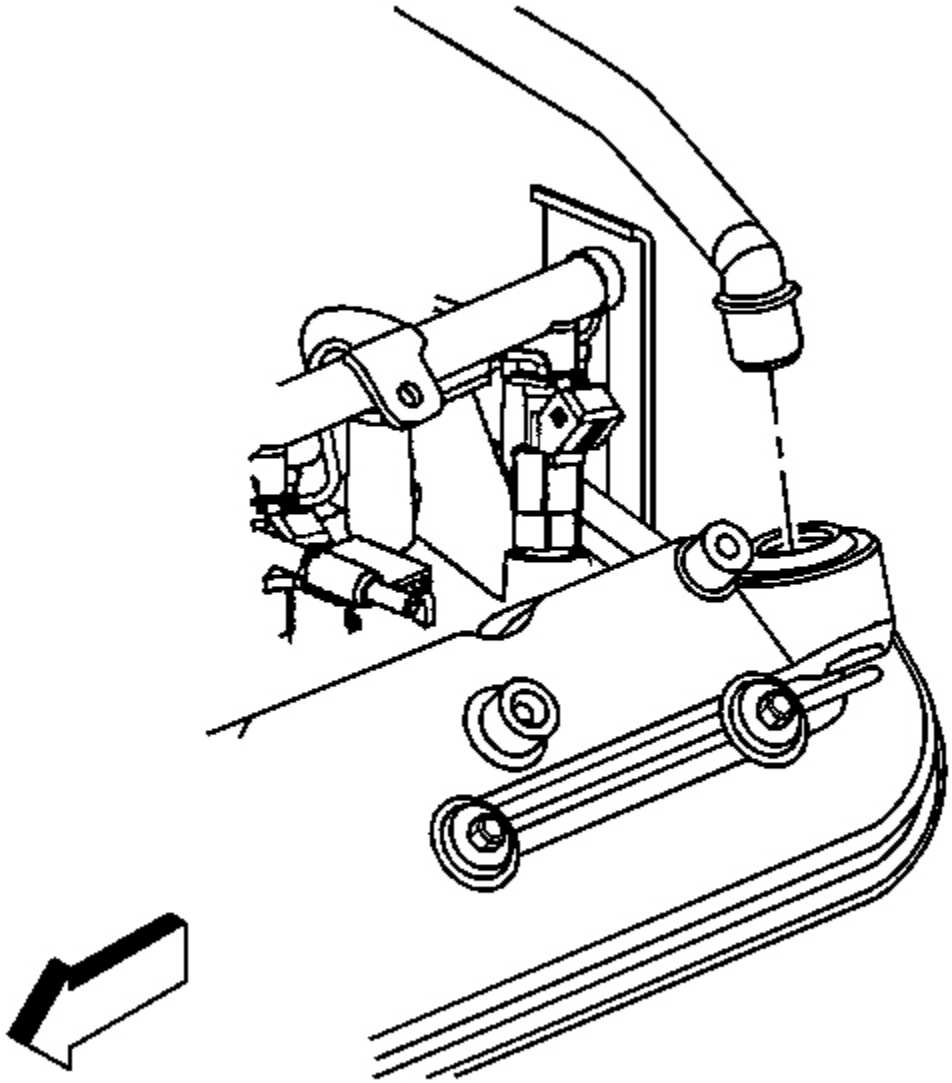

Fig. 103: Left Rocker Arm Cover & PCV Valve Pipe
Courtesy of GENERAL MOTORS CORP.

17. If equipped with the RPO LS1 engine, install the PCV valve pipe to the left rocker cover.

cardiagn.com

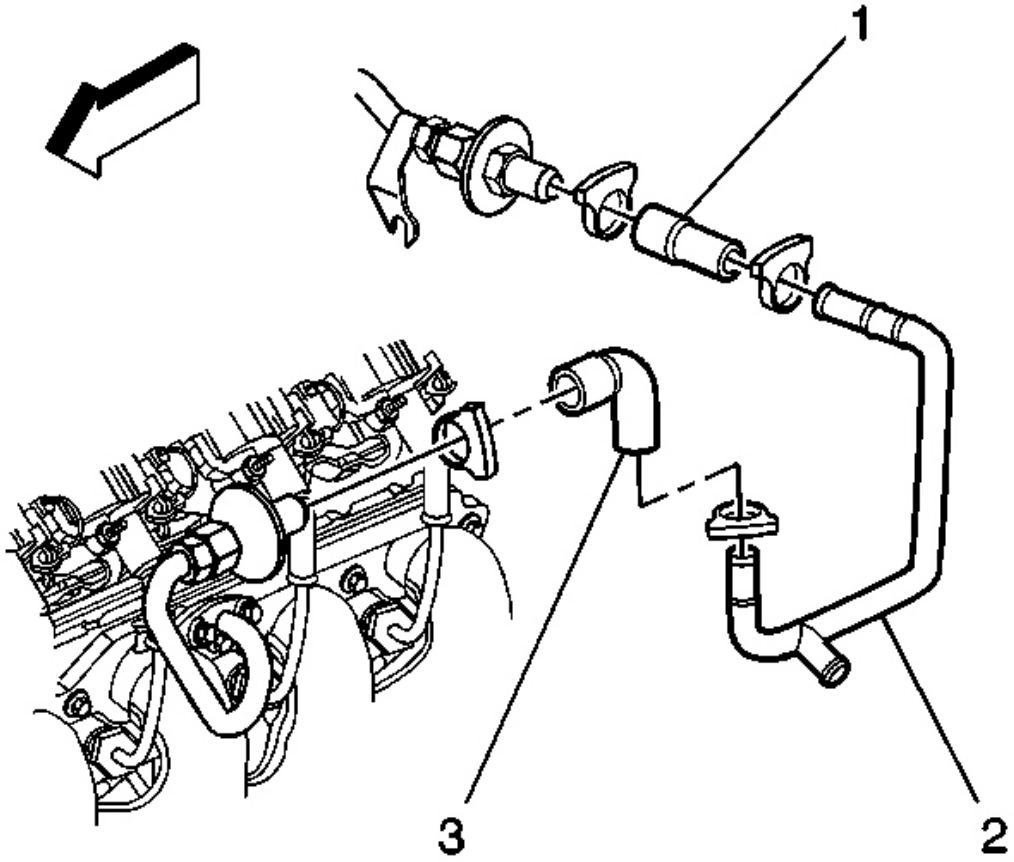

Fig. 104: AIR Hose Clamp & Check Valve
Courtesy of GENERAL MOTORS CORP.

18. Connect the AIR hose (3) to the check valve.
19. Install the AIR hose clamp.

cardiagn.com

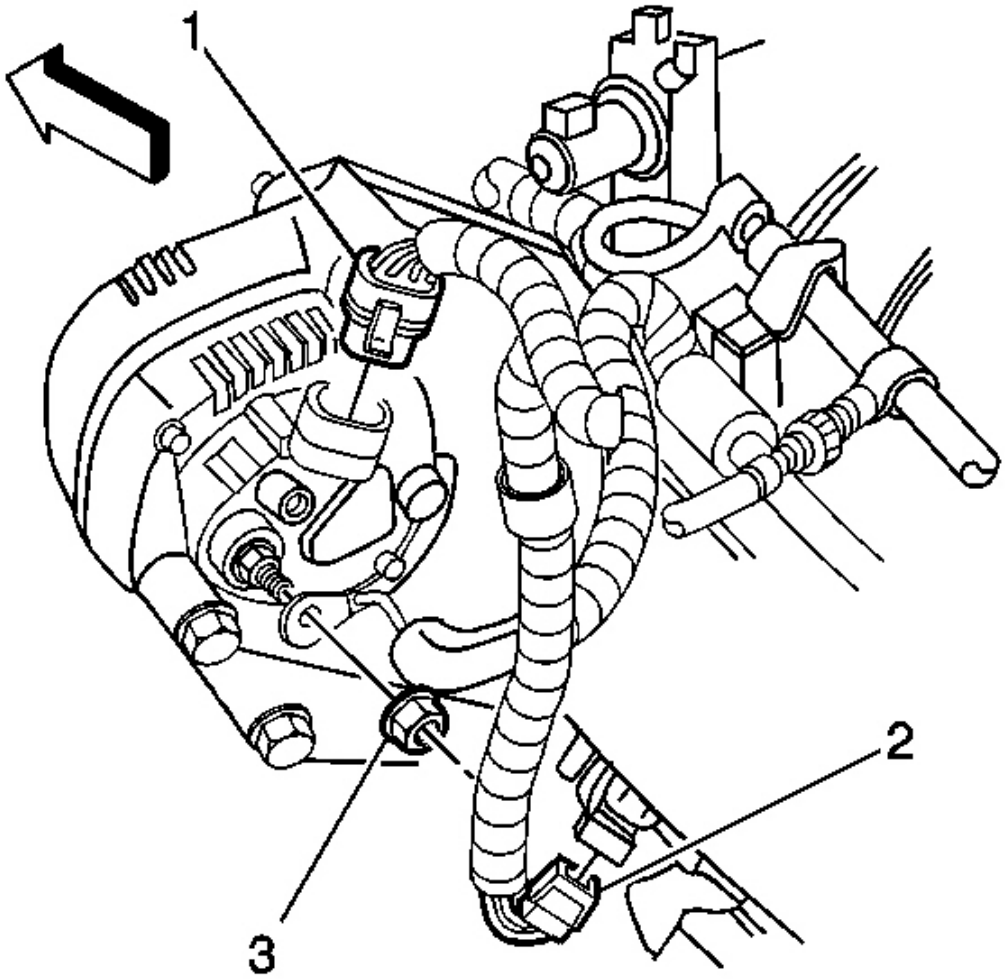

Fig. 105: Engine Wiring Harness Generator Lead Nut & Generator Electrical Connector
Courtesy of GENERAL MOTORS CORP.

20. Connect the generator electrical connector (1).
21. Install the engine wiring harness generator lead and nut (3).

    Tighten: Tighten the engine wiring harness generator lead nut to 13 N.m (115 lb in).

22. Install the fuel feed hose. Refer to **Fuel Hose/Pipes Replacement - Engine Compartment** in Engine Controls - 5.7 L.

VALVE ROCKER ARM COVER REPLACEMENT - RIGHT

cardiagn.com

Removal Procedure

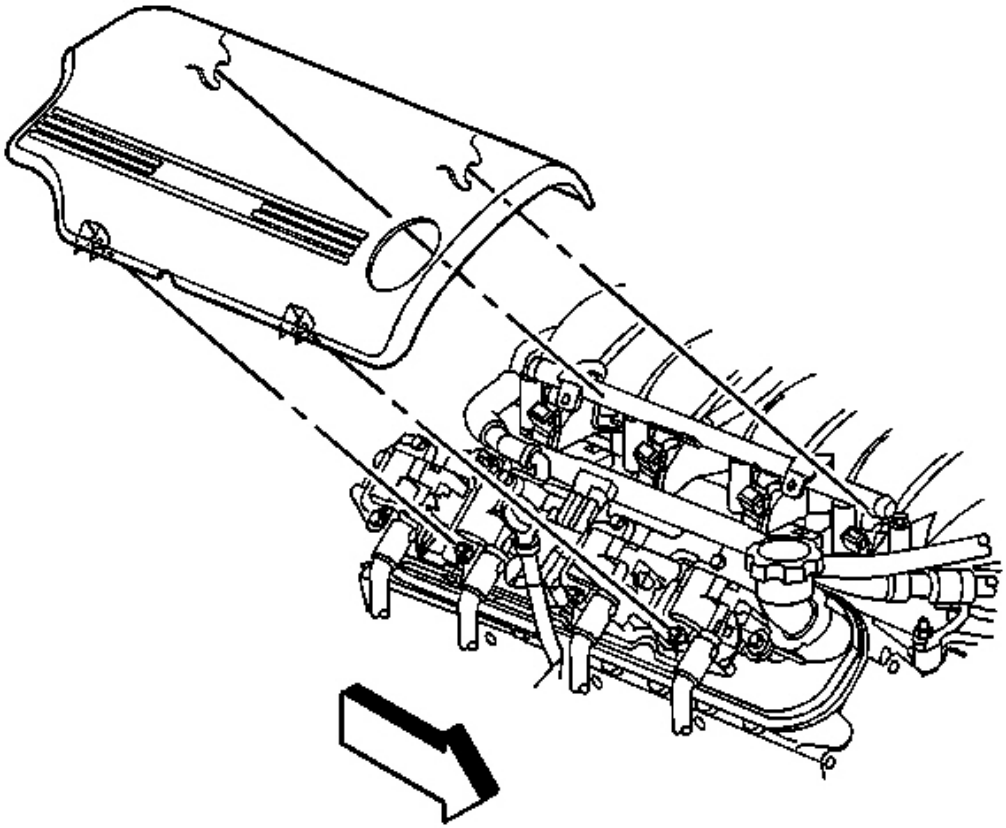

Fig. 106: Right Fuel Injection Rail Cover
Courtesy of GENERAL MOTORS CORP.

1. Remove the right fuel rail cover.

cardiagn.com

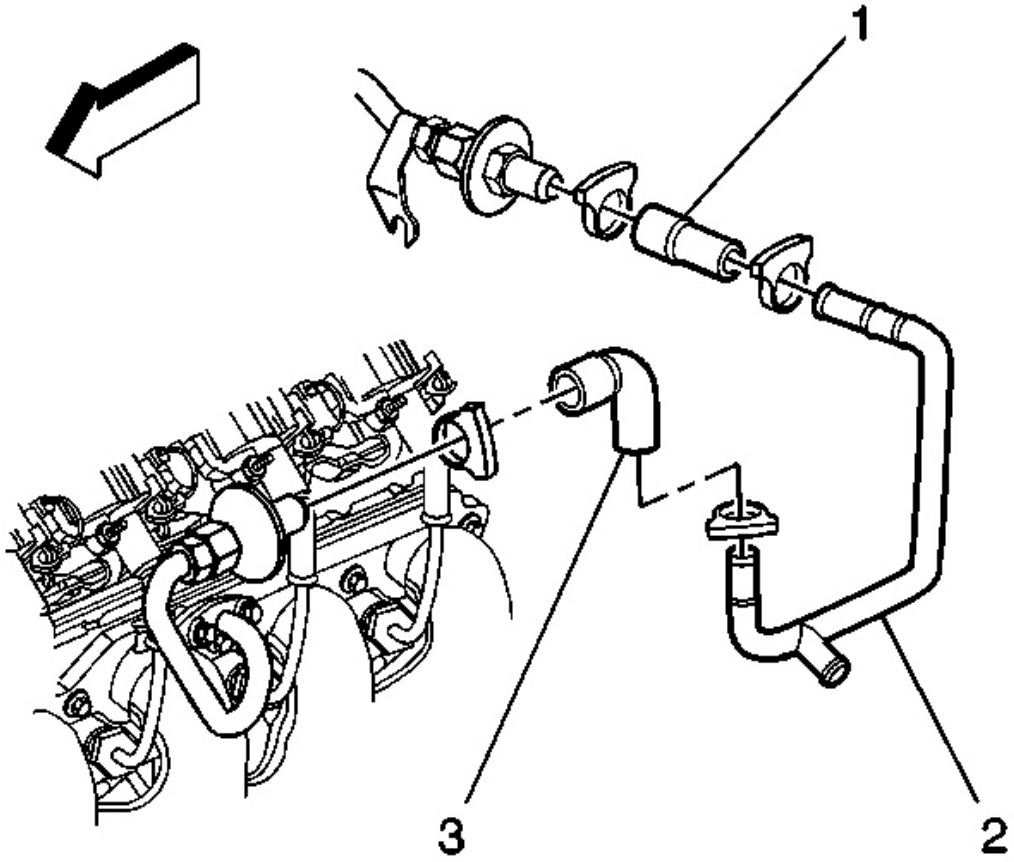

Fig. 107: AIR Hose Clamp & Check Valve
Courtesy of GENERAL MOTORS CORP.

2. Remove the secondary air injection (AIR) hose clamp.
3. Remove the AIR hose (1) from the check valve.

cardiagn.com

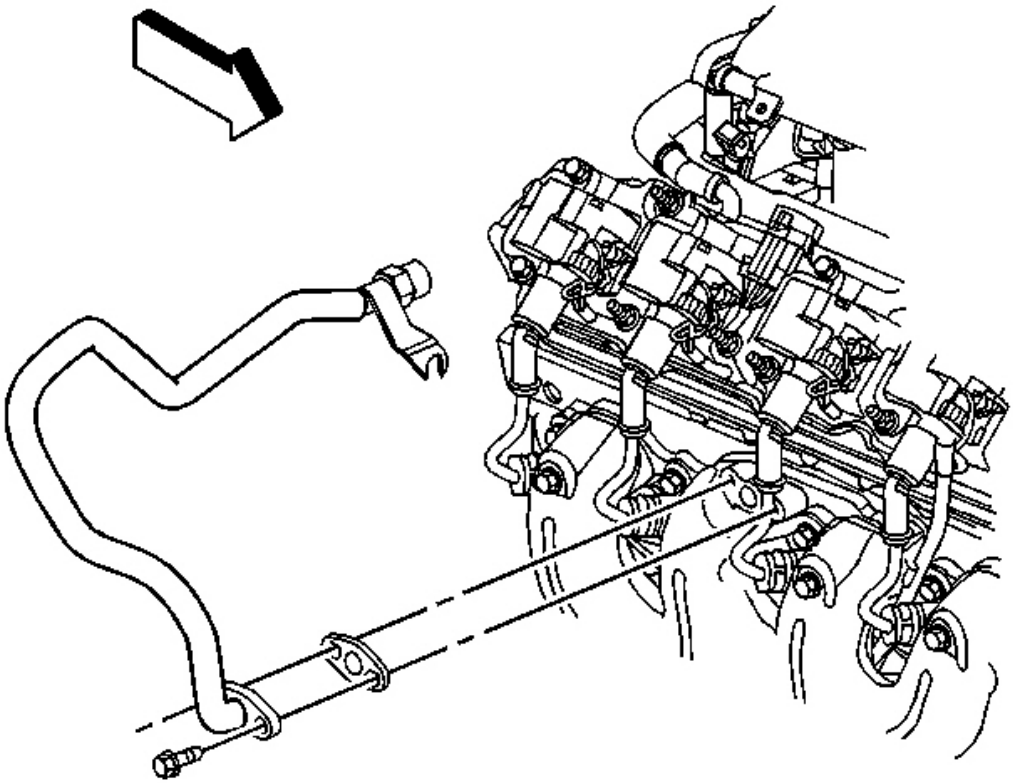

Fig. 108: AIR Pipe & Bolts
Courtesy of GENERAL MOTORS CORP.

4. Remove the AIR pipe bolts at the exhaust manifold.

cardiagn.com

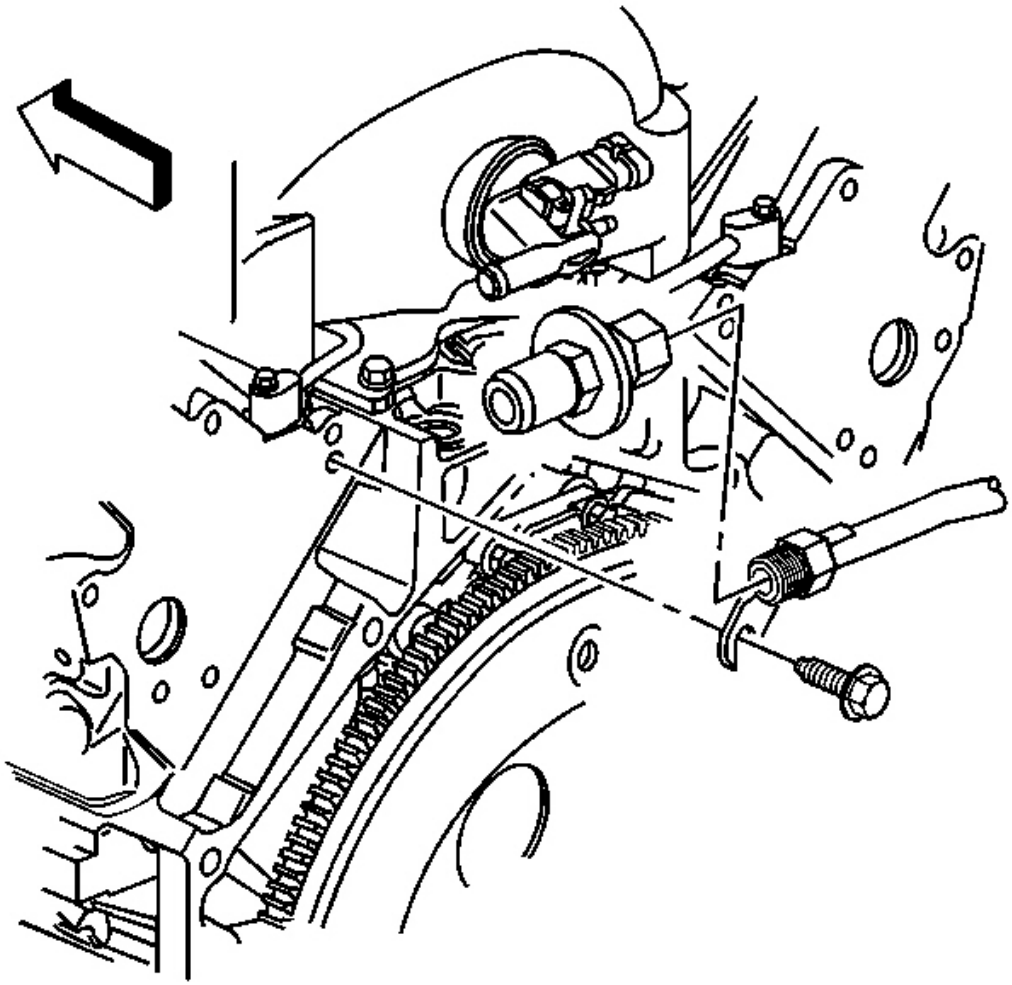

Fig. 109: AIR Pipe Gasket, Exhaust Manifold & Bolts
Courtesy of GENERAL MOTORS CORP.

5. Loosen, DO NOT remove the AIR pipe bolt at the rear of the left cylinder head.
6. Slide the AIR pipe up and out from behind the bolt.
7. Reposition the AIR pipe.
8. Remove the AIR pipe gasket from the exhaust manifold.

cardiagn.com

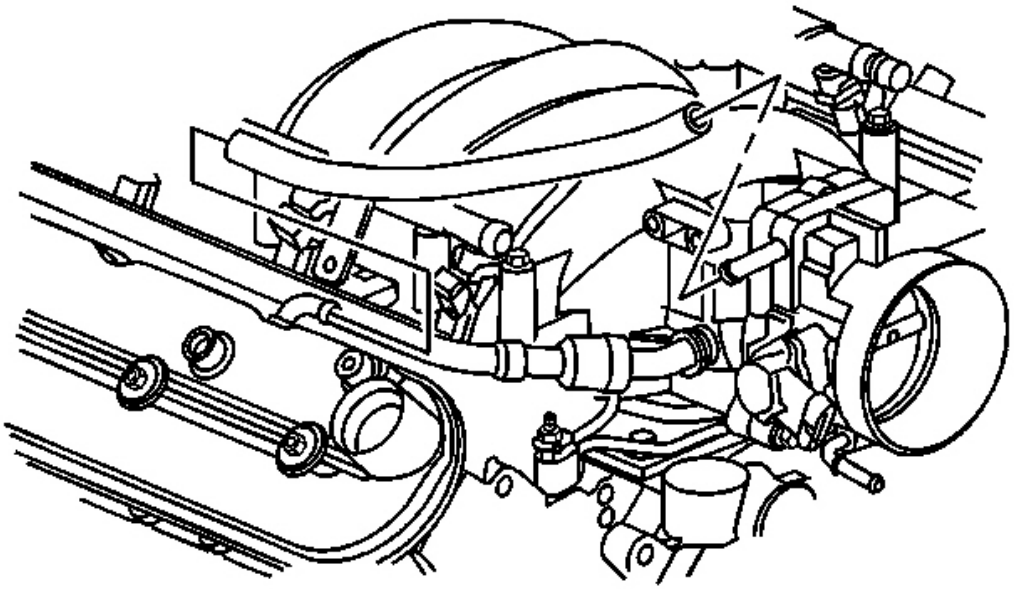

Fig. 110: PCV Tube & Rocker Arm Cover
Courtesy of GENERAL MOTORS CORP.

9. Remove the throttle position (TP) sensor harness clip from the positive crankcase ventilation (PCV) tube.
10. Remove the PCV tube from the throttle body and rocker arm cover.

cardiagn.com

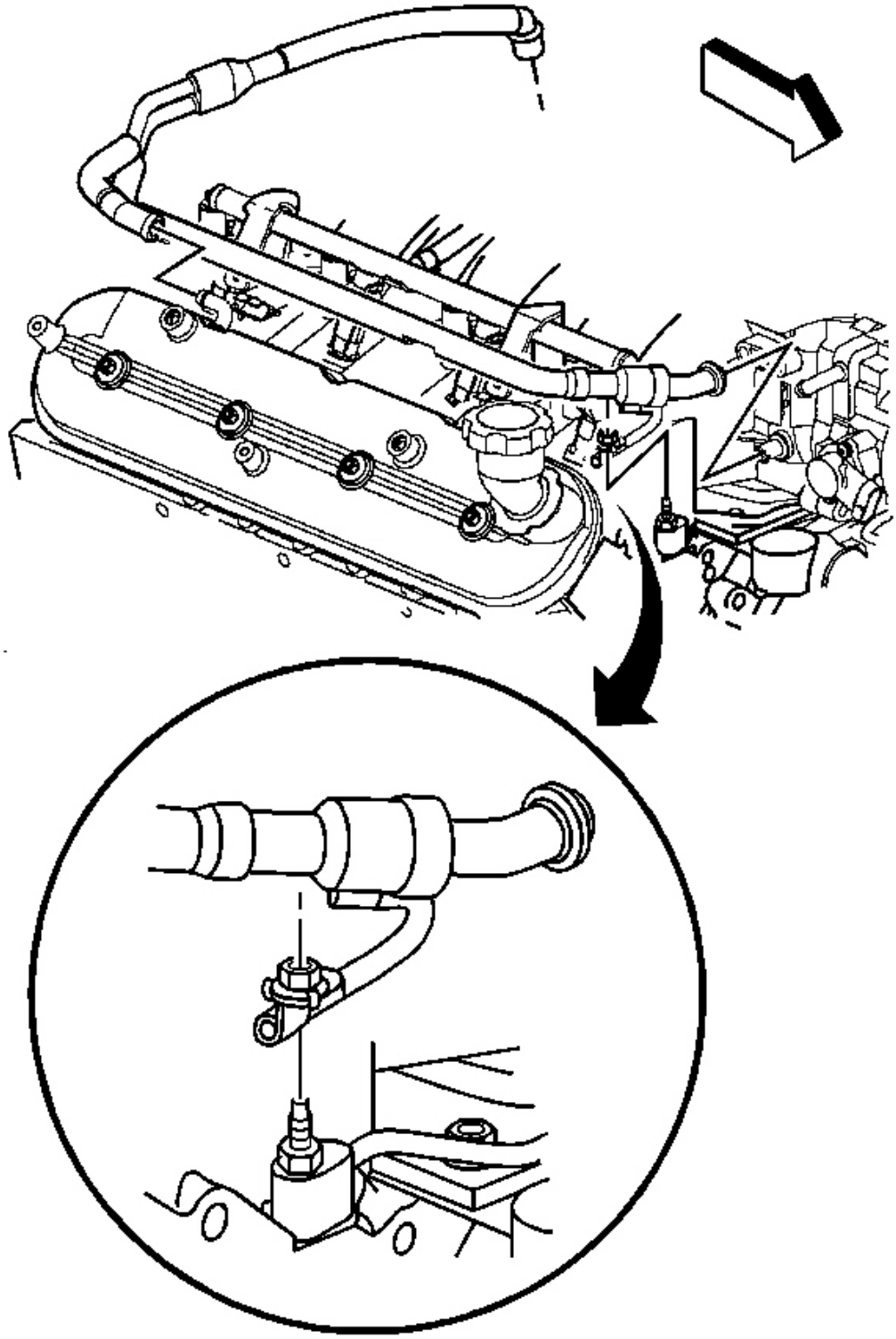

cardiagn.com

Fig. 111: Right Rocker Arm Cover & PCV Valve Pipe
Courtesy of GENERAL MOTORS CORP.

11. If equipped with the regular production option (RPO) LS1 engine, remove the PCV valve pipe strap nut.
12. Remove the PCV valve pipe from the right rocker arm cover and intake manifold.

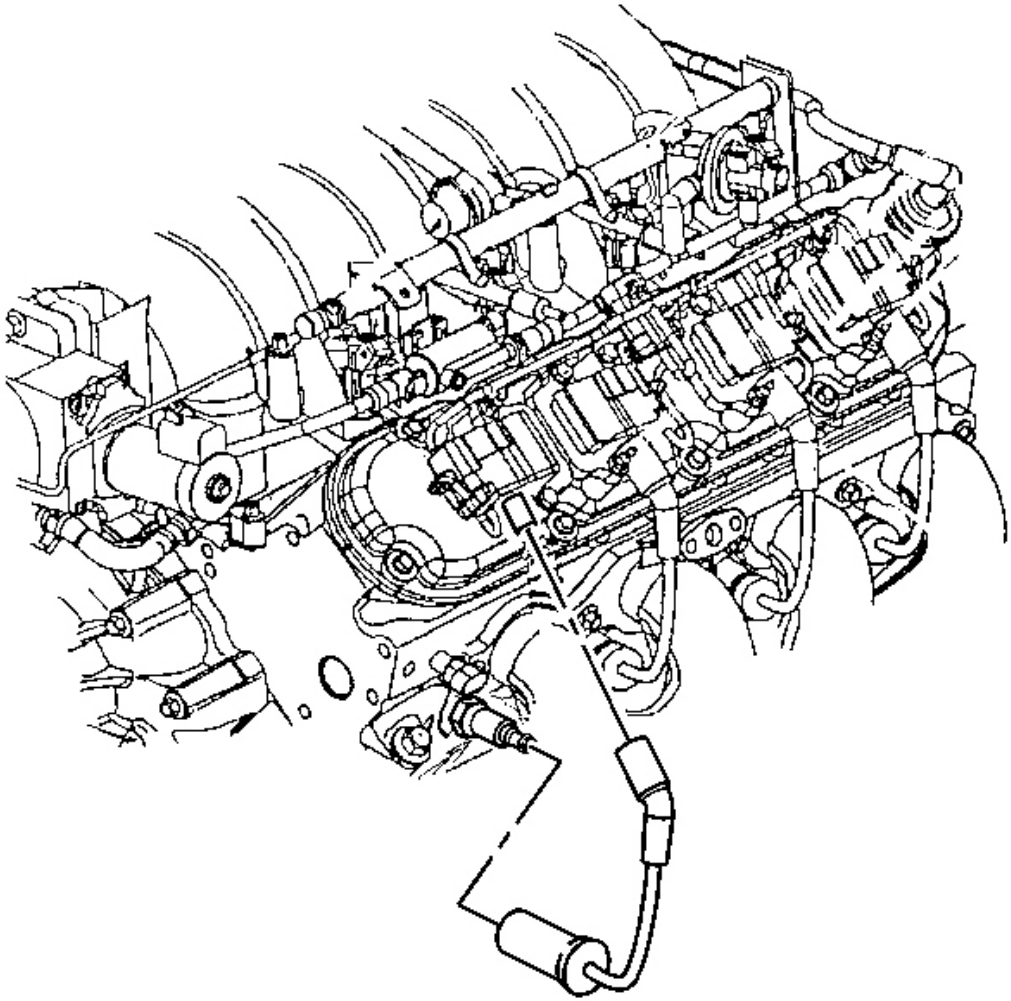

Fig. 112: Spark Plug Wire
Courtesy of GENERAL MOTORS CORP.

13. Disconnect the spark plug wires from the ignition coils.
    - Twist the spark plug wire boot 1/2 turn.

cardiagn.com

- Pull only on the boot in order to remove the wire from the ignition coil.

14. Disconnect the ignition coil wire harness main electrical connector.

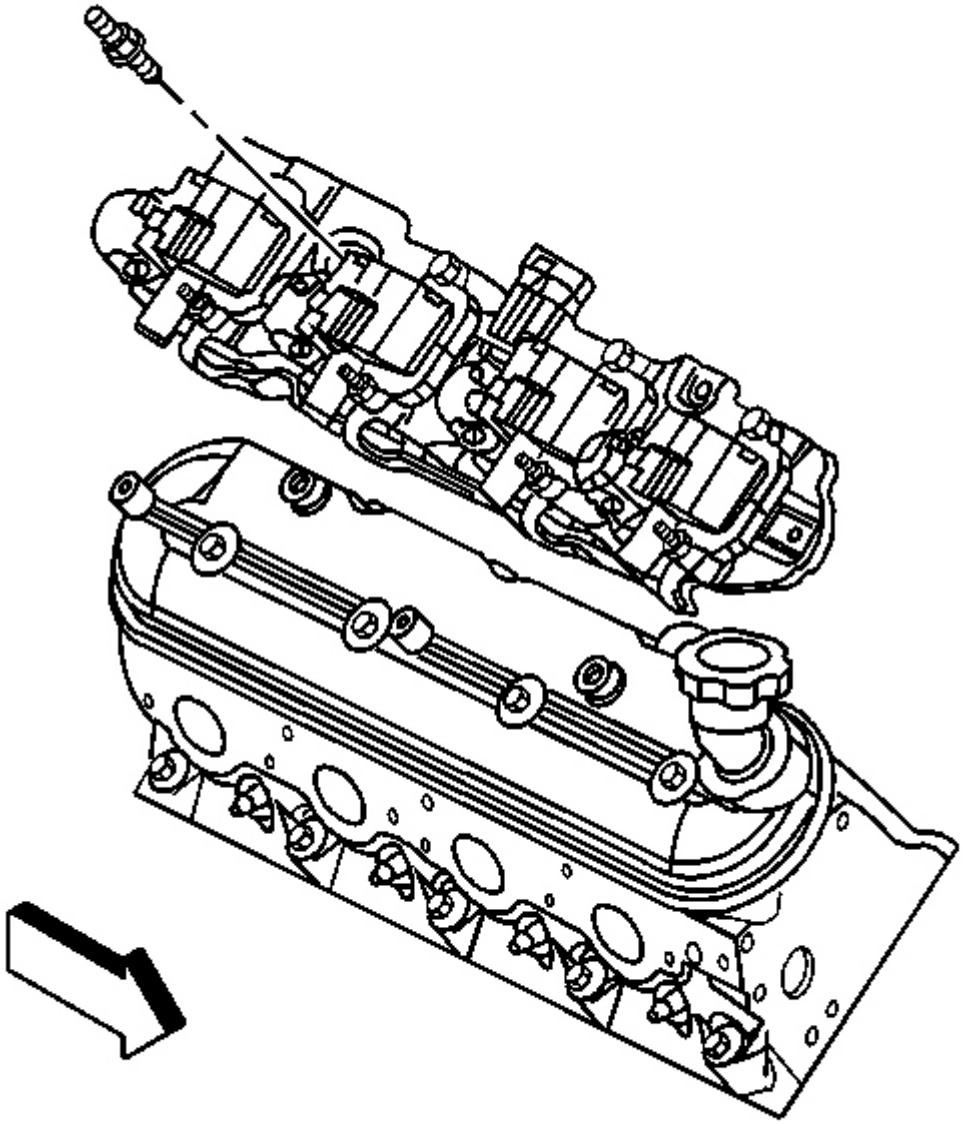

Fig. 113: Ignition Coil Bracket & Studs
Courtesy of GENERAL MOTORS CORP.

15. Remove the ignition coil bracket studs.

cardiagn.com

16. Remove the ignition coil bracket.

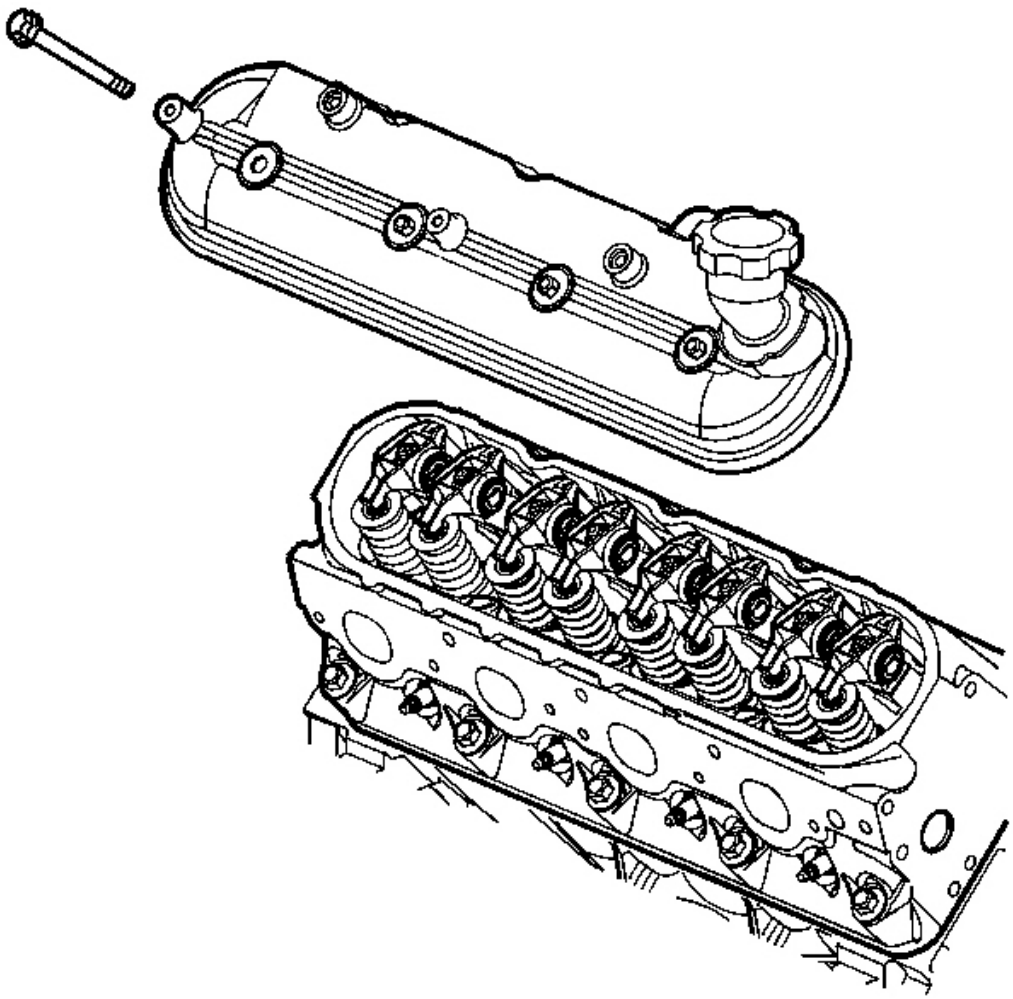

Fig. 114: View Of Valve Rocker Arm Cover & Bolts (Right)
Courtesy of GENERAL MOTORS CORP.

17. Loosen the valve rocker arm cover bolts.
18. Remove the valve rocker arm cover.

cardiagn.com

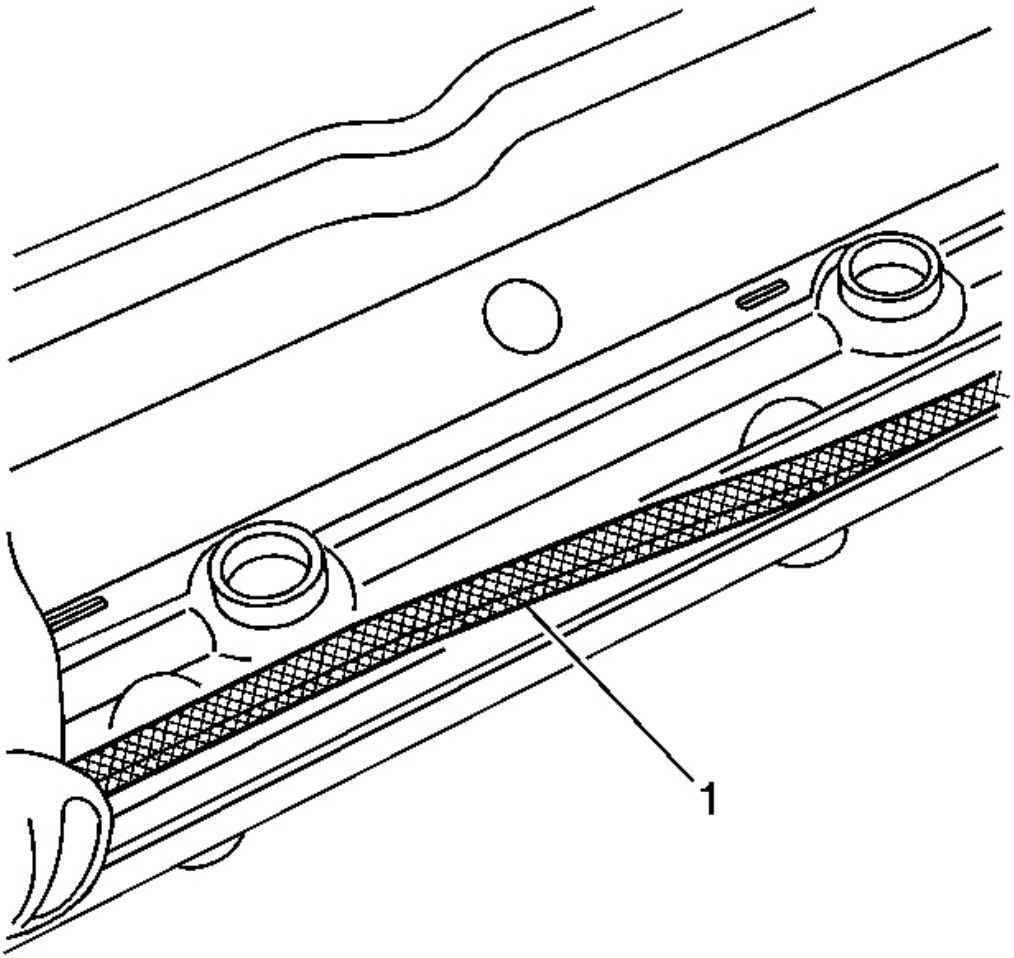

Fig. 115: Rocker Arm Cover & Gasket
Courtesy of GENERAL MOTORS CORP.

19. Remove the gasket (1) from the rocker cover. Discard the OLD gasket.

cardiagn.com

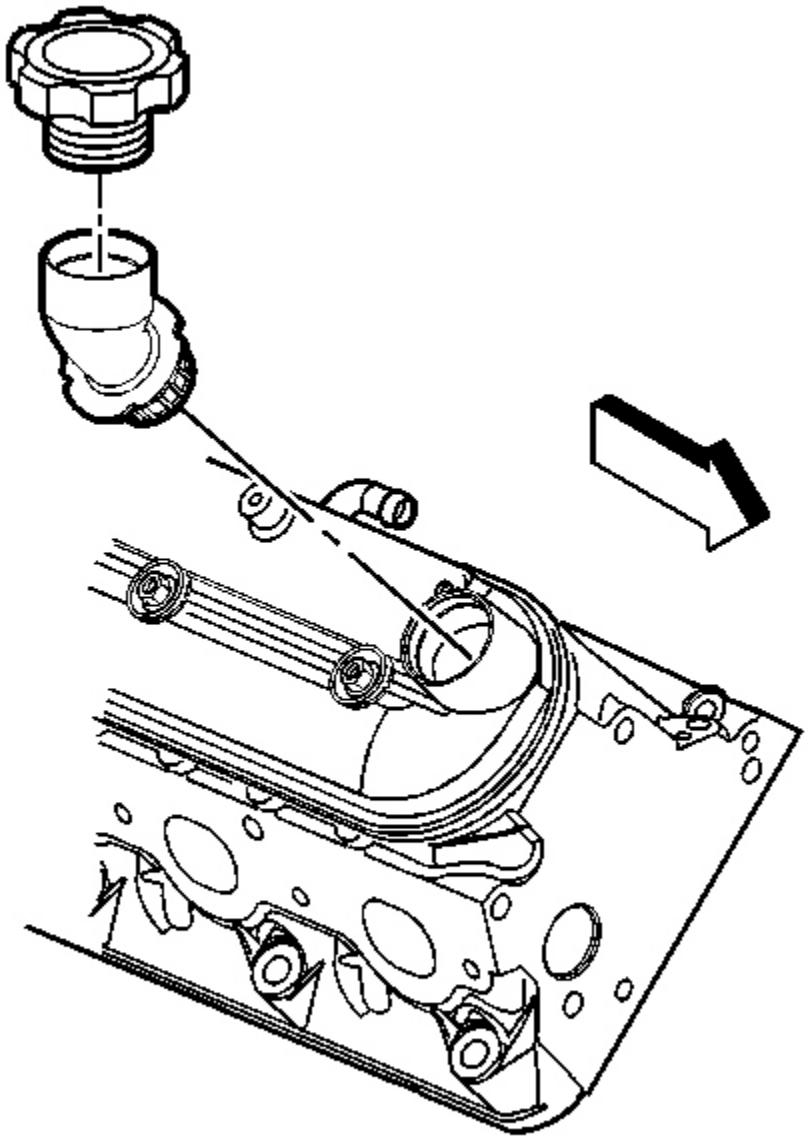

Fig. 116: View Of Oil Fill Tube
Courtesy of GENERAL MOTORS CORP.

20. Remove the oil fill cap from the oil fill tube.
21. Remove the oil fill tube, if required.
22. Discard the oil fill tube.

cardiagn.com

23. Clean and inspect the valve rocker arm cover. Refer to **Valve Rocker Arm Cover Cleaning and Inspection** .

Installation Procedure

IMPORTANT:

- **All gasket surfaces should be free of oil and other foreign material during assembly.**
- **DO NOT reuse the valve rocker arm cover gasket.**
- **The valve rocker arm cover bolt grommets may be reused.**
- **If the oil fill tube has been removed from the rocker arm cover, install a NEW fill tube during assembly.**

cardiagn.com

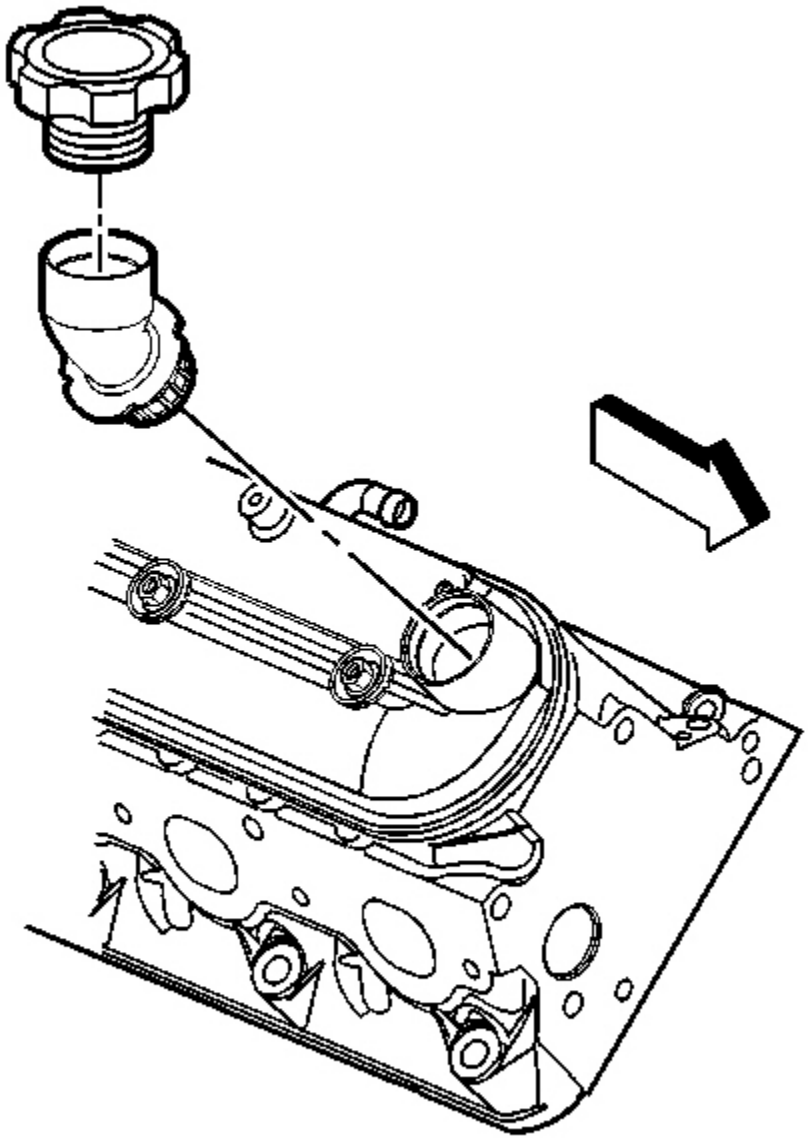

Fig. 117: View Of Oil Fill Tube
Courtesy of GENERAL MOTORS CORP.

1. Lubricate the O-ring seal of the NEW oil fill tube with clean engine oil.
2. Insert the NEW oil fill tube into the rocker arm cover.

   Rotate the tube clockwise until locked in the proper position.

cardiagn.com

3. Install the oil fill cap into the tube.

   Rotate the cap clockwise until locked in the proper position.

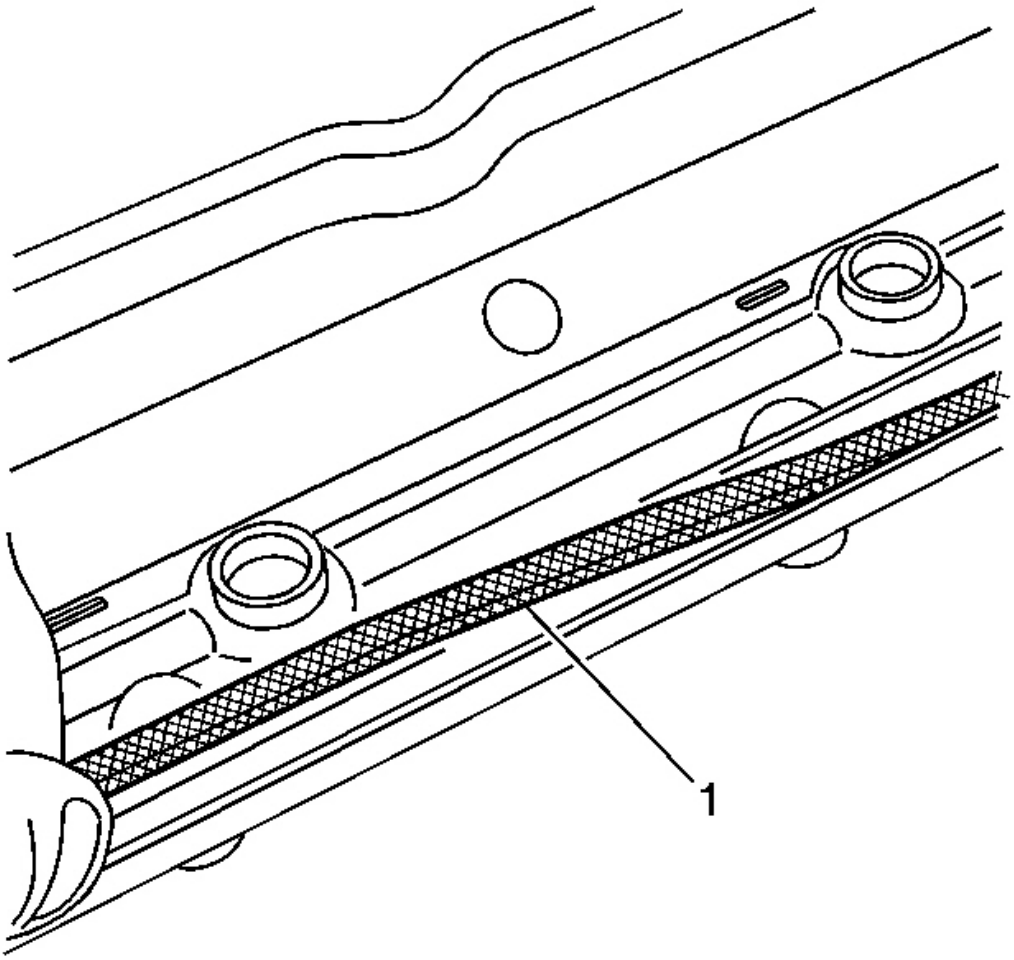

Fig. 118: Rocker Arm Cover & Gasket
Courtesy of GENERAL MOTORS CORP.

4. Install a NEW gasket (1) into the valve rocker cover lip.

cardiagn.com

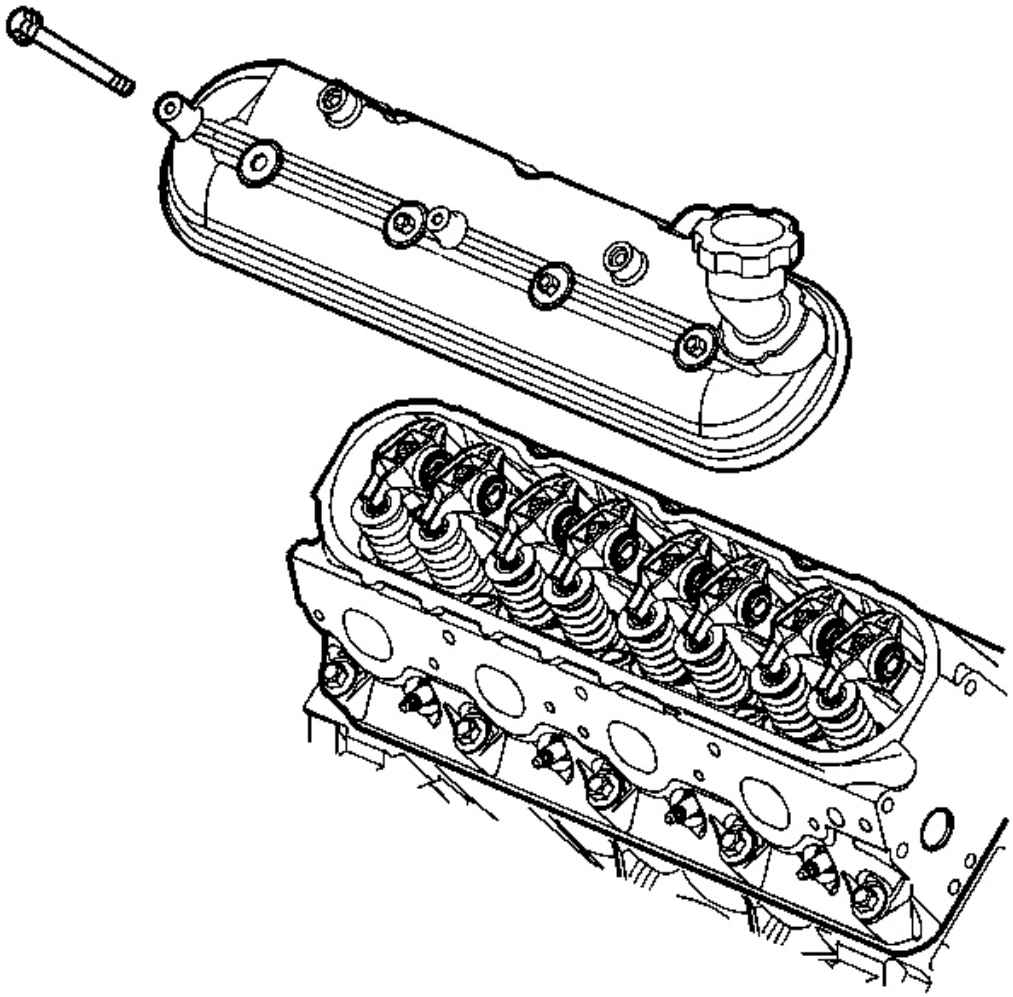

Fig. 119: View Of Valve Rocker Arm Cover & Bolts (Right)
Courtesy of GENERAL MOTORS CORP.

NOTE: Refer to Fastener Notice in Cautions and Notices.

5. Install the valve rocker arm cover onto the cylinder head.
6. Tighten the rocker arm cover bolts.

Tighten: Tighten the valve rocker arm cover bolts to 12 N.m (106 lb in).

cardiagn.com

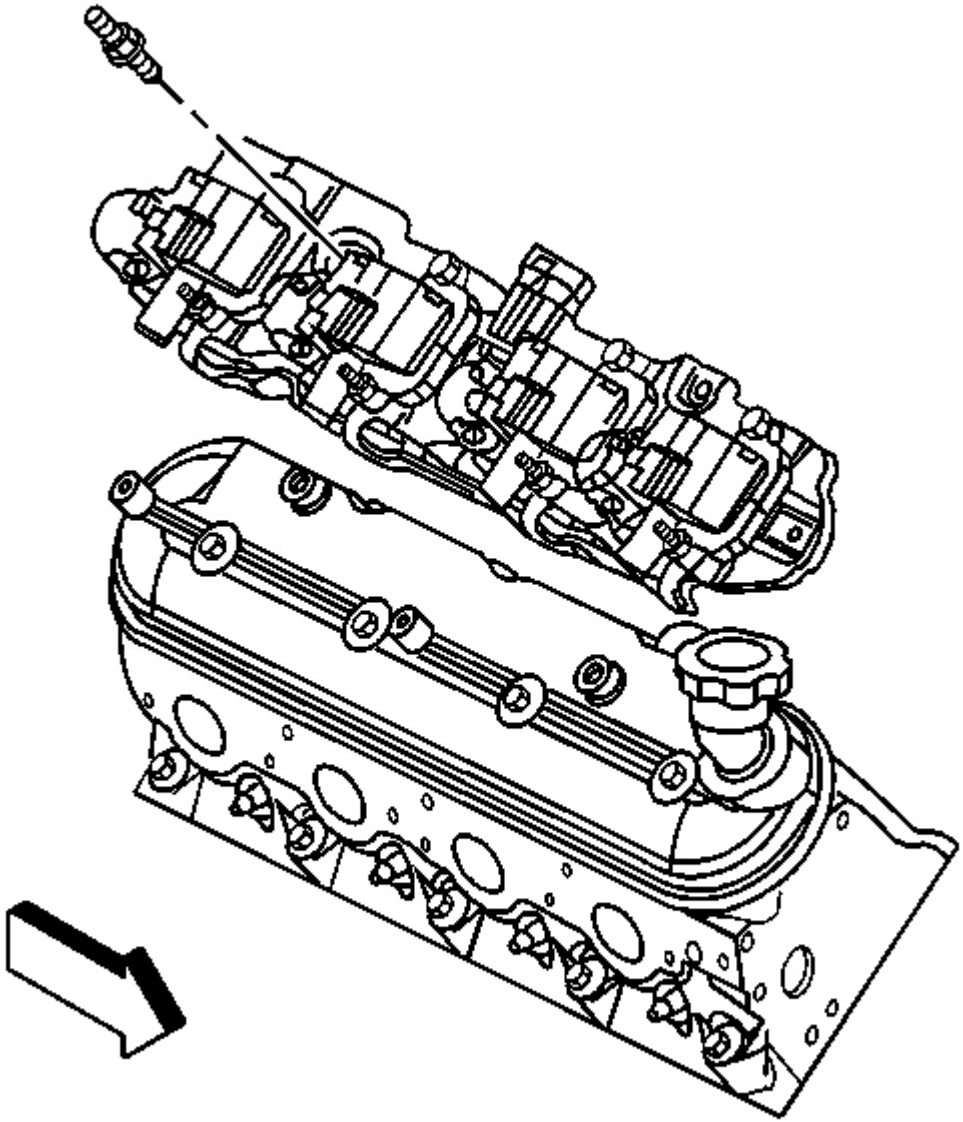

Fig. 120: Ignition Coil Bracket & Studs
Courtesy of GENERAL MOTORS CORP.

7. Install the ignition coil bracket.
8. Apply threadlock GM P/N 12345382 (Canadian P/N 10953489), or equivalent to the threads of the bracket studs.
9. Install the ignition coil bracket studs.

cardiagn.com

Tighten: Tighten the ignition coil bracket studs to 12 N.m (106 lb in).

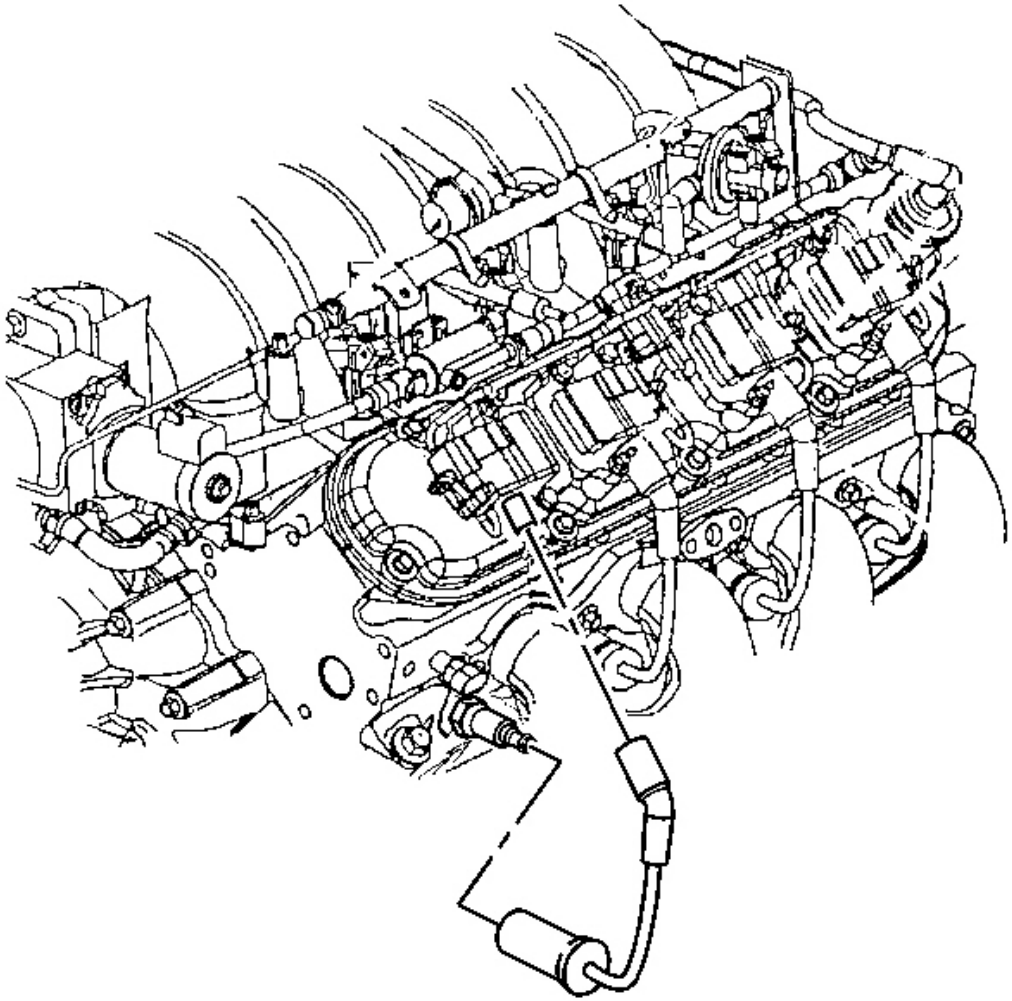

Fig. 121: Spark Plug Wire
Courtesy of GENERAL MOTORS CORP.

10. Connect the ignition coil wire harness main electrical connector.
11. Install the spark plug wires to the ignition coils.

cardiagn.com

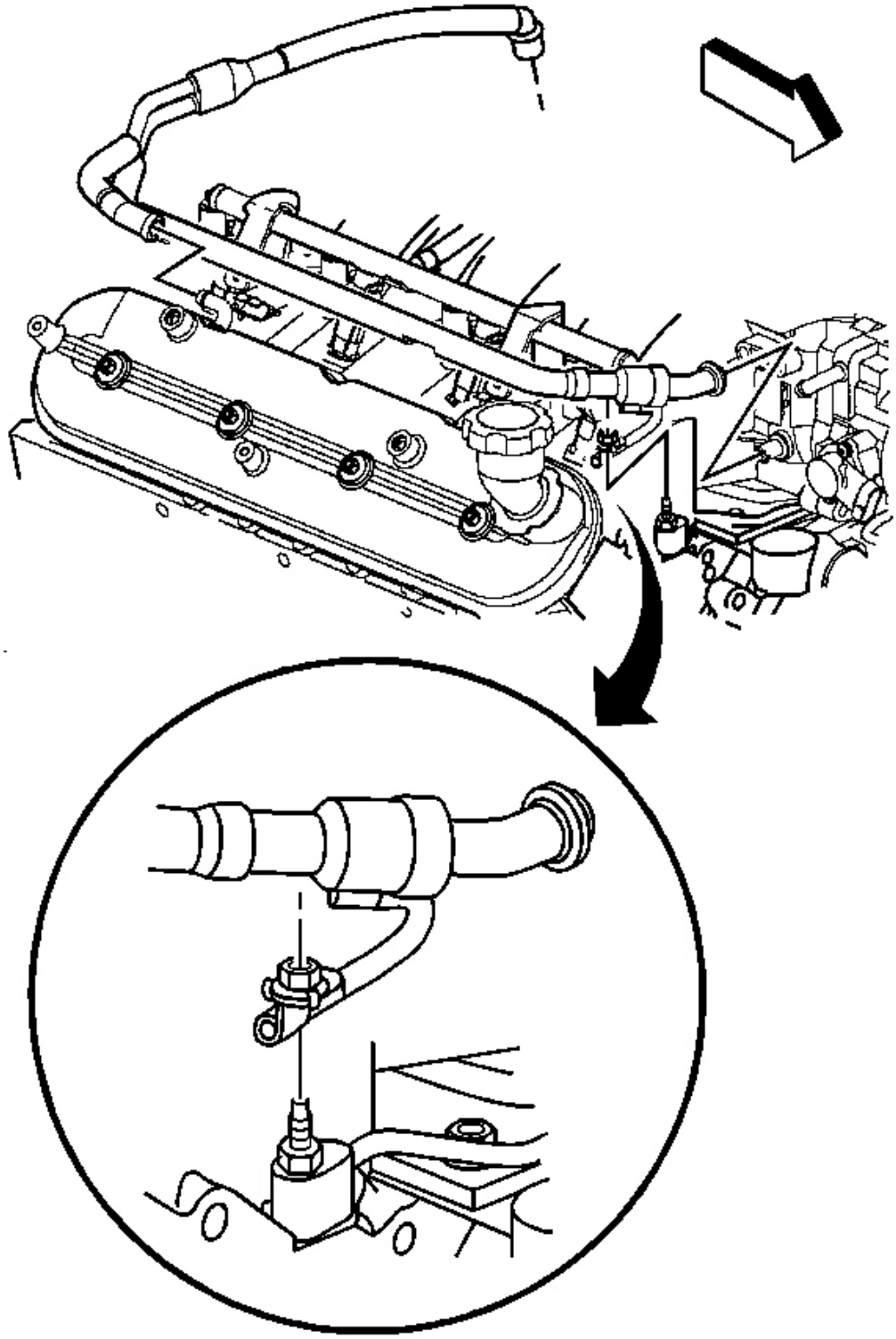

cardiagn.com

Fig. 122: Right Rocker Arm Cover & PCV Valve Pipe
Courtesy of GENERAL MOTORS CORP.

12. If equipped with the RPO LS1 engine, install the PCV valve pipe to the right rocker arm cover and intake manifold.
13. Install the PCV valve pipe strap nut.

    Tighten: Tighten the PCV valve strap nut to 12 N.m (106 lb in).

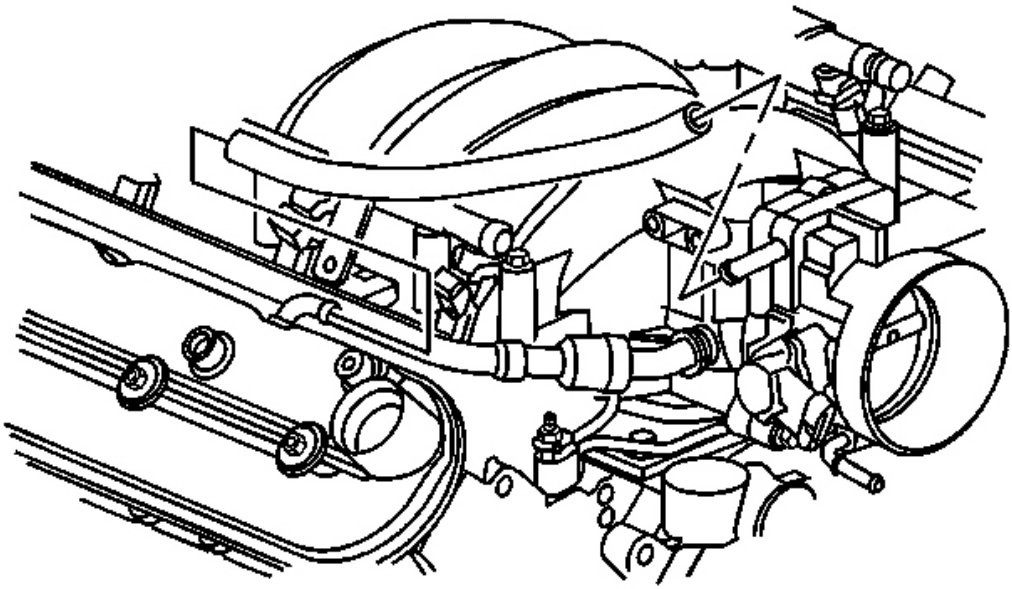

Fig. 123: PCV Tube & Rocker Arm Cover
Courtesy of GENERAL MOTORS CORP.

14. Install the PCV tube to the throttle body and rocker arm cover.
15. Connect the TP sensor harness clip to the PCV tube.

cardiagn.com

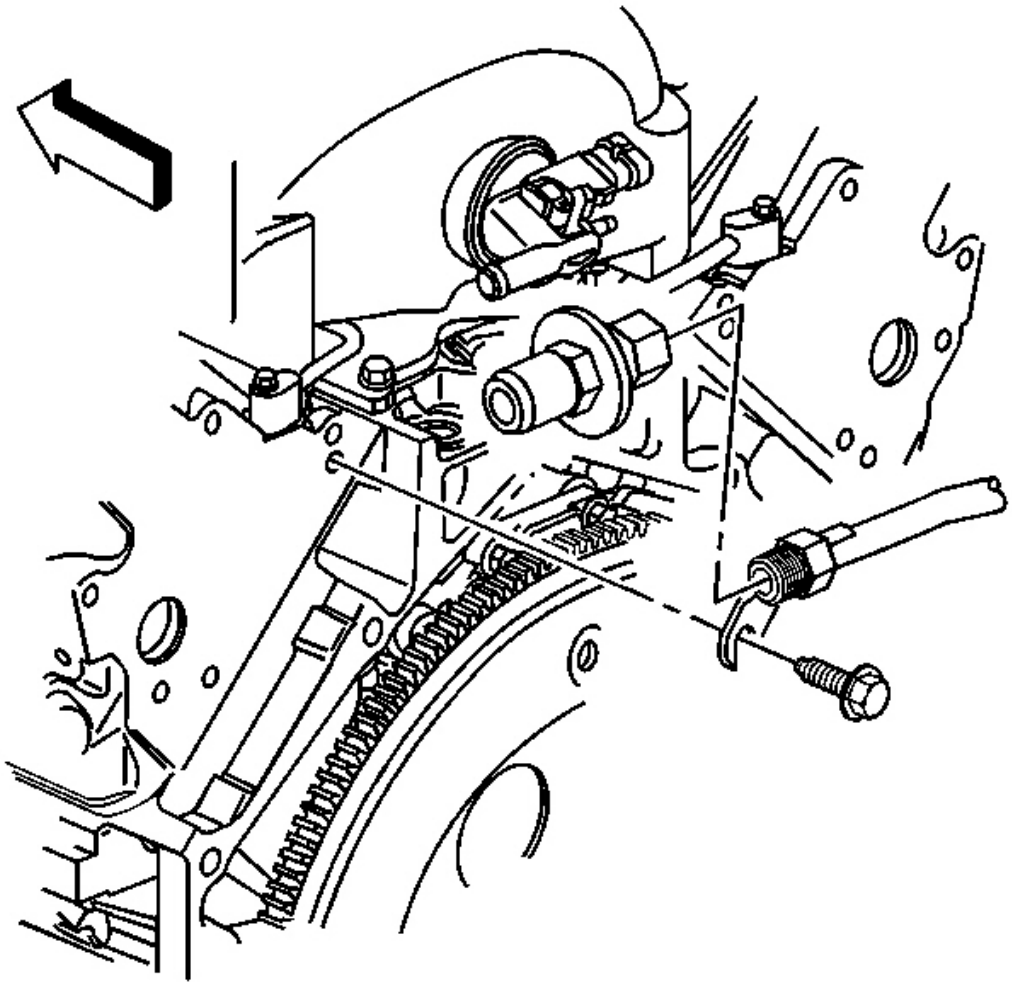

Fig. 124: AIR Pipe Gasket, Exhaust Manifold & Bolts
Courtesy of GENERAL MOTORS CORP.

16. Position the AIR pipe into place.
17. Slide the AIR pipe behind the bolt on the rear of the left cylinder head.

cardiagn.com

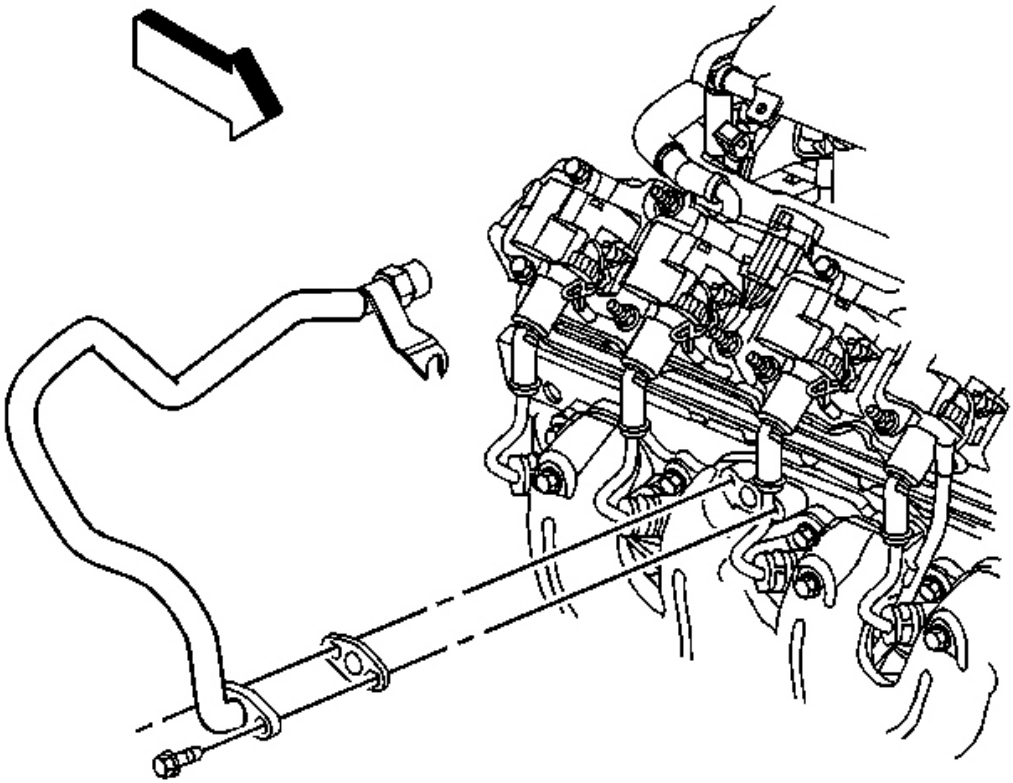

Fig. 125: AIR Pipe & Bolts
Courtesy of GENERAL MOTORS CORP.

18. Install the AIR pipe gasket to the exhaust manifold.
19. Install the AIR pipe to the exhaust manifold.
20. Install the AIR pipe bolts at the exhaust manifold.
21. Tighten the AIR pipe bolts.

Tighten: Tighten the AIR pipe bolts to 20 N.m (15 lb ft).

cardiagn.com

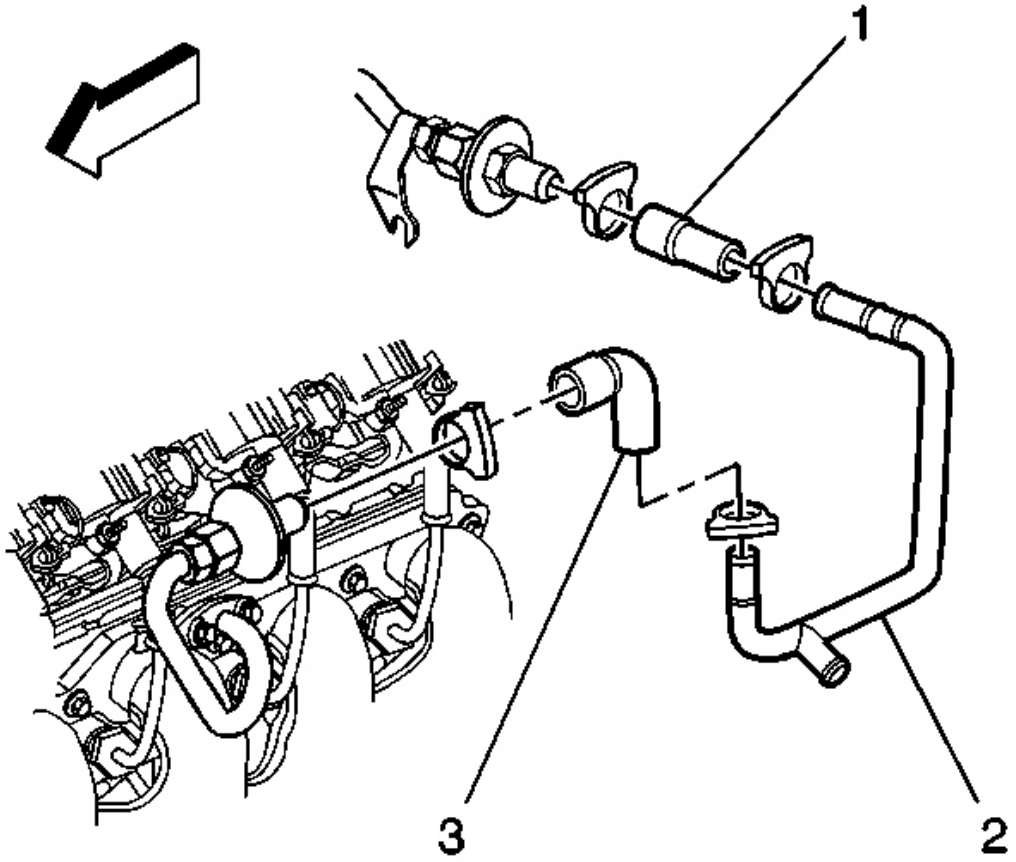

Fig. 126: AIR Hose Clamp & Check Valve
Courtesy of GENERAL MOTORS CORP.

22. Connect the AIR hose (1) to the check valve.
23. Install the AIR hose clamp.

cardiagn.com

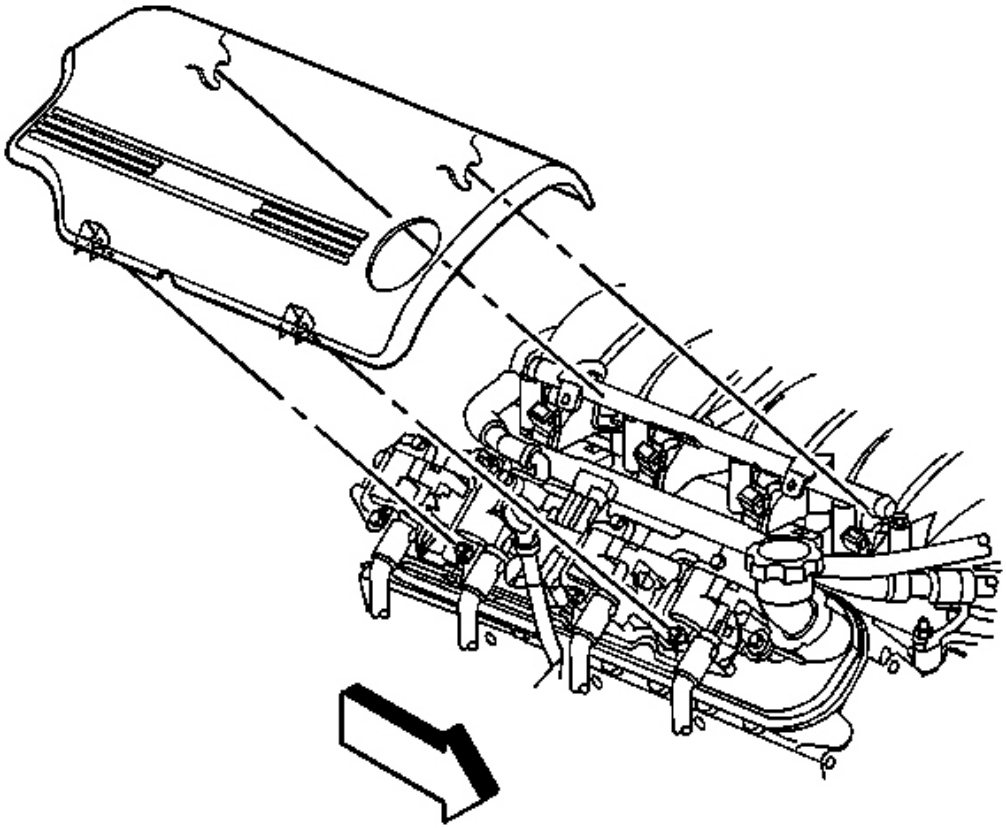

Fig. 127: Right Fuel Injection Rail Cover
Courtesy of GENERAL MOTORS CORP.

24. Install the right fuel injection rail cover.

VALVE ROCKER ARM AND PUSH ROD REPLACEMENT

Removal Procedure

cardiagn.com

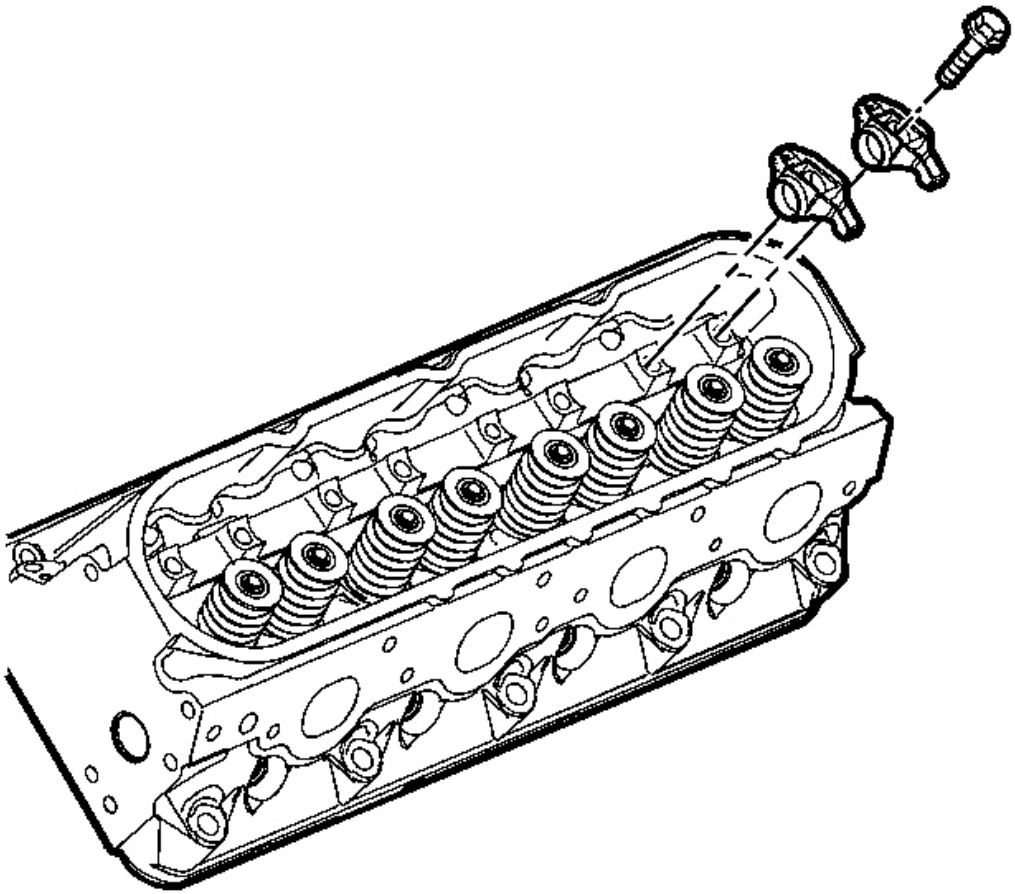

Fig. 128: View Of Valve Rocker Arms & Bolts
Courtesy of GENERAL MOTORS CORP.

IMPORTANT: Place the valve rocker arms, valve pushrods, and pivot support, in a rack so that they can be installed in the same location from which they were removed.

1. Remove the valve rocker arm covers. Refer to **Valve Rocker Arm Cover Replacement - Left** or **Valve Rocker Arm Cover Replacement - Right** .
2. Remove the valve rocker arm bolts.
3. Remove the valve rocker arms.

cardiagn.com

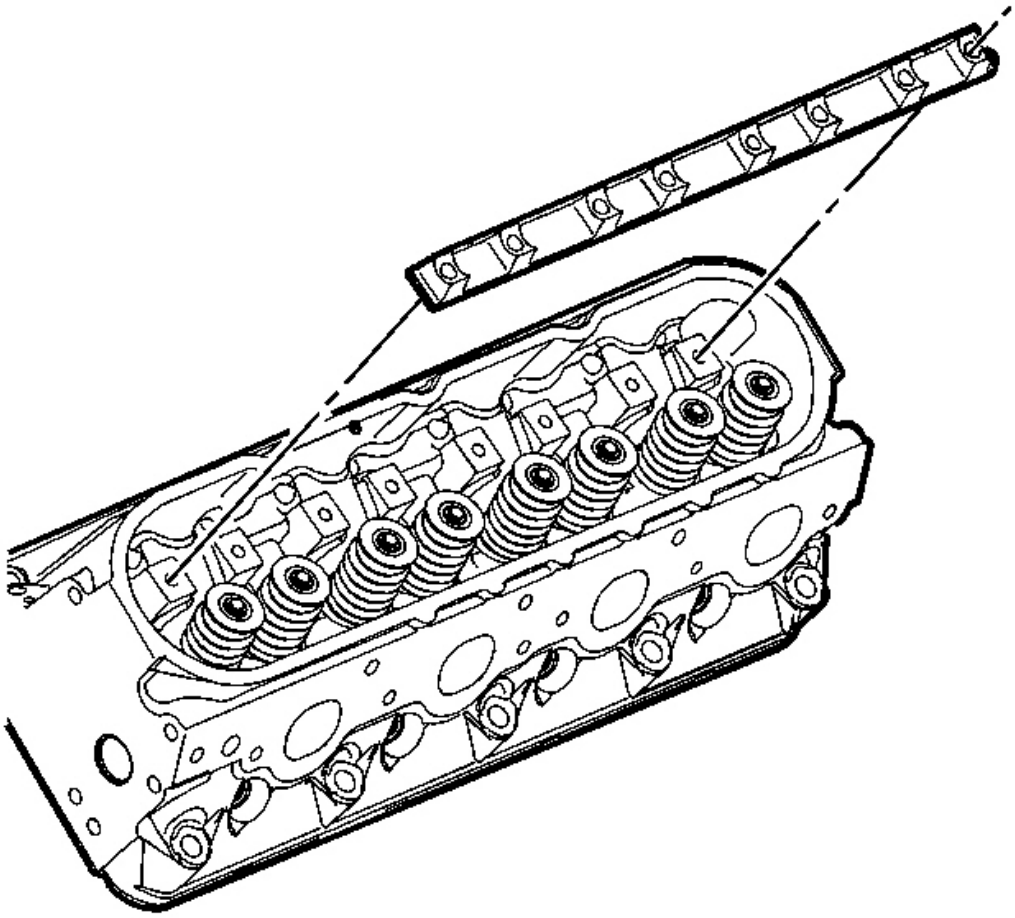

Fig. 129: View Of Valve Rocker Arm Pivot Support
Courtesy of GENERAL MOTORS CORP.

4. Remove the valve rocker arm pivot support.

cardiagn.com

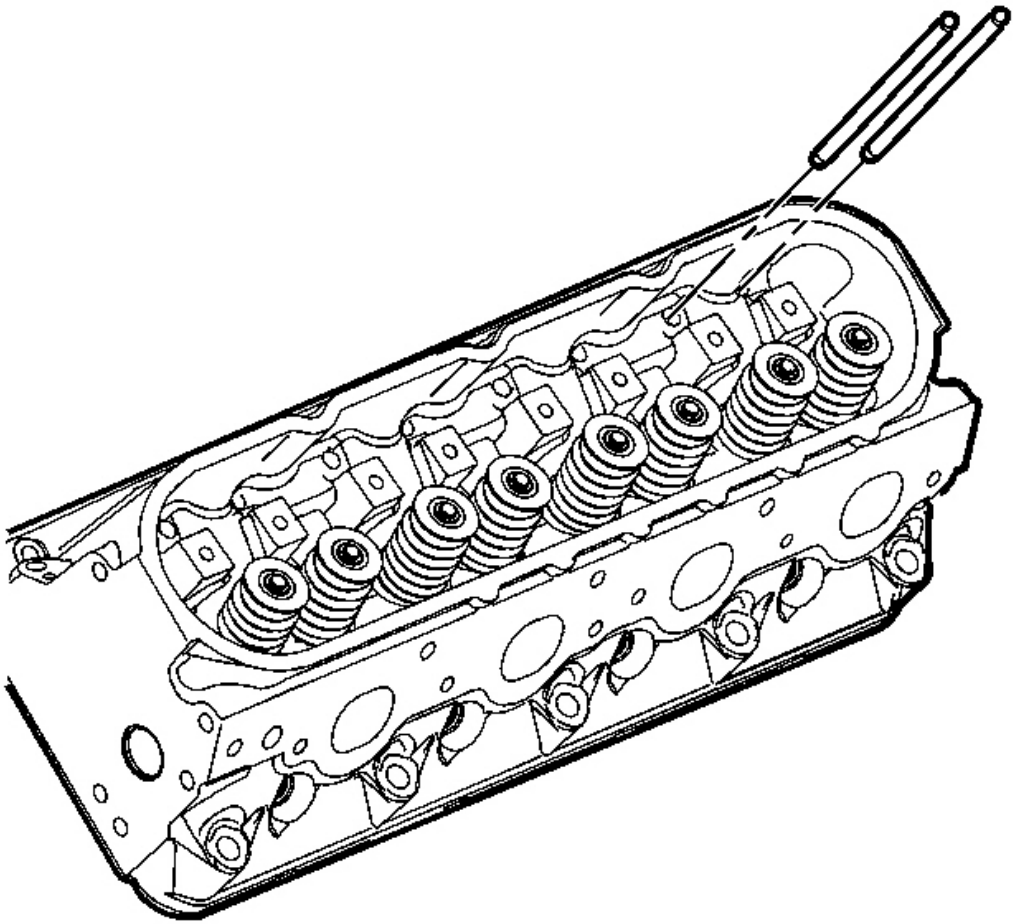

Fig. 130: View Of Pushrods
Courtesy of GENERAL MOTORS CORP.

5. Remove the pushrods.
6. Clean and inspect the valve rocker arms and pushrods. Refer to **Valve Rocker Arm and Push Rods Cleaning and Inspection** .

Installation Procedure

IMPORTANT: When reusing the valvetrain components, always install the components to the original location and position.

Valve lash is net build, no valve adjustment is required.

cardiagn.com

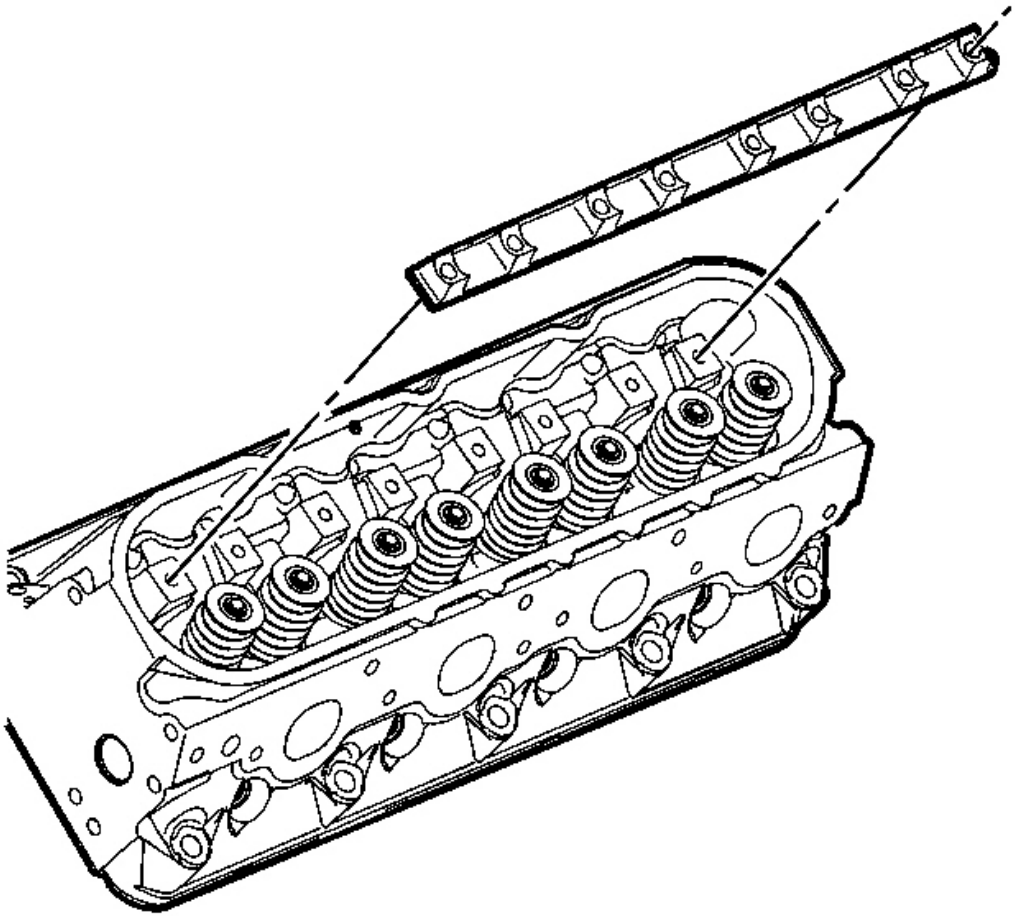

Fig. 131: View Of Valve Rocker Arm Pivot Support
Courtesy of GENERAL MOTORS CORP.

1. Lubricate the valve rocker arms and pushrods with clean engine oil.
2. Lubricate the flange of the valve rocker arm bolts with clean engine oil.

   Lubricate the flange or washer surface of the bolt that will contact the valve rocker arm.

3. Install the valve rocker arm pivot support.

cardiagn.com

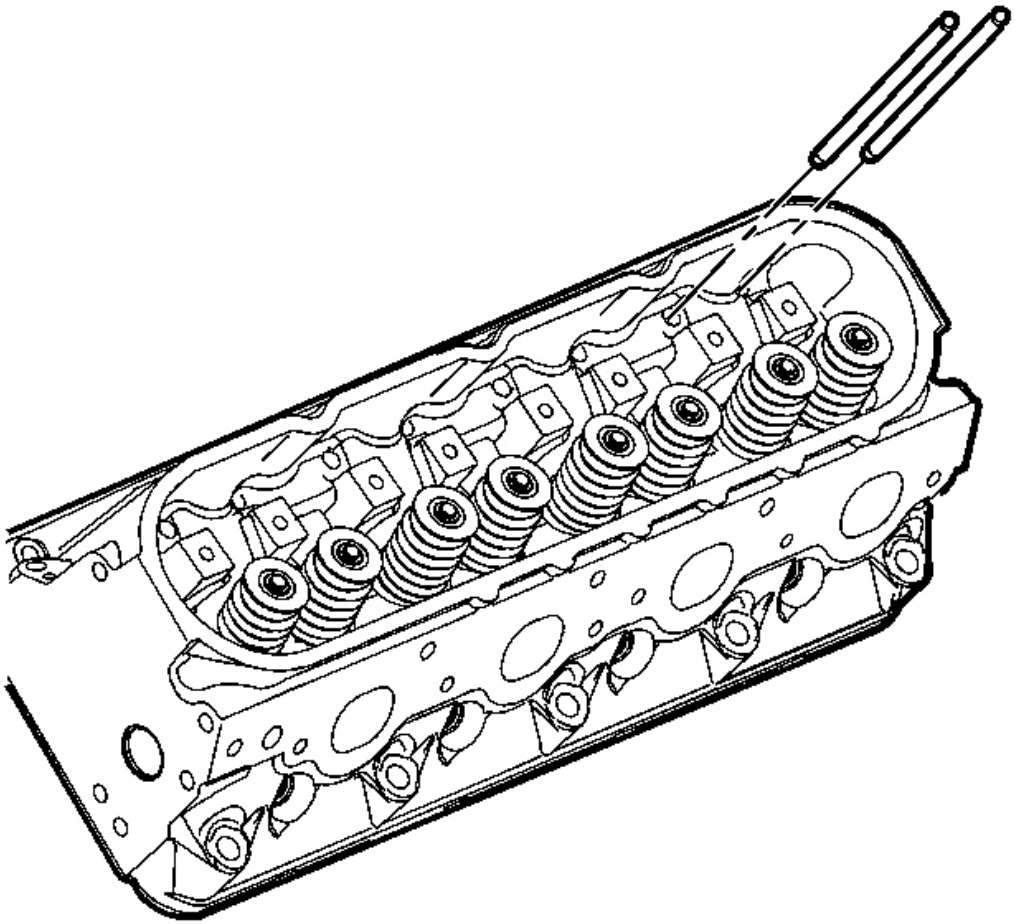

Fig. 132: View Of Pushrods
Courtesy of GENERAL MOTORS CORP.

IMPORTANT: Make sure that the pushrods seat properly to the valve lifter sockets.

4. Install the pushrods.

cardiagn.com

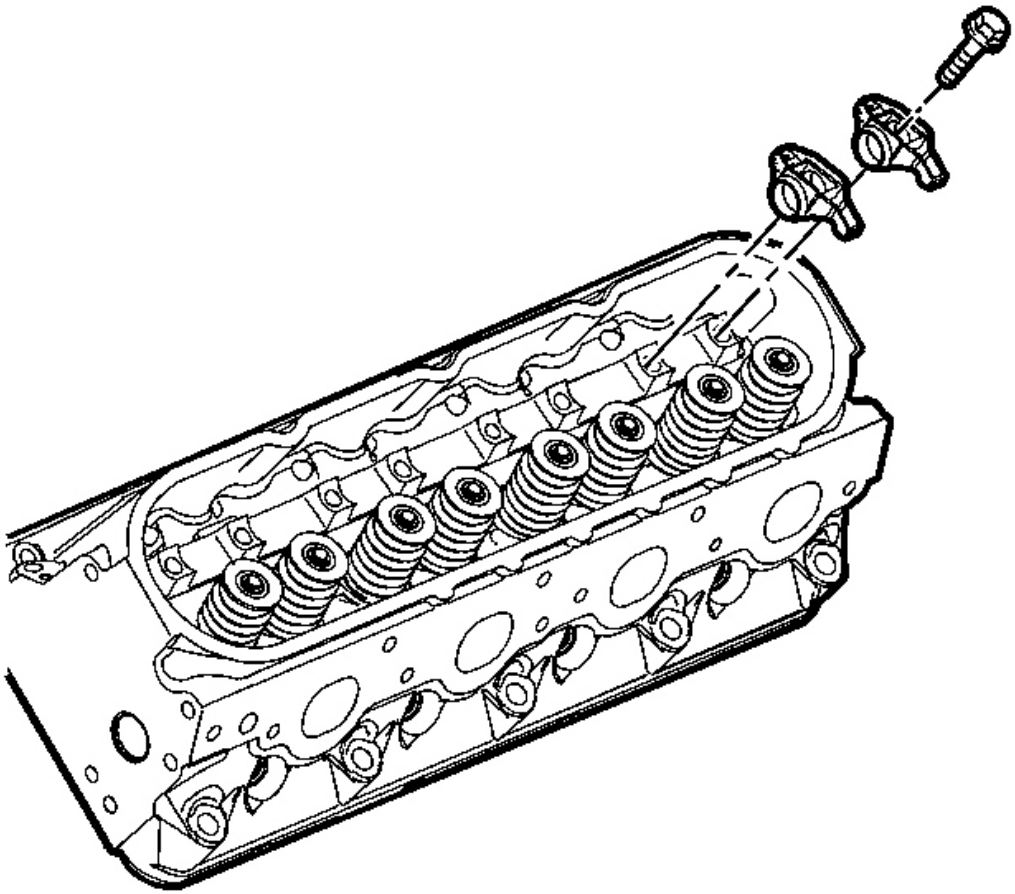

Fig. 133: View Of Valve Rocker Arms & Bolts
Courtesy of GENERAL MOTORS CORP.

IMPORTANT: Make sure that the pushrods seat properly to the ends of the rocker arms.

5. Install the rocker arms and bolts.

   DO NOT tighten the rocker arm bolts at this time.

cardiagn.com

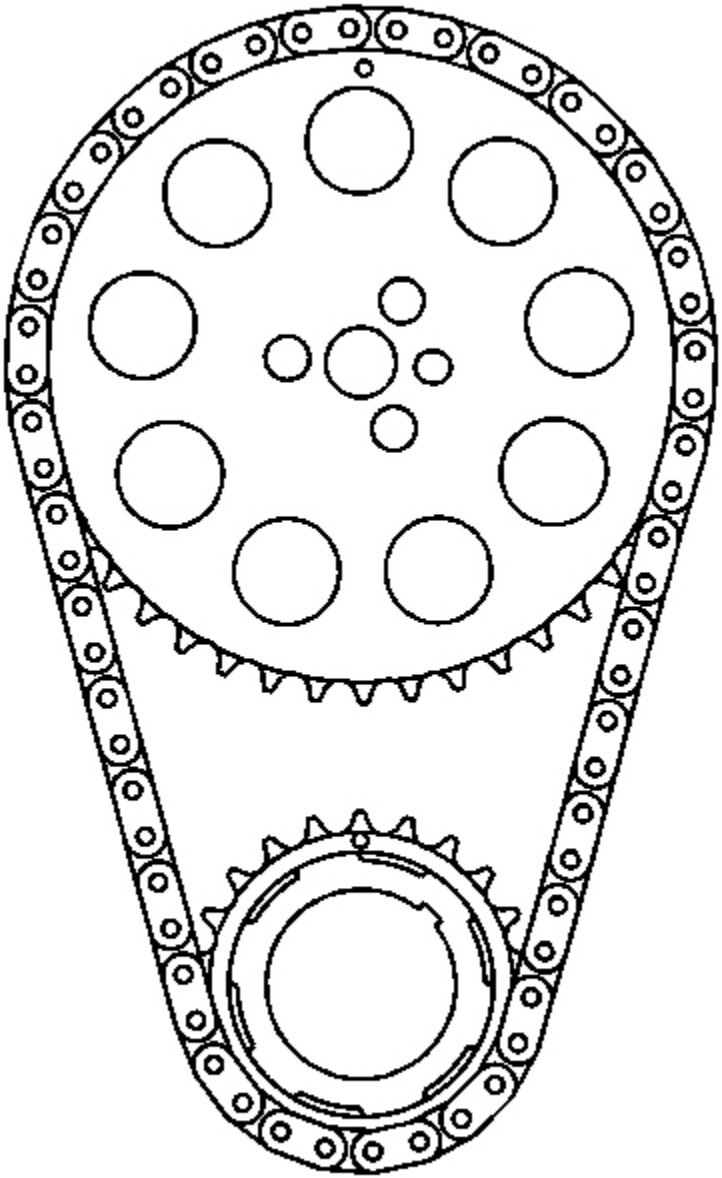

Fig. 134: View of Crankshaft
Courtesy of GENERAL MOTORS CORP.

NOTE: **Refer to Fastener Notice in Cautions and Notices.**

cardiagn.com

6. Rotate the crankshaft until the number one piston is at top dead center (TDC) of the compression stroke.

   In this position, cylinder number one rocker arms will be off lobe lift, and the crankshaft sprocket key will be at the 1:30 position.

   The engine firing order is 1,8,7,2,6,5,4,3.

   Cylinders 1,3,5, and 7 are left bank.

   Cylinders 2,4,6, and 8 are right bank.

7. With the engine in the number one firing position, tighten the following valve rocker arm bolts:

   Tighten:
   - Tighten the exhaust valve rocker arm bolts 1,2,7, and 8 to 30 N.m (22 lb ft).
   - Tighten the intake valve rocker arm bolts 1,3,4, and 5 to 30 N.m (22 lb ft).

8. Rotate the crankshaft 360 degrees.
9. Tighten the following valve rocker arm bolts:

   Tighten:
   - Tighten the exhaust valve rocker arm bolts 3,4,5, and 6 to 30 N.m (22 lb ft).
   - Tighten the intake valve rocker arm bolts 2,6,7, and 8 to 30 N.m (22 lb ft).

10. Install the valve rocker arm covers. Refer to **Valve Rocker Arm Cover Replacement - Left** or **Valve Rocker Arm Cover Replacement - Right** .

VALVE STEM OIL SEAL AND VALVE SPRING REPLACEMENT

Tools Required

- **J 22794** Spark Plug Port Adapter
- **J 38606** Valve Spring Compressor (Head-on)
- J 42078 Valve Stem Oil Seal Installer

Removal Procedure

cardiagn.com

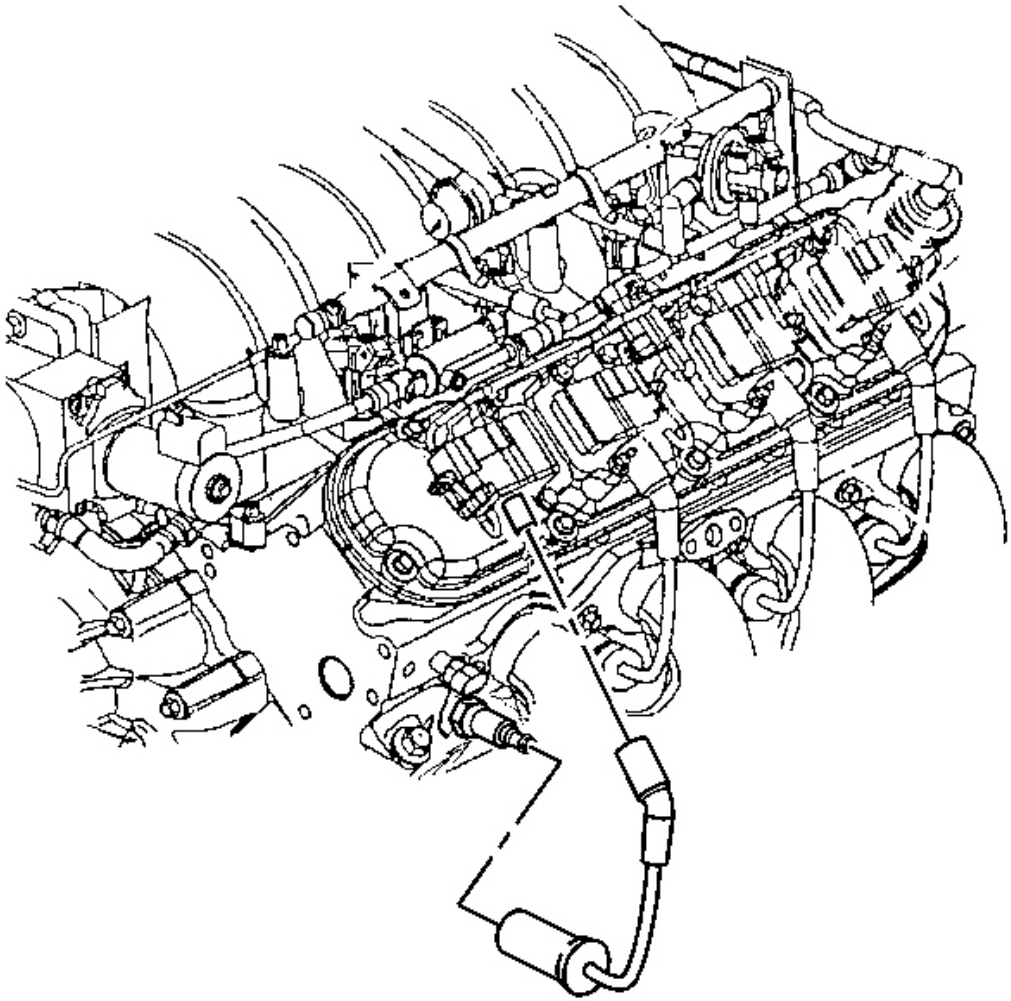

Fig. 135: Spark Plug Wire
Courtesy of GENERAL MOTORS CORP.

1. Remove the valve rocker arms. Refer to **Valve Rocker Arm and Push Rod Replacement** .
2. Remove the spark plug wire from the spark plug for the cylinder to be serviced.
    - Twist the plug wire 1/2 turn.
    - Pull only on the boot in order to remove the wire from the spark plug.

cardiagn.com

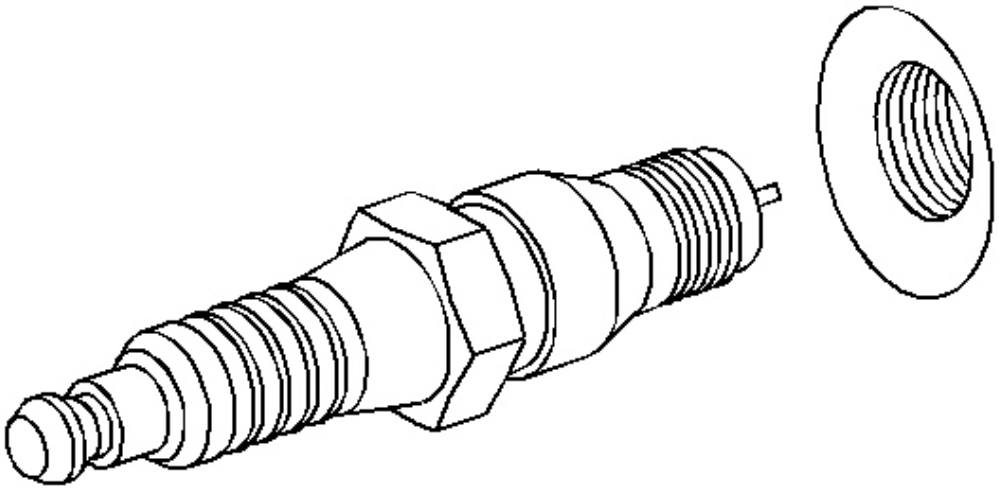

Fig. 136: View Of Spark Plug
Courtesy of GENERAL MOTORS CORP.

IMPORTANT: Remove the spark plugs from the cylinder head with the engine at room temperature.

3. Loosen the spark plug 1 or 2 turns.
4. Brush or use compressed air to remove any dirt or debris around the spark plug.
5. Remove the spark plug.

cardiagn.com

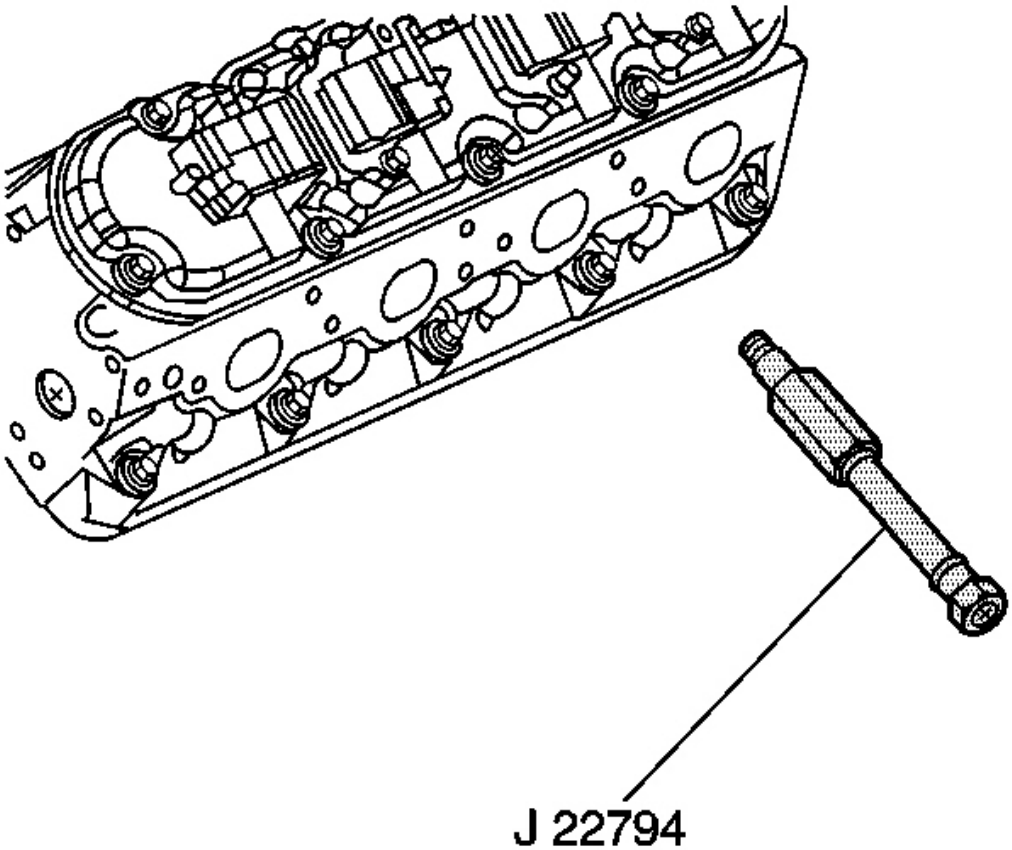

Fig. 137: Install/Remove J 22794 Spark Plug Hole
Courtesy of GENERAL MOTORS CORP.

6. Install the **J 22794** into the spark plug hole.
7. Attach an air hose to **J 22794** .
8. Tap the end of the valve stem with a plastic face hammer in order to loosen any varnish on the valve stem keys.

cardiagn.com

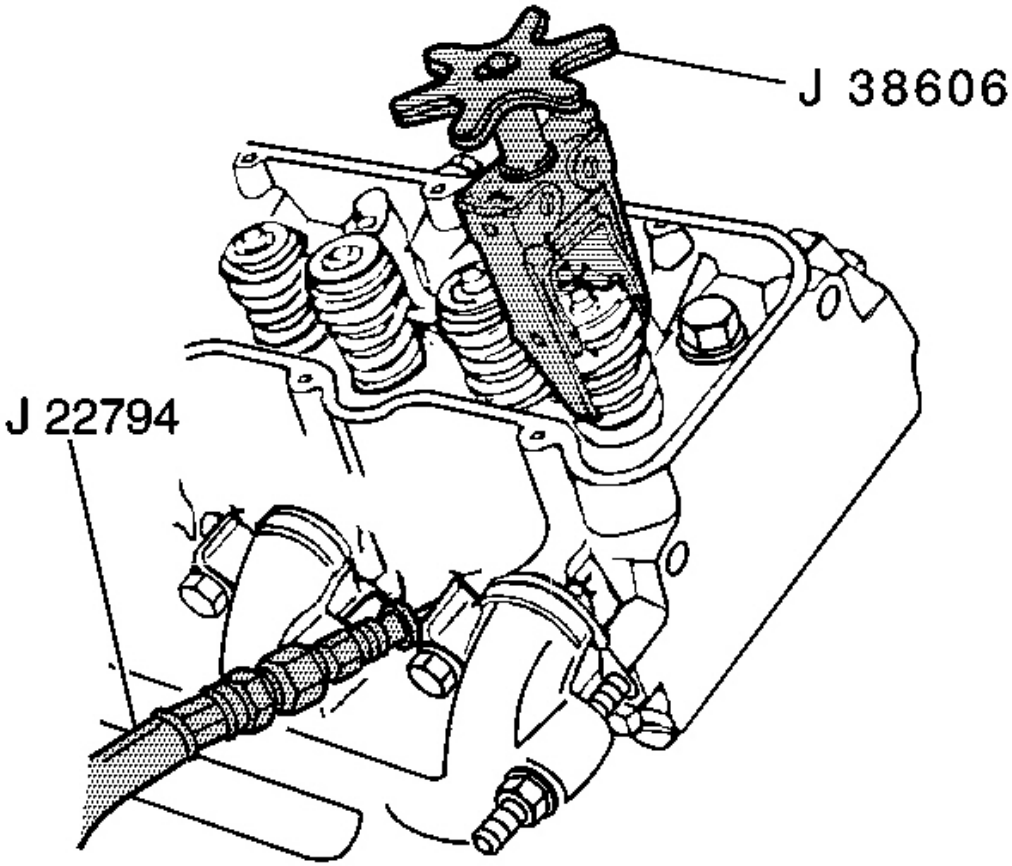

Fig. 138: J 38606, J 5892-D & Valve Spring
Courtesy of GENERAL MOTORS CORP.

9. Use the **J 38606** in order to compress the valve spring.

cardiagn.com

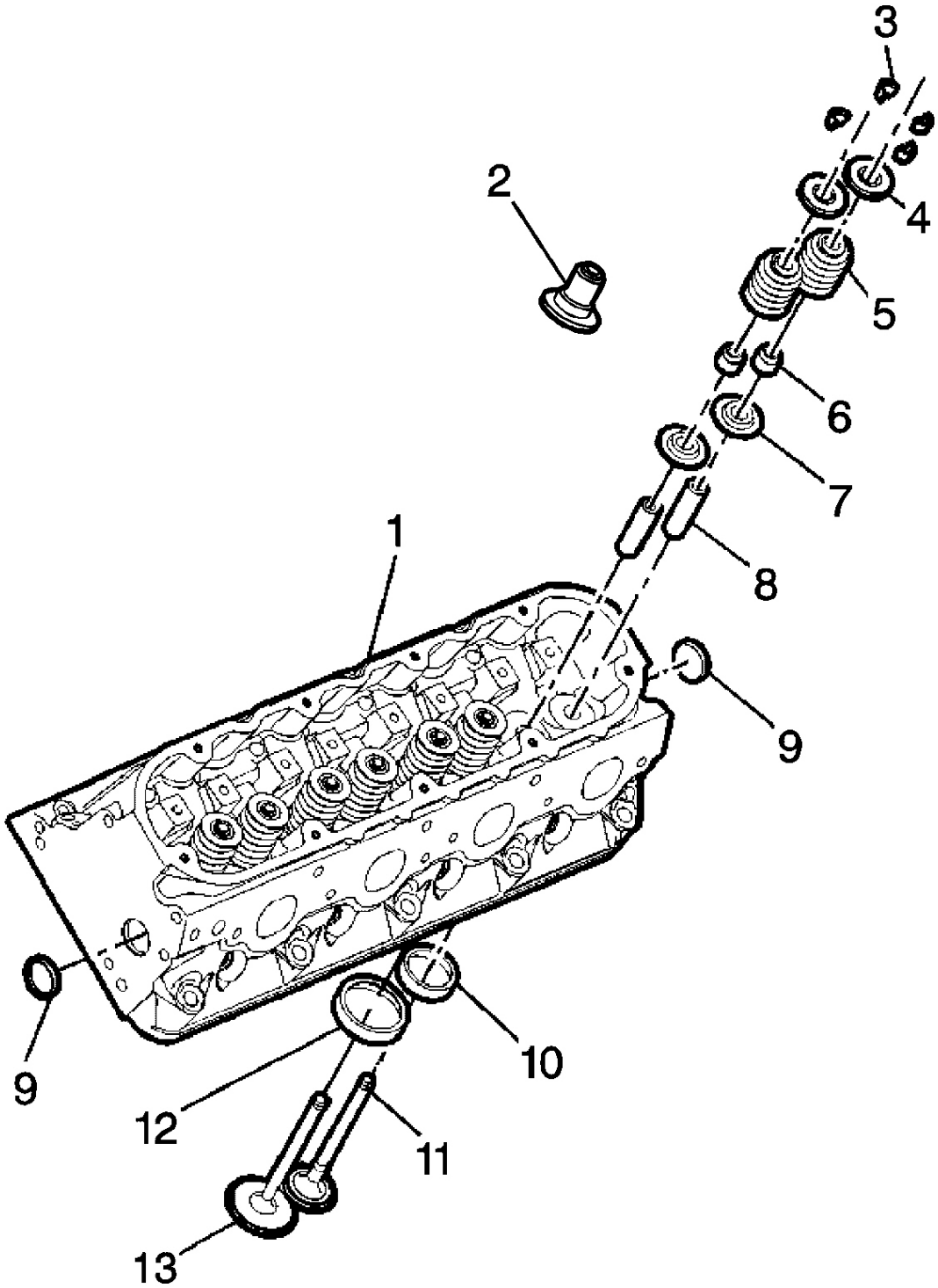

Fig. 139: Valve Stem Keys
Courtesy of GENERAL MOTORS CORP.

cardiagn.com

10. Remove the valve stem keys (3).
11. Carefully release the valve spring tension.
12. Remove the **J 38606** .
13. Remove the valve spring cap (4).
14. Remove the valve spring (5).

IMPORTANT: A second design valve stem oil seal and shim may be used on later engines.
A separate spring shim is not required with the second design seal and shim.

15. Remove the valve stem oil seal (6) (first design).
16. Remove the valve spring shim (7) (first design).
17. Remove the valve stem oil seal and shim (2) (second design).

Installation Procedure

IMPORTANT: The LS6 engine uses a copper plated spring shim. A shim of the same design must be installed during assembly.

cardiagn.com

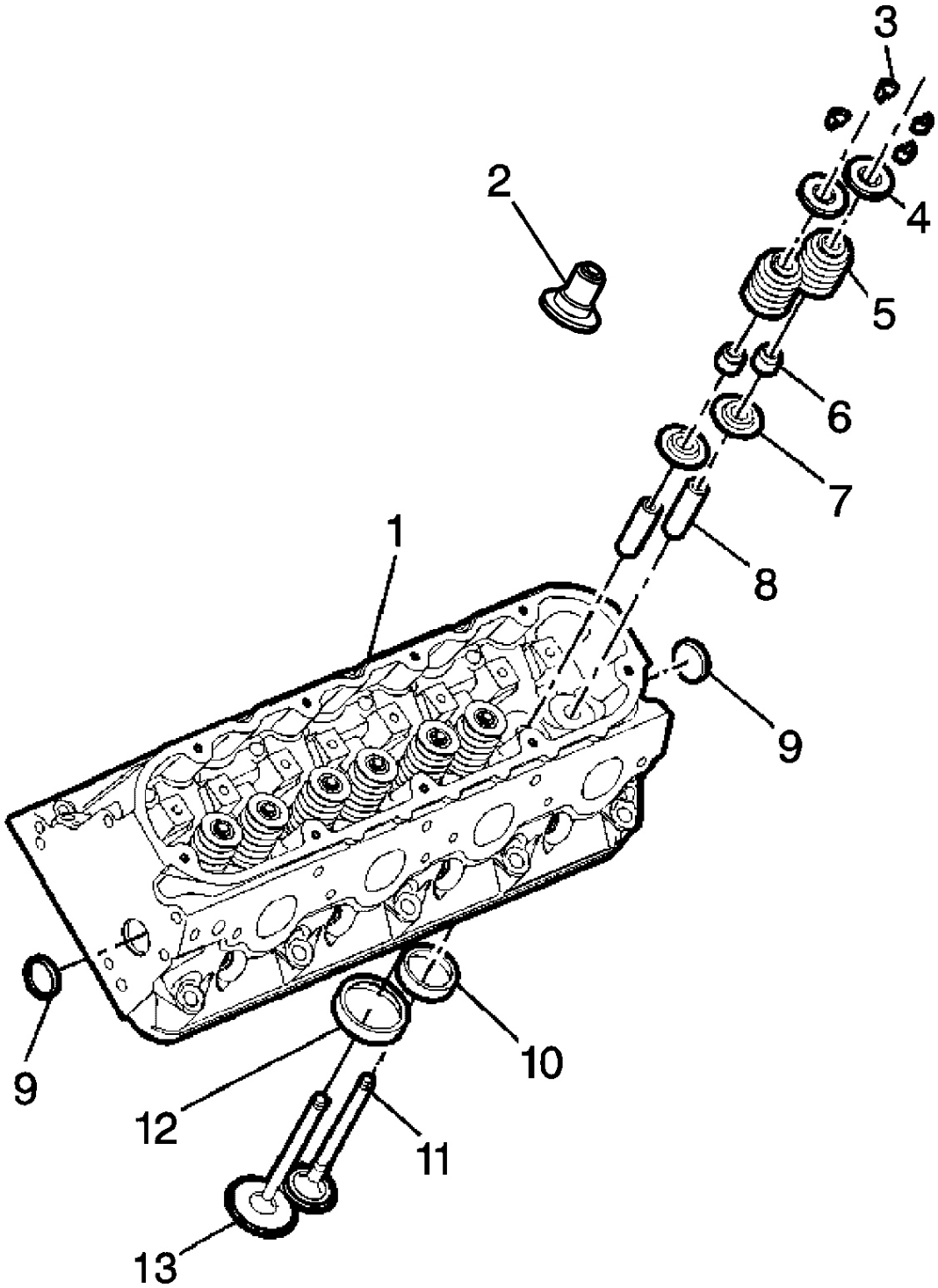

Fig. 140: Valve Stem Keys
Courtesy of GENERAL MOTORS CORP.

cardiagn.com

1. Clean the cylinder head valve spring seat and/or shim area.
2. Install the valve spring shim (7) (first design).
3. Install the valve stem oil seal and shim (2) (second design).

The J 42078 is not required for installation of the second design seal and shim.

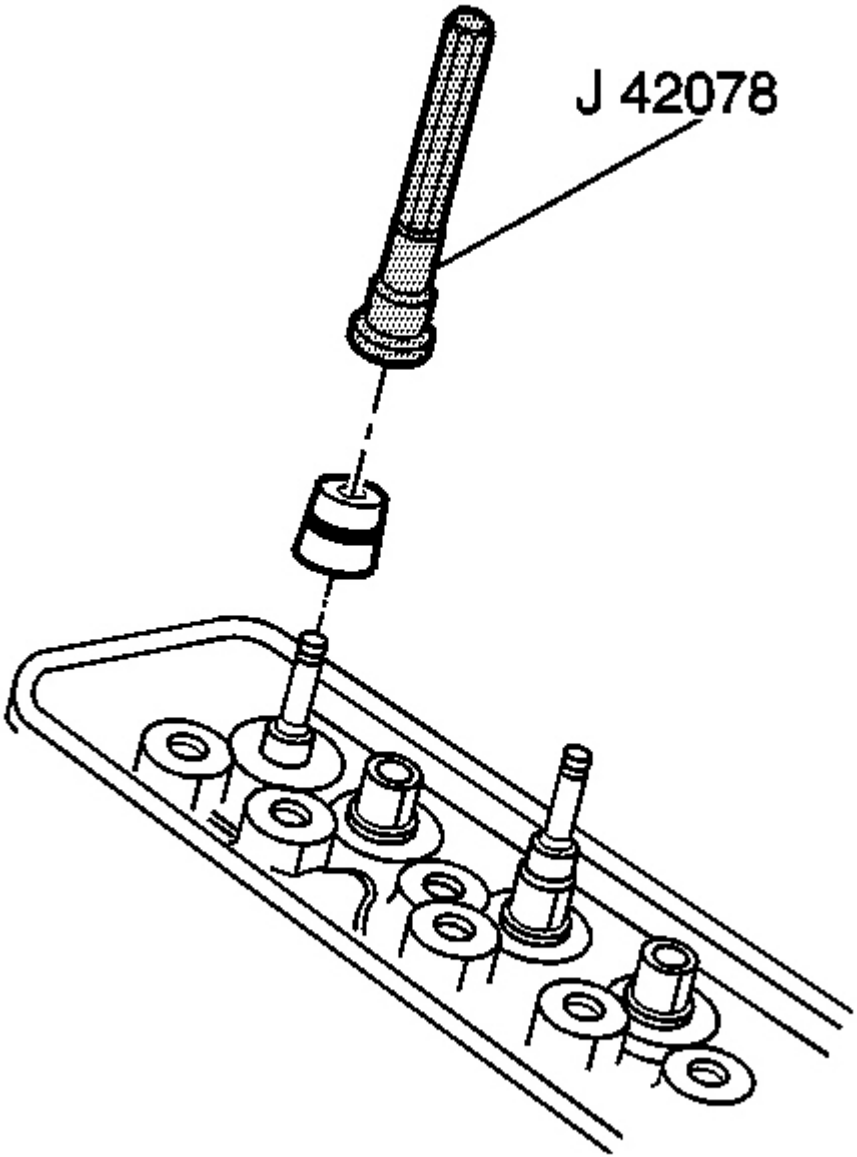

cardiagn.com

Fig. 141: J 42078, Valve Stem Oil Seal & Bolt
Courtesy of GENERAL MOTORS CORP.

IMPORTANT: The valve stem oil seal alignment and position on the valve guide is critical.
An improperly installed valve stem oil seal may lead to excessive oil consumption, and increased vehicle emissions.

4. Install the valve stem oil seal (first design) onto the guide.
   1. Lubricate the valve guide and valve stem oil seal with clean engine oil.
   2. Install the valve stem oil seal (first design) onto the valve stem. Push the seal down until the seal contacts the valve guide.
   3. Use the J 42078 in order to install the oil seal.

      Push or lightly tap the tool until the tool bottoms against the valve spring shim.

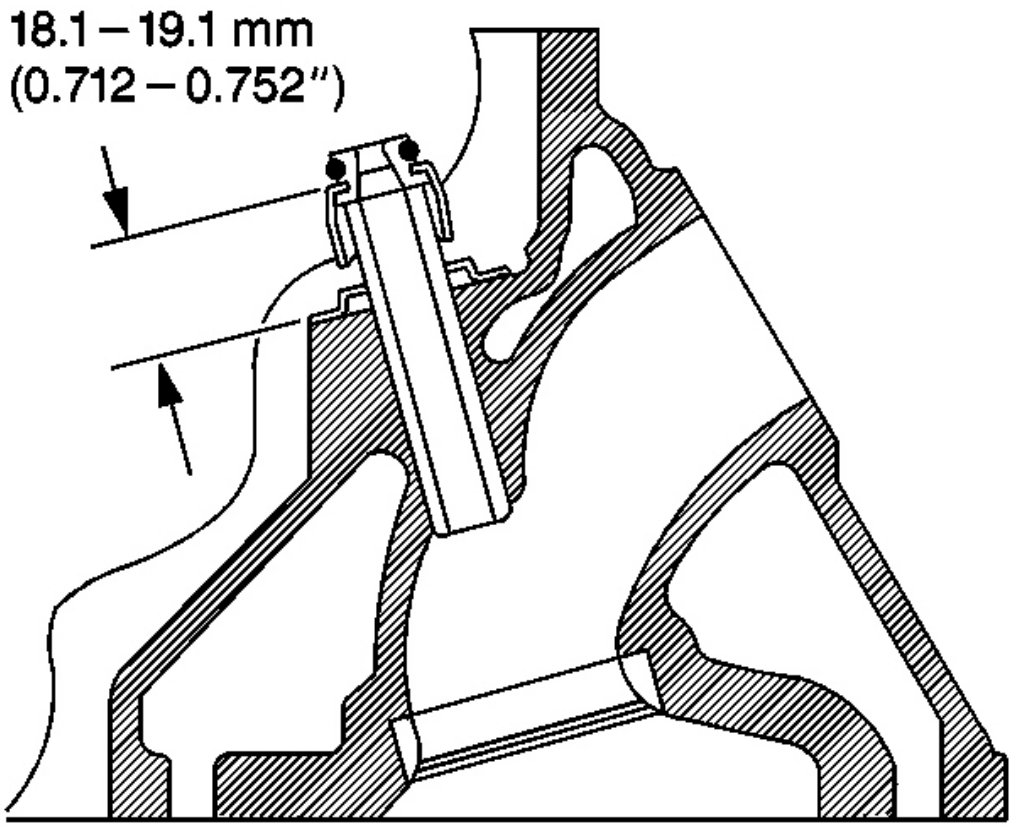

cardiagn.com

Fig. 142: Measuring Valve Stem Oil Seal For Properly Installed Height
Courtesy of GENERAL MOTORS CORP.

5. Measure the valve stem oil seal (first design) for the properly installed height.

   There should be a 18.1-19.1 mm (0.712-0.752 in) gap between the top edge of the oil seal body and the valve spring shim surface.

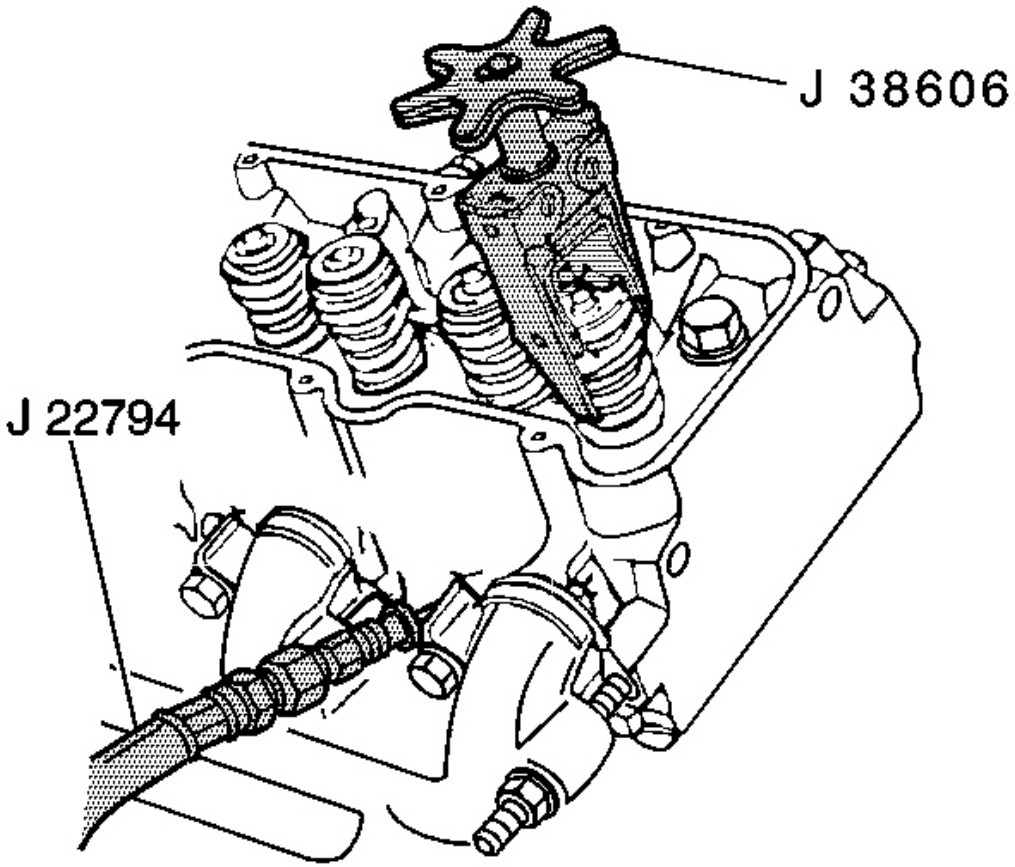

Fig. 143: J 38606, J 5892-D & Valve Spring
Courtesy of GENERAL MOTORS CORP.

6. Install the valve spring to the **J 38606** .
7. Compress the valve spring using the **J 38606** .
8. Install the valve spring to the cylinder head.

cardiagn.com

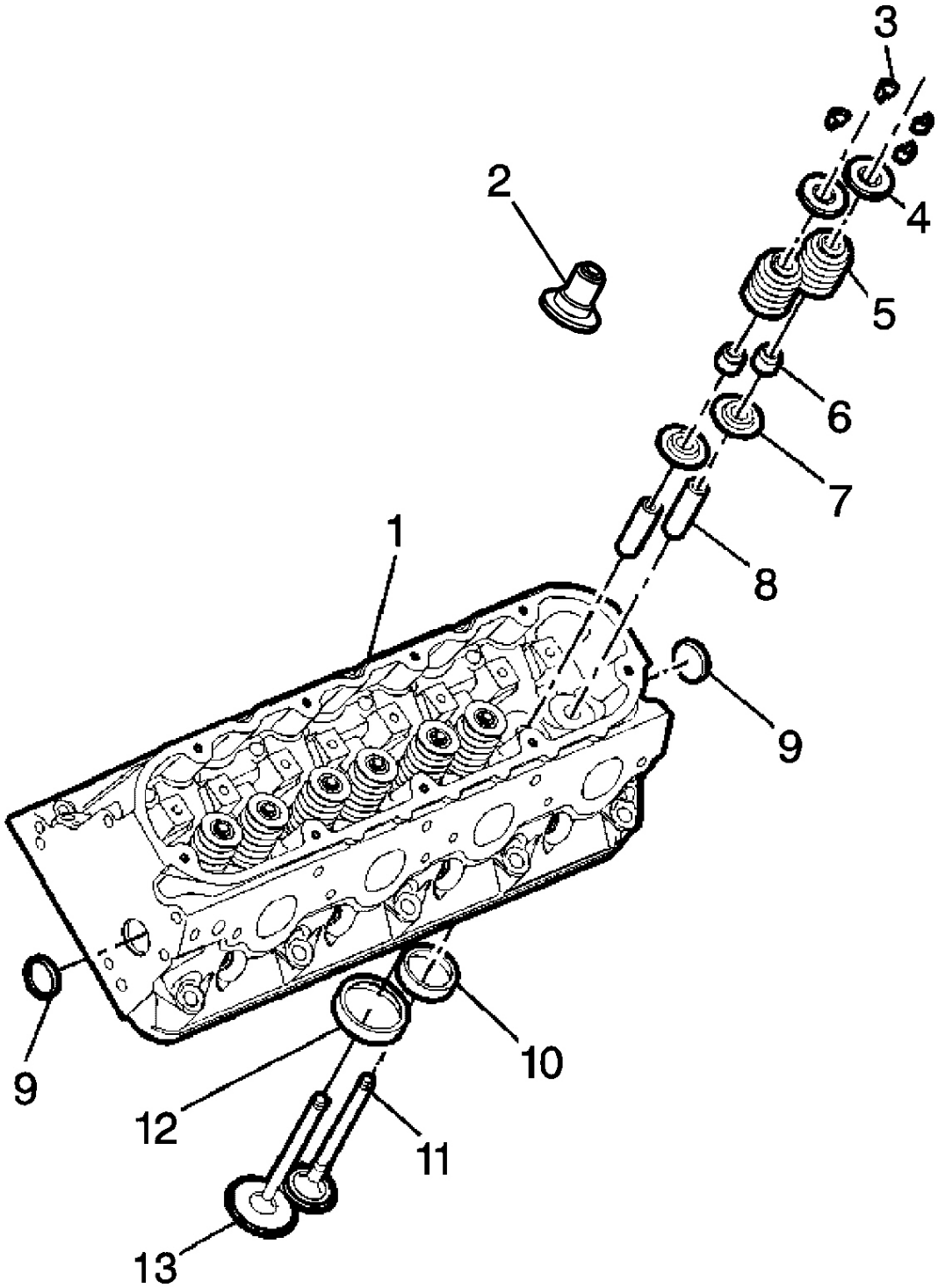

Fig. 144: Valve Stem Keys
Courtesy of GENERAL MOTORS CORP.

cardiagn.com

9. Install the valve spring cap (4).
10. Install the valve stem keys (3).
    - Use grease to hold the keys (3) in place and remove **J 38606** .
    - Make sure the keys (3) seat properly in the groove of the valve stem.
    - Carefully release the valve spring pressure, making sure the valve keys stay in place.
    - Remove the **J 38606** .
    - Tap the end to the valve stem with a plastic faced hammer to seat the keys (if necessary).

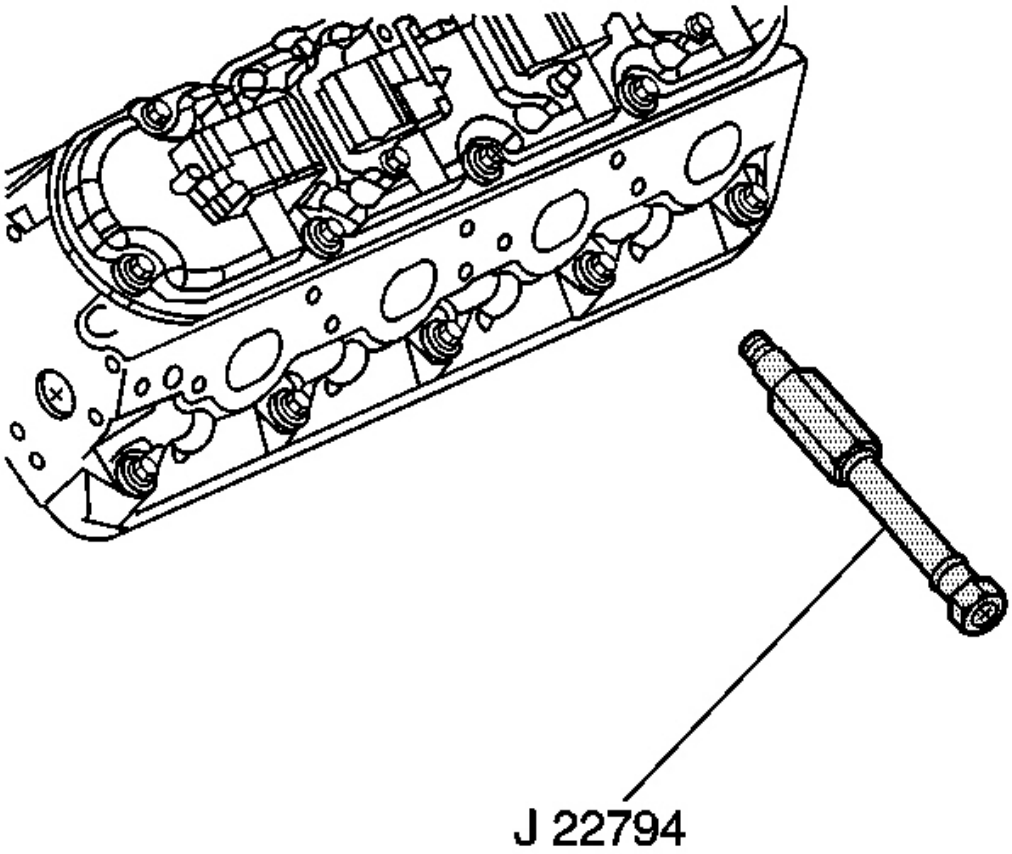

Fig. 145: Install/Remove J 22794 Spark Plug Hole
Courtesy of GENERAL MOTORS CORP.

11. Disconnect and remove the air supply from the **J 22794** .
12. Remove the **J 22794** from the spark plug hole.

cardiagn.com

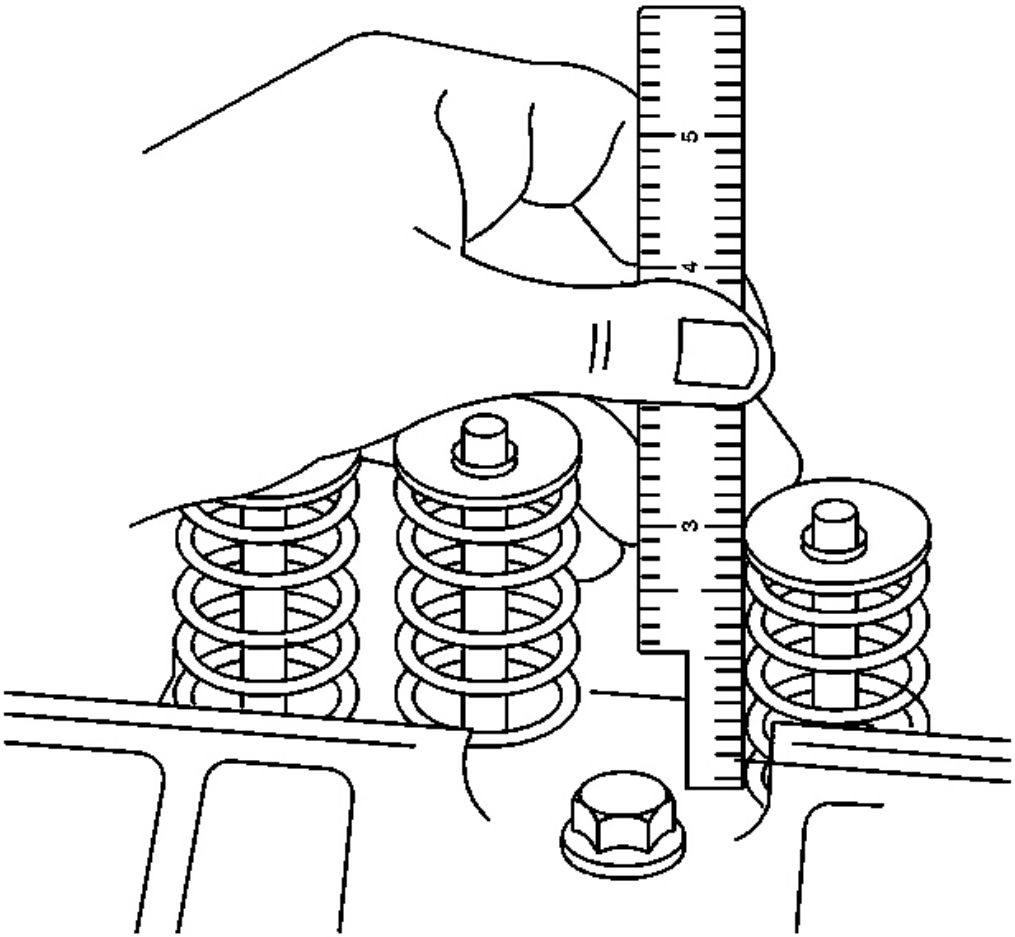

Fig. 146: Measuring Valve Spring Installed Height
Courtesy of GENERAL MOTORS CORP.

13. Measure the valve spring installed height using a ruler.

    Measure from the base of the valve spring to the top of the valve spring.

    - If the installed height exceeds 46.25 mm (1.82 in), install a valve spring shim of approximately 0.5 mm (0.02 in) thick.
    - Do not shim the valve spring to obtain less than the specified height.

      Do not assemble the components without a spring shim on the cylinder head.

14. Remove the air hose from the **J 22794** .

cardiagn.com

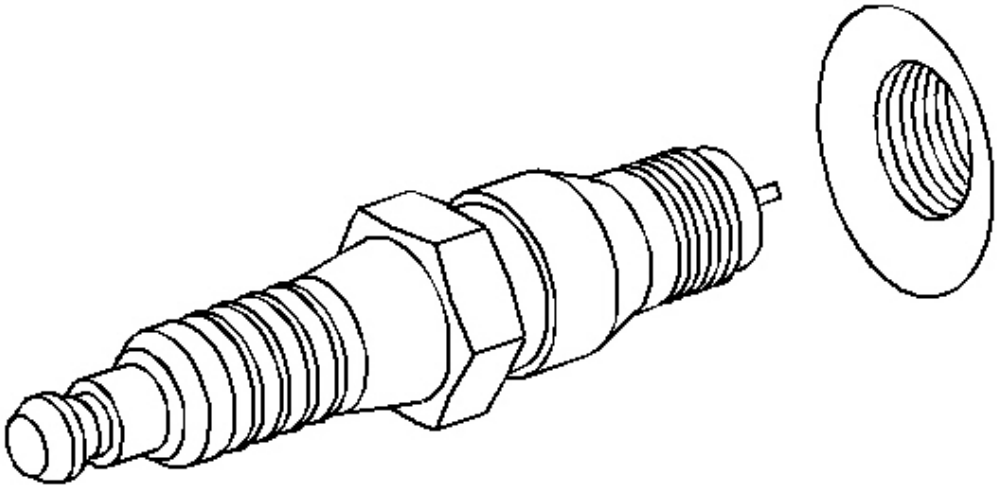

Fig. 147: View Of Spark Plug
Courtesy of GENERAL MOTORS CORP.

NOTE: Refer to Fastener Notice in Cautions and Notices.

15. Instal the spark plug by hand until snug.
16. Tighten the spark plug.

Tighten: Tighten the spark plugs to 15 N.m (11 lb ft).

cardiagn.com

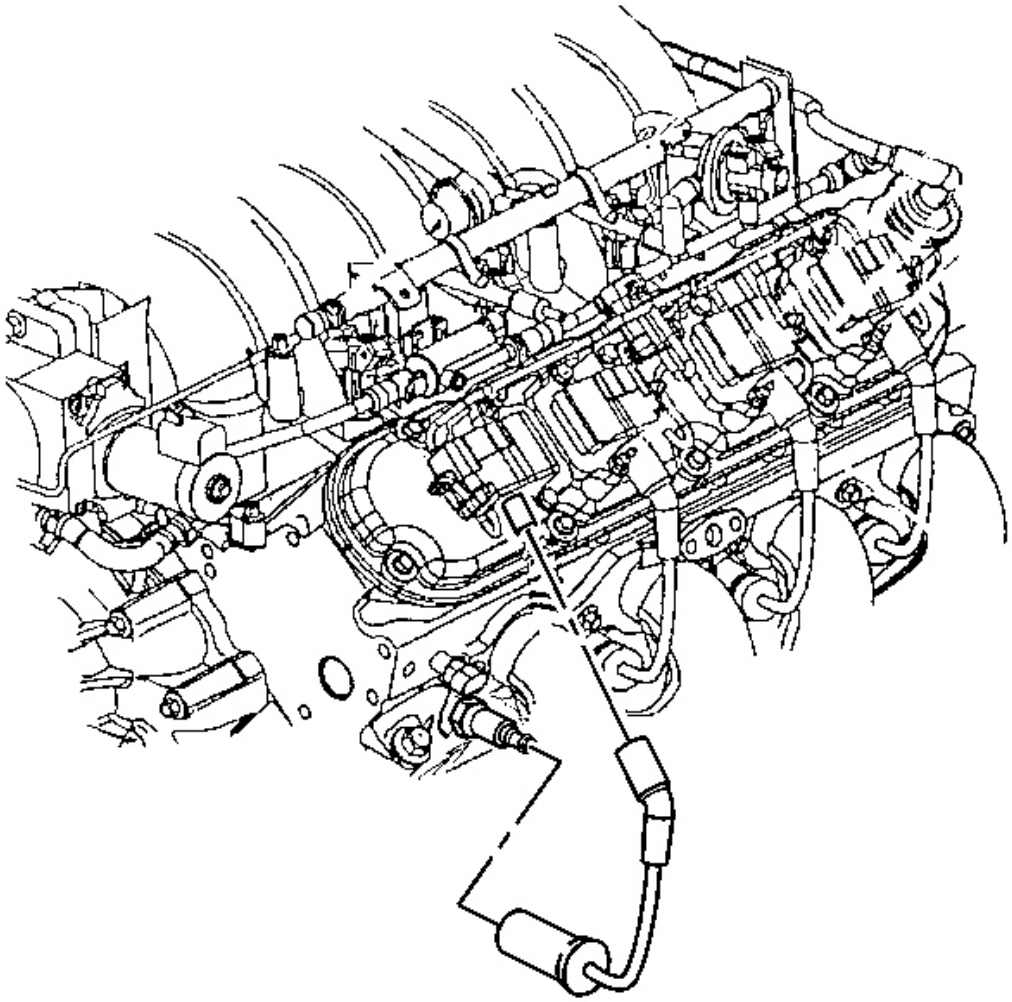

Fig. 148: Spark Plug Wire
Courtesy of GENERAL MOTORS CORP.

17. Install the spark plug wire to the spark plug.
18. Install the valve rocker arms. Refer to **Valve Rocker Arm and Push Rod Replacement** .

OIL LEVEL INDICATOR AND TUBE REPLACEMENT

Removal Procedure

cardiagn.com

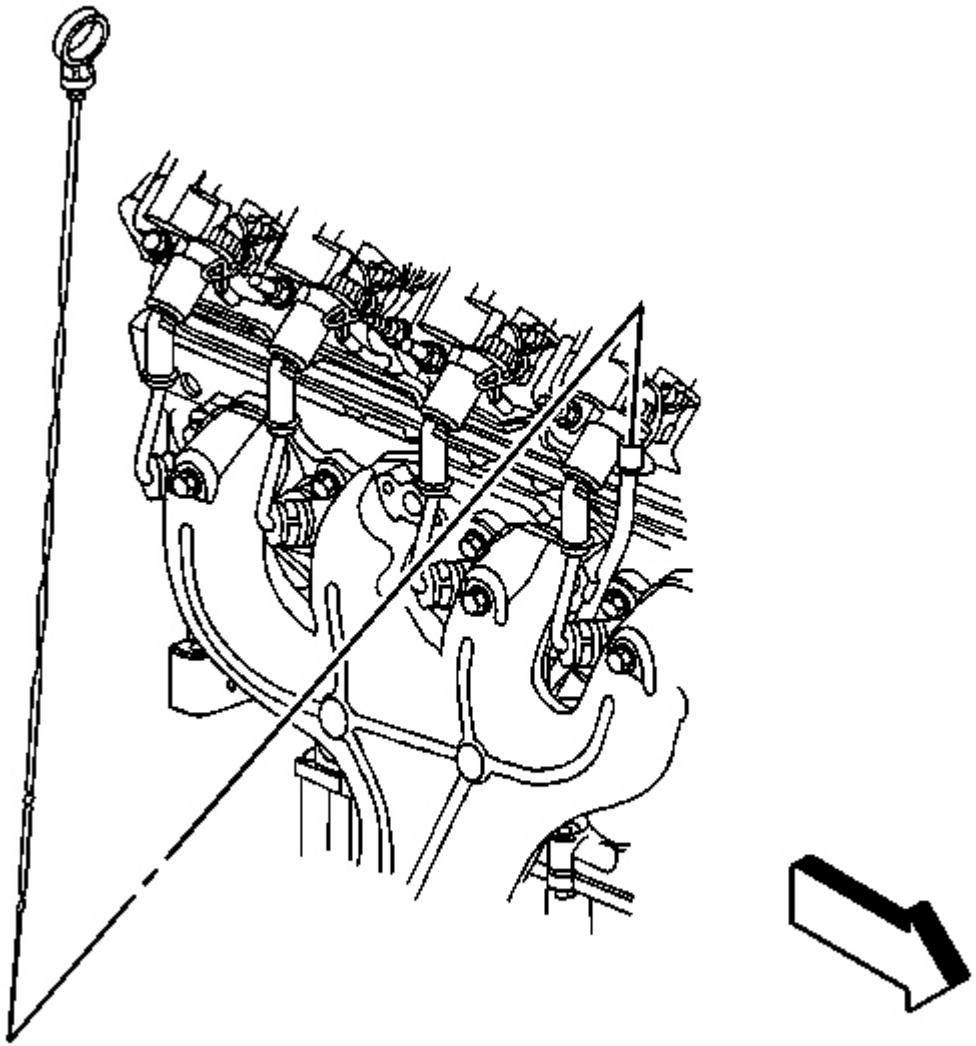

Fig. 149: Oil Level Indicator
Courtesy of GENERAL MOTORS CORP.

1. Remove the oil level indicator.

cardiagn.com

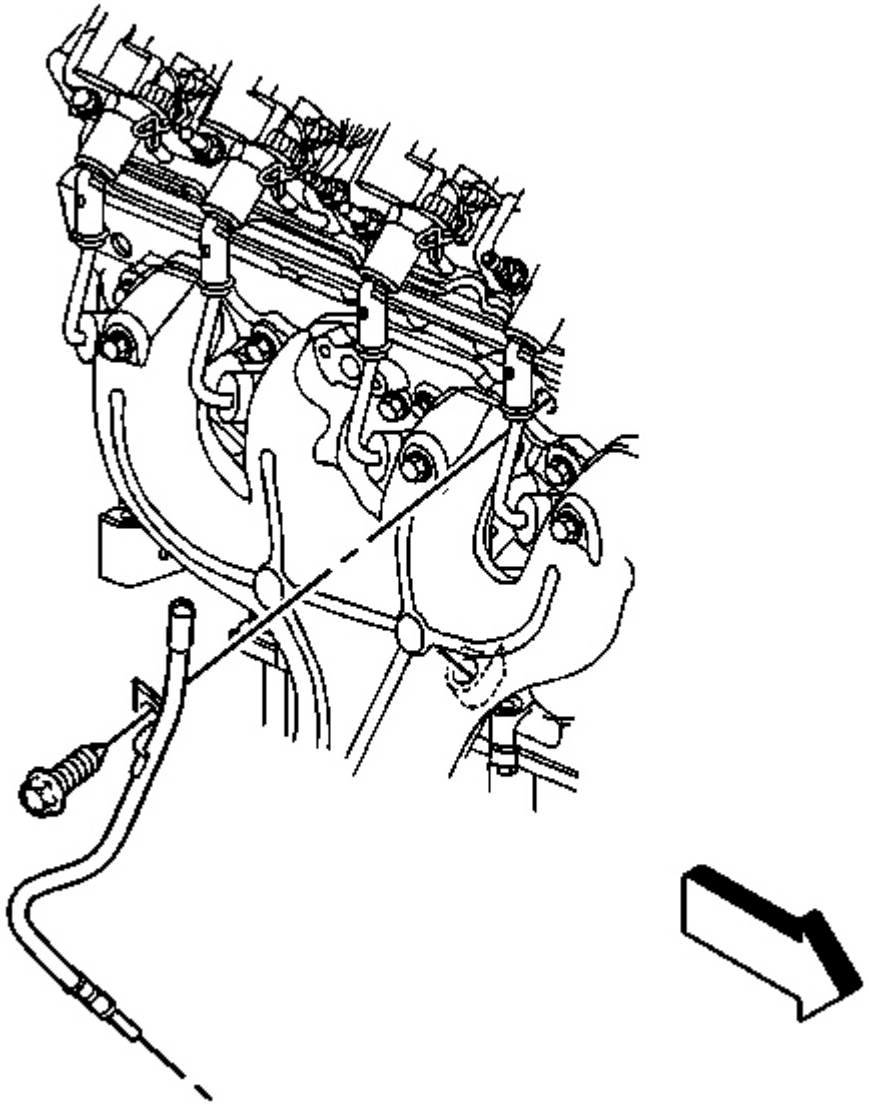

Fig. 150: Oil Level Indicator Tube & Bolt
Courtesy of GENERAL MOTORS CORP.

2. Remove the oil level indicator tube bolt.
3. Remove the oil level indicator tube.

IMPORTANT: Inspect the O-ring seal for cuts or damage. The O-ring seal may be reused

cardiagn.com

if not cut or damaged.

4. Remove the O-ring from the oil level indicator tube, if required.

Installation Procedure

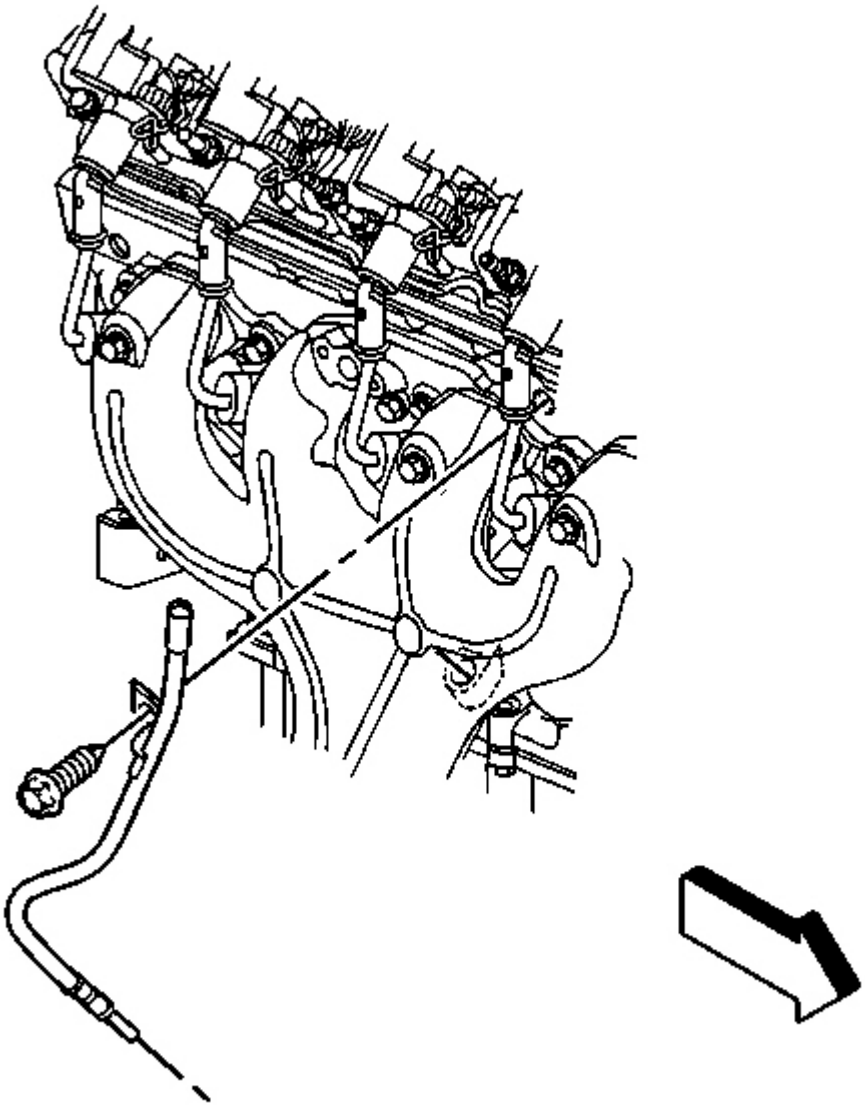

Fig. 151: Oil Level Indicator Tube & Bolt
Courtesy of GENERAL MOTORS CORP.

cardiagn.com

1. Lubricate the O-ring seal with clean engine oil.
2. Install the oil level indicator tube into position.
3. Raise and suitably support the vehicle. Refer to **Lifting and Jacking the Vehicle** in General Information.
4. Insert the oil level indicator tube into the engine block until the collar is flush with the block.
5. Lower the vehicle.

NOTE: Refer to Fastener Notice in Cautions and Notices.

6. Install the oil level indicator tube bolt.

   Tighten: Tighten the oil level indicator tube bolt to 25 N.m (18 lb ft).

cardiagn.com

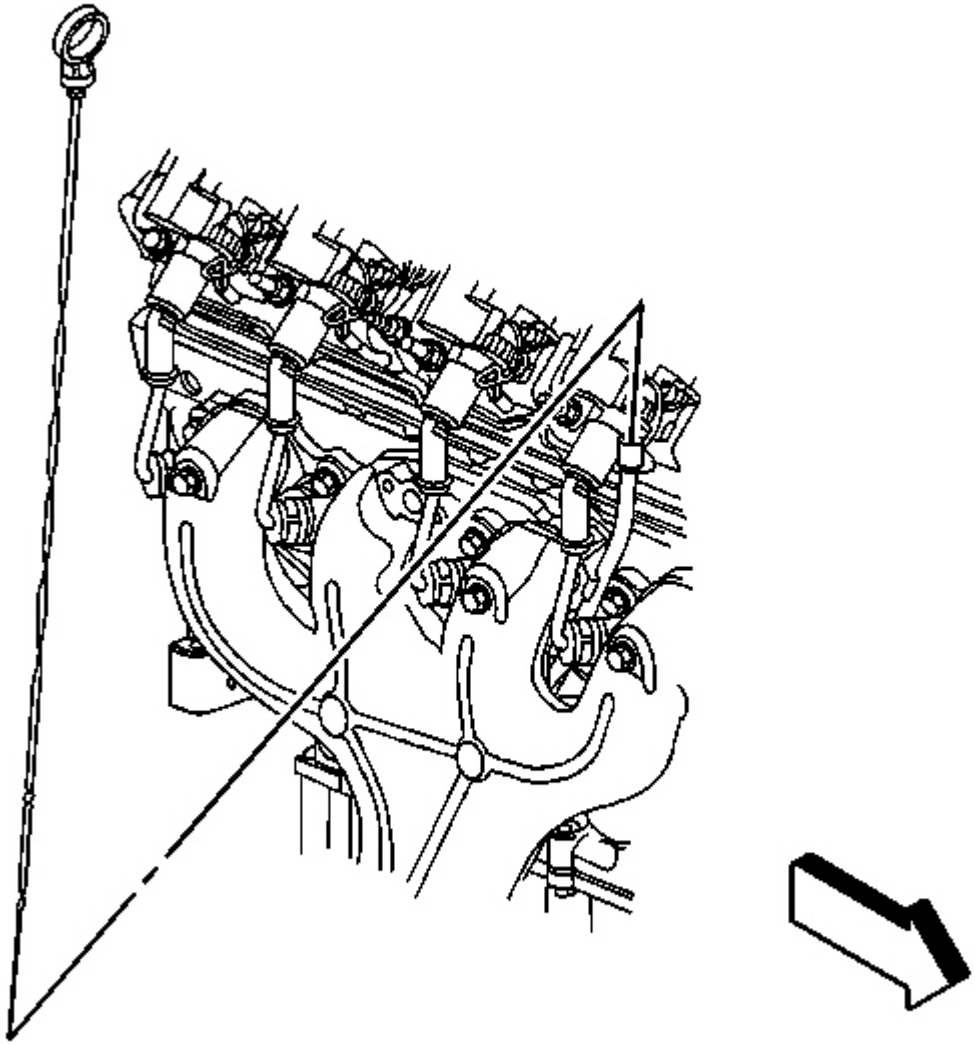

Fig. 152: Oil Level Indicator
Courtesy of GENERAL MOTORS CORP.

7. Install the oil level indicator.
8. Check the oil level and add if necessary.

CYLINDER HEAD REPLACEMENT - LEFT

Tools Required

cardiagn.com

- **J 42385-100** Thread Repair Kit (Cylinder Head/Main Bearing Bolt)
- **J 45059** Angle Meter

Removal Procedure

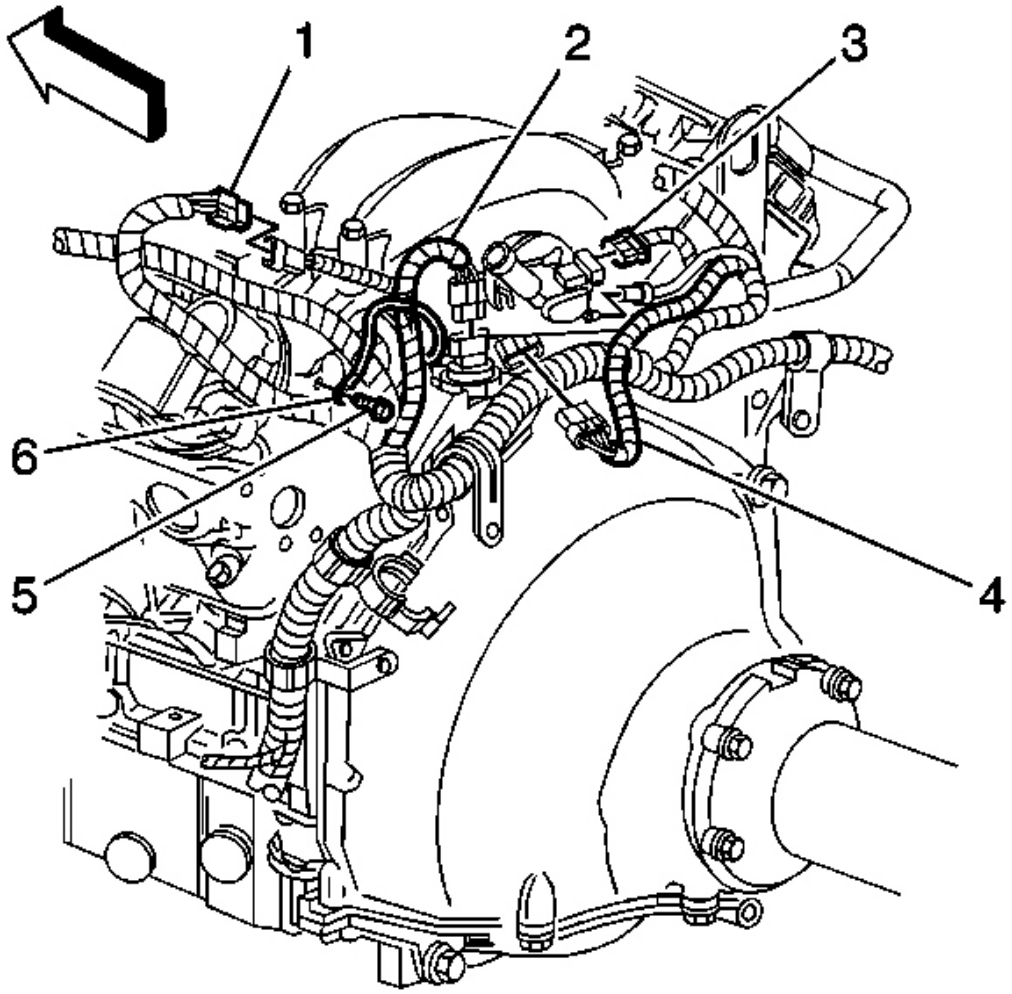

Fig. 153: MAP Sensor Vacuum Hose & MAP Sensor Electrical Connector
Courtesy of GENERAL MOTORS CORP.

1. Remove the valve rocker arms and pushrods. Refer to **Valve Rocker Arm and Push Rod Replacement** .
2. Remove the engine coolant air bleed pipe and covers. Refer to **Coolant Air Bleed Pipe Assembly Replacement** in Engine Cooling.

cardiagn.com

3. Remove the generator bracket. Refer to **Generator Bracket Replacement** in Engine Electrical.
4. Remove the exhaust manifold. Refer to **Exhaust Manifold Replacement - Left** in Engine Exhaust.
5. Remove the engine wiring harness ground bolt (5) from the rear of the left cylinder head.
6. Reposition the engine wire harness ground strap (6) away from the cylinder head.

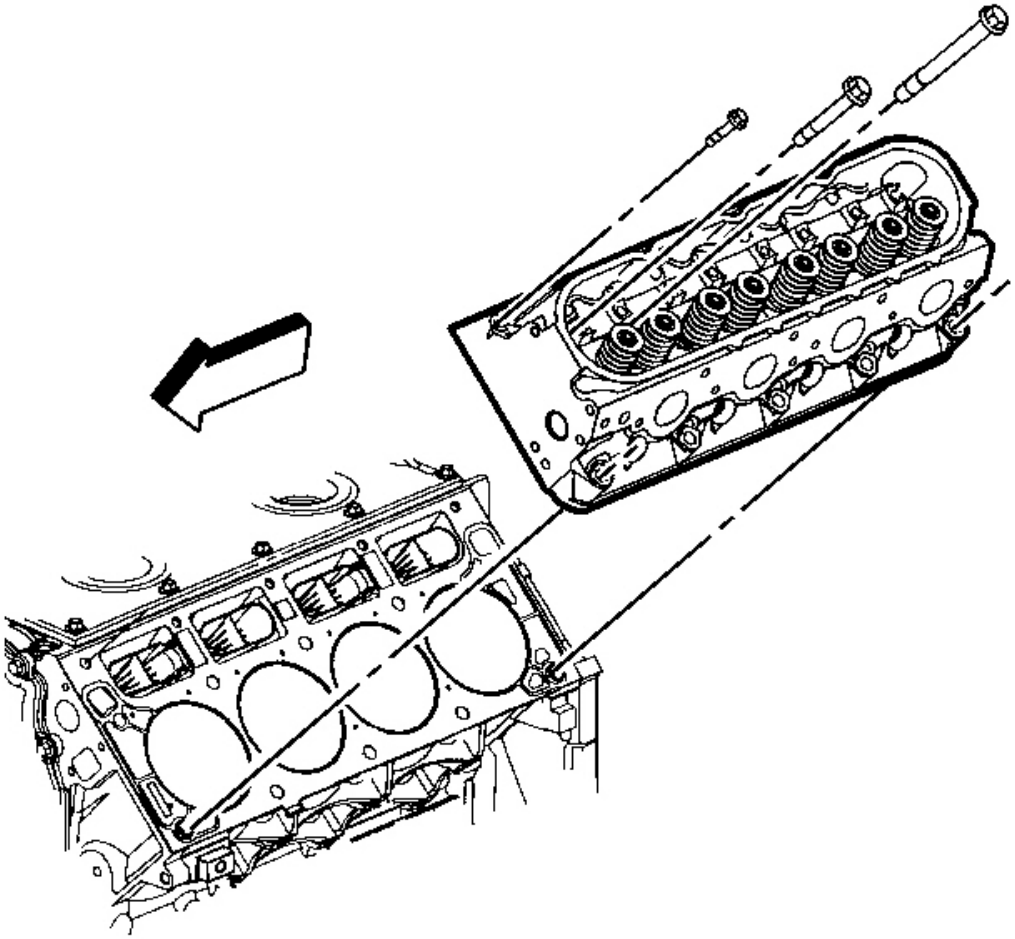

Fig. 154: View Of Cylinder Head & Bolts (Left)
Courtesy of GENERAL MOTORS CORP.

IMPORTANT: The cylinder head bolts are NOT reusable.

NOTE: After removal, place the cylinder head on two wood blocks to prevent damage to the sealing surfaces.

cardiagn.com

7. Remove the cylinder head bolts.
8. Remove the cylinder head.

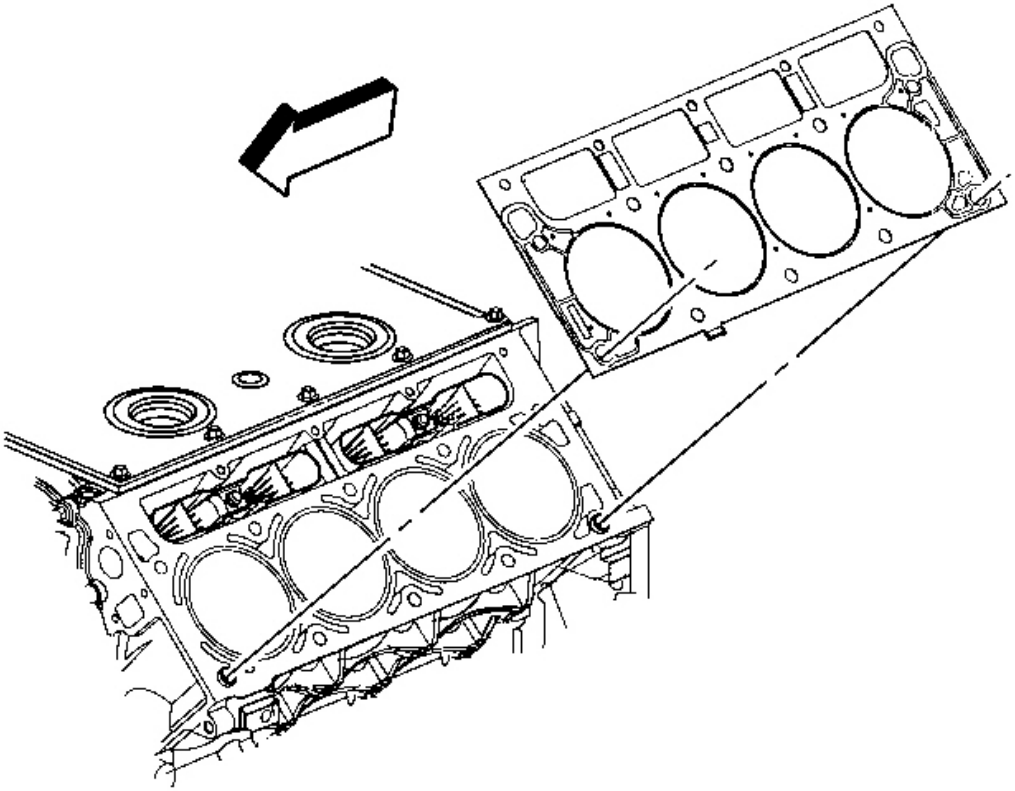

Fig. 155: View Of Cylinder Head Gasket (Left)
Courtesy of GENERAL MOTORS CORP.

9. Remove the cylinder head gasket.
10. Discard the gasket.
11. Discard the M11 cylinder head bolts.
12. Clean and inspect the cylinder head. Refer to **Cylinder Head Cleaning and Inspection** .

Installation Procedure

cardiagn.com

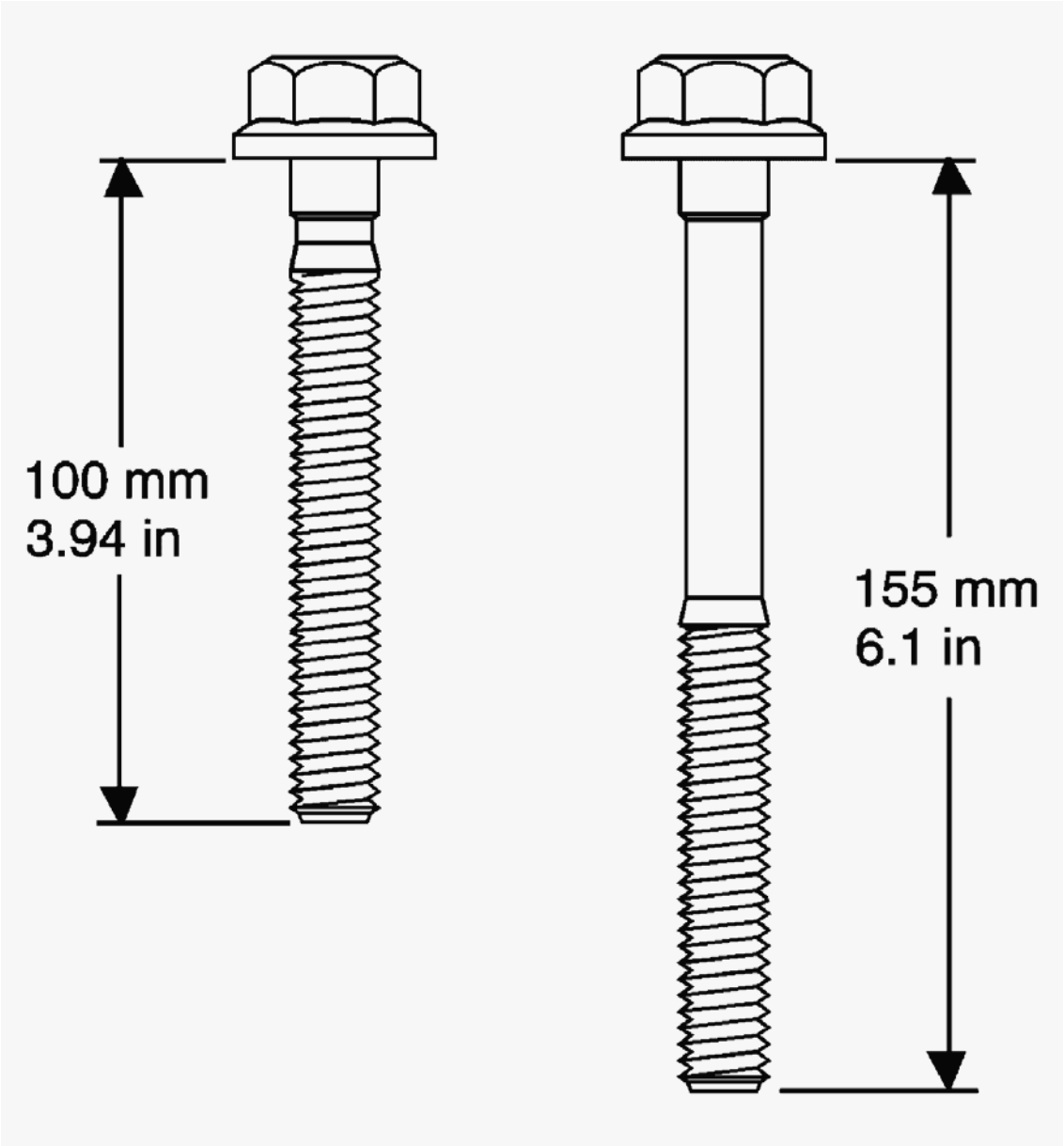

Fig. 156: View Of 100 mm & 155 mm Bolts
Courtesy of GENERAL MOTORS CORP.

CAUTION: Refer to Safety Glasses Caution .

NOTE: **Clean all dirt, debris, and coolant from the engine block cylinder head bolt holes. Failure to remove all foreign material may result in damaged threads, improperly tightened fasteners or damage to components.**

IMPORTANT:

- **Do not use the cylinder head bolts again. Install NEW cylinder head**

cardiagn.com

bolts during assembly.

- **Do not use any type sealant on the cylinder head gasket, unless specified.**
- **The cylinder head gaskets must be installed in the proper direction and position.**

1. Clean the engine block cylinder head bolt holes, if required.

   Thread repair tool J 42385-107 may be used to clean the threads of old threadlocking material.

2. Spray cleaner GM P/N 12346139, GM P/N 12377981 (Canadian P/N 10953463) or equivalent into the hole.
3. Clean the cylinder head bolt holes with compressed air.

cardiagn.com

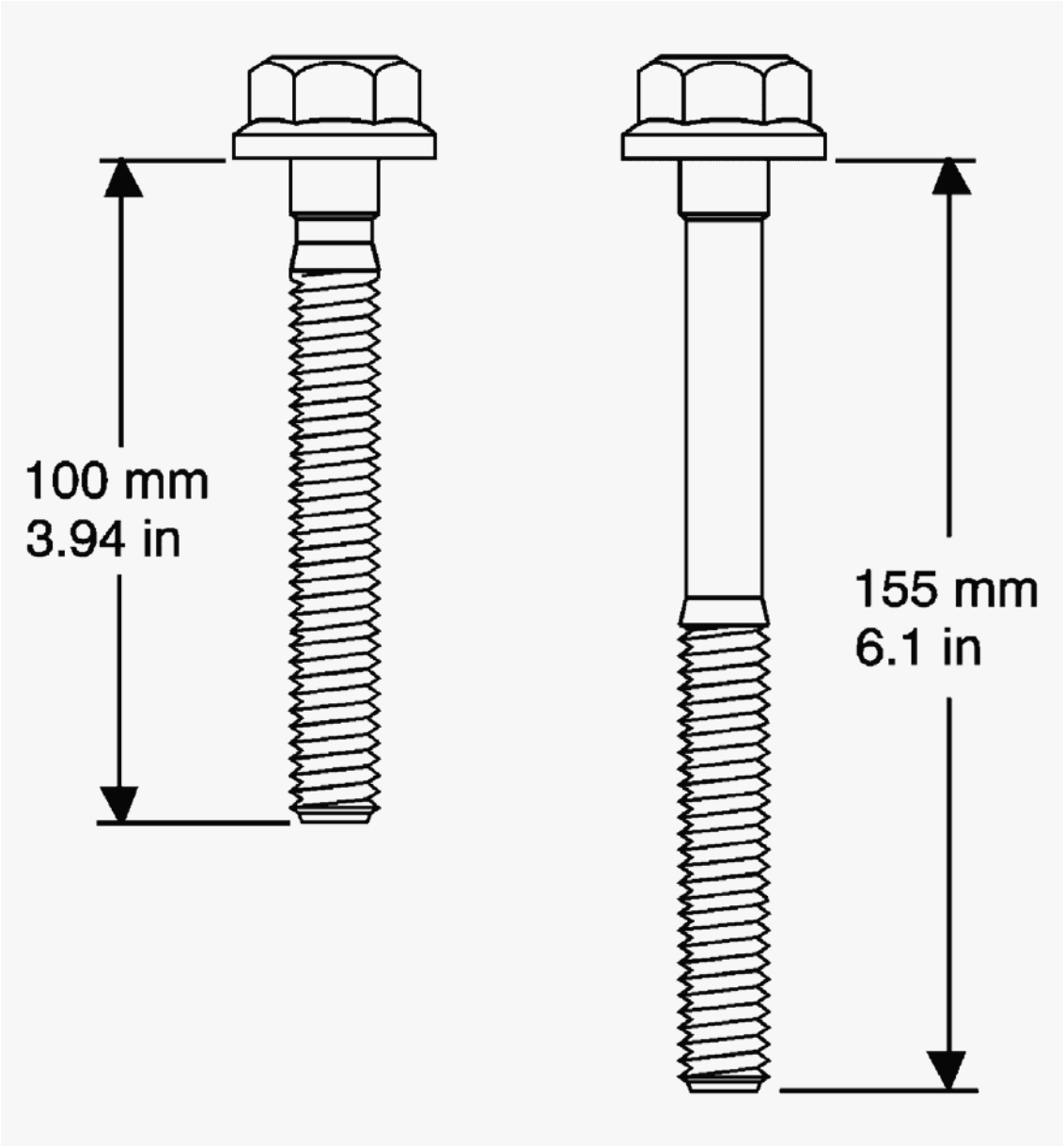

Fig. 157: View Of 100 mm & 155 mm Bolts
Courtesy of GENERAL MOTORS CORP.

IMPORTANT: First design engine blocks have different drill and tap depths using both medium length 100 mm (3.94 in) and long 155 mm (6.1 in) M11 cylinder head bolts. Second design engine blocks use only the medium length 100 mm (3.94 in) bolt with a common drill and tap depth.

4. Measure the depth of the cylinder head bolt holes (1-10) and select the correct length bolts as required.
5. Check the cylinder head locating pins for proper location.

cardiagn.com

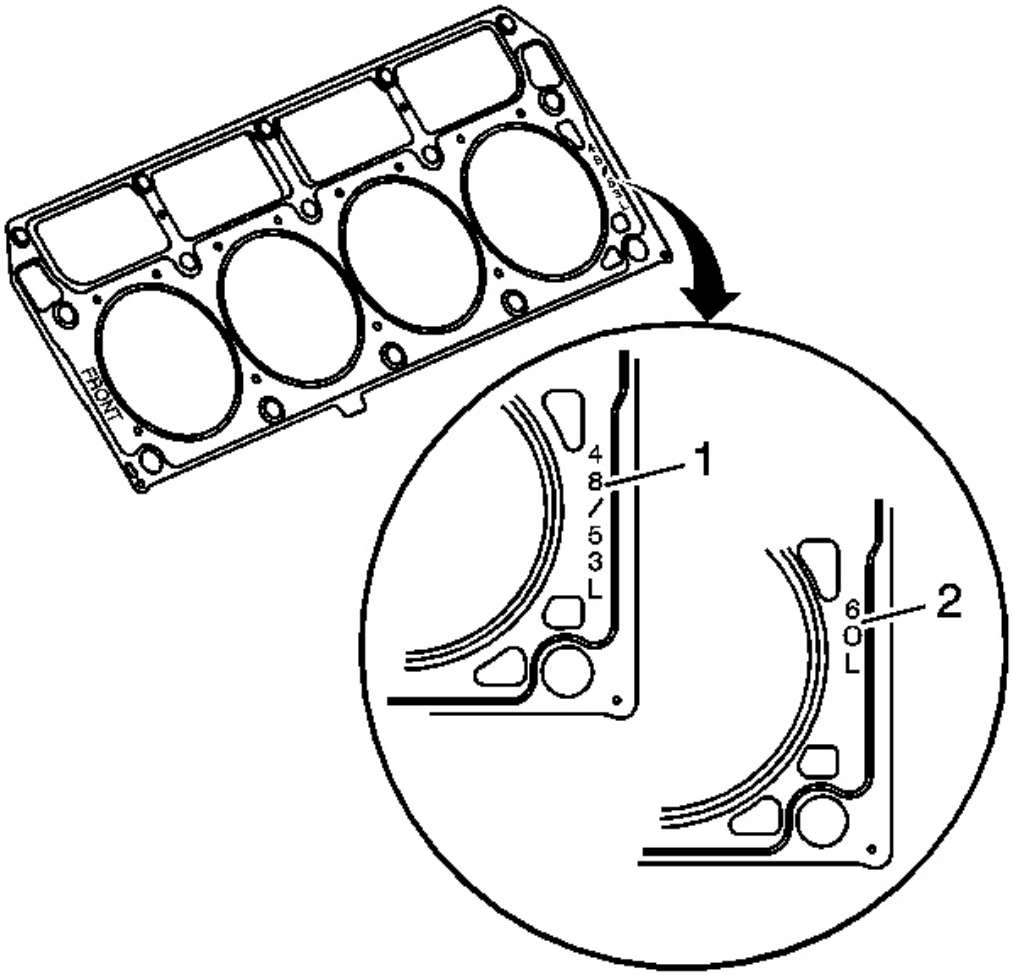

Fig. 158: View Of Cylinder Head Gasket Displacement Markings
Courtesy of GENERAL MOTORS CORP.

6. Inspect the displacement markings (1) on the gasket, for proper usage.

cardiagn.com

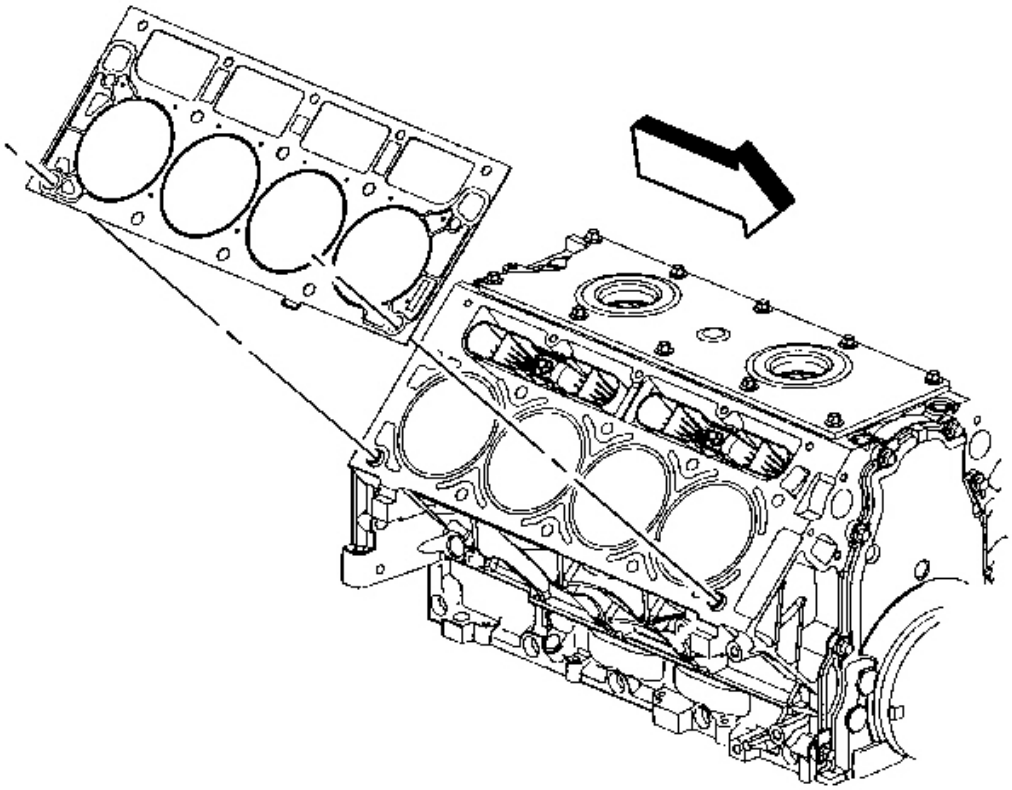

Fig. 159: View Of Cylinder Head Gasket (Right)
Courtesy of GENERAL MOTORS CORP.

IMPORTANT: When properly installed, the tab on the right cylinder head gasket will be located right of center or closer to the front of the engine.

7. Install the NEW cylinder head gasket onto the locating pins.

cardiagn.com

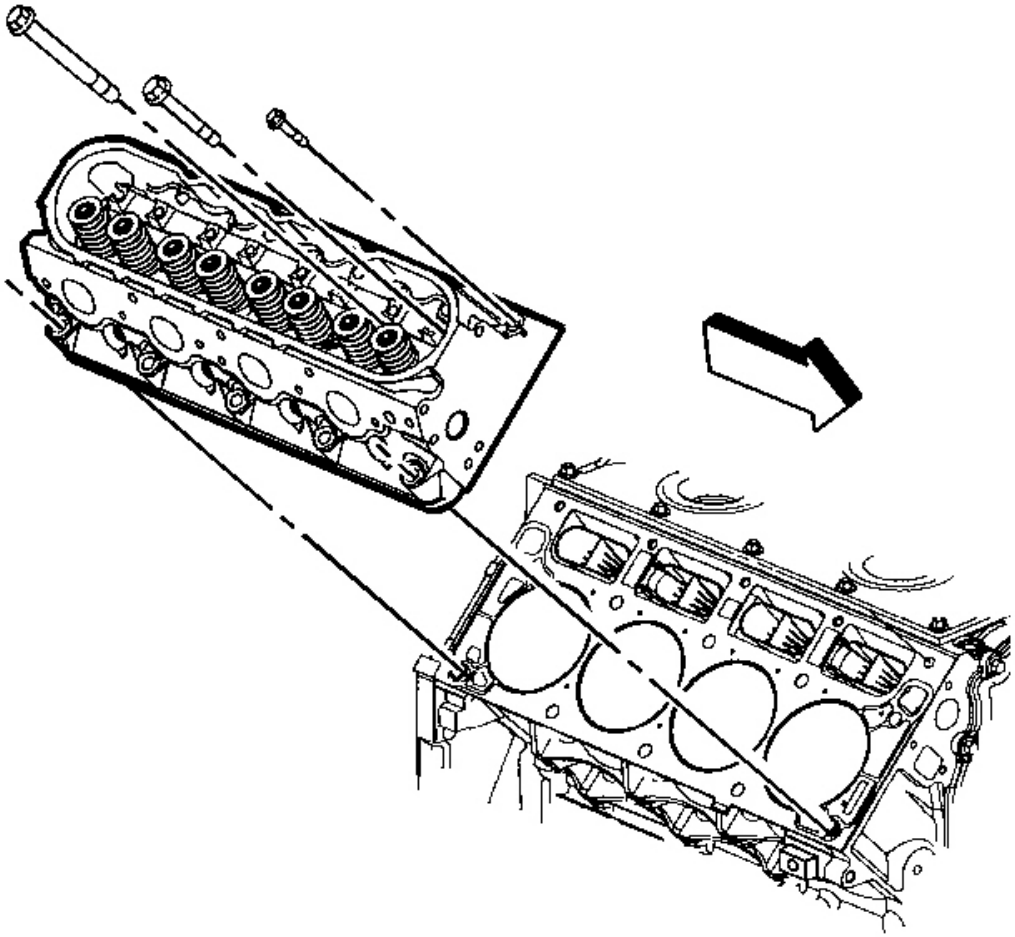

Fig. 160: View Of Cylinder Head & Bolts
Courtesy of GENERAL MOTORS CORP.

8. Install the cylinder head onto the locating pins and the gasket.
9. Install the NEW cylinder head bolts.

cardiagn.com

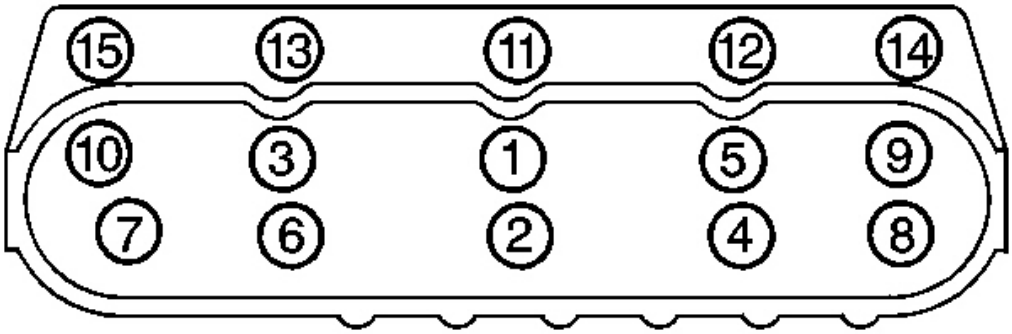

Fig. 161: Cylinder Head Bolt Tightening Sequence (Right)
Courtesy of GENERAL MOTORS CORP.

NOTE: **Refer to Fastener Notice .**

10. Tighten the first design cylinder head bolts.

    Tighten:

    1. Tighten the first design M11 cylinder head bolts a first pass in sequence to 30 N.m (22 lb ft).
    2. Tighten the first design M11 cylinder head bolts a second pass in sequence to 90 degrees using the **J 45059** .
    3. Tighten the first design M11 cylinder head bolts (1, 2, 3, 4, 5, 6, 7, 8) to 90 degrees and the M11 cylinder head bolts (9 and 10) to 50 degrees a final pass in sequence to using the **J 45059** .
    4. Tighten the M8 cylinder head bolts (11, 12, 13, 14, 15) to 30 N.m (22 lb ft). Begin with the center bolt (11) and alternating side-to-side, work outward tightening all of the bolts.

11. Tighten the second design cylinder head bolts.

    Tighten:

    1. Tighten the second design M11 cylinder head bolts (1-10) a first pass in sequence to 30 N.m (22 lb ft).
    2. Tighten the second design M11 cylinder head bolts (1-10) a second pass in sequence to 90 degrees using the **J 45059** .
    3. Tighten the second design M11 cylinder head bolts (1-10) a final pass in sequence to 70 degrees using the **J 45059** .
    4. Tighten the M8 cylinder head bolts (11, 12, 13, 14, 15) to 30 N.m (22 lb ft). Begin with the center bolt (11) and alternating side-to-side, work outward tightening all of the bolts.

cardiagn.com

12. Install the wiring harness to the clip at the rear of the cylinder head.

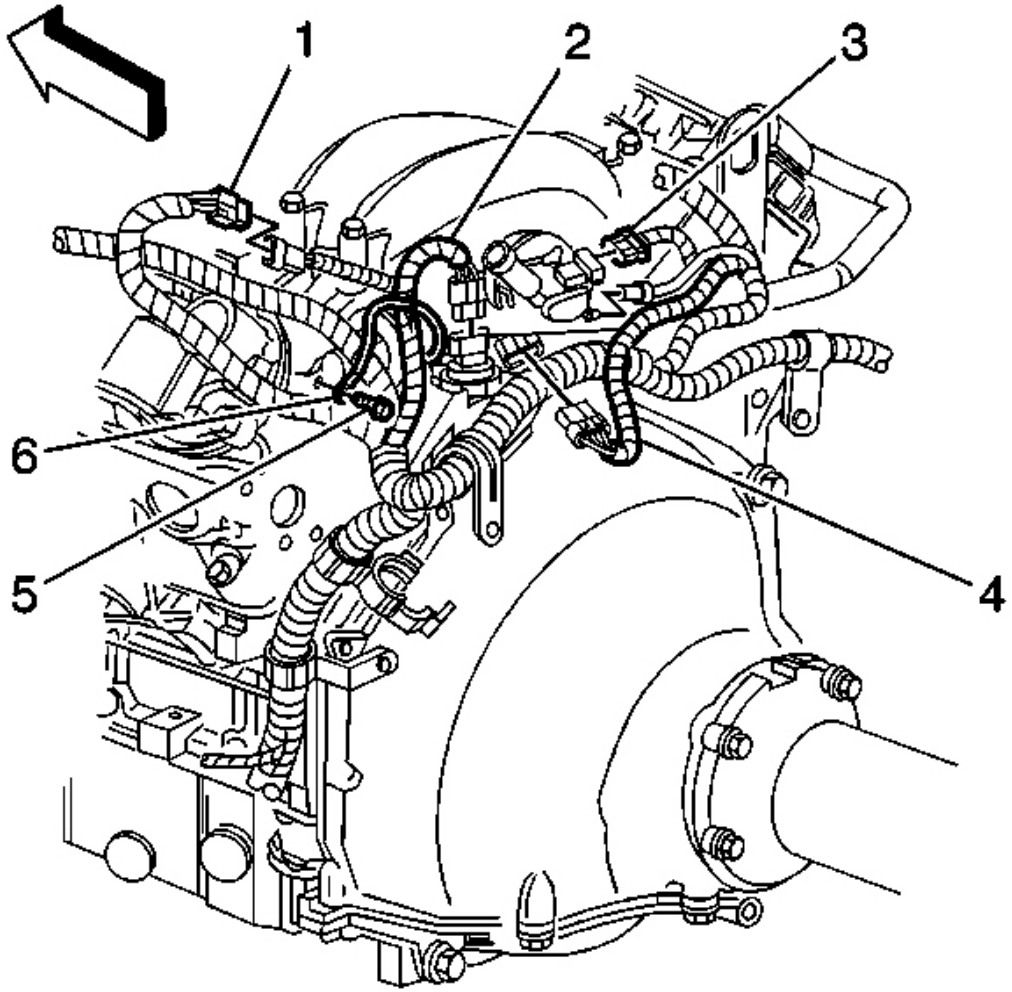

Fig. 162: MAP Sensor Vacuum Hose & MAP Sensor Electrical Connector
Courtesy of GENERAL MOTORS CORP.

13. Position the engine wire harness ground strap (6) against the cylinder head.
14. Install the engine wiring harness ground bolt (5) to the rear of the left cylinder head.

    Tighten: Tighten the engine wire harness ground bolt to 32 N.m (24 lb ft).

15. Install the exhaust manifold. Refer to **Exhaust Manifold Replacement - Left** in Engine Exhaust.

cardiagn.com

16. Install the generator bracket. Refer to **Generator Bracket Replacement** in Engine Electrical.
17. Install the engine coolant air bleed pipe. Refer to **Coolant Air Bleed Pipe Assembly Replacement** in Engine Cooling.
18. Install the valve rocker arms and pushrods. Refer to **Valve Rocker Arm and Push Rod Replacement** .

CYLINDER HEAD REPLACEMENT - RIGHT

Tools Required

- **J 42385-100** Thread Repair Kit (Cylinder Head/Main Bearing Bolt)
- **J 45059** Angle Meter

Removal Procedure

cardiagn.com

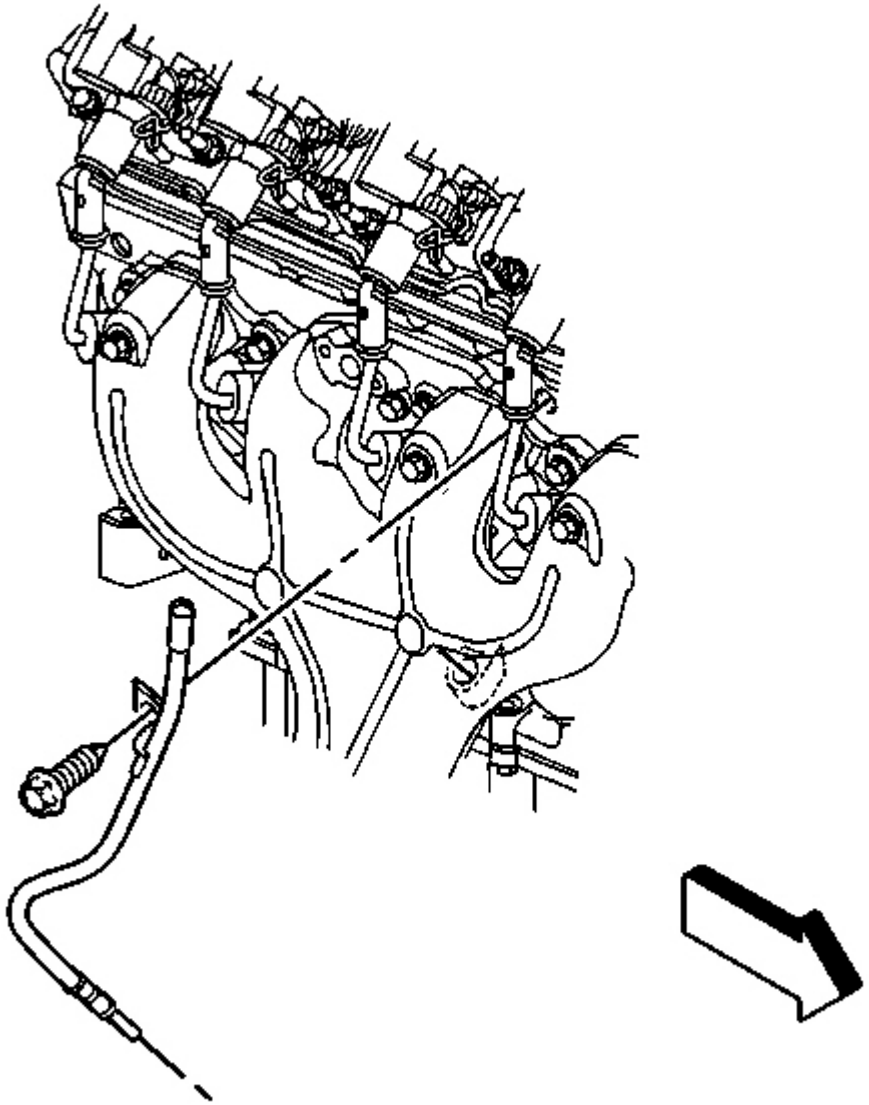

Fig. 163: Oil Level Indicator Tube & Bolt
Courtesy of GENERAL MOTORS CORP.

1. Remove the valve rocker arms and pushrods. Refer to **Valve Rocker Arm and Push Rod Replacement** .
2. Remove the engine coolant air bleed pipe and covers. Refer to **Coolant Air Bleed Pipe Assembly Replacement** in Engine Cooling.
3. Remove the exhaust manifold. Refer to **Exhaust Manifold Replacement - Right** in Engine Exhaust.

cardiagn.com

4. Remove the oil level indicator tube bolt.
5. Reposition the oil level indicator tube, if necessary.
6. Remove the wiring harness from the clip at the rear of the cylinder head.

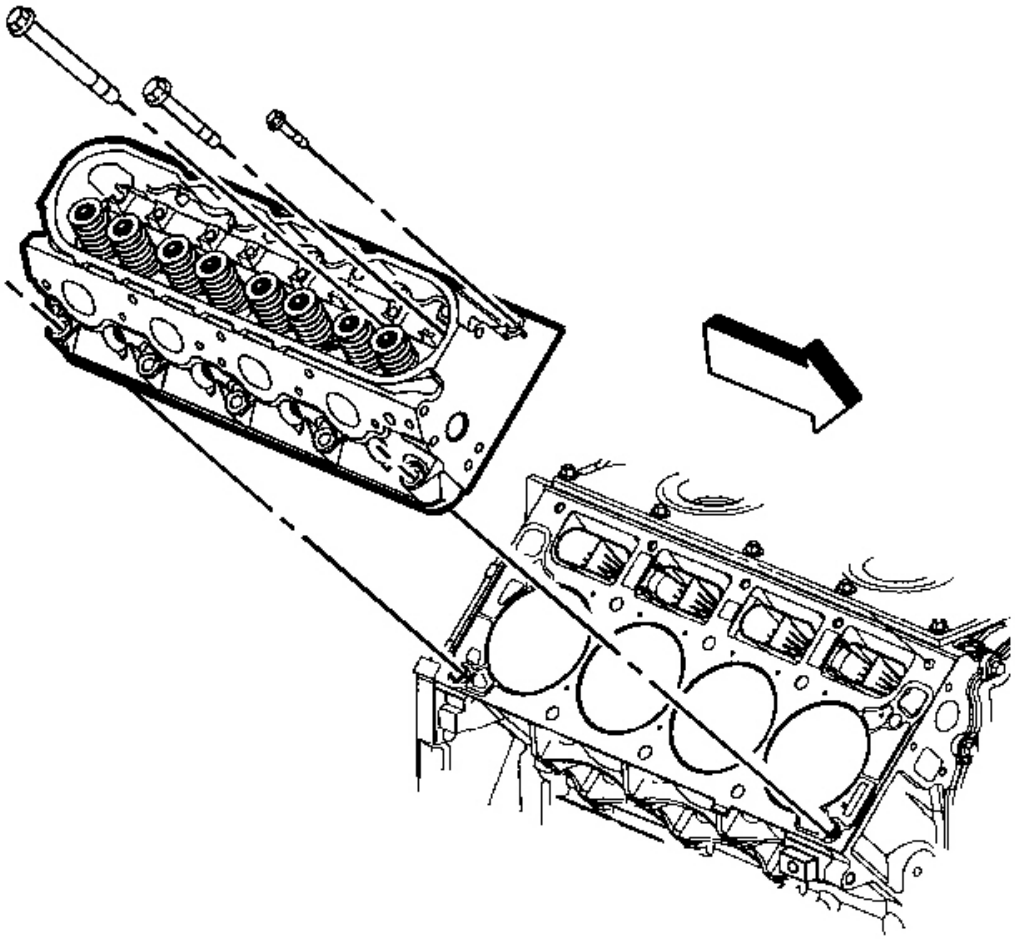

Fig. 164: View Of Cylinder Head & Bolts
Courtesy of GENERAL MOTORS CORP.

IMPORTANT: The cylinder head bolts are NOT reusable.

NOTE: After removal, place the cylinder head on two wood blocks to prevent damage to the sealing surfaces.

cardiagn.com

7. Remove the cylinder head bolts.
8. Remove the cylinder head.

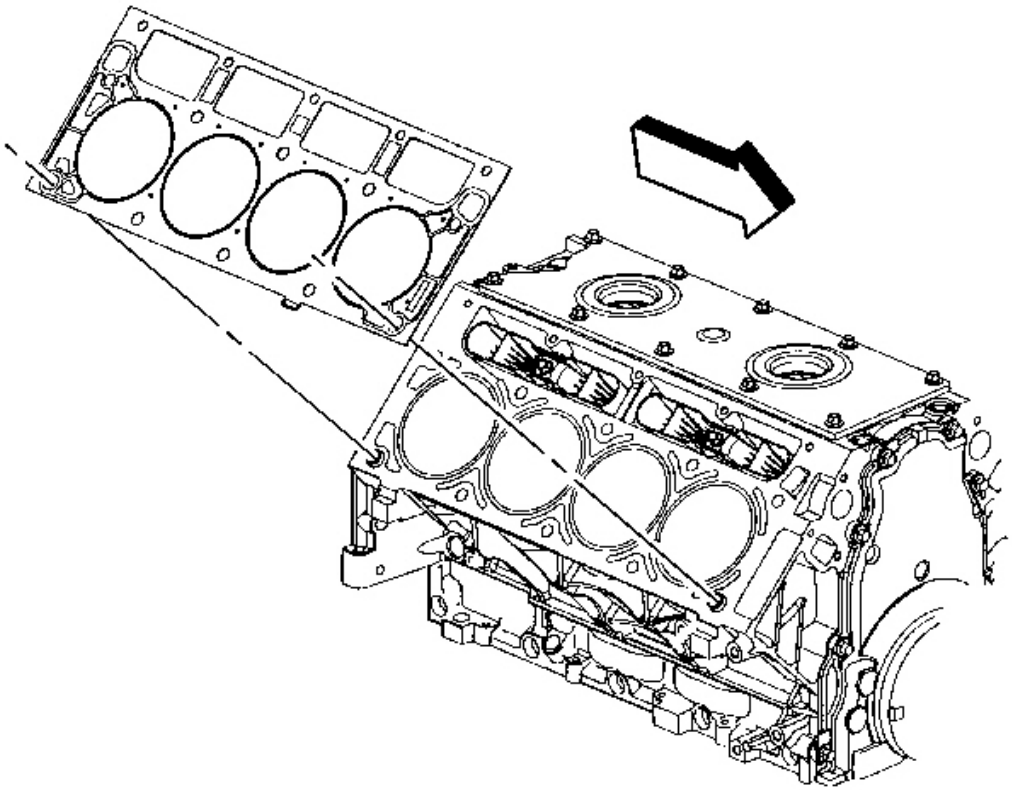

Fig. 165: View Of Cylinder Head Gasket (Right)
Courtesy of GENERAL MOTORS CORP.

9. Remove the cylinder head gasket.
10. Discard the gasket.
11. Discard the cylinder head bolts.
12. Clean and inspect the cylinder head. Refer to **Cylinder Head Cleaning and Inspection** .

Installation Procedure

cardiagn.com

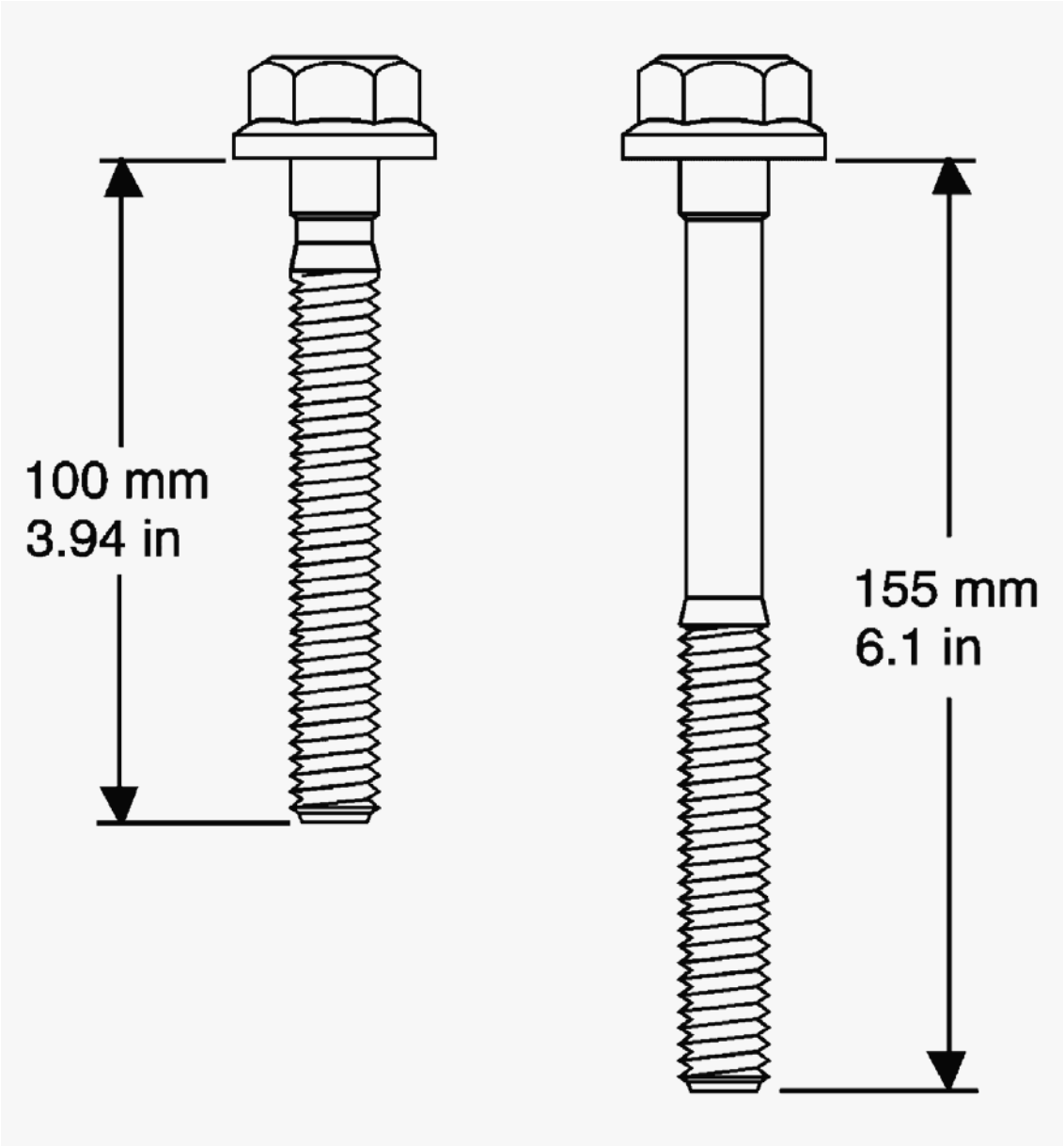

Fig. 166: View Of 100 mm & 155 mm Bolts
Courtesy of GENERAL MOTORS CORP.

CAUTION: Refer to Safety Glasses Caution .

NOTE: **Clean all dirt, debris, and coolant from the engine block cylinder head bolt holes. Failure to remove all foreign material may result in damaged threads, improperly tightened fasteners or damage to components.**

IMPORTANT:

- **Do not use the cylinder head bolts again. Install NEW cylinder head**

cardiagn.com

bolts during assembly.

- **Do not use any type sealant on the cylinder head gasket, unless specified.**
- **The cylinder head gaskets must be installed in the proper direction and position.**

1. Clean the engine block cylinder head bolt holes, if required.

   Thread repair tool J 42385-107 may be used to clean the threads of old threadlocking material.

2. Spray cleaner GM P/N 12346139, GM P/N 12377981 (Canadian P/N 10953463) or equivalent into the hole.
3. Clean the cylinder head bolt holes with compressed air.

cardiagn.com

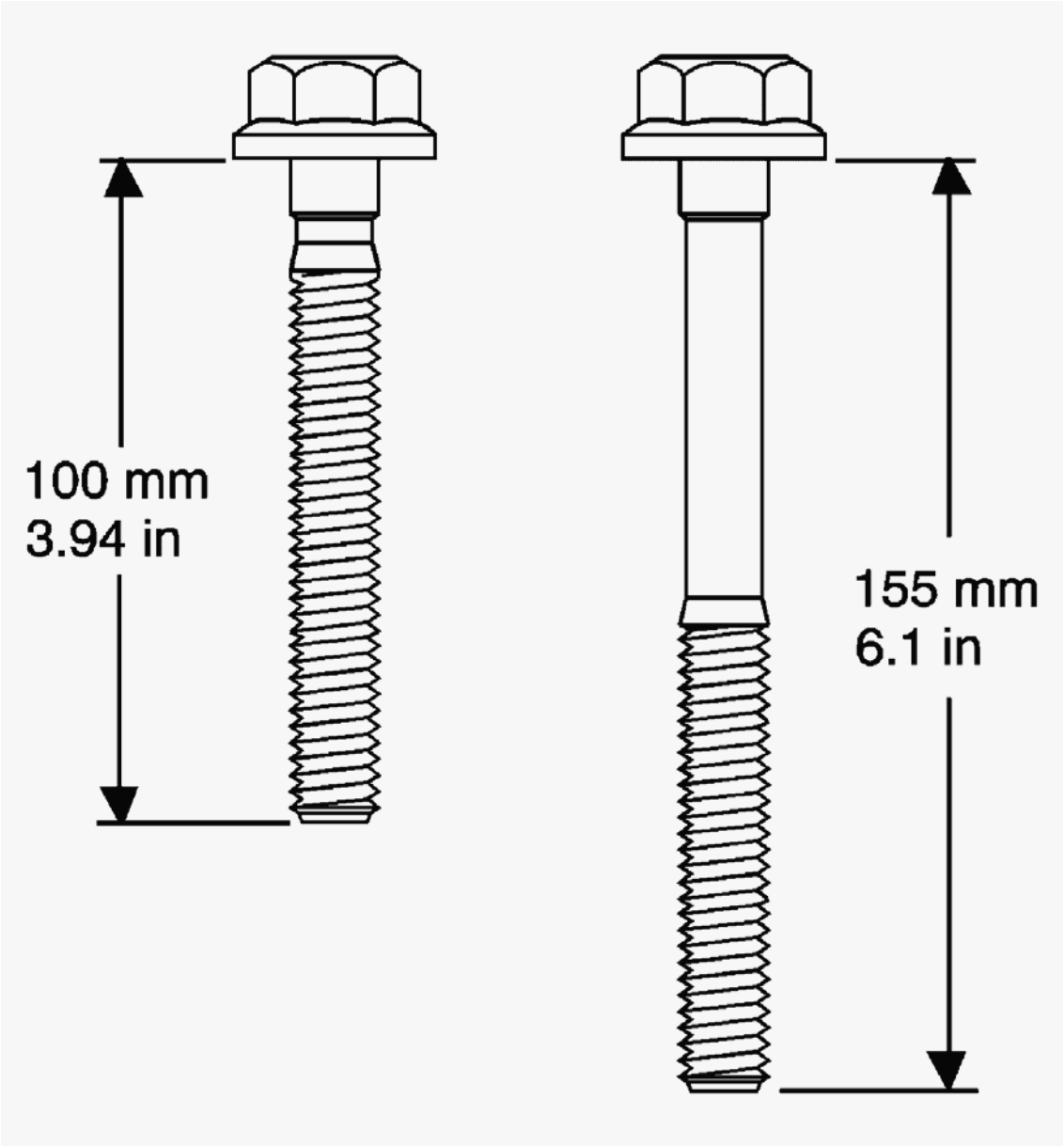

Fig. 167: View Of 100 mm & 155 mm Bolts
Courtesy of GENERAL MOTORS CORP.

IMPORTANT: First design engine blocks have different drill and tap depths using both medium length 100 mm (3.94 in) and long 155 mm (6.1 in) M11 cylinder head bolts. Second design engine blocks use only the medium length 100 mm (3.94 in) bolt with a common drill and tap depth.

4. Measure the depth of the cylinder head bolt holes (1-10) and select the correct length bolts as required.
5. Check the cylinder head locating pins for proper location.

cardiagn.com

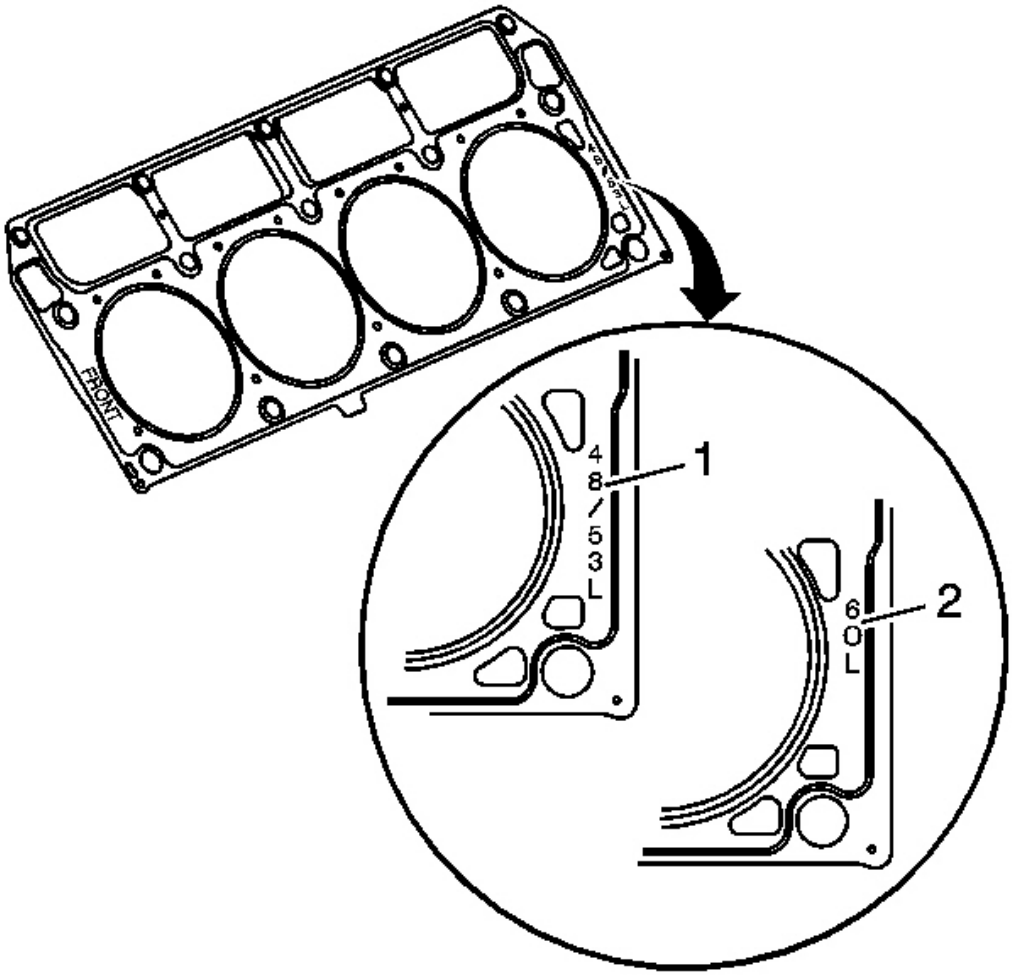

Fig. 168: View Of Cylinder Head Gasket Displacement Markings
Courtesy of GENERAL MOTORS CORP.

6. Inspect the displacement markings (1) on the gasket, for proper usage.

cardiagn.com

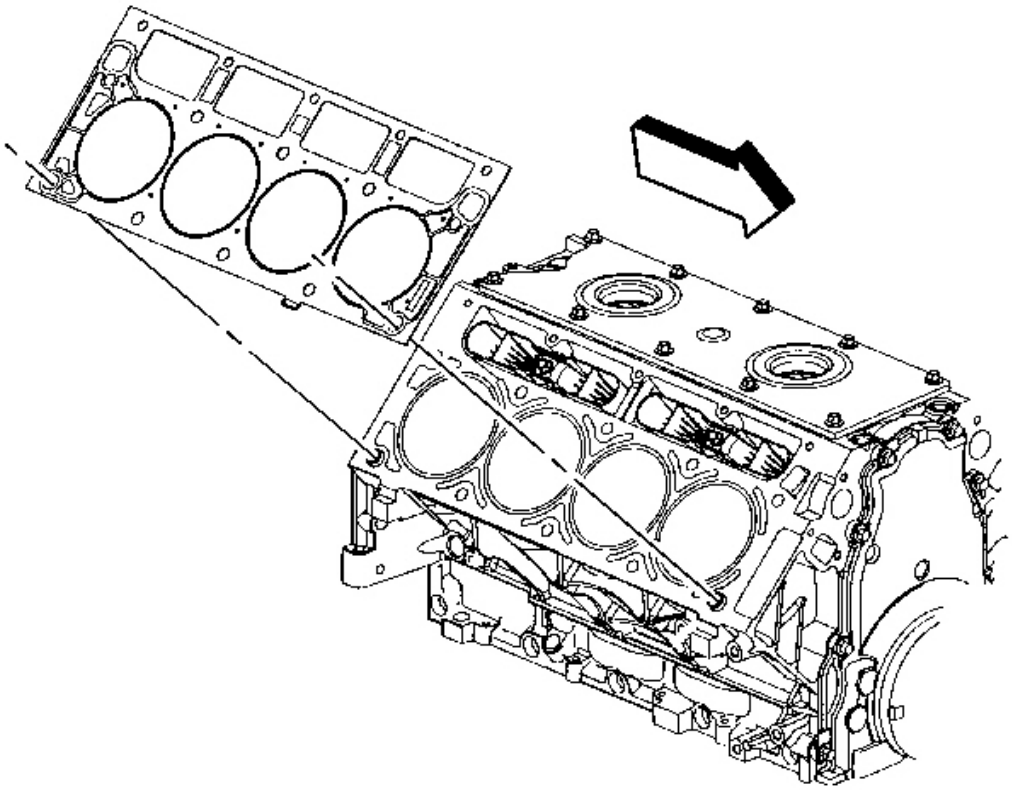

Fig. 169: View Of Cylinder Head Gasket (Right)
Courtesy of GENERAL MOTORS CORP.

IMPORTANT: When properly installed, the tab on the right cylinder head gasket will be located right of center or closer to the front of the engine.

7. Install the NEW cylinder head gasket onto the locating pins.

cardiagn.com

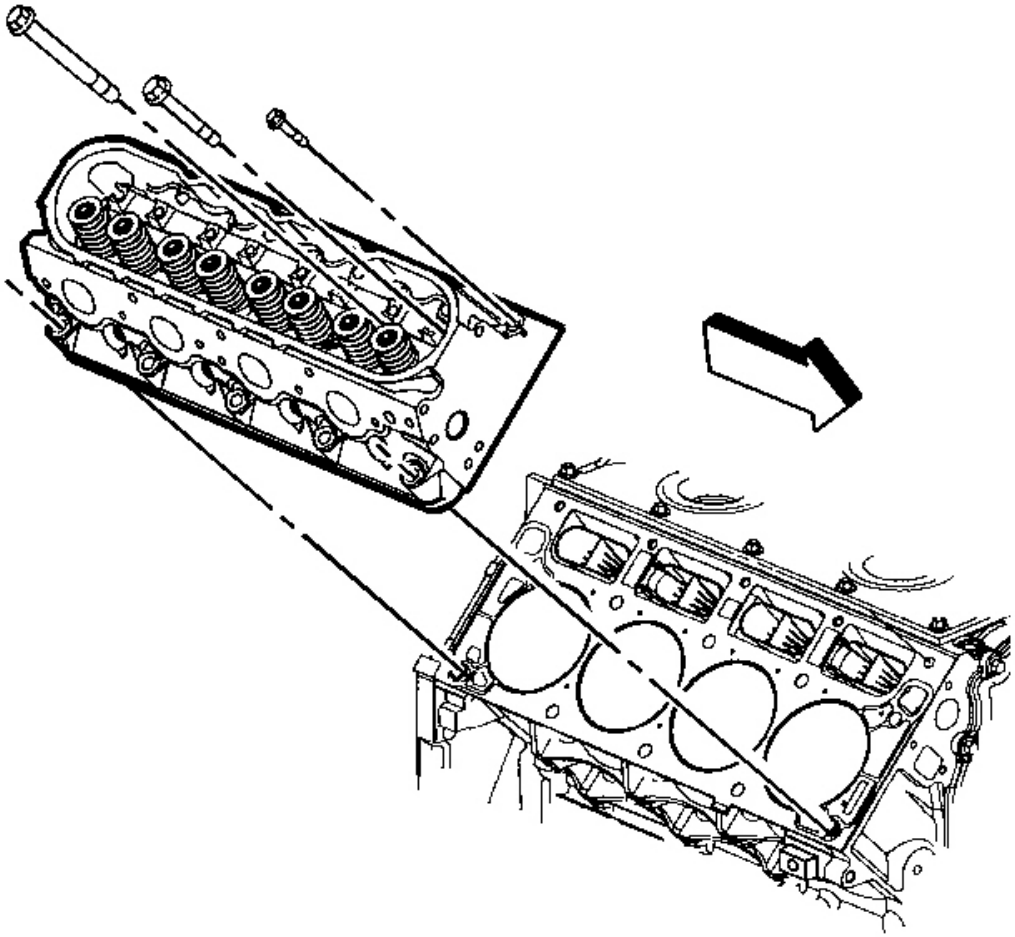

Fig. 170: View Of Cylinder Head & Bolts
Courtesy of GENERAL MOTORS CORP.

8. Install the cylinder head onto the locating pins and the gasket.
9. Install the NEW cylinder head bolts.

cardiagn.com

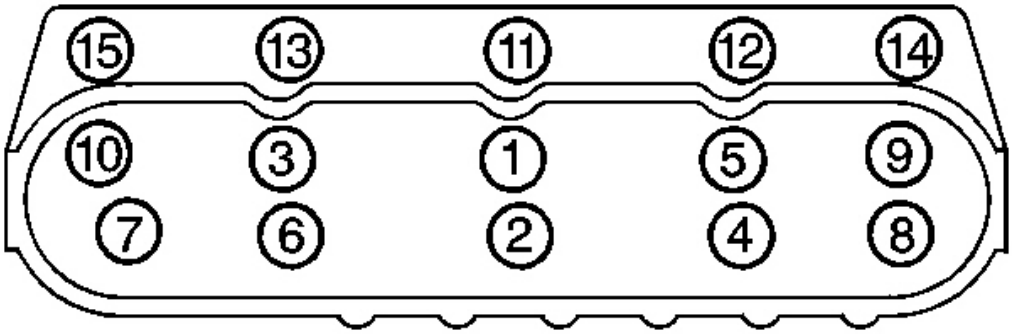

Fig. 171: Cylinder Head Bolt Tightening Sequence (Right)
Courtesy of GENERAL MOTORS CORP.

NOTE: **Refer to Fastener Notice .**

10. Tighten the first design cylinder head bolts.

    Tighten:

    1. Tighten the first design M11 cylinder head bolts a first pass in sequence to 30 N.m (22 lb ft).
    2. Tighten the first design M11 cylinder head bolts a second pass in sequence to 90 degrees using the **J 45059** .
    3. Tighten the first design M11 cylinder head bolts (1, 2, 3, 4, 5, 6, 7, 8) to 90 degrees and the M11 cylinder head bolts (9 and 10) to 50 degrees a final pass in sequence to using the **J 45059** .
    4. Tighten the M8 cylinder head bolts (11, 12, 13, 14, 15) to 30 N.m (22 lb ft). Begin with the center bolt (11) and alternating side-to-side, work outward tightening all of the bolts.

11. Tighten the second design cylinder head bolts.

    Tighten:

    1. Tighten the second design M11 cylinder head bolts (1-10) a first pass in sequence to 30 N.m (22 lb ft).
    2. Tighten the second design M11 cylinder head bolts (1-10) a second pass in sequence to 90 degrees using the **J 45059** .
    3. Tighten the second design M11 cylinder head bolts (1-10) a final pass in sequence to 70 degrees using the **J 45059** .
    4. Tighten the M8 cylinder head bolts (11, 12, 13, 14, 15) to 30 N.m (22 lb ft). Begin with the center bolt (11) and alternating side-to-side, work outward tightening all of the bolts.

cardiagn.com

12. Install the wiring harness to the clip at the rear of the cylinder head.

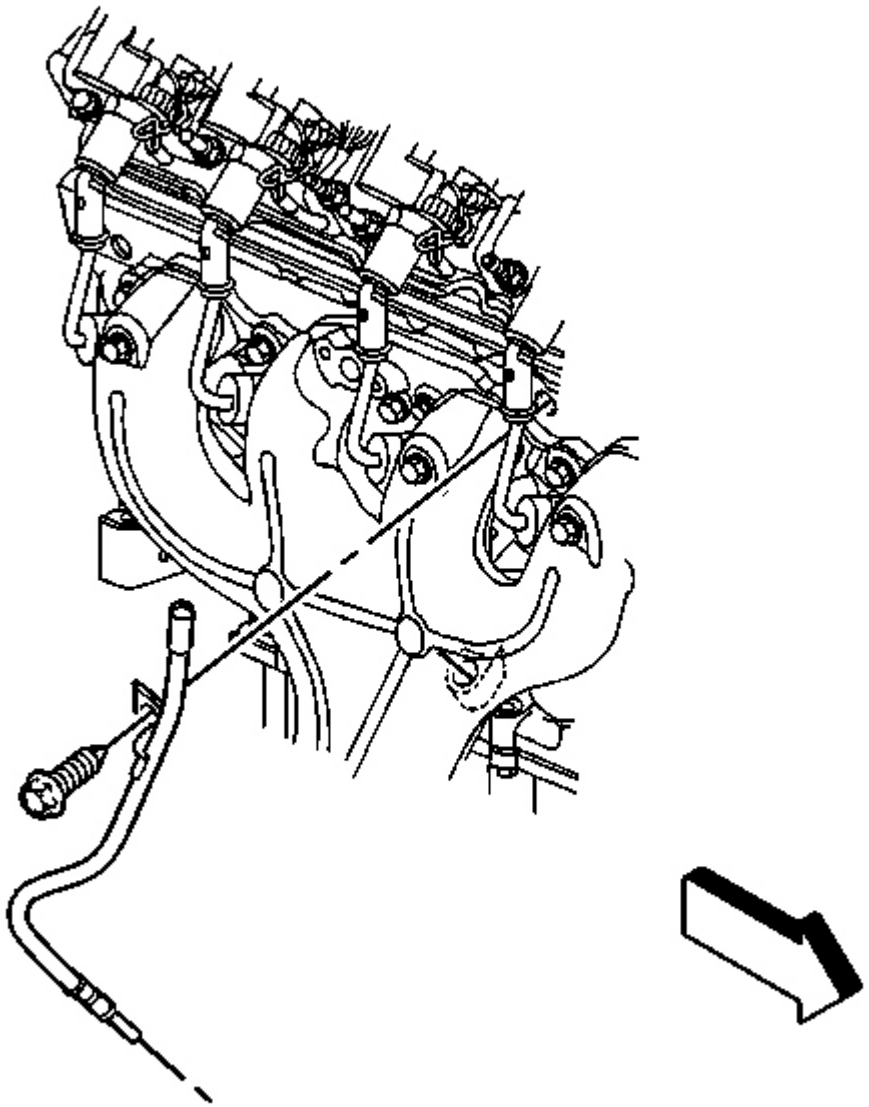

Fig. 172: Oil Level Indicator Tube & Bolt
Courtesy of GENERAL MOTORS CORP.

13. Position the oil level indicator tube into place.
14. Install the oil level indicator tube bolt.

cardiagn.com

Tighten: Tighten the oil level indicator tube bolt to 25 N.m (18 lb ft).

15. Install the exhaust manifold. Refer to **Exhaust Manifold Replacement - Right** in Engine Exhaust.
16. Install the engine coolant air bleed pipe. Refer to **Coolant Air Bleed Pipe Assembly Replacement** in Engine Cooling.
17. Install the valve rocker arms and pushrods. Refer to **Valve Rocker Arm and Push Rod Replacement** .

VALVE LIFTER REPLACEMENT

Tools Required

J 3049-A Valve Lifter Remover

Removal Procedure

cardiagn.com

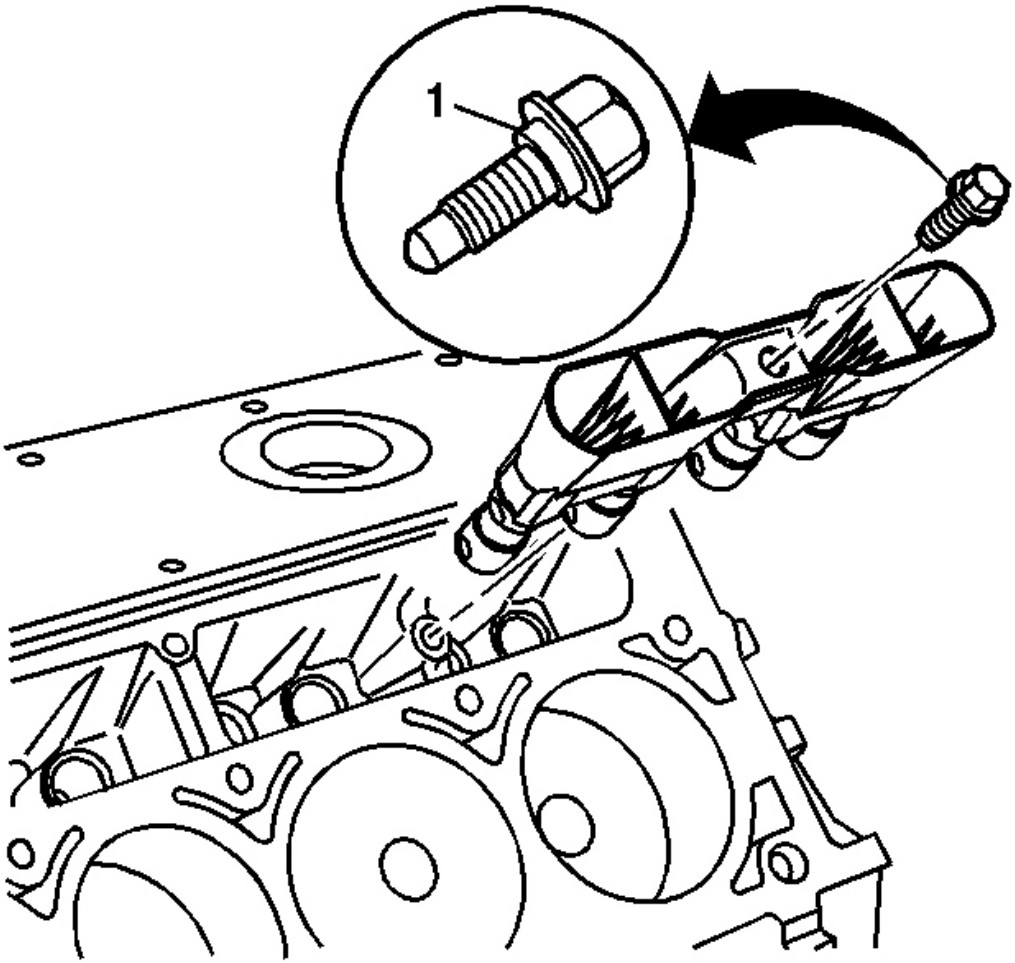

Fig. 173: Valve Lifter Guide & Bolts
Courtesy of GENERAL MOTORS CORP.

1. Remove the cylinder head. Refer to **Cylinder Head Replacement - Left** or **Cylinder Head Replacement - Right** .
2. Remove the valve lifter guide bolts (1).
3. Remove the valve lifters and guide.

cardiagn.com

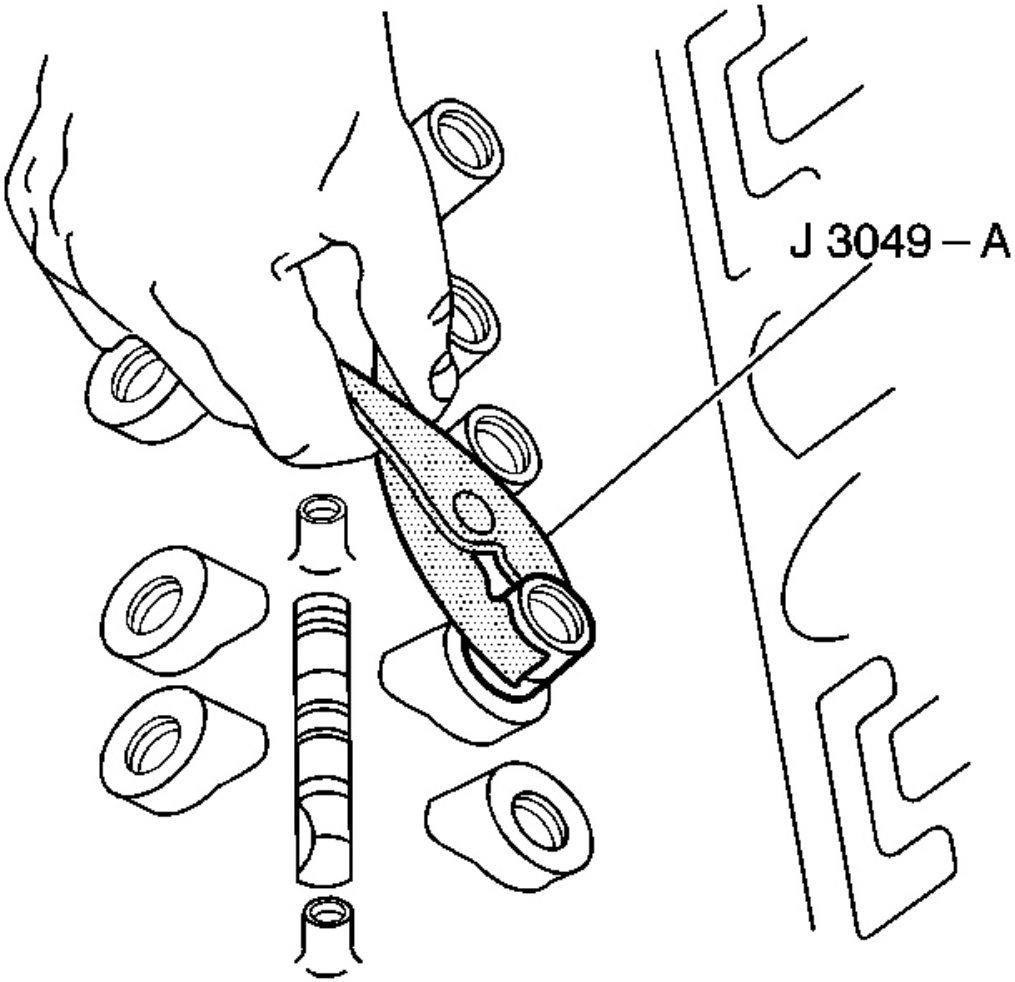

Fig. 174: Using J 3049-A To Remove Stuck Valve Lifters
Courtesy of GENERAL MOTORS CORP.

IMPORTANT: Some valve lifters may be stuck in their bores because of gum or varnish deposits.

4. Use the **J 3049-A** or equivalent in order to remove the valve lifters (if required).

cardiagn.com

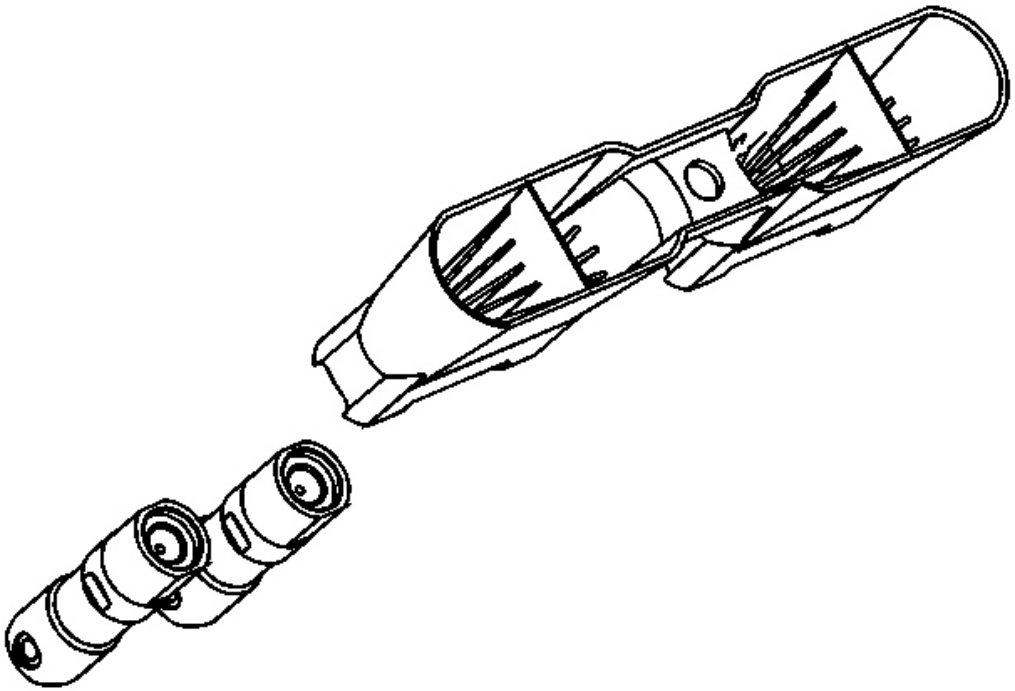

Fig. 175: View Of Valve Lifters & Guide
Courtesy of GENERAL MOTORS CORP.

5. Remove the valve lifters from the guide.
6. Organize or mark the components so that they can be installed in the same location from which they were removed.
7. Clean and inspect the valve lifters and guides. Refer to **Valve Lifters and Guides Cleaning and Inspection** .

Installation Procedure

IMPORTANT: When reusing valve lifters, install the lifters to their original locations.

cardiagn.com

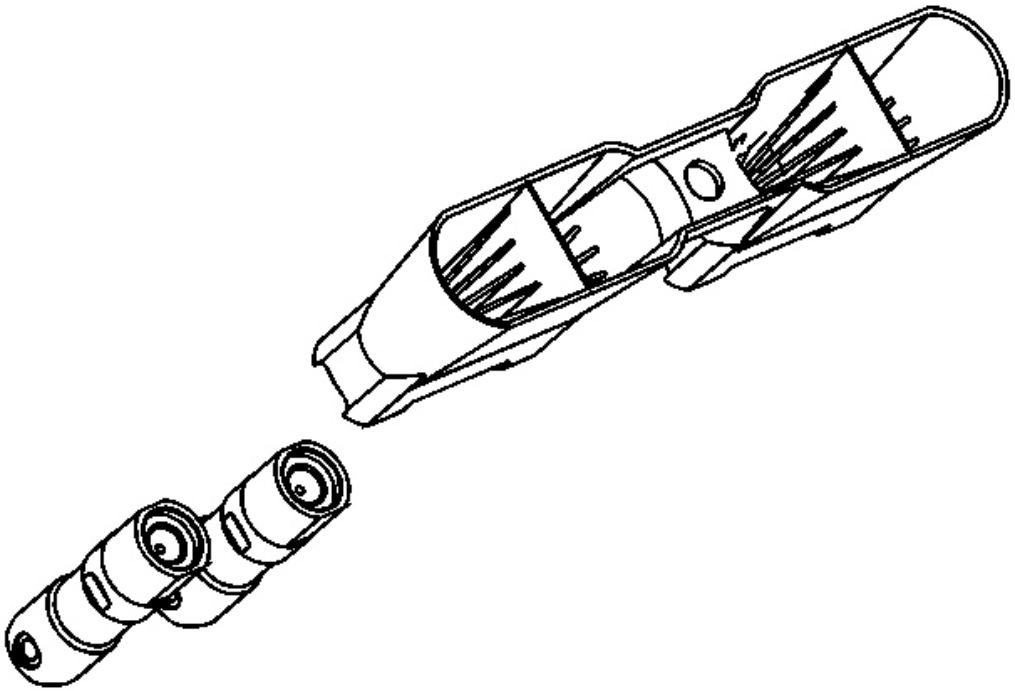

Fig. 176: View Of Valve Lifters & Guide
Courtesy of GENERAL MOTORS CORP.

1. Lubricate the valve lifters and engine block valve lifter bores with clean engine oil.
2. Insert the valve lifters into the lifter guides.

   Align the flat area on the top of the lifter with the flat area in the guide bore. Push the lifter completely into the guide bore.

cardiagn.com

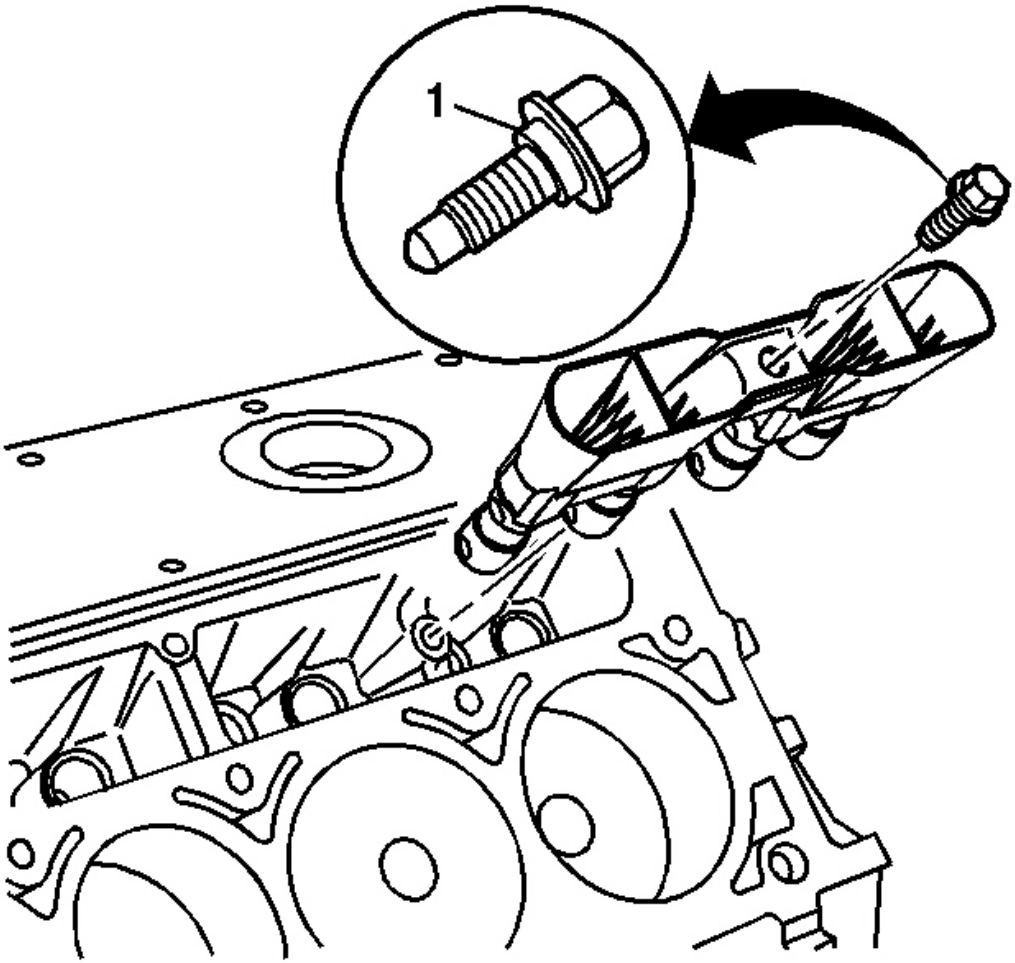

Fig. 177: Valve Lifter Guide & Bolts
Courtesy of GENERAL MOTORS CORP.

NOTE: Refer to Fastener Notice in Cautions and Notices.

3. Install the valve lifters and guide to the engine block.
4. Install the valve lifter guide bolt (1).

   Tighten: Tighten the valve lifter guide bolt to 12 N.m (106 lb in).

5. Install the cylinder head. Refer to **Cylinder Head Replacement - Left** or **Cylinder Head Replacement - Right** .

cardiagn.com

CRANKSHAFT BALANCER REPLACEMENT

Tools Required

- J 41816 Crankshaft Balancer Remover
- J 41816-2 Crankshaft End Protector
- **J 42386-A** Flywheel Holding Tool
- **J 41665** Crankshaft Balancer and Sprocket Installer
- J 36660-A Torque Angle Meter

Removal Procedure

cardiagn.com

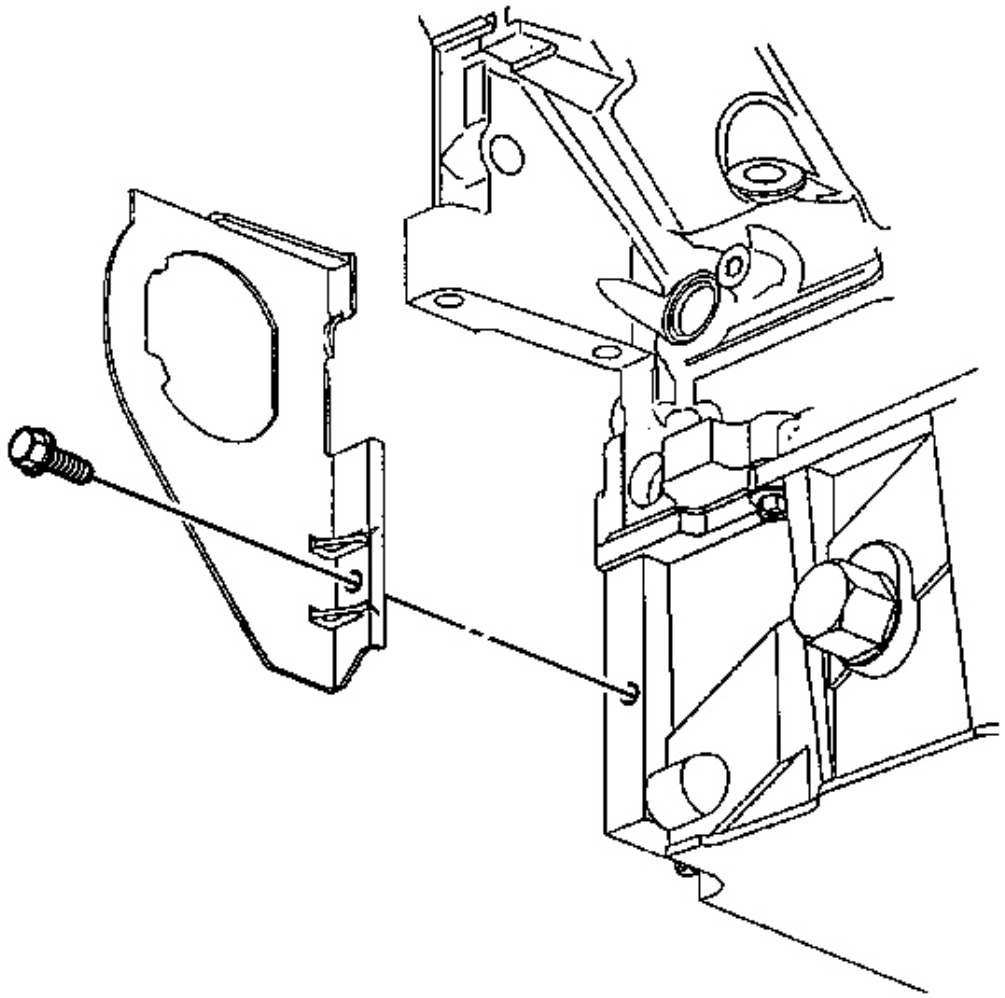

Fig. 178: Right Transmission Cover & Bolt
Courtesy of GENERAL MOTORS CORP.

1. Remove the air conditioning (A/C) drive belt. Refer to **Drive Belt Replacement - Air Conditioning** .
2. Remove the power steering gear. Refer to **Power Steering Gear Replacement** in Power Steering System.
3. Remove the starter motor. Refer to **Starter Motor Replacement** in Engine Electrical.
4. Remove the right transmission cover and bolt.

cardiagn.com

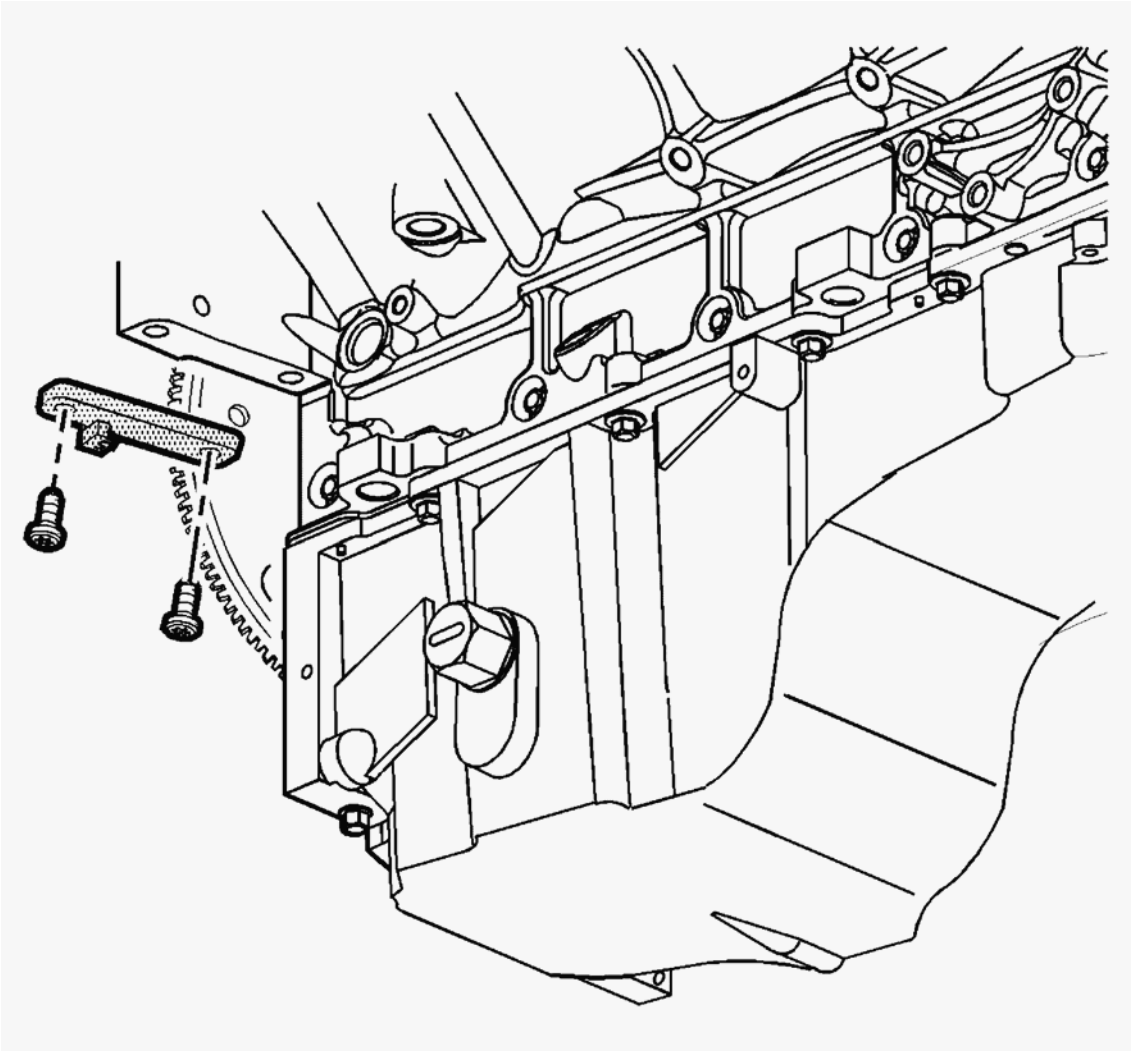

Fig. 179: J 42386-A & Bolts
Courtesy of GENERAL MOTORS CORP.

NOTE: Refer to Fastener Notice in Cautions and Notices.

IMPORTANT: Make sure that the teeth of the flywheel holding tool mesh with the teeth of the engine flywheel.

5. Install the **J 42386-A** and bolts.

   Use one M10-1.5 x 120 mm and one M10-1.5 x 45 mm bolt for proper tool operation

   Tighten: Tighten the **J 42386-A** bolts to 50 N.m (37 lb ft).

cardiagn.com

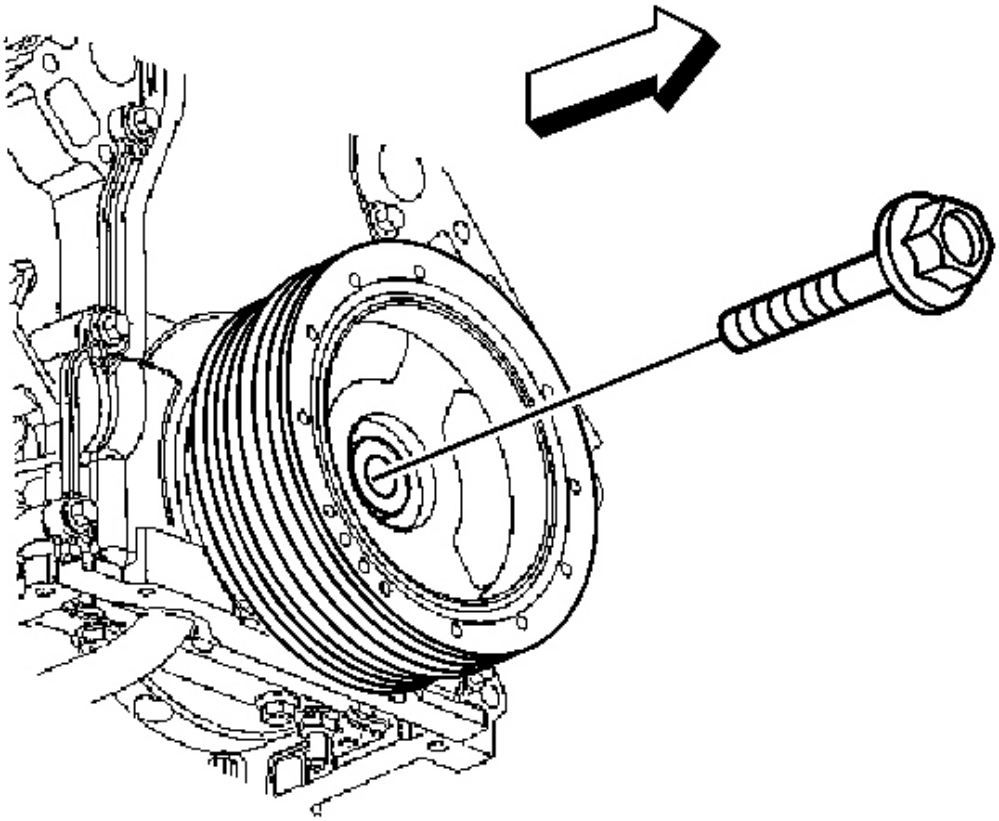

Fig. 180: Identifying Harmonic Balancer Bolt
Courtesy of GENERAL MOTORS CORP.

6. Remove the crankshaft balancer bolt.

   Do not discard the crankshaft balancer bolt. The balancer bolt will be used during the balancer installation procedure.

cardiagn.com

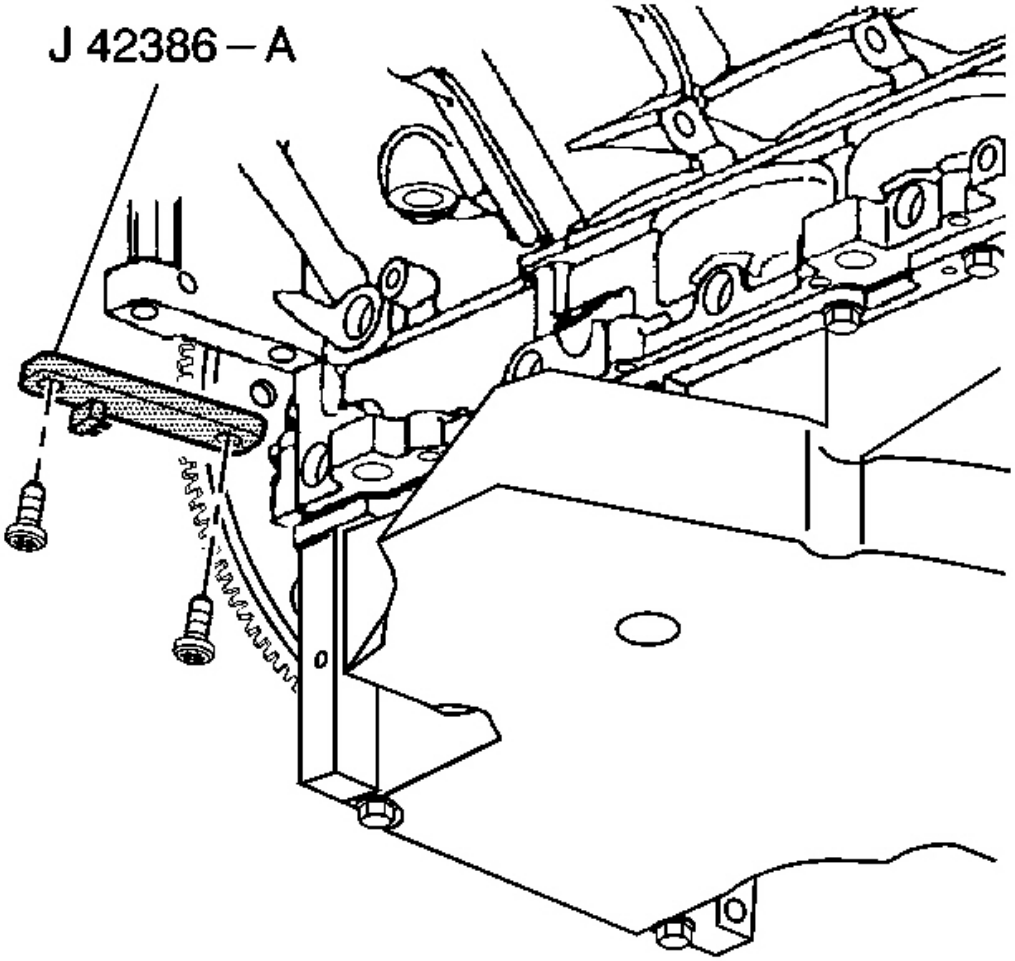

Fig. 181: J 42386-A, Crankshaft Balancer & Bolt
Courtesy of GENERAL MOTORS CORP.

IMPORTANT: For manual transmission applications, note the position of the crankshaft balancer before removal. The balancer does not use a key or keyway for positioning. Mark or scribe the end of the crankshaft and the balancer before removal. If replacing the crankshaft balancer, note the location of any existing balance weights (if applicable). Install new balance weights into the new crankshaft balancer (if applicable) in the same location as the old balancer. A properly installed balance weight will be either flush or below flush with the face of the balancer.

7. Mark or scribe the crankshaft balancer and the end of the crankshaft.

cardiagn.com

Note the balancer installed position on the crankshaft for assembly.

Refer to **Engine Balancing**

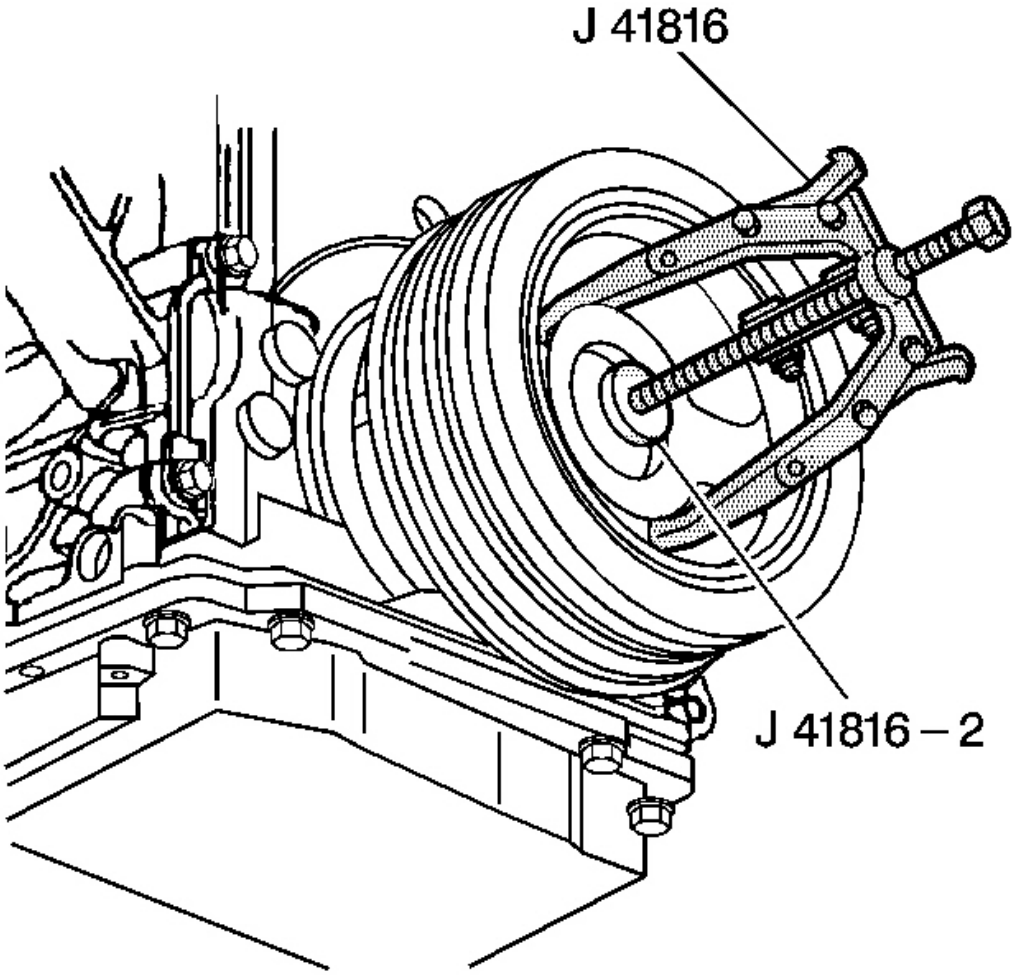

Fig. 182: View Of J 41816 & J 41816-2
Courtesy of GENERAL MOTORS CORP.

8. Use the **J 38416-B** and the J 41816-2 in order to remove the crankshaft balancer.
9. Remove the **J 38416-B** and the J 41816-2 from the crankshaft balancer.

cardiagn.com

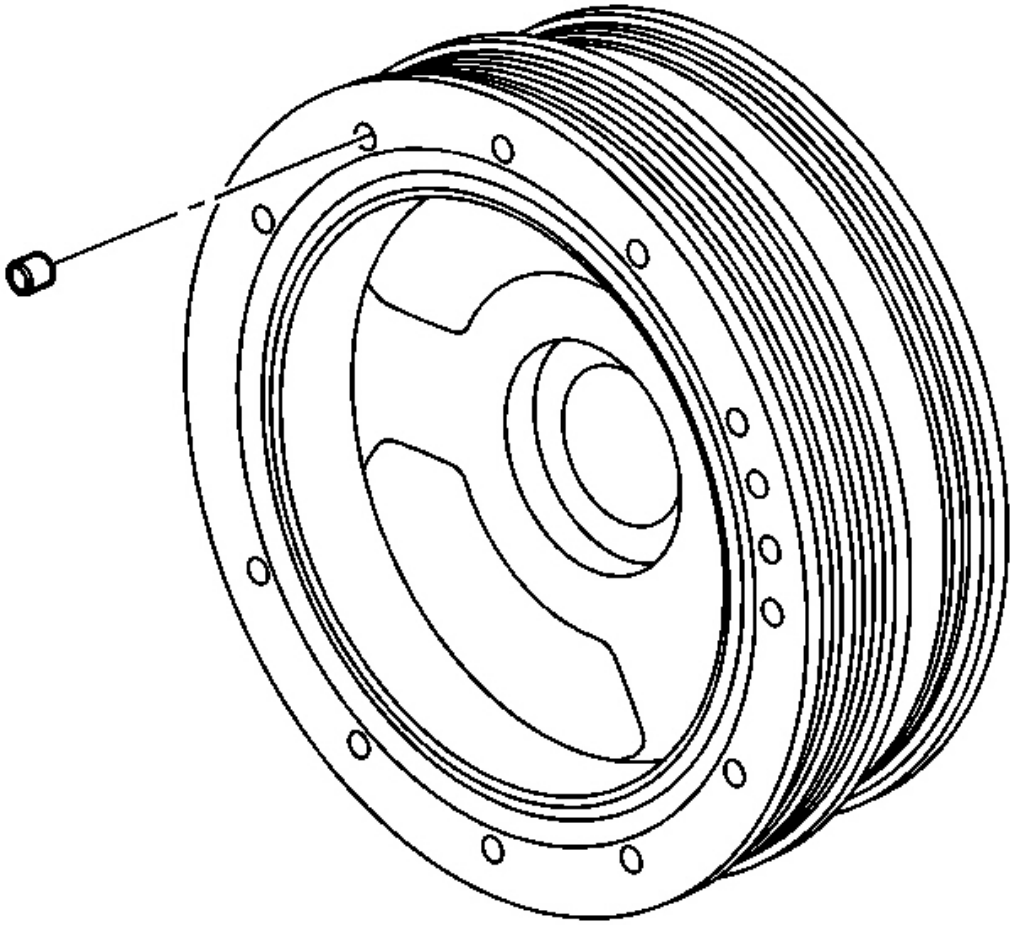

Fig. 183: Crankshaft Balancer Weights
Courtesy of GENERAL MOTORS CORP.

10. Not the position of any crankshaft balancer weights (if applicable).
11. Clean and inspect the crankshaft balancer. Refer to **Crankshaft Balancer Cleaning and Inspection** in the Engine Unit Repair Manual.

Installation Procedure

IMPORTANT:

- **The used crankshaft balancer bolt will be used only during the first pass on the balancer installation procedure. Install a NEW crankshaft balancer bolt and tighten as described in the second, third and fourth passes of the balancer bolt tightening procedure.**

cardiagn.com

- **The crankshaft balancer installation and bolt tightening involves a four stage tightening process. The first pass ensures that the balancer is installed completely onto the crankshaft. The third, and fourth passes tighten the new bolt to the proper torque.**

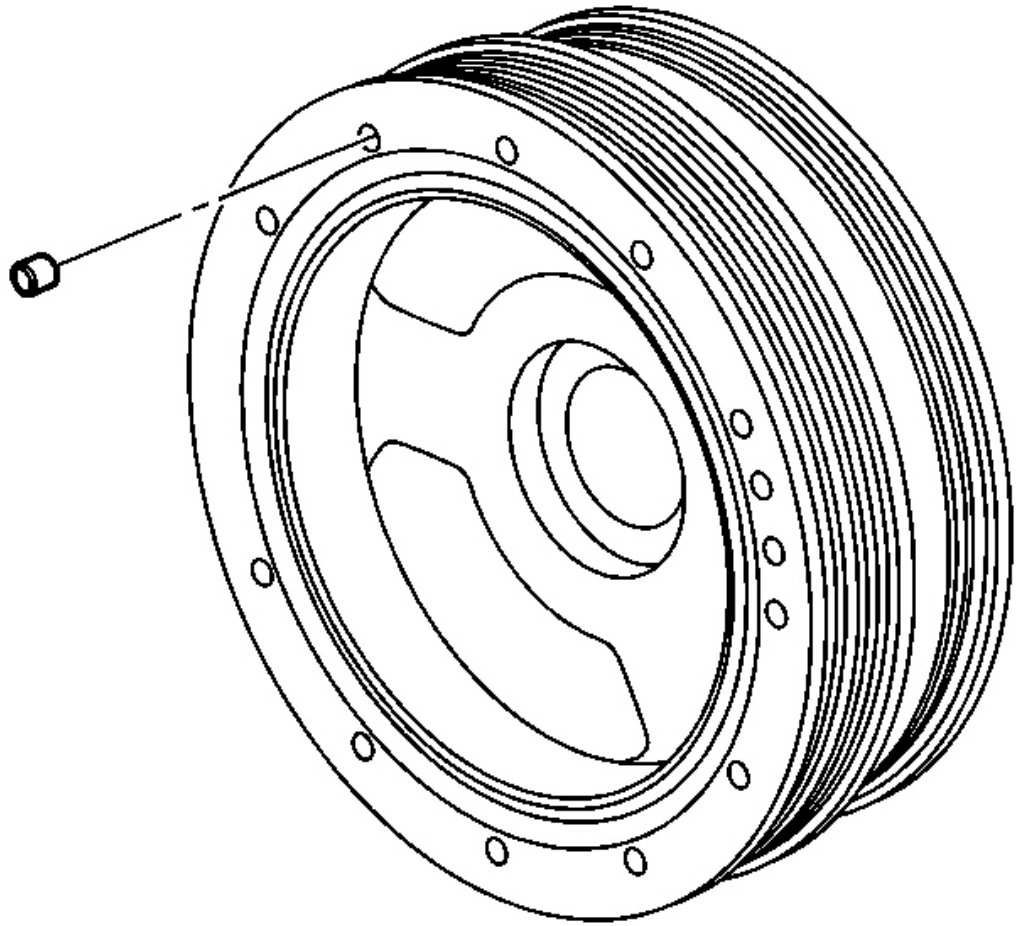

Fig. 184: Crankshaft Balancer Weights
Courtesy of GENERAL MOTORS CORP.

1. Using the old balancer as a reference, mark or scribe the NEW balancer in the same location (if required).

   Refer to **Engine Balancing**

2. Install balance weights into the NEW balancer (if required).

cardiagn.com

Refer to **Crankshaft Balancer Cleaning and Inspection**

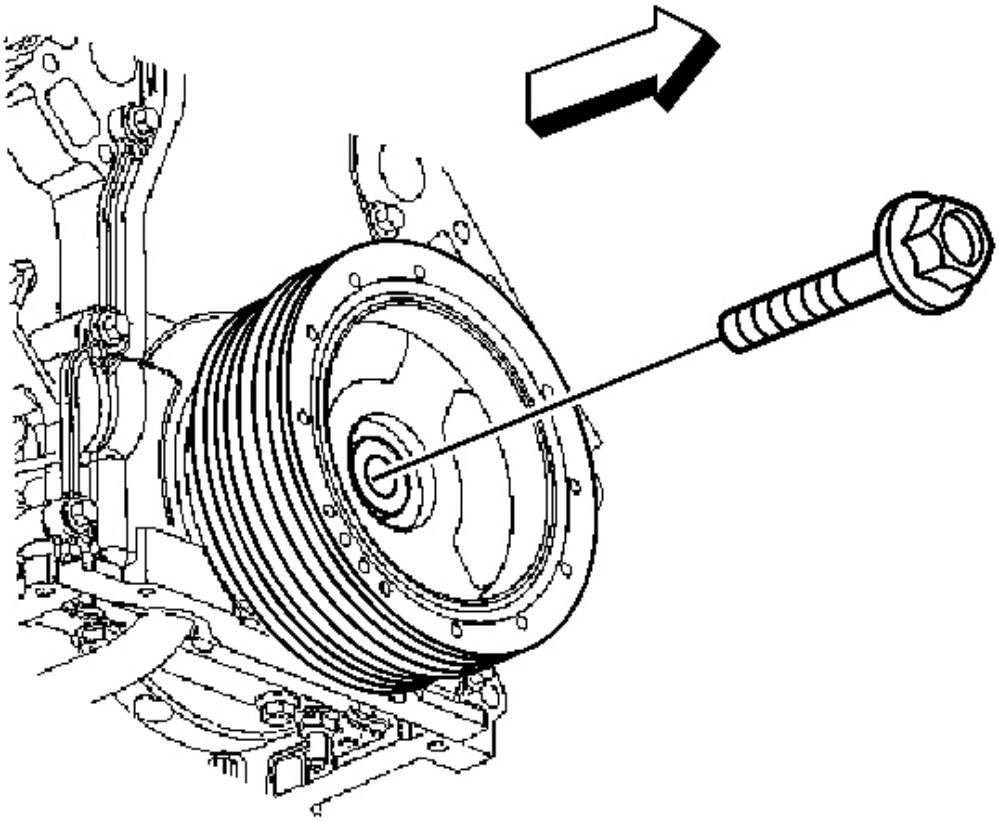

Fig. 185: Identifying Harmonic Balancer Bolt
Courtesy of GENERAL MOTORS CORP.

IMPORTANT: Align the scribe mark on the balancer with the scribe mark on the crankshaft.
The balancer should be positioned onto the end of the crankshaft as straight as possible prior to tool installation.

3. Install the balancer onto the end of the crankshaft.

cardiagn.com

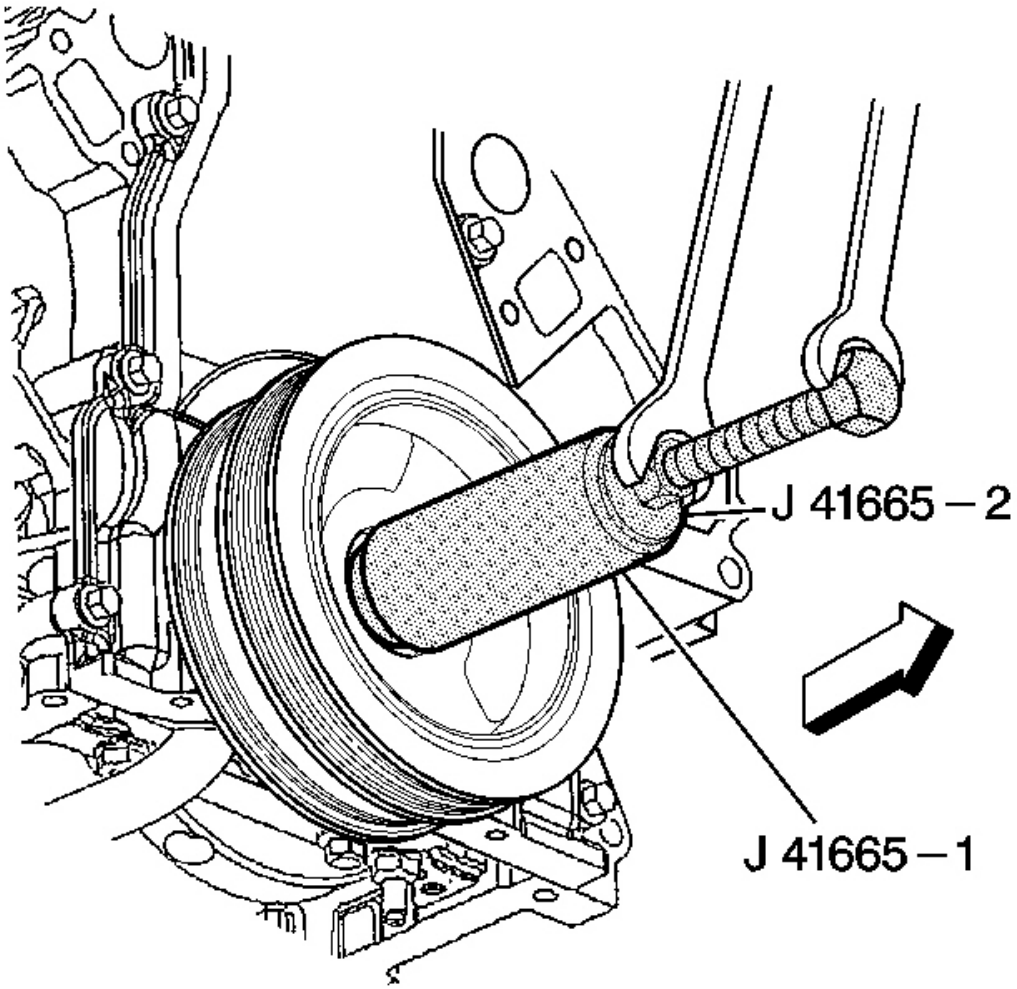

Fig. 186: J 41665 & Crankshaft Balancer
Courtesy of GENERAL MOTORS CORP.

4. Use the **J 41665** in order to install the crankshaft balancer.
    1. Assemble the threaded rod, nut, washer and installer.

       Insert the smaller end of the installer into the front of the balancer.

    2. Use a wrench and hold the hex end of the threaded rod.
    3. Use a second wrench and rotate the installation tool nut clockwise until the balancer is started onto the crankshaft.
    4. Remove the tool and reverse the installation tool.

cardiagn.com

Position the larger end of the installer against the front of the balancer.

5. Use a wrench and hold the hex end of the threaded rod.
6. Use a second wrench and rotate the installation tool nut clockwise until the balancer is installer onto the crankshaft.
7. Remove the balancer installation tool.

cardiagn.com

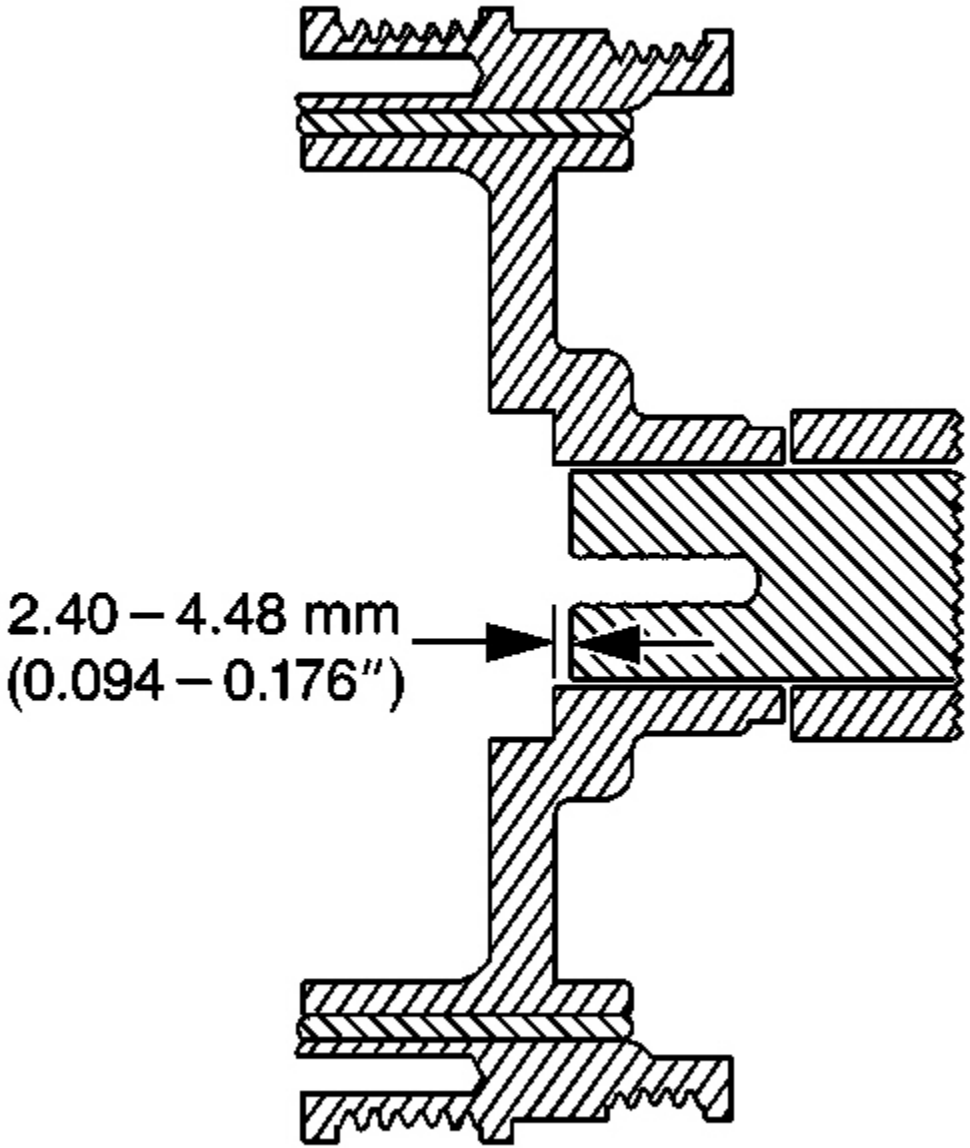

Fig. 187: View Of Balancer Proper Installation Position
Courtesy of GENERAL MOTORS CORP.

5. Install the used crankshaft balancer bolt.

   Tighten: Tighten the used crankshaft balancer bolt to 330 N.m (240 lb ft).

cardiagn.com

6. Remove the used crankshaft balancer bolt.

IMPORTANT: The nose of the crankshaft should be recessed 2.40-4.48 mm (0.094-0.176 in) into the balancer bore.

7. Measure for a correctly installer balancer.

   If the balancer is not installed to the proper dimensions, install the **J 41665** and repeat the installation procedure.

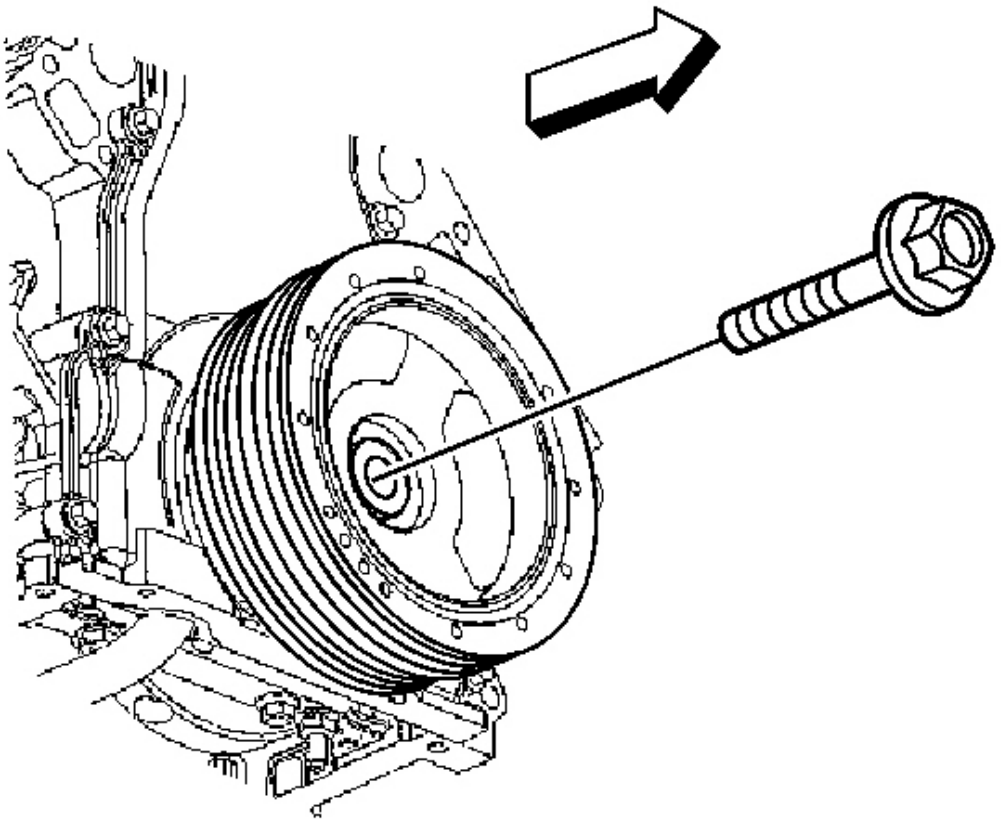

Fig. 188: Identifying Harmonic Balancer Bolt
Courtesy of GENERAL MOTORS CORP.

8. Install the NEW crankshaft balancer bolt.

   Tighten:

cardiagn.com

1. Tighten the new crankshaft balancer bolt a first pass to 50 N.m (37 lb ft).
2. Tighten the new crankshaft balancer bolt a second pass to 140 degrees using the J 36660-A .

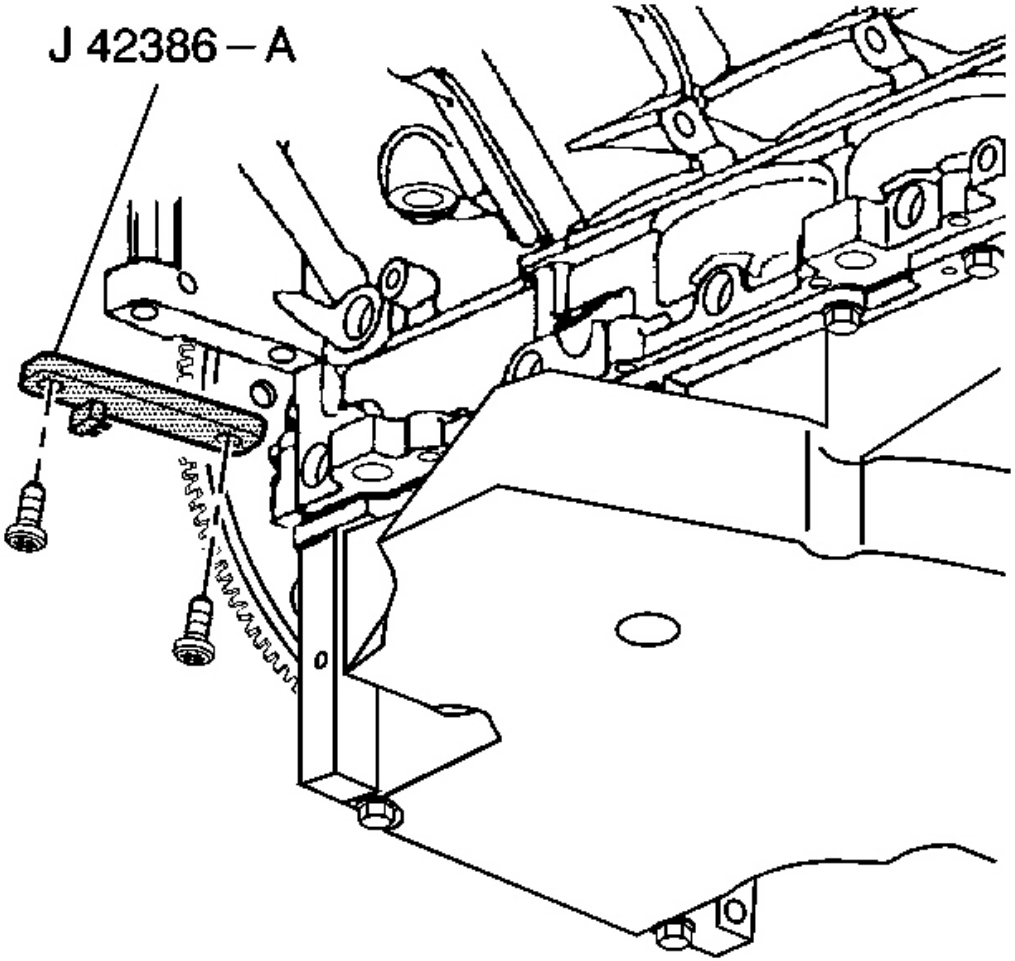

Fig. 189: J 42386-A, Crankshaft Balancer & Bolt
Courtesy of GENERAL MOTORS CORP.

9. Remove the **J 42386-A** and bolts.

cardiagn.com

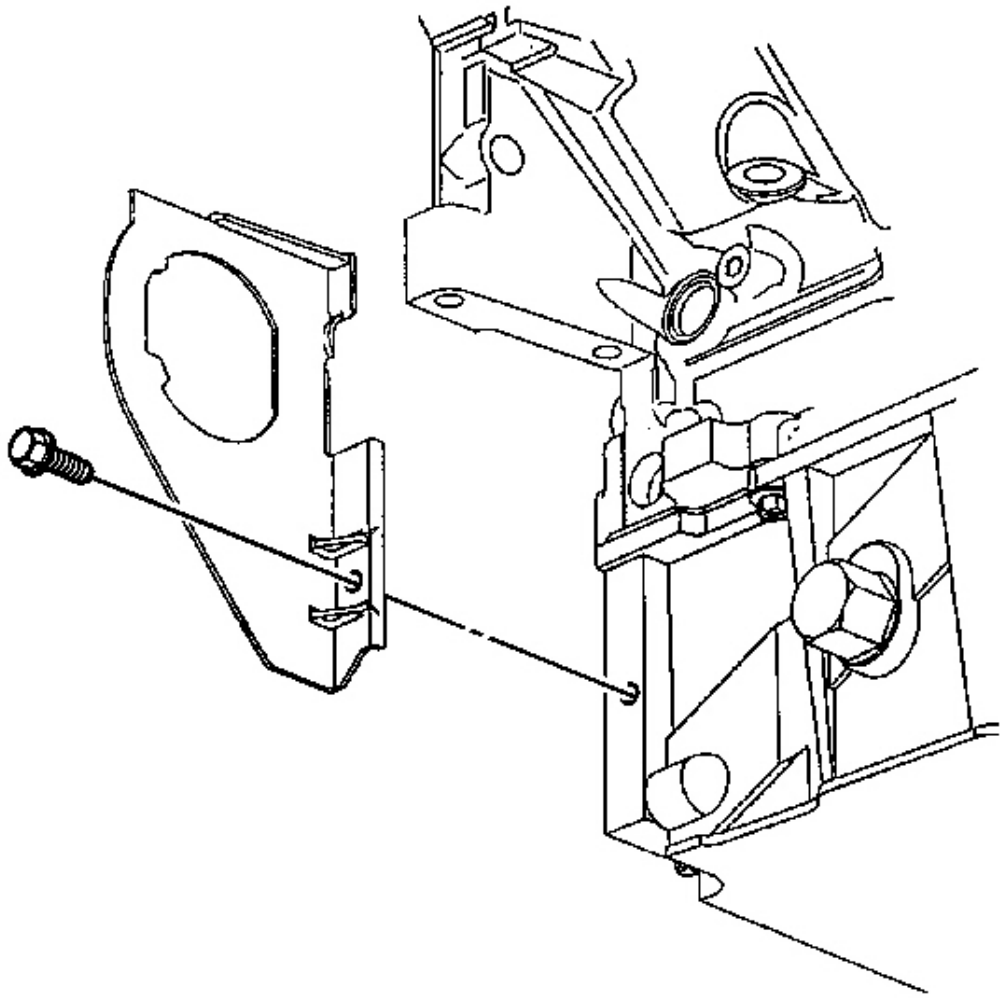

Fig. 190: Right Transmission Cover & Bolt
Courtesy of GENERAL MOTORS CORP.

10. Install the right transmission cover and bolt.

    Tighten: Tighten the right transmission cover bolt to 12 N.m (106 lb in).

11. Install the starter motor. Refer to **Starter Motor Replacement** in Engine Electrical.
12. Install the power steering gear. Refer to **Power Steering Gear Replacement** in Power Steering System.
13. Install the A/C drive belt. Refer to **Drive Belt Replacement - Air Conditioning** .
14. Perform the crankshaft position (CKP) system variation learn procedure. Refer to **CKP System**

cardiagn.com

Variation Learn Procedure in Engine Controls - 5.7 L.

CRANKSHAFT FRONT OIL SEAL REPLACEMENT

Tools Required

J 41478 Crankshaft Front Oil Seal Installer

Removal Procedure

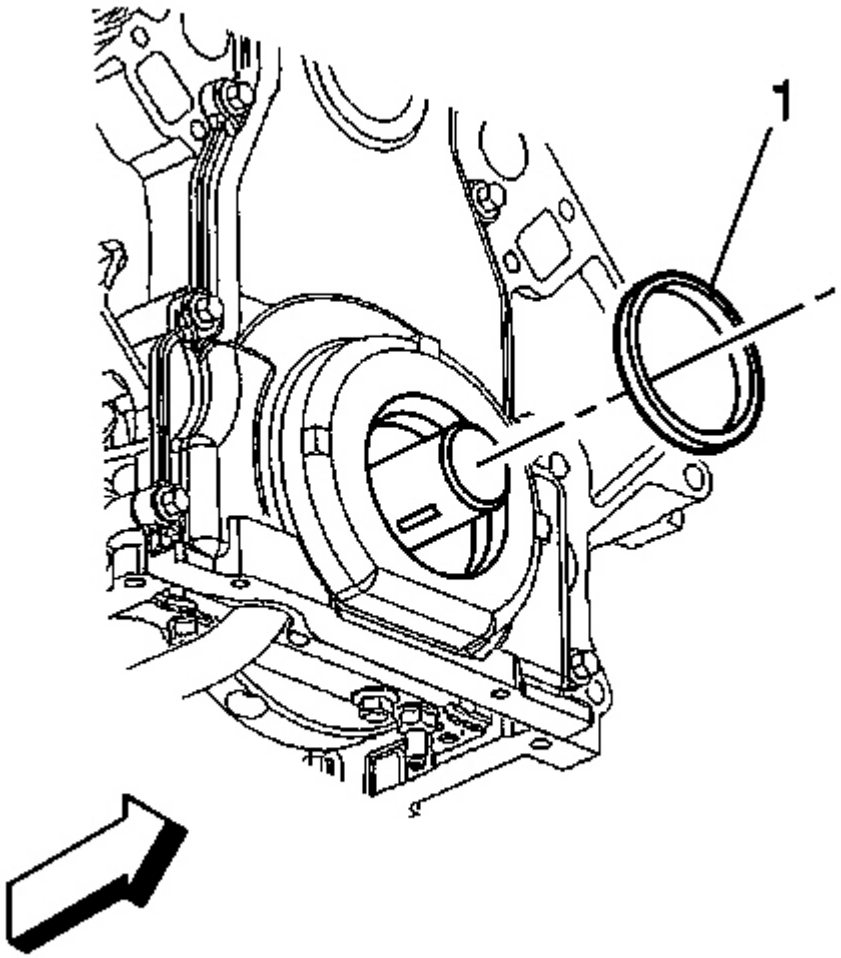

Fig. 191: Front Cover & Oil Seal Bore
Courtesy of GENERAL MOTORS CORP.

cardiagn.com

1. Remove the crankshaft balancer. Refer to **Crankshaft Balancer Replacement** .
2. Gently pry the crankshaft oil seal (1) from the front cover.

Installation Procedure

IMPORTANT:

- **Do not lubricate the oil seal sealing surface.**
- **Do not reuse the crankshaft oil seal.**

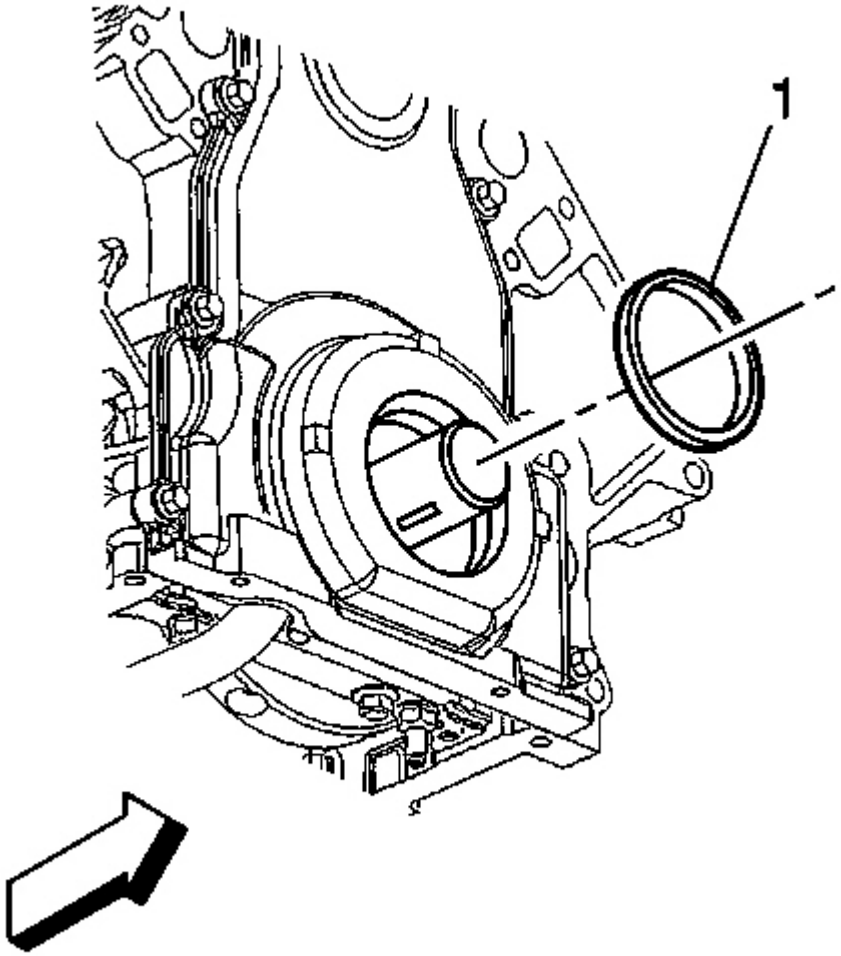

Fig. 192: Front Cover & Oil Seal Bore
Courtesy of GENERAL MOTORS CORP.

cardiagn.com

1. Lubricate the outer edge of the oil seal (1) with clean engine oil.
2. Lubricate the front cover oil seal bore with clean engine oil.

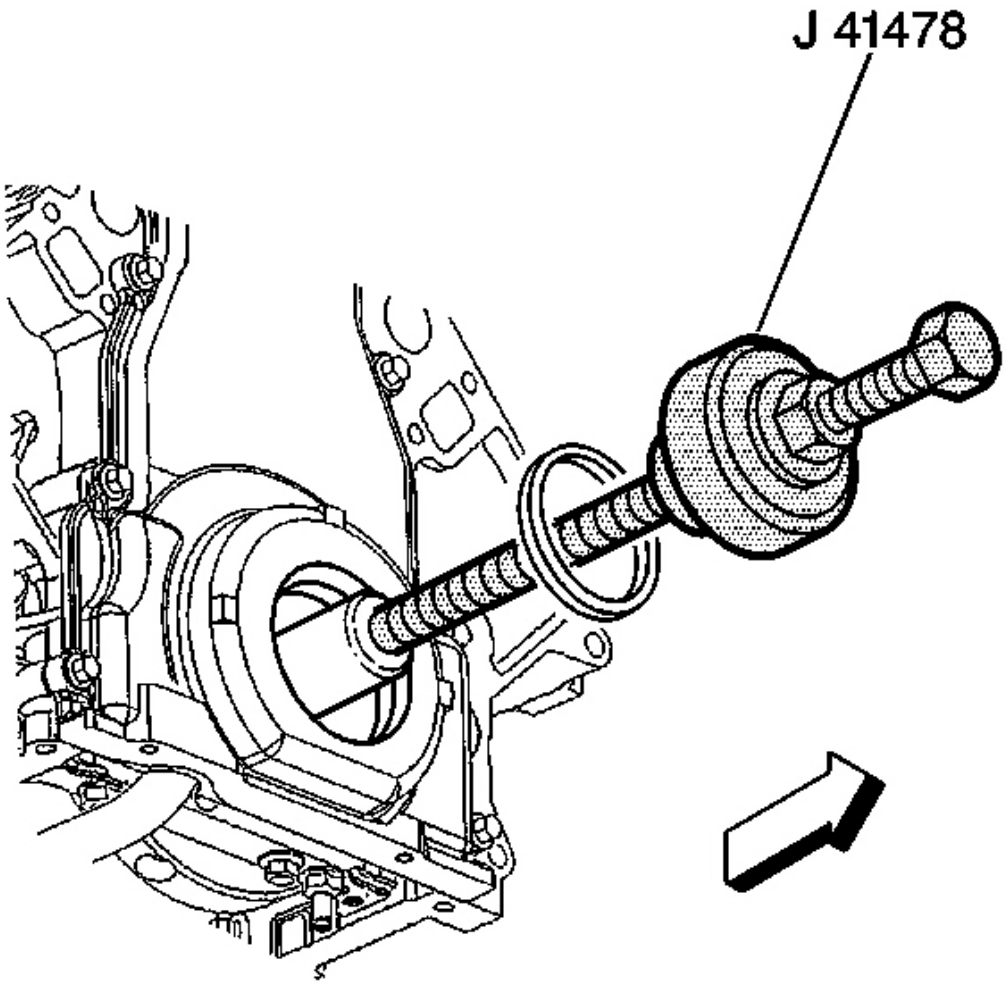

Fig. 193: J 41478 & Crankshaft Front Oil Seal
Courtesy of GENERAL MOTORS CORP.

3. Install the crankshaft front oil seal onto the **J 41478** guide.
4. Install the **J 41478** threaded rod (with nut, washer, guide, and oil seal) into the end of the crankshaft.
5. Use the **J 41478** in order to install the oil seal into the cover bore.
    1. Use a wrench and hold the hex on the installer tool.
    2. Use a second wrench and rotate the installer nut clockwise until the seal bottoms in the cover bore.

cardiagn.com

3. Remove the tool.
4. Inspect the oil seal for proper installation. The oil seal should be installed evenly and completely into the front cover bore.

6. Install the crankshaft balancer. Refer to **Crankshaft Balancer Replacement** .

ENGINE FRONT COVER REPLACEMENT

Tools Required

- **J 41476** Front and Rear Cover Alignment (Crankshaft Oil Seal Area)
- **J 41478** Crankshaft Front Oil Seal Installer

Removal Procedure

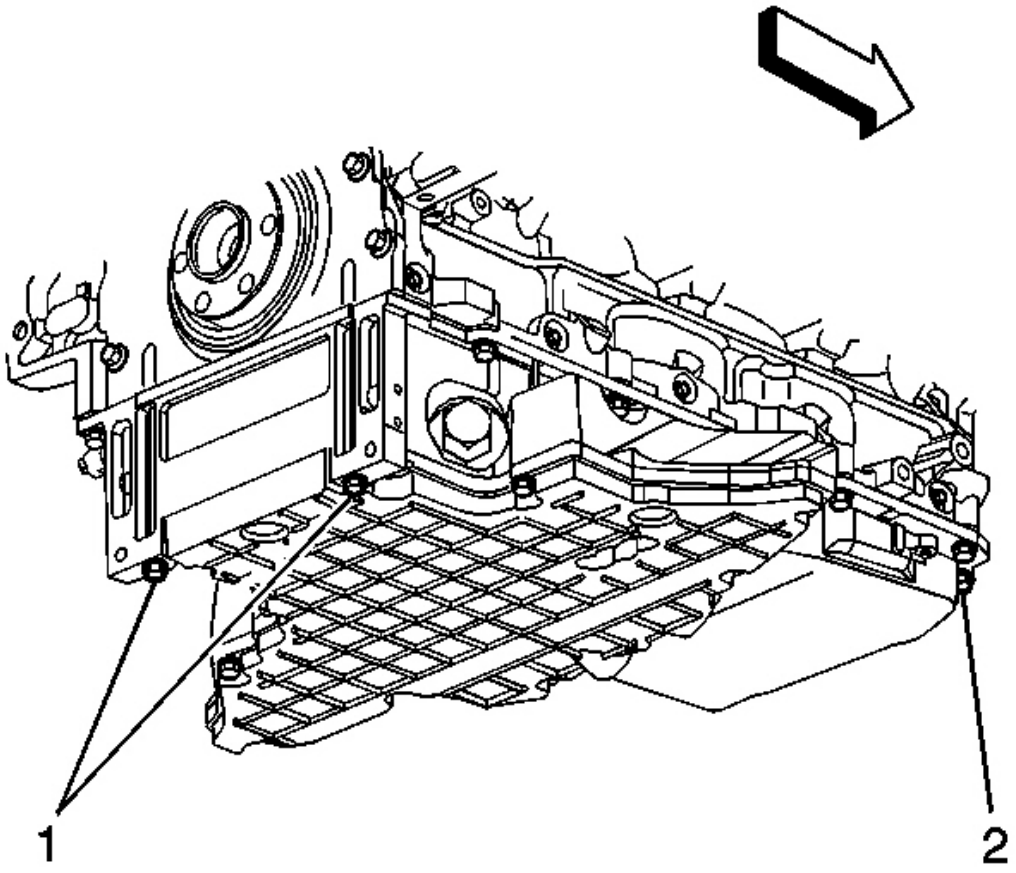

Fig. 194: Oil Pan-To-Front Cover Bolts & Oil Pan-To-Rear Cover Bolts

cardiagn.com

Courtesy of GENERAL MOTORS CORP.

1. Remove the crankshaft balancer. Refer to **Crankshaft Balancer Replacement** .
2. Remove the water pump. Refer to **Water Pump Replacement** in Engine Cooling.
3. Remove the oil pan-to-front cover bolts (2).

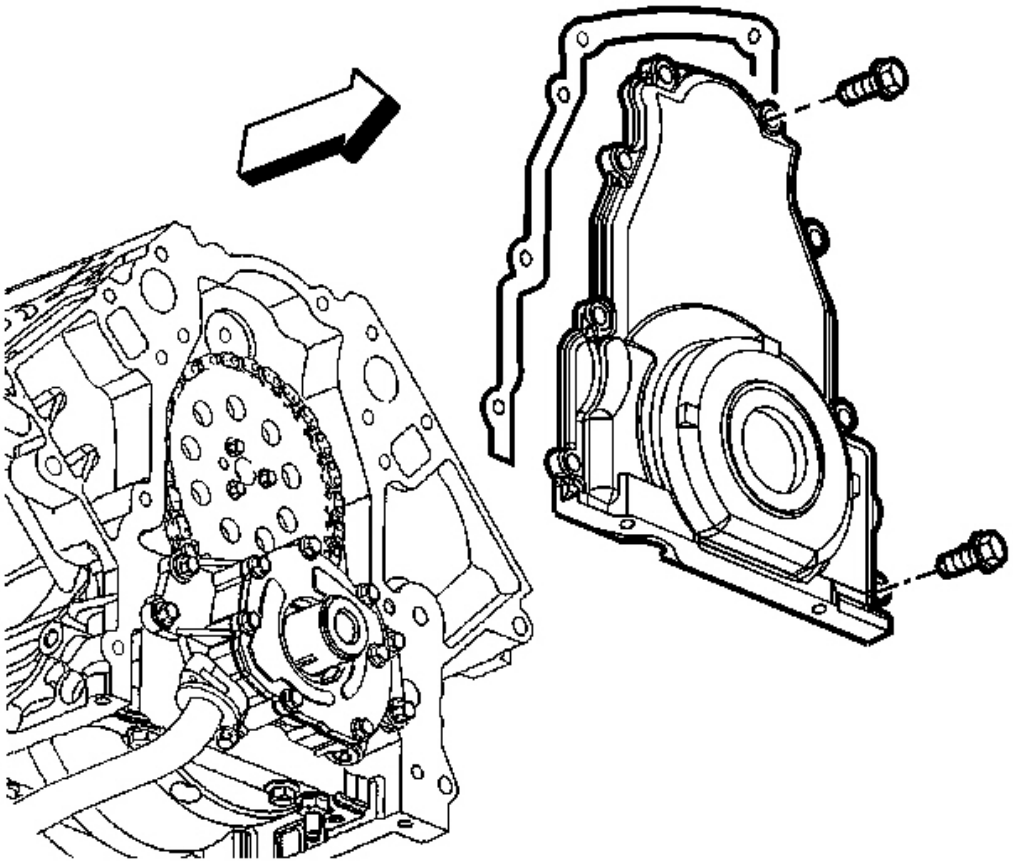

Fig. 195: Front Cover Gasket & Bolts
Courtesy of GENERAL MOTORS CORP.

4. Remove the front cover bolts.
5. Remove the front cover and gasket.
6. Discard the front cover gasket.
7. Clean and inspect the engine front cover. Refer to **Engine Front Cover Cleaning and Inspection** .

Installation Procedure

cardiagn.com

IMPORTANT:

- **Do not reuse the crankshaft oil seal or front cover gasket.**
- **Do not apply any type sealant to the front cover gasket (unless specified).**
- **The special tool in this procedure is used to center the crankshaft front oil seal.**
- **All gasket surfaces should be free of oil or other foreign material during assembly.**
- **The crankshaft front oil seal MUST be centered in relation to the crankshaft.**
- **An improperly aligned front cover may cause premature front oil seal wear and/or engine oil leaks.**

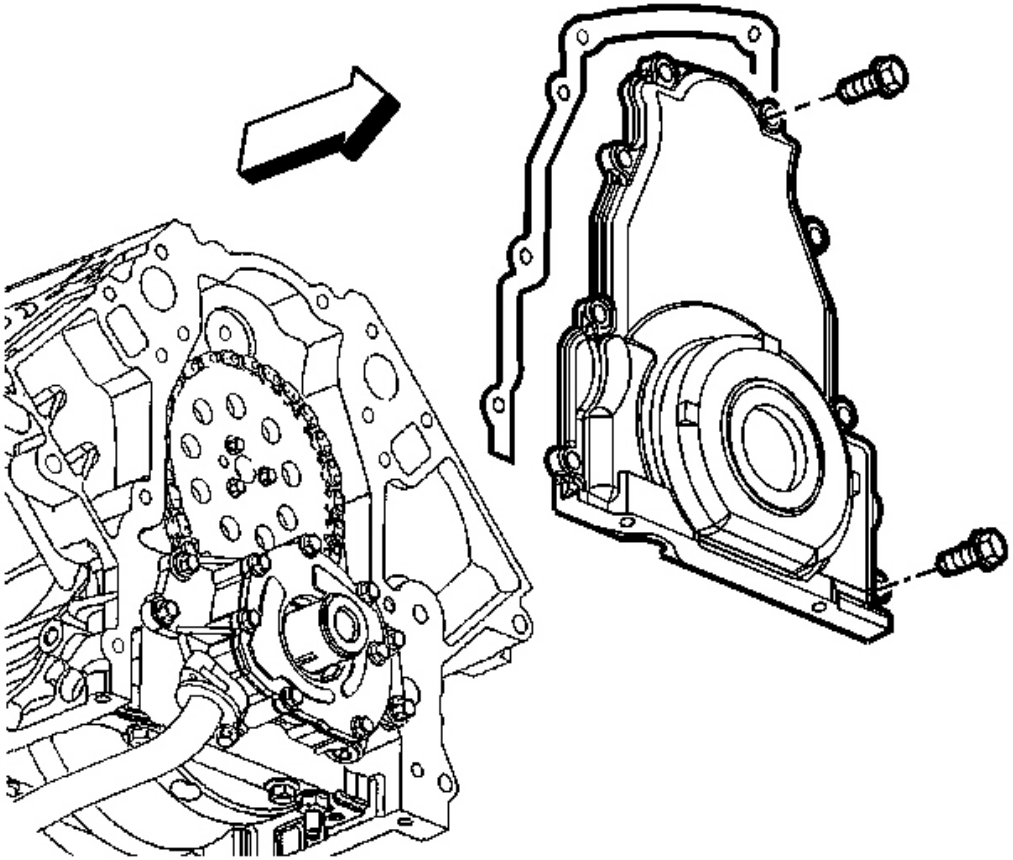

Fig. 196: Front Cover Gasket & Bolts
Courtesy of GENERAL MOTORS CORP.

cardiagn.com

1. Apply a 5 mm (0.20 in) bead of sealant GM P/N 12378190, or equivalent 20 mm (0.80 in) long to the oil pan to engine block junction.
2. Install the front cover gasket and cover.
3. Install the front cover bolts until snug. Do not overtighten.

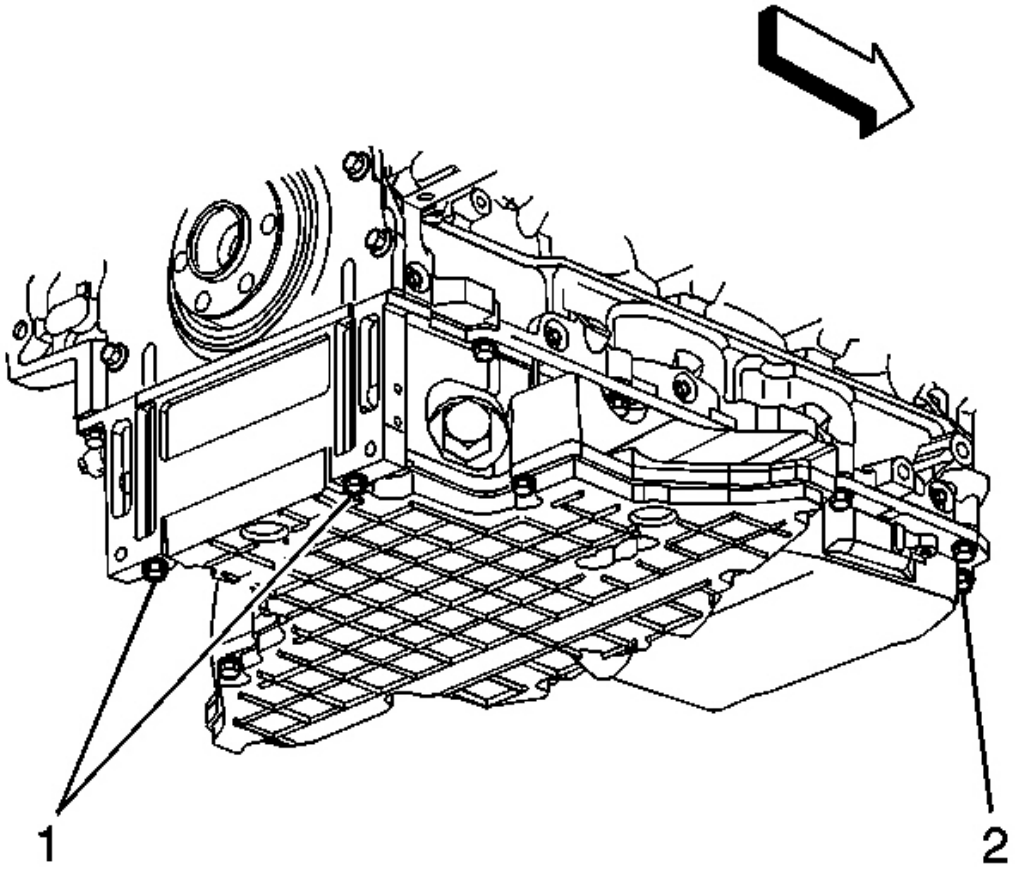

Fig. 197: Oil Pan-To-Front Cover Bolts & Oil Pan-To-Rear Cover Bolts
Courtesy of GENERAL MOTORS CORP.

4. Install the oil pan-to-front cover bolts (2) until snug. Do not overtighten.

cardiagn.com

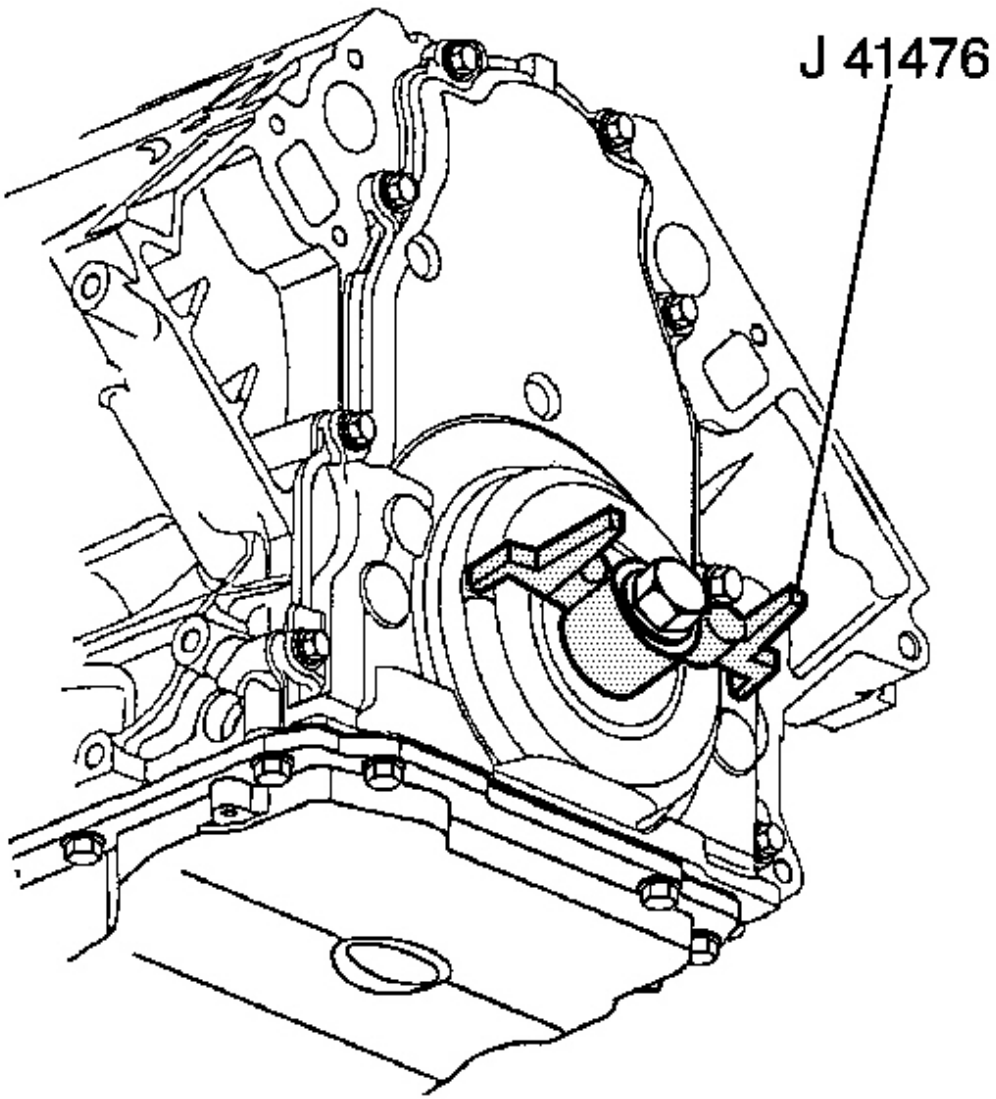

Fig. 198: J 41476 & Front Cover
Courtesy of GENERAL MOTORS CORP.

5. Install the **J 41476** to the front cover.
6. Align the tapered legs of the **J 41476** with the machined alignment surfaces on the front cover.

NOTE: **Refer to Fastener Notice in Cautions and Notices.**

cardiagn.com

7. Install the crankshaft balancer bolt until sung. Do not overtighten.

   Tighten:
   1. Tighten the oil pan-to-front cover bolts to 25 N.m (18 lb ft).
   2. Tighten the engine front cover bolts to 25 N.m (18 lb ft).

8. Remove the **J 41476** .

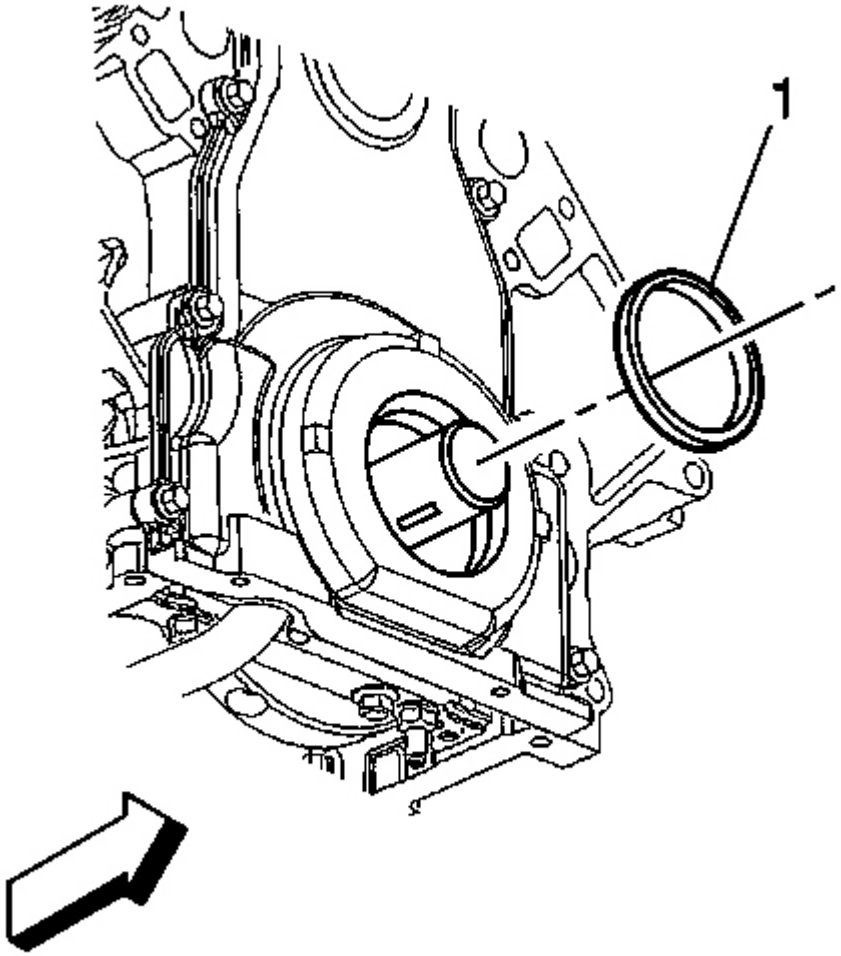

Fig. 199: Front Cover & Oil Seal Bore
Courtesy of GENERAL MOTORS CORP.

cardiagn.com

IMPORTANT:

- **Do not lubricate the oil seal sealing surface.**
- **Do not reuse the crankshaft oil seal.**

9. Lubricate the outer edge of the oil seal (1) with clean engine oil.
10. Lubricate the front cover oil seal bore with clean engine oil.

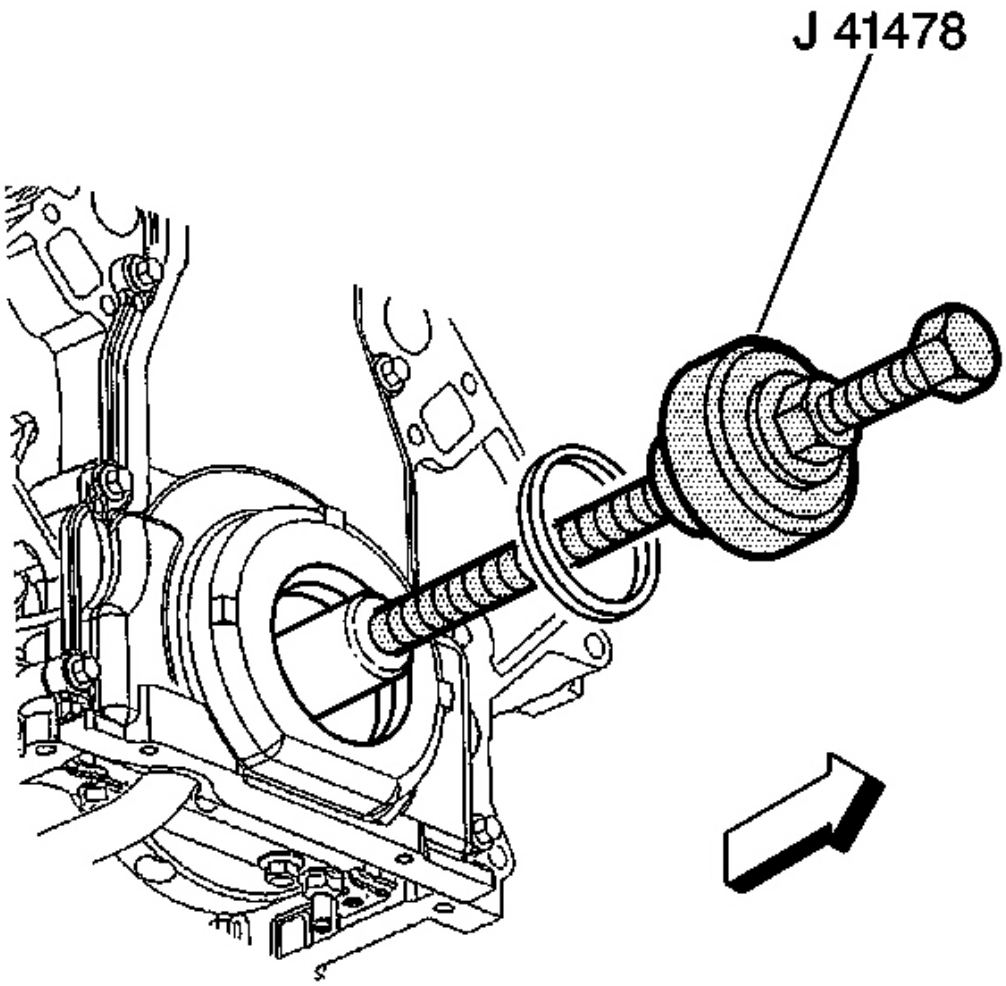

Fig. 200: J 41478 & Crankshaft Front Oil Seal
Courtesy of GENERAL MOTORS CORP.

11. Install the crankshaft front oil seal into the **J 41478** guide.
12. Install the **J 41478** threaded rod (with nut, washer, guide, and oil seal) into the end of the crankshaft.

cardiagn.com

13. Use the **J 41478** in order to install the oil seal into the cover bore.
    - Use a wrench and hold the hex on the installer bolt.
    - Use a second wrench and rotate the installer nut clockwise until the seal bottoms in the cover bore.
    - Remove the tool.
    - Inspect the oil seal for proper installation. The oil seal should be installed evenly and completely into the front cover bore.
14. Install the water pump. Refer to **Water Pump Replacement** in Engine Cooling.
15. Install the crankshaft balancer. Refer to **Crankshaft Balancer Replacement** .

CRANKSHAFT REAR OIL SEAL REPLACEMENT

Tools Required

J 41479 Crankshaft Rear Oil Seal Installer

Removal Procedure

cardiagn.com

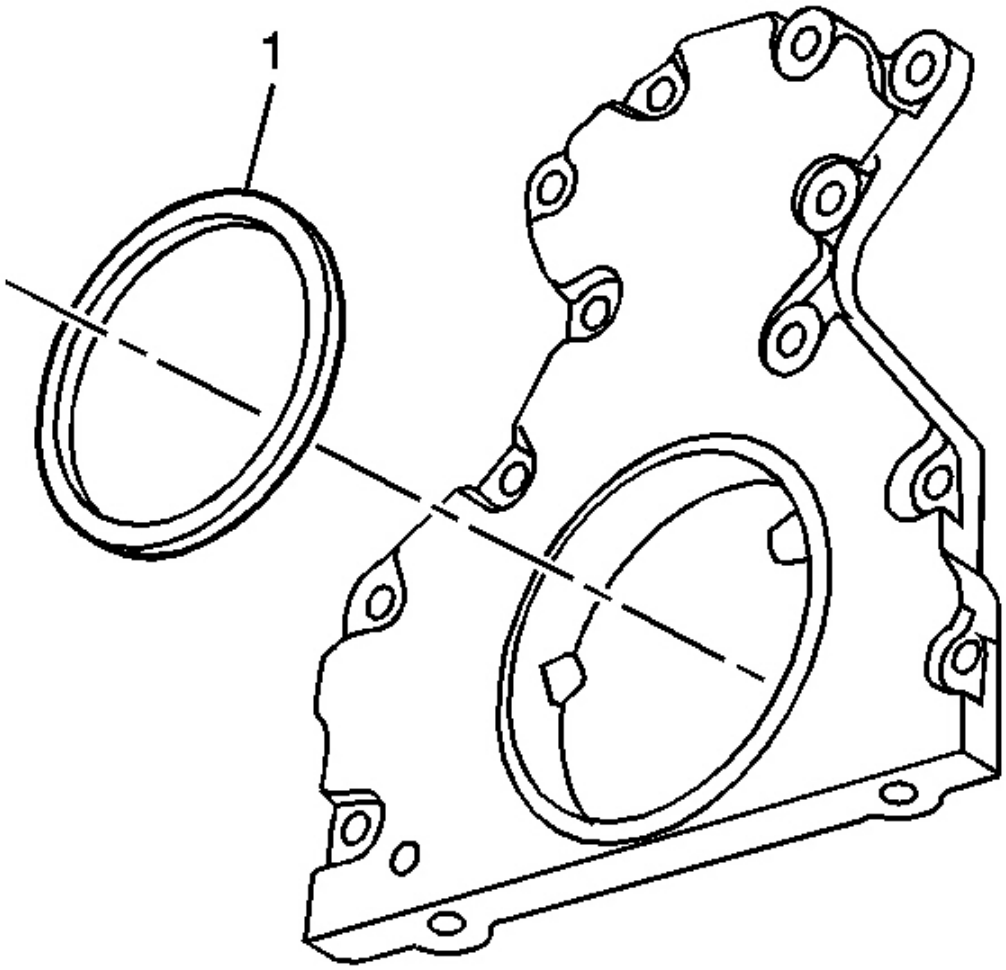

Fig. 201: View Of Crankshaft Rear Oil Seal
Courtesy of GENERAL MOTORS CORP.

1. Remove the engine flywheel. Refer to **Engine Flywheel Replacement** .
2. Gently pry the crankshaft rear oil seal (1) from the rear cover.

Installation Procedure

IMPORTANT:

- **Do not lubricate the oil seal inside diameter (ID) of the crankshaft surface.**
- **Do not reuse the crankshaft rear oil seal.**

cardiagn.com

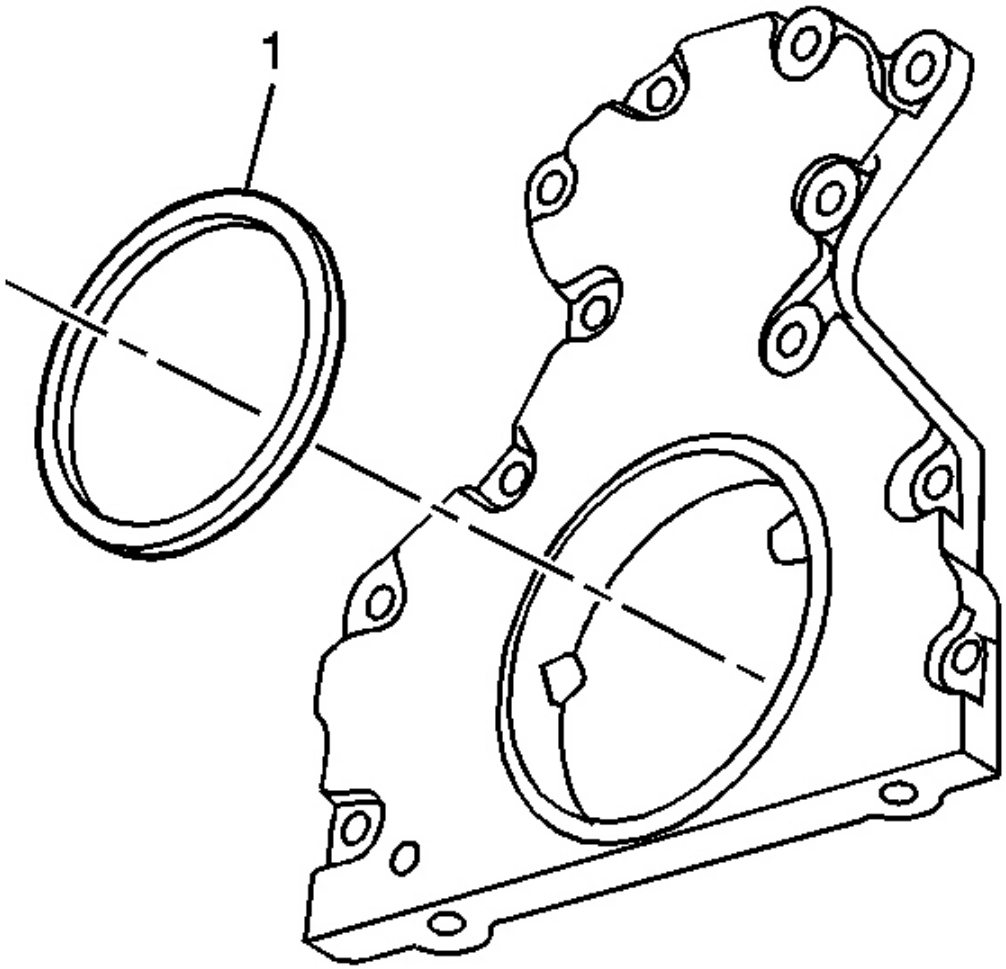

Fig. 202: View Of Crankshaft Rear Oil Seal
Courtesy of GENERAL MOTORS CORP.

1. Lubricate the outside diameter (OD) of the oil seal (1) with clean engine oil.

   DO NOT allow oil or other lubricants to contact the seal surface.

2. Lubricate the rear cover oil seal bore with clean engine oil.

   DO NOT allow oil or other lubricants to contact the crankshaft surface.

cardiagn.com

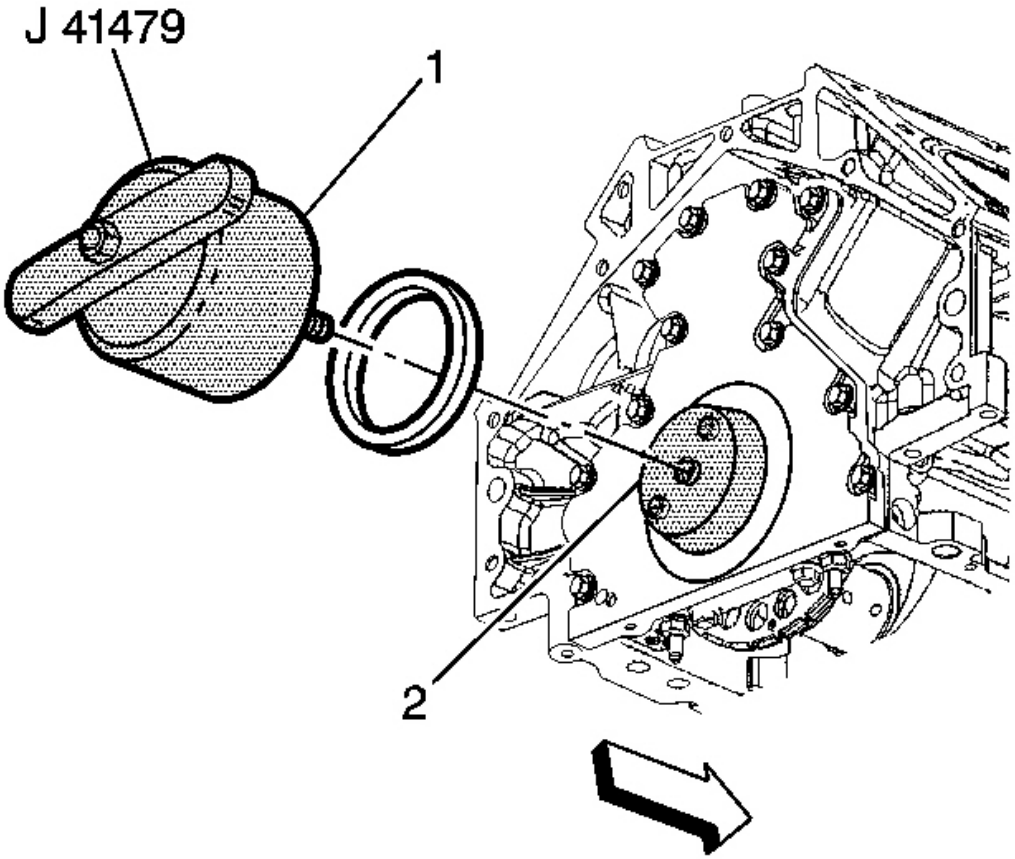

Fig. 203: J 41479, Cone & Rear Crankshaft
Courtesy of GENERAL MOTORS CORP.

3. Install the **J 41479** cone (2) and bolts onto the rear of the crankshaft.
4. Tighten the bolts until snug. Do not overtighten.
5. Install the rear oil seal onto the tapered cone (2) and push the seal to the rear cover bore.
6. Thread the **J 41479** threaded rod into the tapered cone until the tool (1) contacts the oil seal.
7. Align the oil seal onto the tool (1).
8. Rotate the handle of the tool (1) clockwise until the seal enters the rear cover and bottoms into the cover bore.
9. Remove the **J 41479** .
10. Install the engine flywheel. Refer to **Engine Flywheel Replacement** .

ENGINE REAR COVER REPLACEMENT

cardiagn.com

Tools Required

- **J 41476** Front and Rear Cover Alignment (Crankshaft Oil Seal Area)
- **J 41479** Crankshaft Rear Oil Seal Installer

Removal Procedure

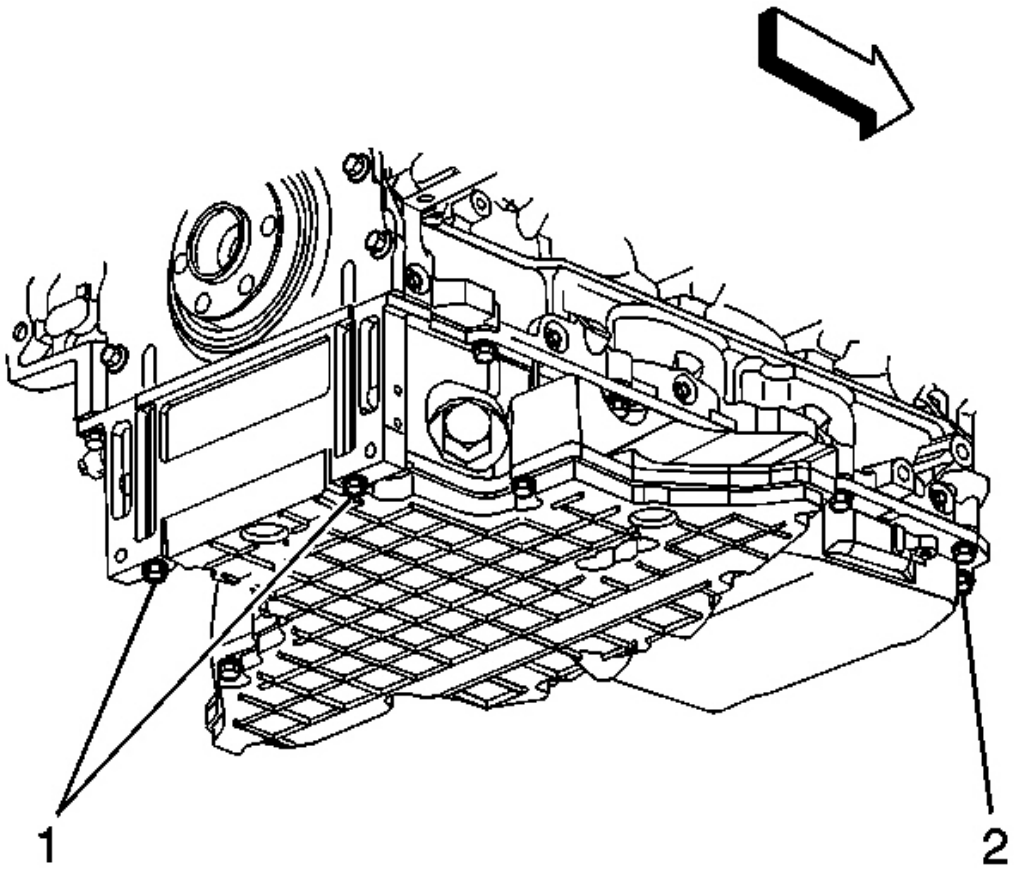

Fig. 204: Oil Pan-To-Front Cover Bolts & Oil Pan-To-Rear Cover Bolts
Courtesy of GENERAL MOTORS CORP.

1. Remove the engine flywheel. Refer to **Engine Flywheel Replacement** .
2. Remove the oil pan-to-rear cover bolts (1).

cardiagn.com

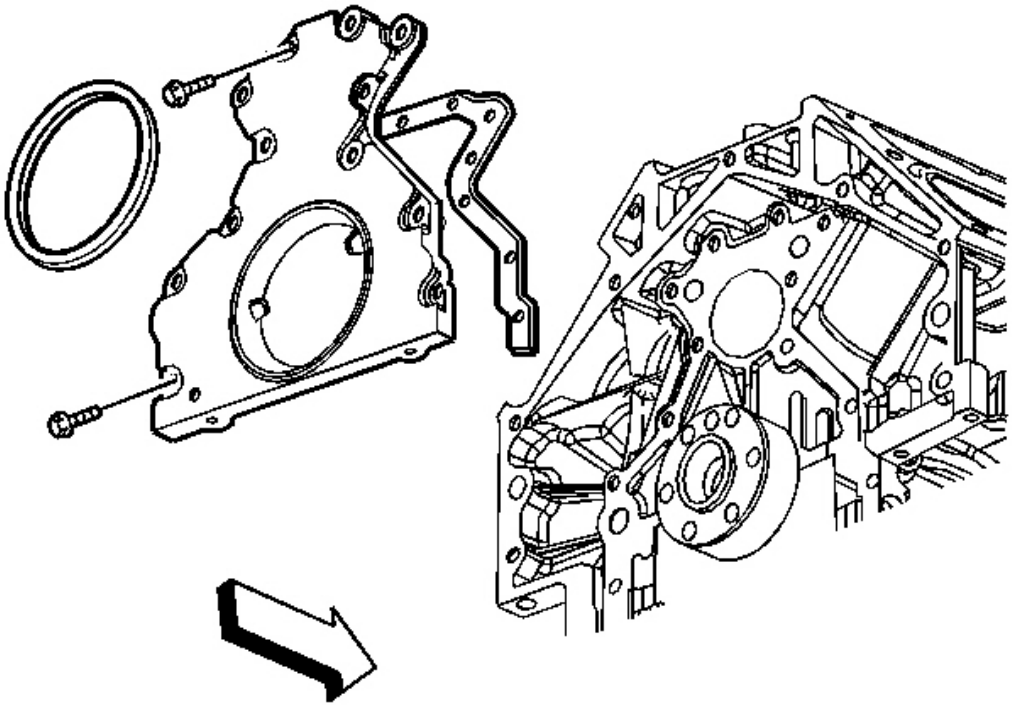

Fig. 205: Rear Cover Gasket & Bolts
Courtesy of GENERAL MOTORS CORP.

3. Remove the rear cover bolts.
4. Remove the rear cover and gasket.
5. Discard the rear cover gasket.
6. Clean and inspect the engine rear cover. Refer to **Engine Rear Cover Cleaning and Inspection** .

Installation Procedure

IMPORTANT:

- **Do not reuse the crankshaft oil seal or rear cover gasket.**
- **Do not apply any type of sealant to the rear cover gasket (unless specified).**
- **The special tool in this procedure is used to center the crankshaft rear oil seal.**
- **All gasket surfaces should be free of oil or other foreign material during assembly.**
- **The crankshaft rear oil seal MUST be centered in relation to the**

cardiagn.com

crankshaft.

- **The crankshaft rear oil seal will be installed after the rear cover has been installed.**
- **An improperly aligned rear cover may cause premature rear oil seal wear and/or engine assembly oil leaks.**

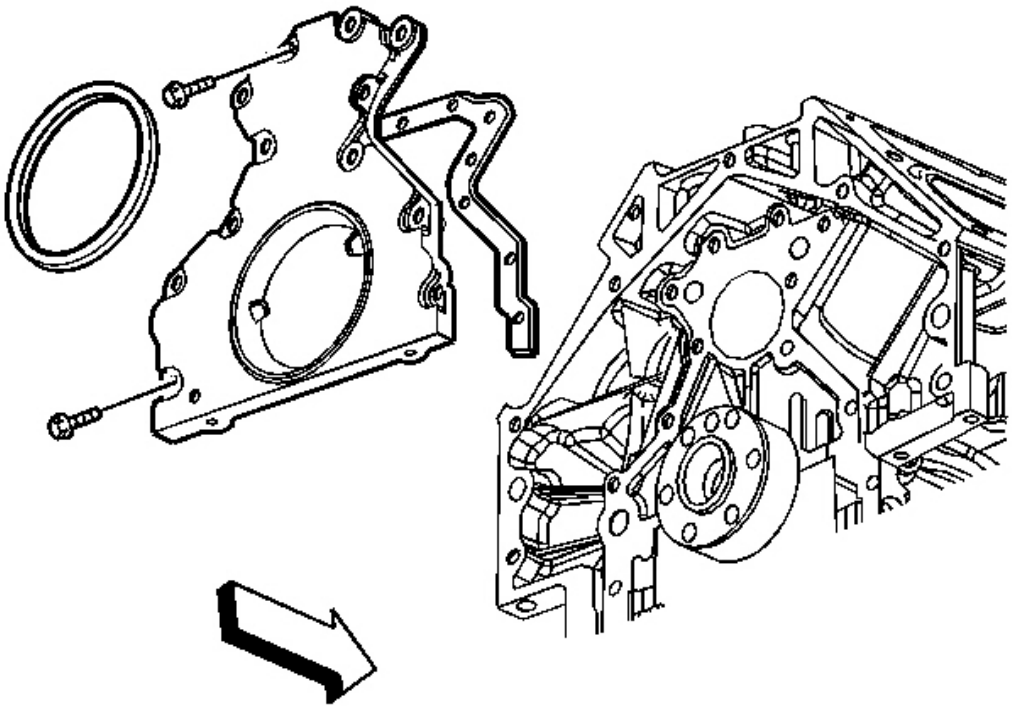

Fig. 206: Rear Cover Gasket & Bolts
Courtesy of GENERAL MOTORS CORP.

1. Install the rear cover gasket and cover.
2. Install the rear cover bolts until snug. Do not overtighten.

cardiagn.com

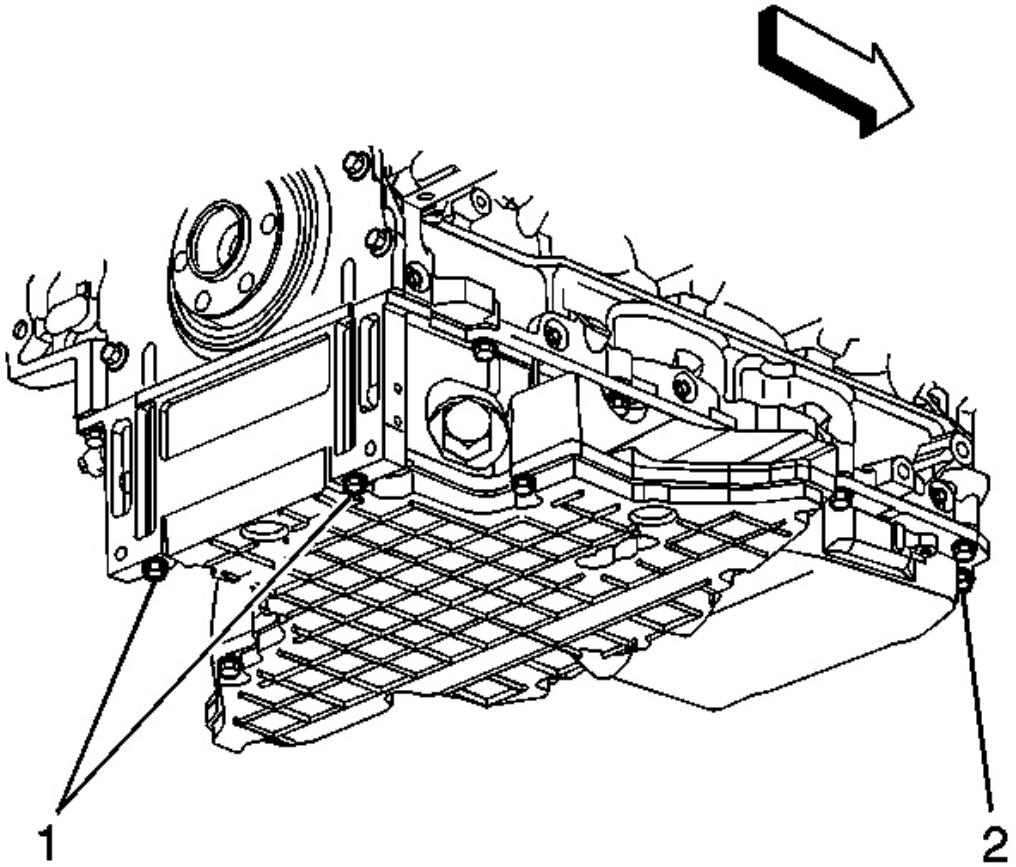

Fig. 207: Oil Pan-To-Front Cover Bolts & Oil Pan-To-Rear Cover Bolts
Courtesy of GENERAL MOTORS CORP.

3. Install the oil pan-to-rear cover bolts (1) until snug. Do not overtighten.

cardiagn.com

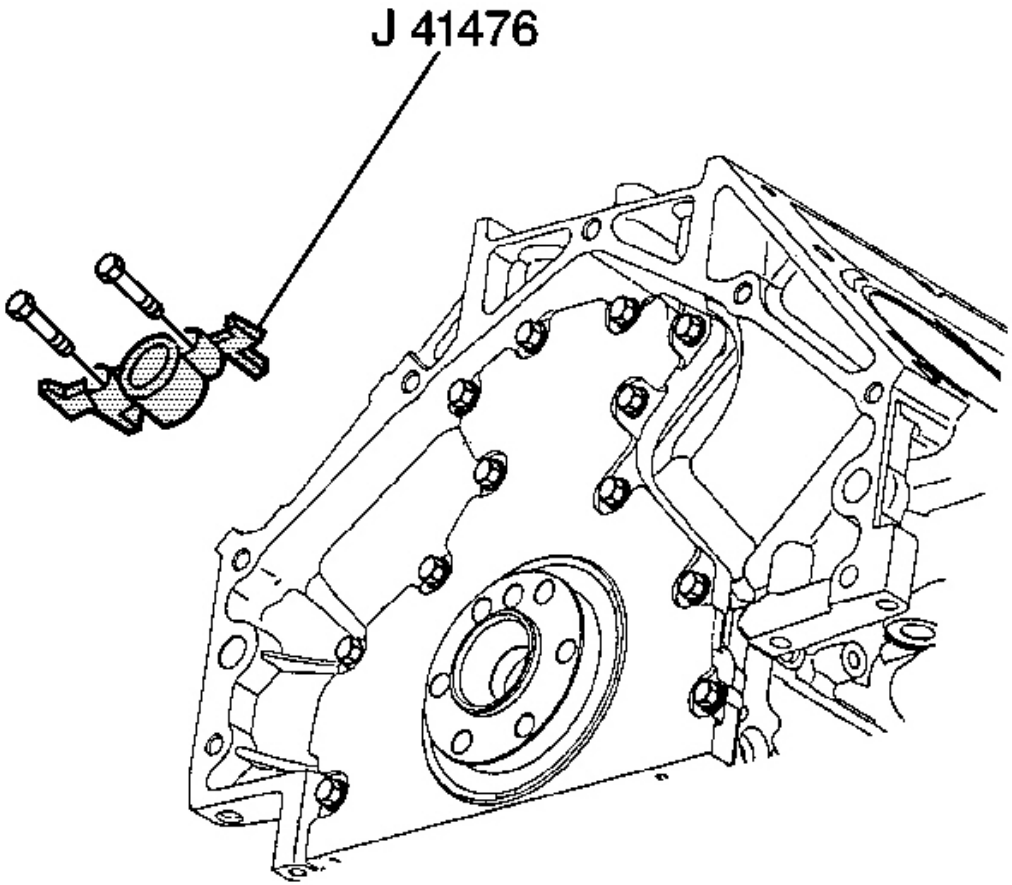

Fig. 208: J 41476 & Bolts
Courtesy of GENERAL MOTORS CORP.

IMPORTANT: The tapered legs of the alignment tool must enter the rear cover oil seal bore.

4. Rotate the crankshaft until 2 opposing flywheel bolt holes are parallel to the oil pan surface.
5. Install the **J 41476** and bolts onto the rear of the crankshaft.

NOTE: Refer to Fastener Notice in Cautions and Notices.

6. Tighten the **J 41476** bolts until snug. Do not overtighten.

Tighten:

cardiagn.com

1. Tighten the oil pan-to-rear cover bolts to 12 N.m (106 lb in).
2. Tighten the engine rear cover bolts to 25 N.m (18 lb ft).

7. Remove the **J 41476** .

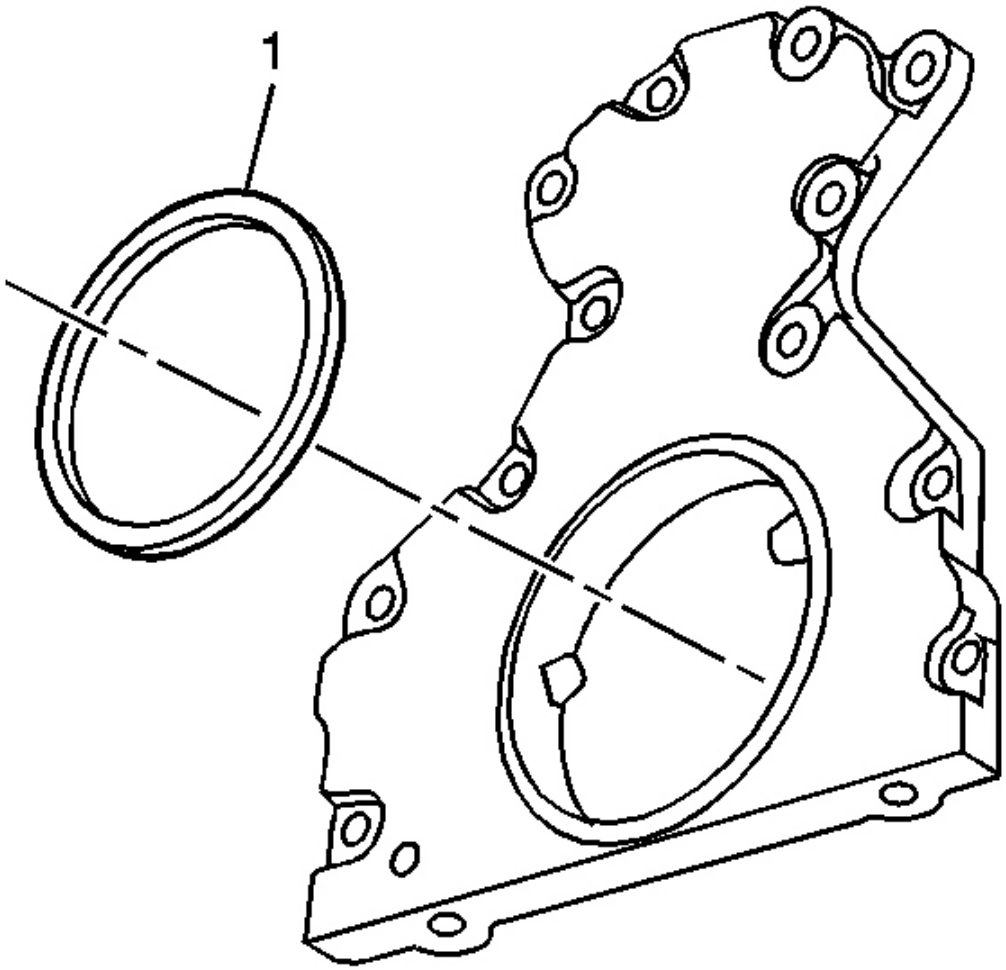

Fig. 209: View Of Crankshaft Rear Oil Seal
Courtesy of GENERAL MOTORS CORP.

IMPORTANT:

- **Do not lubricate the oil seal inside diameter (ID) or the crankshaft surface.**
- **Do not reuse the crankshaft rear oil seal.**

cardiagn.com

8. Lubricate the outside diameter (OD) of the oil seal (1) with clean engine oil.

   Do not allow oil or other lubricants to contact the seal surface.

9. Lubricate the rear cover oil seal bore with clean engine oil.

   Do not allow oil or other lubricants to contact the crankshaft surface.

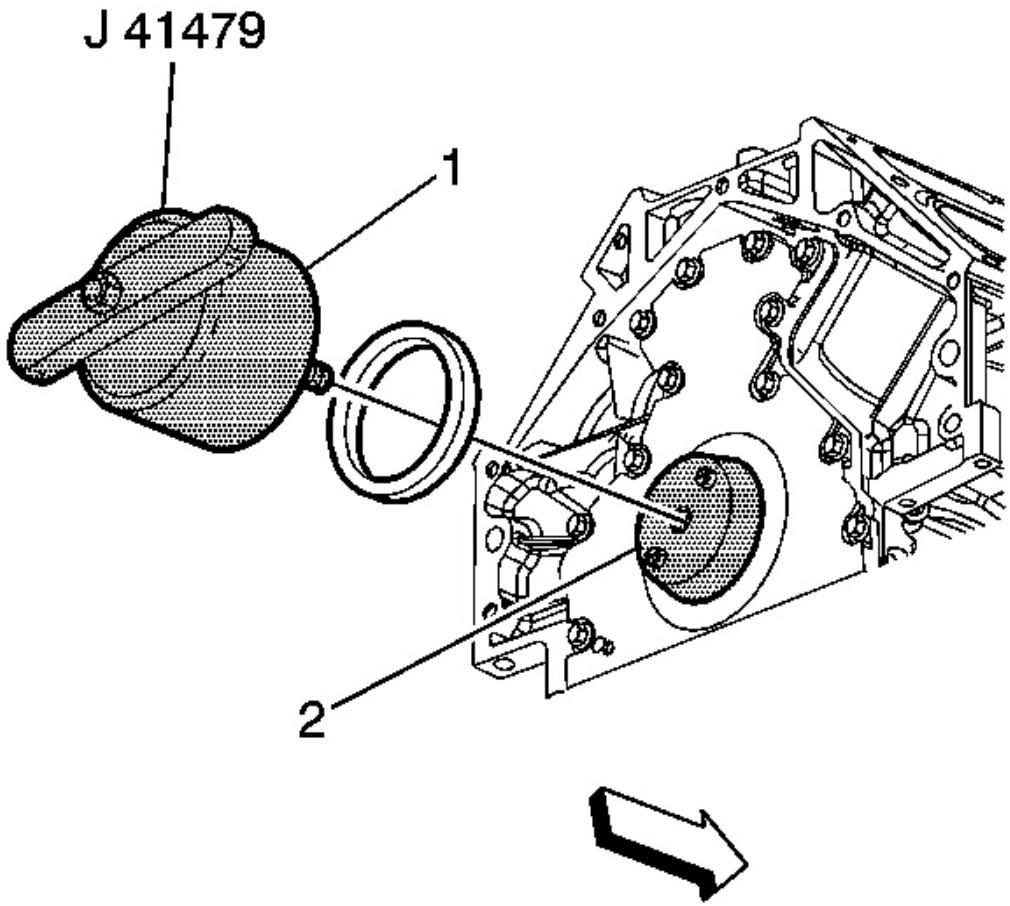

Fig. 210: J 41479, Rear Crankshaft & Cone
Courtesy of GENERAL MOTORS CORP.

10. Install the **J 41479** cone (2) and bolts onto the rear of the crankshaft.
11. Tighten the bolts until snug. Do not overtighten.
12. Install the rear oil seal onto the tapered cone (2) until the tool (1) contacts the oil seal.

cardiagn.com

13. Thread the **J 41479** threaded rod into the tapered cone (2) until the tool (1) contacts the oil seal.
14. Align the oil seal onto the tool (1).
15. Rotate the handle of the **J 41479** clockwise until the seal enters the rear cover and bottoms into the cover bore.
16. Remove the **J 41479** .
17. Install the engine flywheel. Refer to **Engine Flywheel Replacement** .

OIL FILTER ADAPTER REPLACEMENT

Removal Procedure

cardiagn.com

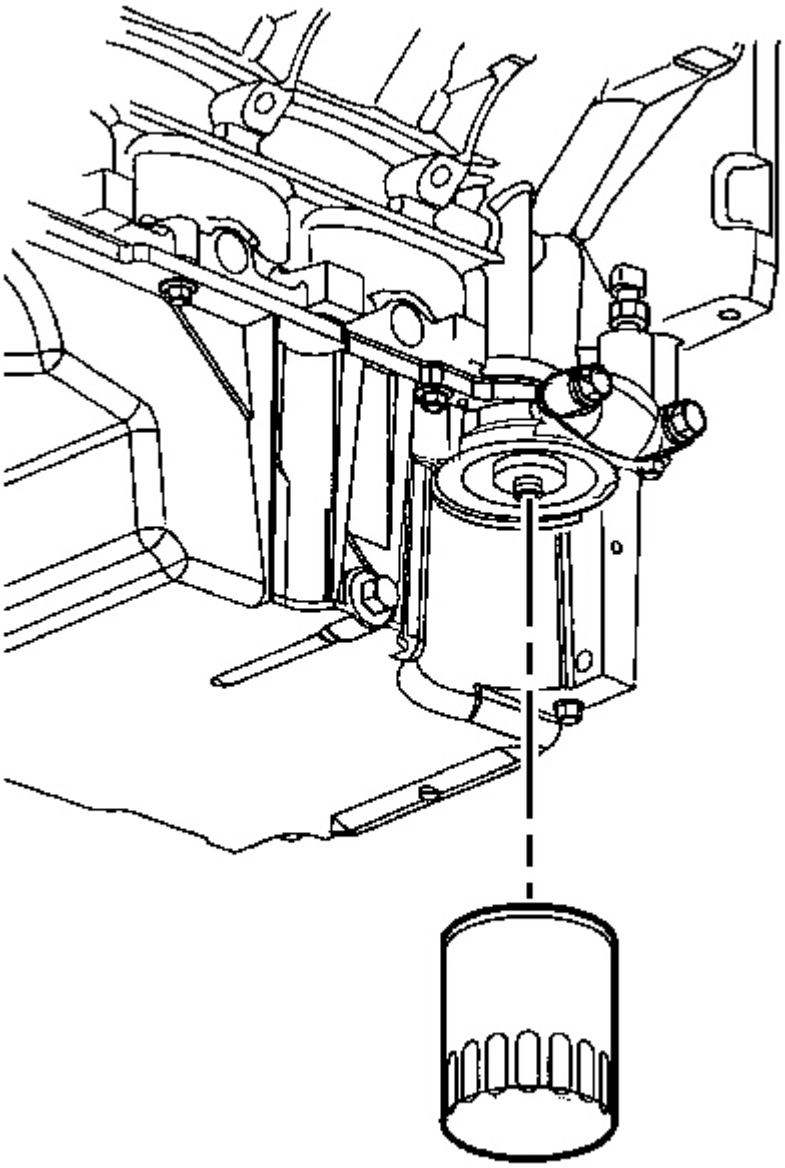

Fig. 211: Oil Filter
Courtesy of GENERAL MOTORS CORP.

1. Drain the engine oil.
2. Remove the oil filter.

cardiagn.com

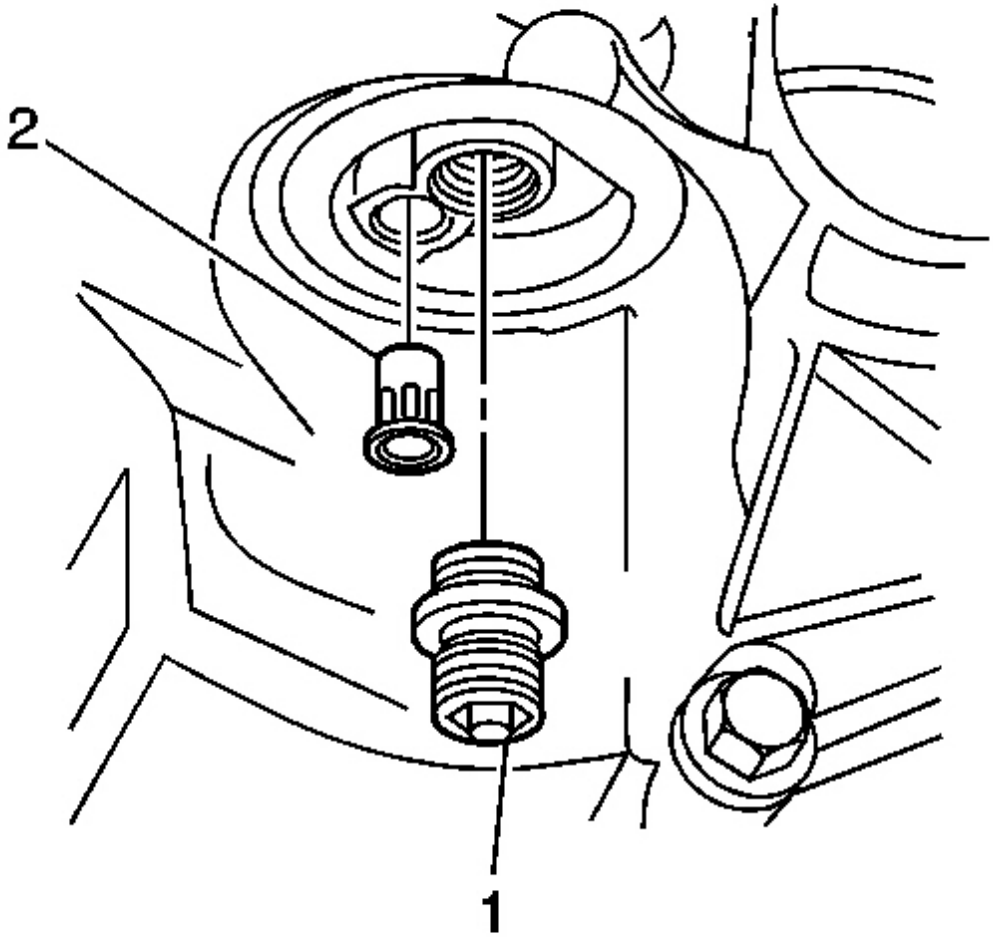

Fig. 212: Oil Filter Adapter & Oil Filter Bypass Valve
Courtesy of GENERAL MOTORS CORP.

3. Remove the oil filter adapter (1).

Installation Procedure

cardiagn.com

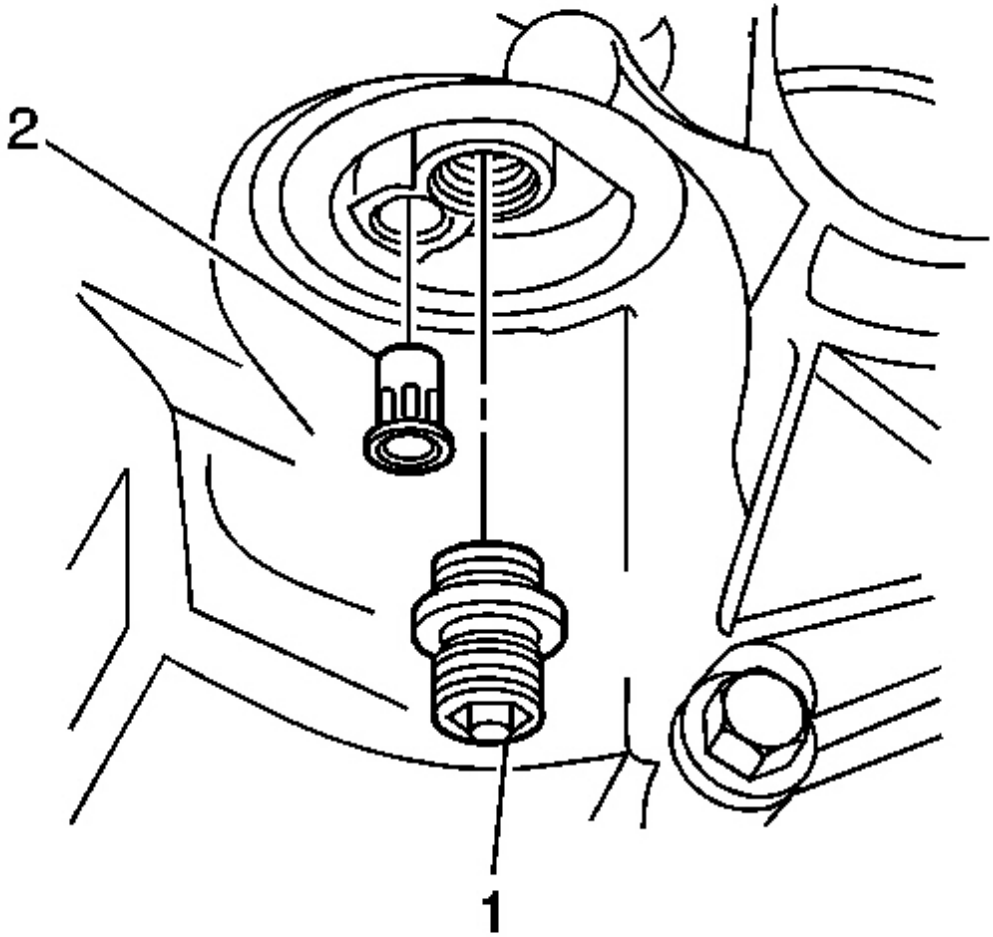

Fig. 213: Oil Filter Adapter & Oil Filter Bypass Valve
Courtesy of GENERAL MOTORS CORP.

NOTE: Refer to Fastener Notice in Cautions and Notices.

1. Install the oil filter adapter (1).

   Tighten: Tighten the oil filter adapter to 55 N.m (40 lb ft).

cardiagn.com

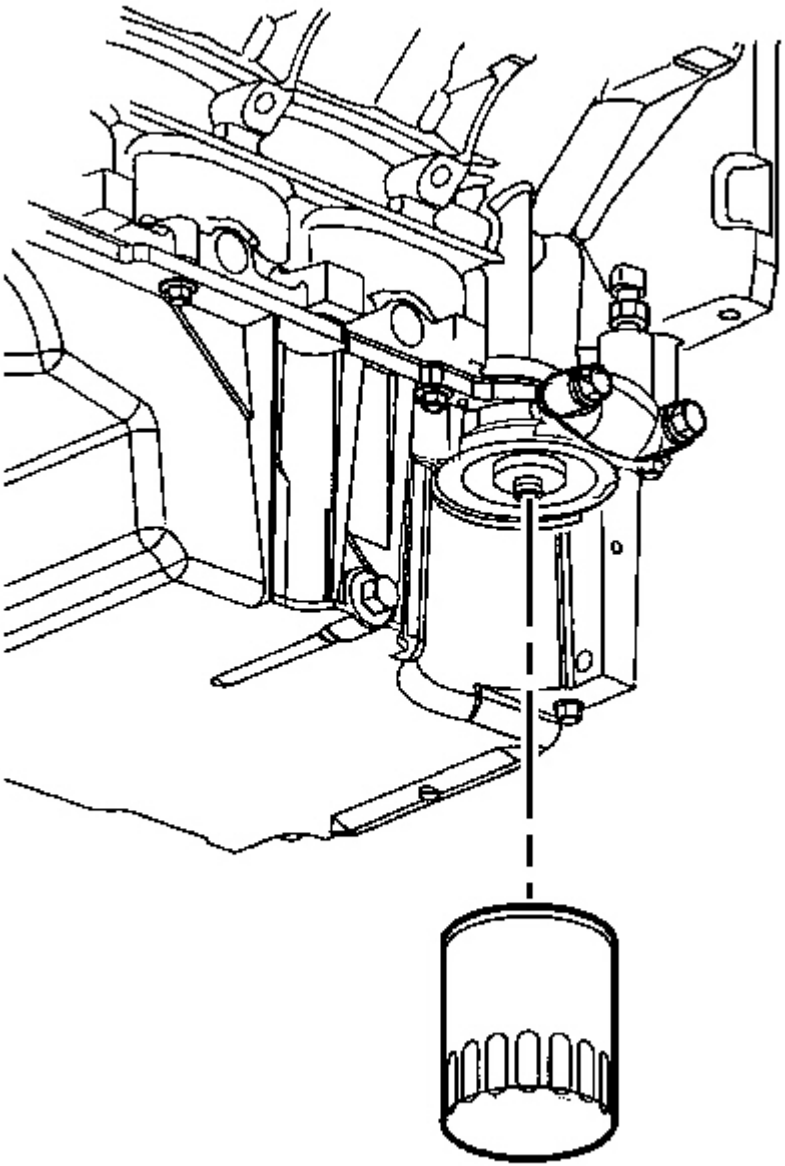

Fig. 214: Oil Filter
Courtesy of GENERAL MOTORS CORP.

2. Install the oil filter.

   Tighten: Tighten the oil filter to 30 N.m (22 lb ft).

cardiagn.com

3. Refill the engine oil.

OIL FILTER BYPASS VALVE REPLACEMENT

Removal Procedure

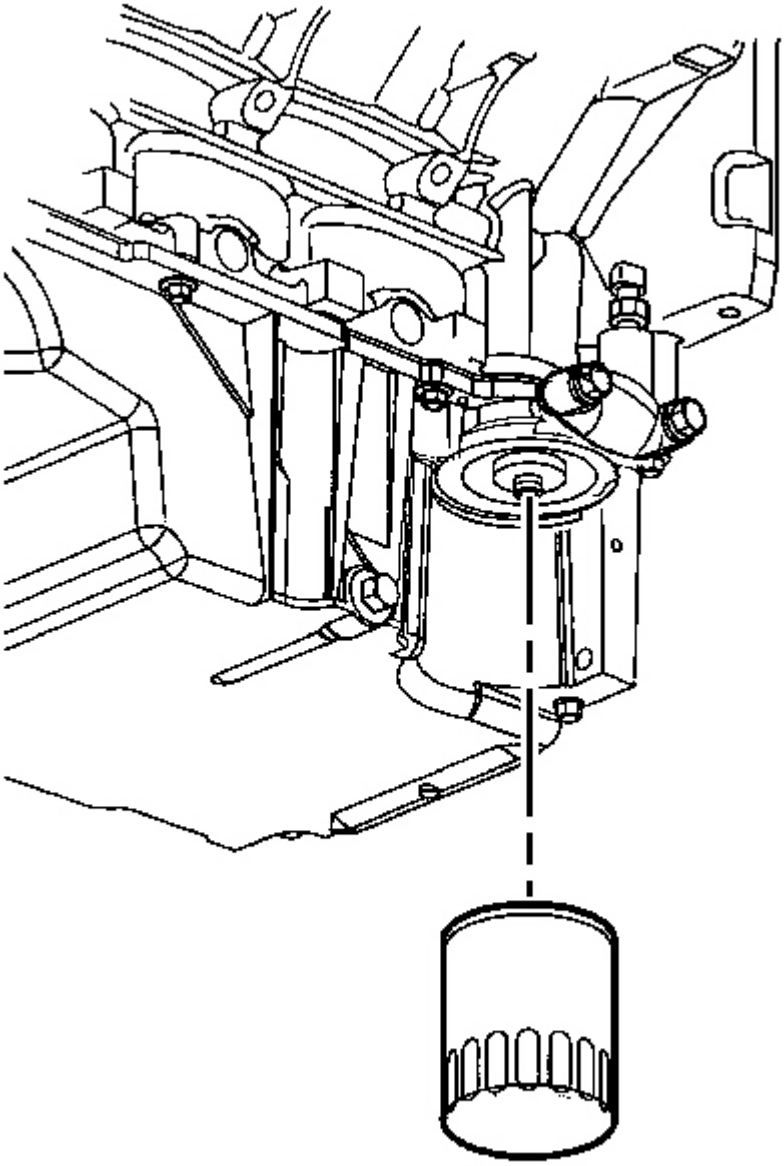

cardiagn.com

Fig. 215: Oil Filter
Courtesy of GENERAL MOTORS CORP.

1. Drain the engine oil.
2. Remove the oil filter.

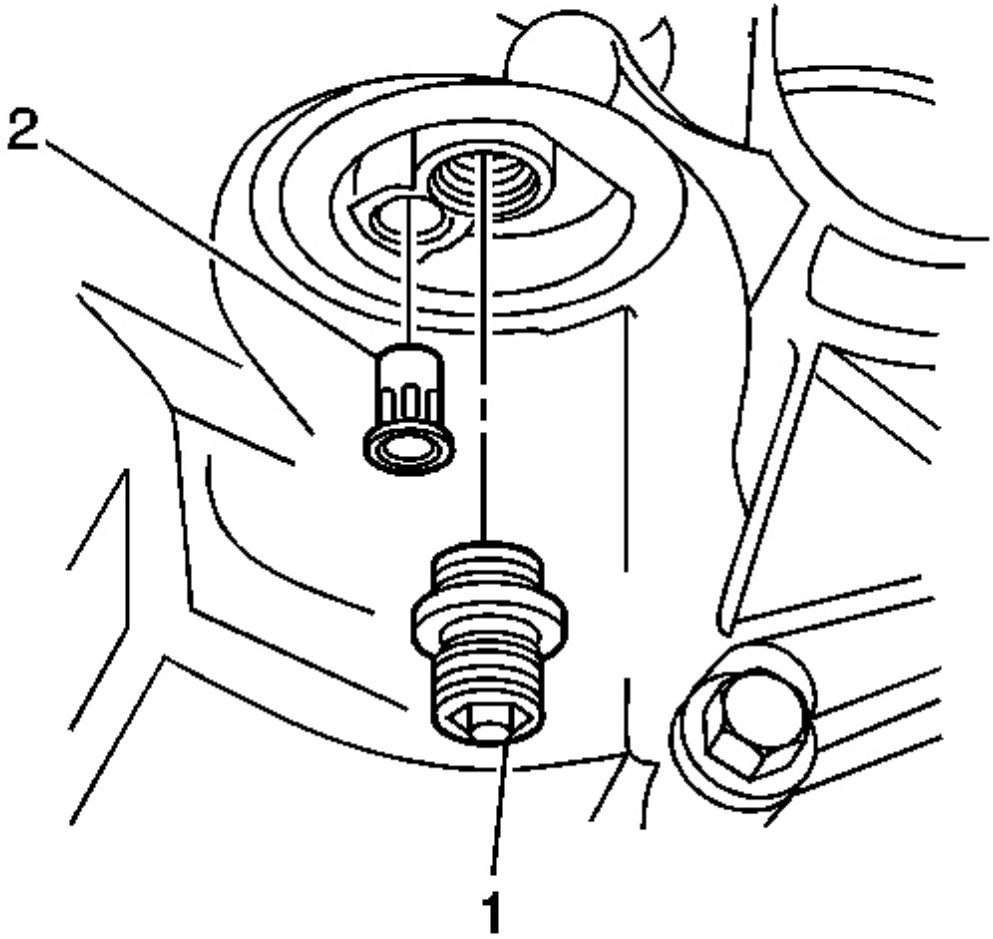

Fig. 216: Oil Filter Adapter & Oil Filter Bypass Valve
Courtesy of GENERAL MOTORS CORP.

3. Remove the oil filter adapter 1.
4. Remove the oil filter bypass valve 2.

cardiagn.com

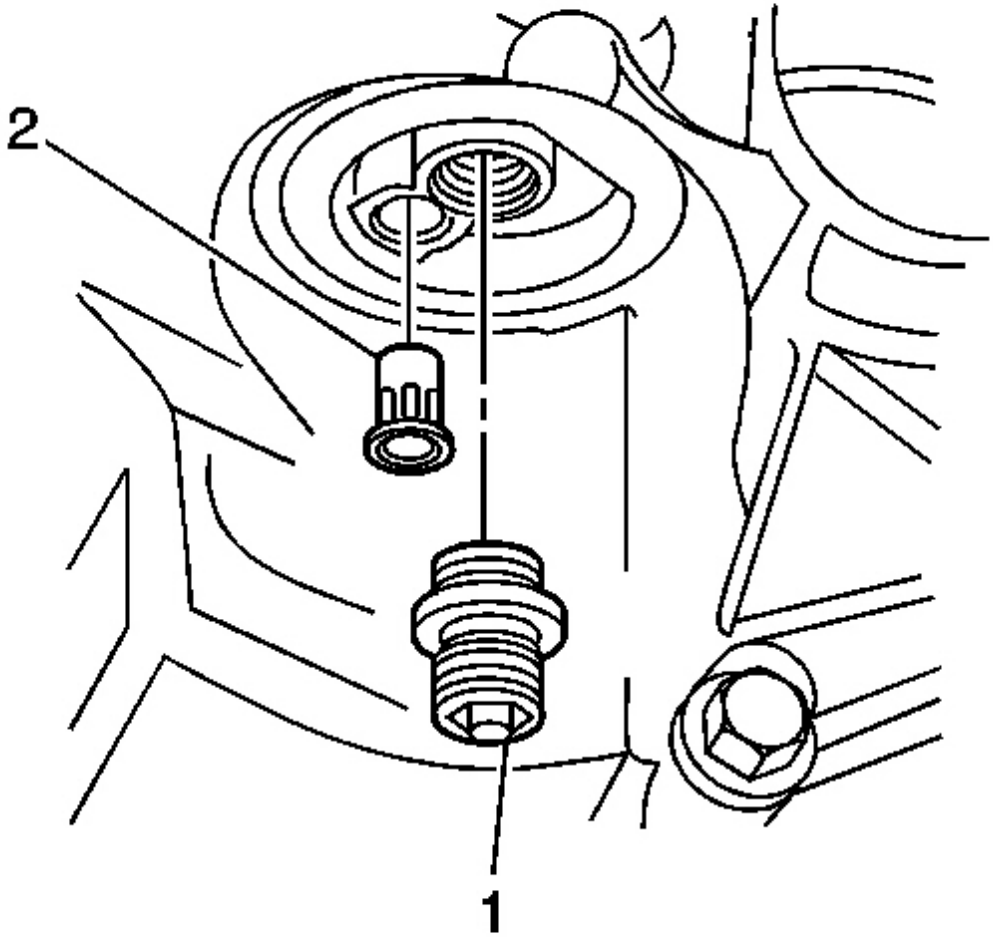

Fig. 217: Oil Filter Adapter & Oil Filter Bypass Valve
Courtesy of GENERAL MOTORS CORP.

NOTE: Refer to Fastener Notice in Cautions and Notices.

1. Install the oil filter bypass valve 2.
2. Install the oil filter adapter 1.

Tighten: Tighten the oil filter adapter to 55 N.m (40 lb ft).

cardiagn.com

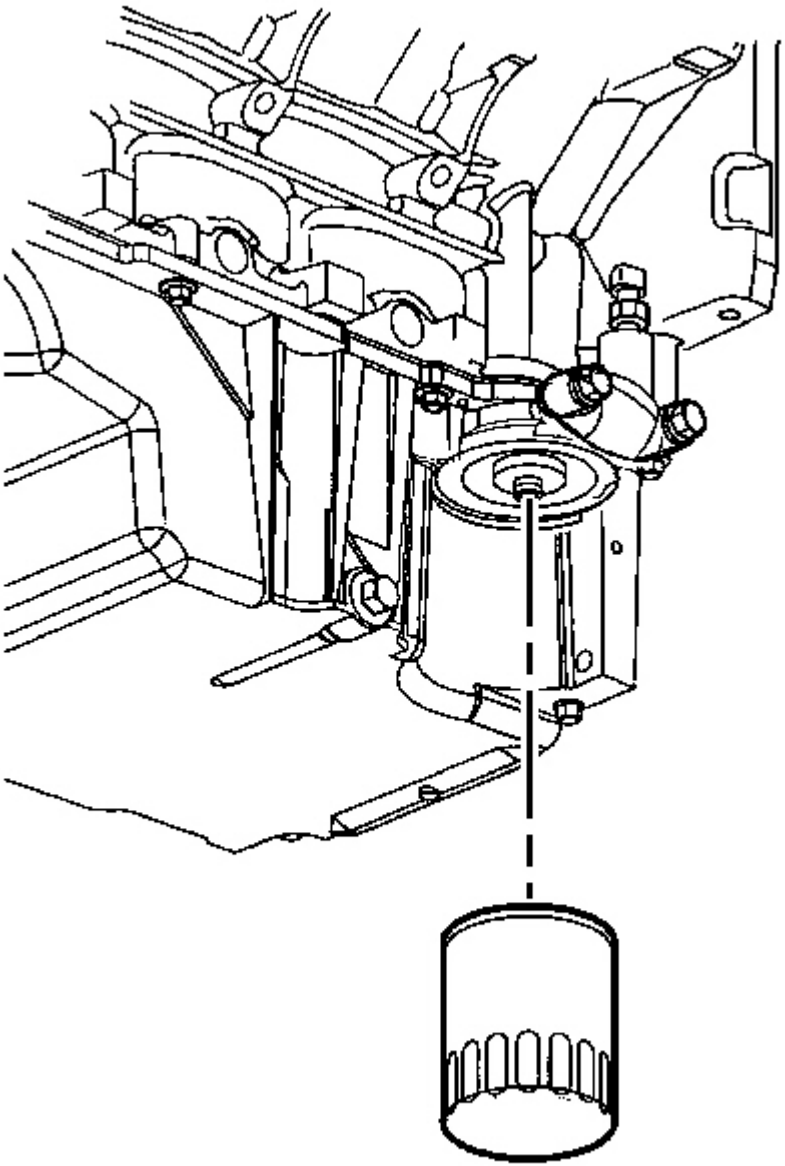

Fig. 218: Oil Filter
Courtesy of GENERAL MOTORS CORP.

3. Install the oil filter.

   Tighten: Tighten the oil filter to 30 N.m (22 lb ft).

cardiagn.com

4. Refill the engine oil.

OIL PAN COVER REPLACEMENT

Removal Procedure

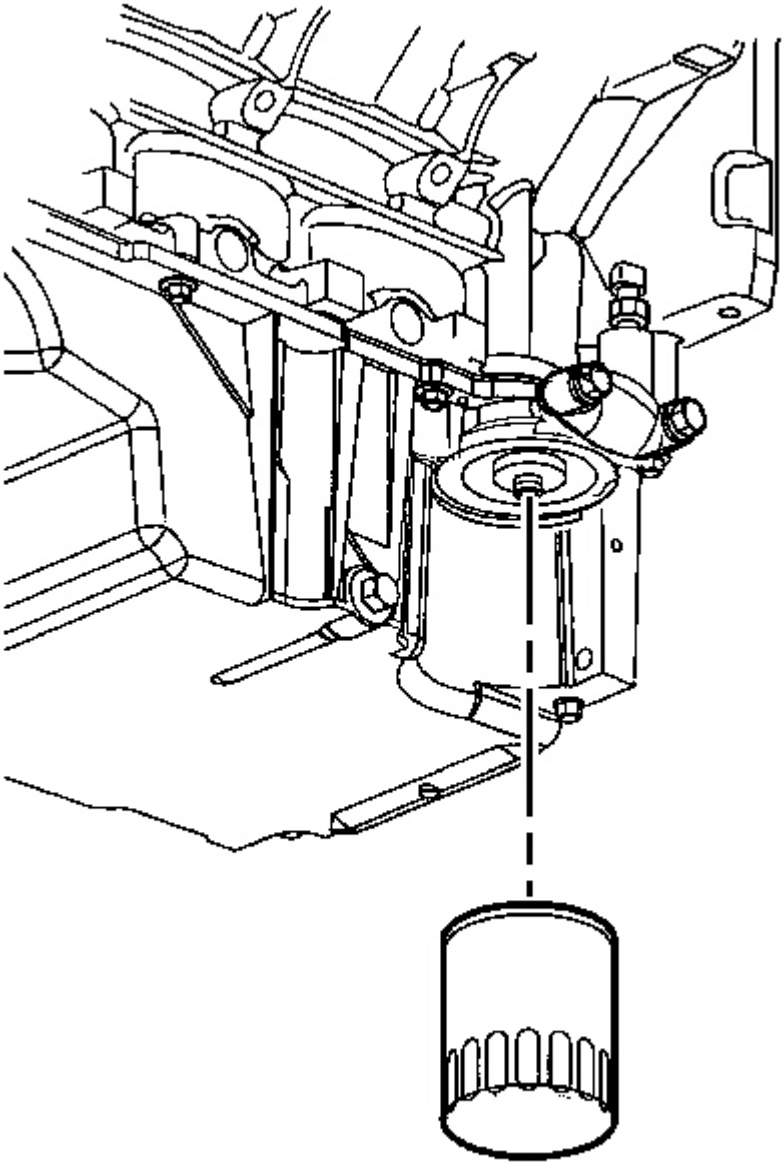

cardiagn.com

Fig. 219: Oil Filter
Courtesy of GENERAL MOTORS CORP.

1. Drain the engine oil.
2. Remove the oil filter.

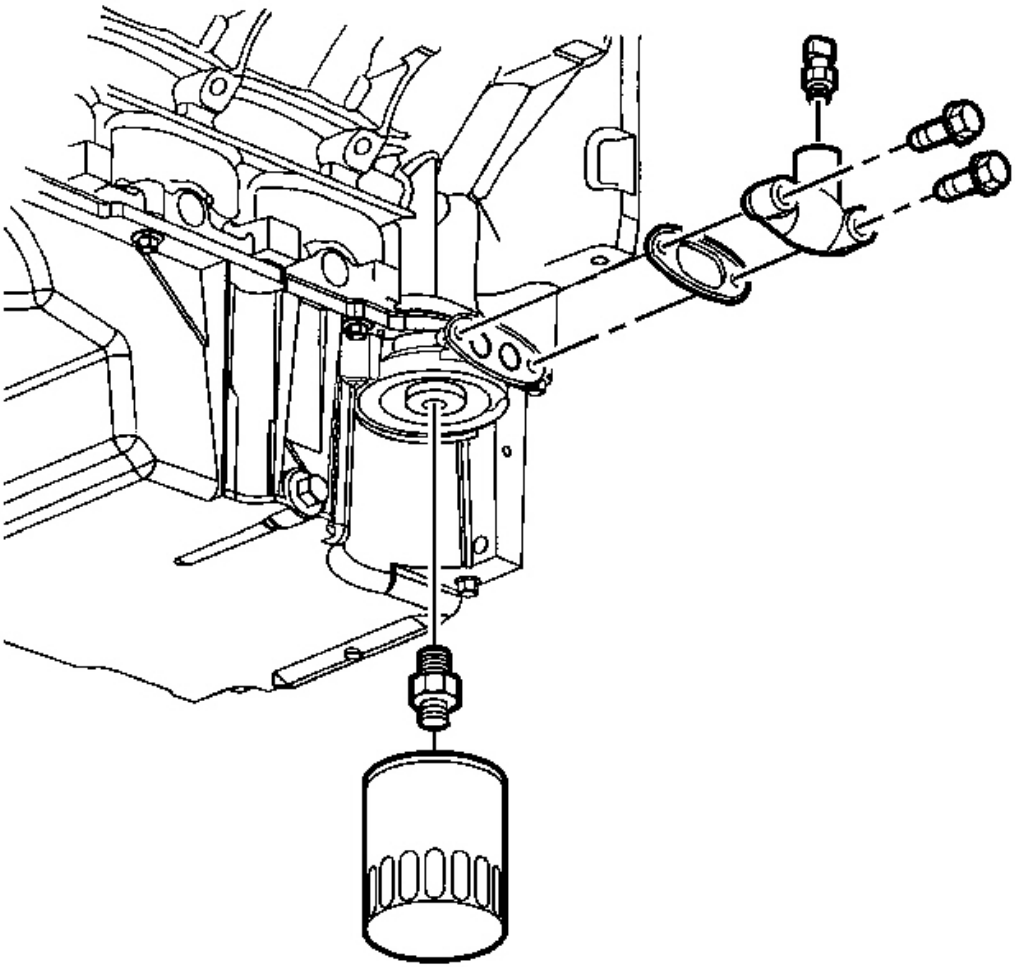

Fig. 220: Oil Pan Cover Bolts, Cover & Gasket
Courtesy of GENERAL MOTORS CORP.

3. Remove the oil pan cover bolts, cover, and gasket.
4. Discard the gasket.

Installation Procedure

cardiagn.com

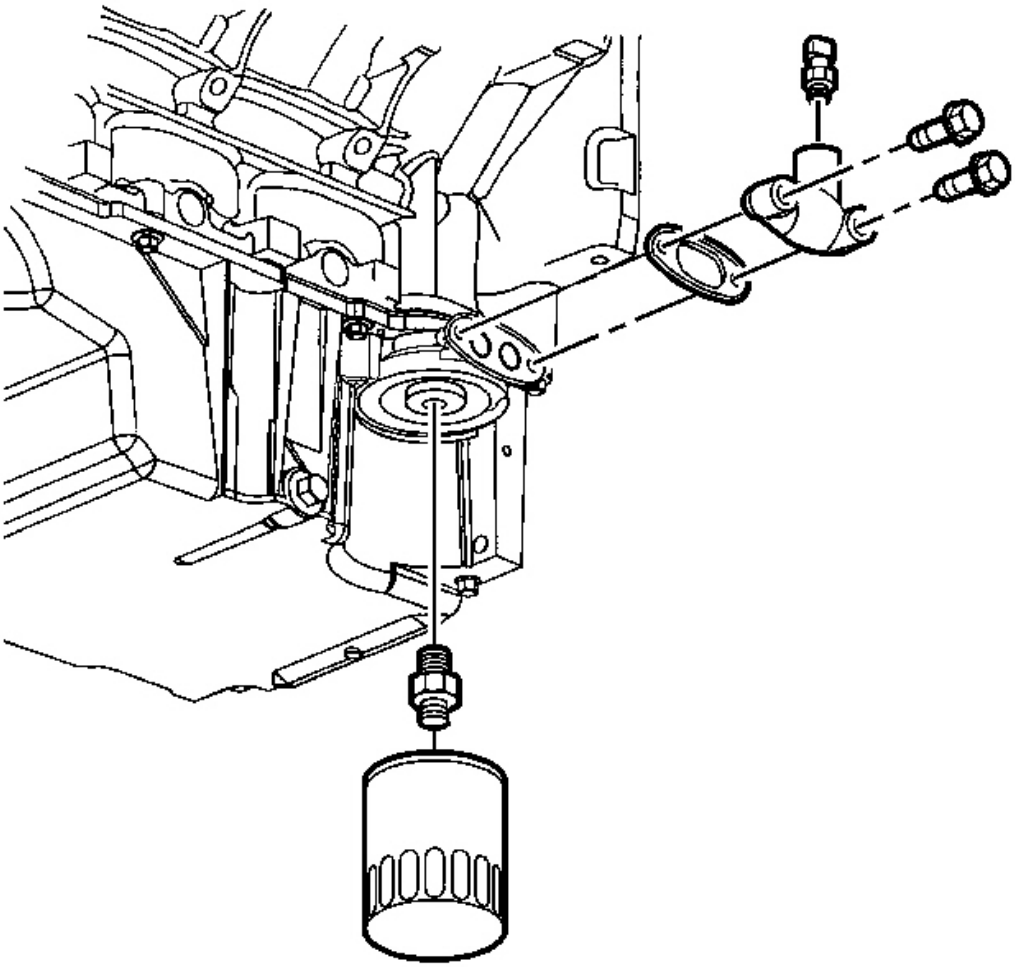

Fig. 221: Oil Pan Cover Bolts, Cover & Gasket
Courtesy of GENERAL MOTORS CORP.

NOTE: Refer to Fastener Notice in Cautions and Notices.

1. Install a new gasket, the cover, and bolts.

   Tighten: Tighten the oil pan cover bolts to 12 N.m (106 lb in).

cardiagn.com

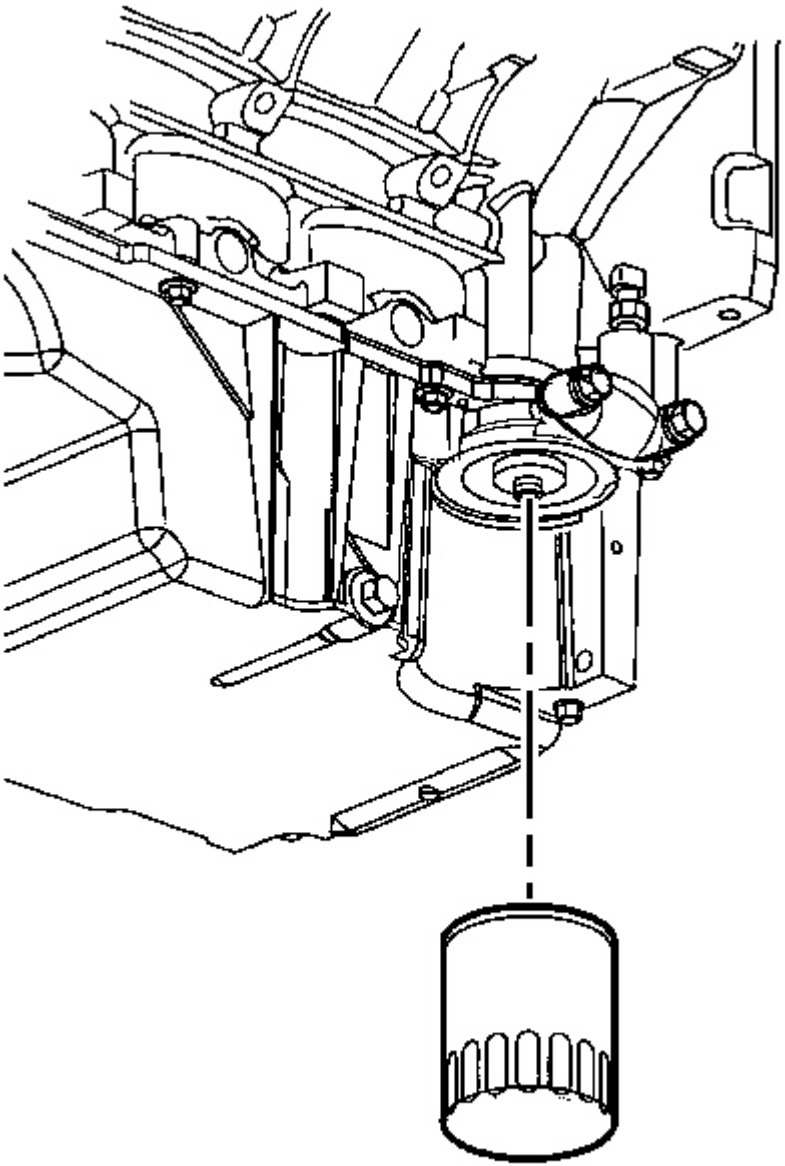

Fig. 222: Oil Filter
Courtesy of GENERAL MOTORS CORP.

2. Install the oil filter.

   Tighten: Tighten the oil filter to 30 N.m (22 lb ft).

cardiagn.com

3. Refill the engine oil.

OIL PAN REPLACEMENT

Removal Procedure

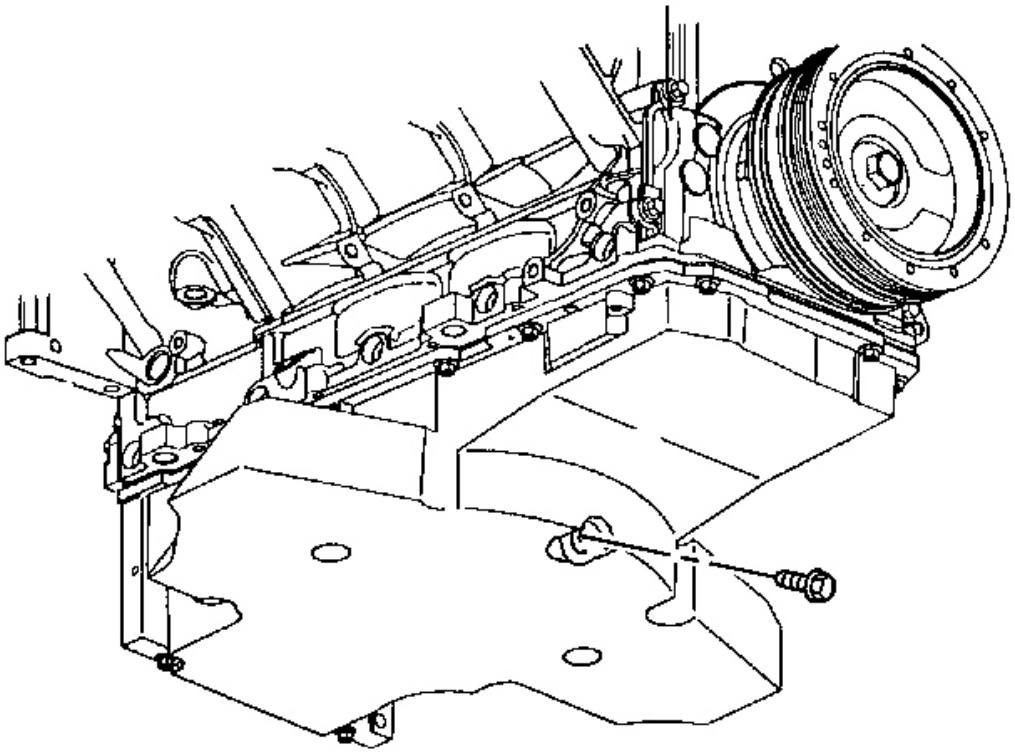

Fig. 223: Oil Pan Drain Plug
Courtesy of GENERAL MOTORS CORP.

1. Remove the front suspension crossmember. Refer to **Crossmember Replacement - Front Suspension** in Front Suspension.
2. Remove the oil pan drain plug and allow the oil to drain.
3. Re-install the engine oil drain plug until snug.

IMPORTANT: It is not necessary to remove the oil pan (lower) in order to remove the oil pan.

4. If oil pan and/or gasket removal or replacement is NOT required proceed to step 10.

cardiagn.com

If the oil pan (lower) gasket replacement is required proceed to the next step.

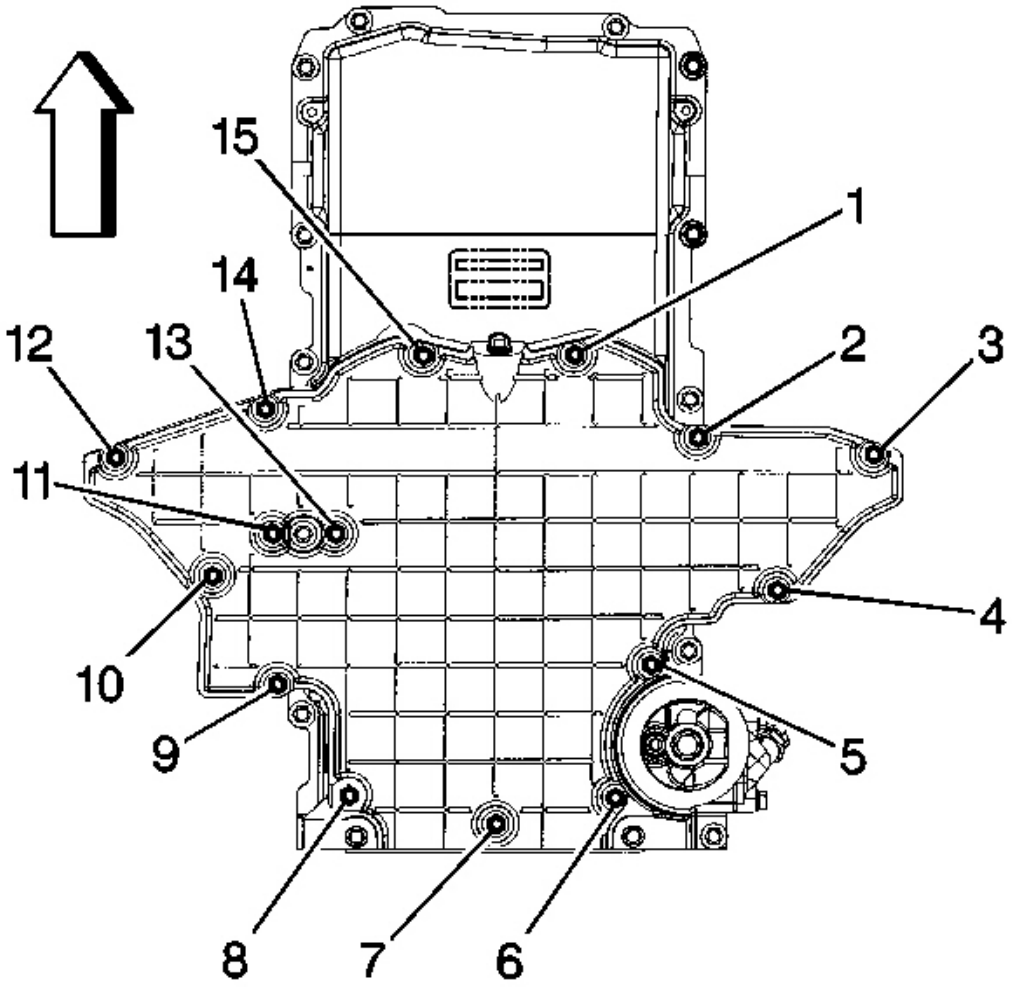

Fig. 224: Lower Oil Pan Bolt (1-15)
Courtesy of GENERAL MOTORS CORP.

5. If replacement of the oil pan (lower) gasket is needed, perform the following:
6. Remove the oil pan (lower) bolt (1-15).

cardiagn.com

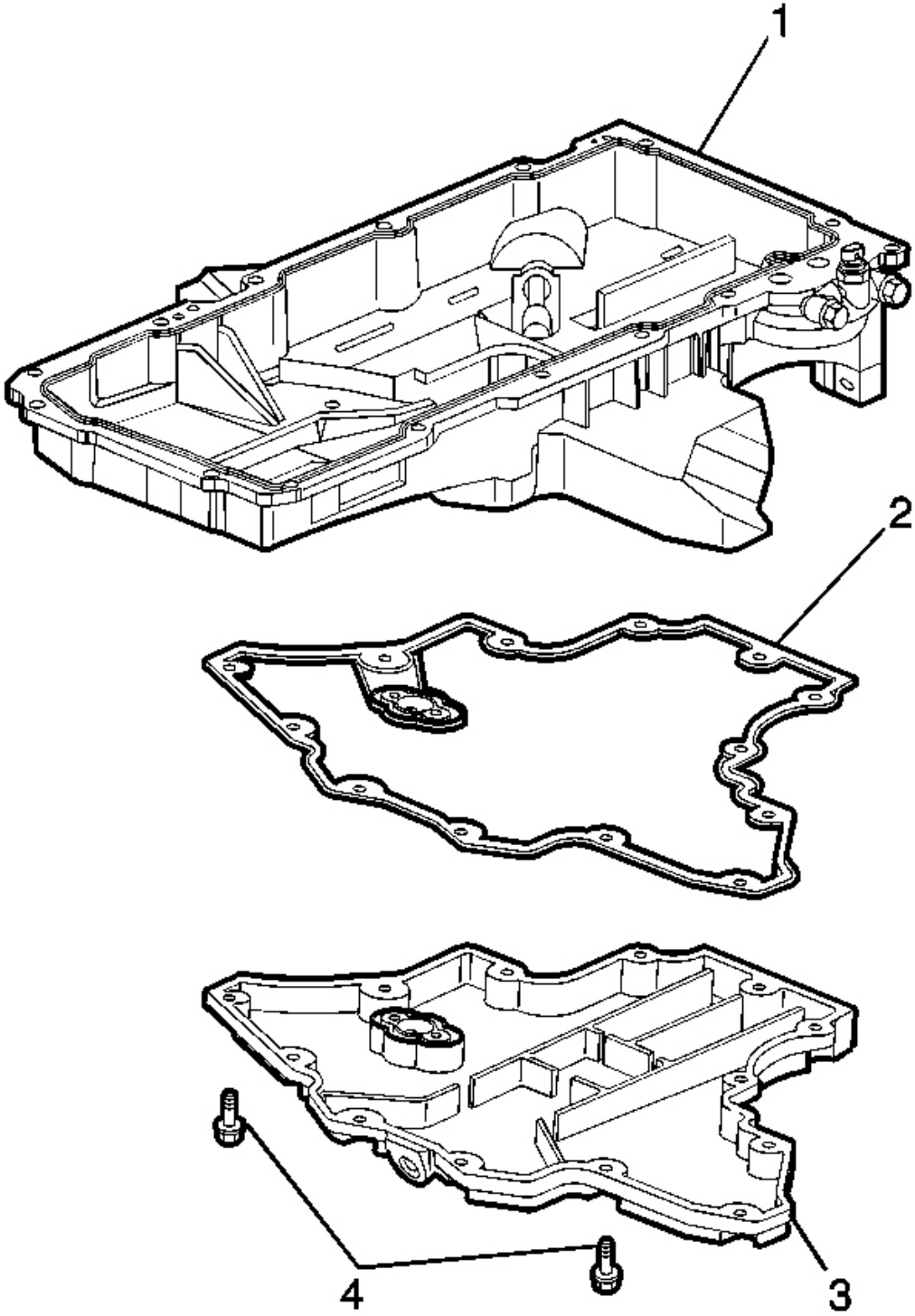

cardiagn.com

Fig. 225: Lower Oil Pan, Gasket, Oil Pan & Bolts
Courtesy of GENERAL MOTORS CORP.

7. Separate the oil pan (lower) (3) from the oil pan (1).
8. Remove the oil pan (lower) gasket (2).
9. Clean the oil pan (lower) gasket surface.

For the oil pan (lower) installation, refer to step 13 in the installation procedure.

cardiagn.com

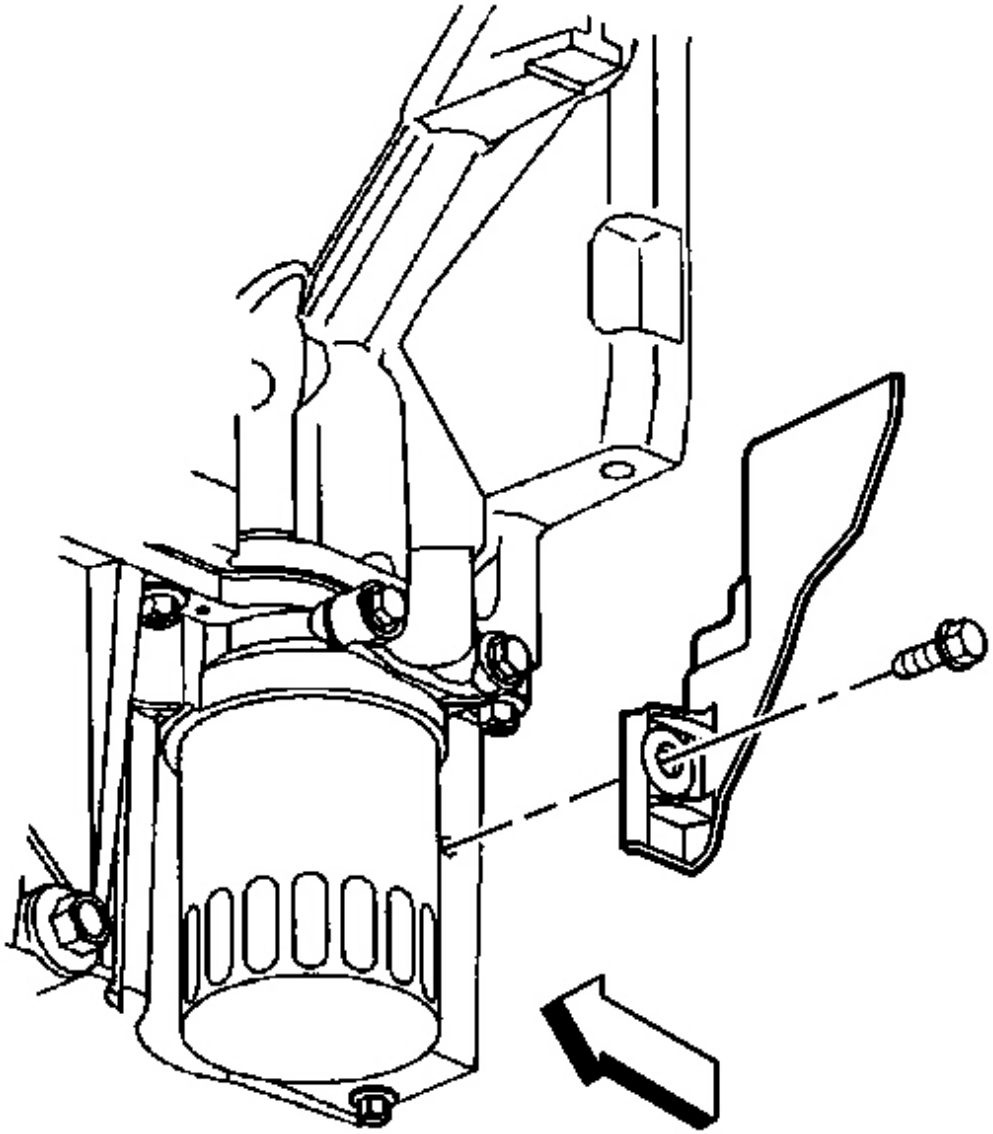

Fig. 226: Left Transmission Cover & Bolt
Courtesy of GENERAL MOTORS CORP.

10. Remove the starter motor. Refer to **Starter Motor Replacement** in Engine Electrical.
11. Remove the left transmission cover bolt and cover.

cardiagn.com

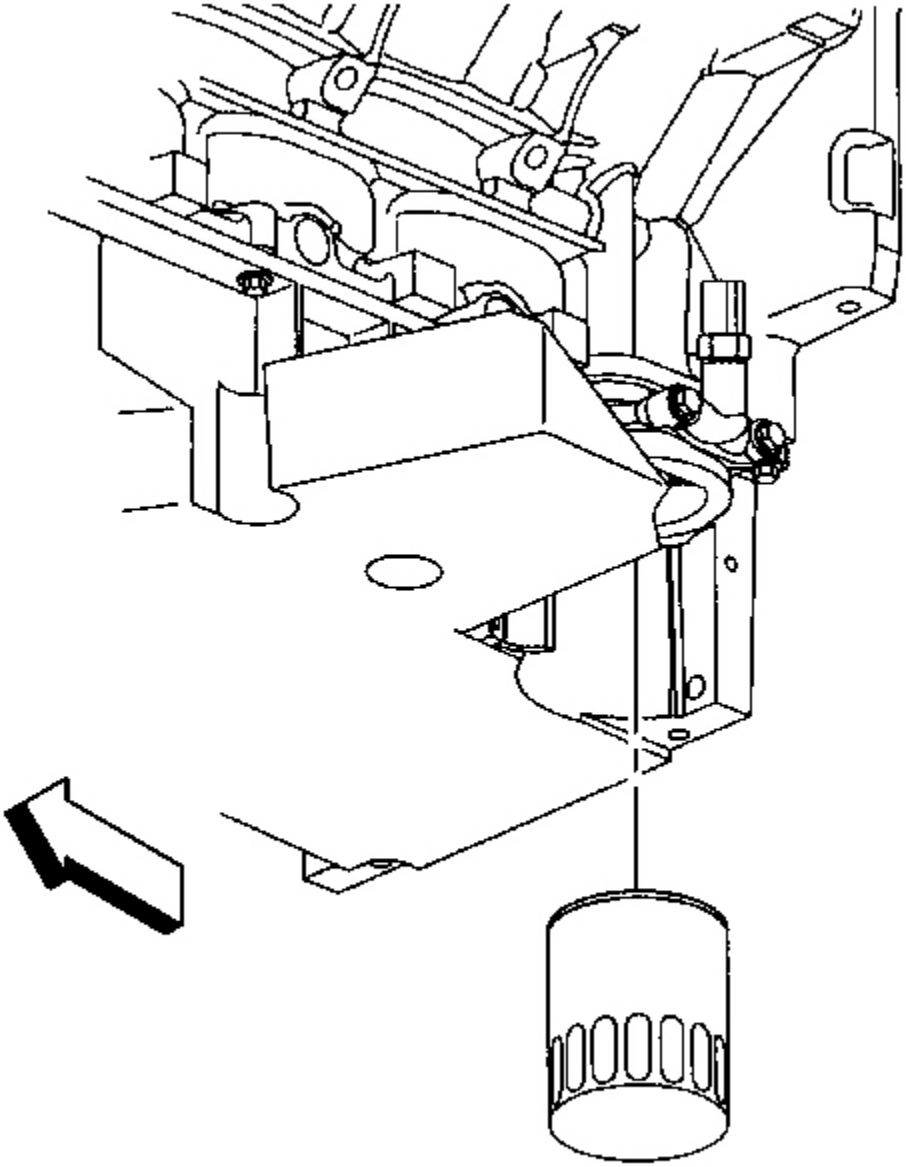

Fig. 227: Engine Oil Filter
Courtesy of GENERAL MOTORS CORP.

12. Remove the engine oil filter and allow the oil to drain.
13. Re-install the engine oil filter until snug.

cardiagn.com

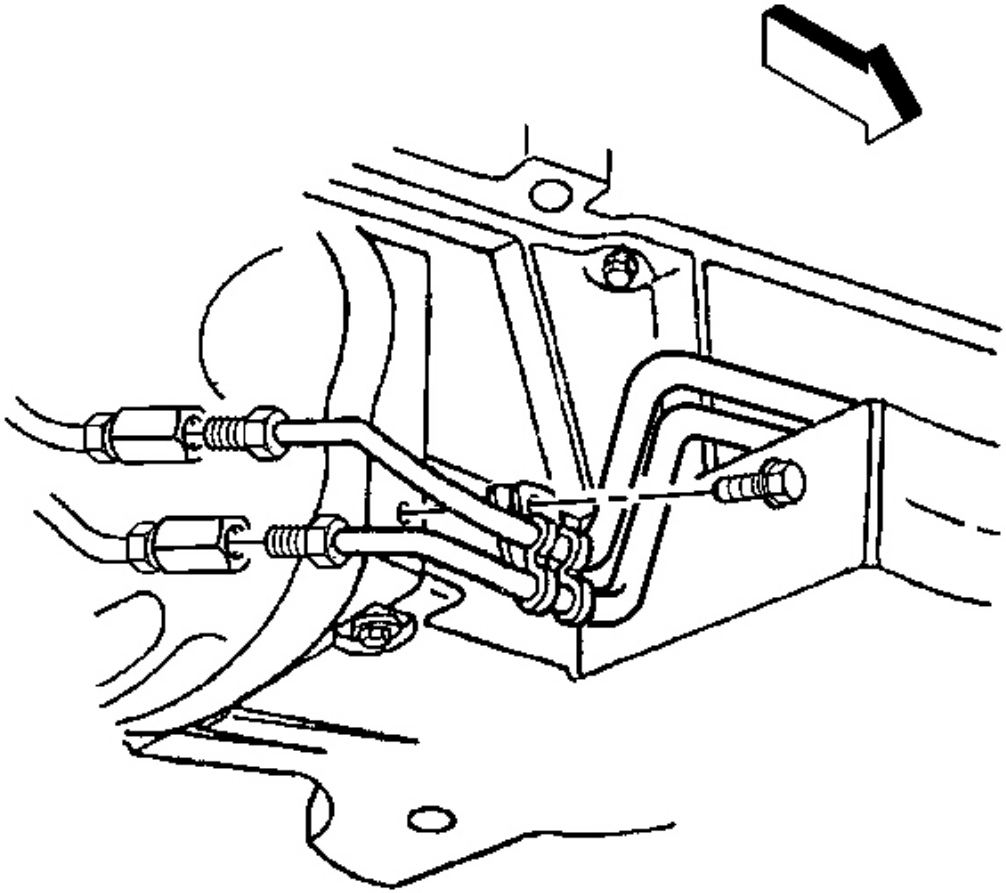

Fig. 228: Automatic Transmission Fluid Cooler Line Clamp & Bolt
Courtesy of GENERAL MOTORS CORP.

14. Remove the automatic transmission fluid cooler line clamp bolt at the right transmission cover, if equipped.

cardiagn.com

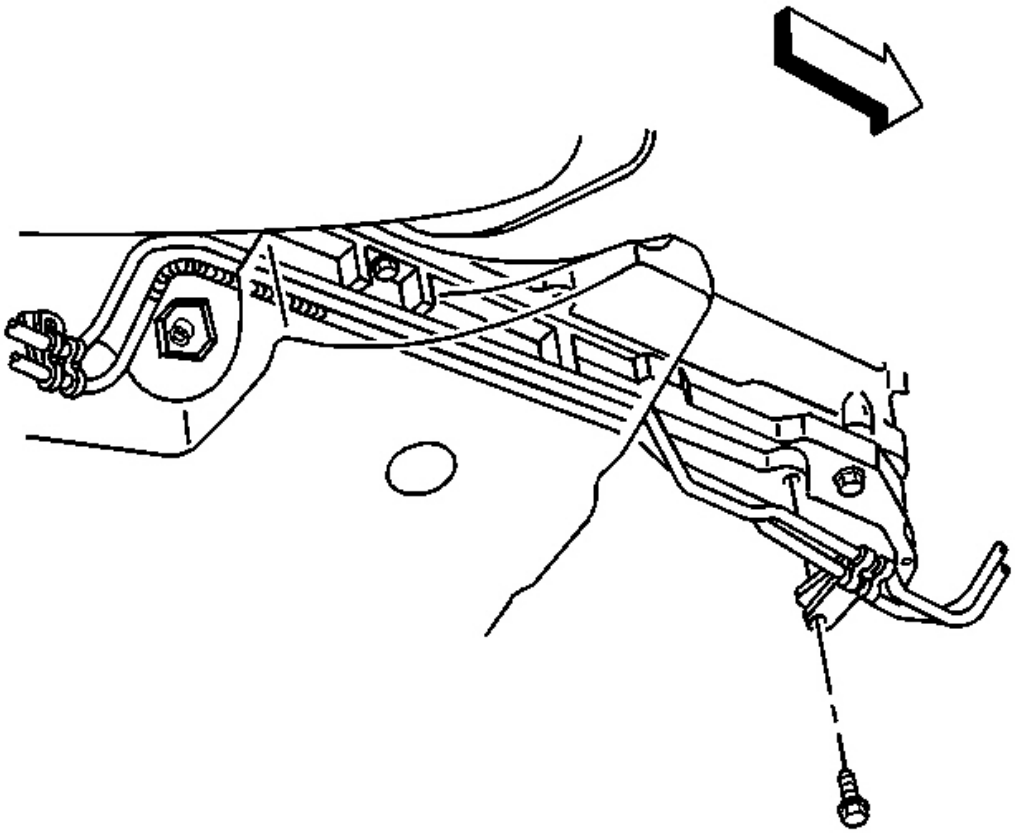

Fig. 229: Automatic Transmission Fluid Cooler Line & Oil Pan
Courtesy of GENERAL MOTORS CORP.

15. Remove the automatic transmission fluid cooler line clamp bolt at the oil pan, if equipped.

cardiagn.com

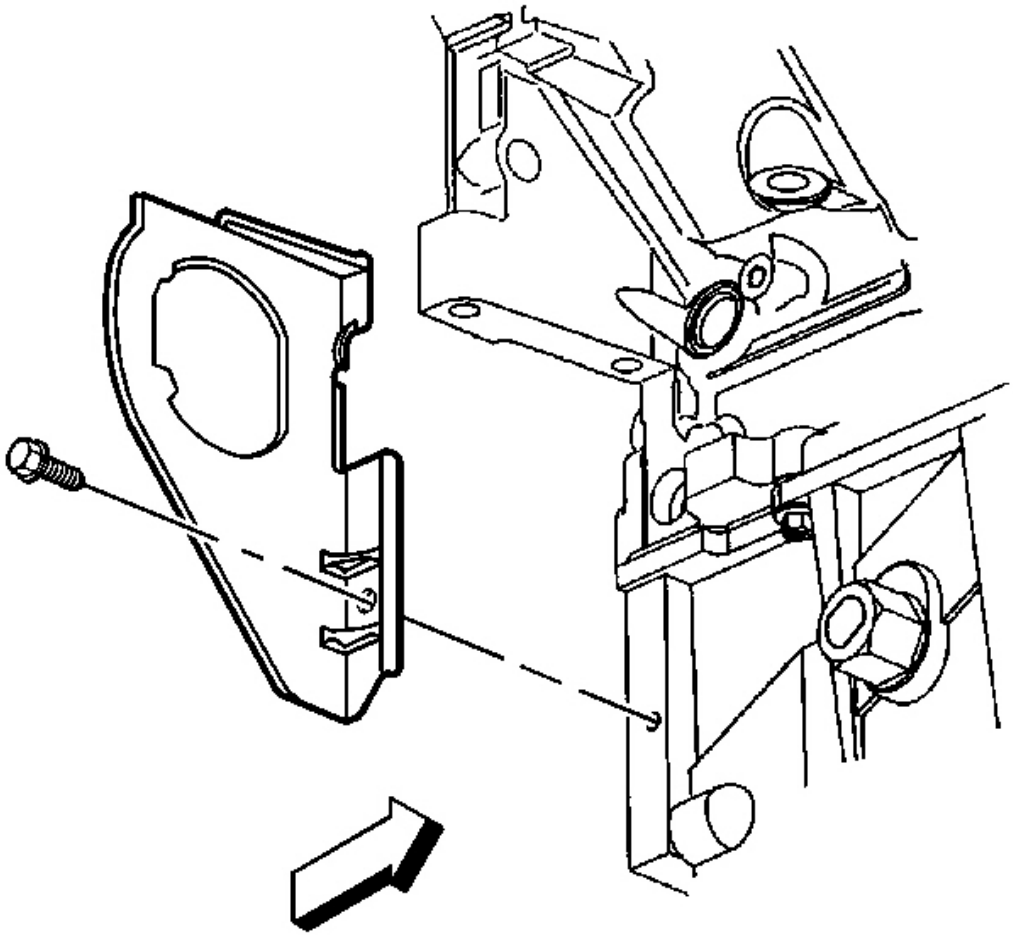

Fig. 230: Right Transmission Cover & Bolt
Courtesy of GENERAL MOTORS CORP.

16. Remove the right transmission cover bolt and cover.

cardiagn.com

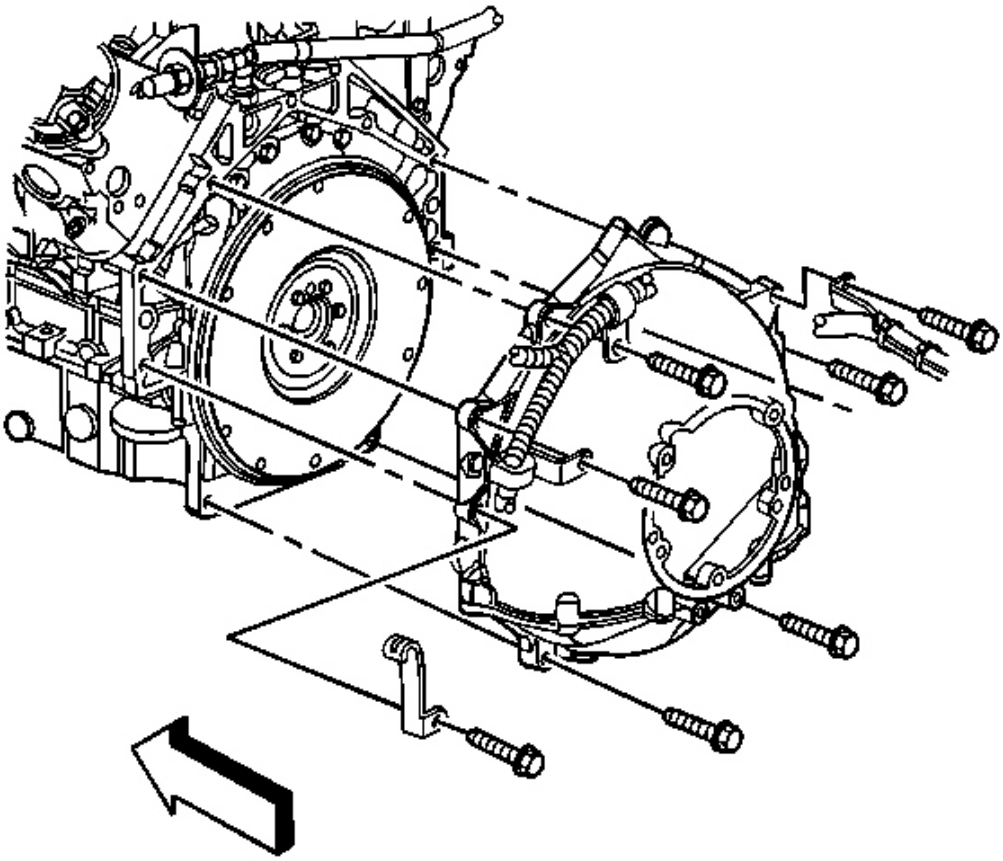

Fig. 231: Bottom Flywheel Housing-To-Oil Pan & Bolts
Courtesy of GENERAL MOTORS CORP.

17. Remove the bottom 2 flywheel housing-to-oil pan bolts.

cardiagn.com

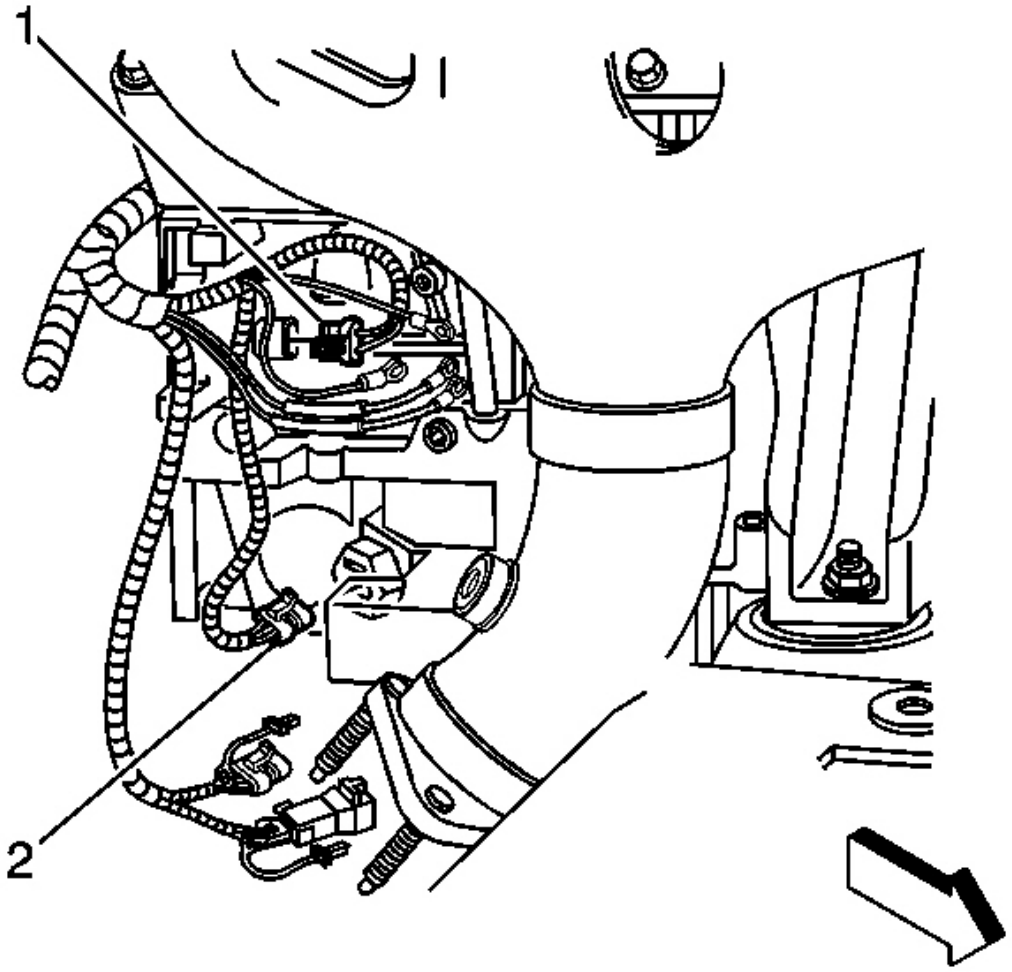

Fig. 232: Engine Oil Level Sensor Electrical Connector & CKP Sensor Electrical Connector
Courtesy of GENERAL MOTORS CORP.

18. Disconnect the engine oil level sensor electrical connector (2).

cardiagn.com

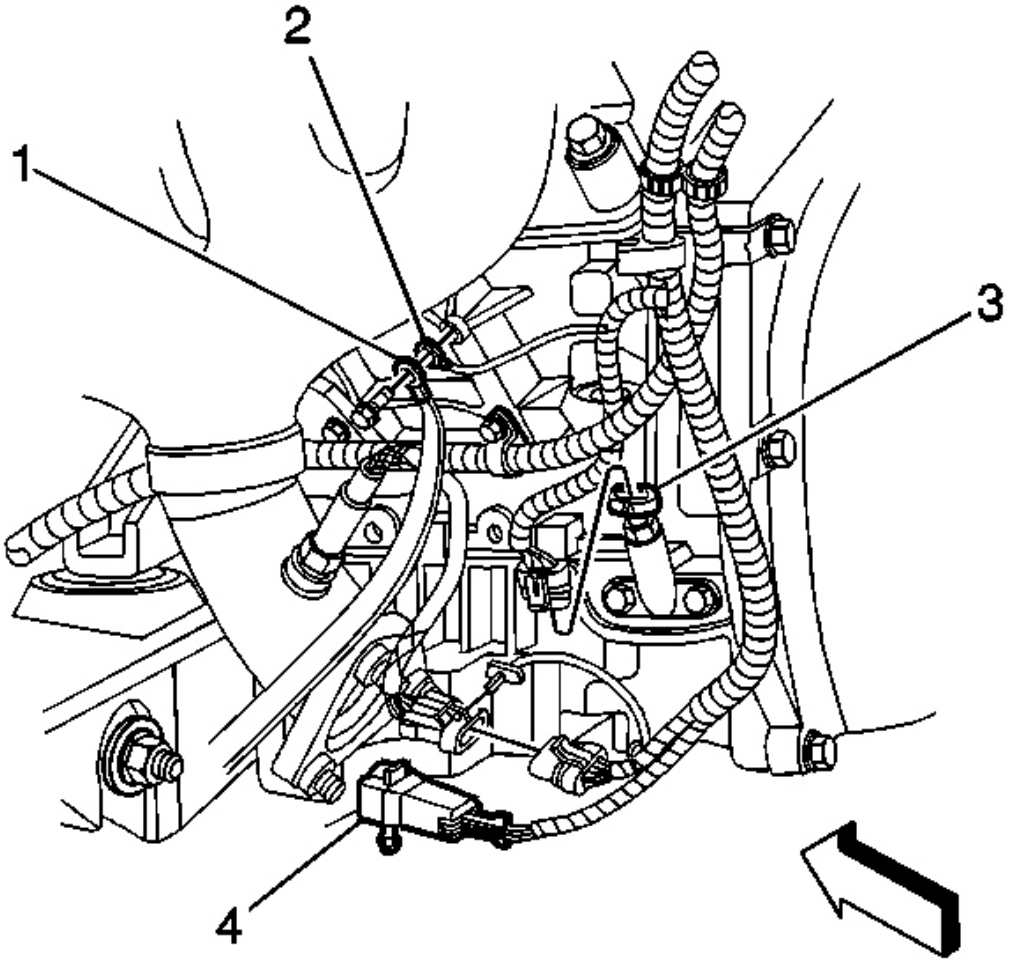

Fig. 233: Engine Oil Temperature Sensor Electrical Connector & Ground Straps
Courtesy of GENERAL MOTORS CORP.

19. Disconnect the engine oil temperature sensor (3) electrical connector.

cardiagn.com

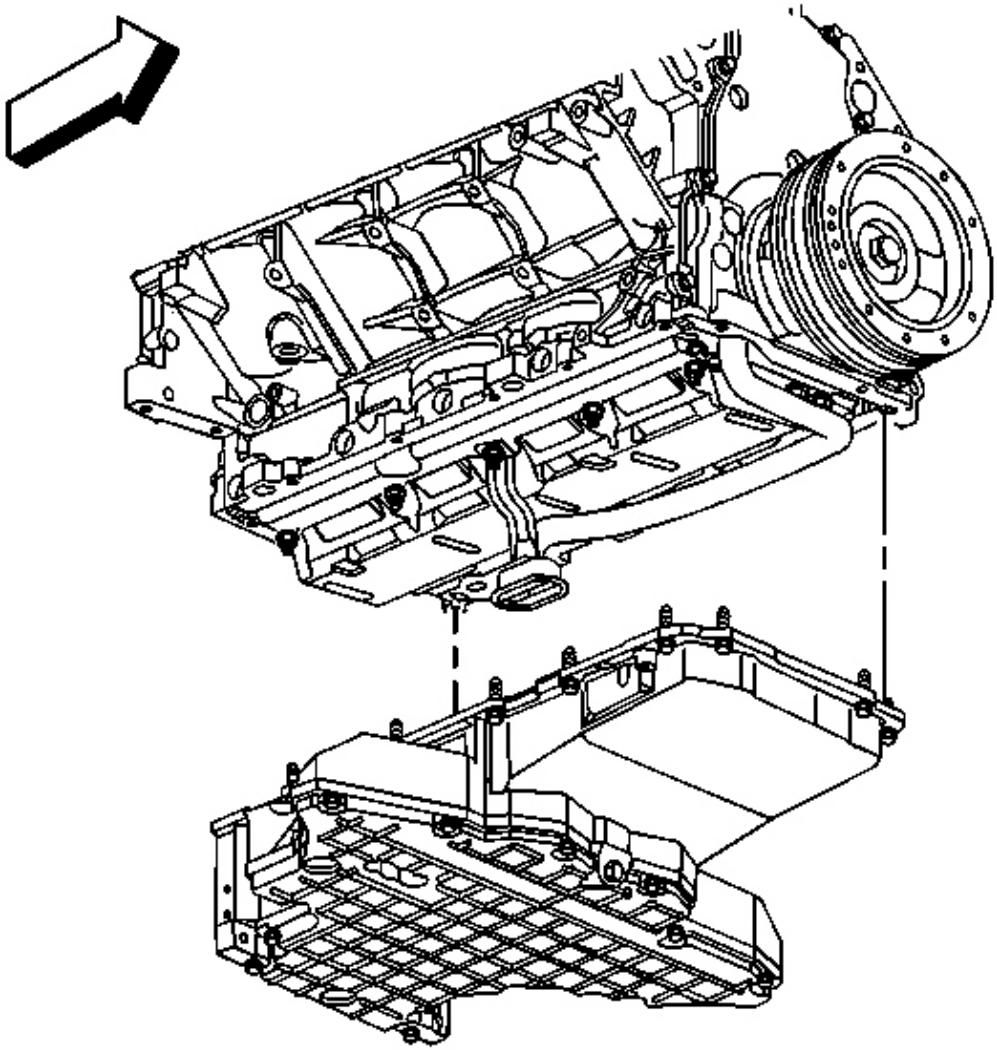

Fig. 234: Oil Pan Gasket & Engine Block
Courtesy of GENERAL MOTORS CORP.

IMPORTANT: The original oil pan gasket is retained and aligned to the oil pan by rivets. When installing a new gasket, it is not necessary to install new oil pan gasket rivets.
DO NOT reuse the oil pan gasket. When installing the oil pan, install a NEW oil pan gasket.
Removal of the oil pan (lower) will not provide access to the crankshaft oil deflector, crankshaft, or other internal engine components.

cardiagn.com

20. Remove the oil pan bolts.
21. Lower the oil pan, rotate the pan until it can be removed from around the oil pump screen.
22. Remove the engine oil filter.
23. Clean and inspect the engine oil pan. Refer to **Oil Pan Cleaning and Inspection** .

Installation Procedure

IMPORTANT: All gasket surfaces should be free of oil or other foreign material during assembly.

The alignment of the structural oil pan is critical. The rear bolt hole locations of the oil pan provide mounting points for the flywheel housing cover. To ensure the rigidity of the powertrain and correct transmission alignment, it is important that the rear of the block and the rear of the oil pan are flush or even. The rear of the oil pan must NEVER protrude beyond the engine block.

Do NOT reuse the oil pan gasket.

It is not necessary to rivet the NEW gasket to the oil pan.

cardiagn.com

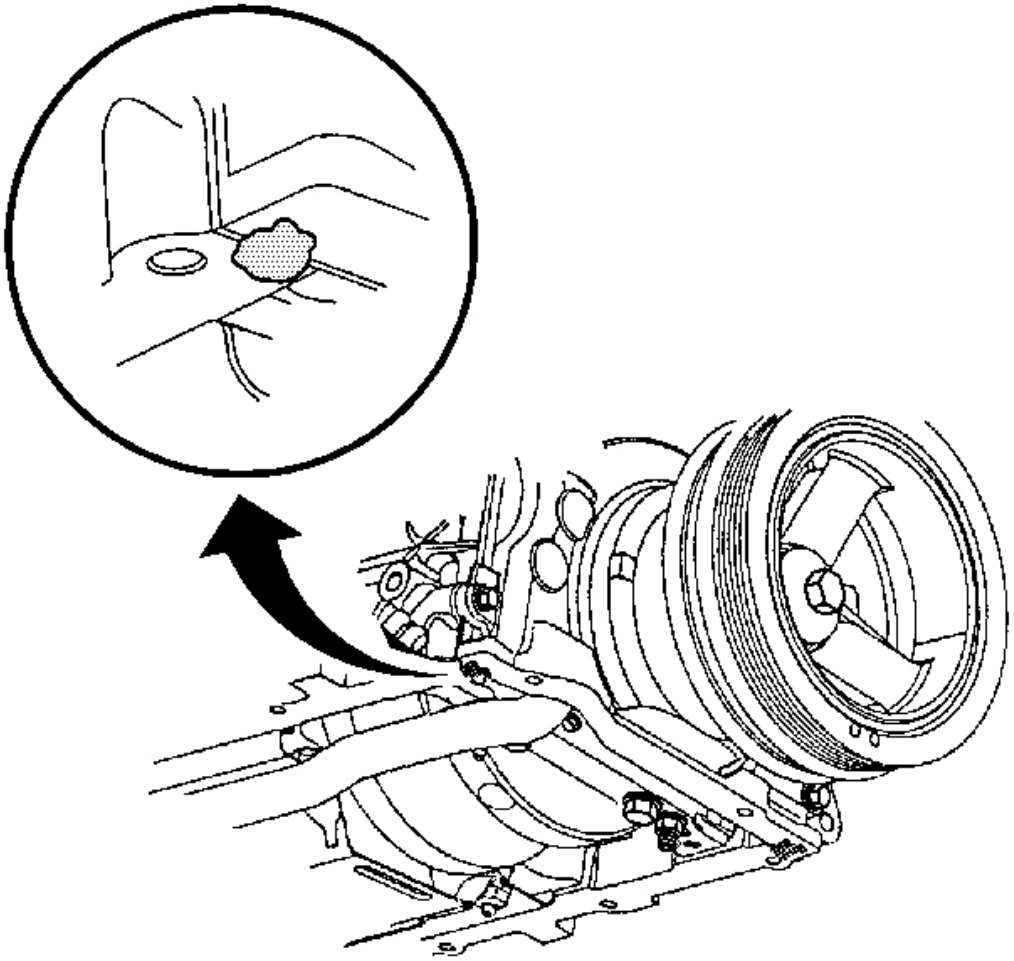

Fig. 235: View Of Sealant Applied To Front Oil Pan-To-Engine Block Junction
Courtesy of GENERAL MOTORS CORP.

1. Apply a 5 mm (0.20 in) bead of sealant GM P/N 12378190, or equivalent 20 mm (0.80 in) long to the engine block. Apply the sealant directly onto the tabs of the front cover gasket that protrude into the oil pan surface.

cardiagn.com

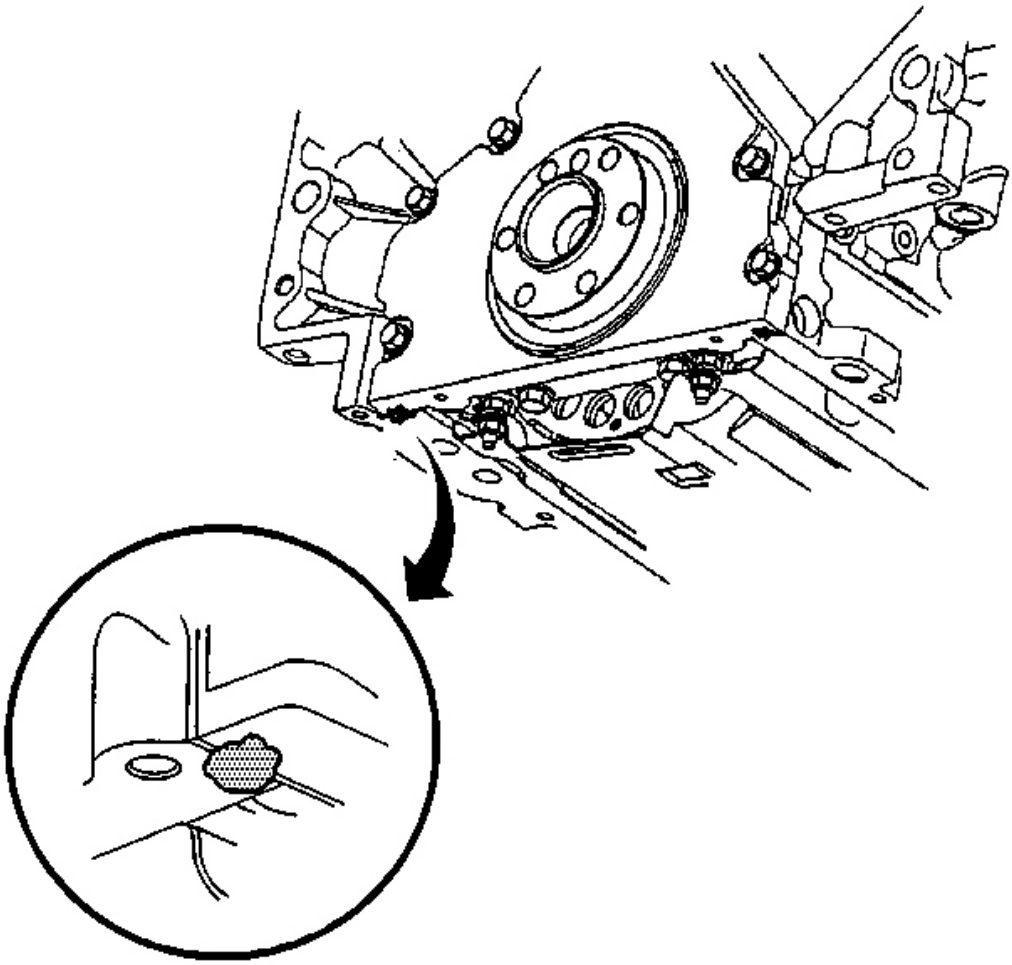

Fig. 236: View Of Sealant Applied To Rear Oil Pan-To-Engine Block Junction
Courtesy of GENERAL MOTORS CORP.

2. Apply a 5 mm (0.20 in) bead of sealant GM P/N 12378190, or equivalent 20 mm (0.80 in) long to the engine block. Apply the sealant directly onto the tabs of the rear cover gasket that protrude into the oil pan surface.

cardiagn.com

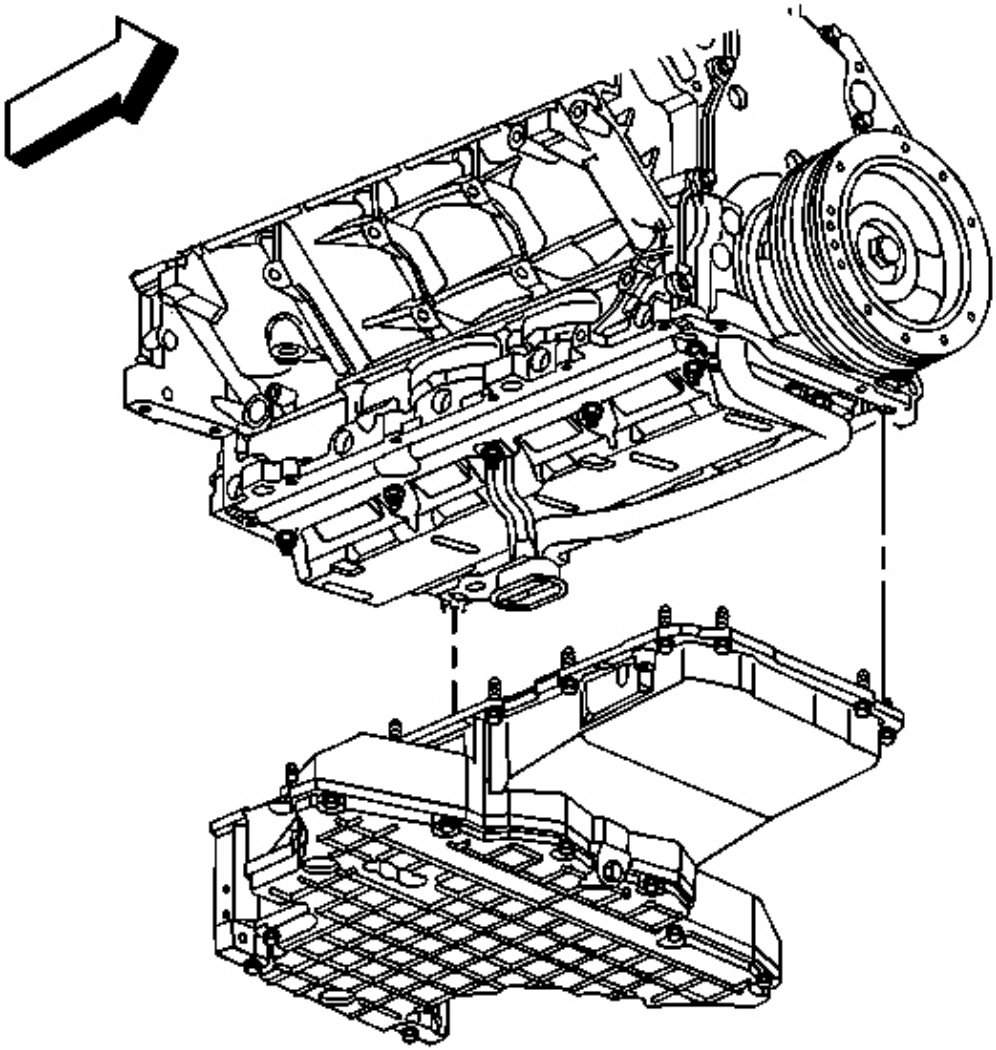

Fig. 237: Oil Pan Gasket & Engine Block
Courtesy of GENERAL MOTORS CORP.

IMPORTANT: Be sure to align the oil gallery passages in the oil pan and engine block properly with the oil pan gasket.

3. Pre-assemble the oil pan gasket to the pan.
    1. Install the gasket onto the oil pan.
    2. Install the oil pan bolts to the pan and through the gasket.

cardiagn.com

3. Install the oil pan, gasket and bolts to the engine block.
4. Tighten the oil pan bolts until snug. Do not overtighten.

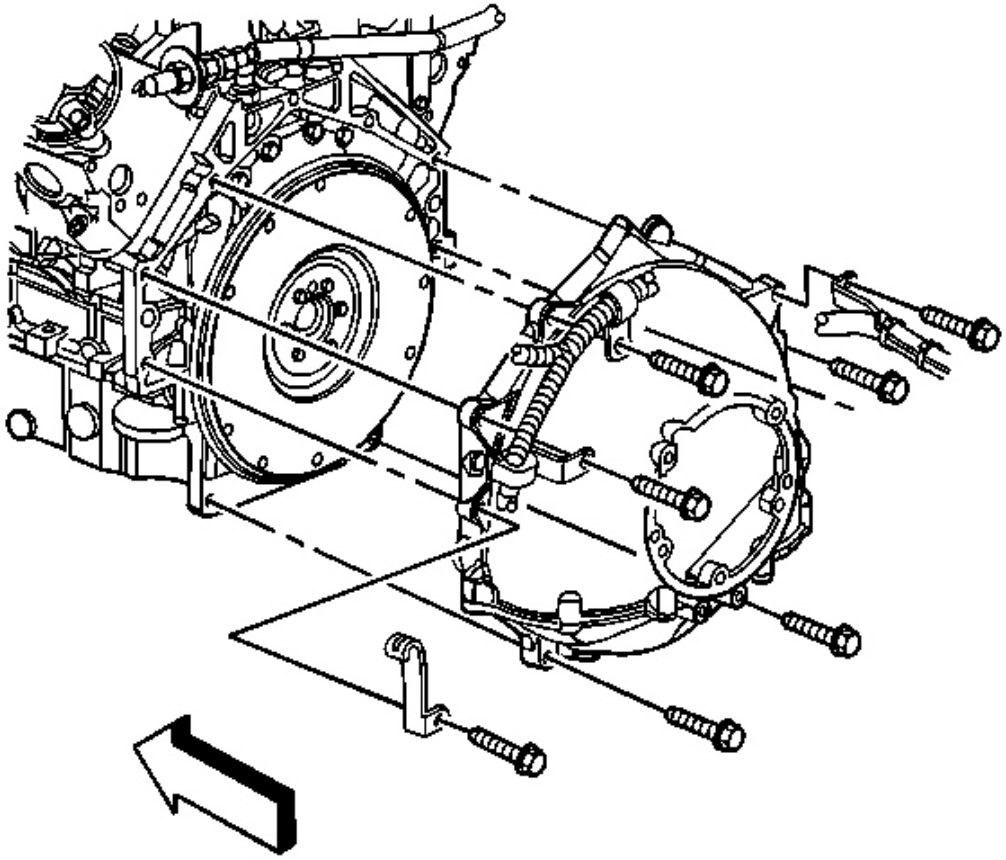

Fig. 238: Bottom Flywheel Housing-To-Oil Pan & Bolts
Courtesy of GENERAL MOTORS CORP.

NOTE: Refer to Fastener Notice in Cautions and Notices.

4. Install the 2 bottom flywheel housing bolts to position the oil pan correctly.
5. Tighten the 2 bottom flywheel housing bolts until snug. Do not overtighten.

Tighten:

1. Tighten the oil pan bolt and oil pan-to-front cover bolts to 25 N.m (18 lb ft).
2. Tighten the oil pan-to-rear cover bolts to 12 N.m (106 lb in).

cardiagn.com

3. Tighten the flywheel housing bolts to 50 N.m (37 lb ft).

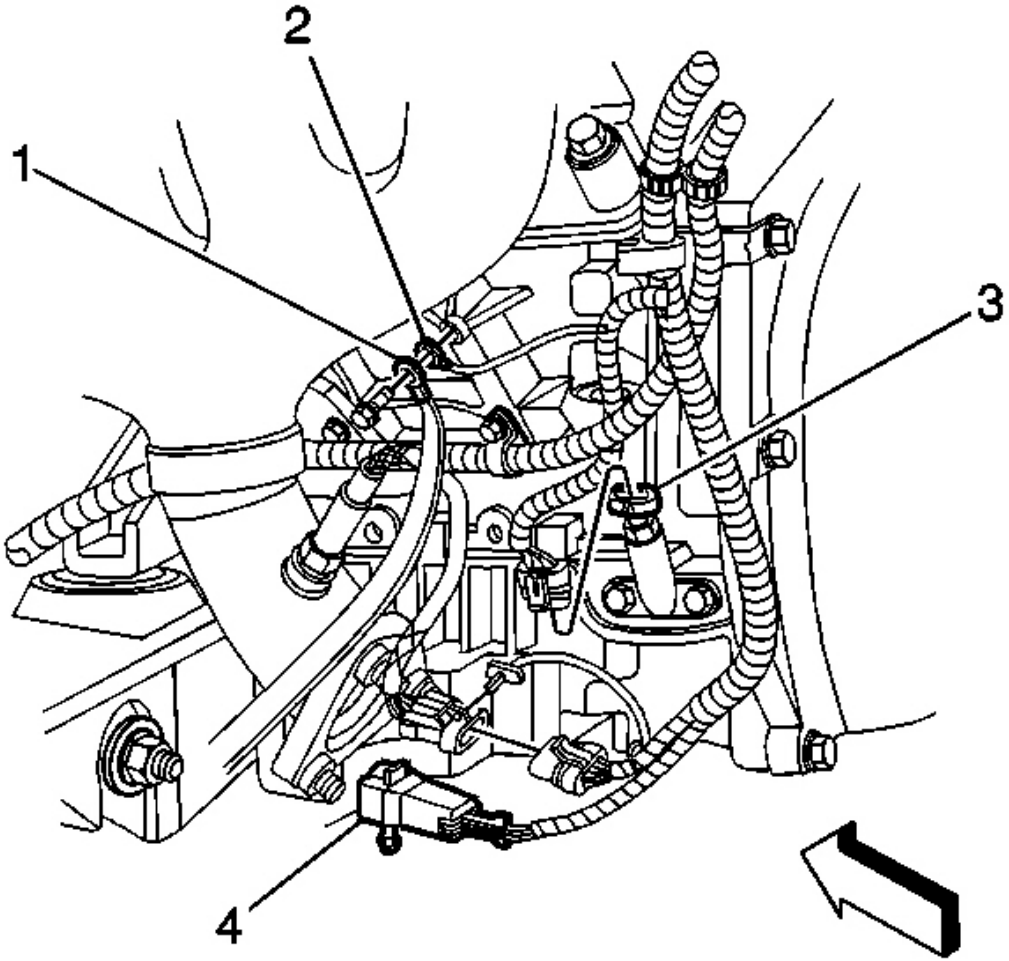

Fig. 239: Engine Oil Temperature Sensor Electrical Connector & Ground Straps
Courtesy of GENERAL MOTORS CORP.

6. Connect the engine oil temperature sensor (3) electrical connector.

cardiagn.com

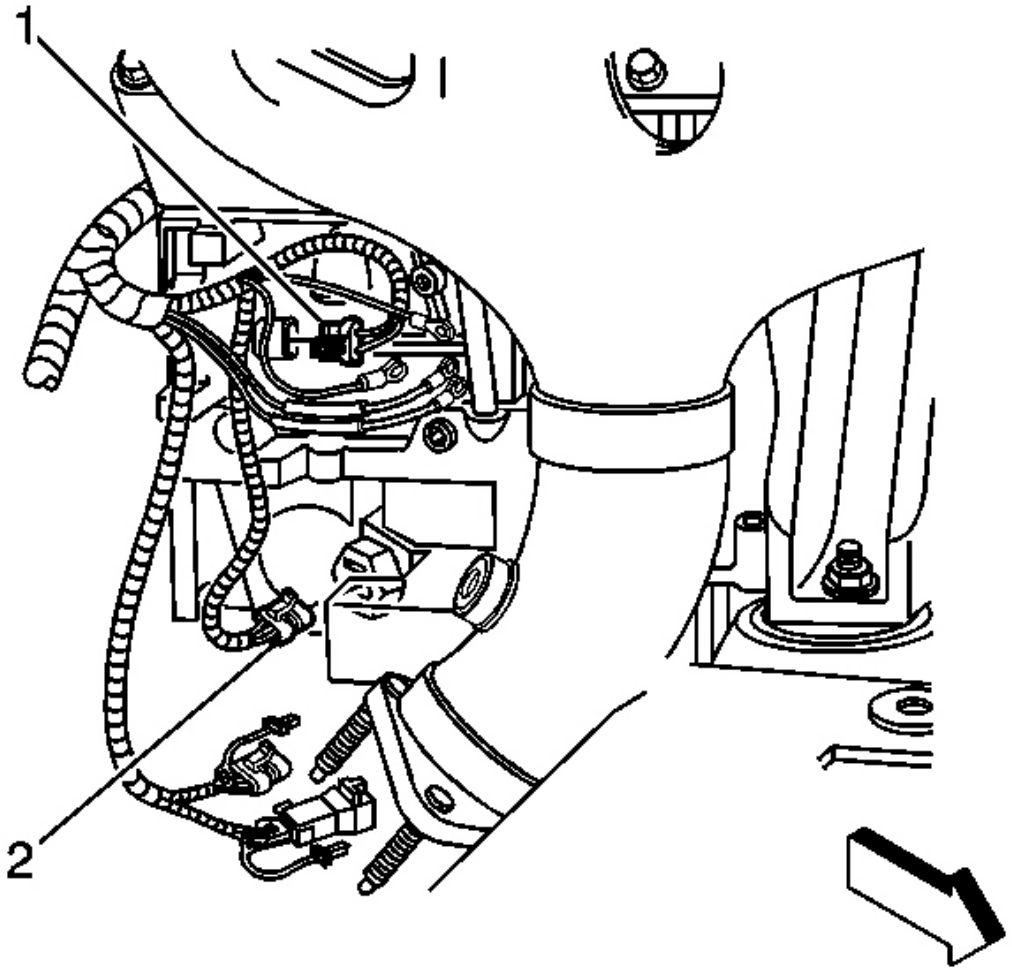

Fig. 240: Engine Oil Level Sensor Electrical Connector & CKP Sensor Electrical Connector
Courtesy of GENERAL MOTORS CORP.

7. Connect the engine oil level sensor electrical connector (2).

cardiagn.com

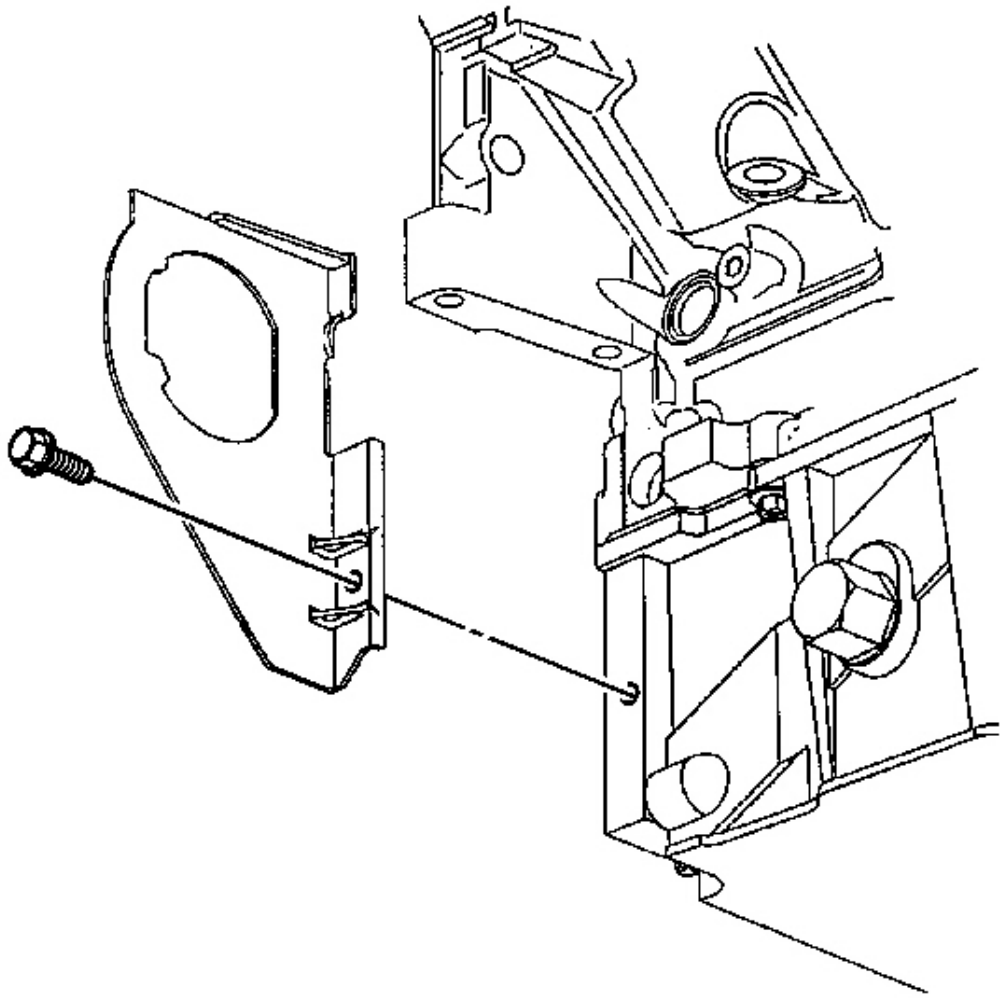

Fig. 241: Right Transmission Cover & Bolt
Courtesy of GENERAL MOTORS CORP.

8. Install the right transmission cover and bolt.

   Tighten: Tighten the right transmission cover bolt to 12 N.m (106 lb in).

cardiagn.com

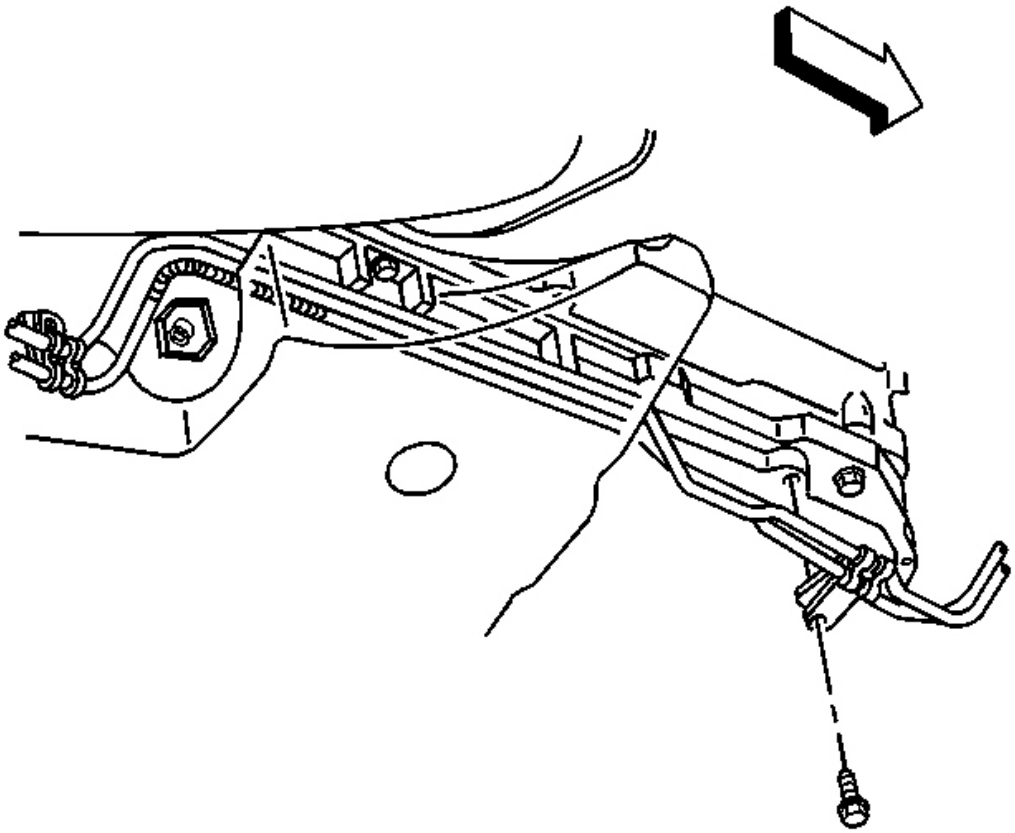

Fig. 242: Automatic Transmission Fluid Cooler Line & Oil Pan
Courtesy of GENERAL MOTORS CORP.

9. Install the automatic transmission fluid cooler line clamp bolt-at-the oil pan, if equipped.

   Tighten: Tighten the automatic transmission fluid cooler line clamp bolt-at-the oil pan to 12 N.m (106 lb in).

cardiagn.com

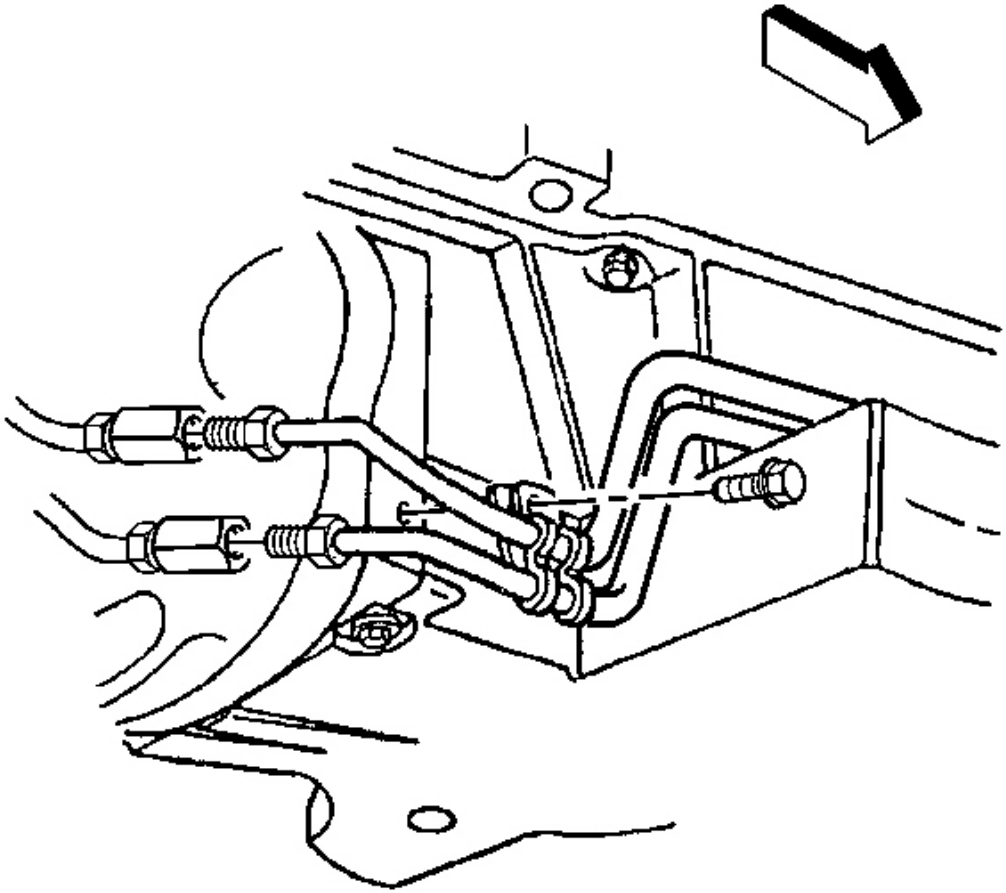

Fig. 243: Automatic Transmission Fluid Cooler Line Clamp & Bolt
Courtesy of GENERAL MOTORS CORP.

10. Install the automatic transmission fluid cooler line clamp bolt-at-right transmission cover, if equipped.

    Tighten: Tighten the automatic transmission fluid cooler line bolt-at-right transmission cover to 2.5 N.m (22 lb in).

cardiagn.com

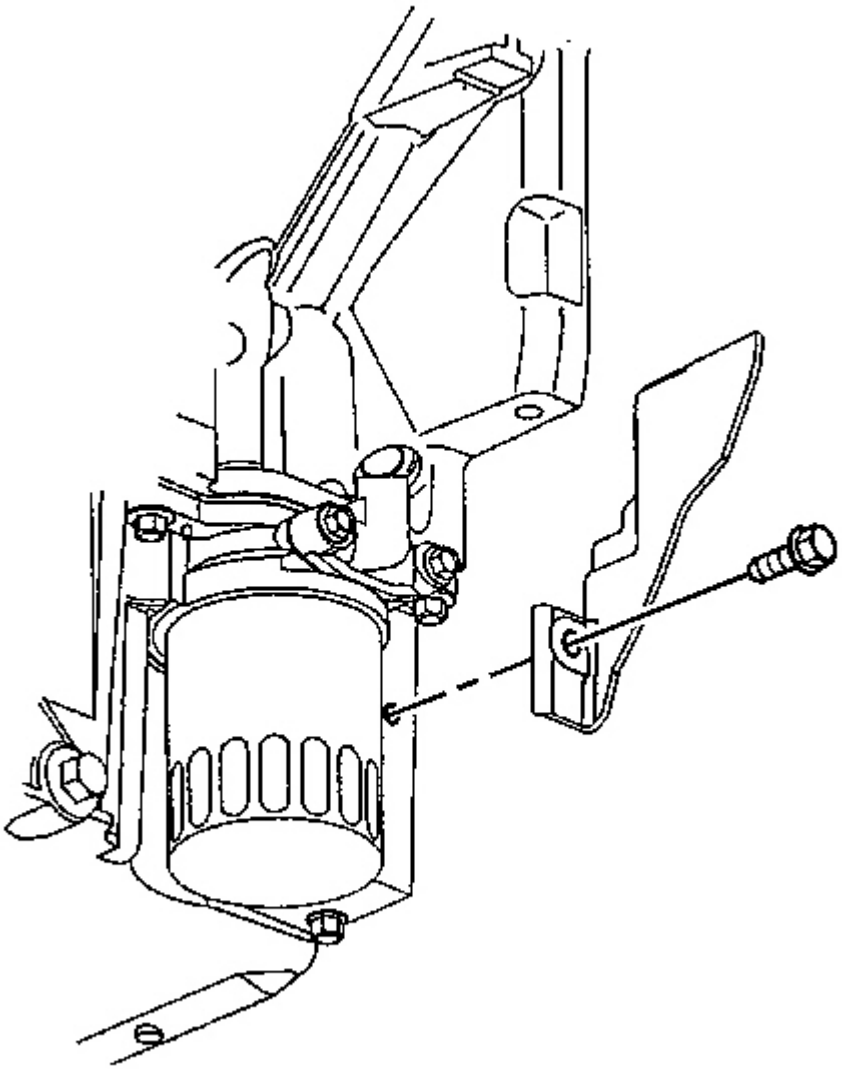

Fig. 244: Left Transmission Cover & Bolt
Courtesy of GENERAL MOTORS CORP.

11. Install the left transmission cover and bolt.

    Tighten: Tighten the left transmission cover bolt to 12 N.m (106 lb in).

12. Install the starter motor. Refer to **Starter Motor Replacement** in Engine Electrical.

cardiagn.com

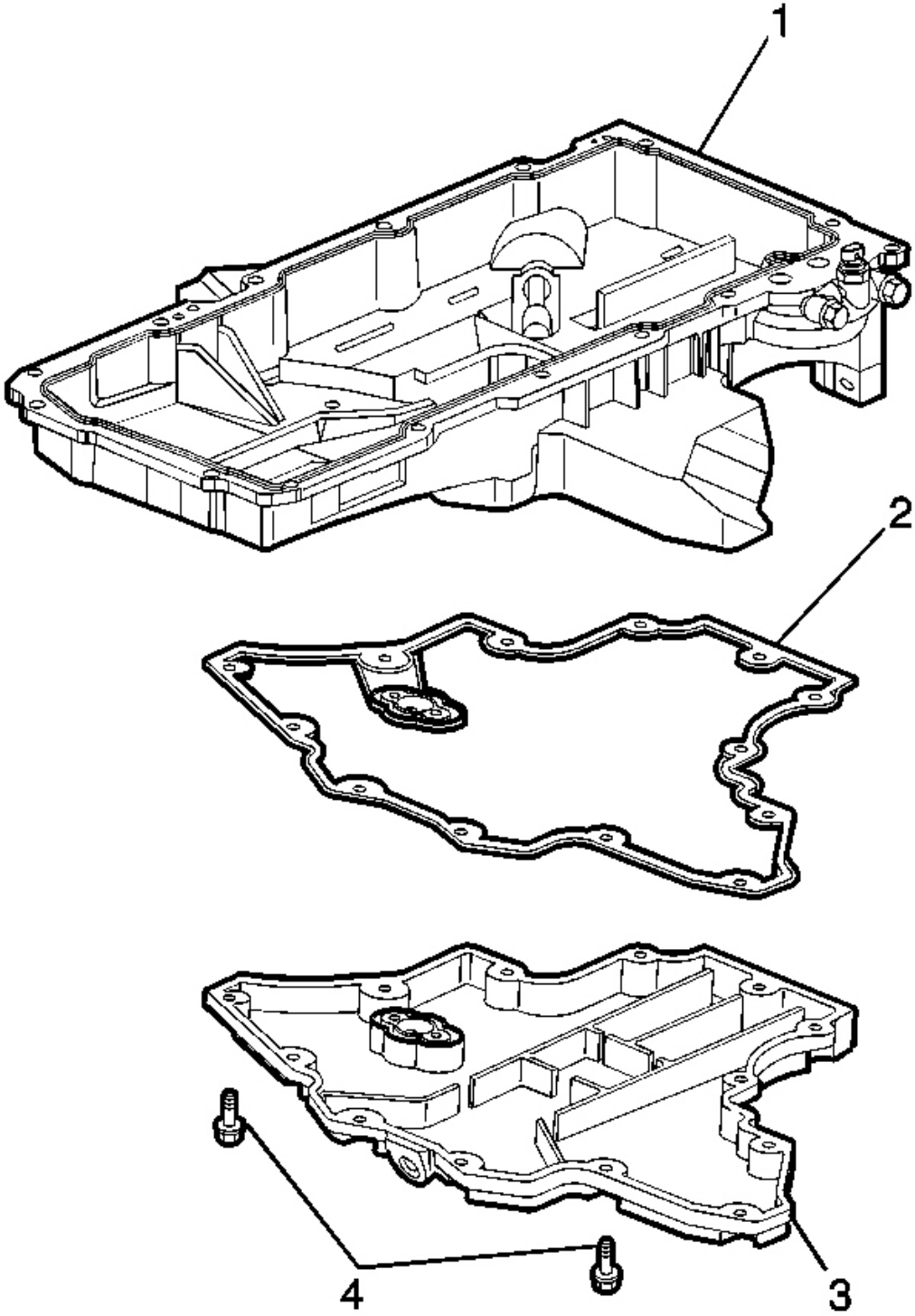

cardiagn.com

Fig. 245: Lower Oil Pan, Gasket, Oil Pan & Bolts
Courtesy of GENERAL MOTORS CORP.

13. Install the oil pan (lower) (3) and gasket (2) to the oil pan (1).
14. Install the oil pan bolts (4).

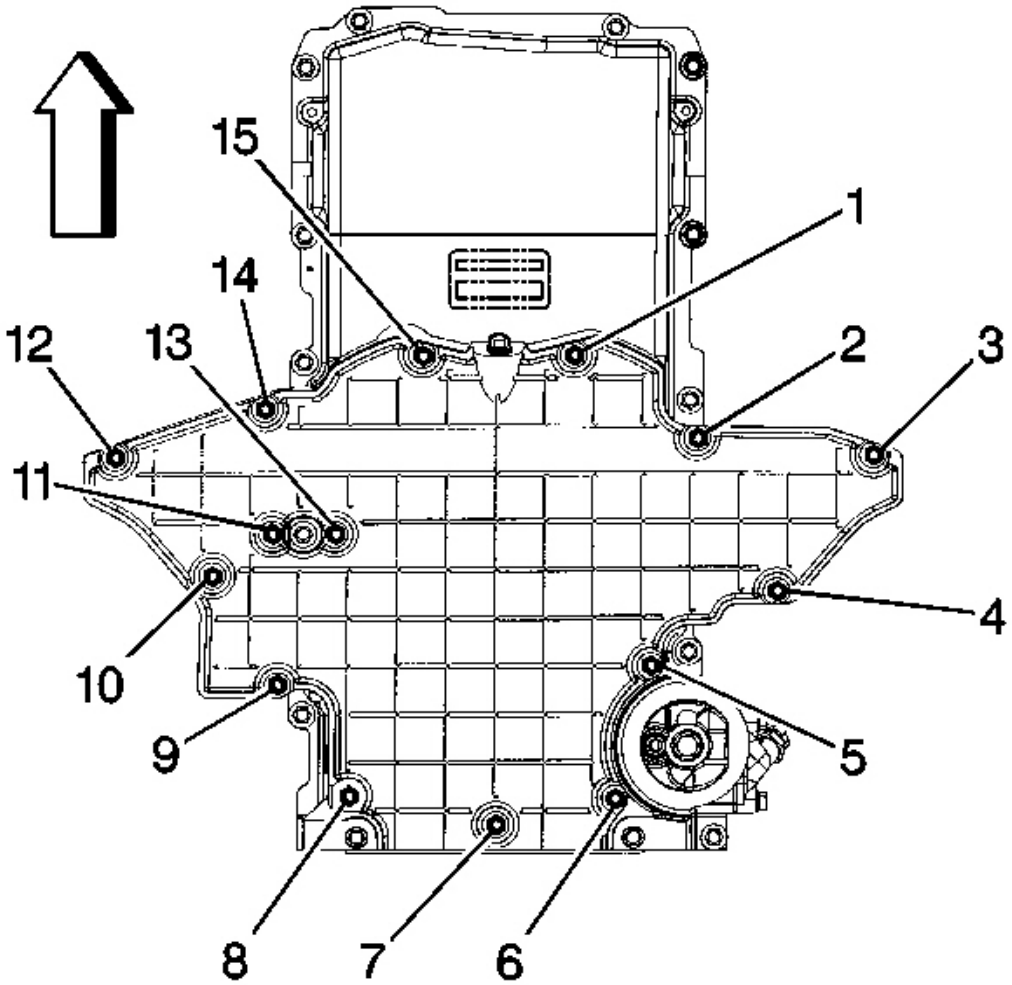

Fig. 246: Lower Oil Pan Bolt (1-15)
Courtesy of GENERAL MOTORS CORP.

15. Tighten the oil pan (lower) bolts (1-15) in a crossing pattern, alternating from side-to-side.

Tighten: Tighten the oil pan (lower) bolts to 12 N.m (106 lb in).

cardiagn.com

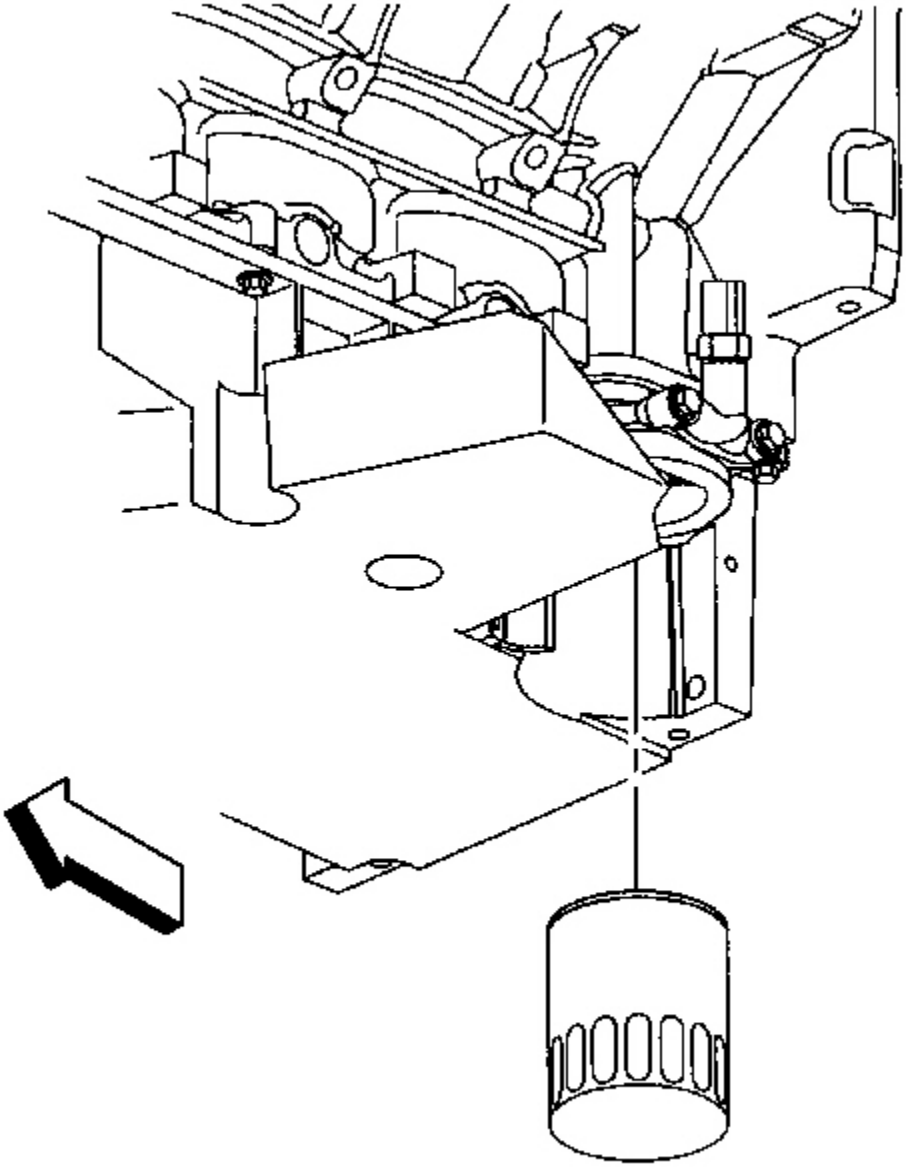

Fig. 247: Engine Oil Filter
Courtesy of GENERAL MOTORS CORP.

16. Install a NEW engine oil filter.

    Tighten: Tighten the engine oil filter to 30 N.m (22 lb ft).

cardiagn.com

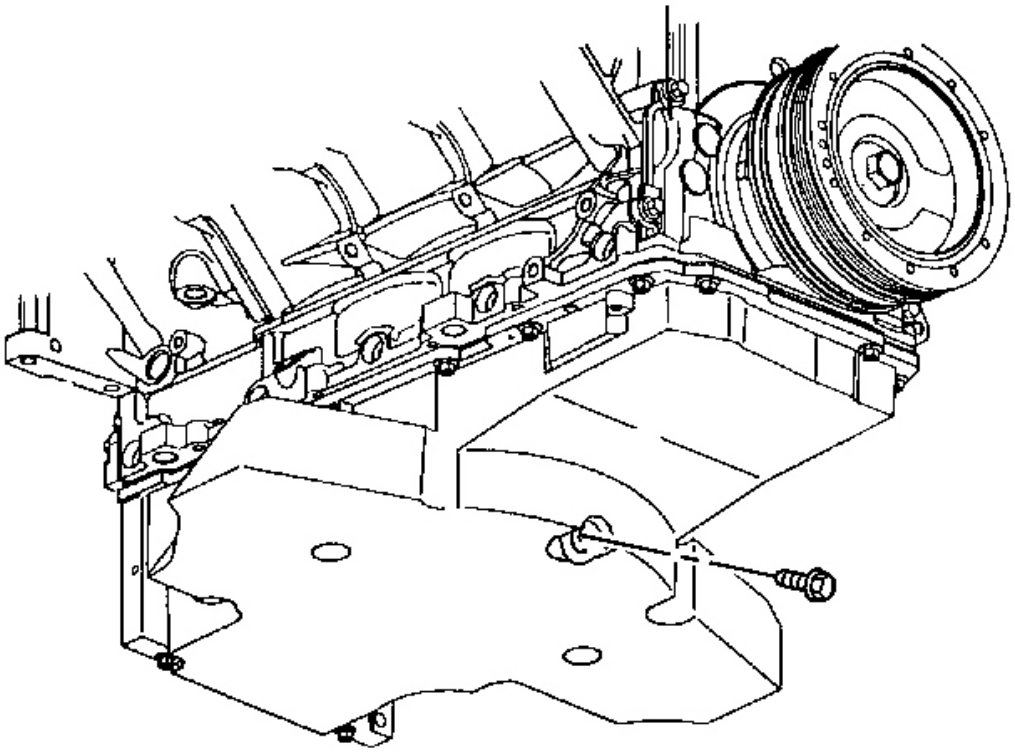

Fig. 248: Oil Pan Drain Plug
Courtesy of GENERAL MOTORS CORP.

17. Install the oil pan drain plug.

    Tighten: Tighten the oil pan drain plug to 25 N.m (18 lb ft).

18. Install the front suspension crossmember to the vehicle. Refer to **Crossmember Replacement - Front Suspension** in Front Suspension.
19. Fill the crankcase with the proper quantity and grade of engine oil. Refer to **Capacities - Approximate Fluid** and **Fluid and Lubricant Recommendations** in Maintenance and Lubrication.
20. Check the transmission fluid, add if necessary.
21. Run the engine and check for leaks.

ENGINE OIL PRESSURE SENSOR AND/OR SWITCH REPLACEMENT

Tools Required

cardiagn.com

J 41712 Oil Pressure Sensor Socket

Removal Procedure

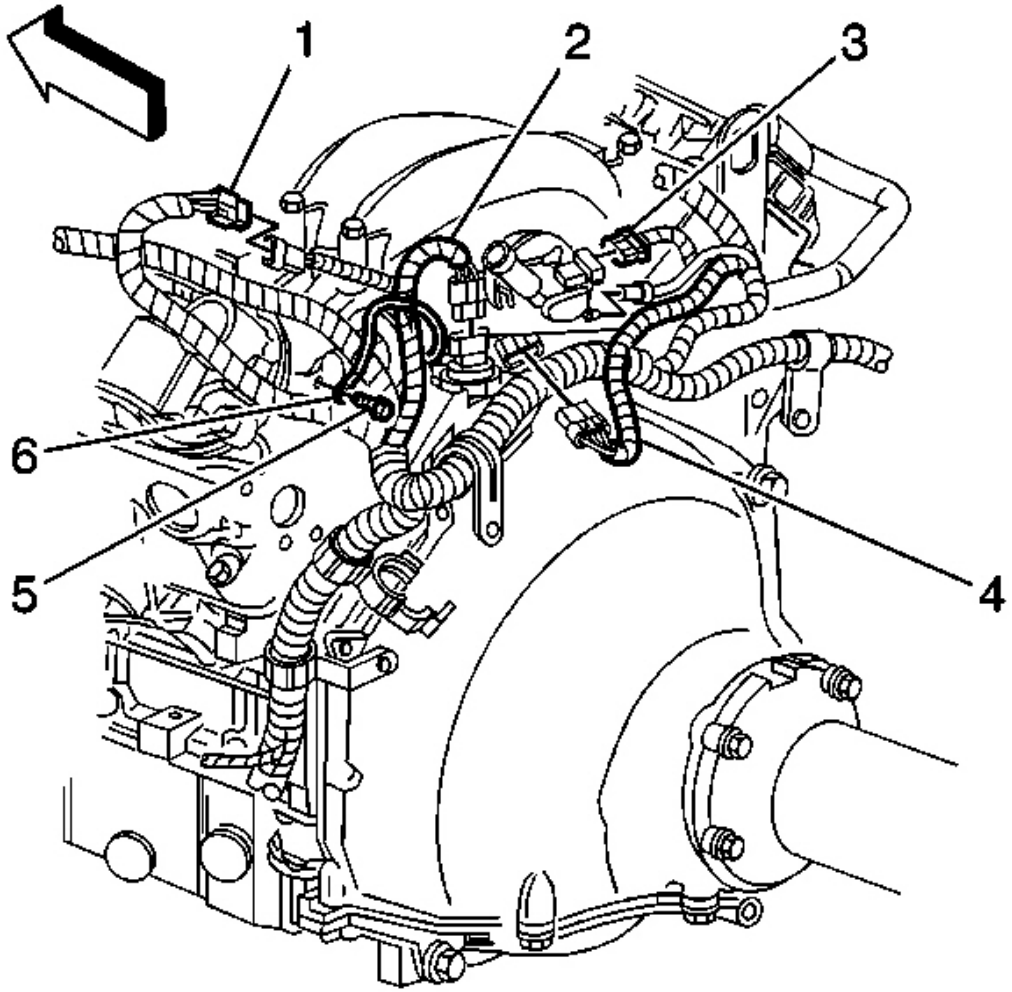

Fig. 249: MAP Sensor Vacuum Hose & MAP Sensor Electrical Connector
Courtesy of GENERAL MOTORS CORP.

1. Remove the intake manifold. Refer to **Intake Manifold Replacement** .
2. Disconnect the oil pressure sensor electrical connector (2).

IMPORTANT: Clean the area around the sensor before removal. This avoids debris from entering the engine.

cardiagn.com

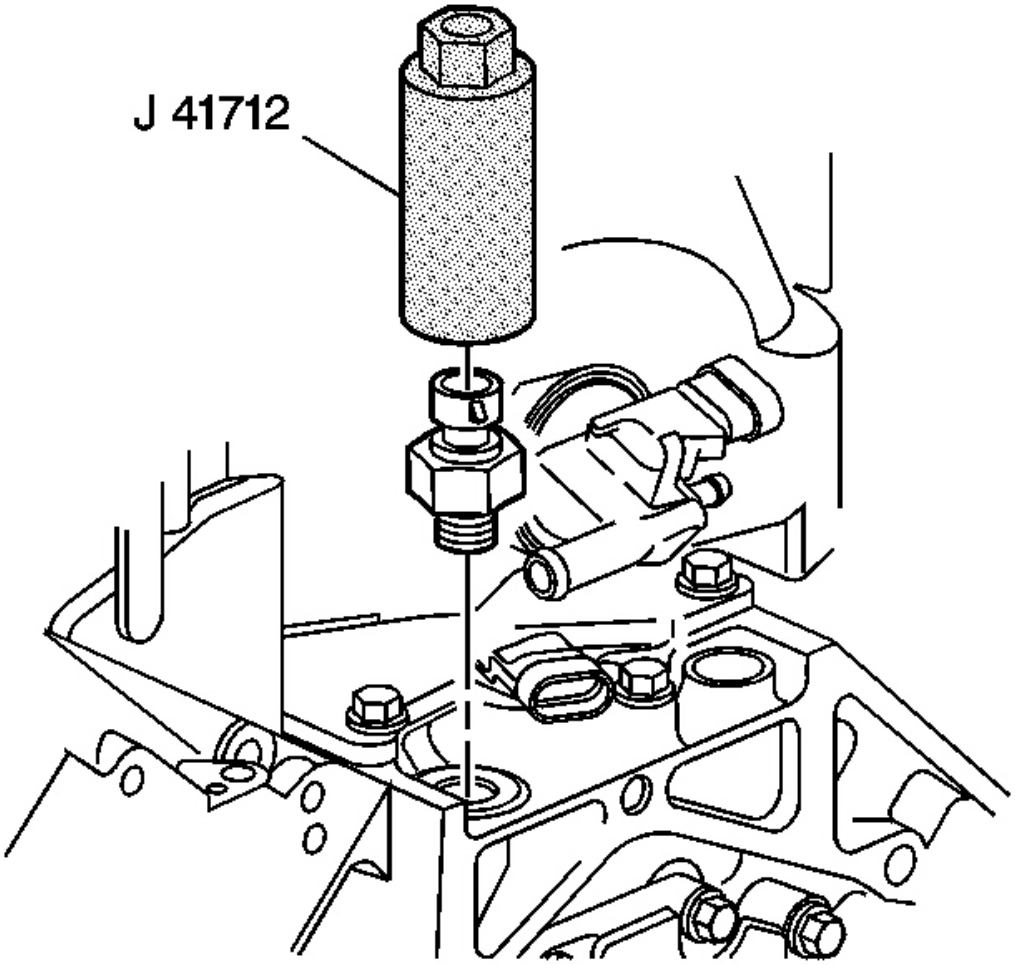

Fig. 250: J 41712 & Oil Pressure Sensor
Courtesy of GENERAL MOTORS CORP.

3. Use J 41712 to remove the oil pressure sensor from the engine block.

Installation Procedure

cardiagn.com

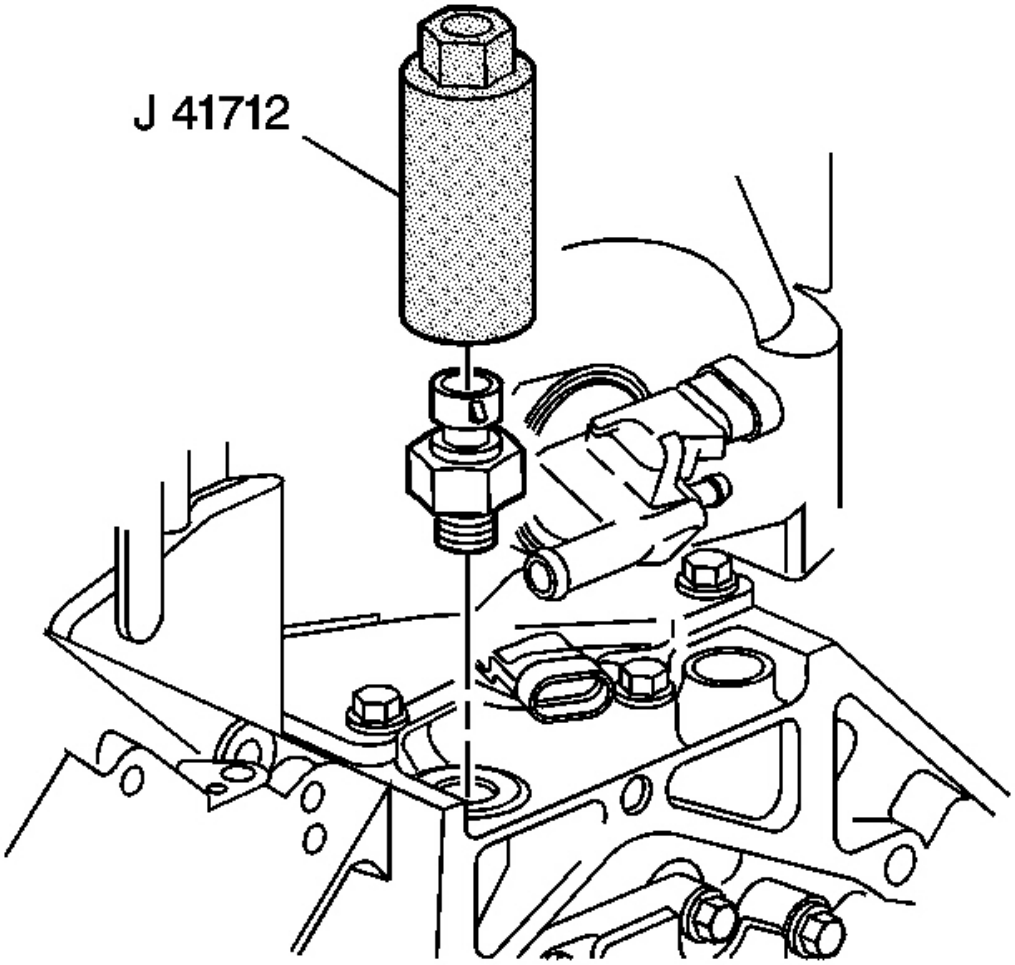

Fig. 251: J 41712 & Oil Pressure Sensor
Courtesy of GENERAL MOTORS CORP.

NOTE: Refer to Fastener Notice in Cautions and Notices.

1. If installing the old sensor, apply thread sealant GM P/N 12346004 (Canadian P/N 10953480), or equivalent.
2. Use J 41712 to install the oil pressure sensor to the engine block.

   Tighten: Tighten the engine oil pressure sensor to 20 N.m (15 lb ft).

cardiagn.com

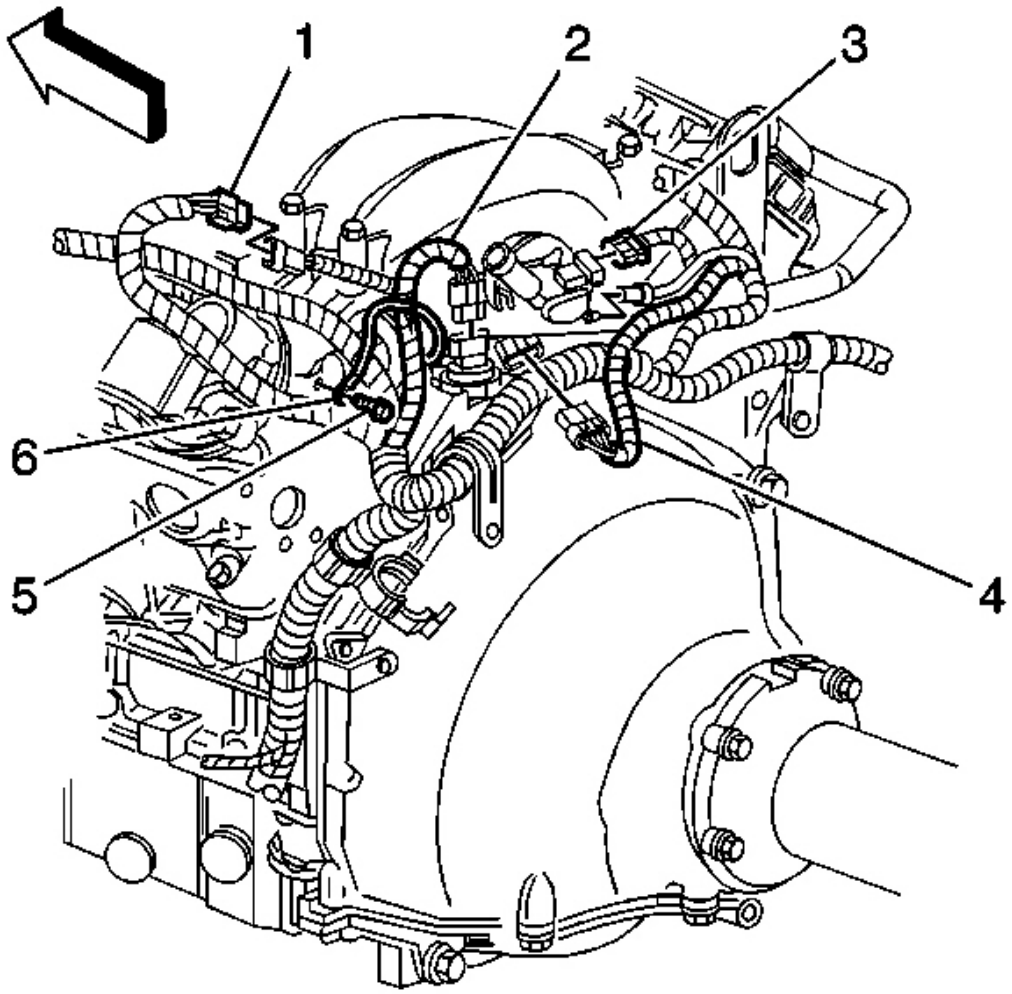

Fig. 252: MAP Sensor Vacuum Hose & MAP Sensor Electrical Connector
Courtesy of GENERAL MOTORS CORP.

3. Connect the oil pressure sensor electrical connector (2).
4. Install the intake manifold. Refer to **Intake Manifold Replacement** .

ENGINE OIL LEVEL SENSOR AND/OR SWITCH REPLACEMENT

Removal Procedure

cardiagn.com

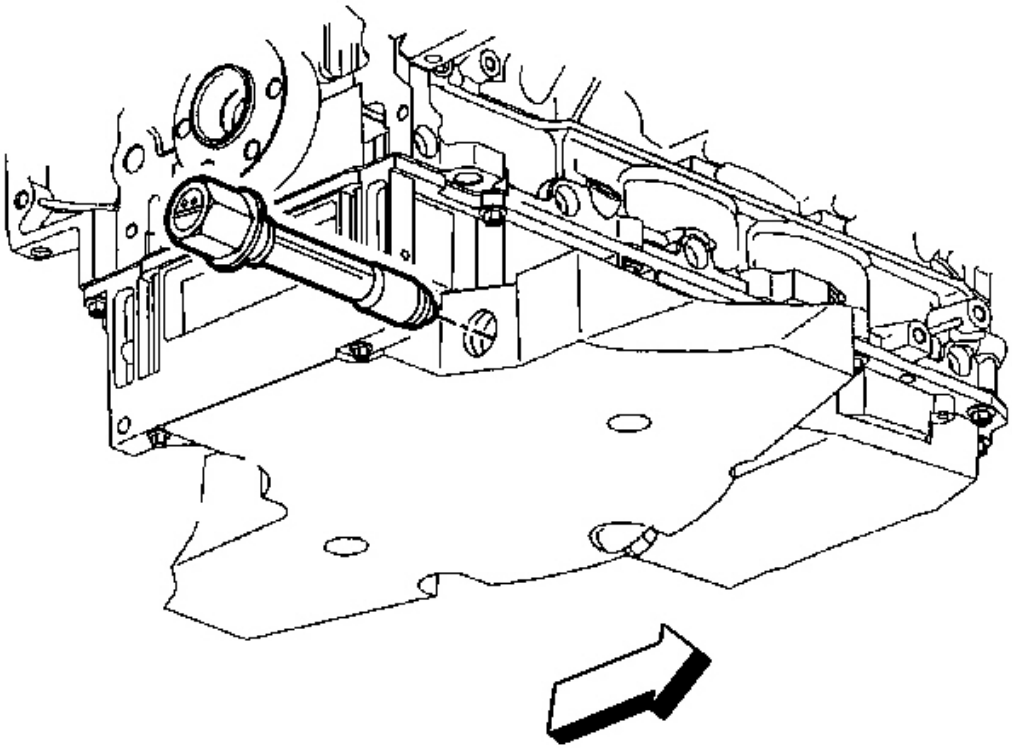

Fig. 253: Engine Oil Level Sensor Electrical Connector
Courtesy of GENERAL MOTORS CORP.

1. Raise and suitably support the vehicle. Refer to **Lifting and Jacking the Vehicle** in General Information.
2. Remove the oil pan drain plug.
3. Completely drain the engine oil.
4. Disconnect the engine oil level sensor electrical connector.
5. Remove the engine oil level sensor.

Installation Procedure

cardiagn.com

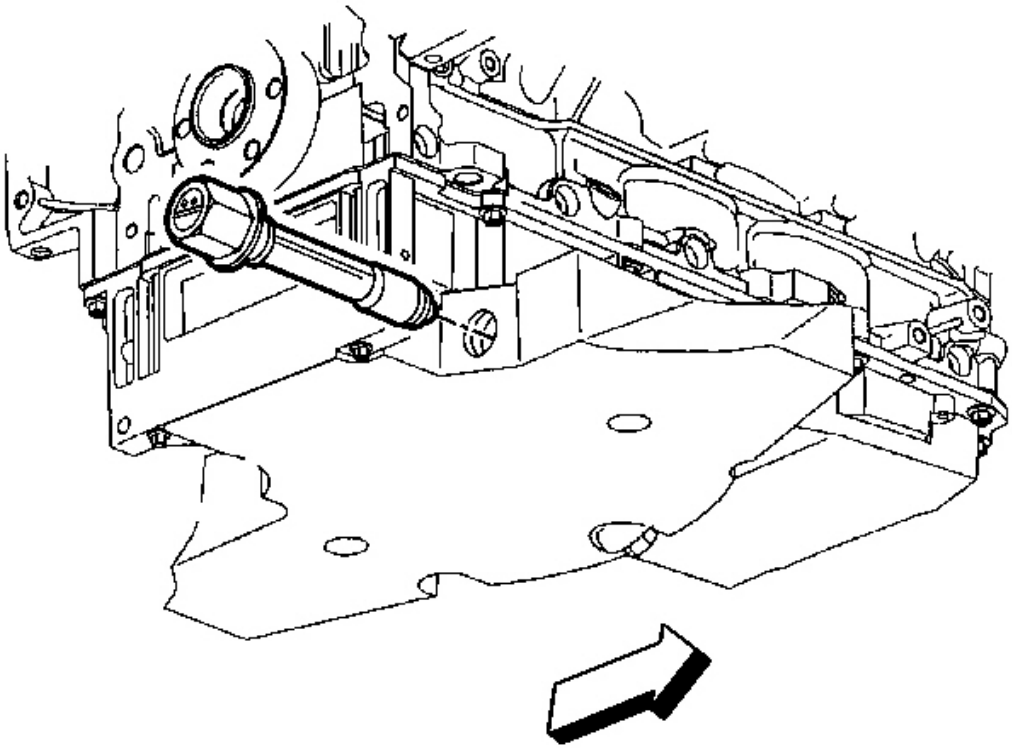

Fig. 254: Engine Oil Level Sensor Electrical Connector
Courtesy of GENERAL MOTORS CORP.

NOTE: Refer to Fastener Notice in Cautions and Notices.

1. Install the drain plug to the oil pan.

   Tighten: Tighten the drain plug to 25 N.m (18 lb ft).

2. Install the engine oil level sensor.

   Tighten: Tighten the engine oil level sensor to 13 N.m (115 lb in).

3. Connector the engine oil level sensor electrical connector.
4. Lower the vehicle.
5. Refill the engine with oil.

ENGINE OIL TEMPERATURE GAGE SENSOR REPLACEMENT

cardiagn.com

Removal Procedure

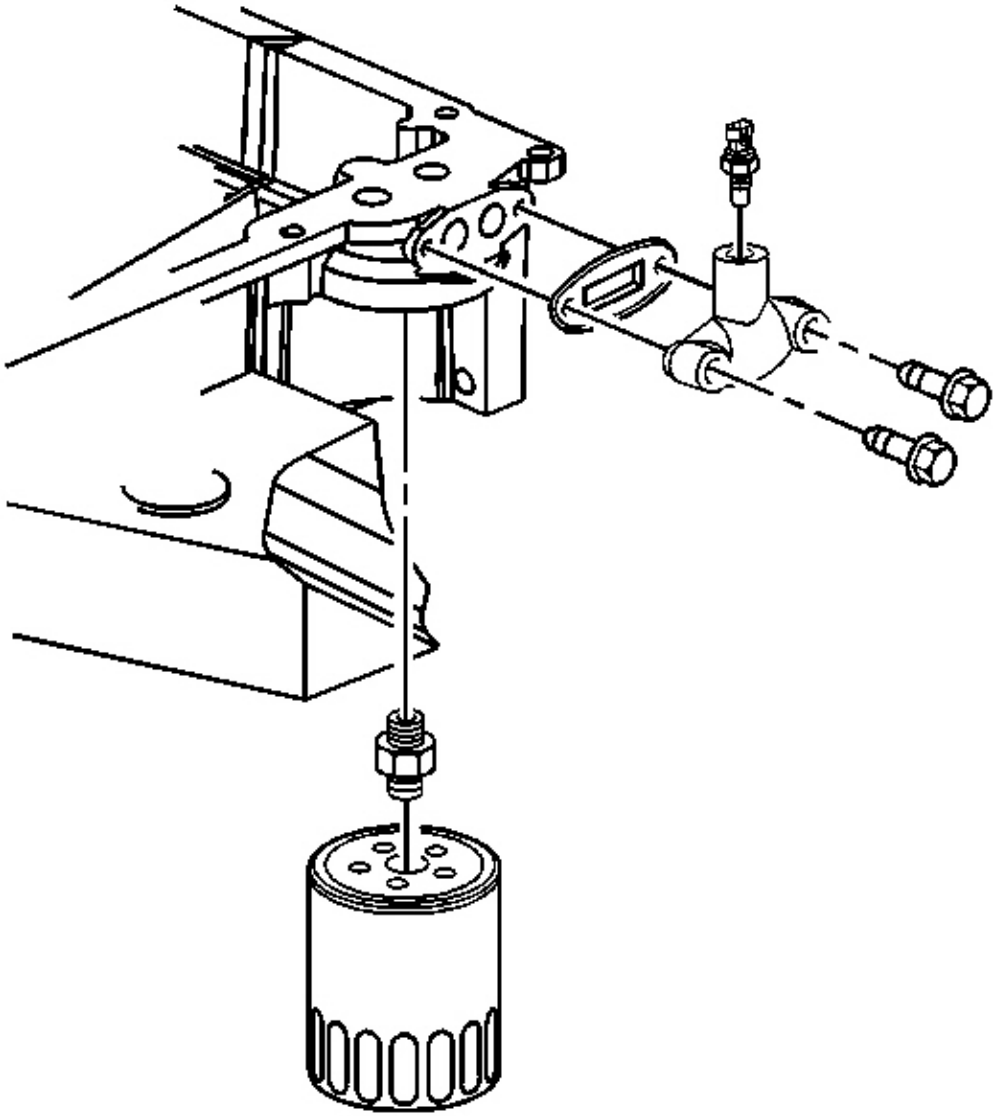

Fig. 255: Engine Oil Temperature Gage Sensor
Courtesy of GENERAL MOTORS CORP.

1. Raise the vehicle. Refer to **Lifting and Jacking the Vehicle** in General Information.
2. Remove the engine oil temperature gage sensor.

cardiagn.com

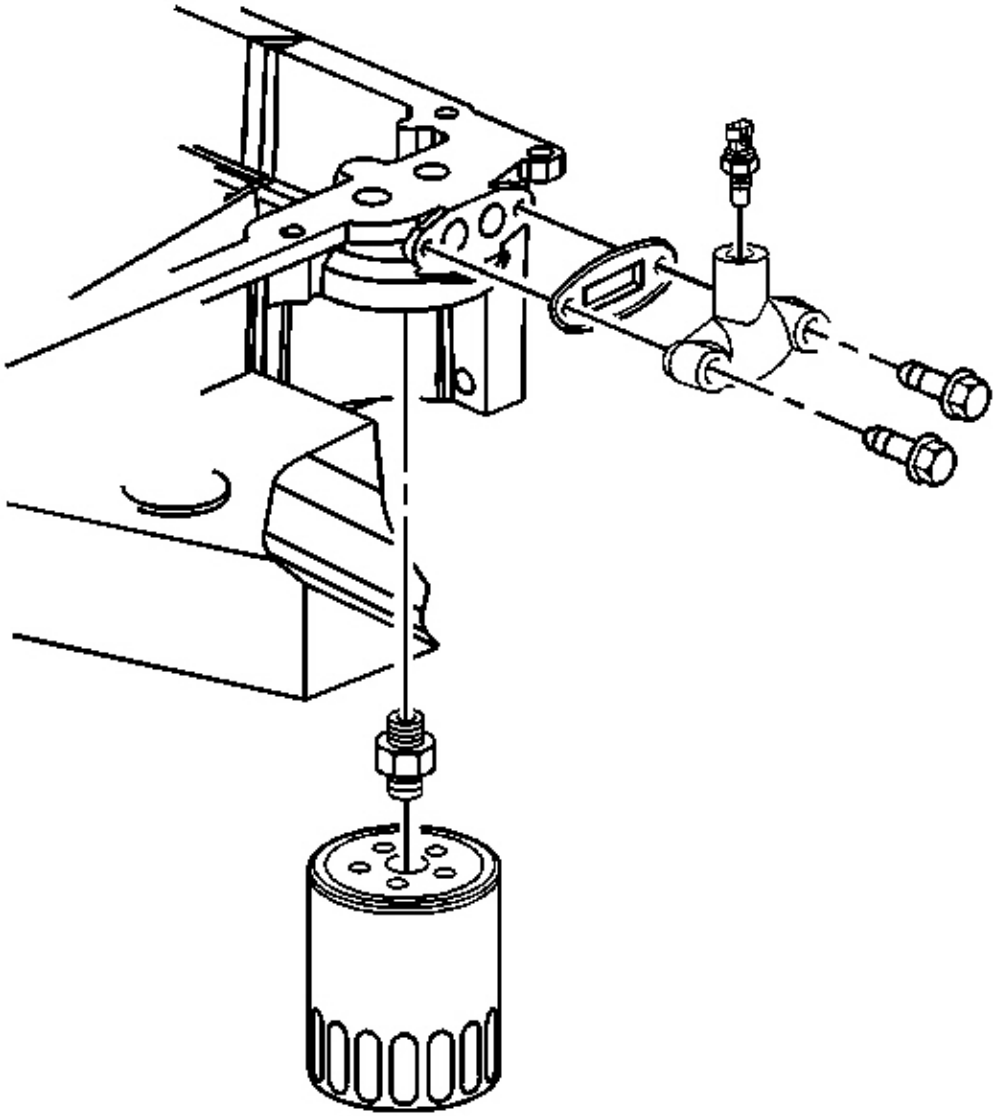

Fig. 256: Engine Oil Temperature Gage Sensor
Courtesy of GENERAL MOTORS CORP.

NOTE: Refer to Fastener Notice in Cautions and Notices.

1. Install the engine oil temperature gage sensor.

cardiagn.com

Tighten: Tighten the engine oil temperature gage sensor to 23 N.m (17 lb ft).

2. Lower the vehicle.

OIL PUMP, PUMP SCREEN AND DEFLECTOR REPLACEMENT

Removal Procedure

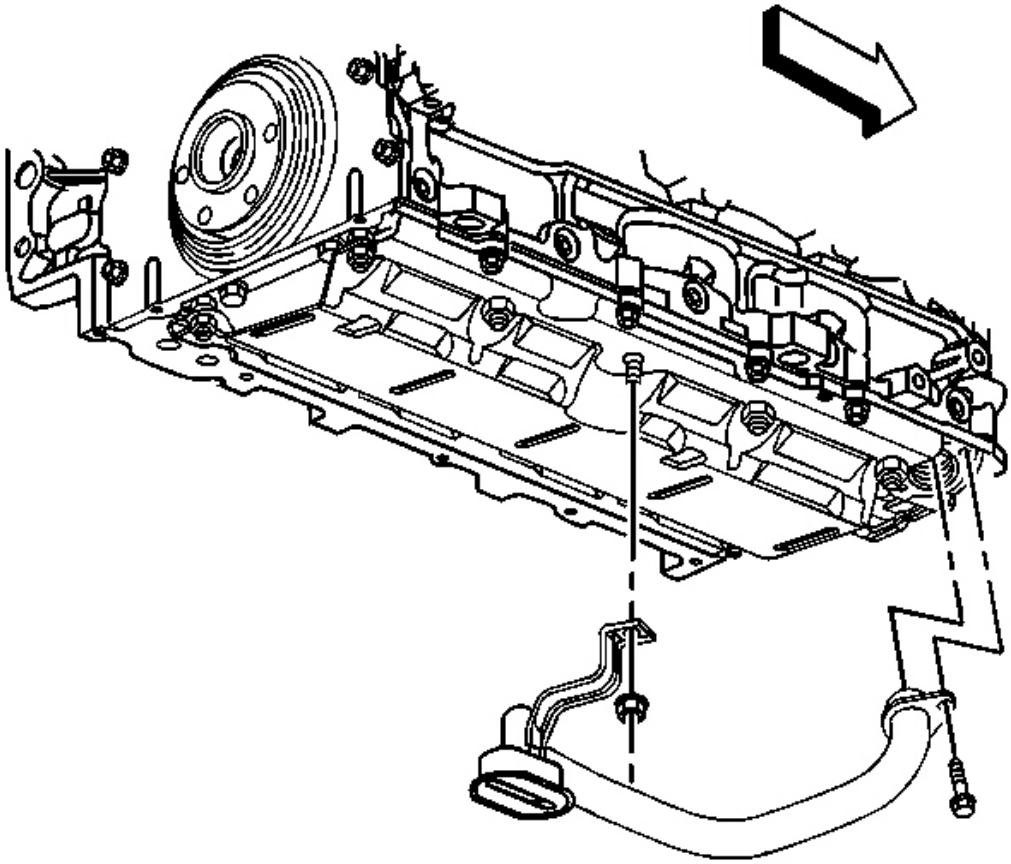

Fig. 257: O-Ring Seal, Oil Pump Screen & Bolt
Courtesy of GENERAL MOTORS CORP.

1. Remove the engine front cover. Refer to **Engine Front Cover Replacement** .
2. Remove the engine oil pan. Refer to **Oil Pan Replacement** .
3. Remove the oil pump screen bolt and nut.
4. Remove the oil pump screen and O-ring seal.

cardiagn.com

5. Remove the O-ring seal from the pump screen.
6. Discard the O-ring seal.

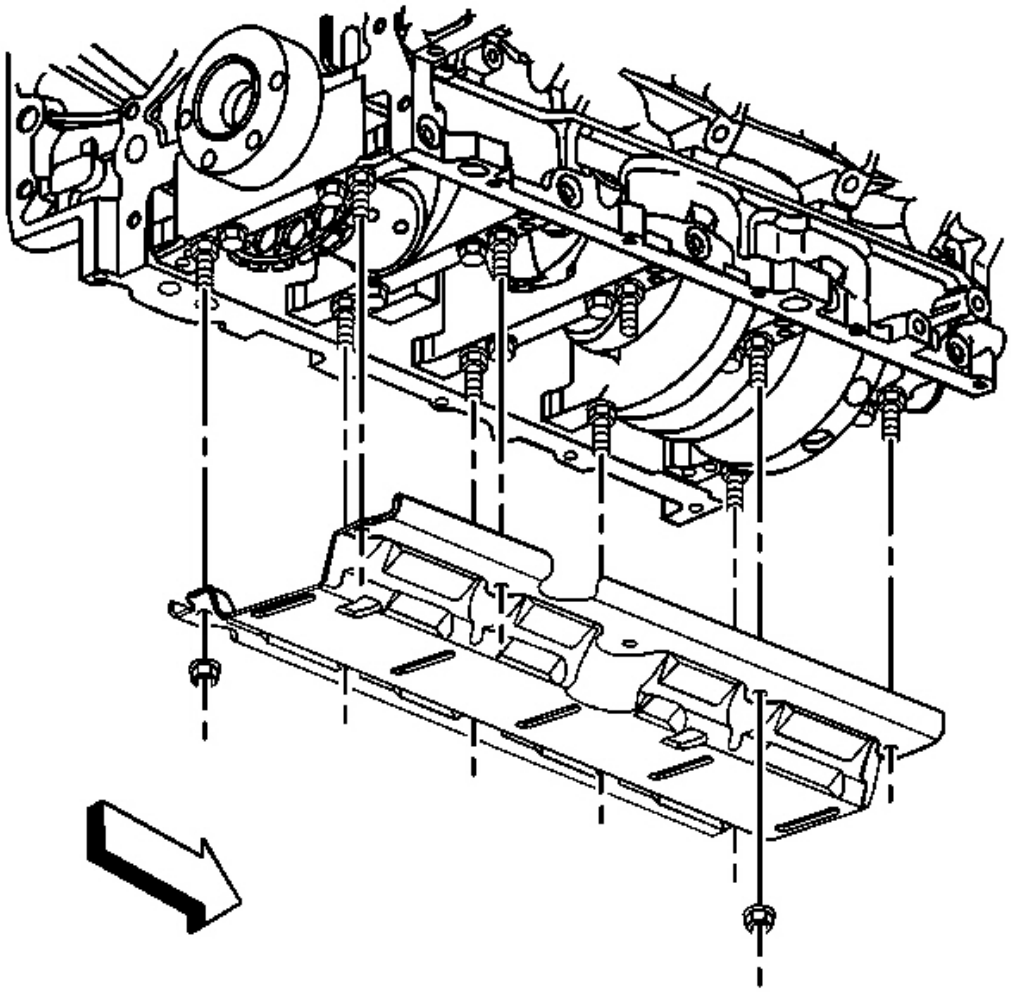

Fig. 258: Crankshaft Oil Deflector & Nuts
Courtesy of GENERAL MOTORS CORP.

7. Remove the remaining crankshaft oil deflector nuts.
8. Remove the crankshaft oil deflector.

cardiagn.com

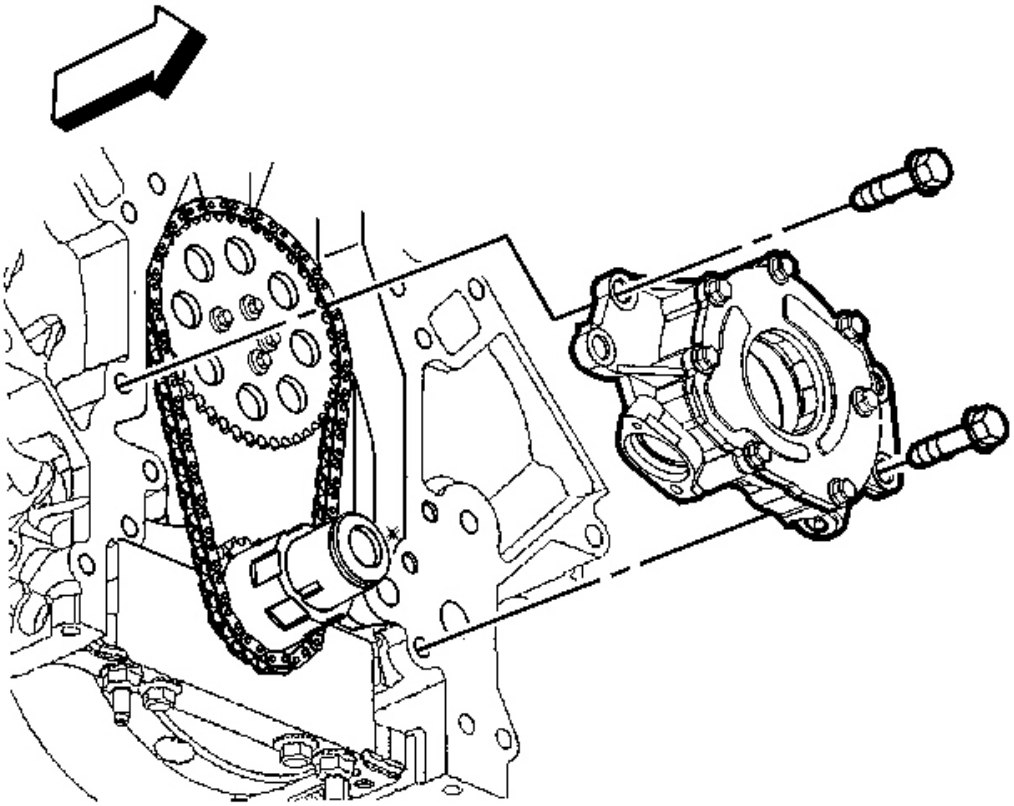

Fig. 259: View Of Oil Pump & Bolt
Courtesy of GENERAL MOTORS CORP.

IMPORTANT: Do not allow dirt or debris to enter the oil pump, cap the ends as necessary.

9. Remove the oil pump bolts.
10. Remove the oil pump.
11. Clean and inspect the oil pump. Refer to **Oil Pump Cleaning and Inspection** .

Installation Procedure

IMPORTANT: Inspect the engine block oil gallery passages. These surfaces must be clear and free of debris or restrictions.

cardiagn.com

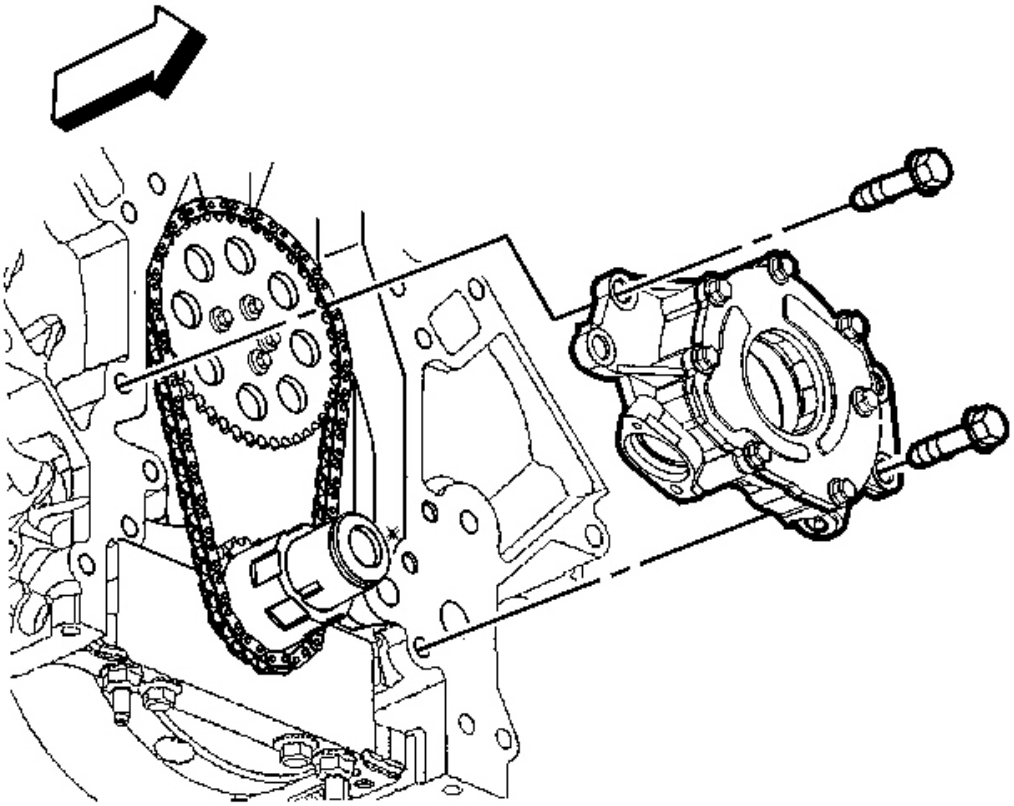

Fig. 260: View Of Oil Pump & Bolt
Courtesy of GENERAL MOTORS CORP.

1. Align the splined surfaces of the crankshaft sprocket and the oil pump drive gear and install the oil pump.
2. Install the oil pump onto the crankshaft sprocket until the pump housing contacts the face of the engine block.

NOTE: **Refer to Fastener Notice in Cautions and Notices.**

3. Install the oil pump bolts.

   Tighten: Tighten the oil pump bolts to 25 N.m (18 lb ft).

cardiagn.com

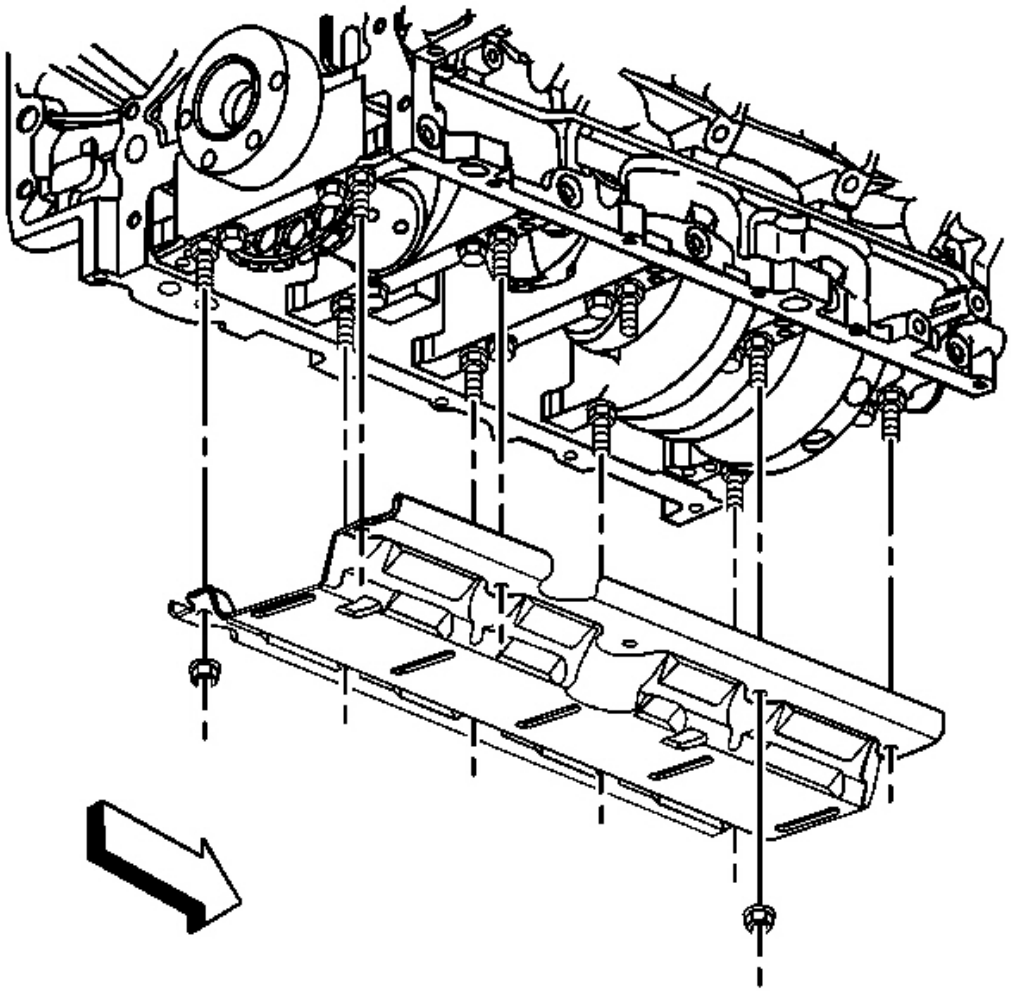

Fig. 261: Crankshaft Oil Deflector & Nuts
Courtesy of GENERAL MOTORS CORP.

4. Install the crankshaft oil deflector.
5. Install the crankshaft oil deflector nuts.

Tighten: Tighten the crankshaft oil deflector nuts to 25 N.m (18 lb ft).

cardiagn.com

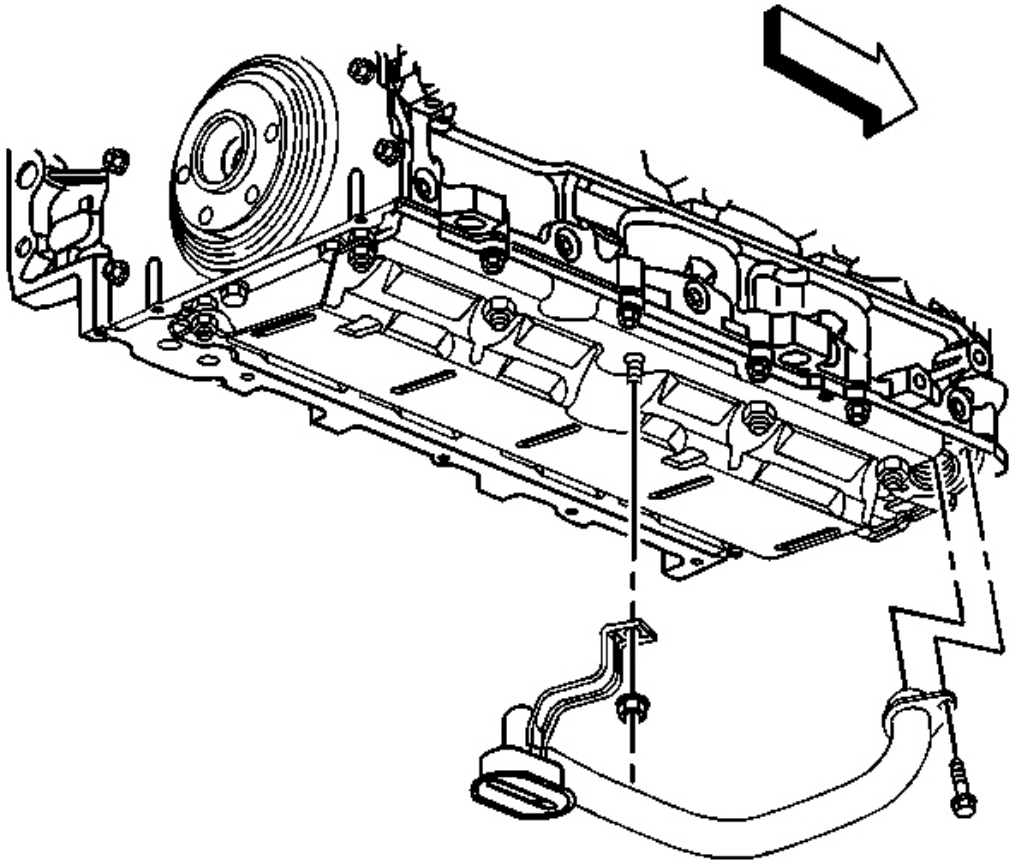

Fig. 262: O-Ring Seal, Oil Pump Screen & Bolt
Courtesy of GENERAL MOTORS CORP.

6. Lubricate a NEW oil pump screen O-ring seal with clean engine oil.
7. Install the NEW O-ring seal onto the oil pump screen.

IMPORTANT: Push the oil pump screen tube completely into the oil pump prior to tightening the bolt. Do not allow the bolt to pull the tube into the pump. Align the oil pump screen brackets with the correct crankshaft bearing cap studs.

8. Install the oil pump screen.
9. Install the oil pump screen bolt and nut.

Tighten:

cardiagn.com

- Tighten the oil pump screen bolt to 12 N.m (106 lb in).
- Tighten the oil pump screen nut to 25 N.m (18 lb ft).

10. Install the engine oil pan. Refer to **Oil Pan Replacement** .
11. Install the engine front cover. Refer to **Engine Front Cover Replacement** .

TIMING CHAIN AND SPROCKETS REPLACEMENT

Tools Required

- **J 8433** Pulley Puller
- **J 41558** Crankshaft Sprocket Remover
- J 41816-2 Crankshaft End Protector
- **J 41665** Crankshaft Balancer and Sprocket Installer

Removal Procedure

NOTE: **Do not turn the crankshaft assembly after the timing chain has been removed in order to prevent damage to the piston assemblies or the valves.**

cardiagn.com

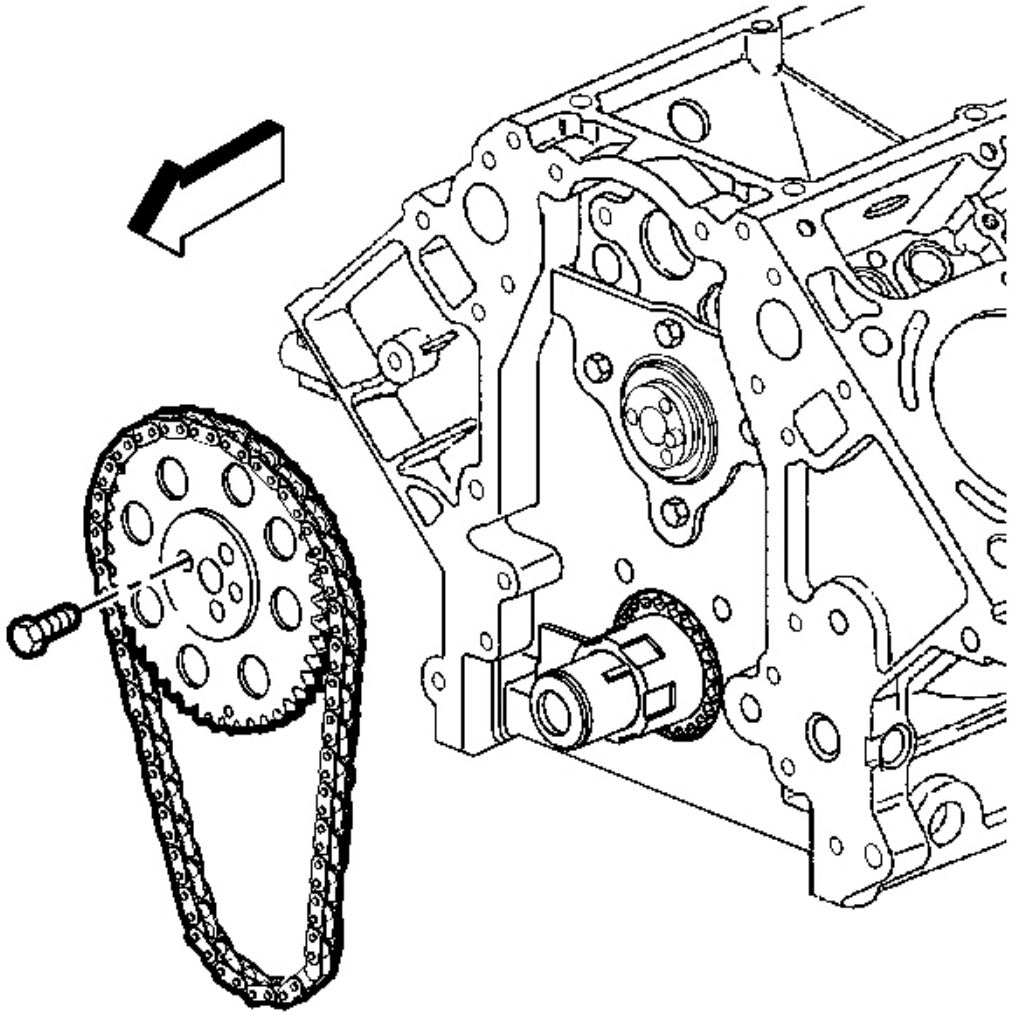

Fig. 263: View Of Camshaft Sprocket, Bolt & Timing Chain
Courtesy of GENERAL MOTORS CORP.

1. Remove the oil pump. Refer to **Oil Pump, Pump Screen and Deflector Replacement** .
2. Remove the camshaft sprocket bolts.
3. Remove the camshaft sprocket and timing chain.

cardiagn.com

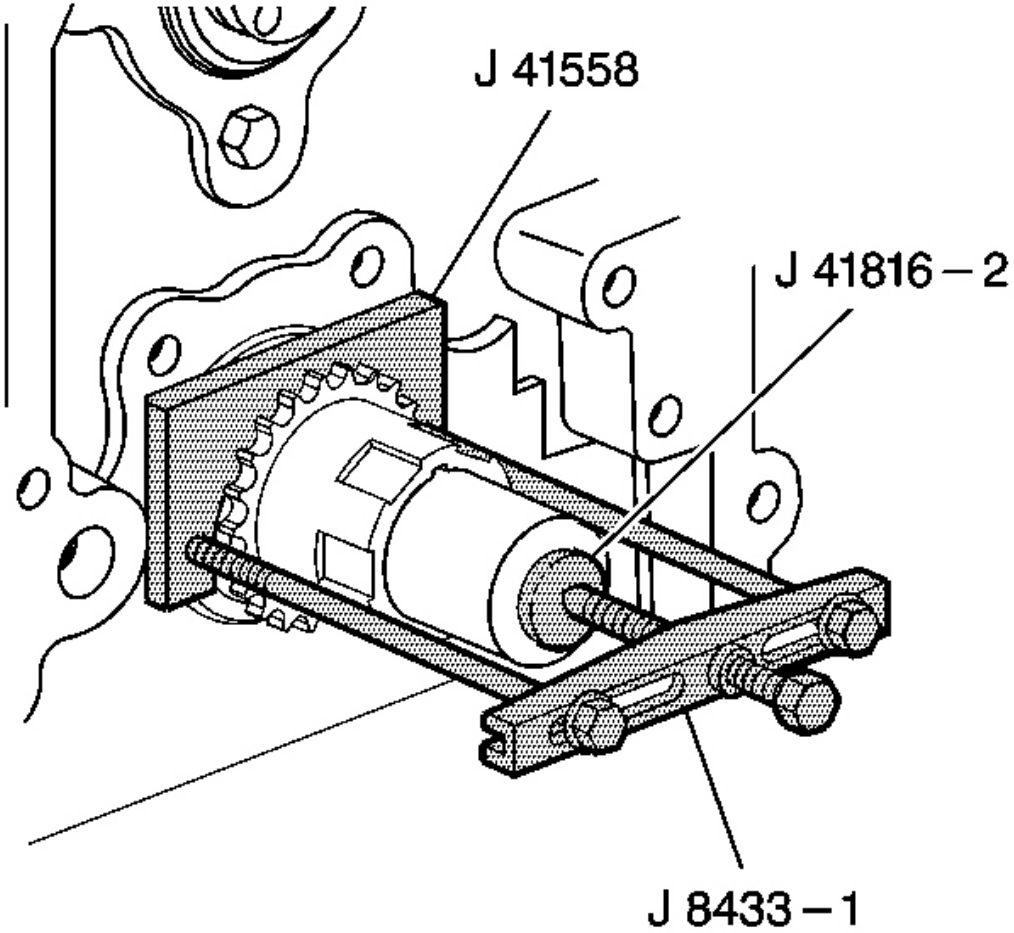

Fig. 264: View Of J 8433-1, J 41816-2 & J 41558
Courtesy of GENERAL MOTORS CORP.

4. Use the **J 8433** , J 41816-2 and **J 41558** in order to remove the crankshaft sprocket.

cardiagn.com

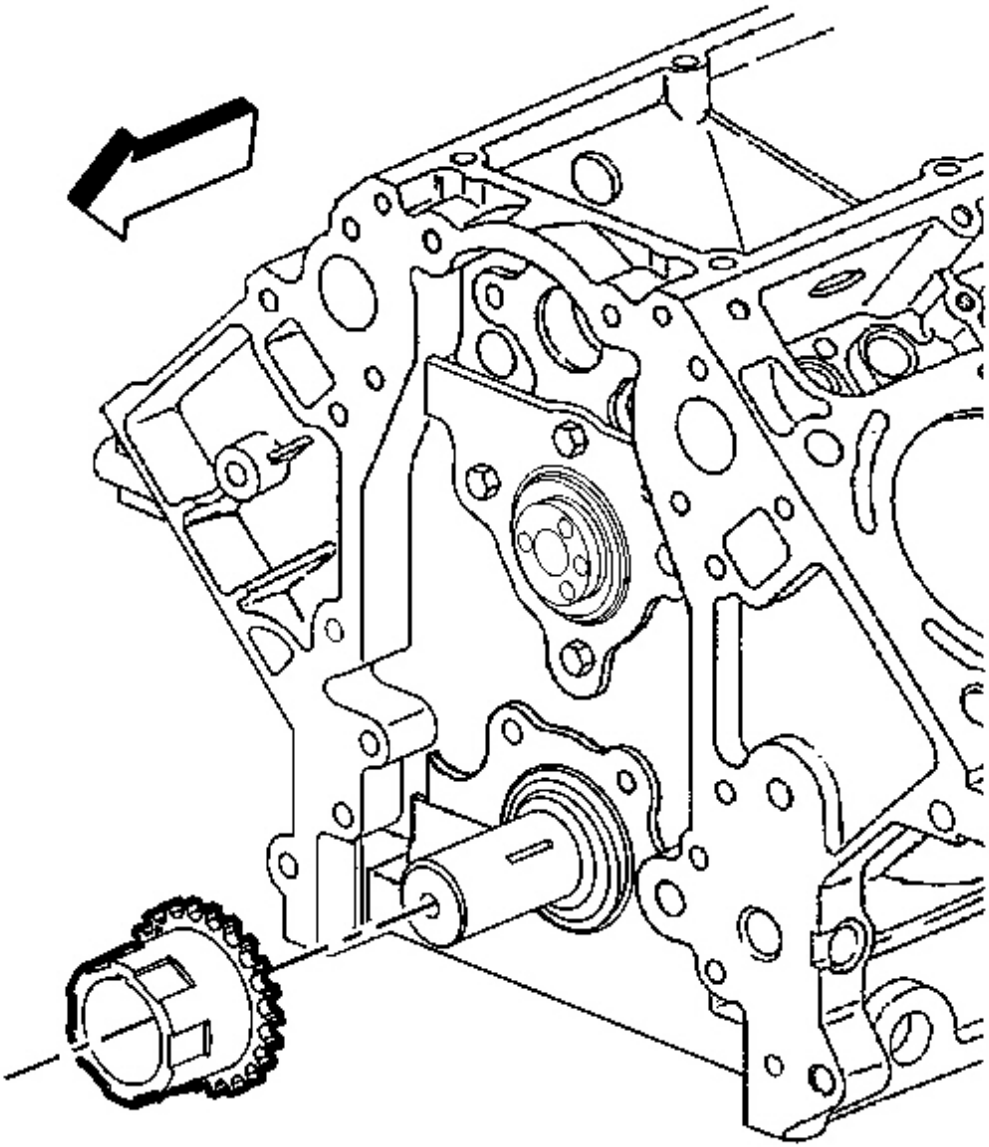

Fig. 265: View Of Crankshaft Sprocket
Courtesy of GENERAL MOTORS CORP.

5. Remove the crankshaft sprocket.

cardiagn.com

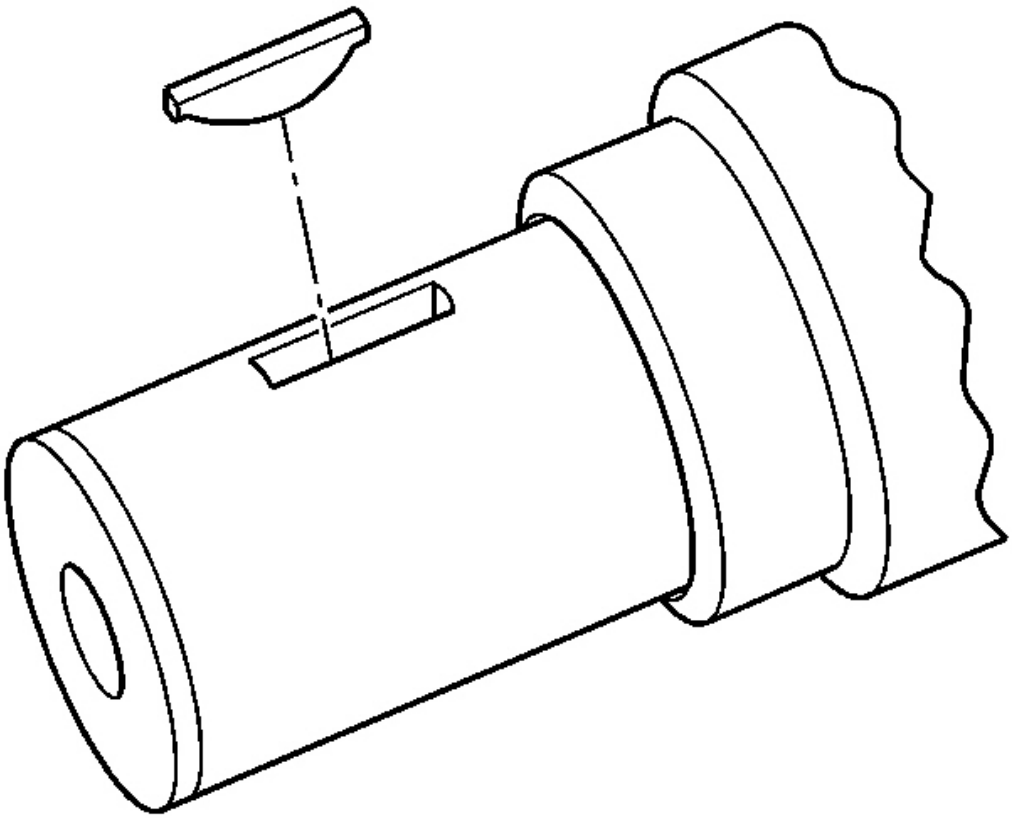

Fig. 266: View Of Crankshaft Sprocket Key
Courtesy of GENERAL MOTORS CORP.

6. Remove the crankshaft sprocket key (if required).
7. Clean and inspect the timing chain and sprockets. Refer to **Timing Chain and Sprockets Cleaning and Inspection** .

Installation Procedure

cardiagn.com

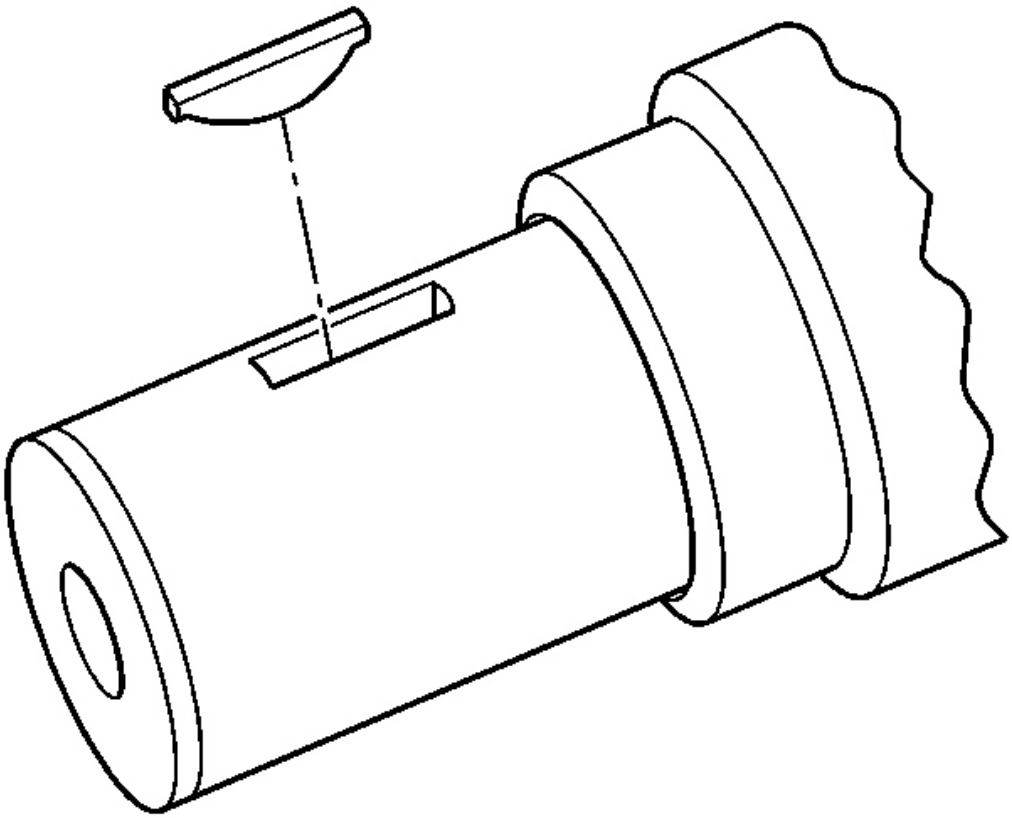

Fig. 267: View Of Crankshaft Sprocket Key
Courtesy of GENERAL MOTORS CORP.

1. Install the key into the crankshaft keyway (if previously removed).

cardiagn.com

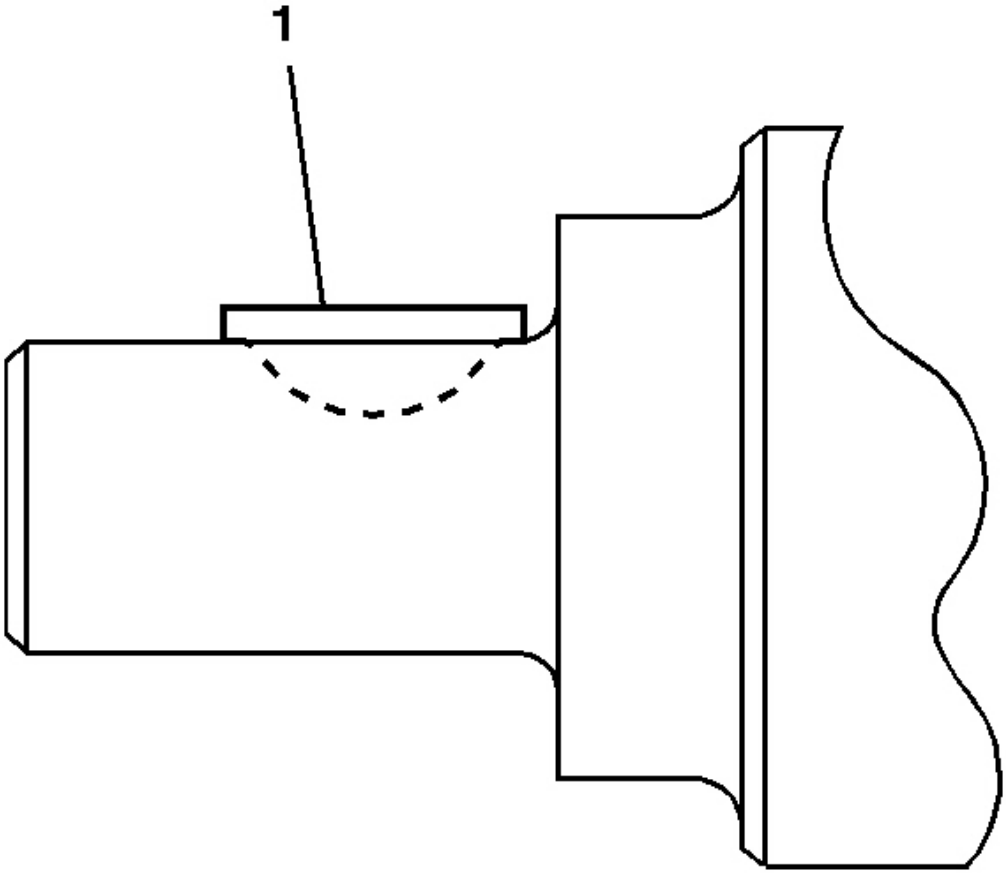

Fig. 268: View Of Crankshaft Sprocket Key Installation Position
Courtesy of GENERAL MOTORS CORP.

2. Tap the key (1) into the keyway until both ends of the key bottom onto the crankshaft.

cardiagn.com

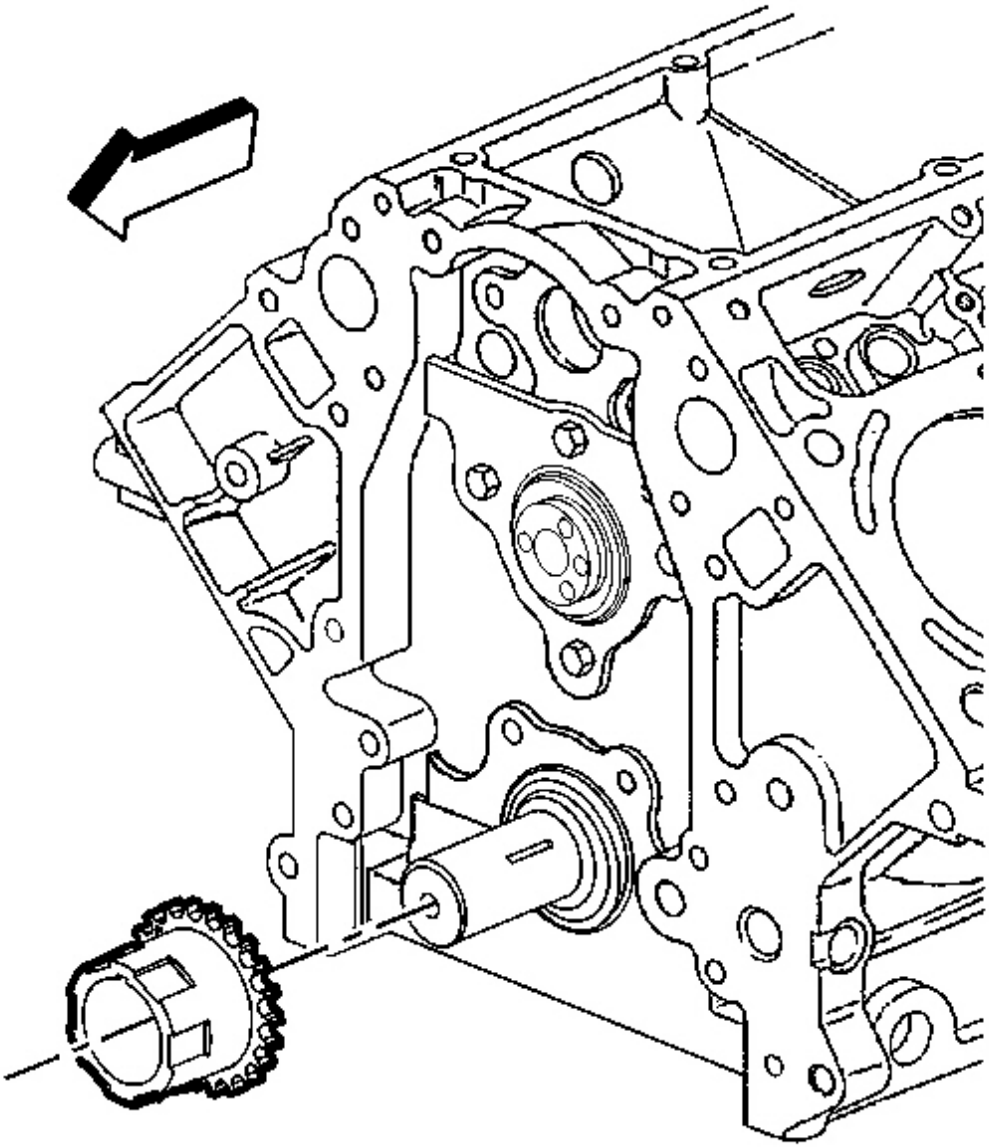

Fig. 269: View Of Crankshaft Sprocket
Courtesy of GENERAL MOTORS CORP.

3. Install the crankshaft sprocket onto the front of the crankshaft. Align the crankshaft key with the crankshaft sprocket keyway.

cardiagn.com

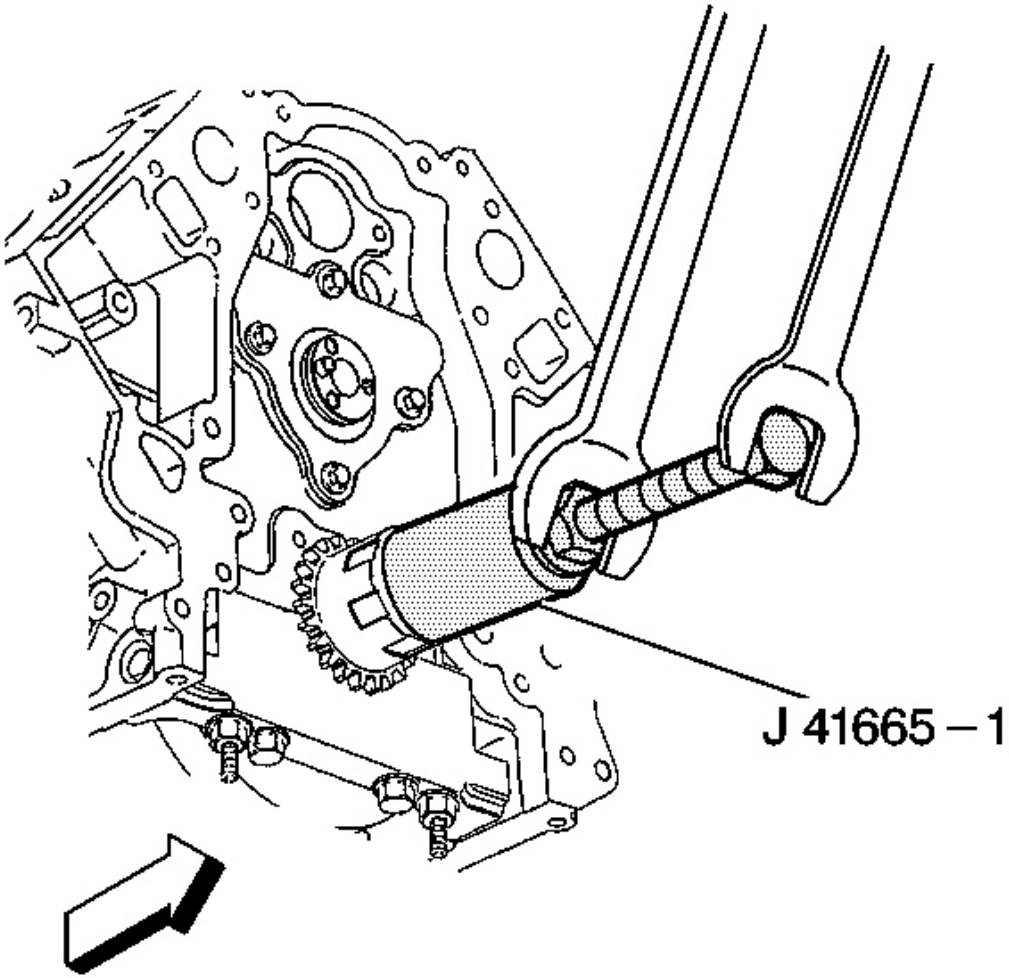

Fig. 270: Installing Crankshaft Sprocket Using J 41665
Courtesy of GENERAL MOTORS CORP.

4. Use the **J 41665** in order to install the crankshaft sprocket.

   Install the sprocket onto the crankshaft until fully seated against the crankshaft flange.

5. Rotate the crankshaft sprocket until the alignment mark is in the 12 o'clock position.

cardiagn.com

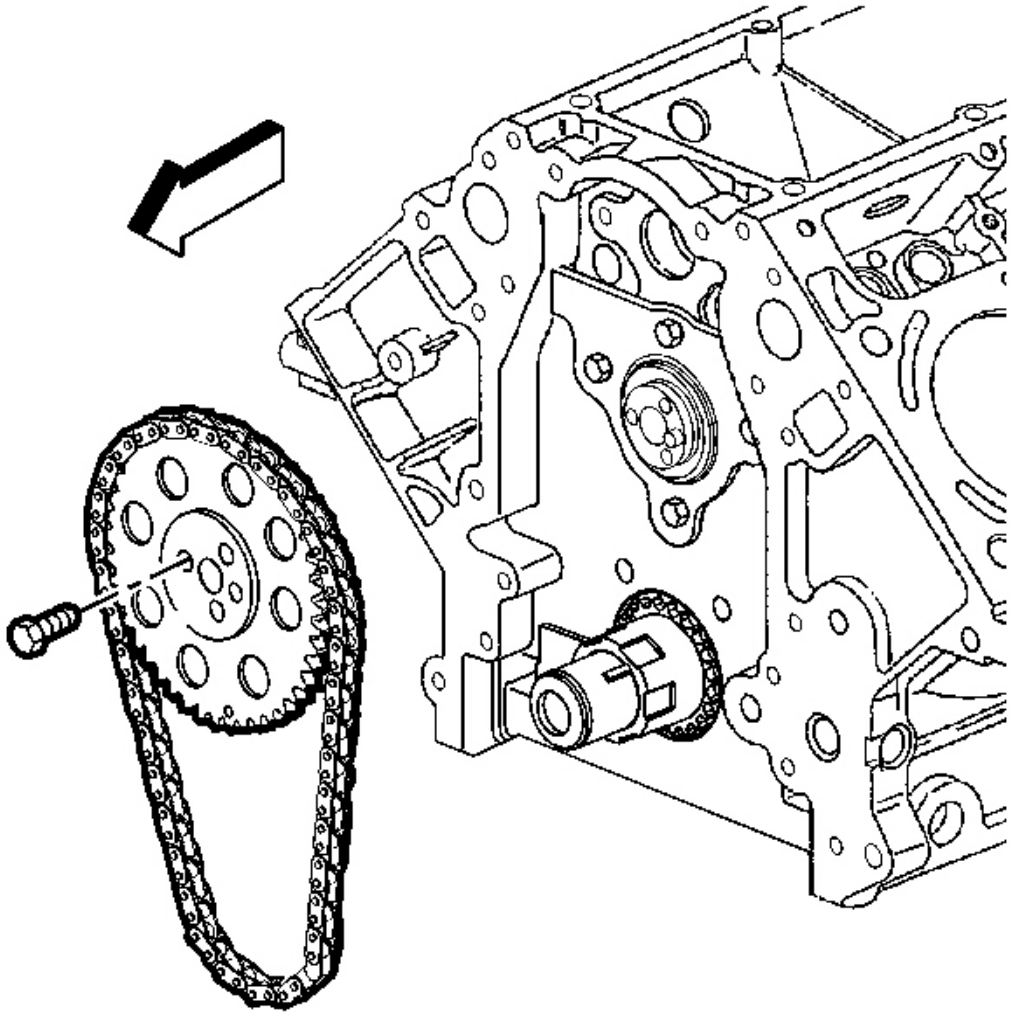

Fig. 271: View Of Camshaft Sprocket, Bolt & Timing Chain
Courtesy of GENERAL MOTORS CORP.

IMPORTANT:

- **Properly locate the camshaft sprocket locating pin with the camshaft sprocket alignment hole.**
- **The sprocket teeth and timing chain must mesh.**
- **The camshaft and the crankshaft sprocket alignment marks MUST be aligned correctly.**

Locate the camshaft sprocket alignment mark in the 6 o'clock

cardiagn.com

position.

6. Install the camshaft sprocket and timing chain.

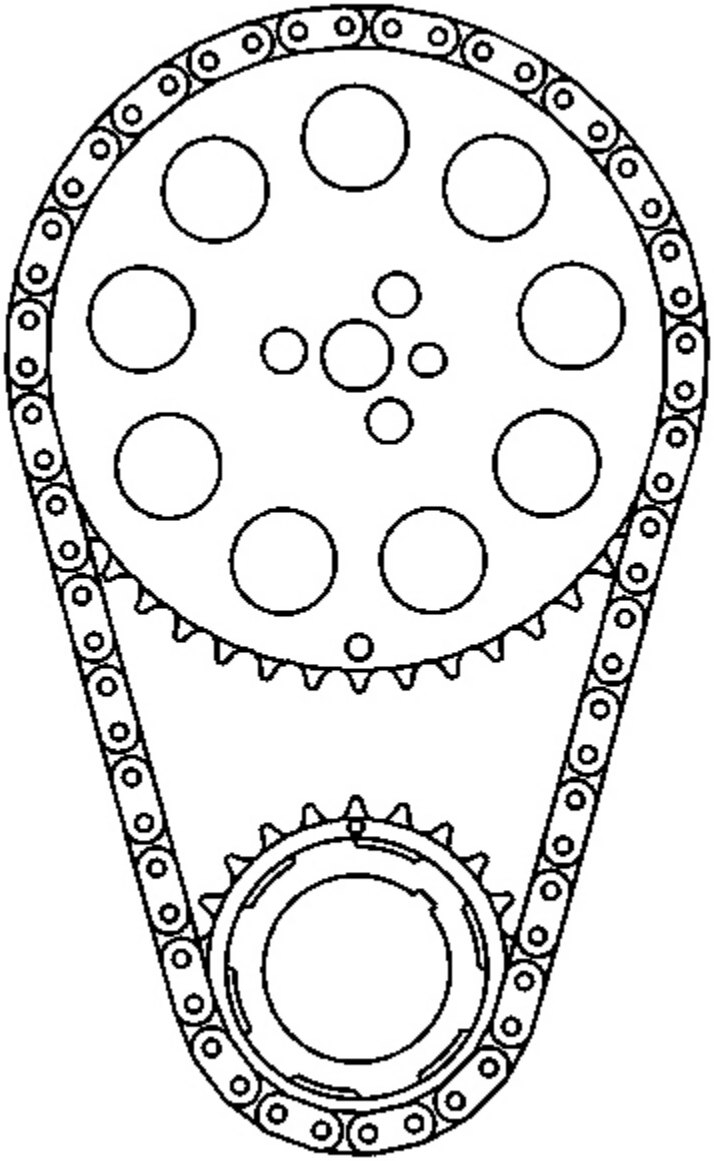

Fig. 272: Crankshaft Sprocket
Courtesy of GENERAL MOTORS CORP.

cardiagn.com

NOTE: Refer to Fastener Notice in Cautions and Notices.

7. If necessary, rotate the camshaft or crankshaft sprockets in order to align the timing marks.
8. Install the camshaft sprocket bolts.

   Tighten: Tighten the camshaft sprocket bolts to 35 N.m (26 lb ft).

9. Install the oil pump. Refer to **Oil Pump, Pump Screen and Deflector Replacement** .

CAMSHAFT REPLACEMENT

Tools Required

J 41476 Front and Rear Cover Alignment Tool

Removal Procedure

cardiagn.com

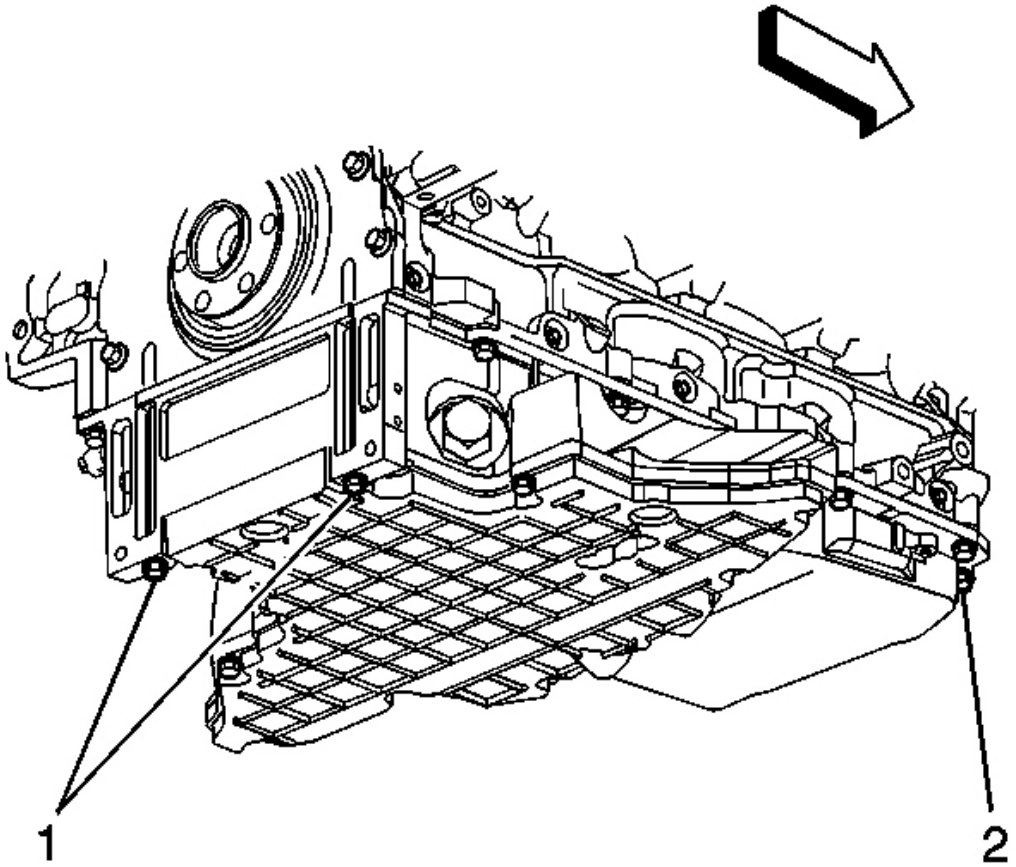

Fig. 273: Oil Pan-To-Front Cover Bolts & Oil Pan-To-Rear Cover Bolts
Courtesy of GENERAL MOTORS CORP.

1. Remove the engine assembly. Refer to **Engine Replacement** .
2. Remove the crankshaft balancer. Refer to **Crankshaft Balancer Removal** .
3. Remove the oil level indicator tube. Refer to **Oil Level Indicator and Tube Removal** .
4. Remove the left and right exhaust manifolds Refer to **Exhaust Manifold Removal - Left** and **Exhaust Manifold Removal - Right** .
5. Remove the water pump. Refer to **Water Pump Removal** .
6. Remove the intake manifold. Refer to **Intake Manifold Removal** .
7. Remove the coolant air bleed pipe. Refer to **Coolant Air Bleed Pipe Removal** .
8. Remove the left and right valve rocker arm covers. Refer to **Valve Rocker Arm Cover Removal - Left** and **Valve Rocker Arm Cover Removal - Right** .
9. Remove the valve rocker arms and push rods. Refer to **Valve Rocker Arm and Push Rod Removal** .

cardiagn.com

10. Remove the left and right cylinder heads. Refer to **Cylinder Head Removal - Left** and **Cylinder Head Removal - Right** .
11. Remove the valve lifters. Refer to **Valve Lifter Removal** .
12. Remove the oil pan-to-front cover bolts (2).

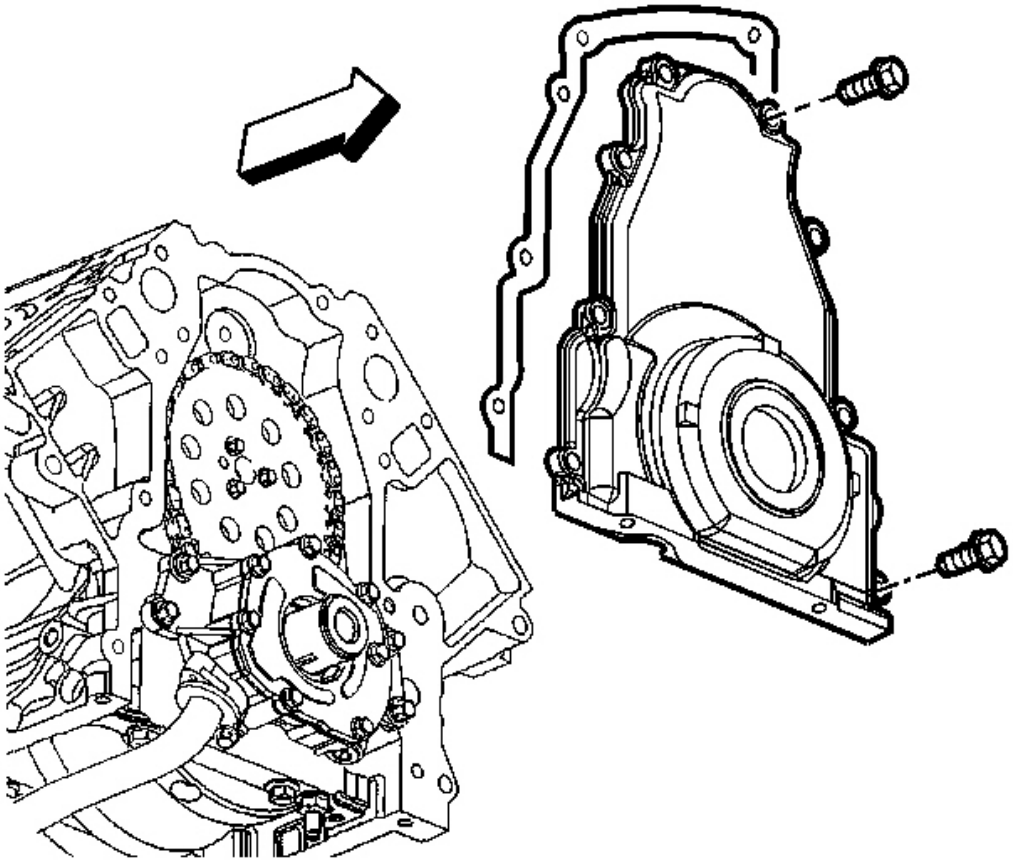

Fig. 274: Front Cover Gasket & Bolts
Courtesy of GENERAL MOTORS CORP.

13. Remove the front cover bolts.
14. Remove the front cover and gasket. Discard the old gasket.

cardiagn.com

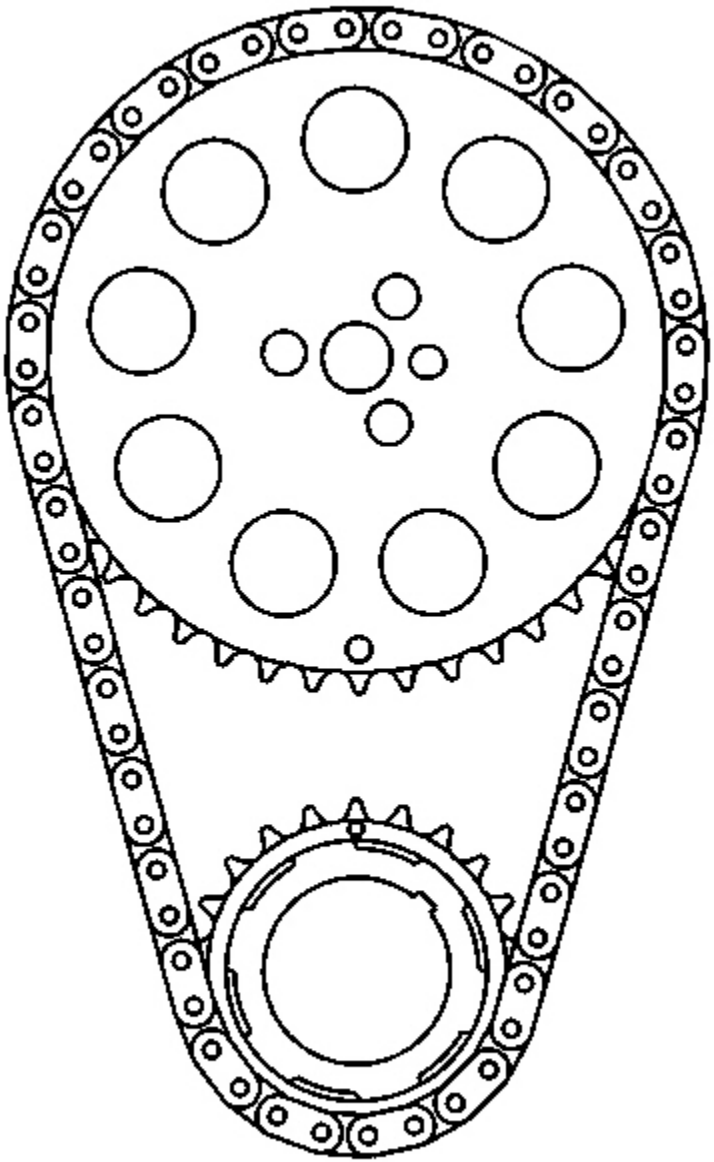

Fig. 275: Crankshaft Sprocket
Courtesy of GENERAL MOTORS CORP.

15. Rotate the engine in order to align the timing marks.

cardiagn.com

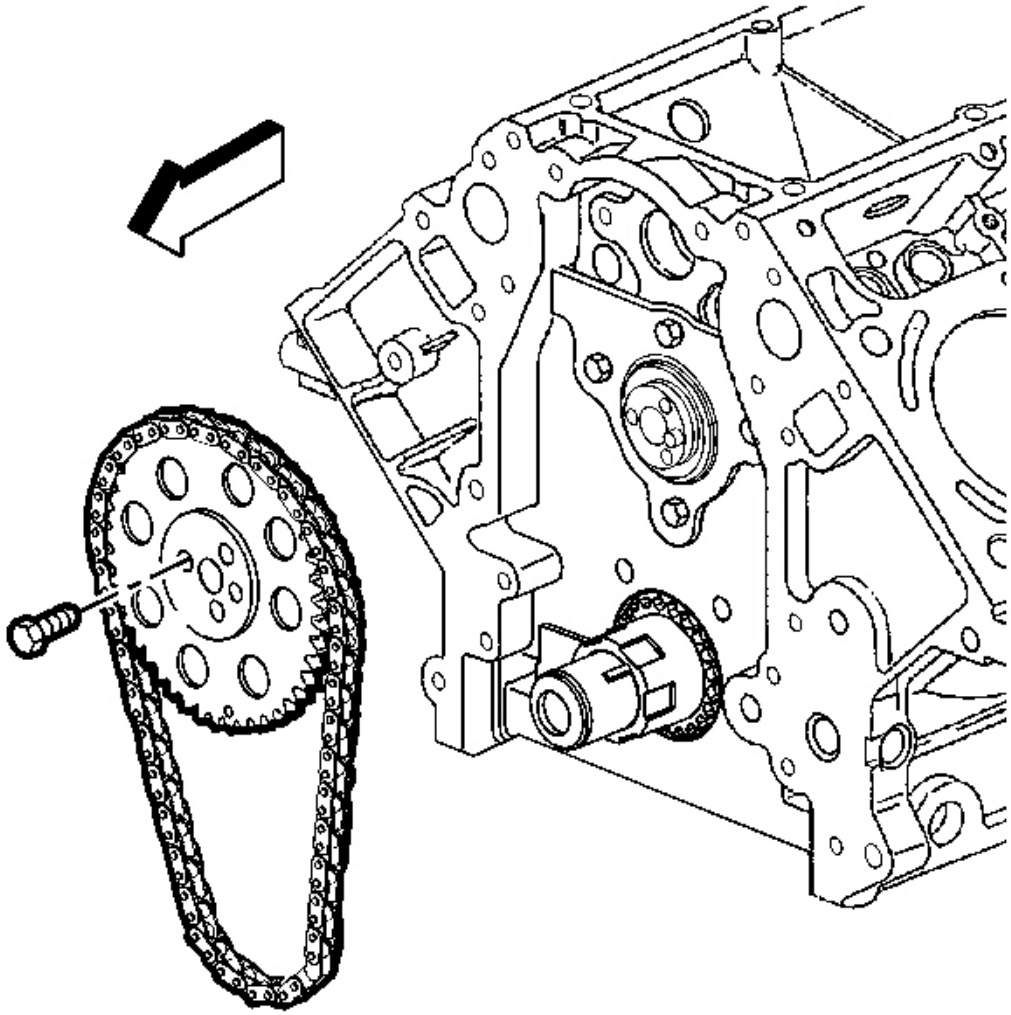

Fig. 276: View Of Camshaft Sprocket, Bolt & Timing Chain
Courtesy of GENERAL MOTORS CORP.

16. Remove the camshaft sprocket bolts.
17. Remove the timing chain from the camshaft sprocket, and allow the timing chain to rest on the crankshaft sprocket.
18. Remove the camshaft. Refer to **Camshaft Removal** .
19. Clean and inspect the camshaft and bearings. Refer to **Camshaft and Bearings Cleaning and Inspection** .

cardiagn.com

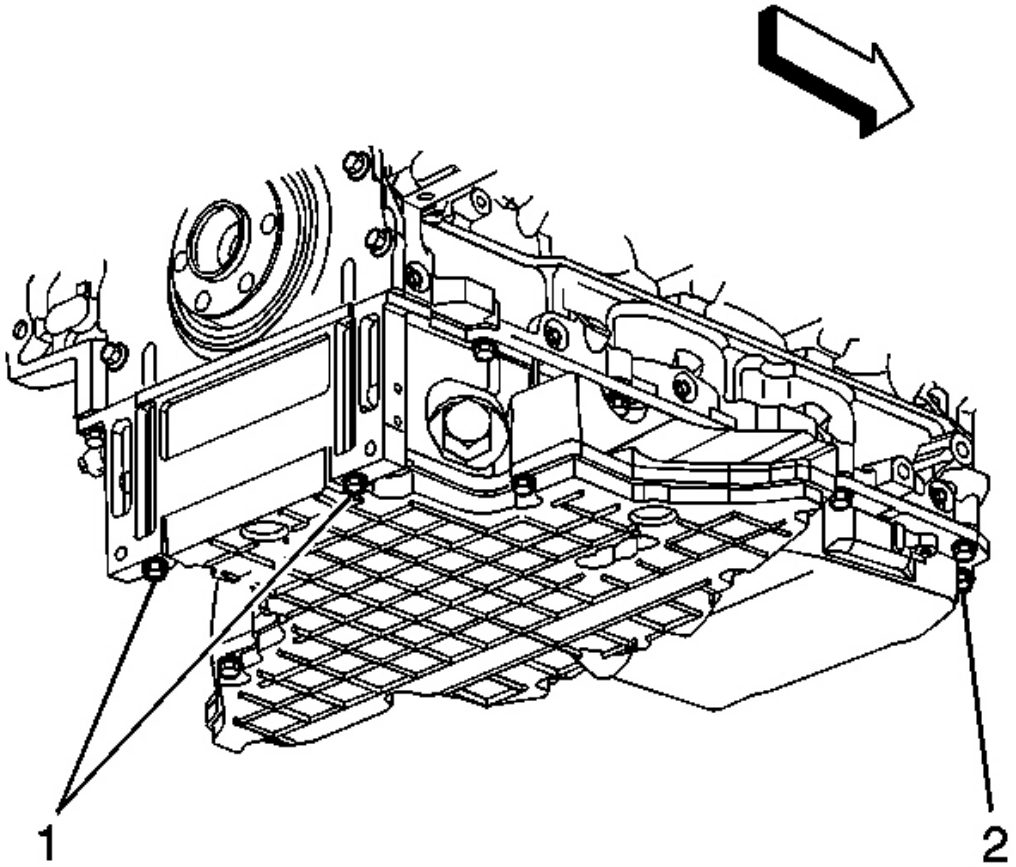

Fig. 277: Oil Pan-To-Front Cover Bolts & Oil Pan-To-Rear Cover Bolts
Courtesy of GENERAL MOTORS CORP.

IMPORTANT: Rear cover removal is not required, if the camshaft bearings are not being replaced.

20. If the camshaft bearings need to be replaced, remove the oil pan-to rear cover bolts (1).

cardiagn.com

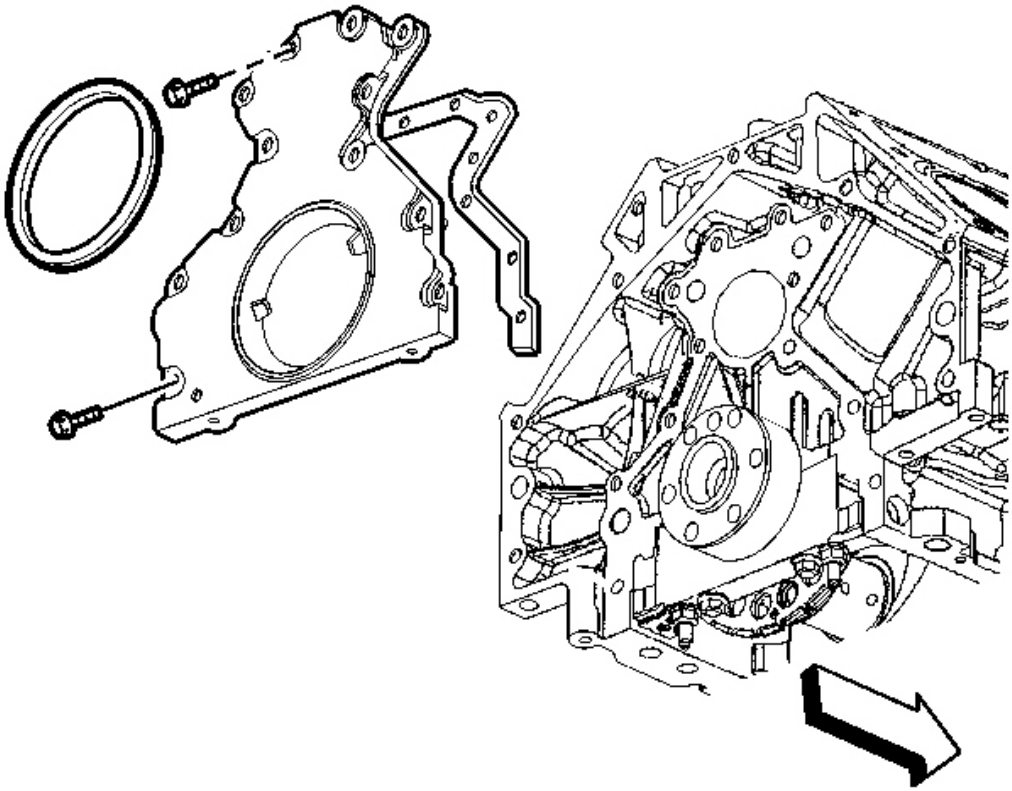

Fig. 278: View Of Rear Cover, Bolts & Gasket
Courtesy of GENERAL MOTORS CORP.

21. Remove the rear cover bolts.
22. Remove the rear cover and gasket. Discard the gasket.
23. Remove the camshaft bearings, if required. Refer to **Camshaft Bearing Removal** .

Installation Procedure

cardiagn.com

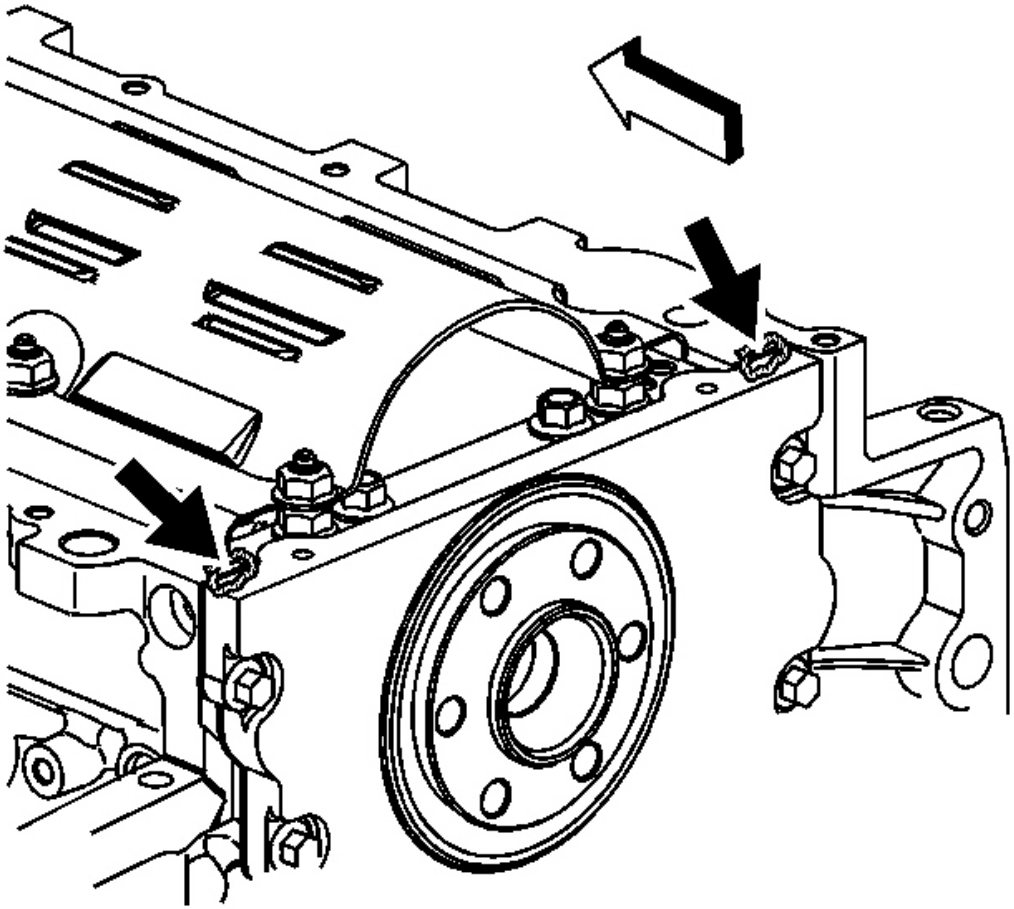

Fig. 279: View Of Sealant On Engine Rear Cover Gasket Tabs
Courtesy of GENERAL MOTORS CORP.

1. Install NEW camshaft bearings, if required. Refer to **Camshaft Bearing Installation** .
2. Apply a 5 mm bead of sealant GM P/N 12378190, or equivalent 20 mm (0.8 in) long to the oil pan to engine block junction, if required.

cardiagn.com

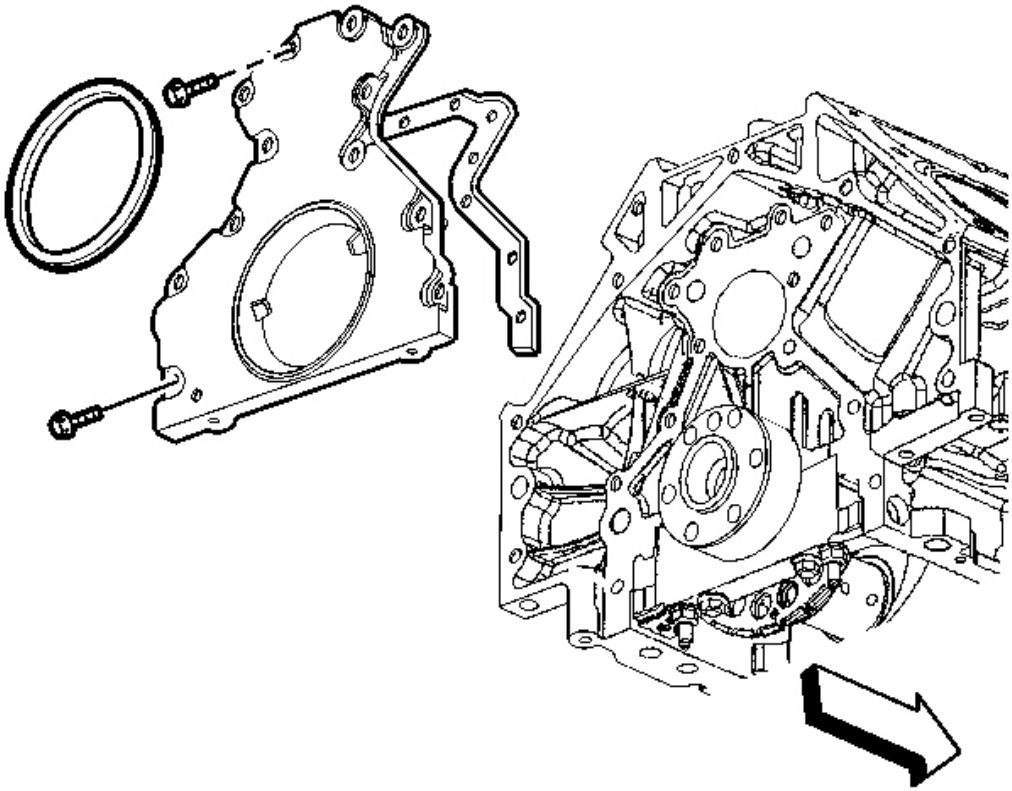

Fig. 280: View Of Rear Cover, Bolts & Gasket
Courtesy of GENERAL MOTORS CORP.

3. Install the rear cover and a new gasket, if required.
4. Install the rear cover bolts until snug, if required.

cardiagn.com

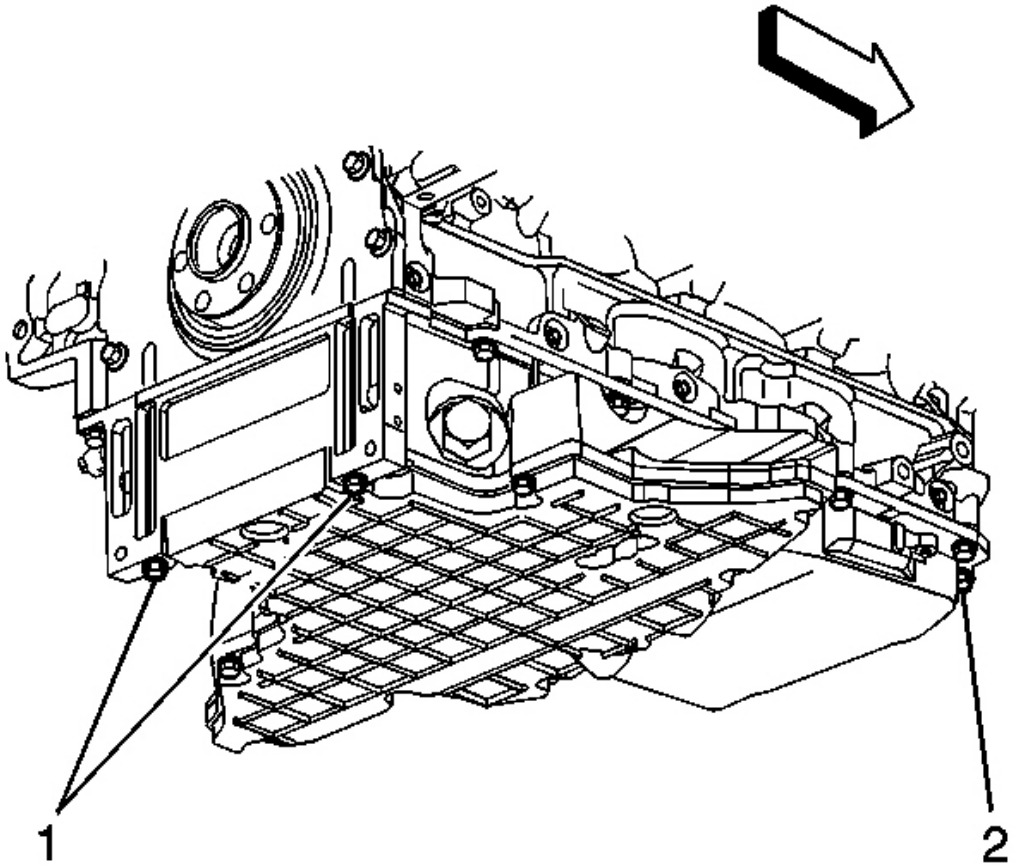

Fig. 281: Oil Pan-To-Front Cover Bolts & Oil Pan-To-Rear Cover Bolts
Courtesy of GENERAL MOTORS CORP.

5. Install the oil pan-to-rear cover bolts (1) until snug, if required.

cardiagn.com

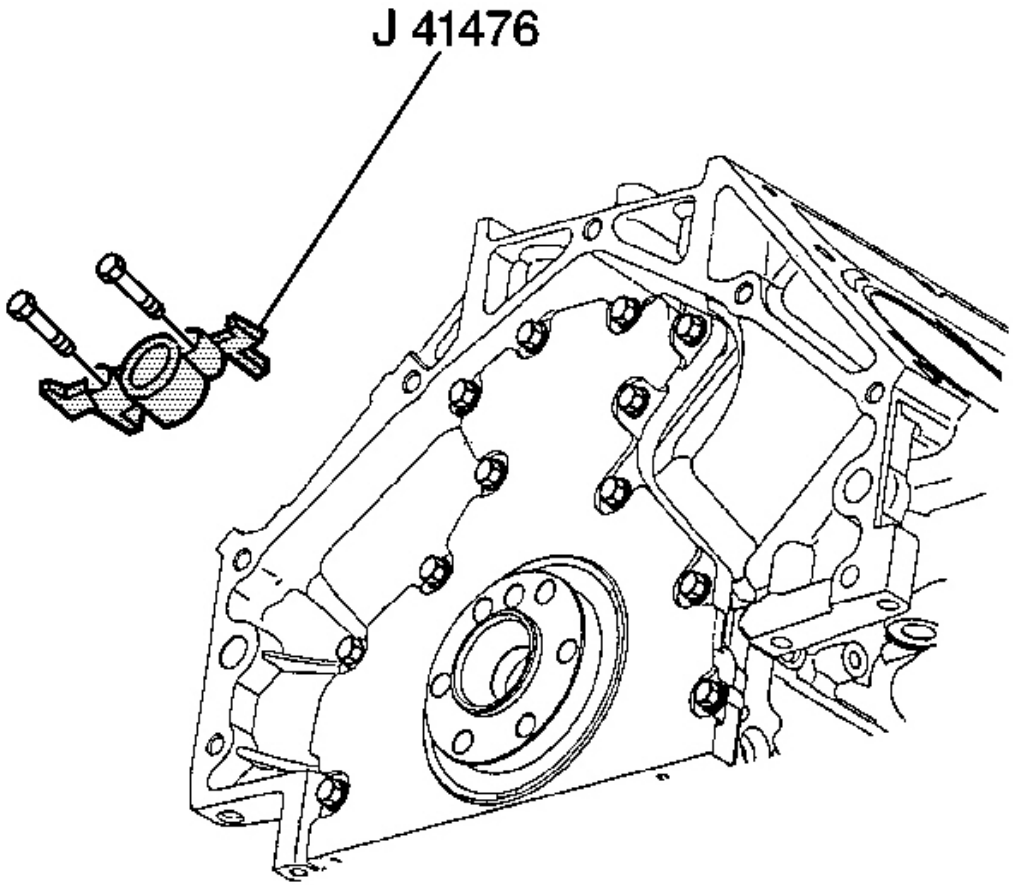

Fig. 282: J 41476 & Bolts
Courtesy of GENERAL MOTORS CORP.

6. Rotate the crankshaft as required until two opposing flywheel bolt holes are parallel to the oil pan surface, if required.

NOTE: **Refer to Fastener Notice in Cautions and Notices.**

IMPORTANT: **The tapered legs of the alignment tool must enter the rear cover oil seal bore.**

7. Install the **J 41476** bolts until snug. Do not overtighten, if required.

Tighten:

cardiagn.com

1. Tighten the oil pan-to-rear cover bolts to 12 N.m (106 lb in).
2. Tighten the engine rear cover bolts to 25 N.m (18 lb ft).

8. Remove the **J 41476** .
9. Install a NEW crankshaft rear oil seal, if required. Refer to **Crankshaft Rear Oil Seal Installation** .

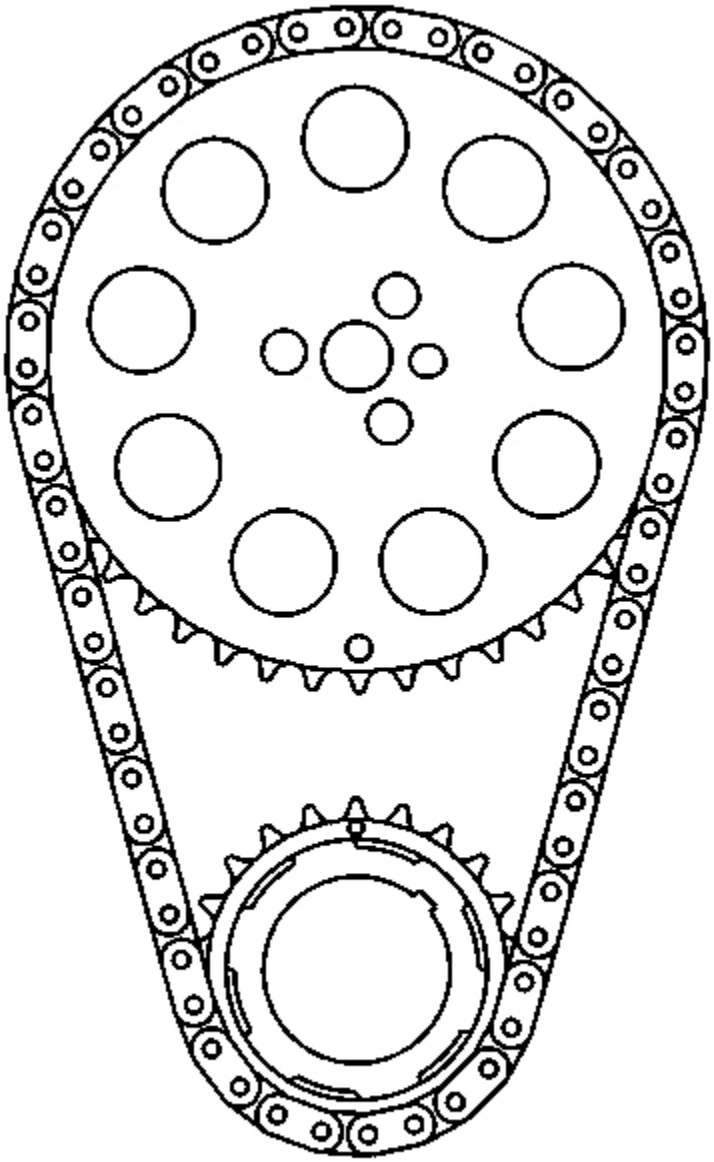

cardiagn.com

Fig. 283: Crankshaft Sprocket
Courtesy of GENERAL MOTORS CORP.

10. Install the camshaft. Refer to **Camshaft Installation** .
11. Align the camshaft sprocket alignment mark in the 6 o'clock position.

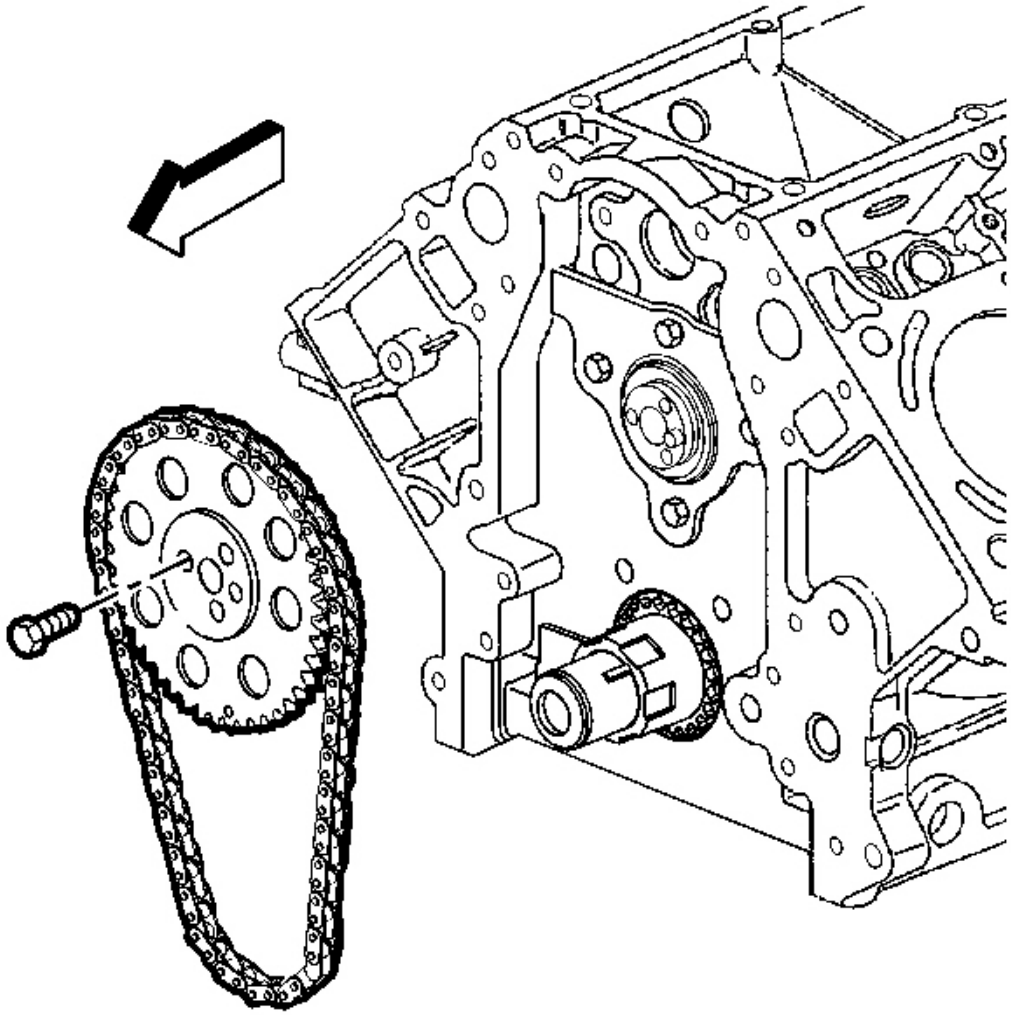

Fig. 284: View Of Camshaft Sprocket, Bolt & Timing Chain
Courtesy of GENERAL MOTORS CORP.

12. Install the camshaft sprocket and timing chain.
13. Install the camshaft sprocket bolts.

cardiagn.com

Tighten: Tighten the camshaft sprocket bolts to 35 N.m (26 lb ft).

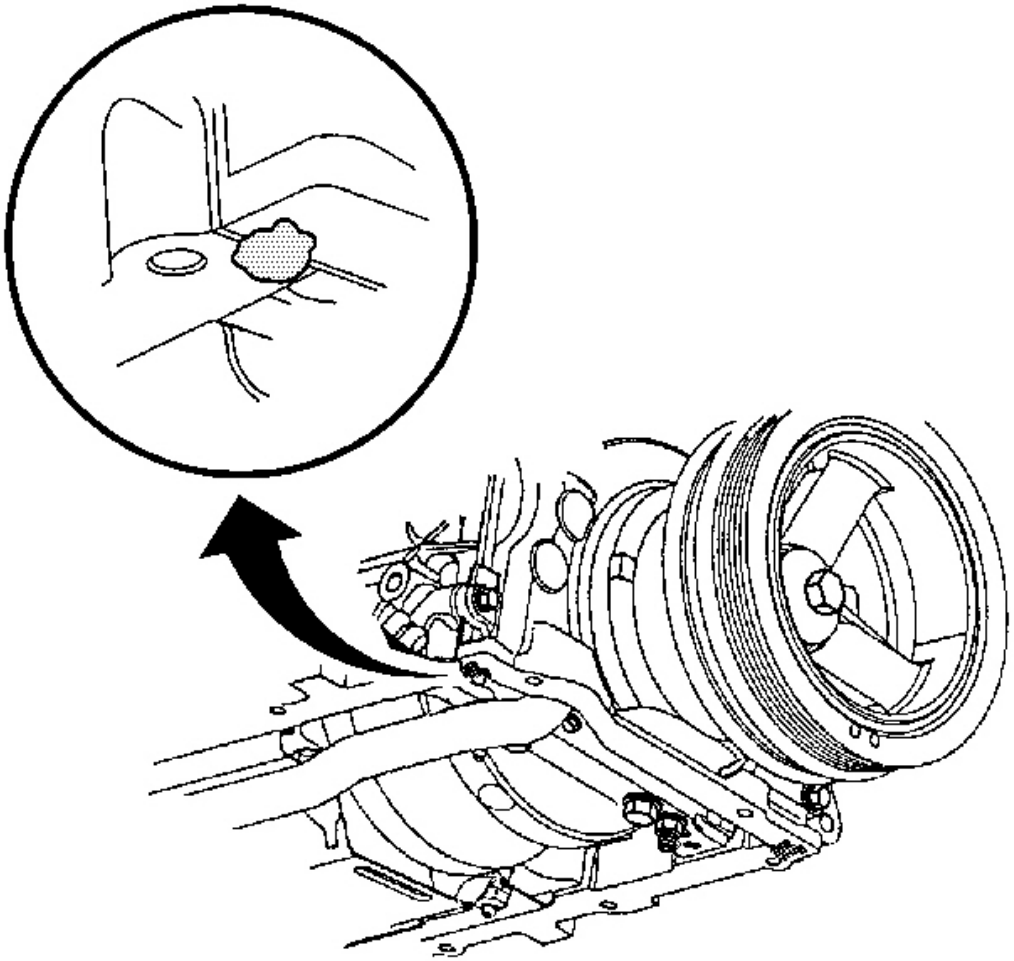

Fig. 285: View Of Sealant Applied To Front Oil Pan-To-Engine Block Junction
Courtesy of GENERAL MOTORS CORP.

14. Apply a 5 mm (0.2 in) bead of sealant GM P/N 12378190, or equivalent 20 mm (0.8 in) long to the oil pan to engine block junction.

cardiagn.com

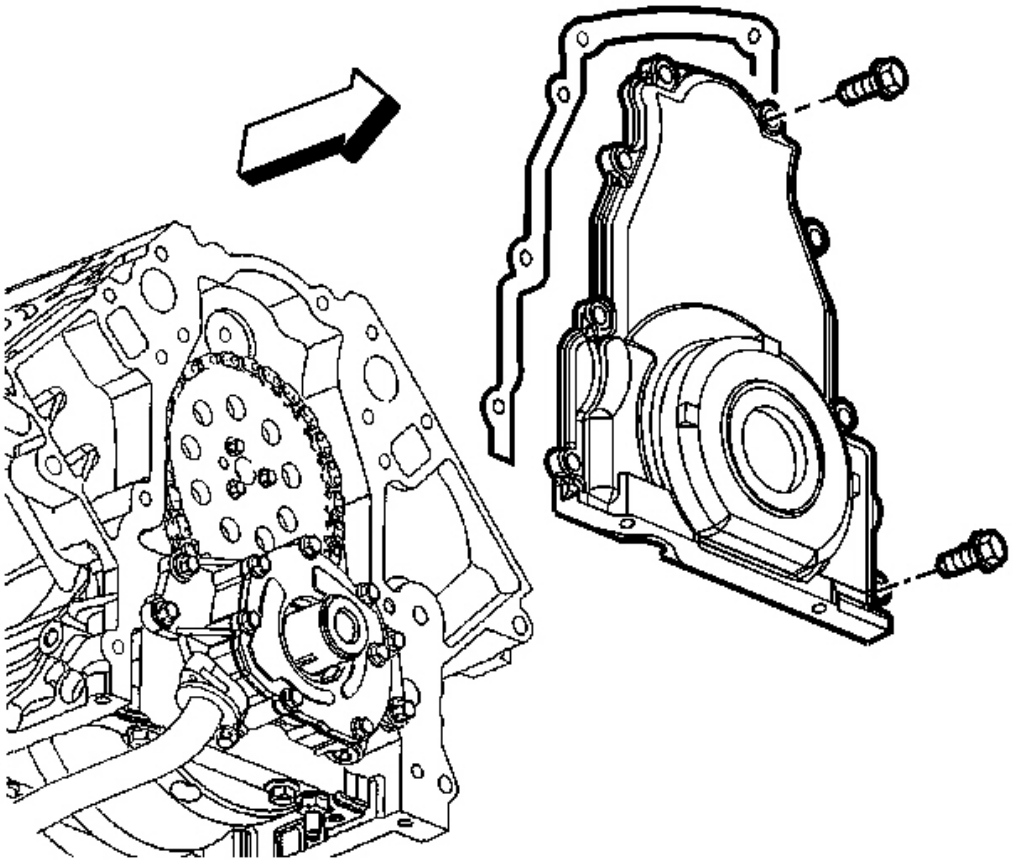

Fig. 286: Front Cover Gasket & Bolts
Courtesy of GENERAL MOTORS CORP.

15. Install the front cover and a new gasket.
16. Install the front cover bolts until snug.

cardiagn.com

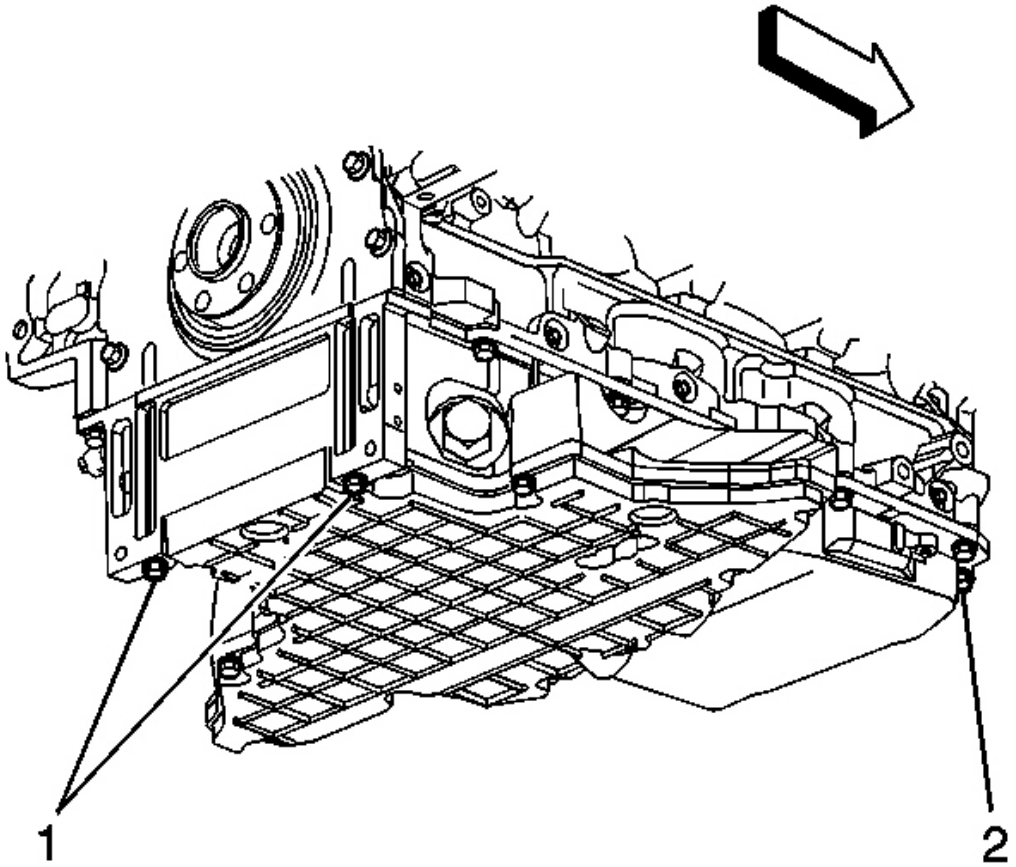

Fig. 287: Oil Pan-To-Front Cover Bolts & Oil Pan-To-Rear Cover Bolts
Courtesy of GENERAL MOTORS CORP.

17. Install the oil pan-to-front cover bolts (1) until snug.

cardiagn.com

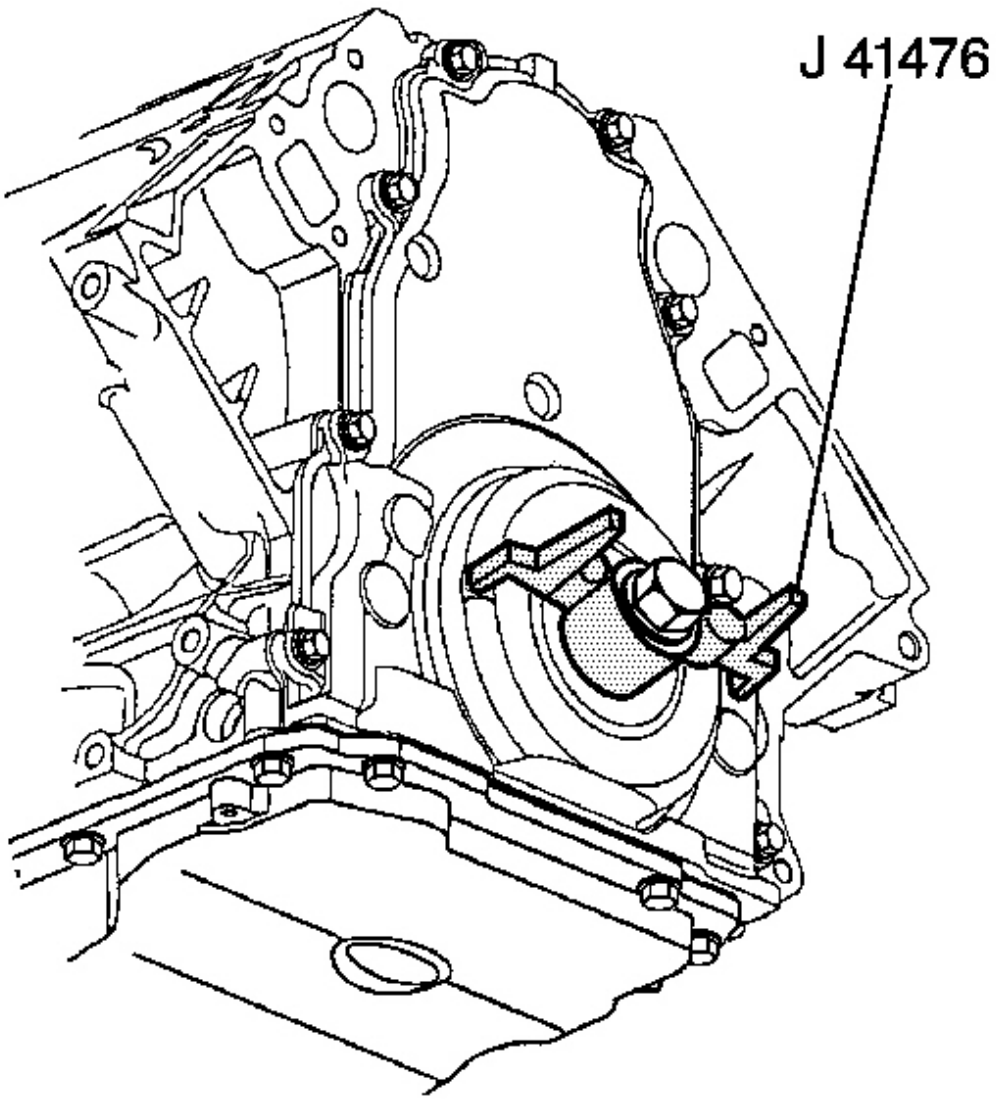

Fig. 288: J 41476 & Front Cover
Courtesy of GENERAL MOTORS CORP.

18. Install the **J 41476** and crankshaft balancer bolt to the front cover.
19. Align the tapered legs of the **J 41476** with the machined alignment surfaces on the front cover.
20. Install the crankshaft balancer bolt until snug. Do not overtighten.

Tighten:

cardiagn.com

1. Tighten the oil pan-to-front cover bolts to 25 N.m (18 lb ft).
2. Tighten the engine front cover bolts to 25 N.m (18 lb ft).

21. Remove the **J 41476** .
22. Install a NEW crankshaft front oil seal. Refer to **Crankshaft Front Oil Seal Installation** .
23. Install the valve lifters. Refer to **Valve Lifter Installation** .
24. Install the right and left cylinder heads. Refer to **Cylinder Head Installation - Right** and **Cylinder Head Installation - Left** .
25. Install the valve rocker arms and push rods. Refer to **Valve Rocker Arm and Push Rod Installation** .
26. Install the right and left valve rocker arm covers. Refer to **Valve Rocker Arm Cover Installation - Right** and **Valve Rocker Arm Cover Installation - Left** .
27. Install the coolant air bleed pipe. Refer to **Coolant Air Bleed Pipe Installation** .
28. Install the intake manifold. Refer to **Intake Manifold Installation** .
29. Install the water pump. Refer to **Water Pump Installation** .
30. Install the left and right exhaust manifolds. Refer to **Exhaust Manifold Installation - Left** and **Exhaust Manifold Installation - Right** .
31. Install the oil level indicator tube. Refer to **Oil Level Indicator and Tube Installation** .
32. Install the crankshaft balancer. Refer to **Crankshaft Balancer Installation** .
33. Install the engine assembly. Refer to **Engine Replacement** .

ENGINE FLYWHEEL REPLACEMENT

Removal Procedure

NOTE: **Failure to follow the proper removal and installation procedures may result in damage to the engine crankshaft thrust bearing.**

NOTE: **When tilting down the rear of the driveline, observe the clearance between the rear of the engine and the composite dash panel. Do not allow the engine to rest unsupported against the composite dash panel, or vehicle damage may result.**

NOTE: **When lowering and removing the rear of the driveline, observe the clearance between the rear of the transaxle assembly and the underbody to prevent damage.**

IMPORTANT:

- **For manual transmission applications, note the position and direction of the engine flywheel before removal. The flywheel does not use a locating pin for alignment. Mark or scribe the end of the crankshaft and the flywheel before component removal. The engine flywheel must be reinstalled to the original position and direction. The engine flywheel will not initially seat against the crankshaft flange, but will be pulled onto the crankshaft by the engine flywheel bolts. This procedure requires a 3 stage**

cardiagn.com

tightening process.

- DO NOT remove the prop shaft hub or flex plate from the automatic transmission engine flywheel. The flywheel, prop shaft hub, and flex plate are balanced as an assembly. If service is required, the entire flywheel assembly should be replaced.

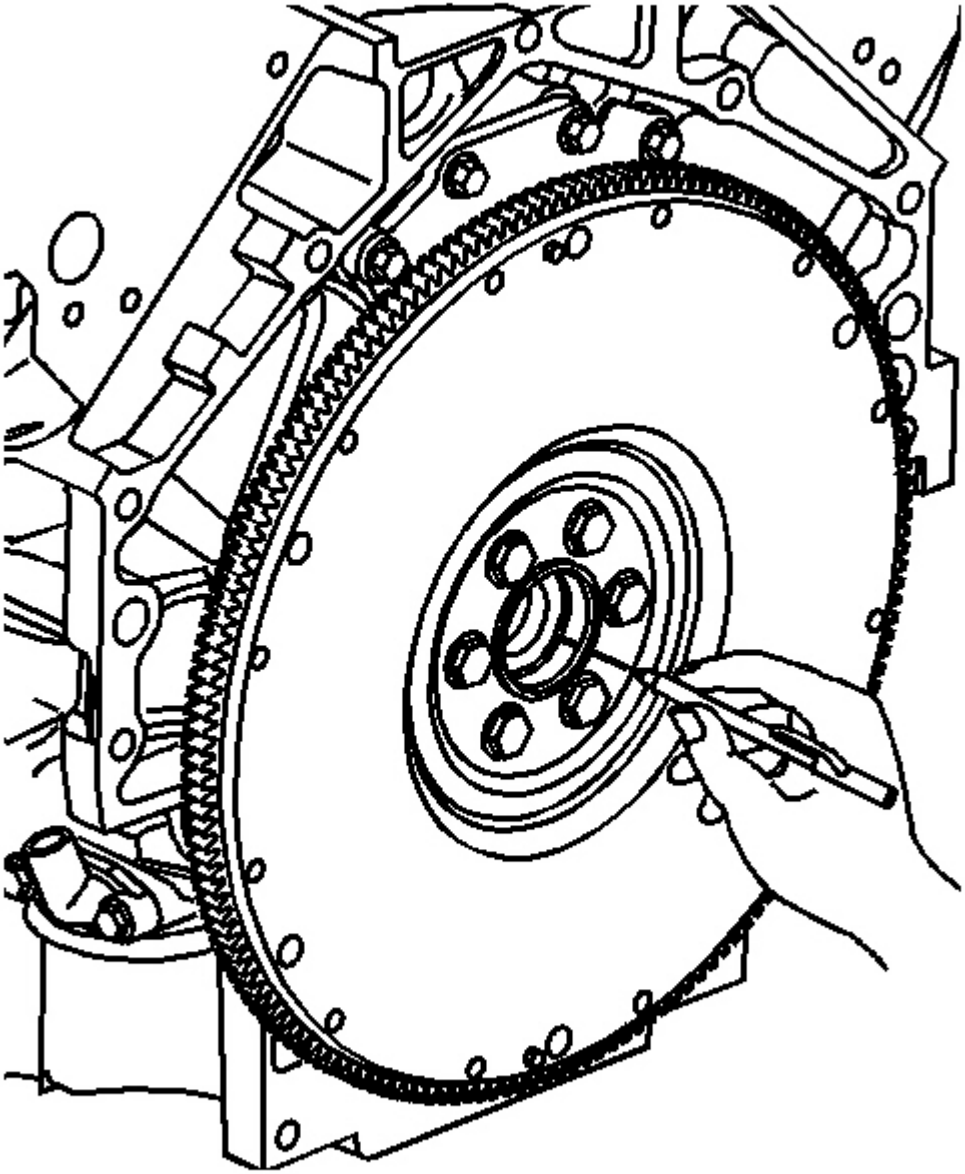

cardiagn.com

Fig. 289: Mark End Of Crankshaft & Manual Transmission Flywheel
Courtesy of GENERAL MOTORS CORP.

1. Remove the catalytic converter. Refer to **Catalytic Converter Replacement** in Engine Exhaust.
2. Remove the driveline support, if equipped with a automatic transmission. Refer to **Driveline Support Assembly Replacement (Automatic Transmission)** or **Driveline Support Assembly Replacement (Manual Transmission)** in Propeller Shaft.
3. Remove the clutch assembly, if equipped with a manual transmission. Refer to **Clutch Assembly Replacement** in Clutch.
4. Mark or scribe the end of the crankshaft and the manual transmission flywheel. Refer to **Engine Balancing** .

-

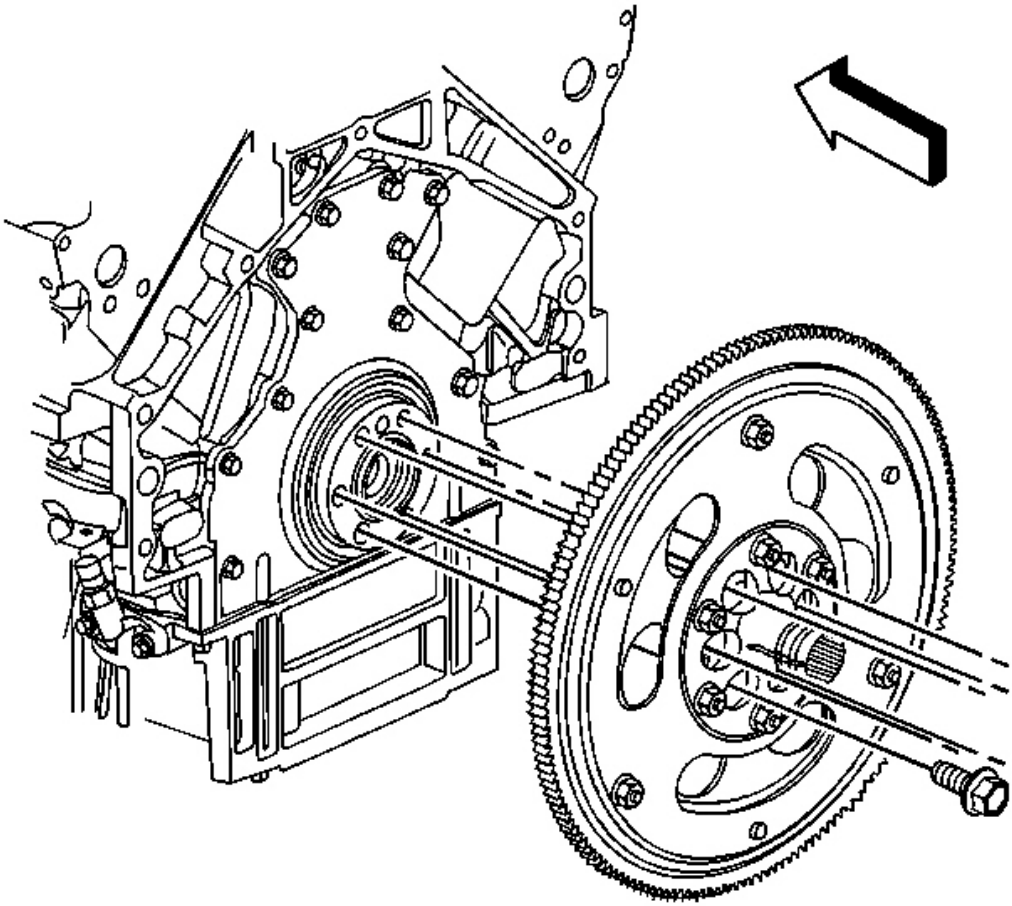

cardiagn.com

Fig. 290: Automatic Transmission Engine Flywheel & Bolts
Courtesy of GENERAL MOTORS CORP.

5. If equipped with an automatic transmission, remove the engine flywheel bolts.

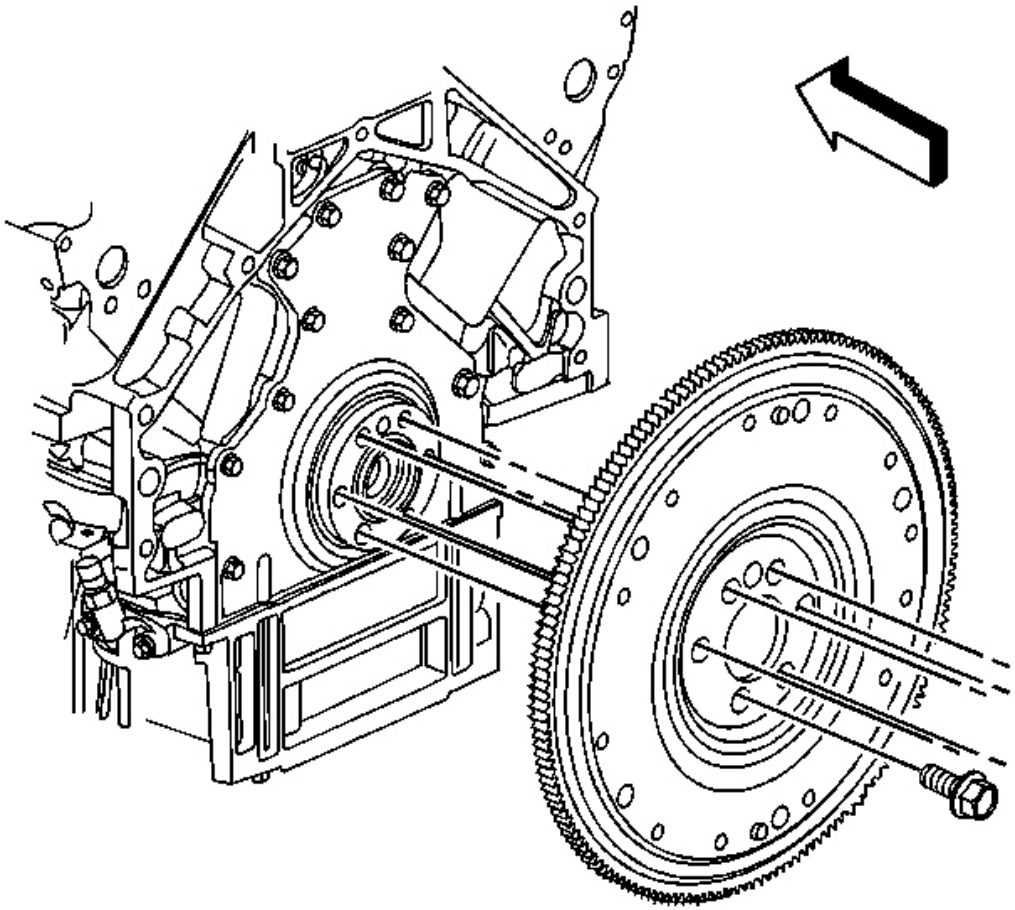

Fig. 291: Manual Transmission Engine Flywheel & Bolts
Courtesy of GENERAL MOTORS CORP.

6. If equipped with a manual transmission, remove the engine flywheel bolts.
7. Remove the engine flywheel.

Installation Procedure

IMPORTANT: For manual transmission applications, note the position and direction of the

cardiagn.com

engine flywheel before removal. The flywheel does not use a locating pin for alignment. Mark or scribe the end of the crankshaft and the flywheel before component removal. The engine flywheel must be reinstalled to the original position and direction. The engine flywheel will not initially seat against the crankshaft flange, but will be pulled onto the crankshaft by the engine flywheel bolts. This procedure requires a 3 stage tightening process.

DO NOT remove the prop shaft hub or flex plate from the automatic transmission engine flywheel. The flywheel, prop shaft hub, and flex plate are balanced as an assembly. If service is required, the entire flywheel assembly should be replaced.

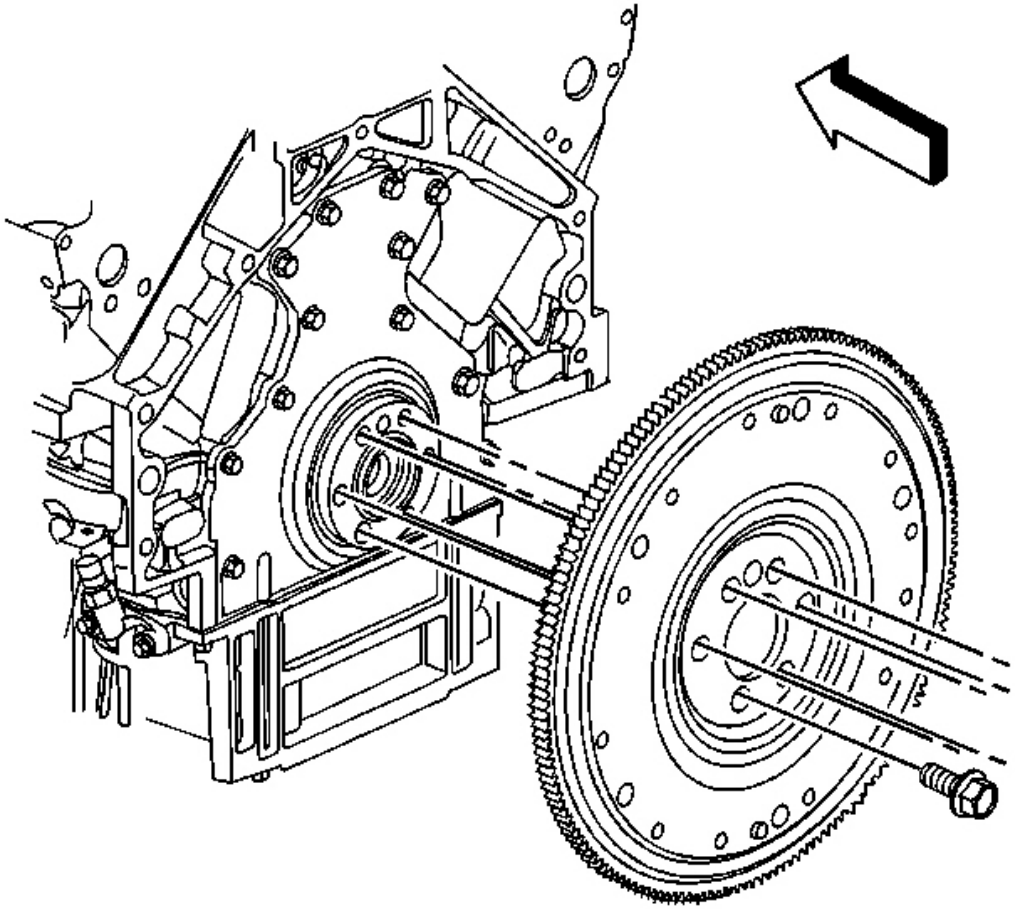

Fig. 292: Manual Transmission Engine Flywheel & Bolts
Courtesy of GENERAL MOTORS CORP.

cardiagn.com

1. If equipped with a manual transmission, align the mark or scribe on the crankshaft with the mark or scribe on the existing flywheel.

   Refer to **Engine Balancing**

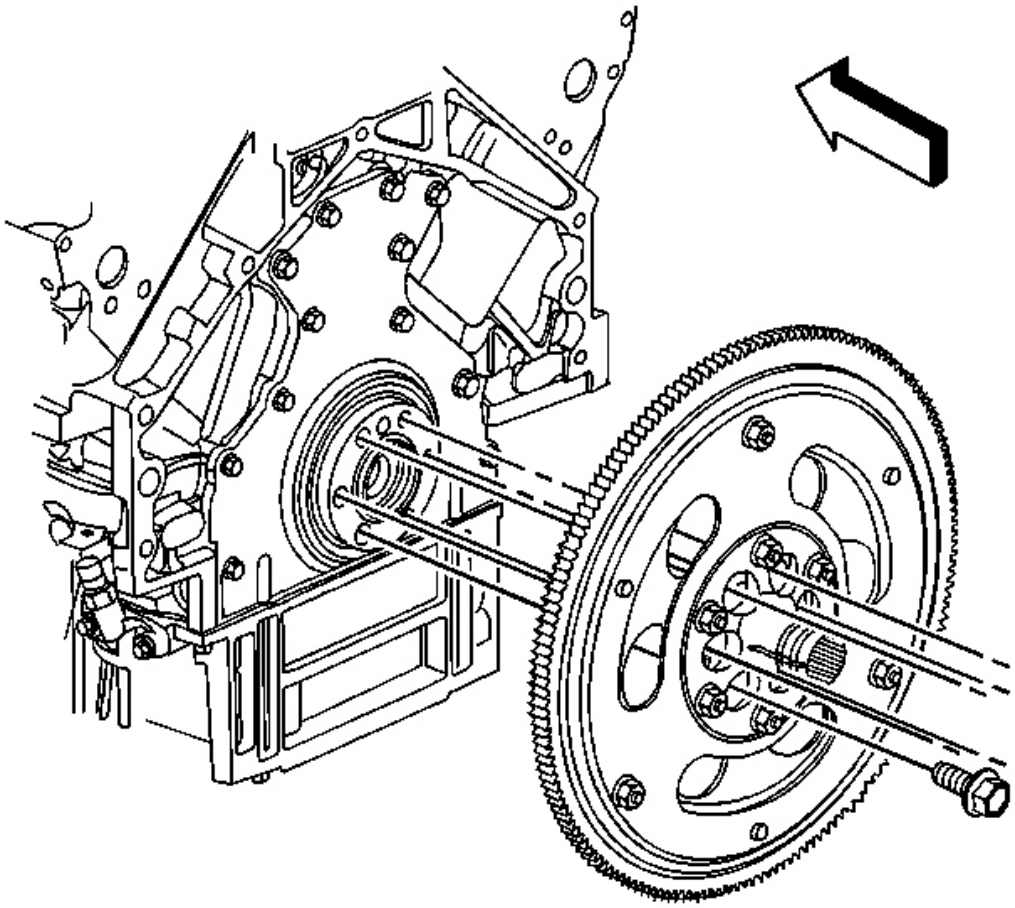

Fig. 293: Automatic Transmission Engine Flywheel & Bolts
Courtesy of GENERAL MOTORS CORP.

2. Install the engine flywheel.

cardiagn.com

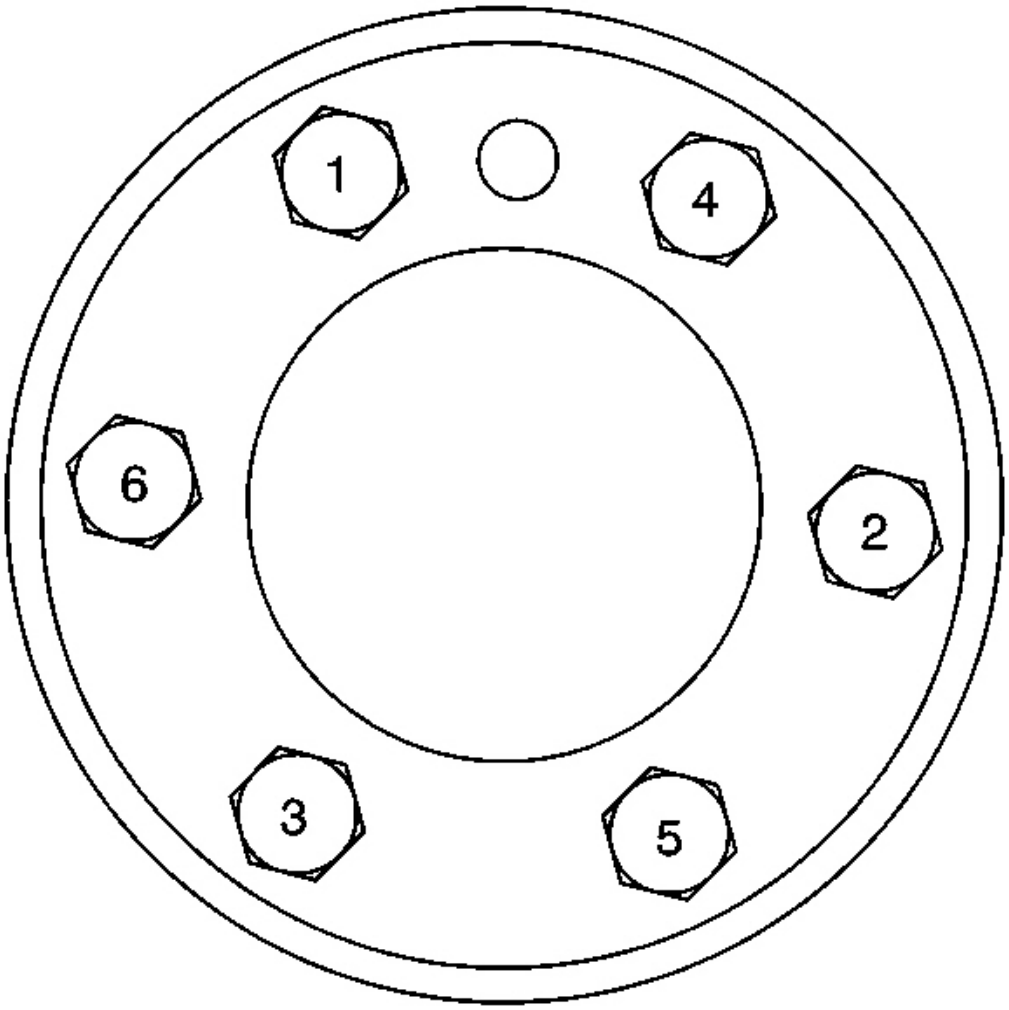

Fig. 294: Flywheel Bolt Tightening Sequence
Courtesy of GENERAL MOTORS CORP.

NOTE: Refer to Fastener Notice in Cautions and Notices.

3. Apply threadlock GM P/N 12345382 (Canadian P/N 10953489), or equivalent to the threads of the flywheel bolts.
4. Install the engine flywheel bolts until snug.

Tighten:

1. Tighten the engine flywheel bolts a first pass in sequence to 20 N.m (15 lb ft).

cardiagn.com

2. Tighten the engine flywheel bolts a second pass in sequence to 50 N.m (37 lb ft).
3. Tighten the engine flywheel bolts a final pass in sequence to 100 N.m (74 lb ft).

5. Install the driveline support, if equipped with a automatic transmission. Refer to **Driveline Support Assembly Replacement (Automatic Transmission)** or **Driveline Support Assembly Replacement (Manual Transmission)** in Propeller Shaft.
6. Install the clutch assembly, if equipped with a manual transmission. Refer to **Clutch Assembly Replacement** in Clutch.
7. Install the catalytic converter. Refer to **Catalytic Converter Replacement** in Engine Exhaust.

ENGINE REPLACEMENT

Tools Required

- **J 25034-C** Power Steering Pump Pulley Remover
- **J 42188** Ball Joint Separator
- **J 39580** Engine Support Table
- **J 39580-500** Engine Support Table Top
- **J 41798** Engine Lifting Brackets
- **J 42203** Driveline Support
- **J 36221** Hydraulic Clutch Line Separator
- **J 25033-C** Power Steering Pump Pulley Installer
- J 36660-A Torque Angle Meter

Removal Procedure

IMPORTANT: The steps in the following procedure are in a specific order. Follow these steps in this order and do not ignore any details.

cardiagn.com

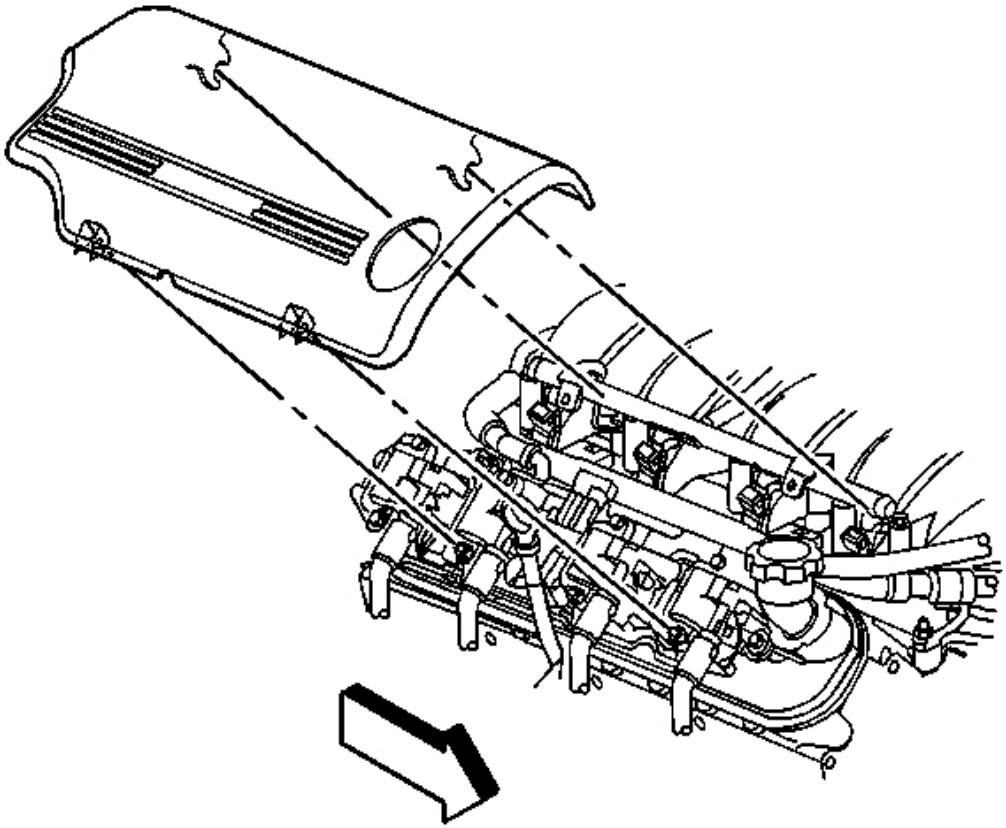

Fig. 295: Right Fuel Injection Rail Cover
Courtesy of GENERAL MOTORS CORP.

1. Recover the air conditioning (A/C) refrigerant. Refer to **Refrigerant Recovery and Recharging** in Heating, Ventilation and Air Conditioning.
2. Remove the radiator. Refer to **Radiator Replacement** in Engine Cooling.
3. Remove the break pressure modulator valve (BPMV) bracket. Refer to **Brake Pressure Modulator Valve (BPMV) Bracket Replacement** in Antilock Brake System.
4. Reposition the brake pipes.
5. Remove the accessory drive belt. Refer to **Drive Belt Replacement - Accessory** .
6. Remove the right fuel injection rail cover.
7. Relieve the fuel system pressure. Refer to **Fuel Pressure Relief Procedure** in Engine Controls - 5.7 L.
8. Disconnect the EVAP emission canister purge hose at the fuel line.
9. Remove the fuel feed hose. Refer to **Fuel Hose/Pipes Replacement - Engine Compartment** in Engine Controls - 5.7 L.

cardiagn.com

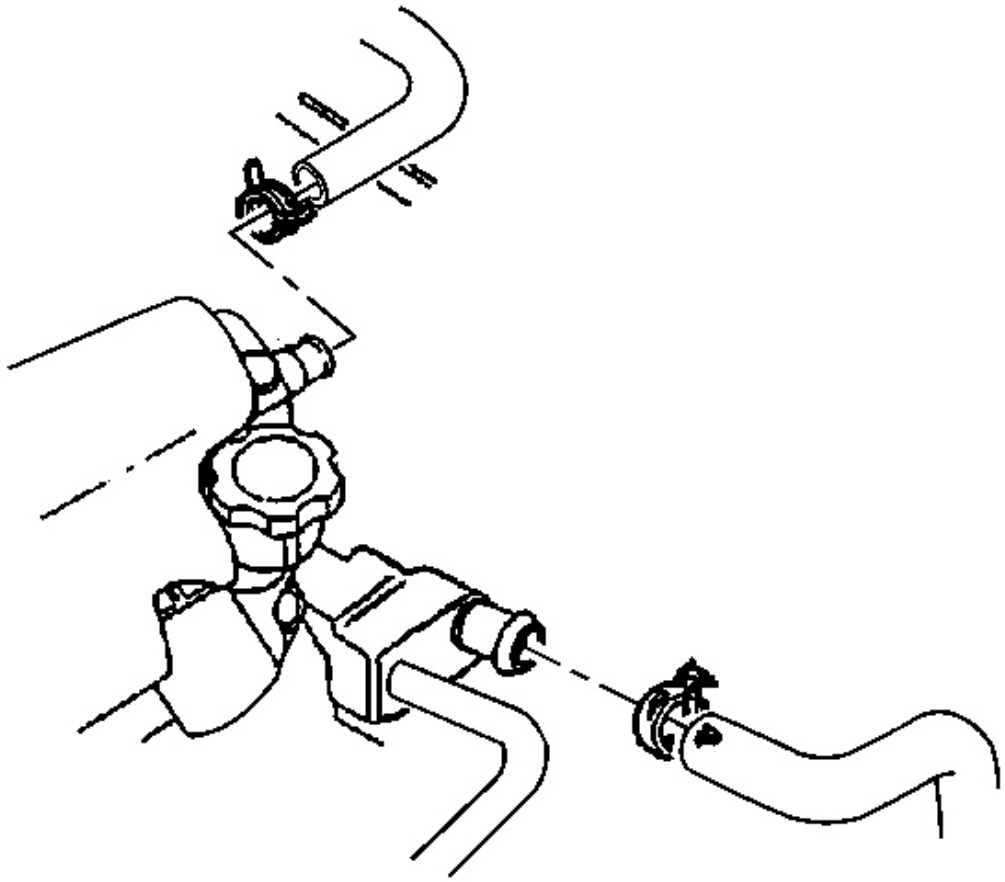

Fig. 296: Radiator Hoses & Water Pump
Courtesy of GENERAL MOTORS CORP.

IMPORTANT: Cap the hoses and inlets when separating the cooling system components, this prevents dirt and other contaminants from entering the cooling system.

10. Remove the radiator hoses from the water pump.

cardiagn.com

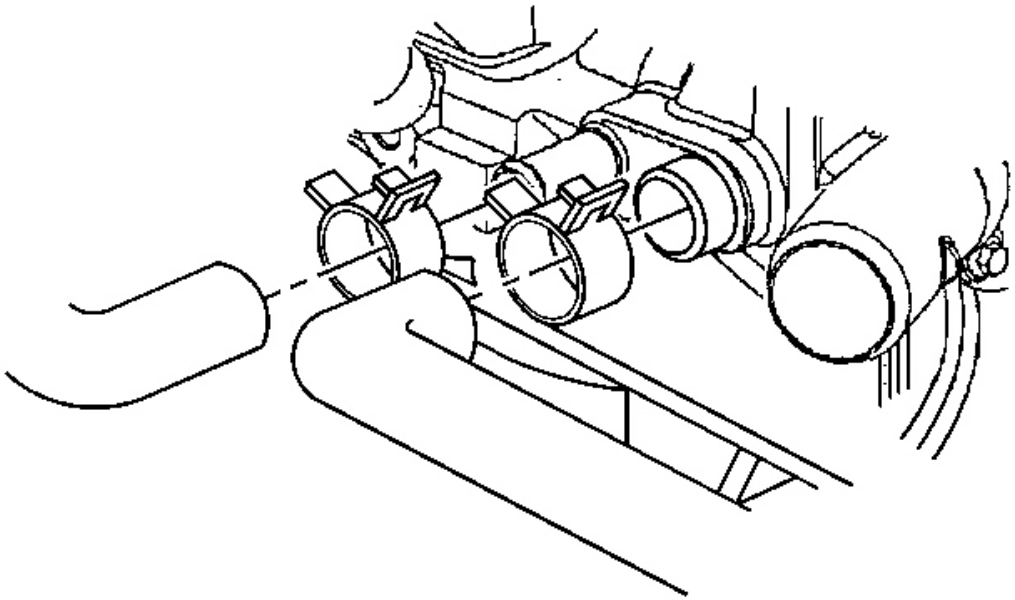

Fig. 297: Heater Hoses & Water Pump
Courtesy of GENERAL MOTORS CORP.

11. Remove the heater hoses from the water pump.

cardiagn.com

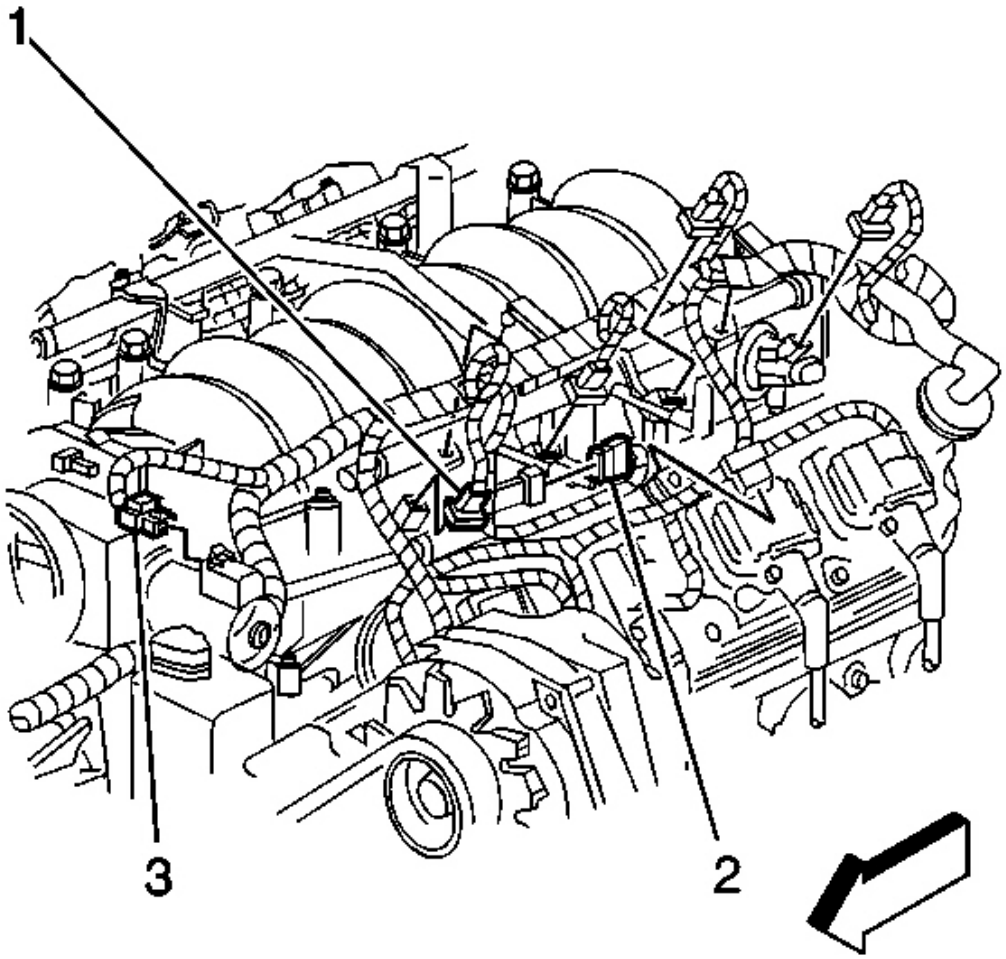

Fig. 298: Electrical Connectors
Courtesy of GENERAL MOTORS CORP.

12. Disconnect the following electrical connectors from the engine:
    - The fuel injectors (1)
    - The ignition coil main harness connectors
    - The evaporative emission (EVAP) solenoid (2)
    - The electric throttle motor (3)
    - The throttle position (TP) sensor
    - The engine coolant temperature (ECT) sensor
    - The A/C compressor

cardiagn.com

13. Remove the generator. Refer to **Generator Replacement** in Engine Electrical.

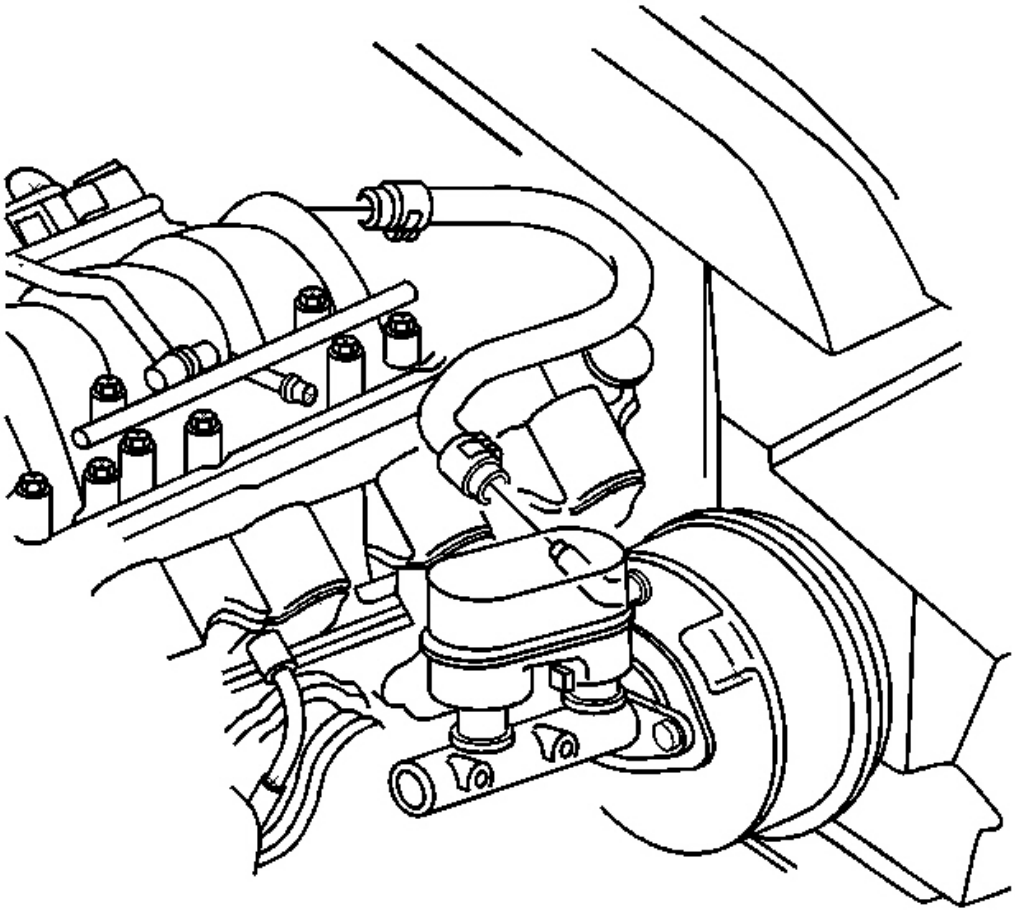

Fig. 299: Vacuum Booster Hose
Courtesy of GENERAL MOTORS CORP.

14. Remove the power brake booster vacuum hose.

cardiagn.com

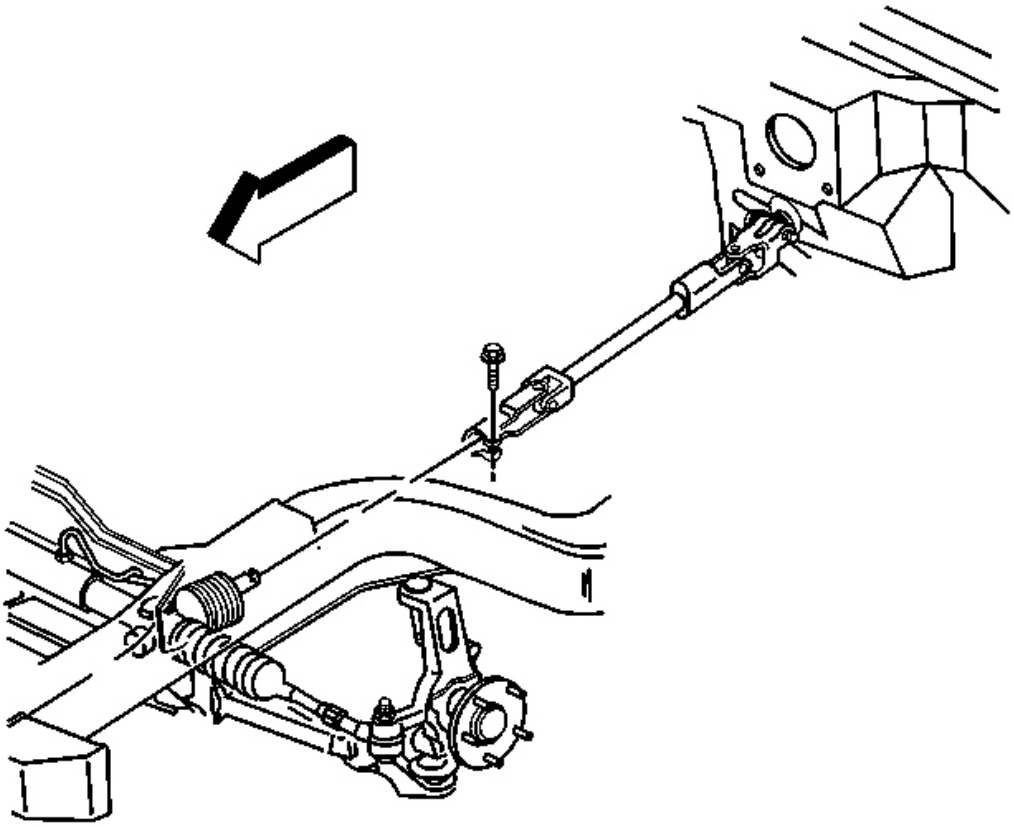

Fig. 300: Intermediate Steering Shaft & Bolt
Courtesy of GENERAL MOTORS CORP.

15. Remove the intermediate steering shaft bolt (to steering gear).
16. Remove the intermediate steering shaft from the steering gear and position it to the left onto the frame rail.

cardiagn.com

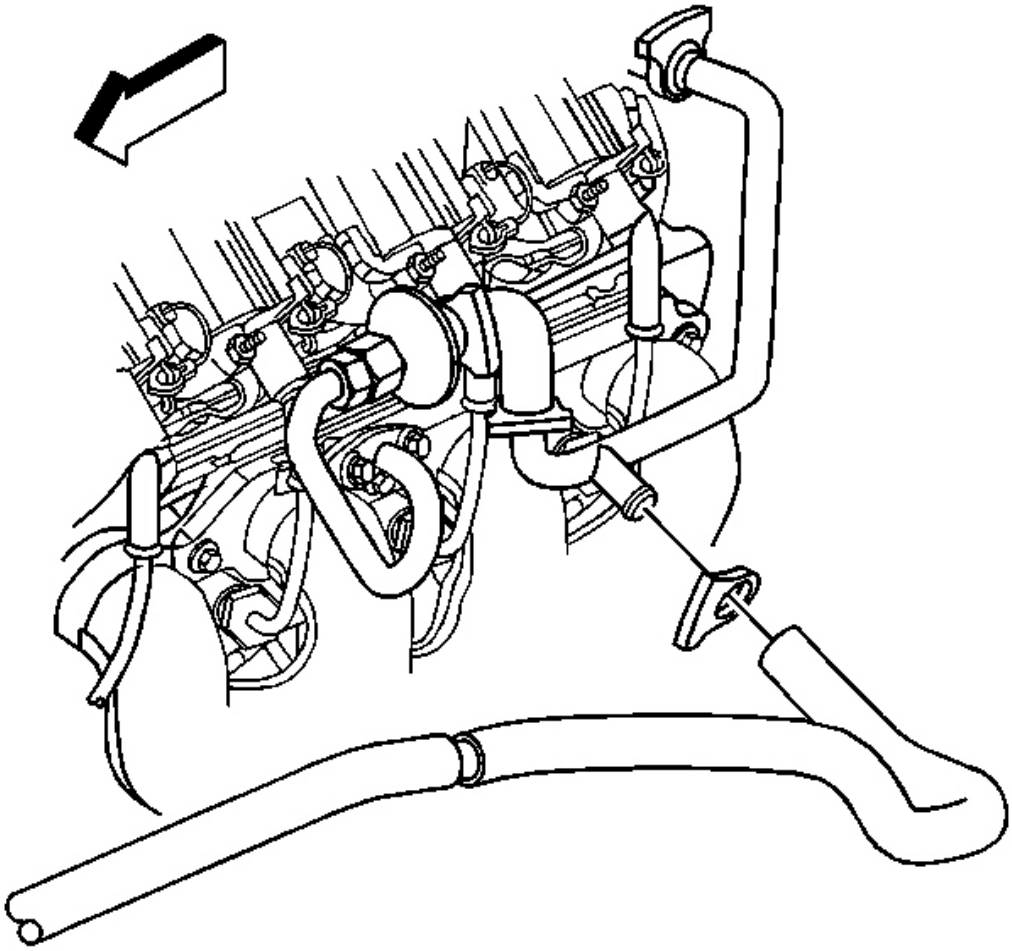

Fig. 301: AIR Pump Hose & AIR Pipe
Courtesy of GENERAL MOTORS CORP.

17. Disconnect the secondary air injection (AIR) pump hose from the AIR pipe.
18. Remove the front tires and wheels. Refer to **Tire and Wheel Removal and Installation** in Tires and Wheels.
19. Remove the catalytic converter. Refer to **Catalytic Converter Replacement** in Engine Exhaust.

cardiagn.com

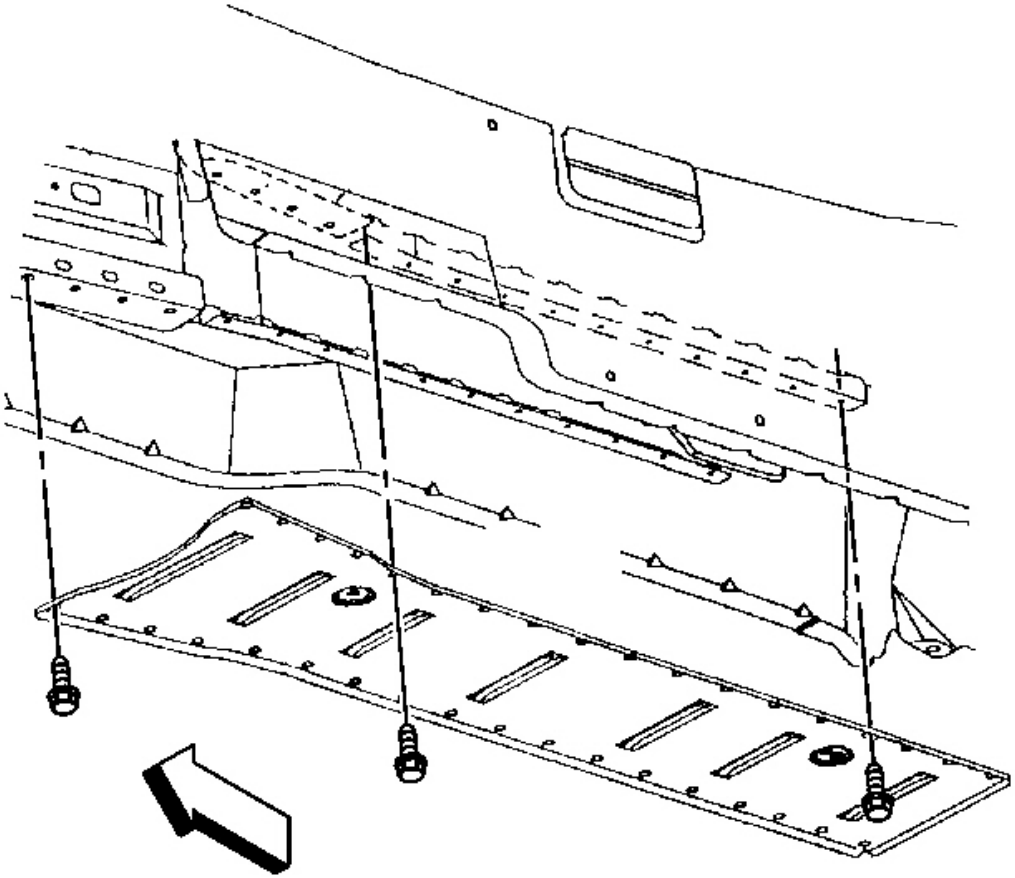

Fig. 302: Driveline Tunnel Close-Out Panel & Bolts
Courtesy of GENERAL MOTORS CORP.

20. Remove the driveline tunnel close-out panel bolts.
21. Remove the driveline tunnel close-out panel.
22. Remove the starter motor. Refer to **Starter Motor Replacement** in Engine Electrical.

cardiagn.com

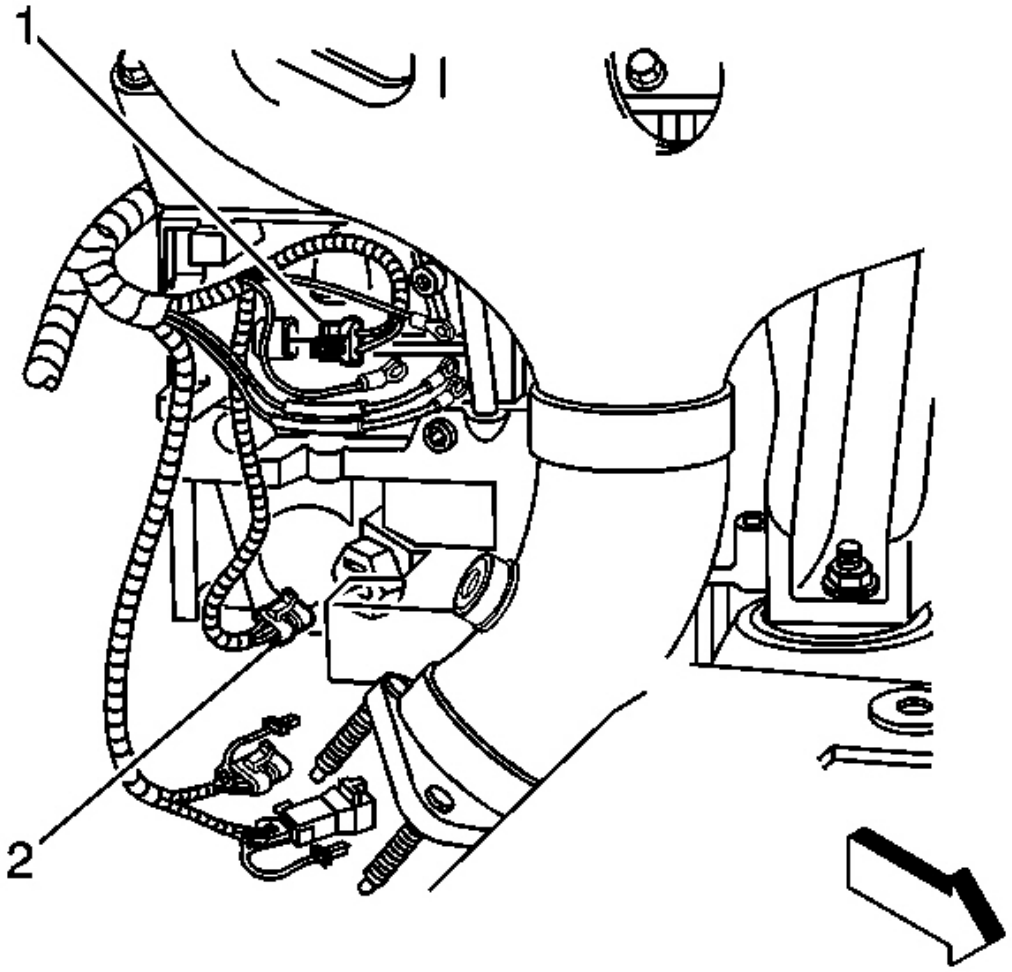

Fig. 303: Engine Oil Level Sensor Electrical Connector & CKP Sensor Electrical Connector
Courtesy of GENERAL MOTORS CORP.

23. Disconnect the crankshaft position (CKP) sensor electrical connector (1).
24. Disconnect the oil level sensor electrical connector (2).
25. Disconnect the right heated oxygen sensor (HO2S) electrical connector.

cardiagn.com

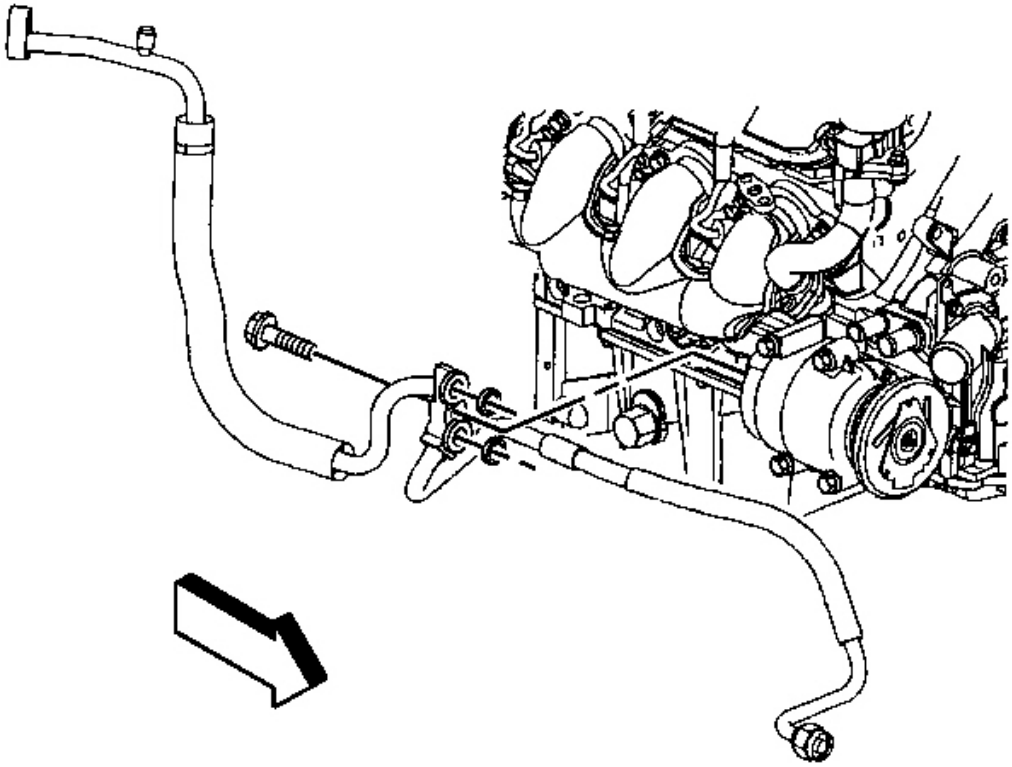

Fig. 304: A/C Compressor & Condenser Hose & Bolt
Courtesy of GENERAL MOTORS CORP.

26. Remove the A/C compressor and condenser hose bolt (at compressor).
27. Separate the A/C compressor and condenser hose from the A/C compressor.

cardiagn.com

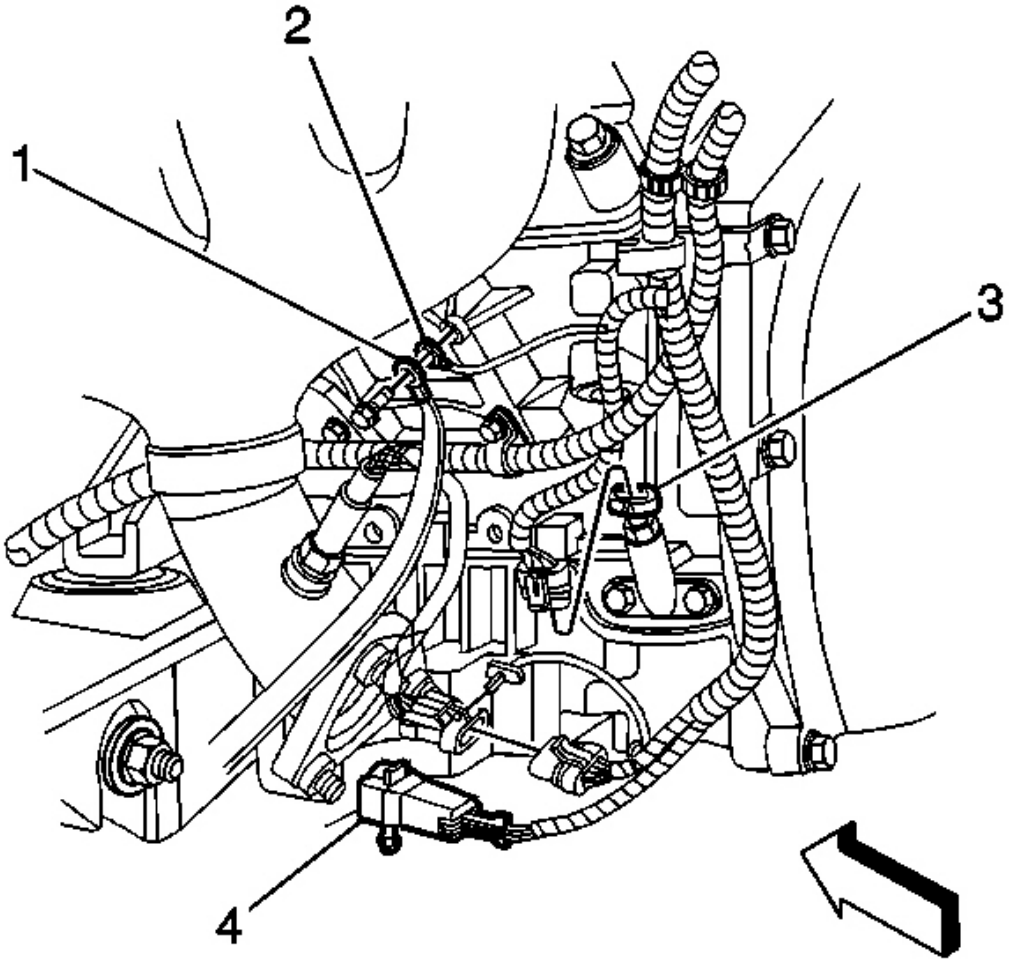

Fig. 305: Engine Oil Temperature Sensor Electrical Connector & Ground Straps
Courtesy of GENERAL MOTORS CORP.

28. Disconnect the engine oil temperature sensor (3) electrical connector.
29. Disconnect the left HO2S electrical connector.
30. Remove the ground strap bolt.

Remove the ground straps (1 and 2) from the engine block.

cardiagn.com

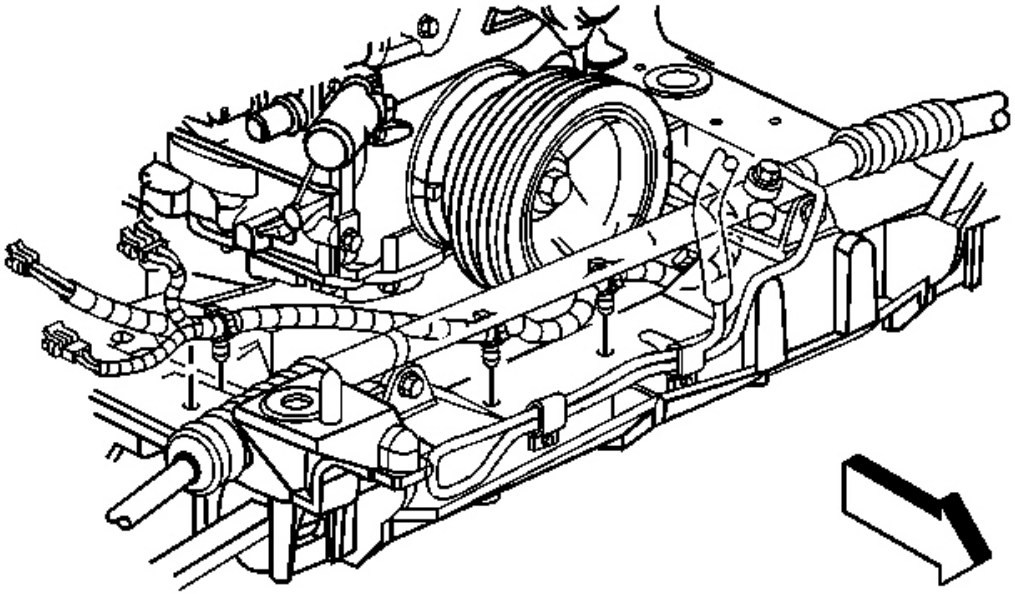

Fig. 306: Transmission Wire Harness & Electrical Connectors
Courtesy of GENERAL MOTORS CORP.

31. Disconnect the wheel speed sensor electrical connectors.
32. If equipped with real time damping (RTD) disconnect the following electrical connectors:
    - Shock absorber damper
    - Position sensor pigtail
33. Unclip the transmission wire harness from the crossmember.
34. Disconnect the electronic variable orifice (EVO) control connector clips from the crossmember.

cardiagn.com

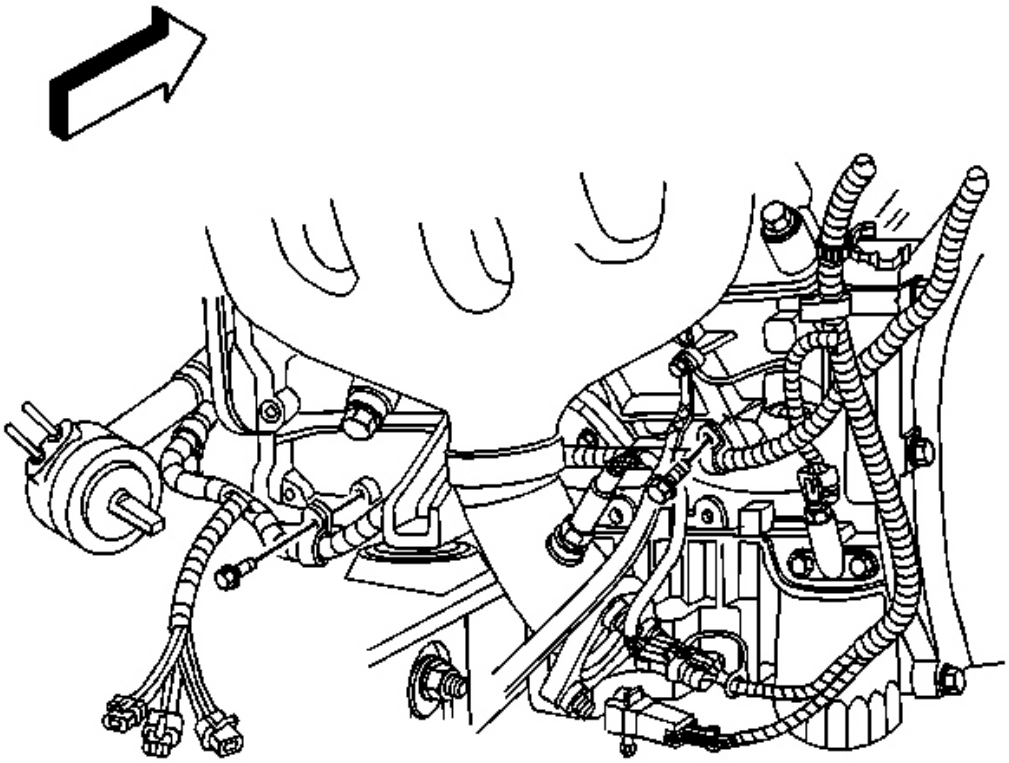

Fig. 307: Transmission Wire Harness & Engine Wire Harness
Courtesy of GENERAL MOTORS CORP.

35. Remove the transmission harness clip bolts from the engine block.
36. Unclip the transmission wire harness from the engine wire harness.
37. Remove the stabilizer shaft. Refer to **Stabilizer Shaft Replacement** in Front Suspension.

cardiagn.com

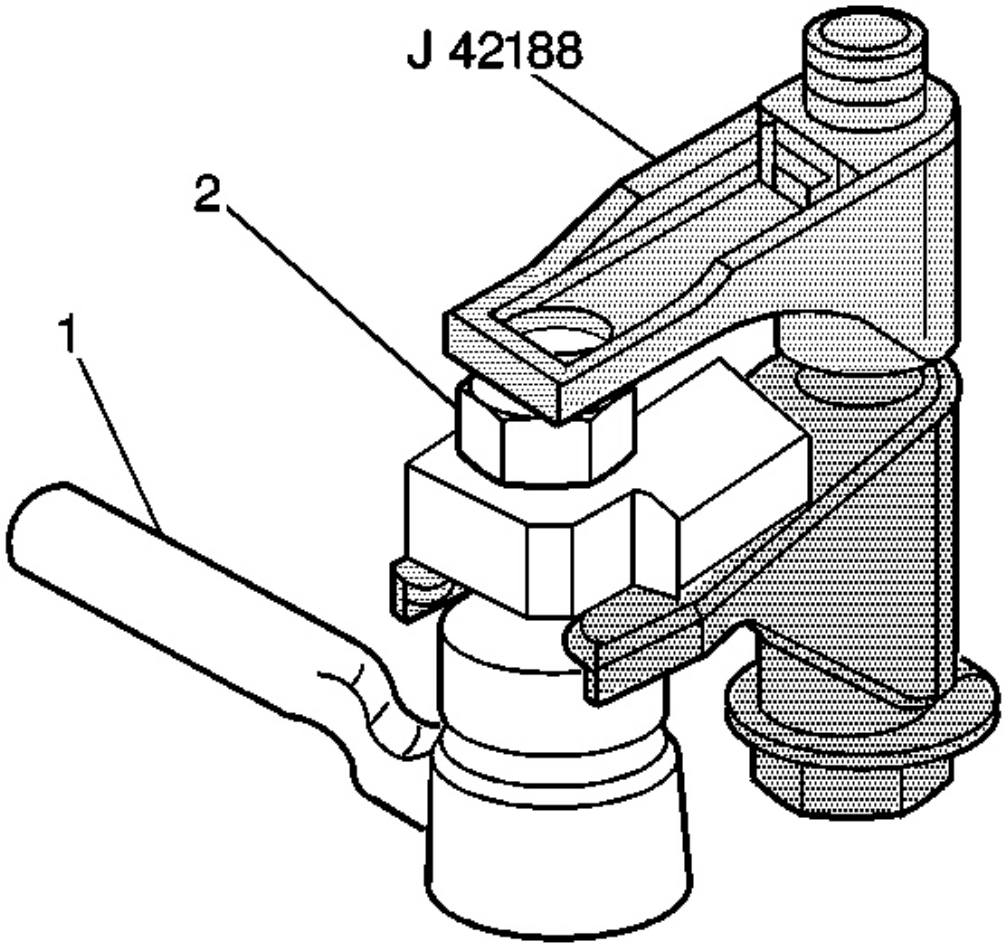

Fig. 308: J 42188, Steering Knuckle & Lower Control Arm Ball Stud
Courtesy of GENERAL MOTORS CORP.

38. Loosen, do not remove, the steering knuckle nut (2) from the lower control arm ball stud.
39. Install the**J 42188** between the steering knuckle and the lower control arm ball stud.
40. Tighten the nut on the **J 42188** until the steering knuckle and the lower control arm ball stud separate.
41. Disconnect the antilock brake system (ABS) electrical connector clips from the crossmember (if equipped).
42. Remove the front transverse leaf spring. Refer to **Front Transverse Spring Replacement** in Front Suspension.

cardiagn.com

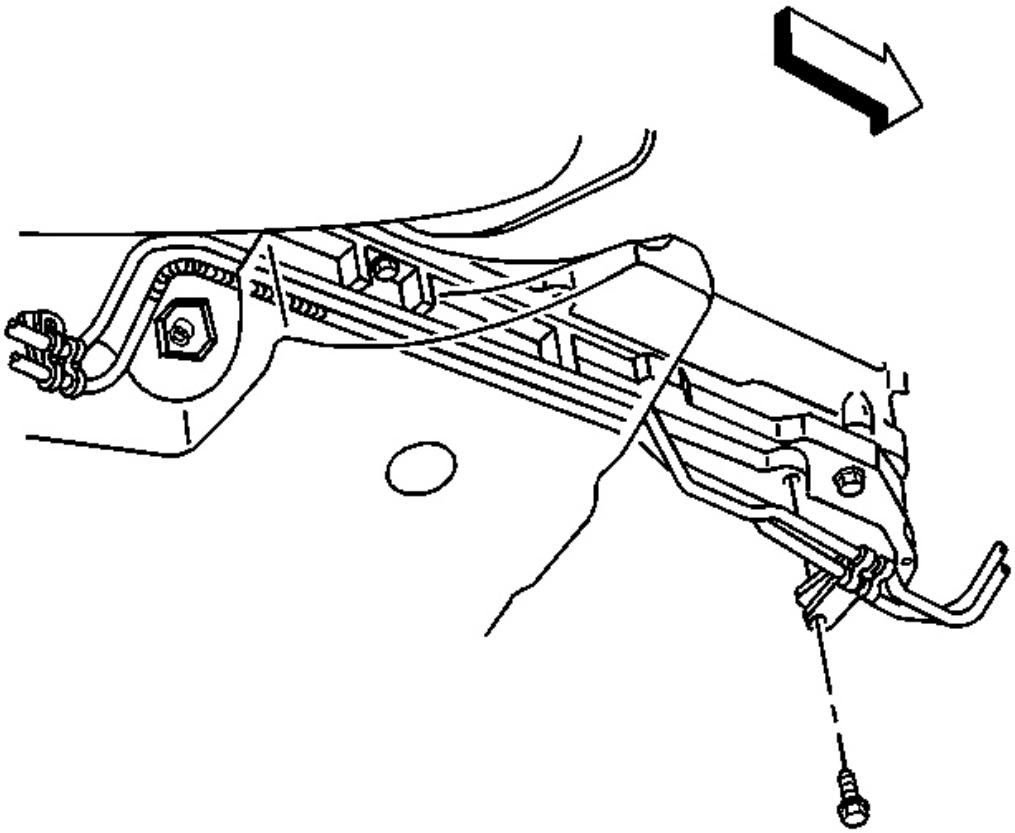

Fig. 309: Automatic Transmission Fluid Cooler Line & Oil Pan
Courtesy of GENERAL MOTORS CORP.

43. Disconnect the automatic transmission fluid cooler pipe clip from the front of the engine oil pan (if equipped).

cardiagn.com

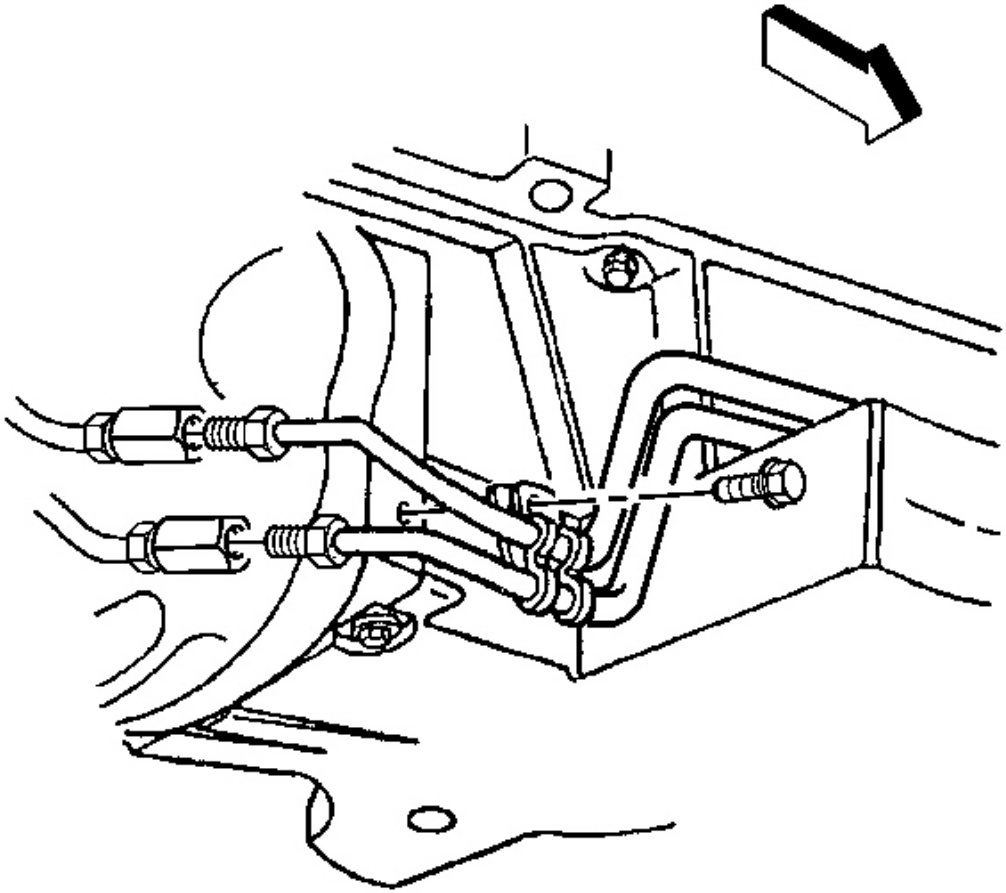

Fig. 310: Automatic Transmission Fluid Cooler Line Clamp & Bolt
Courtesy of GENERAL MOTORS CORP.

44. Disconnect the front automatic transmission fluid cooler pipes from the rear pipes.
45. Disconnect the automatic transmission cooler pipe clip at the right transmission cover (if equipped).

cardiagn.com

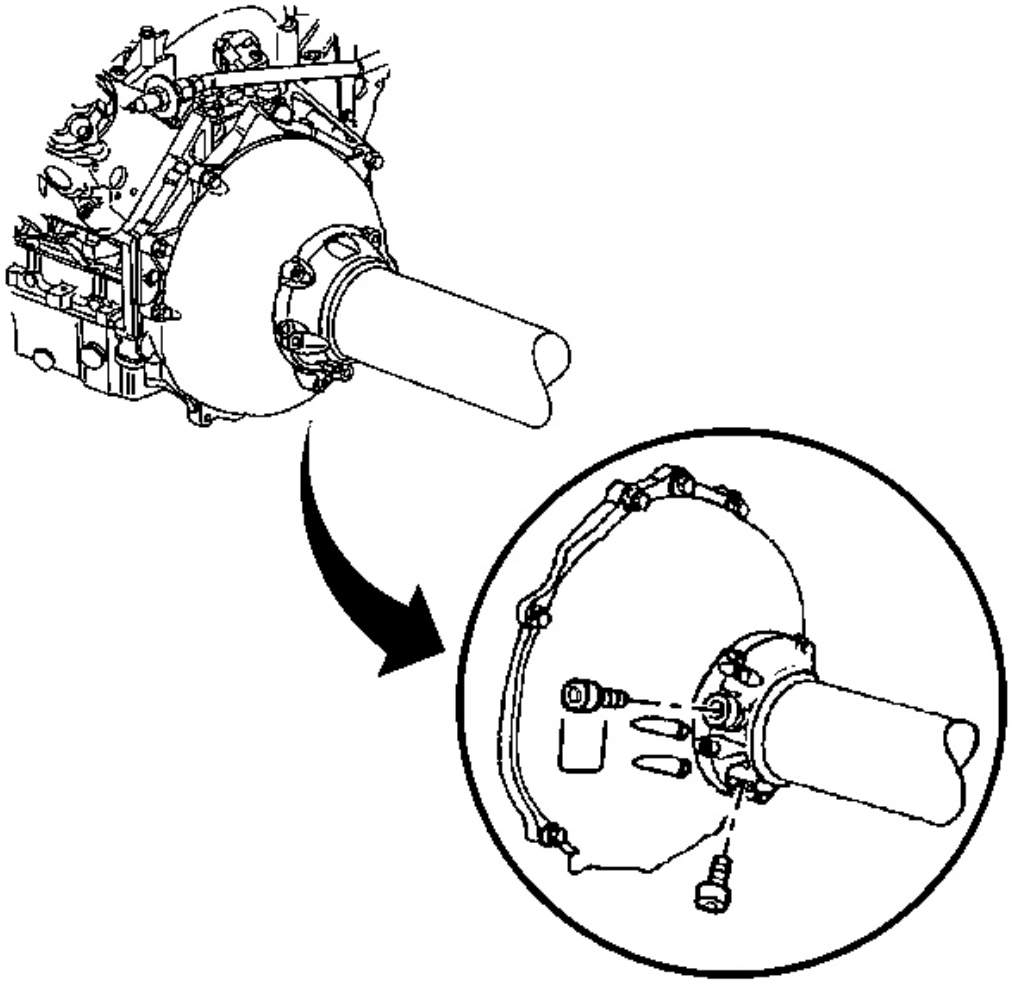

Fig. 311: Driveline Support Plug & Bolts
Courtesy of GENERAL MOTORS CORP.

NOTE: **Refer to Fastener Notice in Cautions and Notices.**

IMPORTANT: Failure to use the minimum fastener length specified will prevent proper retention of the propeller shaft during disassembly.

46. With automatic transmission vehicles, use the following steps:
    1. Remove the 2 driveline support hole plug bolts.
    2. Install a M10.0-1.5 x 55 mm bolt or longer in each plug location.

cardiagn.com

Tighten: Tighten the M10 bearing support bolts to 35 N.m (26 lb ft).

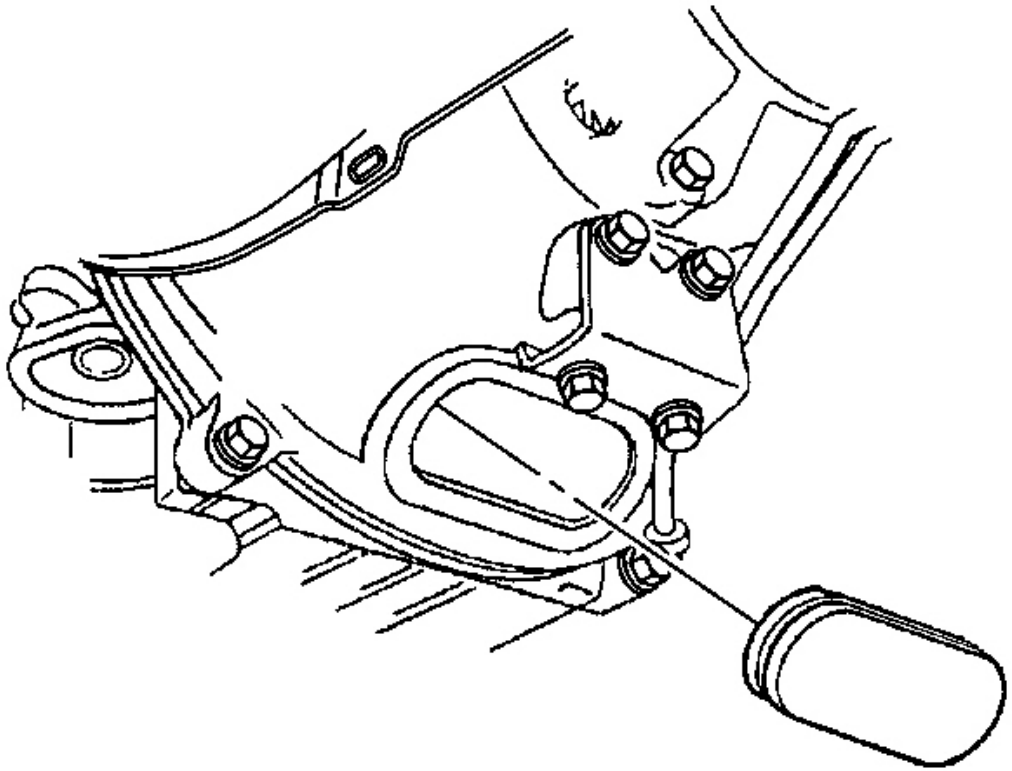

Fig. 312: Flywheel Housing Plug
Courtesy of GENERAL MOTORS CORP.

47. If equipped with a automatic transmission, remove the flywheel housing plug.

cardiagn.com

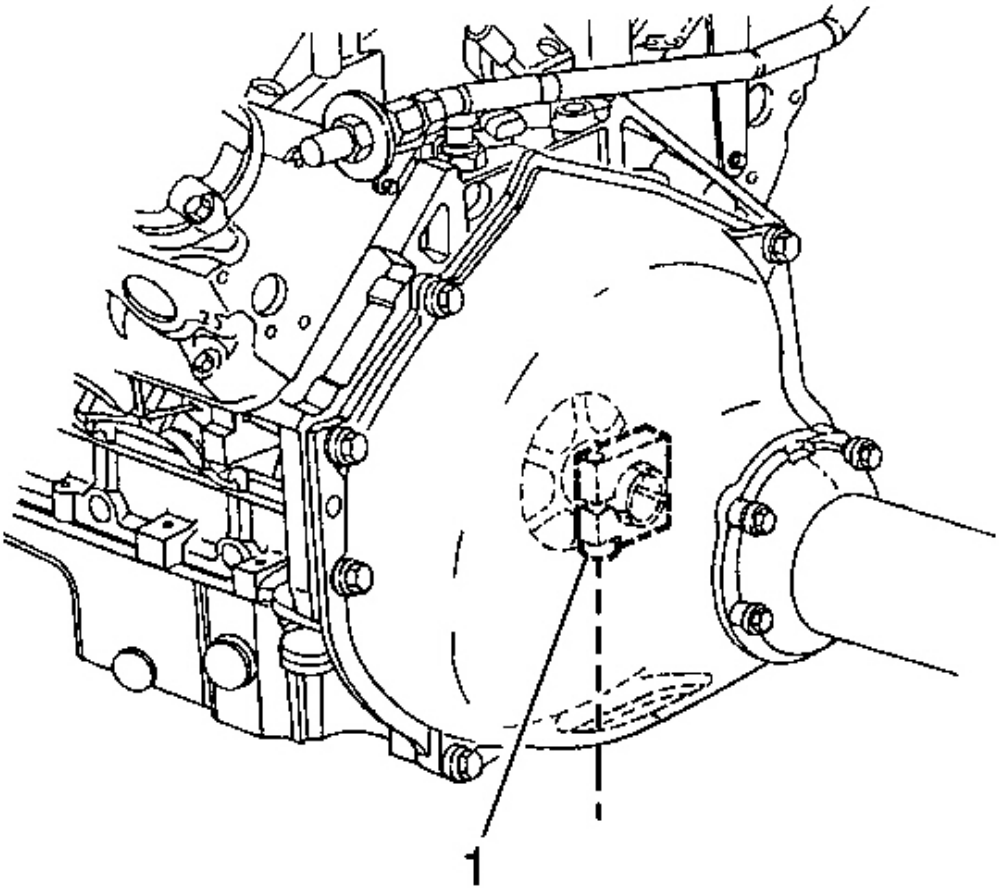

Fig. 313: Prop Shaft Hub Collar & Bolt
Courtesy of GENERAL MOTORS CORP.

48. If equipped with a automatic transmission perform the following:
    1. Orientate the prop shaft hub clamp for access to the bolt (1).
    2. Position the clamp bolt (1) facing downward.
    3. Loosen the prop shaft hub clamp bolt (1).

cardiagn.com

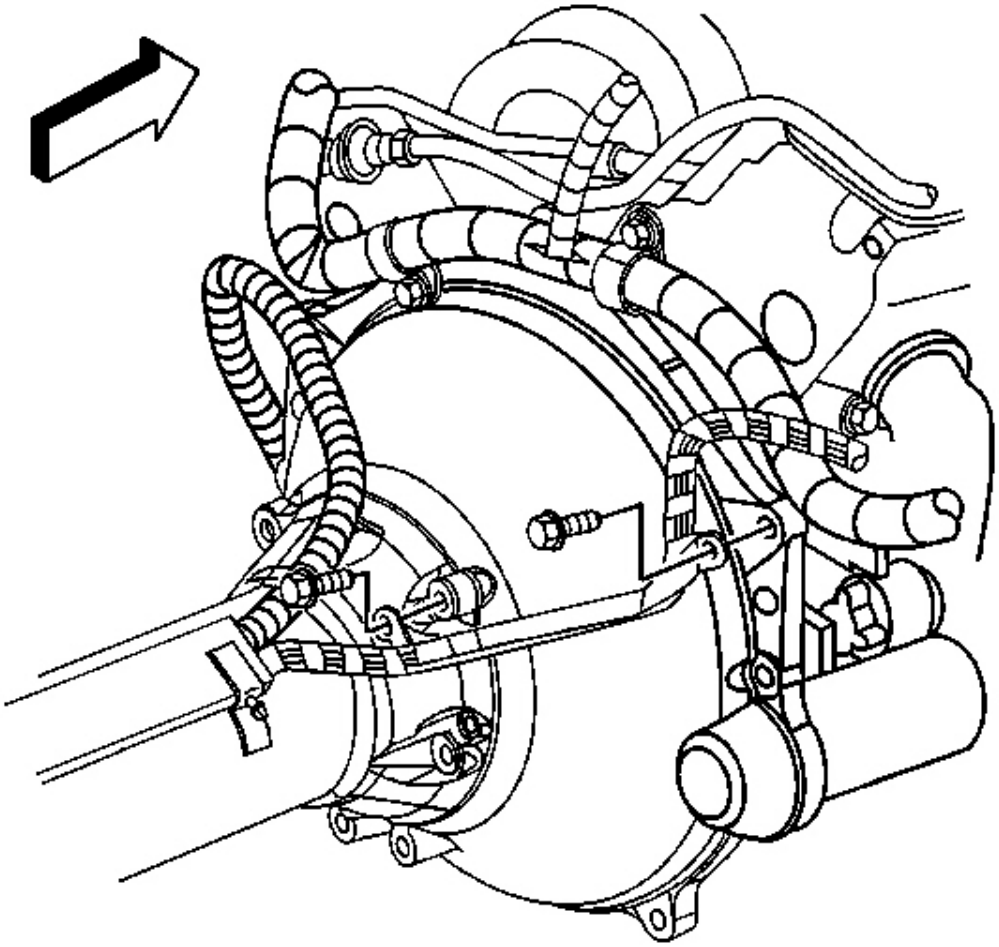

Fig. 314: Transmission Wire Harness Bracket & Bolts
Courtesy of GENERAL MOTORS CORP.

49. Remove bolts attaching the transmission wire harness bracket to the flywheel housing.
50. Remove the transmission wire harness from its mounting location, rearward toward the driveline support.
51. Lay the harness on the driveline support.

    Secure if necessary.

cardiagn.com

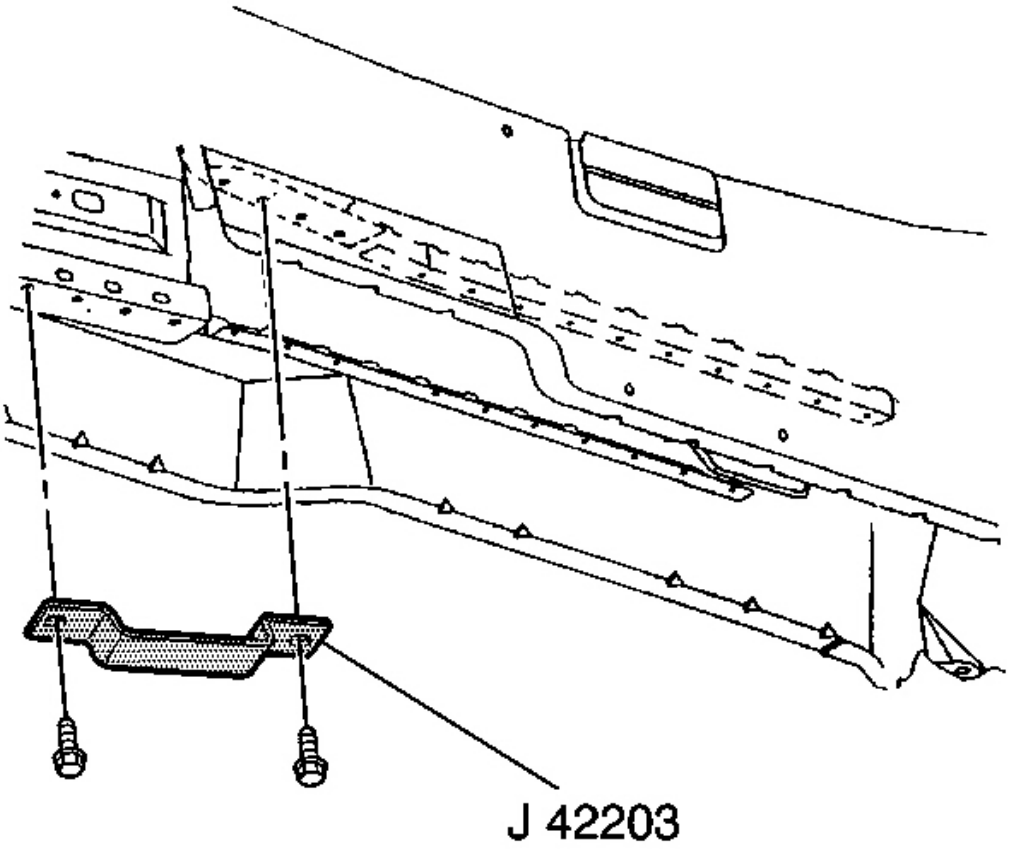

Fig. 315: J 42203, Close-Out Panel Flange & Bolts
Courtesy of GENERAL MOTORS CORP.

IMPORTANT: The weight of the engine should never be supported by the J 42203 .

52. Install the **J 42203** to the close-out panel flange.

cardiagn.com

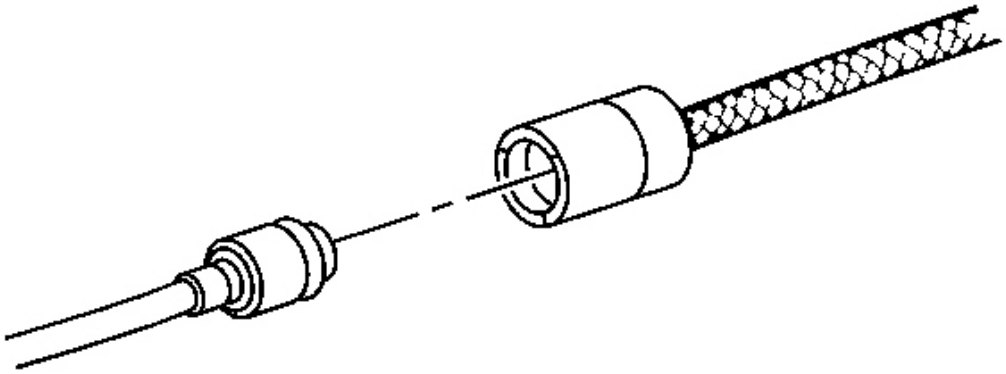

Fig. 316: Identifying White Circular Release Ring On The Actuator Hose
Courtesy of GENERAL MOTORS CORP.

53. If equipped with a manual transmission perform the following:
    1. Unclip the clutch actuator hose from the clutch actuator hose clip.
    2. Using the **J 36221** , depress the white circular release ring on the actuator hose and simultaneously pull lightly on the master cylinder hose to disconnect.
    3. Protect both ends from dirt and damage.

cardiagn.com

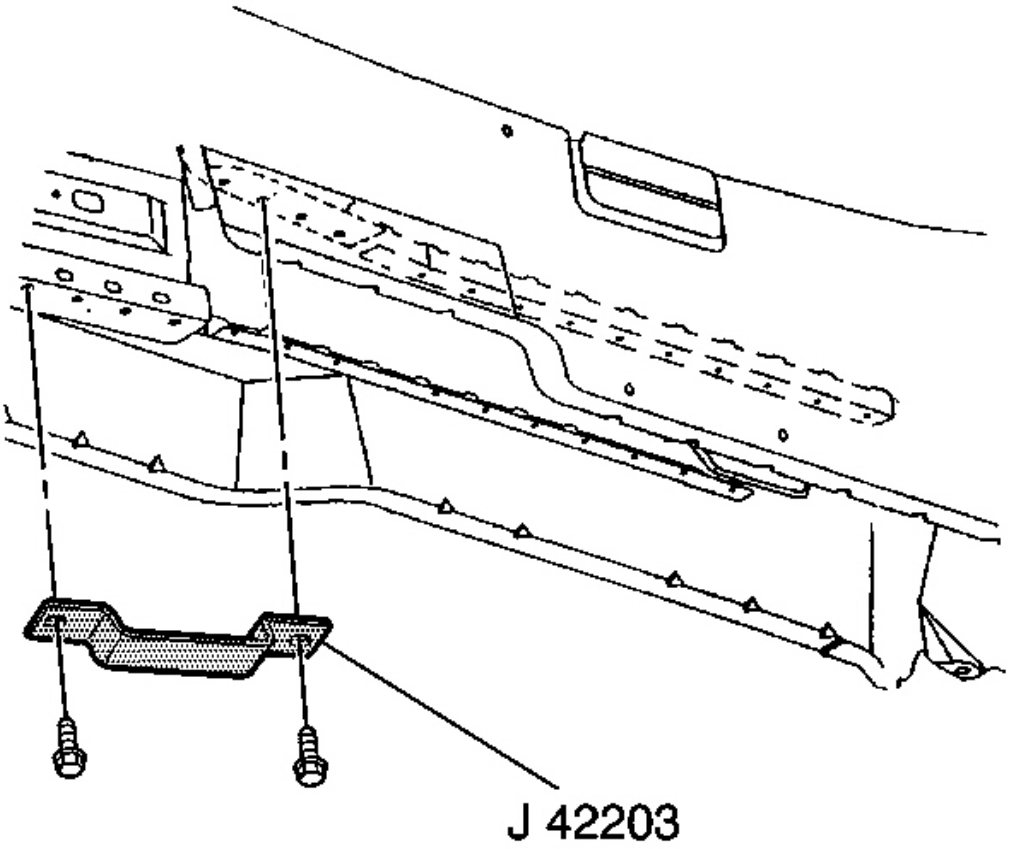

Fig. 317: J 42203, Close-Out Panel Flange & Bolts
Courtesy of GENERAL MOTORS CORP.

IMPORTANT: The weight of the engine should never be supported by the J 42203 .

54. Install the **J 42203** to the close-out panel flange.
55. Slowly lower the vehicle onto the **J 39580** and the **J 39580-500** .
56. Support the engine and crossmember on the **J 39580** and the **J 39580-500** .

cardiagn.com

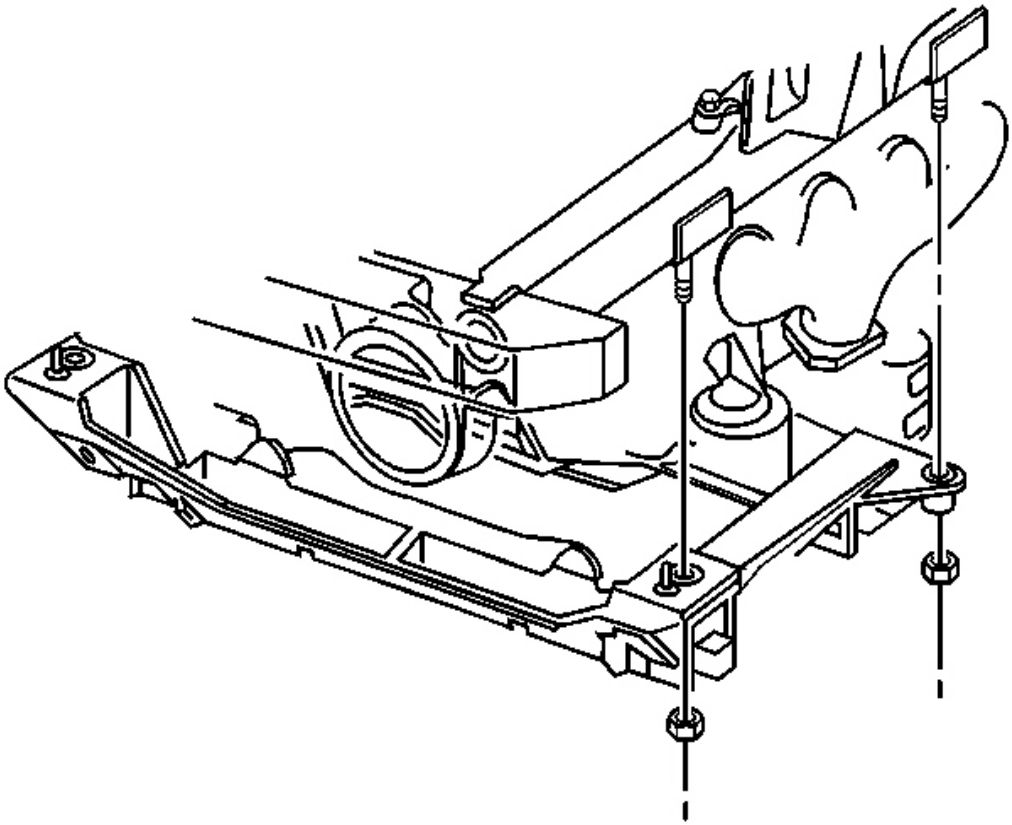

Fig. 318: Front & Rear Crossmember Nuts
Courtesy of GENERAL MOTORS CORP.

57. Using HAND TOOLS ONLY, remove the front and rear crossmember nuts.
58. Partially raise the vehicle.

cardiagn.com

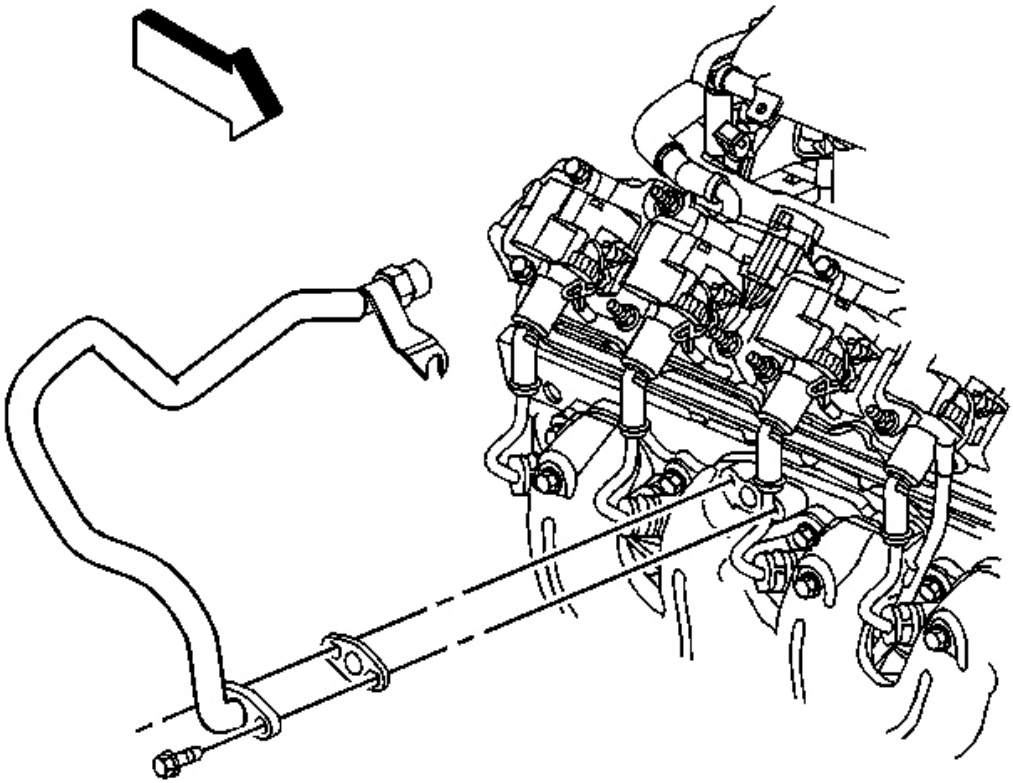

Fig. 319: AIR Pipe & Bolts
Courtesy of GENERAL MOTORS CORP.

59. Remove the AIR pipe bolts from the right exhaust manifold.

cardiagn.com

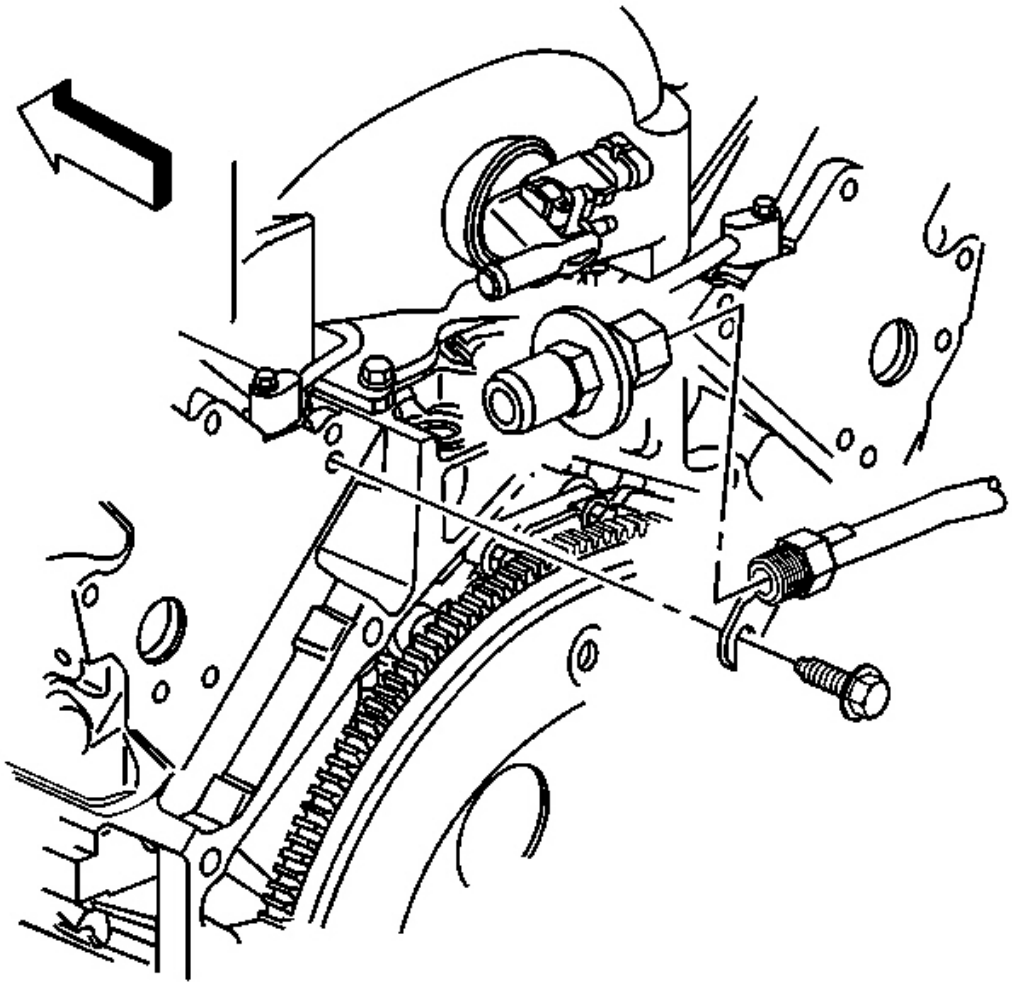

Fig. 320: AIR Pipe Gasket, Exhaust Manifold & Bolts
Courtesy of GENERAL MOTORS CORP.

60. Remove the AIR pipe bracket bolt (at the rear of the cylinder head).
61. Remove the AIR pipe (with check valve) and gasket.

cardiagn.com

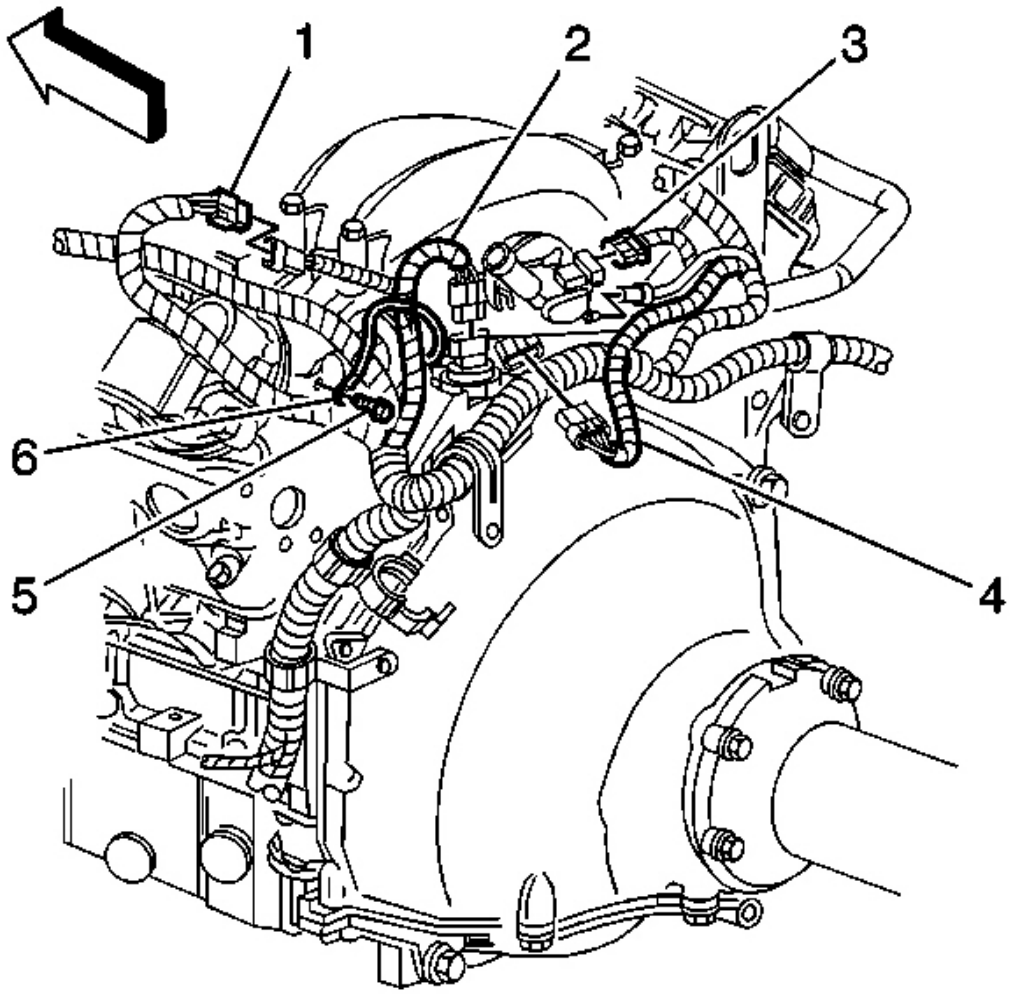

Fig. 321: MAP Sensor Vacuum Hose & MAP Sensor Electrical Connector
Courtesy of GENERAL MOTORS CORP.

62. Remove the ground strap bolt (5).
63. Remove the ground strap (6) from the left rear cylinder head.
64. Disconnect the following electrical connectors from the back of the engine:
    - The knock sensor wire harness (1)
    - The engine oil pressure sensor (2)
    - The manifold absolute pressure (MAP) sensor (3)
    - The camshaft position (CMP) sensor (4)

cardiagn.com

65. Disconnect the vacuum hose from the MAP sensor.

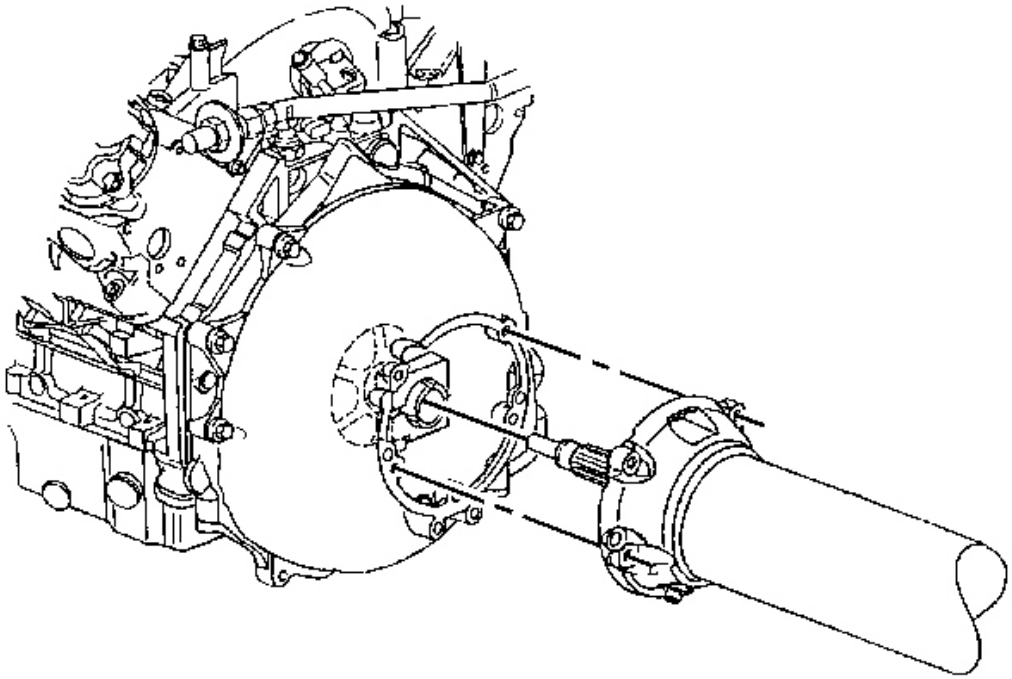

Fig. 322: Driveline Support & Bolts
Courtesy of GENERAL MOTORS CORP.

66. Remove the driveline support bolts.

cardiagn.com

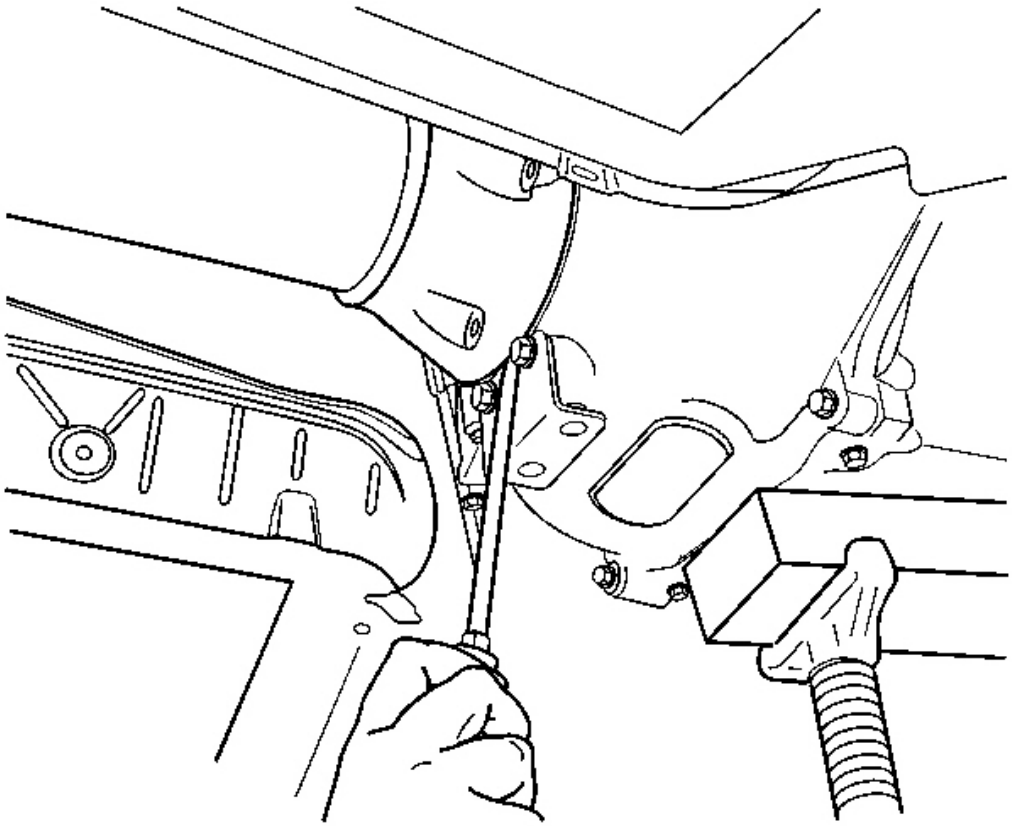

Fig. 323: Inserting Flat Tool Separating Flywheel Housing & Driveline Support
Courtesy of GENERAL MOTORS CORP.

IMPORTANT: Visually inspect the transmission wiring harness to ensure detachment from the engine.

67. Insert a flat bladed screwdriver, or similar tool, between the edge of the driveline support and the flywheel housing, then separate the flywheel housing from the driveline support.
68. Slowly pull the engine away from the propeller shaft.
69. As soon as the propeller input shaft clears the flywheel housing, slowly raise the vehicle.
70. Slide the engine and crossmember forward in order to clear the propeller shaft spline.

cardiagn.com

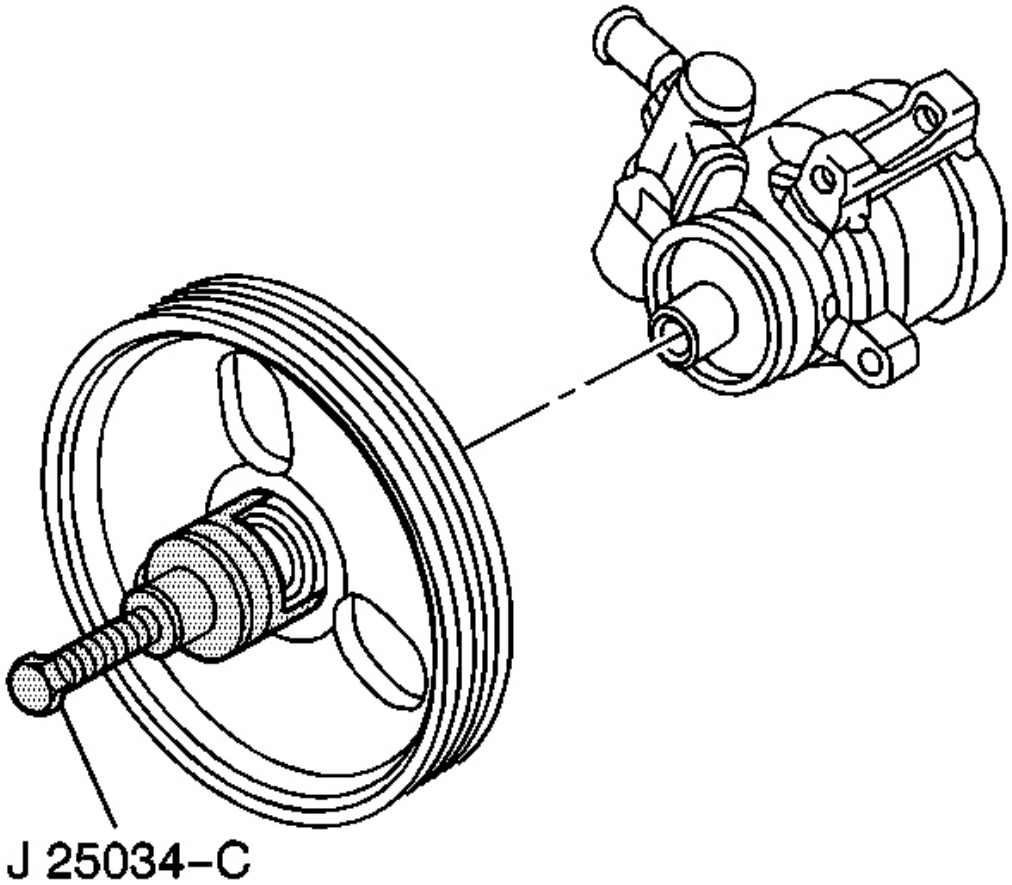

Fig. 324: Power Steering Pump Pulley &
Courtesy of GENERAL MOTORS CORP.

IMPORTANT: Visually inspect the wiring harness clearances while raising the vehicle.

71. Raise the vehicle completely off of the engine and crossmember.
72. Remove the power steering pump pulley hub cap, if necessary.
73. Using the **J 25034-C** remove the power steering pump pulley.

cardiagn.com

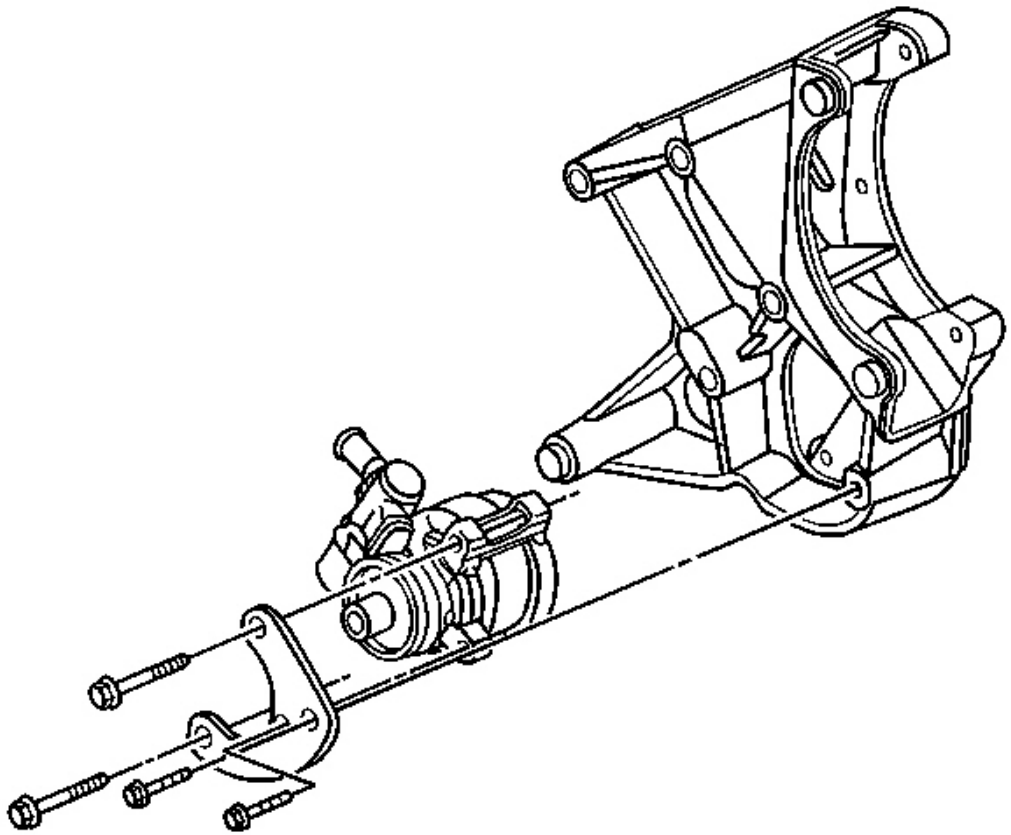

Fig. 325: Power Steering Pump, Generator Bracket & Bolts
Courtesy of GENERAL MOTORS CORP.

IMPORTANT: It is not necessary to open the power steering system during the engine removal procedure.

74. Remove the power steering pump bolts.
75. Remove the power steering pump brace.
76. Remove the power steering pump (with reservoir) from the engine and reposition them to the crossmember.
77. Remove the A/C compressor bracket. Refer to **Compressor Mounting Bracket Replacement** in Heating, Ventilation, and Air Conditioning.

cardiagn.com

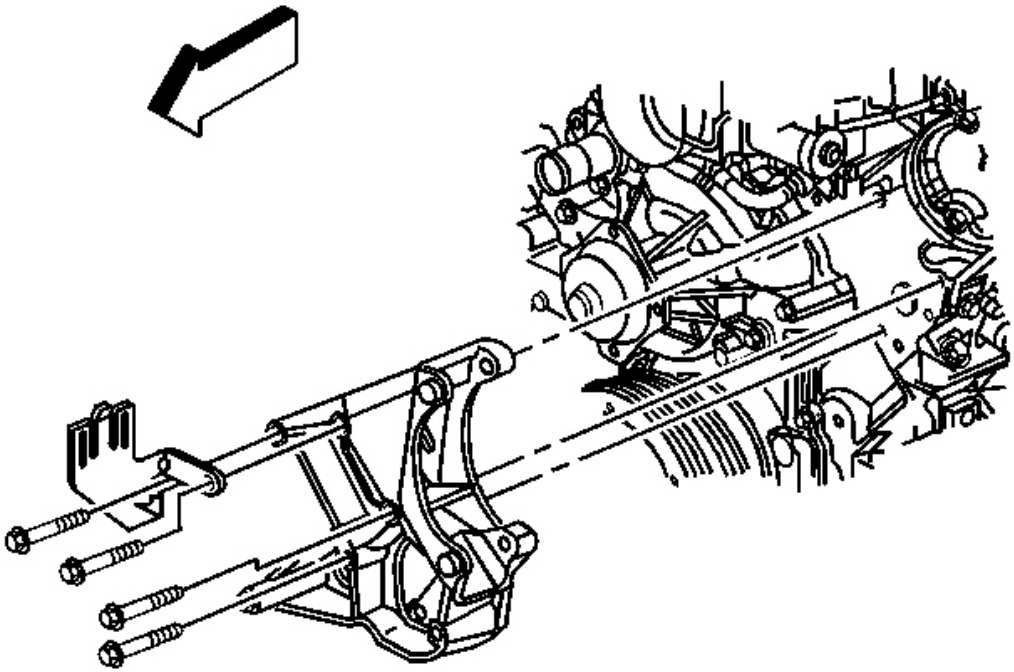

Fig. 326: Generator Bracket & Bolts
Courtesy of GENERAL MOTORS CORP.

78. Remove the generator bracket bolts.
79. Remove the generator bracket and power steering pump bracket.

cardiagn.com

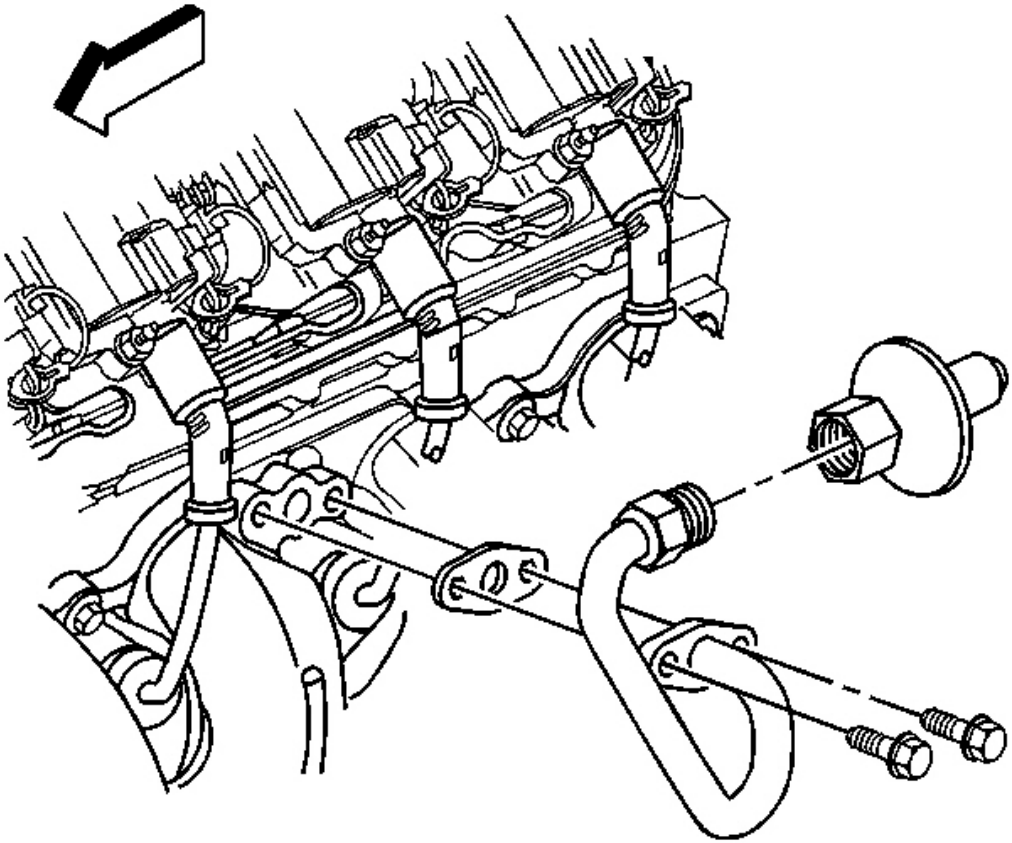

Fig. 327: AIR Pipe Bolts, Exhaust Manifold & Bolts
Courtesy of GENERAL MOTORS CORP.

80. Remove the AIR pipe bolts from the left exhaust manifold.
81. Remove the AIR pipe and gasket.
82. Install the **J 41798** to the engine.
83. Remove the spark plugs. Refer to **Spark Plug Replacement** in Engine Controls - 5.7 L.

cardiagn.com

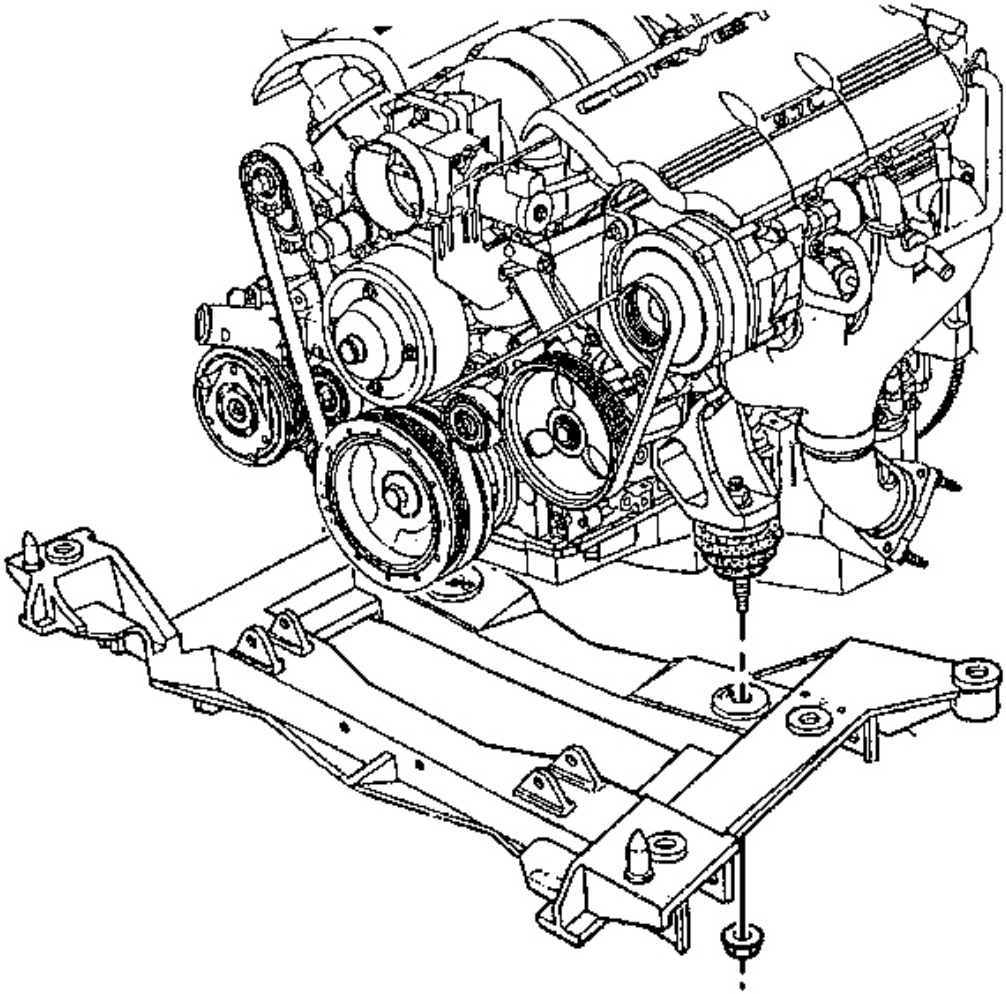

Fig. 328: Engine Mount & Nuts
Courtesy of GENERAL MOTORS CORP.

84. Remove the engine mount nuts.
85. Using a engine hoist and the **J 41798** slowly raise the engine.
86. Remove the engine from the crossmember.

cardiagn.com

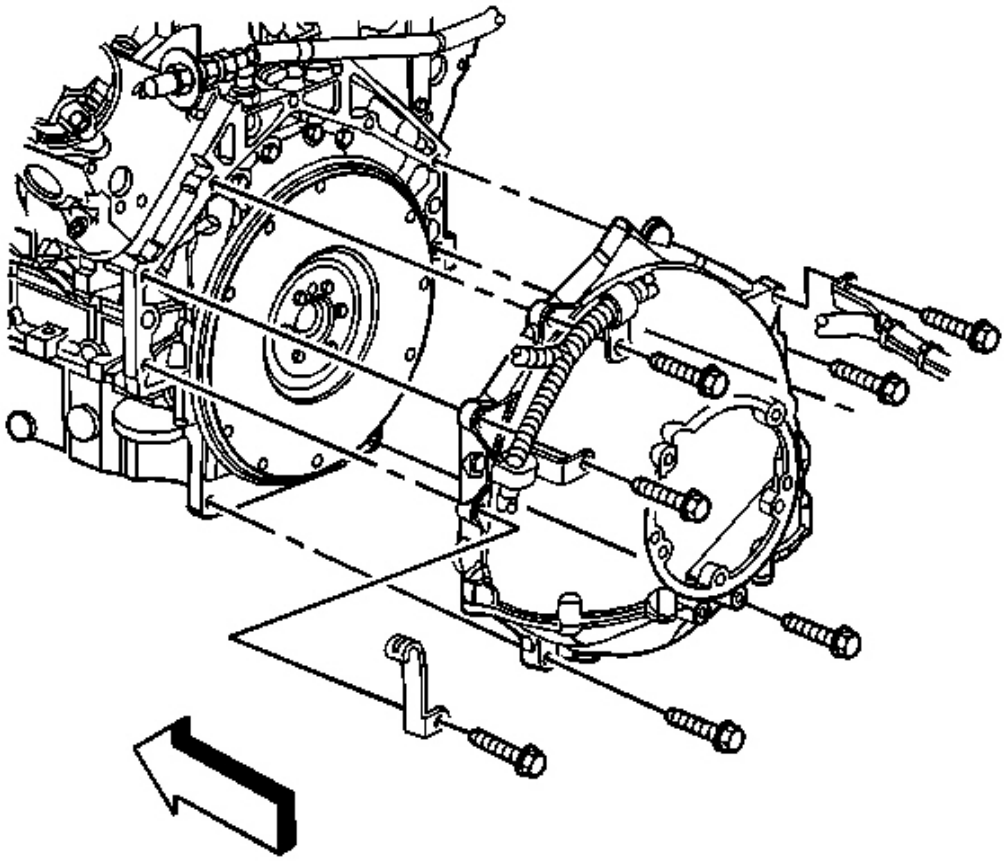

Fig. 329: Bottom Flywheel Housing-To-Oil Pan & Bolts
Courtesy of GENERAL MOTORS CORP.

87. Remove the flywheel housing bolts.
88. Remove the flywheel housing from the engine block.
89. Install the engine onto an engine stand and prepare for disassembly. Refer to **Engine Balancing** .
90. Remove the engine hoist.
91. Remove the **J 41798** from the engine.
92. Remove the engine mount bracket bolts.
93. Remove the engine mount brackets from the engine block.

Installation Procedure

Important

cardiagn.com

The steps in the following procedure are in a specific order. Follow these steps in this order and ignore no details.

1. Prepare the engine for installation. Refer to **Engine Prelubing** and **Engine Balancing** .

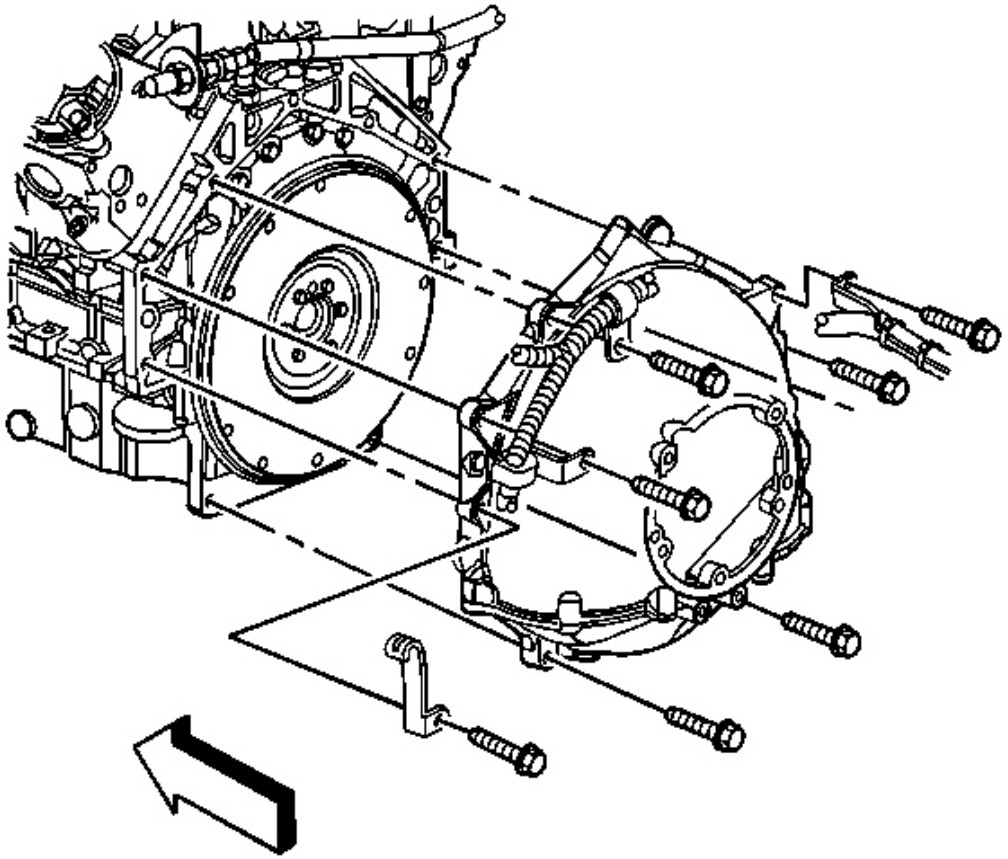

Fig. 330: Bottom Flywheel Housing-To-Oil Pan & Bolts
Courtesy of GENERAL MOTORS CORP.

NOTE: Refer to Fastener Notice in Cautions and Notices.

2. Install the engine mount brackets to the engine block.
3. Install the engine mount bracket bolts.

Tighten: Tighten the engine mount bracket bolts to 50 N.m (37 lb ft).

cardiagn.com

4. Install the **J 41798** to the engine.
5. Using a engine hoist and the **J 41798** raise the engine slightly.
6. Remove the engine from the engine stand.
7. Install the flywheel housing to the engine block.
8. Install the flywheel housing bolts.

   Tighten: Tighten the flywheel housing bolts to 50 N.m (37 lb ft).

9. Using a engine hoist and the **J 41798** lower the engine onto the crossmember.

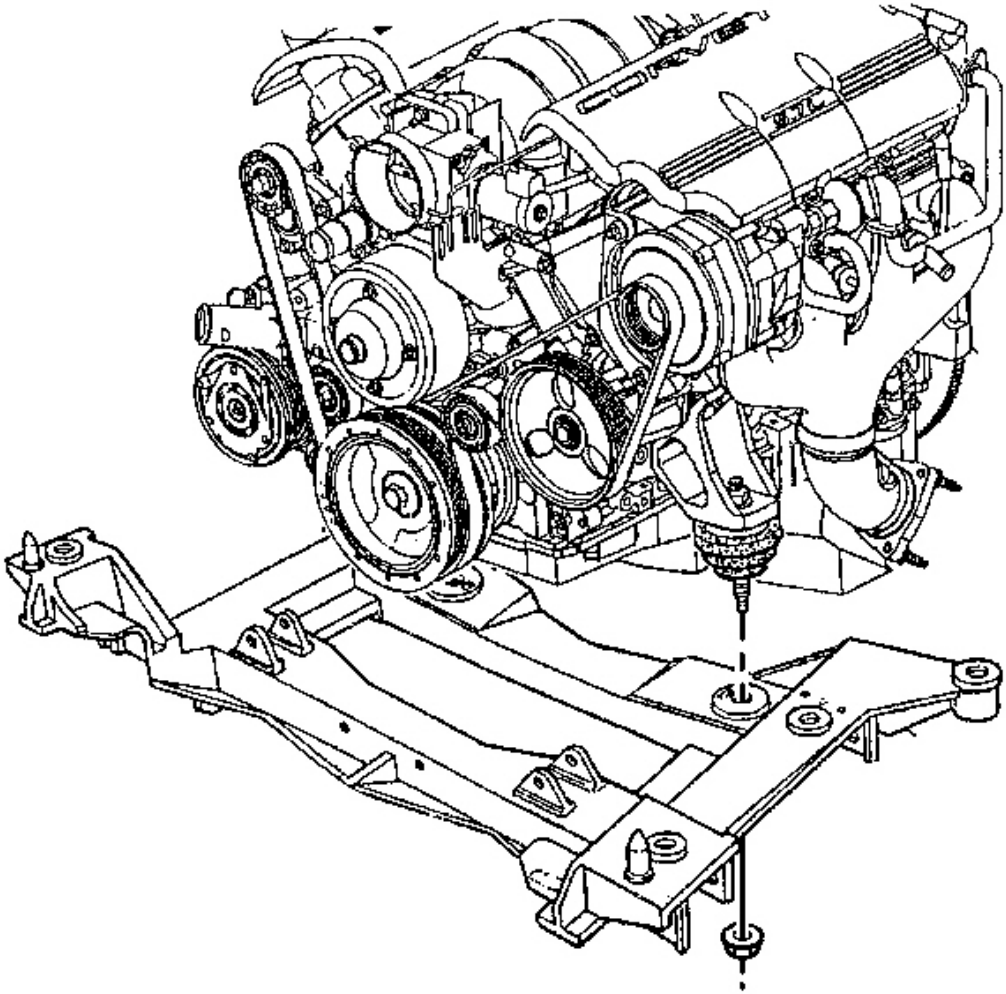

Fig. 331: Engine Mount & Nuts

cardiagn.com

Courtesy of GENERAL MOTORS CORP.

10. Install the engine mount nuts.

    Tighten: Tighten the engine mount nuts to 65 N.m (48 lb ft).

11. Install the spark plugs. Refer to **Spark Plug Replacement** in Engine Controls - 5.7 L.
12. Remove the **J 41798** from the engine.

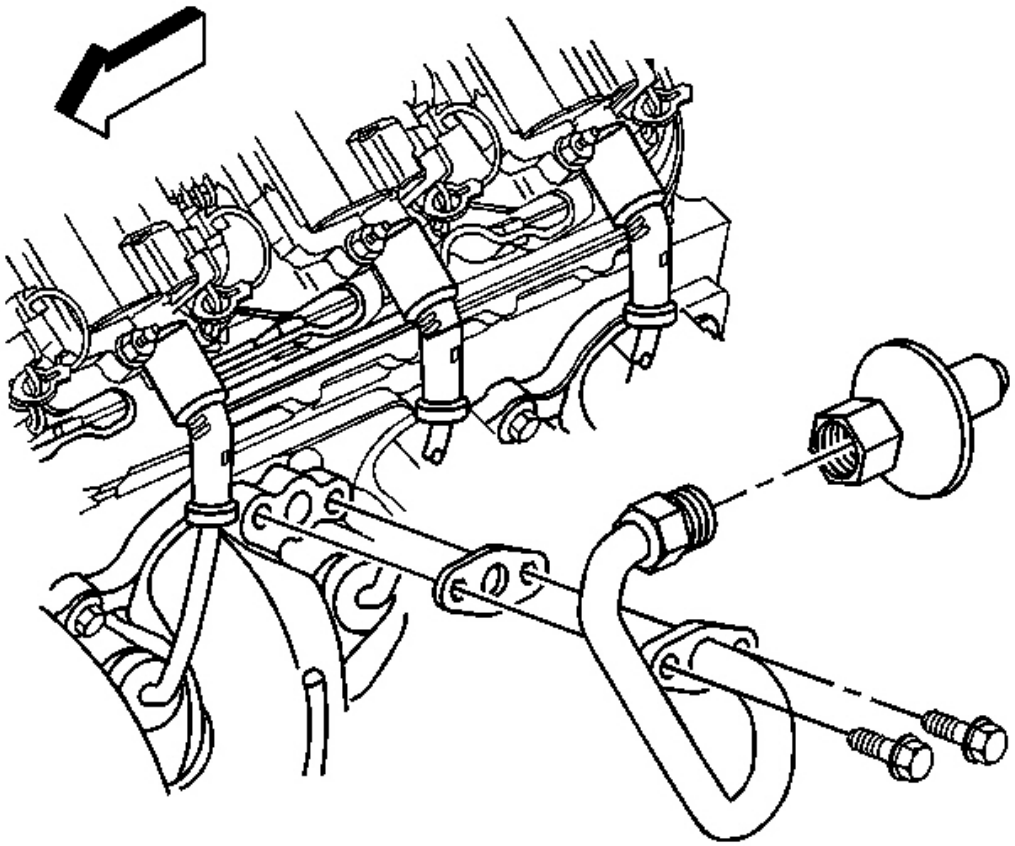

Fig. 332: AIR Pipe Bolts, Exhaust Manifold & Bolts
Courtesy of GENERAL MOTORS CORP.

13. Clean the exhaust manifold AIR pipe gasket flange, if necessary.
14. Install a NEW AIR pipe gasket and the pipe.
15. Install the AIR pipe bolts.

cardiagn.com

Tighten: Tighten the AIR pipe bolts to 20 N.m (15 lb ft).

16. Install the A/C compressor bracket. Refer to **Compressor Mounting Bracket Replacement** in Heating, Ventilation, and Air Conditioning.

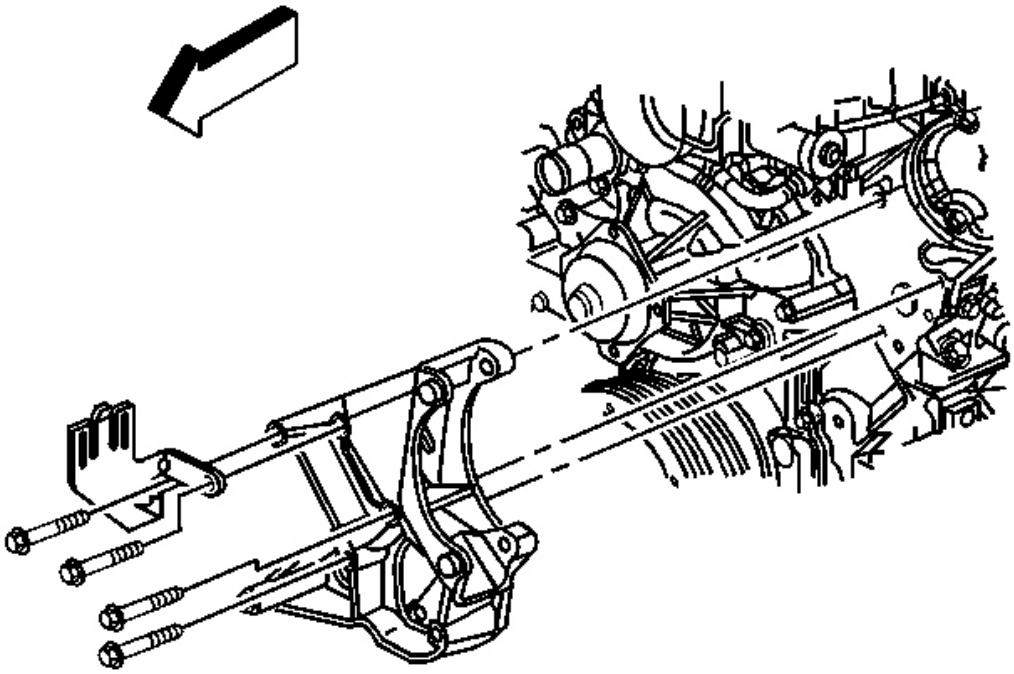

Fig. 333: Generator Bracket & Bolts
Courtesy of GENERAL MOTORS CORP.

17. Install the generator bracket and power steering pump bracket.
18. Install the generator bracket bolts until snug.
19. Tighten the generator bracket bolts in the following order:
    1. Inner power steering pump reservoir bracket bolt
    2. Upper generator bracket bolt
    3. Outer power steering pump reservoir bracket bolt
    4. Lower generator bracket bolt

    Tighten: Tighten the generator bracket bolts to 50 N.m (37 lb ft).

cardiagn.com

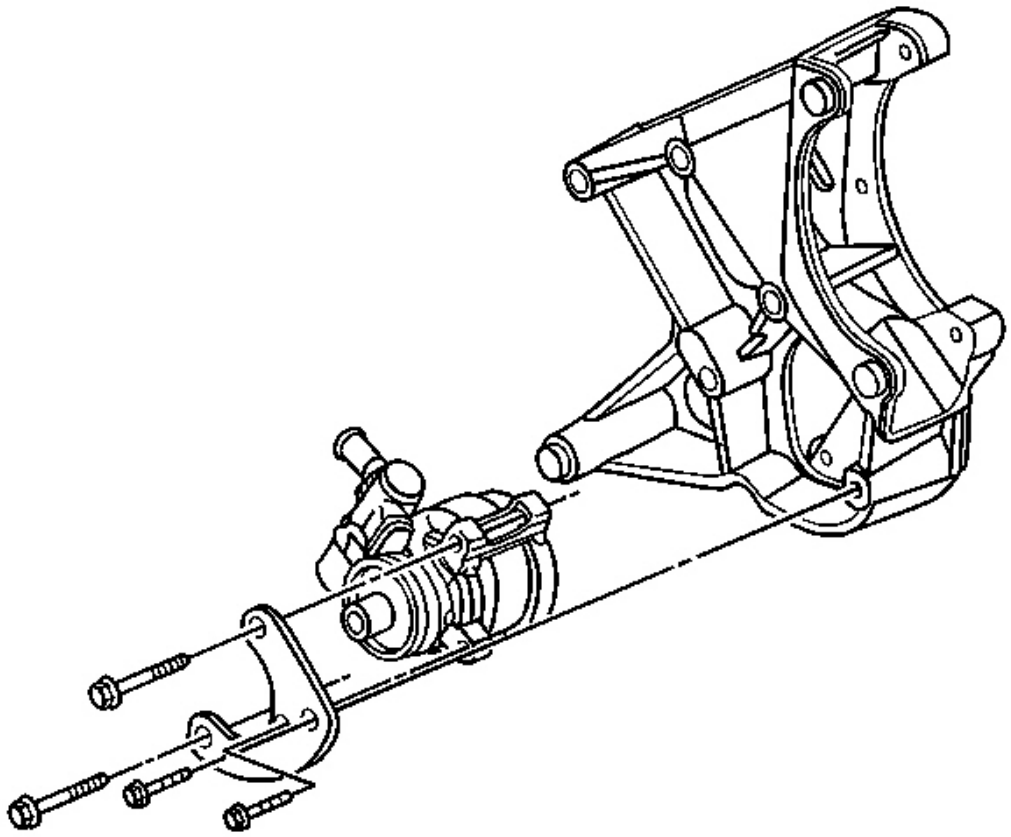

Fig. 334: Power Steering Pump, Generator Bracket & Bolts
Courtesy of GENERAL MOTORS CORP.

20. Install the power steering pump (with reservoir) to the generator bracket.
21. Install the power steering pump brace.
22. Install the power steering pump bolts.

Tighten: Tighten the power steering pump bolts to 25 N.m (18 lb ft).

cardiagn.com

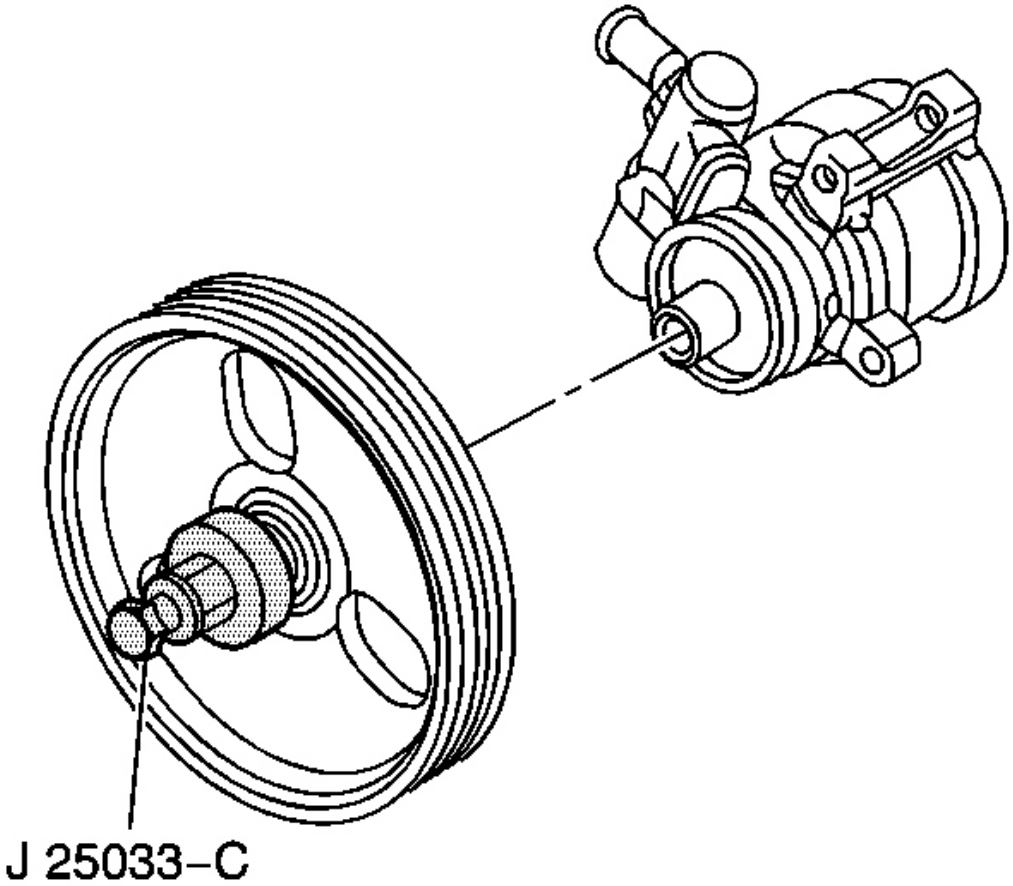

Fig. 335: J 25033-C & Power Steering Pump Pulley
Courtesy of GENERAL MOTORS CORP.

23. Using the **J 25033-C** install the power steering pump pulley.
24. Install the power steering pump pulley hub cap, if necessary.
25. Roll the engine and crossmember underneath the vehicle.
26. Partially lower the vehicle onto the engine and crossmember.

cardiagn.com

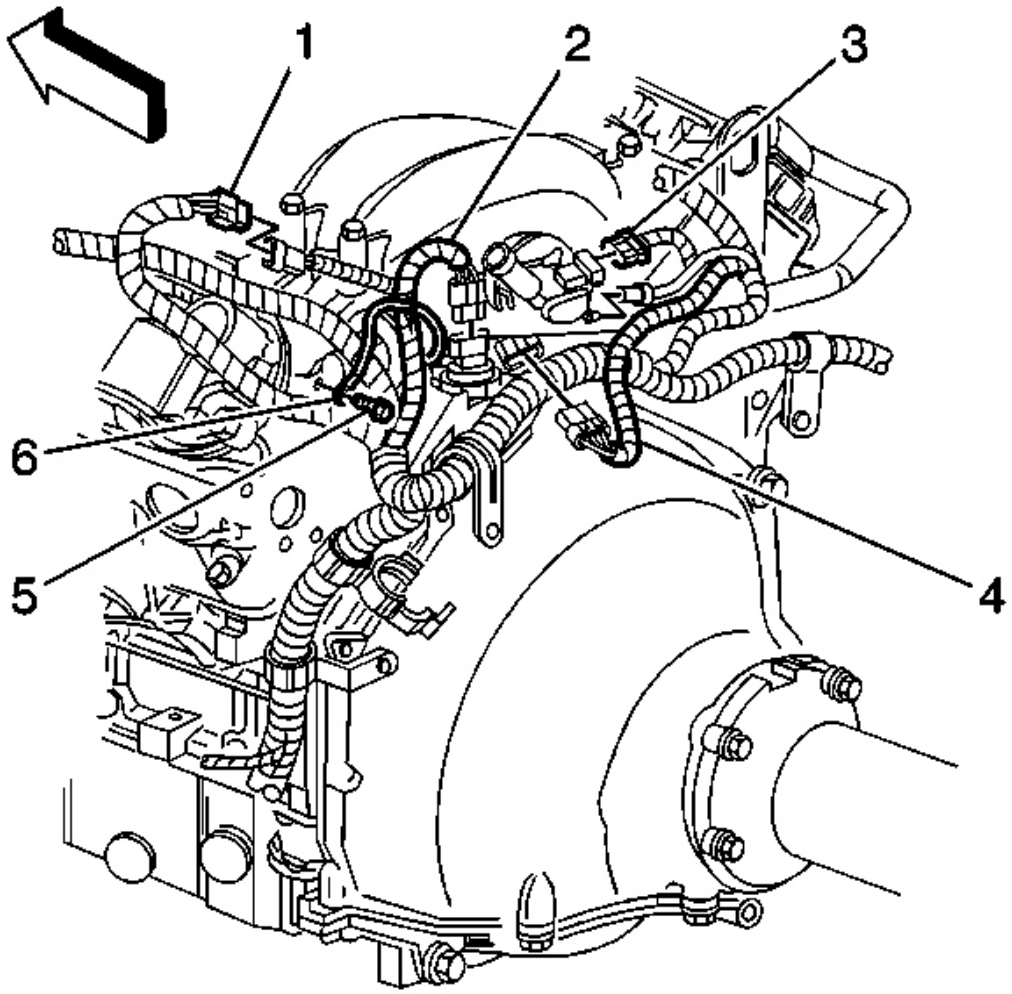

Fig. 336: MAP Sensor Vacuum Hose & MAP Sensor Electrical Connector
Courtesy of GENERAL MOTORS CORP.

27. Install the ground strap (6) and ground strap bolt (5) to the rear of the left cylinder head.

    Tighten: Tighten the ground strap bolt (5) to 32 N.m (24 lb ft).

28. Route the electrical harness and connect the following electrical connectors at the rear of the engine:
    - The knock sensor wire harness (1)
    - The engine oil pressure sensor (2)
    - The MAP sensor (3)

cardiagn.com

- The CMP sensor (4)

29. Connect the vacuum hose to the MAP sensor.

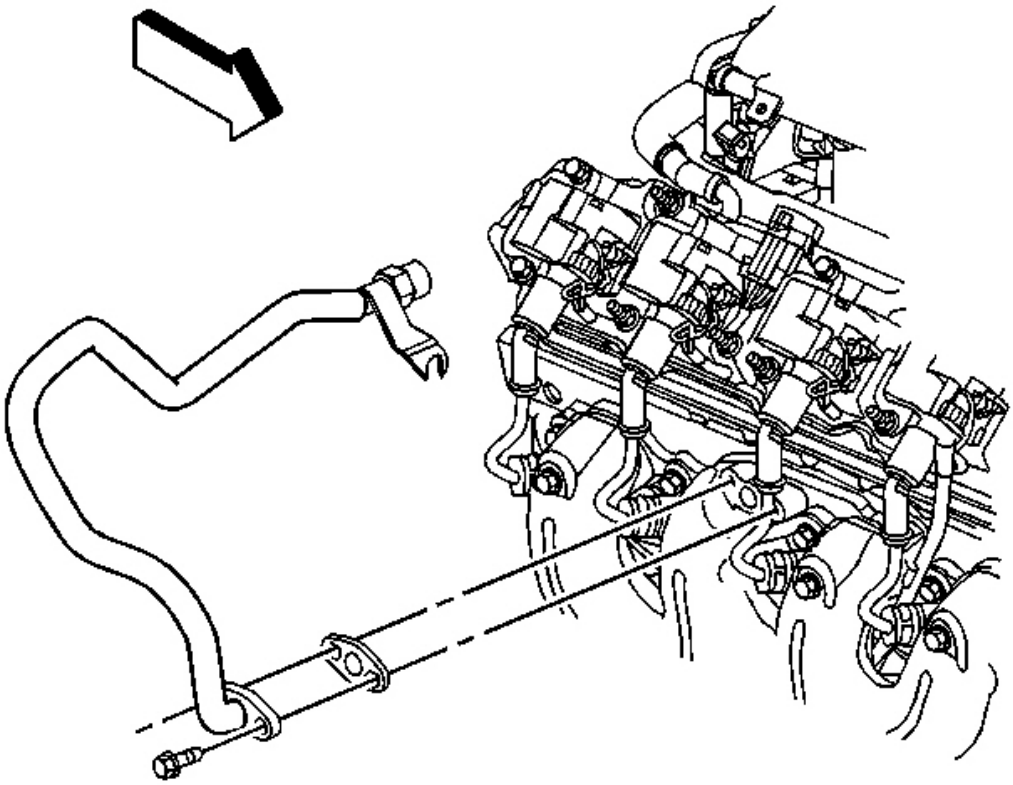

Fig. 337: AIR Pipe & Bolts
Courtesy of GENERAL MOTORS CORP.

30. Clean the exhaust manifold AIR gasket flange, if necessary.
31. Install a NEW AIR pipe gasket and the pipe (with check valve) to the right exhaust manifold.
32. Install the AIR pipe bolts until snug.

cardiagn.com

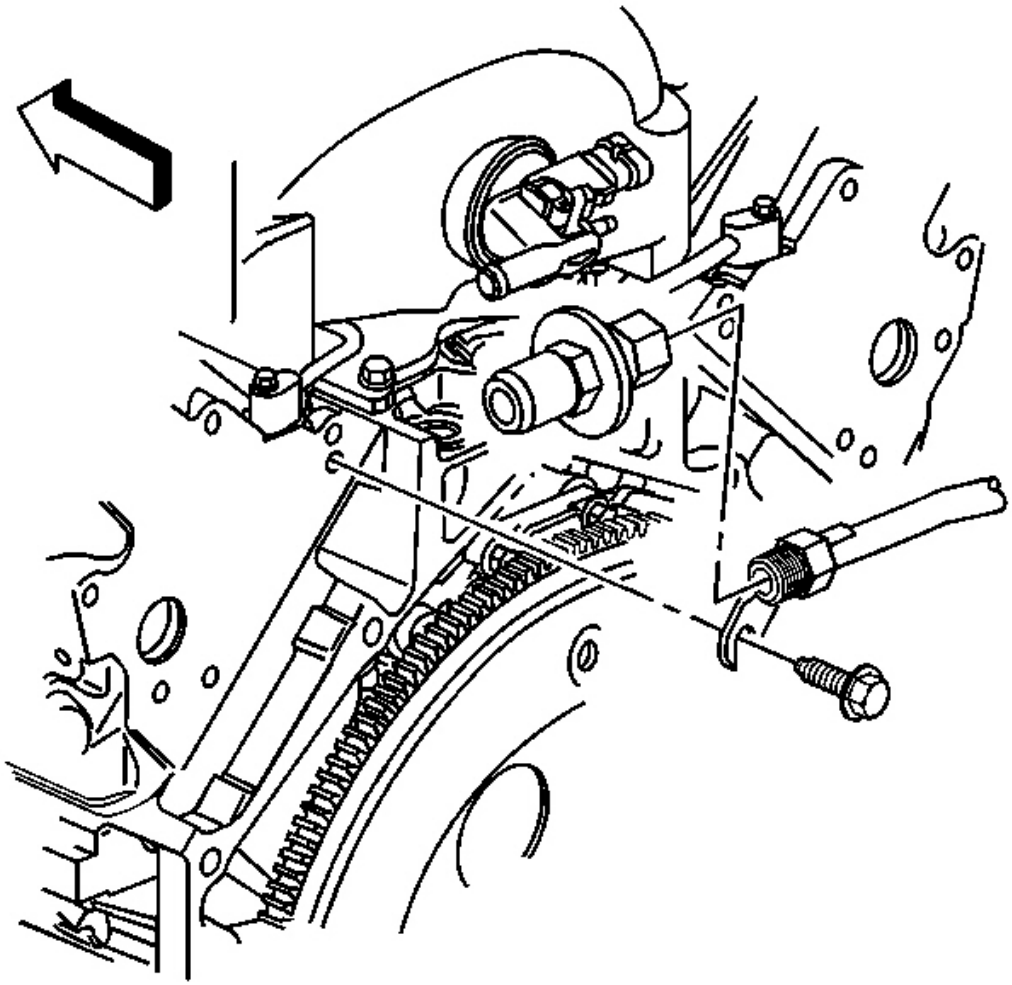

Fig. 338: AIR Pipe Gasket, Exhaust Manifold & Bolts
Courtesy of GENERAL MOTORS CORP.

33. Install the AIR pipe bracket bolt (at the rear of the cylinder head).

    Tighten: Tighten the AIR pipe bolts to 20 N.m (15 lb ft).

cardiagn.com

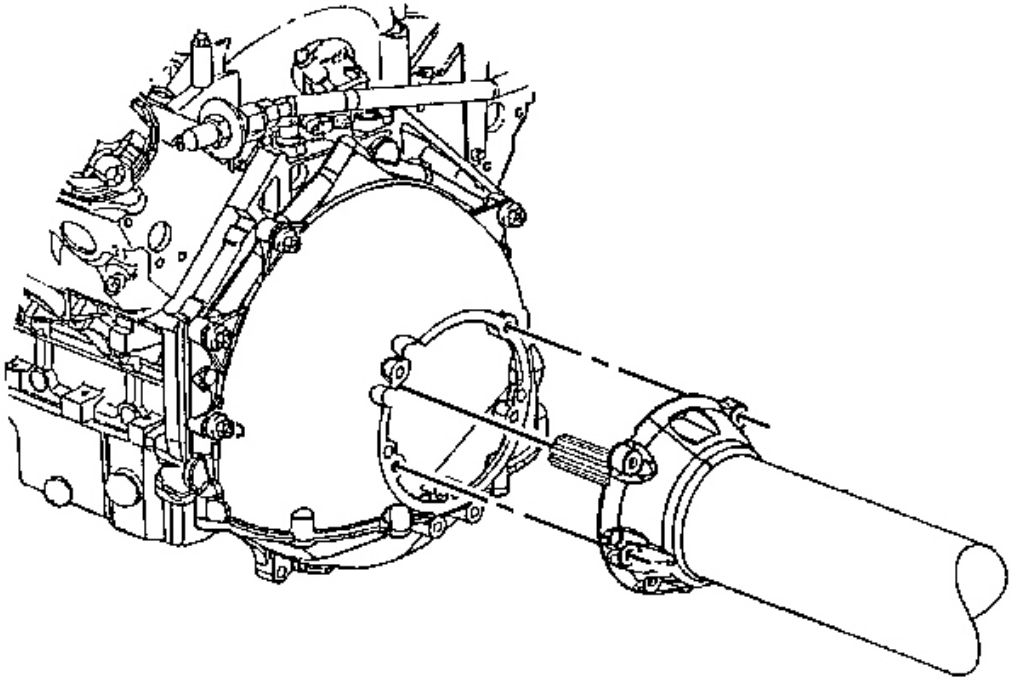

Fig. 339: Propeller Input Shaft & Clutch Driven Plate Hub
Courtesy of GENERAL MOTORS CORP.

34. Vehicles equipped with a manual transmission, slide the engine and crossmember rearward. Do not force the engine onto the propeller spline.
35. Position the engine to the proper height and angle in order to install the propeller input shaft.
36. Insert the propeller input shaft into the clutch driven plate hub while maintaining the proper angle, Do Not Force. Rotate the shaft slightly to bring the 2 splines into alignment, if necessary.

cardiagn.com

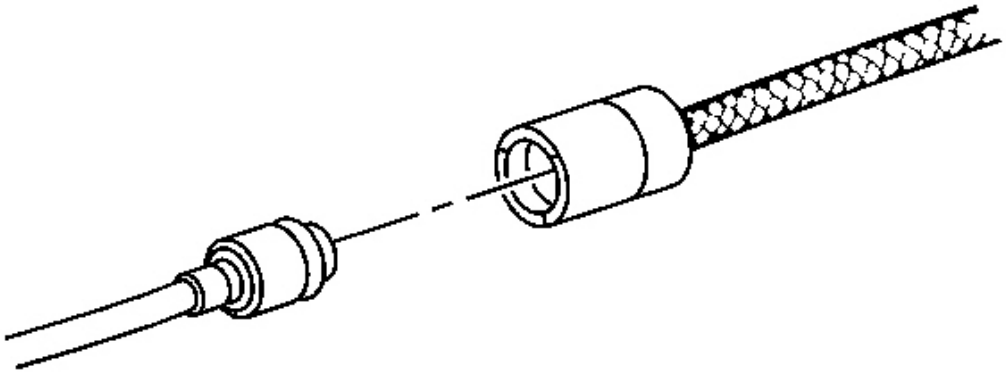

Fig. 340: Identifying White Circular Release Ring On The Actuator Hose
Courtesy of GENERAL MOTORS CORP.

37. Slowly seat the flywheel housing to the driveline.
38. Install the driveline support bolts.

    Tighten: Tighten the driveline support bolts to 50 N.m (37 lb ft).

39. Clip the clutch actuator hose to the clutch actuator hose clip.
40. Connect the master cylinder hose to the clutch actuator hose.

cardiagn.com

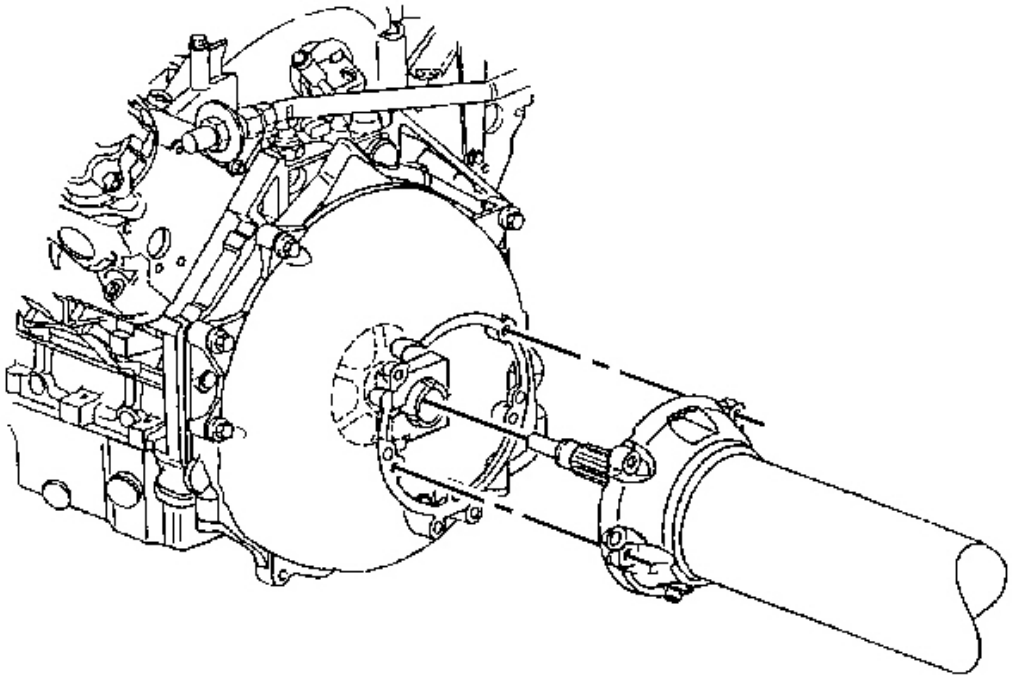

Fig. 341: Driveline Support & Bolts
Courtesy of GENERAL MOTORS CORP.

IMPORTANT: Do not tighten the flywheel hub collar bolt at this time.

41. Vehicles equipped with an automatic transmission, slide the engine and crossmember rearward. Do not force the engine onto the propeller spline.
42. Position the engine to the proper height and angle in order to install the propeller input shaft.
43. Install the driveline support bolts.

    Tighten: Tighten the driveline support bolts to 50 N.m (37 lb ft).

44. Hand tighten the flywheel hub collar bolt.
45. Lower the vehicle onto the crossmember and align the dowels.

cardiagn.com

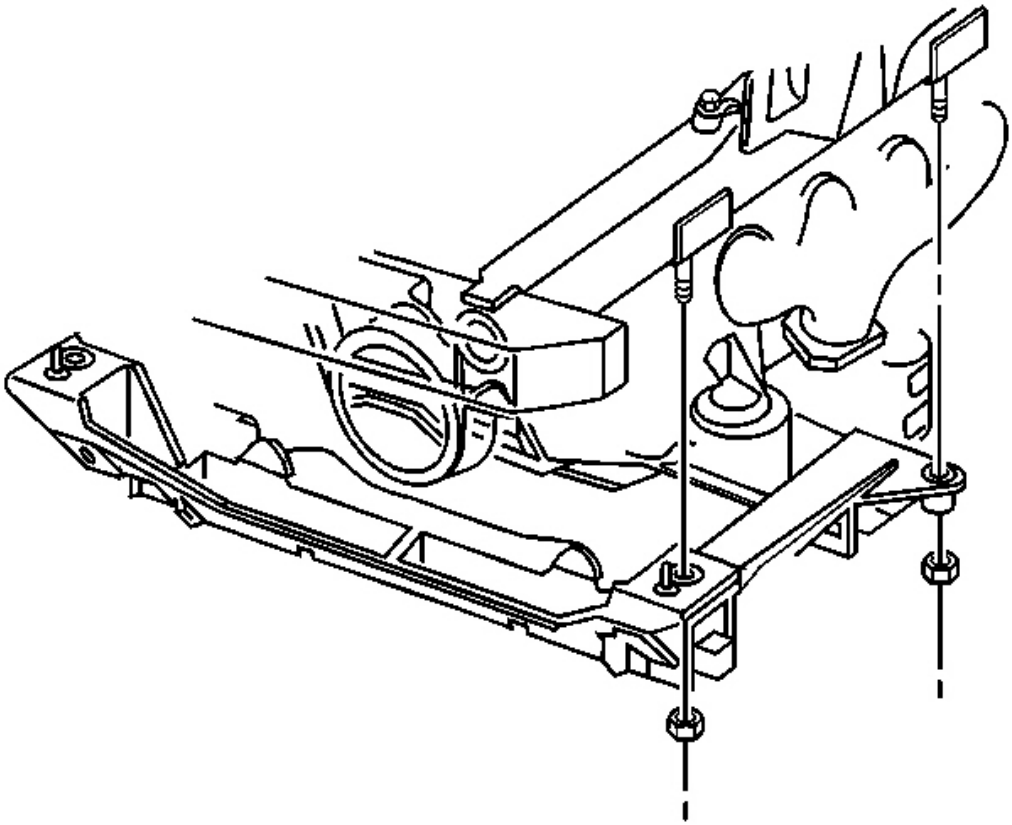

Fig. 342: Front & Rear Crossmember Nuts
Courtesy of GENERAL MOTORS CORP.

IMPORTANT: Use only hand tools when tightening or torquing crossmember nuts.

46. By HAND, install new crossmember nuts until snug.

    Tighten: Tighten the crossmember nuts to 110 N.m (81 lb ft).

47. Raise and suitably support the vehicle.
48. Remove the **J 39580** and the **J 39580-500** .
49. Remove the **J 42203** from the vehicle.

cardiagn.com

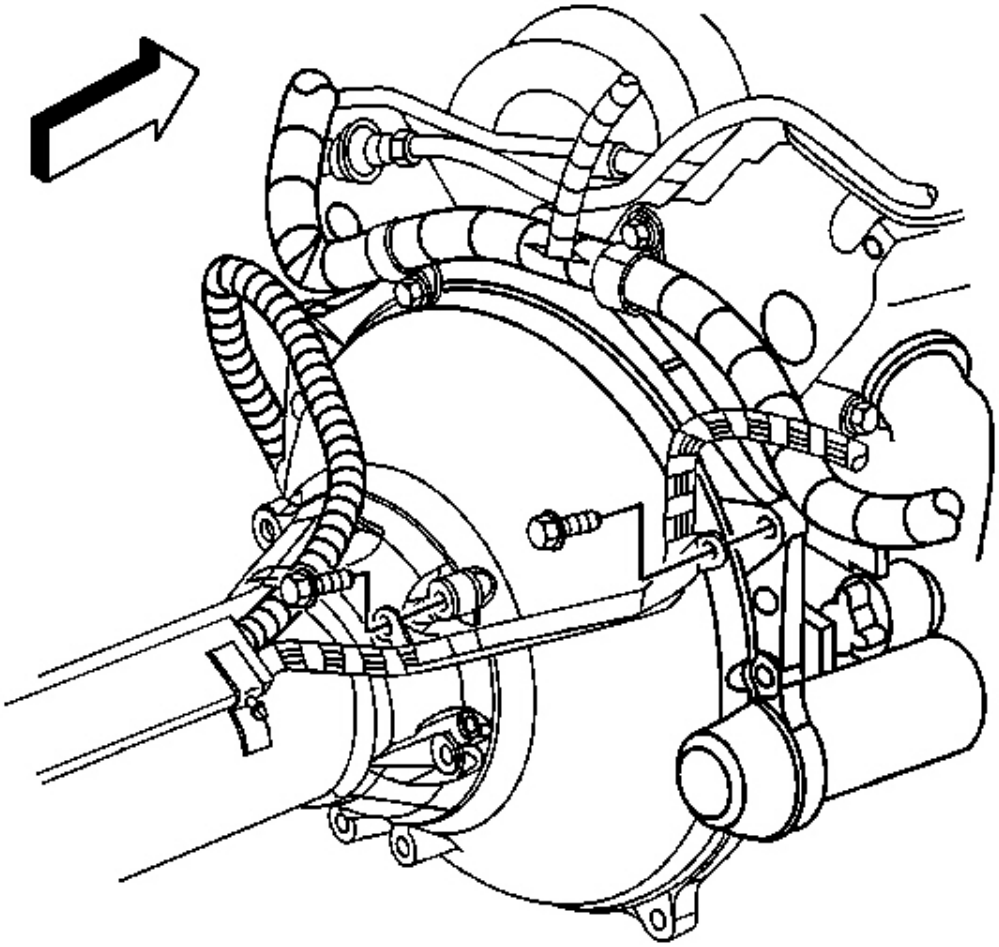

Fig. 343: Transmission Wire Harness Bracket & Bolts
Courtesy of GENERAL MOTORS CORP.

50. Route the transmission wire harness into place.
51. Install the transmission wire harness bracket bolts.

Tighten: Tighten the transmission wire harness bracket bolts to 50 N.m (37 lb ft).

cardiagn.com

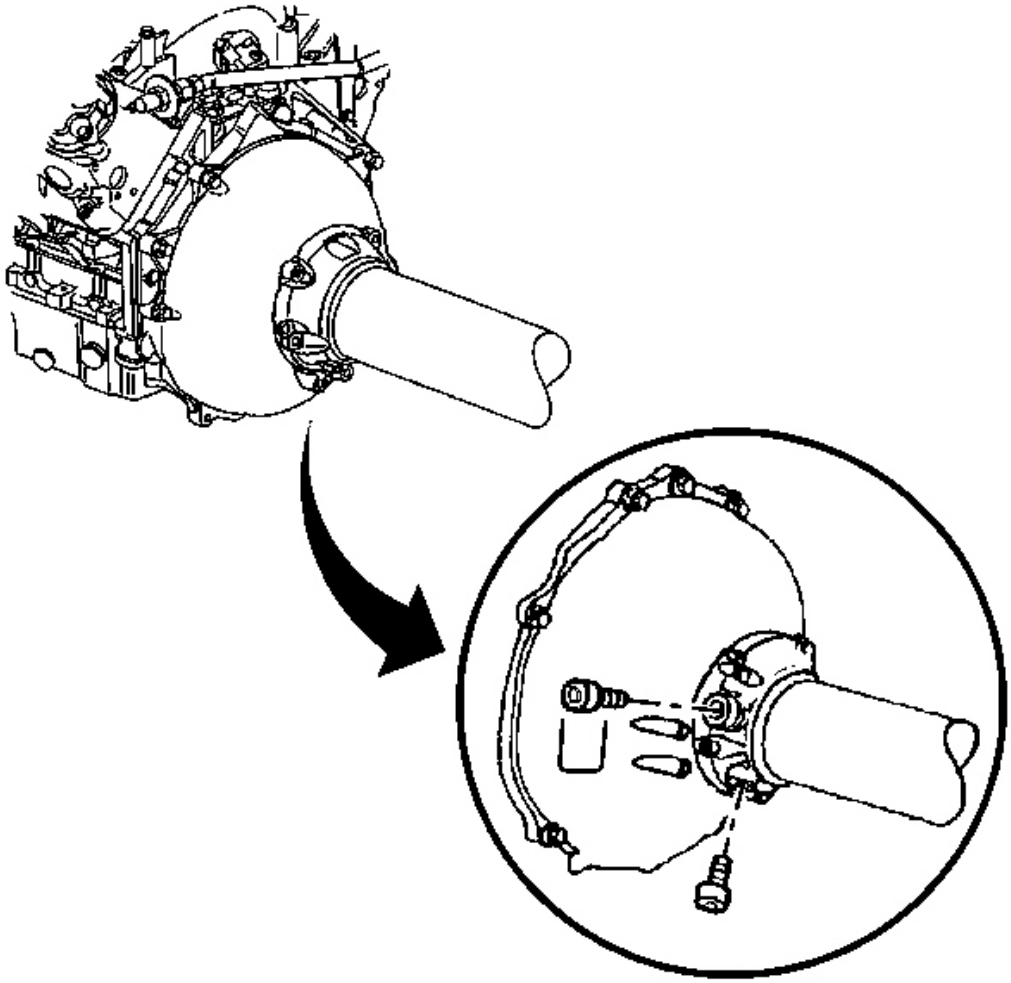

Fig. 344: Driveline Support Plug & Bolts
Courtesy of GENERAL MOTORS CORP.

52. Vehicles equipped with an automatic transmission, remove the previously installed M10-1.5 x 55 mm bolts from the front of the driveline support.
53. Install 2 plugs in the driveline support.

    Tighten: Tighten the driveline support plugs to 50 N.m (37 lb ft).

cardiagn.com

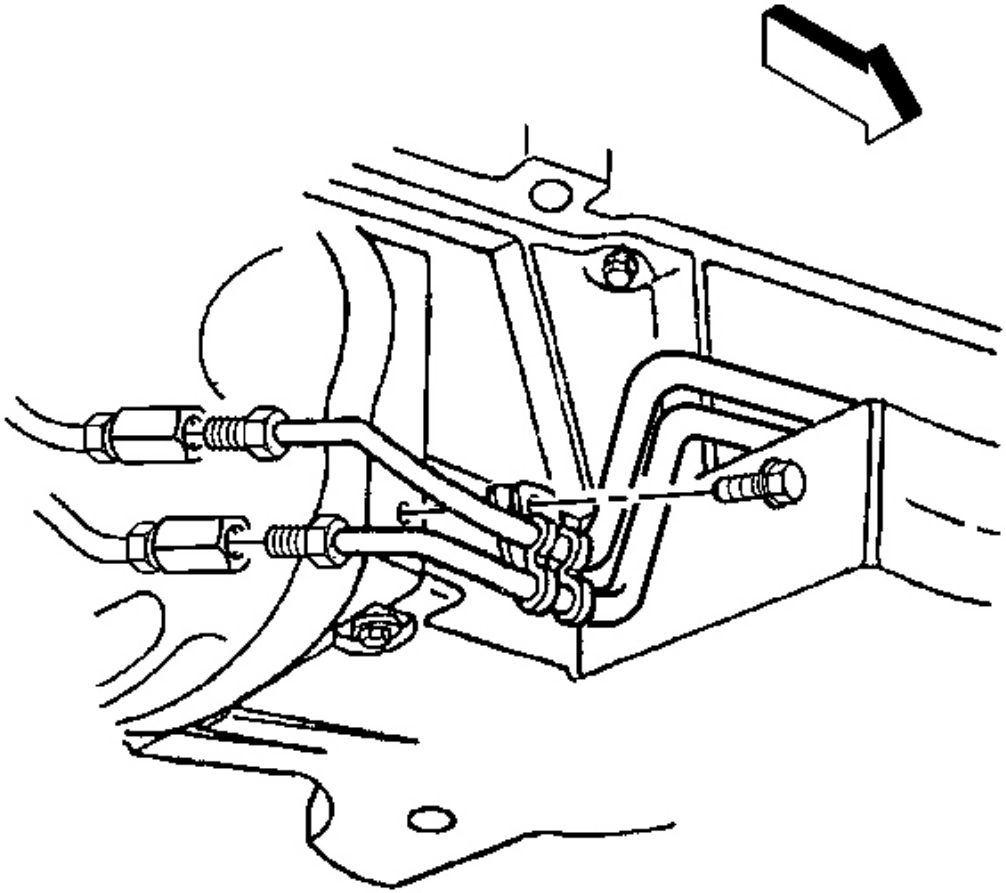

Fig. 345: Automatic Transmission Fluid Cooler Line Clamp & Bolt
Courtesy of GENERAL MOTORS CORP.

54. Connect the front automatic transmission fluid cooler pipes to the rear pipes, if equipped.

    Tighten: Tighten the automatic transmission fluid cooler pipes to 25 N.m (18 lb ft).

55. Install the automatic transmission cooler pipe clamp bolt (at the transmission cover), if equipped.

    Tighten: Tighten the automatic transmission fluid cooler pipe clamp bolt (at the transmission cover) to 2.2 N.m (22 lb in).

cardiagn.com

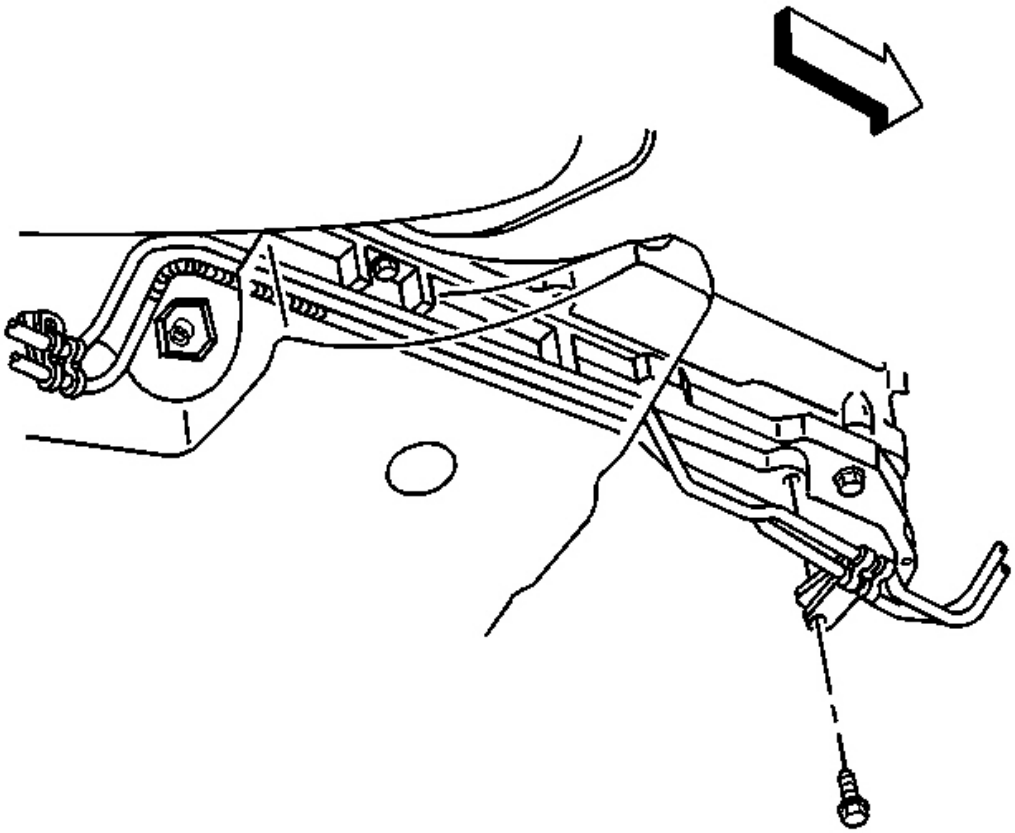

Fig. 346: Automatic Transmission Fluid Cooler Line & Oil Pan
Courtesy of GENERAL MOTORS CORP.

56. Install the automatic transmission fluid cooler pipe clamp bolt (at the oil pan), if equipped.

    Tighten: Tighten the automatic transmission fluid cooler pipe clamp bolt (at the oil pan) to 12 N.m (106 lb in).

57. Install the front transverse leaf spring. Refer to **Front Transverse Spring Replacement** in Front Suspension.

cardiagn.com

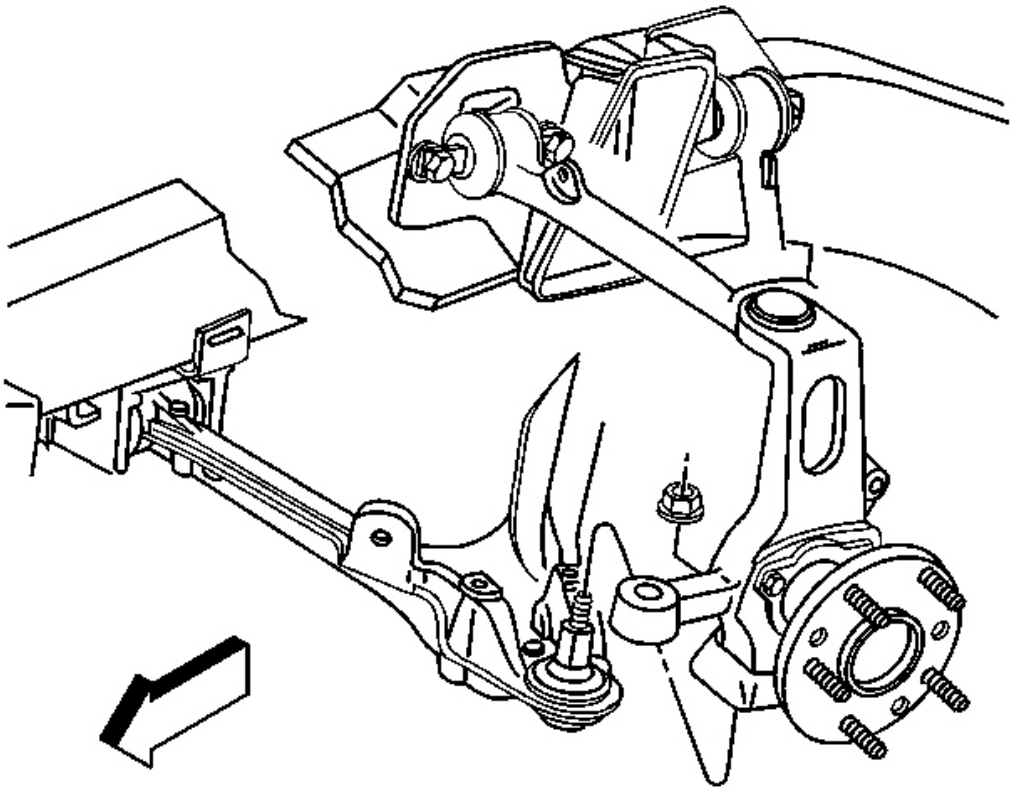

Fig. 347: Lower Control Arm Stud, Steering Knuckle & Nut
Courtesy of GENERAL MOTORS CORP.

58. Install the lower control arm stud to the steering knuckle.
59. Install a NEW steering knuckle nut.

Tighten:

1. Tighten the steering knuckle nut to 20 N.m (15 lb ft) to seat the ball joint stud.
2. Torque the steering knuckle nut an additional 210 degrees using J 36660-A .
3. Check the steering knuckle nut for a final torque of 55 N.m (41 lb ft)

60. Connect the ABS electrical connector clips to the crossmember (if equipped).
61. Install the front stabilizer shaft. Refer to **Stabilizer Shaft Replacement** in Front Suspension.

cardiagn.com

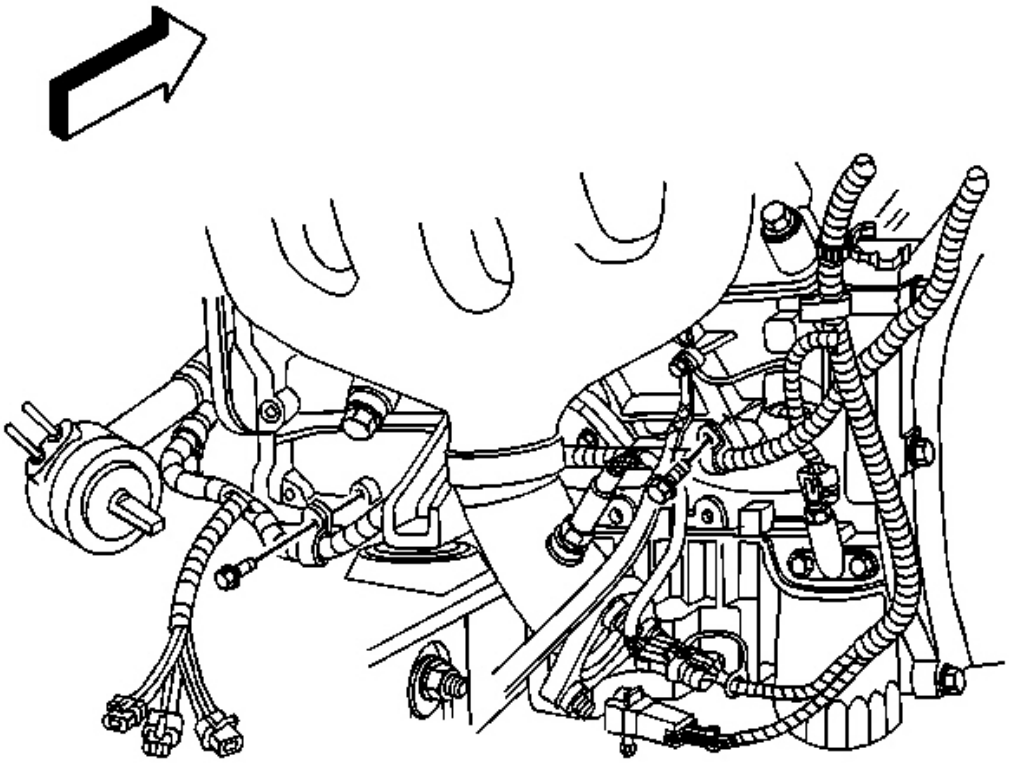

Fig. 348: Transmission Wire Harness & Engine Wire Harness
Courtesy of GENERAL MOTORS CORP.

62. Clip the transmission wire harness the engine wire harness (at the white tape).
63. Install the transmission wire harness clip bolts to the engine block.

Tighten

1. Tighten the transmission wire harness clip bolt (near the harness ground) to 32 N.m (23 lb ft)
2. Tighten the transmission wire harness clip bolt (near the oil pan) to 25 N.m (18 lb ft)

64. Install the EVO electrical connector clips to the crossmember.

cardiagn.com

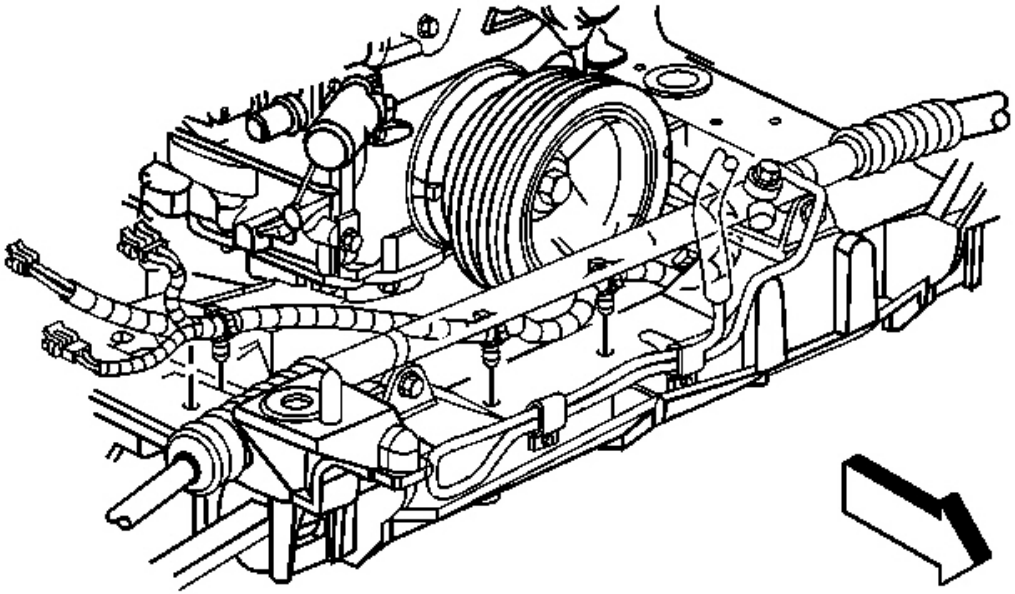

Fig. 349: Transmission Wire Harness & Electrical Connectors
Courtesy of GENERAL MOTORS CORP.

65. Clip the transmission wire harness to the crossmember.
66. If equipped with RTD connect the following electrical connectors:
    - Position sensor pigtail
    - Shock absorber damper

cardiagn.com

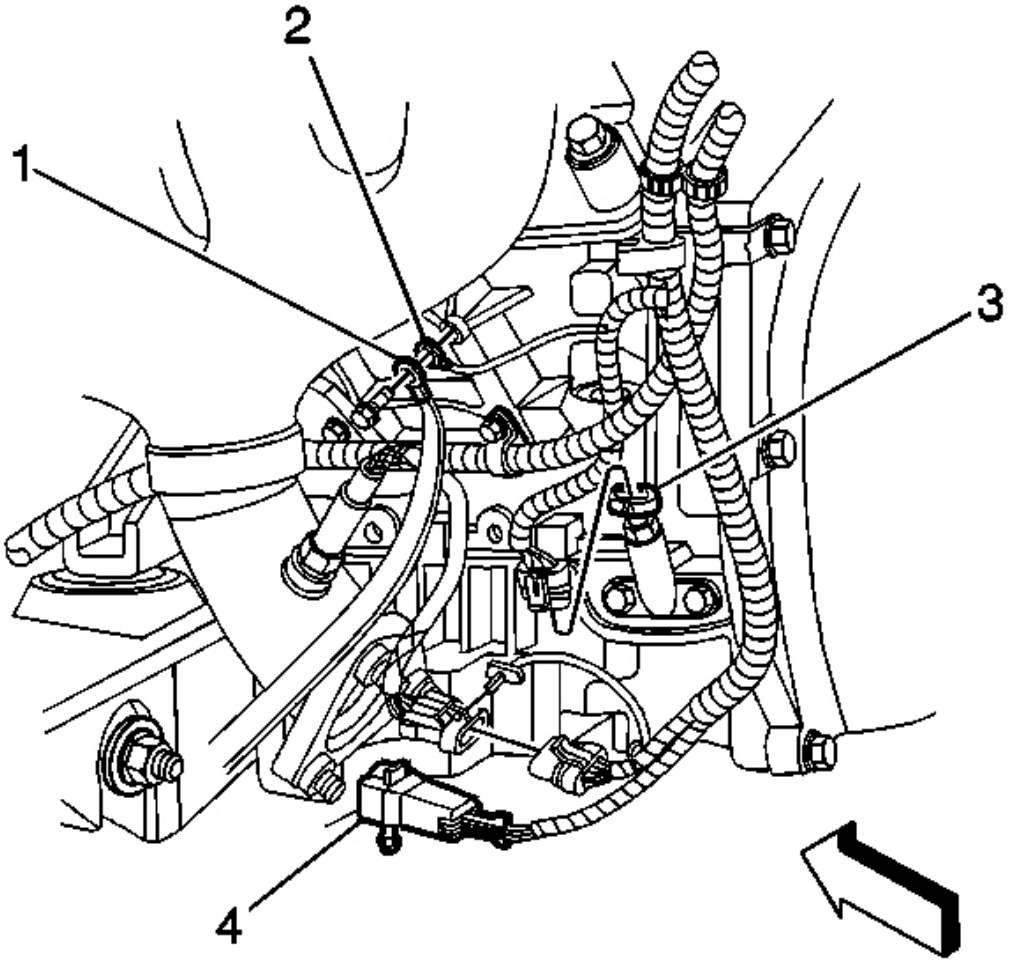

Fig. 350: Engine Oil Temperature Sensor Electrical Connector & Ground Straps
Courtesy of GENERAL MOTORS CORP.

67. Position the ground straps (1 and 2) to the engine block.
68. Install the engine ground strap bolt.

    Tighten: Tighten the engine wire harness ground bolt to 32 N.m (23 lb ft).

69. Connect the left HO2S electrical connector.
70. Connect the engine oil temperature sensor (3) electrical connector.

cardiagn.com

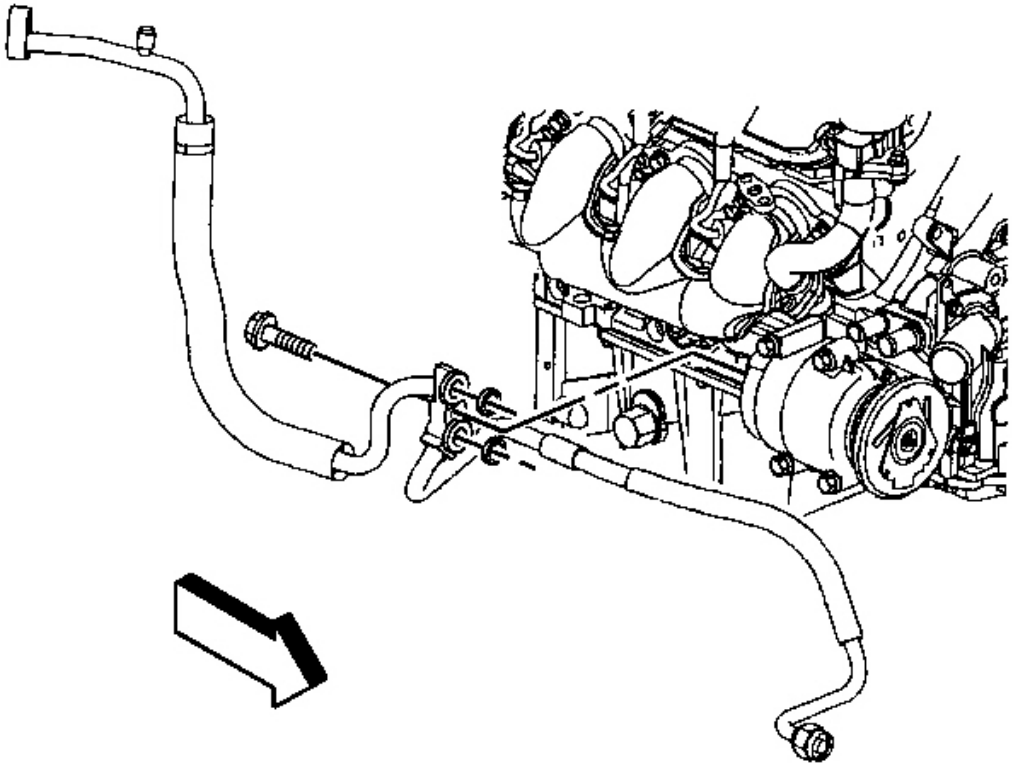

Fig. 351: A/C Compressor & Condenser Hose & Bolt
Courtesy of GENERAL MOTORS CORP.

71. Install the AC compressor and condenser hose to the A/C compressor.
72. Install the A/C compressor and condenser hose bolt (at compressor).

Tighten: Tighten the A/C compressor and condenser hose bolt (at compressor) to 27 N.m (20 lb ft).

cardiagn.com

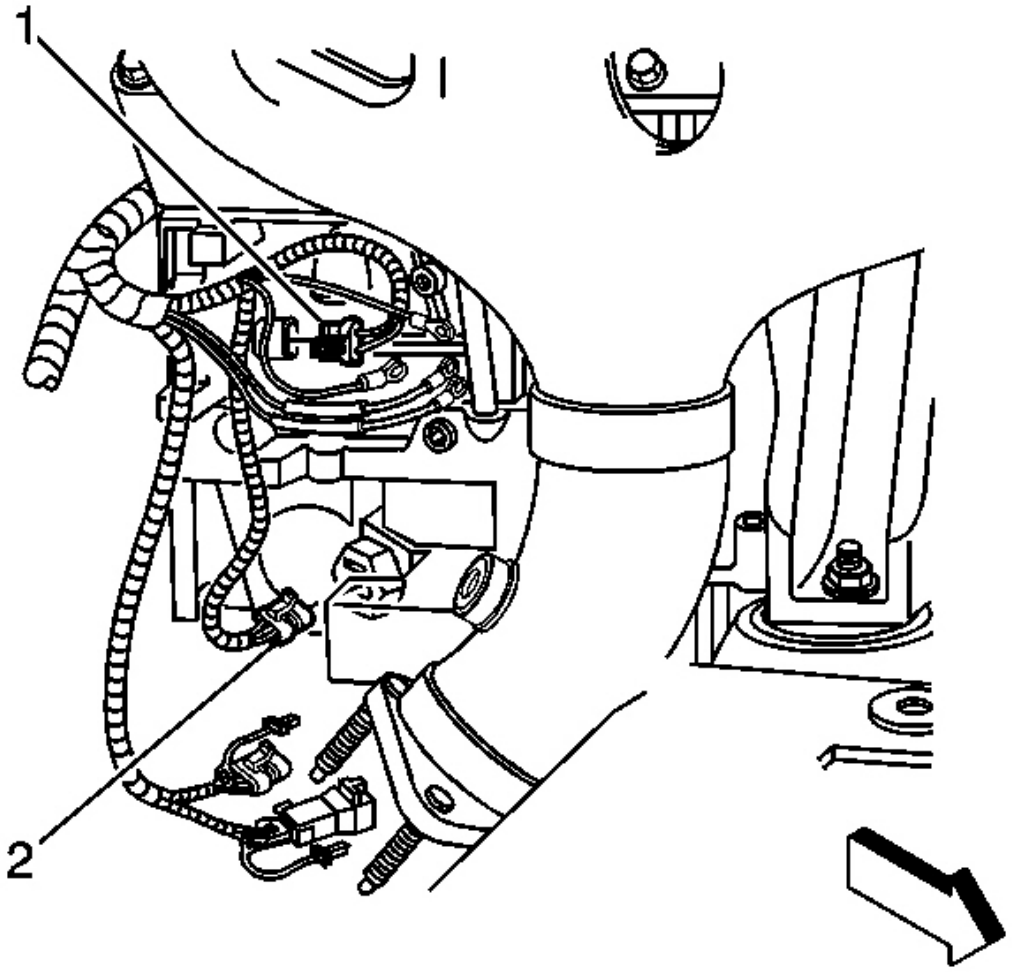

Fig. 352: Engine Oil Level Sensor Electrical Connector & CKP Sensor Electrical Connector
Courtesy of GENERAL MOTORS CORP.

73. Connect the right front HO2S sensor electrical connector.
74. Connect the oil level sensor (2) electrical connector.
75. Connect the CKP sensor (1) electrical connector.
76. Install the starter motor. Refer to **Starter Motor Replacement** in Engine Electrical.

cardiagn.com

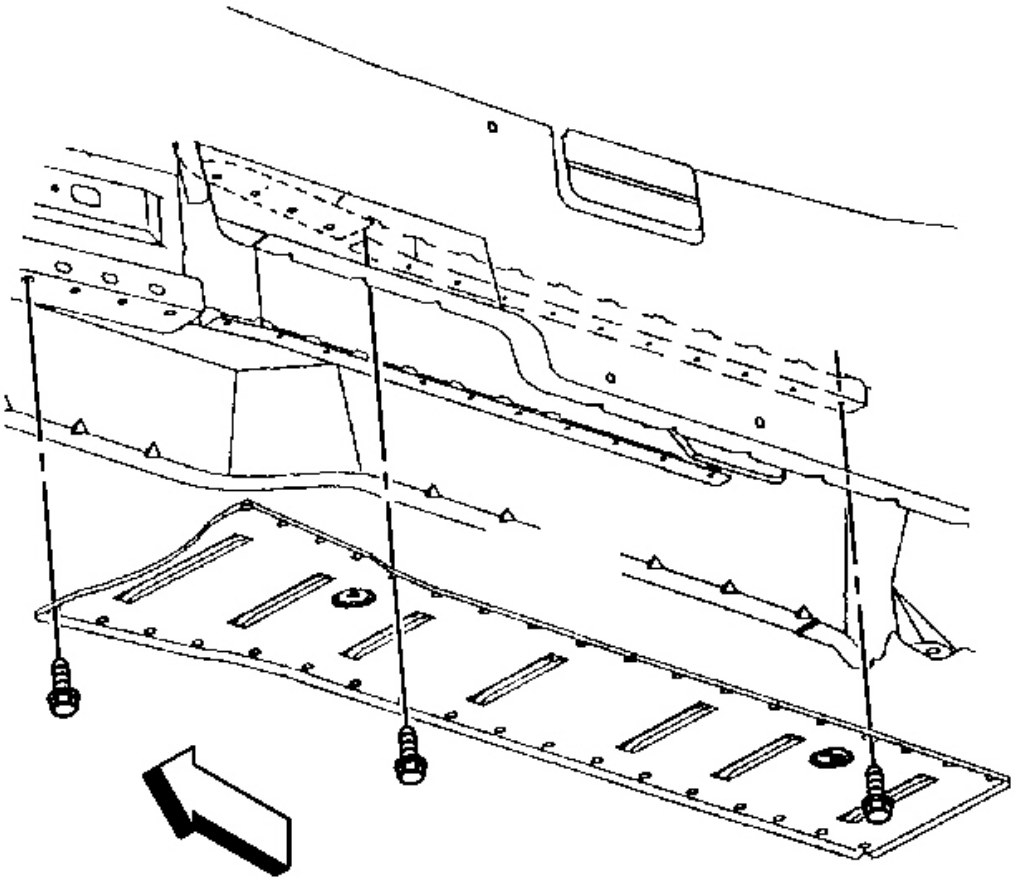

Fig. 353: Driveline Tunnel Close-Out Panel & Bolts
Courtesy of GENERAL MOTORS CORP.

77. Install the driveline close-out panel.
78. Install the driveline close-out panel bolts.

    Tighten: Tighten the driveline close-out panel bolts to 12 N.m (106 lb in).

79. Install the catalytic converter. Refer to **Catalytic Converter Replacement** in Engine Exhaust.
80. Install the front tires and wheels. Refer to **Tire and Wheel Removal and Installation** in Tires and Wheels.
81. Lower the vehicle.

cardiagn.com

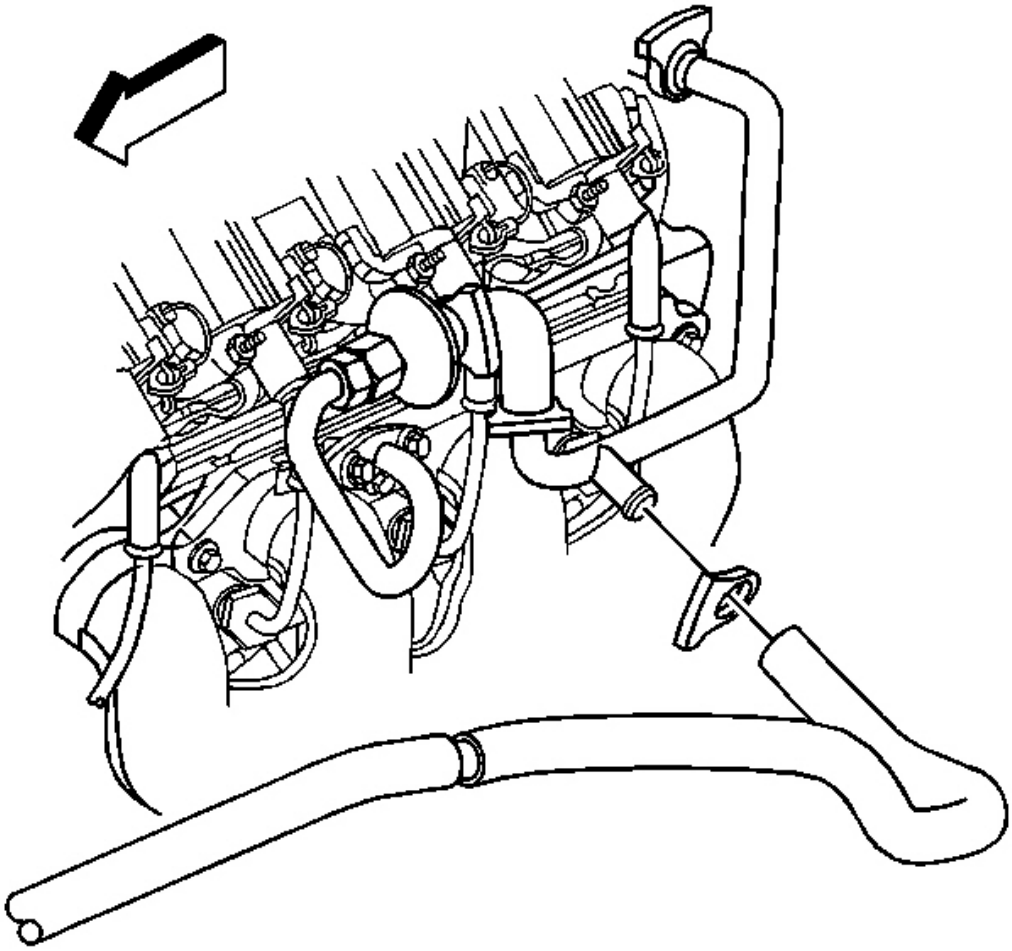

Fig. 354: AIR Pump Hose & AIR Pipe
Courtesy of GENERAL MOTORS CORP.

82. Connect the AIR pump hose to the AIR pipe.

cardiagn.com

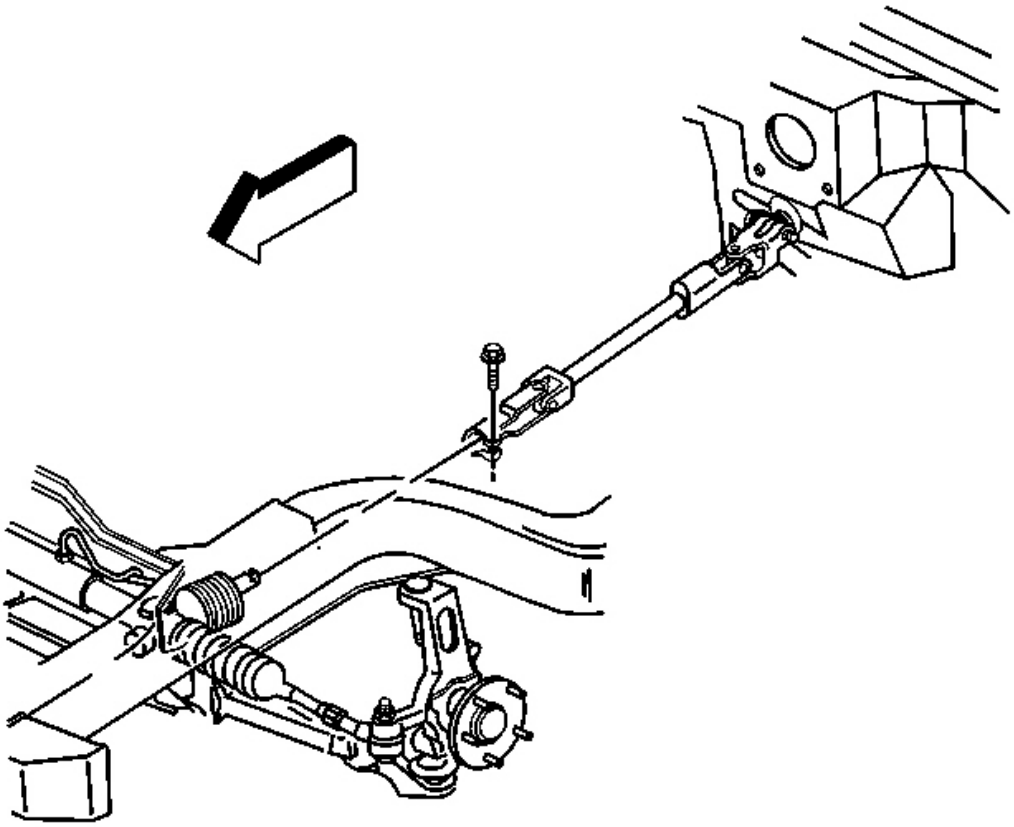

Fig. 355: Intermediate Steering Shaft & Bolt
Courtesy of GENERAL MOTORS CORP.

83. Install the intermediate steering shaft to the steering gear.
84. Install the intermediate steering shaft bolt.

Tighten: Tighten the intermediate steering shaft bolt to 48 N.m (35 lb ft).

cardiagn.com

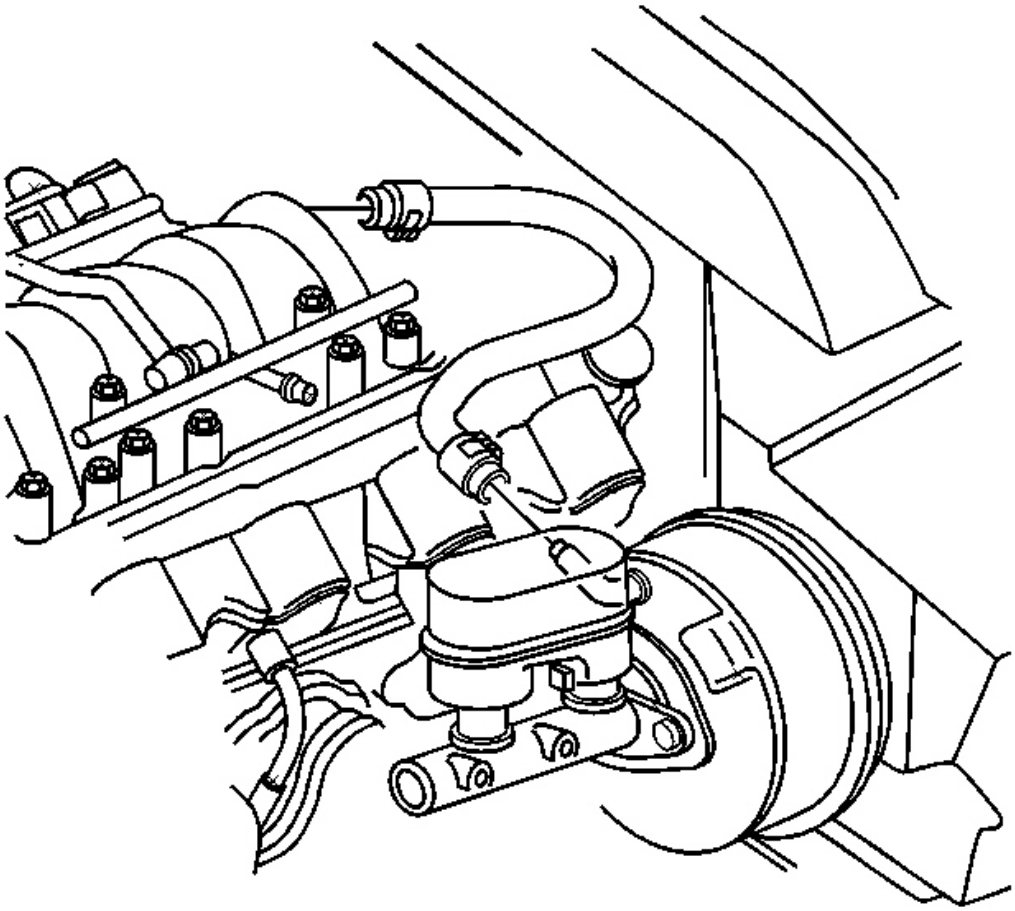

Fig. 356: Vacuum Booster Hose
Courtesy of GENERAL MOTORS CORP.

85. Install the power brake booster vacuum hose.
86. Install the generator. Refer to **Generator Replacement** in Engine Electrical.

cardiagn.com

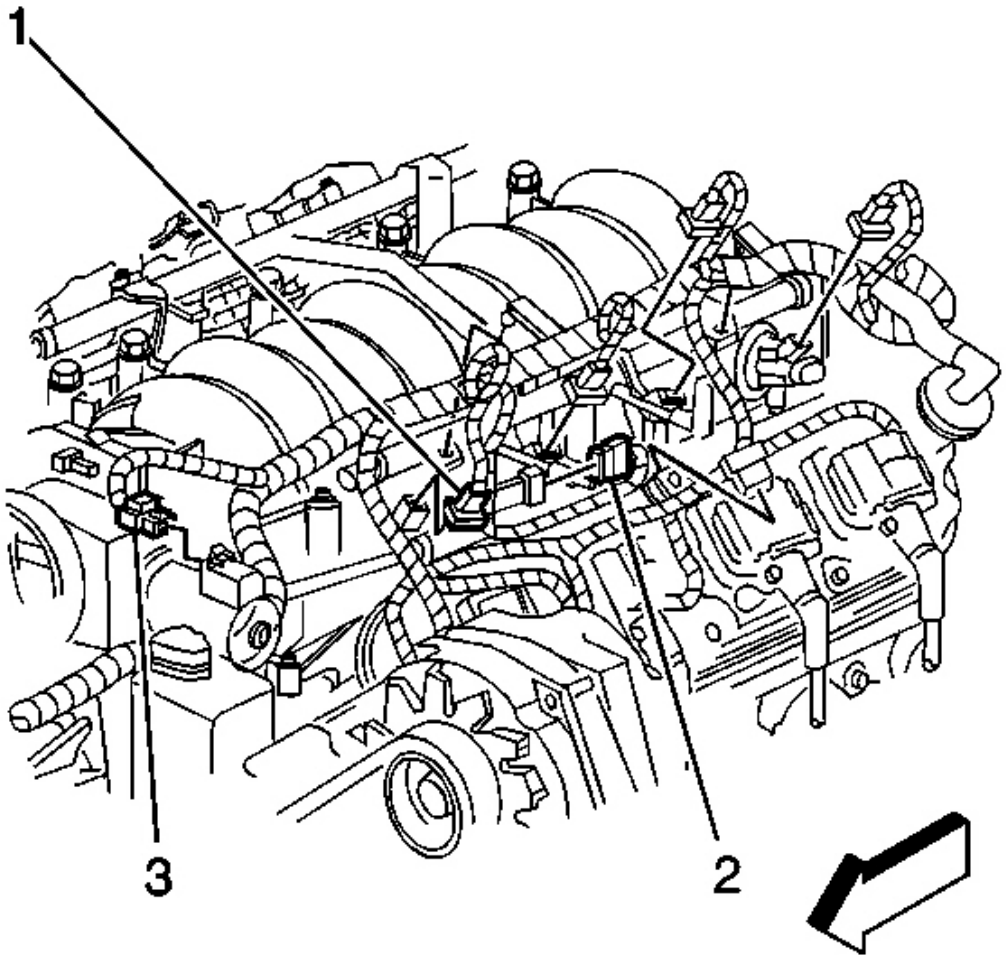

Fig. 357: Electrical Connectors
Courtesy of GENERAL MOTORS CORP.

87. Connect the following electrical connectors to the engine:
    - The fuel injectors (1)
    - The ignition coil main harness connectors
    - The EVAP solenoid (2)
    - The electric throttle motor (3)
    - The TP sensor
    - The ECT sensor
    - The A/C compressor

cardiagn.com

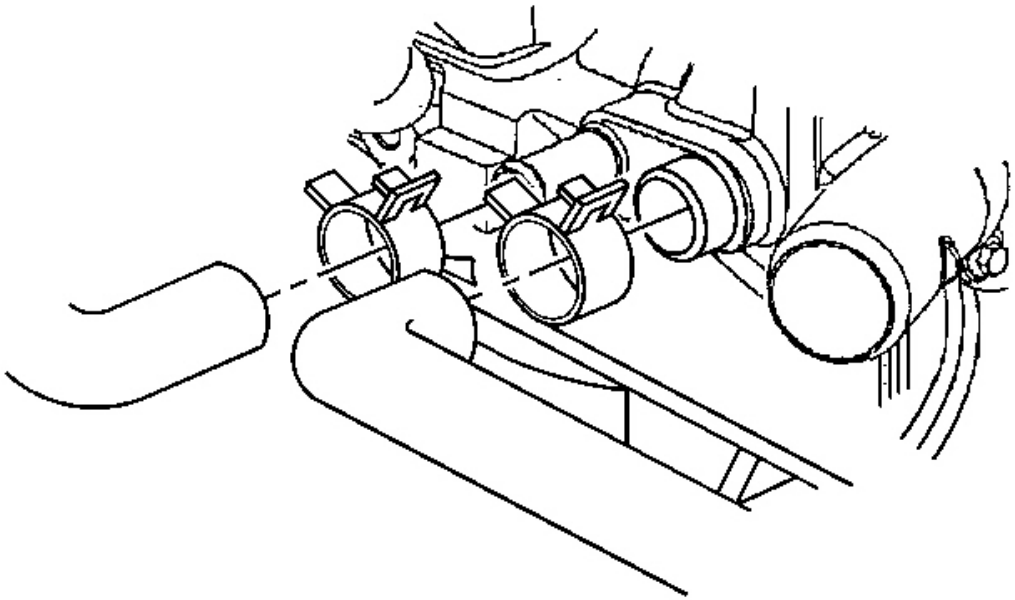

Fig. 358: Heater Hoses & Water Pump
Courtesy of GENERAL MOTORS CORP.

88. Install the heater hoses to the water pump.

cardiagn.com

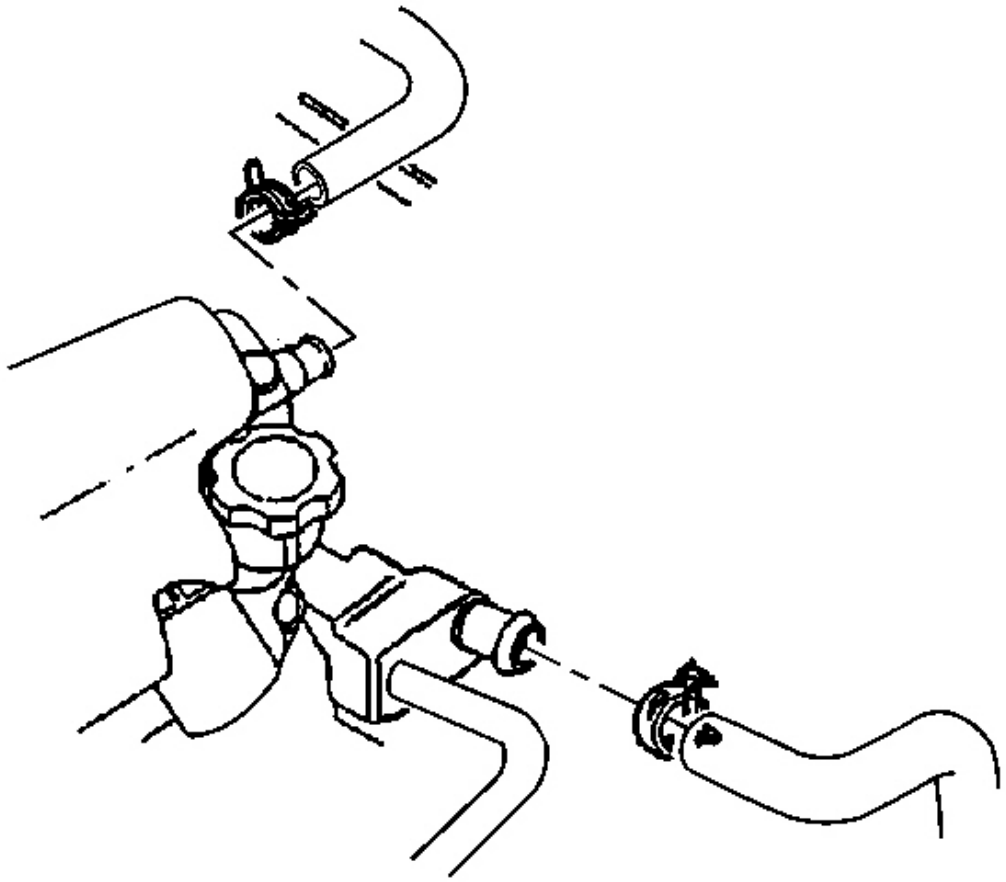

Fig. 359: Radiator Hoses & Water Pump
Courtesy of GENERAL MOTORS CORP.

89. Install the radiator hoses to the water pump.
90. Install the fuel feed hose. Refer to **Fuel Hose/Pipes Replacement - Engine Compartment** in Engine Controls - 5.7 L.
91. Connect the EVAP emission canister purge hose at the fuel line.

cardiagn.com

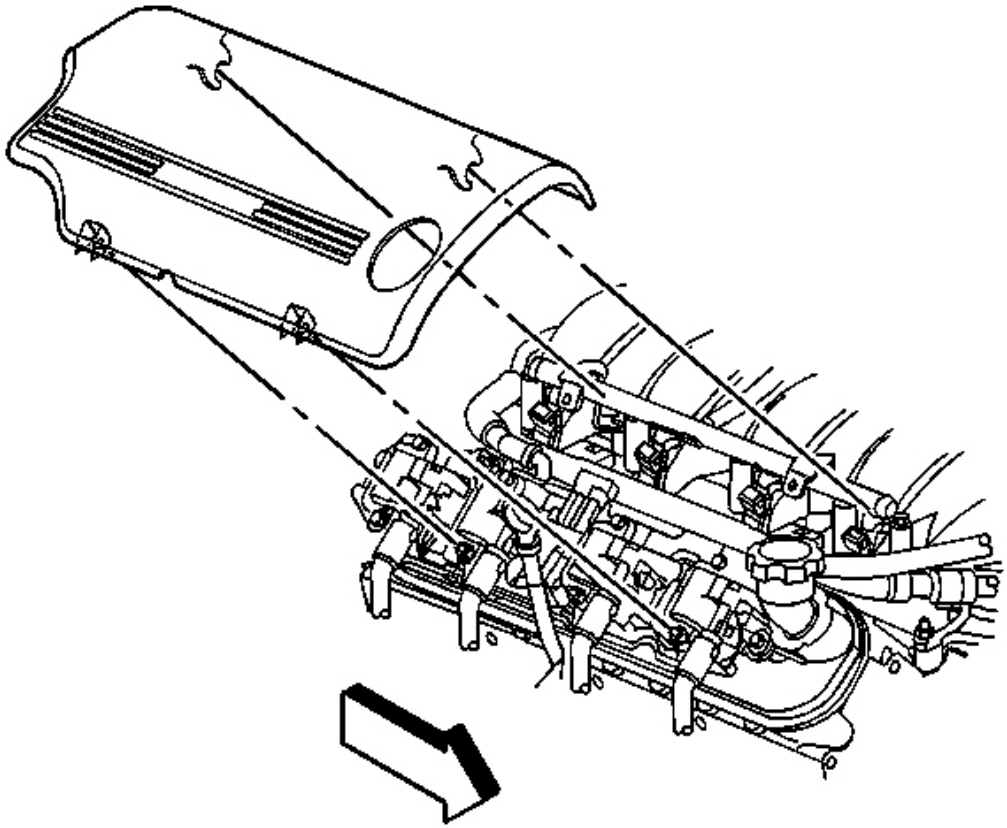

Fig. 360: Right Fuel Injection Rail Cover
Courtesy of GENERAL MOTORS CORP.

92. Install the right fuel injection rail cover.
93. Install the accessory drive belt. Refer to **Drive Belt Replacement - Accessory** .
94. Install the BPMV bracket. Refer to **Brake Pressure Modulator Valve (BPMV) Bracket Replacement** in Antilock Brake System.
95. Install the radiator. Refer to **Radiator Replacement** in Engine Cooling.
96. Recharge the A/C system. Refer to **Refrigerant Recovery and Recharging** in Heating, Ventilation and Air Conditioning.
97. Program the transmitters. Refer to **Transmitter Programming** in Keyless Entry.
98. Bleed the clutch hydraulic system, if equipped. Refer to **Hydraulic Clutch Bleeding** in Clutch.
99. Perform the CKP system variation learn procedure. Refer to **CKP System Variation Learn Procedure** in Engine Controls - 5.7 L.
100. Fill the crankcase with the proper quantity and grade of engine oil. Refer to **Capacities - Approximate**

cardiagn.com

Fluid and **Fluid and Lubricant Recommendations** in Maintenance and Lubrication.

101. Disable the ignition system.
102. Crank the engine several times. Listen for any unusual noises or evidence that parts are binding.
103. Enable the ignition system.
104. Start the engine and listen for unusual noises.
105. Check the vehicle oil pressure gauge and confirm that the engine has acceptable oil pressure.

    If necessary, install an oil pressure gauge and measure the engine oil pressure.

106. Run the engine speed at about 1000 RPM until the engine has reached normal operating temperature.
107. Listen for sticking lifters and other unusual noises.
108. Inspect for fuel, oil, and/or other coolant leaks while the engine is running.

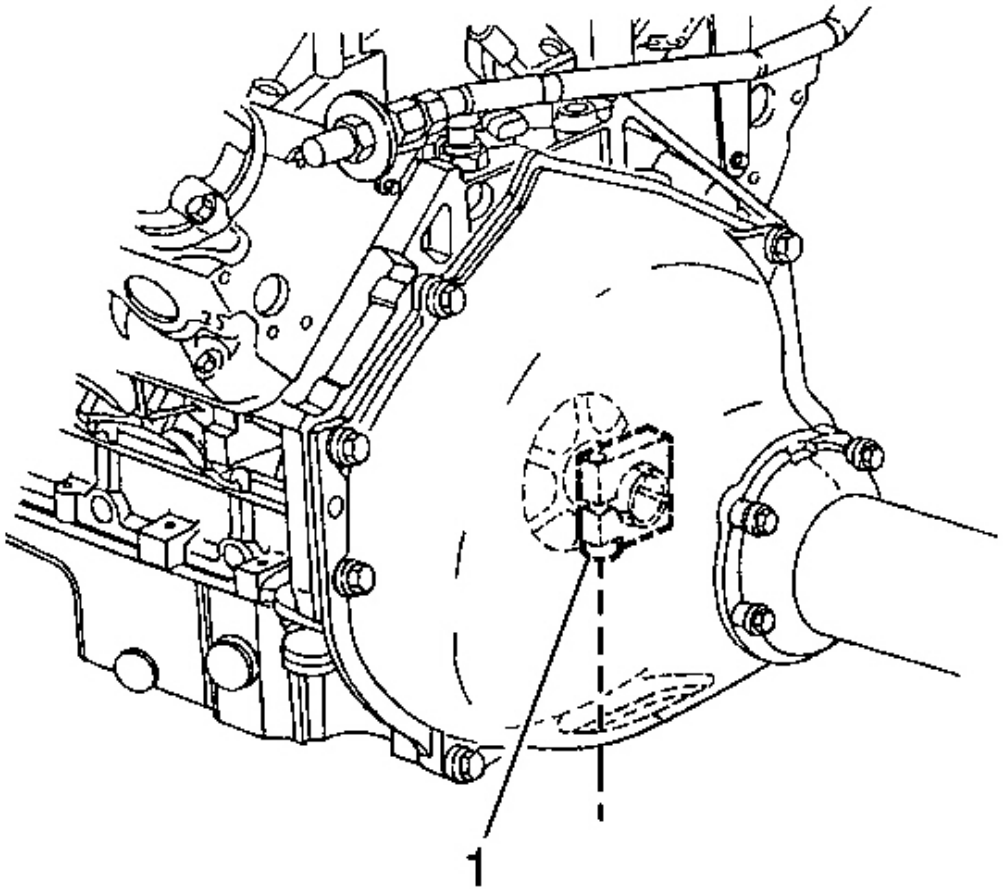

cardiagn.com

Fig. 361: Prop Shaft Hub Collar & Bolt
Courtesy of GENERAL MOTORS CORP.

109. With automatic transmission vehicles perform the following steps:
    1. Shut off the engine.
    2. Allow engine to cool to room temperature.
    3. Raise the vehicle.
    4. Tighten the prop shaft hub collar bolt (1).

    Tighten: Tighten the propeller shaft hub collar bolt to 125 N.m (92 lb ft).

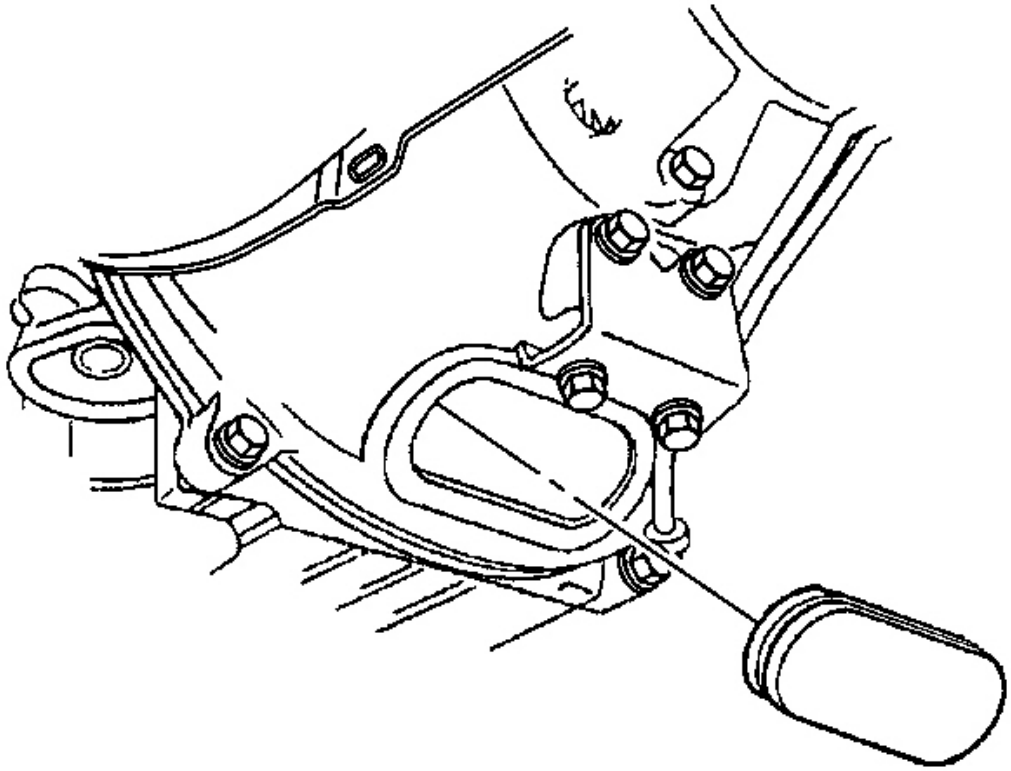

Fig. 362: Flywheel Housing Plug
Courtesy of GENERAL MOTORS CORP.

110. Install the engine flywheel housing inspection plug.
111. Perform a final inspection for the proper engine oil and coolant levels.

cardiagn.com

ENGINE OIL AND OIL FILTER REPLACEMENT

Removal Procedure

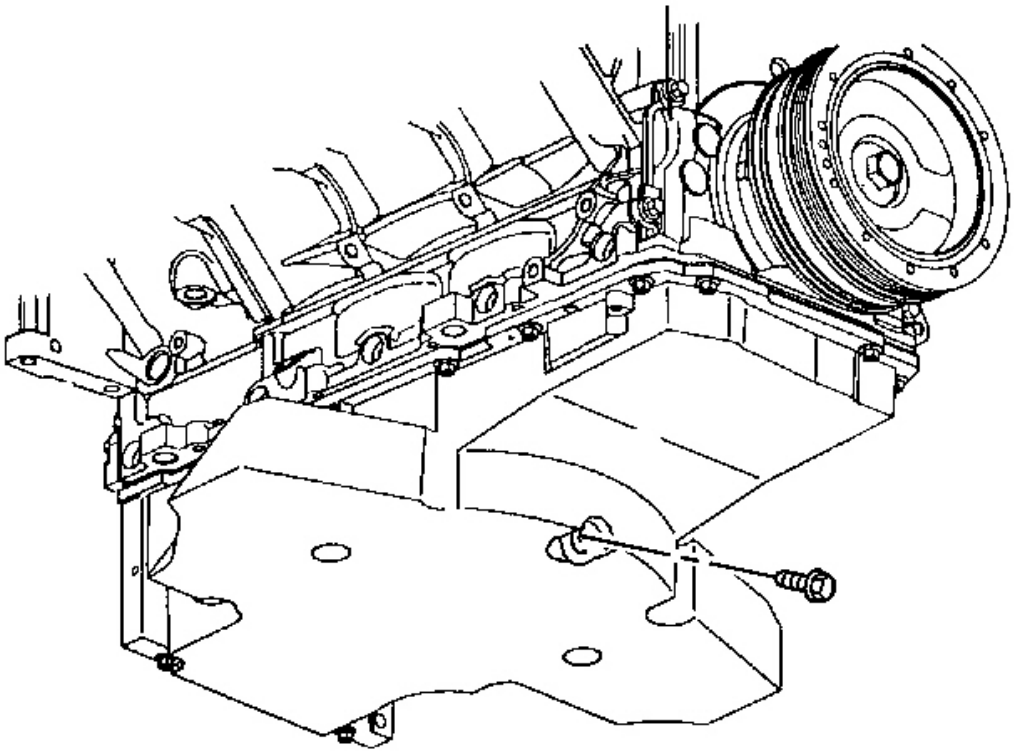

Fig. 363: Oil Pan Drain Plug
Courtesy of GENERAL MOTORS CORP.

1. Open the hood.
2. Remove the oil fill cap.
3. Raise and suitably support the vehicle. Refer to **Lifting and Jacking the Vehicle** in General Information.
4. Remove the oil pan drain plug.
5. Drain the engine oil into an appropriate container.

   Allow sufficient time for the oil to drain.

cardiagn.com

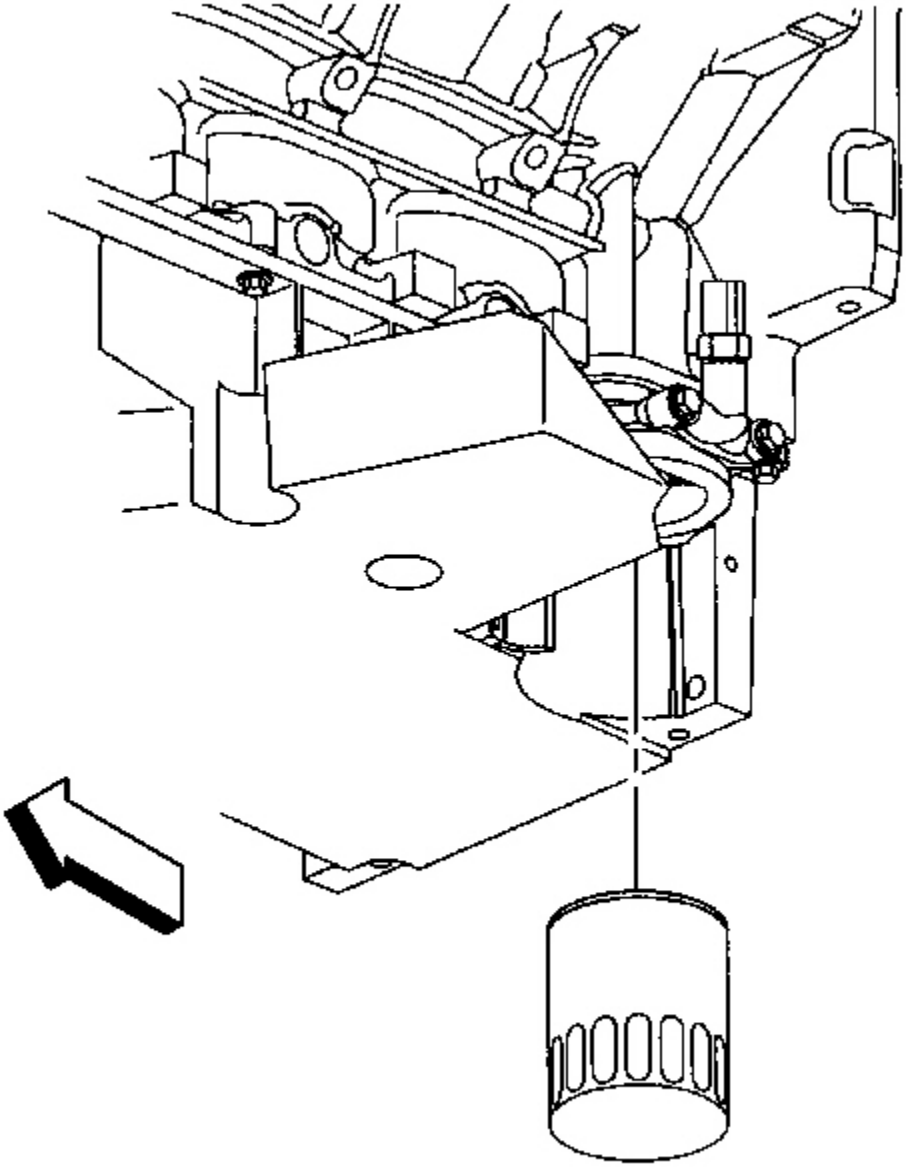

Fig. 364: Engine Oil Filter
Courtesy of GENERAL MOTORS CORP.

IMPORTANT: Check the old oil filter to ensure that the filter seal is not left on the engine block.

cardiagn.com

6. Remove the engine oil filter from the engine block.
7. Empty the oil filter into the drain pan.
8. Allow sufficient time for the oil to drain from the oil filter opening.
9. Wipe the excess oil from the oil filter mounting.

Installation Procedure

cardiagn.com

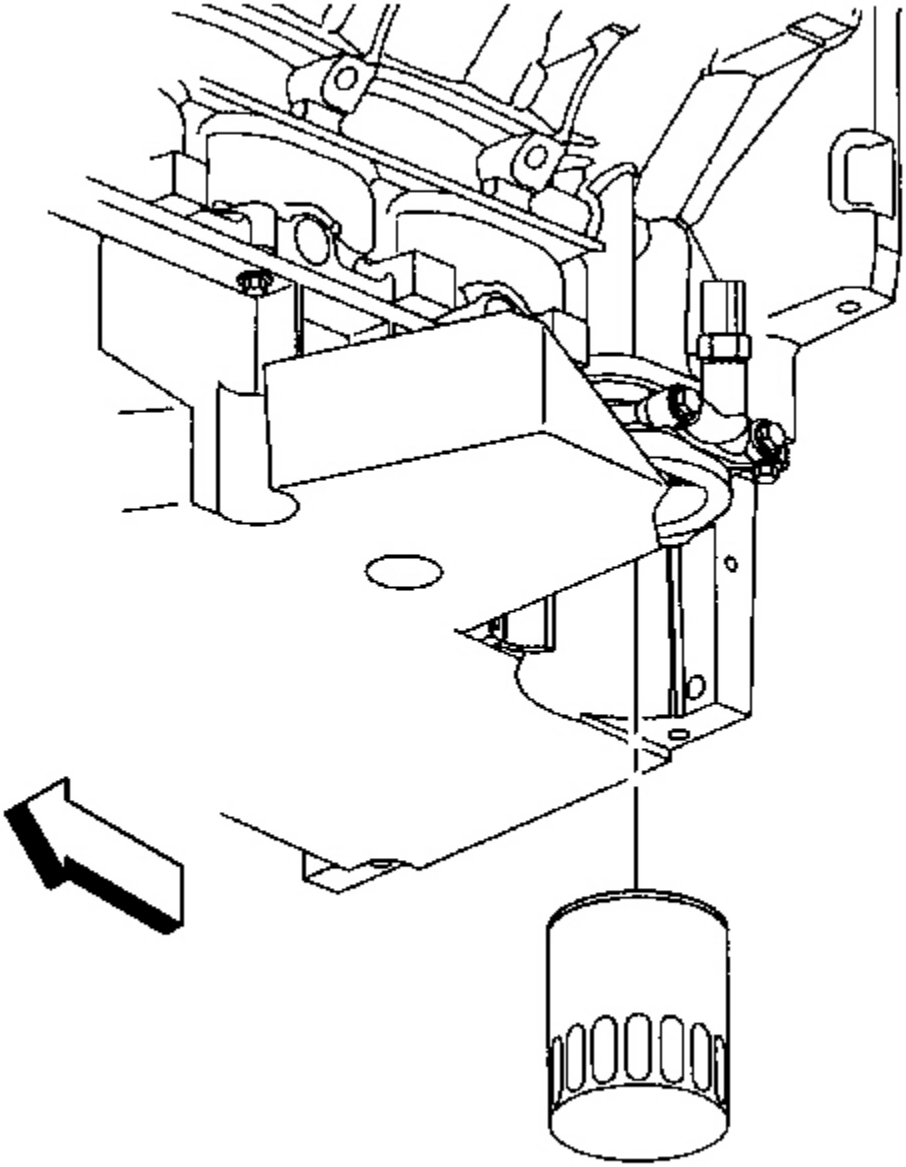

Fig. 365: Engine Oil Filter
Courtesy of GENERAL MOTORS CORP.

NOTE: Refer to Fastener Notice in Cautions and Notices.

1. Wipe any excess oil from the oil filter mounting.

cardiagn.com

IMPORTANT: Lightly oil the engine oil filter gasket, using CLEAN oil.

2. Install the oil filter to the engine block.

   Tighten: Tighten the engine oil filter to 30 N.m (22 lb ft).

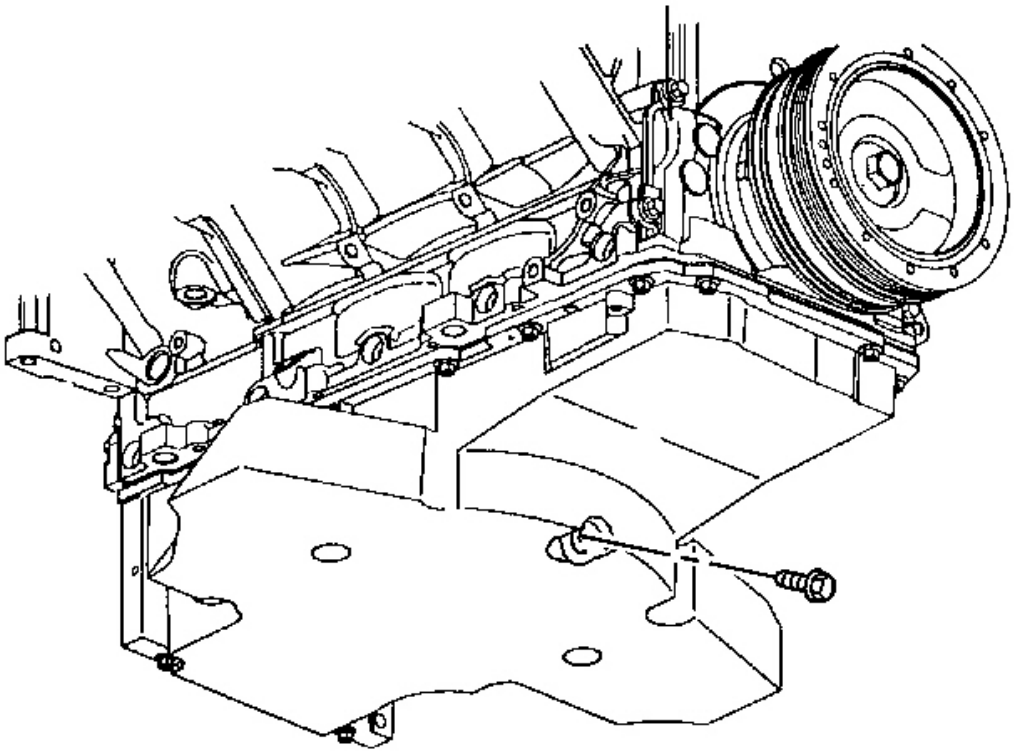

Fig. 366: Oil Pan Drain Plug
Courtesy of GENERAL MOTORS CORP.

3. Wipe any excess oil from the oil pan drain hole.
4. Install the oil pan drain plug.

   Tighten: Tighten the oil pan drain plug to 25 N.m (18 lb ft).

5. Lower the vehicle.

IMPORTANT: DO NOT use any engine oil additives in Corvette engines.

cardiagn.com

6. Fill the engine with the appropriate amount and type of engine oil. Refer to **Capacities - Approximate Fluid** and **Fluid and Lubricant Recommendations** in Maintenance and Lubrication.
7. Run the engine for 3 minutes.
8. Raise the vehicle.
9. Thoroughly inspect the oil filter and the oil pan drain plug areas for leaks.
10. Allow the engine to cool for a minimum of 3 minutes.
11. Lower the vehicle.
12. Check the engine oil level.
13. Top-off the engine oil to the full mark on the oil level indicator (dipstick), if necessary.
14. Install the oil fill cap.
15. Close the hood.
16. Reset the engine oil life monitor. Refer to **GM Oil Life System - Resetting** in Maintenance and Lubrication.

DRAINING FLUIDS AND OIL FILTER REMOVAL

Tools Required

J 41712 Oil Pressure Switch Socket

cardiagn.com

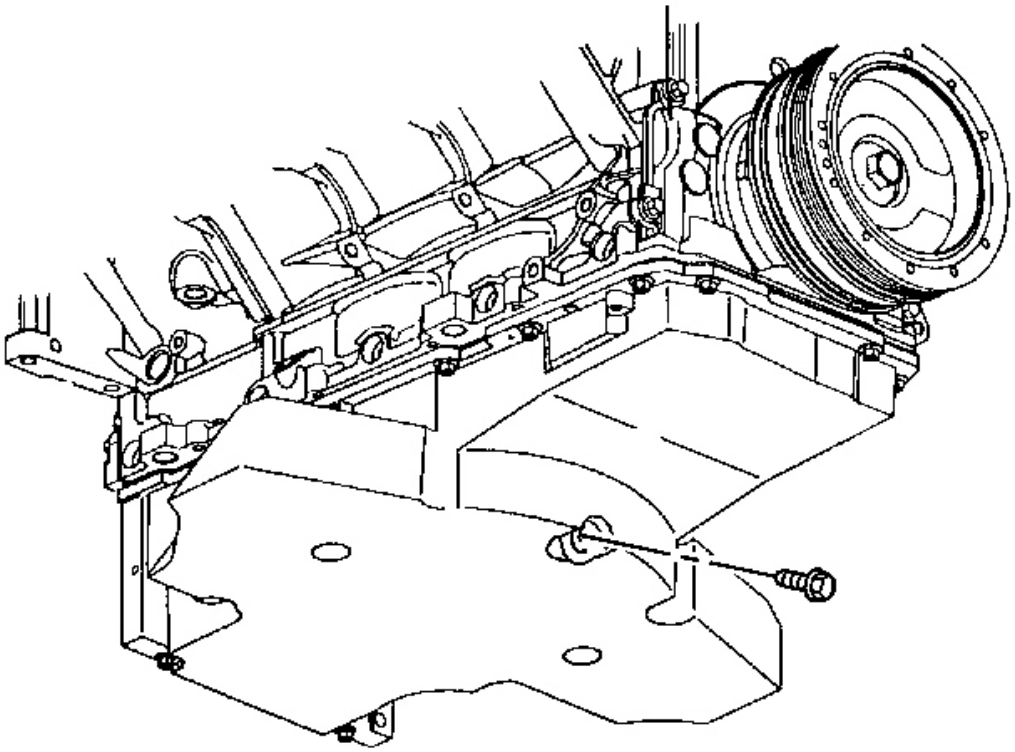

Fig. 367: Oil Pan Drain Plug
Courtesy of GENERAL MOTORS CORP.

IMPORTANT: In order to completely drain the oil from the oil pan internal baffling, the bottom of the oil pan must be level during the oil drain procedure.

1. Remove the oil pan drain plug and allow the oil to drain.

cardiagn.com

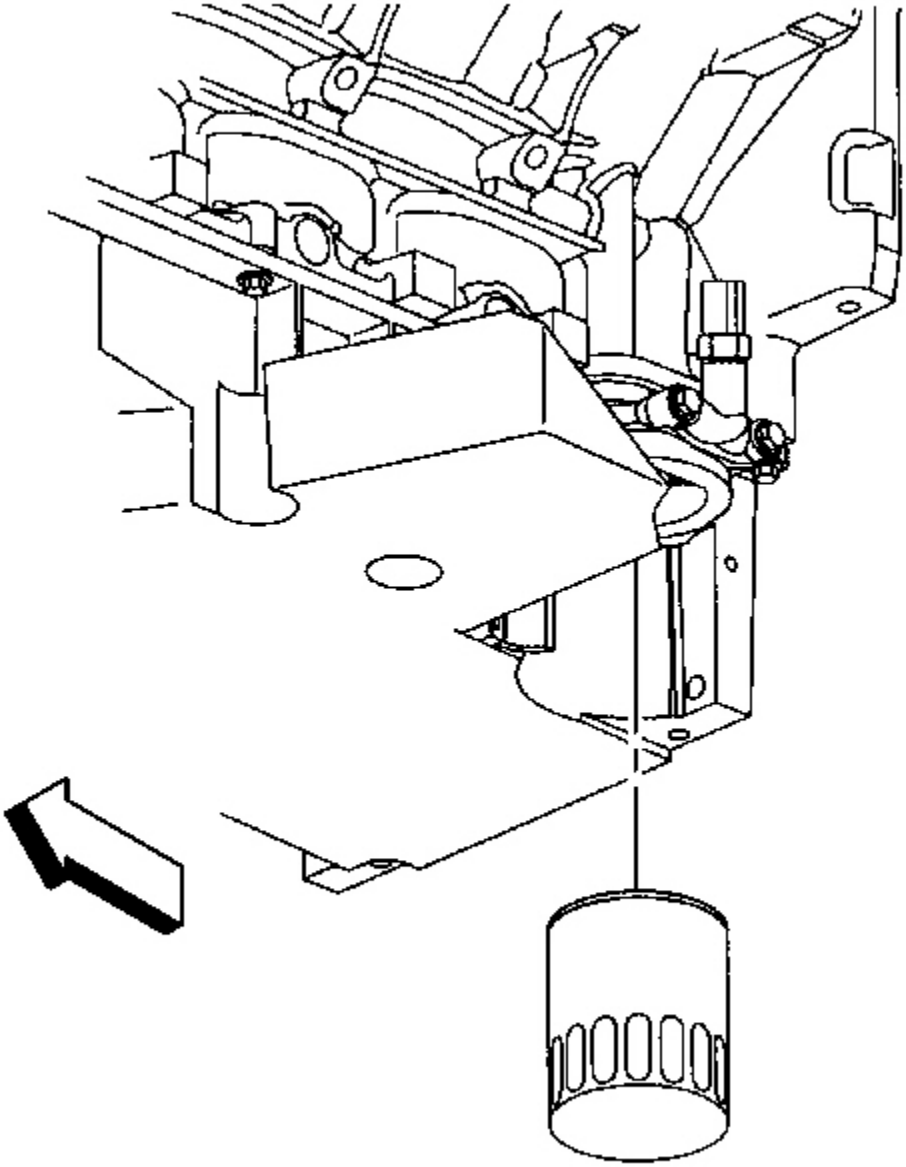

Fig. 368: Engine Oil Filter
Courtesy of GENERAL MOTORS CORP.

2. Remove the engine oil filter.

cardiagn.com

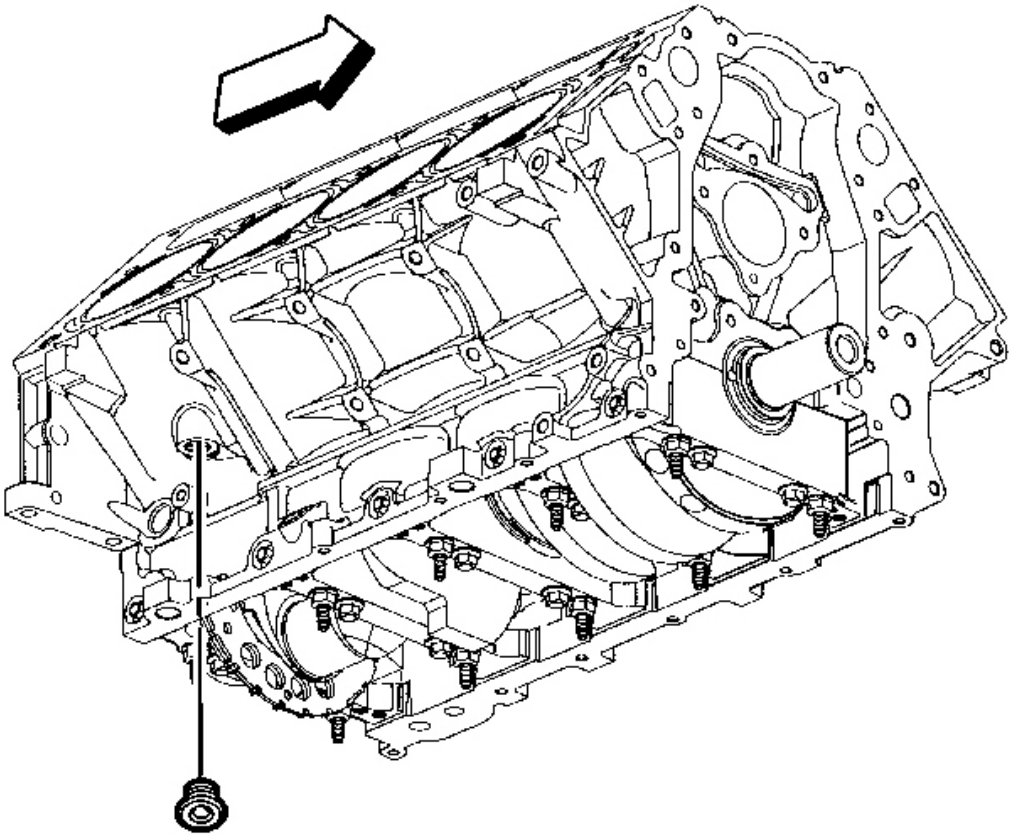

Fig. 369: Right Rear Engine Block Coolant Drain Plug
Courtesy of GENERAL MOTORS CORP.

3. Remove the right rear engine block coolant drain plug and allow the coolant to drain.

cardiagn.com

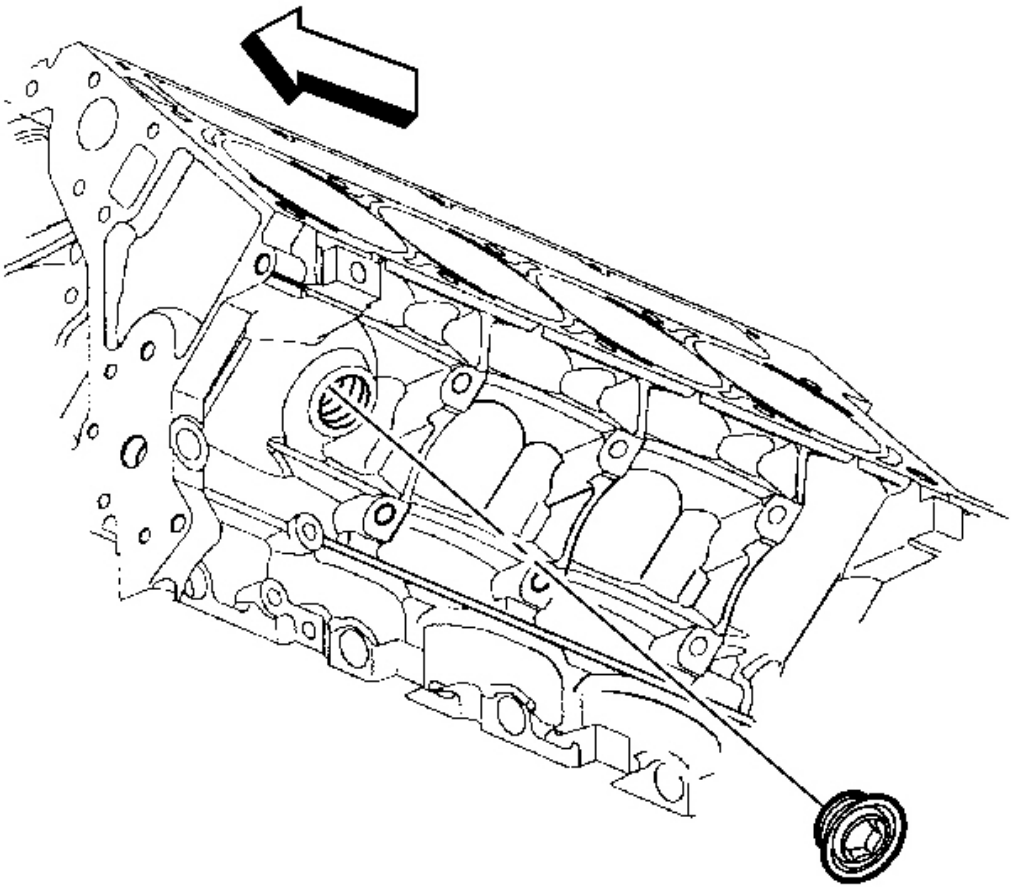

Fig. 370: View Of Engine Block Left Rear Coolant Drain Hole Plug
Courtesy of GENERAL MOTORS CORP.

4. Remove the left front engine block coolant drain plug, if applicable, and allow the coolant to drain.

cardiagn.com

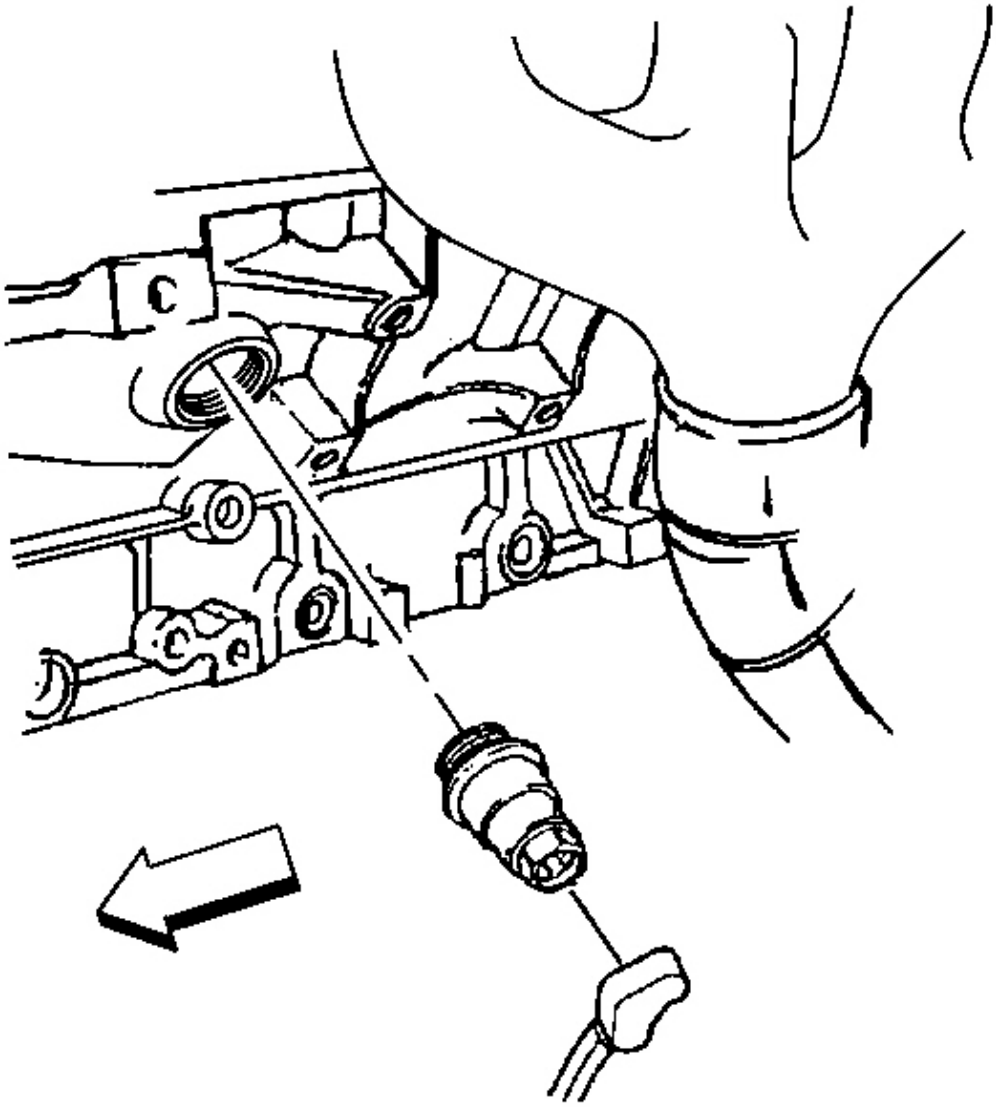

Fig. 371: Engine Block Coolant Heater
Courtesy of GENERAL MOTORS CORP.

5. Remove the engine block coolant heater, if applicable, and allow the coolant to drain.

cardiagn.com

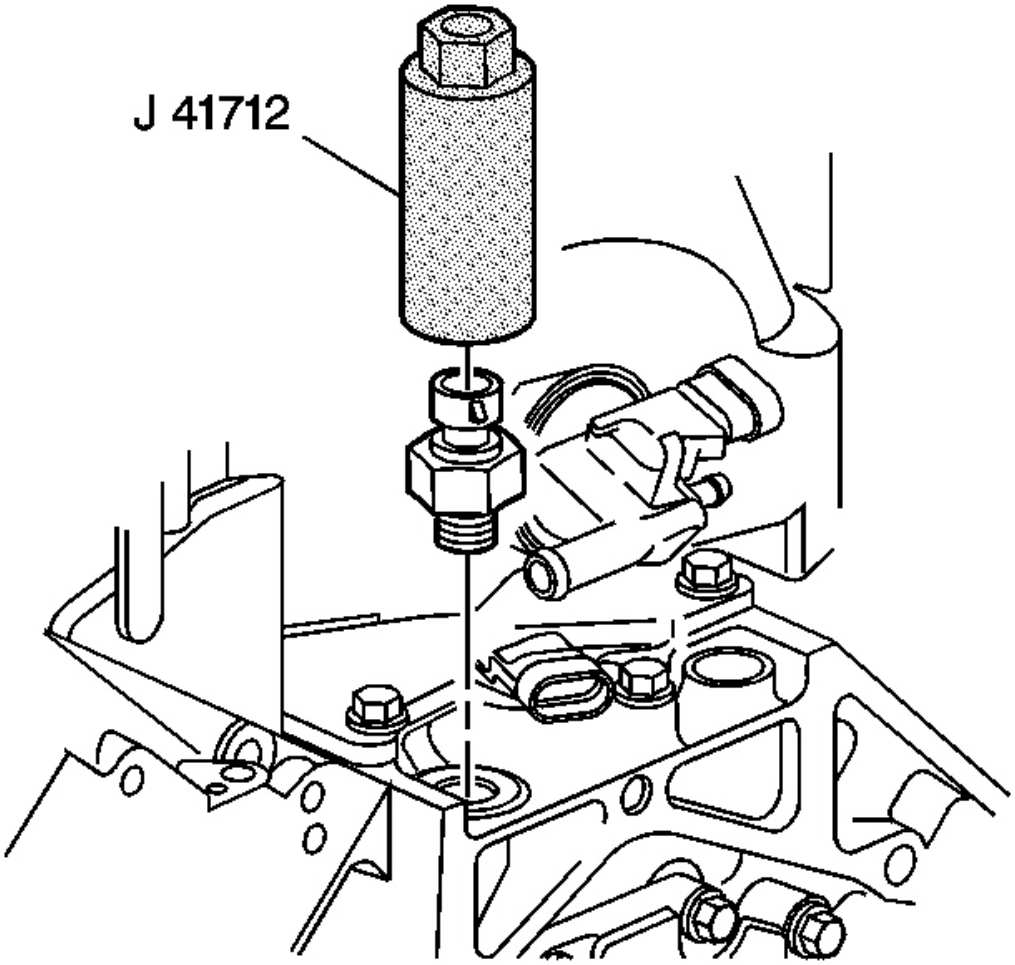

Fig. 372: J 41712 & Oil Pressure Sensor
Courtesy of GENERAL MOTORS CORP.

6. Use the J 41712 or equivalent in order to remove the oil pressure sensor.

CRANKSHAFT BALANCER REMOVAL

Tools Required

- J 41816 Crankshaft Balancer Remover
- J 41816-2 Crankshaft End Protector
- **J 42386-A** Flywheel Holding Tool

cardiagn.com

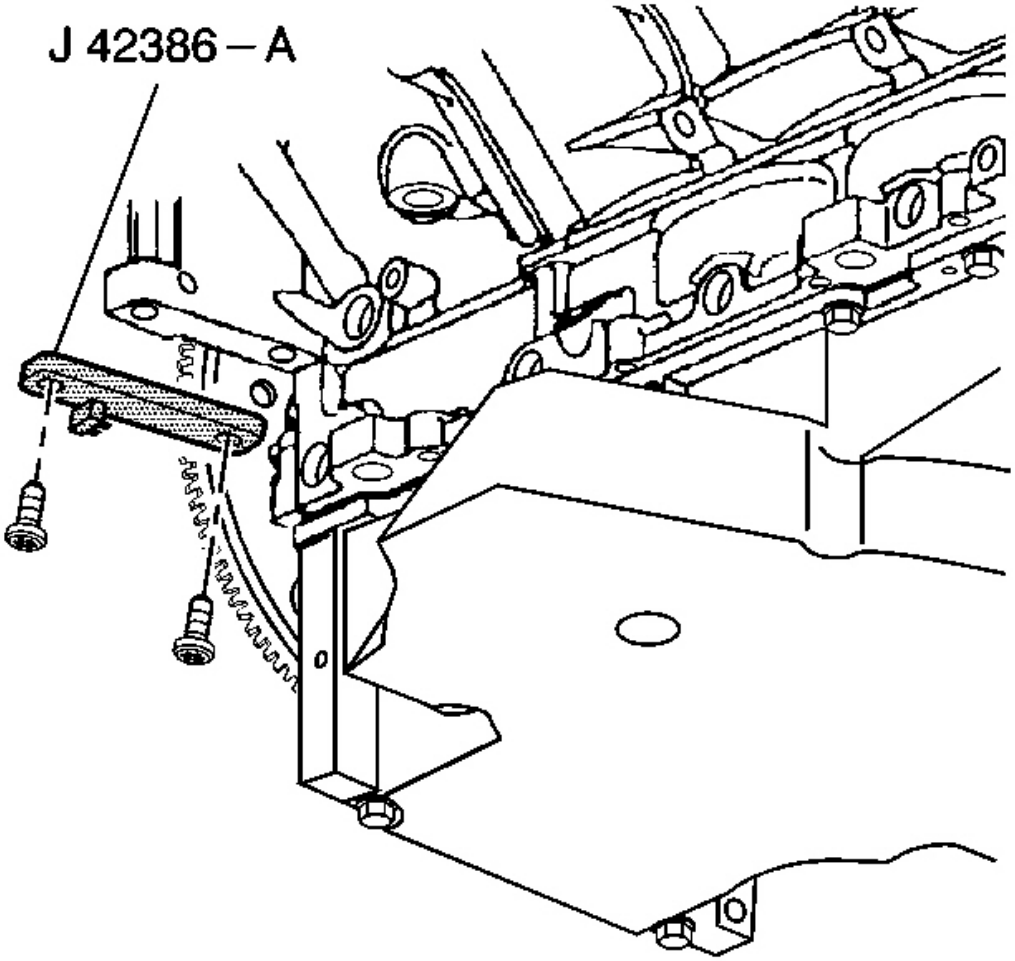

Fig. 373: J 42386-A, Crankshaft Balancer & Bolt
Courtesy of GENERAL MOTORS CORP.

NOTE: **Refer to Fastener Notice in Cautions and Notices.**

IMPORTANT:

- **For manual transmission applications, note the position of the crankshaft balancer before removal. The balancer does not use a key or keyway for positioning. Mark or scribe the end of the crankshaft and the balancer before component removal. The crankshaft balancer must be installed to the original position. If replacing the crankshaft balancer, note the location of any existing balance weights, if applicable. Install new balance weights into the**

cardiagn.com

new crankshaft balancer, if applicable. Crankshaft balancer weights must be installed into the new balancer in the same location as the old balancer. A properly installed balance weight will be either flush or below flush with the face of the balancer.

- **Do not use the crankshaft balancer bolt again. Install a NEW crankshaft balancer bolt during final assembly.**
- **Ensure that the teeth of the flywheel holding tool mesh with the teeth of the engine flywheel.**

1. Install the **J 42386-A** and bolts.

   Use one M10 - 1.5 x 120 mm and one M10 - 1.5 x 45 mm bolt for proper tool operation.

   Tighten: Tighten the **J 42386-A** bolts to 50 N.m (37 lb ft).

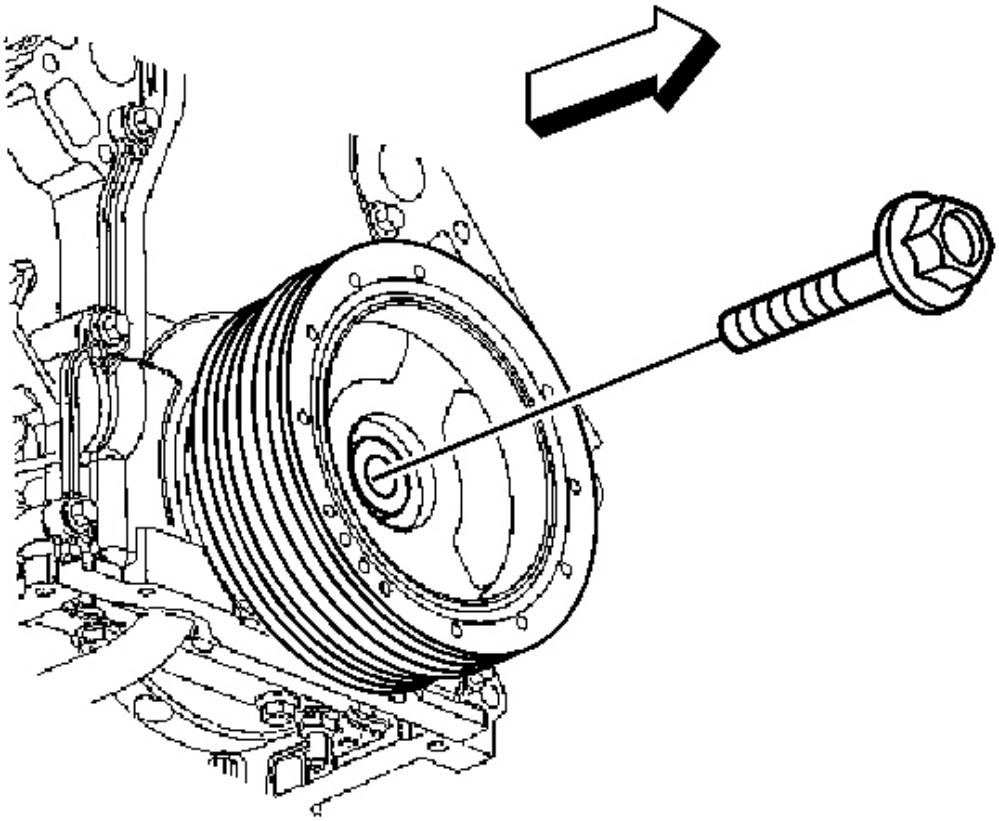

cardiagn.com

Fig. 374: Identifying Harmonic Balancer Bolt
Courtesy of GENERAL MOTORS CORP.

2. Remove the crankshaft balancer bolt.

   Do not discard the crankshaft balancer bolt. The balancer bolt will be used during the balancer installation procedure.

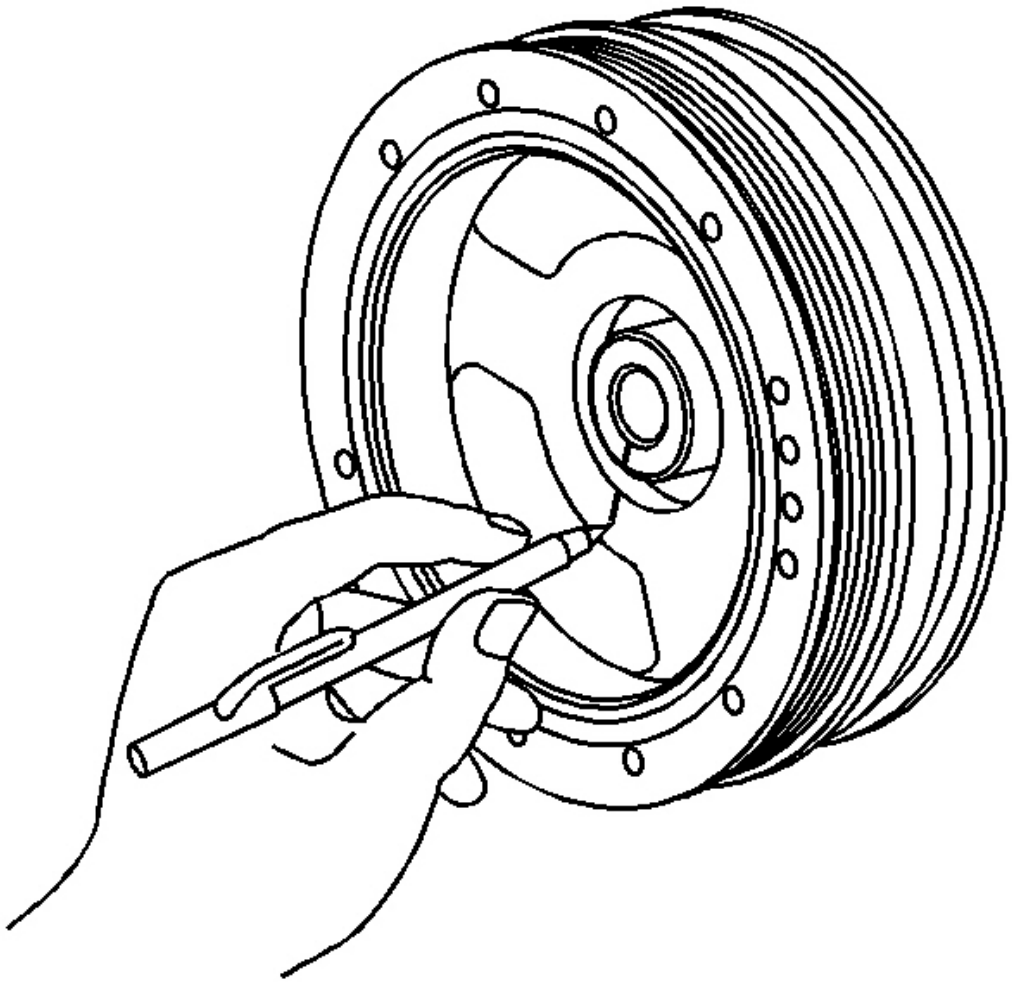

Fig. 375: Mark Crankshaft Balancer & End Of Crankshaft
Courtesy of GENERAL MOTORS CORP.

3. Mark or scribe the crankshaft balancer and the end of the crankshaft.

cardiagn.com

Note the balancer installed position on the crankshaft for assembly. Refer to **Engine Balancing** .

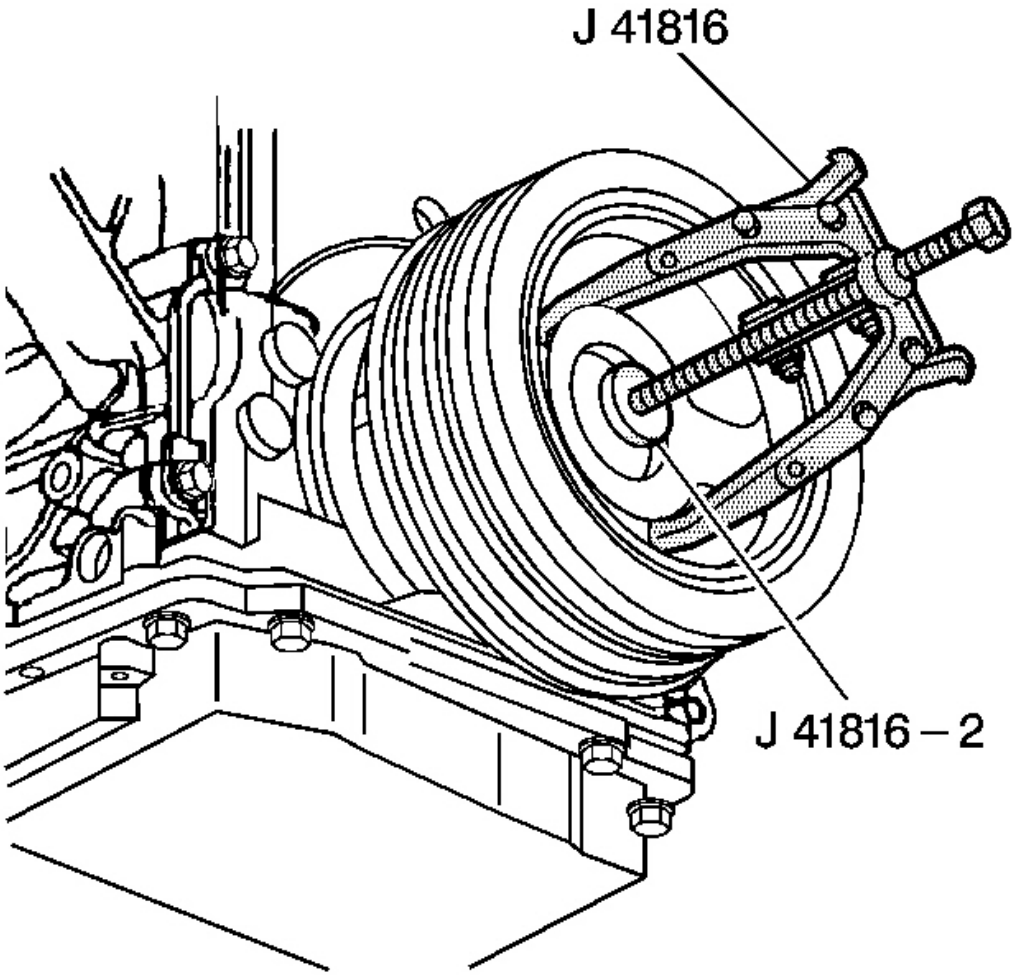

Fig. 376: View Of J 41816 & J 41816-2
Courtesy of GENERAL MOTORS CORP.

4. Use the J 41816 and the J 41816-2 in order to remove the crankshaft balancer.
5. Remove the **J 42386-A** and bolts.

cardiagn.com

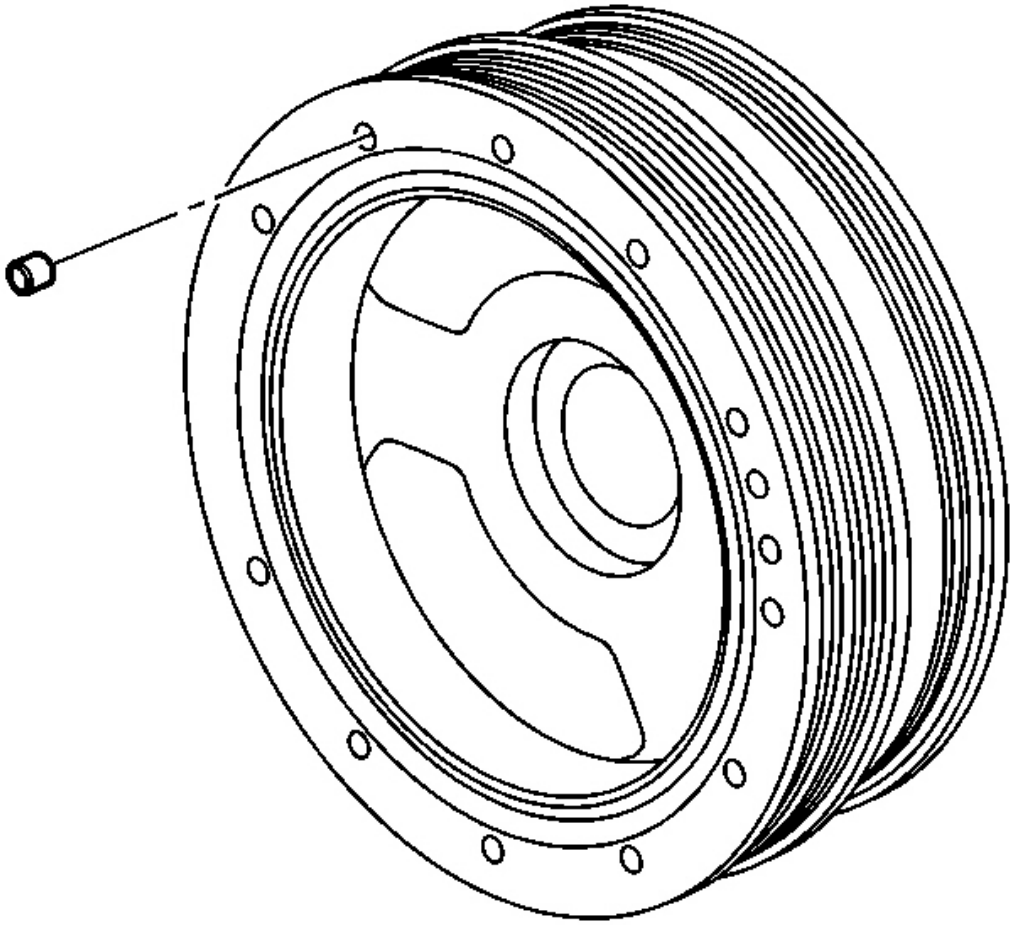

Fig. 377: Crankshaft Balancer Weights
Courtesy of GENERAL MOTORS CORP.

6. Note the position of crankshaft balancer weights, if applicable. Refer to **Crankshaft Balancer Cleaning and Inspection** .

ENGINE FLYWHEEL REMOVAL

cardiagn.com

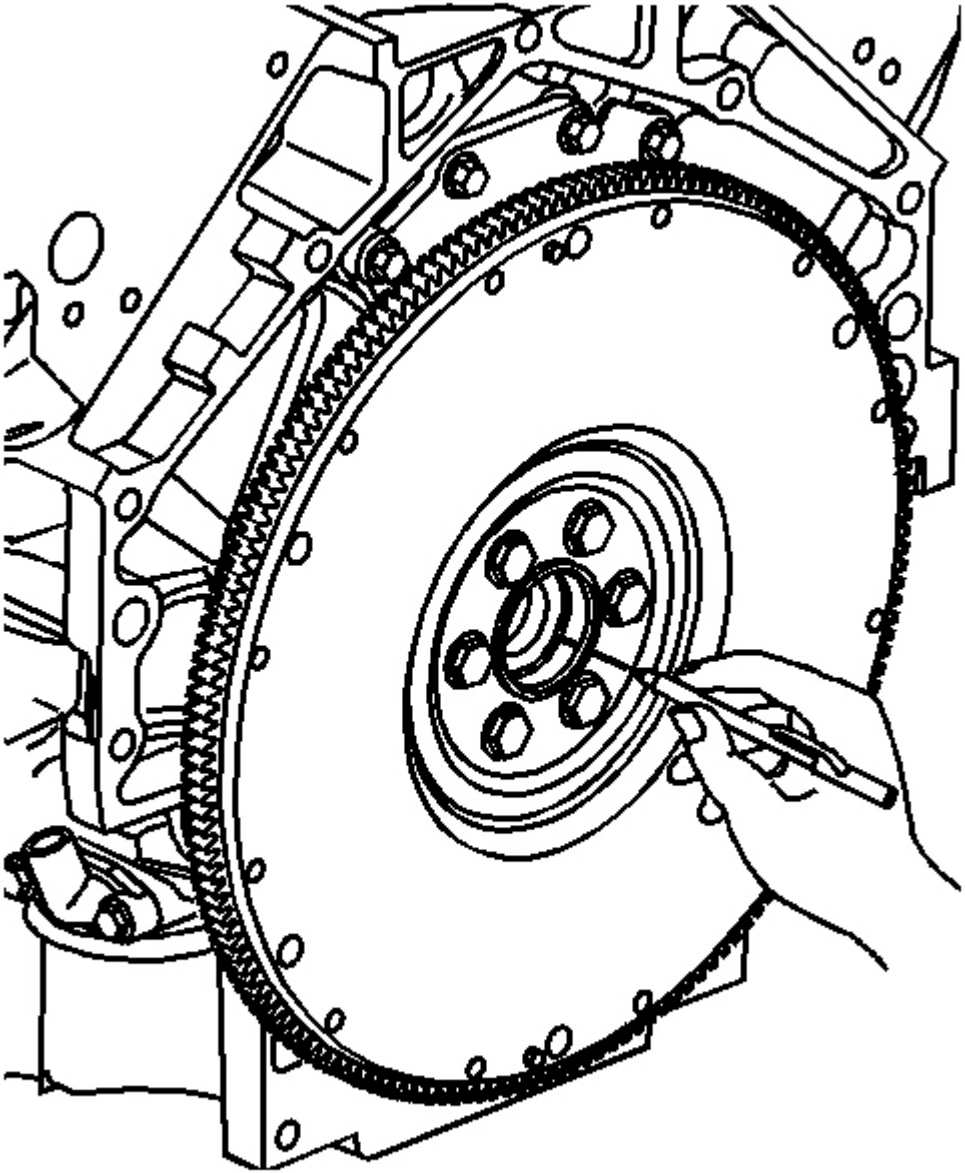

Fig. 378: Mark End Of Crankshaft & Manual Transmission Flywheel
Courtesy of GENERAL MOTORS CORP.

IMPORTANT:

- **For manual transmission applications, note the position and direction of the engine flywheel before removal. The flywheel does**

cardiagn.com

not use a locating pin for alignment. Mark or scribe the end of the crankshaft and the flywheel before component removal. The existing manual transmission engine flywheel must be installed to the original position and direction. The engine flywheel will not initially seat against the crankshaft flange, but will be pulled onto the crankshaft by the engine flywheel bolts. This procedure requires a 3 stage tightening process.

- **DO NOT remove the propeller shaft hub or flexplate from the automatic transmission engine flywheel. The flywheel, propeller shaft hub, and flexplate are balanced as an assembly. If service is required, the entire flywheel assembly should be replaced.**

1. Mark or scribe the end of the crankshaft and the manual transmission flywheel. Refer to **Engine Balancing** .

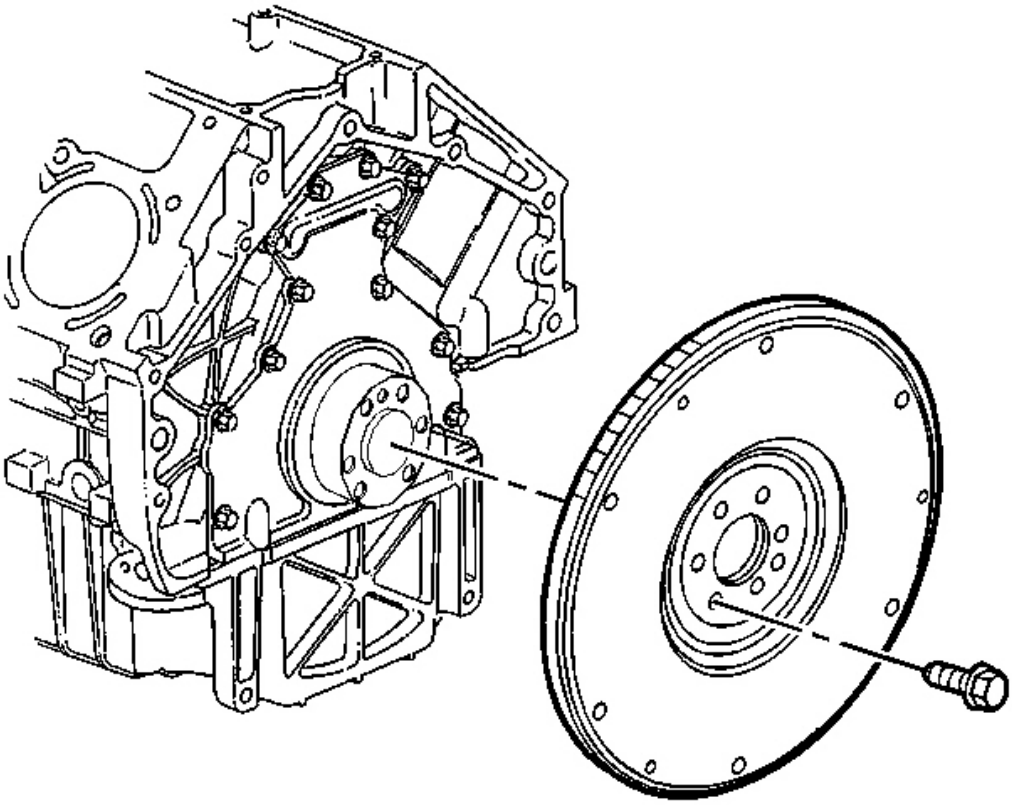

Fig. 379: Engine Flywheel & Bolts (Manual Transmission)
Courtesy of GENERAL MOTORS CORP.

cardiagn.com

2. Remove the manual transmission engine flywheel and bolts.

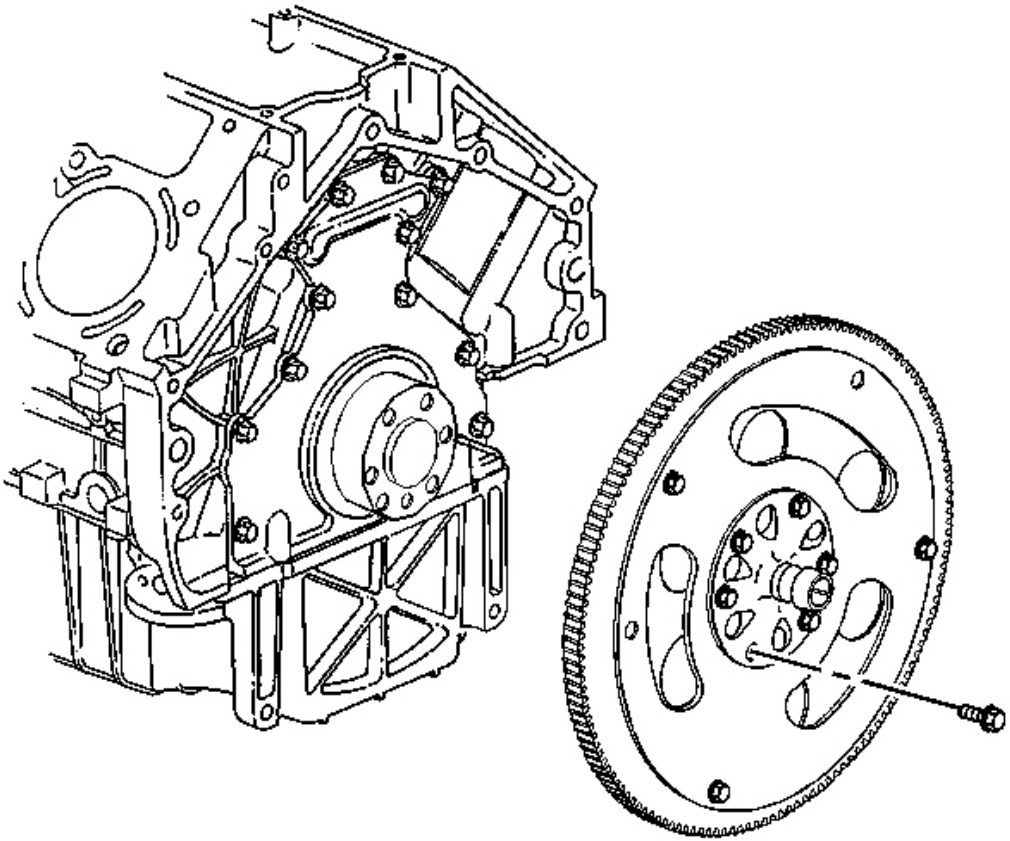

Fig. 380: Automatic Transmission Engine Flywheel & Bolts
Courtesy of GENERAL MOTORS CORP.

3. Remove the automatic transmission engine flywheel and bolts.

CLUTCH PILOT BEARING REMOVAL

Tools Required

J 43276 Clutch Pilot Bearing Remover

cardiagn.com

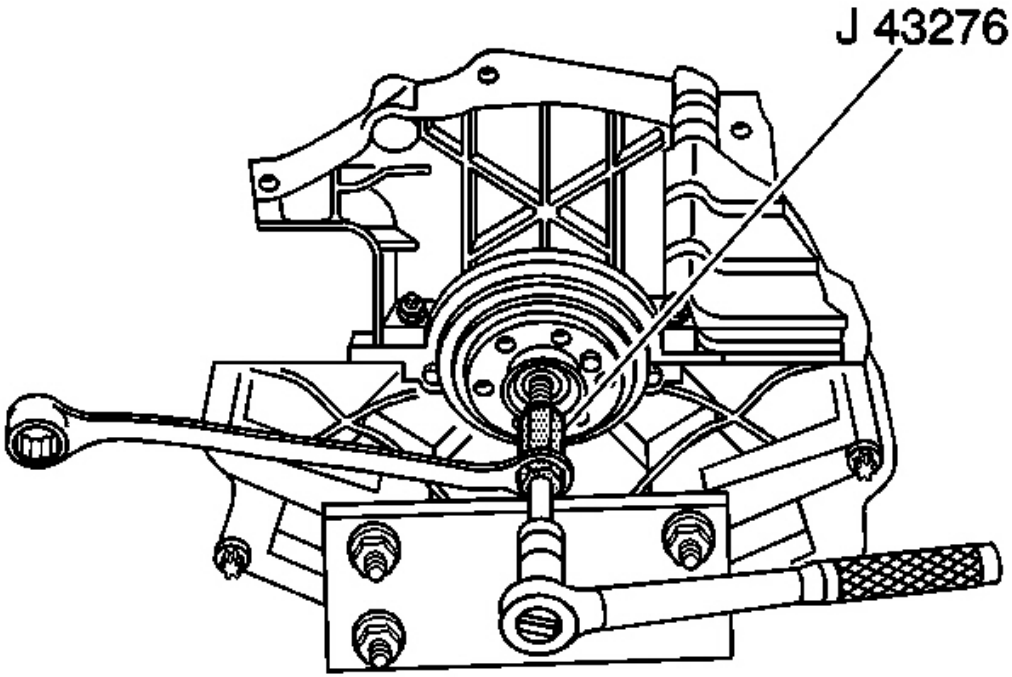

Fig. 381: Clutch Pilot Bearing & J 43276
Courtesy of GENERAL MOTORS CORP.

NOTE: **When using the J 43276 Clutch Pilot Bearing Remover, always secure the J 43276-1 Clutch Pilot Bearing Remover tool body using a wrench. Do not allow the J 43276-1 tool body to rotate. Failing to do so causes damage to the J 43276-1 tool body.**

1. Remove the clutch pilot bearing using the **J 43276** .
    1. Install the J 43276-1 into the clutch pilot bearing.
    2. Using a wrench, secure the J 43276-1.
    3. Insert the J 43276-2 into the J 43276-1.
    4. Rotate the J 43276-2 clockwise into the J 43276-1 until the clutch pilot bearing is completely removed from the crankshaft.
    5. Rotate the J 43276-2 counterclockwise to remove the J 43276-2 from the J 43276-1.
    6. Remove the J 43276-1 from the tool body.

cardiagn.com

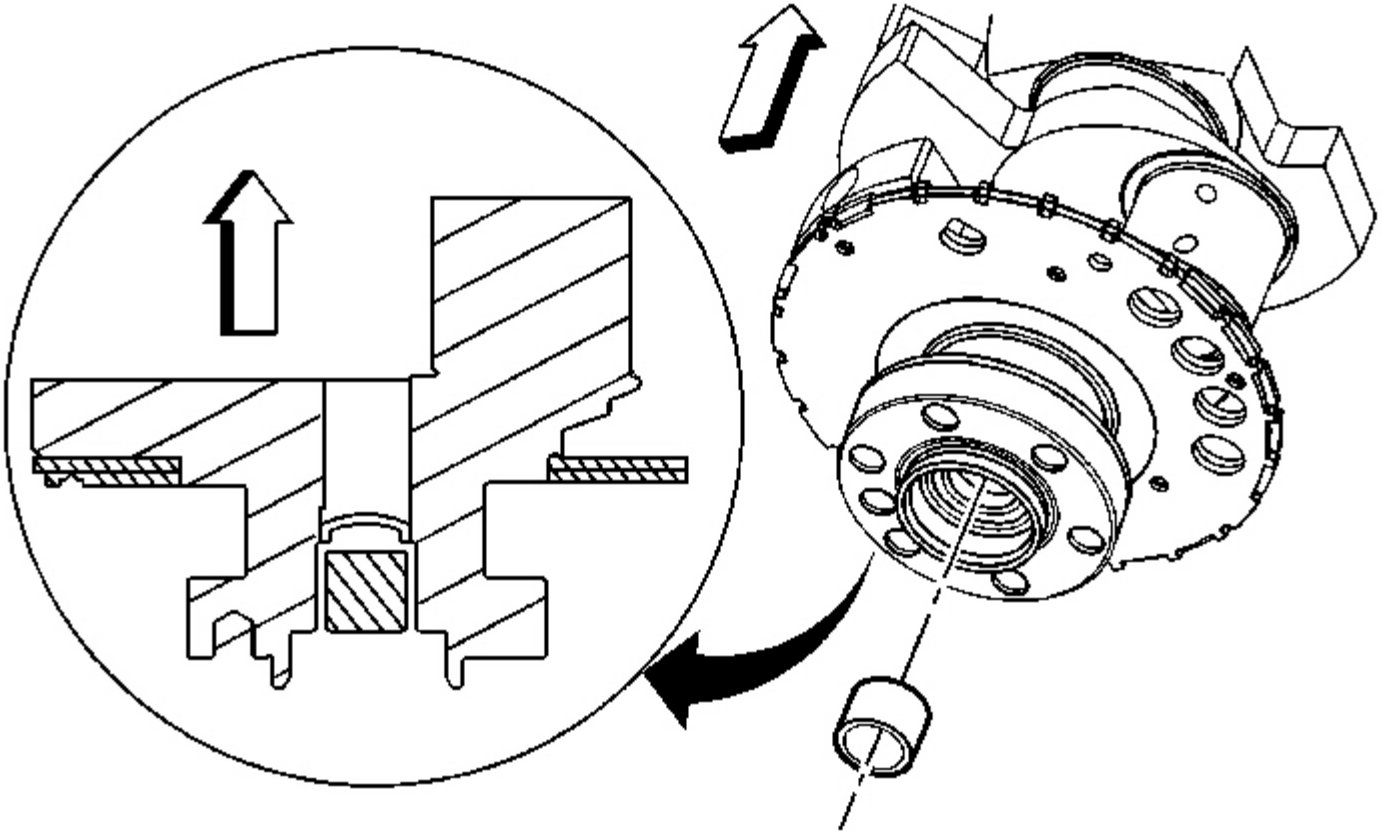

cardiagn.com

Fig. 382: Pilot Bearing
Courtesy of GENERAL MOTORS CORP.

2. Discard the pilot bearing.

OIL LEVEL INDICATOR AND TUBE REMOVAL

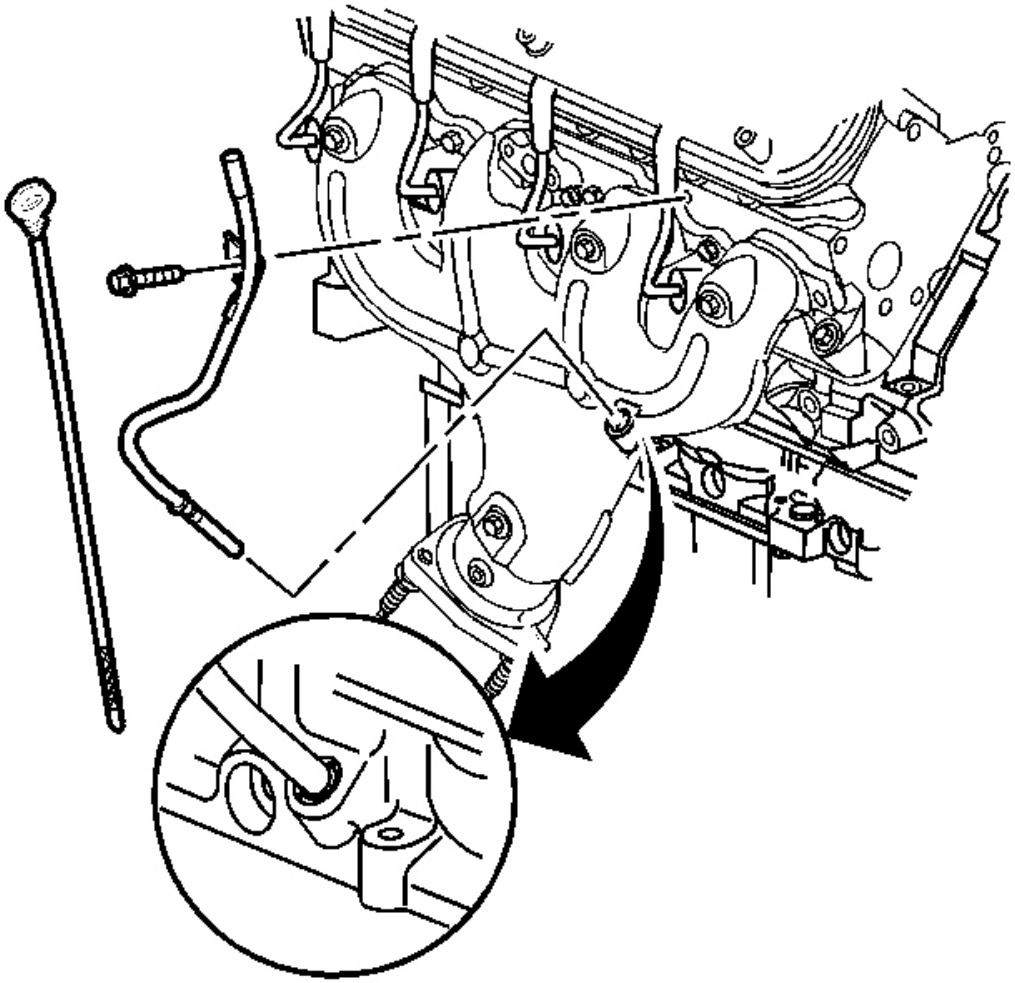

Fig. 383: Oil Level Indicator Tube
Courtesy of GENERAL MOTORS CORP.

1. Remove the oil level indicator from the tube.
2. Remove the oil level indicator tube bolt from the right cylinder head.

cardiagn.com

3. Remove the oil level indicator tube from the engine block.

IMPORTANT: Inspect the O-ring seal for cuts or damage. The O-ring seal may be used again if it is not cut or damaged.

4. Remove the O-ring seal from the tube, if required.

EXHAUST MANIFOLD REMOVAL - LEFT

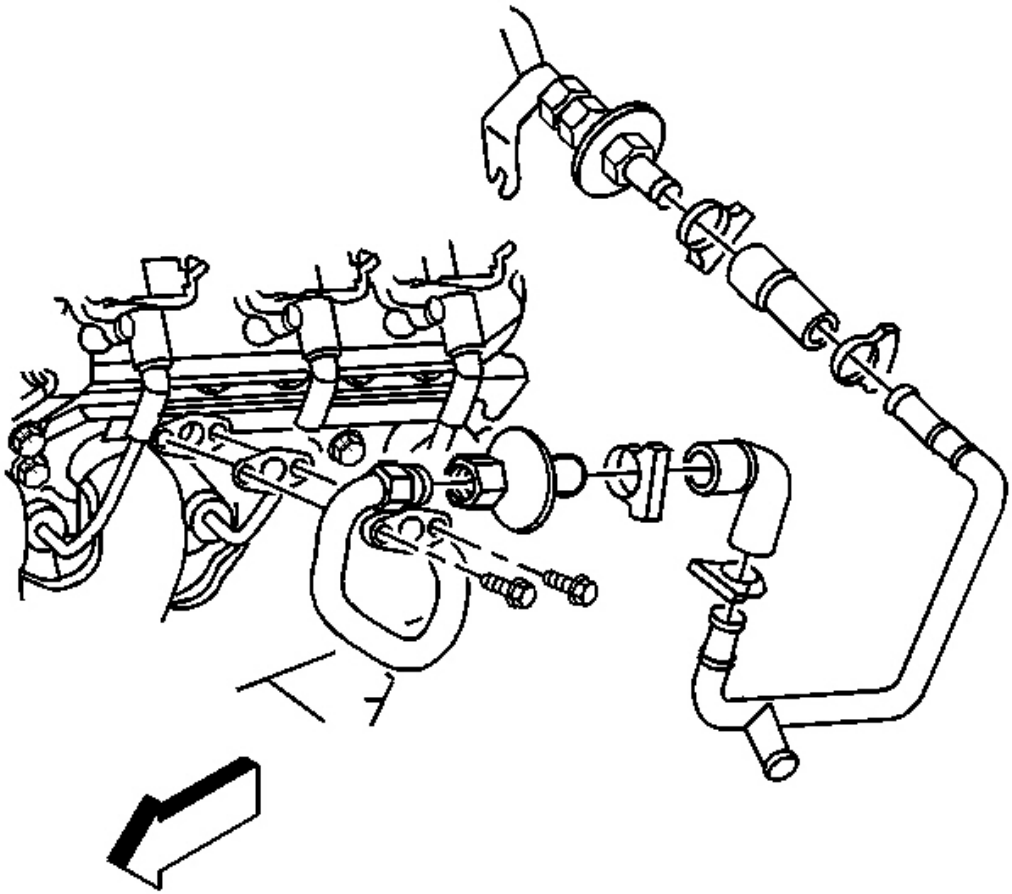

Fig. 384: Air Pipe, Check Valve, Bolts & Gasket From Left Exhaust Manifold
Courtesy of GENERAL MOTORS CORP.

IMPORTANT:

- **Do not remove the check valve from the air injection reaction (AIR) pipe unless service is required.**

cardiagn.com

- **Do not remove the oxygen sensor from the exhaust manifold unless service is required.**

1. Remove the AIR pipe, with check valve, bolts, and gasket from the left exhaust manifold.

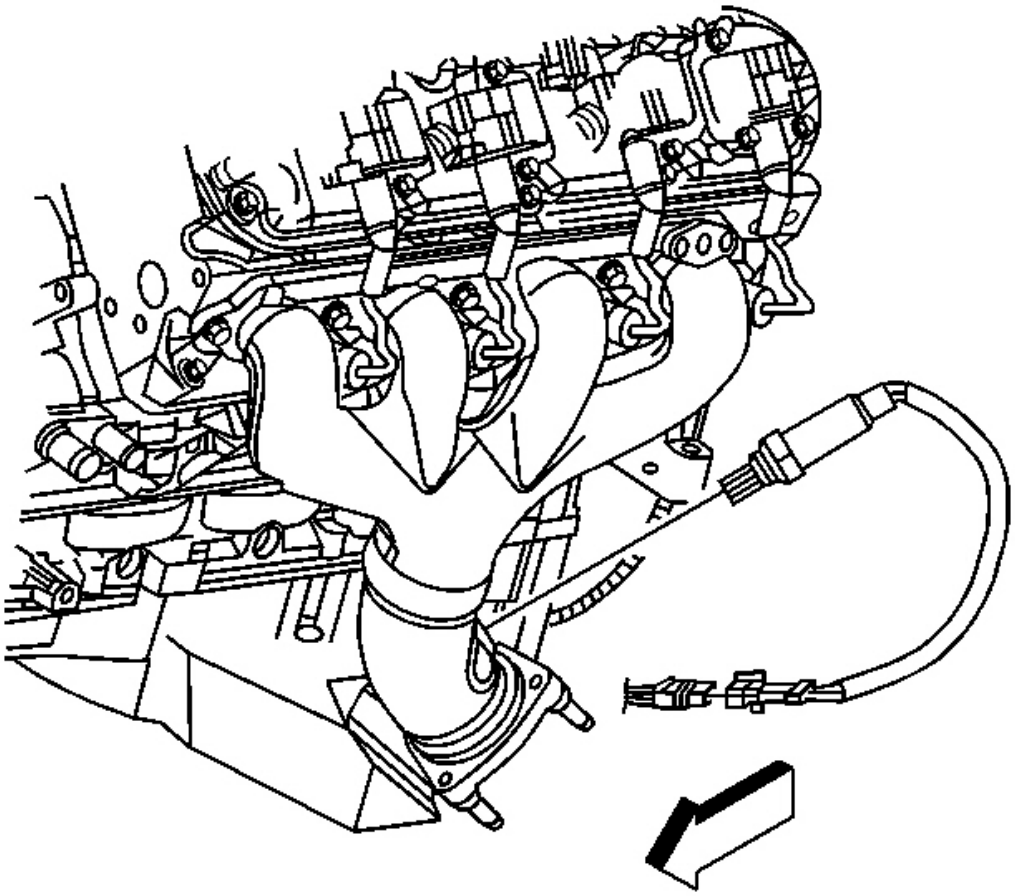

Fig. 385: Spark Plug Wires & Oxygen Sensor
Courtesy of GENERAL MOTORS CORP.

2. Remove the spark plug wires from the spark plugs.

   Do not remove the spark plug wires from the ignition coils unless required.

3. Remove the oxygen sensor from the manifold.

cardiagn.com

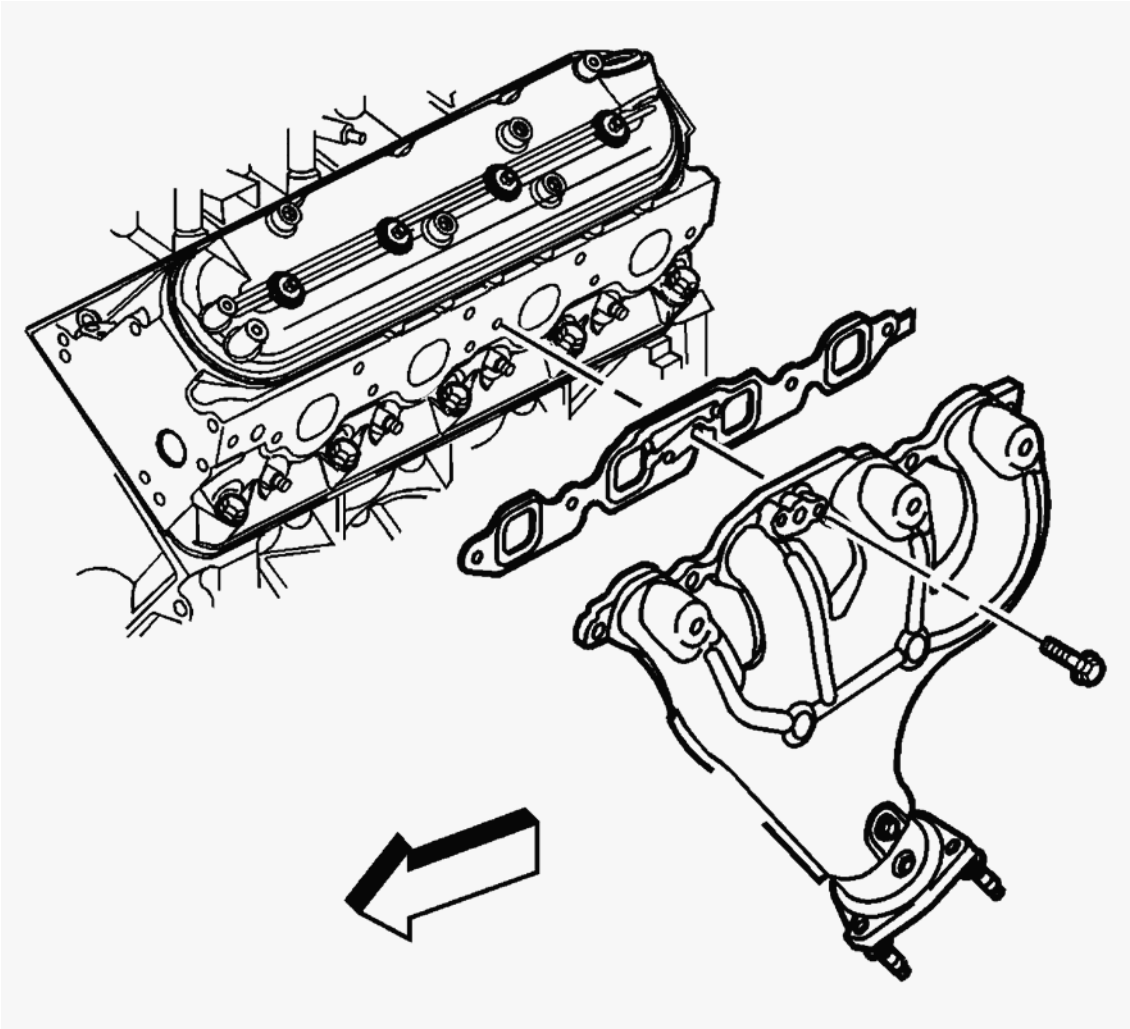

Fig. 386: Exhaust Manifold, Bolts & Gasket
Courtesy of GENERAL MOTORS CORP.

4. Remove the exhaust manifold, bolts, and gasket.
5. Discard the gasket.
6. Remove the heat shield and bolts, if required.

EXHAUST MANIFOLD REMOVAL - RIGHT

cardiagn.com

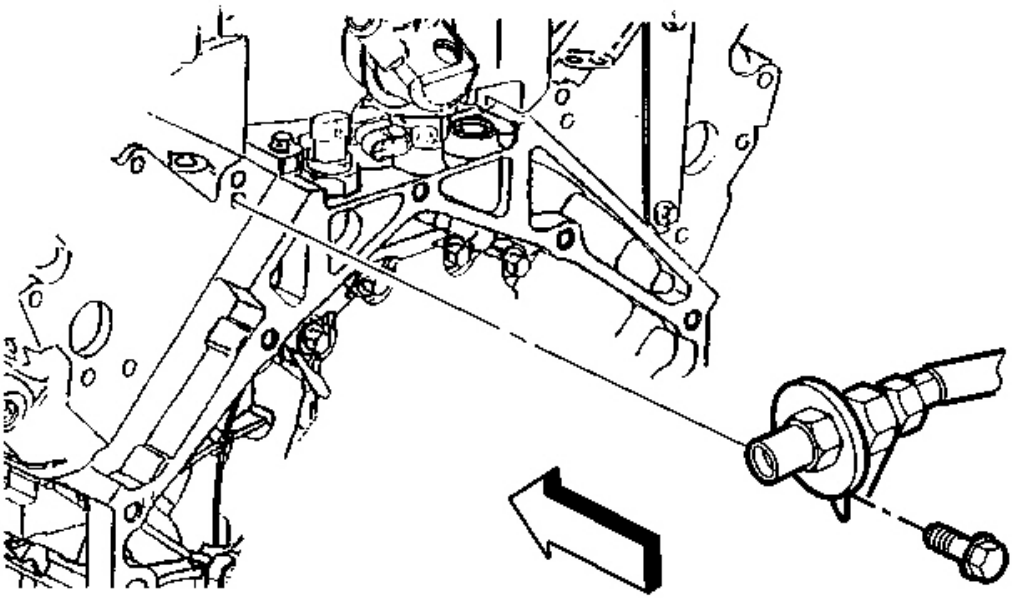

Fig. 387: AIR Pipe, Oxygen Sensor & Bolt
Courtesy of GENERAL MOTORS CORP.

IMPORTANT:

- **Do not remove the check valve from the air injection reaction (AIR) pipe unless service is required.**
- **Do not remove the oxygen sensor from the exhaust manifold unless service is required.**

1. Remove the AIR pipe bracket bolt from the rear of the left cylinder head.

cardiagn.com

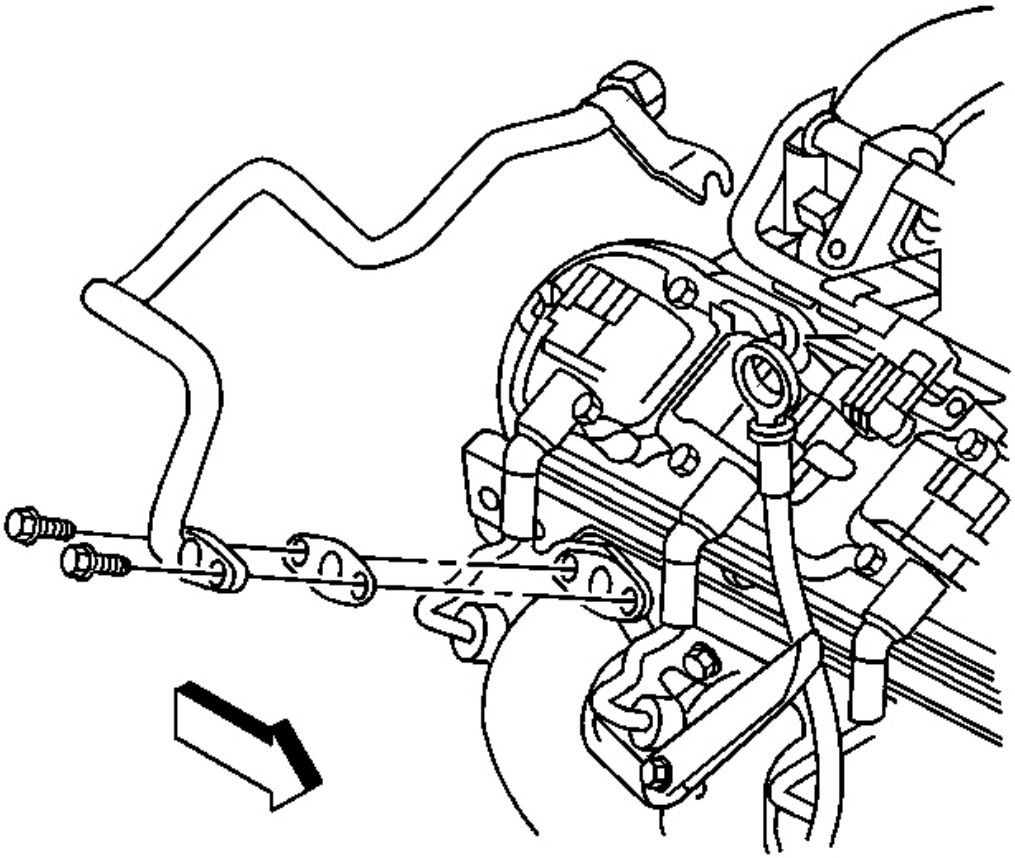

Fig. 388: Air Pipe, Bolts, Gasket & Right Exhaust Manifold
Courtesy of GENERAL MOTORS CORP.

2. Remove the AIR pipe, with check valve, bolts, and gasket from the right exhaust manifold.

cardiagn.com

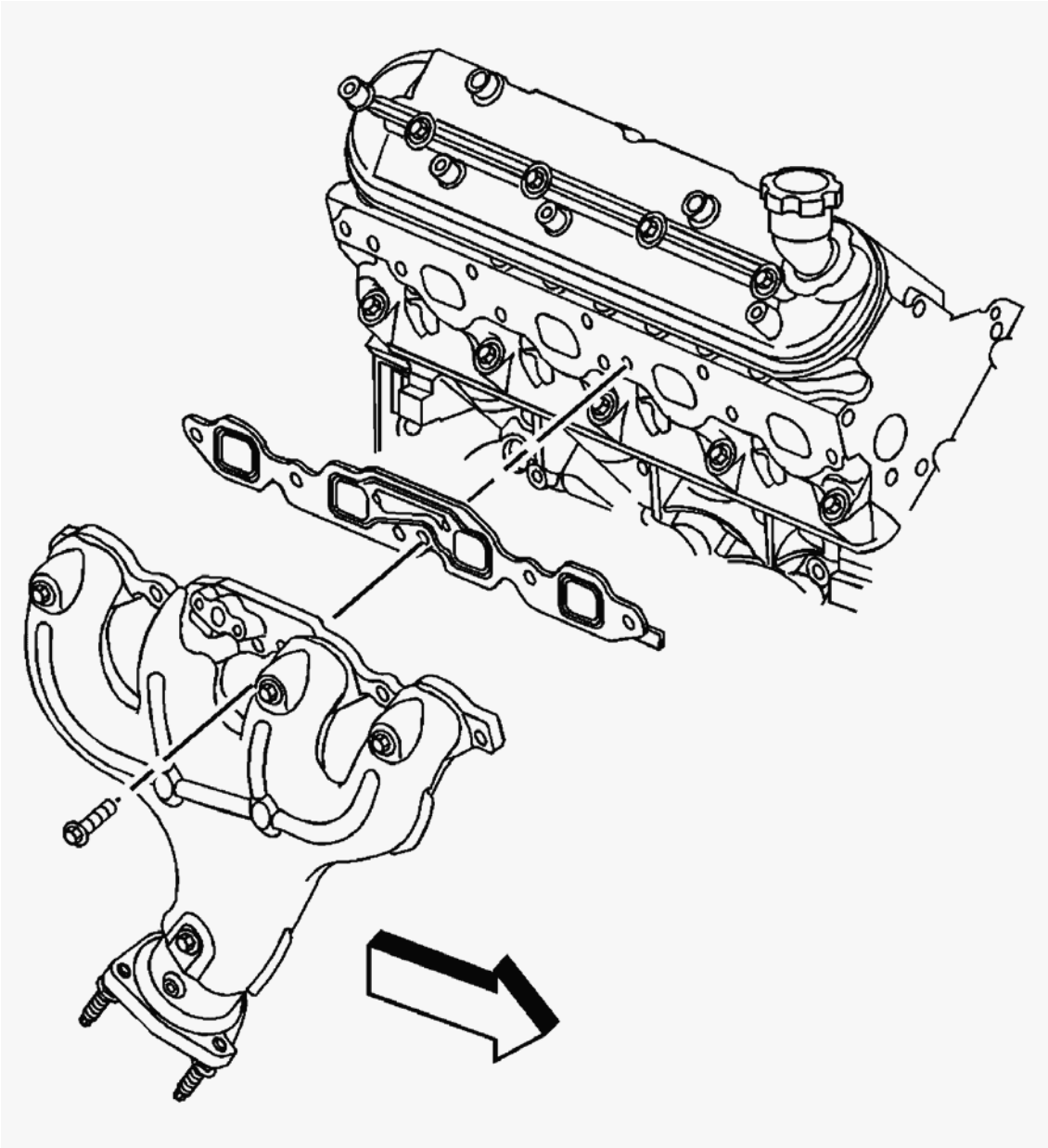

Fig. 389: Exhaust Manifold, Bolts & Gasket
Courtesy of GENERAL MOTORS CORP.

3. Remove the spark plug wires from the spark plugs.

   Do not remove the spark plug wires from the ignition coils unless required.

4. Remove the oxygen sensor from the manifold.
5. Remove the exhaust manifold, bolts, and gasket.
6. Discard the gasket.
7. Remove the heat shield and bolts, if required.

cardiagn.com

WATER PUMP REMOVAL

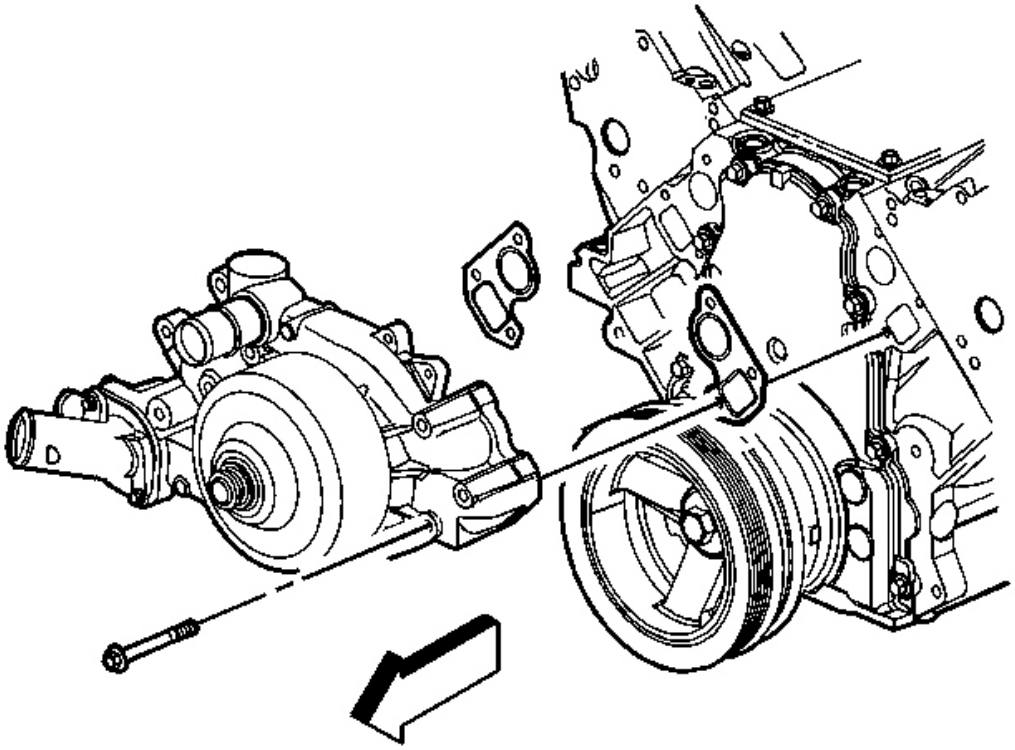

Fig. 390: Water Pump, Gaskets & Bolts
Courtesy of GENERAL MOTORS CORP.

1. Remove the water pump bolts.
2. Remove the water pump and gaskets.
3. Discard the water pump gaskets.

cardiagn.com