AUSTIN

GIPSY

G4M10 & G4M15 VEHICLES

WORKSHOP MANUAL

NOTE

Refer to the end of the appropriate Section for the latest instructions when carrying out work on the vehicle. Additional copies of this publication (Part No. AKD3384C) can only be obtained from an Austin Distributor.

Issued by

B.M.C. SERVICE LIMITED

Proprietors: The British Motor Corporation Limited

COWLEY · OXFORD · ENGLAND

Telephone - - - - - Oxford 77777
Telegrams - - - BMCSERV. Telex. Oxford
Telex - - BMCSERV. Oxford 83145 and 83146
Overseas Cables BMCSERV. Telex. Oxford. England

G4 M10/G4 M15. Issue 2. 48995

PRINTED IN ENGLAND

© The British Motor Corporation Limited, 1965

INTRODUCTION

This Manual has been prepared to provide the service operator with the necessary information for the maintenance and repair of these vehicles. The Manual serves not only as a ready-reference book for service supervision, but also covers items of procedure for the guidance of both the fully qualified and the less-experienced mechanic.

The following notes will simplify reference to the information the Manual contains.

Unit arrangement. The complete vehicle is broken down into Sections, each Section having a letter reference.

Numbering of pages and illustrations. The pages and illustrations are numbered consecutively within each Section, and the Section title and letter, in addition to each page number, are shown on each page.

Service tools. Proper tools contribute largely to efficient, economic, and profitable repair. References have therefore been made to such tools throughout the Manual.

CONTENTS

	Section
Introduction	
General Data	
Petrol Engine	A
Diesel Engine	Aa
Ignition System (petrol models)	B
Cooling System (petrol models)	C
Cooling System (diesel models)	Ca
Fuel System (petrol models)	D
Fuel System (diesel models)	Da
Clutch	E
Gearbox	F
Propeller Shaft	G
Rear Axle (with leaf-spring suspension)	H
Rear Axle (with Flexitor-type suspension)	Ha
Steering Gear (with leaf-spring suspension)	J
Steering Gear (with Flexitor-type suspension)	Ja
Front Axle (with leaf-spring suspension)	K
Front Axle (with Flexitor-type suspension)	Ka
The Front and Rear Suspensions (Road Springs and Dampers)	L
Front and Rear Suspensions (Flexitor type)	La
Braking System	M
Electrical Equipment (petrol models)	N
Electrical Equipment (diesel models)	Na
Wheels and Tyres	O
Chassis Frame	Q
Bodywork	R
Recommended Lubricants	End of Book

GENERAL DATA

PETROL ENGINE

●Type	22NA and 22NB.●
Number of cylinders	4.
Bore	3·125 in. (79·4 mm.).
Stroke	4·375 in. (111·1 mm.).
Capacity	134·1 cu. in. (2199 c.c.).
Compression ratio	6·8 : 1.
Firing order	1, 3, 4, 2.
Maximum torque	116 lb. ft. at 1,800 r.p.m.
Oversize bore: First	·010 in. (·254 mm.).
Second	·020 in. (·508 mm.).
Third	·030 in. (·762 mm.).
Max.	·040 in. (1·016 mm.).

Crankshaft

Journal diameter	2·4790 to 2·4795 in. (62·967 to 62·979 mm.).
Crankpin diameter	2·0000 to 2·0005 in. (50·8 to 50·813 mm.).
Undersizes (journals and crankpins): First	·010 in. (·254 mm.).
Second	·020 in. (·508 mm.).
Third	·030 in. (·762 mm.).
Max.	·040 in. (1·016 mm.).
End-float (taken on thrust washers at centre main bearing)	·002 to ·003 in. (·051 to ·076 mm.).

Main bearings

Number	3.
Type	Steel-backed white metal.
Length: Front and centre	1¾ in. (44·4 mm.).
Rear	2 in. (50·8 mm.).
Running clearance	·001 to ·0025 in. (·025 to ·063 mm.).
Undersizes for reground journals	See under **'Crankshaft'**.

Connecting rods

Length (centres)	8·1830 to 8·1875 in. (207·848 to 207·963 mm.).
Side-clearance	·008 to ·012 in. (·203 to ·305 mm.).

Big-end bearings

Type	Steel-backed white metal.
Length	1·226 to 1·236 in. (31·140 to 31·394 mm.).
Inner diameter	2·001 to 2·002 in. (50·825 to 50·850 mm.).
Running clearance	·0005 to ·002 in. (·0127 to ·0508 mm.).
Undersizes for reground crankpins	See under **'Crankshaft'**.

Pistons

Material	Aluminium alloy.
Clearance at bottom of skirt	·008 to ·014 in. (·020 to ·036 mm.).
Width of groove: Compression	·0957 to ·0967 in. (2·430 to 2·456 mm.).
Oil control	·1895 to ·1905 in. (4·813 to 4·838 mm.).
Oversizes	See under **'ENGINE'**.

Piston rings

Number	3 compression (1 plain, 2 taper), 1 oil control.
Width: Compression	$\frac{3}{32}$ in. (2·38 mm.).
Oil control	$\frac{3}{16}$ in. (4·76 mm.).
Gap (fitted): Compression	·009 to ·014 in. (·2286 to ·3556 mm.).
Oil control	·008 to ·012 in. (·2032 to ·3048 mm.).

Gudgeon pins	
Type	Clamped.
Fit in piston	·0001 in. (·0025 mm.) clearance to ·0003 in. (·0076 mm.) interference.
Diameter	·8748 to ·8750 in. (22·22 to 22·225 mm.) clearance.
Length	2·75 in. (69·85 mm.).
Valves	
Position	Overhead, push-rod-operated.
Lift	·340 in. (9·906 mm.).
Diameter: Head: Inlet	1·600 to 1·605 in. (40·64 to 40·767 mm.).
Exhaust	1·415 to 1·420 in. (35·941 to 36·068 mm.).
Stem: Inlet and exhaust	·341 to ·342 in. (8·68 to 8·69 mm.).
Stem to guide clearance: Inlet	·00155 to ·00255 in. (·039 to ·064 mm.).
Exhaust	·00105 to ·00205 in. (·027 to ·052 mm.).
Valve to rocker clearance	·012 in. (·30 mm.).
Seat angle	45°.
Valve guides	
Length: Inlet	$2\frac{9}{64}$ in. (54·371 mm.).
Exhaust	$2\frac{53}{64}$ in. (71·834 mm.).
Fitted height above head	$\frac{11}{16}$ to $\frac{3}{4}$ in. (17·5 to 19 mm.).
Diameter: Outside: Inlet and exhaust	·5635 to ·5640 in. (14·312 to 14·325 mm.).
Inside: Inlet	·3438 to ·3443 in. (8·73 to 8·75 mm.).
Exhaust	·3433 to ·3438 in. (8·720 to 8·733 mm.).
Valve springs	
Free length	$1\frac{55}{64}$ in. (47·288 mm.).
Fitted length	1·526 in. (38·76 mm.).
Pressure: Valve closed	66 to 72 lb. (29·94 to 32·66 kg.).
Wire diameter	·184 in. (4·67 mm.).
Core diameter	1·125 to 1·140 in. (28·575 to 28·956 mm.).
Tappets	
Type	Cylindrical.
Rockers	
Bushes—inside diameter (reamed in position)	·8115 to ·8125 in. (20·61 to 20·64 mm.).
Bore of arm	·909 to ·910 in. (23·088 to 23·114 mm.).
Camshaft	
Journal diameter: Front	1·78875 to 1·78925 in. (45·434 to 45·446 mm.).
Centre	1·74875 to 1·74925 in. (44·418 to 44·431 mm.).
Rear	1·62275 to 1·62325 in. (41·217 to 41·236 mm.).
End-float (taken on thrust plate at front end)	·003 to ·006 in. (·076 to ·152 mm.).
Camshaft bearings	
Number	3.
Type	Steel-backed white metal.
Inner diameter (reamed in position): Front	1·79025 to 1·79075 in. (45·472 to 45·485 mm.).
Centre	1·75025 to 1·75075 in. (44·456 to 44·469 mm.).
Rear	1·62425 to 1·62475 in. (41·256 to 41·269 mm.).
Running clearance	·001 to ·002 in. (·025 to ·051 mm.).
Valve timing	
Chain pitch and number of pitches	·375 in. (9·525 mm.); 62.
Valve to rocker clearance timing check	·021 in. (·533 mm.).
Inlet valve: Opens	5° B.T.D.C.
Closes	45° A.B.D.C.
Exhaust valve: Opens	40° B.B.D.C.
Closes	10° A.T.D.C.

Engine lubrication system

System	Pressure.
Pump type	Eccentric rotor.
External filter	Full-flow Tecalemit or Purolator.
Oil pressure: Idling	15 lb./sq. in. (1·05 kg./cm.²).
Normal running	50 lb./sq. in. (3·5 kg./cm.²).
Release valve spring: Free length	3 in. (7·62 mm.).
Operating pressure	50 to 55 lb./sq. in. (3·52 to 3·87 kg./cm.²).

DIESEL ENGINE

●Type	22UA and 22UC.●
Number of cylinders	4.
Bore	3·2495 to 3·2510 in. (82·537 to 82·575 mm.).
Stroke	4·0 in. (101·6 mm.).
Capacity	132·7 cu. in. (2178 c.c.).
Compression ratio	20 : 1.
Firing order	1, 3, 4, 2.
Maximum torque	89 lb. ft. at 2,800 r.p.m.
Idling speed	600 r.p.m. (500 r.p.m. with pump Type DPA.3248050A).
Maximum governed light running speed	3,700 r.p.m.
Maximum governed speed under load	3,500 r.p.m.
Oversize bore: First	·010 in. (·254 mm.).
Second	·020 in. (·508 mm.).
●Third [max. on early (linered) engines]	·030 in. (·762 mm.).
Fourth [max. on later (non-linered) engines]	·040 in. (1·016 mm.).●

Crankshaft

Journal diameter	2·4780 to 2·4785 in. (62·941 to 62·954 mm.).
Crankpin diameter	2·2480 to 2·2485 in. (57·099 to 57·112 mm.).
Undersizes (journals and crankpin): First	·010 in. (·254 mm.).
Second	·020 in. (·508 mm.).
Third	·030 in. (·762 mm.).
Max.	·040 in. (1·016 mm.).
End-float (taken on thrust washers at centre main bearing)	·002 to ·003 in. (·051 to ·076 mm.).

Main bearings

Number	3.
Length: Front and centre	1·625 in. (41·275 mm.).
Rear	1·875 in. (47·625 mm.).
Running clearance	·002 to ·0035 in. (·051 to ·089 mm.).
Undersizes for reground journals	See under **'Crankshaft'**.

Connecting rods

Length (centres)	7·999 to 8·001 in. (20·317 to 20·323 mm.).
Side-clearance	·008 to ·012 in. (·203 to ·305 mm.).
Small-end bush (inner diameter, reamed in position)	1·1255 to 1·1260 in. (28·588 to 28·600 mm.).

Big-end bearings

Length	·995 to 1·005 in. (25·273 to 25·527 mm.).
Inner diameter	2·2515 in. (57·188 mm.).
Running clearance	·002 to ·0035 in. (·051 to ·089 mm.).
Undersizes for reground crankpin	See under **'Crankshaft'**.

Pistons

Material	Aluminium alloy.
Clearance at bottom of skirt	·004 to ·0046 in. (·102 to ·117 mm.).
Width of groove: First compression	·0975 to ·0985 in. (2·477 to 2·502 mm.).
Second and third compression	·0965 to ·0975 in. (2·451 to 2·477 mm.).
Oil control	·1885 to ·1895 in. (4·788 to 4·813 mm.).
Oversizes	See under 'ENGINE'.

Piston rings

Number	3 compression (1 chrome-faced, 2 parallel, internally stepped), 2 oil control.
Width: Compression	·0928 to ·0938 in. (2·357 to 2·383 mm.).
Oil control	·1865 to ·1875 in. (4·737 to 4·763 mm.).
Gap (compression and oil control)	·009 to ·014 in. (·228 to ·356 mm.).

Gudgeon pins

Type	Floating, located in piston by circlips.
Fit: In piston	·0003 in. (·008 mm.) clearance to ·0005 in. (·013 mm.) interference.
In connecting rod	·0005 to ·0033 in. (·013 to ·033 mm.).
Diameter	1·1247 to 1·1250 in. (28·567 to 28·575 mm.).
Length	2·762 to 2·772 in. (70·155 to 70·409 mm.).

Valves

Position	Overhead and push-rod-operated.
Lift	·39 in. (9·9 mm.).
Diameter: Head: Inlet	1·605 to 1·610 in. (40·77 to 40·89 mm.).
Exhaust	1·3215 to 1·3265 in. (33·566 to 33·693 mm.).
Stem: Inlet and exhaust	·34175 to ·34225 in. (8·680 to 8·693 mm.).
Stem to guide clearance: Inlet	·0015 to ·0025 in. (·038 to ·064 mm.).
Exhaust	·001 to ·002 in. (·025 to ·051 mm.).
Valve to rocker clearance	·012 in. (·305 mm.) cold.
Seat angle, inlet and exhaust	45°.
Seat face width: Inlet	·195±·0025 in. (4·953±·063 mm.).
Exhaust	·199±·0025 in. (5·05±·063 mm.).

Valve guides

Length: Inlet	2·141 in. (54·37 mm.).
Exhaust	2·5 in. (63·5 mm.).
Fitted height above head	·734 to ·750 in. (18·64 to 19·05 mm.).
Diameter: Outside: Inlet and exhaust	·5635 to ·5640 in. (14·313 to 14·326 mm.).
Inside: Inlet (reamed in position)	·3438 to ·3443 in. (8·733 to 8·745 mm.).
Exhaust	·3433 to ·3438 in. (8·720 to 8·733 mm.).

Valve springs

Free length: Inner	2·187 in. (55·55 mm.).
Outer	2·5 in. (63·5 mm.).
Fitted length: Inner	1·5 in. (38·1 mm.).
Outer	1·703 in. (43·26 mm.).
Pressure: Valve closed: Inner	23 to 25 lb. (10·43 to 11·34 kg.).
Outer	56·5 to 60·5 lb. (25·63 to 27·44 kg.).
Working coils: Inner	7½.
Outer	5½.
Wire diameter Inner	·104 in. (2·64 mm.).
Outer	·156 in. (3·97 mm.).
Core diameter Inner	·75 to ·765 in. (19·05 to 19·43 mm.).
Outer	1·125 to 1·140 in. (28·58 to 28·96 mm.).

Tappets	
Type	Cylindrical.
Rockers	
Bushes—inside diameter (reamed in position)	·8115 to ·8125 in. (20·61 to 20·64 mm.).
Bore of arm	·909 to ·910 in. (23·09 to 23·11 mm.).
Camshaft	
Journal diameter: Front	1·78875 to 1·78925 in. (45·43 to 45·45 mm.).
Centre	1·74875 to 1·74925 in. (44·42 to 44·43 mm.).
Rear	1·62275 to 1·62325 in. (41·22 to 41·23 mm.).
End-float (taken on thrust plate at front end)	·003 to ·006 in. (·077 to ·15 mm.).
Camshaft bearings	
Number	3.
Type	Steel-backed white metal.
Inner diameter (reamed in position): Front	1·79025 to 1·79075 in. (45·47 to 45·48 mm.).
Centre	1·75025 to 1·75075 in. (44·46 to 44·47 mm.).
Rear	1·62425 to 1·62475 in. (41·26 to 41·27 mm.).
Running clearance	·001 to ·002 in. (·03 to ·05 mm.).
Valve and injection timing	
Chain pitch and number of pitches	·375 in. (9·53 mm.); 92.
Valve to rocker clearance for timing check	·021 in. (·53 mm.).
Inlet valve: Opens	5° B.T.D.C. (With ·021 in. (·53 mm.) valve to rocker clearance.)
Closes	40° A.B.D.C.
Exhaust valve: Opens	60° B.B.D.C.
Closes	5° A.T.D.C.
Static injection timing	28° B.T.D.C. (26° B.T.D.C. with pump Type DPA.3248050A).
Injection pump chain wheel bearing liner	
Inside diameter (finished in position)	1·75025 to 1·75075 in. (44·46 to 44·47 mm.).
Clearance	·001 to ·002 in. (·03 to ·05 mm.).
Engine lubrication system	
System	Pressure.
Pump type	Eccentric rotor.
Pump rotor end float	See Section Aa.11.
Pump rotor lobe clearance	See Section Aa.11.
External filter	Full-flow Tecalemit.
Oil pressure: Idling	15 lb./sq. in. (1·055 kg./cm.²).
Normal running	45 to 50 lb./sq. in. (3·164 to 3·515 kg./cm.²).
Release valve spring: Free length	3 in. (76·2 mm.).
Operating pressure	50 to 55 lb./sq. in. (3·52 to 3·87 kg./cm.²).

IGNITION

Distributor	
Type	25D/4.
Rotation	Clockwise, looking on drive end.
Gap	·014 to ·016 in. (·35 to ·40 mm.).
Dwell angle	57–63°.
Coil type	HA12.
Static ignition timing	6° B.T.D.C.
Stroboscopic ignition timing	9° B.T.D.C. at 600 r.p.m.
Sparking plug type	Champion XN8.
Gap	·024 to ·026 in. (·61 to ·66 mm.).

COOLING SYSTEM

Circulation	Pump and thermostat (pressurized).
Thermostat opening temperature	●Stamped on thermostat.●
Fan belt type	Wedge.

FUEL SYSTEM

Petrol models	
Fuel delivery	S.U. electric pump, Type SP.
Air cleaner	Oil bath type.

Carburetter type	Zenith 42VN downdraught.
Carburetter settings	
Choke tube	36 mm.
Main jet	145.
By-pass jet	110.
Slow-running jet	60/50.
Progression jet	2×110.
Pump jet	60.
Full throttle bleed	80.
Needle seating	2·25 mm.
Diesel models	
Lift pump	S.U. electric (Type SP) or A.C./mechanical (Type U).
Injection pump	C.A.V. Type DPA.3243760A or DPA.3248050A.
Roller to roller dimension	1·988 in. (50·49 mm.).
Governor link length	
DPA.3243760A	2·087±·039 in. (53±1 mm.).
DPA.3248050A	2·067±·039 in. (52·5±1 mm.).
Injectors	C.A.V.
Nozzle type	Pintaux BDN.12.SPC.6290.
Nozzle holder type	BKB.35.S.5136 or BKB.35.S.5189.
Nozzle valve lift	·75 to ·95 mm.
Opening pressure	130 atmospheres*.
Main filter	C.A.V. bowl-less.
Type	FS5836020.

CLUTCH

Petrol engine	
Make	Borg & Beck.
Type	Single dry plate.
Outside diameter	9 in. (22·8 cm.).
Total frictional area	65·8 sq. in. (424·5 cm.²).
Thickness of friction lining	·150 in. (·381 cm.).
Release bearing	Ball race.
Number of thrust springs	9.
Identification colours of thrust springs	Yellow and light green.
Total axial spring pressure	1,215 to 1,305 lb. (551 to 592 kg.).
Thrust plate travel to fully released position	·42 to ·47 in. (1·067 to 1·194 cm.).
Diesel engine	
Make	Borg & Beck.
Type	Single dry plate.
Outside diameter	10 in. (25·4 cm.).
Total frictional area	78 sq. in. (503·2 cm.²).
Thickness of friction lining	·150 in. (·381 cm.).
Release bearing	Ball race.
Number of thrust springs	12.
Identification colours of thrust springs	Light green.
Total axial spring pressure	1,260 to 1,380 lb. (572 to 626 kg.).
Thrust plate travel to fully released position	·50 to ·54 in. (1·27 to 1·37 cm.).

MAIN GEARBOX

Ratios	
Top	1·0.
Third	1·37.
Second	2·35.
First	4·05.
Reverse	5·168.

* Add 5 atmospheres to the opening pressure when setting new injectors or after fitting new springs, to allow for settling of the components.

Bearing dimensions	
Mainshaft rear ball bearing	$3\frac{1}{8}$ in. × $1\frac{1}{4}$ in. × $\frac{7}{8}$ in.
First motion shaft ball bearing	45 mm. × 100 mm. × 25 mm.
Mainshaft spigot needle rollers	
Quantity	19.
Dimensions	39·8 mm. × 4 mm.
Mainshaft second speed gear needle rollers	
Quantity	33.
Dimensions	29·8 mm. × 3·5 mm.
Mainshaft third speed gear needle rollers	
Quantity	32.
Dimensions	29·8 mm. × 3·5 mm.
Layshaft needle rollers, front and rear	
Quantity	66 (33 each bearing).
Dimensions	39·8 mm. × 3 mm.

TRANSFER GEARBOX

Ratios	
High	1·0 (rear-wheel-drive only).
Low	2·02 (four-wheel-drive).
Ball bearing dimensions	
Front drive shaft	72 mm. × 30 mm. × 19 mm. (2 off).
Rear drive shaft	(Front) $3\frac{1}{8}$ in. × $1\frac{1}{4}$ in. × $\frac{7}{8}$ in. (Rear) 72 mm. × 30 mm. × 19 mm.
Intermediate shaft needle rollers	
Type	Caged.
Speedometer pinion ratios	
6·50—16, 7·00—16, 8·90—15 tyres	5/17.
6·00—16 tyres	5/18.

PROPELLER SHAFTS

Type	Tubular.
Make and type of joints	Hardy Spicer needle roller.

REAR AXLE

Type	Hypoid gear drive, three-quarter-floating.
Ratio	5·125 : 1.
Number of gear teeth	8/41.

STEERING

Type	Cam and lever.	
Steering gear ratio	17 : 1.	
Diameter of steering-wheel	$17\frac{1}{4}$ in. (43·815 cm.).	
Turning circle	43 ft. (12·19 m.) approx.	
Toe-in	$\frac{3}{32}$ in. (2·58 mm.)	Static unladen.
Castor angle	$4\frac{1}{2}°$	Static unladen.
Camber angle	$1\frac{1}{2}°$	Static unladen.
King pin inclination	$8\frac{1}{2}°$	Static unladen.

FRONT AXLE

Type	Hypoid gear drive, fully floating.
Ratio	5·125 : 1.
Number of gear teeth	8/41.

ROAD SPRINGS AND DAMPERS

	Front	*Rear* (G4*M*10)	*Rear* (G4*M*15)
Road springs*			
Number of leaves	6	7	11
Thickness of leaves	$\frac{3}{16}$ in. (4·76 mm.)	$\frac{1}{4}$ in. (6·35 mm.)	$\frac{1}{4}$ in. (6·35 mm.)
Width of leaves	$2\frac{1}{2}$ in. (63·5 mm.)	$2\frac{1}{4}$ in. (57·15 mm.)	$2\frac{1}{4}$ in. (57·15 mm.)
Camber (to No. 1 leaf): Laden	$\frac{13}{16}$ in. (20·63 mm.)	0 in. (0·0 mm.)	0 in. (0·0 mm.)
Length between eye centres (laden)	36 in. (·92 m.)	48 in. (1·22 m.)	48 in. (1·22 m.)
Load	759 lb. (344 kg.)	1,120 lb. (508 kg.)	1,344 lb. (610 kg.)
Deflection	3·89 in. (98·80 mm.)	4·92 in. (124·96 mm.)	4 in. (101·6 mm.)
Spring dampers	Telescopic	Lever type	

*On later models an eight-leaf front spring is fitted, having a load of 980 lb. (445 kg.) and a deflection of 3·78 in. (86 mm.). Remaining dimensions unaltered.

BRAKES

Make	Girling.
Foot brake	Hydraulic.
Hand brake	Mechanical, on rear wheels.
Drum diameter: (G4 M10)	10 in. (25·4 cm.).
(G4 M15)	11 in. (27·94 cm.).
Total lining area: (G4 M10)	133 sq. in. (858 cm.²).
(G4 M15)	189·6 sq. in. (1220 cm.²).

ELECTRICAL SYSTEM

Petrol models	
Battery: Make	Lucas 12-volt.
Wiring	Single-pole, positive (+) earth return.
Starter motor	Lucas M418G.
Dynamo	Lucas C40.
Control box	Lucas.
Diesel models	
Dynamo	Lucas.
Type	C40, C40–1, C42, or C45, PV–6.
Starter motor	Lucas.
Type	M45G, 12-volt (solenoid-operated).
Lock torque (terminal voltage 6·4, current 900 amps.)	32·5 lb. ft. (4·49 kg. m.).
Torque (terminal voltage 8·8, current 570 amps.)	15·5 lb. ft. (2·14 kg. m.) at 1,000 r.p.m.
Heater plugs	Lodge D18, 1·2V (formerly DD2/3) or Champion AG.4.
Heater plug resistance	Lodge.
Type	12R4–3.
●**Petrol and diesel models**	
Alternator	Lucas 11AC.
Control unit	Lucas 4TR.
Field isolating relay	Lucas 6RA.
Warning lamp control unit	Lucas 3AW.●

WHEELS AND TYRES

Wheels	
Type	Ventilated disc.
Wheel nut torque figure	100 lb. ft. (13·8 kg. m.).
Size	
Standard	5·00×16.
Alternative	6·00×15.
Fixing	5-stud.
Tyre sizes and pressures	

NOTE.—The following pressures are for normal road and cross-country conditions.

6·00—16 tyres	(Front) 25 lb./sq. in. (1·76 kg./cm.²). (Rear) 30 lb./sq. in. (2·11 kg./cm.²).
6·50—16 tyres	(Front) 25 lb./sq. in. (1·76 kg./cm.²). (Rear) 25 lb./sq. in. (1·76 kg./cm.²).
7·00 and 7·50—16 tyres	(Front 20 lb./sq. in. (1·41 kg./cm.²). (Rear) 20 lb./sq. in. (1·41 kg./cm.²).
8·20 and 9·00—15 tyres (Front and Rear)	18 to 20 lb./sq. in. (1·27 to 1·41 kg./cm.²).

NOTE.—The following pressures are used when loads exceeding 560 lb. (254 kg.) are carried in the rear of the vehicle.

6·00 and 6·50—16 tyres	(Front) 25 lb./sq. in. (1·76 kg./cm.²). (Rear) 30 lb./sq. in. (2·11 kg./cm.²).
7·00—16 tyres	(Front) 20 lb./sq. in. (1·41 kg./cm.²). (Rear) 30 lb./sq. in. (2·11 kg./cm.²).
7·50—16 tyres	(Front) 20 lb./sq. in. (1·41 kg./cm.²). (Rear) 25 lb./sq. in. (1·76 kg./cm.²).
8·20 and 9·00—15 tyres (Front and Rear)	18 to 20 lb./sq. in. (1·27 to 1·41 kg./cm.²).

PRINCIPAL DIMENSIONS

Length overall: (G4 M10)	142⅞ in. (3·62 m.).
(G4 M15)	163⅞ in. (4·16 m.).
Width overall	66¾ in. (1·69 m.).
Height overall (unladen)	74¼ in. (1·88 m.).
Ground clearance	8¾ in. (·22 m.).

CAPACITIES

Diesel sump (including filter)	11½ pints (6·5 litres).
Petrol sump (including filter)	11½ pints (6·5 litres).
Filter capacity	1¼ pints (·7 litre).
Cooling system (excluding heater)	21 pints (12 litres).
Main gearbox	4 pints (2·2 litres).
Transfer gearbox	3½ pints (2·0 litres).
Front axle	3 pints (1·73 litres).
Front hub and swivel housing	1 pint (·57 litre).
Rear axle	2½ pints (1·5 litres).
Steering-box	⅞ pint (·5 litre).
Fuel tank	12 gallons (54·5 litres).
Air cleaner	1½ pints (·85 litre).

TORQUE WRENCH SETTINGS

Petrol models

Cylinder head nuts	55 lb. ft. (7·60 kg. m.).
Big-end bolts	50 lb. ft. (6·91 kg. m.).
Main bearing nuts	80 lb. ft. (11·06 kg. m.).
Flywheel bolts	50 lb. ft. (6·91 kg. m.).
Gudgeon pin clamp bolts	35 lb. ft. (4·84 kg. m.).

Diesel models

Cylinder head nuts	75 lb. ft. (10·37 kg. m.).
Big-end and flywheel bolts	50 lb. ft. (6·91 kg. m.).
Main bearing nuts	100 lb. ft. (13·82 kg. m.).
Fuel injector securing nuts	12 lb. ft. (1·7 kg. m.).
Fuel injector nozzle nut	50 lb. ft. (7·0 kg. m.).
Fuel injection pump	
Governor control cover stud	60 lb. in. (·69 kg. m.).
Governor control cover stud nut	40 lb. in. (·46 kg. m.).
Governor control bracket screw	21 lb. in. (·24 kg. m.).
Governor drive shaft screw	285 lb. in. (3·3 kg. m.).

Governor vent screw body	65 lb. in. (·75 kg. m.).
Distributor rotor screw	28 lb. in. (·32 kg. m.).
Cam advance screw	300 lb. in. (3·45 kg. m.).
Drive plate screw:	
Direct	160 lb. in. (1·85 kg. m.).
Indirect (ring spanner and torque adaptor centres at 2·6 in. [66 mm.])	140 lb. in. (1·61 kg. m.).
Indirect (ring spanner and torque adaptor centres at 5·0 in. [127 mm.])	115 lb. in. (1·32 kg. m.).
Transfer pump rotor	65 lb. in. (·75 kg. m.).
End plate set bolt	45 lb. in. (·52 kg. m.).
Hydraulic head locating fitting	350 lb. in. (4·05 kg. m.).
Advance unit housing cap nut	110 lb. in. (1·25 kg. m.).
Advance unit housing stud	60 lb. in. (·69 kg. m.).
Advance unit housing spring cap and end plug	250 lb. in. (2·9 kg. m.).
Hydraulic head locking screw	170 lb. in. (1·96 kg. m.).
High-pressure outlet banjo pipe bolts	270 lb. in. (3·1 kg. m.).
Control and 'shut-off' lever nuts	30 lb. in. (·34 kg. m.).
Fuel inlet connection	360 lb. in. (4·15 kg. m.).
Back leakage connection	140 lb. in. (1·6 kg. m.).

SECTION A

THE PETROL ENGINE

	Section
Adjustments in the vehicle	A.2
Camshaft	
Bearings—renewing	A.26
Removing and replacing	A.25
Cylinder block—overhauling	A.27
Cylinder head—removing and replacing	A.11
Cylinder liners	A.29
Decarbonizing	A.19
Description	A.1
Engine—removing and replacing	A.3
External oil filter	A.6
Flywheel and housing—removing and replacing	A.28
Flywheel starter rings—fitting	A.30
Lubrication system	A.4
Main bearings and crankshaft—removing and replacing	A.23
Manifolds—removing and replacing	A.10
Oil pressure release valve	A.9
Oil pump	
Dismantling and reassembling	A.8
Removing and replacing	A.7
Oil sump—removing and replacing	A.5
Piston and connecting rod	
Dismantling and reassembling	A.22
Removing and replacing	A.21
Push-rods—removing and replacing	A.13
Rocker bushes—removing and replacing	A.15
Rocker shaft—removing and replacing	A.12
Service tools	End of Section
Tappets—removing and replacing	A.14
Timing chain and wheels—removing and replacing	A.24
Valve guides—removing and replacing	A.17
Valve rocker clearances—adjusting	A.20
Valves	
Grinding	A.18
Removing and replacing	A.16

Section A.1

DESCRIPTION

The four-cylinder internal-combustion engine used in this vehicle is supported on the frame at four points: by two brackets on the engine front plate and bolted to the front cross-member and by a bracket on the gearbox extension and bolted to the cross-member which passes under the gearbox. The engine mountings are insulated at the front and rear to cushion vibrations.

The cylinder block and crankcase are cast in one piece for rigidity. The cylinders are water-jacketed the full length of the bore to provide efficient cooling.

The cylinder head, which carries the valves and rocker gear, is secured to the cylinder block by 11 studs and nuts and is completely water-jacketed.

The water pump is located on the front of the cylinder block by three studs and is driven by a 'V' belt from the crankshaft.

The camshaft is located in the crankcase and is driven by a duplex roller chain from the crankshaft. A synthetic rubber ring is fitted to the camshaft chain wheel, which ensures quiet running.

The crankshaft is supported by three main bearings, which are renewable.

Downdraught carburation with hot-spot vaporizer induction is used, feeding all four cylinders through a single manifold which is secured with the exhaust manifold to the left-hand side of the cylinder head.

Crankcase ventilation is provided by a pipe secured to the tappet cover on the left-hand side of the crankcase. A second pipe connects from the valve gear cover to the air cleaner.

The oil supply is contained in a pressed-steel sump, and a submerged rotor-type pump, driven from the camshaft by an inclined shaft, draws oil from the sump through a strainer and delivers it through a renewable-element-type pressure filter on the right-hand side of the engine. From the filter oil is forced through drilled passages to the camshaft and crankshaft bearings, the timing chain, and the overhead-valve rocker shaft. Any excess oil is by-passed back to the sump through a release valve situated behind the external oil filter in the crankcase.

Section A.2

ADJUSTMENTS IN THE VEHICLE

The purpose of the following adjustments is to maintain the performance of the engine at its maximum and consists of a series of cleaning, inspecting, and adjusting operations. The operations listed below are essential items of maintenance which may have to be accomplished during normal service with the engine in the vehicle.

Test the compression of each cylinder. If a compression gauge is not available a simple method is to remove three sparking plugs, leaving the remaining plug in the cylinder being tested. A general indication of the compression will be obtained when the engine is cranked by hand through at least two revolutions.

Clean the engine generally and lubricate at the recommended points.

Adjust the fan belt tension (see Section C).

Remove the valve gear cover and check the cylinder head nuts to the recommended torque settings.

Check and adjust the valve to rocker clearances (see Section A.20).

Make a visual inspection for evidence of cracked valve springs or scored valve stems.

Remove and clean the sparking plugs. Examine the insulation for damage. Ensure that the correct type of plug is being used. Adjust the points gap.

Test the plugs and renew any found to be unfit for service, using new gaskets. Check the high-tension cables for fractures and deterioration before refitting (see Section B).

Remove the distributor head cover, clean, and examine it for cracks and burned contacts. Inspect the contact points to determine whether new points are needed or cleaning and adjusting are necessary. Ensure that the carbon brush contacts the rotor arm and that the capacitor terminals are clean and securely tightened. Check the ignition timing (see Section B).

Drain, clean, and refill the air cleaner (see Section D).

Ensure that the fuel system is operating efficiently and clean all filters in the system. Check the carburetter manifold flange gasket for evidence of leakage, and adjust the carburetter if necessary (see Section D).

Section A.3

REMOVING AND REPLACING THE ENGINE

First method

Remove the engine, gearbox, and transfer box as a unit by adopting the following procedure.

Drain the cooling system by opening the two taps, one on the side of the cylinder block and the other at the base of the radiator.

Release the radiator top and bottom hoses.

Disconnect the battery.

Remove the blanking plate from the top of the radiator cowl leg, taking out the 10 securing screws. The electrical harness which runs across the top of the plate can be moved to one side after disconnecting it at the snap connectors.

Take out four set pins (two each side) from the radiator mounting frame. Lift out the radiator. Remove the front grille by taking out the 10 securing set pins (three on each side and two each side of the front apron).

Release the clips which secure the air intake hoses to the air cleaner. Take out the set pin from one side of the air cleaner securing strap and lift the air cleaner out of the vehicle.

Disconnect the exhaust pipe from the manifold and release the two securing points for the exhaust pipe which are situated below the chassis, one on the down pipe and one on the silencer. Remove the exhaust.

Disconnect the throttle linkage at the upper ball joint.

Release the electrical leads from the starter motor and generator.

Disconnect the choke wire.

Release the electrical leads from the ignition coil.

Disconnect the low-tension wire from the distributor.

Disconnect the hydraulic pipe line from the clutch slave cylinder.

Release the speedometer drive cable from the gearbox.

Disconnect the earth strap from the bulkhead.

Disconnect the oil pressure gauge pipe at the flexible connection.

Release the fuel pipe from the inlet side of the fuel pump.

If a tyre pump is fitted to the side of the gearbox it must be removed by disconnecting the air intake pipe and taking out the six securing set pins from the mounting flange. Take the pump downwards away from the vehicle.

Remove the bolts from the rear spider of the front propeller shaft and separate the joint.

Remove the bolts from the front spider of the rear propeller shaft and separate the joint.

If a power take-off is fitted to the rear of the vehicle release the bolts from the forward spider of the drive shaft and separate the joint. Remove the power take-off itself by taking the six nuts off the mounting studs.

Remove the gearbox top cover with gear change lever. When lifting the cover keep pressure on the rear of the cover to obviate losing the selector ball springs.

Remove the mounting bolts from the gearbox mounting brackets. Remove the exhaust pipe stay from the mounting bracket (two bolts).

Remove the nuts from the engine mountings.

Take off the transfer box engagement lever by removing the clevis pin from the operating rod yoke and the split pin which secures the hand lever to the pivot shaft.

Sling the engine to a suitable hoist.

Remove the four set pins from the gearbox mounting brackets and take the brackets off the box.

Remove the steering draglink to one side after releasing its ball joint at the steering box arm. The engine can now be hoisted forward out of the vehicle complete with gearbox and transfer box.

Reassembly is a reversal of the removal procedure.

Remove the transfer box and gearbox from the engine by taking out the bell housing flange set pins.

Second method

The engine can also be removed without disturbing the gearbox or transfer box by the following method:

Drain the cooling system (two taps) and remove the bonnet.

Release the radiator top and bottom hoses.

Disconnect the battery.

Remove the blanking plate from the top of the radiator cowl by taking out the 10 securing screws and releasing the electrical harness

Take out the screws which secure the fan cowl. Take out the four set pins (two each side) from the radiator mounting frame and lift out the radiator and then the cowl.

Release the clips which secure the air intake hoses to the air cleaner. Take out the set pin from one side of the air cleaner securing strap. Swing the strap to one side and lift the air cleaner out of the car.

Disconnect the exhaust pipe from the engine manifold.

Disconnect the throttle linkage at the upper ball joint.

Disconnect the draglink from the steering box arm and move it to one side.

Release the electrical leads from the starter, generator, coil, and distributor.

Disconnect the choke wire from its clip and the earthing strap from the bulkhead.

Disconnect the oil pressure gauge pipe.

Release the fuel pipe from the inlet side of the fuel pump.

Take the weight of the engine on a hoist and support the forward end of the gearbox on a jack.

Remove the bell housing to flywheel housing bolts. Remove the centre panel in the floor of the vehicle to gain access to the upper ones.

Remove the nuts from the engine front mounting bolts which pass through the centre of the rubber cushions.

With the weight of the engine taken by the hoist, pull the unit forward off the gearbox and then lift it straight up and out of the engine compartment.

NOTE.—**If a high lift is not available remove the front grille and the cross-bracing rods.**

Refitting is a reversal of the removal procedure, but a suitable tool should be used to check the alignment of the clutch driven plate. Care must be taken when refitting the engine to the gearbox to avoid bending the gearbox first motion shaft.

Section A.4

LUBRICATION SYSTEM

The rotor-type oil pump supplies lubricant under pressure to the engine oiling system. The pump is located in the crankcase so that the suction end, to which is attached a strainer, is submerged in oil in the sump.

Oil is pumped through the delivery pipe and a drilled passage to a renewable-element-type pressure filter situated on the right-hand side of the engine.

From the outlet side of the external filter oil is fed through drilled passages to the various bearings, the camshaft gear, and the overhead valve gear.

The cylinder bores are lubricated by means of a small jet hole in the top half of each connecting rod big-end.

Discharged oil from the rear main bearing drains back into the sump through a pipe attached to the bearing cap.

Discharged oil from the valve rocker chamber drains back to the sump via the push-rod holes.

Any excess pressure of oil is by-passed back to the sump through a release valve located between the pump and the external filter, being accessible from the exterior of the crankcase.

Section A.5

REMOVING AND REPLACING THE SUMP

First drain off the oil into a suitable container, then extract the set screws and washers, thus enabling the sump to be removed.

Detach the bottom of the strainer by removing the nut, washer, and distance piece. Take out the two set pins holding the strainer to the pump, so allowing the body of the gauze strainer to be removed. The pump and strainer can be swilled out with petrol or paraffin and thoroughly dried with a non-fluffy rag.

Inspect the two joint washers and renew if they are damaged in any way.

Reassembly is a reversal of the above procedure. Care, however, should be exercised with the strainer to ensure that the distance piece is correctly positioned and that the lip on the cover registers with the slot in the body side. Refill the sump with the recommended oil.

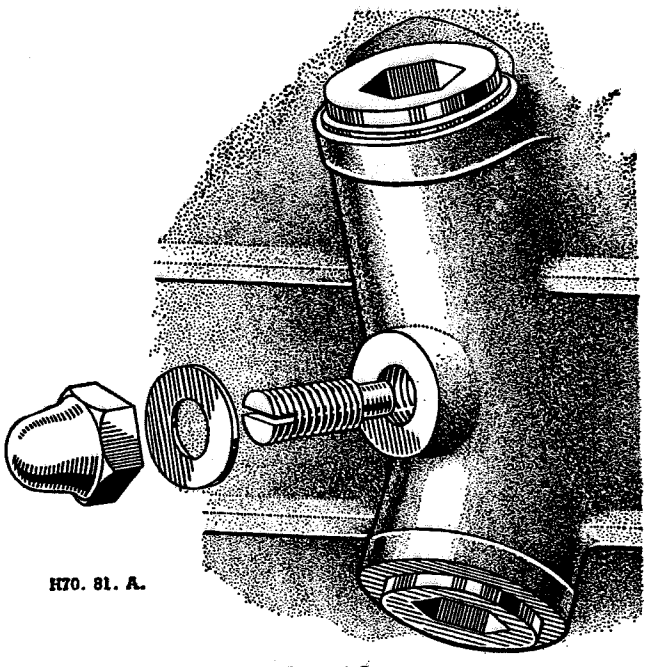

Fig. A.2
The oil pump locating screw

Section A.6

EXTERNAL OIL FILTER

An external full-flow filter is located on the right-hand side of the crankcase, between the oil pump and the main gallery.

Oil is passed to the filter from the oil pump at a pressure controlled at 50 to 55 lb./sq. in. (3·5 to 3·8 kg./cm.^{2}) by the oil release valve. Some pressure is lost in passing through the filter element; this will amount to very little with a new element, but will increase as the element becomes progressively contaminated by foreign matter removed from the oil.

Should the filter become completely choked, due to neglect, a balance valve is provided to ensure that oil will still reach the bearings. This valve, set to open at a pressure difference of 15 to 20 lb./sq. in. (1·0 to 1·4 kg./cm.^{2}), is non-adjustable and is located in the filter head casting. When the valve is opened unfiltered oil can by-pass the filter and so reach the bearings.

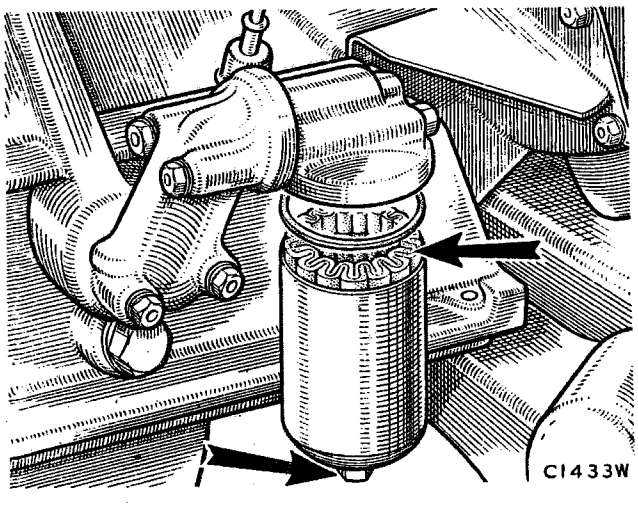

Fig. A.1
The external oil filter showing the centre fixing bolt and element

Therefore, to ensure that only filtered oil is delivered to the bearings it is necessary to renew the filter element at the recommended intervals (see Section P) as follows:

(1) Unscrew the centre-fixing bolt, and the container, complete with the element, can be removed.
(2) Withdraw the contaminated element and carefully cleanse the container of all foreign matter.
(3) Check the condition of the filter bowl sealing washer and renew if at all doubtful.
(4) After ensuring that no fibres from the cleansing operation have been left in the container put in a new element. Hold the centre-bolt in place and top up the case with oil before offering up the filter to its head. Tighten the centre-fixing bolt sufficiently to make an oiltight joint.
(5) Run the engine until the oil is thoroughly warm and check the filter for leaks.

It is recommended that the oil filter container should not be disturbed other than for the fitting of a new element; to do so invites the hazard of added contamination from dirt on the outside of the unit.

Section A.7

REMOVING AND REPLACING THE OIL PUMP

Drain and remove the sump and oil strainer (see Section A.5).

Disconnect the oil feed pipe from the pump body to the crankcase.

From the left-hand side of the crankcase remove the oil pump cap nut, washer, and locating screw.

Withdraw the oil pump assembly downwards and out of the crankcase.

Replacement is a reversal of the above procedure, ensuring that the pump shaft is right home and the driving gear is meshed with the gear on the camshaft and that the locating screw is tight and properly engaged with the recess in the pump body.

Section A.8

DISMANTLING AND REASSEMBLING THE OIL PUMP

Remove the oil pump as described in Section A.7 and proceed then as follows.

First, mark the flange and pump body to assist re-assembly. Separate the body from the bottom flange. The outer rotor can be lifted out of the body and the inner rotor pulled from the shaft. Take care not to lose the key from the shaft.

The outer rotor has one of its edges chamfered. It is of great importance that this chamfered edge should face away from the bottom cover. Failure to assemble in this way will result in the pump seizing up when the cover is tightened down. Insert the shaft through the hole in the base of the rotor body, and place the inner rotor in position on the shaft. Ensure that the key is in position between the shaft and the inner rotor. Insert the outer rotor into the body over the inner rotor. Place the cover into position, tighten the set screws, and rotate the pump shaft to ensure that the pump revolves freely. Ensure that the markings on the flange and pump body register together.

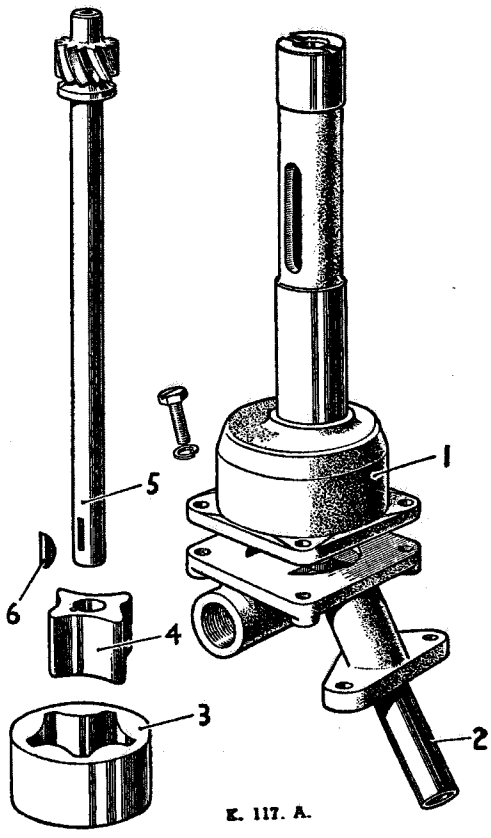

Fig. A.3

The oil pump (exploded)

1. Pump body.
2. Intake pipe.
3. Outer rotor.
4. Inner rotor.
5. Drive shaft.
6. Woodruff key.

Section A.9

OIL PRESSURE RELEASE VALVE

Excess pressure of oil is by-passed to the sump, the pressure being determined by a spring which is held in position by a plug and accessible from the outside of the crankcase. To remove proceed as follows:

(1) Remove the external oil filter body assembly (see Section A.6).

(2) Remove the hexagon-headed plug, and copper washer located immediately below the filter head.

(3) Remove the valve spring and withdraw the plunger, using tool 18G69.

Check that the plunger and seat are clean and undamaged and that the passages in the crankcase are clear Tool 18G69 may be used to remove any burrs from the valve seating in the block.

Check the tension of the valve spring (see under 'GENERAL DATA'), and renew if necessary. Clean the hexagon-headed plug externally and internally.

Insert the plunger, conical end first, into the housing, followed by the spring.

Screw the hexagon-headed plug, with a new copper washer, fully home to ensure an oiltight joint. Install the external oil filter body assembly (see Section A.6).

Section A.10

REMOVING AND REPLACING THE INLET AND EXHAUST MANIFOLDS

The manifolds are held in position on the left-hand side of the engine by six nuts, four of which bear on steel clamps, the remaining two on studs which pass through the flange at each end of the exhaust manifold. There are four bolts which secure the inlet manifold to the exhaust manifold at the hot-spot joint.

The inlet and exhaust manifolds can be removed either as one unit or separately. First disconnect the air cleaner from the carburetter and the fuel pipe from the fuel pump and carburetter, then release the carburetter throttle and choke control, and the vacuum pipe to the distributor.

Remove the exhaust down pipe by unscrewing the three nuts at the flange. The manifold securing nuts should now be removed, when the manifold may be detached complete with the carburetter. Unscrew the four hot-spot bolts to separate the inlet from the exhaust manifold.

When refitting the manifolds see that the joint washers are in good condition, and tighten the securing nuts evenly to ensure good joints.

It is important that the four bolts which secure the

inlet manifold to the exhaust manifold hot-spot are not tightened down until after all the manifold securing nuts have been tightened. Failure to observe this precaution may result in damage to the manifold securing flanges.

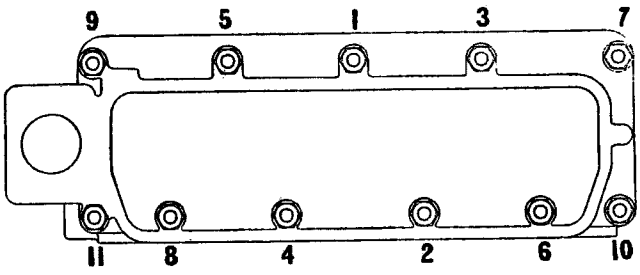

H16. 5. A.

Fig. A.4

Cylinder head tightening sequences

Section A.11

REMOVING AND REPLACING THE CYLINDER HEAD

Remove the bonnet by lifting it to a vertical position then slide it sideways to disconnect the hinges.

Drain the cooling system.

Disconnect the air cleaner hose from the carburetter and the breather pipe from the valve rocker cover and then remove the rocker cover.

Disconnect the throttle linkage at the cross-shaft and the fuel pipe and the distributor vacuum control pipe from the carburetter.

Release the top water hose from the radiator and the by-pass pipe from the water pump.

Disconnect the high-tension cables from the sparking plugs and the wire to the thermal transmitter.

Remove the valve rocker shaft after first releasing the rocker adjusting screws and the rocker shaft oil feed pipe at the cylinder head. Withdraw the push-rods, taking care that the tappets are not lifted out of their guides by suction.

Remove the inlet and exhaust manifolds complete with the carburetter (see Section A.10).

Working in the order shown in Fig. A.4, first slacken each cylinder head nut a quarter of a turn only, and subsequently unscrew each nut a further amount in the same order until loose.

Crank the engine by hand, when the compression in the cylinder head will probably be sufficient to break the joint and allow the head to be lifted off. On no account should a screwdriver or any similar tool be used as a wedge between the cylinder head and the block.

Remove the cylinder head joint washer.

Replacing the cylinder head assembly is a reversal of the removal procedure. For tightening the cylinder head stud nuts torque spanner 18G372 set to 65 lb. ft. (9 kg. m.) should be used whenever possible. The nuts should be tightened in the order shown in Fig. A.6. If there is any doubt about the condition of the cylinder head joint washer fit a new one with the side marked 'TOP' uppermost, after carefully and evenly smearing both sides of it with grease to make a good joint and prevent sticking when the head is again lifted.

Check the valve clearance after running the engine as the valves have a tendency to bed down. At the same time it is advisable to test the cylinder head nuts for tightness. Tightening the cylinder head nuts may affect valve clearances, although not usually enough to justify resetting.

Section A.12

REMOVING AND REPLACING THE ROCKER SHAFT

The valve rocker shaft on the cylinder head is hollow. It is supplied with oil by a pipe connection, and is drilled for lubrication to each rocker bearing.

This shaft is plugged at each end, one of these being screwed in order that the shaft may be cleaned internally.

Remove the air cleaner and rocker gear cover.

Slacken the rocker adjusting screws and release the oil feed pipe from the cylinder head.

Release the rocker bracket nuts and lift off the rocker gear.

Remove the split pin from the end of the shaft and, after carefully noting their relative positions, withdraw the washers, rockers, brackets, and springs. Replacement is a reversal of these operations.

Section A.13

REMOVING AND REPLACING THE PUSH-RODS

Take off the valve rocker cover and slacken the valve adjustment screw to its full extent. With the aid of a screwdriver, supported under the rocker shaft, depress the valve and slide the rocker sideways free of the push-rod. Withdraw the push-rod, taking care that the tappet is not lifted out of its guide.

In the case of the rocker at each end it is necessary to take out the split pins from the ends of the shaft.

The above sequence should be reversed when replacing push-rods and rockers.

Section A.14

REMOVING AND REPLACING THE TAPPETS

Remove the rocker cover, slacken back the rocker adjustment screws, and withdraw the push-rods.

Remove the vent pipe and washer by undoing the two set screws securing it to the side cover.

Loosen the 15 set screws holding the cover and remove these with the cover and joint washer.

Withdraw the tappets upwards with finger and thumb.

When replacing the tappets reverse this procedure,

ensuring that oiltight joints are made between the cylinder side cover and the block and at the vent pipe flange. If either joint washer is at all damaged it must be renewed.

Section A.15

REMOVING AND REPLACING THE ROCKER BUSHES

While the rocker gear is detached from the head check for play between the rocker shaft and the rocker arm bushes. If this is excessive new bushes should be fitted. To do this take out the split pin at the end of the shaft, when the plain and spring washers, rocker arms, and rocker shaft brackets may be removed.

The white-metal bush is best removed by using tool 18G21. The anvil is recessed to retain the rocker in position while the bush is gently knocked out by the drift.

The flange of the drift is also recessed to prevent the new split bush from opening when being driven into position. These new bushes are not supplied to a finished size: the internal diameter must be reamed to suit the shaft. Ream the bushes in position (split at the top) ·8115 to ·8125 in. (20·61 to 20·64 mm.). File and drill out the rivet in the rocker arm oilway. Drill oilways through the bush—top of rocker ·0785 in. (1·99 mm.), in arm of rocker ·089 in. (2·26 mm.). Plug the oilway in the rocker arm with a rivet and weld the head to the boss.

Section A.16

REMOVING AND REPLACING THE VALVES

With the cylinder head removed, use tool 18G45 to compress the spring. Take away the circlip, split cotters, and valve stem cap, so releasing the spring and allowing the valve to be removed.

When removing the valves, place them in a rack, thus enabling them to be paired up with their correct cylinders. The valve springs should be tested and their free length checked, the correct length being approximately $1\frac{25}{32}$ in. (5·42 cm.).

Remove all carbon accumulation from the valves and thoroughly clean them. Inspect the valve faces and seats, and if they are slightly pitted or rough grind them in, using tool 18G29. If the valves and seats show signs of extensive pitting or the faces are not flat the valves and seats should be refaced true with the guide, using the cutting tools listed on page A.21. Finally, grind them in by hand. When the valve faces and seatings are perfectly smooth thoroughly clean all parts, using petrol.

Before reassembly, which is a reversal of the operations for removal, smear the valve stems and guides with engine oil. This will obviate the possibility of the valves sticking before adequate lubrication from the oiling system reaches them.

Section A.17

REMOVING AND REPLACING THE VALVE GUIDES

The valve guides are of a one-piece design. They are pressed into the cylinder head to allow $\frac{11}{16}$ to $\frac{3}{4}$ in. (1·75 to 1·9 cm.) of the guide to protrude above the head as shown at (B) in Fig. A.5.

To position each valve spring on the cylinder head a stepped pressed-steel seating collar is fitted over the part of the guide protruding from the cylinder head.

Valve guides should be tested for wear whenever valves are removed, and if excessive side-play is present a close check should be made of the valve stem and the guide. In the event of wear being noticeable the defective components should be renewed. If a valve is at fault the wear will be evident on the stem. It should be borne in mind that the valve stem and guide should be a running-fit to avoid the possibility of an air leak.

If renewal is necessary due to wear, the valve guide may be driven out after removal of the valve, as shown in Fig. A.5.

The drift (A) in Fig. A.5 is stepped in order to ensure location and to obviate it slipping off the guide and damaging the port. Knock out the guide in the direction shown.

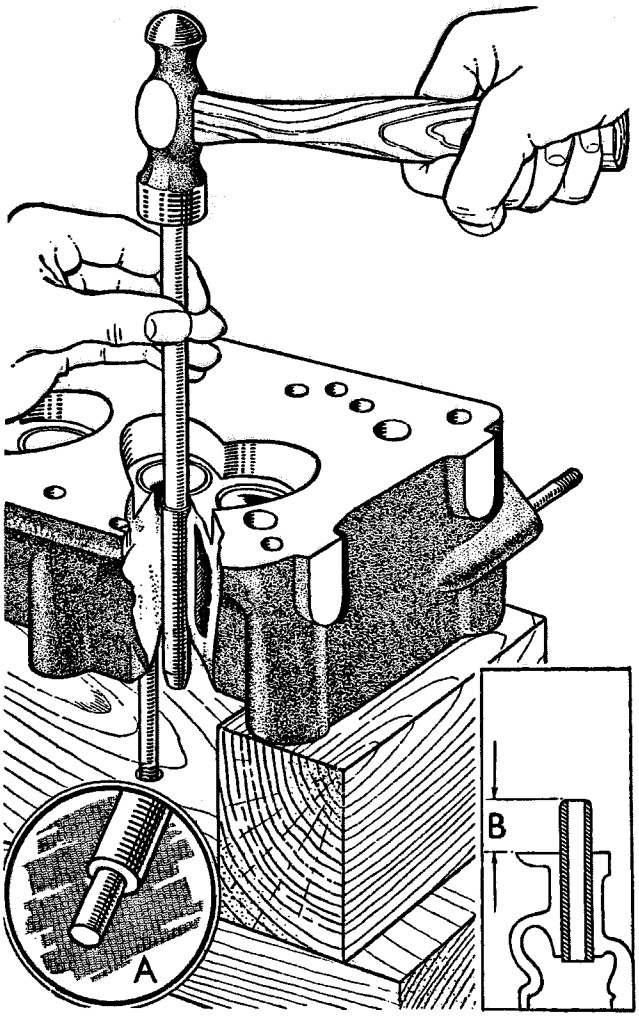

TH. 145. F.

Fig. A.5

Fitting valve guides with a stepped drift (A)

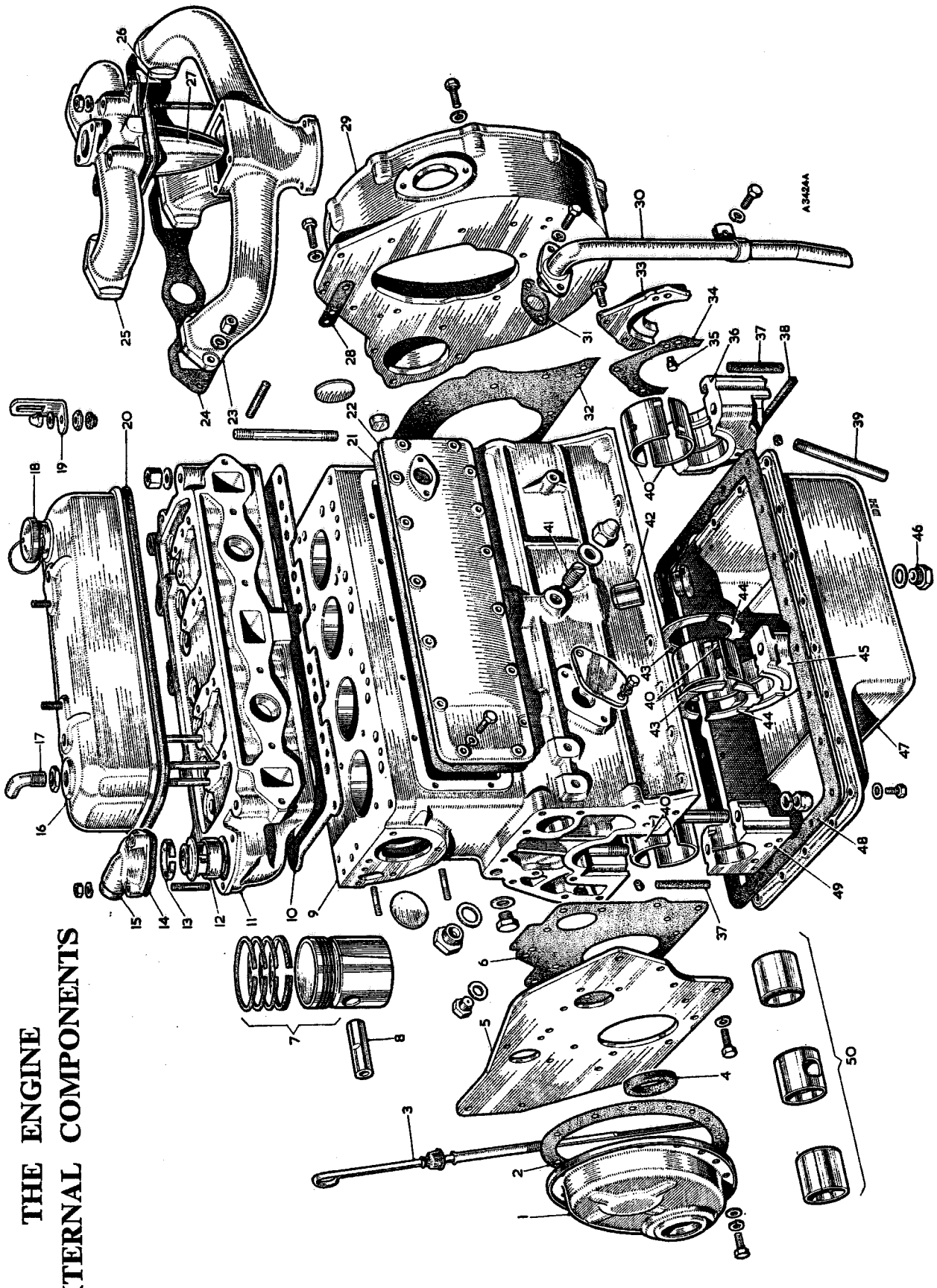

THE ENGINE
EXTERNAL COMPONENTS

KEY TO THE ENGINE EXTERNAL COMPONENTS

No.	Description
1.	Front cover.
2.	Joint washer.
3.	Dipstick.
4.	Felt ring.
5.	Engine front plate.
6.	Joint washer.
7.	Piston and rings.
8.	Gudgeon pin.
9.	Cylinder block.
10.	Joint washer.
11.	Cylinder head.
12.	Thermostat.
13.	Retaining ring.
14.	Joint washer.
15	Water outlet pipe.
16.	Valve rocker cover.
17.	Vent pipe.
18.	Oil filler cap.
19.	Lifting bracket.
20.	Valve rocker cover joint.
21.	Joint washer.
22.	Side cover.
23.	Exhaust manifold.
24.	Joint washer.
25.	Inlet manifold.
26.	Washer for hot-spot.
27.	Hot-spot assembly.
28.	Joint washer.
29.	Flywheel housing.
30.	Crankcase vent pipe.
31.	Joint washer.
32.	Joint washer.
33.	Rear cover.
34.	Joint washer.
35.	Dowel for rear cover.
36.	Rear main bearing cap.
37.	Front and rear main bearing cap plugs.
38.	Rear main bearing cap joint.
39.	Drain pipe.
40.	Main bearings.
41.	Oil pump locating screw.
42.	Distributor driving spindle bush.
43.	Thrust washer (upper).
44.	Thrust washer (lower).
45.	Centre main bearing cap.
46.	Sump drain plug.
47.	Oil sump.
48.	Joint washer.
49.	Front main bearing cap.
50.	Camshaft liners.

THE ENGINE INTERNAL COMPONENTS

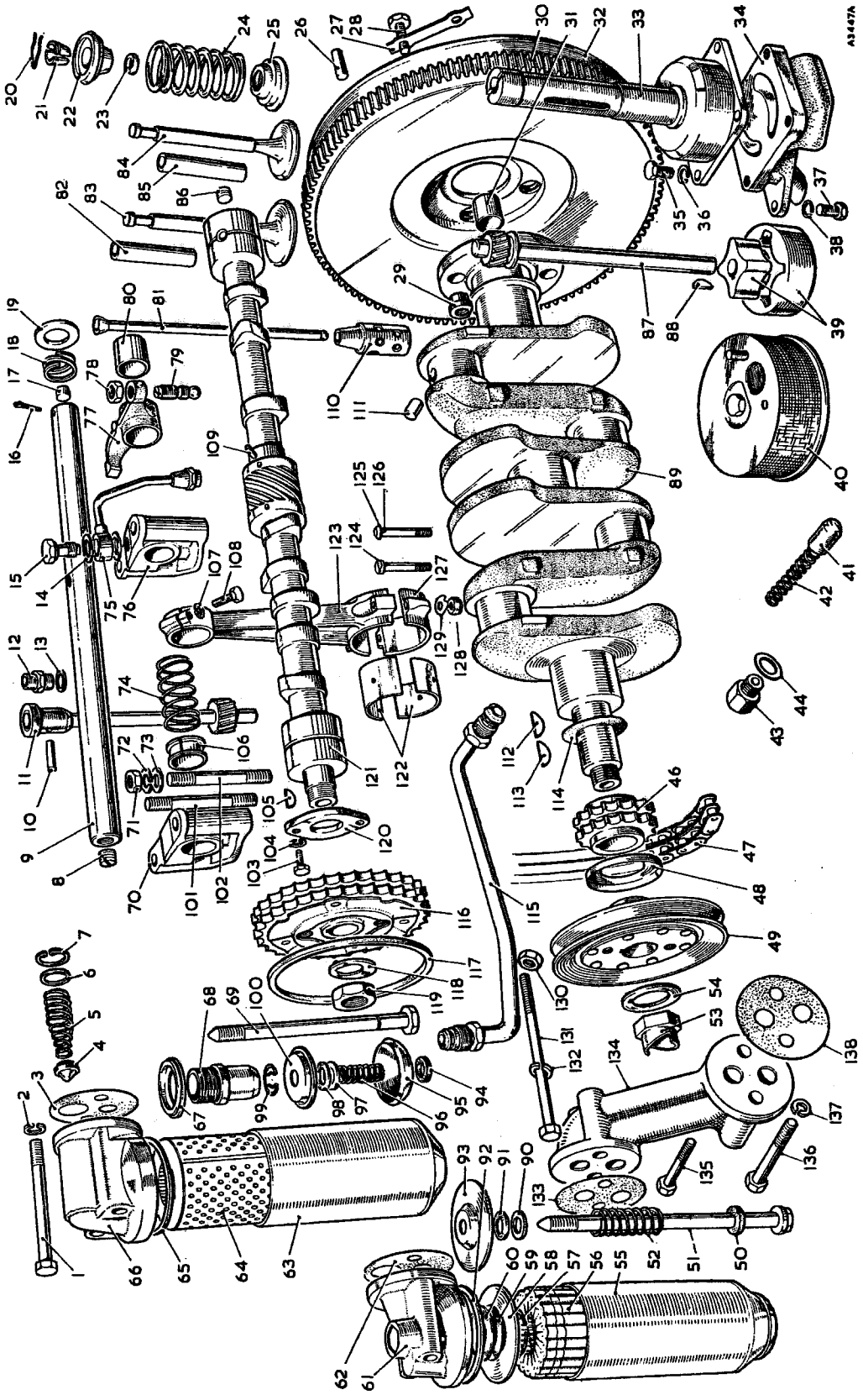

KEY TO THE ENGINE INTERNAL COMPONENTS

No.	Description
1.	Bolt—filter to block.
2.	Spring washer.
3.	Joint washer.
4.	Valve.
5.	Spring.
6.	Valve washer.
7.	Circlip.
8.	Screwed plug.
9.	Rocker shaft.
10.	Peg for spindle.
11.	Distributor driving spindle.
12.	Union for oil feed pipe.
13.	Washer for union.
14.	Fibre washer.
15.	Locating screw.
16.	Split pin.
17.	Plain plug.
18.	Spring washer—double-coil.
19.	Plain washer.
20.	Circlip for cotter.
21.	Valve cotter.
22.	Valve spring cup.
23.	Valve packing ring.
24.	Valve spring.
25.	Valve spring collar.
26.	Dowel—flywheel to clutch.
27.	Locking washer.
28.	Flywheel to crankshaft bolt.
29.	Nut for bolt.
30.	Starter ring gear.
31.	Bush.
32.	Flywheel assembly.
33.	Oil pump body.
34.	Bottom cover.
35.	Screw for bottom cover.
36.	Spring washer.
37.	Screw—oil strainer to pump.
38.	Spring washer.
39.	Inner and outer rotors.
40.	Oil strainer.
41.	Oil release valve.
42.	Spring.
43.	Oil pressure switch adaptor.
44.	Washer for adaptor.
46.	Crankshaft gear.
47.	Timing chain.
48.	Oil thrower.
49.	Crankshaft pulley.
50.	Sealing washer.
51.	Centre-bolt.
52.	Pressure spring.
53.	Starting handle nut.
54.	Locking washer.
55.	Filter bowl.
56.	Filter element.
57.	Circlip.
58.	Clamping plate.
59.	Felt washer.
60.	Dished washer.
61.	Head assembly.
62.	Joint washer.
63.	Filter bowl.
64.	Filter element.
65.	Joint washer.
66.	Head assembly.
67.	Element guide (top).
68.	Centre tube.
69.	Centre-bolt.
70.	Rocker bracket (plain).
71.	Nut for stud.
72.	Spring washer.
73.	Plain washer.
74.	Spacing spring.
75.	Oil feed pipe.
76.	Rocker bracket (tapped hole).
77.	Rocker arm.
78.	Locknut.
79.	Adjusting screw.
80.	Rocker arm bush.
81.	Push-rod.
82.	Inlet valve guide.
83.	Inlet valve.
84.	Exhaust valve.
85.	Exhaust valve guide.
86.	Plug for camshaft.
87.	Shaft and gear.
88.	Key for shaft.
89.	Crankshaft.
90.	Plain washer.
91.	Felt washer.
92.	Joint washer.
93.	Pressure plate.
94.	Sealing washer.
95.	Reinforcing washer.
96.	Spring.
97.	Plain washer.
98.	Felt washer.
99.	Circlips.
100.	Element guide (bottom).
101.	Rocker bracket stud (long).
102.	Rocker bracket stud (short).
103.	Locating plate screw.
104.	Spring washer.
105.	Key for gear.
106.	Distance piece.
107.	Spring washer.
108.	Clamping bolt.
109.	Oil feed nozzle.
110.	Tappet.
111.	Oil restrictor.
112.	Key for gear.
113.	Key for pulley.
114.	Packing washer.
115.	Oil delivery pipe.
116.	Camshaft gear.
117.	Rubber tensioner ring.
118.	Locking washer.
119.	Camshaft nut.
120.	Locating plate.
121.	Camshaft.
122.	Big-end bearing.
123.	Connecting rod.
124.	Connecting rod bolt.
125.	Connecting rod bolt (alternative).
126.	Peg for bolt.
127.	Connecting rod cap.
128.	Tab washer for bolt.
129.	Simmonds nut for bolt.
130.	Nut for bolt.
131.	Bolt.
132.	Spring washer.
133.	Joint washer.
134.	Adaptor—oil filter.
135.	Bolt (short).
136.	Bolt (long).
137.	Spring washer.
138.	Joint washer.

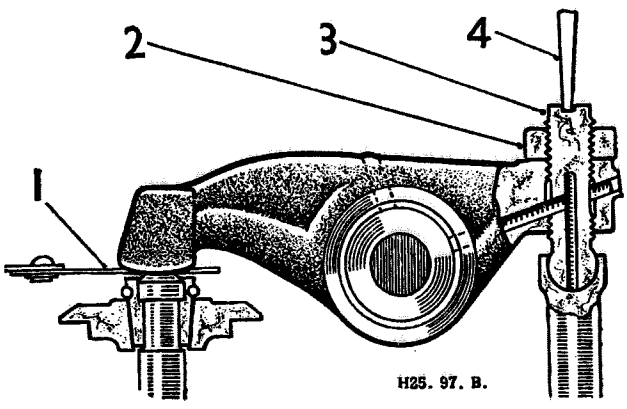

Fig. A.6

Checking valve to rocker clearance

1. Feeler gauge.
2. Locknut.
3. Adjuster.
4. Screwdriver.

A new guide should be driven into position in the same direction—that is, inserting it through the valve seating and driving towards the top of the cylinder head.

NOTE.—The exhaust valve guides are longer than the inlet guides, therefore they must be pressed into their correct ports.

Section A.18

VALVE-GRINDING

For valve-grinding a little grinding paste should be smeared evenly on the valve face and the valve rotated backwards and forwards against its seat, advancing it a step at short intervals until a clean and unpitted seating is obtained. The cutting action is facilitated by allowing a light spring situated under the valve head to periodically lift the valve from its seat. This allows the grinding compound to repenetrate between the two faces after being squeezed out.

On completion, all traces of compound must be removed from the valve and seating. It is essential that each valve is ground in and refitted to its own seating.

It is also desirable to clean the valve guides; this can be done by dipping the valve stem in petrol or paraffin and moving it up and down in the guide until it is free.

Section A.19

DECARBONIZING

Scrape off all carbon deposit from the cylinder head and ports. Clean the carbon from the piston crowns, care being taken not to damage the pistons and not to allow dirt or carbon deposit to enter the cylinder barrels or push-rod compartment.

When cleaning the top of the pistons do not scrape right to the edge as a little carbon left on the chamfer assists in keeping down oil consumption; with the pistons cleaned right to the edge or new pistons oil consumption is often slightly, though temporarily, increased.

Section A.20

ADJUSTING THE VALVE ROCKER CLEARANCES

Lift off the valve cover after removing the flat cap nuts, two lifting brackets, and air cleaner.

Between the rocker arm and the valve stem there must be a clearance of ·012 in. (·30 mm.) for both inlet and exhaust valves, clearances being set with the engine cold.

If adjustment is necessary, slacken the locknut whilst continuously applying sufficient pressure to the adjusting screw with a heavy screwdriver, and raise or lower the adjusting screw in the rocker arm. Check the clearance with a feeler gauge.

Tighten the locknut when the adjustment is correct, but always check it again afterwards in case the adjustment has been disturbed during the locking process.

While the clearance is being set the tappet of the rocker being adjusted must be on the back of its cam, i.e. opposite the peak.

As this cannot be observed accurately, the rocker adjustment is more easily carried out in the following order, and this also obviates turning the engine over more than is necessary.

Adjust No.	1	rocker	with	No.	8	valve	fully	open.
,,	,,	3	,,	,,	,, 6	,,	,,	,,
,,	,,	5	,,	,,	,, 4	,,	,,	,,
,,	,,	2	,,	,,	,, 7	,,	,,	,,
,,	,,	8	,,	,,	,, 1	,,	,,	,,
,,	,,	6	,,	,,	,, 3	,,	,,	,,
,,	,,	4	,,	,,	,, 5	,,	,,	,,
,,	,,	7	,,	,,	,, 2	,,	,,	,,

When replacing the valve cover take care that the joint washer (using a new one if necessary) is properly in place to ensure an oiltight joint.

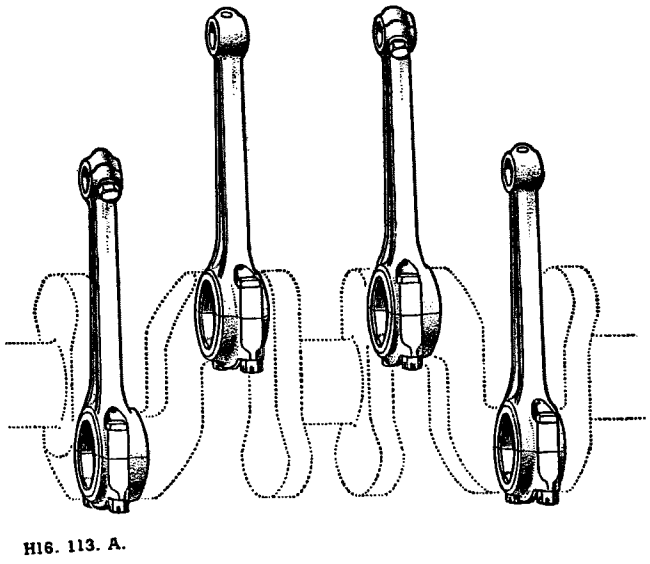

Fig. A.7

Connecting rod offsets

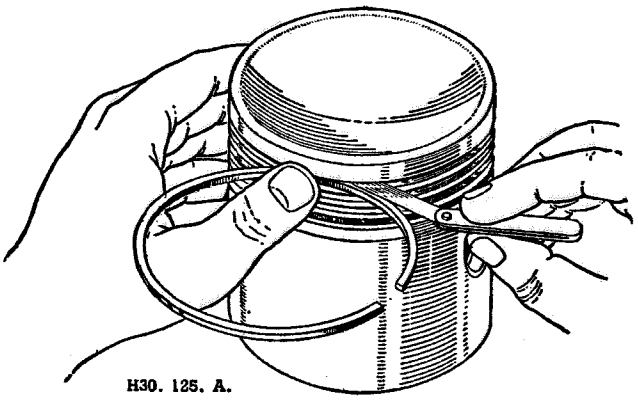

Fig. A.8

Checking piston ring and groove clearance

Section A.21

REMOVING AND REPLACING A PISTON AND CONNECTING ROD

In order to withdraw the pistons the connecting rods have to be taken through the cylinder bores. The sump and cylinder head have, therefore, to be removed (see Sections A.5 and A.11 respectively).

Remove the Simmonds nuts and tab washers securing the caps and bearings to the connecting rods. Remove the caps with the bottom half of the bearings.

Withdraw the pistons and connecting rods upwards through the cylinder bores after ensuring that the big-end bolts are still properly in position. The heads of the bolts are anchored in the connecting rod by a small peg. If these have been disturbed the big-end will not pass through the bore as the bolt head may have turned.

When replacing the pistons and connecting rods they must be fitted in the same cylinder bores and the same way round as when removed (see Fig. A.7 for order of assembling the connecting rods). Lubricate all bearing surfaces with engine oil before commencing this operation.

Insert the big-end bolts into the connecting rods; position them correctly by locating the peg in the head of the bolt into the slot in the connecting rod. If new bolts are being fitted they must be machined or filed in position to the contour of the big-end, as any protrusion will foul the bore on assembly.

Compress the piston rings, using tool 18G55A, insert the connecting rods and pistons downwards through their respective cylinder bores, and fit the bearings and caps. Each half of the bearings is notched to fit the connecting rod and cap so that they are correctly positioned and prevented from turning. Ensure also that the oil jet holes in the connecting rod line up with the holes in the bearing shell to give free passage of oil.

Before fitting the cap check that the number stamped on the rod is the same as that on the cap.

Ensure that the connecting rod bolts are anchored correctly by the small pegs in the head of the bolts, and, using new nuts, tighten them to a torque of 50 lb. ft. (6·91 kg. m.). Lock the nuts in position with new tab washers. Turn the crankshaft after fitting each rod to ensure that the bearing is not binding on the crankpin. Also check the side-clearance of each rod, as given under **'GENERAL DATA'**.

Refit the cylinder head assembly (see Section A.11). Replace the sump and refill with the recommended grade of oil (see Section A.5).

Section A.22

DISMANTLING AND ASSEMBLING A PISTON AND CONNECTING ROD

Remove the pistons from the connecting rods by unscrewing the clamp bolt from the small-end of the connecting rod (see Fig. A.9) and pushing out the gudgeon pin. Remove the rings from the pistons.

Scrape all accumulation of carbon off the piston heads and, using a piston ring groove-cleaning tool or an old ring section, carefully scrape all carbon out of the ring grooves of the pistons. Clean the carbon out of the oil holes in the piston ring grooves.

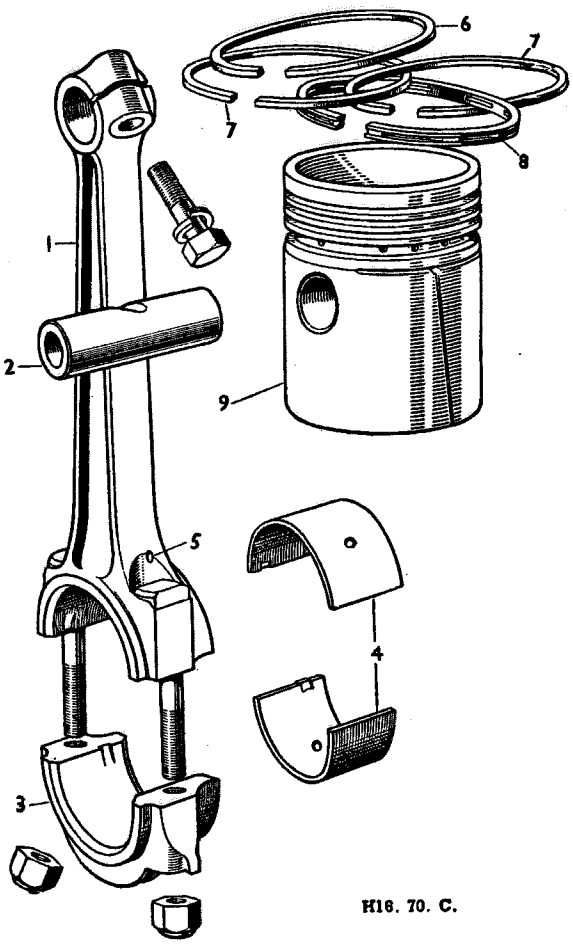

Fig. A.9

The piston and connecting rod assembly

1. Connecting rod.
2. Gudgeon pin.
3. Connecting rod cap.
4. Bearings.
5. Oil jet.
6. Top compression ring.
7. Lower compression ring.
8. Scraper ring.
9. Piston.

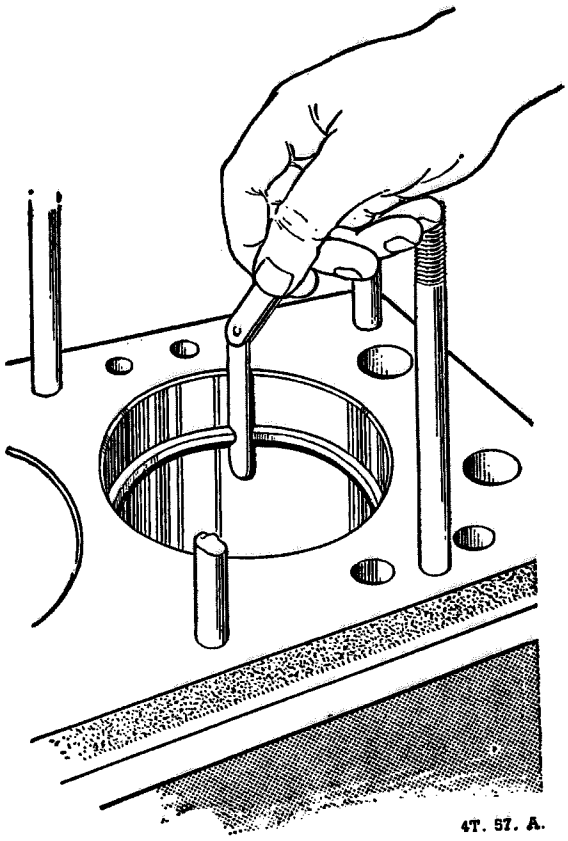

Fig. A 10

Checking the piston ring gap

Thoroughly clean all the dismantled parts in paraffin, examine all parts for wear and damage, and renew if necessary.

Piston rings should have a gap clearance (see under **'GENERAL DATA'**) when installed in the cylinder bores. If new rings are being installed each ring should be checked in the cylinder bore to determine whether its gap clearance is within the range specified. To do this use the bottom of a piston to insert the ring part way into the bore. The ring will thus be squared up in the bore for measurement of the gap clearance, as shown in Fig. A.10. To check the ring clearance in the piston grooves install the rings on the pistons and determine the clearances with a feeler gauge. If the piston ring grooves are worn excessively, as indicated when comparing the actual clearances with those given under **'GENERAL DATA'**, renew the rings and pistons.

NOTE.—The cylinder bore glazing should be removed before fitting new rings into a worn cylinder bore.

Gudgeon pins should be a hand-push fit in the piston. The fit can be checked after the rod has been assembled by holding the piston with the connecting rod in an approximately horizontal position. The weight of the large end of the connecting rod should be just insufficient to turn the gudgeon pin in the piston.

Thoroughly clean the bearing shells and the faces of the rods and caps. Blow out the oil passages in the connecting rods

Examine the bearing shells for wear and pits, and renew if necessary. Bearings are prefinished with the correct diametrical clearance and do not require bedding in.

Alignment of the connecting rods should be checked on an alignment fixture. On no account must the rods or caps be filed.

Assemble the pistons to the connecting rods by the gudgeon pins, which are a hand-push fit in the pistons. The gudgeon pins are locked in position by the clamp bolts in the small-ends of the connecting rods to a torque of 35 lb. ft. (4·85 kg. m.).

Section A.23

REMOVING AND REPLACING THE MAIN BEARINGS AND CRANKSHAFT

The crankshaft is supported in the crankcase by three renewable main bearings of the steel-backed shell type Crankshaft end-float is controlled by thrust washers fitted on both sides of the centre main bearing.

Remove the engine from the vehicle (see Section A.3) and place it upside-down in a dismantling fixture.

Remove the sump and oil strainer (see Section A.5). Remove the timing chain (see Section A.24). Remove the flywheel and housing (see Section A.28).

Check the crankshaft end-float to determine whether the renewal of the thrust washers is necessary.

Remove the connecting rod bearing caps and shells, keeping the shells with their respective caps for correct replacement, and release the connecting rods from the crankshaft. The removal of the sparking plugs will facilitate the turning of the crankshaft.

Withdraw the main bearing caps complete with the bearing bottom shells. Caps and both bearing half shells should be kept together. The use of tools 18G42A and 18G42B will assist in the removal of the bearing caps. The bottom halves of the two thrust washers will be removed with the centre main bearing cap and the oil sealing plugs removed with the front and rear bearing caps.

Remove the crankshaft, the two remaining halves of the thrust washers, and the top half-shells of the main bearings from the crankcase.

Inspect the crankshaft main journals and crankpins for wear, scores, scratches, and ovality. If necessary, the crankshaft may be reground to the minimum limits shown under **'GENERAL DATA'**. Main bearings for reground crankshafts are available in sizes shown under **'GENERAL DATA'**.

Clean the crankshaft thoroughly, ensuring that the connecting oilways between the journals and crankpins are clear. They can be cleaned out by applying a pressure gun containing petrol or paraffin. When clean inject a thin oil in the same manner.

Thoroughly clean the bearing shells, caps, and housings above the crankshaft. Examine the bearing shells for wear and pitting, and look for evidence of breaking away or picking up. Renew the shells if necessary.

Bearings are prefinished with the correct diametrical clearance and do not require bedding in. New bearings should be marked to match up with the marking on the cap, and **on no account should they be filed to take up wear or reduce running clearance.**

Check the thrust washers for wear on their bearing surfaces, and renew if necessary to obtain the correct end-float.

Replacing the crankshaft and main bearings is a reversal of the removal procedure, noting the following points.

Ensure that the thrust washers are replaced the correct way round and locate the bottom half tab in the slot in the bearing cap.

The bearing shells are notched to fit the recesses machined in the housing and cap.

In the case of the front and rear main bearing caps install new oil sealing plugs.

The stamp markings on the bearing caps should be facing the camshaft.

Lubricate the bearings freely with engine oil.

Fully tighten the main bearing nuts to a torque of 80 lb. ft. (11·06 kg. m.).

Section A.24

REMOVING AND REPLACING THE TIMING CHAIN AND WHEELS

It is possible to obtain access to the chain and wheels without removing the engine from the vehicle.

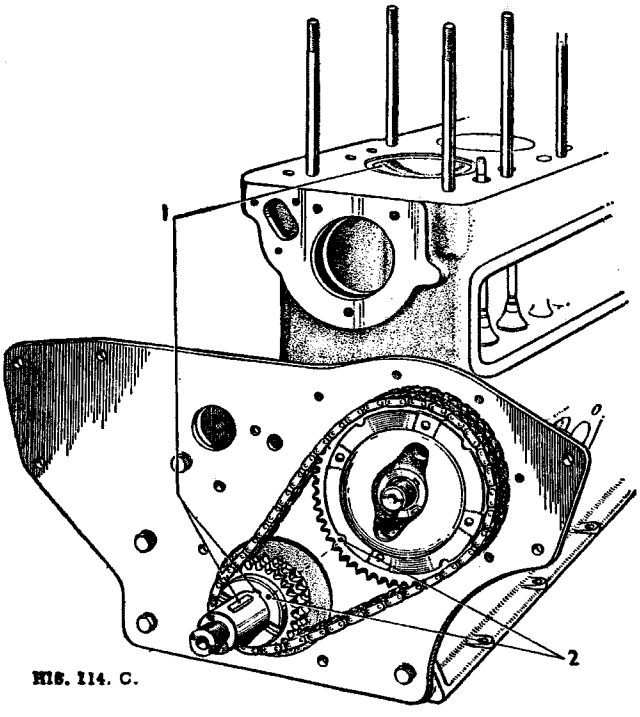

Fig. A.11

The timing gear and chain

1. Pistons 1 and 4 at T.D.C. with the relative positions of the crankshaft and camshaft keys.
2. The correct positions of the 'spots' on both timing gears.

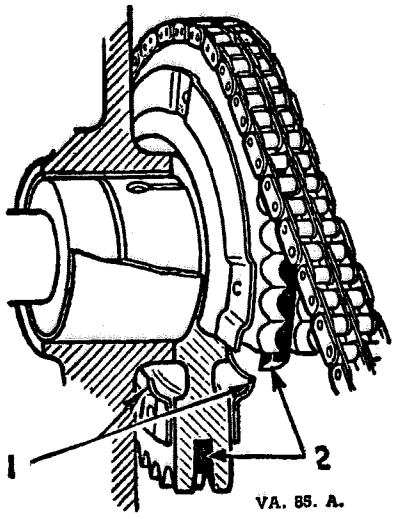

Fig. A.12

Oil catchers (1) *feed a flow of oil to the chain on each side of the camshaft sprocket, and a synthetic rubber tensioner ring* (2) *ensures quiet running and takes up slack in the chain*

Remove the grille and radiator (see Section C), also the fan belt and pulley (see Section C).

Tap back the tab washer and remove the starting-handle jaw nut from the crankshaft, using tool 18G96.

Withdraw the fan driving pulley from the crankshaft. The pulley is keyed but there is no taper fit and withdrawal will present no difficulty. Tool 18G2 can be used to advantage. Remove the timing chain cover complete with the felt oil seal. Remove the pulley key and oil thrower from the crankshaft

Tap back the tab washer and remove the nut from the camshaft. Withdraw slightly the camshaft chain wheel. The wheel is keyed and withdrawal will present no difficulty. Tool 18G58 can be used to advantage. Withdraw slightly the crankshaft chain wheel, which is keyed to the crankshaft. Tool 18G2 can be used to advantage. The timing chain, camshaft wheel, and crankshaft wheel can now be removed together.

Clean and examine the joint faces of the timing cover and front suspension plate. Examine the felt oil seal for signs of wear, hardening, or damage. If the slightest wear or damage is revealed it should be renewed.

Inspect the fan driving pulley for wear on the flanges and the chain wheels for broken or chipped teeth.

Examine the rubber tensioner ring fitted to the camshaft chain wheel. If worn, renew the wheel assembly. The rubber tensioner ring ensures quiet running by constantly taking up slack in the timing chain, and it should not be interfered with in any way (see Fig. A.12).

Inspect the chain for excessive wear or stretch.

Replacing the timing chain, wheels, and cover is a reversal of the removal procedure, but the following points should be carefully noted.

To facilitate retiming, the crankshaft and camshaft chain wheels are spot-marked, and the timing is correct when the spot on the camshaft wheel is in line with the

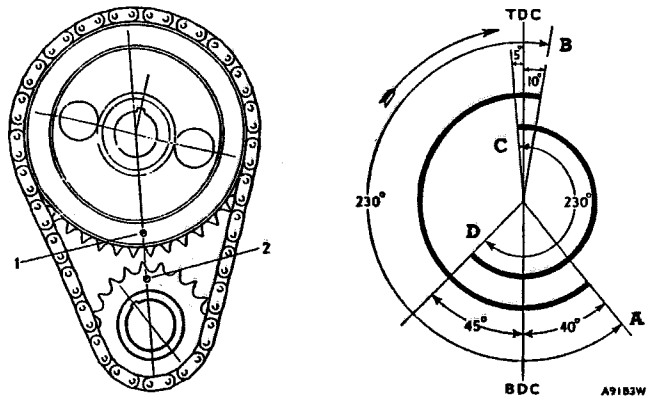

Fig. A.13

The diagram of valve timing, showing

1 and 2. The relative position of the timing marks on the sprockets.
A and B. Exhaust valve open.
C and D. Inlet valve open.

spot on the crankshaft wheel at their closest position (2, Fig. A.11) and pistons 1 and 4 are at T.D.C. relative to the position of the crankshaft keys (1, Fig. A.11). Use drift 18G16 for installing the crankshaft pulley and chain wheel. There should be a clearance of ·003 to ·006 in. (·076 to ·152 mm.) between the camshaft wheel and the locating plate when the wheel is fully tightened to the camshaft. This clearance is given automatically by the camshaft locating plate and the camshaft shoulder, and will be within the limits given if there is no excessive wear on the components.

Apply engine oil to the timing chain and wheels before installing the cover.

Fit a new joint washer between the chain cover and front suspension plate.

Fit new tab washers when locking the camshaft and crankshaft nuts.

Ensure that the crankshaft oil thrower is positioned correctly: the concave or hollow side must face towards the pulley. Use tool 18G3 to ensure that when refitting the chain cover the felt oil seal and cover are concentric to the crankshaft, thereby safeguarding against oil leakages and possible damage to the oil seal.

Section A.25

REMOVING AND REPLACING THE CAMSHAFT

To withdraw the camshaft first dismantle the sump and oil pump complete. Take out the distributor and driving spindle. Detach the fuel pump from its mounting.

Remove the timing gear complete, also the push-rods and tappets.

Undo the two set pins holding the locating plate, and draw the camshaft forward, rotating it slowly to assist withdrawal.

Inspect the cams and oil pump driving gear for excessive wear. If the camshaft is in order carefully replace it so as not to damage the white-metal bearings.

Section A.26

RENEWING THE CAMSHAFT BEARINGS

While the camshaft is removed it is advisable to check the bearing liners for damage and wear. If these are not in good condition they must be removed and new ones fitted.

The old bearings can be removed and new ones refitted, using tool 18G124A.

This tool comprises a body with built-in thrust race, screw wing nut, stop plate, 'C' washer, and handle, and must be used in conjunction with the following adaptors:

Pilot, code 5	18G124F
Pilot, code 3	18G124D
Pilot, code 1	18G124B
Guide, code 6	18G124H

Removing the front and rear liners

Stand the cylinder block on a bench and insert the pilot, code 5 for the front liner or code 1 for the rear liner. Screw the wing nut a few threads onto the screw and pass the screw through the body so that the thrust race will abut against the wing nut.

Push the screw through the liner and pilot, slip the 'C' washer onto the flats provided, and insert the handle into the hole at the end of the screw to prevent the liner turning.

Oil the screw to reduce friction before turning the wing nut in a clockwise direction to withdraw the liner.

Removing the middle liner

To remove the middle liner insert pilot 3 into this liner and pilot 6 into the front liner housing. Pass the screw through the first pilot and liner, and finally through the second pilot. Slip the 'C' washer on the flats provided, and insert the handle into the hole at the end of the screw to prevent the liner frometurning.

Turn the wing nut in a clockwise direction to withdraw the liner.

Replacing the liners

Replace the middle liner first.

Insert pilots 6 and 3 into the housings at the front and middle liners respectively.

Pass the screw through both pilots and locate a new liner, chamfered edge foremost, on the end of the second pilot. Place the stop plate at the back of the liner and fit the 'C' washer to retain it in position. The handle assembled in the hole in the screw will prevent the liner turning when being pulled into position. Care must be taken to ensure that the oil holes in liner and cylinder block are in line, and that the flat on the stop plate is away from the split in the liner.

Turn the wing nut in a clockwise direction to pull the liner into position.

Now assemble front and rear liners in position, using pilot 5 for the front and pilot 1 for the rear. If either of these liners is longer than its housing it should be fitted so that it is flush with the face of the block.

Reaming the liners

Before the camshaft can be reassembled the liners must be reamed in line in order to obtain the correct clearance between the shaft journals and their bearings. For this purpose use tool 18G123A, which comprises an arbor with tommy-bar and Allen key, and must be used with the following adaptors:

Pilot, code 15	18G123AD
Cutter, code 1	18G123B
Pilot, code 13	18G123Q
Pilot, code 10	18G123M
Cutter, code 2	18G123C
Pilot, code 9	18G123L
Pilot, code 16	18G123T
Cutter, code 4	18G123E

Each cutter, though in one piece, incorporates a roughing and a finishing cutter. It is therefore essential that the roughing portion enters the liner first. A peg is retained in the centre groove of each cutter by means of a spring clip and locates the cutter by engaging in a slot in the arbor.

The three camshaft liners must be reamed in two operations.

Insert the tapered pilots, codes 10 and 13, from the rear of the block into Nos. 2 and 3 liners respectively. Place the plain pilot, code 9, onto the arbor, followed by code 4 cutter.

Pass the arbor through the front liner and the pilot, code 10. Code 1 cutter can then be placed onto the arbor before it is pushed through the pilot in the rear liner. Locate the two cutters, codes 4 and 1, in positions 10 and 4 respectively by turning them to the left so that the pegs engage in the holes provided. They will be in the correct positions when numbers 10 and 4 on the arbor are visible directly in front of the appropriate cutter.

Apply paraffin or thin oil to the cutters before commencing to ream by turning the tommy-bar at the end of the arbor in a clockwise direction. On no account must the operator attempt to force the cutter through the liner, otherwise it will seize.

Swarf should be cleared away at frequent intervals, particularly after the front liner has been reamed, so that the plain pilot, code 9, can take the place of the first cutter. Continue the first part of the operation by reaming the rear liner in a similar manner. As the cutter passes through it will push out the tapered pilot.

Free the cutters by turning them to the right; withdraw the arbor and remove the pilots.

To commence the second operation place code 16 pilot in the front liner and code 15 pilot in the rear liner.

Pass the arbor through the front pilot and put code 2 cutter onto the arbor before pushing it through the middle liner and the rear pilot. Locate the cutter in position 7 and apply paraffin or thin oil with a brush. Slowly turn the tommy-bar in a clockwise direction to ream the middle liner.

Free the cutter, withdraw the arbor, and remove the pilots. Clear away all swarf and apply oil to the liners before assembling the camshaft.

Section A.27

OVERHAULING THE CYLINDER BLOCK

Remove and dismantle the engine. Remove all studs, unions, and screwed plugs, etc., if necessary.

If an expansion plug has blown, or leaks, remove the plug by drilling a hole in its centre and lever it out with a screwdriver or other suitable tool.

Scrape as much sediment as possible from the water passages and thoroughly swill out with a water hose.

Clean all joint washer surfaces.

Inspect for cracks and scores on joint washer surfaces.

It may be advisable to remove the ridge above the ring travel at the top of the cylinder bores before checking the fit of the pistons.

Wipe the cylinder bores clean and examine them for scores, out of round, and taper. If the cylinders are found to be out of round or excessively tapered when measured with a dial test indicator they should be reconditioned.

If cylinder reconditioning is required determine accurately the amount of material to be removed (refer to **'GENERAL DATA'** concerning oversizes pistons available).

Make sure that all traces of abrasives are cleaned from all parts of the cylinder block after the cylinder-reconditioning operation is completed.

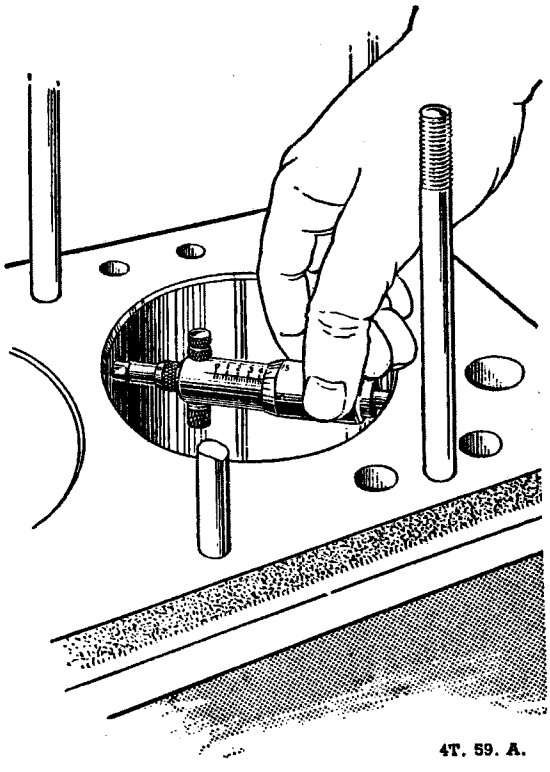

Fig. A.14
Measuring bore wear

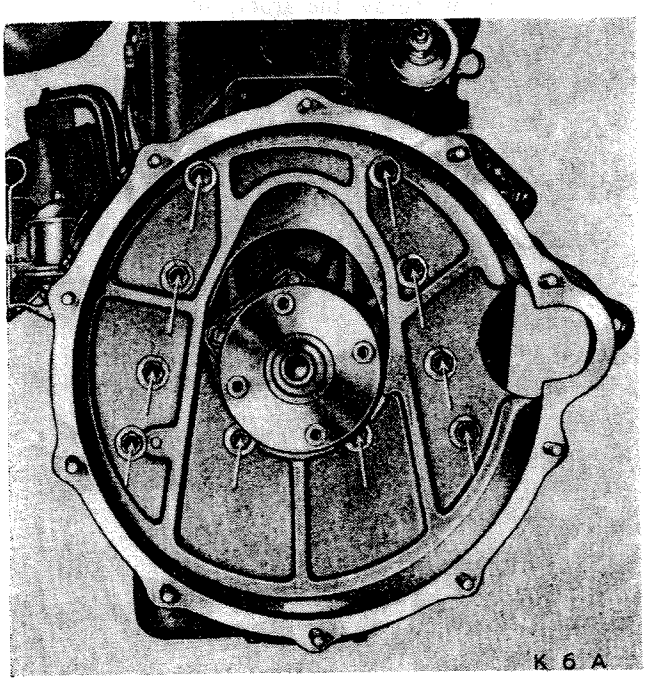

Fig. A.15
The flywheel housing bolts

Section A.28

REMOVING AND REPLACING THE FLYWHEEL AND HOUSING

The flywheel complete with starter ring is fastened to a flange on the rear of the crankshaft by four set bolts, which screw into four dowel-type nuts and are locked in position by two lock plates. The flywheel housing is secured to the crankcase by 12 set bolts and spring washers. To remove the flywheel after removing the engine from the vehicle proceed as follows.

Separate the gearbox from the engine and remove the clutch from the flywheel.

Knock back the tabs of the lock plates, when the bolts can be unscrewed and the flywheel withdrawn.

Unscrew the eight set bolts and withdraw the engine rear plate.

Examine the flywheel teeth and friction face for excessive wear. If the teeth on the starter ring are damaged or badly worn a replacement flywheel with a new ring should be fitted.

Examine the engine rear plate for distortion and damage, clean the joint faces of the plate and crankcase, and check for scores.

Refit the engine rear plate to the crankcase, using a new joint washer. Tighten the securing bolts evenly and firmly.

Place the flywheel over the flange and flange nuts of the crankshaft so that the timing mark '1/4' is at T.D.C. when the first throw of the crankshaft is at T.D.C. The joint faces should be perfectly clean. Place the lock plates under the heads of the bolts, insert the bolts to engage with the dowel-type nuts, and tighten them in diagonal sequence. A torque spanner set to 50 lb. ft. (6·9 kg. m.) should be used whenever possible when tightening the flywheel bolts.

Check the alignment of the flywheel by installing a dial test indicator on the engine rear plate so that the indicator button rides on the clutch face of the flywheel.

Crank the engine slowly to determine the amount of misalignment. This should not exceed ·003 in. (·076 mm.) as registered on the dial when the engine is turned through one complete revolution.

Finally, remove the dial test indicator and knock back the tabs of the lock plates.

Refit the clutch and gearbox.

Section A.29

CYLINDER LINERS

Should the condition of the cylinder bores be such that they cannot be cleaned up to accept the recommended oversize pistons, it is possible that dry cylinder liners can be fitted. This operation may be carried out by the use of specialized proprietary equipment or with a power press using pilot adaptors to the dimensions shown in Fig. A.16. If liners have not previously been

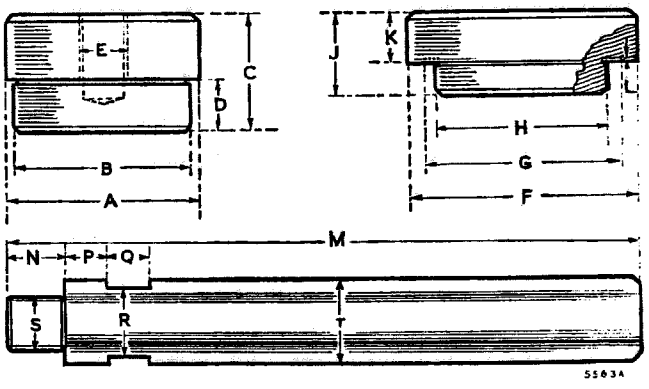

Fig. A.16
Cylinder liner pilot dimensions

Pressing-out pilot

A. $3\frac{15}{64}\ ^{-\cdot 0}_{+\cdot 005}$ in. (82·153 $^{-\cdot 0}_{+\cdot 127}$ mm.).
B. 3·123 $^{-\cdot 05}_{+0}$ in. (79·324 $^{-\cdot 127}_{+\cdot 0}$ mm.).
C. $1\frac{3}{4}$ in. (44·45 mm.).
D. $\frac{3}{4}$ in. (19·05 mm.).
E. $\frac{3}{4}$ in. B.S.W. thread.

Pressing-in pilot

F. $3\frac{5}{8}$ in. (92·075 mm.).
G. $3\frac{5}{16}$ in. (84·137 mm.).
H. 3·108 $^{-\cdot 005}_{+\cdot 0}$ in. (78·943 $^{-\cdot 127}_{+\cdot 0}$ mm.).
J. $1\frac{1}{4}$ in. (31·75 mm.).
K. $\frac{3}{4}$ in. (19·05 mm.).
L. ·015 in. (·38 mm.).

Pilot extension

M. $10\frac{1}{2}$ in. (26·67 cm.).
N. $\frac{7}{8}$ in. (22·22 m.).
O. $\frac{5}{8}$ in. (15·87 mm.).
P. $\frac{5}{8}$ in. (15·87 mm.).
R. Two flats, 1 in. (25·4 mm.) across
S. $\frac{3}{4}$ in. B.S.W. thread.
T. $1\frac{1}{4}$ in. (31·75 mm.).

Cylinder bore diameter before fitting liner	*Outside diameter of liner*	*Interference fit of liner in cylinder bore*	*Finish bore diameter of liner after fitting*
3·2630 to 3·2635 in. (82·880 to 82·894 mm.)	3·2650 to 3·2657 in. (82·931 to 82·948 mm.)	·0015 to ·0027 in. (·038 to ·069 mm.)	3·1245 to 3·1260 in. (79·362 to 79·400 mm.)

fitted, then the bores must be machined and honed to the dimensions given in the table.

Removing worn liners

Remove and dismantle the cylinder block as detailed in Section A.27. Place the cylinder block face downwards on suitable wooden supports on the bed of the press, ensuring that there is sufficient space between the block and the bed of the press to allow the worn liner to pass down. Insert the pilot with its extension into the bottom of the liner and carefully press the liner out of the bore.

Fitting new liners

Thoroughly clean the cylinder block and liner contacting surfaces. Stand the cylinder block face upwards on the bed of the press, insert the pilot into the top of the liner, and position the liner with its chamfered end in the top of the cylinder block bore. Ensure that the liner is square with the top of the block and that the ram of the press is over the centre of the pilot. Press the liner fully into the bore and flush with the top face of the block.

If a liner without connecting rod clearance slots is fitted, then slots must be milled in the bottom of the liner to suit the slots in the cylinder block bore.

Finally, bore and hone the liners to the dimensions given in the table.

Section A.30

FITTING FLYWHEEL STARTER RINGS

To remove the old starter ring from the flywheel flange split the ring with a cold chisel, taking care not to damage the flywheel. Make certain that the bore of the new ring and its mating surface on the flywheel are free from burrs and are perfectly clean.

To fit the new ring it must be heated to a temperature of 572 to 752° F. (300 to 400° C.), indicated by a light-blue surface colour. If this temperature is exceeded the temper of the teeth will be affected. The use of a thermostatically controlled furnace is recommended. Place the heated ring on the flywheel with the lead of the ring teeth uppermost. The expansion will allow the ring to be fitted without force by pressing or tapping it lightly until the ring is hard against its register.

This operation should be followed by natural cooling, when the 'shrink fit' will be permanently established and no further treatment required.

(For 'SERVICE TOOLS' see page A.20)

18G28. Valve Seat Finishing Cutter

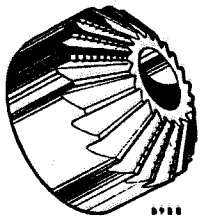

18G28A. Valve Seat Glaze Breaker

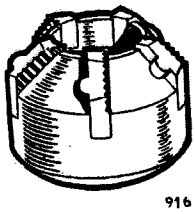

18G28B. Valve Seat Narrowing Cutter—Top

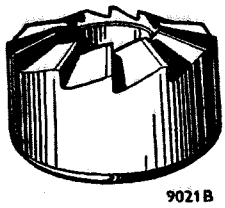

18G28C. Valve Seat Narrowing Cutter—Bottom

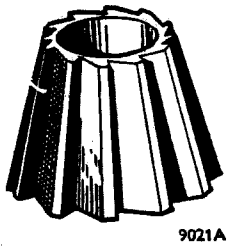

18G174D. Valve Seat Cutter Pilot

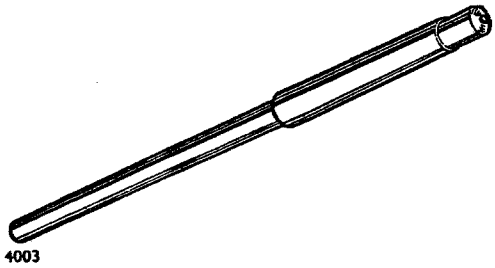

18G27. Valve Seat Cutter and Pilot Handle

The use of these tools will save lengthy and wasteful grinding when valve seats are pitted and also enable the width of the valve seats to be maintained at their original dimensions.

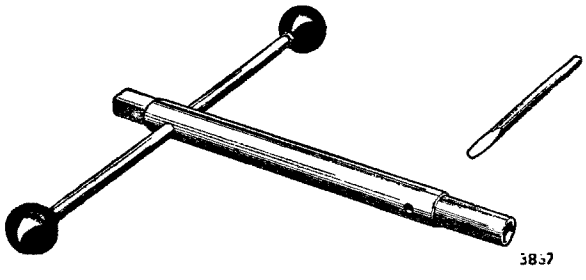

18G27B. Fibre Box for Valve Seat Cutters

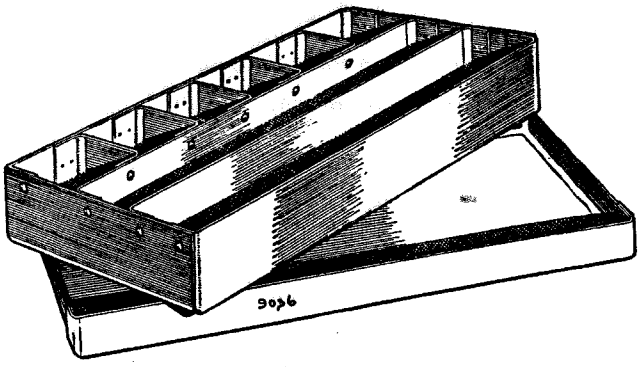

18G21. Valve Rocker Bush Remover and Replacer

This tool, which consists of a driver and an anvil, makes the removal and replacement of rocker bushes a simple and safe operation.

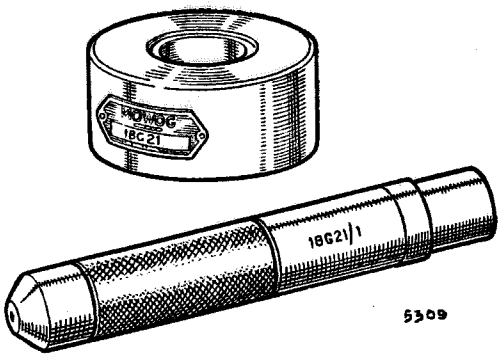

18G96. Starting Nut Spanner

The robust construction of this special 'shock-type' spanner is conducive to long life. The design enables a jaw nut to be removed or replaced without the need for locking the crankshaft by improvised means, which may cause damage to components.

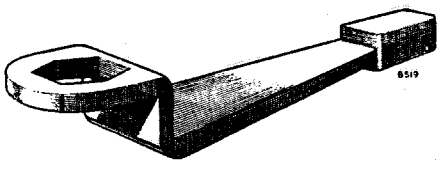

18G55A. Piston Ring Compressor

A clamping device to retain the piston rings and enable the piston to enter the cylinder bore with a minimum of pressure.

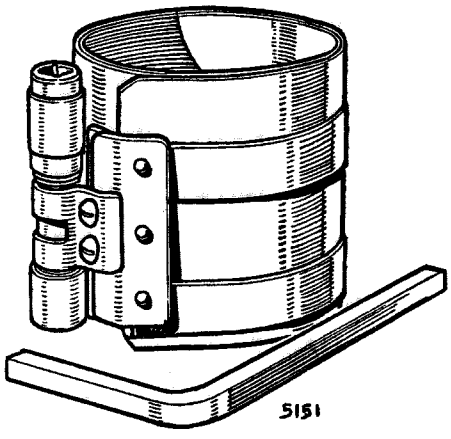

18G372. Torque Spanner—30 to 140 lb. ft. (4·15 to 19·35 kg. m.)

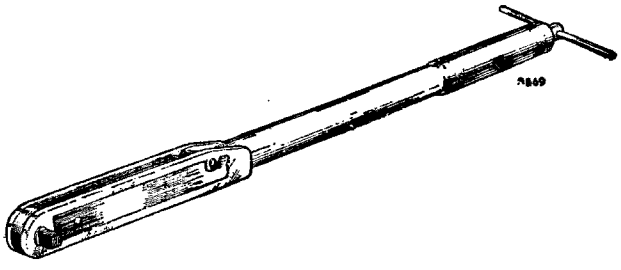

18G16. Crankshaft Gear and Pulley Replacer

This tool is designed for driving on the crankshaft gear and pulley.

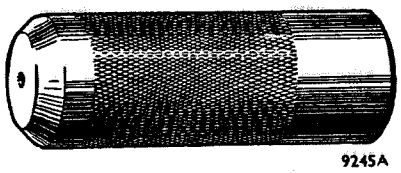

18G124A. Camshaft Liner Remover and Replacer (basic tool)

Camshaft liners can be removed and replaced without the damage invariably associated with the use of improvised drifts. Adaptors for use with this basic tool are obtainable separately.

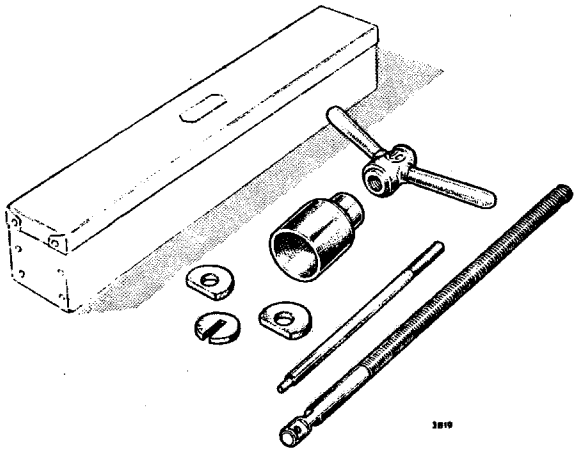

18G124B. Camshaft Liner Remover Adaptor

18G124D. Camshaft Liner Remover Adaptor

18G124F. Camshaft Liner Remover Adaptor

18G124H. Camshaft Liner Remover Adaptor

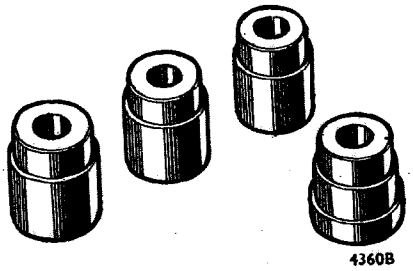

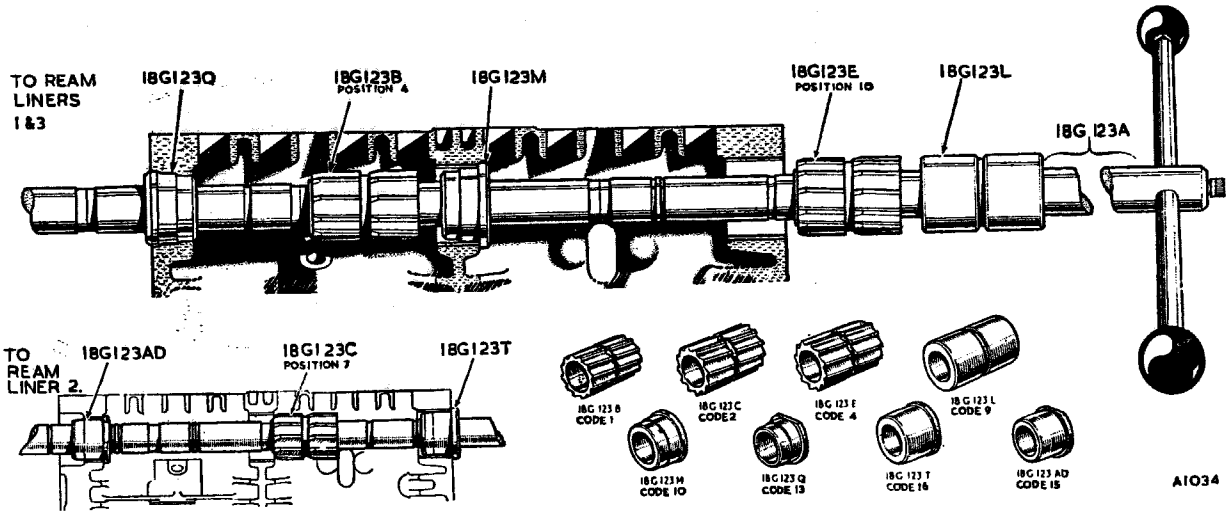

18G123A. Camshaft Liner Reamer (basic tool)

This is essential when reconditioning cylinder blocks, otherwise camshaft liners cannot be reamed in line, and in consequence the clearance between the camshaft journal and liner will be incorrect. The cutters and pilots for use with this basic tool are supplied separately.

18G123B. Camshaft Liner Reamer Cutter

18G123C. Camshaft Liner Reamer Cutter

18G123E. Camshaft Liner Reamer Cutter

18G123L. Camshaft Liner Reamer Pilot

18G123M. Camshaft Liner Reamer Pilot

18G123Q. Camshaft Liner Reamer Pilot

18G123T. Camshaft Liner Reamer Pilot

18G123AD. Camshaft Liner Reamer Pilot

18G42A. Main Bearing Cap Remover (basic tool)

The frame has feet suitably spaced to locate on the crankcase flanges. The adaptor 18G42B is screwed first onto the drive screw and then into the main bearing cap.

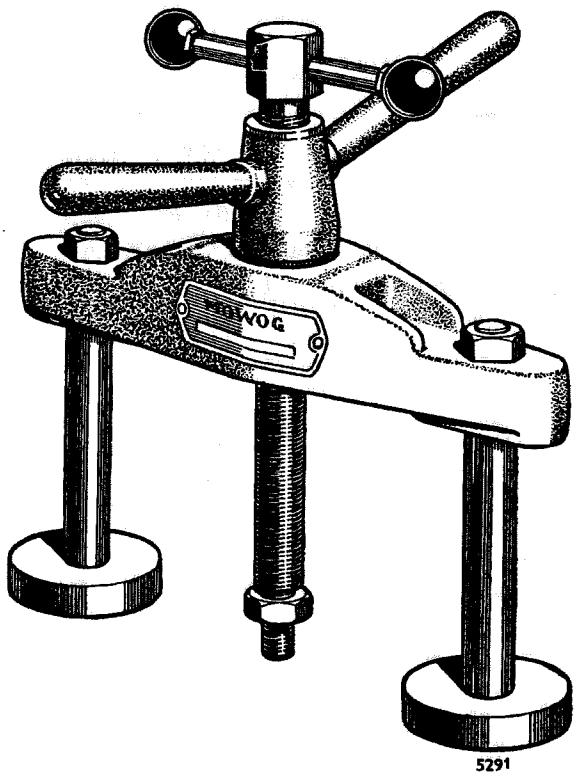

18G42B. Main Bearing Remover Adaptors

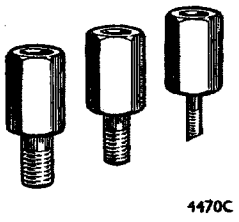

18G69. Oil Pump Release Valve Grinding-in Tool

This tool is designed for the removal and grinding in of oil release valves. It consists of a knurled handle, knurled set screw, and rubber sleeve. Tightening the set screw expands the rubber plunger, which ensures that the tool is a tight fit when inserted into the hollow oil release valve.

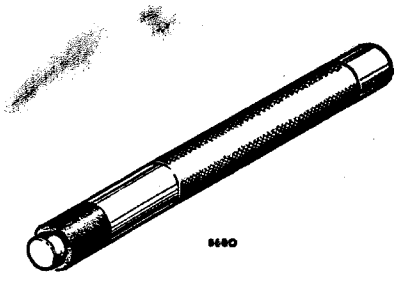

18G58. Camshaft Gear Remover

This tool will remove the gear quickly and without damage. The centre drive screw incorporates a hardened steel ball to reduce friction; a separate thrust pad is provided for insertion between the camshaft and the ball when extra travel is required.

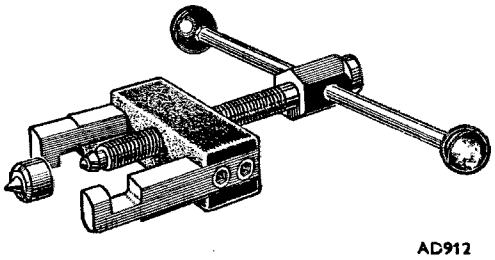

18G2. Crankshaft Gear, Pulley, and Propeller Shaft Flange Remover

(Application—crankshaft gear and pulley removal.)

A multipurpose tool with alternative legs readily interchangeable, one pair with thin, flat ends designed for removing the chain wheel, and the other pair having tapered ends to engage the pulley grooves.

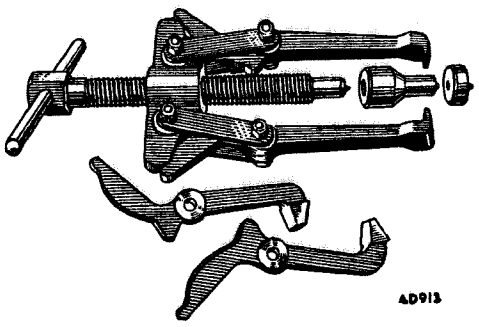

18G3. Engine Front Cover Locating Bush

This tool ensures that the felt oil seal and cover are concentric with the crankshaft, thus safeguarding against oil leaks. The tool is double-ended to make its use applicable to crankshafts and front covers of different dimensions.

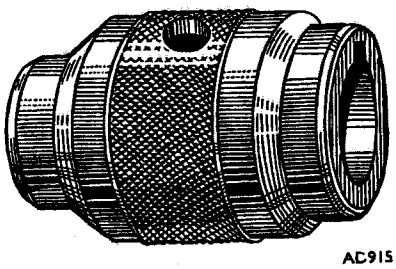

18G45. Valve Spring Compressor

This tool is designed with a cam and lever action which is both positive and speedy. The adaptor ring which contacts the valve spring caps is specially shaped to facilitate the removal and replacement of the split collets. A screw adjustment is also provided.

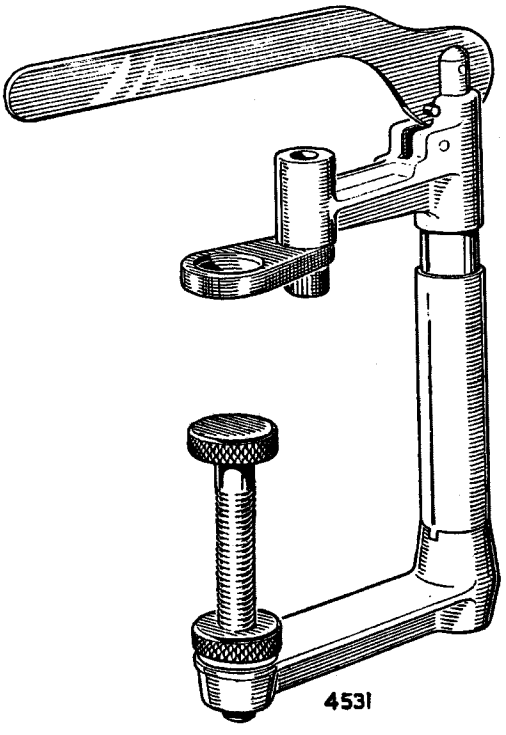

18G29. Valve Grinding-in Tool

This suction-type tool has a handle of convenient length to enable it to be rotated backwards and forwards between the palms of the hands when grinding the valve faces and seats.

SECTION Aa

THE DIESEL ENGINE

	Section
Big-end bearings—removing and replacing	Aa.12
Camshaft	
Bearing liners—removing and replacing	Aa.34
Removing and replacing	Aa.33
Crankshaft—removing and replacing	Aa.39
Cylinder head—removing and replacing	Aa.17
Cylinder liners—removing and replacing	Aa.40
Decarbonizing	Aa.24
Description	Aa.1
Engine front plate—removing and replacing	Aa.35
Flywheel—removing and replacing	Aa.36
Flywheel housing—removing and replacing	Aa.38
Flywheel starter ring—removing and replacing	Aa.37
Lubrication system	Aa.3
Manifolds—removing and replacing	Aa.16
Oil filter—external	Aa.5
Oil pressure	Aa.7
Oil pressure release valve	Aa.6
Oil pump	
Dismantling and reassembling	Aa.11
Removing and replacing	Aa.9
Oil strainer and pick-up—removing and replacing	Aa.10
Piston and connecting rod	
Dismantling and reassembling	Aa.19
Removing and replacing	Aa.18
Piston rings—removing and replacing	Aa.20
Piston sizes and cylinder bores	Aa.21
Power unit—removing and replacing	Aa.2
Service tools	End of Section
Sump	
Draining	Aa.4
Removing and replacing	Aa.8
Tappets—removing and replacing	Aa.26
Timing chain	
Case—removing and replacing	Aa.29
Removing and replacing	Aa.31
Tensioner—removing, dismantling, and replacing	Aa.30
Wheels—removing and replacing	Aa.32
Valves	
Grinding	Aa.23
Removing and replacing	Aa.22
Timing check	Aa.28
Valve guides—removing and replacing	Aa.25
Valve rockers	
Bushes—removing and replacing	Aa.15
Clearances—adjusting	Aa.27
Shaft—dismantling and reassembling	Aa.14
Shaft—removing and replacing	Aa.13

THE DIESEL ENGINE
(Longitudinal Section)

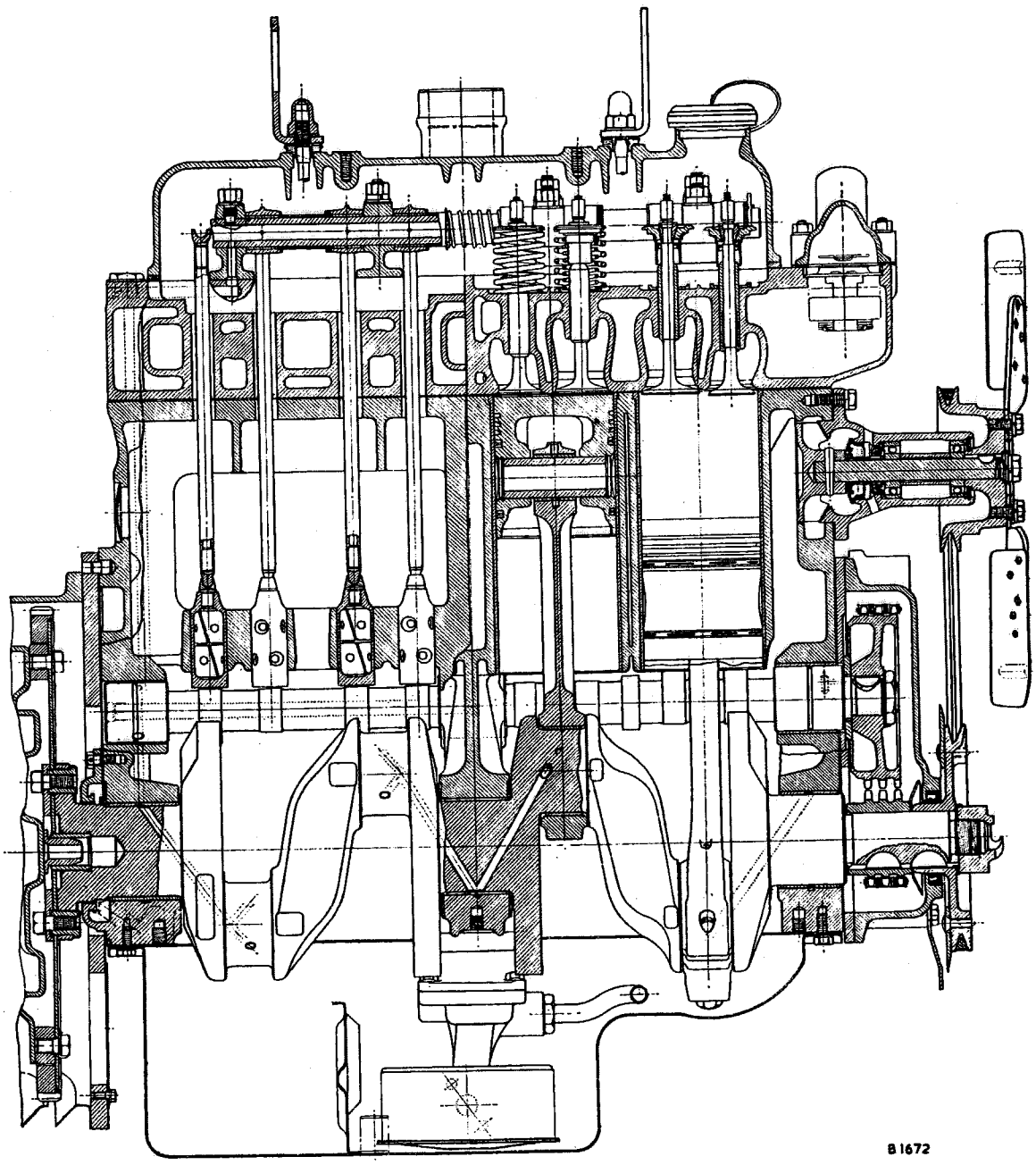

THE DIESEL ENGINE
(Transverse Section)

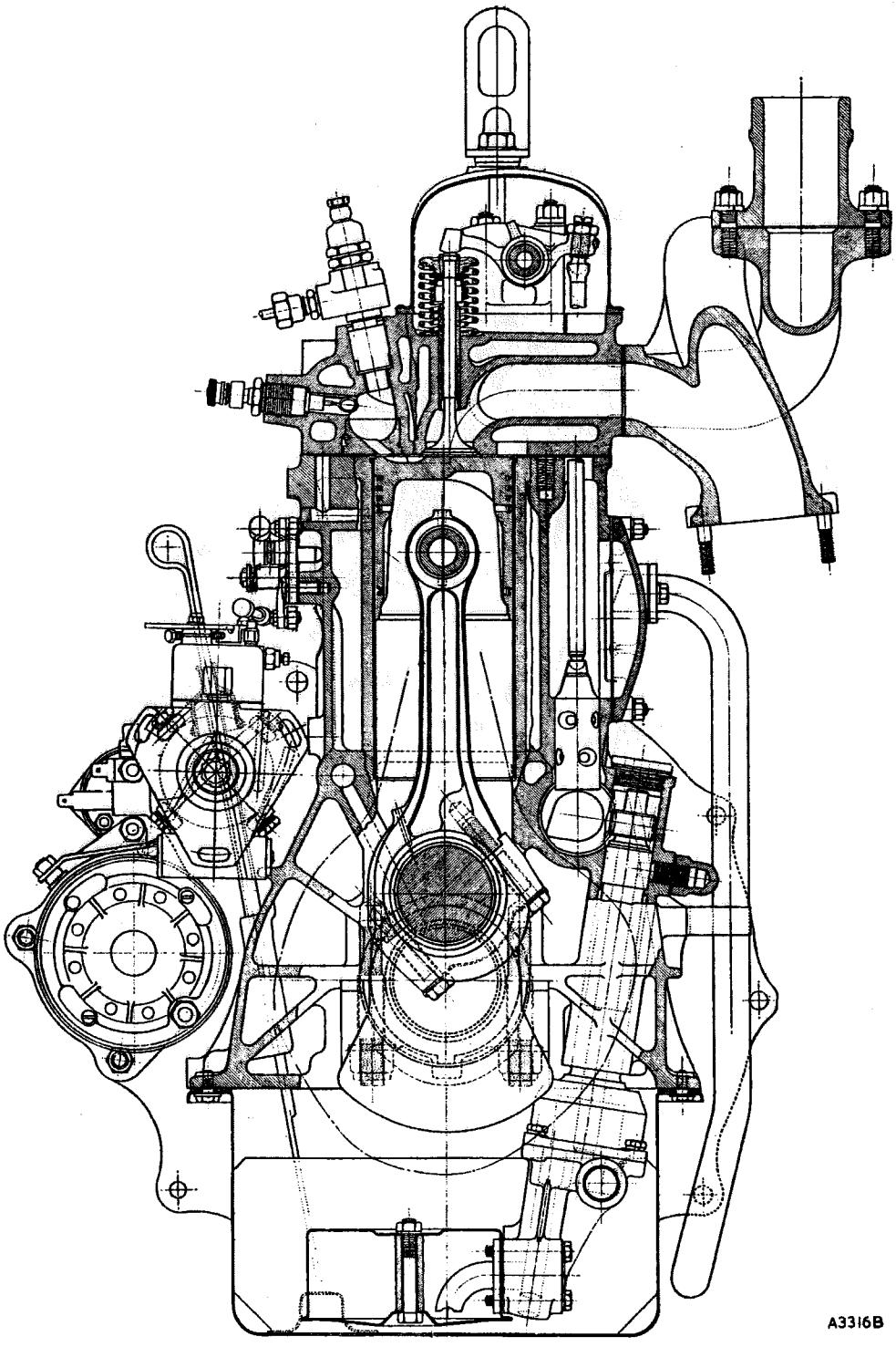

THE DIESEL ENGINE EXTERNAL COMPONENTS

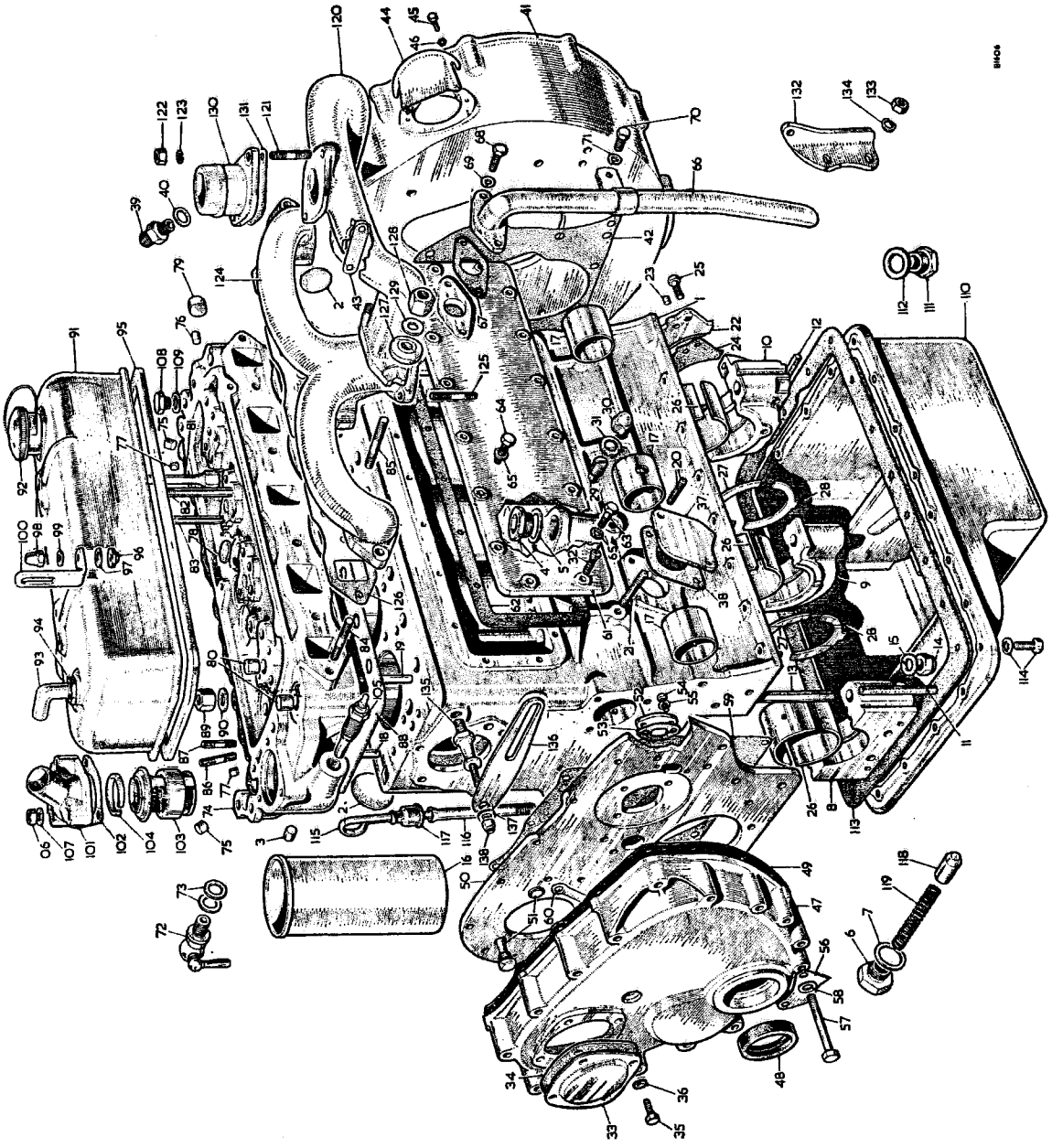

KEY TO THE DIESEL ENGINE EXTERNAL COMPONENTS

No.	Description
1.	Cylinder block assembly.
2.	Plug for cylinder block (welch).
3.	Plug for water gallery and oil passage.
4.	Plug for oil pump spindle bore.
5.	Washer for plug.
6.	Oil release valve plug.
7.	Washer for plug.
8.	Main bearing cap (front).
9.	Main bearing cap (centre).
10.	Main bearing cap (rear).
11.	Plug for front and rear main bearing caps.
12.	Joint for rear main bearing cap.
13.	Main bearing cap stud.
14.	Nut for stud.
15.	Spring washer for stud.
16.	Cylinder liner.
17.	Camshaft bearing liner.
18.	Cylinder head stud (short).
19.	Cylinder head stud (long).
20.	Stud for blanking plate.
21.	Stud for dynamo rear bracket.
22.	Crankcase cover (rear).
23.	Dowel for cover.
24.	Joint for cover.
25.	Screw for cover.
26.	Main bearing.
27.	Thrust washer (top).
28.	Thrust washer (bottom).
29.	Oil pump locating screw.
30.	Cap nut for locating screw.
31.	Washer for cap nut.
32.	Side cover screw (countersunk).
33.	Injection pump driving gear cover.
34.	Joint washer for cover.
35.	Set screw for cover.
36.	Washer for set screw.
37.	Blanking plate.
38.	Joint washer for blanking plate.
39.	Union for oil pressure pipe.
40.	Washer for union.
41.	Flywheel housing.
42.	Joint for housing.
43.	Joint for housing (top).
44.	Ventilation cover for housing.
45.	Screw for cover.
46.	Spring washer for screw.
47.	Cover assembly (front).
48.	Oil seal.
49.	Joint for front cover.
50.	Front plate.
51.	Bolt for fuel injection pump.
52.	Cover for riveting hole in front plate.
53.	Joint for cover.
54.	Screw for cover.
55.	Washer for screw.
56.	Timing pointer.
57.	Set screw for pointer and cover.
58.	Washer for screw.
59.	Joint for front plate.
60.	Lock washer for front plate screw.
61.	Side cover.
62.	Joint for side cover.
63.	Screw for side cover (short).
64.	Screw for side cover (long).
65.	Washer for screw.
66.	Vent pipe with clip.
67.	Joint for vent pipe.
68.	Screw for vent pipe.
69.	Spring washer.
70.	Screw for vent pipe clip.
71.	Spring washer.
72.	Water drain tap.
73.	Washer for tap.
74.	Cylinder head.
75.	Plug for water jet boss.
76.	Plug for oil hole to rocker bracket.
77.	Plug for air vent boss.
78.	Plug for centre jet boss.
79.	Plug for core hole (taper).
80.	Plug for core hole.
81.	Stud for valve rocker cover.
82.	Stud for valve rocker bracket (long).
83.	Stud for valve rocker bracket (short).
84.	Stud for manifolds.
85.	Stud for exhaust manifold.
86.	Stud for nozzle holders.
87.	Stud for water outlet pipe.
88.	Cylinder head joint.
89.	Nut for cylinder head stud.
90.	Plain washer for nut.
91.	Valve rocker cover.
92.	Oil filler cap.
93.	Vent pipe.
94.	Locknut for vent pipe.
95.	Joint for rocker cover.
96.	Bush for rocker cover.
97.	Cup washer for bush.
98.	Nut for cover and engine sling bracket.
99.	Plain washer.
100.	Engine sling bracket.
101.	Water outlet elbow.
102.	Joint for outlet elbow.
103.	Thermostat.
104.	Retaining ring for thermostat.
105.	Thermal transmitter.
106.	Nut for outlet elbow stud.
107.	Plain washer.
108.	Plug for heater outlet.
109.	Washer for plug.
110.	Oil sump.
111.	Drain plug for sump.
112.	Washer for plug.
113.	Joint for sump.
114.	Screw with captive washer for sump.
115.	Oil level dipstick.
116.	Tube for dipstick.
117.	Dust cap.
118.	Oil release valve.
119.	Spring for release valve.
120.	Air manifold.
121.	Stud for adaptor.
122.	Nut for stud.
123.	Spring washer.
124.	Exhaust manifold.
125.	Stud for exhaust pipe flange.
126.	Joint for exhaust and air manifolds.
127.	Yoke for manifolds.
128.	Nut for manifold stud.
129.	Washer for stud.
130.	Adaptor (air cleaner to manifold).
131.	Joint for adaptor.
132.	Bracket for dynamo.
133.	Nut for bracket stud.
134.	Spring washer.
135.	Mounting pillar.
136.	Adjusting link.
137.	Washer for link.
138.	Nut for link.

THE DIESEL ENGINE INTERNAL COMPONENTS

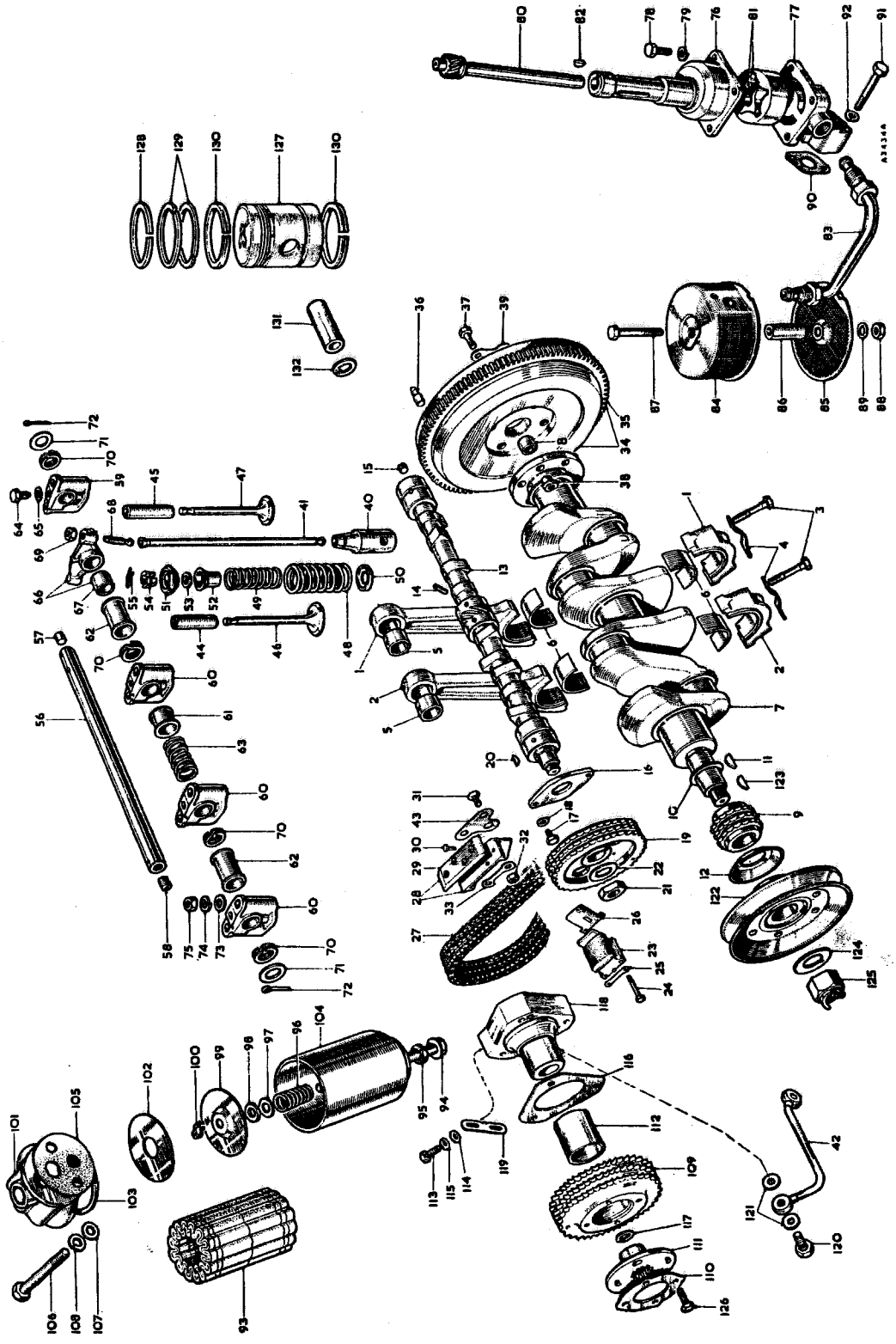

KEY TO DIESEL ENGINE INTERNAL COMPONENTS

No.	Description
1.	Connecting rod with cap (Nos. 1 and 3 cylinders).
2.	Connecting rod with cap (Nos. 2 and 4 cylinders).
3.	Screw for cap.
4.	Lock washer.
5.	Bush for connecting rod.
6.	Bearing for connecting rod.
7.	Crankshaft.
8.	Bush for first motion shaft.
9.	Crankshaft chain wheel.
10.	Packing washer for chain wheel.
11.	Key for chain wheel.
12.	Oil thrower for crankshaft.
13.	Camshaft.
14.	Oil feed nozzle for camshaft.
15.	Plug for camshaft.
16.	Locating plate for camshaft.
17.	Screw for locating plate.
18.	Spring washer.
19.	Camshaft chain wheel.
20.	Key for chain wheel.
21.	Nut for chain wheel.
22.	Lock washer for nut.
23.	Chain tensioner.
24.	Screw for tensioner.
25.	Lock washer.
26.	Joint washer for tensioner.
27.	Timing chain.
28.	Vibration damper for chain.
29.	Pad for damper.
30.	Rivet for pad.
31.	Screw for damper.
32.	Nut for damper screw.
33.	Lock washer.
34.	Flywheel assembly.
35.	Starter ring.
36.	Dowel for flywheel.
37.	Bolt for flywheel.
38.	Nut for flywheel bolt.
39.	Lock washer.
40.	Tappet.
41.	Push-rod.
42.	Oil feed pipe for chain wheel bearing.
43.	Shim for front cover centre boss.
44.	Guide for inlet valve.
45.	Guide for exhaust valve.
46.	Inlet valve.
47.	Exhaust valve.
48.	Valve spring (outer).
49.	Valve spring (inner).
50.	Collar for spring (bottom).
51.	Cup for valve spring.
52.	Shroud and oil seal retainer.
53.	Oil seal for valve.
54.	Cotter for valve.
55.	Circlip for cotter.
56.	Valve rocker shaft.
57.	Plug for rocker shaft (plain).
58.	Plug for rocker shaft (screwed).
59.	Rocker bracket (tapped).
60.	Rocker bracket (plain).
61.	Distance piece (centre).
62.	Distance piece (end).
63.	Spring.
64.	Locating screw for rocker shaft.
65.	Lock washer for locating screw.
66.	Valve rocker.
67.	Bush for rocker.
68.	Tappet adjusting screw.
69.	Locknut.
70.	Spring washer.
71.	Plain washer.
72.	Split pin.
73.	Plain washer.
74.	Spring washer.
75.	Nut for rocker stud.
76.	Oil pump body.
77.	Cover for oil pump.
78.	Screw.
79.	Spring washer.
80.	Shaft for oil pump.
81.	Rotors for oil pump.
82.	Key for inner rotor.
83.	Oil delivery pipe.
84.	Oil strainer body.
85.	Cover for oil strainer.
86.	Distance piece.
87.	Bolt.
88.	Nut.
89.	Shakeproof washer.
90.	Joint for oil strainer.
91.	Set bolt.
92.	Spring washer.
93.	Oil filter element.
94.	Centre-bolt.
95.	Sealing washer (bottom).
96.	Spring.
97.	Steel washer.
98.	Felt washer.
99.	Pressure plate.
100.	Spring clip.
101.	Filter head.
102.	Clamping plate.
103.	Sealing washer (top).
104.	Container.
105.	Joint washer.
106.	Set bolt.
107.	Plain washer.
108.	Spring washer.
109.	Injection pump chain wheel.
110.	Washer for flange.
111.	Injection pump driving flange.
112.	Bearing liner.
113.	Screw (indicator to hub).
114.	Plain washer for screw.
115.	Spring washer for screw.
116.	Joint washer.
117.	Circlip for driving flange.
118.	Hub for chain wheel.
119.	Timing indicator.
120.	Screw for oil pipe banjo union.
121.	Washer for oil pipe banjo union.
122.	Crankshaft pulley.
123.	Key for pulley.
124.	Lock washer.
125.	Starting nut.
126.	Set screw (driving flange to chain wheel).
127.	Piston.
128.	Compression ring (No. 1).
129.	Compression ring (Nos. 2 and 3).
130.	Scraper ring.
131.	Gudgeon pin.
132.	Circlip.

THE DIESEL ENGINE LUBRICATION SYSTEM

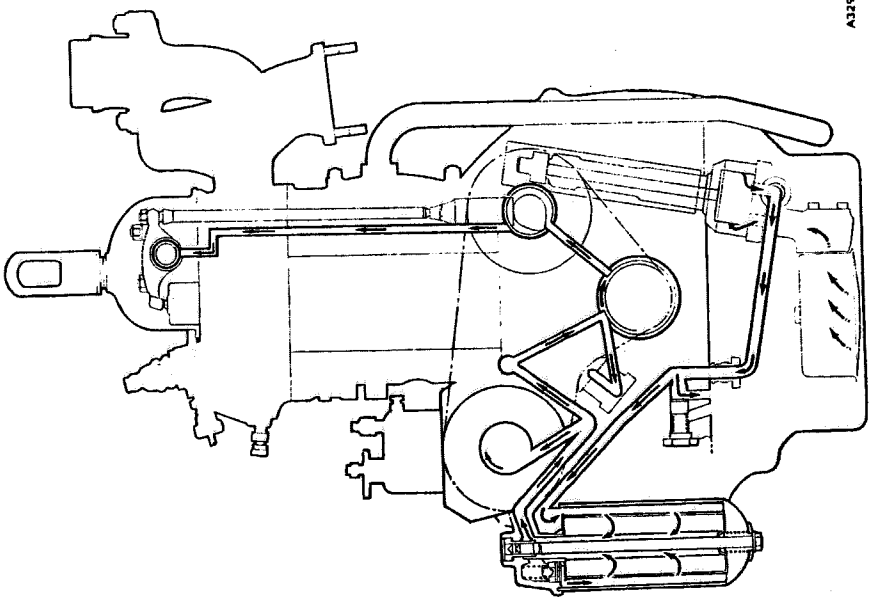

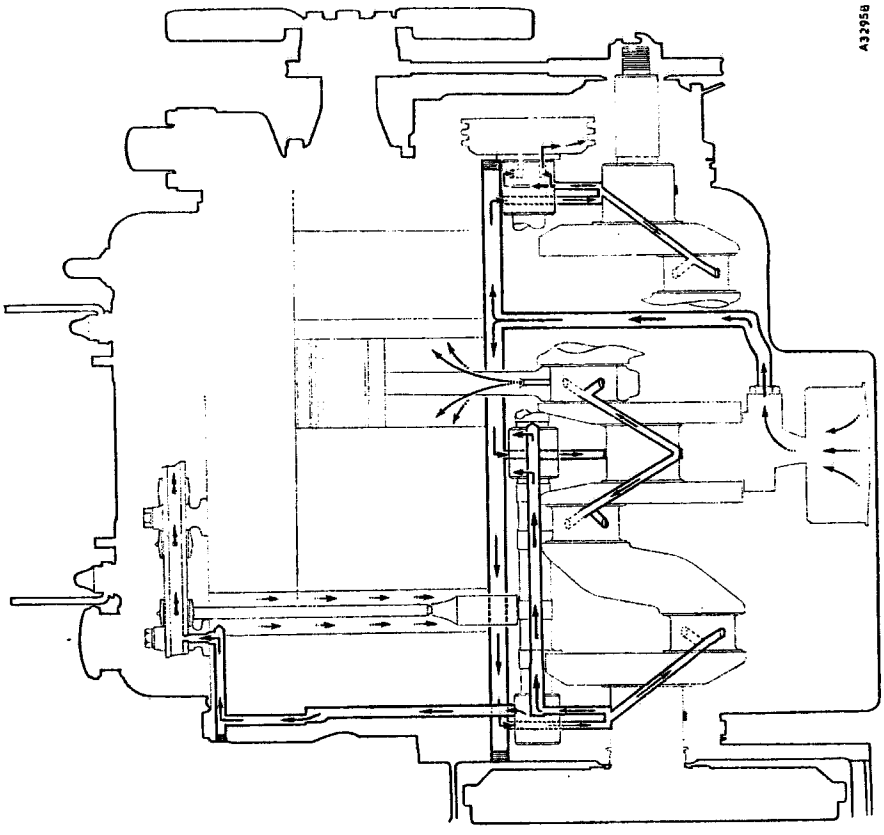

Section Aa.1

DESCRIPTION

The BMC 2·2-litre diesel engine installed in this vehicle is of the indirect injection type, with four cylinders having a bore of 3·25 in. (82·6 mm.) and a stroke of 4 in. (101·6 mm.), with a compression ratio of 20 : 1.

●The cylinder block and crankcase is a one-piece casting in high-quality cast iron, ensuring maximum rigidity and strength. Full-length water jackets are provided so that even cylinder temperatures and high wear resistance are assured.●

The cylinder head carries the valve operating gear, inlet and exhaust valves, fuel injectors, and heater plugs. Large circulation passages are cast in the head, ensuring adequate cooling.

A quickly detachable rocker cover encloses the valve gear and embodies an oil filler.

The combustion chambers are the Ricardo Comet III type, and in conjunction with valves of large head diameter give maximum efficiency and easy air inlet and exhaust flow. Both the air inlet and exhaust manifolds are carried on the left-hand side of the cylinder head, and provision is made for connecting a vehicle heater.

The forged-steel camshaft is mounted in the left-hand side of the cylinder block and is supported by three white-metal bearings. The cam profiles are designed to prevent surge and to give quiet operation of the valve gear. A slipper-type, oil-fed chain tensioner is fitted.

The timing chain is of the triple-roller type and drives the fuel injection pump.

The forged-steel, counterbalanced crankshaft is supported by three main bearings of generous dimensions to give adequate bearing surfaces in order to withstand the considerable loads experienced in diesel engines. The bearings are of steel-backed lead-indium.

Crankshaft thrust washers, of steel-backed white metal, are fitted on each side of the centre main bearing.

The connecting rods are of 'H'-section forged steel with renewable big- and small-end bearings.

The big-end bearings are of steel-backed lead-indium and the small-ends are fitted with steel-backed bronze bushes.

The big-ends are diagonally split to permit the pistons and connecting rods to be withdrawn upwards through the cylinder bores.

Oil jet holes are drilled in the upper half of the big-ends and these supply the cylinder walls with adequate lubrication.

Aluminium pistons of the solid-skirt type are fitted and a specially shaped crown is incorporated to suit the characteristics of the combustion chamber.

Three compression and two scraper rings are fitted, and the floating-type gudgeon pin is secured in position by means of circlips.

The inlet valves are of large head diameter to promote good charging, and oil seals are fitted to all valves.

The oil pump is of the eccentric-rotor, non-draining type and is driven from the camshaft.

A full-flow oil filter is mounted by means of an adaptor on the side of the crankcase.

The C.A.V. distributor-type fuel injection pump is flange-mounted and incorporates a mechanical governor. The pump drive is via the triple-roller timing chain. Fuel oil is delivered to the injection pump via an external filter, having a renewable paper-type element.

Pintaux-type fuel injection nozzles are used, and a leak-off pipe returns any back-leakage of fuel to the supply side of the fuel system.

The inlet manifold is of aluminium alloy and cast iron is used for the exhaust manifold. Both manifolds are mounted on the same side of the cylinder head.

A centrifugal water pump with fan blades attached to the pulley is mounted on the front of the cylinder block and is driven by the dynamo belt.

The cooling system is controlled by a thermostat in the cylinder head via inbuilt by-pass passages.

Section Aa.2

REMOVING AND REPLACING THE POWER UNIT

The engine may be removed leaving the gearbox and transfer box in the vehicle, or, alternatively, the engine, gearbox, and transfer box may be removed as a unit.

Engine only

Disconnect the battery.

Release the hoses from the inlet manifold adaptor and rocker cover vent pipe and remove the air cleaner.

Drain and remove the radiator as described in Section C.7.

Disconnect the dynamo and starter motor cables, the feed cable from No. 4 heater plug, and the cable from the thermal transmitter.

Detach the control cable from the shut-off lever and from the support bracket.

Disconnect the control rod from the engine.

Unscrew the oil pressure gauge pipe from the union on the cylinder block.

Disconnect the fuel feed pipe and the fuel leak-off pipe from the engine.

Release the exhaust system at the manifold flange and silencer support.

If a heater is fitted, disconnect the water hoses, demister tubes, and cable connections. The heater element and blower can then be removed by unscrewing the four securing screws from the engine side of the dash panel.

Remove the knobs and gaiters from the gear change levers.

Unscrew the six fixing screws and lift off the gearbox cover inside the cab.

Sling the engine from the two brackets on the rocker cover and support the gearbox on a jack.

Remove the bolts securing the gearbox to the flywheel housing and the nuts from the engine front mountings.

Lift and pull the engine forward to release it from the gearbox.

Replacing the engine is a reversal of the removal procedure, but the front propeller shaft should be disconnected from the transfer box to facilitate re-engagement of the first motion shaft.

Air-vent the fuel system as described in Section Da.5.

Engine with gearbox and transfer box

Disconnect the battery.

Release the hoses from the inlet manifold adaptor and rocker cover vent pipe and remove the air cleaner.

Drain and remove the radiator as described in Section C.7 and drain the gearbox.

Remove the two gussets and the closing panel from the top of the radiator cowl. The lamp and horn harness can be disconnected at the snap connectors and moved to one side.

Detach the lower grille panel by removing the eight self-tapping screws and the upper grille panel by removing the set screws and nuts, and the two tie-rods.

Disconnect the dynamo and starter motor cables, the feed cable from No. 4 heater plug, and the cable from the thermal transmitter.

Detach the control cable from the shut-off lever and from the support bracket.

Disconnect the control rod from the engine.

Unscrew the oil pressure gauge pipe from the union on the cylinder block.

Disconnect the fuel feed pipe and the fuel leak-off pipe from the engine.

Release the exhaust system at the manifold flange and silencer support.

If a heater is fitted, disconnect the water hoses, demister tubes, and cable connections. Unscrew the securing screws from the engine side of the dash panel and remove the heater element and blower.

Remove the knobs and gaiters from the gear change levers.

Unscrew the six fixing screws and lift off the gearbox cover inside the cab.

Remove the gear change turret from the top of the gearbox.

Detach the clutch operating cylinder from the gearbox by unscrewing the two set screws and drawing the cylinder off the push-rod.

Disconnect the speedometer drive from the gearbox.

Withdraw the two clevis pins from the change lever links, the split pin from the change speed lever support pin, and detach the two change speed levers from the support pin.

Release the front and rear propeller shafts from the transfer box.

If a power take-off is fitted, the power take-off housing should be removed from the top of the transfer box after disconnecting the propeller shaft from the power take-off.

If a tyre pump is fitted it should be detached from the side of the gearbox.

Remove the two bolts from the engine rear mounting brackets and unscrew the nuts from the engine front mountings.

Sling the engine from the two brackets on the rocker cover.

Lift the engine and pull it forward and clear.

Replacing the engine is a reversal of the removal procedure.

Air-vent the fuel system as described in Section Da.5.

Section Aa.3

LUBRICATION SYSTEM

The oil supply is carried in the sump below the cylinder block and the filler cap is fitted on the valve rocker cover. The oil level indicator rod is on the right-hand side of the engine and is marked to indicate both the maximum and minimum levels.

An eccentric-rotor, non-draining-type oil pump, located in the left-hand side of the crankcase, is driven from the camshaft.

Oil is drawn through a gauze strainer attached to the base of the pump and is delivered through drilled passages in the crankcase to a full-flow filter mounted by means of an adaptor on the right-hand side of the crankcase. The oil pressure is controlled by a non-adjustable plunger-type release valve which is situated at the front of the engine on the right-hand side. Oil is fed from the filter to the main gallery, and then through drillings in the crankcase and crankshaft to the main, big-end, and camshaft bearings. A drilled passage in the crankcase feeds oil from the crankshaft front main bearing to the timing chain tensioner. From the rear camshaft bearing oil at reduced pressure is fed through drilled passages in the cylinder block, cylinder head, and the valve rocker shaft to the valve rockers. Surplus oil returning to the sump from the valve rockers lubricates the tappets. From the front camshaft bearing oil is supplied to the timing chain through two bleed holes.

Lubrication of the cylinder bores is effected by jet holes drilled in the connecting rod big-end bearings.

An external pipe feeds oil from the main oil gallery to the fuel injection pump chain wheel hub to lubricate the injection pump chain wheel bearing.

Section Aa.4

DRAINING THE SUMP

This operation should be carried out when the engine is hot, in which condition the oil will flow more readily and any sediment present will still be held in suspension, not having had time to settle.

To drain the sump arrange the vehicle on a level platform, remove the plug from the base of the sump, and allow the oil to drain for at least 10 minutes before replacing the plug.

At every oil change a new external oil filter element should be fitted.

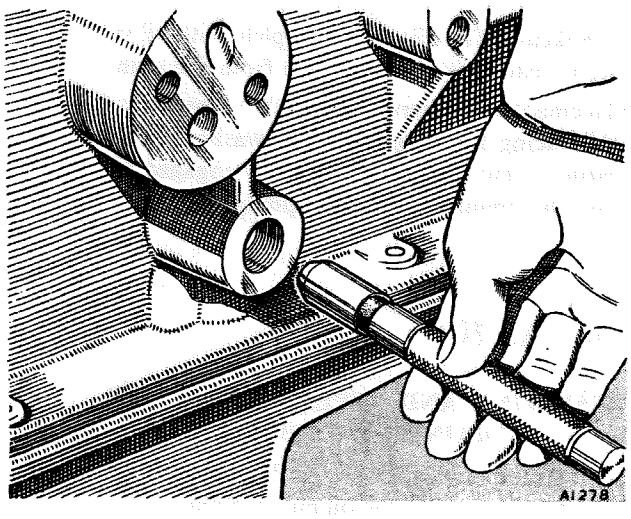

*Fig. Aa.*1
Removing the oil pressure release valve, using tool 18*G*69

Section Aa.5

EXTERNAL OIL FILTER

The external filter is of the full-flow type, thus ensuring that all oil in the lubrication circuit passes through the filter before reaching the bearings.

The element of the filter is of star formation in which a special-quality felt, selected for its filtering properties, is used.

Oil is passed through the filter from the pump at a pressure controlled at 50 lb./sq. in. (3·5 kg./cm.^{2}) by the engine oil release valve. This pressure will, of course, be somewhat higher until the oil reaches a working temperature. Some pressure is lost in passing the oil through the filter element; this will only be very slight with a new element, but will increase as the element becomes progressively contaminated by foreign matter removed from the oil.

A balance valve is provided to ensure that oil will still reach the bearings if the filter becomes completely choked. This valve, set to open at a pressure difference of 15 to 20 lb./sq. in. (1·0 to 1·4 kg./cm.^{2}), is non-adjustable and is located in the filter head casting. When the valve is opened unfiltered oil can by-pass the filter element and reach the bearings.

At every oil change the filter element should be renewed as follows.

Release the filter bowl by unscrewing the central bolt which holds it to the filter head and withdraw the bowl complete with element. Remove and discard the old filter element; withdraw the circlip from the central securing bolt and dismantle the filter bowl. Wash the filter bowl and its components in petrol and allow to dry. Reassemble the filter bowl, ensuring that the felt washer fitted between the pressure plate and the pressure spring washer is in good condition, and install a new filter element.

Check that the filter bowl sealing washer is positioned correctly in the filter head, prime the filter with clean engine oil, and reassemble.

After reassembly run the engine until the oil is thoroughly warm and then check the oil filter for leaks.

Section Aa.6

OIL PRESSURE RELEASE VALVE

The non-adjustable oil pressure release valve is situated at the front, on the right-hand side of the cylinder block just below the boss for the external oil filter adaptor, and is held in position by a large hexagon nut sealed by a copper washer. The release valve spring maintains a valve cup against a seating machined in the cylinder block.

During major overhauls or in the event of low oil pressure, when it is known that all other components of the engine are in good condition, the release valve should be removed, using tool 18G69, and examined to ensure that the cup is seating correctly and that the spring has not lost its tension. If the valve cup is scored or shows signs of wear it should be renewed.

The release valve spring should be checked by measuring its free length; it should be renewed if it is below the specification given under **'GENERAL DATA'**.

The valve seating can be checked by applying engineer's blue to the conical face of the valve and testing for continuous marking. If the seating is damaged, the valve cup should be lapped in, using valve grinding-in tool 18G69.

Section Aa.7

OIL PRESSURE

Provided the oil filter element is clean and in good condition, the oil pressure during normal running and when the engine is idling should be in accordance with the figures given under **'GENERAL DATA'**. As the filter becomes choked the pressure registered on the oil gauge will progressively decrease, and on an engine known to be in good condition a drop of between 10 and 15 lb./sq. in (·7 and 1·05 kg./cm.^{2}) below the normal pressure is an indication that the filter element has become choked and is being by-passed. This can be remedied by renewing the oil filter element.

If there is a noticeable drop in oil pressure when it is known that the oil filter element is in a good and clean condition, the following points should be checked:

(1) Ensure that there is a good supply of the correct grade oil in the engine sump.
(2) Check the oil pressure release valve (see Section Aa.6).
(3) Check the operation of the oil pressure gauge by substitution.
(4) Ensure that the oil strainer in the engine sump is clean and not choked with foreign matter.
(5) Check the oil pump for correct operation and ensure that there is no air leakage between the pump cover and body (see Section Aa.11).

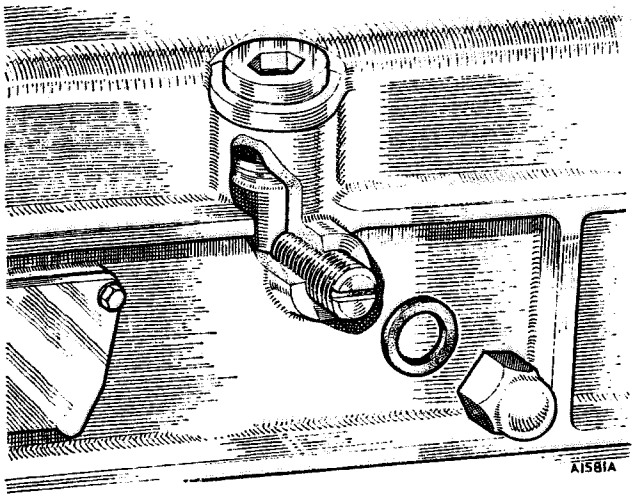

Fig. Aa.2

The oil pump locating screw with cap nut and washer removed

(6) Check that the working clearances of all bearings, to which oil is supplied under pressure, is not excessive (see **'GENERAL DATA'**).

Section Aa.8

REMOVING AND REPLACING THE SUMP

Drain the sump as described in Section Aa.4. Support the sump, remove the set screws which secure it to the crankcase, and detach the sump and its gasket from the engine.

Before refitting the sump to the crankcase ensure that the sump gasket and the cork seal in the recess of the rear main bearing cap are in good condition. It is always advisable to fit a new sump gasket.

When fitting a new gasket clean the joint faces of the sump and crankcase, ensuring that all traces of the old gasket are removed. Smear the crankcase face with grease and place the new gasket in position, ensuring that the gasket does not cover the pressure release valve passage in the crankcase. Lift the sump into position, install the 22 securing screws, and tighten them evenly.

Section Aa.9

REMOVING AND REPLACING THE OIL PUMP

The oil pump is secured to the crankcase by one locating screw, which is inserted into the left-hand side of the crankcase from the outside. A dome nut and washer are used to lock the locating screw and prevent an oil leak due to seepage past the threads.

Drain and remove the sump as described in Sections Aa.4 and Aa.8. Disconnect the oil delivery pipe from the crankcase and the base of the pump, unscrew the dome nut, and remove the locating screw from the side of the crankcase. The oil pump complete with oil strainer and pick-up can now be withdrawn from the crankcase.

Replacement is a reversal of the above procedure, but before replacing the dome nut and washer ensure that the locating screw is tight and properly engaged with the recess in the pump body. The pump does not need priming.

Section Aa.10

REMOVING AND REPLACING THE OIL STRAINER AND PICK-UP

The oil strainer and pick-up can be removed from the engine without removing the oil pump. Remove the sump as described in Section Aa.8. Unscrew the two set bolts with spring washers and detach the strainer and pick-up and gasket from the oil pump cover.

Dismantle the strainer by removing the centre-bolt, nut, and distance piece and clean the strainer gauze in a paraffin bath, using a stiff brush—never use rag.

When reassembling the strainer and pick-up ensure that the locating tag on the strainer cover engages the slot in the strainer body.

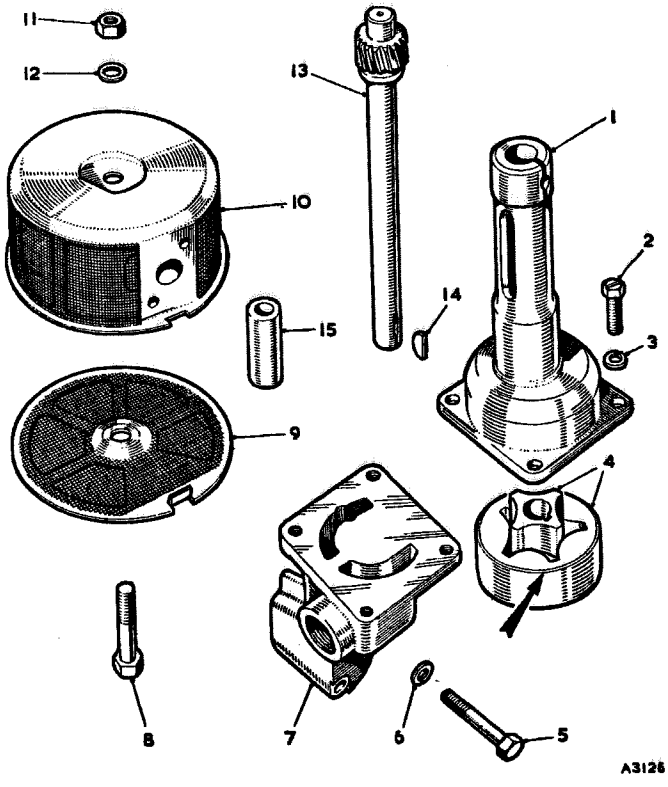

Fig. Aa.3

Oil pump components. The chamfered end of the outer rotor is indicated by the arrow

1. Body.
2. Set screw.
3. Spring washer.
4. Rotors.
5. Set bolt.
6. Spring washer.
7. Cover—oil pump.
8. Bolt.
9. Cover—strainer.
10. Body—strainer.
11. Nut.
12. Shakeproof washer.
13. Shaft with gear.
14. Key.
15. Distance piece.

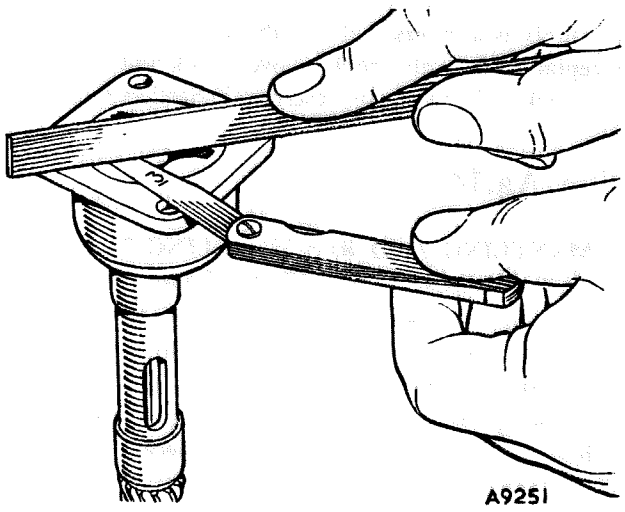

Fig. Aa.4

Checking the oil pump rotor end-float, which should not exceed ·005 in. (·13 mm.)

Refit the strainer and pick-up to the oil pump with the strainer cover at the bottom—that is, with the internal suction pipe facing downwards—using a new joint washer between the strainer body and the oil pump cover.

Section Aa.11

DISMANTLING AND REASSEMBLING THE OIL PUMP

Before dismantling the oil pump scribe a line across one side of the pump body and cover flanges to assist reassembly.

Remove the oil strainer and pick-up as described in Section Aa.10. Unscrew the four set screws from the base of the pump and remove the pump cover.

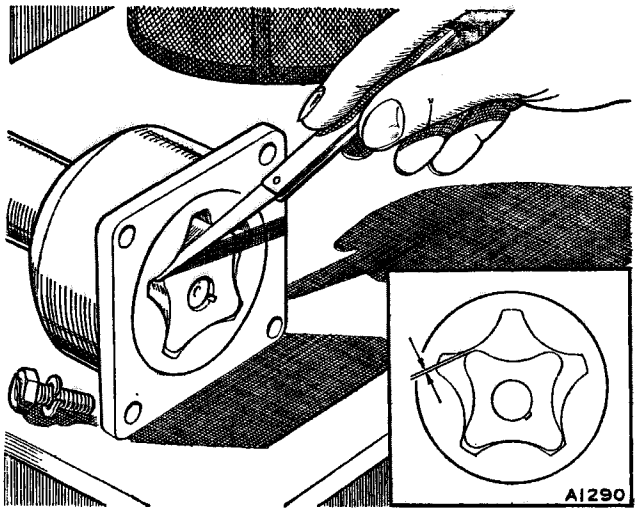

Fig. Aa.5

Checking the rotor lobe clearance, which should not exceed ·006 in. (·15 mm.) when the rotors are in the position shown inset

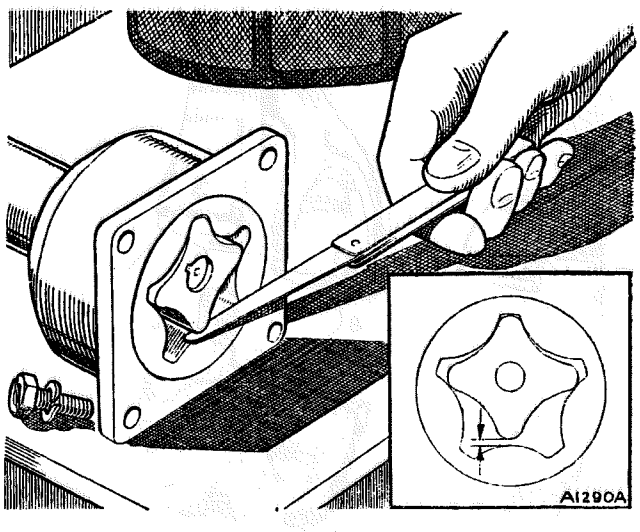

Fig. Aa.6

Checking the rotor lobe clearance. When the rotors are in the position shown inset the clearance should not exceed ·008 in. (·2 mm.)

Withdraw the outer rotor, detach the inner rotor and its key from the pump spindle, and remove the spindle.

Thoroughly clean all parts in paraffin and inspect them for wear. The rotor end-float and lobe clearances should be checked as follows:

(1) Install the rotors in the pump body, place a straight-edge across the joint face of the pump body, and measure the clearance between the top face of the rotors and the under side of the straight-edge. The clearance should not exceed ·005 in. (·127 mm.). In cases where the clearance is excessive this may be remedied by careful lapping of the pump body face.

(2) With the rotors installed in the pump body measure the clearance between the rotor lobes when they are in the position shown in Fig. Aa.5. If the clearance exceeds ·006 in. (·152 mm.) the rotors should be renewed.

(3) Repeat test (2) with the rotor lobes in the position shown in Fig. Aa.6, and if the clearance exceeds ·008 in. (·203 mm.) renew the rotors.

Reassembly is a reversal of the dismantling procedure, noting the following points:

(1) Lubricate all parts with clean engine oil.

(2) Ensure that the outer rotor is installed in the pump body with its chamfered end (see Fig. Aa.3) at the driving gear end of the rotor pocket in the pump body.

(3) After reassembling check the pump for freedom of action.

Section Aa.12

REMOVING AND REPLACING THE BIG-END BEARINGS

Remove the sump and the oil pump (Sections Aa.8 and Aa.9).

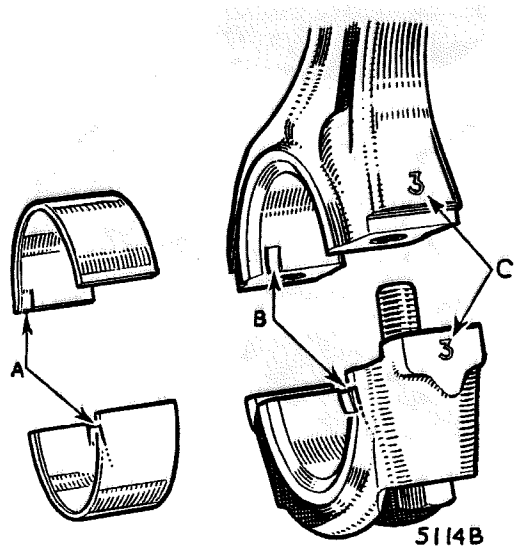

Fig. Aa.7

The connecting rod big-end bearing locating tags (A) *and grooves* (B). *The figures* (C) *indicate the cylinder from which the rod and cap were removed*

Unlock and remove the big-end bearing cap bolts; withdraw the bearing caps; detach the connecting rods from the crankshaft and extract the bearing liners.

As the bearings are of the shimless type it is essential that no attempt be made to adjust them. Worn bearings should always be renewed.

The bearing liners (see Fig. Aa.7) are located in their housings by a small tag on one side of each liner engaging a corresponding groove in the connecting rod and bearing cap. It should be noted that the bearings are fitted so that the tags are on the same joint edge of the bearing housing, although on opposite corners.

If used bearing liners are to be refitted it is essential that they are installed in their original positions, and each half-liner should be marked with its position in, and the number of, the connecting rod from which it was withdrawn. A centre-punch should not be used for this purpose.

The connecting rod cap bolts should be tightened, using torque wrench 18G372 set to the figure given under **'GENERAL DATA'**. Always renew the lock washers.

Section Aa.13

REMOVING AND REPLACING THE VALVE ROCKER SHAFT ASSEMBLY

Detach the two hoses from the air cleaner.

Unscrew the two nuts securing the valve rocker cover, withdraw the engine lifting brackets, plain washers, cup washers, and sealing bushes, and lift off the valve rocker cover, taking care not to damage the cork gasket.

Unlock and slacken fully the valve rocker adjusting screws and remove the eight rocker shaft bracket securing nuts and plain and spring washers. Remove the valve rocker shaft complete with rockers and brackets.

Reassembly is a reversal of the above procedure, but before replacing the valve rocker cover check and adjust the valve rocker clearances as described in Section Aa.27.

Section Aa.14

DISMANTLING AND REASSEMBLING THE VALVE ROCKER SHAFT ASSEMBLY

Press back the locking washer and remove the rocker shaft locating screw from the rear rocker mounting bracket. Withdraw the split pin and plain and spring washers from each end of the valve rocker shaft and slide the rockers, brackets, distance pieces, spring washers, and spacing spring from the rocker shaft, noting the order in which they are removed for reassembly purposes.

Unscrew the plug from the front end of the rocker shaft; the plug in the rear end of the rocker shaft is a drive fit and should not normally be removed.

Thoroughly clean all components with paraffin, allow to dry, and then clear the oilways in the rear rocker bracket, rocker shaft, and valve rockers with compressed air.

When reassembling, commence with the rear bracket and secure the rocker shaft in position, ensuring that the dowel end of the locating screw properly engages the locating hole in the rocker shaft. The valve rockers and remaining rocker brackets should be assembled to the rocker shaft together with the spring washers, distance pieces, and spacing spring in the reverse order to that in which they were removed.

Section Aa.15

REMOVING AND REPLACING THE ROCKER BUSHES

Remove and dismantle the rocker shaft as in Sections Aa.13 and Aa.14.

To remove and replace worn rocker bushes the use of

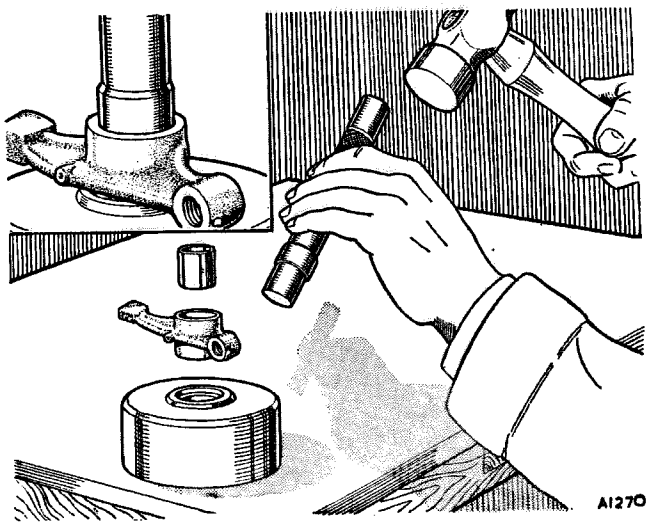

Fig. Aa.8

Fitting a valve rocker bush, using tool 18G21

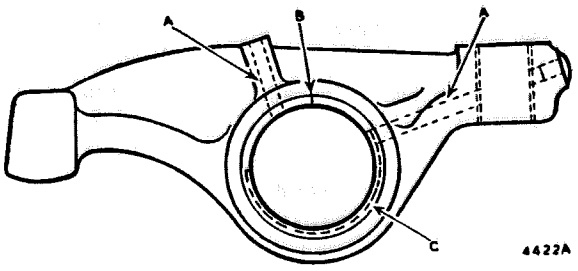

Fig. Aa.9

Showing the correct position for the valve rocker bush

A. Oilways. B. Joint in rocker bush. C. Oil groove.

tool 18G21 is recommended; the bushes and the rockers can be very easily damaged by using improvised drifts. Place the rocker on the anvil and drive the worn bush out (Fig. Aa.8).

Place a new bush on the driver and position the bush with the butt joint at the top of the rocker bore and with the end of the oil groove picking up the oilway to the adjuster end of the rocker.

It will be necessary to drill the oil holes in the bush to coincide with the oilways in the rocker. The oil hole to the adjuster end can be drilled before the bush is fitted, extra care being taken to keep the holes of the bush and rocker in line during the pressing-in operation.

If the holes are drilled after fitting, the following procedure should be adopted. Remove the adjuster screw and use a No. 43 drill, ·089 in. (2·26 mm.), to drill out the end plug and to continue the oilway through the bush. Replug the end after this operation with a rivet (Part No. 5C2436) and weld the plug into position. The oil hole in the top of the rocker barrel should be continued through the bush with a No. 47 drill, ·0785 in. (1·99 mm.).

Finally, burnish-ream the bush to the dimensions given under **'GENERAL DATA'**.

Section Aa.16

REMOVING AND REPLACING THE INLET AND EXHAUST MANIFOLDS

Disconnect the exhaust pipe from the manifold and detach the air cleaner hose from the manifold adaptor.

Support the inlet manifold, unscrew the four nuts which secure both the inlet and exhaust manifolds to the cylinder head, and withdraw the inlet manifold.

The exhaust manifold and manifold gasket can be withdrawn after the two remaining nuts with plain washers securing it to the cylinder head have been removed.

Before reassembling, which is a reversal of the above procedure, remove all traces of the old gasket from the cylinder head and manifold joint faces and fit a new gasket.

Section Aa.17

REMOVING AND REPLACING THE CYLINDER HEAD

Drain the cooling system as described in Section C.7.

Remove the inlet and exhaust manifolds (see Section Aa.16) and the valve rocker shaft assembly as described in Section Aa.13). Withdraw the eight push-rods, storing them carefully so that they may be replaced in their original positions. One way of doing this is to punch eight small holes in a piece of cardboard, number the holes, and insert each push-rod into its corresponding hole in the card.

Disconnect the fuel feed pipes from the injectors and injection pump and remove the pipes complete with clamps and damper bushes. Detach the leak-off pipe from No. 4 injector and from the fuel filter and remove the injectors as described in Section Da.12.

The fuel injection pump outlet unions should be sealed with sealing caps 18G216 to prevent the ingress of foreign matter into the fuel system.

Disconnect the radiator top hose, the feed lead from No. 4 heater plug, and the cable from the thermal transmitter.

Remove the main fuel filter as described in Section Da.2.

Slacken the 23 nuts and the two valve rocker cover studs securing the cylinder head a turn at a time in the order shown in Fig. Aa.10 until all load has been released. Remove the nuts, cover studs, and plain washers from the cylinder head studs and lift off the cylinder head and gasket.

To facilitate the breaking of the cylinder head joint tap each side of the cylinder head with a hide mallet or a hammer with a piece of wood interposed to take the blow.

When reassembling, which is a reversal of the above procedure, ensure that the surfaces of both the cylinder head and cylinder block are clean; it is not necessary to use jointing compound or grease for the gasket, one side

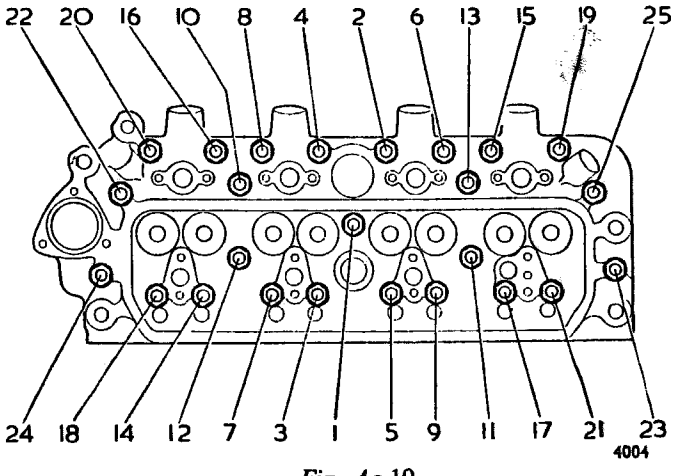

Fig. Aa.10

Cylinder head nut slackening and tightening sequence

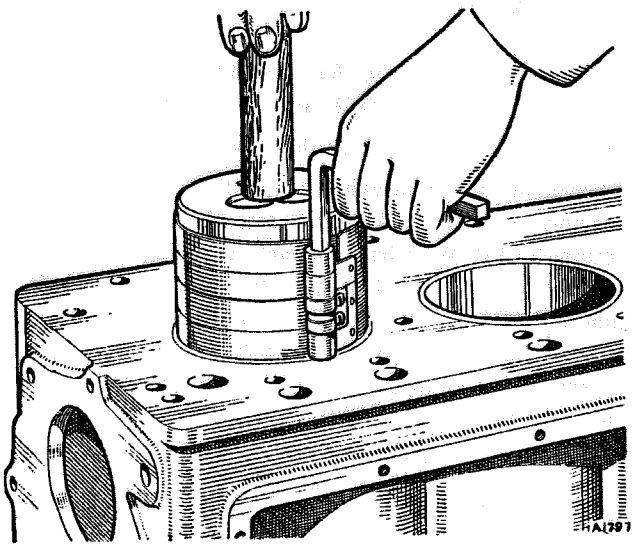

Fig. Aa.11

Installing a piston and connecting rod, using tool 18G55A to compress the piston rings

of which is marked 'FRONT' and 'TOP' to facilitate correct replacement.

Tighten the cylinder head nuts and cover studs a quarter of a turn at a time in the order shown in Fig. Aa.10 with torque wrench 18G372 set to the figure given under **'GENERAL DATA'**.

Replace the push-rods, ensuring that they are installed into the positions from which they were originally taken, refit the valve rocker shaft assembly, and check and adjust the valve rocker clearances as described in Section Aa.27.

Bleed the fuel system of air as described in Section Da.5, start the engine, and allow it to run at a fast idling speed until it is thoroughly warm. Stop the engine, remove the valve rocker cover, retighten the cylinder head nuts and cover studs as described above, and check and adjust the valve rocker clearances if necessary.

Section Aa.18

REMOVING AND REPLACING A PISTON AND CONNECTING ROD

The pistons and connecting rods are withdrawn from the top of the cylinder block.

Remove the sump as described in Section Aa.8, the oil strainer as in Section Aa.10, and the cylinder head as in Section Aa.17.

Unlock and remove the big-end bearing cap bolts; withdraw the bearing cap; release the connecting rod from the crankpin journal and push the connecting rod and piston assembly upwards until the piston rings are clear of the cylinder bore. Withdraw the connecting rod and piston from the top of the cylinder block and refit the bearing cap.

The big-end bearings are offset in the connecting rods; the bearings of Nos. 1 and 3 connecting rods are offset towards the rear and those for Nos. 2 and 4 towards the front.

When used parts are to be refitted it is essential that they are installed in their original positions. In order to ensure this, mark each bearing cap and connecting rod with the number of the cylinder from which it was removed.

Before replacing the piston and connecting rod, which is a reversal of the above procedure, set the piston ring gaps at 180° to each other.

It is essential that the pistons and connecting rods are installed in their own cylinder bores and the same way round, i.e. the combustion cavity in the piston crown and the oil jet hole in the big-end bearing must be on the side of the engine opposite to the camshaft.

Use piston ring compressor 18G55A to facilitate the installation of the piston in the bore and to avoid the breaking of the piston rings.

Fit new lock washers and tighten the big-end bearing cap bolts with torque wrench 18G372 set to the figure given under **'GENERAL DATA'**.

Section Aa.19

DISMANTLING AND REASSEMBLING A PISTON AND CONNECTING ROD

Remove the two circlips securing the gudgeon pin in its position and press the gudgeon pin out. Suitably mark the pistons and gudgeon pin to facilitate reassembly to their original connecting rods.

Check the gudgeon pin and connecting rod little-end bush for wear against the dimensions given under **'GENERAL DATA'**. If the little-end bush is worn it

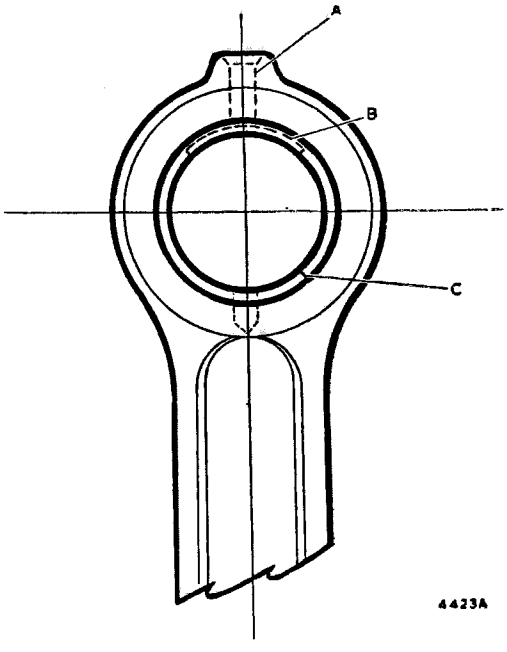

Fig. Aa.12

Showing the correct position for the connecting rod little-end bush

A. Oilways. B. Oil groove.
C. Bush joint on camshaft side of connecting rod.

should be removed and a new bush installed, using a light press.

When installing a new little-end bush ensure that the oil holes in the bush are in line with the oil holes in the connecting rod and that the oil grooves in the bush are uppermost (see Fig. Aa.12).

After installing, new little-end bushes must be finish-reamed to the dimensions given under 'GENERAL DATA'.

New gudgeon pins should be fitted by selective assembly. The gudgeon pin should be a hard hand push-fit in the piston at a room temperature of 20° C. (68° F.).

NOTE.—When reassembling the piston to the connecting rod ensure that the combustion cavity in the piston crown is on the same side of the connecting rod as the oil jet hole in the big-end bearing.

Secure the gudgeon pin in position with the two circlips, ensuring that they fit well into their grooves.

Section Aa.20

REMOVING AND REPLACING THE PISTON RINGS

In the absence of a special piston ring expander a smoothly ground hacksaw blade or a disused ·020 in. (·50 mm.) feeler gauge may be used for this operation.

Raise one end of the ring out of its groove and insert the blade between the ring and the piston. Rotate the blade around the piston, applying slight upward pressure to the raised portion of the ring until it rests on the land above the ring grooves. The ring can then be eased off the piston.

Do not remove or replace the rings over the piston skirt, but always over the top of the piston.

Before refitting the rings clean the grooves in the piston and remove any carbon deposit. Care must be taken not to remove any metal, or excessive side-play between the ring and the groove will result, with consequent increased oil consumption and loss of gas-tightness.

New rings should be tested in an unworn part of the cylinder bore to ensure that the ends do not butt together. Insert the piston into the cylinder bore, push the new ring onto the top of the piston to ensure that the ring is square with the cylinder bore, and measure the gap with a feeler gauge. The correct ring gaps are given in the 'GENERAL DATA' section.

Before fitting new rings to a worn cylinder the glazing should be removed from the liner bore.

Section Aa.21

PISTON SIZES AND CYLINDER BORES

When fitting new pistons selective assembly is necessary, and to facilitate this the pistons are stamped with identification figures on their crowns. Oversize pistons are marked with the actual oversize dimensions. A piston

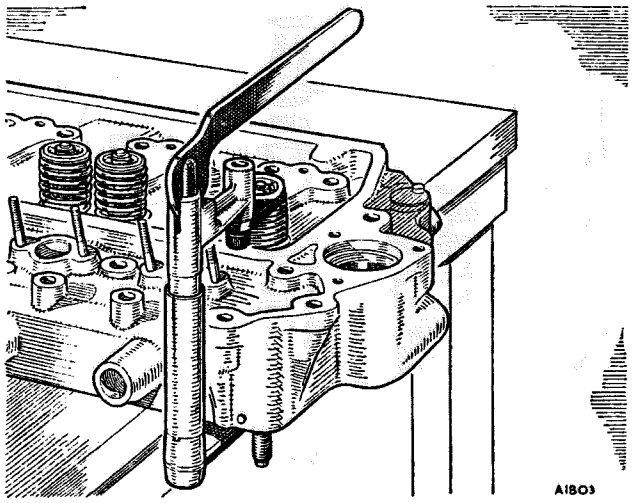

*Fig. Aa.*13

Compressing a valve spring, using tool 18G45

stamped ·020 is only suitable for a bore ·020 in. (·508 mm.) larger than the standard bore; similarly, pistons with other markings are only suitable for the oversize bore indicated.

●The cylinder block of early engines is fitted with dry cylinder liners and worn liners may be bored out to a maximum oversize of ·030 in. (·762 mm.). Oversize pistons are available in the sizes indicated in the following table:●

Piston marking	*Suitable bore size*	*Metric equivalent*
STANDARD	3·2495 to 3·2510 in.	82·537 to 82·575 mm.
OVERSIZE		
+·010 in. (·254 mm.)	3·2595 to 3·2610 in.	82·791 to 82·829 mm.
+·020 in. (·508 mm.)	3·2695 to 3·2710 in.	83·045 to 83·083 mm.
+·030 in. (·762 mm.)	3·2795 to 3·2810 in.	83·299 to 83·337 mm.

●Later-type engines are not linered and may be bored out to a maximum oversize of ·040 in. (1·016 mm.).●

Section Aa.22

REMOVING AND REPLACING THE VALVES

Remove the cylinder head as described in Section Aa.17 and detach the circlips from the valve spring cap retainers. Compress each valve spring, using valve spring compressor 18G45, and detach the two valve cap retainers from the stem of the valve. Release and remove the valve spring compressor and remove the valve spring cap, valve oil seal retainer with seal, and the inner and outer valve springs.

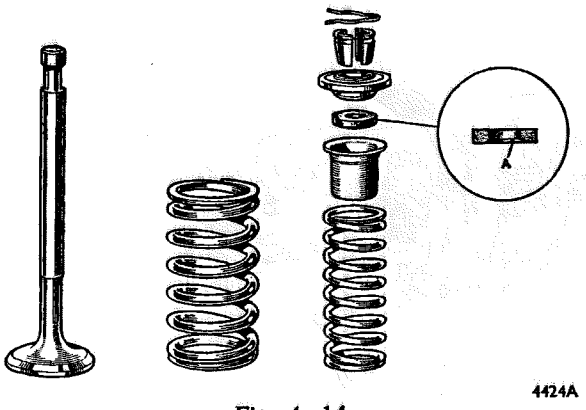

*Fig. Aa.*14

Engine valve components. Shown inset is a cross-section of a valve oil seal, showing the chamfer (A)

Withdraw the valves from their guides, keeping them in their relative positions when removed from the engine to ensure replacement in their original valve guides. The valves are numbered on their heads 1 to 8, commencing from the front of the engine. If new valves are fitted they should be identified in a similar manner.

When reassembling, fit a new oil seal, chamfered side facing downwards (see Fig. Aa.14), to each valve. Do not refit the old seals or oil-tightness may be lost, with consequent increased oil consumption. It will be found that the new seals are more easily fitted if they are soaked in engine oil for a short time before use.

NOTE.—Owing to the limited clearance between the crowns of the pistons and the cylinder head joint face when the pistons are in the T.D.C. position, it is imperative that the valve heads do not stand proud of the cylinder head joint face more than ·003 in. (·076 mm.) when the valves are in the fully closed position. If new valves are fitted this dimension should be checked by placing a straight-edge across the face of the valve and measuring the clearance between the under side of the straight-edge and the cylinder face. When refitting used valves check that they do not 'stand down' below the joint face of the cylinder head by more than ·010 in. (·25 mm.) by placing a straight-edge across the cylinder head joint face and measuring the clearance between the under side of the straight-edge and the valve face.

Valves that have a stand-down clearance greater than the above limit will adversely affect the engine compression, and should be renewed.

Section Aa.23

VALVE-GRINDING

Operational efficiency of the compression-ignition engine depends largely on the maintenance of good compression; therefore contact between the valve faces and their seatings must be perfect.

Remove the valves as described in Section Aa.22 and clean them thoroughly. Examine the face of each valve for signs of pitting, any badly pitted valves being either renewed or refaced with a suitable grinder. For details of the valve seat angle see **'GENERAL DATA'**.

If the valve seats show signs of pitting or unevenness they should be trued by the use of the valve seat cutting tools illustrated at the end of Section Aa. When using these tools, which save lengthy and wasteful grinding in, care must be exercised to remove only as little metal as is necessary to ensure a true seat. Worn seats usually have a glass-hard surface, and the glaze-breaker should be used to prepare the seat surface for any recutting that may be necessary. Narrowing cutters should be used to maintain the valve seats at their correct widths as given under **'GENERAL DATA'**.

When grinding a valve onto its seating the valve face should be smeared lightly with a fine- or medium-grade carborundum paste and then lapped to its seat with grinding-in tool 18G29. Avoid the use of excessive quantities of grinding paste and see that it remains in the region of the valve seating only.

A light coil spring placed under the valve head will assist considerably in the process of grinding. The valve should be ground to its seat with a semi-rotary motion and occasionally allowed to rise by the pressure of the light coil spring. This assists in spreading the paste evenly over the valve face and seat. It is necessary to carry out the grinding operation until a dull, even, mat surface, free from blemish, is produced on the valve seat and valve face.

On completion, the valve seat and ports should be cleaned thoroughly with a rag soaked in paraffin, dried, and then thoroughly cleaned by compressed air. The valves should be washed in paraffin and all traces of grinding paste removed.

Section Aa.24

DECARBONIZING

Remove the cylinder head and gasket as described in Section Aa.17 and withdraw the valves as described

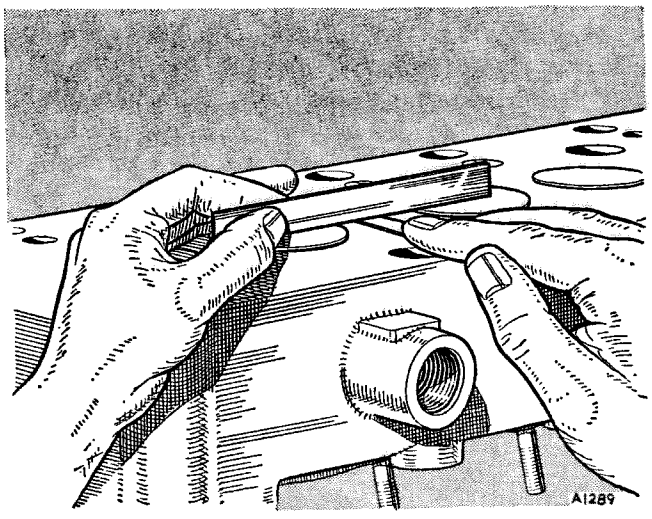

*Fig. Aa.*15

Checking the standing height of the valve heads in relation to the cylinder head joint face

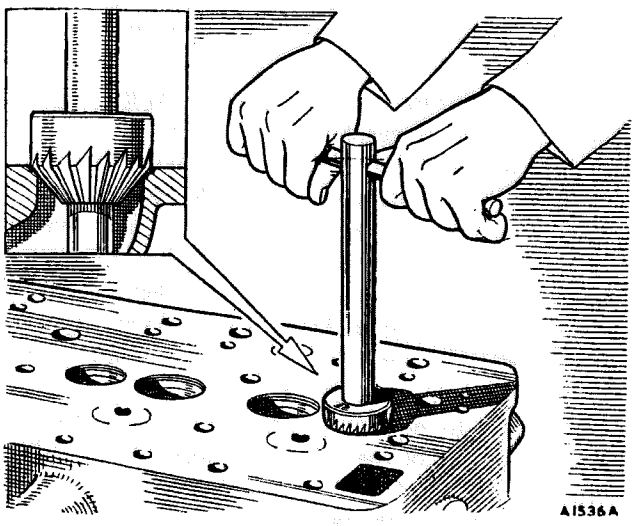

*Fig. Aa.*16

Badly pitted valve seats should be refaced, using tools 18*G*25, 18*G*25*A*, 18*G*25*B*, 18*G*25*C*, 18*G*27, 18*G*28, 18*G*28*A*, 18*G*28*B*, 18*G*28*C*, *and* 18*G*174*D*

in Section Aa.22. Plug the waterways in the cylinder head and block with clean rag.

If special equipment for decarbonizing is not available it will be necessary to scrape the carbon deposit from the piston crown and the cylinder head, using a blunt scraper. An odd length of copper tubing with the end flattened and filed up makes an ideal scraping tool which will not scratch.

A ring of carbon should be left round the periphery of the piston crown and the rim of carbon round the top of each cylinder bore should not be removed. An old piston ring sprung into the bore and resting on the top of the piston will facilitate this operation.

The cylinder head is next given attention. Remove the carbon deposit from the valves, valve ports, and cylinder head. Cleaning of the spherical combustion chamber in the cylinder head is not necessary as the heat generated during combustion is such as to prevent the build-up of carbon on the walls of the chamber. Any accumulation of carbon in the valve guides should be removed by dipping the valve stem in petrol or paraffin and oscillating it in the guide until it is free. Remove all traces of carbon dust with compressed air or by the vigorous use of a tyre pump, and then clean thoroughly with paraffin and dry off.

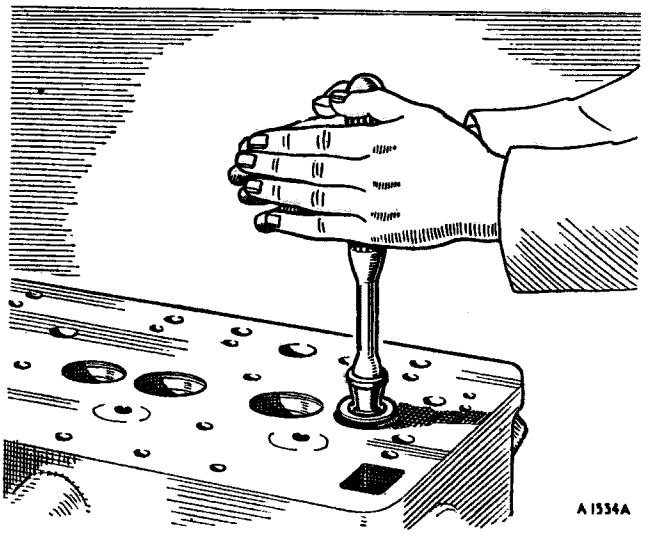

*Fig. Aa.*17

Grinding in a valve, using tool 18*G*29*; occasionally lift the valve off its seat to spread the grinding paste evenly over the seat and valve face*

Section Aa.25

REMOVING AND REPLACING THE VALVE GUIDES

Remove the cylinder head as described in Section Aa.17 and the appropriate valve and springs as described in Section Aa.22.

Support the cylinder head with wooden blocks and drive the valve guide outwards from the exhaust or inlet port with a suitable drift. The drift should take the form of a hardened-steel punch ·5 in. (12·7 mm.) in diameter and not less than 5 in. (13 cm.) in length with a locating spigot ·312 in. (7·9 mm.) in diameter machined on one end for a length of 1 in. (2·54 cm.) to engage the bore of the guide.

New valve guides must be fitted in the same direction —that is, through the inlet or exhaust port—and driven outwards until they are between ·734 and ·750 in. (18·64 and 19·05 mm.) above the machined face of the valve spring seat (see Fig. Aa.18).

Inlet valve guides must be finish-reamed in position to the dimension given under **'GENERAL DATA'**.

NOTE.—Valve guides with an outer diameter ·010 in. (·254 mm.) oversize are available for fitment where the normal fit has been impaired during the removal of an old guide.

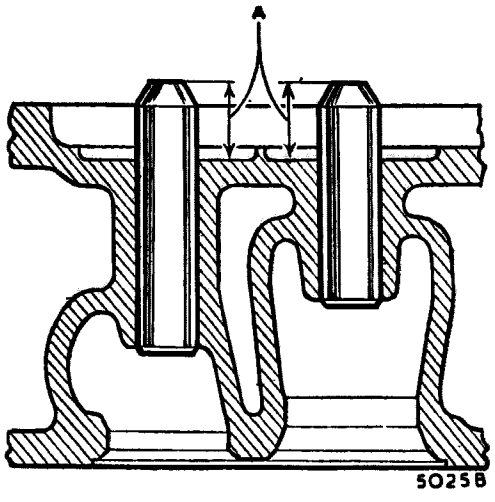

*Fig. Aa.*18

Showing the correct location of the valve guides

(A) = $\cdot 75^{+\cdot 00}_{-\cdot 16}$ in. (19·05 $^{+\cdot 00}_{-\cdot 4}$ mm.)

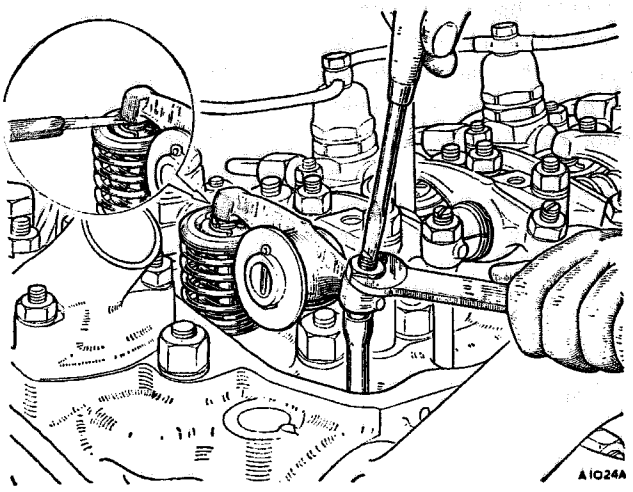

Fig. Aa.19

Checking and adjusting the valve rocker clearances

Section Aa.26

REMOVING AND REPLACING THE TAPPETS

Remove the valve rocker shaft assembly as described in Section Aa.13 and withdraw the push-rods, taking care to store them as described in Section Aa.17 so that they may be replaced in their original positions.

Detach the steady clip from the crankcase; remove the two set screws securing the crankcase vent pipe to the cylinder side cover and remove the vent pipe and its gasket.

Unscrew the set screws securing the cylinder side cover to the cylinder block and withdraw the side cover and its gasket.

Lift out the tappets from their guides in the cylinder block, keeping them in their respective positions so that they may be replaced in their own guides.

New tappets must be fitted by selective assembly so that they just fall into their guides under their own weight when lubricated with engine oil.

Worn tappet bores may be cleaned up by 'fine-finish' machining and tappets ·002 in., ·004 in., and ·006 in. (·051 mm., ·102 mm., and ·152 mm.) oversize are available.

When reassembling, which is a reversal of the above procedure, remove all traces of the old gasket from the joint faces of the cylinder block and cylinder side cover, fit a new gasket, and tighten the side cover securing screws evenly. The crankcase vent pipe gasket should be renewed if it is in any way suspect.

Section Aa.27

ADJUSTING THE VALVE ROCKER CLEARANCES

If the engine is to give its best performance and the valves are to retain their maximum useful life it is essential to maintain the correct valve rocker clearance.

The correct clearance for both inlet and exhaust valves is ·012 in. (·305 mm.) when the engine is cold.

Provision for adjusting the valve clearance is made in the rocker arm by an adjustable screw and locknut.

The rocker adjusting screw is released by slackening the hexagon locknut with a spanner while holding the screw against rotation with a screwdriver. The valve clearance can then be set by carefully rotating the rocker screw while checking the clearance at the other end of the rocker with a feeler gauge. This screw is then relocked by tightening the hexagon locknut while again holding the screw against rotation.

It is important to note that, when setting the valve clearance, the tappet of the valve being operated upon must be on the back of its cam—that is, opposite the peak. As the position of the tappet on its cam cannot be observed, and to avoid turning the engine more than is necessary, rocker adjustment is more easily carried out in the following order:

Adjust	No. 1	rocker	with	No. 8	valve	fully	open.	
,,	,, 3	,,	,,	,, 6	,,	,,	,,	
,,	,, 5	,,	,,	,, 4	,,	,,	,,	
,,	,, 2	,,	,,	,, 7	,,	,,	,,	
,,	,, 8	,,	,,	,, 1	,,	,,	,,	
,,	,, 6	,,	,,	,, 3	,,	,,	,,	
,,	,, 4	,,	,,	,, 5	,,	,,	,,	
,,	,, 7	,,	,,	,, 2	,,	,,	,,	

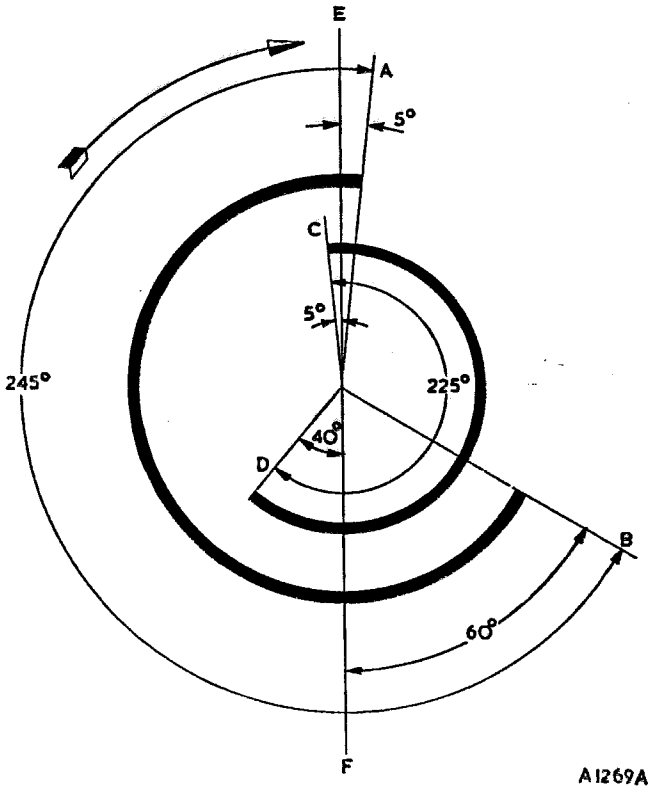

Fig. Aa.20

Valve-timing diagram with valve rocker clearance set at ·021 in. (·53 mm.). Exhaust valve opens at (B) *and closes at* (A). *Inlet valve opens at* (C) *and closes at* (D). *Top dead centre is at* (E) *and bottom dead centre is at* (F)

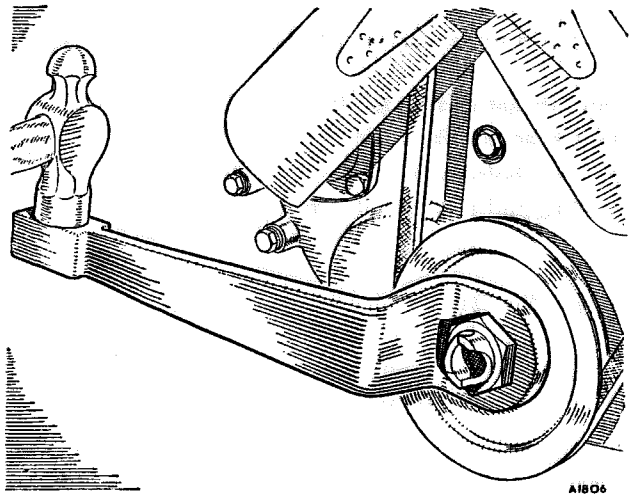

*Fig. Aa.*21

Unscrewing the starting nut, using spanner 18*G*96

Section Aa.28

VALVE-TIMING CHECK

Set the valve rocker clearance of No. 1 cylinder inlet valve to ·021 in. (·53 mm.) with the engine cold.

Obtain access to the flywheel and scribe a line on the flywheel ·562 in. (14·29 mm.) to the left of the 'TDC1/4' mark.

Crank the engine and determine the exact point at which No. 1 cylinder inlet valve is about to open. A clock gauge mounted on the cylinder head with its indicator in contact with the valve spring cap will facilitate this operation. If the valve timing is correct and in accordance with the valve-timing diagram (see Fig. Aa.20) the 'TDC 1/4' mark on the flywheel will be 5° B.T.D.C.—that is, the line scribed on the flywheel as described above will be vertical.

NOTE.—Reset the inlet valve clearance to ·012 in. (·305 mm.) when the timing check has been completed.

Section Aa.29

REMOVING AND REPLACING THE TIMING CHAIN CASE

Drain and remove the radiator as described in Section C.7.

Remove the lower front grille as described in Section Aa.2 and remove the fan belt as described in Section C.6.

Support the engine on a sling and detach the fan blades and water pump pulley from the water pump.

Press back the starting-handle nut locking washer and, using spanner 18G96, unscrew the starting-handle nut from the crankshaft and withdraw the crankshaft pulley.

●Unscrew and remove the securing bolts, nuts, set screws, and washers and withdraw the timing chain case and timing plate from the engine. Remove the oil thrower from the end of the crankshaft.●

Extract the oil seal from the outside of the timing chain case.

When reassembling, install a new oil seal in the timing chain case with the lip of the seal facing towards the engine. Lubricate the seal and the hub of the crankshaft pulley liberally with clean engine oil. Place the timing pointer and its securing bolts, washers, and distance pieces in position on the timing chain case, and install the crankshaft pulley in the timing chain case, rotating the pulley clockwise to enter the pulley into the oil seal.

Replace the oil thrower on the crankshaft with its concave side facing away from the engine and fit a new gasket to the timing chain case using 'Hylomar SQ32/M' jointing compound.

Install the timing chain case and crankshaft pulley assembly, screwing the timing pointer securing bolts into the crankcase as the pulley is driven onto the crankshaft, using tool 18G16.

Fit and tighten evenly the timing chain case securing bolts and nuts and set screws.

Reassemble the remaining components, reversing the removal sequence and adjusting the fan and dynamo drive belt tension as described in Section C.6.

Section Aa.30

REMOVING, DISMANTLING, AND REPLACING THE TIMING CHAIN TENSIONER

Remove the timing chain case (see Section Aa.29).

Press back the locking washer and unscrew the plug from the base of the chain tensioner body. Insert a ⅛ in. (3·18 mm.) Allen key to engage the tensioner cylinder and turn the key in a clockwise direction to retract the tensioner slipper into the unloaded position (see Fig. Aa.23). Between a half and one full turn is all that is necessary. Unlock and remove the two set bolts and withdraw the tensioner assembly, tensioner back plate, and joint washer from the engine.

Withdraw the plunger and slipper assembly from the tensioner body and engage the lower end of the cylinder with the Allen key. Turn the key clockwise, holding the key and plunger securely until the cylinder and spring are released from inside the plunger.

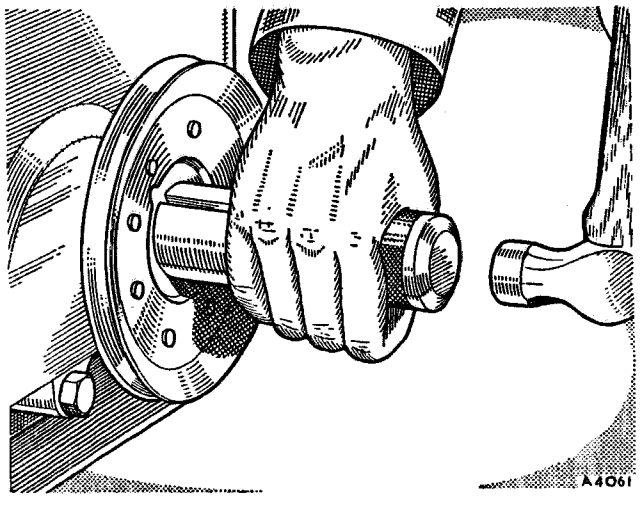

*Fig. Aa.*22

Replacing the crankshaft pulley, using tool 18*G*16

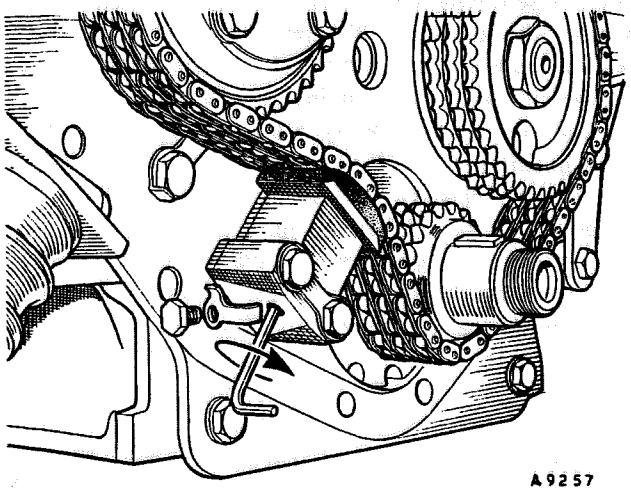

Fig. Aa.23
Setting the timing chain tensioner

Check the bore in the tensioner body for ovality. If ovality is greater than ·003 in. (·0762 mm.) when measured on diameters near the mouth of the bore, then the complete chain tensioner should be renewed.

Inspect the slipper head for wear. If it is badly worn a new slipper head and cylinder assembly should be fitted to the existing body, provided the bore of the body is within the limit given above.

The components should be cleaned thoroughly in clean petrol, and the inlet oil hole in the spigot and the outlet oil hole in the slipper should be cleaned with compressed air before reassembling.

When the tensioner is in operation and the engine is running, oil from the lubrication system enters the spigot on the back face under pressure and lubricates the bearing surface through a hole in the slipper pad. The pad is held against the chain by the coil spring.

If the chain stretches with use, the slipper plunger rises and the limiting peg, bearing on the top of the helical slot, rotates the cylinder until the next recess in the lower edge of the slot comes into line with the limiting peg and prevents the plunger returning to its original position and allowing the timing chain to become slack again.

When reassembling, insert the spring in the plunger and place the cylinder on the other end of the spring.

Compress the spring until the cylinder enters the plunger bore, engaging the helical slot with the peg in the plunger. Hold the assembly compressed in this position and engage the Allen key. Turn the cylinder clockwise until the end of the cylinder is below the peg and the spring is held compressed. Withdraw the key and insert the plunger assembly in the body. Replace the back plate and the joint washer and secure the assembly to the cylinder block.

After refitting the tensioner check the slipper head for freedom of movement and ensure that it does not bind on the back plate when it is moved in the body.

Release the tensioner, by inserting and turning the Allen key in a clockwise direction, until the slipper head moves forward under spring pressure against the timing chain.

Do not attempt to turn the key anti-clockwise or force the slipper head into the chain by external pressure.

Secure the bolts with the locking plate, replace the bottom plug, and lock with the tab washer.

Section Aa.31

REMOVING AND REPLACING THE TIMING CHAIN

Remove the heater plugs to relieve the compression when turning the crankshaft by hand.

Fully slacken all the valve rocker adjusting screws or, if necessary, remove the valve rocker shaft assembly as described in Section Aa.13 to ensure that throughout this operation the valves are always in the fully closed position. This is to prevent damage to the pistons and valves, which would otherwise foul each other when rotating either the crankshaft or camshaft with the timing chain removed.

Remove the fuel injection pump (Section Da.7).

Remove the timing chain case as described in Section Aa.29.

Remove the fuel injection pump quill shaft.

Press back the locking tab and remove the plug from the base of the timing chain tensioner body. Insert a $\frac{1}{8}$ in. Allen key to engage the tensioner cylinder and turn the key in a clockwise direction to retract the tensioner slipper into the unloaded position (Section Aa.30).

Disconnect and remove the fuel injection pump chain wheel bearing oil feed pipe from the crankcase and the fuel injection pump chain wheel hub. Unscrew the countersunk screw securing the chain wheel hub to the engine front mounting plate; support the fuel injection pump chain wheel and withdraw the chain wheel hub rearwards from the mounting plate. The timing chain and the fuel injection pump chain wheel may now be withdrawn.

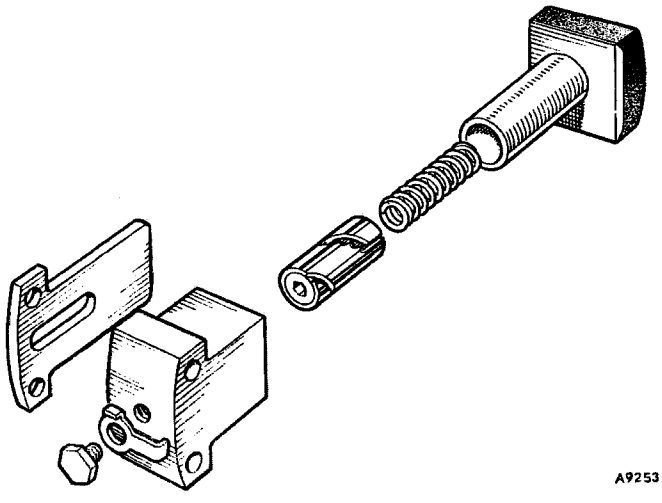

Fig. Aa.24
The chain tensioner components

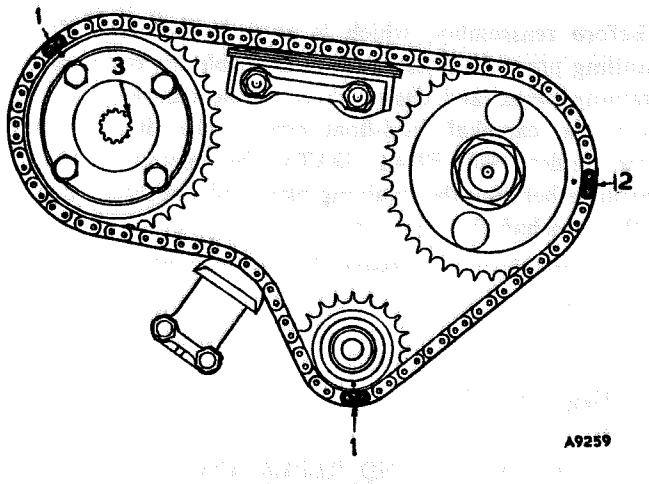

Fig. Aa.25

The camshaft and injection pump drive

1. Dimple marks and bright links stamped 'T'.
2. Dimple mark and plain bright link.
3. Master spline at two o'clock position.

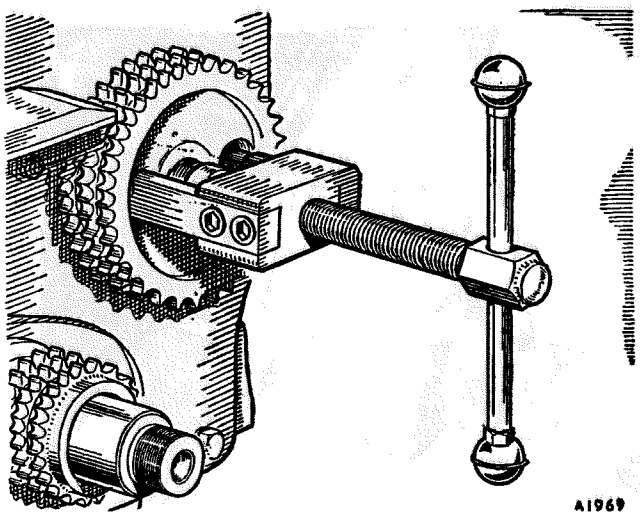

Fig. Aa.26

Withdrawing the camshaft chain wheel, using tool 18G58

Replacement is a reversal of the foregoing procedure, noting the following points.

To facilitate retiming of the engine valves and the fuel injection pump, one tooth on each chain wheel is marked with a 'dimple', the timing chain has three 'bright' links (two of which are marked with the letter 'T'), and the fuel injection pump chain wheel driving flange is provided with a master spline.

Before assembling the timing chain rotate the camshaft and the crankshaft chain wheels until the teeth marked with a 'dimple' are in the three o'clock and six o'clock positions respectively.

Place the timing chain and the fuel injection pump chain wheel in position, engaging the two 'bright' links marked with the letter 'T' with the teeth marked with a 'dimple' on the crankshaft and fuel injection pump chain wheels. The plain 'bright' link in the timing chain must engage the tooth marked with a 'dimple' on the camshaft chain wheel (see Fig. Aa.25).

Release the timing chain tensioner as described in Section Aa.30.

Check and adjust the fuel injection timing and replace the fuel injection pump as described in Section Da.7.

Bleed the fuel system (Section Da.5).

Section Aa.32

REMOVING AND REPLACING THE TIMING CHAIN WHEELS

Remove the timing chain case (Section Aa.29) and unlock and remove the chain wheel nut from the end of the camshaft.

Remove the fuel injection pump (Section Da.7) and the timing chain and the fuel injection pump chain wheel (Section Aa.31).

Withdraw the camshaft chain wheel, using tool 18G58, and crankshaft chain wheel, using tool 18G2.

As the crankshaft chain wheel is withdrawn, note the packing washers located on the crankshaft immediately behind the chain wheel. To remove these washers the two half-moon keys must first be withdrawn from the end of the crankshaft. The washers need only be removed when new crankshaft or camshaft components are to be fitted, in which case realignment of the chain wheels will be necessary. To determine the thickness of packing washers required, assemble and secure the camshaft and crankshaft chain wheels to their respective shafts, using the starting-handle dog and a suitable distance piece to secure the crankshaft chain wheel. Press both shafts towards the rear of the engine to take up all end-float. Place a straight-edge across the sides of the camshaft chain wheel teeth and measure with a feeler gauge the gap between the straight-edge and the sides of the teeth on the crankshaft chain wheel (see Fig. Aa.27). The fuel injection pump chain wheel is self-aligning.

If the fuel injection pump chain wheel bearing liner

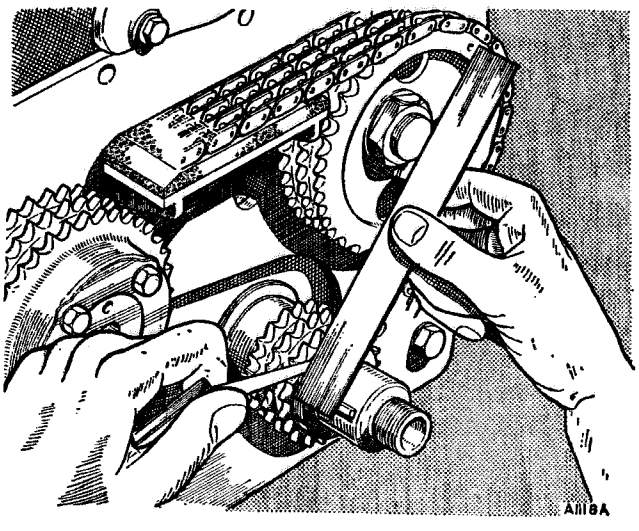

Fig. Aa.27

Checking the chain wheel alignment

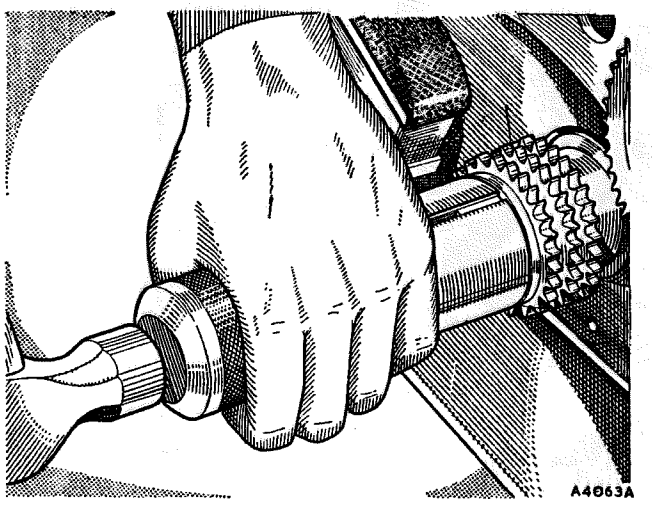

Fig. Aa.28

Replacing the crankshaft chain wheel, using tool 18G16

is worn it should be removed and a new liner installed. Before removing the liner it will be necessary to detach the driving flange from the injection pump chain wheel. The external diameter at one end of the liner is chamfered, and the inner end of the liner bore in the chain wheel is countersunk to facilitate the pressing-in of the liner. After pressing in, a new bearing liner must be finished to the dimensions given in the **'GENERAL DATA'** section.

Replacement is a reversal of the foregoing procedure, using tool 18G16 to drive the crankshaft chain wheel into position.

Install the fuel injection pump driving flange so that the master spline in the flange is in the two o'clock position when the tooth marked with a 'dimple' on the fuel injection pump chain wheel is in the 11 o'clock position, as shown in Fig. Aa.25.

The bolt holes on the driving flange are elongated to provide initial adjustment of the fuel injection timing, and on assembly the flange securing bolts should be positioned in the centre of the elongation.

Section Aa.33

REMOVING AND REPLACING THE CAMSHAFT

Remove the sump and the oil pump (Sections Aa.8 and Aa.9).

Remove the valve rocker shaft assembly, tappets, and push-rods (Sections Aa.13 and Aa.26) and the timing chain case (Section Aa.29).

Unlock and remove the camshaft chain wheel nut, remove the fuel injection pump (Section Da.7) and the timing chain (Section Aa.31), and withdraw the camshaft chain wheel, using tool 18G58 (see Fig. Aa.26).

●Unscrew and remove the two camshaft retaining plate set screws and withdraw the retaining plate and camshaft.●

Before reassembly, which is a reversal of the dismantling procedure, temporarily assemble the camshaft, retaining plate, and chain wheel to the camshaft, and check the camshaft end-float against the dimensions given under **'GENERAL DATA'** by measuring the clearance between the retaining plate and the thrust face of the camshaft front journal.

If the end-float is excessive the retaining plate should be renewed.

Section Aa.34

REMOVING AND REPLACING THE CAMSHAFT BEARING LINERS

If the camshaft bearing clearances are excessive new bearing liners must be fitted. Thinwall white-metal liners are used, and removing and refitting are facilitated by the use of tool 18G124A and adaptors 18G124B, 18G124D, 18G124F, and 18G124H. New liners must be line-reamed to give the correct running clearance (see **'GENERAL DATA'**), using tool 18G123A with cutters 18G123B, 18G123C, and 18G123E and pilots 18G123L, 18G123M, 18G123Q, 18G123T, and 18G123AD.

Removing the front and rear liners

Insert the small end of adaptor 18G124F into the camshaft front liner from the inside of the cylinder block, thread the body of the tool onto the centre screw, and pass the screw through the adaptor from the front of the block. Place the slotted washer on the flat at the rear of the centre screw and insert the tommy-bar into the centre screw behind the slotted washer.

Tighten up the wing nut to withdraw the worn liner.

The rear liner is withdrawn by the same method, using adaptor 18G124B and withdrawing the liner from the rear of the block.

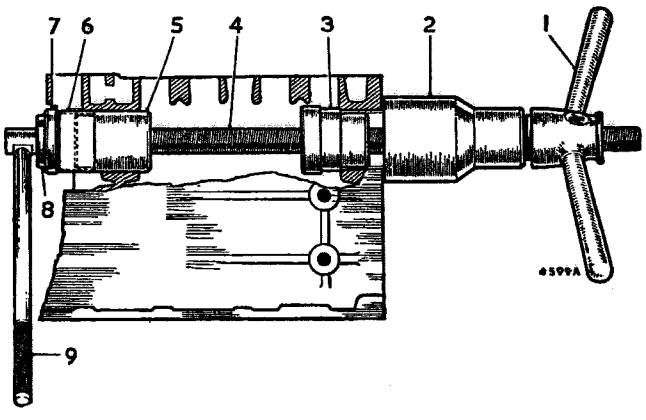

Fig. Aa.29

Replacing the camshaft centre bearing liner, using tool 18G124A with adaptors 18G124H and 18G124D

1. Wing nut.
2. Body.
3. Adaptor 18G124H.
4. Centre screw.
5. Adaptor 18G124D.
6. Bearing liner.
7. Large 'D' washer.
8. Slotted washer.
9. Tommy-bar.

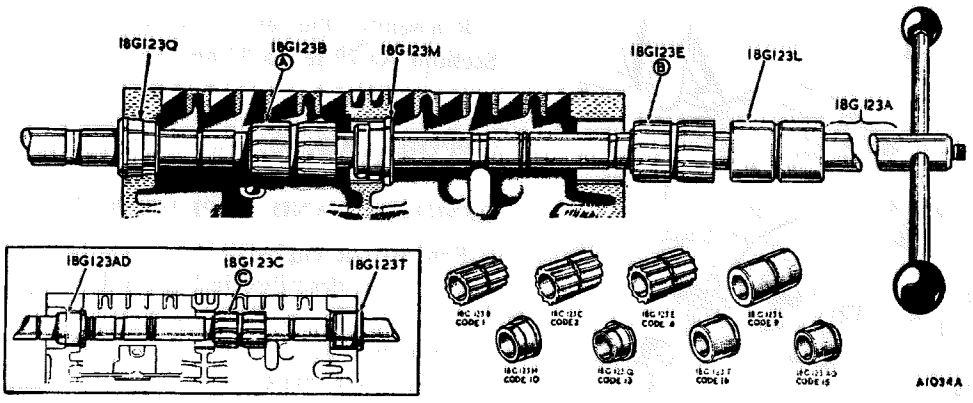

Fig. Aa.30

Cutters and pilots positioned for reaming the camshaft front and rear bearing liners. Shown inset are the pilots and cutter positioned for reaming the centre liner

(A) Position No. 4. (B) Position No. 10. (C) Position No. 7.

Removing the centre liner

Insert stepped pilot adaptor 18G124H into the camshaft liner front bore from the inside of the block and adaptor 18G124D into the centre liner from the rear, small end first.

With the body of the tool positioned on the centre screw, pass the screw through the pilot adaptor and the adaptor in the centre liner.

Place the slotted washer on the flat at the rear of the centre screw and insert the tommy-bar into the screw behind the slotted washer.

Tighten the wing nut to withdraw the liner.

Replacing the front and rear liners

Place the new liner on the smallest diameter of adaptor 18G124F and insert the adaptor into the camshaft front liner bore from the inside of the block, largest diameter first.

Line up the oil holes in the liner and the cylinder block and make certain that they remain correctly positioned during the whole operation.

Thread the body of the tool onto the centre screw and pass the screw through the adaptor located in the front liner from the front of the block.

Position the larger of the two 'D' washers on the centre screw with the cut-away portion turned away from the butt joint of the liner; this joint must be covered by the washer.

Place the slotted washer on the flat at the rear of the centre screw and insert the tommy-bar into the screw behind the slotted washer.

Tighten the wing nut to pull the liner squarely into position.

The rear liner is replaced by the same method, using adaptor 18G124B and pulling the liner into position from the rear of the block.

Replacing the centre liner

Insert the stepped pilot adaptor into the camshaft front liner from the inside of the block.

Place a new centre liner on the small end of adaptor 18G124D and position the adaptor in the centre liner bore from the rear, largest diameter first. Ensure that the oil holes in the liner and the cylinder block are lined up and remain so during the whole operation.

With the body of the tool positioned on the centre screw, insert the screw through the pilot adaptor and the adaptor in the centre liner bore.

Position the larger of the two 'D' washers on the centre screw with the cut-away portion turned away from the butt joint of the liner; this joint must be covered by the washer.

Place the slotted washer on the flat of the centre screw and insert the tommy-bar into the centre screw. Tighten up the wing nut to pull the liner into position.

Reaming the front and rear liners

Insert taper pilots 18G123M and 18G123Q into the centre and rear liners respectively.

Place plain pilot 18G123L on the arbor, followed by cutter 18G123E.

Pass the arbor through the front liner and the pilot located in the centre liner.

Place cutter 18G123B on the arbor and push the arbor through the taper pilot in the rear liner.

Secure the cutters in their respective positions shown in Fig. Aa.30, ensuring that the cutter locating pins are engaged in the correct numbered hole provided in the arbor.

The cutter for the front liner will cut first with the arbor piloting in the centre and rear liners. Clear away the swarf frequently during the operation. The cutter for the rear liner will follow with the arbor piloting in the front and centre liners. Clear away all the swarf before the plain pilot is allowed to enter the front liner.

When the cut in the rear liner is finished free the cutters and withdraw the arbor.

Reaming the centre liner

Set up for the second part of the operation by inserting pilots 18G123T and 18G123AD in the front and rear liners.

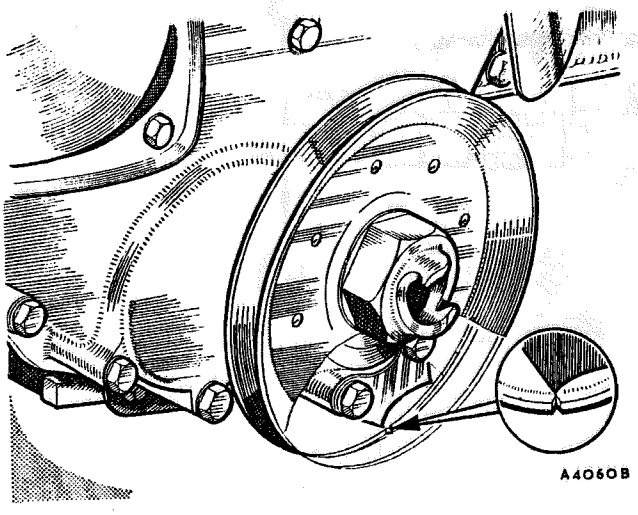

Fig. Aa.31

When the notch in the crankshaft pulley is opposite the lower point of the timing pointer Nos. 1 and 4 pistons are at T.D.C.

Pass the arbor through the pilot in the front liner and place cutter 18G123C on the arbor. Push the arbor through the centre liner and the pilot located in the rear liner.

Secure the cutter in the position shown in Fig. Aa.30, ensuring that the locating pin of the cutter engages the correct numbered hole in the arbor.

Ream the centre liner, release the cutter, and withdraw the arbor.

IMPORTANT.—It is essential that the cutter flutes are kept clear of swarf at all times during the cutting operation, preferably with air-blast equipment. The cutter should be withdrawn from the liner half-way through the cut and the swarf removed from the cutter and the liner.

Feed the reamer very slowly and keep the cutters dry.

The arbor should be lightly lubricated before assembling the cutters and pilots.

Section Aa.35

REMOVING THE ENGINE FRONT PLATE

Remove the fuel injection pump (Section Da.7), the timing chain case (Section Aa.29), the timing chain tensioner (Section Aa.30), the timing chain (Section Aa.31), and the timing chain wheels (Section Aa.32).

Unscrew the two securing screws with spring washers and withdraw the camshaft retaining plate.

Press back the lock washer, unscrew the five securing bolts, and remove the front plate complete with the timing chain vibration damper.

Unlock and remove the two countersunk screws and nuts securing the timing chain vibration damper and remove the vibration damper and shim.

When reassembling, be sure to fit the shim between the vibration damper and the front plate, otherwise distortion of the timing chain case will occur when tightening its central securing screw.

Reassemble the remaining components as detailed in Sections Aa.29 to Aa.32 and Section Da.7.

Section Aa.36

REMOVING AND REPLACING THE FLYWHEEL

Remove the engine as described in Section Aa.2 and the clutch as described in Section E.6.

Crank the engine until the groove in the crankshaft pulley is in line with the T.D.C. pointer, or zero mark, on the timing plate attached to the timing case. The engine is now set with Nos. 1 and 4 pistons in the T.D.C. position. This will facilitate correct reassembly.

Unlock and remove the six bolts securing the flywheel and detach the flywheel from the crankshaft flange.

When reassembling first ensure that Nos. 1 and 4 pistons are in the T.D.C. position and then install the flywheel with the 'T.D.C. 1/4' mark in the vertical position. Later flywheels are unmarked and may be installed in any position.

Tighten the flywheel securing bolts with a torque wrench set to the figure given under **'GENERAL DATA'**.

Section Aa.37

REMOVING AND REPLACING THE FLYWHEEL STARTER RING

To remove the old starter ring from the flywheel drill holes through the flange of the gear and then split the gear, using a hammer and chisel, taking care not to damage the flywheel.

Make certain that the bore of the new ring and its mating surface on the flywheel are free from burrs and are perfectly clean.

To fit the new ring it must be heated to a temperature of 200 to 230° C. (392 to 446° F.). Do not exceed this temperature, otherwise the temper of the teeth will be adversely affected. The use of a thermostatically controlled furnace is recommended. Place the heated ring on the flywheel with the lead on the ring teeth uppermost.

The expansion will allow the ring to be fitted without force by pressing or tapping it lightly until the ring is hard against its register.

This operation should be followed by natural cooling, when the 'shrink fit' will be permanently established and no further treatment required.

Section Aa.38

REMOVING AND REPLACING THE FLYWHEEL HOUSING

Remove the flywheel (Section Aa.36) and the starter motor (Section Na).

Unscrew and remove the 10 set screws and washers securing the flywheel housing to the cylinder block. The

seal washers are fitted to the two screws which screw into the rear main bearing cap, the remaining set screws being fitted with spring washers.

Remove the flywheel housing, using a hide mallet to ease it off the two locating dowels.

Clean off all traces of the old gaskets from the cylinder block and flywheel housing joint faces. Examine the joint face of the flywheel housing, especially in the area of the locating dowel holes, for burrs, which should be carefully removed with a scraper.

When reassembling renew the two gaskets to ensure an oil-tight joint.

Section Aa.39

REMOVING AND REPLACING THE CRANKSHAFT

Remove the timing chain case, timing chain tensioner, timing chain, and the crankshaft and camshaft chain wheels (Sections Aa.29 to Aa.32).

Remove the engine front plate (Section Aa.35).

Remove the flywheel and flywheel housing (Sections Aa.36 and Aa.38).

Remove the sump and oil pump (Sections Aa.8 and Aa.9).

Disconnect the connecting rods from the crankshaft as described in Section Aa.18, pushing each rod and piston to the top of its cylinder bore as soon as it is disconnected.

Unscrew the six self-locking nuts and washers from the main bearing cap studs and, using tool 18G42A with adaptors 18G42B, withdraw the main bearing caps and remove the lower halves of the crankshaft thrust washers from the centre main bearing. Lift the crankshaft out of its bearings and remove the upper halves of the crankshaft thrust washers.

Withdraw the bearing liners from the bearing caps and the housings in the crankcase, marking the bearing liners so that they may be replaced in their original positions. A punch should not be used for this purpose.

In the case of a run bearing, the oilways in the crankshaft and cylinder block must be cleaned thoroughly with petrol or paraffin and then blown clean with compressed air. The oil pump and oil strainer should also be dismantled and cleaned (Sections Aa.10 and Aa.11) and the external oil filter element renewed (Section Aa.5) to ensure that all bearing metal is removed from the lubricating system.

Before reassembly check the crankshaft end-float against the dimensions given under **'GENERAL DATA'**.

Thoroughly clean the thrust faces of the crankshaft centre main journal, bearing, and thrust washers and temporarily install them in the crankcase. Mount a clock gauge on the front end of the crankcase with its indicator resting on the front face of the crankshaft front main journal. Press the crankshaft as far as possible to the rear and, holding it in this position, zero the clock gauge. Now press the crankshaft forward as far as possible and

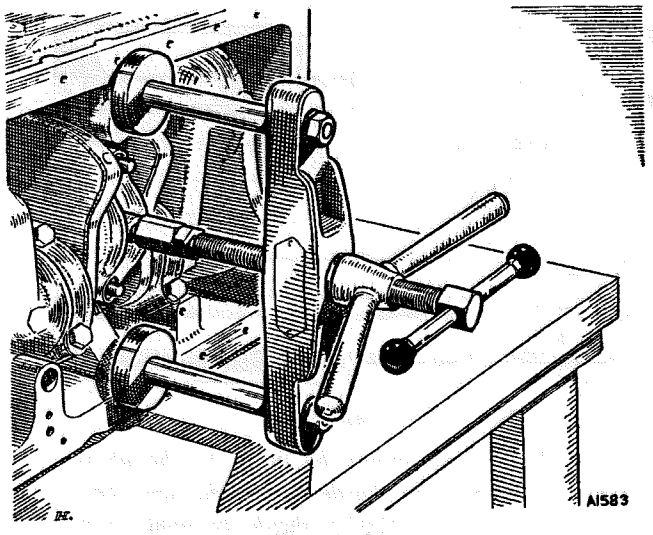

Fig. Aa.32
Withdrawing the main bearing cap, using tool 18G42A and adaptor 18G42B

note the reading on the clock gauge, the difference from zero being the amount of crankshaft end-float.

If necessary, renew the thrust washers, fitting them by selective assembly and ensuring that the oil grooves face outwards, towards the crankshaft webs. Thrust washers ·003 in. (·076 mm.) oversize are available.

When installing new bearings no scraping is required as the bearings are machined to give the correct diametrical clearance.

Reassembly is a reversal of the dismantling procedure, noting the following points:

(1) Ensure that the felt plugs fitted between the front and rear main bearing caps and the crankcase are in good condition.

(2) Coat the rear main bearing cap to cylinder block horizontal joint surface with 'Hylomar SQ32/M' jointing compound.

(3) Renew the Langite seal fitted in the base of the rear main bearing cap.

(4) Tighten the main bearing cap nuts to the figure given under **'GENERAL DATA'**.

(5) If any of the crankshaft components are renewed, check the crankshaft and camshaft chain wheel alignment as described in Section Aa.32.

(6) Check the fuel injection timing as described in Section Da.7.

(7) Bleed the fuel system (Section Da.5).

Section Aa.40

REMOVING AND REPLACING THE CYLINDER LINERS

If the condition of the cylinder liner bores is such that they cannot be cleaned up to accept standard oversize pistons (see Section Aa.21), new liners should be fitted.

This operation may be carried out by the use of specialized proprietary equipment or with a power press,

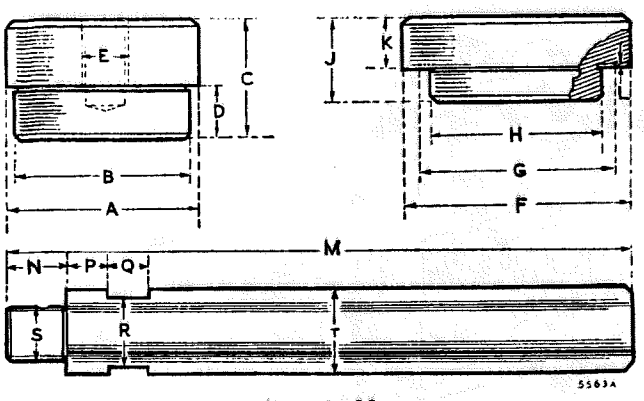

Fig. Aa.33

Cylinder liner pilots should be made to the above dimensions from case hardening steel, and case hardened. The pilot extension should be made from 55-ton hardening and tempering steel, hardened in oil and then tempered at 550° C. (1,020° F.)

Pressing-out pilot

A. $3\frac{25}{64}{}^{+\cdot005}_{-\cdot000}$ in. (86·121$^{+\cdot127}_{-\cdot000}$ mm.).
B. 3·248$^{+\cdot000}_{-\cdot005}$ in. (82·50$^{+\cdot000}_{-\cdot127}$ mm.).
C. $1\frac{3}{4}$ in. (44·45 mm.).
D. $\frac{3}{4}$ in. (19·05 mm.).
E. $\frac{3}{4}$ in. B.S.W. thread.

Pressing-in pilot

F. $3\frac{5}{8}$ in. (92·07 mm.).
G. $3\frac{1}{4}$ in. (82·55 mm.).
H. 3·228$^{+\cdot000}_{-\cdot005}$ in. (82·0$^{+\cdot000}_{-\cdot127}$ mm.).
J. $1\frac{1}{4}$ in. (31·75 mm.).
K. $\frac{3}{4}$ in. (19·05 mm.).
L. ·015 in. (·38 mm.).

Pilot extension

M. $14\frac{1}{2}$ in. (36·83 cm.).
N. $\frac{7}{8}$ in. (22·22 mm.).
P. $\frac{5}{8}$ in. (15·87 mm.).
Q. $\frac{5}{8}$ in. (15·87 mm.).
R. 1 in. (25·4 mm.) flats.
S. $\frac{3}{4}$ in. B.S.W. thread.
T. $1\frac{1}{4}$ in. (31·75 mm.).

using pilot adaptors to the dimensions shown in Fig. Aa.33. The press must be capable of 3 tons (3048 kg.) pressure to fit new liners and 5 to 8 tons (5080 to 8128 kg.) to remove old liners.

To remove worn liners

Dismantle the engine and remove the cylinder head studs.

Place the cylinder block face downwards on suitable wooden blocks on the bed of the press, making sure that there is sufficient space between the cylinder block and the bed of the press to allow the worn liner to pass down. Insert the pilot, complete with extension, in the bottom of the liner and carefully press the liner from the bore.

To press in new liners

When fitted, the top face of the liner must stand ·002 to ·005 in. (·05 to ·13 mm.) proud (see Fig. Aa.34) and be parallel with the top face of the cylinder block. If, owing to damage, it is found necessary to grind the top face of the cylinder block, the liner flange recess in the top of the cylinder block must be recut to maintain the above dimension. The top face of the liner must not be machined. The dimensions of the recess are 3·531 to 3·536 in. (89·69 to 89·817 mm.) diameter by ·177±·001 in. (4·508±·025 mm.) deep with a radius at the bottom of its bore not exceeding ·010 in. (·254 mm.).

Thoroughly clean the inside of the bore and the outside of the liner. Stand the cylinder block upright on the bed of the press, insert the pilot guide in the top of the liner, and position the liner in the top of the bore. Make certain that the liner is square with the top of the block and that the ram of the press is over the centre of the pilot. Press the liner fully into the bore.

Each liner must be machined and honed to a finished diameter of 3·2495 to 3·2510 in. (82·537 to 82·575 mm.), but before honing, the top of the liner bore must be chamfered at an angle of 30° for a depth of $\frac{1}{16}$ in. (1·59 mm.).

●Cylinder liners are also available for the later-type (non-linered) cylinder block. Before the liners are pressed in, the cylinder block bores should be increased to a diameter of 3·407 to 3·4075 in. (86·54 to 86·55 mm.) and, after fitting, the new liners should be finish bored to a diameter of 3·2495 to 3·251 in. (82·537 to 82·575 mm.).●

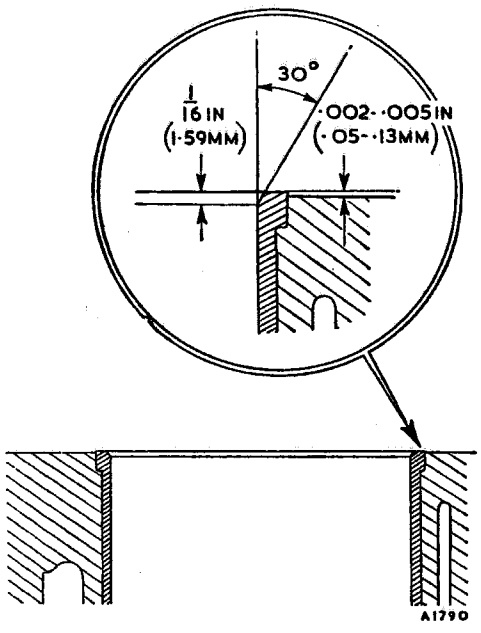

Fig. Aa.34

●*Cylinder liner (early type) fitting dimensions*●

SERVICE TOOLS

18G2. Crankshaft Gear, Pulley, and Propeller Shaft Flange Remover

A multipurpose tool with alternative legs which are readily interchangeable. When withdrawing the crankshaft gear the legs with the flat ends are used.

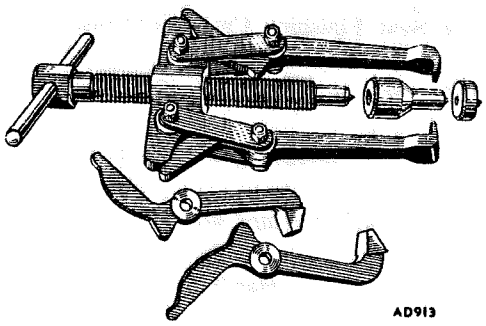

18G16. Crankshaft Gear and Pulley Replacer

A hollow drift, enabling the gear and pulley to be driven onto the crankshaft without damage.

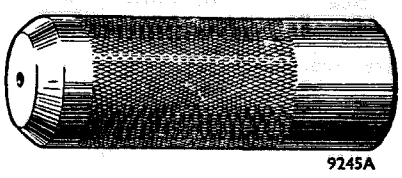

18G21. Valve Rocker Bush Remover and Replacer

This tool, which consists of a driver and an anvil, makes the removal and replacement of rocker bushes a simple and safe operation.

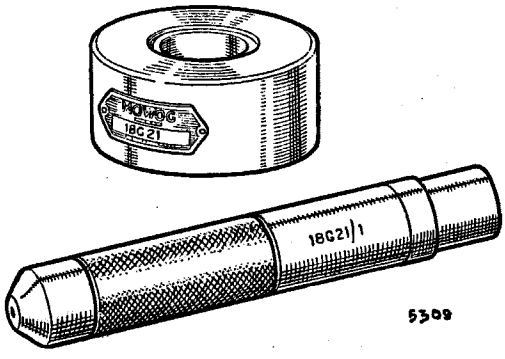

18G29. Valve Grinding-in Tool

This suction-type tool has a handle of convenient length to enable it to be rotated backwards and forwards between the palms of the hands when grinding the valve faces and seats. Replacement suction pads are available under Part No. 18G29A.

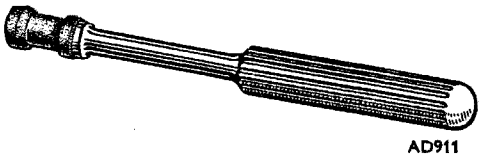

18G25. Valve Seat Finishing Cutter (Exhaust)

18G25A. Valve Seat Glaze Breaker (Exhaust)

18G25B. Valve Seat Narrowing Cutter—Top (Exhaust)

18G25C. Valve Seat Narrowing Cutter—Bottom (Exhaust)

18G27. Valve Seat Cutter Handle

18G27B. Fibre Box—Valve Seat Cutters

18G28. Valve Seat Finishing Cutter (Inlet)

18G28A. Valve Seat Glaze Breaker (Inlet)

18G28B. Valve Seat Narrowing Cutter—Top (Inlet)

18G28C. Valve Seat Narrowing Cutter—Bottom (Inlet)

18G174D. Valve Seat Cutter Pilot

The use of these tools will save lengthy and wasteful grinding in when the valve seats are badly pitted. The glaze breakers should be used to prepare worn seats, which usually have a glass-hard surface, before using the finishing cutters. Overwide seats may be returned to their original dimensions by careful use of the narrowing cutters.

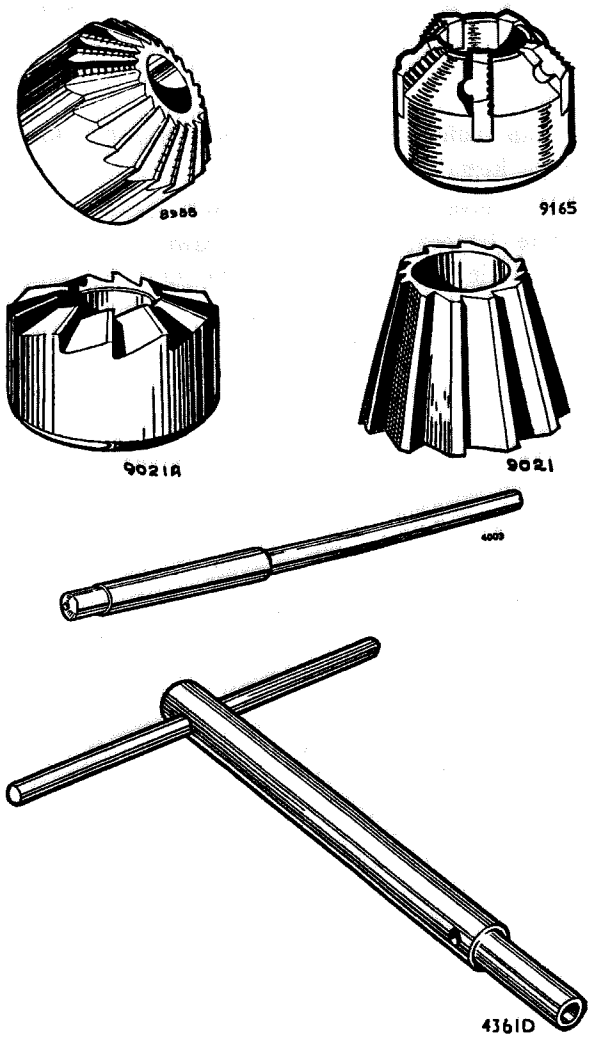

18G42A. Main Bearing Cap Remover (basic tool)

18G42B. Main Bearing Cap Remover Adaptors

The remover has feet suitably spaced to locate on the crankcase flanges. The appropriate adaptor is screwed first onto the remover drive screw and then into the main bearing cap.

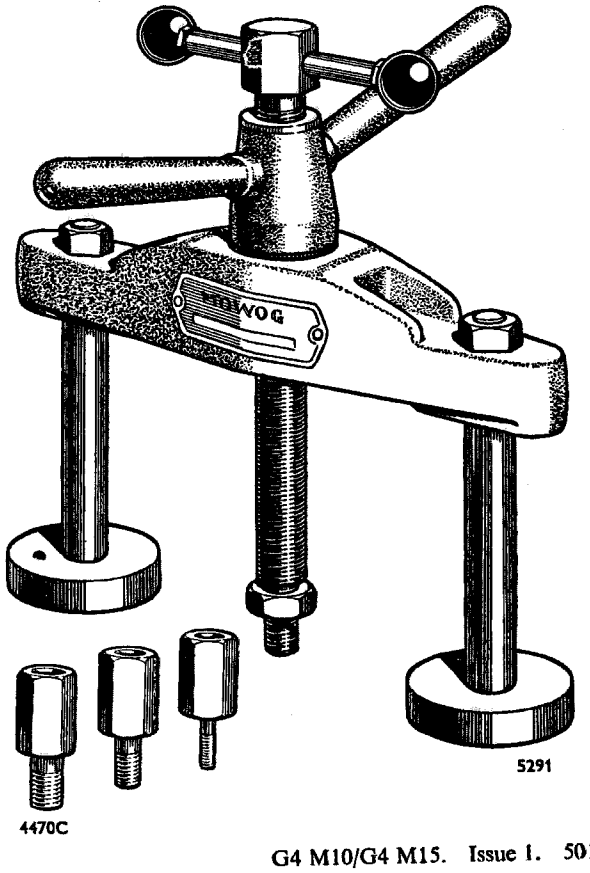

18G45. Valve Spring Compressor

This tool is designed with a cam and lever action which is both positive and speedy. The adaptor ring which contacts the valve spring caps is specially shaped to facilitate the removal and replacement of the split cotters. A screw adjustment is also provided.

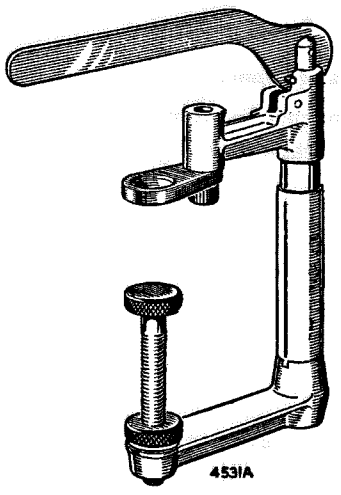

18G55A. Piston Ring Compressor

A clamping device to retain the piston rings and enable the piston to enter the cylinder bore with a minimum of pressure.

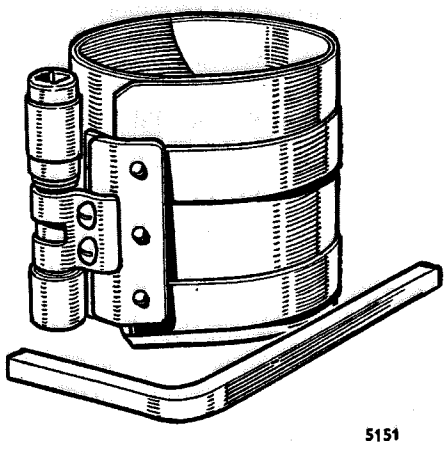

18G58. Camshaft Gear Remover

This tool will remove the camshaft chain wheel quickly and without damage. The centre drive screw incorporates a hardened-steel ball to reduce friction; a separate thrust pad is provided for insertion between the camshaft and the ball to protect the end of the camshaft.

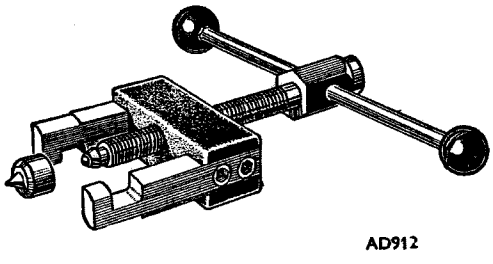

18G69. Oil Pump Release Valve Grinding-in Tool

This tool is designed for the removal and grinding in of oil release valves. It consists of a knurled handle, knurled set screw, and rubber sleeve. Tightening the set screw expands the rubber plunger, which ensures that the tool is a tight fit when inserted into the hollow oil pressure release valve.

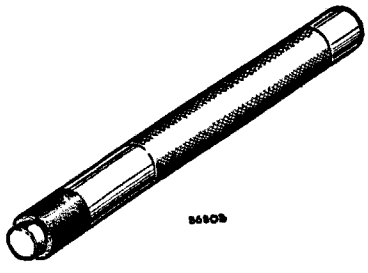

18G96. Starting Nut Spanner

A 'shock-type' spanner for removing the starting nut without locking the crankshaft.

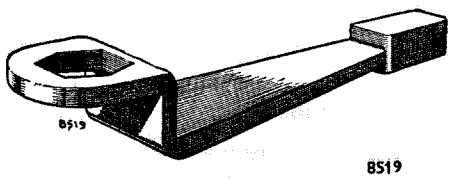

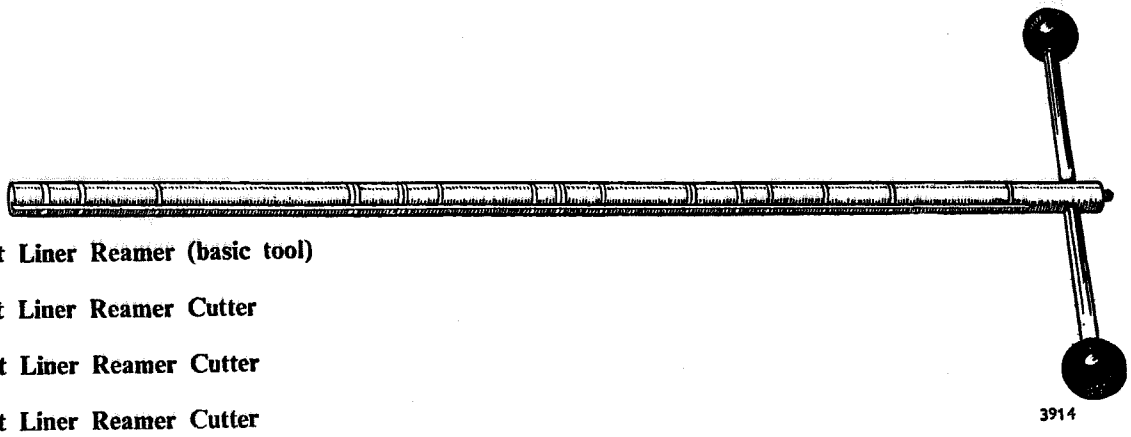

18G123A. Camshaft Liner Reamer (basic tool)

18G123B. Camshaft Liner Reamer Cutter

18G123C. Camshaft Liner Reamer Cutter

18G123E. Camshaft Liner Reamer Cutter

18G123L. Camshaft Liner Reamer Pilot

18G123M. Camshaft Liner Reamer Pilot

18G123Q. Camshaft Liner Reamer Pilot

18G123T. Camshaft Liner Reamer Pilot

18G123AD. Camshaft Liner Reamer Pilot

This equipment is essential when reconditioning cylinder blocks, otherwise camshaft liners cannot be reamed in line and in consequence the clearance between the camshaft journal and the liner will be incorrect.

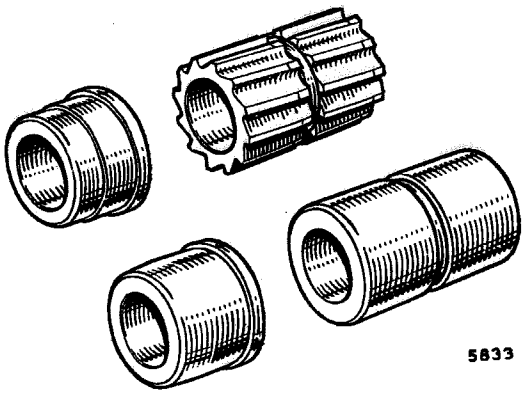

18G124A. Camshaft Liner Remover and Replacer (basic tool)

Camshaft liners can be removed and replaced accurately and without the damage invariably associated with the use of improvised drifts. Adaptors for use with this basic tool are supplied separately.

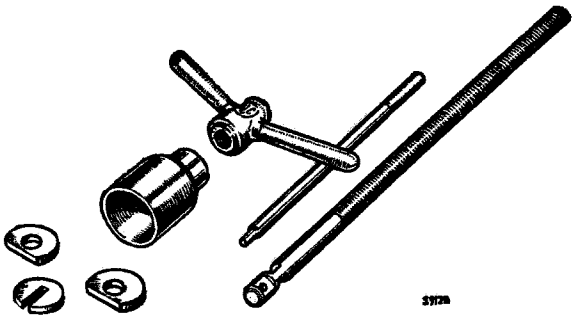

18G124B. Camshaft Liner Remover Adaptor

18G124D. Camshaft Liner Remover Adaptor

18G124F. Camshaft Liner Remover Adaptor

18G124H. Camshaft Liner Remover Adaptor

The adaptors 18G124B, 18G124D, and 18G124F are used in conjunction with the basic tool 18G124A to remove old and worn liners and to pilot new liners into position. Adaptor 18G124H is a pilot to be inserted into the front bearing when the centre liner is being removed or replaced.

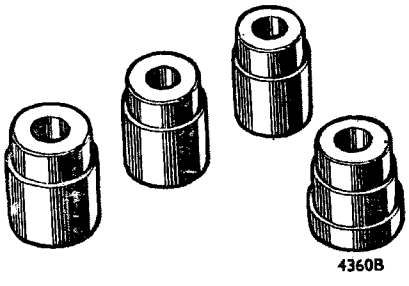

18G372. Torque Wrench—30 to 140 lb. ft. (4·15 to 19·35 kg. m.)

A universal torque wrench for use with standard sockets. This type of tool is essential if the recommended maximum torque for cylinder head studs, etc., is not to be exceeded.

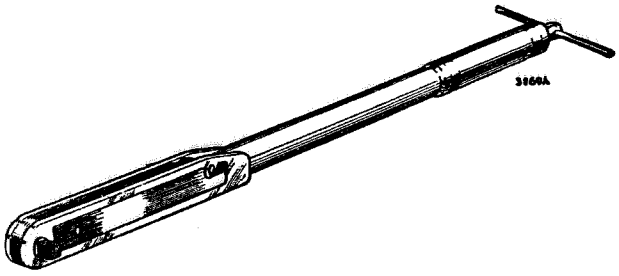

SECTION B

THE IGNITION SYSTEM

(PETROL MODELS)

	Section
Coil	B.10
Contact breaker	B.6
Description	B.1
Distributor	
Dismantling and reassembling	B.8
Removing and replacing	B.7
High-tension cables	B.5
Locating a low-tension circuit fault	B.4
Locating the cause of uneven firing	B.2
Sparking plugs	B.11
Testing the low-tension circuit	B.3
Timing the ignition	B.9

Section B.1

DESCRIPTION

At slow engine speeds the ignition point is retarded. At high speeds the ignition point is advanced by an automatic timing control mechanism operated by centrifugal force.

A vacuum-operated timing control is also fitted, designed to give additional advance under part-throttle conditions. The combined effects of the centrifugal and vacuum-operated timing controls give added efficiency over the full operating range of the engine with a corresponding economy in fuel consumption. A micrometer adjustment is fitted by which fine alterations to the timing can be made to allow for changes in running conditions as a result of carbonization or change of fuel.

A completely sealed, metallized paper capacitor is fitted to the distributor. This has the property of being self-healing in the event of a breakdown, so that trouble arising from this source should be very infrequent.

The high-tension pick-up brush in the distributor cover is of composite construction, the top portion consisting of a resistive compound and the lower of softer carbon to prevent wear taking place on the rotor electrode.

The resistive portion of the brush is in circuit between the coil and distributor and gives a measure of radio interference suppression. Under no circumstances must a short, non-resistive brush be used as a replacement for one of the longer, resistive type.

Section B.2

LOCATING THE CAUSE OF UNEVEN FIRING

Start the engine and set it to run at a fairly fast idling speed.

Short-circuit each plug in turn by pulling the insulator sleeve up the cable and placing a hammer head or the blade of a screwdriver with a wooden or insulated handle between the terminal and the cylinder head. No difference in the engine performance will be noted when short-circuiting the plug in the defective cylinder. Shorting the other plugs will make uneven running more pronounced.

Having located the cylinder which is at fault, stop the engine and remove the cable from the terminal of the sparking plug. Restart the engine and hold the end of the cable about $\frac{3}{16}$ in. (5 mm.) from the cylinder head.

If the sparking is strong and regular the fault probably lies in the sparking plug. Remove the plug, clean it, and adjust the gap to the correct setting (see **'GENERAL DATA'**), or alternatively fit a new plug.

If there is no spark or if it is weak and irregular examine the cable from the sparking plug to the distributor. After a long period of service the insulation may be cracked or perished, in which case the cable should be renewed.

Finally, examine the distributor moulded cap, wipe the inside and outside with a clean, dry cloth, see that the carbon brush moves freely in its holder, and examine the moulding closely for signs of breakdown. After long service it may become tracked—that is, a conducting path may have formed between two or more of the electrodes or between one of the electrodes and some part of the distributor in contact with the cap. Evidence of a tracked cap is shown by the presence of a thin black line. A replacement distributor cap must be fitted in place of one that has become tracked.

Section B.3

TESTING THE LOW-TENSION CIRCUIT

Spring back the securing clips on the distributor and remove the moulded cap and rotor. If the rotor is a tight fit it can be levered off carefully with a screwdriver.

Check that the contacts are clean and free from pits, burns, oil, or grease. Turn the engine and check that the contacts are opening and closing correctly and that the clearance is correct when the contacts are fully opened.

Correct the gap if necessary to between ·014 and ·016 in. (·36 and ·40 mm.).

Disconnect the cable at the contact breaker terminal of the coil and at the low-tension terminal of the distributor, and connect a test lamp between these terminals. If the lamp lights when the contacts close and goes out when the contacts open the low-tension circuit is in order. Should the lamp fail to light, the contacts are dirty or there is a broken or loose connection in the low-tension wiring. The procedure for isolating the fault is detailed in Section B.4.

Section B.4

LOCATING A LOW-TENSION CIRCUIT FAULT

Having determined, by testing as described in Section B.3, that the fault lies in the low-tension circuit, switch on the ignition and turn the engine until the contact breaker points are fully opened.

Refer to the wiring diagram and check the circuit with a voltmeter (0–20 volts) as follows.

NOTE.—If the circuit is in order the reading on the voltmeter should be approximately 12 volts.

(1) **Cable—battery to starter solenoid.** Connect the voltmeter between the supply terminal of the starter solenoid and an earthing point. No reading indicates a faulty cable or loose connections.

(2) **Cable (brown)—starter solenoid to ammeter.** Connect the voltmeter between the ammeter terminal and earth. No reading indicates a faulty cable or loose connections.

(3) **Ammeter.** Connect the voltmeter between the ammeter (brown and white cable terminal) and earth. No reading indicates a faulty ammeter.

(4) **Cable (brown with white)—ammeter to control box.** Connect the voltmeter between the control box terminal 'A' and earth. No reading indicates a faulty cable or loose connections.

(5) **Control box.** Connect the voltmeter between the control box terminal 'A1' and earth. No reading indicates a faulty control box.

(6) **Cable (brown with blue)—control box to ignition/master switch.** Connect the voltmeter between the ignition/master switch terminal '1' and earth. No reading indicates a faulty cable or loose connections.

(7) **Ignition/master switch.** Connect the voltmeter between the ignition switch (terminal '2') and earth. No reading indicates a faulty switch.

(8) **Cable (white)—ignition/master switch to ignition coil.** Connect the voltmeter between the ignition coil terminal 'SW' and earth. No reading indicates a faulty cable or loose connections.

(9) **Ignition coil.** Connect the voltmeter between the ignition coil terminal 'CB' and earth. No reading indicates a faulty ignition coil.

(10) **Cable (black)—ignition coil to distributor.** Connect the voltmeter between the distributor terminal and earth. No reading indicates a faulty cable or loose connections.

(11) **Distributor.** Connect the voltmeter across the distributor contacts. If no reading is given, remove the capacitor and test again. If a reading is given, the capacitor is faulty.

Section B.5

HIGH-TENSION CABLES

The high-tension cables must be examined carefully and any which have the insulation cracked, perished, or damaged in any way must be renewed.

To fit the cables to the terminal of the ignition coil thread the knurled moulded terminal nut over the cable, bare the end of the cable for about ¼ in. (6 mm.), thread the wire through the brass washer removed from the original cable, and bend back the strands over the washer. Finally, screw the terminal into the coil.

To make the connections to the terminals in the distributor moulded cap first remove the cap and slacken the screw on the inside of the moulding till they are clear of the cables. Cut the new cables off to the required length, push them completely home, and tighten the securing screws.

The cables from the distributor to the sparking plugs must be connected up in the correct firing order, which is 1, 3, 4, 2. Secure them firmly to the connectors.

Section B.6

CONTACT BREAKER

After the first 500 miles (800 km.) or 25 hours running, and subsequently every 6,000 miles (10000 km.) or 300 hours, check the contact breaker as follows:

(1) Turn the engine until the contact breaker points are fully opened and check the gap with a gauge having a thickness of ·014 to ·016 in. (·36 to ·40 mm.). If the gap is correct the gauge should be a sliding fit. Do not alter the setting unless the gap varies considerably from the gauge thickness.

To adjust the setting keep the engine in the position which gives maximum opening of the contacts and then slacken the fixed contact plate securing screws and adjust the contact gap by moving the plate to give the required gap clearance. Tighten the securing screws.

(2) If the contacts are dirty or pitted they must be cleaned by polishing them with a fine carborundum stone, and afterwards wiping them with a cloth moistened with petrol. The moving contact can be removed from its mounting in order to assist cleaning. Check and adjust the contact breaker setting after cleaning the contacts.

(3) Check that the moving arm is free on its pivot. If it is sluggish remove the arm and polish the pivot pin with a strip of fine cloth. Afterwards clean off all traces of emery dust and apply a spot of clean engine oil to the top of the pivot.

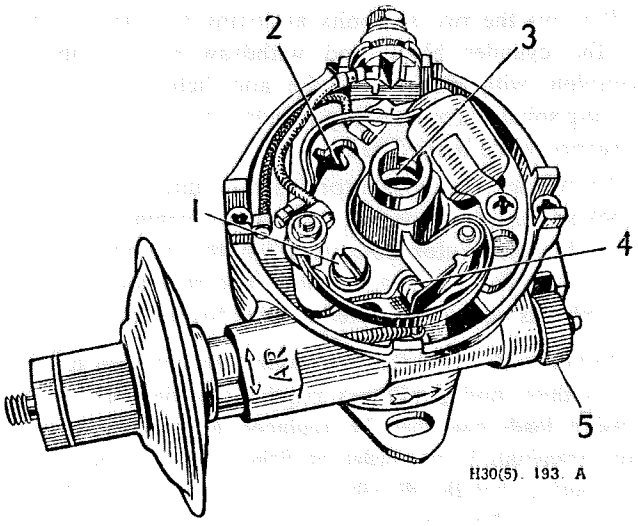

Fig. B.1
The distributor

1. Clamp screw.
2. Adjusting slot.
3. Oiling point.
4. Contact points.
5. Micrometer adjuster.

Section B.7

REMOVING AND REPLACING THE DISTRIBUTOR

The distributor can be removed and replaced without interfering with the ignition timing, provided the clamp plate pinch-bolt is not disturbed.

Remove the distributor cover and disconnect the low-tension lead from the terminal on the distributor. Disconnect the suction advance pipe at the union on the distributor.

To facilitate the replacement of the distributor turn the engine over until the rotor arm is in the vertical position to provide a datum for replacement.

Remove the two set bolts attaching the clamp plate to the cylinder block and withdraw the distributor complete with driving spindle and helical gear. The driving spindle is more easily withdrawn if the distributor is turned while being lifted.

To replace the distributor insert it into the cylinder block so that the rotor arm takes up its original position. Turn the distributor body to align the clamping plate holes with those in the housing. The remainder of the assembly is now in the reverse order to that of removal.

NOTE.—Provided that the engine has not been turned, the ignition timing will not require resetting. The high-tension leads can then be replaced on their respective plug terminals in the order of firing, i.e. 1, 3, 4, 2, remembering that the distributor rotation is anti-clockwise when viewed from above.

Section B.8

DISMANTLING AND REASSEMBLING THE DISTRIBUTOR

When dismantling, carefully note the positions in which the various components are fitted, in order to ensure their correct replacement on reassembly. The amount of dismantling necessary will naturally depend on the repair required.

Spring back the securing clips and remove the moulded cover. Lift the rotor arm off the spindle, carefully levering with a screwdriver if it is tight.

Remove the terminal nut, washer, insulating piece, and cable connections from the contact breaker spring anchor post; the movable contact assembly can then be removed from its pivot on the contact breaker plate, followed by the fibre washer.

Lift the low-tension terminal complete with mounting and cable from the slot in the side of the distributor body. Remove the fixed contact plate by releasing the single screw.

Remove the capacitor after removing its securing Phillips screw and release the vacuum control link spring from the moving contact breaker plate.

Remove the two screws securing the base plate to the distributor body and withdraw the base plate. Separate the moving contact breaker plate and base plate by turning the base plate.

Remove the peg securing the distributor shaft to the driving spindle, when the spindle can be withdrawn from the shaft. The peg is peened over at both ends and the peening must be filed off before the peg can be tapped out.

The distributor shaft, cam, and centrifugal timing control can be pressed upwards through the distributor body. Remove the cam fixing screw from the top of the driving shaft and withdraw the cam and centrifugal timing control.

To release the vacuum control from the distributor remove the spring circlip from the micrometer adjusting screw, remove the knurled adjusting nut with the spring, and withdraw the vacuum unit complete, taking care not to lose the coil springs and ratchet under the micrometer nut.

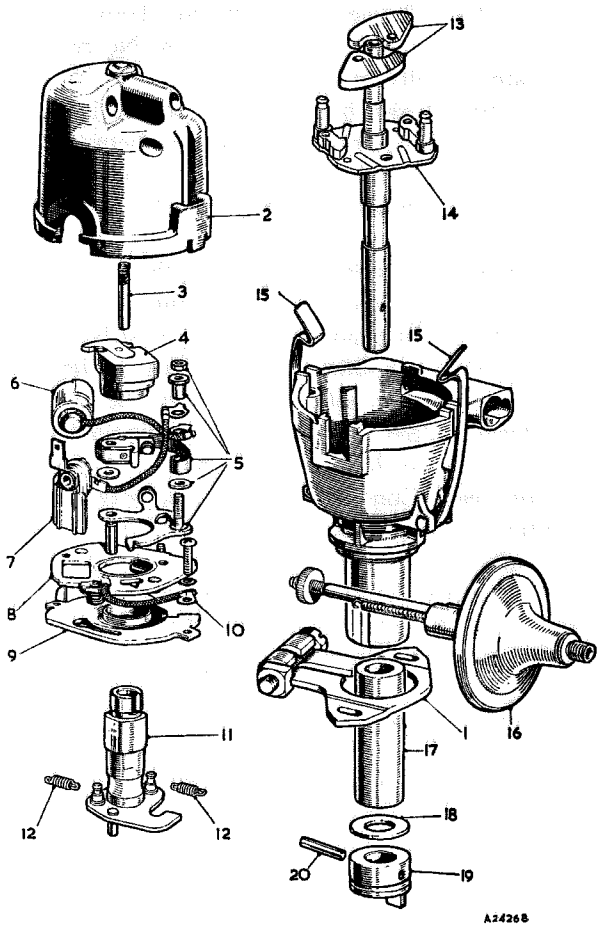

Fig. B.2
The distributor

1. Clamping plate.
2. Moulded cap.
3. Brush and spring.
4. Rotor arm.
5. Contacts (set).
6. Capacitor.
7. Terminal and lead (low-tension).
8. Moving contact breaker plate.
9. Contact breaker base plate.
10. Earth lead.
11. Cam.
12. Automatic advance springs.
13. Weight assembly.
14. Shaft and action plate.
15. Cap retaining clips.
16. Vacuum unit.
17. Brush.
18. Thrust washer.
19. Driving dog.
20. Pin.

Release the clamp bolt and remove the clamp plate from the distributor.

Clean the distributor cover and examine it for signs of cracks and evidence of 'tracking', i.e. a conducting path may have formed between adjacent segments. This is indicated by a thin black line between the segments; when this has occurred the cover should be renewed.

Ensure that the carbon brush moves freely in the distributor cover. Examine the attachment of the metal electrode to the rotor moulding, and if slack or abnormally burned renew the rotor.

The contact face of the contact breaker points should present a clean, greyish, frosted appearance. If burned or blackened, renew the contact set or polish the contact face of each point with a fine oil-stone, working with a rotary motion. Care should be taken to maintain the faces of the points flat and square, so that when re-assembled full contact is obtained. Clean the points thoroughly in petrol.

Check that the movable contact arm is free on its pivot without slackness.

Check the contact breaker spring tension, using a small spring scale. The tension measured at the contacts should be within the limits of 20 to 24 oz. (567 to 679 gm.). If necessary, reset the spring by bending.

Check the centrifugal timing control balance weights and pivot pins for wear, and renew the cam assembly or weights if necessary.

The cam assembly should be a free sliding fit on the driving shaft. If the clearance is excessive, or the cam face is worn, renew the cam assembly or shaft as necessary.

Check the fit of the shaft in the body bearing bushes. If slack, renew the bushes and shaft as necessary. Press out the old bushes. The new bushes should be allowed to stand completely immersed in thin engine oil for 24 hours, or alternatively for two hours in oil which has been heated to 212° F. (100° C.), before pressing them into the distributor body.

Reassembly of the distributor is a reversal of the dismantling procedure, noting the following points:

(1) Apply a few drops of engine oil to the centrifugal timing control mechanism and cam bearing.
(2) Lightly smear the cam surface with engine oil.
(3) Apply a drop of engine oil to the top of the pivot on which the moving contact fibre rocker arm works.
(4) Secure the distributor shaft to the driving spindle with a new peg; peen over both ends of the peg.
(5) Be sure to connect the internal cables correctly.
(6) Adjust the contact breaker points.

Section B.9

TIMING THE IGNITION

If at any time the distributor has been disturbed adjust the ignition timing as follows.

Remove the rocker cover so that the valve action can be observed. Rotate the engine with the starting-handle until the arrow on the timing case and the hole or notch in the crankshaft pulley are in alignment and adjacent to each other with No. 1 piston on the compression stroke. Rotate the engine back 6°, using a degree plate on the crankshaft pulley. The ignition should be set at this point. Set the micrometer adjustment on the distributor in its central position and remove the distributor cover and rotor. Slacken the distributor clamp bolt and turn the distributor casing in an anti-clockwise direction until the contact breaker points are fully closed, then gradually turn the distributor in a clockwise direction until the contact breaker points just commence to open. Secure the distributor clamp bolt. When installing the rotor and cover it will be noted that the rotor electrode is just approaching one of the metal segments in the cover. The high-tension cable from the terminal of this segment should be connected to No. 1 sparking plug with the other plugs connected in the firing order sequence of 1, 3, 4, 2.

NOTE.—A further method to determine the actual position at which the points break contact is to switch on the ignition, disconnect the centre high-tension cable from the distributor cover, and, holding it to form a small gap with some nearby metal part, turn the distributor in a clockwise direction. There will be a spark across the gap immediately the points open; this is the exact firing position in which the distributor should be locked.

A further method is to connect a test lamp in parallel with the distributor points and bring the timing mark up to 6° B.T.D.C., when the lamp should light up.

Section B.10

COIL

The coil does not require any attention beyond seeing that the terminal connections and the coil mounting bolts are tight, and that the exterior is kept clean and dry, particularly between the terminals.

Section B.11

SPARKING PLUGS

●It is recommended that the plugs be inspected, cleaned, and tested at regular intervals as stated in the Driver's Handbook.●

When sparking plugs are removed from the engine their gaskets should be removed with them and replaced on the plugs which should be placed in a suitable holder. It is advisable to identify each plug with the number of the cylinder from which it was removed so that any faults revealed on examination can be traced back to the cylinder concerned.

When examining the plugs place a new plug of the same type beside the others to afford a ready comparison of the relative condition of the used plugs.

Examine for signs of oil fouling. This will be indicated by a wet, shiny, black deposit on the insulator. This is caused by oil pumping due to worn cylinders and pistons or gummed-up or broken rings. Under such conditions oil from the cylinder walls is forced up past the rings on the suction stroke of the piston and is eventually deposited on the plugs.

A permanent remedy for this cannot be effected, the only cure being the fitting of a new piston and rings, or, in extreme cases, a rebore may be necessary.

Next examine the plugs for signs of petrol fouling. This is indicated by a dry, fluffy, black deposit which is usually caused by over-rich carburation, although

ignition defects such as a run-down battery, faulty distributor, coil or capacitor defects, or a broken or worn-out cable may be additional causes. If the plugs appear to be suitable for further use proceed to clean and test them.

First remove the plug gaskets and examine them for condition. A large proportion of the heat of the plug is normally dissipated to the cylinder head through the gasket between the plug and the head. Plugs not screwed down tightly can easily become overheated so that they operate out of their proper heat range, thus producing pre-ignition, short plug life, and 'pinking'. On the other hand, it is unnecessary and unwise to tighten up the plugs too much. What is required is a reasonably good seal between the plug and the cylinder head.

If the plugs require cleaning it is preferable to make use of a proper plug cleaner of the type recommended by the plug manufacturers, and the makers' instructions for using the cleaner should be followed carefully.

Occasionally a blistered insulator or a badly burnt electrode may be noticed when examining the plugs.

If the plug is of the type normally recommended for the engine and it was correctly installed (down tightly on the gasket), this condition may have been brought about by a very weak mixture or an overheated engine. There is, however, a possibility that a plug of another type is required, but as a rule the recommended plug should be adhered to.

After cleaning carefully, examine the plugs for cracked insulators and wear of the insulator nose due to excessive previous cleaning. In such cases the plugs have passed their useful life and new plugs should be installed.

Examine the insulator for deposits underneath the side electrode which have possibly accumulated and which act as a 'hot-spot' in service.

After cleaning the plugs in a special cleaner blow all surplus abrasive out of the body recesses, and off the plug threads, by means of an air blast. Next examine the threads for carbon. Any deposits can be removed and the threads cleaned with a wire brush. A wire buffing wheel may also be utilized, but reasonable care must be used in both methods in order not to injure the electrodes or the tip of the insulator. This simple procedure will ensure absence of binding on the threads on replacement and also obviate unnecessary use of the plug spanner.

The thread section of the plug body is often neglected when cleaning the plugs, owing to the fact that it is not generally realized that, like the gaskets, the threads are a means of heat dissipation and that when they are coated with carbon the flow of the heat from the plug is retarded, producing overheating.

When replacing a plug always screw it down finger tight, then use a socket to avoid possible fracture of the insulator.

Examine the electrodes for the correct gap (see **'GENERAL DATA'**). Watch out for an incorrect reading in the case of badly pitted electrodes.

Remember that electrode corrosion and the development of oxides at the gap area vitally affects the sparking efficiency. The special cleaner can remove the oxides and deposits from the insulator, but the cleaner stream does not always reach this area with full effect owing to its location, and cannot necessarily deal with corrosion effectively as this sometimes requires too strong a blast for proper removal.

When the plugs appear worthy of further use it is good practice to dress the gap area on both centre and side electrodes with a small file before resetting them to the correct gap. The intense heat, pressure, explosion shock, and electrical and chemical action to which the plugs are submitted during service are so intense that the molecular structure of the metal points is eventually affected. Plugs then reach a worn-out condition and resetting the points can no longer serve a good purpose. When the points are burnt badly it is indicative that the plug has worn to such an extent that its further use is undesirable and wasteful.

Before replacing the plug in the engine, test it for correct functioning under air pressure in a plug tester, following out the instructions issued by the makers of the plug tester. Generally speaking, a plug may be considered satisfactory for further service if it sparks continuously under a pressure of 100 lb./sq. in. (7 kg./cm.^{2}) with the gap between the points set at ·025 in. (·63 mm.). It is essential that the plug points should be reset to the recommended gap before the plug is refitted to the engine (see **'GENERAL DATA'**).

While the plug is under pressure in the tester it should be inspected for leakage by applying oil round the terminal. Leakage is indicated by the production of air bubbles, the intensity of which will serve to indicate the degree of leakage. The leakage gases have a 'blow-torch' effect when the engine is running which rapidly raises the temperature of the plug to above its designed heat range, thus producing overheating, pre-ignition, and rapid electrode destruction.

The top half of the insulator is frequently responsible for poor plug performance due to the following faults: splashes; accumulation of dirt and dust; cracked insulators, caused by a slipping spanner; overtightness of the terminals.

Examine for a cracked insulator at the shoulder and the terminal post and remove any accumulations of dirt and dust.

25D4 DISTRIBUTOR TEST DATA

Centrifugal advance (vacuum pipe disconnected)

No advance below 180 crankshaft r.p.m.
18 to 22° advance up to 1,800 crankshaft r.p.m.
18 to 22° advance decelerating to 1,400 crankshaft r.p.m.
11 to 15° advance decelerating to 1,000 crankshaft r.p.m.
2 to 6° advance decelerating to 500 crankshaft r.p.m.
0 to 2° advance decelerating to 250 crankshaft r.p.m.

Vacuum advance

Starts at 7 in. Hg. (177·8 mm. Hg.).
Finishes at 18 in. Hg. (457·2 mm. Hg.).

SECTION C

THE COOLING SYSTEM

(PETROL MODELS)

	Section
Cold weather precautions	C.5
Description	C.1
Draining, flushing, and refilling the cooling system	C.4
Fan and dynamo belt adjustment	C.6
Filler cap—removing	C.3
Radiator—removing and replacing	C.7
Service tools	End of Section
Thermostat	C.2
Water pump	
Dismantling and reassembling	C.9
Removing and replacing	C.8

Section C.1

DESCRIPTION

The cooling system is pressurized and the water circulation is assisted by a pump attached to the front of the engine and driven by a belt from the crankshaft pulley. A relief valve is incorporated in the radiator filler cap which controls the pressure at approximately 4 lb./sq. in. (·28 kg./cm.^{2}).

The water circulates from the base of the radiator and passes round the cylinders and cylinder head, reaching the header tank of the radiator via the thermostat and top hose. From the header tank it passes down the radiator core to the base tank of the radiator. Air is drawn through the radiator by a fan attached to the water pump pulley.

Section C.2

THERMOSTAT

For maximum efficiency the engine operating temperature is maintained within certain limits by a bellows-type thermostat fitted in the water outlet at the front of the cylinder head.

When the engine is cold this valve is closed, and when the engine is started the flow of water to the radiator is temporarily restricted. Due to this, the temperature of the water in the cylinder head and cylinder jackets will quickly rise, thus ensuring rapid warming up. The heat so generated will gradually expand the bellows, so opening the valve and ultimately permitting a full flow of water to the radiator.

The thermostat is detachable.

A small hole drilled in the head of the valve provides a by-pass to cope with any expansion of the cooling water. When the system has been completely drained it is essential when refilling, to allow sufficient time for any trapped air to escape through the by-pass hole in the valve before finally topping up.

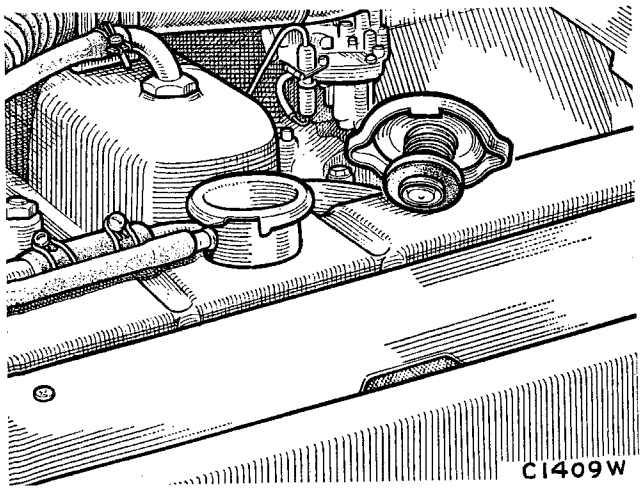

Fig. C.1

Showing the radiator header tank and filler cap

The thermostat opening is set by the manufacturer and cannot be altered. It opens at the temperature marked on the body of the thermostat. During decarbonizing it is policy to test this opening by immersing the thermostat in water raised to the requisite temperature. The valve should open under these conditions, but if it fails to open a new unit must be fitted.

Section C.3

REMOVING THE FILLER CAP

The cooling system is under pressure while the engine is hot, and the radiator filler cap must be removed very carefully or left in position until the water has cooled.

If it is necessary to remove the filler cap when the engine is hot it is absolutely essential to release the cap gradually, and the filler spout is provided with a specially shaped cam to enable this to be done easily.

Unscrew the cap slowly until the retaining tongues are felt to engage the small lobes on the end of the filler spout cam, and wait until the pressure in the radiator is fully released before finally removing the cap.

It is advisable to protect the hand against escaping steam while removing the cap.

Section C.4

DRAINING, FLUSHING, AND REFILLING THE COOLING SYSTEM

Remove the radiator header tank filler cap.

Open the two drain taps. One is fitted on the cylinder block and the other at the base of the radiator. If anti-freeze mixture is being used it should be drained into a suitable container and carefully preserved for future use.

In the event of a drain tap becoming clogged it is advisable to completely remove the tap from the cylinder block or radiator and then remove any foreign matter. The use of stiff wire to dislodge any obstruction will not always prove effective as the construction of the taps is such as to prevent complete penetration behind them.

When the system is completely drained and refilling is to be deferred until some later date a suitable notice should be fixed to the radiator filler cap, indicating that the coolant has been drained. As an alternative, place the radiator filler cap on the driver's seat or leave the filler cap access panel open as a reminder to fill the cooling system before the vehicle is used again.

NOTE.—If a heater is fitted, under no circumstances should draining of the cooling system be resorted to as an alternative to the use of anti-freeze mixture, due to the fact that complete draining of the heater unit by means of the cooling system drain taps is not possible.

To ensure efficient circulation of the coolant and to reduce the formation of scale and sediment in the radiator the system should be periodically flushed out with clear running water, preferably before putting in anti-freeze solution and again after taking it out.

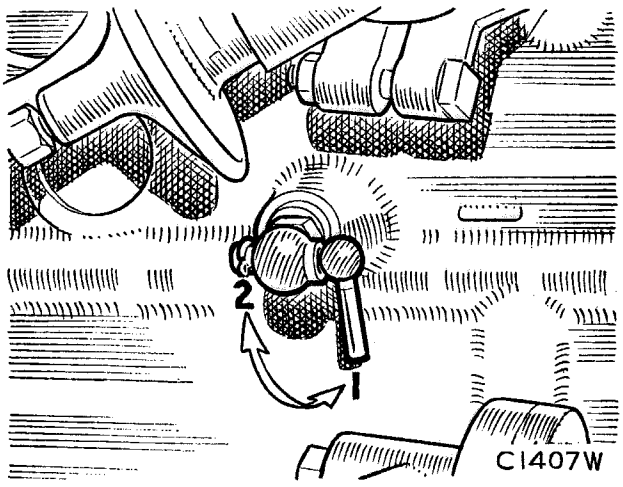

Fig. C.2
The cylinder block drain tap
1. Closed. 2. Open.

The water should be allowed to run through until it comes out clear from the taps.

This method is adequate under normal conditions, but in extreme cases where excessive 'furring up' is experienced a more efficient method is to completely remove the radiator and flush in the reverse way to the flow, i.e. turn the radiator upside-down and let the water flow in through the bottom hose and out of the top connection.

Close the radiator and cylinder block drain taps.

Ensure that all hose connections are tight.

Fill up the system through the filler in the radiator header tank until the level of water can just be seen. Run the engine until it is hot and then add sufficient water to raise the level to within 1 in. (25 mm.) of the bottom of the filler neck.

When possible, soft water, such as clean rain-water, should be used to fill the system.

When using anti-freeze solution avoid overfilling and prevent loss due to expansion. Screw the filler cap firmly into position.

The cooling system is unsuitable for use with anti-freeze solutions having an alcohol base owing to the high temperatures attained in the top tank. Only anti-freeze solutions of the ethylene glycol type incorporating the correct type of corrosion inhibitor should be employed (see Section C.5).

Section C.5

COLD WEATHER PRECAUTIONS

As the cooling system is sealed, relatively high temperatures are developed in the radiator upper tank. For this reason anti-freeze solutions having an alcohol base are unsuitable owing to their high evaporation rate producing rapid loss of coolant and a consequent interruption of the circulation of coolant.

Only anti-freeze solution of the ethylene glycol type incorporating the correct type of corrosion inhibitor is suitable for use in the cooling system, and the recommended make is Bluecol. We also approve the use of any anti-freeze solution which conforms to Specification B.S.3151 or B.S.3152. The anti-freeze solution should be made up in the proportions shown in the table below.

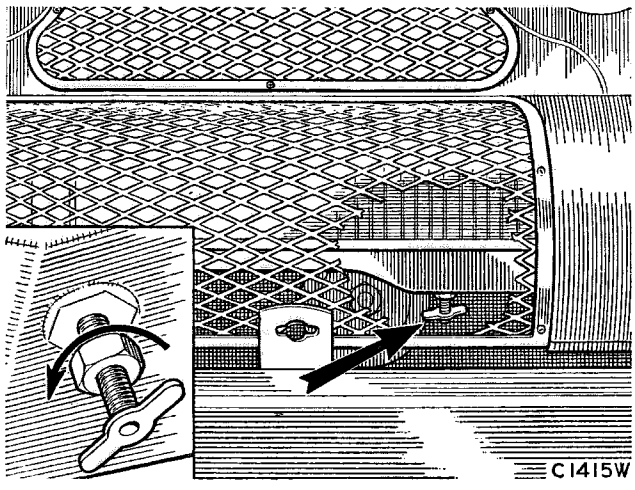

Fig. C.3
The radiator drain tap. Turn in the direction of the arrow to close

Anti-freeze (%)	*Commences to freeze*		*Amount of anti-freeze*					
			Frozen solid		*With heater*		*Without heater*	
	° C.	° F.	° C.	° F.	*Pints*	*Litres*	*Pints*	*Litres*
25	−13	9	−26	−15	5½	3·2	5¼	3·0
33⅓	−19	−2	−36	−33	7½	4·3	7	4·0
50	−36	−33	−48	−53	11	6·3	10½	6·0

It is advisable for vehicles with an anti-freeze solution

WATER PUMP COMPONENTS

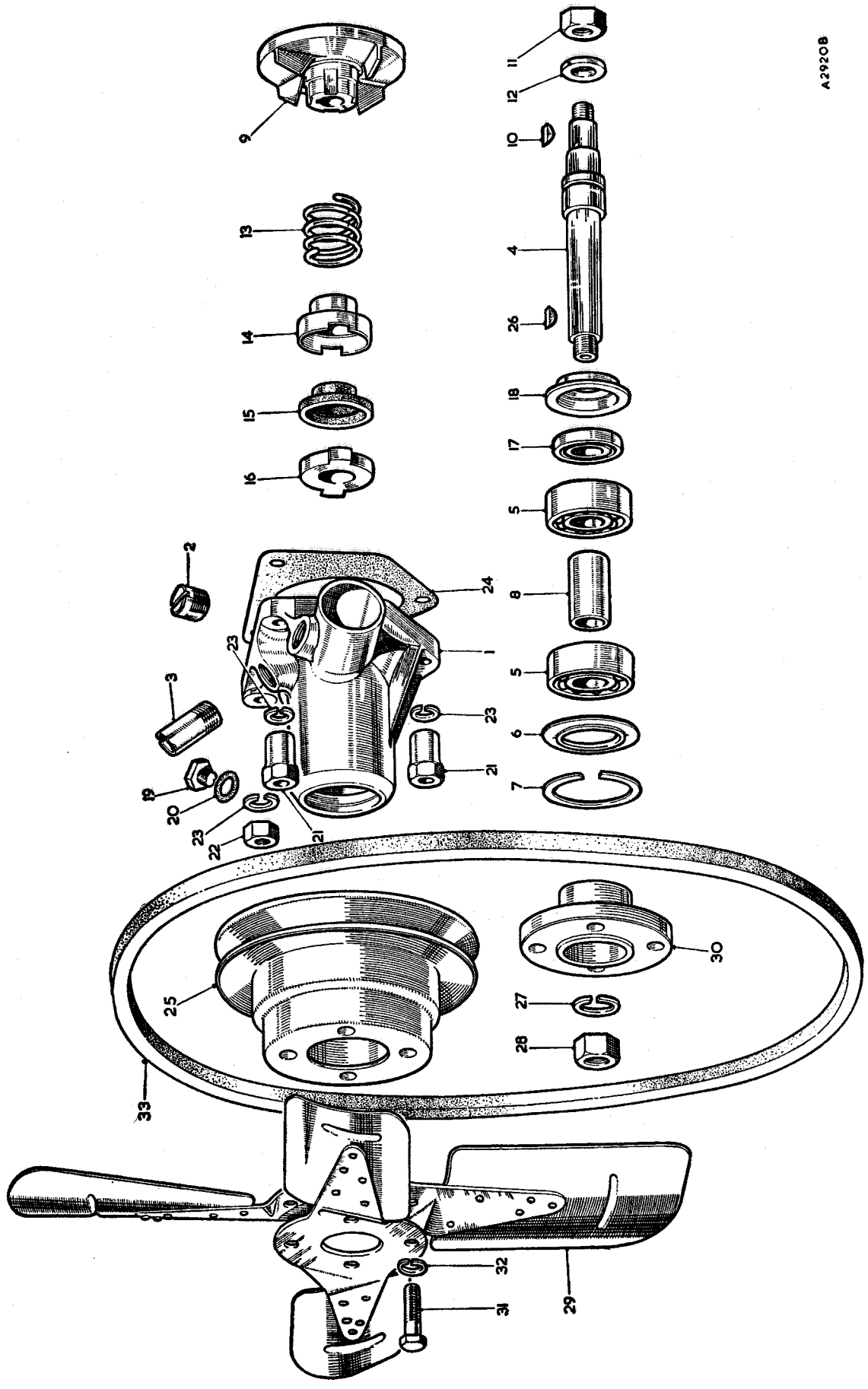

KEY TO THE WATER PUMP COMPONENTS

No.	*Description*
1.	Water pump body.
2.	Plug—heater connection.
3.	Adaptor for by-pass.
4.	Spindle.
5.	Bearing for spindle.
6.	Grease retainer.
7.	Spring ring.
8.	Distance piece.
9.	Vane.
10.	Key for vane.
11.	Nut—vane to spindle.
12.	Fibre washer.
13.	Gland spring.
14.	Locating cup.
15.	Rubber seal.
16.	Sealing ring.
17.	Oil seal.
18.	Oil seal housing.
19.	Lubricant plug.
20.	Fibre washer.
21.	Shouldered nut.
22.	Plain nut.
23.	Spring washer.
24.	Joint washer.
25.	Pulley.
26.	Key for hub.
27.	Spring washer.
28.	Nut—hub to spindle.
29.	Fan blades.
30.	Hub for pulley.
31.	Screw—fan to pulley.
32.	Spring washer.
33.	Fan belt.

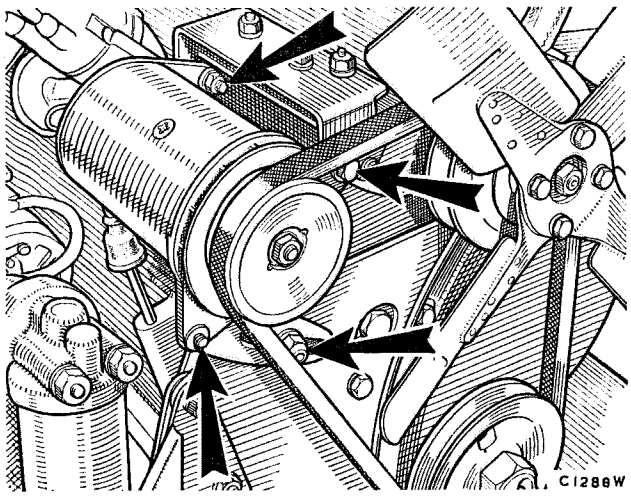

Fig. C.4

The dynamo mounting points which must be slackened for belt tension adjustment

in the cooling system to have an identification mark on the header tank of the radiator.

The following precautions are necessary on vehicles so marked.

Ensure that the mixture strength is to that shown on the container of the anti-freeze solution used. This must be maintained by topping up as necessary with anti-freeze solution while the system is hot. Topping up with water alone will reduce the protection provided.

Should anti-freeze be retained in the cooling system for more than one year the specific gravity of the coolant must be checked and additional anti-freeze added to ensure adequate protection against frost. After a second winter the system should be drained and refilled with clean water and the appropriate quantity of anti-freeze solution added when required.

Before inserting anti-freeze solution into the cooling system, flush the system thoroughly with a hose, ensure that all water joints are tight, and defective water hoses renewed.

Section C.6

FAN AND DYNAMO BELT ADJUSTMENT

To fit a new fan belt slacken slightly the two bolts on which the dynamo pivots and release the bolt securing it to the slotted link and the nut securing the slotted link to the engine. Move the dynamo to the engine as far as possible. Slide the belt over the fan and onto the fan pulley; ease the belt onto the crankshaft pulley and dynamo pulley. It may be found helpful to turn the engine with the starting-handle whilst easing the belt over the dynamo pulley.

Adjustment is made by moving the dynamo away from the engine. **A gentle hand pull only must be exerted on the dynamo, or the belt tension will be excessive and undue strain will be thrown onto the dynamo bearings.** Tighten up the bolts with the dynamo in this position. The belt should be sufficiently tight to prevent slip, yet it should be possible to move the belt laterally 1 in. (25·4 mm.) in the centre of its longest run.

Section C.7

REMOVING AND REPLACING THE RADIATOR

Disconnect the battery and drain the cooling system (two taps).

Take out the screws which secure the radiator centre top blanking plate and remove the plate. This will give access to the radiator mounting points.

Detach the upper and lower hoses. Take out the set pins which secure the radiator to its mounting frame and lift it out of the vehicle.

Replacement of the radiator is a reversal of the above procedure.

Close the drain taps and refill the system until the surface of the coolant is 1 in. (25·4 mm.) below the bottom of the filler neck.

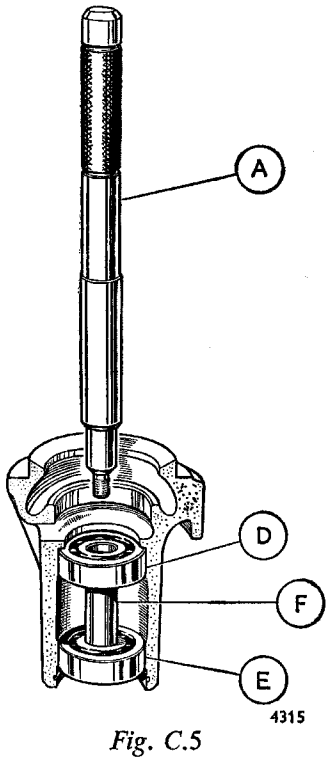

Fig. C.5

This cut-away view of the water pump shows the special driver about to enter the rear bearing for removal. The rear bearing felt and retainers are not shown here

A. Drift.
D. Rear bearing.
E. Front bearing.
F. Distance piece.

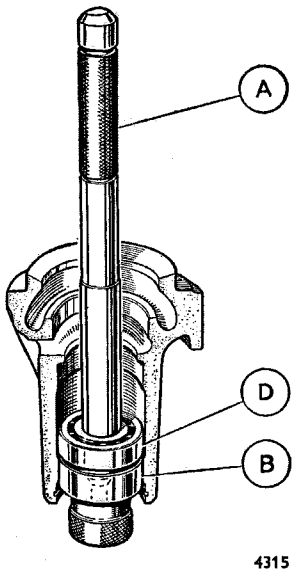

Fig. C.6

Here the dummy front bearing is in position and the driver is screwed into it. This is the method of removing the rear bearing

A. Drift. B. Dummy front bearing. D. Rear bearing.

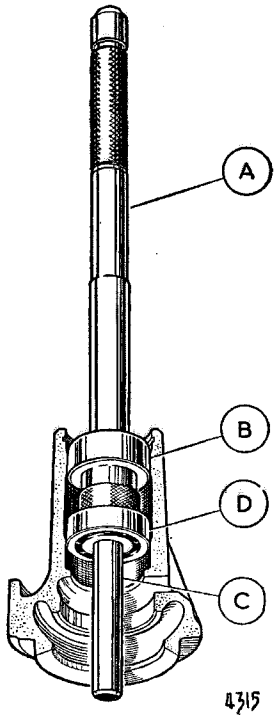

Fig. C.7

When reassembling the pump use tool assembled as shown and thread the rear bearing onto the pilot with the felt ring and retainers. (Felt and retainers are not shown here)

A. Drift. B. Dummy front bearing. C. Pilot. D. Rear bearing

Section C.8

REMOVING AND REPLACING THE WATER PUMP

Drain the water from the cooling system as in Section C.4 and remove the radiator as in Section C.7.

Disconnect the hoses from the water pump.

Remove the fan belt (see Section C.6).

Release the securing points of the fan and pump assembly to the front of the cylinder block and withdraw the assembly.

Replacement of the fan and pump assembly is a reversal of this procedure, but care must be taken to see that the joint gasket between the pump body and the cylinder block is in good condition. It is always advisable to fit a new gasket.

Section C.9

DISMANTLING AND REASSEMBLING THE WATER PUMP

Unscrew the four set bolts which attach the fan blades to the pulley hub and remove the blades and pulley.

Remove the nut from the front end of the spindle, withdraw the fan pulley, and take out the key. Holding the pump body, tap the spindle towards the rear together with the impeller, spring, and seal assembly.

Next prise out the spring ring and remove the oil retaining ring. With the body face downwards, insert the drift of tool 18G61 into the rear bearing and tap with a hammer until the front bearing and distance piece are removed.

The dummy front bearing of tool 18G61 is then placed in the body and the drift, which is still piloted in the rear bearing, screwed into it. Tap the drift with a hammer to release the bearing and seal.

When the nut on the rear end of the spindle is removed it will enable the impeller and key to be withdrawn, followed by the spring, locating cup, rubber seal and sealing ring, the latter registering within the locating cup.

Secure the pump body vertically in a vice. Assemble the drift, dummy front bearing, and pilot so that the rear bearing and seal can be accurately driven into the housing. The front bearing and distance piece are similarly fitted. Fit the vane, spindle, and other parts in the order shown in the illustration.

Repack the pump with the recommended grease.

(*For* 'SERVICE TOOLS' *see page C.8*)

SERVICE TOOLS

18G61. Water Pump Bearing Remover and Replacer

This tool, consisting of three parts—a driver, dummy front bearing, and a pilot—will ensure that the rear bearing is removed and replaced without damage to the pump body.

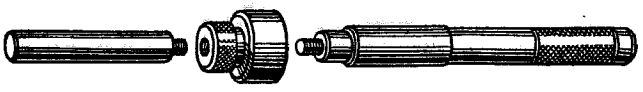

AD922

18G187. Radiator Reverse-flush Adaptors

These adaptors should be used in pairs, one for the radiator inlet hose and one for the outlet hose. The brass inlet pipe is 1 in. (25·4 mm.) in diameter. This is the size of the water mains supply hose generally used; if there is any variation a reducing sleeve can be used.

9190

SECTION Ca

THE COOLING SYSTEM

(DIESEL MODELS)

	Section
Cold weather precautions	Ca.5
Description	Ca.1
Draining, flushing, and refilling the cooling system	Ca.4
Fan and dynamo belt adjustment	Ca.6
Filler cap—removing	Ca.3
Radiator—removing and replacing	Ca.7
Service tools	End of Section
Thermostat	Ca.2
Water pump	
Dismantling and reassembling	Ca.9
Removing and replacing	Ca.8

THE WATER PUMP COMPONENTS

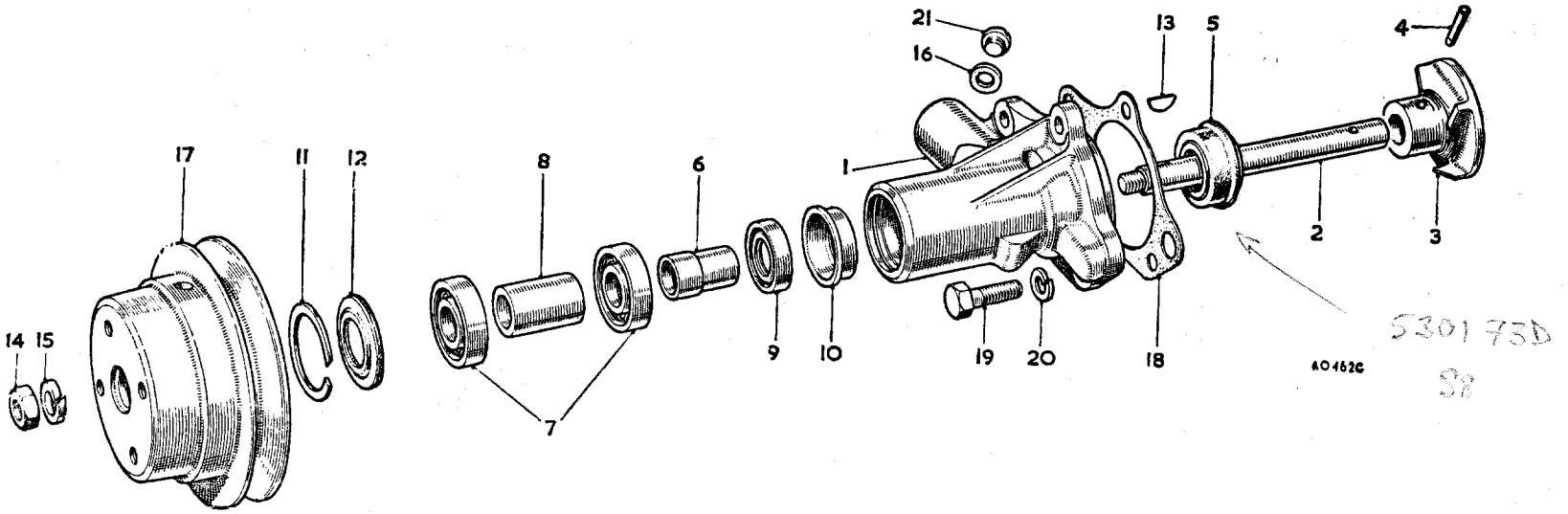

No.	*Description*	*No.*	*Description*	*No.*	*Description*
1.	Body.	8.	Distance piece for bearing.	15.	Spring washer.
2.	Spindle.	9.	Seal—oil.	16.	Washer for plug (fibre).
3.	Vane.	10,	Housing for seal.	17.	Pulley—fan and water pump.
4.	Taper pin.	11.	Circlip.	18.	Joint—water pump to crankcase.
5.	Seal.	12.	Retainer for bearing lubricant.	19.	Set screw—water pump to crankcase.
6.	Distance piece for vane.	13.	Key.	20.	Spring washer.
7.	Bearing spindle.	14.	Nut for spindle.	21.	Plug—lubrication.

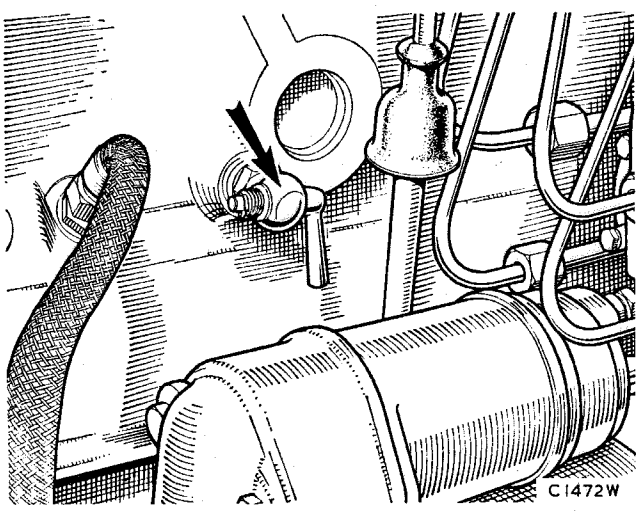

Fig. Ca.1
The cylinder block water drain tap

Section Ca.1

DESCRIPTION

The instructions given in Section C.1 are to be followed.

Section Ca.2

THERMOSTAT

The instructions given in Section C.2 are to be followed.

Section Ca.3

REMOVING THE FILLER CAP

The instructions given in Section C.3 are to be followed.

Section Ca.4

DRAINING, FLUSHING, AND REFILLING THE COOLING SYSTEM

The instructions given in Section C.4 are to be followed. Refer also to Fig. Ca.1.

Section Ca.5

COLD WEATHER PRECAUTIONS

The instructions given in Section C.5 are to be followed.

Section Ca.6

FAN AND DYNAMO BELT ADJUSTMENT

The instructions given in Section C.6 are to be followed. Refer also to Fig. Ca.2.

Section Ca.7

REMOVING AND REPLACING THE RADIATOR

The instructions given in Section C.7 are to be followed.

Section Ca.8

REMOVING AND REPLACING THE WATER PUMP

The instructions given in Section C.8 are to be followed.

Section Ca.9

DISMANTLING AND REASSEMBLING THE WATER PUMP

Remove the nut and spring washer from the front end of the water pump spindle; withdraw the pulley, using a suitable extractor, and remove the pulley key from the spindle.

Carefully remove any burrs from the spindle keyway and, using a hollow brass drift, drive the spindle and vane out of its bearings. Withdraw the vane distance piece and the water seal from the rear of the pump body.

Extract the bearing circlip from its groove in the front of the pump body; withdraw the dished grease retainer and, using tool 18G61, drive the bearings out of the pump body as follows.

Insert the driver (A, Fig. C.5) into the rear bearing (D) and tap it downwards until the front bearing (E) and the distance piece (F) are released.

Position the dummy front bearing (B) in the pump body and screw the driver into the dummy bearing (Fig. C.6). The rear bearing is now aligned with the housing and may be gently tapped out.

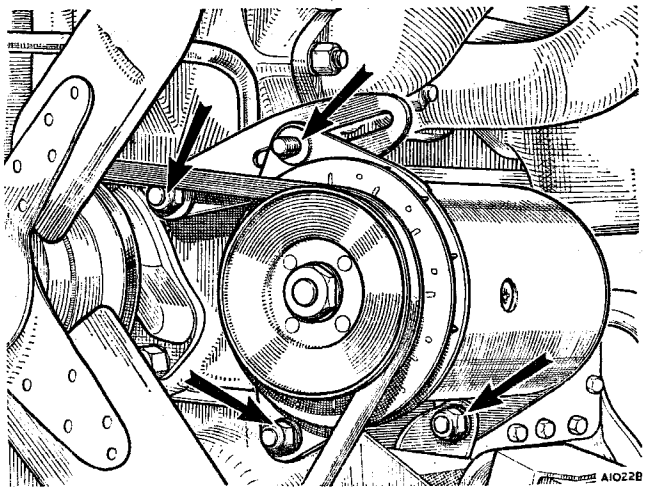

Fig. Ca.2
The dynamo attachment bolts and nuts

Remove the bearing oil seal and its housing.

Reassembly is a reversal of the dismantling procedure, but to install the rear bearing assemble the three parts of tool 18G61, thread the bearing onto the pilot as shown in Fig. C.7, together with the oil seal and oil seal housing, ensuring that the lip of the oil seal faces towards the bearing, and gently drive the bearing into its housing.

Repack the bearings with one of the recommended greases.

SERVICE TOOLS

The instructions given in Section C are to be followed.

SECTION D

THE FUEL SYSTEM

(PETROL MODELS)

	Section
Air cleaner	
Cleaning and re-oiling	D.8
Carburetter	D.9
Fuel lift pump	
Description	D.3
Dismantling and reassembling	D.6
Operation	D.4
Removing and replacing	D.5
Testing	D.7
Fuel tank	
Gauge unit—removing and replacing	D.2
Removing and replacing	D.1

Section D.1

REMOVING AND REPLACING THE FUEL TANK

Remove the passenger's seat cushion and seat box cover plate.

Disconnect the wires from the tank gauge unit. Drain the fuel from the tank and disconnect the fuel pipe from the tank.

From inside the body remove the cowl surrounding the filler neck. Release the clip and remove the upper part of the filler neck.

Release the bolts of the securing straps from the under side of the tank and lower the tank to the ground. The straps remain fixed at the top.

Replacement is a reversal of the above instructions.

Section D.2

REMOVING AND REPLACING THE FUEL TANK GAUGE UNIT

Remove the hexagon drain plug and empty the tank.

Remove the passenger's seat cushion and seat box cover plate.

Remove the lead from the gauge unit.

Unscrew the six cross-headed screws securing the gauge unit in the forward end of the tank.

Extract the gauge unit, taking particular care not to bend the float arm as the unit is withdrawn.

Before replacing the gauge unit ensure that all traces of the old gasket are removed from both the tank and the unit. Always use a new gasket and apply a suitable jointing compound to each of the screws before replacing them.

Ensure that the unit takes up its original position in the tank.

Check for leaks immediately after filling the tank with fuel.

Section D.3

DESCRIPTION OF THE FUEL LIFT PUMP

The SP fuel pump is of conventional design, having a flexible diaphragm and an armature assembly operated by a solenoid. The electrical circuit to the solenoid is opened and closed by a contact breaker mechanism operated by an armature spindle. The electrical connections to the pump may be by a terminal knob or a Lucar connector.

The pump consists of three main parts—namely, a body, a diaphragm armature and coil housing assembly, and a contact breaker assembly.

The body is a zinc die-casting and has on its outer face integral inlet and outlet connections and two tapped lugs for mounting purposes. An inlet nozzle that houses a filter is screwed into the inlet connection; the outlet connection is pressed into the body and is not detachable.

Two seatings machined within the body accommodate the inlet valve and the outlet valve respectively. The inlet valve comprises a disc of Melinex film which is lightly loaded onto its seating within the body. The outlet valve, also of Melinex film, is loaded by means of a light spring onto a carrier plate; the plate locates on the remaining seat in the body. The valves are retained on their seats by a valve retainer that is secured to the body by a recessed pan-head screw.

The pumping element comprises a pair of Neoprene diaphragms supported by stiffening washers to prevent flutter and bagging of the diaphragm; breather holes in the inner diaphragm prevent vapour accumulating between the discs. The centre of the diaphragm is clamped to a sintered iron armature by means of a screwed clamping plate and an armature spindle. Eleven brass rollers located between the armature and the coil housing centralize the armature within the housing and also ensure that the periphery of the armature does not contact the mouth of the housing during the power stroke.

A feed spring is interposed between the armature and the solenoid and a rubberized impact washer is located on the face of the armature to reduce noise in operation when the pump is priming.

A central iron core pressed into the blind end of the coil housing supports the solenoid winding. A central bore through the core permits the armature spindle to pass freely through the core to the contact breaker mechanism. An atmospheric vent is provided at the bottom of the coil housing to accommodate the pulsation of air at the coil side of the diaphragm and an earthing screw is provided in the housing flange.

The contact breaker assembly is mounted on a pedestal secured by two screws to the top face of the coil housing. The armature spindle is screwed into a trunnion member which is pivotally mounted within a channel-section inner rocker. One end of the inner rocker is mounted on a common hinge with the end of an outer rocker; the two rockers are mechanically connected through the medium of a toggle spring assembly made up of two springs attached by pivot pins to the extremities of the rocker arms. The pivot pin through the outer rocker also carries two fibre rollers which contact the face of the coil housing during the operation of the pump. A pair of tungsten points on the free end of the outer rocker make contact with a corresponding pair of points carried by a spring blade secured to the upper face of the pedestal. A terminal screw which forms the main electrical connection to the pump is fitted to the upper face of the pedestal and passes through a bakelite cap that encloses the whole of the contact breaker assembly.

From the terminal screw a lead passes to one end of the coil winding and the return lead from the coil is connected to a tag attached to the spring blade. When the contacts are closed the current passes through the contacts to the outer rocker arm, through a braided copper earth wire to one of the pedestal securing screws, and so to the coil housing. The separate earthing screw on the housing completes the circuit. Provision against excessive

THE SP FUEL PUMP

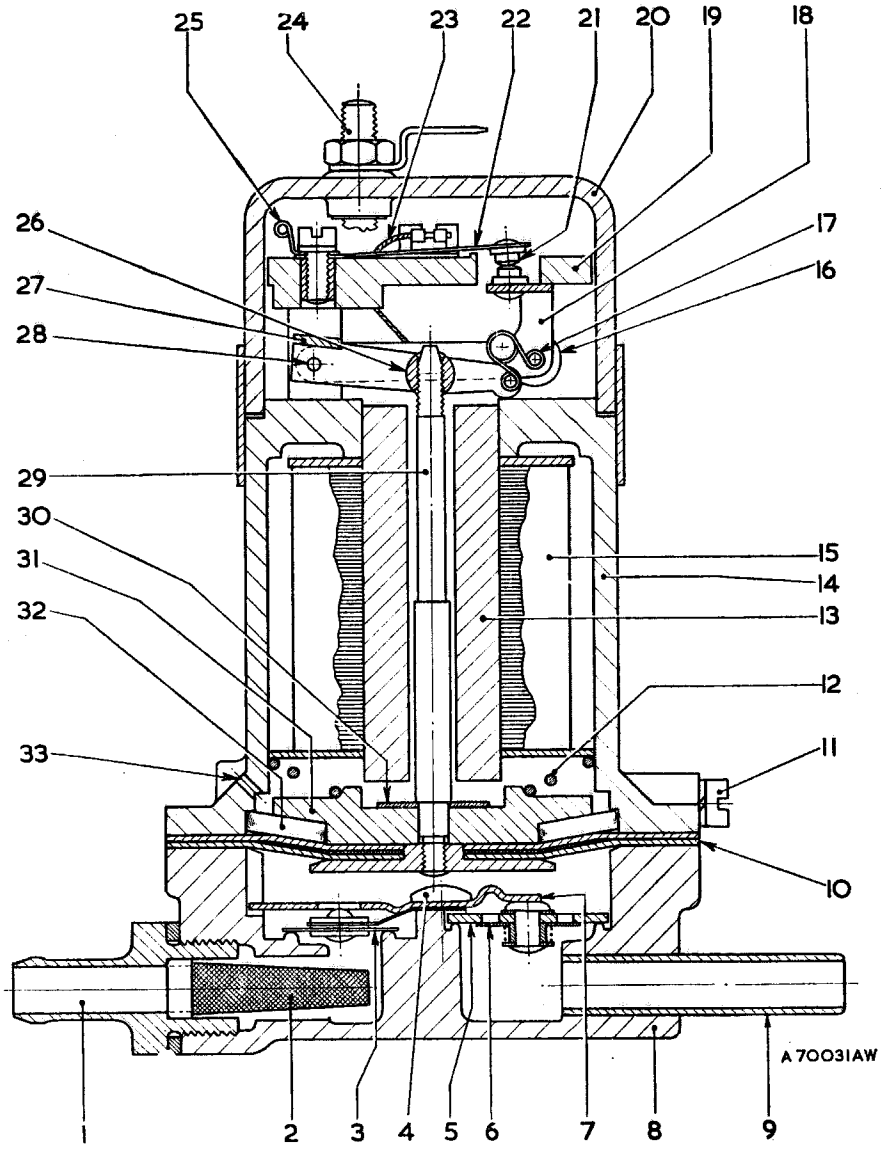

No.	Description	No.	Description	No.	Description
1.	Feed nozzle.	12.	Feed spring.	23.	Braided earth wire.
2.	Filter.	13.	Solenoid core.	24.	Terminal screw.
3.	Inlet valve.	14.	Coil housing.	25.	Coil lead tag.
4.	Screw—valve retainer.	15.	Coil.	26.	Trunnion.
5.	Carrier plate.	16.	Fibre rollers.	27.	Inner rocker.
6.	Delivery valve.	17.	Toggle spring.	28.	Rocker hinge pin.
7.	Valve retainer.	18.	Outer rocker.	29.	Armature spindle.
8.	Body.	19.	Pedestal.	30.	Impact washer.
9.	Outlet connection.	20.	End cap.	31.	Armature.
10.	Diaphragm.	21.	Contact points.	32.	Brass rollers.
11.	Earth screw.	22.	Spring blade.	33.	Air vent.

THE SP FUEL PUMP COMPONENTS

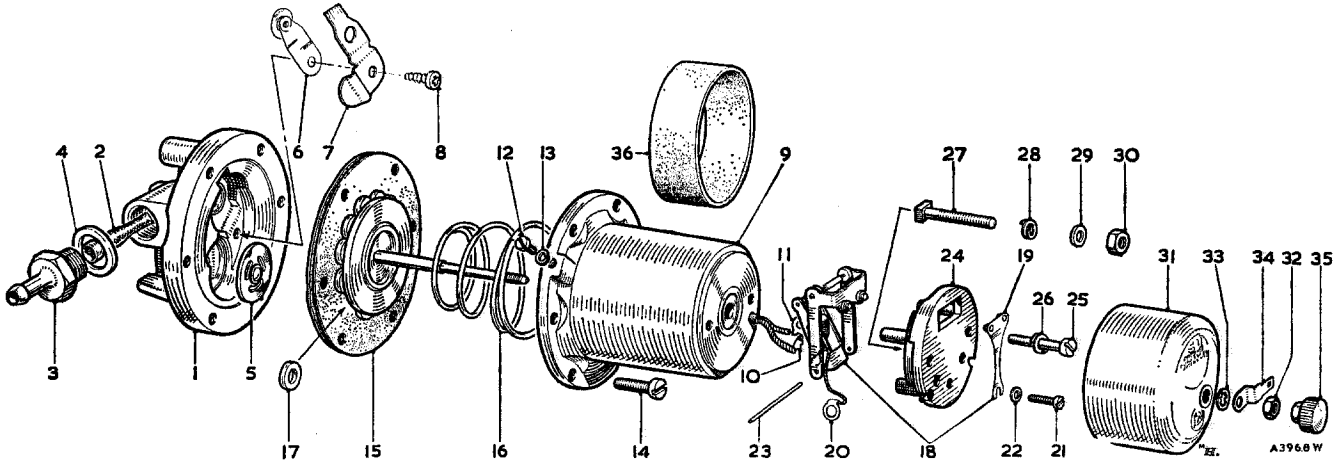

No.	Description	No.	Description	No.	Description
1.	Body.	13.	Washer—spring.	25.	Screw—pedestal to housing.
2.	Filter.	14.	Screw—housing to body.	26.	Washer—spring.
3.	Nozzle inlet.	15.	Diaphragm assembly.	27.	Screw for terminal.
4.	Washer for nozzle.	16.	Spring.	28.	Washer—spring.
5.	Valve—outlet.	17.	Roller.	29.	Washer—lead—for screw.
6.	Valve—inlet.	18.	Rocker and blade.	30.	Nut for screw.
7.	Retainer—valve.	19.	Blade.	31.	Cover—end.
8.	Screw for retainer.	20.	Tag—2 B.A. terminal.	32.	Nut for cover.
9.	Housing—coil.	21.	Screw for blade.	33.	Washer—shakeproof.
10.	Tag—5 B.A. terminal.	22.	Washer—dished.	34.	Connector—Lucar.
11.	Tag—2 B.A. terminal.	23.	Spindle for contact breaker.	35.	Knob—terminal.
12.	Screw—earth.	24.	Pedestal.	36.	Sleeve—rubber.

sparking at the contact points at the moment of break is made by the inclusion of a high-resistance leak wire in the coil winding.

Section D.4

OPERATION OF THE FUEL LIFT PUMP

When the pump is at rest the armature and diaphragm assembly is deflected towards the pumping chamber by the feed spring, the armature spindle retains the inner rocker in its lower position, and the spring toggle retains the outer rocker in its upper position to make firm contact with the points on the spring blade.

When the pump is switched on the solenoid winding is energized and draws the armature and diaphragm assembly towards it, overcoming the loading of the feed spring. The volume of the pumping chamber is thus increased and fuel is drawn in through the inlet valve. Simultaneously the armature spindle rotates the inner rocker about its pivot pin and the toggle spring moves the outer rocker downwards until the fibre rollers contact the upper face of the coil housing. This movement of the outer rocker separates the contact points and de-energizes the solenoid.

The armature and diaphragm assembly, under the action of the feed spring, moves towards the pumping chamber and forces fuel from the chamber out through the delivery valve. As the armature spindle moves with the diaphragm assembly the inner rocker is again rotated about its pivot pin and the toggle spring moves the outer rocker upwards until the points again make contact, when the cycle of operations is repeated.

Section D.5

REMOVING AND REPLACING THE FUEL LIFT PUMP

The fuel pump is housed in the compartment beneath the passenger's seat. Remove the seat cushion and the seat box cover plate to give access to the pump.

Remove the fuel pipes from the inlet and outlet adaptors on the pump body.

Disconnect the electrical leads to the pump, release the mounting bracket and remove the pump from the vehicle.

Replacement is a reversal of the above procedure.

Section D.6

DISMANTLING AND REASSEMBLING THE FUEL LIFT PUMP

Unscrew the inlet nozzle and from it remove the filter and the fibre washer.

Unscrew the six screws securing the coil housing to the body and carefully detach the outer periphery of the diaphragm from the body and the coil housing.

Remove the pan-head recessed screw securing the valve retainer to the body and withdraw the retainer and the two valves.

Unscrew the armature from the inner rocker trunnion and remove the brass rollers, the feed spring, and the impact washer from the armature.

Remove the terminal nut, Lucar connector, and washer from the terminal screw and take off the bakelite cap.

Unscrew the spring blade securing screw and disconnect the coil lead. Remove the terminal screw retaining nut, cut the lead washer, and then unscrew the two pedestal retaining screws and disconnect the braided copper earth lead.

Turn the pedestal on its side, and remove the remaining coil lead from the terminal screw and the screw from the pedestal.

Push the inner and outer rocker pivot pin from the pedestal and remove the rocker assembly.

Do not remove the toggle springs.

Thoroughly clean all parts of the pump in clean kerosene and then examine for cracks, fractures, wear, deterioration, and thread damage. Worn or damaged parts must be renewed.

Metal parts that have been contaminated with gum formation from the fuel will be coated with a substance similar to varnish. Brass and steel parts so affected are to be boiled in a 20 per cent. solution of caustic soda, dipped in a strong nitric acid solution, and, finally, thoroughly washed in boiling water. Light-alloy parts must be well soaked in methylated spirit and then cleaned.

Check the weight of the feed spring; it must compress to a length of ·1 in. (2·54 mm.) under a load of between 7½ and 8 lb. (3·42 and 3·62 kg.).

Examine the outlet valve and ensure that the valve spring functions correctly. Assemble the valves to their respective seats, retain them with the valve retainer, and test each valve in turn by alternately sucking and blowing at the inlet and at the outlet connection. The inlet valve must unseat when blowing through the inlet connection and seat when sucking at the connection. The outlet valve seat must seat when blowing through the outlet connection and unseat when sucking.

Examine the contact breaker points. If burning or pitting of the points is evident, the rocker assembly and the spring blade must be renewed.

Place the valves on their respective seats and retain them with the valve retainer.

Insert the filter into the nozzle, fit a new fibre washer to the nozzle, and then screw the nozzle into the inlet connection.

Secure the free ends of the rocker assembly to the pedestal with the pivot pin.

Fit the terminal screw to the pedestal and replace the spring washer and the short lead from the coil. Fit a new lead washer to the terminal screw and secure it with the nut.

Connect the braided copper earth lead from the outer rocker to the nearest pedestal securing screw and ensure

that the tag is next to the head of the screw. Secure the pedestal to the face of the coil housing with the two spring washers and screws.

Fit the remaining coil lead to the 5 B.A. screw, position the spring blade on the pedestal, and lightly secure it with the screw.

NOTE.—The blade must bear against the small rib formed on the top face of the pedestal and the tag of the solenoid lead must be on top of the blade.

Adjust the spring blade until the points are making firm and positive contact and ensure that the points on the blade or rocker wipes over the centre-line of the other points when the outer rocker arm is moved up and down.

Tighten the spring blade securing screw and re-check the setting. In this position the free end of the spring blade must be deflected away from the small rib on the face of the pedestal so that an appreciable gap exists between the under side of the blade and the rib.

Depress the outer rocker arm and ensure that the spring blade rests on the rib. If it does not, remove and lightly set the blade towards the pedestal.

Assemble the impact washer and the feed spring to the armature spindle, pass the spindle through the centre of the solenoid core, and screw it onto the trunnion on the inner rocker.

Adjust the armature spindle until a firm, steady pressure on the armature assembly just fails to cause the outer rocker to snap over from the 'contact made' to 'contact broken' position. Then unscrew the armature spindle seven holes. This will ensure an adequate margin in the contact breaking operation against the eventuality of subsequent wear or any increase in friction in the moving parts of the contact breaker mechanism.

Position the brass rollers between the armature and the diaphragm, fit the body to the coil housing, and secure them with the six screws.

Replace the bakelite cap, fit the spring washer, Lucar connector, and nut to the terminal screw, and replace the terminal knob.

Fit the rubber sleeve to the body of the pump and dust excluders to the inlet and the outlet connections.

Section D.7

TESTING THE FUEL LIFT PUMP

Check that the pump points are correctly gapped and adjusted as described in Section D.6.

Fit the SP pump adaptor set to a standard test rig and mount the pump on the rig. In order to observe the action of the contact breaker assembly fit a cut-away cover to the pump.

Connect the pump to a 12-volt electrical supply with a resistance and a voltmeter in the circuit.

Ensure that there is an adequate supply of kerosene in the test rig tank.

Priming and maximum delivery check

Open the tap on the test rig and switch on the pump. The pump should prime from dry in 10 to 15 seconds and the fuel should rise in the glass jar until it flows over the top of the drain pipe. If the fuel level does not rise above the small hole in the drain pipe, then the pump is not operating at the required standard and must be inspected.

Air leak check

When the pump is first switched on air bubbles will be seen emerging from the drain pipe. These bubbles should cease after the pump has been operating for a minute or two. If the bubbles continue to appear it is an indication that an air leak exists on the suction side of the pump and this must be found and rectified.

Valve seat check

Operate the pump for about 10 minutes and then turn the tap right off. The pump should not beat for at least 12 seconds. If pumping action takes place within 12 seconds the inlet valve is not seating correctly and must be re-seated.

Minimum delivery check

Partially open the tap and check that fuel is delivered to the glass jar. Gradually depress the spring blade to reduce the stroke; the pump should continue working with increasing frequency until it eventually stops due to there being no gap left between the points.

Reduced voltage check

Turn the tap fully on, reduce the voltage to 9·5 volts, and check that the pump is functioning satisfactorily.

Sparking check

Switch on the pump and check for excessive sparking between the points. A small degree of sparking is permissible, but a special leak wire in the solenoid winding is designed to reduce sparking to a minimum. If excessive sparking is evident the solenoid assembly must be renewed.

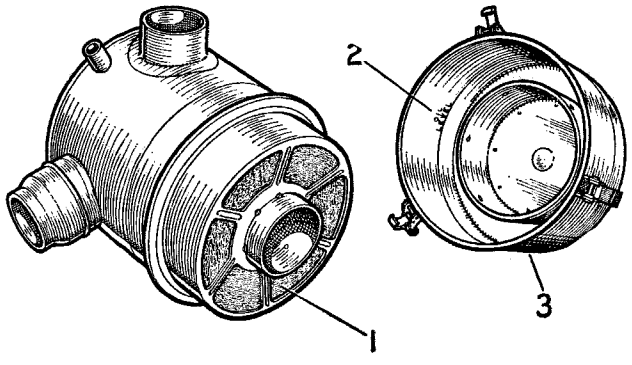

Fig. D.1

The air cleaner

1. Gauze mesh. 2. Oil level. 3. Oil reservoir.

Section D.8

CLEANING AND RE-OILING THE AIR CLEANER

The air cleaner is mounted on the left-hand side of the engine and is connected to the carburetter adaptor by a corrugated hose. Servicing must be carried out at the recommended intervals, or more often if excessive dusty conditions are experienced.

Remove the oil bath air cleaner and detach the oil bath from the gauze container. Swill the gauze in petrol, clean out the oil bath, and refill with clean engine oil. Keep the air cleaner in a vertical position whilst removing or replacing to avoid oil spillage.

Section D.9

CARBURETTER

Description

The 42VN carburetter is a downdraught model embodying a mechanically operated accelerating pump, an automatic strangler interconnected with the throttle, and a depression-operated economy device. A lever-type float is fitted, and a particular feature of this carburetter is the manner in which all the jets are centrally mounted in the specially-designed emulsion block.

Accelerating pump

The object of this pump is to overcome any tendency to lag in acceleration; this may be apparent when a carburetter is adjusted to give low fuel consumption at normal driving speeds. In order to obtain economical running at such speeds and yet ensure a faultless acceleration, a controlled and measured supply of mixture is necessary when the throttle is opened suddenly. This is provided by the accelerator pump.

Provision is made for varying the pump stroke by altering the position of the small block fitted over the pump rod. The block has two vertical lugs of different heights; with the taller lug beneath the pump lever, the short (summer) stroke will be given. By lifting the block slightly and turning it through 180°, so that the shorter lug is under the pump lever, the longer (winter) stroke will be provided.

Dismantling of the carburetter

If dismantling the carburetter is necessary absolute cleanliness is essential; hands should be clean and the work-bench covered by a sheet of clean metal or paper.

Remove the four screws in the float-chamber cover and withdraw the float-chamber horizontally for about an inch, when it will drop into the hand. For access to the jets, lift the float-arm and float from the float-chamber and remove the two screws retaining the emulsion block, which can then be removed.

The main and by-pass jets are screwed into the base of the emulsion block. The main jet has a longer thread and the head of the by-pass jet is chamfered at each end. Both jets are cadmium-plated to distinguish them from other jets of similar size and shape but which have a plain brass finish.

When replacing the emulsion block see that the gasket is undamaged and in position and that the securing screws are tight. Both the float and arm must have the 'top' mark uppermost when replaced.

Cleaning the jets

When cleaning the jets do not pass anything through them—such as wire—that is likely to damage the carefully calibrated orifices. The most satisfactory and efficient method is to blow through them with air, free from moisture, and wash with clean petrol. This should remove any obstruction and will leave the jets undamaged. The sizes of all jets are clearly numbered—the larger the jet the greater the number.

Strangler interconnection

Should the strangler/throttle interconnection be disturbed at any time it may be restored by opening the throttle a definite amount by means of the throttle stop screw, which should be given half-turns of the stop screw from the fully closed position of the throttle when the strangler is shut.

Before setting the interconnection it is advisable to note the number of half-turns to which the stop screw was adjusted for idling so that it may be reset correctly after clamping the interconnection rod.

The float

If there have been signs of flooding the float may be suspected. Remove the float and immerse in boiling water, when rising bubbles will indicate the exact location of a puncture. When the petrol inside has thus been evaporated seal the puncture with a spot of solder. This is essentially a temporary expedient, as the extra weight of solder may cause a difference in petrol level in the bowl. Fit a new float at the earliest opportunity.

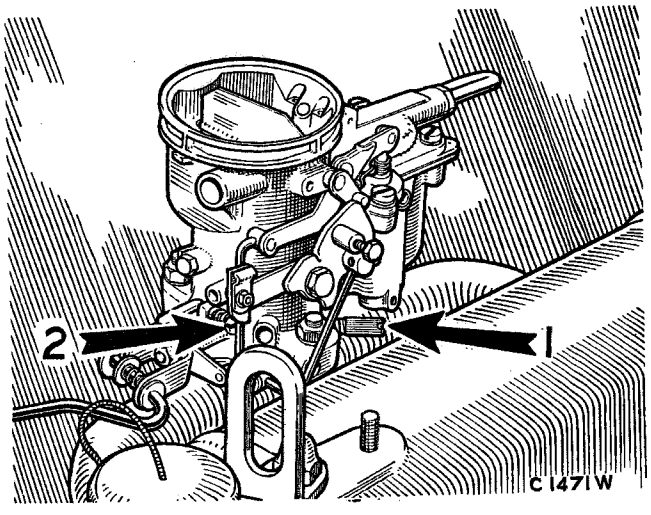

Fig. D.2

1. Volume control screw. 2. Throttle stop screw.

THE CARBURETTER COMPONENTS

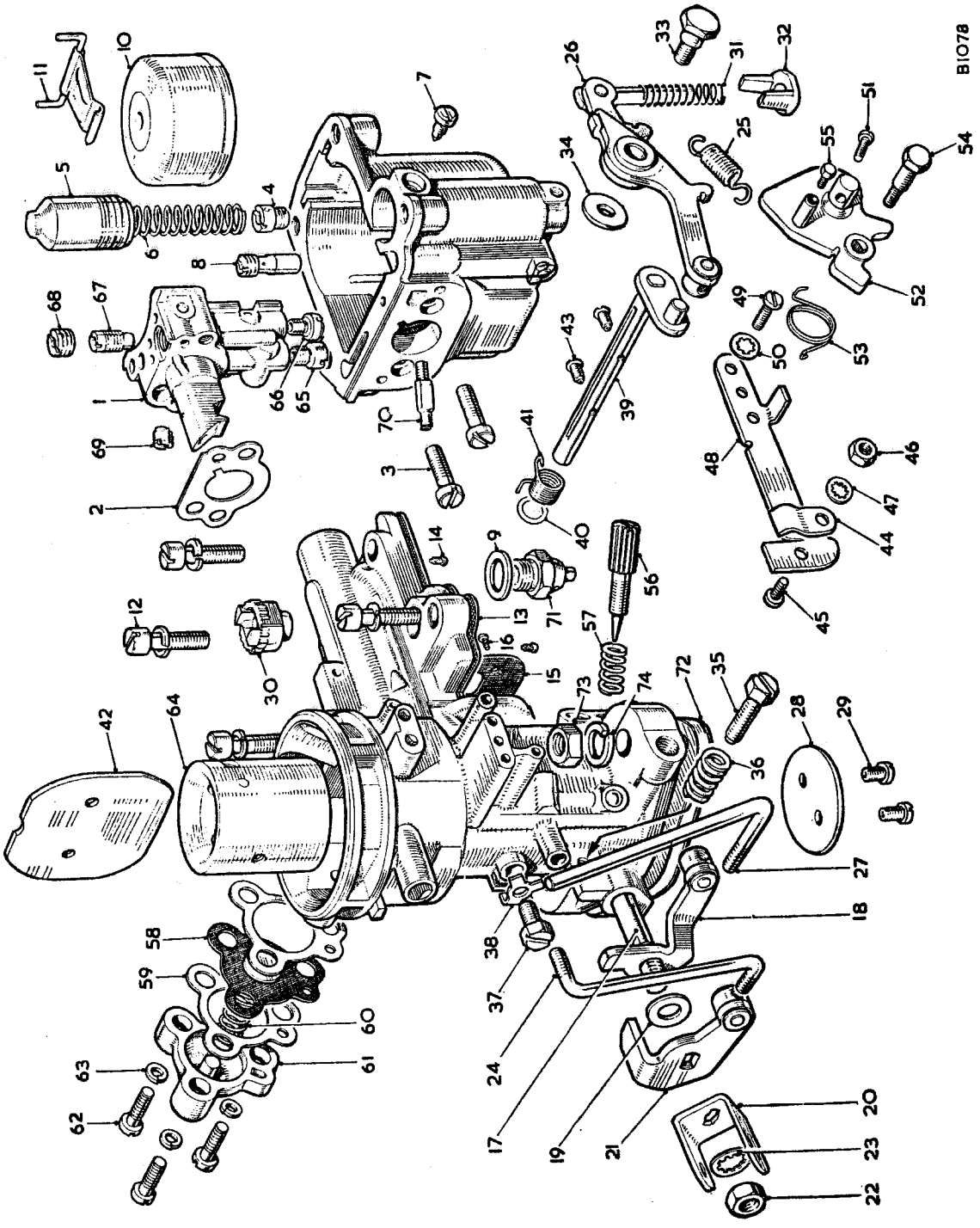

KEY TO THE CARBURETTER COMPONENTS

No.	Description
1.	Emulsion block.
2.	Emulsion block gasket.
3.	Emulsion block screw.
4.	Pump check valve.
5.	Pump piston.
6.	Spring for piston.
7.	Piston retaining screw.
8.	Pump discharge valve.
9.	Needle seating washer.
10.	Float.
11.	Float arm and pivot.
12.	Spring washer and screw.
13.	Float-chamber cover gasket
14.	Float-chamber cover screw.
15.	Gasket—vertical bowl face.
16.	Screw—vertical bowl face.
17.	Throttle spindle.
18.	Floating lever.
19.	Throttle spindle washer.
20.	Throttle lever.
21.	Throttle stop.
22.	Nut.
23.	Shakeproof washer.
24.	Pump link.
25.	Follow-up spring.
26.	Pump lever and rod.
27.	Interconnection rod.
28.	Throttle.
29.	Throttle screw.
30.	Pump stop.
31.	Pump rod spring.
32.	Pump rod sealing washer.
33.	Pump lever pivot screw.
34.	Washer for screw.
35.	Throttle stop screw.
36.	Spring for screw.
37.	Choke tube fixing screw.
38.	Tab washer.
39.	Strangler spindle and lever assembly.
40.	Strangler spindle washer.
41.	Automaticity spring.
42.	Strangler flap.
43.	Screw for flap.
44.	Clip.
45.	Screw.
46.	Nut.
47.	Shakeproof washer.
48.	Strangler control bracket assembly.
49.	Strangler control bracket screw.
50.	Shakeproof washer.
51.	Screw for swivel.
52.	Strangler control lever.
53.	Strangler control lever spring.
54.	Strangler control lever pivot screw.
55.	Interconnection swivel screw.
56.	Volume control screw.
57.	Volume control screw spring.
58.	Diaphragm.
59.	Diaphragm gasket.
60.	Spring.
61.	Cover.
62.	Fixing screw.
63.	Spring washer.
64.	Choke tube.
65.	Main jet.
66.	Compensating jet.
67.	Slow-running jet.
68.	Plug over slow-running jet.
69.	Ventilation screw.
70.	Pump jet.
71.	Needle seating.
72.	Carburetter insulating washer.
73.	Carburetter stud nut.
74.	Spring washer for stud.

Adjustment

The carburetter settings have been selected as most suitable for the engine after extensive experimental work. Consequently very little adjustment to the carburetter should be needed. Adjustments should only be made when absolutely necessary. The setting of the slow running mixture and the idling speed of the engine are the only likely alterations needed, apart from an occasional cleaning of its jets, float-chamber bowl and filter gauze.

When trouble with the running of the engine is experienced do not assume that it is always due to the carburetter. Check all other possible causes of trouble, such as sparking plugs, ignition equipment and condition of valves, before making alterations to the carburetter.

Slow-running adjustment

The throttle stop screw determines the speed of slow running. To increase the slow-running speed the stop screw must be turned in a clockwise direction. If turned in an anti-clockwise direction a slower 'tick-over' will be obtained.

The richness of the slow-running mixture is controlled by the volume control screw. Should the engine refuse to 'tick' over for any length of time or stall on deceleration the slow-running jet may be choked and should be cleaned. After examination reset the slow running by means of the throttle stop screw and the volume control screw. If the engine is inclined to hunt when running slowly the mixture is too rich and must be weakened by turning the volume control screw in an anti-clockwise direction. Check, by speeding up the engine and releasing the accelerator pedal quickly. If the engine stalls the slow-running adjustment is not correct and the idling speed should be slightly increased to a point where the sudden release of the throttle after accelerating allows the engine to settle to an even 'tick-over.' Do not expect a new engine which is tight in its bearings to idle perfectly.

It must be borne in mind that factors other than the carburetter, such as non air-tight joints, worn valve guides, valves not seating, contact points incorrectly set, ignition too far advanced, and incorrect setting of sparking plug gaps, can have considerable influence on 'slow running' when the engine is out of gear, with the vehicle stationary. Such details should always be given consideration when the slow running is irregular. The carburetter alone should not be suspected.

Altitude

It is recommended that the following jet changes should be made when the vehicle is constantly operated at altitudes in excess of 5,000 ft. (1500 metres) in order to maintain the correct fuel/air ratio in the rarified atmosphere.

5,000 to 7,000 ft. (1500 to 2000 metres)
Main jet—smaller (143); by-pass jet—smaller (108).

7,000 to 10,000 ft. (2000 to 3000 metres)
Main jet—smaller (140); by-pass jet—smaller (105).

10,000 to 15,000 ft. (3000 to 4500 metres)
Main jet—smaller (135); by-pass jet—smaller (105).

While no change is specified for altitudes up to 5,000 ft. (1500 metres), where an owner is more concerned with economy rather than performance it would be worth trying the next smaller main jet when the working altitude exceeds 3,500 ft. (1000 metres).

The foregoing suggested changes apply only in cases where the vehicle is operated consistently at altitude; no change need be made where a vehicle climbs to an altitude then drops down again to something under 2,000 ft. (600 metres) or thereabouts.

SECTION Da

THE FUEL SYSTEM

(DIESEL MODELS)

	Section
Accelerator pedal stop adjustment	Da.20
Fuel system—bleeding	Da.5
Injection pump (Type DPA.3243760A)	
Altitude settings	Da.10
Description	Da.6
Dismantling and reassembling	Da.8
Removing and replacing	Da.7
Testing and adjusting	Da.9
●Injectors	
Description	Da.11
Dismantling and reassembling	Da.13
Reclaiming injector nozzles ●	Da.15
Removing and replacing	Da.12
Testing	Da.14
Main fuel filter	
Description	Da.1
Dismantling and reassembling	Da.3
Removing and replacing	Da.2
Renewing the element	Da.4
Mechanical fuel lift pump	
Description	Da.16
Dismantling and reassembling	Da.18
Removing and replacing	Da.17
Testing	Da.19
Modified injection pump (Type DPA.3248050A)	Da.21
Service tools	End of Section

For all other information see Section D.

THE FUEL INJECTION PUMP COMPONENTS

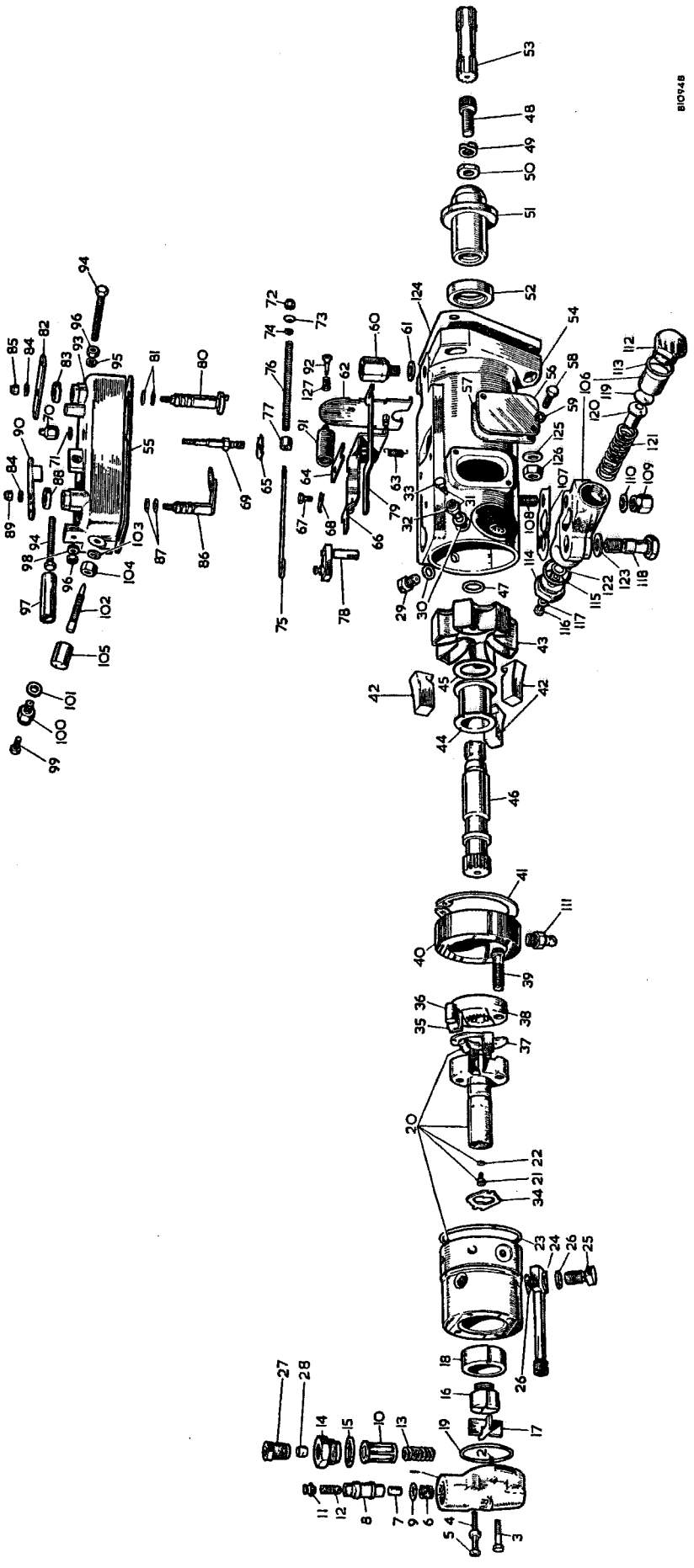

KEY TO THE FUEL INJECTION PUMP COMPONENTS

No.	Description
1.	End plate.
2.	Locating pin.
3.	Screw for end plate.
4.	Stud for end plate.
5.	Nut for stud.
6.	Piston retaining spring.
7.	Regulating piston.
8.	Regulating sleeve.
9.	Washer for sleeve.
10.	Filter.
11.	Regulating plug.
12.	Regulating spring.
13.	Sleeve retaining spring.
14.	Inlet connection.
15.	Washer for inlet connection.
16.	Transfer pump rotor.
17.	Transfer pump blade.
18.	Transfer pump liner.
19.	Transfer pump seal.
20.	Hydraulic head and rotor assembly.
21.	Rotor plug.
22.	Washer for plug.
23.	Hydraulic head seal.
24.	Banjo pipe.
25.	Bolt for banjo pipe.
26.	Washer for bolt.
27.	Fuel feed pipe connection.
28.	Olive for fuel feed pipe.
29.	Hydraulic head locking screw.
30.	Washer for screw.
31.	Hydraulic head vent screw assembly.
32.	Vented locking screw for hydraulic head.
33.	Vent screw.
34.	Adjusting plate (bottom).
35.	Roller shoe.
36.	Roller.
37.	Adjusting plate (top).
38.	Drive plate.
39.	Drive plate screw.
40.	Cam ring.
41.	Locating circlip for cam ring.
42.	Governor weight.
43.	Retainer for governor weights.
44.	Thrust sleeve.
45.	Thrust washer.
46.	Drive shaft.
47.	Drive shaft seal.
48.	Drive shaft screw.
49.	Spring washer for screw.
50.	Support washer.
51.	Drive hub.
52.	Drive hub seal.
53.	Quill shaft.
54.	Pump housing.
55.	Gasket for control cover.
56.	Cover-plate.
57.	Gasket for cover-plate.
58.	Screw for cover-plate.
59.	Washer for screw (shakeproof).
60.	Drain connection.
61.	Washer for connection.
62.	Governor arm.
63.	Spring for governor arm.
64.	Keep plate.
65.	Tab washer.
66.	Control bracket.
67.	Screw for bracket.
68.	Tab washer for screw.
69.	Stud for control cover.
70.	Nut for stud.
71.	Washer for stud.
72.	Linkage nut.
73.	Pivot ball washer.
74.	Linkage washer.
75.	Linkage hook.
76.	Linkage spring.
77.	Spring retainer.
78.	Metering valve.
79.	Shut-off bar.
80.	Shut-off shaft.
81.	Seal for shut-off shaft.
82.	Shut-off lever.
83.	Dust cap for shaft.
84.	Washer for shaft.
85.	Nut for shaft.
86.	Throttle shaft.
87.	Seal for throttle shaft.
88.	Dust cap for shaft.
89.	Nut for shaft.
90.	Throttle arm.
91.	Governor spring.
92.	Guide for idling spring.
93.	Control cover.
94.	Adjusting screw.
95.	Washer for adjusting screw.
96.	Locknut for screw.
97.	Locking sleeve.
98.	Adaptor for sleeve.
99.	Vent screw.
100.	Vent screw body.
101.	Washer for vent screw body.
102.	Adjustment screw for metering valve.
103.	Washer for nut.
104.	Locknut.
105.	Sealing cap.
106.	Automatic advance device housing and piston.
107.	Gasket for housing.
108.	Stud for housing.
109.	Cap nut for stud.
110.	Washer for cap nut.
111.	Cam advance screw.
112.	Piston plug.
113.	Seal for plug.
114.	Piston spring cap.
115.	Seal for cap.
116.	Screw for cap.
117.	Washer for screw.
118.	Head locating bolt.
119.	Slide washer.
120.	Maximum advance stop.
121.	Spring for stop.
122.	Shim washer for spring.
123.	Washer for head locating bolt.
124.	Joint washer for pump mounting flange.
125.	Washer for nut.
126.	Nut for injection pump mounting bolt.
127.	Idling spring.

Section Da.1

DESCRIPTION OF THE MAIN FUEL FILTER

The main fuel filter, which is mounted at the front of the cylinder head, is a C.A.V. bowl-less type—that is, the paper element, which is contained in a thin metal canister, is clamped between the filter head and base castings.

The filter components are held together by a split bolt arrangement, comprising a centre stud mounted in the filter base and a threaded bolt, which passes through the filter head to screw into the centre stud.

Synthetic rubber rings located in the filter head and base castings effect a seal between the outer rims of the element and the head and base castings. An 'O' ring located in an annular groove in the centre boss of the filter head, and over which the centre tube of the element fits, seals the dirty side of the filter from its clean side.

The head casting is provided with two inlet, two outlet, and a single vent connection. One outlet connection is not required and is fitted with a sealing plug, while the second inlet connection allows fuel oil surplus to the injection pump requirements to return to the dirty side of the filter. This connection is fitted with a non-return valve to ensure that unfiltered fuel cannot find its way into the injection pump body.

Passages in the filter head connect the filter inlet connections to the centre tube of the filter element. As the upper end of the centre tube is sealed, fuel at lift pump pressure passes down the centre tube into the base casting and then upwards through the filter element to the outlet connection in the filter head.

An auxiliary pipe connects the vent connection on the top of the filter head to the injector leak-off pipe, providing continuous air-venting of the filter during operation.

The paper element is not intended to be washed or cleaned in any way and should be renewed at the recommended intervals.

Section Da.2

REMOVING AND REPLACING THE FUEL FILTER

Thoroughly clean the outside of the filter.

Disconnect the fuel inlet and outlet pipes and the fuel leak-off pipe from the filter head, taking care not to lose the sealing washer positioned on each side of the banjo-type union.

Unscrew the two bolts and nuts securing the filter to the mounting bracket on the cylinder head and withdraw the filter from the engine.

When replacing the filter, which is a reversal of the above procedure, ensure that the washers positioned on each side of the banjo-type union are in good condition and will make a fuel-tight joint. Upon completion the fuel system must be bled to remove all air, as described in Section Da.5.

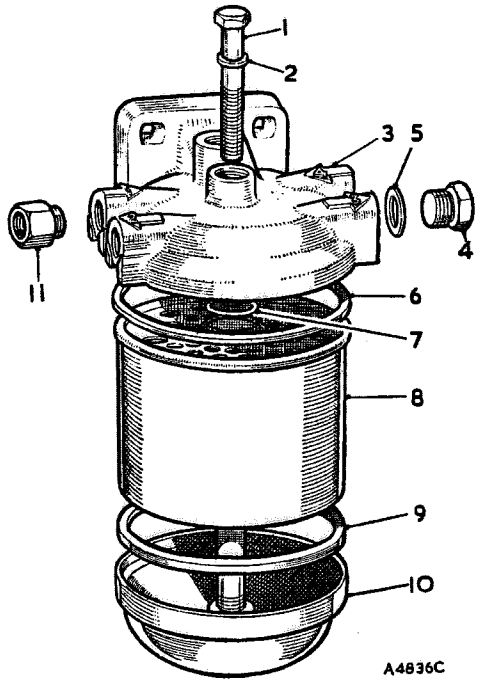

Fig. Da.1

Main fuel filter components

1. Retaining bolt.
2. Washer.
3. Head casting.
4. Blanking plug.
5. Copper washer.
6. Sealing washer.
7. 'O' ring.
8. Element.
9. Sealing ring.
10. Base casting.
11. Non-return valve.

Section Da.3

DISMANTLING AND REASSEMBLING THE FUEL FILTER

Unscrew the retaining bolt and sealing washer from the centre of the head casting and detach the base casting from the filter.

Remove the filter element, using a twisting movement to release the element from the head casting. Withdraw the three sealing rings from their locations in the head and base castings.

Unscrew and remove the blanking plug with washer, and the non-return valve from the head casting.

Wash the filter head and base castings, the blanking plug, and the non-return valve in petrol and allow them to dry. Do not use cotton waste or cloth wipers to dry them. Ensure that no residue is left in the passages in the head casting by blowing them clear with compressed air.

Discard the filter element and sealing rings, which should be renewed as normal routine procedure.

Check the operation of the non-return valve.

Assemble the sealing plug and washer to (outlet) connection No. 3 and the non-return valve to (inlet) connection No. 1 in the head casting.

Fit new sealing rings to the head casting, ensuring that they are properly located in their grooves. Assemble a new element, strengthened rim uppermost, to the head casting, using a twisting movement to seat it on the seals.

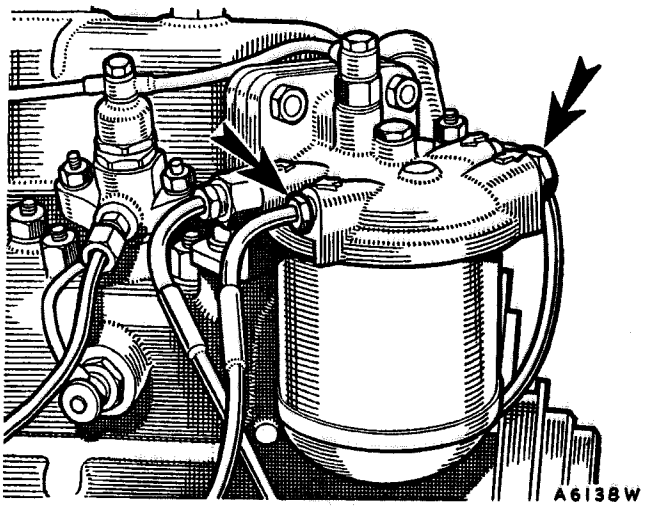

Fig. Da.2
Main fuel filter air bleed points

Place the base casting in position, using a new sealing ring to make the joint between the element and the casting, and secure the assembly with the retaining bolt and washer.

Section Da.4

RENEWING THE FUEL FILTER ELEMENT

Thoroughly clean the outside of the filter.

Support the filter base casting and unscrew the retaining bolt with copper seal washer located in the centre of the filter head casting. Detach the base casting and, using a twisting movement, separate the element from the head casting. Remove the three sealing rings from their locations in the head and base castings.

Wash the base casting in petrol, and when dry remove any residue.

Reassemble, using a new element and sealing rings, fitting the element with its strengthened rim uppermost.

After reassembly, bleed the fuel filter and the fuel injection pump as described in Section Da.5.

Section Da.5

AIR-VENTING (BLEEDING) THE FUEL SYSTEM

The following procedure should be used to air-vent the fuel system after first ensuring that there is an adequate supply of fuel in the tank:

(1) Slacken the union nut at the filter end of the injection pump feed pipe. Operate the lift pump, and when the fuel passing the union threads is free from air bubbles tighten the union nut.

(2) Unscrew the blanking plug, in the unused outlet connection in the filter head, sufficiently to allow fuel at lift pump pressure to pass the threads. Operate the lift pump, and when the fuel issuing from around the plug threads is free from air bubbles, tighten the plug.

(3) Slacken the two air bleed valves on the fuel injection pump. One bleed valve is located on the governor housing, while the other is incorporated in the hydraulic head locking screw situated immediately above the pump nameplate. Operate the lift pump, and when the fuel issuing from both valves is free from air bubbles, tighten the bleed valves.

(4) Slacken the union nuts at the injector end of any two high-pressure pipes. Ensure that the stop control is in the 'run' position, and set the accelerator in the fully open position. Crank the engine until the fuel flowing from both pipes is free from air bubbles, then tighten the pipe union nuts.

(5) Start the engine and allow it to run until it is firing on all cylinders.

After renewing the main fuel filter element, **providing the engine is not cranked during this operation,** it is only necessary to bleed the fuel filter as described in operations (1) and (2) before starting the engine.

WARNING.—Lubrication of the injection pump mechanism is effected by fuel oil under pressure, therefore no attempt should be made to bleed the fuel system by towing the vehicle in gear as this may result in serious damage to the injection pump.

Section Da.6

DESCRIPTION OF THE FUEL INJECTION PUMP

The injection pump is a single-cylinder, opposed-plunger, inlet-metering, distributor-type pump fitted with a mechanical flyweight-type governor and a hydraulically operated automatic advance mechanism. The pump is flange-mounted on the rear of the engine front mounting plate and is driven by the timing chain. A splined quill shaft, having a master spline at each end to ensure correct location, transmits the drive from the chain wheel to the injection pump drive hub.

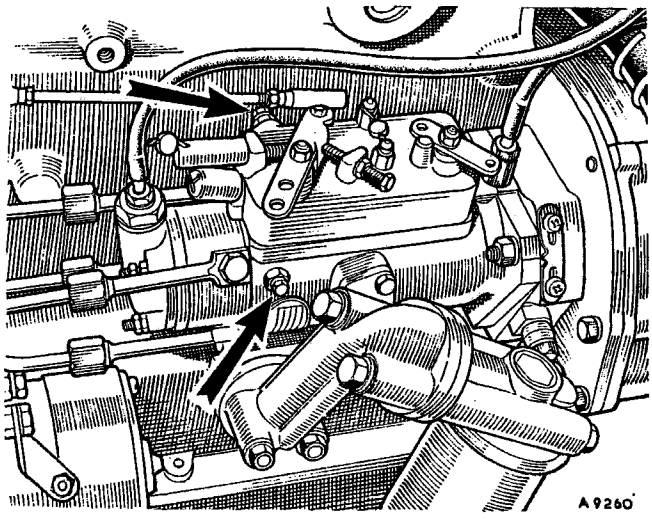

Fig. Da.3
Fuel injection pump air bleed points

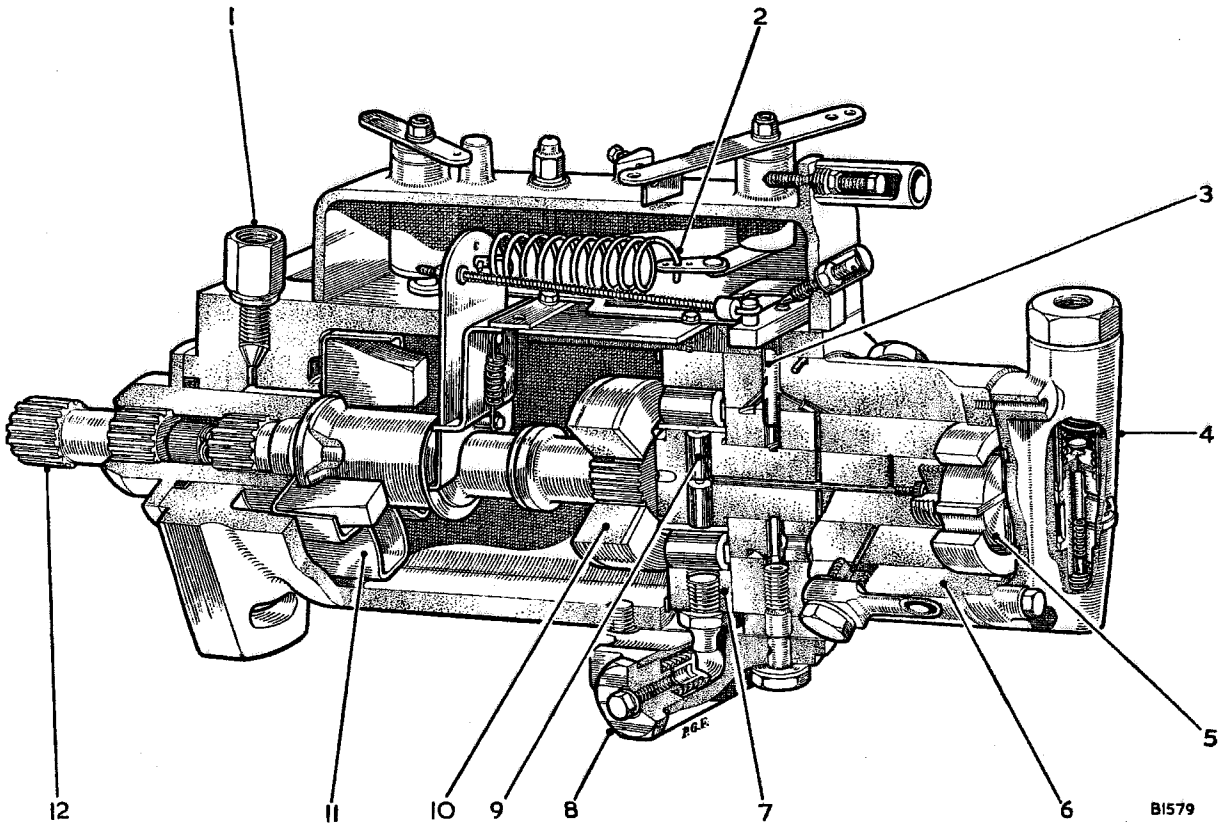

Fig. Da.4

Section through the fuel injection pump

1. Back-leakage connection.
2. Governor spring.
3. Metering valve.
4. End plate and regulating valve.
5. Transfer pump.
6. Hydraulic head.
7. Cam ring.
8. Automatic advance device.
9. Pumping plunger.
10. Drive plate.
11. Governor weight assembly.
12. Quill shaft.

A central rotating member forms the pumping and distributing rotor, and this is driven by the drive hub through a splined drive shaft on which is mounted the governor flyweight assembly.

Mounted on the outer end of the pumping and distributing rotor is a sliding-vane-type transfer pump. This pump raises the fuel pressure to an intermediate level, and as its capacity is many times the maximum requirements of the injection pump a regulating valve, housed in the pump end plate, allows excess fuel to be by-passed back to the suction side of the transfer pump.

The pressure regulating valve, in addition to regulating the pressure of the fuel from the transfer pump, also provides a means of by-passing the transfer pump when priming the injection pump. Referring to Fig. Da.5, it will be seen that the valve is cylindrical and contains a small 'free' piston, the travel of which is limited by two light springs. When priming the injection pump, fuel at lift pump pressure enters the central port in the regulating valve sleeve and moves the 'free' piston against the pressure of the piston retaining spring to uncover the priming port in the lower end of the valve sleeve. The priming port is connected by a passage in the end plate to the delivery side of the transfer pump, thus enabling the fuel to by-pass the stationary transfer pump and prime the injection pump.

When the injection pump is in operation fuel at transfer pressure enters the lower end of the valve sleeve, forcing the 'free' piston upwards against the regulating spring. As the engine speed increases, the transfer pressure rises, moving the piston against the pressure of the regulating spring to progressively uncover the regulating port in the valve sleeve and allow a metered flow of fuel to by-pass back to the inlet side of the transfer pump.

The transfer pressure, therefore, is controlled by a balance between the regulating spring pressure and the requirements of the injection pump at any moment.

The pumping and distributing rotor revolves, and is a close fit, in the stationary hydraulic head. The pumping section of the rotor has a transverse bore containing twin opposed pumping plungers. These plungers are operated by means of a cam ring, carried in the pump housing, through rollers and shoes which slide in the rotor. The cam ring has four internal lobes operating in diagonally opposite pairs. The opposed plungers have no return springs but are moved outwards by fuel under pressure from the transfer pump, the flow of fuel and outward displacement of the plungers being determined by the setting of the metering valve and the speed at which the pump is rotating. As a result the rollers, which operate the plungers, do not follow the contour of the internal cam ring entirely, but will contact the cam lobes

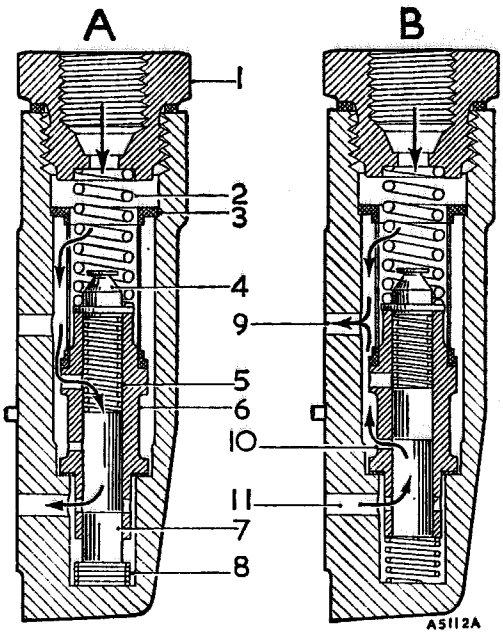

Fig. Da.5

Section through the end plate and regulating valve

A. Priming.
B. Regulating.
1. Inlet connection.
2. Sleeve retaining spring.
3. Nylon filter.
4. Sleeve guide plug.
5. Regulating spring.
6. Regulating sleeve.
7. Regulating piston.
8. Piston retaining spring.
9. Fuel passage to transfer pump inlet.
10. Regulating port.
11. Fuel passage to transfer pump outlet.

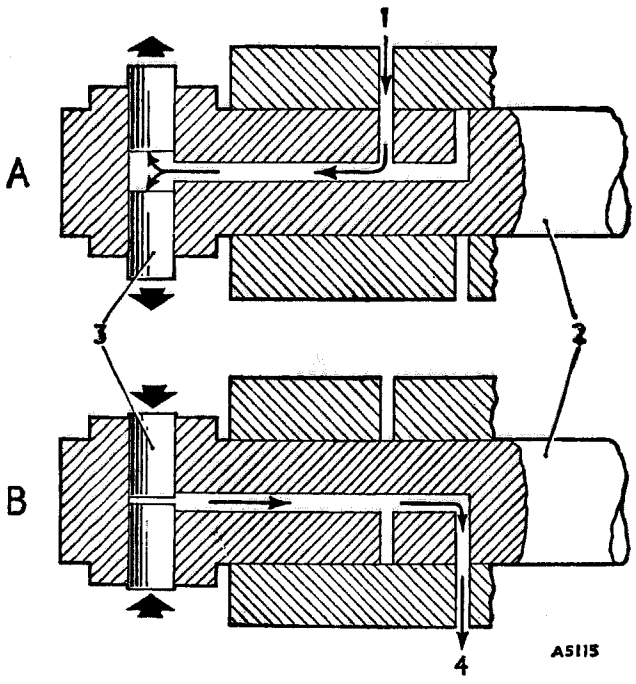

Fig. Da.6

The injection cycle

A. Inlet stroke.
B. Injection stroke.
1. Fuel inlet.
2. Pumping and distributing rotor.
3. Pumping plungers.
4. Fuel to injector.

at points which will vary according to the amount of plunger displacement.

The automatic light-load advance mechanism operates by rotating the cam ring within the pump body. A ball-ended lever, screwed into the cam ring, is operated by a piston, one side of which is spring-loaded, sliding in a cylinder. The other side of the piston is subjected to fuel at transfer or drain pressure, according to engine load, which is admitted to the cylinder through the hollow locating bolt and a port in the cylinder wall. The pressure of fuel is controlled by the rotary and endwise movement of the metering valve.

Machined in the surface of the metering valve is a helical groove. A vertical flat extends upwards from the helical groove and protrudes beyond the hydraulic head. This flat is open to fuel at drain pressure in the governor housing.

In the surface at the lower end of the metering valve is machined a flat, the upper edge of which is of the same pitch as the helical groove. This flat is open to fuel at transfer pressure.

The width of the land between the helical groove and the flat at the lower end of the metering valve is slightly less than the diameter of the timing port in the metering valve chamber, in the hydraulic head. The timing port, which is situated opposite the metering port, is connected by a passage in the hydraulic head and the hollow locating bolt to the port in the advance cylinder.

When the metering valve is in the full-load position the helical groove in the valve is aligned with the timing port in the hydraulic head and fuel at drain pressure is applied to the advance piston. As the drain pressure is insufficient to overcome the piston spring pressure the cam ring is held in the fully retarded position.

Under light-load conditions the metering valve is moved to the low fuelling position, aligning the flat at the lower end of the metering valve with the timing port. The advance piston is now subject to fuel at transfer

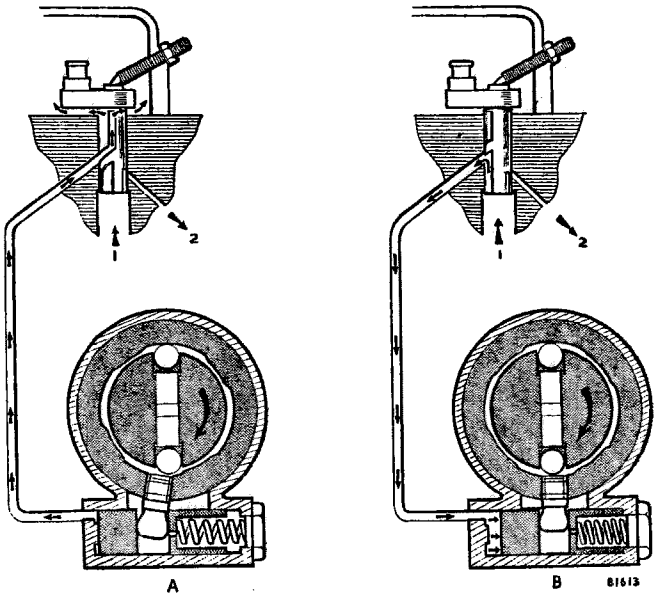

Fig. Da.7

Light-load advance device

A. Full load.
B. Low load.
1. Transfer pressure.
2. To pumping element.

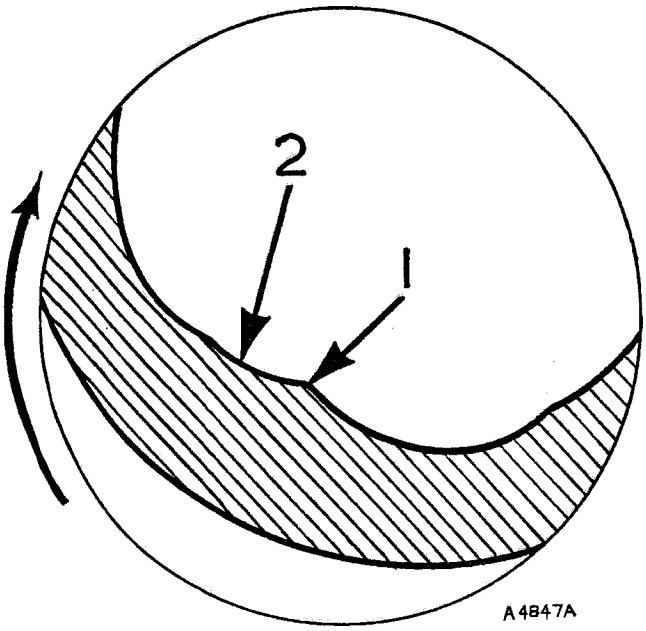

Fig. Da.8

Enlarged view of a cam ring lobe

1. Cam peak. 2. Retraction curve.

pressure, and the piston and cam ring move to the fully advanced position.

The under side of the metering valve is subject to fuel at transfer pressure which tends to force the valve upwards. This upward movement of the valve is controlled by an adjustable stop screw, which sets the relative positions of the helical groove, the flat on the lower end of the valve, and the timing port so that light-load advance is obtained at the required engine speed.

Machined on each lobe of the cam ring, immediately after the peak of the cam, is a retraction curve. Under running conditions, when the injection cycle is completed the distributor port in the rotor and the outlet port in the hydraulic head are still in partial alignment with each other. As the plunger rollers move off the peaks of the cams the retraction curves allow the plungers to move slightly outwards. This movement of the plungers effects a sudden reduction of pressure in the injection line, so preventing secondary injection and allowing the injector nozzle needle valve to snap onto its seating to terminate the spray of fuel into the combustion chamber without 'dribble'. When starting the engine the metering valve is in the full-load position and the advance piston is subject to fuel at drain pressure. As drain pressure is not sufficient to overcome the pressure of the advance piston return spring, the piston and the cam ring remain in the fully retarded position.

When the cam ring is in the fully retarded position the timing of the injection cycle is such that, as the plunger rollers reach the peaks of the cam lobes, the distributing port in the rotor becomes completely out of alignment with the outlet port in the hydraulic head. This renders the retraction curves on the cam lobes inoperative, and so fuel in excess of normal maximum is sprayed into the combustion chamber.

The distributing part of the rotor has a central axial passage which connects the pumping space between the plungers with the four inlet ports and single distributing port drilled radially in the rotor. The radial hole at the outer end of the rotor is the distributing port, and, as the rotor turns, this port is aligned successively with the outlet ports in the hydraulic head, from which the injectors are fed via external high-pressure pipes. The inlet or charging ports are equally spaced around the rotor at an intermediate position, and, as the rotor turns, these are aligned successively with the inlet or metering port in the hydraulic head. This port admits fuel to the rotor under control of the metering valve, which is mechanically governed.

The mechanical governor is of the flyweight type, the weights being held in a retainer, which is clamped between the injection pump drive hub and the drive shaft and rotates with these components as a single unit. The weights are a sliding fit in the retainer pockets and are so shaped that, when under the influence of centrifugal force, they pivot about one edge. A thrust sleeve, which is a sliding fit on the injection pump drive shaft, is moved axially by the flyweights. Movement of the thrust sleeve is transmitted by means of the governor arm and the spring-loaded hook link to rotate the metering valve. The governor arm pivots about a fulcrum on the control bracket and is held in contact with the

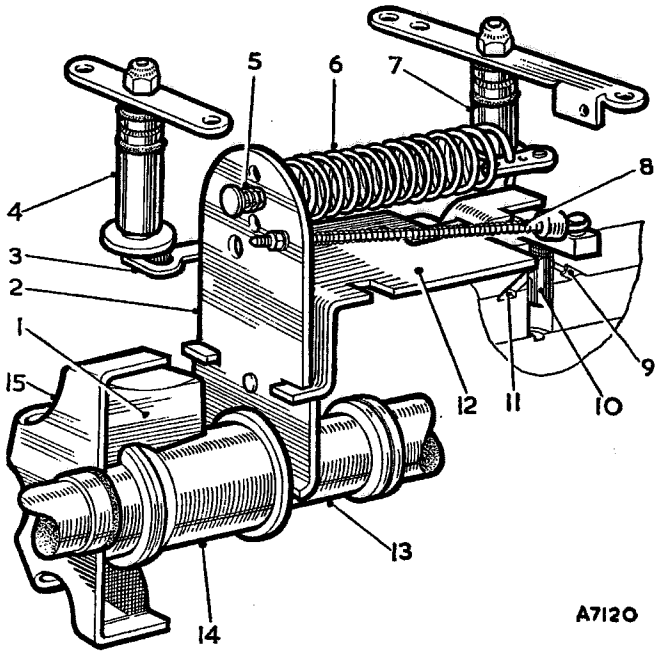

Fig. Da.9

Mechanical governor

1. Governor weight.
2. Governor arm.
3. Shut-off bar.
4. Shut-off shaft.
5. Idling spring.
6. Governor spring.
7. Throttle shaft.
8. Linkage hook.
9. Metering port.
10. Metering valve.
11. Timing port.
12. Control bracket.
13. Drive shaft.
14. Thrust sleeve.
15. Weight retainer.

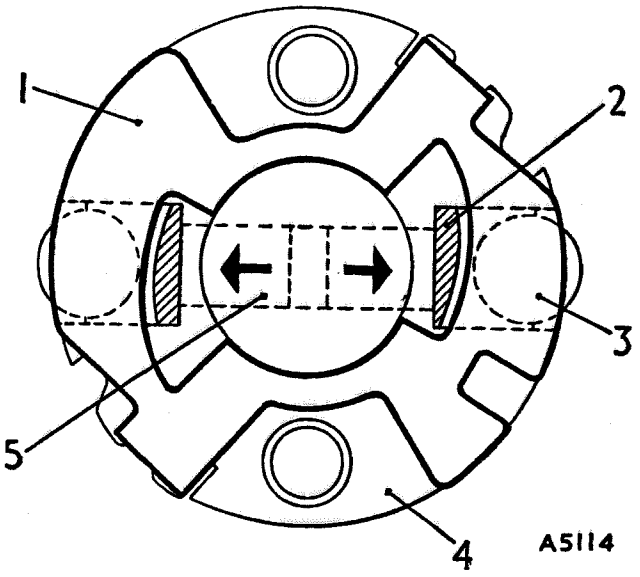

*Fig. Da.*10
Maximum fuel adjustment

1. Top adjusting plate.
2. Roller shoe ear.
3. Roller.
4. Pumping end of rotor.
5. Pumping plunger.

thrust sleeve by spring tension. Connection between the governor arm and the throttle arm and shaft assembly is made through the governor spring and the idling spring and guide.

A shut-off bar, operated by an external lever, rotates the metering valve to close the metering port.

The metering valve is provided with a vertical slot along which fuel passes at transfer pressure into the metering port. The valve is situated in a chamber in the hydraulic head, into which the diagonally drilled metering port opens, and rotation of the valve varies the effective area of the metering port to regulate the flow of fuel to the pumping and distributing rotor.

When the throttle arm is moved to give increased speed, the light idling spring is compressed as the guide is drawn through the governor arm and the governor spring is tensioned. Tension of the governor spring acting upon the governor arm and thrust sleeve resists movement of the governor flyweights. As the engine speed increases, the increasing centrifugal force moves the flyweights outwards, overcoming the governor spring tension to move the governor arm and the metering valve towards the closed position. When the selected speed has been attained it will be maintained by governor action. Should the engine speed fall, the flyweights will move inwards, causing an increase of fuelling which restores the selected engine speed.

When the throttle arm is in the idling position the governor spring is untensioned and governing action is controlled by the light idling spring.

In operation, fuel at lift pump pressure enters the pump through the connection on the pump end plate and passes through a fine nylon gauze filter to the inlet side of the transfer pump.

From the transfer pump the fuel passes through a passage in the hydraulic head to an annular groove surrounding the rotor, and thence to the metering valve. The position of the metering valve depends upon the setting of the throttle arm, which varies the governor spring pressure on the governor arm. Any variation in pump speed is accompanied by an increase or decreaes in transfer pressure, which assists in regulating the flow of fuel into the pumping section of the rotor. The volume of fuel passing into the pumping element is thus controlled by the transfer pressure, the position of the metering valve, and the time during which an inlet port in the rotor is aligned with the metering port in the hydraulic head.

When one of the rotor inlet ports is aligned with the metering port in the hydraulic head, fuel at metering pressure flows into the rotor and forces the pumping plungers apart, the amount of plunger displacement being governed by the quantity of fuel which can flow into the rotor while the ports are aligned. As the rotor turns, the inlet port is cut off and the pump plungers begin to be forced inwards by their rollers bearing on a pair of cam lobes. This causes an immediate rise in pressure, and as the single distributor port in the rotor comes into register with an outlet port in the hydraulic head the plungers force the fuel up the central bore of the rotor and out to the respective injector.

The maximum amount of fuel delivered at one charge is controlled by limiting the maximum outward movement of the plungers. In Fig. Da.10 is shown an end-on view of the rotor, and it will be seen that the cam rollers are carried in shoes which bear against the ends of the plungers. The roller shoes, which slide in slots in the rotor, have specially shaped projecting 'ears' which engage eccentric slots in the top and bottom adjusting plates. Two lugs on the top adjusting plate engage slots in the bottom adjusting plate to locate the plates one to the other.

The top adjusting plate is clamped to the rotor by the drive plate, the adjusting plate being cut away in the areas of the drive plate securing screws to permit adjustment of the plates by rotation. The maximum outward travel of the pump plungers is limited by the 'ears' of the roller shoes coming into contact with the curved slot sides in the adjusting plates. As the slots are eccentric, rotation of the adjusting plates relative to the rotor provides a means of adjusting the maximum plunger stroke.

Section Da.7

REMOVING AND REPLACING THE FUEL INJECTION PUMP

Remove the air cleaner as described in Section Aa.2.

Thoroughly clean the outside of the injection pump body, and then disconnect the throttle and shut-off controls and the fuel feed and return pipes from the pump.

Disconnect the high-pressure pipes from the pump and the injectors and withdraw the pipes complete with clamp and damper bushes from the engine. Seal the pump

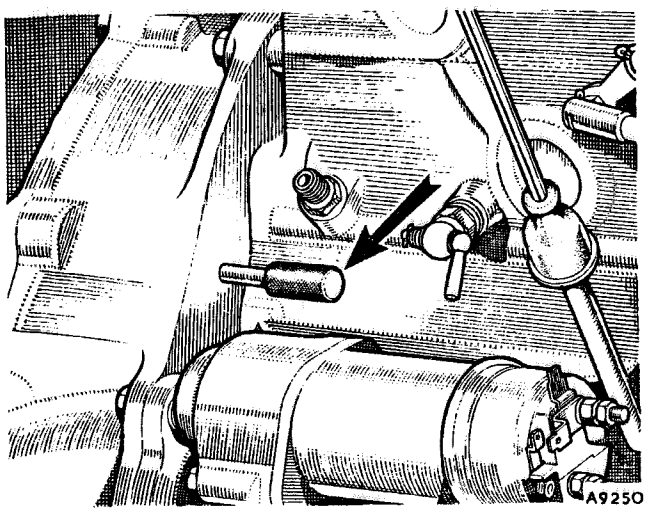

*Fig. Da.*11

Setting Nos. 1 *and* 4 *pistons in the* 28° *B.T.D.C. position, using timing pin AMK*9990

outlet unions with sealing caps 18G216 to prevent the ingress of foreign matter.

Remove the oil filter and adaptor from the cylinder block.

Unscrew the three nuts with plain washers securing the injection pump flange to the rear of the engine front plate and draw the pump rearwards to disengage it from the engine. Withdraw the quill shaft from inside the injection pump chain wheel hub.

Before replacing the fuel injection pump it is necessary to set the static injection timing so that commencement of injection occurs when the pistons are at 28° B.T.D.C. on their compression strokes.

To ensure correct timing relationship between the injection pump and the engine the injection pump drive hub, the quill shaft, and the driving flange of the injection pump chain wheel are provided with master splines; also, a timing mark is scribed on the fuel injection pump mounting flange and an adjustable timing pointer is secured to the flange of the chain wheel hub.

Before fitting the injection pump to the engine the position of the timing pointer on the flange of the chain wheel hub should be checked, using timing gauge 18G698 and timing pin AMK9990, and reset if necessary. Initial adjustment of the injection timing is provided for in the injection pump driving flange, the holes for the bolts which secure it to the chain wheel being elongated.

Crank the engine until the inlet valve for No. 1 cylinder is closing. Insert timing pin AMK9990 through the reamed hole in the flywheel housing just above the starter motor, and while maintaining pressure on the head of the timing pin, crank the engine slowly until the pin engages the timing hole in the flywheel. This will set No. 1 piston at 28° B.T.D.C. on its compression stroke. Remove the injection pump chain wheel cover-plate from the front of the timing chain case and note the position of the master spline in the pump driving flange, which should now be in the seven o'clock position as seen from the front of the engine.

Insert injection timing gauge 18G698 through the chain wheel hub, engaging the splined end of the gauge with the internal splines of the pump driving flange. The master spline will allow the gauge to engage the driving flange in one position only. Turn the gauge by hand (undue force is not necessary) in a clockwise direction, as seen from the rear of the engine, to take up any backlash in the injection pump drive mechanism. Hold the gauge in this position, slacken the two securing screws, and move the timing pointer to align it with the slot on the edge of the gauge. Should the movement required to line up the timing pointer be appreciable, then initial adjustment should be made by altering the position of the injection pump driving flange relative to the chain wheel. This adjustment is made by slackening the four bolts securing the driving flange to the chain wheel and carefully turning the driving flange the required amount by means of the timing gauge. Tighten the driving flange securing screws and carry out final adjustment of the timing pointer as described previously and then remove the timing gauge.

NOTE.—After every occasion of injection pump removal or attention to the crankshaft, camshaft, or timing gear the position of the timing pointer should be checked, and reset if necessary, as described above.

Fit the injection pump quill shaft into the driving flange.

Rotate the injection pump drive hub and position the master spline in the drive hub at seven o'clock, when looking on the drive end of the pump. This will facilitate the engagement of the quill shaft splines with the drive hub.

Place a new joint washer in position on the engine front plate and offer up the injection pump to the engine. Engage the pump drive hub with the quill shaft and retain the pump in position by fitting the securing nuts and washers finger tight. Rotate the injection pump to align the timing mark on the pump mounting flange with the timing pointer. Tighten the three nuts to secure the injection pump in this position and remove timing pin AMK9990.

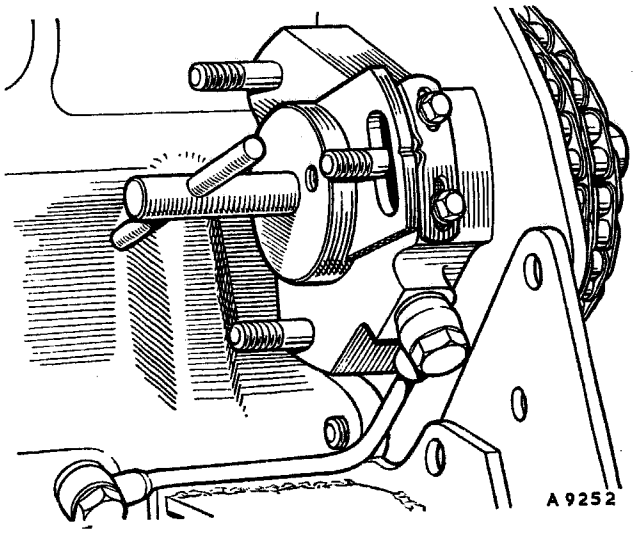

*Fig. Da.*12

Checking the position of the injection pump timing pointer, using timing gauge 18*G*698

Refit the oil filter and adaptor, the high-pressure pipes, and the fuel feed and drain pipes. Connect the throttle and shut-off controls and ensure that both controls have their full range of movement. Refit the air cleaner.

Bleed the fuel system as described in Section Da.5.

Maximum and idling speed adjustments

After fitting either a new or overhauled injection pump the engine maximum light running speed and the idling speed must be checked, and adjusted if necessary. Before making either of these adjustments it is imperative that the engine air cleaner is correctly serviced and fitted.

Run the engine until it has attained its normal running temperature—**this is most important.** Ensure that the shut-off control is in the fully open position and remove the locking sleeve from the maximum speed adjusting screw.

Using a tachometer to check the engine speed, adjust the maximum speed stop screw to give a maximum light running speed of 3,700 r.p.m., thus giving a maximum road governed speed of 3,500 r.p.m. Tighten the locknut. Fit the locking sleeve and seal it with wire and a lead seal, using sealing pliers 18G 541.

Adjust the idling stop screw to give an idling speed of 600 r.p.m. and tighten the locknut.

Section Da.8

DISMANTLING AND REASSEMBLING THE FUEL INJECTION PUMP

Dismantling and servicing of the fuel injection pump should only be carried out by specially trained personnel, and the Service tools and special test equipment referred to in the following instructions should be available. The workshop in which these operations are carried out should be absolutely clean and the atmosphere free from dust or dirt. It is also recommended that components are immersed in clean Shell Calibration Fluid 'C' immediately after they are dismantled from the main assembly to protect them from possible damage and corrosion and to prevent the ingress of foreign matter.

Abrasives should never be used for cleaning as the resulting damage would seriously impair both the efficiency and the working life of the pump. The components should be washed in clean Shell Calibration Fluid 'C', but they must not be wiped with cotton waste, rags, or cloth wipers of any kind.

Remove the cover-plate from the side of the pump housing and drain the fuel oil from the pump. Withdraw the quill shaft from the drive hub and check the drive hub end-float by inserting a feeler gauge between the drive hub and pump body. The end-float should not exceed ·010 in. (·254 mm.). Excessive end-float can be corrected by renewing the pump body and the governor weight retainer.

●Mount the pump on assembly base 18G 633 A secured in a vice.●

Remove the banjo pipes from the hydraulic head. Unscrew the self-locking nuts with plain washers and remove the shut-off lever and throttle arm from their shafts. Remove the dust cover from each shaft. Cut the locking wire, unscrew the two control cover securing nuts, and remove the two flat washers. Press the throttle shaft downwards and withdraw the control cover complete with shut-off shaft and adjusting screws. Remove and discard the control cover to pump housing gasket.

Press back the locking tabs and unscrew the two control cover studs and the small set screw securing the control bracket to the pump housing. Remove the keep plate and tab washers, then lift the complete control bracket assembly together with the metering valve and shut-off bar from the pump housing. Remove the shut-off bar from the control bracket. Disconnect the metering valve from the linkage hook and protect its precision-ground surface by immersing it in a bath of Shell Calibration Fluid 'C'. Unscrew the self-locking nut and remove the nylon pivot washer to release the linkage hook from the governor arm. Disconnect the throttle shaft link from the governor spring and remove and discard the two 'O' seals from the throttle shaft. Disconnect the governor spring from the idling spring guide and withdraw the guide and spring from the governor arm. Remove the governor arm spring to release the governor arm from the control bracket.

Turn the pump upside-down and slacken both the spring cap and the end plug in the advance device housing until the pressure of the maximum advance stop spring inside the advance device housing is relieved. Unscrew the cap nut and the head locating bolt, both of which have aluminium and rubber sealing washers, and remove the advance device housing. Unscrew and remove the advance screw from the cam ring. Remove and discard the advance device housing gasket.

Unscrew the end plug and the spring cap, noting the adjusting shim inside the cap. Withdraw the spring, stop, slide washer, and piston from inside the advance device housing. Remove and discard the 'O' seals from the spring cap and end plug.

Slacken the fuel inlet connection and then remove the screws and studs securing the end plate to the hydraulic head. Carefully remove the carbon vanes from their slots in the transfer pump rotor and withdraw the transfer pump liner.

Unscrew the fuel inlet connection and carefully withdraw the components of the regulating valve from the end plate in the following order: sleeve retaining spring, nylon filter, regulating plug, regulating spring, valve sleeve with piston and joint washer, and lastly the piston retaining spring.

Hold the drive hub with drive shaft screw assembly tool 18G 659 and, using box spanner 18G 634 in conjunction with a standard ratchet wrench, slacken the transfer pump rotor. The word 'OFF' and an arrow etched on the exposed face of the rotor indicate the direction in which the rotor is unscrewed.

Unscrew and remove the two hydraulic head locking

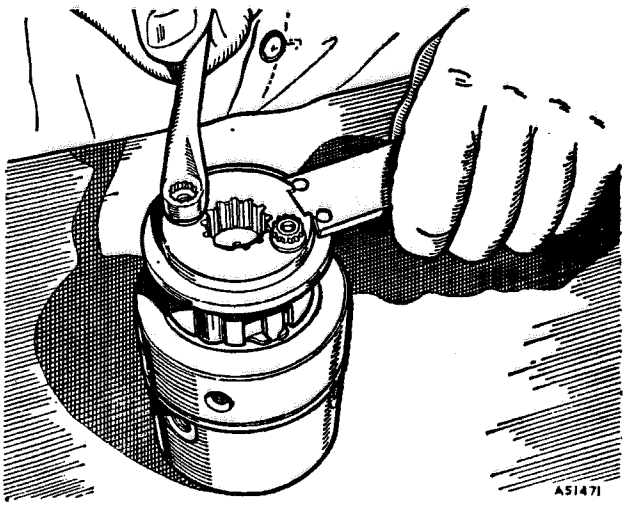

*Fig. Da.*13

Holding the drive plate with spanner 18*G* 641 *when unscrewing the drive plate securing screws*

screws, one of which carries an air vent valve, and carefully withdraw the hydraulic head and distributing rotor assembly from the pump housing. Remove the 'O' seal from the groove in the periphery of the hydraulic head.

Unscrew the transfer pump rotor, taking care not to allow the pumping and distributing rotor assembly to fall out from the hydraulic head.

Stand the hydraulic head assembly on the bench with the drive plate uppermost. Hold the drive plate with assembly spanner 18G 641 and unscrew the two drive plate securing screws. Remove the drive plate, lift off the top adjusting plate, and withdraw the rollers and roller shoes from the pumping and distributing rotor.

Withdraw the rotor from the hydraulic head and remove the bottom adjusting plate. Refit the rotor to the hydraulic head, and to protect the working surfaces immerse the assembly in a bath of clean Shell Calibration Fluid 'C'.

Withdraw the cam ring from the pump housing, noting the arrow etched on the visible face of the cam ring. The arrow is to assist when reassembling, and its direction corresponds with the direction of pump rotation, as shown on the pump nameplate.

Compress the cam ring locating circlip, using circlip pliers 18G 1004, and withdraw the circlip from inside the pump housing.

Hold the drive hub with drive shaft screw assembly tool 18G 659 and, using torque adaptor 18G 664 and a standard socket wrench, unscrew the drive shaft screw from inside the drive hub, reversing the procedure shown in Fig. Da.17. The splined drive shaft complete with governor weights assembly may now be withdrawn from inside the pump housing.

Remove and discard the 'O' seal from the drive shaft and remove the weight retainer, weights, thrust washer, and sleeve from the drive shaft.

Withdraw the drive hub from inside the pump housing and remove the spring washer and support washer from their location inside the drive hub. The washers are removed by turning them end on inside the drive hub and withdrawing them along the master spline. Two flats are machined on the outside diameter of the support washer to facilitate this operation.

Remove the drive hub oil seal from the pump housing, using oil seal extractor tool 18G 658.

Wash all components thoroughly in clean Shell Calibration Fluid 'C'. Cotton waste, rags, or cloth wipers must not be used to wipe the components. If necessary, unscrew the rotor plug with sealing washer, using rotor plug spanner 18G 652, and blow out the internal passages in the pumping and distributing rotor with compressed air. Coat the threads of the plug with Araldite and refit and tighten the plug to 28 lb. in. (·32 kg. m.).

Push out the pumping plungers, one at a time, for inspection, noting that the end of the plunger which has been in contact with the roller shoe is polished and should be replaced in this position. Examine the working surface of the plungers and the plunger bore in the pumping and distributing rotor for wear and abrasions. The bore of the hydraulic head and its mating surface on the rotor should also be examined for wear and scoring. If any of these parts are worn, the pumping and distributing rotor and hydraulic head, which are mated assemblies, must be renewed as a unit.

Some injection pumps are fitted with hydraulic heads having an oversize metering valve bore and an oversize metering valve to suit. Oversize metering valves, which are identified by a machined groove, are available, but only hydraulic heads having a standard-size metering valve bore are supplied as replacements. Injection pumps fitted with oversize metering valves are identified by the number 6·375 etched upon the hydraulic head between the outlet connections adjacent to the metering valve bore.

Inspect the plunger rollers for flats and the cam ring lobes for signs of wear. Test the roller shoes in their

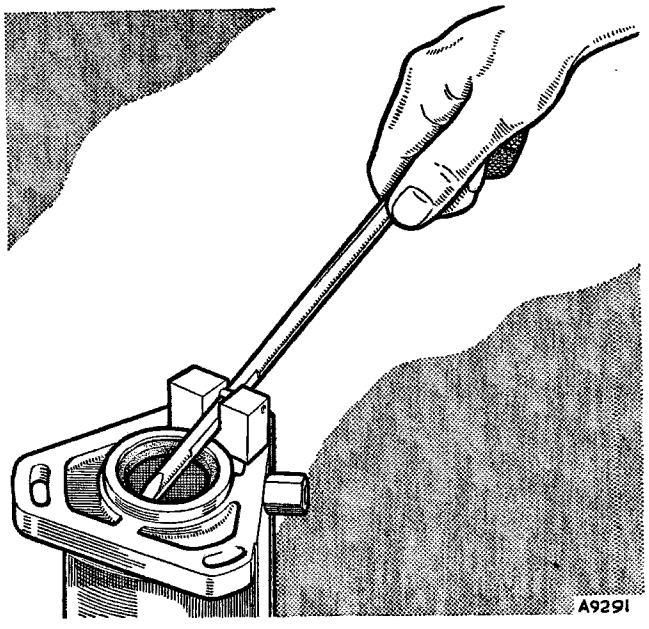

*Fig. Da.*14

Removing the drive hub oil seal, using oil seal extractor 18*G* 658

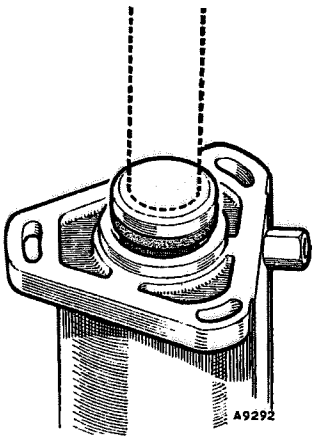

*Fig. Da.*15
Fitting a drive hub oil seal, using oil seal guide 18G663

guides in the pumping and distributing rotor for correct action and freedom of movement.

Check the drive shaft splines for wear, assemble the drive shaft to the drive plate, and ensure that there is no excessive radial movement between the drive shaft and plate.

Test the fit of the vanes in their slots in the transfer pump rotor. The vanes should be a sliding fit when lubricated with fuel oil.

Inspect the bore of the regulating valve sleeve for wear and ensure that the valve piston can move freely along the whole length of the sleeve bore.

Inspect all springs for fractures and check them against new counterparts for length. Weak or fractured springs should be renewed. Check the governor weight retainer, thrust washer, and thrust sleeve against new counterparts for signs of wear.

When reassembling, thoroughly rinse all components in freshly filtered clean Shell Calibration Fluid 'C' and assemble all parts wet.

Fit a new drive hub oil seal to pump housing, driving it onto its seat with oil seal guide 18G663. Insert oil seal inspection plug 18G660 into the oil seal. A correctly fitted oil seal will show a continuous black line when viewed through the flange end of the oil seal inspection plug.

Fit the support washer and spring washer into the drive hub. Remove the oil seal inspection plug and pass the drive hub through the seal, seating the drive hub flange against the pump housing.

Place the governor weight retainer on plate 18G662 and pass locating pin 18G661 through the weight retainer to locate in the plate so that the weight retainer is trapped between the plate and the shoulder of the locating pin. Place the weights, equally spaced, in position on the weight retainer.

The slot in each weight should be uppermost and nearest the locating pin (Fig. Da.16). Each weight should be aligned with a pocket in the weight retainer and with its inner end against the locating pin. Place the thrust washer and thrust sleeve on the locating pin

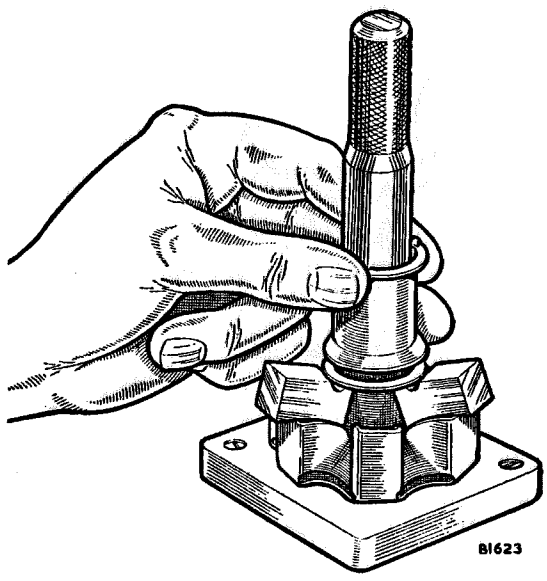

*Fig. Da.*16
Assembling the governor weights, thrust washer, and thrust sleeve into the weight retainer, using Service tools 18G661 *and* 18G662

and resting on the governor weights. The thrust sleeve must be fitted with the flange having the projection uppermost. Exert downward pressure on the thrust sleeve and the assembly will enter the weight retainer. Withdraw the locating pin and remove the assembly from the plate. Slide the assembly onto the drive shaft. Fit protection cap 18G657 over the drive shaft splines and fit a new 'O' seal in the machined groove on the shaft. Insert the drive shaft and weight assembly into the pump housing and engage the drive shaft splines with the splines in the drive hub. Fit the drive shaft screw, and, holding the drive hub with drive shaft screw assembly tool 18G659, tighten the drive shaft screw to the figure given in **'GENERAL DATA'**, using torque

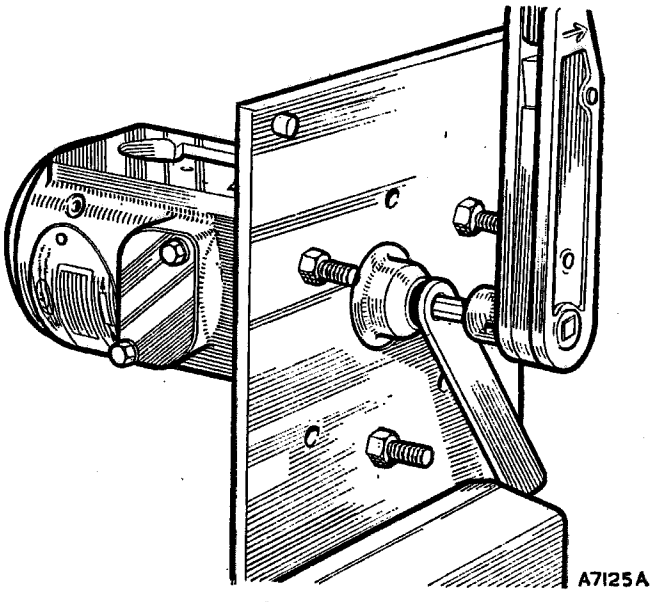

●*Fig. Da.*17
Holding the drive hub with drive shaft screw assembly tool 18G659 *while tightening the drive shaft screw with torque adaptor* 18G664 *and torque wrench* 18G537

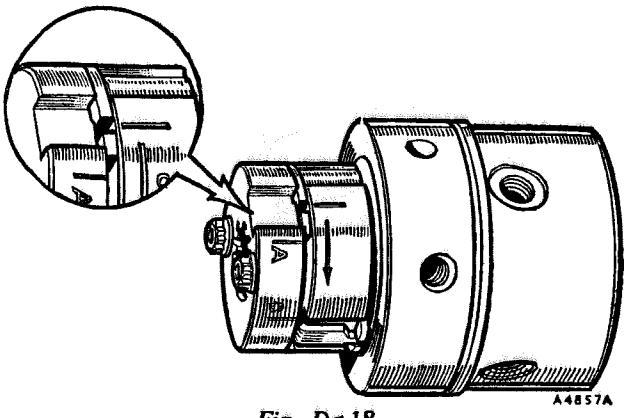

*Fig. Da.*18

Assemble the top adjusting plate and the drive plate with the slots in their peripheries aligned with the scribed mark on the pumping end of the rotor

adaptor 18G 664 and torque wrench 18G 537 (Fig. Da.17).

Compress the cam ring locating circlip, using circlip pliers 18G 1004, and seat it against the shoulder in the bore of the pump housing. Place the cam ring in position against the circlip. The direction of the arrow on the visible face of the cam ring must conform with the direction of pump rotation as marked on the pump nameplate. Fit the cam advance screw finger tight to locate the cam ring and check the ring for freedom of movement in the pump housing.

If the hydraulic head and pumping and distributing rotor are renewed, ensure that the direction of the arrow stamped on the periphery of the pumping end of the rotor corresponds with the pump rotation, as indicated on the pump nameplate.

Withdraw the pumping and distributing rotor complete with plungers from the hydraulic head. Place the top adjusting plate in its correct position on the rotor—that is, with the slot in the periphery of the adjusting plate aligned with the scribed mark on the periphery of the pumping end of the rotor (Fig. Da.18).

Fit the drive plate to the rotor with its relieved face next to the top adjusting plate. The slot in the periphery of the drive plate must be in line with the scribe mark on the periphery of the rotor (Fig. Da.18). Tighten the drive plate securing screws lightly to hold the top adjusting plate in position on the rotor. Invert this assembly so that the distributing end of the rotor is uppermost. Slide the rollers into their shoes and insert the roller and shoe assemblies into their guides in the rotor, ensuring that the contour of theroller shoe ears conforms with the contour of the eccentric slots in the top adjusting plate. Assemble the bottom adjusting plate to the rotor with the contour of the eccentric slots in the adjusting plate conforming to the contour of the roller shoe ears and the slots in the periphery of the bottom adjusting plate engaging the lugs on the top adjusting plate. Fit the assembly of the pumping and distributing rotor to the hydraulic head and fit and lightly tighten the transfer pump rotor. Stand the assembly of the hydraulic head and the pumping and distributing rotor on the bench with the pumping end of the rotor uppermost.

●Fit relief valve timing adaptor 18G 653 A, preset at 15 atmospheres, to high-pressure outlet 'V' on the hydraulic head and connect up the whole assembly to injector nozzle testing machine 18G 109 A (Fig. Da.19).●

Operate the handle of the test machine and turn the pumping and distributing rotor in the normal direction of rotation until the pumping plungers are forced outwards to the maximum fuel position. Set the roller-to-roller dimension, using a micrometer, to the dimension given in **'GENERAL DATA'**. Move the adjusting plates (clockwise to increase and anti-clockwise to decrease the dimension) with maximum fuel adjusting probe 18G 656. Tighten the drive plate securing screws to the figure given in **'GENERAL DATA'**, using torque wrench 18G 537. This setting is approximate, final adjustment being made with the pump mounted on a power-driven test machine (see Section Da.9). The drive plate is held, when tightening the securing screws, with assembly drive plate spanner 18G 641. Disconnect the test machine and the hydraulic adaptor from the hydraulic head.

Fit a new oil seal into its groove in the machined periphery of the hydraulic head.

Turn the pump drive shaft in the pump housing and position the master spline at 12 o'clock. Align the master spline in the drive plate with the metering valve bore in the hydraulic head. Lubricate the periphery of the hydraulic head and the bore of the pump housing liberally with clean Shell Calibration Fluid 'C'. Hold the hydraulic head assembly square with the axis of the pump housing and, with the metering valve bore at 12 o'clock, push the hydraulic head into the pump housing. Rotate the drive shaft slightly to assist the engagement of the shaft with the drive plate.

Insert the two hydraulic head locking screws, leaving them finger tight and ensuring that the screw with the vent valve is fitted immediately above the pump nameplate.

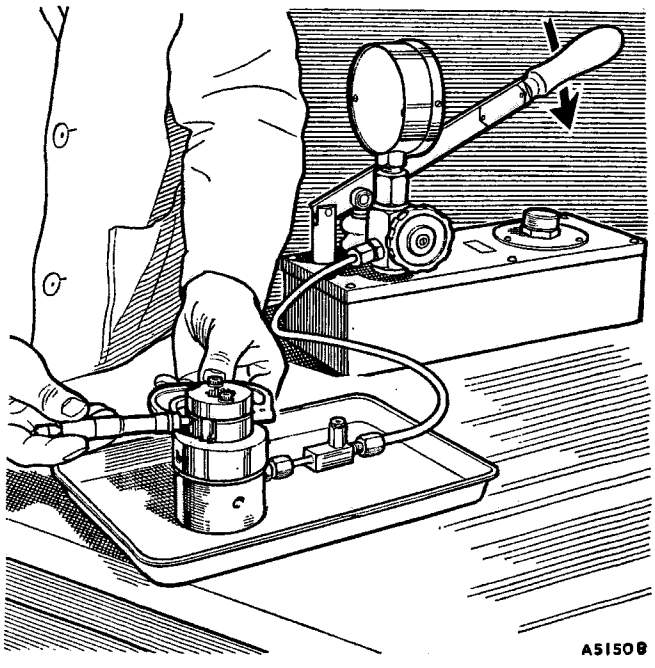

●*Fig. Da.*19

Setting the roller-to-roller dimension, using a micrometer and Service tools 18G 109 *A and* 18G 653 *A*●

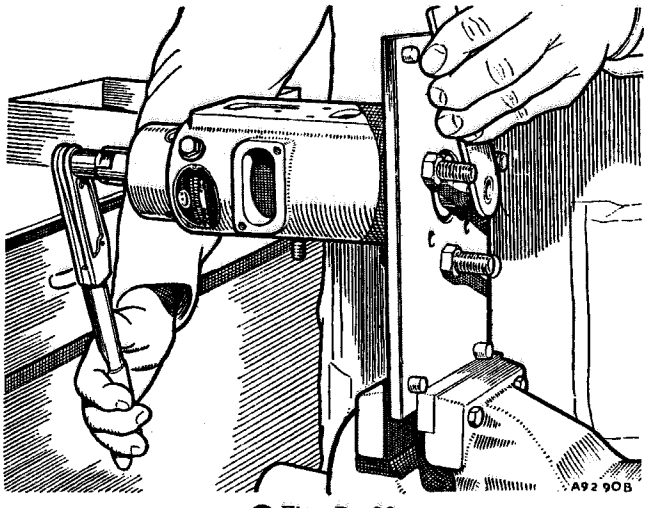

●*Fig. Da.*20

Tightening the transfer pump rotor, using torque wrench 18G536 *and Service tools* 18G659 *and* 18G634

Mount drive shaft screw assembly tool 18G659 in the splined drive hub and, using torque wrench 18G536 and assembly box spanner 18G634, tighten the transfer pump rotor to the figure given in **'GENERAL DATA'**.

Fit the transfer pump liner and insert the carbon vanes into the slots in the transfer pump rotor.

●Ensure that the transfer pump liner locating peg is in position 'C' in the pump end plate.●

Insert the piston retaining spring into the regulating valve bore in the end plate, ensuring that it is properly seated in the bottom of the bore. Fit a new seal washer to the small-diameter end of the regulating valve sleeve and insert the valve piston into the sleeve. Insert the regulating spring into the large-diameter end of the valve sleeve. Place the regulating plug on the top of the sleeve with its spigoted end engaging the sleeve bore. Fit the sleeve retaining spring onto the guide. Pass the nylon filter, small-diameter end leading, over the spring and regulating plug onto the shoulder of the valve sleeve. Insert this assembly, valve sleeve first, into the bore of the end plate and secure it in position with the fuel inlet connection and washer.

Position a new oil seal in its recess in the upper face of the hydraulic head and fit the assembled end plate to the head, engaging the locating peg on the inner face of the end plate with the slot in the periphery of the transfer pump liner. The end plate securing screw holes are unequally spaced to ensure correct assembly of the end plate to the hydraulic head. Tighten the set screws and studs to the torque figure given in **'GENERAL DATA'**, using torque wrench 18G536. Tighten the fuel inlet connection to the torque figure in **'GENERAL DATA'**, using torque wrench 18G537.

Tighten the cam ring advance screw to the figure given in **'GENERAL DATA'**, using torque wrench 18G372. Check the cam ring for freedom of movement.

Place a new advance device housing gasket in position on the pump housing with the flat of the 'D'-shaped hole at the drive hub end of the pump. To ensure satisfactory sealing this gasket should be assembled dry. Assemble the advance device housing to the pump housing, using new rubber and aluminium sealing washers for the head locating bolt and cap nut. Using torque wrench 18G537, tighten the head locating bolt, the cap nut, and the two head locking screws to the figures given in **'GENERAL DATA'**. Check the cam ring for freedom of movement.

Fit new 'O' seals to the light-load advance piston plug and the spring cap, using protection cap 18G640 to pass the seals over the threads.

Insert the slide washer and piston, in that order, into the advance device housing on the side where the fuel oil drilling enters the piston bore. Screw in the piston plug. Insert the maximum advance stop, and spring, in that order, into the remaining open end of the advance unit housing and screw in the cap complete with shim. Tighten the piston plug and spring cap to the torque figures given in **'GENERAL DATA'**, using torque wrench 18G537.

Insert the metering valve into the metering valve bore in the hydraulic head.

Engage the governor arm with the control bracket and connect the governor arm spring to both components.

Fit the assembled governor arm and control bracket to the pump housing. The lower end of the governor arm should engage the outside face of the thrust sleeve flange. Place the keep plate in position with its open end towards the shut-off bar. Fit new tab washers with their pointed tabs towards the governor arm. Secure the keep plate in position with the two governor control cover studs. Fit the small screw and tab washer at the metering valve end of the control bracket. Tighten the control cover studs to the torque figure given in **'GENERAL DATA'**, using torque wrench 18G536. Lock the studs in position by bending up the pointed tabs. Tighten the small screw to the torque figure given in **'GENERAL DATA'** and lock it with the tab washer.

Assemble the spring retainer, spring, and fibre washer onto the governor linkage hook, in that order. Pass the threaded end of the linkage hook through the governor

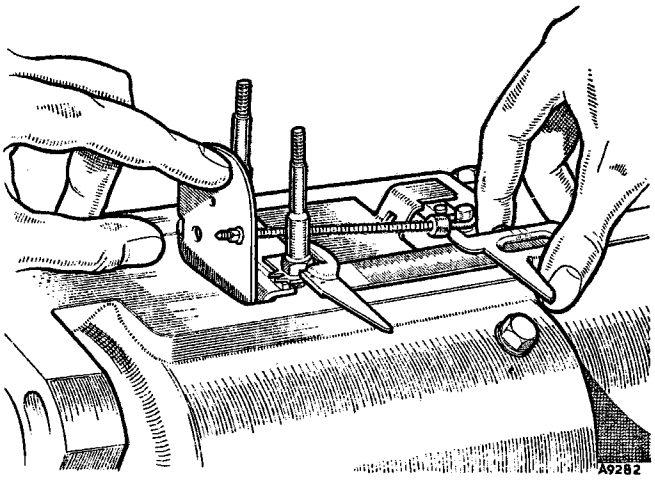

*Fig. Da.*21

Setting the internal dimension between the metering valve lever pin and the control cover stud with the vernier held parallel to the axis of the pump

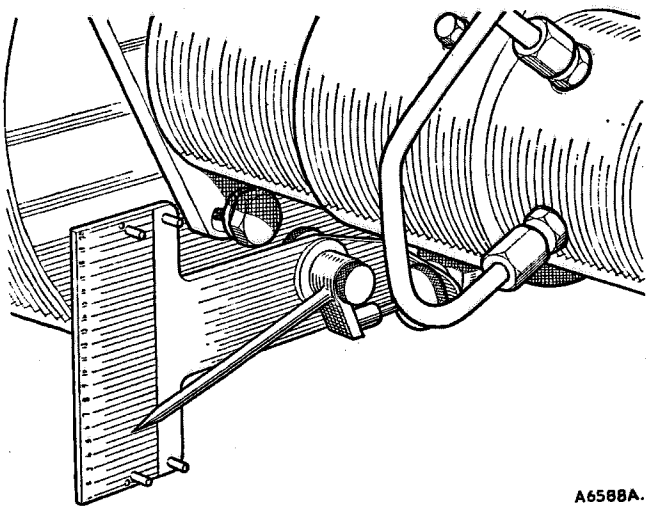

●*Fig. Da.22*
Checking the automatic advance device, using advance gauge 18G638B●

arm. Fit the pivot ball washer onto the linkage hook and screw on the linkage nut about three turns. Press back the spring retainer and attach the linkage hook to the metering valve. The hook end should turn towards the metering valve.

Set the internal dimension between the metering valve lever pin and its nearest control cover stud to the length given in **'GENERAL DATA'**, using a vernier gauge as shown in Fig. Da.21. Adjustment is made by slackening or tightening the hook linkage nut. During this operation light pressure should be applied to the governor arm in the direction of the metering valve and the vernier gauge should be held parallel to the pump axis.

Locate the idling spring on the idling spring guide. Insert the guide into hole No. 2 in the governor arm (Fig. Da.9) and connect the governor spring to the idling spring guide.

Insert the plain end of the shut-off bar into the slot in the control bracket and position the shut-off bar under the tab of the control cover stud locking washer.

Using protection cap 18G654, fit the lower 'O' seal to the shut-off shaft. Fit the upper 'O' seal, using protection cap 18G665. Pack the groove between the 'O' seals with Shell Alvania No. 2 grease. Press the shut-off shaft into its bore in the control cover. The peg which engages the shut-off bar should be close to the inside edge of the control cover, and should be left projecting slightly above the control cover face.

Place a new control cover gasket in position on the pump housing, ensuring that the locating tabs of the gasket engage the slots under the keep plate. To ensure satisfactory sealing this gasket should be soaked in Shell Calibration Fluid 'C' before assembly.

Fit new lower and upper 'O' seals to the throttle shaft, using protection caps 18G654 and 18G665. Pack the groove between the 'O' seals with Shell Alvania No. 2 grease. Connect the free end of the governor spring to hole No. 2 in the throttle shaft link (Fig. Da.9).

Press the throttle shaft into its bore in the control cover. Place the control cover in position on the control cover studs. Ensure that the shut-off shaft peg engages the shut-off bar and pull the shut-off shaft fully home as the control cover is lowered onto the gasket. Fit new sealing washers on the control cover studs and fit and tighten the stud nuts to the torque figures given in **'GENERAL DATA'**, using torque wrench 18G536. Place the dust caps on the throttle and shut-off shafts. Fit the throttle arm and the shut-off lever to their respective shafts and secure them in place with their nuts and washers.

Section Da.9

TESTING AND ADJUSTING THE FUEL INJECTION PUMP

After overhaul the fuel injection pump must be checked functionally and the maximum fuel output adjusted if necessary. These tests and adjustments are carried out on a power-driven test bench embodying the necessary vacuum and pressure gauges and equipment to test the fuel transfer pump and a graduated glass to measure the injection pump back-leakage. In addition, the tools mentioned in the following paragraphs are also required.

NOTE.—The following precautions must be observed when testing the pump:

(1) Ensure that the power-driven test bench is set to run in the direction of rotation of the injection pump, as indicated by the arrow on the pump nameplate. Serious damage may be caused to the pump if it is run in the reverse direction

(2) Ensure that the fuel flow at the pump inlet is not less than 1,000 c.c./min. If this flow cannot be obtained, a maximum feed pressure of 2 lb./sq. in. (·15 kg./cm.²) is permissible.

(3) Do not run the pump for long periods at high speed with low fuel output.

(4) Do not run the pump for long periods with the shut-off control in the closed position.

After checking the direction of rotation mount the pump on the test bench and connect up the drive. Fit radial connections to the hydraulic head in place of the banjo pipes. Using high-pressure pipes 6 mm. × 2 mm. × 865 mm. (34 in.) long, connect the radial connections to a matched set of test nozzles. The test nozzles should be Type BDN.12.SD.12 mounted in nozzle holders Type BKB.50.SD.533b (formerly BKB.50.SD.19b) and set to open at 175 atmospheres.

Ensure that the pump throttle arm has the full range of movement by unscrewing fully the idling and maximum speed stop screws.

Remove the hydraulic head locking screw, not the one incorporating the vent valve, and connect the pressure gauge by means of a flexible pipe to transfer pressure adaptor 18G636, which is screwed into the head locking screw hole.

Connect the feed pipe, preferably of the transparent type, to the fuel inlet connection on the injection pump end plate. The vacuum gauge should be fitted, by means of a 'T' coupling, to the feed pipe.

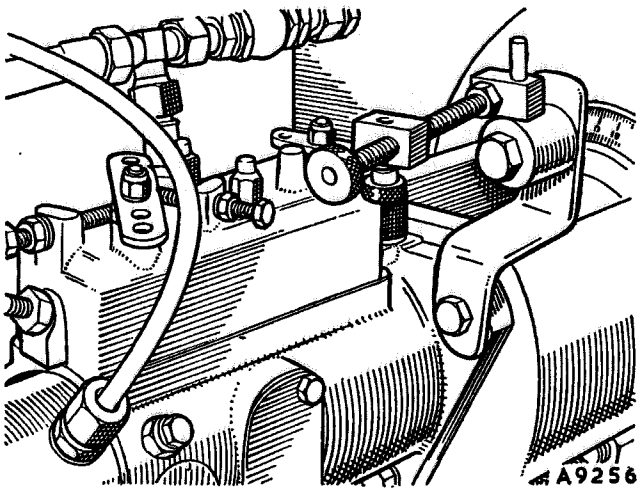

Fig. Da.23
The shut-off lever adjuster 18G697 mounted on the fuel injection pump and test bench

Connect the inlet connection on the measuring-glass to the drain connection on the pump housing and the drain cock on the measuring-glass to the return pipe on the test bench by means of flexible pipes.

Remove the small set screw from the centre of the advance unit housing spring cap and assemble automatic advance gauge 18G638B to the spring cap with the degree scale and pointer uppermost and the scale set to zero.

Throughout the following operations and tests the pump throttle and shut-off levers must be in the fully open position, except where stated otherwise.

The pump and the feed pipe should now be filled and primed as follows:

(1) Connect the fuel feed pipe to the drain connection on the pump housing.
(2) Open both of the vent screws on the injection pump.
(3) Turn on the gravity feed. When test oil free from air bubbles flows from the vent screw on the hydraulic head, close this vent screw. Wait till the test oil flowing from the vent screw in the governor control housing is free from air bubbles, then close this vent screw also.
(4) Rotate the pump drive through 180° and repeat operations (2) and (3).
(5) Fit the feed and return pipes to their respective connections.
(6) Slacken the high-pressure pipe unions at the injector end.
(7) Start the test machine and run at 100 r.p.m. until oil free from air bubbles issues from the injector pipe connections.
(8) Tighten the injector pipe connections while the test machine is running.

The following tests are designed to check, in turn, each of the separate functions of the injection pump. Before, however, making these individual tests a general check should be carried out to ensure oil-tightness of all joint washers, oil seals, and pipe connections while the pump is running and when stationary.

(1) Transfer pump vacuum test

Start the test machine and run the pump at 100 r.p.m.

Turn the test oil feed cock to the 'off' position and note the depression registered on the vacuum gauge. This should build up to 16 in. (406 mm.) Hg within 60 seconds maximum. Check the fuel feed pipe unions for air leaks, indicated by the presence of air bubbles in the pipe line. If necessary, tighten the feed pipe unions and carry out a further test.

NOTE.—Do not run the pump for periods exceeding 60 seconds with the test oil supply turned off.

After the vacuum test is completed turn on the test oil supply, and with the pump running at 100 r.p.m. air-vent the pump by means of the vent valve on the hydraulic head locking screw.

(2) Transfer pump pressure

With the pump running at 100 r.p.m. note the pressure registered on the pressure gauge, which should read 12 lb./sq. in. (·8 kg./cm.^{2}).

(3) Transfer pump pressure

Increase the pump speed to 800 r.p.m., when a pressure of 32 to 44 lb./sq. in. (2·3 to 3·1 kg./cm.^{2}) should be registered on the pressure gauge.

(4) Fuel delivery setting

Run the pump at 800 r.p.m., and after slackening the locknut alter the metering valve adjustment screw till a zero reading is obtained on the automatic advance gauge. Tighten the locknut and re-check the advance reading. Fit the shut-off lever adjustment tool 18G697 to the fuel pump and adjust the shut-off lever to obtain an average fuel delivery of 3·6 to 4·4 c.c. per 200 shots. Ensure that the advance gauge still shows a zero reading.

(5) Advance setting

Run the pump at 800 r.p.m. Slacken the metering valve adjustment screw locknut and alter the adjustment screw to obtain an advance reading of 1¾ to 2¼°. Tighten the locknut and re-check the advance reading.

(6) Fuel delivery check

Without altering any of the adjustments, check that the fuel delivery at 800 r.p.m. is 3·6 to 4·4 c.c. per 200 shots. Remove the shut-off lever adjustment tool.

(7) Advance check

Run the fuel pump at 800 r.p.m. Move the shut-off lever to the fully closed position and check that the advance reading is 3½ to 4½°. Fit and seal the metering valve adjustment screw sealing cap with wire and a lead seal, using sealing pliers 18G541.

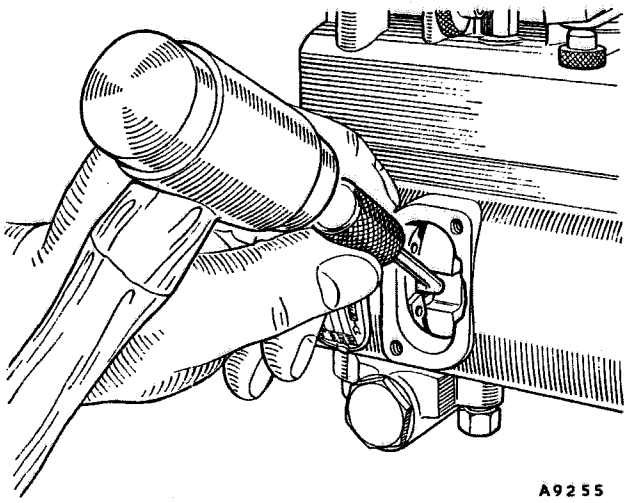

Fig. Da.24

Adjusting the maximum fuel setting, using Service tool 18G 656

NOTE.—If for any reason it is found necessary to tighten or slacken the governor control cover cap nuts, the settings made at (4) and (5) will be disturbed, and operations (4), (5), (6), and (7) should be repeated.

(8) Back-leakage

Set the shut-off lever fully open and the throttle arm fully closed. Run the pump at 1,000 r.p.m. and measure the back-leakage through the graduated measuring-glass. The back-leakage should be 5 to 50 c.c. per 100 shot time cycle.

(9) Maximum fuel setting

NOTE.—Throughout this test the advance gauge must show a zero reading.

Run the pump at 1,000 r.p.m. with both controls in their fully open position, when the average delivery for 200 shots from all four test injectors should be 6·9±·1 c.c. In arriving at this figure compare the delivery from all injectors to ensure that the difference in output from any two does not exceed ·6 c.c. Before taking a reading the test oil in the measuring-glasses should be allowed to settle for 15 seconds and the measuring-glasses should be allowed to drain for 30 seconds before a fresh test is made.

To adjust the pump output stop the test bench and turn the test oil feed cock to the 'off' position. Remove the cover-plate from the side of the pump housing to provide access to the interior of the pump. Slacken the two drive plate securing screws sufficiently to permit movement of the adjusting plates. Turn the pump drive until the slots in the peripheries of the drive plate and the top adjusting plate are visible through the aperture in the pump housing. Engage the end of the maximum fuel adjusting probe 18G 656 in the slot in the top adjusting plate and tap the tool with a light hammer to move the plate in the required direction. The adjusting plate is turned in the same direction as the normal direction of the pump rotation to increase the maximum output. Movement of the adjusting plate in the opposite direction will decrease the maximum output. This operation must be carried out very carefully as the amount of movement required will be very small. Tighten the drive plate securing screws to the torque figure given in **'GENERAL DATA'**, using tools 18G 537 and 18G 655 A. While tightening the screws the torque wrench must be in line with the spanner (Fig. Da.25). After making this adjustment replace the cover-plate and carry out the complete filling and priming operation. Re-check the fuel delivery and, if necessary, re-adjust the pump output.

(10) Fuel delivery

Decrease the pump speed to 100 r.p.m. and check the output. The average delivery for 200 shots under these conditions should not be less than that obtained when setting the pump maximum fuel output minus 1·5 c.c. When carrying out this test use 30 seconds' measuring-glass draining time and allow the test oil to settle for 15 seconds before taking a reading.

(11) Cut-off test

With the shut-off lever held in the fully closed position run the pump at 200 r.p.m. The average delivery for 200 shots, with the throttle arm in the fully open position, should not exceed 1·0 c.c.

(12) Throttle operation

Run the fuel pump at 200 r.p.m. with the throttle arm in the fully closed position. The average delivery with the shut-off lever fully open should not exceed 1·0 c.c. per 200 shots.

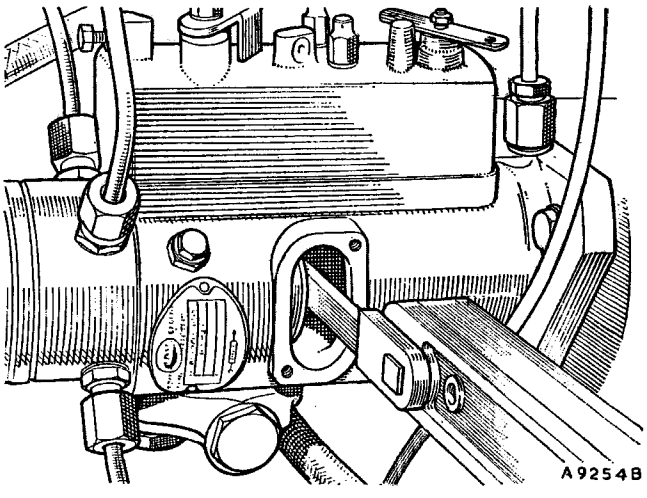

Fig. Da.25

Tightening the drive plate screws, using torque wrench 18G 537 and torque adaptor 18G 655 A

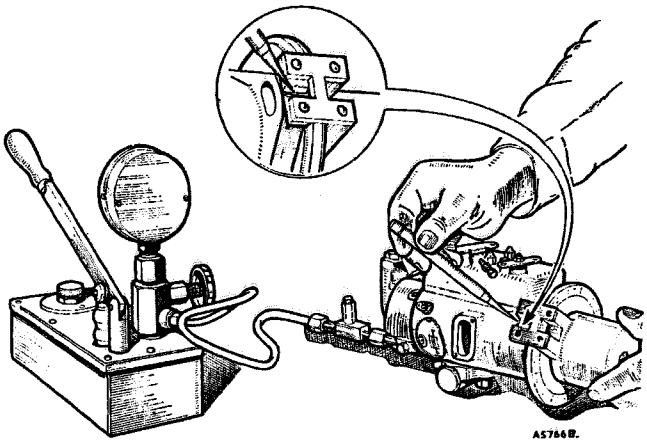

●*Fig. Da.*26
Scribing the timing mark on the fuel injection pump mounting flange, using Service tool 18*G* 648

(13) Fuel delivery check

With both controls fully open run the fuel pump at 1,650 r.p.m. and record the average delivery per 200 shots.

(14) Governor setting

Increase the pump speed to 1,850 r.p.m. and set the throttle arm by means of the maximum speed adjustment screw to give a maximum average delivery of 1·0 c.c. per 200 shots. No line should exceed 1·8 c.c. Tighten the adjustment screw locknut.

(15) Fuel delivery check

Reduce the pump speed to 1,650 r.p.m. and re-check the fuel delivery. The average delivery now should not be less than that recorded in operation (13) minus ·4 c.c. per 200 shots.

(16) Timing setting

This setting is made, after all the foregoing tests have been completed, with the pump removed from the power-driven test bench.

It should be noted that, unlike the 'in-line' fuel injection pump, which has a static commencement of injection point, the point at which commencement of injection occurs in the distributor-type fuel injection pump varies according to the fuel requirements of the engine. The timing of the distributor-type pump is carried out with the pumping plungers set to deliver maximum fuel on No. 1 injection line and with the plunger rollers in contact with the cam lobes: therefore, after all occasions of pump overhaul or adjustment to the pump output it is imperative that the pump timing is checked, and the timing mark on the pump flange re-marked if necessary.

●Remove the cover-plate from the side of the pump housing and the four radial connections from the hydraulic head. Connect injector nozzle testing machine 18G 109 A to outlet 'V' on the hydraulic head by means of relief valve timing adaptor 18G 653 A. The relief valve must be set to operate at 30 atmospheres.●

Turn the pump drive hub in the normal direction of rotation until the timing mark 'E' on the drive plate becomes visible through the aperture in the side of the pump housing. Operate the handle of the test machine to apply a pressure of 30 atmospheres to the pump. This will force the pumping plungers outwards to the limit of their travel as the drive hub is turned. Continue turning the drive hub in the normal direction of rotation until resistance is encountered. With the pump held in this position mount flange marking gauge 18G 648, preset to 86°, on the pump quill shaft. Check that the timing mark on the pump flange lies along the scribing guide on the flange marking gauge. If necessary, delete the old timing mark and scribe a new mark by drawing a scribing tool along the guide on the flange marking gauge.

Disconnect the pump from the test machine and fit the banjo pipes to the hydraulic head. Refit the cover-plate to the side of the fuel pump housing and seal the securing screws with wire and a lead seal, using sealing pliers 18G 541.

Maximum and idling speed adjustments

These adjustments are carried out after the pump has been installed on the engine, and are detailed in Section Da.7.

Section Da.10

ALTITUDE SETTINGS

Each vehicle leaves the factory with its maximum fuel setting adjusted for sea-level conditions. If the vehicle is

Altitude	*Maximum fuel output for* 200 *shots at* 1,000 *pump r.p.m.*
0 to 2,000 ft. (0 to 600 m.)	6·8 to 7·0 c.c.
2,000 to 4,000 ft. (600 to 1200 m.)	6·4 to 6·6 c.c.
4,000 to 6,000 ft. (1200 to 1800 m.)	6·0 to 6·2 c.c.
6,000 to 8,000 ft. (1800 to 2400 m.)	5·6 to 5·8 c.c.
8,000 to 10,000 ft. (2400 to 3000 m.)	5·1 to 5·3 c.c.
10,000 to 12,000 ft. (3000 to 3600 m.)	4·7 to 4·9 c.c.

to be operated continuously above sea-level, adjustment of the injection pump is necessary to set the maximum fuel delivery to conform with the figures given in the table on page Da.19.

Section Da.11

DESCRIPTION OF THE FUEL INJECTORS

The fuel injectors are of the Pintaux type developed for use with the Ricardo Comet III combustion chamber to assist starting under cold conditions. The Pintaux nozzle is a pintle-type nozzle having an auxiliary spray hole which directs a spray of fuel into the hottest zone of the combustion chamber.

The nozzle consists of two parts, the nozzle valve and the nozzle body. The nozzle valve takes the form of a plunger accurately lapped into the nozzle body to the closest possible fit, within which it will work freely. The inner end of the valve is reduced in diameter to produce a stem upon which a valve face is formed, the stem being extended to form a pin or pintle which fits into a comparatively large-diameter hole in the nozzle body. The auxiliary spray hole is drilled in the nozzle body at an angle to the pintle hole, entering the nozzle seating below the line of contact between the valve and seat. Fuel is fed to the mouth of the nozzle through vertical drillings in the nozzle body which terminate in an annular gallery just above the valve seating.

The nozzles are held in position in the cylinder head by suitably designed holders, a nozzle nut securing the two components together, the faces of which are lapped to form a high-pressure seal.

Each holder contains a spindle and spring which serve to retain the nozzle valve on its seating. The upper end of the spring is located in an adjustable cap nut, enabling the pressure at which the valve is forced off its seating to be regulated. A fuel inlet connection is provided to accept the high-pressure piping from the injection pump and the body of the holder is drilled to allow passage of the fuel to the gallery in the nozzle body. A leak-off pipe is connected to the small tapped hole in the top of the cap nut to return to the low-pressure side of the fuel system the accumulation of fuel which leaks past the nozzle valve. This slight leakage of fuel also serves to lubricate the nozzle valve.

In operation, the pressure in the annular gallery in the nozzle body is built up by the delivery of fuel from the injection pump. When the pressure in the gallery reaches injection pressure, determined by the spindle and spring in the nozzle holder, the valve is raised from its seating in the nozzle body and fuel is forced through the pintle and auxiliary holes in the form of a finely atomized spray. As the pressure in the gallery drops, injection into the combustion chamber is terminated by the snap return of the nozzle valve onto its seating.

At engine starting speed, when the injection pressure is low, the valve is not lifted sufficiently to clear the pintle hole and the bulk of the fuel is discharged through the auxiliary hole. At normal running speed the injection pressure is higher and the valve is withdrawn from the pintle hole, allowing the bulk of the fuel to be discharged through it. A small proportion of fuel continues to be discharged through the auxiliary hole, which prevents the formation of carbon in the hole and does not affect the engine performance.

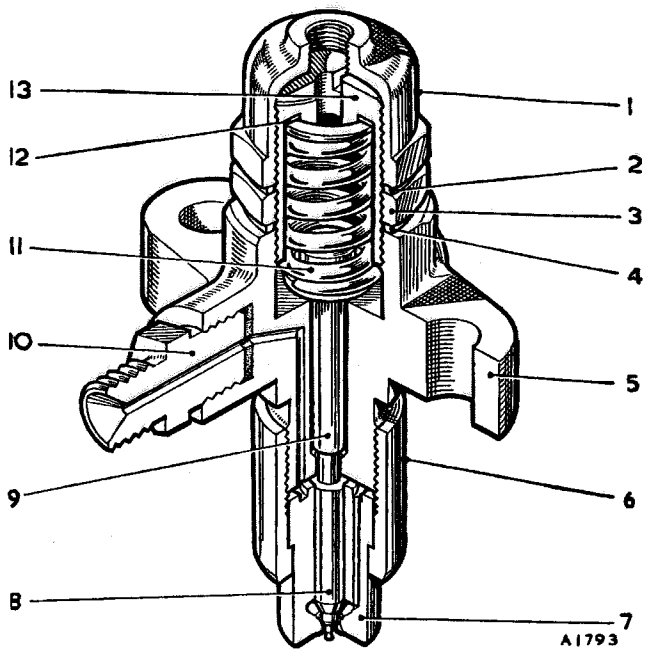

Fig. Da.27

Section through a fuel injector

1. Injector cap nut.
2. Joint washer.
3. Locknut.
4. Joint washer.
5. Nozzle holder.
6. Nozzle nut.
7. Nozzle body.
8. Nozzle valve.
9. Spindle.
10. Inlet union.
11. Spring.
12. Washer.
13. Spring cap nut.

Section Da.12

REMOVING AND REPLACING THE FUEL INJECTORS

Injectors should be removed from the engine and tested for performance, as described in Section Da.14, at regular intervals (see Driver's Handbook).

Disconnect the high-pressure feed pipes from the unions on the nozzle holder bodies.

Unscrew the bolts, noting the copper sealing washers positioned on each side of the banjo-type unions to release the fuel leak-off pipe from the injector nozzle holder cap nuts, and the union on the main fuel filter head.

Unscrew and remove the cap nut from each injector nozzle holder.

Remove the eight nuts and spring washers securing the nozzle holders to the cylinder head and withdraw each injector in turn, using tool 18G491A. Assemble the tool, using the appropriate centre screw adaptor and the unthreaded legs. Place the leg locating sleeves over the nozzle holder studs and position the tool with the

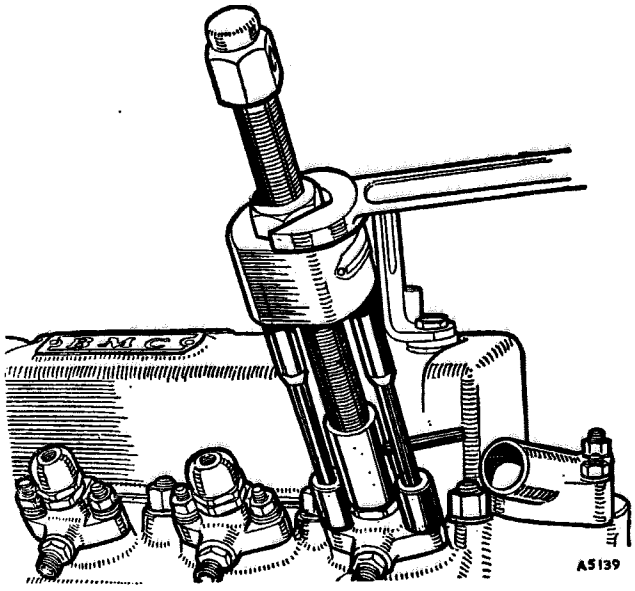

Fig. Da.28
Withdrawing an injector nozzle, using Service tool 18G491A

legs in the sleeves. Screw the centre screw adaptor onto the spring cap nut. Insert the tommy-bar into the small hole in the adaptor, ensuring that its free end bears against one of the legs to prevent the adaptor turning, and tighten the centre screw nut to withdraw the injector nozzle assembly.

If the injectors are to be removed for any considerable length of time, seal off the fuel feed unions, using sealing caps 18G216, and then wrap each injector assembly in greaseproof paper.

Remove the nozzle holder sealing washers from the cylinder head.

Plug the injector bores in the cylinder head to prevent the ingress of foreign matter into the combustion chambers and cylinders.

When replacing, thoroughly clean the injector bores in the cylinder head and ensure that the copper sealing washers are in good condition and will make a gas-tight joint.

Place the injector assemblies in position and tighten the securing nuts evenly to the figure given in **'GENERAL DATA'**, using torque wrench 18G537.

Reconnect the high-pressure feed pipes to the unions on the nozzle holder bodies and refit the fuel leak-off pipe, ensuring that the copper sealing washers are positioned on each side of the banjo-type unions.

Section Da.13

DISMANTLING AND REASSEMBLING A FUEL INJECTOR

As in the case of injection pump dismantling, absolute cleanliness is essential, therefore the same facilities must be available and the same precautions taken for injector maintenance as those described at the beginning of Section Da.8 for the injection pump.

Mount the injector assembly in dismantling fixture 18G388, which may be either bolted to a bench or secured in a vice.

Unscrew the injector cap nut and remove the copper joint washer. Slacken the locknut, unscrew the spring cap nut, and remove the copper joint washer, spring, and spindle from the nozzle holder body. If necessary, remove the inlet union adaptor and withdraw its seating washer (early injectors only).

Unscrew the nozzle nut, using spanner 18G210 in conjunction with torque wrench 18G372, and withdraw the nozzle, taking care not to let the valve drop out.

The nozzle components are mated and must always be kept together.

Before reassembling, used nozzles should be cleaned as outlined in the following paragraphs, using the tools contained in cleaning kit 18G487. After cleaning, the nozzle body should be reverse-flushed to remove any particles of carbon, and testing machine 18G109A with reverse-flush adaptor 18G109E should also be available.

Remove any carbon from the pintle end of the valve, using the brass wire brush, and polish with a piece of soft wood. Use considerable care when cleaning the valve as a scratch or a burr may cause leakage or spray distortion. All polished surfaces should be relatively bright and should not appear 'blue' due to overheating.

Using the wire brush, remove all loose carbon from the outside of the nozzle. Clear the pintle orifice by passing a suitably sized probe down the nozzle bore

Fig. Da.29
Clearing the pintle orifice

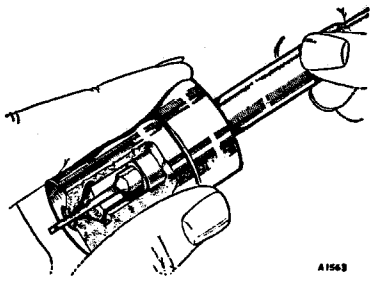

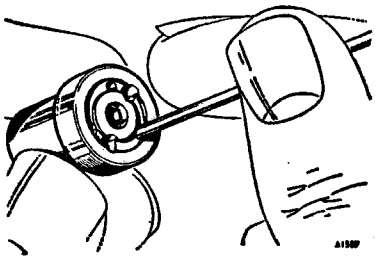

Fig. Da.30
Clearing the feed channel bores

Fig. Da.31
Cleaning the carbon from the fuel gallery

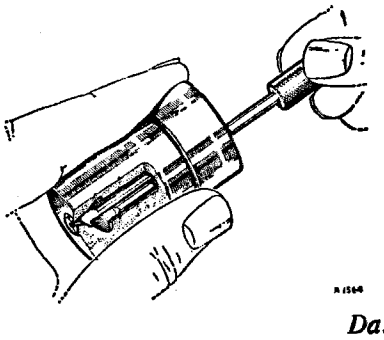

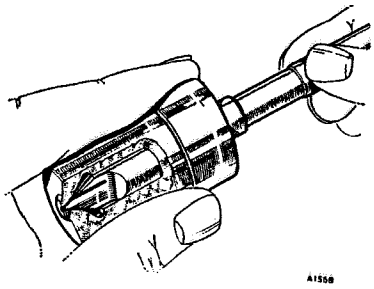

*Fig. Da.*32
Cleaning the nozzle seating

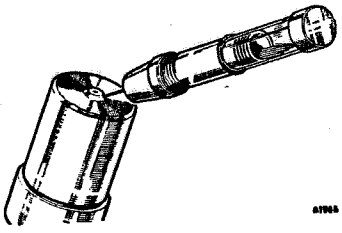

*Fig. Da.*33
Clearing the auxiliary spray hole

until it protrudes through the orifice. Rotate the probe until all the carbon is removed.

Clean out the small feed channel bores, using a drill or wire of ·067 in. (·17 mm.) diameter.

Insert the special groove scraper until the nose locates in the fuel gallery. Press hard against the side of the cavity and rotate to clear away all carbon deposit.

With the appropriate seat scraper clean all carbon from the nozzle seating by rotating and pressing the tool onto the seating.

Clear the auxiliary spray hole by the use of the probing tool fitted with the appropriate-size cleaning wire. The wire should be fitted into the tool so that it protrudes only approximately $\frac{1}{16}$ in. (1·59 mm.) to give maximum resistance to bending. Extreme care must be exercised to obviate the danger of the wire breaking in the hole, as broken particles are extremely difficult to remove.

Ensure that the lapped pressure faces on the upper end of the nozzle are clean, perfectly smooth, and free from burrs.

Assemble the nozzle body into adaptor 18G109E with the nozzle end towards the small thread connection. Attach the adaptor to testing machine 18G109A and operate the pumping lever several times. This forces oil through the spray holes in the reverse direction and flushes out the gallery and internal passages to remove any loose carbon.

In cases where the carbon build-up is particularly hard this may be softened in the following manner, thereby reducing time: prepare a 10 per cent. solution of caustic soda with a detergent added by dissolving 2 oz. (56·7 gm.) of caustic soda in 1 pint (·57 litre) of water and add $\frac{1}{2}$ oz. (14·2 gm.) of an ordinary washing detergent. Place the nozzle bodies in the liquid and boil for a minimum of 1 hour and not more than $1\frac{1}{2}$ hours. Care must be taken not to allow the water to evaporate too much, because if the percentage of caustic soda rises above 15 per cent. the surface of the guide bore and seat may be roughened, making it impossible to service the injectors correctly. Remove the nozzle bodies from the solution, wash them in running water, and then immerse them in a de-watering oil such as Shell Ensis 254. Remove the surplus oil by draining or compressed air.

The carbon may now be removed, using the standard tools provided in the cleaning kit, or in some cases blown clean with compressed air.

If the nozzle is blued, or the seating has a dull circumferential ring, indicating wear or pitting, the complete unit should be set aside for special attention (see Section Da.15).

●Wash all the nozzle holder components in clean Shell Calibration Fluid 'C', taking care to protect the pressure face of the holder body. This face registers with the nozzle pressure faces to form a high-pressure seal and it must be handled in such a way as to avoid damage to it.●

Examine the spring for signs of weakness, rusting, or fracture. Ensure that the ends are perfectly square. The spindle should be perfectly smooth and straight. Examine the recessed end of the spindle which accommodates the top of the nozzle valve; the recess should be perfectly clear and free from abnormal wear. Clear out the feed hole in the nozzle holder, using an air jet; the copper seating of the feed pipe union must be in good condition.

●When reassembling thoroughly wash all components of the nozzle and nozzle holder in clean Shell Calibration Fluid 'C'.●

Test the fit of the valve in the nozzle body. The valve should just fall into position under its own weight when lubricated with fuel oil.

●Immerse the nozzle body and valve in a bowl filled with clean Shell Calibration Fluid 'C' and assemble them under the liquid.●

Mount the nozzle holder in fixture 18G388 and place the nozzle assembly in position on the holder, ensuring that the dowels on the holder are correctly located in the holes in the nozzle body. Fit the nozzle nut and carefully tighten to the figure given in **'GENERAL DATA'**, using spanner 18G210 and torque wrench 18G372.

Do not overtighten this nut, since distortion and subsequent seizure of the nozzle may result.

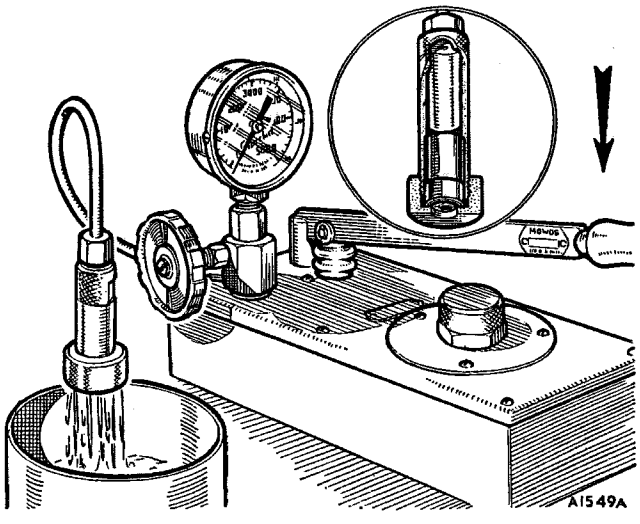

*Fig. Da.*34
Reverse-flushing an injector nozzle with testing machine 18*G* 109 *A and adaptor* 18*G* 109 *E. A sectioned adaptor with a nozzle in position is shown inset*

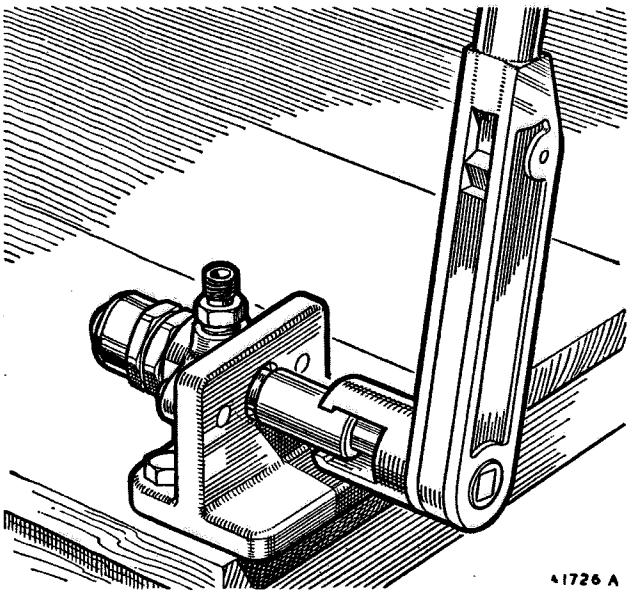

Fig. Da.35

Reassembling a fuel injector, using fixture 18G388, *spanner* 18G210, *and torque wrench* 18G372

Replace the valve spindle in the nozzle holder, ensuring that the stalk of the valve is properly located in the recessed end of the spindle. Lightly smear the valve spring with grease and reassemble the spring, spring cap nut with washer, locknut, and copper joint washer to the nozzle holder body.

●Replace the inlet union adaptor (early injectors), using a serviceable joint washer, and test and set the nozzle opening pressure as described in Section Da.14.●

Refit the cap nut and copper joint washer.

When fitting a nozzle to an assembled nozzle holder the cap nut should be removed and the spring cap unscrewed until the valve spring is relieved of all tension.

If the nozzle is to be stored, smear lightly with Vaseline before packing.

Section Da.14

TESTING THE FUEL INJECTORS

If the injectors are to be tested correctly or it is desired to adjust the opening pressure, then the use of nozzle-testing machine 18G109A and nozzle-testing adaptor 18G109B is essential.

●A fuel which does not affect the skin of the person handling the injectors, such as Shell Calibration Fluid 'C', should be used; the fluid has about the same viscosity as diesel oil and also prevents stickiness of the needle after long periods of injector storage.●

Before using the testing machine ensure that the fuel tank is full. There is no necessity for air-venting as the pump is self-priming.

Before removing an injector from the testing machine close the check valve to prevent damage to the pressure gauge, which may result from a sudden drop in pressure.

WARNING.—It cannot be stressed too strongly that when a nozzle is spraying the nozzle holder must be turned away from the operator.

If faulty injection is experienced on one or more cylinders the suspect nozzle or nozzles can usually be determined by releasing the feed pipe union nut on each nozzle holder in turn, with the engine running, and listening to the idling performance of the remaining cylinders. Retighten each union nut before slackening the next.

Testing for spray

To test the Pintaux-type nozzle for spray, test adaptor 18G109B, which is connected between the nozzle-testing machine and the injector under test, must be used.

The adaptor consists of an additional nozzle holder, fitted with a special nozzle, and a modified nozzle nut, into which the injector under test is fitted. The adaptor assembly is used to simulate high rates of injection so that the main spray can be observed.

Set the injectors to open at 130 atmospheres as described under **'To check and adjust the nozzle opening pressure'**.

Attach adaptor 18G109B to testing machine 18G109A and set the adaptor opening pressure to 220 atmospheres. A fine spray formation from the test adaptor must not be expected in view of its special nozzle.

Now screw the injector to be tested into the test adaptor; close the check valve to cut off the pressure gauge and operate the test machine several times to expel any air.

(1) *Auxiliary spray.* With the pressure gauge out of circuit operate the testing machine slowly at about 60 strokes a minute; it is possible to cut out the main spray almost entirely and produce only the auxiliary spray. When this condition has been achieved the auxiliary spray can be observed. This should be well formed and free from splits and distortions, although there may be present a slight central core, which may be disregarded.

(2) *Main spray.* Operating the hand lever more rapidly —at about 140 strokes per minute—the main spray can be observed. This should be well atomized and

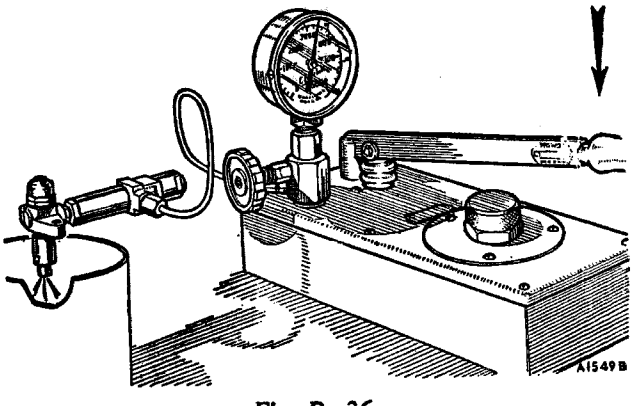

Fig. Da.36

Testing an injector for spray, using testing machine 18G109*A and adaptor* 18G109*B*

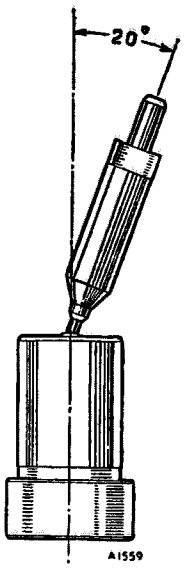

Fig. Da.37

Testing the pintle and orifice for wear. The valve must not tilt at a greater angle than about 20° from the body centre-line

free from large splits or distortion. A slight centre core may be disregarded.

Seat-tightness test

Remove the test adaptor and connect the injector under test direct to the nozzle-testing machine. Open the check valve and set the nozzle to an opening pressure of 100 atmospheres as described under **'To check and adjust the nozzle opening pressure'**.

Depress the lever of the testing machine until a pressure of 90 atmospheres is obtained. Hold this pressure for 10 seconds and examine the nozzle seat for dryness. Reject if wet. If in doubt, maintain this pressure for a period of 60 seconds, when the diameter of the wet spot on a piece of blotting-paper held below the nozzle tip must not exceed ½ in. (13 mm.).

Back-leakage test

The pressure gauge of the injector testing machine must be in circuit and the injector under test set to open at between 160 and 170 atmospheres as described under **'To check and adjust the nozzle opening pressure'**.

●Operate the lever of the testing machine until the gauge registers a pressure of 160 atmospheres. Release the lever and time the pressure drop from 150 to 100 atmospheres. For a nozzle in good condition this time should be not less than six seconds nor greater than 40 seconds, using Shell Calibration Fluid 'C' at a temperature of 10 to 21° C. (50 to 70° F.). At higher temperatures a somewhat lower figure may be obtained.●

When carrying out this test ensure that no leakage occurs at the lapped joint of the valve. If leakage at the lapped joint is suspected, do not overtighten the nozzle nut in an effort to rectify, but dismantle the nozzle (see Section Da.13) and re-examine the pressure faces for signs of dirt or surface imperfections. Clean thoroughly, and if all appears in order replace the components, tightening the nozzle nut to the torque figure given under **'GENERAL DATA'** and re-test.

If the pressure drop time is still low, this indicates excessive leakage past the lapped portion of the valve, and the particular nozzle and valve must be renewed as an assembly.

To check and adjust the nozzle-opening pressure

After carrying out the foregoing tests the Pintaux nozzle must be set to open at a pressure of 130 atmospheres as follows:

(1) Remove the injector from the testing machine.
(2) Remove the injector cap nut and copper joint washer.
(3) Release the locknut and turn the spring cap nut clockwise to increase or anti-clockwise to reduce the opening pressure.
(4) Lock the spring cap nut and re-check the nozzle-opening pressure on the testing machine.
(5) Repeat operations (3) and (4) until the correct opening pressure of 130 atmospheres is obtained.
(6) Refit the injector cap nut and joint washer.

Section Da.15

RECLAIMING INJECTOR NOZZLES

If after dismantling, cleaning, and testing (see Sections Da.13 and Da.14) a nozzle is found to be unsatisfactory, the probable cause is faulty valve seating due to scoring and wear.

The fundamental requirements of the nozzle operation are:

(1) Oil-tight seating.
(2) Correct angular fitment of the nozzle body and nozzle valve seat.
(3) Good fitting of the valve in the body; it must be able to move perfectly freely, yet not permit excessive back-leakage of fuel oil.
(4) The clearance between the pintle and the spray hole must not be excessive. If the nozzle valve is taken out and the pintle end reversed and inserted in the orifice or spray hole, it should not tilt at a greater angle than about 20° from the centre-line of the body.

Assuming correct adjustment of opening pressure, a nozzle lacking the conditions required in (1), (2), or (4) will have a distorted or wet spray, leaking seat, etc., when tested on a nozzle-testing machine.

The valve will either stick open or an excessive amount of oil will leak back from the nozzle holder leak-off connection on nozzles lacking in condition (3). This will be shown by the rapid return of the needle in the pressure gauge of the nozzle-testing machine.

If the clearance between the needle and body, and/or pintle and orifice, is excessive, then the nozzle must be scrapped. Similarly, units must be scrapped if damage has been sustained at the pintle end or lapped faces of the nozzle body or the nozzle valve. Finally, the appearance of fuel abrasion at the top of the seat core may

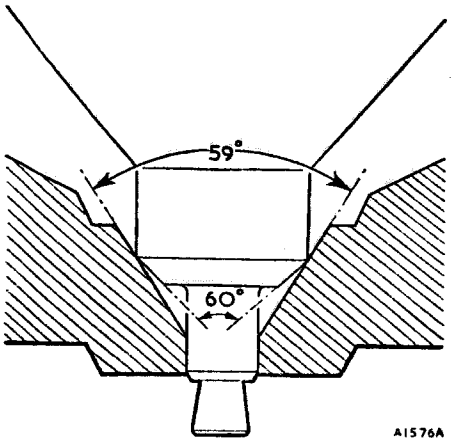

Fig. Da.38

Correct nozzle and seat valve angles

render the nozzle unrepairable. This sometimes has the effect of rounding off the seat angle: thus lapping becomes ineffective.

When the cause of faulty nozzle operation—that is, either dribbling or bad spraying—is due to lack of a good oil-tight seating or incorrect angular fitment of the nozzle body and nozzle valve seat, the nozzle may be reclaimed by relapping the nozzle seat and refacing the valve seat on a nozzle grinding and lapping machine. A nozzle microscope is also required for inspection of the nozzle body and valve seatings during the reclaiming process.

Select a lap from the three supplied as part of the equipment of the nozzle grinding and lapping machine. It should be noted that the nozzle bore varies slightly in diameter, and it is necessary to choose a lap which will fit the nozzle body in the same manner as the nozzle valve. This will ensure concentricity of the body bore and seat after lapping. It will be found that the laps have some form of marking to indicate their diameter variations, but the operator will be able to determine the correct fit by feel. If the lap is pointed the tip must be removed to prevent damage to the pintle hole in the nozzle body.

Mount the lap in the lathe of the nozzle grinding and lapping machine and grind the conical tip to the correct nozzle seat angle of 59°. The lap must be passed slowly backwards and forwards across the surface of the grinding-wheel, feeding in the lap very gradually until its surface is entirely cleaned up. Inspect the lap under the nozzle microscope to ensure that its ground surface is smooth. If the surface appears rough the grinding wheel should be dressed.

Fit the lap into the lapping chuck of the machine and apply a coating of tallow to the lap guide surface for lubrication purposes. Using a matchstick, apply a small quantity of lapping paste to the tip of the lap, taking care that the paste does not extend to the top of the cone. Should the body seat be badly worn, as shown by inspection under the nozzle microscope, coarse lapping paste will be required.

Take care to keep all lapping paste off the lap sides (i.e. restrict it to the extreme tip), otherwise the bore of the body will be increased and thus too much clearance will exist between the valve and body, causing excessive back-leakage.

Start the machine and slide the nozzle carefully over the rotating lap, ensuring that the lapping paste does not contact the bore of the nozzle. Oscillate the nozzle over the lap at a rate of 20 to 30 strokes per minute, engaging the nozzle seat with the lap at the end of each stroke and at the same time rotating the nozzle slowly with the fingers. The lap must not remain in contact with the nozzle seat for more than five seconds at a time and the pressure applied to the nozzle must not be excessive as this will generate grooves in the seat.

After 30 seconds' lapping time withdraw the nozzle; clean the lap and examine its conical tip, which will have a mat surface where it has made contact with the nozzle seat. In the early stages of lapping the width of this mat surface will probably be narrow or may have a bright circumferential ring in the middle, which indicates the extent of the wear on the nozzle seat.

The lap must be refaced as described above after every 1½ minutes of lapping time, but in the case of a badly worn nozzle seat it may be necessary to reduce this time.

Wipe the lap stem to ensure that it is free from lapping paste and recoat it with tallow. Recharge the lap tip with lapping paste and continue lapping until the seat is free from scores and grooves. When the seat appears satisfactory after a few seconds' lapping with a freshly ground lap, charge the lap with fine lapping paste and continue lapping until a mat surface over the majority of the lap conical tip is obtained. Throughout the lapping operation the lap should be cleaned and examined after every 30 seconds of lapping time.

Thoroughly clean the nozzle by 'reverse-flushing' as described in Section Da.13 and dry out with compressed air. It is advisable to adapt the air line with a short piece of suitably sized tubing which can be inserted into the nozzle to direct the air blast onto the nozzle seat. Any

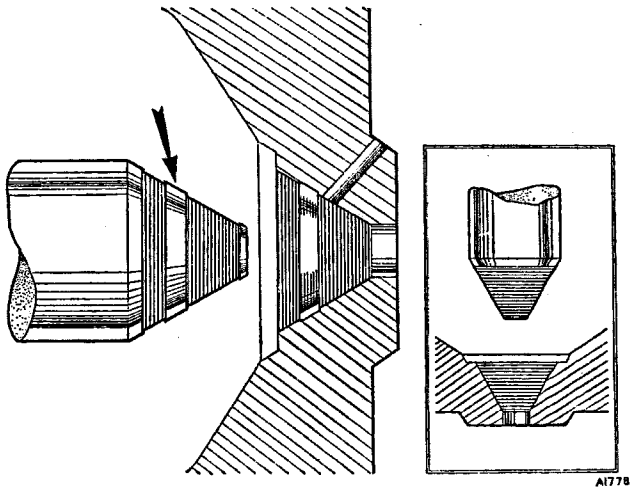

Fig. Da.39

Lapping a nozzle seat. The arrow indicates the bright circumferential ring which may be present on the lap in the early stages of lapping. A view of the seat and lap upon completion is shown inset

oil remaining in the nozzle may be blown out of the nozzle bore by sealing the pintle hole with a finger. After cleaning, inspect the nozzle seat under the microscope to ensure that it is free from scores and pitting.

Examine the nozzle valve conical seating under the nozzle microscope for scoring and pitting. If wear is evident the conical seating should be refaced on the nozzle grinding and lapping machine.

Ensure that the grinding-wheel is dressed perfectly true, and to avoid damaging the valve pintle, bevel the edge of the grinding-wheel, which will be adjacent to the pintle during the refacing process, at an angle of 45° to a width of about $\frac{3}{32}$ in. (2·38 mm.).

Mount the nozzle valve in the lathe of the machine and reface the valve conical seating at the correct angle —that is, 60°—using the same method as described above for refacing the nozzle body lap.

Remove only the absolute minimum of material; sufficient to change the colour of the valve seat is all that is necessary, otherwise the needle lift will be affected. As a guide, there must be no sparks or audible hiss from the grinding-wheel when carrying out this operation.

It is advisable to observe the refacing operation through a magnifying-glass. Do not attempt to observe the surface of the valve where it contacts the grinding-wheel, but look at the upper surface of the seating.

In the event of the valve being a tight fit in the nozzle body, due to slight distortion or deposits on the valve guide surface, it is possible to restore the fit, using fine lapping paste and the adjustable lapping collet supplied as part of the equipment of the nozzle grinding and lapping machine.

Mount the nozzle valve in the lapping chuck, using a suitable adaptor chuck, and apply a very small quantity of fine lapping paste to the valve guide surface. Start the machine and thread the lapping collet over the rotating valve. Oscillate the collet over the valve guide surface, and after every 10 to 15 seconds of lapping time clean the valve and test it for correct fit in the nozzle body. A correctly fitting nozzle valve will just slide into the nozzle body under its own weight when lubricated with fuel oil.

Using a suitably adapted dial gauge, check the nozzle valve lift, which should be ·75 to ·95 mm. If the lift is found to exceed this limit it may be restored by lapping the top face of the nozzle body on a surface lapping plate.

When lapping the nozzle face extreme care must be taken not to tilt the nozzle, as this face makes a high-pressure joint with the nozzle holder and must therefore be true and at right angles to the nozzle axis.

Reassemble the injector (see Section Da.13) and test and set the nozzle-opening pressure (see Section Da.14).

If a reclaimed nozzle is found to leak slightly during the 'seat-tightness test' it is permissible to lap the nozzle valve in the nozzle body until a very narrow marking is made on the 'cut-off' edge of the nozzle valve seat.

Mount the nozzle valve in the lapping chuck as described above and place a very small quantity of fine lapping paste on the conical face of the valve seat. Lap the valve in the nozzle body for 5 to 10 seconds, using very light pressure. Great care must be exercised when carrying out this operation as excessive lapping will produce a wide marking on the nozzle valve seat, indicating an increased area of contact between the nozzle valve and body seats. This will have an adverse effect on the 'seat tightness' and it will be necessary to reface the nozzle valve seat as described previously.

It will be found that, owing to the lowering of the seating in the nozzle body, it is impracticable to reclaim a nozzle more than three times.

Section Da.16

DESCRIPTION OF THE MECHANICAL FUEL LIFT PUMP

The fuel lift pump fitted to later engines is mounted on the left-hand side of the crankcase and is operated mechanically from an eccentric on the engine camshaft. A hand priming lever permits pumping a supply of fuel through the main fuel filter to the injection pump for bleeding the system of air whenever any component has been dismantled or disconnected.

As the engine camshaft revolves the eccentric lifts the pump rocker arm, which pulls the pull-rod together with the diaphragm downwards against the spring pressure, thus creating a partial vacuum in the pumping chamber.

Fuel drawn from the tank enters the sediment chamber and then passes through the filter gauze, and the suction valve, into the pumping chamber. On the return stroke the spring pressure pushes the diaphragm upwards, forcing the fuel from the pumping chamber through the delivery valve and port to the main fuel filter.

When the main fuel filter is full a pressure is created in the pump chamber. This pressure will hold the diaphragm downward against the spring pressure, and it will remain in this position until the main fuel filter requires further fuel. The rocker arm operates the connecting link and allows an idling movement of the rocker arm when there is no movement of the fuel pump diaphragm.

A spring keeps the rocker arm in constant contact with the eccentric, thus eliminating noise.

Section Da.17

REMOVING AND REPLACING THE MECHANICAL FUEL LIFT PUMP

Disconnect the two fuel pipes from the pump. Unscrew the two nuts securing the pump to the crankcase and withdraw the pump and joint gasket.

Before replacing the pump, which is a reversal of the procedure to remove, lubricate the rocker arm and the rocker arm pin with clean engine oil.

Renew the gasket between the pump and the cylinder block and to facilitate the fitting of the pump crank the engine to bring the eccentric on the camshaft into the extreme released position so that its small side will contact the rocker arm.

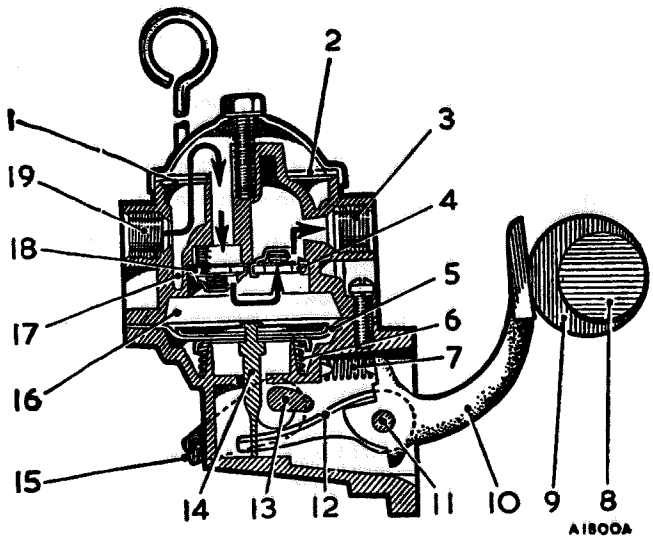

Fig. Da.40
Section through the mechanical fuel lift pump

1. Filter gauze.
2. Gasket.
3. Outlet port.
4. Delivery valve.
5. Diaphragm.
6. Diaphragm spring.
7. Rocker arm spring.
8. Engine camshaft.
9. Camshaft eccentric.
10. Rocker arm.
11. Pivot pin.
12. Link.
13. Priming cam.
14. Pull-rod.
15. Hand priming lever.
16. Pumping chamber.
17. Sediment chamber.
18. Inlet valve.
19. Inlet port.

After installation, bleed the fuel system of air as described in Section Da.5: start the engine and check the pump and its fuel line connections for leaks. After correcting any leaks the fuel system must be re-bled.

Section Da.18

DISMANTLING AND REASSEMBLING THE MECHANICAL FUEL LIFT PUMP

Before dismantling, thoroughly clean the exterior of the pump and scribe a mark across the upper to lower half body joint flanges for guidance when reassembling.

Remove the set bolt and fibre washer securing the domed cover to the lift pump body; detach the domed cover and its cork sealing ring and lift off the filter gauze.

Unscrew the set screws and separate the two halves of the pump body.

Release the valve retaining plate from the upper half of the pump body by removing the two securing screws and lift out the inlet and outlet valves. Carefully remove the valve gasket.

Lightly press the centre of the diaphragm downwards to take the weight of the return spring; turn the diaphragm assembly clockwise through an angle of 90° to release the diaphragm pull-rod from the operating link fork and withdraw the diaphragm assembly and its return spring.

Remove the retaining clips from the ends of the rocker arm pin and press the pin out of the body to release the rocker arm, rocker arm distance washers, rocker arm spring and link.

Detach the spring from the priming lever and body assembly.

Further dismantling of the body is not advisable as the priming lever is secured to its spindle by riveting.

Before reassembling thoroughly clean all components in paraffin and blow the cavities clean with compressed air.

Check the body castings for cracks and, using a straight-edge, ensure that the diaphragm and engine mounting flanges are true. If they are found to be distorted, they may be lapped to restore their flatness.

Examine the two valve assemblies for signs of wear and renew them if they are not in perfect condition.

Very little wear should be tolerated on the rocker arm pin and rocker linkage. Slight wear on the working face of the rocker arm which engages the camshaft is permissible but if it exceeds ·010 in. (·254 mm.) the rocker arm should be renewed.

The diaphragm spring seldom requires renewing but should it be necessary, ensure that the new spring bears the same identification colour as the original spring.

Reassembly is a reversal of the dismantling procedure noting the following.

To install the valves, first place a new gasket in position and then insert the outlet valve, spring end foremost, into its port. The inlet valve cannot be installed incorrectly owing to a restriction in the port.

The rocker arm pin should be a tap fit in the body and if, due to wear, it is freer than this the holes in the body may be closed by peening to restore the fit.

When installing the diaphragm and pull-rod assembly ensure that the upper end of the diaphragm return spring is centred properly in the diaphragm lower protector washer and place the diaphragm in the pump body with its locating tab in the 11 o'clock position

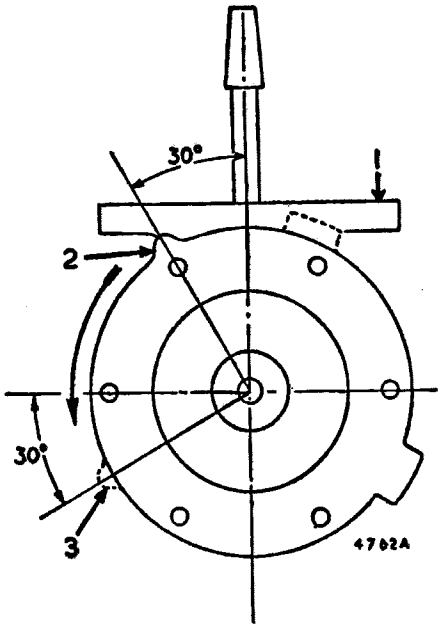

Fig. Da.41
Diaphragm assembly diagram

1. Pump mounting flange.
2. Initial position of diaphragm locating tab.
3. Final position of diaphragm locating tab.

(see Fig. Da.41). Press the diaphragm downwards and turn it anti-clockwise through an angle of 90° to engage the slots in the pull-rod with the link fork. This will place the pull-rod in the correct working position and at the same time align the holes in the diaphragm with those in the pump body flange.

●To assemble the two pump body sub-assemblies, push the rocker arm towards the pump body until the diaphragm is level with the body joint flange. Place the upper half of the pump in position, ensuring that the marks scribed on the joint flanges during dismantling coincide, and install the body securing screws finger tight. Press the rocker arm towards the pump body to position the diaphragm at the bottom of its stroke. With the diaphragm held in this position tighten the body securing screws in a diagonal sequence.●

Section Da.19

TESTING THE MECHANICAL FUEL LIFT PUMP

Before installing an overhauled pump it should be tested for performance and air leaks. In the absence of special test equipment the pump may be tested in the following simple but effective manner.

Immerse the pump in a bath of clean paraffin and flush it through by operating the rocker arm six to eight times. Remove and empty the pump; seal the suction side of the pump by placing a finger firmly over the inlet union (marked 'in') and operate the rocker arm several times. Upon removal of the finger from the inlet union a distinct sucking noise should be heard, denoting that the pump has developed a reasonable degree of suction.

In a similar manner seal the delivery side of the pump and press the rocker arm inwards to charge the pumping chamber with air. If the pump is in good condition the air in the pumping chamber should be held under compression for two or three seconds. Repeat this test but immediately the pumping chamber is charged with air, immerse the pump in a bath of clean paraffin and inspect the diaphragm clamping flanges for signs of air leakage.

Finally, flush the pump through with clean fuel oil to remove all traces of paraffin.

Section Da.20

ACCELERATOR PEDAL STOP ADJUSTMENT

When the accelerator pedal or the control cable has been disconnected, or the adjustment disturbed, the pedal stop must be readjusted to ensure that the throttle lever stop on the D.P.A. fuel injection pump is not subjected to load when the accelerator pedal is operated to its maximum open-throttle position. If not correctly adjusted the strain imposed on the control shaft sealing arrangements will cause fuel leakage.

Slacken the locknut and unscrew the pedal stop adjusting screw until the end of the screw is flush with the face of the locknut. Depress the accelerator pedal until the throttle control lever on the injection pump is in the fully open position. Hold the pedal in this position without imposing any strain upon the control lever, and screw in the adjusting screw until the pedal moves upward taking the throttle control lever just off the maximum open position. Tighten the locknut and check the throttle operation, making certain that the control lever is just short of its maximum travel when the pedal is firmly against the adjusting screw.

Section Da.21

MODIFIED INJECTION PUMP
(Type DPA.3248050A)

This pump is as described in Section Da.6 but with various detail modifications to improve engine governing and the addition of an anti-stall device. The modifications include a governor spring, idling spring, and maximum advance stop spring of new load rates. Other modifications incorporated in this pump are to the metering valve, quill shaft, and banjo pipes.

The anti-stall device consists of an adjusting screw, which protrudes from the drive end of the control cover, and a locknut. In operation the inner end of the adjusting screw contacts the governor arm to act as a stop. The effect of this is to prevent the governor from reducing the metering area below the position permitted by the anti-stall screw. Therefore, adjustment of the anti-stall screw should only be carried out as described in Section Da.21 under **'Maximum and idling speed adjustments'.**

Removing and replacing

Follow the instructions in Section Da.7, but before refitting the injection pump set the injection timing pointer on the flange of the chain wheel hub so that commencement of injection occurs at 26° B.T.D.C. To set the injection timing pointer, crank the engine until No. 1 inlet valve is closing. Observe the timing plate on the front of the crankcase and continue cranking the engine until the groove in the crankshaft pulley coincides with the 26° mark on the timing plate. With the engine in this position, insert injection timing gauge 18G 698 through the chain wheel hub and set the injection timing pointer as described in Section Da.7.

Maximum and idling speed adjustments

After fitting either a new or overhauled injection pump, adjust the engine maximum light running speed as described in Section Da.7. Then proceed as follows to adjust the idling speed and anti-stall device.

(1) With the engine stopped, unscrew the anti-stall screw until it is out of contact with the governor arm.
(2) Start the engine, ensure that it is at its normal running temperature, and adjust the idling stop screw to set the engine speed at 450 to 500 r.p.m.
(3) Screw in the anti-stall screw carefully until a slight speed increase is noticed, then unscrew one third of a turn and lock in position with the locknut.

(4) Readjust the idling stop screw to set the idling speed at 500 r.p.m. and tighten the idling stop screw locknut.

(5) Test the anti-stall screw setting by running the engine at about 3,000 r.p.m. and then releasing the throttle:

(*a*) If the engine stalls the pump is underdamped and the anti-stall screw should be screwed in slightly, relocked, and the setting re-tested.

(*b*) If the engine deceleration is slow or sluggish the pump is overdamped and the anti-stall screw should be screwed out slightly, relocked, and the setting re-tested.

(6) Check that the engine stops when the shut-off lever is operated.

NOTE.—After every adjustment of the anti-stall screw ensure that the engine idling speed is controlled by the idling stop screw and not by the anti-stall screw.

Dismantling and reassembling

Follow the instructions in Section Da.8 noting that this pump is fitted with four governor weights.

Testing and adjusting

Mount the pump on a test bench and fill and prime the pump as described in Section Da.9. Check the oil-tightness of all joint washers, oil seals, and pipe connections with the pump running and when stationary. Then proceed with the following tests, noting that the pump throttle arm and shut-off lever must be in the fully open position except where stated otherwise.

(1) *Transfer pump vacuum test*

Start the test machine and run the pump at 100 r.p.m.

Turn the test oil feed cock to the 'off' position and note the depression registered on the vacuum gauge. This should build up to 16 in. (406 mm.) Hg within 60 seconds maximum. Check the fuel feed pipe unions for air leaks, indicated by the presence of air bubbles in the pipe line. If necessary, tighten the feed pipe unions and carry out a further test.

NOTE.—Do not run the pump for periods exceeding 60 seconds with the test oil supply turned off.

After the vacuum test is completed turn on the test oil supply, and with the pump running at 100 r.p.m. air vent the pump by means of the vent valve on the hydraulic head locking screw.

(2) *Transfer pump pressure*

With the pump running at 100 r.p.m. note the pressure registered on the pressure gauge, which should read 11 lb./sq. in. (·8 kg./cm.^{2}).

(3) *Transfer pump pressure*

Increase the pump speed to 1,300 r.p.m. when a pressure of 43 to 54 lb./sq. in. (2·9 to 3·8 kg./cm.^{2}) should be registered on the pressure gauge.

(4) *Fuel delivery setting*

Run the pump at 1,300 r.p.m. and after slackening the locknut alter the metering valve adjustment screw till a zero reading is obtained on the automatic advance gauge. Tighten the locknut and re-check the advance reading. Fit shut-off lever adjustment tool 18G 697 to the fuel pump and adjust the shut-off lever to obtain an average fuel delivery of 6·2 to 7·0 c.c. per 200 shots.

Ensure that the advance gauge still shows a zero reading.

(5) *Advance setting*

Run the pump at 1,300 r.p.m. Slacken the metering valve adjustment screw locknut and alter the adjustment screw to obtain an advance reading of 1¾ to 2¼°. Tighten the locknut and re-check the advance reading.

(6) *Fuel delivery check*

Without altering any of the adjustments check that the fuel delivery at 1,300 r.p.m. is 6·2 to 7·0 c.c. per 200 shots. Remove the shut-off lever adjustment tool.

(7) *Advance check*

Run the fuel pump at 1,300 r.p.m. Move the shut-off lever to the fully closed position and check that the advance reading is 3½ to 4½°. Fit and seal the metering valve adjustment screw sealing cap with wire and a lead seal, using sealing pliers 18G 541.

NOTE.—If for any reason it is found necessary to tighten or slacken the governor control cover cap nuts, the settings made at (4) and (5) will be disturbed and operations (4), (5), (6), and (7) should be repeated.

(8) *Back leakage*

Set the shut-off lever fully open and the throttle arm fully closed. Run the pump at 1,000 r.p.m. and measure the back-leakage through the graduated measuring glass. The back-leakage should be 5 to 50 c.c. per 100 shot time cycle.

(9) *Maximum fuel setting*

NOTE.—Throughout this test the advance gauge must show a zero reading.

Run the pump at 1,000 r.p.m. with both controls in their fully open position, when the average delivery for 200 shots from all four test injectors should be 6·9±·1 c.c. In arriving at this figure compare the delivery from all injectors to ensure that the difference in output from any two does not exceed ·6 c.c. Before taking a reading the test oil in the measuring-glasses should be allowed to settle for 15 seconds and the measuring-glasses should be allowed to drain for 30 seconds before a fresh test is made.

To adjust the pump output, stop the test bench and turn the test oil feed cock to the 'off' position. Remove the cover-plate from the side of the pump housing to provide access to the interior of the pump. Slacken the two drive plate securing screws sufficiently to permit movement of the adjusting plates. Turn the pump drive until the slots in the

peripheries of the drive plate and the top adjusting plate are visible through the aperture in the pump housing. Engage the end of maximum fuel adjusting probe 18G 656 in the slot in the top adjusting plate and tap the tool with a light hammer to move the plate in the required direction. The adjusting plate is turned in the same direction as normal pump rotation to increase the maximum output. Movement of the adjusting plate in the opposite direction will decrease the maximum output. This operation must be carried out very carefully as the amount of movement required will be very small. Tighten the drive plate securing screws to the torque figure given in **'GENERAL DATA'**, using tools 18G 537 and 18G 655 A. While tightening the screws the torque wrench must be in line with the spanner (Fig. Da.25). After making this adjustment replace the cover-plate and carry out the complete filling and priming operation. Re-check the fuel delivery and, if necessary, re-adjust the pump output.

(10) *Fuel delivery*

Decrease the pump speed to 100 r.p.m. and check the output. The average delivery for 200 shots should now be not less than that obtained when setting the pump maximum fuel output minus 1·5 c.c. When carrying out this test use 30 seconds measuring-glass draining time and allow the test oil to settle for 15 seconds before taking a reading.

(11) *Cut-off test*

With the shut-off lever held in the fully closed position run the pump at 200 r.p.m. The average delivery for 200 shots, with the throttle arm in the fully open position, should not exceed ·8 c.c.

(12) *Throttle operation*

With the throttle arm in the fully closed position unscrew the anti-stall screw till it is out of contact with the governor arm and tighten the locknut. Run the pump at 200 r.p.m. with the throttle arm still fully closed. The average delivery, with the shut-off lever fully open, should not exceed 1·0 c.c. per 200 shots.

(13) *Fuel delivery check*

With both controls fully open run the fuel pump at 1,630 r.p.m. and record the average delivery per 200 shots.

(14) *Governor setting*

Increase the pump speed to 1,850 r.p.m. and set the throttle arm by means of the maximum speed adjustment screw to give a maximum average delivery of 1·0 c.c. per 200 shots. No line should exceed 1·8 c.c. Tighten the adjustment screw locknut.

(15) *Fuel delivery check*

Reduce the pump speed to 1,630 r.p.m. and re-check the fuel delivery. The average delivery now should not be less than that recorded in operation (13) minus ·4 c.c. per 200 shots.

(16) *Timing setting*

This setting is made, after all the foregoing tests have been completed, with the pump removed from the power-driven test bench.

It should be noted that unlike the 'in-line' fuel injection pump, which has a static commencement of injection point, the point at which commencement occurs in the distributor-type fuel injection pump varies according to the fuel requirements of the engine. The timing of the distributor-type pump is carried out with the pumping plungers set to deliver maximum fuel on No. 1 injection line and with the plunger rollers in contact with the cam lobes: therefore, after all occasions of pump overhaul or adjustment to the pump output it is imperative that the pump timing is checked, and the pump flange re-marked if necessary.

●Remove the cover-plate from the side of the pump housing and the four radial connections from the hydraulic head. Connect injector nozzle testing machine 18G 109 A to outlet 'V' on the hydraulic head by means of relief valve timing adaptor 18G 653 A. The relief valve should be set to operate at 30 atmospheres.●

Turn the pump drive hub in the normal direction of rotation until the timing mark 'E' on the drive plate becomes visible through the aperture in the side of the pump housing. Operate the handle of the test machine to apply a pressure of 30 atmospheres to the pump. This will force the pumping plungers outwards to the limit of their travel as the drive hub is turned. Continue turning the drive hub in the normal direction of rotation until resistance is encountered. With the pump held in this position mount flange marking gauge 18G 648, pre-set to 86°, on the pump quill shaft. Check that the timing mark on the pump flange lies along the scribing guide on the flange marking gauge. If necessary delete the old timing mark and scribe a new mark by drawing a scribing tool along the guide on the flange marking gauge.

Disconnect the pump from the test machine and fit the banjo pipes to the hydraulic head. Refit the cover-plate to the side of the fuel pump housing and seal the securing screws with wire and a lead seal, using sealing pliers 18G 541.

Altitude settings

Follow the instructions in Section Da.10.

SERVICE TOOLS

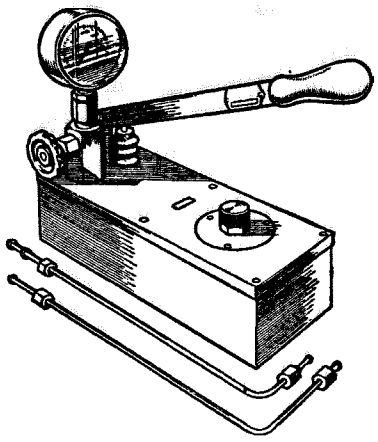

18G109A. Injector Nozzle Testing Machine

This machine is essential if injector nozzles are to be tested correctly or if it is desired to adjust the opening pressure. It is also required, when reassembling the fuel injection pump, to set the roller-to-roller dimension and the timing.

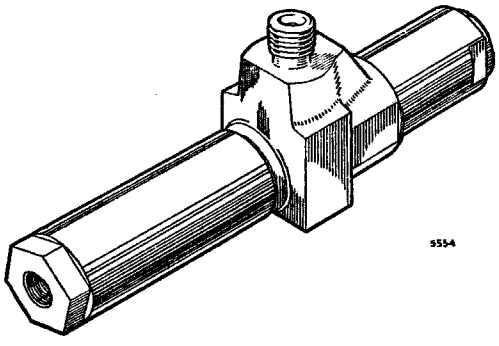

18G109B. Pintaux Nozzle Testing Adaptor

When testing Pintaux nozzles it is essential that a high rate of injection is obtained to determine the quality and form of atomization for both the main and auxiliary sprays. This is achieved by interposing test adaptor 18G109B, set to open at 220 atmospheres, between the nozzle under test and testing machine 18G109A.

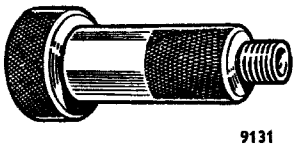

18G109E. Injector Nozzle Reverse-flush Adaptor

After the injector nozzle has been scraped internally to remove carbon deposits it should be flushed clean with the aid of this adaptor, which fits onto nozzle-testing machine 18G109A. Operation of the testing machine will force fuel oil through the nozzle spray holes in a reverse direction, thus removing all loose carbon.

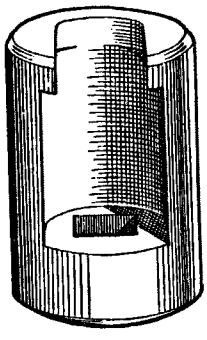

18G210. Injector Nozzle Nut Spanner

A robust spanner for use with torque wrench 18G372 to unscrew and to tighten the injector nozzle to the correct torque figure.

18G1004. Circlip Pliers●

These pliers will remove small circlips of both the internal and external type. The points are detachable, and five different sets, complete with instructions, are supplied with each pair of pliers.

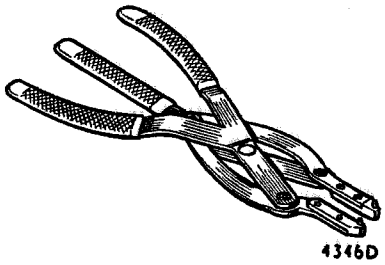

4346D

18G216. F.I. Pump Outlet Sealing Caps—set of 6

To prevent the ingress of foreign matter into the pump outlet and the injector nozzle feed unions when not in use.

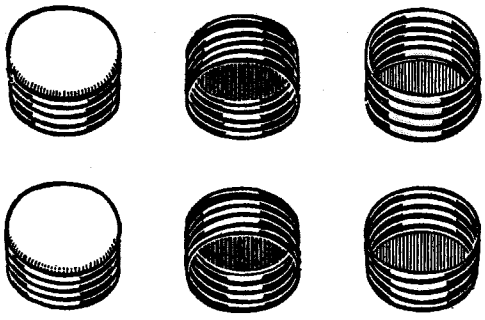

AD1248

18G388. Injector Nozzle Dismantling Fixture

The fixture is designed for use either screwed to a bench or clamped in a vice. It holds the injector nozzle in a suitable working position during dismantling and reassembling.

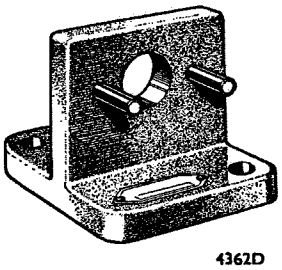

4362D

18G487. Injector Nozzle Cleaning Kit

This is a case containing a wire brush for removing carbon from the nozzle and valve, scrapers for cleaning the internal passage, and a probing tool which holds the steel wire for cleaning the auxiliary spray hole in the nozzle. Replacement wires 18G487B are available.

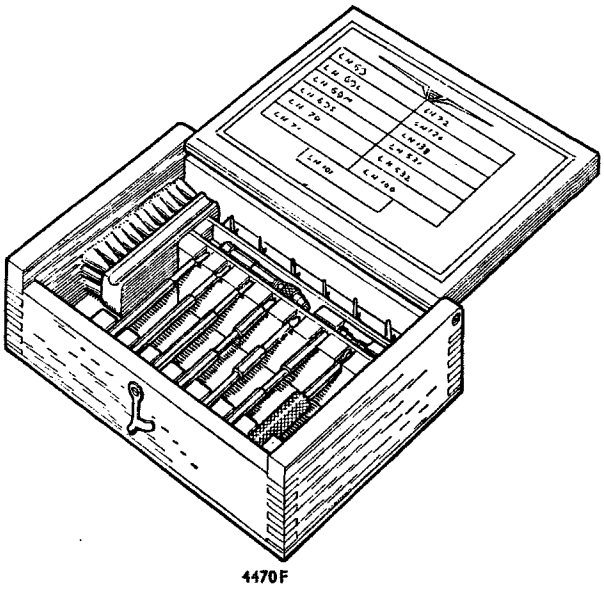

4470F

18G491A (formerly 18G491). Injector Nozzle Remover

Supplied complete with adaptors, this tool will remove the most obstinate injector without damage.

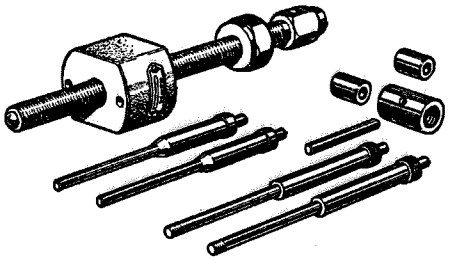

●
18G372. Torque Wrench—30 to 140 lb. ft. (4 to 20 kg. m.)

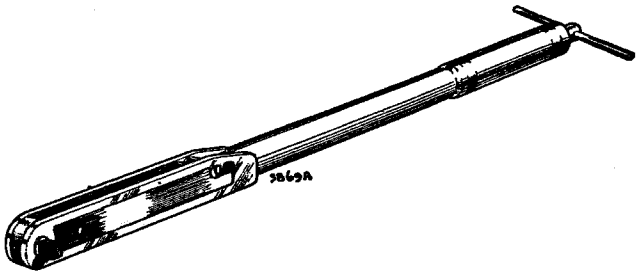

18G536. Torque Wrench—20 to 100 lb. in (300 to 1200 gm. m.)

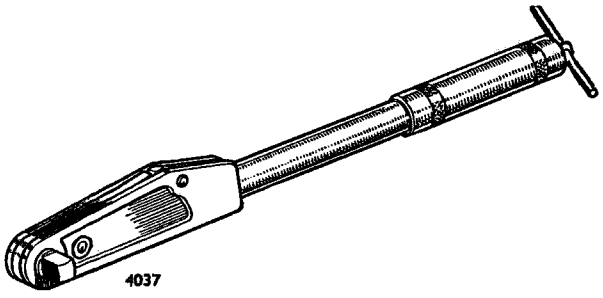

18G537. Torque Wrench—10 to 50 lb. ft. (2 to 7 kg. m.)●

These torque wrenches are for use with standard sockets and are essential if the recommended torque for the various bolts, nuts, and fittings on the fuel injection pump and injectors is not to be exceeded.

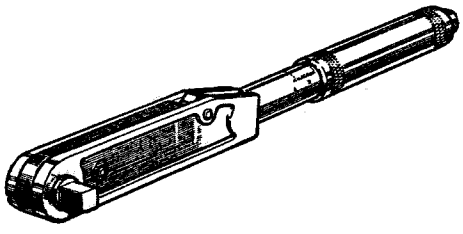

18G541. Venturi and F.I. Pump Sealing Pliers

For use when resealing the fuel injection pump with wire and lead seal after testing and adjusting. Wires and lead seals are available in packs of 36 under Part No. 58G444.

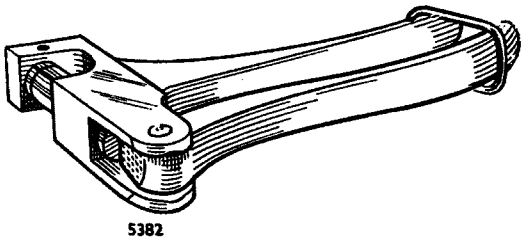

●18G633A. DPA Assembly Base●

Held in the jaws of a bench vice, this tool provides a mounting face to which the injection pump can be rigidly secured during dismantling and assembling operations.

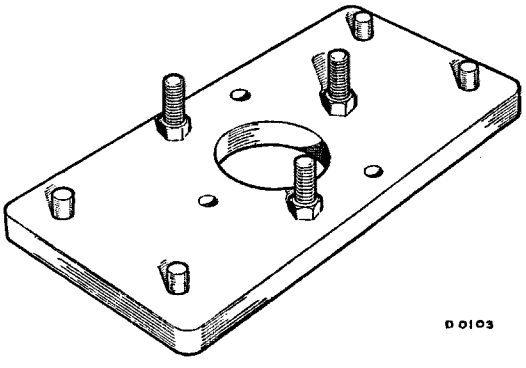

18G634. Assembly Box Spanner

Used in conjunction with a torque wrench when tightening the fuel injection pump transfer pump rotor. It fits over the transfer pump rotor and engages one of the vane slots.

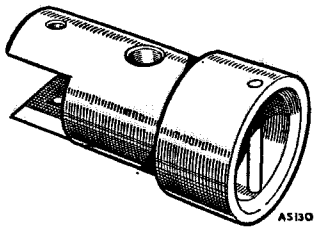

18G657. Protection Cap for Mechanical Drive Shaft

Facilitates the fitting of the 'O' seal to the distributor injection pump drive shaft and eliminates the possibility of damage when passing the seal over the shaft splines.

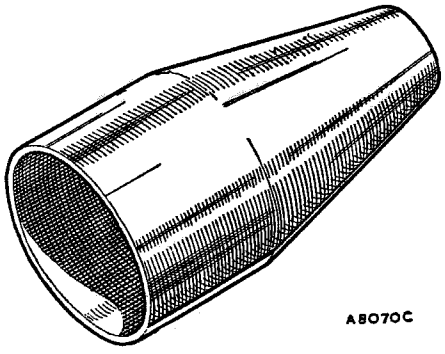

18G636. Transfer Pressure Adaptor

Fitted into the fuel injection pump hydraulic head after removal of the head locking screw not fitted with a vent valve. A pipe from the pressure gauge, mounted on the test machine, is coupled to the adaptor to convey test oil at transfer pressure to the gauge.

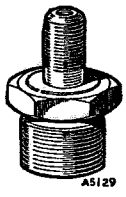

18G638B (formerly 18G638A). Automatic Advance Gauge

Assembled to the injection pump after removing the small plug from the automatic advance device spring cap. This gauge, which is graduated in degrees, is used when testing the pump to measure the angular movement of the cam ring.

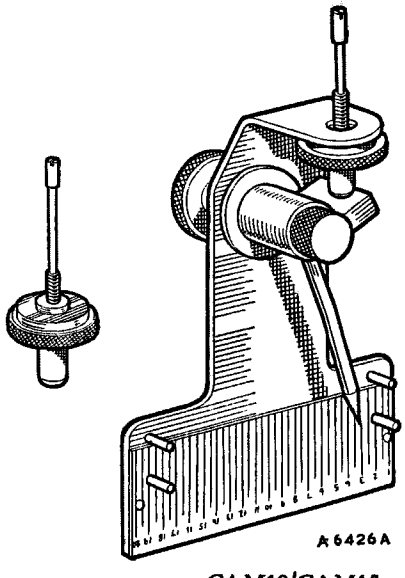

18G640. Protection Cap for Automatic Advance Plug

For passing the 'O' rings over the threaded portions of the fuel injection pump automatic advance device end plug and spring cap.

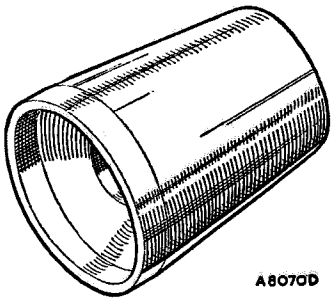

18G641. Assembly Drive Plate Spanner

A special ring spanner with an internal tongue which engages the slot in the periphery of the drive plate. The drive plate is held with this spanner when slackening and tightening the drive plate screws during dismantling and assembling of the injection pump.

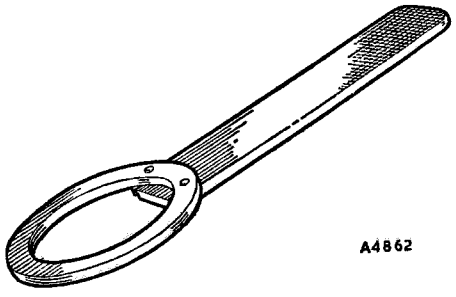

18G648. Universal Flange Marking Gauge

With this tool the timing mark scribed on the fuel injection pump flange can be checked and, if necessary, re-marked by passing a scriber along the scribing guide on the tool. Prior to use, the tool must be set to 86°.

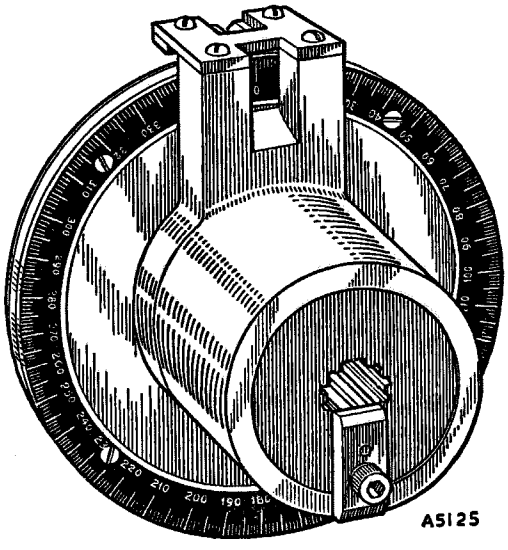

18G652. Rotor Plug Spanner

A 'T'-handled spanner for unscrewing the socket-headed plug from the end of the fuel injection pump pumping and distributor rotor.

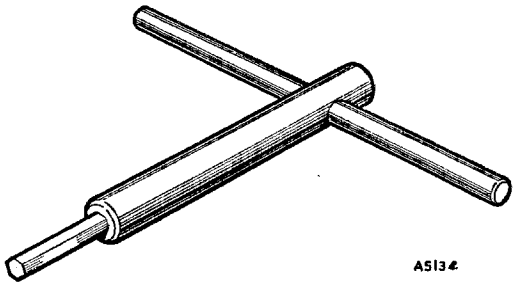

●18G653A. Relief Valve Timing Adaptor●

Connected to high-pressure outlet union 'V' on the hydraulic head, this adaptor is used in conjunction with testing machine 18G109A when setting the fuel injection pump roller-to-roller dimension and the internal timing.

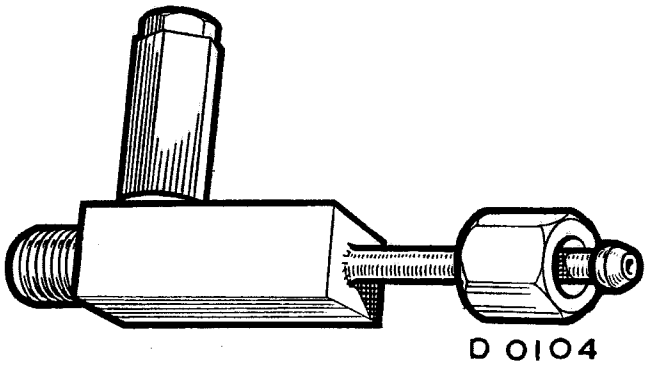

18G654. Protection Cap for Shut-off Spindle

Facilitates the fitting of the 'O' ring into its groove in the fuel injection pump shut-off spindle.

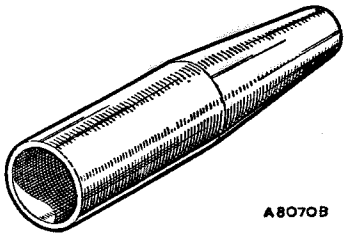

18G 655A. Drive Plate Screw Torque Adaptor

Used in conjunction with torque wrench 18G 537 to tighten the drive plate securing screws after adjustment of the fuel injection pump maximum fuel output during testing.

18G656. Maximum Fuel Adjusting Probe

A light drift, which engages the slot in the top adjusting plate and is tapped with a light hammer to move the adjusting plate in relation to the rotor when setting the injection pump maximum fuel output.

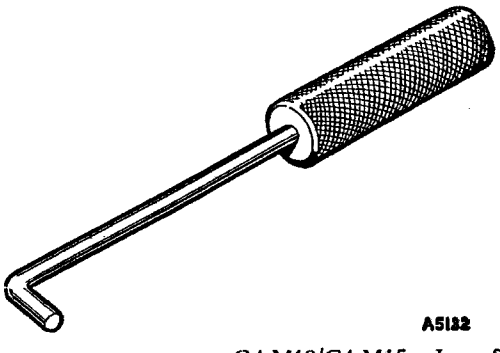

18G658. Oil Seal Extractor

The drive hub oil seal can be extracted easily with this tool and without any damage being done to the injection pump flange.

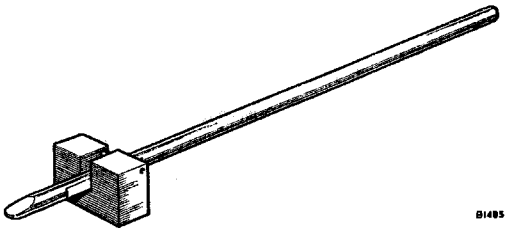

18G659. Drive Shaft Screw Assembly Tool

This tool fits the splines in the drive hub and is used to hold the drive hub while the drive shaft screw is being tightened or slackened.

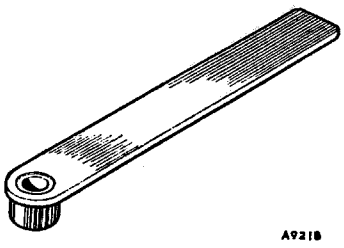

18G660. Oil Seal Inspection Plug

A transparent plug which, when fitted into the drive hub oil seal, is used to inspect the area of contact between the oil seal and the drive hub.

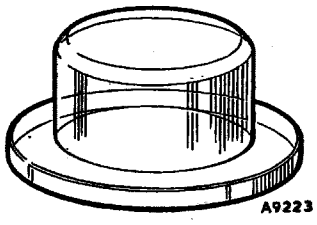

18G661. Locating Pin

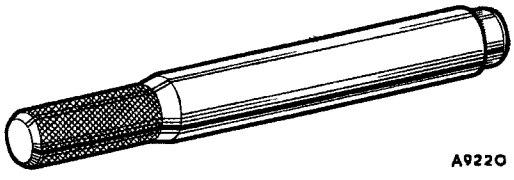

18G662. Plate

The locating pin and plate are used together to locate the governor weight retainer while the governor weights, thrust washer, and thrust sleeve are assembled.

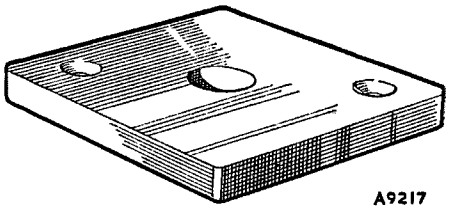

18G663. Oil Seal Guide

A tool which enables the drive hub oil seal to be fitted correctly and without damage.

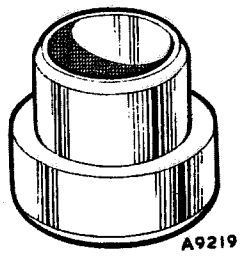

18G664. Torque Adaptor

The boss of tool 18G659 is bored so that this tool passes through it to engage the drive shaft screw when dismantling and reassembling.

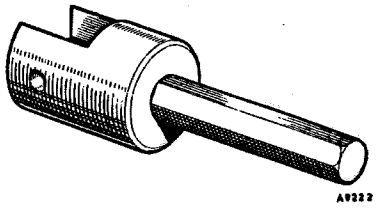

18G665. Protection Cap for Throttle and Shut-off Shafts

To enable the 'O' seals to be fitted to the throttle and shut-off shaft without damage.

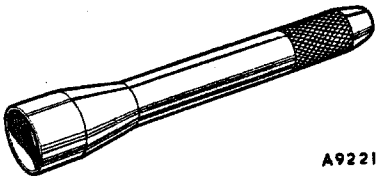

18G697. Shut-off Lever Adjuster

Used when testing the injection pump as described in Section Da.9.

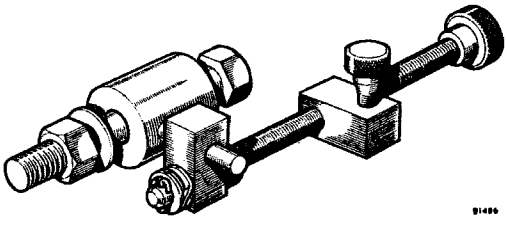

18G698. Injection Timing Gauge

An essential tool for checking and setting the injection timing pointer on the injection pump drive hub. Its full use is described in Section Da.7.

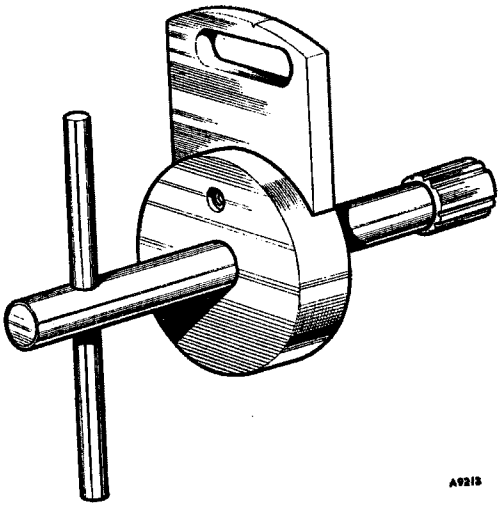

SECTION E

THE CLUTCH

	Section
Clutch	
Bleeding the system	E.5
Description	E.1
Dismantling, reassembling, and gauging	E.7
Refacing the driven plate	E.8
Removing and replacing	E.6
Master cylinder	
Dismantling and reassembling	E.3
Removing and replacing	E.2
Service tools	End of Section
Slave cylinder—dismantling and reassembling	E.4

Section E.1

DESCRIPTION OF THE CLUTCH

The clutch is of the single-dry-plate type consisting of a driven plate assembly, a cover assembly, and a ball release bearing. Fundamentally the clutches fitted to the petrol and diesel models are identical, only differing dimensionally.

This is of the flexible-centre type in which the splined hub is indirectly attached to a disc which transmits the power and over-run through a number of coil springs held in position by retaining wires. Two friction linings are riveted to the disc.

The cover assembly consists of a pressed-steel cover and a cast-iron pressure plate loaded by thrust springs. Mounted on the pressure plate are three release levers which pivot on floating pins retained by eyebolts. Adjustment nuts are screwed onto the eyebolts and secured by staking. Struts are interposed between the lugs on the pressure plate and the outer ends of the release levers. Anti-rattle springs load the release levers, and retainer springs connect the release lever plate.

The release ball bearing is pressed out of the withdrawal housing, which is located by the operating forks and the fork retaining spring.

As the clutch is hydraulically operated no adjustment is needed to the clutch pedal.

The clutch is operated from a master cylinder by means of a suspended pedal. A slave cylinder mounted on the side of the gearbox is coupled to the clutch operating shaft.

When pressure to the clutch pedal is applied the piston of the master cylinder displaces the fluid in the cylinder and via a pipe-line, in turn, moves the piston of the slave cylinder, pushing against the lever of the clutch shaft.

Section E.2

REMOVING AND REPLACING THE MASTER CYLINDER

The master cylinder consists of an alloy body with a $\frac{5}{8}$ in. (15·87 mm.) diameter polished finish bore, and reservoir with cap. The inner assembly is made up of the push-rod, dished washer, circlip, plunger, plunger seal, spring thimble, plunger return spring, valve spacer, spring washer, valve stem, and valve seal. The open end of the cylinder is protected by a rubber dust cover.

To remove the master cylinder proceed as follows.

Unhook the clutch pedal pull-off spring.

Undo the pressure pipe at its union on the master cylinder.

Remove the 10 nuts and bolts which secure the cylinder housing to the bulkhead and lift the housing out of the vehicle.

Slide the cover-plate off the cylinder housing.

Remove the clevis pin from the push-rod yoke.

Undo the nut and tap out the pedal pivot pin.

Separate the housing from the cylinder by removing the two bolts from the mounting flange.

Refitting is a reversal of the removal procedure, but car should be taken to fit the pedal pivot pin into the **upper hole** in the cylinder housing.

The clutch system must be bled as described in Section E.4

Section E.3

DISMANTLING AND REASSEMBLING THE MASTER CYLINDER

Remove the filler cap and drain out the fluid. Pull back the rubber dust cover and remove the circlip with a pair of long-nosed pliers. The push-rod and dished

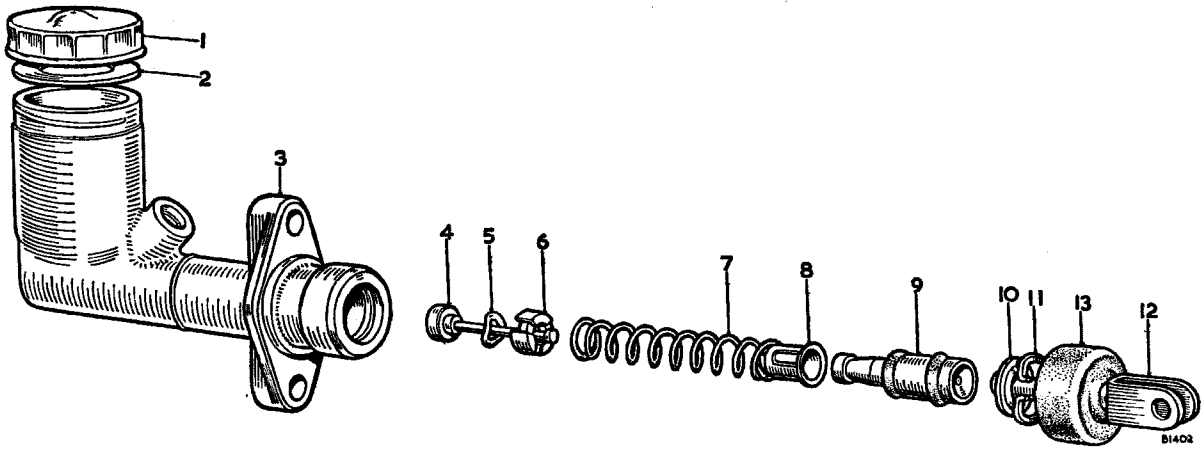

Fig. E.1

Components of the master cylinder and reservoir

1. Filler cap.
2. Washer.
3. Master cylinder.
4. Valve stem.
5. Spring washer.
6. Valve spacer.
7. Return spring.
8. Thimble.
9. Plunger.
10. Dished washer.
11. Circlip.
12. Fork.
13. Duct cover.

washer can then be removed. When the push-rod has been removed the plunger with seal attached will be exposed; remove the plunger assembly complete. The assembly can be separated by lifting the thimble leaf over the shouldered end of the plunger. Depress the plunger return spring, allowing the valve stem to slide through the elongated hole of the thimble, thus releasing the tension on the spring. Remove the thimble, spring, and valve complete. Detach the valve spacer, taking care of the spacer spring washer which is located under the valve head. Remove the seals from the valve head and plunger.

Examine all parts, especially the seals, for wear or distortion and replace the new parts where necessary.

Replace the valve seal so that the flat side is correctly seated on the valve head. The spring washer should then be located with the dome side against the under side of the valve head and held in position by the valve spacer, the legs of which face towards the valve seal. Replace the plunger return spring centrally on the spacer, insert the thimble into the spring, and depress until the valve stem engages through the elongated hole of the thimble, making sure that the stem is correctly located in the centre of the thimble. Check that the spring is still central on the spacer. Refit a new plunger seal on the plunger with the flat of the seal seated against the face of the plunger. Refit the plunger end seal, using a new seal if necessary. Insert the reduced end of the plunger into the thimble until the thimble leaf engages under the shoulder of the plunger. Press home the thimble leaf.

Smear the assembly well with the recommended brake fluid, and insert the assembly into the bore of the cylinder valve, end first, easing the plunger seal lips in the bore. Replace the push-rod, with the dished side of the washer under the spherical head, into the cylinder, followed by the circlip, which engages into the groove machined in the cylinder body.

Replace the rubber dust cover.

Section E.4

DISMANTLING AND REASSEMBLING THE SLAVE CYLINDER

The slave cylinder is of simple construction, consisting of an alloy body, piston with seal, spring, bleed screw, and ball, the open end of the cylinder being protected by a rubber dust cover. The cylinder is mounted on the side of the gearbox and held in position by set pins.

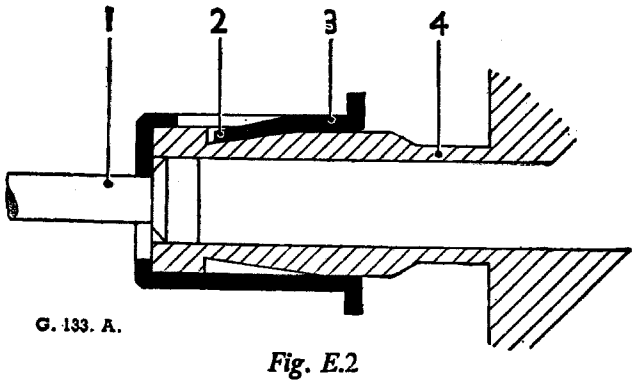

Fig. E.2

Diagrammatic section of the master cylinder

1. Valve stem.
2. Thimble leaf.
3. Thimble.
4. Plunger.

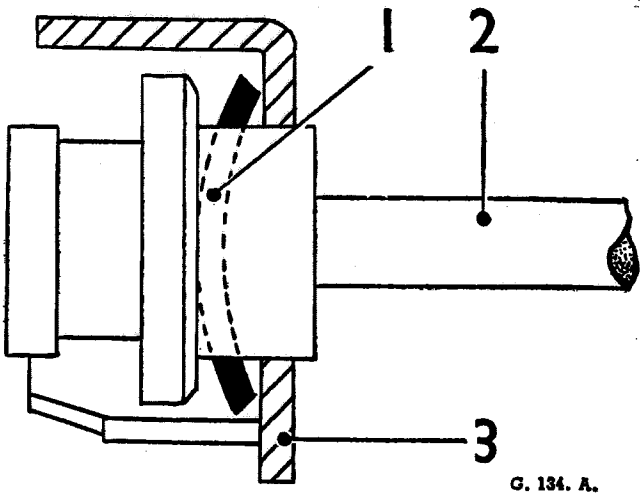

Fig. E.3

Further section of the master cylinder

1. Washer. 2. Valve stem. 3. Valve spacer.

Remove the rubber dust cap from the bleed nipple, attach a bleed tube, open the bleed screw three-quarters of a turn, and pump the clutch pedal until all the fluid has been drained into a clean container. Unscrew the pressure pipe union at the cylinder and remove the cylinder securing bolts. The slave cylinder can now be removed.

Remove the rubber cover and blow out the piston and seal. The spring can also be removed. Examine all parts, especially the seal, and renew if worn or damaged.

Place the seal into the stem of the piston, with the back of the seal against the piston, replace the springs with the small end on the stem, smear well with the recommended fluid, and insert into the cylinder. Replace the rubber dust cover and mount the cylinder in position on the side of the gearbox. Secure the cylinder with the bolts and screw in the pipe union. Connect up the linkage.

Section E.5

BLEEDING THE CLUTCH SYSTEM

●Remove the bleed screw dust cap at the slave cylinder, open the bleed screw approximately three-quarters of a turn, and attach a tube, immersing the open end into a clean receptacle containing a small amount of brake fluid. Fill the master cylinder reservoir with **Castrol/ Girling Brake Fluid Crimson** (if this fluid is not available an alternative fluid conforming to Specification S.A.E, 70.R3 should be used) and by using slow, full strokes, pump the clutch pedal until the fluid entering the container is free from air bubbles. On a down stroke of the pedal screw up the bleed screw, remove the bleed tube. and replace the dust cap.●

THE CLUTCH COMPONENTS

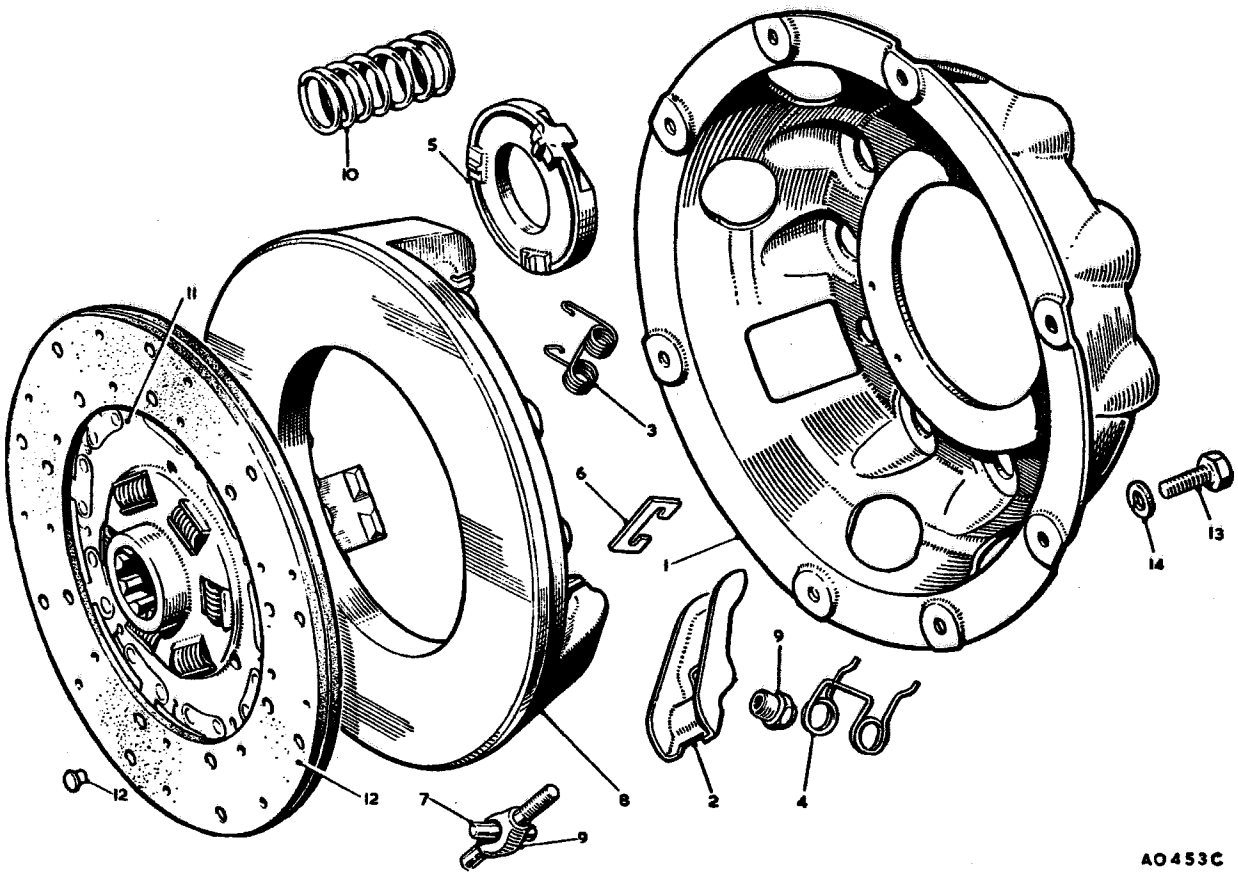

No.	Description	No.	Description	No.	Description
1.	Clutch cover.	6.	Strut.	11.	Driven plate assembly.
2.	Release lever.	7.	Release lever pin.	12.	Linings and rivets.
3.	Release lever retainer.	8.	Pressure plate.	13.	Screw—clutch to flywheel.
4.	Anti-rattle spring.	9.	Eyebolt and nut.	14.	Spring washer.
5.	Release lever plate.	10.	Thrust spring.		

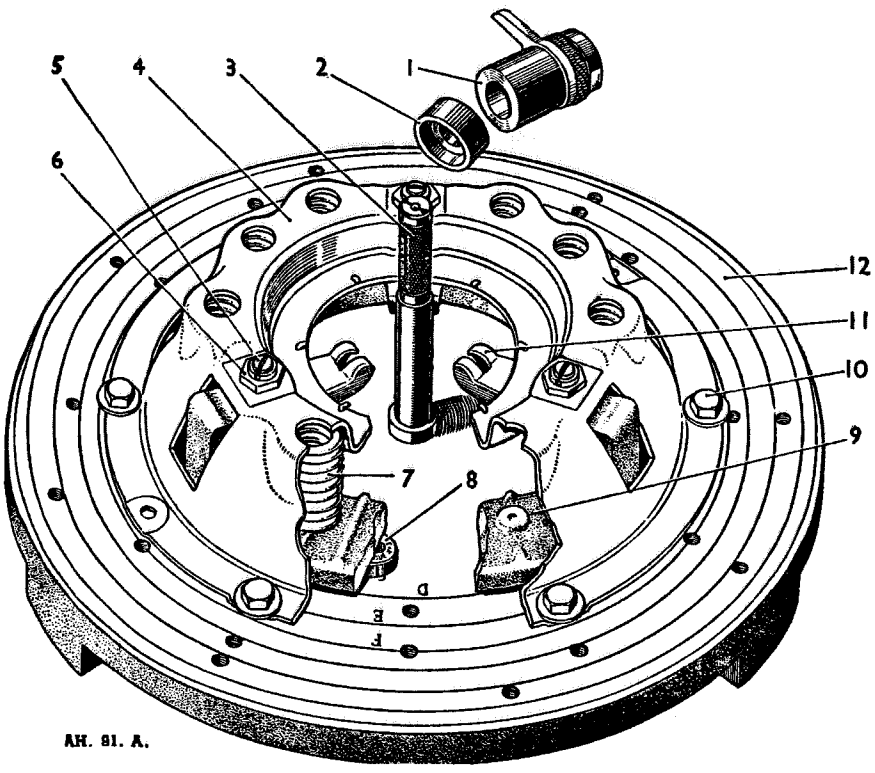

AH. 91. A.

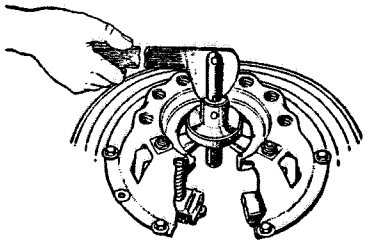

AH. 92. A.

Fig. E.4

Clutch assembly tool

1. Height finger.
2. Distance piece.
3. Centre pillar.
4. Clutch cover.
5. Eyebolt.
6. Eyebolt locknut.
7. Pressure spring.
8. Spacing washer.
9. Pressure plate.
10. Set bolt.
11. Release lever.
12. Base plate.

Inset shows the clutch tool actuating mechanism in use

Section E 6

REMOVING AND REPLACING THE CLUTCH

To gain access to the clutch it is first necessary to remove the gearbox from the engine. This necessitates the removal of the engine and gearbox from the chassis, or the removal of the engine alone according to circumstances. Both methods are described in Section A.

Slacken the clutch cover securing screws a turn at a time by diagonal selection until the spring pressure is relieved. Then remove the screws completely and lift the clutch assembly away from the flywheel. Finally, remove the driven plate assembly.

NOTE.—The release levers are correctly set on assembly. Interference with this, unless new parts have to be fitted, will throw the pressure plate out, causing judder.

Place the driven plate on the flywheel with the longer chamfered splined end of the driven plate hub towards the gearbox. The driven plate should be centralized by using a tool which fits the splined bore of the driven plate hub and the pilot bearing of the flywheel.

The clutch cover assembly can now be secured to the flywheel by means of the holding screws, tightening them a turn at a time by diagonal selection. There are two dowels in the flywheel to locate in the clutch cover. Remove the clutch centralizer after these screws are fully tightened.

Section E.7

DISMANTLING, ASSEMBLING, AND GAUGING THE CLUTCH

By using Service tool 18G99A the clutch can be quickly dismantled, reassembled, and adjusted to a high degree of accuracy.

The tool comprises the following parts: base plate, centre pillar, spacing washers, distance pieces, height finger, actuating mechanism, set screws, speed brace, and metal box. As this tool is universal, a chart indicating the particular parts to be used for particular types of clutch will be found on the inside of the lid of the box.

With a 9 in. clutch, select three spacing washers (code 3) and place them over the code letter 'D' on the base plate.

With a 10 in. clutch, select three spacing washers (code 3) and place them over the code letter 'E' on the base plate (see Fig. E.4).

Now place the clutch on the three spring washers so that the holes in the cover coincide with the tapped holes in the plate, insert the set screws provided, and tighten them, a little at a time, by diagonal selection until the cover is firmly attached to the base plate at all possible points. This is most important if the best results are to be achieved.

Mark the cover, pressure plate lugs, and release levers with a centre-punch so that the parts can be reassembled in their relative positions in order to maintain the balance of the clutch.

Detach the release lever plate from the retaining springs and remove the three eyebolt nuts or adjusting nuts.

Slowly release the pressure on the springs, unscrewing by diagonal selection the set screws securing the cover to the base plate. The clutch can then be lifted to expose all components for inspection.

The release levers, eyebolts, struts, and springs should be examined for wear and distortion. Renew these parts if necessary, bearing in mind that the thrust springs must only be renewed in sets.

Clean all parts and lubricate the bearing surfaces of the levers, eyebolts, etc., sparingly with grease.

Place the pressure plate over the three spacing washers on the base plate (12) with the thrust springs (7) in position on the pressure plate (9) (see Fig. E.4).

Assemble the release lever, eyebolt, and pin, holding the threaded end of the eyebolt and the inner end of the lever as close together as possible. With the other hand insert the strut in the slots on the pressure plate lug sufficiently to allow the plain end of the eyebolt to be inserted into the hole in the pressure plate.

Move the strut upwards into the slot in the pressure plate lug and over the ridge on the short end of the lever and drop it into the groove formed in the latter. Fit the other two levers in a similar manner.

Place the cover (4) over the assembled parts, ensuring that the anti-rattle springs are in position and that the tops of the thrust springs (7) are directly under the seats in the cover. In addition, the machined portions of the pressure plate lugs must be directly under the slots in the cover through which they have to pass.

Compress the pressure springs by screwing down the cover (4) to the base plate (12) by using the special set screw (10) placed through each hole in the cover. Tighten the screws, a little at a time, by diagonal selection to prevent distortion to the cover. The eyebolts (5) and pressure plate lugs must be guided through the holes in the cover at the same time.

Screw the nuts (6) (Fig. E.4) into the eyebolts and proceed as follows.

Screw the centre pillar (3) into the base plate and slip the distance piece (2)—code 7 for 9 in. clutch and 8 for 10 in. clutch—over the pillar, followed by the cam-shaped height finger (1). Adjust the height of the release levers by screwing or unscrewing the eyebolt nuts until the height finger, when rotated, just contacts the highest point on the tip of the release levers (11).

Replace the height finger and pillar by the clutch actuating mechanism (see inset, Fig. E.4) and actuate the clutch several times by operating the handle. This will enable the parts to settle down on their knife-edges. Replace the height finger and distance piece and readjust the height of the release levers. Finally, repeat the procedure to make quite sure the release levers are seating properly, and gauge again.

Secure the eyebolt nuts (6) and fit the release lever plate on the tips of the release levers (11), then secure by means of the three retaining springs.

Release the set screws (10), a little at a time, by diagonal selection, and remove the clutch assembly from the base plate.

Section E.8

REFACING THE CLUTCH DRIVEN PLATE

If a new complete clutch driven plate is not available new linings may be fitted to the old driven plate in the following manner. Each rivet should be removed by using a $\frac{5}{32}$ in. diameter drill. The rivets should not be punched out.

Rivet one new facing in position, then, if the correct tool is not available, use a blunt-ended centre-punch to roll the rivet shanks securely against the plate.

The second facing should then be riveted on the opposite side of the plate with the clearance holes over the heads already formed in fitting the first facing.

The plate should then be mounted on a mandrel between centres and checked for 'run-out' as near the edge as possible; if the error is more than ·015 in. (·38 mm.) press over the high-spots until it is true within this figure.

It is important to keep friction facings free from oil or grease.

SERVICE TOOLS

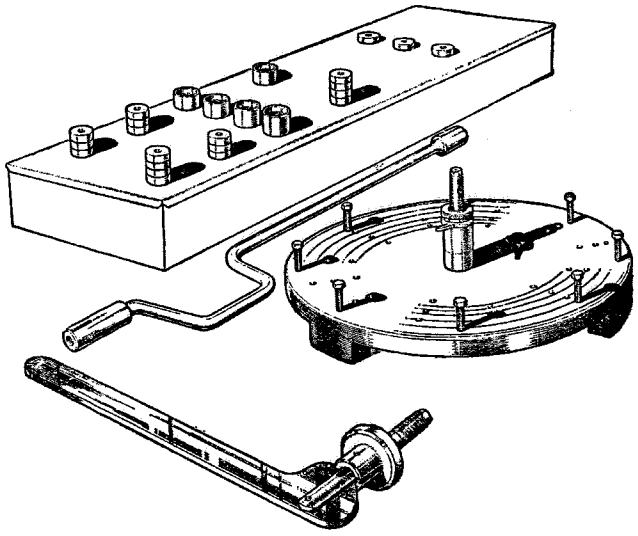

6939A

18G99A. Clutch Assembly Gauging Fixture

With the use of this tool a clutch assembly can be quickly dismantled, rebuilt, and finally adjusted with a high degree of accuracy. This is a universal tool for clutch assemblies from 6¼ to 11 in. (158 to 279 mm.) diameter.

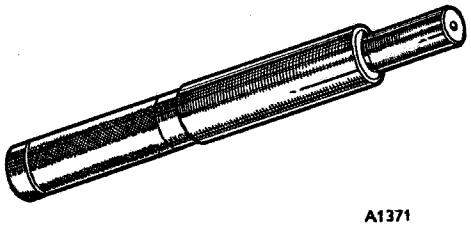

A1371

18G554. Clutch Centralizer

This tool is essential when bolting the clutch cover assembly to the flywheel to centralize the driven plate. It ensures that when fitting the gearbox to the engine the first motion shaft passes easily through the clutch driven plate hub and locates in the spigot bearing in the end of the crankshaft.

SECTION F

THE MAIN AND TRANSFER GEARBOXES

	Section
Main gearbox	
Dismantling and reassembling	F.2
Removing and replacing	F.1
●Modified synchronizer assemblies	F.4
Transfer gearbox	
Dismantling and reassembling	F.3
Service tools	End of Section

Section F.1

REMOVING AND REPLACING THE MAIN GEARBOX

The main gearbox and transfer gearbox can only be taken off the engine after they have been removed from the chassis complete with the engine. Removal procedure is given under Section A. Remove the transfer gearbox from the main gearbox as detailed under Section F.4 before attempting to dismantle the main gearbox. The main gearbox itself is removed from the engine by taking out the bolts from the bell housing flange, when the box can be drawn off. The flywheel housing stays in position on the engine.

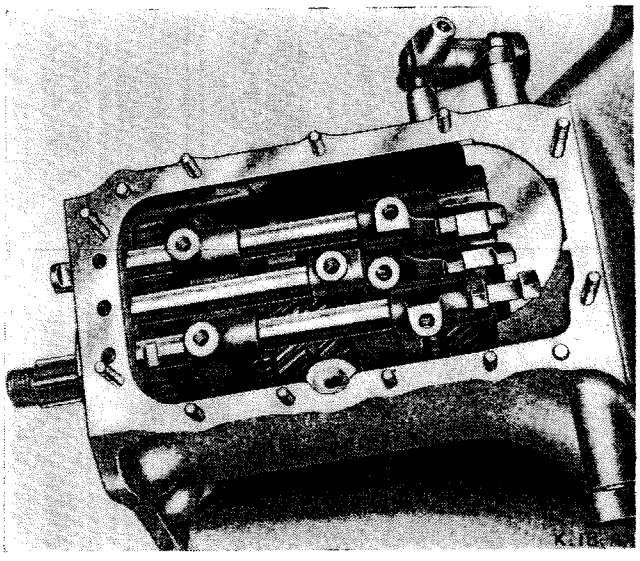

Fig. F.1
A general view showing the selectors and forks in the box

Section F.2

DISMANTLING AND REASSEMBLING THE MAIN GEARBOX

Drain the oil from the box and place the gears in neutral.

Remove the cotter pin from the clutch operating arm and take out the two set pins which secure the operating cylinder to the side of the bell housing. Remove the operating arm and cylinder complete.

Disengage the release bearing spring and remove the bearing with its housing.

Release the cotter pin nuts and tap the cotters out of the withdrawal fork. Push the fork pivot shaft out of the bell housing and collect the fork and spring.

Within the bell housing remove the seven nuts on studs which secure the gearbox front cover. Remove the cover and paper joint washer. Any shims fitted to control first motion shaft end-float must be removed.

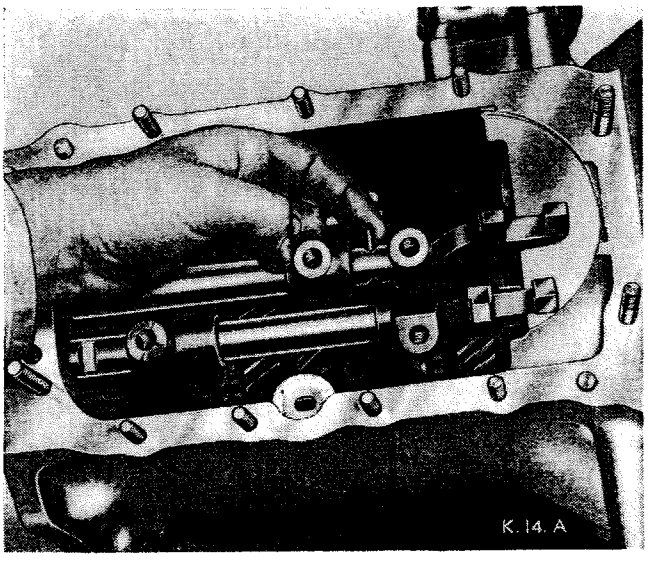

Fig. F.2
Showing the small interlock plunger for the central selector rod

Take out the set pins which secure the selectors and forks to the rods. Retrieve the star washers fitted below the set pin heads. Pull the selector rods rearwards out of the box and collect the selectors and forks. Remove the selector balls if still in position.

Remove the small interlock plunger from the central selector rod. The large plungers for the other two rods will stay in position and can be removed by tilting the box.

Remove the laygear shaft by tapping it out of the box from front to rear.

Tap the reverse gear shaft rearwards out of the box and retrieve the key. The reverse gear will now lie in the bottom of the box.

Remove the mainshaft rearwards out of the box and retrieve the reverse gear from the bottom of the box.

Using a suitable soft drift, remove the first motion shaft forward from the box complete with its bearing.

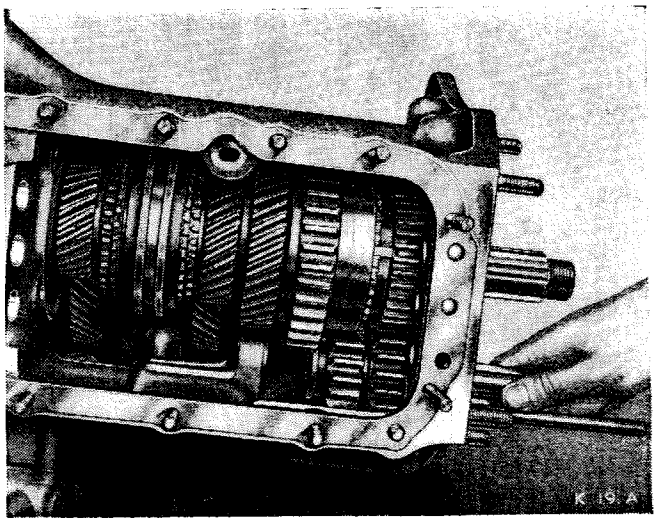

Fig. F.3
Removing the reverse gear shaft

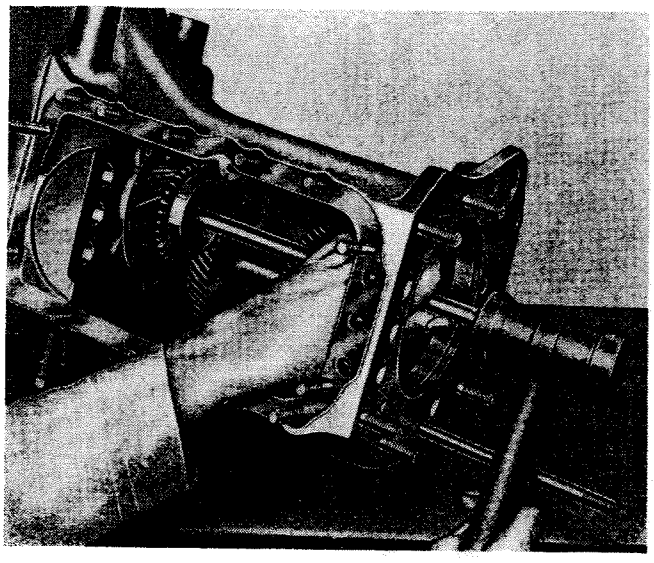

Fig. F.4
Removing the first motion shaft

Remove the laygears from the bottom of the box and retrieve the thrust washers.

Secure the mainshaft in a vice, using lead jaws. Slide the third and top synchronized sleeve off the mainshaft, together with the third speed synchronizer ring.

Depress the third speed locking ring plunger and rotate the locking ring until it is free to be drawn off the shaft.

Remove the spring and plunger and draw the third gear off the shaft.

Remove the third gear needle rollers from the shaft.

Reverse the position of the shaft in the vice and remove the mainshaft bearing, using a suitable extractor.

Slide the first gear and synchronizer assembly off the shaft, followed by the second gear synchronizing ring.

Depress the plunger securing the locking key and slide the key off the shaft.

Again depress the plunger, rotate the second gear locking ring, and rotate the ring until it is free to be drawn off the shaft.

Remove the plunger and spring and lift out the two halves of the thrust ring. Lift off the second gear.

Remove the needle rollers from the shaft.

While reassembling the gearbox parts lubricate with one of the recommended gearbox oils. New oil seals should be saturated with engine oil and a few spots applied to the gear change lever pivot ball at its contact point with the spherical seat in the gearbox top cover. These lubrication instructions are important to avoid possible damage when the reassembled gearbox is first operated.

Mount the mainshaft vertically in a vice with the rear end uppermost.

Using grease, position the needle rollers for the second gear so that they rest on the shaft flange. Slide the second gear into position over the rollers.

The thrust ring, which is in two halves, must now be positioned on top of the needle rollers.

NOTE.—The tags on the thrust ring locate in recesses on the under side of the locking ring, the fitting of which is described next.

Position the spring plunger in the hole in the shaft and slide the locking ring (recesses leading) onto the shaft. Use a suitable tool to depress the plunger whilst the ring passes over it. Ensure that the tags on the thrust ring locate in the recesses of the locking ring. Rotate the locking ring a small amount to allow the plunger to locate into a groove in the ring.

The locking key must now be fitted between the shaft and locking ring. Use a suitable tool to depress the plunger whilst the key is slid into position. Ensure that the plunger, when released, passes through the hole in the key.

Reverse the position of the shaft in the vice.

Using grease, position the needle rollers for the third gear and slide the gear into position.

Fit the third gear spring and plunger and slide the locking ring into position, using a suitable tool to depress the plunger. Rotate the locking ring to lock it in position.

Take the shaft as now assembled out of the vice and reverse its position. Fit the synchronizer ring and slide the first gear and synchronizer as an assembly onto the shaft. The synchronizer will only fit in one position because one spline is cut back to allow it to fit over the locking key.

Remove the shaft from the vice and fit the third and top synchronizer ring onto the shaft.

NOTE.—The fourth speed synchronizing ring is best positioned on the first motion shaft in the box during reassembly, as detailed in the next section.

Position the laygear in the bottom of the box with the thrust washers held in position with grease. Support the thrust washers and laygear with a pilot shaft.

NOTE.—Four thicknesses of thrust washers are available and they should be used so that ·003 to ·004 in. (·0762 to ·1016 mm.) end-play is present at the laygear.

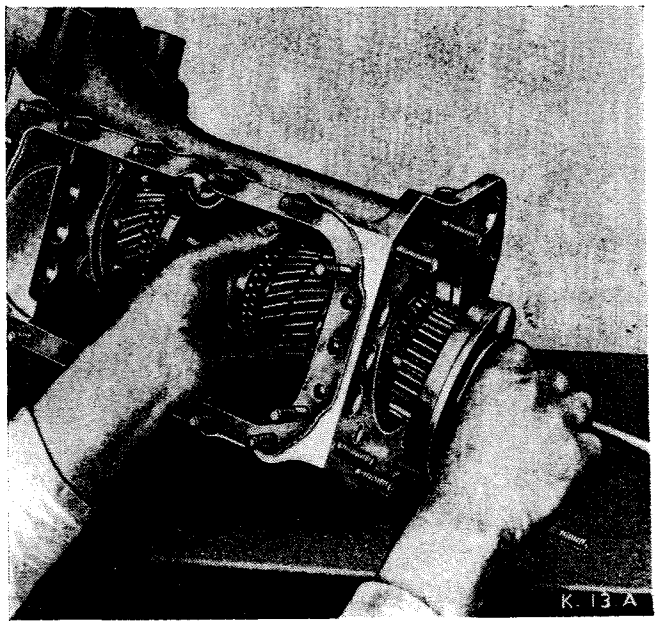

Fig. F.5
Removing the mainshaft assembly

THE MAIN GEARBOX INTERNAL COMPONENTS

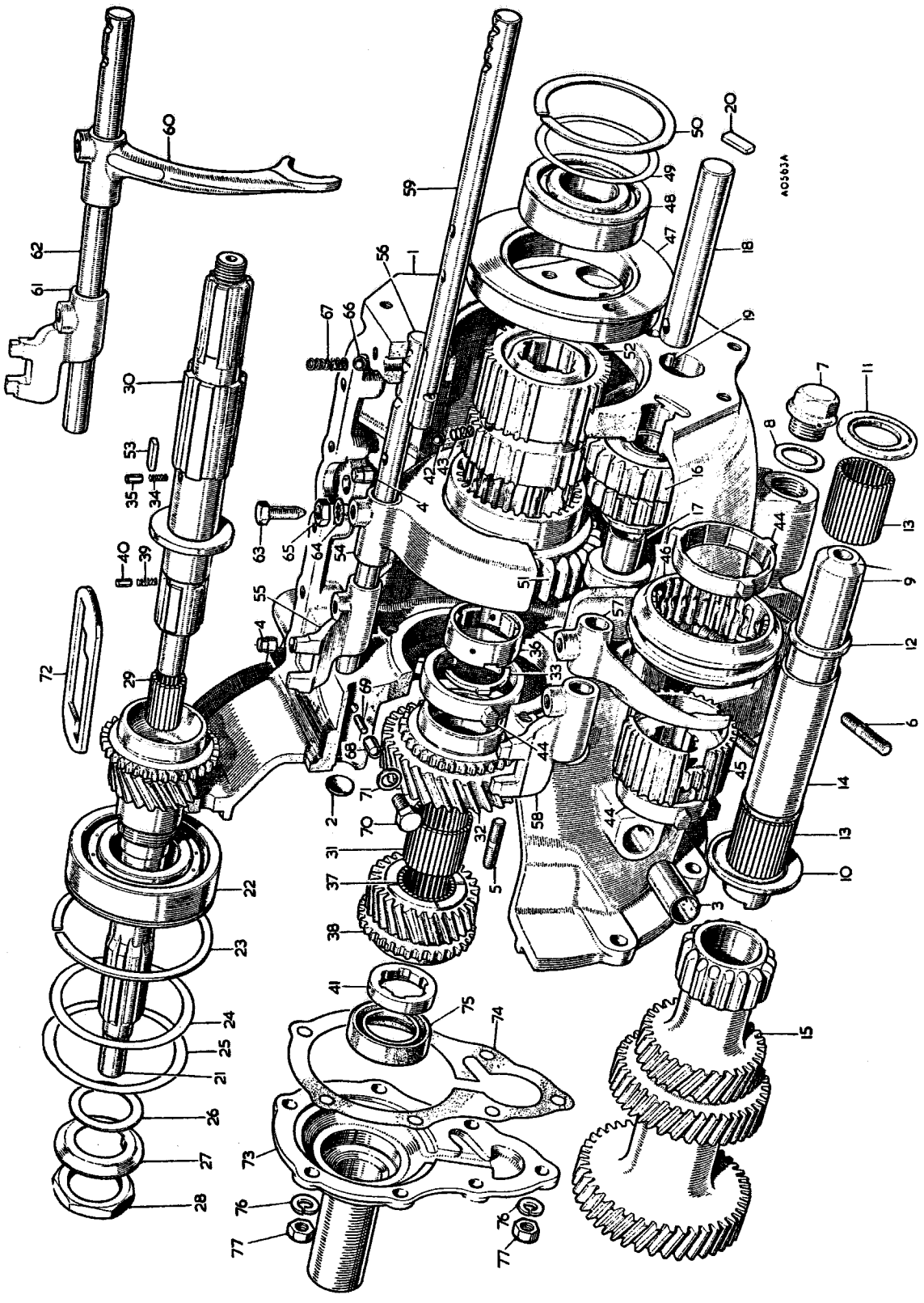

KEY TO THE MAIN GEARBOX INTERNAL COMPONENTS

No.	Description
1.	Gearbox casing.
2.	Welch plug.
3.	Clutch operating bush.
4.	Top cover dowel.
5.	Front cover stud.
6.	Side cover stud.
7.	Drain plug.
8.	Drain plug washer.
9.	Layshaft.
10.	Layshaft washer (front).
11.	Layshaft washer (rear).
12.	Layshaft needle roller washer.
13.	Layshaft needle roller.
14.	Needle roller spacer.
15.	Laygear.
16.	Reverse gear.
17.	Reverse gear bush.
18.	Reverse gear shaft.
19.	Plug for shaft.
20.	Key—gear to shaft.
21.	1st motion shaft.
22.	Ball bearing.
23.	Spring ring for bearing.
24.	Shim for bearing.
25.	Shim for bearing.
26.	Washer for shaft.
27.	Locking washer.
28.	Nut for shaft.
29.	1st motion shaft needle roller.
30.	3rd motion shaft.
31.	2nd speed gear needle roller.
32.	2nd speed gear.
33.	Washer for gear.
34.	Spring for plunger.
35.	Plunger for collar
36.	Locking collar.
37.	3rd speed gear needle roller
38.	3rd speed gear.
39.	Lock plate spring.
40.	Lock plate plunger.
41.	Fixed hub backplate
42.	Ball for sliding hub.
43.	Sliding hub spring.
44.	Interceptor.
45.	Striking dog.
46.	Sliding hub.
47.	Centre bearing housing.
48.	Centre bearing.
49.	Centre bearing shim.
50.	Spring ring.
51.	1st speed sliding gear.
52.	Sliding hub—1st and 2nd speed.
53.	Key—hub to locking collar.
54.	Selector fork—1st and 2nd speed.
55.	Selector jaw—1st and 2nd speed.
56.	Fork rod—1st and 2nd speed.
57.	Selector fork—3rd and 4th speed.
58.	Selector jaw—3rd and 4th speed.
59.	Fork rod—3rd and 4th speed.
60.	Selector fork—reverse gear.
61.	Selector jaw—reverse.
62.	Fork rod—reverse.
63.	Screw—fork and jaw to rod.
64.	Shakeproof washer.
65.	Locknut.
66.	Detent ball.
67.	Detent spring.
68.	Interlock plunger.
69.	Interlock pin.
70.	Plug—interlock pin hole.
71.	Joint washer.
72.	Change speed gate.
73.	Front cover.
74.	Joint washer.
75.	Oil seal.
76.	Spring washer.
77.	Nut for stud.

THE MAIN GEARBOX EXTERNAL COMPONENTS

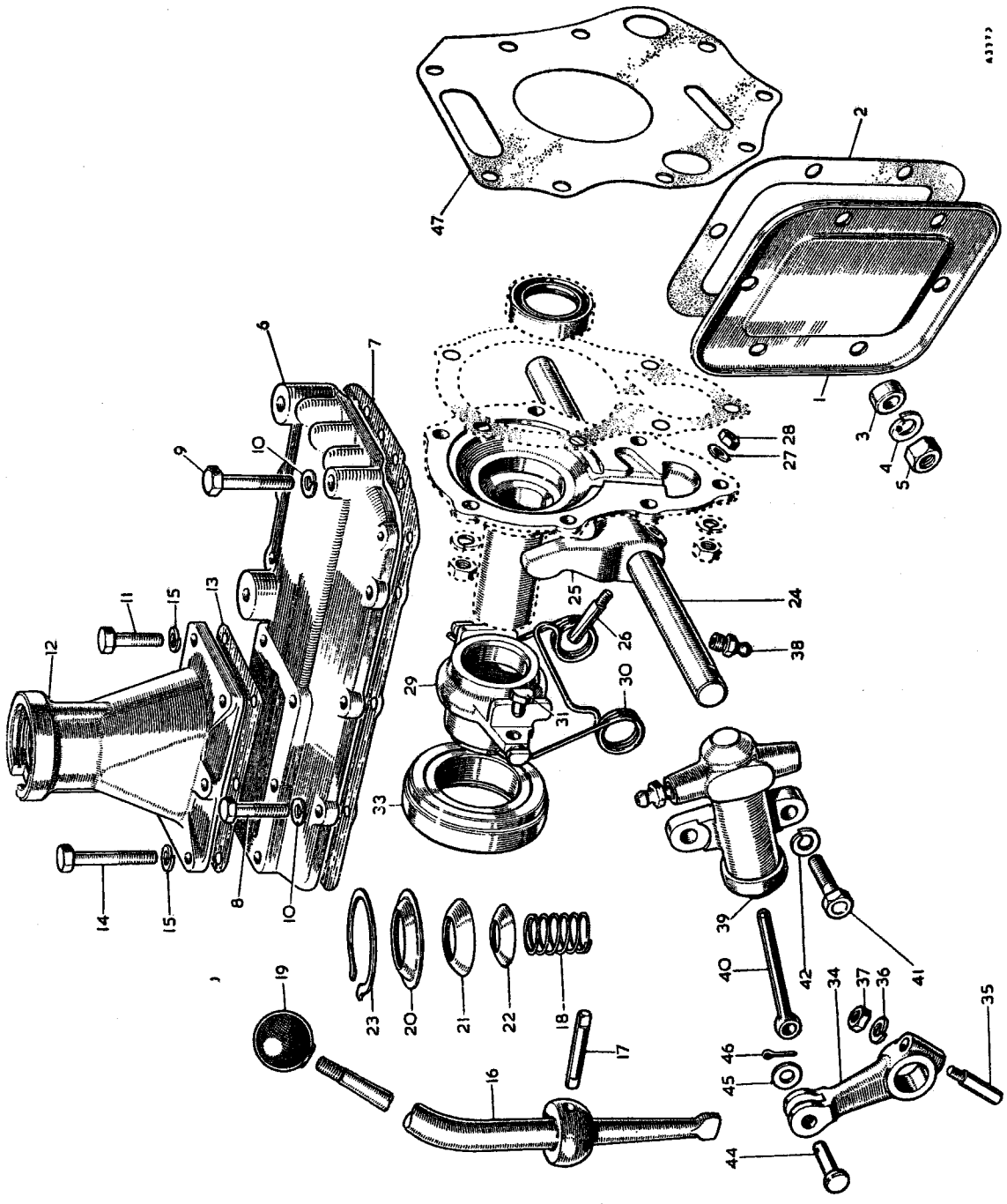

KEY TO THE MAIN GEARBOX EXTERNAL COMPONENTS

No.	*Description*
1.	Side cover.
2.	Joint washer.
3.	Distance piece.
4.	Spring washer.
5.	Nut for stud.
6.	Top cover.
7.	Joint washer.
8.	Set screw.
9.	Set screw.
10.	Spring washer.
11.	Set screw.
12.	Change speed lever turret.
13.	Joint washer.
14.	Set screw.
15.	Spring washer.
16.	Change speed lever.
17.	Fulcrum lever.
18.	Spring.
19.	Knob.
20.	Dust cover—outer.
21.	Dust cover—inner—large.
22.	Dust cover—inner—small.
23.	Retaining ring.
24.	Clutch operating shaft.
25.	Clutch withdrawal fork.
26.	Cotter pin.
27.	Spring washer.
28.	Cotter pin nut.
29.	Clutch withdrawal housing.
30.	Spring—fork to housing.
31.	Thrust button.
33.	Clutch throw-out bearing.
34.	Clutch cross-shaft lever.
35.	Cotter pin.
36.	Spring washer.
37.	Cotter pin nut.
38.	Lubricating nipple.
39.	Clutch operating cylinder.
40.	Cylinder push-rod.
41.	Set screw.
42.	Spring washer.
44.	Clevis pin.
45.	Clevis pin washer.
46.	Split pin.
47.	Joint washer.

Position the reverse gear in the bottom of the box—the shaft is fitted later.

With its bearing in position on the shaft, drift the first motion shaft into position in the box.

Using grease, place the needle-roller bearings around the front end of the mainshaft. Temporarily secure the rollers with wire or an elastic band. Insert the mainshaft through the opening in the rear of the box. Gently position the forward end of the shaft into the first motion shaft, taking care not to displace the needle rollers. Before pushing the mainshaft fully home remove the wire or elastic band from round the rollers.

Carefully drift the rear bearing housing into position, ensuring that it remains square with the rear face of the gearbox.

Drive the rear bearing onto the shaft and into the bearing housing until the bearing circlip fits flush into the housing recess.

Fit the reverse shaft and its key. Tap the shaft fully home and ensure that the key locates properly into the recess for it in the rear face of the gearbox.

Turn the gearbox upside-down and drift in the layshaft from the front of the box. The cutaway on the front end of the layshaft must be lined up to allow the front cover to seat properly.

Position the first and second speed fork in the box with the lug facing forward and fit the rod through the fork. Fit the selector on the rod. Do not at this stage finally secure the fork or selector.

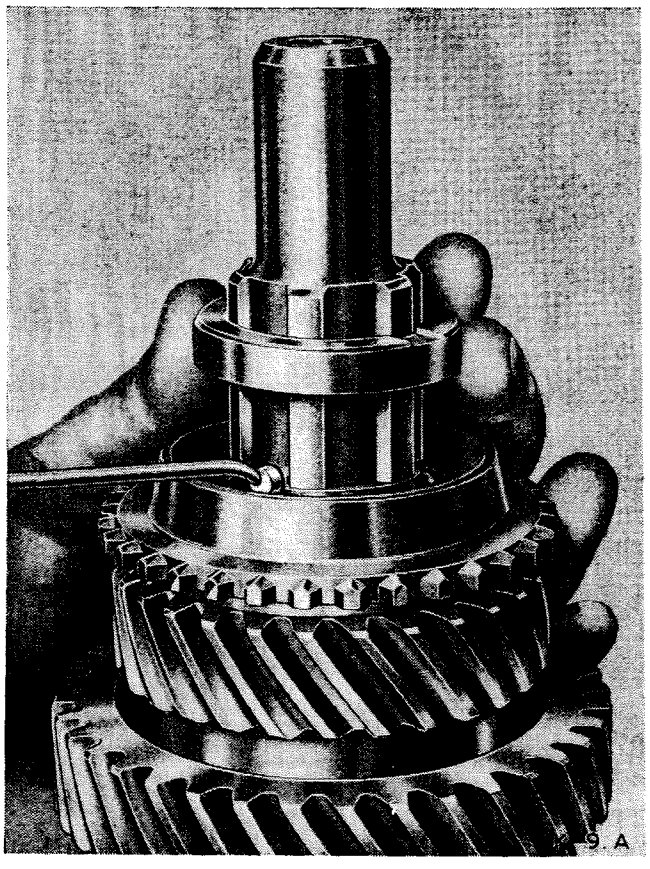

Fig. F.6

Depressing the third gear locking ring plunger

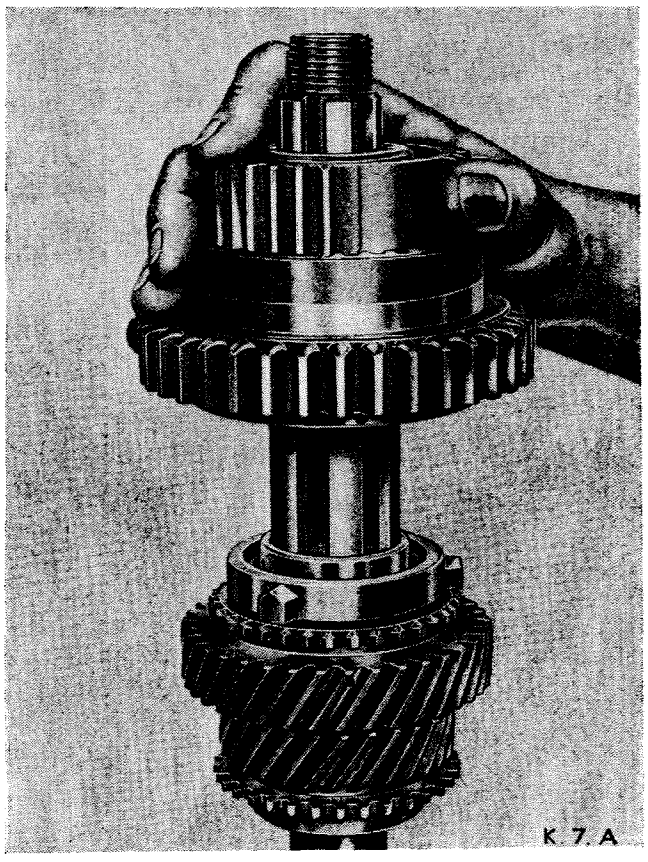

Fig. F.7

Removing the first gear and synchronizer assembly

Fit the large interlock plunger through the centre hole in the forward end of the box so that it takes up a position between the centre and right-hand holes.

Position the third and fourth speed fork in the box with the lug facing rearward and insert the rod through the centre hole in the rear part of the box and through the fork. Fit the selector on the rod before pushing the rod fully home. Fit the small interlock plunger into the hole in the rod. Do not finally secure the fork or selector.

Fit the second large interlock plunger in the same manner as the first. In this case, however, the plunged takes up its position between third and fourth and reverse rod holes at the front of the gearbox.

Position the reverse fork in the box and insert the rod. When the rod has passed through the fork position the selector and push the rod fully home.

Secure the selectors and forks with their taper set pins. Ensure that the serrated washers are in position and that the locknuts are tight.

Fit the blanking plug into the interlock plunger drilling.

Fit the gearbox front cover, using a new joint washer if necessary.

NOTE.—Refit the same number of shims as found on dismantling the cover so that the first motion shaft bearing is nipped in its housing.

Push the withdrawal fork pivot shaft into the bell housing. Position the spring and withdrawal fork and secure to the shaft with the two cotter pins and nuts.

Slide the withdrawal bearing and housing out of the spigot which is formed on the gearbox front cover.

NOTE.—The withdrawal bearing housing must be packed with recommended grease before it is slid into position.

Finally, position the free ends of the withdrawal fork spring in the trunnion grooves of the housing.

Install the selector rod balls and springs. The top cover and gear change lever is fitted as an assembly after the transfer gearbox, main gearbox, and engine have been refitted to the chassis. Refill the main gearbox with recommended oil—capacity 4 pints (2.27 litres).

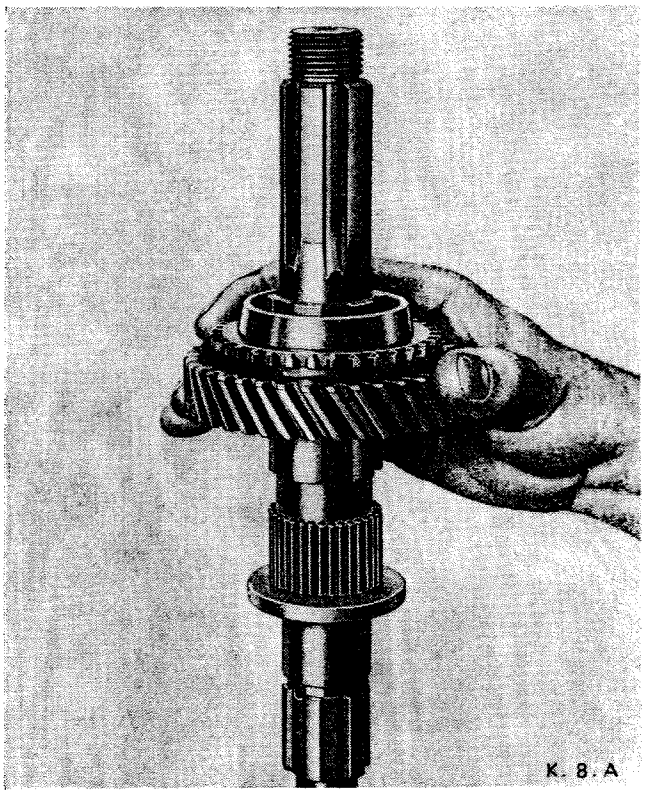

Fig. F.8
Fitting the second gear

Section F.3

DISMANTLING AND REASSEMBLING THE TRANSFER GEARBOX

The transfer gearbox mounted on the rear face of the main gearbox provides the option of a direct drive to the rear axle only for highway work or a low-ratio 2·02 : 1 or direct high ratio to both front and rear wheels for cross-country conditions.

The transfer gearbox can only be dismantled when the engine and main gearbox assemblies have been removed from the vehicle as described in Section A. To dismantle the transfer gearbox proceed as follows:

Remove the engine and main gearbox with transfer gearbox from the vehicle (see Section A.3).

NOTE.—The transfer gearbox cannot be removed from the main gearbox as a unit.

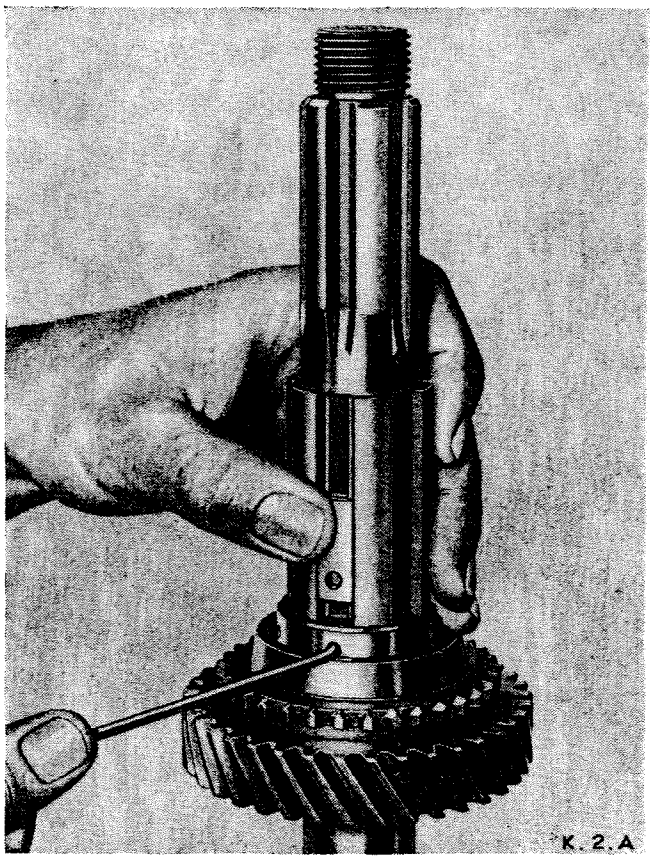

Fig. F.9
Fitting the second gear locking ring key

Drain the oil from the transfer gearbox by unscrewing the drain plug and removing the dipstick.

If the vehicle is not fitted with a power take-off it will be necessary to remove the six nuts securing the cover-plate in position. Lift off the cover-plate.

Use a suitable tool to hold the front wheel drive flange. To remove the flange undo the securing nut after knocking back the lock washer. Retrieve the lock washer.

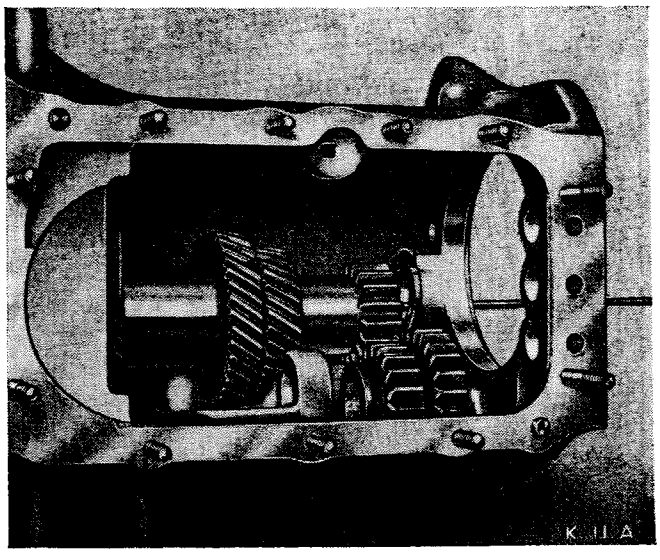

Fig. F.10
Positioning the laygear, thrust washers, and reverse gear

THE TRANSFER GEARBOX COMPONENTS

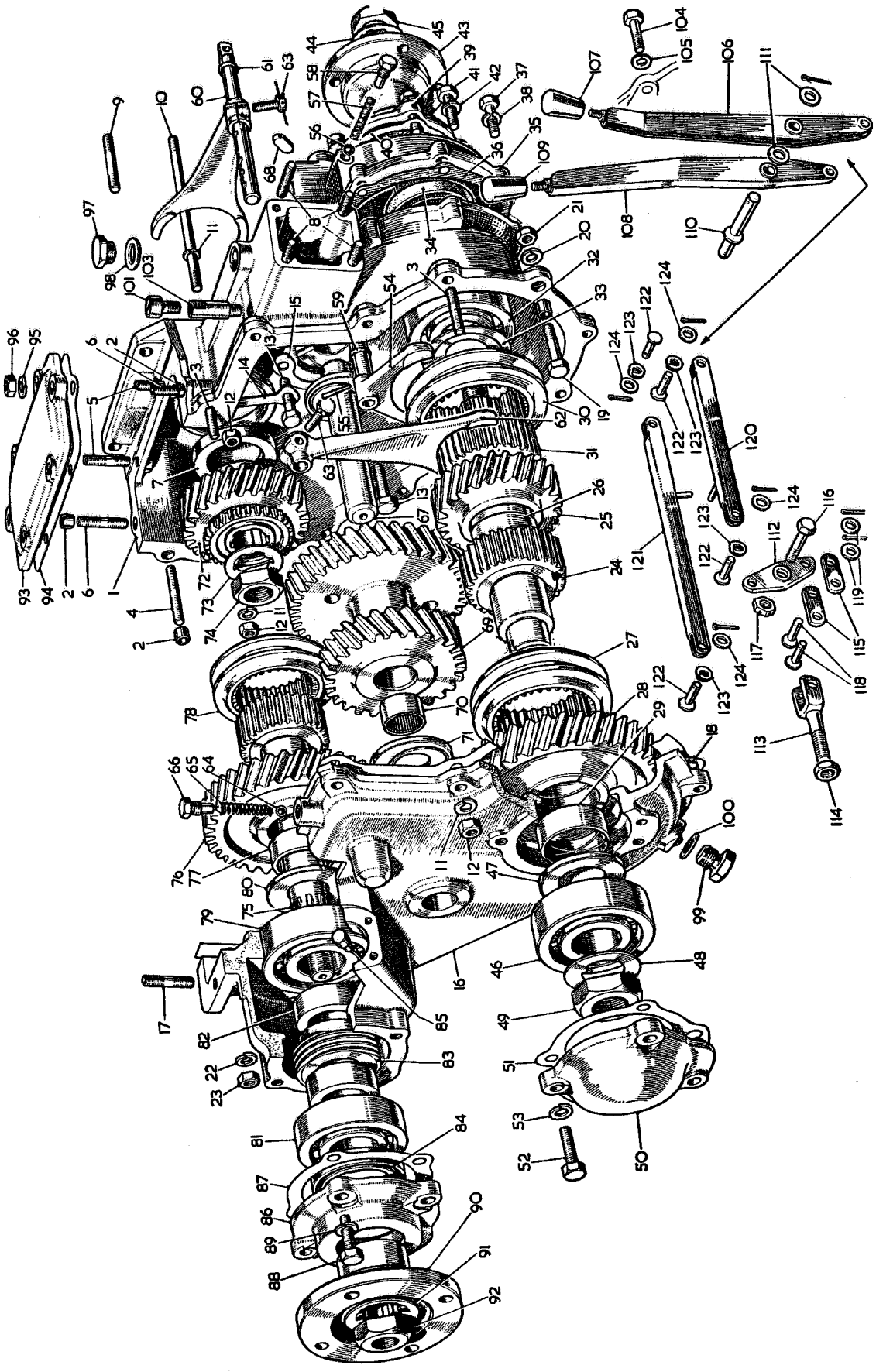

KEY TO THE TRANSFER GEARBOX COMPONENTS

No.	Description
1.	Casing.
2.	Dowel.
3.	Stud—case to cover.
4.	Stud—case to cover.
5.	Stud for top cover.
6.	Stud for top cover.
7.	Oil seal.
8.	Rear mounting bracket stud.
9.	Transfer case to main case stud.
10.	Stud—long.
11.	Spring washer.
12.	Nut for stud.
13.	Set screw.
14.	Lock washer.
15.	Lock washer.
16.	Cover for casing.
17.	Top cover stud.
18.	Joint washer.
19.	Bolt for cover.
20.	Spring washer.
21.	Nut for bolt.
22.	Spring washer.
23.	Nut for stud.
24.	Front drive shaft.
25.	Front gear.
26.	Bush for gear.
27.	Front drive coupling.
28.	Rear gear.
29.	Bush for gear.
30.	Front coupling.
31.	Hub for coupling.
32.	Front bearing.
33.	Bearing shield.
34.	Oil seal.
35.	Bearing support cover.
36.	Joint washer.
37.	Cover to casing screw.
38.	Spring washer.
39.	Front cover.
40.	Joint washer.
41.	Support cover screw.
42.	Spring washer.
43.	Coupling flange.
44.	Lock washer.
45.	Nut for flange.
46.	Rear bearing.
47.	Thrust washer.
48.	Lock washer.
49.	Front drive shaft nut.
50.	Front drive shaft cover.
51.	Joint washer.
52.	Set screw.
53.	Spring washer.
54.	Fork assembly.
55.	Taper pin.
56.	Detent ball.
57.	Detent ball spring.
58.	Plug for spring.
59.	Sealing ring.
60.	Selector shaft.
61.	Sealing ring.
62.	Change-speed fork.
63.	Bolt for forks.
64.	Detent ball.
65.	Spring for ball.
66.	Plug for spring.
67.	Layshaft.
68.	Key for layshaft.
69.	Laygear.
70.	Laygear bearing.
71.	Thrust washer.
72.	Driving gear.
73.	Lock washer.
74.	Driving gear nut.
75.	Rear drive shaft.
76.	Gear for shaft.
77.	Bearing for gear.
78.	Rear drive coupling.
79.	Inner bearing.
80.	Thrust washer.
81.	Outer bearing.
82.	Distance piece.
83.	Speedometer wheel.
84.	Oil seal.
85.	Thrust button.
86.	Rear drive shaft cover.
87.	Joint washer.
88.	Bolt for cover.
89.	Spring washer.
90.	Coupling flange.
91.	Lock washer.
92.	Nut for flange.
93.	Top cover.
94.	Joint washer.
95.	Spring washer.
96.	Nut for stud.
97.	Filler plug.
98.	Filler plug washer.
99.	Drain plug.
100.	Washer for drain plug.
101.	Breather.
103.	Extension for breather.
104.	Set screw.
105.	Spring washer.
106.	High ratio lever.
107.	Knob for lever.
108.	Low ratio lever.
109.	Knob for lever.
110.	Support pin.
111.	Washer for pin.
112.	Relay lever.
113.	Relay lever fork.
114.	Lock nut.
115.	Relay lever link.
116.	Relay lever bolt.
117.	Nut for bolt.
118.	Clevis pin.
119.	Washer for pin.
120.	Change lever link.
121.	Change lever link.
122.	Clevis pin.
123.	Spring washer.
124.	Plain washer.

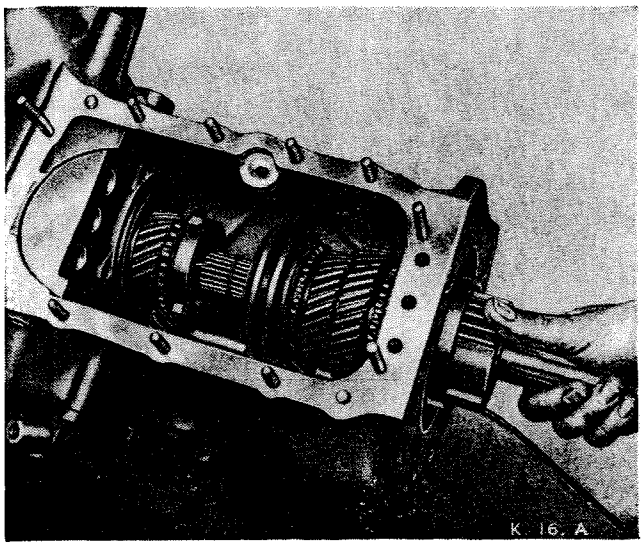

*Fig. F.*11
Fitting the mainshaft with the spigot needle rollers temporarily held by a rubber band

Remove the four nuts and spring washers which secure the front wheel drive shaft oil seal housing. Remove the housing.

Remove the transfer gearbox cover by releasing the eight nuts and bolts and the four nuts on studs which secure it. Separate the cover joint by gently tapping the exposed end of the front wheel drive shaft with a soft hammer. The cover can now be pulled away from the transfer gearbox case complete with rear and front drive shafts. The selector forks and coupling sleeves also come away with the cover. Carefully remove the joint washer. The laygears together with the front drive coupling, hub and engagement fork may remain in position in the case.

Remove the cover-plate for the front wheel drive shaft from the transfer gearbox cover. Undo the nut thus exposed after knocking back the lock washer.

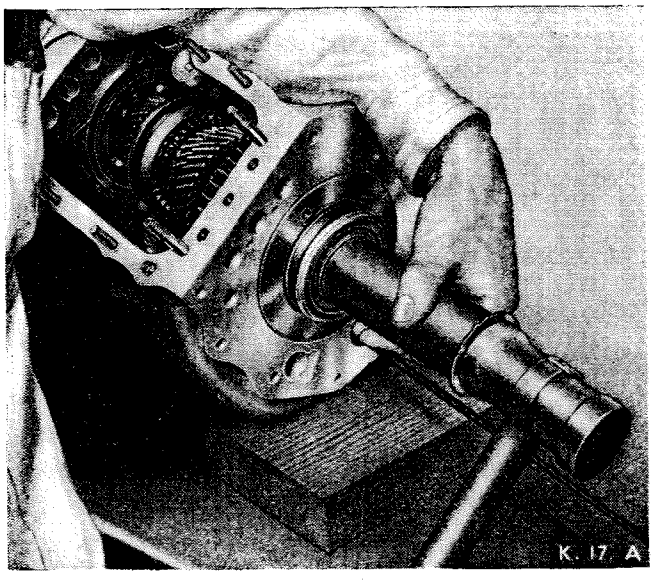

*Fig. F.*12
Drifting the mainshaft rear bearing into its housing

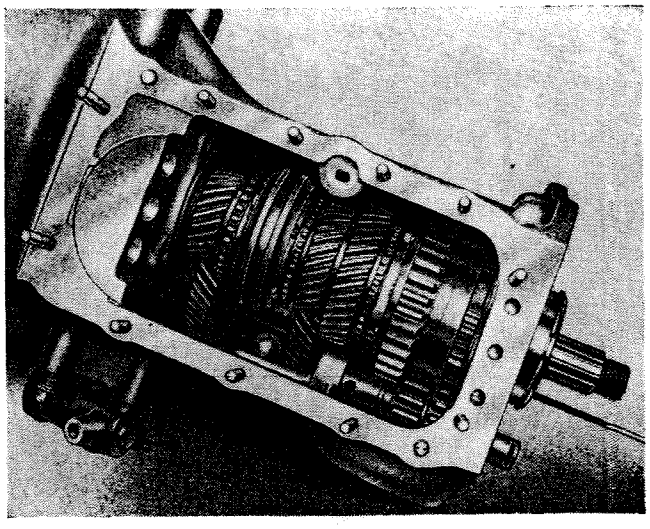

*Fig. F.*13
The gears assembled, showing the reverse shaft keyway

Using a soft drift, drive the shaft out of the cover from the cover-plate side. The bearing will remain in the cover. Retrieve the thrust washer and gear. If necessary the bearing can be drifted out of the cover.

Release the pressure on the selector rod ball and spring by unscrewing the screw plug. The selector fork assembly can now be pulled out of the cover.

Remove the rear drive flange from its shaft by undoing the securing nut. Use a suitable tool to hold the flange whilst the nut is being released. Retrieve the lock washer.

After the rear drive shaft flange is removed the oil seal housing can be taken off the cover by extracting the four securing set pins.

Remove the speedometer drive gear and housing from the cover.

Drive out the rear drive gear shaft assembly from the cover. The front bearing will remain in position on the

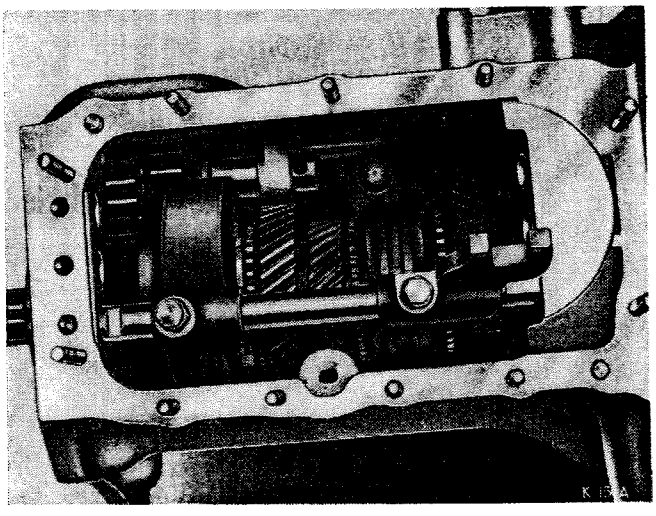

*Fig. F.*14
The first and reverse rod with fork and selector positioned but not tightened down

shaft but the rear bearing will stay in position in the cover and can be drifted out.

The rear drive gear shaft can be dismantled by gently bumping the threaded end of the shaft on a block of wood or lead to displace the distance pieces, speedometer gear, bearing, thrust washer, gear and, on later models, two needle thrust races with thrust washers. Notice the order of assembly.

Knock back the lock washer and remove the nut from the gearbox mainshaft. To prevent the gearbox mainshaft rotating it is necessary to use a suitable wedge of wood or rubber between the teeth of the mainshaft gear and laygear.

Extract the laygear and two thrust washers together with the front drive coupling, hub, and engagement fork from the case if not already removed.

Use a suitable tool to pull the gear off the gearbox mainshaft.

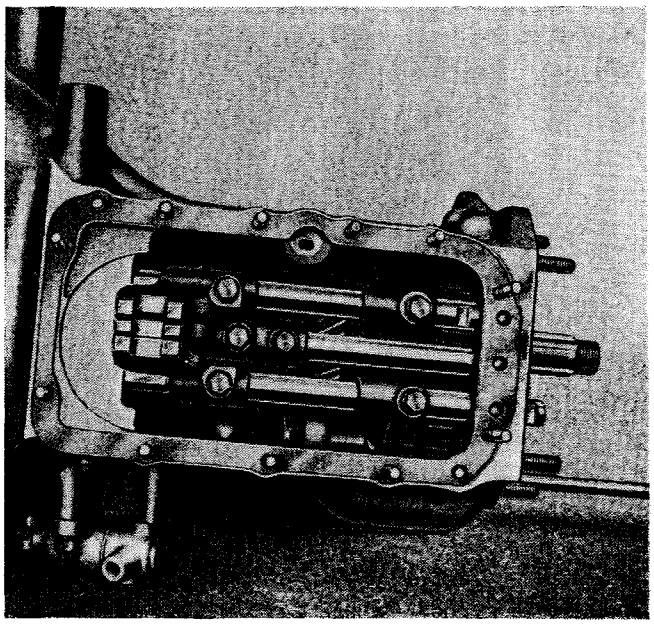

Fig. F.15

Rods, selectors, and forks in position with the set pins tightened

Remove the casing from the gearbox rear face by releasing the two set pins and one nut on a stud from inside the case. The lock washers must be released beforehand. The five nuts round the mounting flange should now be removed and the case taken off its mounting studs.

Remove the layshaft by pushing it out of the case towards the front face. This will displace the retaining key from its housing in the case, after which it can be removed from the shaft.

If necessary, the oil seal for the gearbox mainshaft can now be removed from its housing in the transfer gearbox case and a replacement fitted.

All bearings and gears should be lubricated on assembly and not fitted dry.

If a new oil seal is to be fitted gently drift it into position, using a suitable tool. The seal is fitted with the lip towards the front face of the transfer case, and its final position should be in register with the chamfered internal edge of the housing.

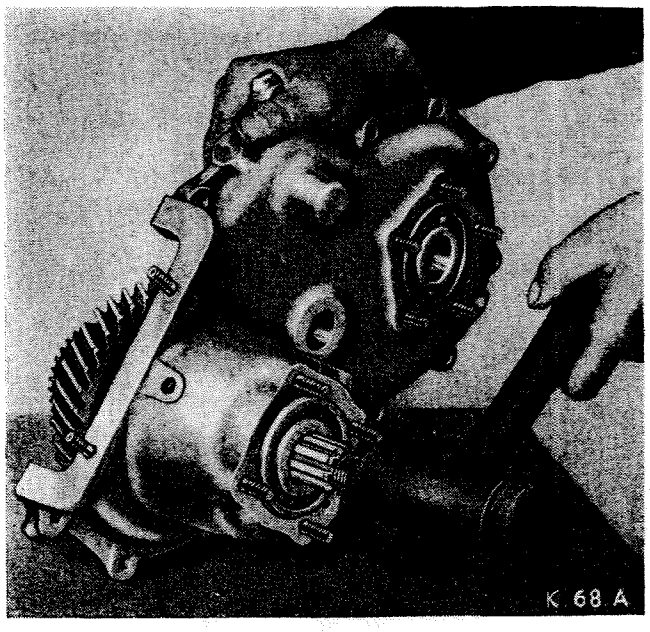

Fig. F.16

Drifting out the transfer gearbox rear drive shaft

Position the paper joint washer on the rear face of the gearbox, using a small quantity of jointing compound on both sides.

Fit the layshaft into the casing and secure it with the key.

Fit the front drive engagement fork into the casing.

Position the front drive shaft front gear, coupling, hub, and bearing shield on the front wheel drive shaft with

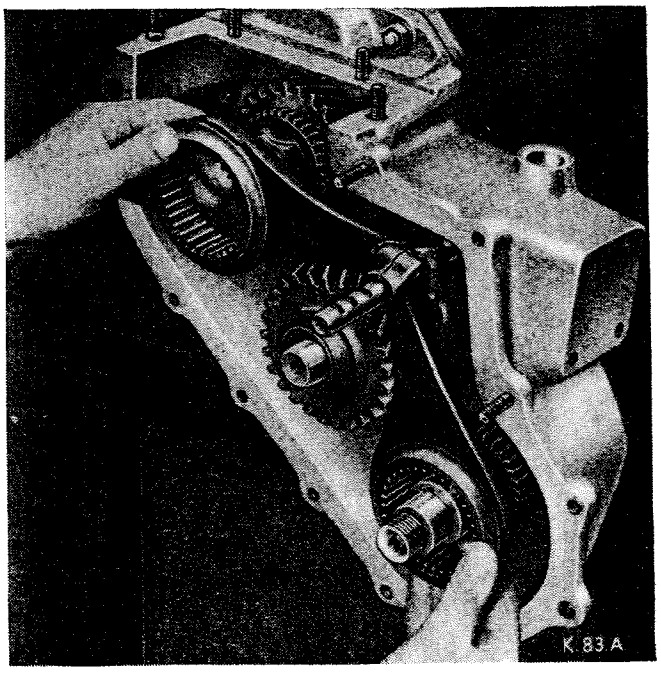

Fig. F.17

Fitting the selector fork assembly

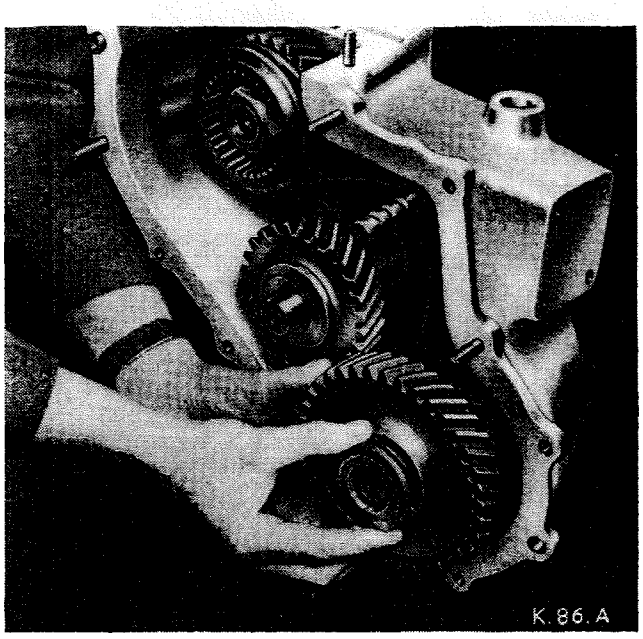

Fig. F.18
Installing the front wheel drive gear and thrust washer

the latter having its convex side facing the bearing, and then fit the bearing to the shaft.

Drift the shaft into position in the bearing housing at the same time engaging the coupling in its fork.

The transfer case can now be positioned on the main gearbox and bolted up. Do not omit the lock washers.

Using a suitable drift, position the gear on the mainshaft with the dog-clutch outwards. Fit the lock washer and do up the nut finger-tight.

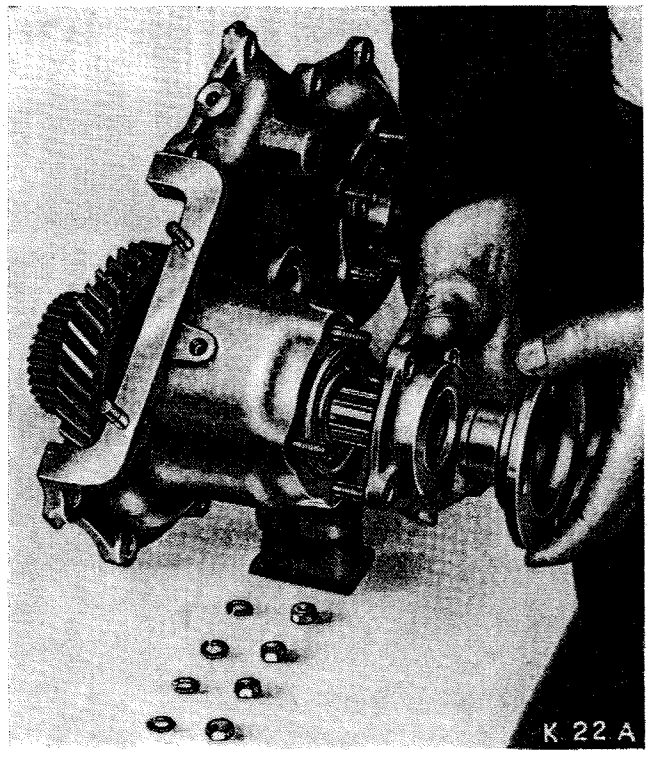

Fig. F.19
Rear drive shaft flange assembly

Position the thrust washer on the layshaft, followed by the laygear. Mesh the gear with the gear on the mainshaft. Using a suitable wooden or rubber wedge between the laygear and the mainshaft gear, tighten up the mainshaft nut. Knock over the lock washer. Place the second thrust washer on the outer face of the laygear cluster.

The selector fork assembly can now be placed in position as an assembly and engaged with the dog-clutch on the mainshaft gear.

Place the front wheel drive rear gear on the front wheel drive shaft with the dog-clutch towards the selector fork ring.

Position the thrust washer on the front wheel drive shaft. Fit the oil seal housing drive flange, lock washer, and nut. Tighten up and knock over the lock washer.

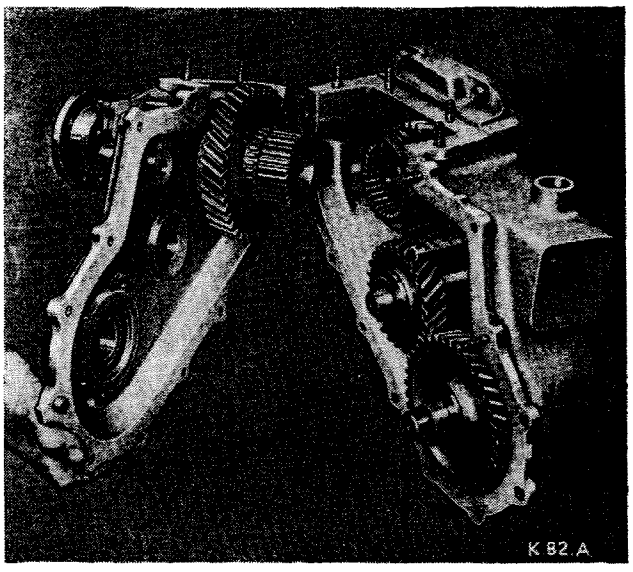

Fig. F.20
Fitting the transfer gearbox cover

Assemble the gear, thrust washer, bearing, distance pieces, and speedometer gear onto the rear wheel drive shaft. Install the rear wheel drive shaft and gear assembly into the transfer case rear cover. Drift the bearing into its housing.

Fit the oil seal housing over the rear wheel drive shaft and secure with the four set pins.

NOTE.—A new oil seal must be fitted if the old one is damaged or ineffective.

Fit the rear drive shaft flange, using a suitable tool to hold the flange against rotation, fit the lock washer and nut, and tighten up. Knock over the lock washer.

The end cover can now be positioned on the transfer gearbox. Ensure that the two locating dowels are in position. Tighten the cover down with nuts on four studs and eight nuts and bolts.

Drift the front drive shaft rear bearing into its housing in the cover.

Use a suitable tool to hold the front drive flange against rotation and fit the lock washer and nut to the rear end of the shaft. Tighten up and knock over the lock washer.

Fit the cover-plate over the rear end of the front drive shaft.

Insert the selector ball and spring into their housing and secure with the screw plug.

Refit the speedometer drive and housing to the transfer gearbox cover.

Screw the breather into the case.

Screw in the oil drain plug and tighten up. Refill the transfer gearbox with recommended oil—capacity 3 pints (1·17 litres).

If a power take-off is not fitted to the vehicle position and tighten down the top cover-plate. When the power take-off is fitted it will be necessary to refit the engine, main gearbox, and transfer gearbox as a unit to the chassis before fitting the power take-off to the top of the transfer gearbox. With the units in position in the chassis, reconnect the selector shaft and lever.

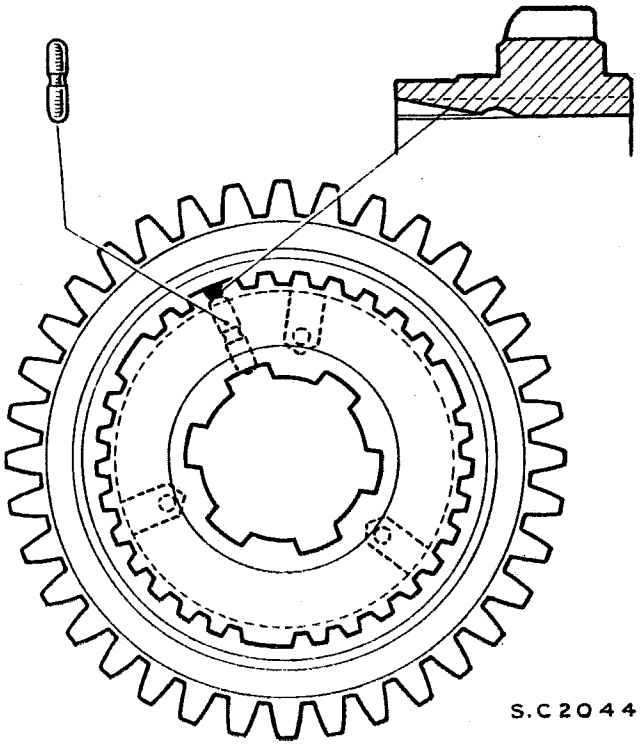

●*Fig. F.21*

Showing the first speed gear and synchronizer correctly assembled. The plunger and a section through the cut-away spline in the gear are also shown

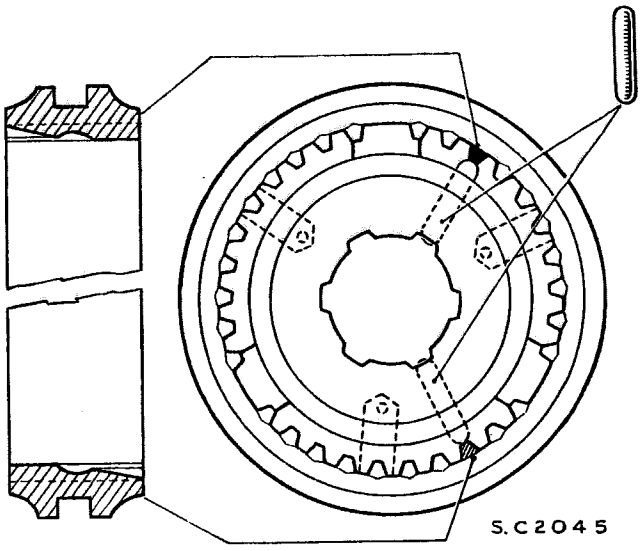

●*Fig. F.22*

Showing the third and fourth speed coupling sleeve and synchronizer correctly assembled. Also shown are the two plungers and sections through the cut-away splines in the coupling sleeve

Section F.4

MODIFIED SYNCHRONIZER ASSEMBLIES

From gearbox No. 11270 plungers are incorporated in the second, third, and fourth speed synchronizers. The dismantling and reassembling sequences of the gearbox are as previously detailed with the exception that the third and fourth speed synchronizer assembly must be re-fitted so that the plungers are in line with the grooved splines of the mainshaft.

NOTE. If either of these assemblies have to be dismantled, it will facilitate reassembly if the parts are marked. It is most important that they are assembled correctly.

When reassembling the first speed gear to the second speed synchronizer ensure that the plunger in the synchronizer aligns with the cut-away spline in the gear (see Fig. F.21).

When reassembling the third and fourth speed coupling sleeve to the synchronizer ensure that both plungers are aligned with the cut-away splines in the sleeve (see Fig. F.22).●

(*For* 'SERVICE TOOLS' *see page F.*16)

SERVICE TOOLS

18G 2. Crankshaft Gear, Pulley, and Propeller Shaft Flange Remover

(Application—driving flange removal.)

A multipurpose tool with alternative legs readily interchangeable, one pair with thin, flat ends designed for removing the driving flange, and the other pair having tapered ends to engage pulley grooves.

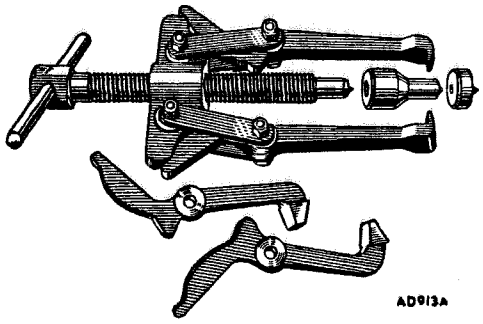

18G 34 A. Bevel Pinion Flange Wrench

(Application—holding driving flange.)

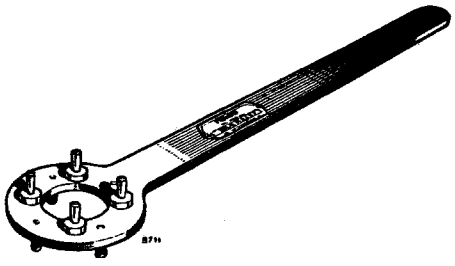

18G 618. Dummy Layshaft

For use as a pilot to line up the gears and retain thrust washer and needle bearings prior to inserting the layshaft proper.

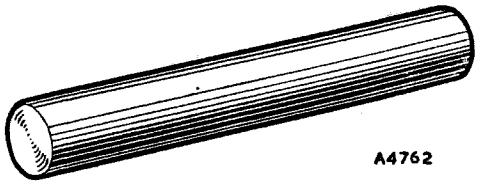

SECTION G

THE PROPELLER SHAFT

	Section
Propeller shaft	
Description	G.1
Dismantling and reassembling	G.4
Removing and replacing	G.3
Testing for wear	G.2

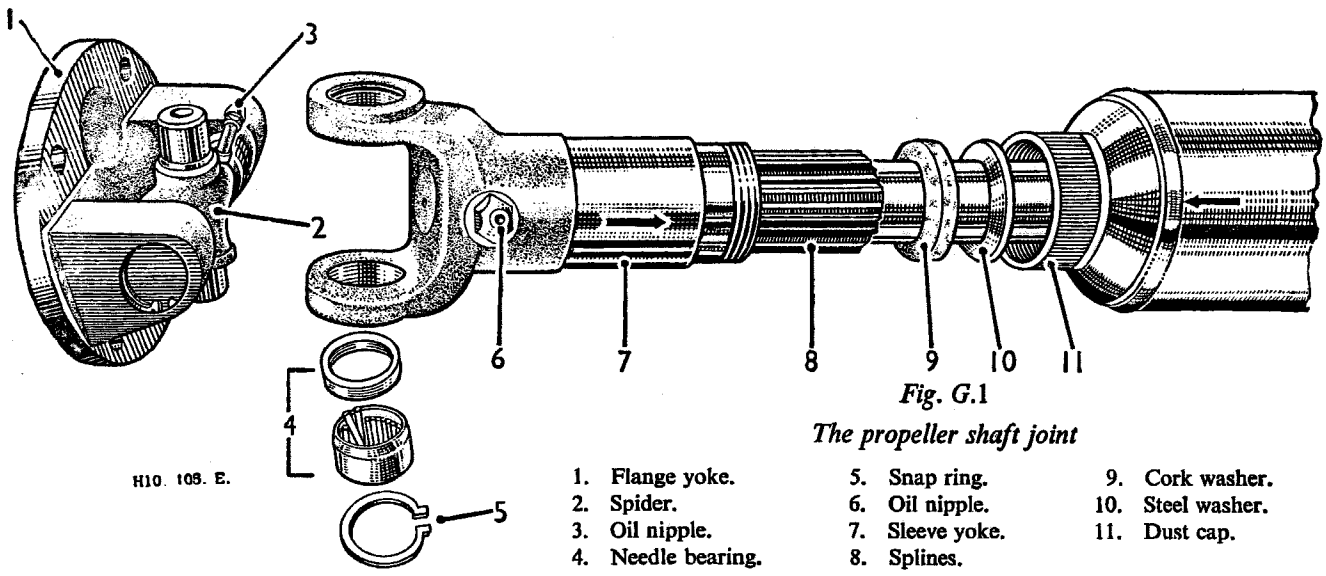

Fig. G.1

The propeller shaft joint

1. Flange yoke.
2. Spider.
3. Oil nipple.
4. Needle bearing.
5. Snap ring.
6. Oil nipple.
7. Sleeve yoke.
8. Splines.
9. Cork washer.
10. Steel washer.
11. Dust cap.

Section G.1

DESCRIPTION OF THE PROPELLER SHAFT

Two propeller shafts are used in this vehicle, one transmitting the drive to the front axle and the other to the rear axle.

The shafts are of the tubular type with Hardy Spicer type needle-bearing universal joints. Variations due to engine and axle movement are provided for by a sliding joint on the splined end of the rear shaft.

The sliding joint male and female members are marked in order that the spline can be reassembled in the original position. This is essential to ensure the correct relative positions of the yokes of the universal joints and avoid shaft vibrations.

Section G.2

TESTING THE PROPELLER SHAFT FOR WEAR

Wear on the thrust faces is ascertained by testing the lift in the joint either by hand or with the aid of a length of wood suitably pivoted.

Any circumferential movement of the shaft relative to the flange yokes indicates wear in the needle-roller bearings, or in the splined shaft in the case of the forward joint of the rear shaft.

Section G.3

REMOVING AND REPLACING THE PROPELLER SHAFT

Support the applicable propeller shaft near the sliding joint.

Remove all the nuts and bolts from the connecting flange at the sliding spline joint end.

Unscrew by hand the oil seal cap at the sliding joint. Slide the splined sleeve yoke about half an inch (13 mm.) towards the propeller shaft, thus disengaging the pilot flanges.

Next remove all the bolts securing the flange yoke to the differential companion flange and gently lower to a clean space on the ground.

The replacement of the propeller shaft is a reversal of the removal instructions.

Wipe the connecting flange and flange yoke faces clean to ensure that the pilot flange registers properly and that the joint faces bed evenly all round. Insert the bolts, and see that the nuts are evenly tightened all round and are securely locked.

Section G.4

DISMANTLING AND REASSEMBLING THE PROPELLER SHAFT

Clean away the enamel from all the snap rings and bearing faces to ensure easy extraction of the bearings.

Remove the snap rings by pressing together the ends of the rings and extracting with a screwdriver. If the ring does not come out easily tap the bearing face lightly to relieve the pressure against the ring.

Now, holding the joint so that the splined sleeve trunnion is on top, tap the radius of the yoke with a lead or copper hammer (see Fig. G.2) and it will be found that the bearing will begin to emerge. If difficulty is experienced use a small bar to tap the bearing from the inside, taking care not to damage the race itself. Turn the yoke over and extract the bearing with the fingers (see Fig. G.3), being careful not to lose any of the needles.

Repeat this operation for the other bearing, and the splined yoke can then be removed from the spider (see Fig. G.4).

Using a support and the directions given, remove the spider from the other yoke.

After long usage the parts most likely to show signs of wear are the bearing races and the spider journals of the universal joints. Should looseness or stress marks be observed the assembly should be renewed complete as no oversize journals or bearings are provided.

It is essential that bearing races are a light drive fit in the yoke trunnions. Should any ovality be apparent in the trunnion bearing holes new yokes must be fitted.

With reference to wear of the cross-holes in a fixed yoke, which is part of the tubular shaft assembly, only in cases of emergency should this be replaced. It should normally be renewed with a complete tubular shaft assembly. The other parts likely to show signs of wear are the splined sleeve yoke and the splined stub shaft. A total of ·004 in. (·10 mm.) circumferential movement, measured on the outside diameter of the spline, should not be exceeded. Should the splined stub shaft require renewing, this must be dealt with in the same way as the fixed yoke, i.e. a replacement tubular shaft assembly fitted.

See that all drilled holes in the journals of the universal joints are clean and filled with oil. Assemble the needle rollers in the bearing races and fill with oil. Should difficulty be experienced in assembly, smear the walls of the races with vaseline to retain the needle rollers in place.

Insert the spider in the flange yoke. Using a soft-nosed drift about $\frac{1}{32}$ in. (·80 mm.) smaller in diameter than the hole in the yoke, tap the bearing in position. It is essential that bearing races are a light drive fit in the yoke trunnions. Repeat this operation for the other three bearings. The spider journal shoulders should be coated with shellac prior to fitting the retainers to ensure a good seal.

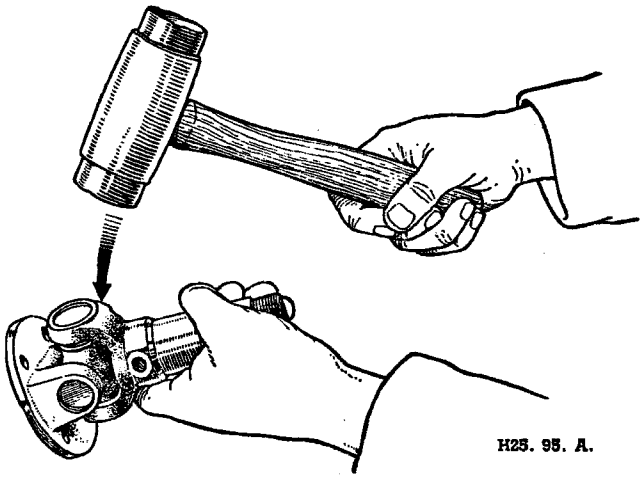

Fig. G.2
Tapping the joint to extract the bearing

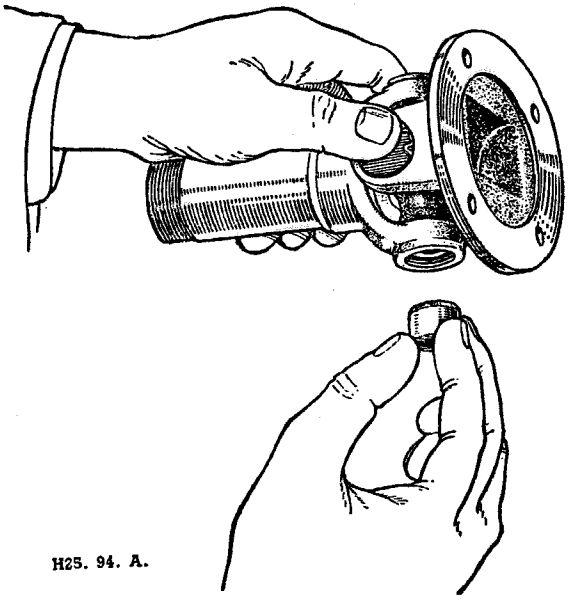

Fig. G.3
Removing a bearing cup

If the joint appears to bind tap lightly with a wooden mallet, which will relieve any pressure of the bearings on the end of the journals. When replacing the sliding joint on the shaft be sure that the trunnions in the sliding and fixed yoke are in line. This can be checked by observing that arrows marked on the splined sleeve yoke and the splined stub shaft are in line. It is advisable to renew cork washers and washer retainers on spider journals, using a tubular drift.

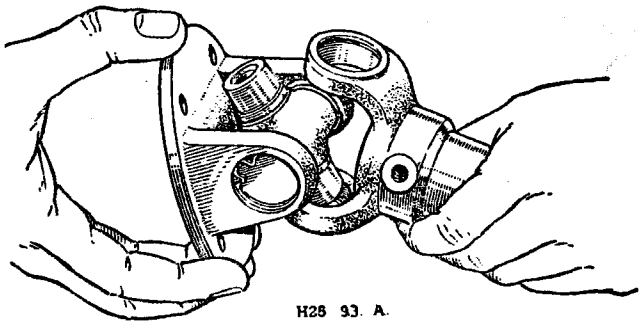

Fig. G.4
Separating the joint

SECTION H

THE REAR AXLE

(With Leaf-spring Suspension)

	Section
Axle assembly—removing and replacing	H.2
Brake-drum and axle shaft—removing and replacing	H.8
Crown wheel and pinion	
Assembling and setting	H.5
Dismantling	H.4
Description	H.1
Differential assembly—removing and replacing	H.3
Differential pinions—removing and replacing	H.6
Hub—removing and replacing	H.9
Pinion oil seal—renewing	H.7
Service tools	End of Section

Section H.1

DESCRIPTION

The rear axle is of the three-quarter-floating type, incorporating hypoid final reduction gears. The axle shafts and differential assembly can be withdrawn without removing the axle from the vehicle.

The differential and pinion shaft bearings are pre-loaded, the amount of preload being adjustable by shims. The position of the pinion in relation to the crown wheel is determined by a pinion head washer. The backlash between the gears is adjustable by collars.

The rear wheel bearing outer races are located in the hubs; the inner races are mounted on the axle tube and are secured by nuts and lock washers. Wheel studs in the hubs pass through the brake-drums, which are located on the hub flanges. Each axle shaft driving flange is secured direct to the hub by five bolts and spring washers.

Section H.2

REMOVING AND REPLACING THE AXLE ASSEMBLY

Drain the oil from the axle case.

Jack up the rear of the vehicle and support it with stands positioned beneath the chassis side-members.

Remove the road wheels and position a trolley jack under the centre of the axle case.

Disconnect the propeller shaft flange from the pinion flange and support the propeller shaft. Before separating the flanges mark them so that they can be refitted in the same relationship.

Disconnect the rear damper links from the spring seats and release the check straps from the chassis side-members.

Release the hand brake rod from the balance lever on the axle and disconnect the flexible hydraulic brake hose from the bracket on the chassis.

Remove the nuts and spring washers from the 'U' bolts and remove the 'U' bolts and clamp plates.

Raise the axle clear of the springs, remove the rear shackle bolts, and lower the springs to the ground. The complete axle can now be removed rearwards clear of the vehicle.

Refitting the axle is a reversal of the removal procedure, but care should be taken to line up the marks made on the propeller and pinion shaft flanges in order to maintain their balance.

Refill the axle case with oil to the correct level and bleed the brakes as detailed in Section M.6.

Section H.3

REMOVING AND REPLACING THE DIFFERENTIAL ASSEMBLY

Remove the drain plug and allow the oil to drain away.

Withdraw both axle shafts sufficiently to clear the differential assembly.

Disconnect the propeller shaft at the flange on the pinion shaft.

The complete gear carrier is secured to the axle casing by nuts. Remove all the nuts and withdraw the carrier from the axle casing, taking care to support the unit as it comes away.

When replacing, clean off the old paper joint washer fitted between the carrier and axle casing flange. Fit a new joint washer coated with jointing compound.

Refill the axle with the recommended grade of oil.

Section H.4

DISMANTLING THE CROWN WHEEL AND PINION

Remove the differential assembly as detailed in Section H.3.

Remove the differential bearings from the differential cage, using differential bearing remover 18G47C together with adaptor 18G47AD. Note that the thrust face of each bearing is marked with the word 'THRUST' and that shims are fitted between the inner ring of each bearing and the differential cage.

Knock back the tabs of the locking washers, unscrew the nuts from the bolts securing the crown wheel to the differential, and remove the crown wheel from the differential cage.

Unscrew the pinion nut, using a bevel pinion flange wrench (Service tool 18G34A) to prevent the flange from turning during this operation.

Remove the driving flange and the pressed-steel end cover.

Drive the bevel pinion rearwards through the carrier, using a soft-metal drift. The pinion will carry with it the inner race and rollers of the rear bearing, distance piece, and shims, leaving the outer race and the complete front bearing in position.

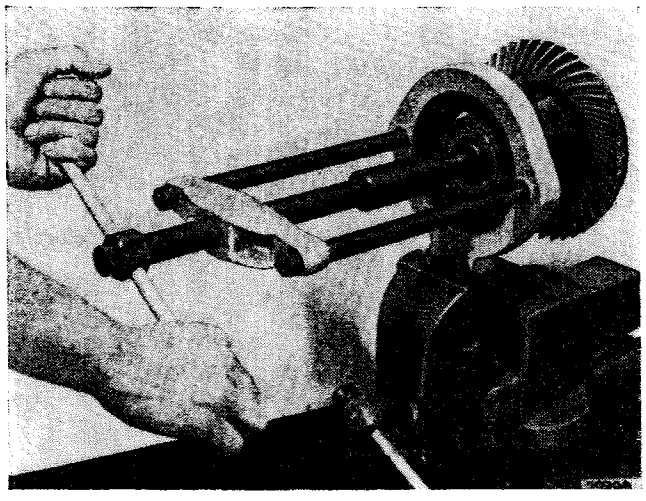

Fig. H.1
Removing the differential bearings, using tools 18G47C and 18G47AD

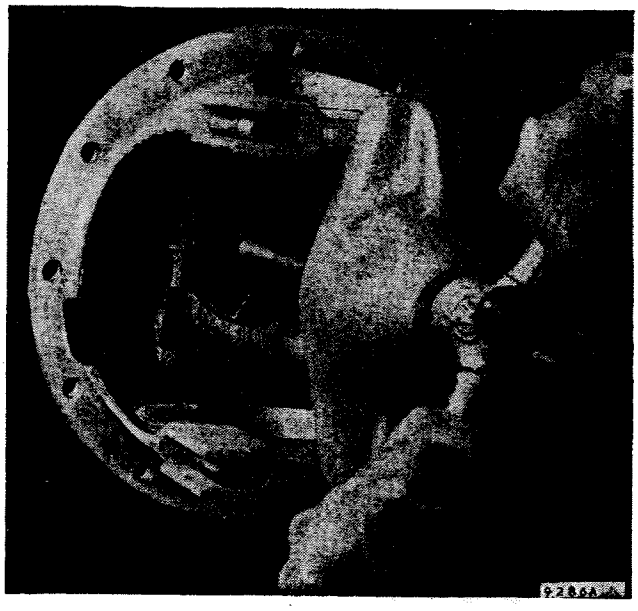

Fig. H.2

Removing the pinion bearing outer races, using tools 18G264, 18G264D, and 18G264H

The inner race of the front bearing may be removed with the fingers and the outer race of both the front and rear bearings removed with the special bevel pinion bearing outer race remover (Service tool 18G264), together with adaptors 18G264D and 18G264H.

Slide the distance piece and shims from the pinion shaft and withdraw the inner race, using bevel pinion inner race remover and replacer 18G285. Note the spacing washer against the pinion head.

Section H.5

ASSEMBLING AND SETTING THE CROWN WHEEL AND PINION

Apart from the fitting of components as detailed in Sections H.6 and H.7 it is not permissible to fit any new parts (e.g. crown wheel and pinion, pinion bearings, differential bearings, etc.) to the axle assembly without working through the procedure given in this Section. Furthermore, if a new crown wheel or a new pinion is needed, a mated pair—crown wheel and pinion—must be fitted.

Fitting a new crown wheel and pinion involves four distinct operations:

(1) Setting the position of the pinion.

(2) Adjusting the pinion bearing preload.

(3) Setting the crown wheel position.

(4) Adjusting the backlash between the gears.

To carry out these operations correctly special tools are required: the bevel pinion setting gauge (Service tool 18G191), the differential bearing gauge (Service tool 18G191A), the pinion bearing outer race remover and replacer (Service tool 18G264), and the preload checking tool (Service tool 18G207).

1. SETTING THE PINION POSITION

(1) Fit the bearing outer race to the gear carrier, using the special pinion race replacing tool.

(2) Smooth off the pinion head with an oil-stone but do not erase any markings that may be etched on the pinion head.

(3) Refit the pinion head washer; if the original washer is damaged or not available select a washer from the middle of the range of thicknesses—say, ·214 or ·216 in.

(4) Position the pinion in the gear carrier without the shims, bearing spacer, and oil seal.

(5) Fit the inner ring of the front bearing and the universal joint driving flange and tighten the nut gradually until a bearing preload of 13 to 15 lb. in. (·150 to ·173 kg. m.) is obtained.

(6) Remove the keep disc from the base of the magnet. Adjust the dial indicator to zero on the machined step 'C' of the setting block.

(7) Clean the pinion head and place the magnet and dial indicator in position. Move the indicator arm until the foot of the gauge rests on the centre of the differential bearing bore at one side and tighten the knurled locking screw. Obtain the maximum depth reading and note any variation from the zero setting. Repeat the check in the opposite bearing bore. Add the two variations together and divide by two to obtain a mean reading.

(8) Take into consideration any variation in pinion head thickness. This will be shown as an unbracketed figure etched on the pinion head and will always be minus (—). If no unbracketed figure is shown the pinion head is of nominal thickness.

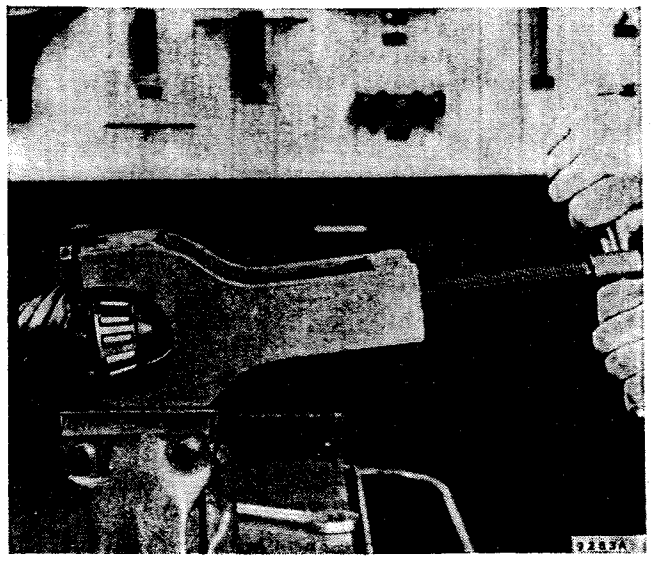

Fig. H.3

Removing the pinion rear bearing inner race, using tool 18G285

THE REAR AXLE COMPONENTS
(WITH LEAF-SPRING SUSPENSION)

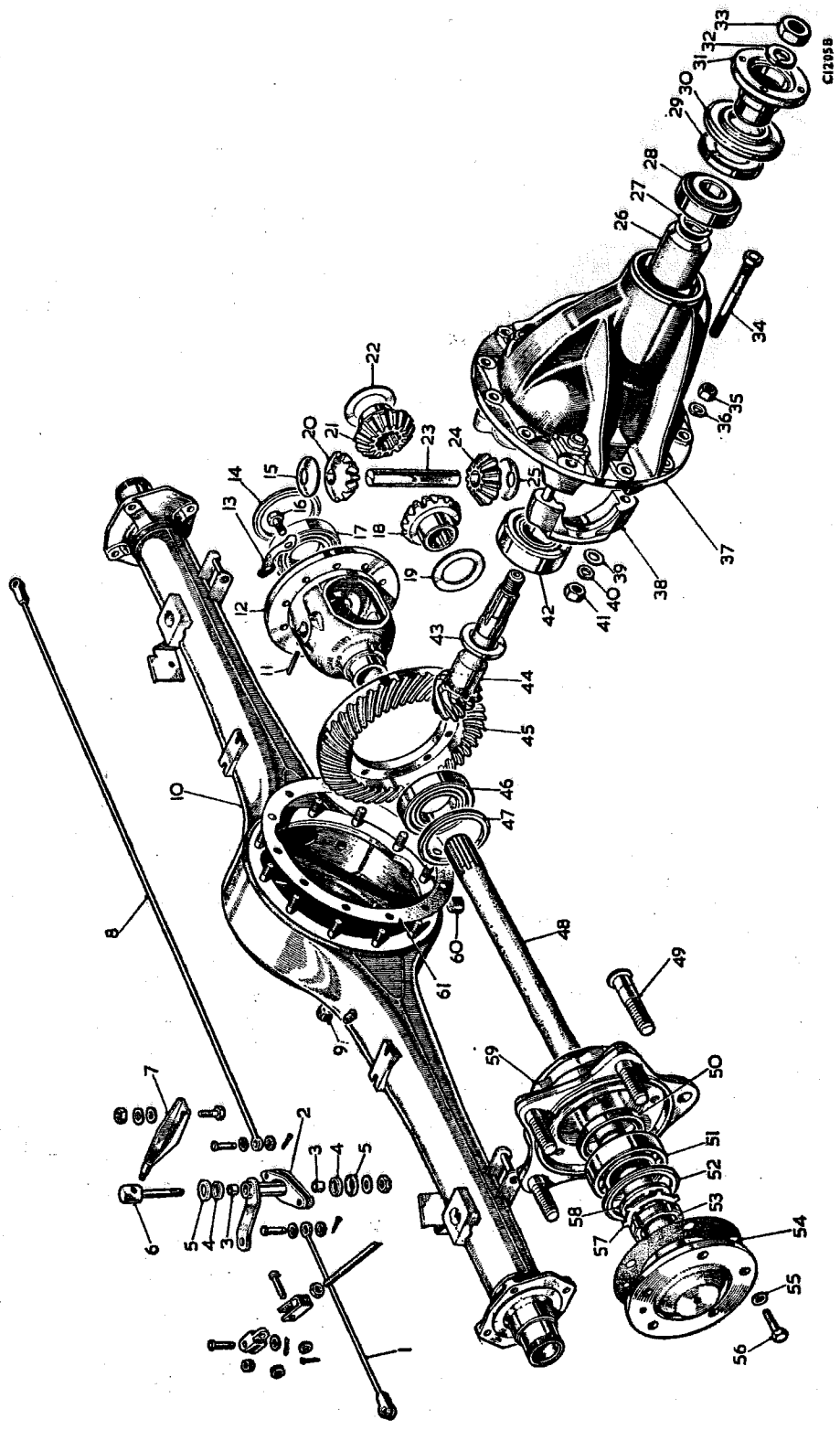

KEY TO THE REAR AXLE COMPONENTS
(WITH LEAF-SPRING SUSPENSION)

No.	*Description*
1.	Cross-rod—short.
2.	Compensating lever assembly.
3.	Bush.
4.	Felt washer.
5.	Cup for felt washer.
6.	Compensating lever shaft.
7.	Support for shaft.
8.	Cross-rod—long.
9.	Filler and level plug.
10.	Axle case.
11.	Pinion pin locking pin.
12.	Differential cage.
13.	Lock washer.
14.	Distance collar.
15.	Pinion thrust washer.
16.	Bolt—crown wheel to cage
17.	Differential bearing.
18.	Differential wheel.
19.	Thrust washer.
20.	Differential pinion.
21.	Differential wheel.
22.	Thrust washer.
23.	Differential pinion pin.
24.	Differential pinion.
25.	Pinion thrust washer.
26.	Distance piece.
27.	Shim—outer bearing.
28.	Pinion outer bearing.
29.	Oil seal.
30.	Dust cover.
31.	Flange—universal joint.
32.	Spring washer.
33.	Nut for flange.
34.	Bolt—cap to carrier.
35.	Nut for carrier.
36.	Spring washer.
37.	Carrier.
38.	Bearing cap.
39.	Plain washer.
40.	Spring washer.
41.	Nut for cap.
42.	Pinion inner bearing.
43.	Pinion head washer.
44.	Pinion.
45.	Crown wheel.
46.	Differential bearing.
47.	Distance collar.
48.	Axle shaft.
49.	Wheel stud.
50.	Oil seal.
51.	Bearing.
52.	Bearing spacer.
53.	Hub retaining nut.
54.	Joint washer.
55.	Spring washer.
56.	Bolt—shaft to hub.
57.	Lock washer.
58.	Washer for hub.
59.	Hub assembly.
60.	Drain plug.
61.	Joint washer.

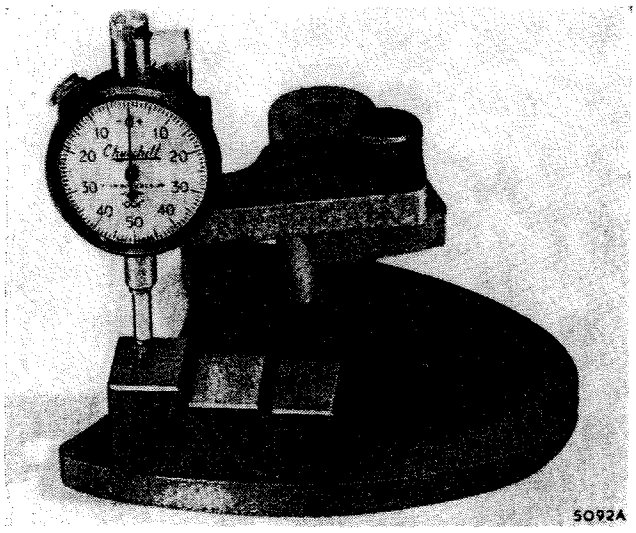

Fig. H.4
Set the gauge to zero on the step 'C' before gauging as illustrated in Fig. H.5

Using the mean clock gauge reading obtained and the unbracketed pinion head figure (if any), the following calculations can be made.

(*a*) **If the clock reading is minus** add the clock reading to the pinion head marking, the resulting sum being minus. **Reduce** the washer thickness by this amount.

Example:

Clock reading	−·002 in.
Pinion marking	−·005 in.
Variation from nominal ..	−·007 in.

Reduce the washer thickness by this amount.

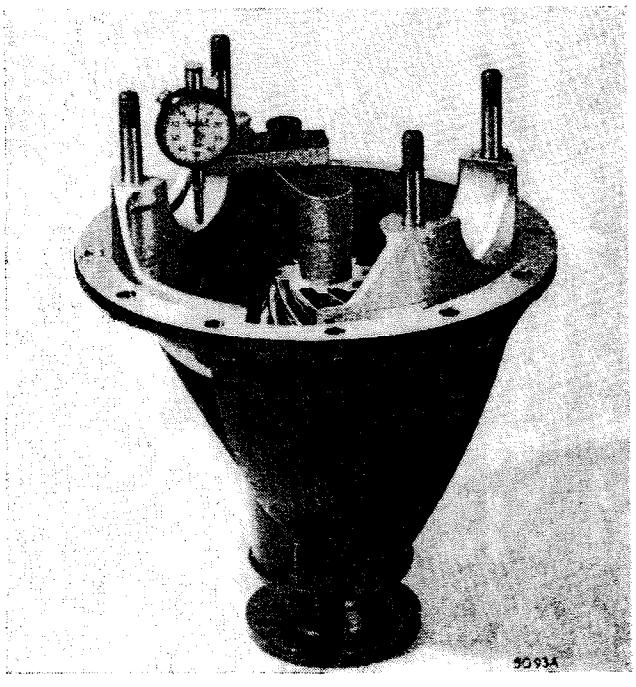

Fig. H.5
The tool in position on the pinion head, with the gauge indicating a variation from the standard setting

(*b*) **If the clock reading is plus and numerically less** than the pinion marking, **reduce** the washer thickness by the difference.

Example:

Pinion marking	−·005 in.
Clock reading	+·003 in.
Variation from nominal ..	−·002 in.

Reduce the washer thickness by this amount.

(*c*) **If the clock reading is plus and numerically greater** than the pinion marking, **increase** the washer thickness by the difference.

Example:

Clock reading	+·008 in.
Pinion marking	−·003 in.
Variation from nominal ..	+·005 in.

Increase the washer thickness by this amount.

2. ADJUSTING THE PINION BEARING PRELOAD

Assemble the pinion shaft bearings, distance piece, and shims to the gear carrier; fit the oil seal and driving flange. Tighten the flange nut gradually to a torque wrench reading of 1,680 lb. in. (19·4 kg. m.), checking the preload at intervals to ensure that it does not exceed 16 to 18 lb. in. (·184 to ·207 kg. m.), i.e. 3 lb. in. (·0345 kg. m.). greater than the previous figure as the oil seal is now fitted.

If the preload is too great more shims must be added, and if too small the thickness of the shimming must be decreased.

3. ADJUSTING THE DIFFERENTIAL BEARING PRELOAD

The differential bearings must be preloaded, and this is done by 'pinching' them to the extent of ·002 in. on each bearing, the 'pinch' being obtained by varying the thickness of the bearing distance collar fitted between each bearing outer race and the register in the axle housing. The collar thickness is calculated as shown below.

In making the necessary calculations machining tolerances and variations in bearing width must be taken into account. Machining tolerances are stamped on the component, bearing width variations must be measured.

The dimensions involved in preloading the differential bearings are illustrated in Fig. H.6, and it is emphasized that it is the tolerance on each dimension which is important and referred to in the formula used.

The dimensions are:

(A) From the centre-line of the differential to the bearing register on the left-hand side of the gear carrier.
Variation—stamped on the carrier.

(B) From the centre-line of the differential to the bearing register on the right-hand side of the carrier.
Variation—stamped on the carrier.

(C) From the bearing register on one side of the differential cage to the register on the opposite side.
Variation—stamped on the cage.

(D) From the rear face of the crown wheel to the bearing register on the opposite side.
Variation—stamped on the cage.

To calculate the collar thickness

Left-hand side

Formula A+D−C+·1815 in. (4·610 mm.).

Substitute the dimensional variations for the letters in the formula. The result is the thickness of the collar required at the left-hand side to compensate for machining variations and to give the necessary pinch, **with bearings of standard width.** The width of the bearing must

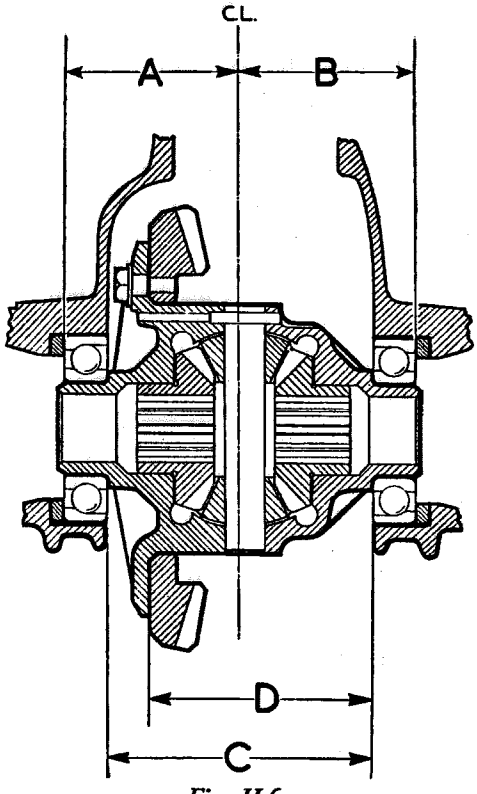

Fig. H.6

The dimensions referred to in the instructions for differential setting

now be checked and any variation from standard added to or subtracted from the collar thickness. If the bearing width is under standard that amount must be added to the collar thickness, and vice versa.

To check bearing width rest the bearing on the small surface plate of tool 18G191 with the inner race over the recess and the thrust face downwards.

Place the magnet on the surface plate and set the dial indicator to zero on the step marked 'C' of the gauge block; this is the width of a standard bearing. Transfer the indicator to the plain surface of the bearing inner race and, holding the race down against the balls, note the reading on the dial. A **negative** reading shows the additional thickness to be **added** to the collar at this side, a **positive** reading the thickness to be **subtracted.**

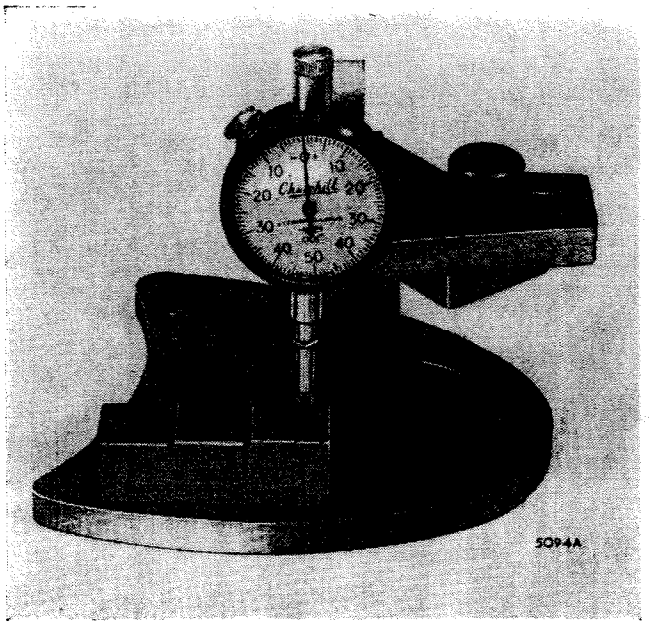

Fig. H.7

Set the gauge to zero on the step 'C' before gauging as illustrated in Fig. H.8

Right-hand side

Formula: B−D+·1825 in. (4·634 mm.).

The procedure is the same as that for the left-hand side.

When a framed number is marked on the back of the crown wheel, e.g. +2, it must be taken into account before assembling the collars to the differential carrier. This mark assists in relating the crown wheel with the pinion.

If, for example, the mark is +2, then the collar thickness must be increased on the right-hand side by ·002 in. (·05 mm.) and decreased on the left-hand side (crown

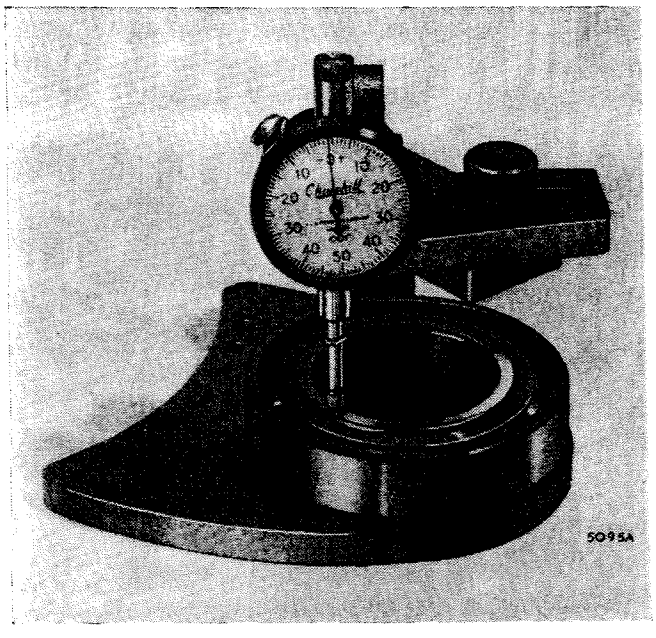

Fig. H.8

The gauge in position on the bearing with the dial indicating a variation from the standard bearing width

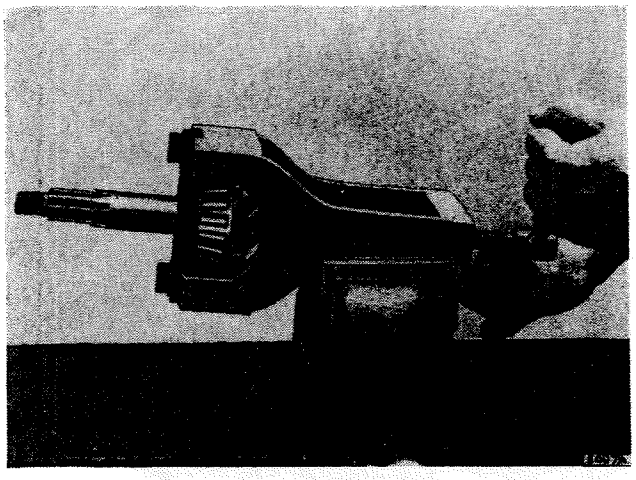

Fig. H.9
Refitting the pinion rear bearing inner race, using Service tool 18G285

wheel side) by the same amount. If the marking is —2, the collar thickness must be decreased on the right-hand side and increased on the left-hand side by the same amount.

4. ADJUSTING THE BACKLASH

Assemble the bearings to the differential cage, using Service tool 18G134 and adaptor 18G134K.

Bolt the crown wheel to the differential cage but do not knock over the locking tabs. Tighten the bolts to a torque wrench reading of 60 lb. ft. (8·3 kg. m.), using 18G372.

Mount the assembly on two 'V' blocks and check the amount of run-out of the crown wheel, as it is rotated, by means of a suitably mounted dial indicator. The maximum permissible run-out is ·002 in. (·05 mm.) and any greater irregularity must be corrected. If there is excessive run-out detach the crown wheel and examine the joint faces on the flange of the differential cage and on the crown wheel for any particles of dirt.

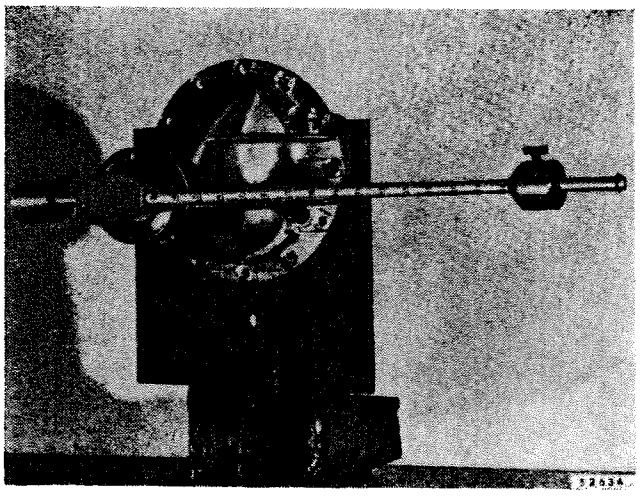

Fig. H.10
Checking the pinion bearing preload, using tool 18G207

When the parts are thoroughly cleaned it is unlikely that the crown wheel will not run true.

Tighten the bolts to the correct torque wrench reading and knock over the locking washers.

Refit the differential to the gear carrier. Replace the bearing caps and tighten the nuts to a torque wrench reading of 65 lb. ft. (8·99 kg. m.), using 18G372. Bolt the special tool surface plate to the gear carrier flange and mount the clock gauge on the magnet bracket in such a way that an accurate backlash figure may be obtained.

Vary the backlash by decreasing the thickness of the collar at one side and increasing the thickness of the collar at the other side by the same amount, thus moving the crown wheel into or out of mesh as required. The total thickness of the two collars must not be changed. The recommended backlash will be found etched on the rear face of the crown wheel. The minimum backlash allowed in any circumstances is ·005 in. (·127 mm.), and the maximum is ·007 in. (·178 mm.).

Table of washer and shim thickness	
Pinion head washer thickness	·208 to ·222 in. (5·283 to 5·638 mm.) in steps of ·002 in. (·0508 mm.)
Pinion bearing preload shims	·004 to ·012 in. (·1016 to ·3048 mm.) in steps of ·002 in. (·0508 mm.) plus ·020 and ·030 in. (·508 and ·762 mm.)
Differential bearing collars ..	·175 to ·193 in. (4·445 to 4·902 mm.) in steps of ·002 in. (·0508 mm.)
Pinion bearing preload ..	13 to 15 lb. in. (·150 to ·173 kg. m.) without oil seal, 16 to 18 lb. in. (·184 to ·207 kg. m.) with oil seal
Differential bearing pinch ..	·002 in. (·0508 mm.) each side

Section H.6

REMOVING AND REPLACING THE DIFFERENTIAL PINIONS

Make sure that the differential bearing housing caps are marked so that they can be replaced in their original positions, then remove the four nuts and spring washers. Withdraw the bearing caps and the differential assembly.

Tap out the dowel pin locating the differential pinion shaft. It must be tapped out from the crown wheel side as the hole into which it fits has a slightly smaller diameter at the crown wheel end to prevent the pin passing

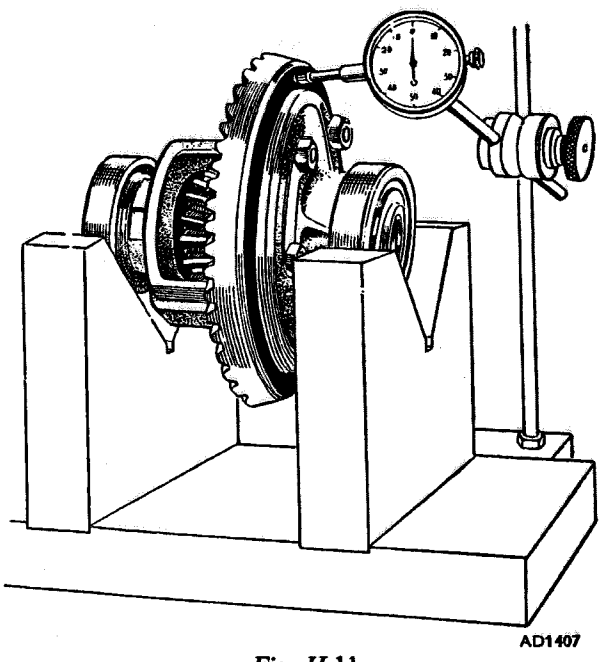

*Fig. H.*11
Method of checking the crown wheel run-out

right through. It may be necessary to clean out the metal peened over the entry with a $\frac{3}{16}$ in. drill to facilitate removal of the dowel pin. Drive out the differential pinion shaft, when the pinions and thrust washers can be removed from the cage.

Examine the pinions and thrust washers and renew as required.

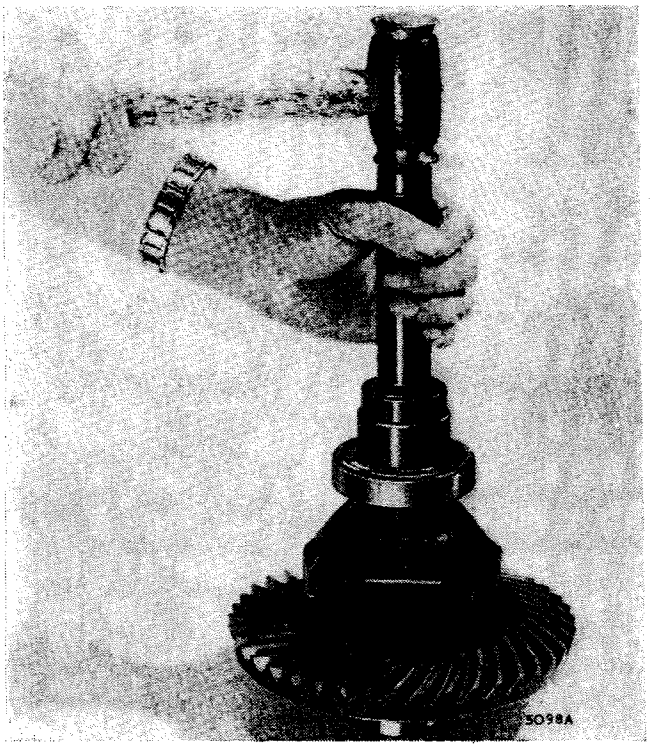

*Fig. H.*12
Refitting a differential bearing, using tools 18*G*134 *and* 18*G*134*K*

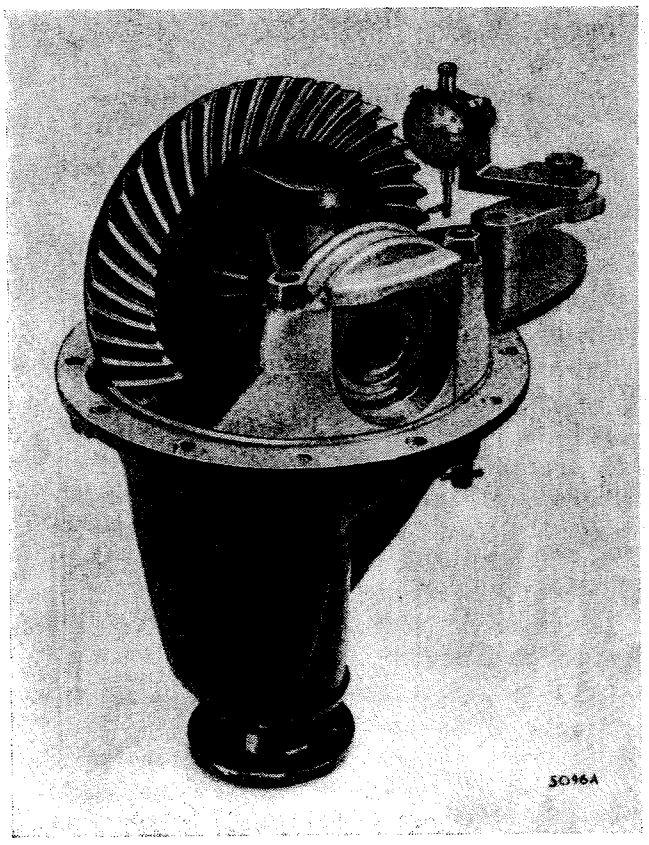

*Fig. H.*13
Checking the crown wheel backlash with tool 18*G*191*A*

Replace the pinions, thrust washers, and pinion shaft in the differential cage and insert the dowel pin. Peen over the entry hole.

Reassembly is a reversal of the removal instructions.

NOTE.—If it proves necessary to fit any new parts other than those detailed in this Section and Section H.7 the axle assembly must be set up as in Section H.5.

Section H.7

RENEWING THE PINION OIL SEAL

Mark the propeller shaft and pinion shaft driving flanges so that they can be replaced in the same relative positions and disconnect the propeller shaft, carefully supporting it.

Knock back the lock washer and unscrew the nut in the centre of the driving flange. Remove the nut and washer and withdraw the flange and pressed-steel end cover from the pinion shaft.

Extract the oil seal from the casing.

Press a new seal into the casing with the edge of the sealing ring facing inwards.

Replace the driving flange and end cover, taking care not to damage the edge of the oil seal, and tighten the nut with a torque wrench (Service tool 18G372) to a reading of 140 lb. ft. (19·3 kg. m.).

Reconnect the propeller shaft, taking care to fit the two flanges with the locating marks in alignment.

Section H.8

REMOVING AND REPLACING A BRAKE-DRUM AND AXLE SHAFT

Jack up the vehicle and remove the road wheel concerned.

Release the hand brake.

Remove the brake-drum. It may be necessary to slacken off the brake adjustment slightly if the shoes hold the drum.

Unscrew the five bolts securing the axle shaft flange to the hub.

Extract the axle shaft by inserting a $\frac{5}{16}$ in. UNF. set screw into the tapped hole provided in the flange. This will draw the flange out of the hub sufficiently for it to be gripped, thus enabling the axle shaft to be completely removed. If the paper joint washer is damaged it must be renewed when reassembling.

To replace the shaft and drum reverse the above sequence of operations.

Section H.9

REMOVING AND REPLACING A HUB

Remove the brake-drum and axle shaft as detailed in Section H.8.

Remove the bearing spacer.

●Knock back the tab of the locking washer and unscrew the hub nut, using tool 18G1005 or 18G1092.●

Tilt the lock washer to disengage the key from the slot in the threaded portion of the axle tube and remove the washer.

Withdraw the hub from the axle, using tools 18G220, 18G220A, and 18G220F. The bearing and oil seal will be withdrawn with the hub.

Drive out the bearing and oil seal from the hub. Discard the oil seal.

Soak the new oil seal in engine oil and fit it with its sealing edge towards the wheel bearing, using tools 18G134 and 18G134AQ.

Drive the wheel bearing into the hub, ensuring that it bolts up against the shoulder in the hub. The bearing is not adjustable and is replaced in one operation.

Pack the bearing with the recommended grade of grease.

Refit the hub assembly to the axle tube, using tools 18G134 and 18G134K.

●Refit the axle tube lock washer and nut. Fully tighten the nut, using tool 18G1005 or 18G1092 and lock in position.●

Refit the bearing spacer. It is essential that the outer face of the bearing spacer should protrude from ·001 to ·004 in. (·025 to ·091 mm.) beyond the outer face of the hub with the paper joint washer fitted. This ensures that the bearing is gripped tightly between the abutment shoulder in the hub and the driving flange of the axle shaft.

Refit the axle shaft and brake-drum.

SERVICE TOOLS

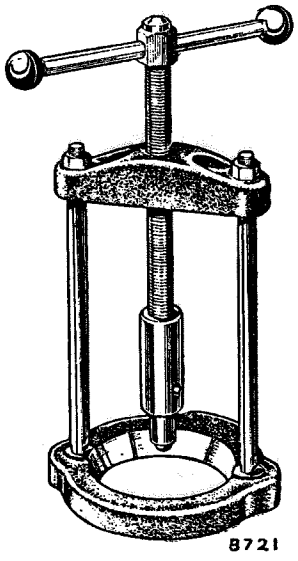

18G47C. Differential Bearing Remover (basic tool)

This standardized basic tool used in conjunction with adaptor 18G47AD permits easy and safe withdrawal of the differential bearings.

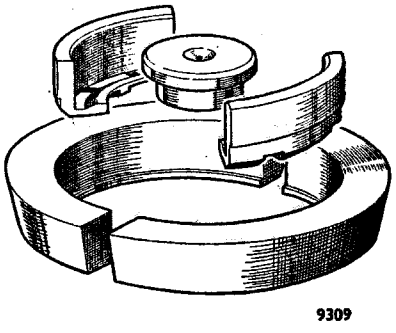

18G47AD. Differential Bearing Adaptor

For use with basic tool 18G47C.

18G264. Bevel Pinion Bearing Outer Race Remover (basic tool)

Comprising a body, centre screw with extension and tommy-bar, wing nut, guide cone, and two distance pieces. A plain ring is also included to serve as a pilot when the rear bearing outer race is being replaced.

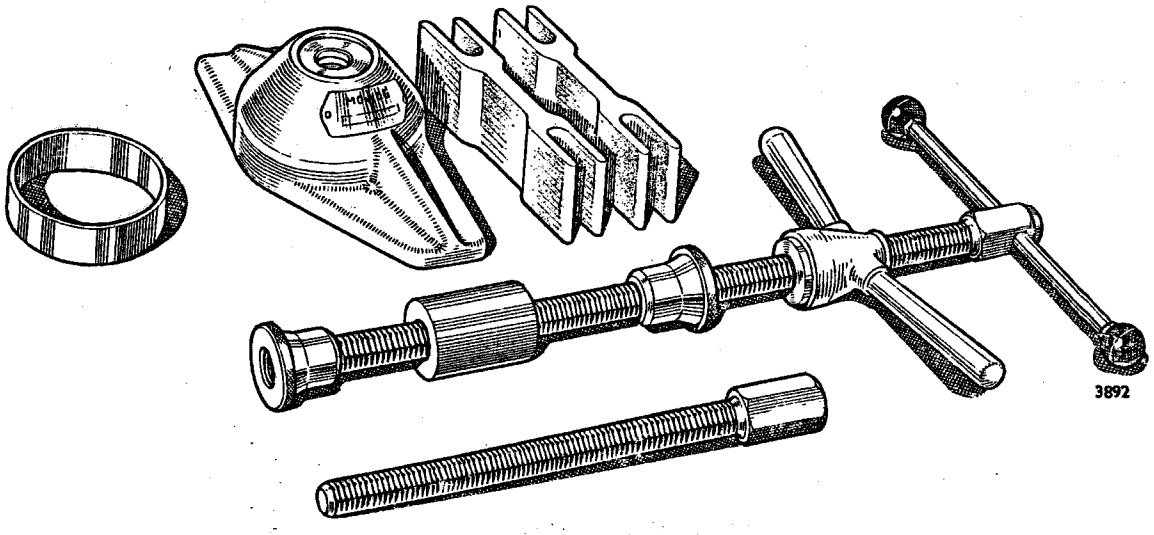

18G264D and 18G264H. Bevel Pinion Bearing Outer Race Remover Adaptors

Use in conjunction with basic tool 18G264.

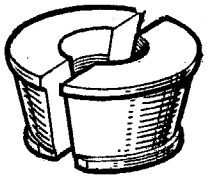

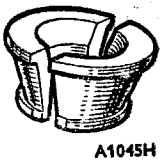

18G1005. Front and Rear Hub Spanner

This tool will service rear axles prior to No. 4774 and all front axles from commencement of Mk. IV.

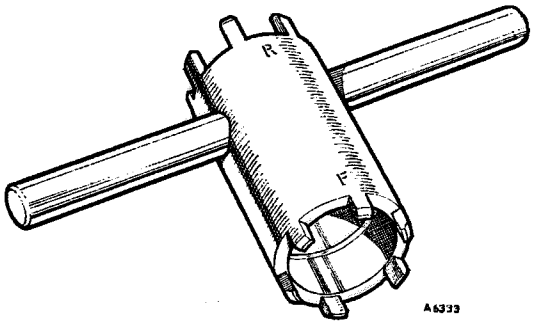

18G1092. Rear Hub Nut Spanner

This tool will service rear axles from No. 4774 onwards.

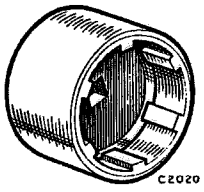

18G34A. Bevel Pinion Flange Wrench

This wrench prevents the rotation of the bevel pinion flange when releasing or tightening the flange securing nut. The pegs of the holding wrench fit into the bolt holes of the flange.

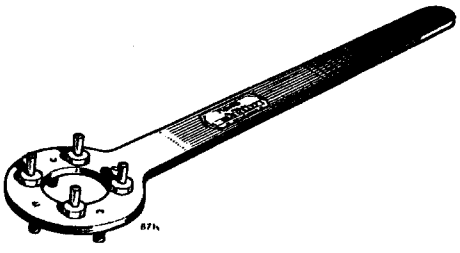

18G191. Bevel Pinion Setting Gauge

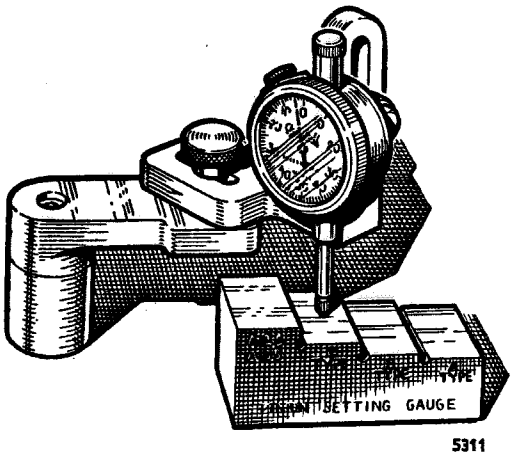

18G191A. Differential Bearing Gauge

These are essential tools to ensure accurate location of the driving pinion in the carrier and to check the differential bearing spacer thickness and the crown wheel and pinion backlash.

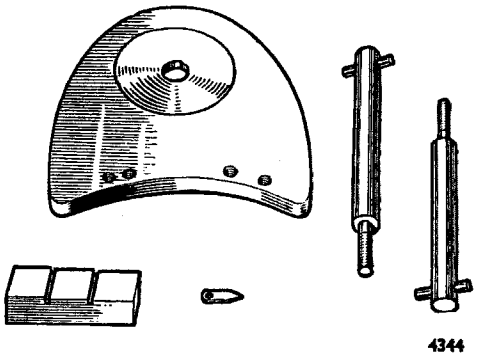

18G285. Bevel Pinion Bearing Inner Race Remover and Replacer

A tool which is essential when withdrawing or replacing the inner bearing race of the pinion shaft.

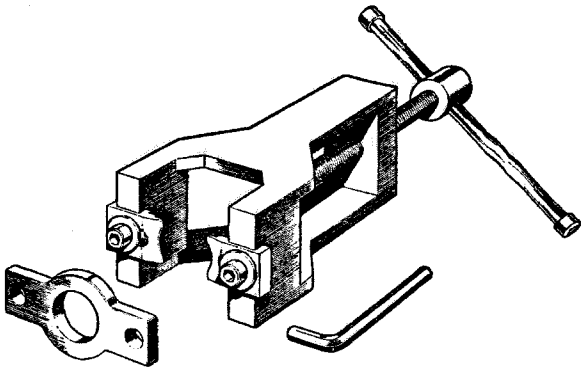

4228

18G372. Torque Wrench (30–140 lb. ft.)

This type of tool is essential if the recommended maximum torque for the bevel pinion flange securing nut is not to be exceeded. This tool is used with a standard-type socket and in conjunction with the flange holding wrench 18G34A.

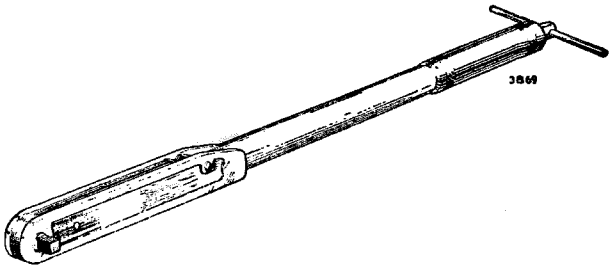

18G207. Bevel Pinion Bearing Preload Gauge

The movable arms of the tool are located in opposite holes of the bevel pinion flange and the weight is moved along the rod to the poundage required.

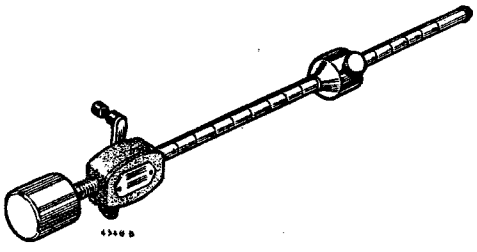

18G134. Differential Bearing, Hub Bearing, and Hub Oil Seal Replacer

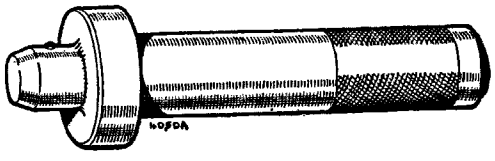

18G134K. Differential and Hub Bearing Replacer Adaptor

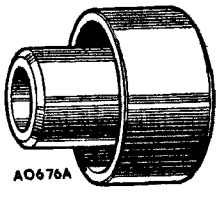

AO676A

18G134AQ. Hub Oil Seal Replacer Adaptor

For use with detachable handle 18G134.

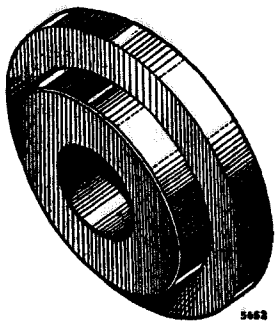

18G220. Front and Rear Hub Remover (basic tool)

18G220A. Hub Remover Adaptors

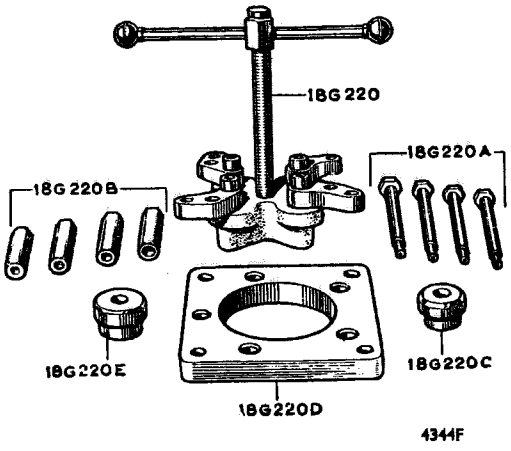

18G220F. Rear Hub Remover Adaptor

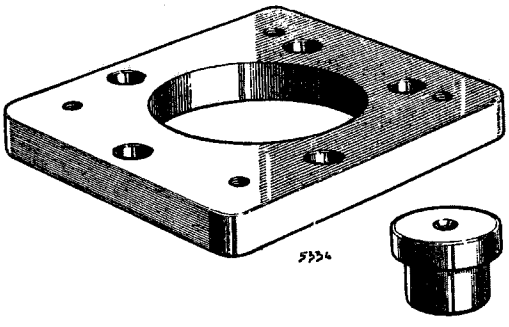

18G2. Crankshaft Gear, Pulley, and Propeller Shaft Flange Remover

A multipurpose tool with readily interchangeable alternative legs. When removing the bevel pinion flange the pair of legs with thin, flat ends should be used.

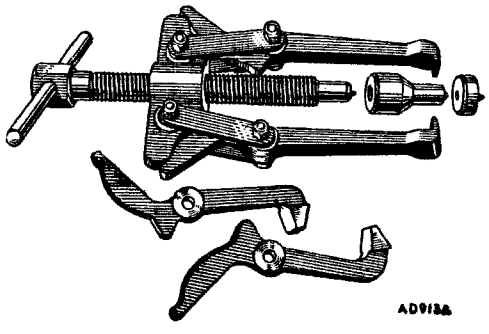

SECTION Ha

THE REAR AXLE
(With Flexitor-type Suspension)

	Section
Axle drive unit—removing and replacing	Ha.2
Bevel pinion oil seal—renewing	Ha.4
Crown wheel and pinion—assembling and setting	Ha.8
Crown wheel and pinion—dismantling	Ha.7
Description	Ha.1
Differential assembly—removing and replacing	Ha.3
Differential pinions—removing and replacing	Ha.9
Drive shaft needle roller bearings	Ha.6
Drive shaft oil seal	Ha.5
Hub—dismantling and reassembling	Ha.11
Hub—removing and replacing	Ha.10

THE DRIVE UNIT

(WITH FLEXITOR-TYPE SUSPENSION)

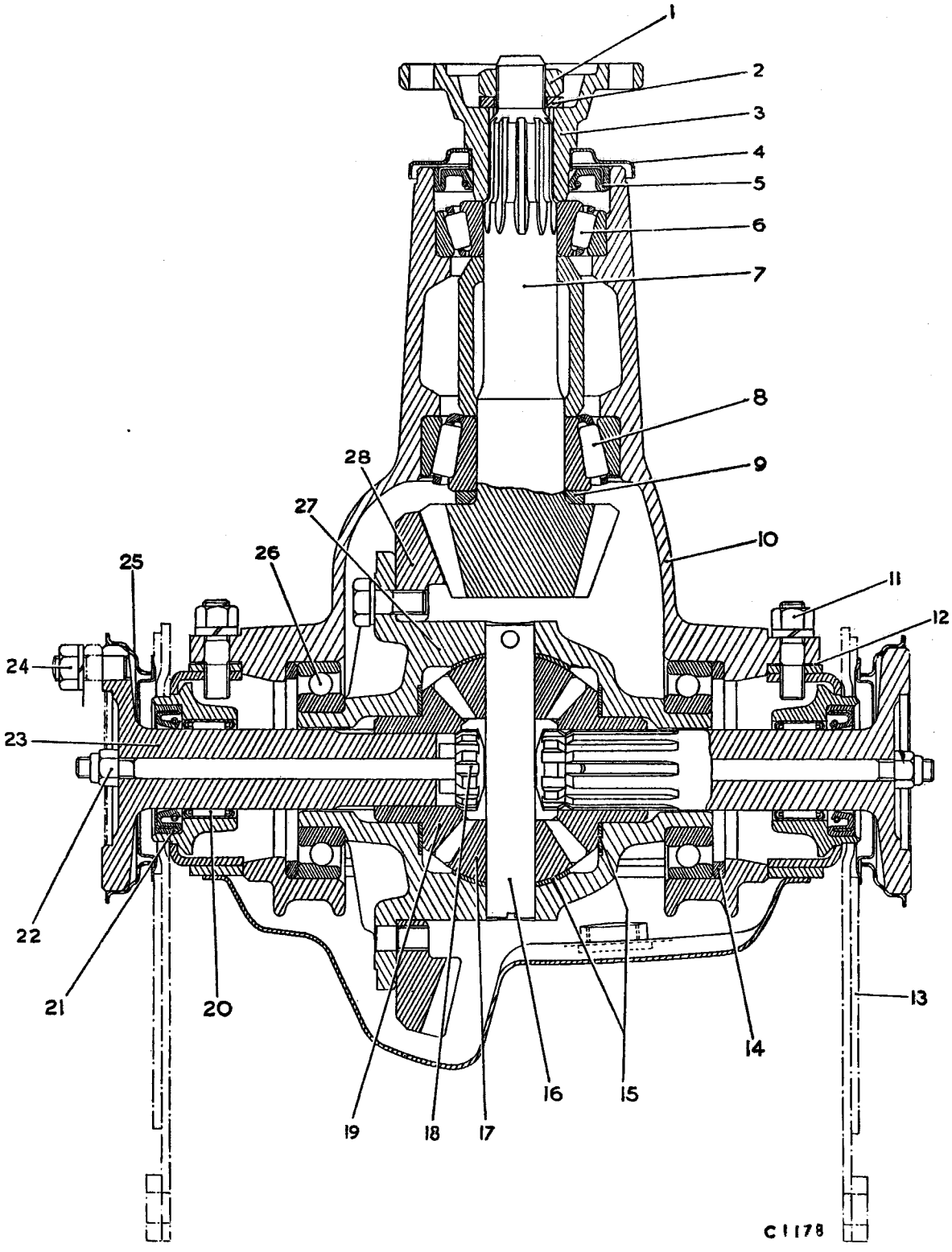

KEY TO THE DRIVE UNIT
(WITH FLEXITOR-TYPE SUSPENSION)

No.	*Description*	*No.*	*Description*
1.	Pinion flange nut.	15.	Thrust washers.
2.	Washer.	16.	Differential pinion pin.
3.	Flange.	17.	Differential pinion.
4.	Dust cover.	18.	Retaining bolt.
5.	Oil seal.	19.	Differential wheel.
6.	Taper roller bearing.	20.	Drive shaft needle rollers.
7.	Pinion.	21.	Oil seal.
8.	Taper roller bearing.	22.	Retaining bolt nut.
9.	Pinion head.	23.	Drive shaft.
10.	Axle carrier	24.	Flange nut.
11.	Flange nut.	25.	Dust cover.
12.	Plastic shim(s).	26.	Ball bearing.
13.	Mounting plate.	27.	Differential cage.
14.	Bearing collar.	28.	Crown wheel.

Section Ha.1

DESCRIPTION

Servicing and mechanical details of the front and rear axle units with their drive shafts are common. In each case the hypoid bevel gear and bevel-type differential is housed in a pressed case which is rigidly attached to the chassis by mounting plates. The method of attaching the mounting plates varies slightly between front and rear installations, these differences being detailed under **'Axle removal and replacement'.**

The drive is transmitted to the hubs through open shafts having needle-roller universal joints. The hubs are fitted with taper-roller bearings, which support the driving shafts. The drive flanges are splined to the shafts.

Complete details of the front axle unit are to be found in Section Ka.

Section Ha.2

REMOVING AND REPLACING THE AXLE DRIVE UNIT ASSEMBLY

To remove the rear axle drive unit proceed as follows:

Drain the oil from the axle case.

Remove the nuts and spring washers from the open half-shaft driving flange studs at the differential end. Slacken the oil seal cap fitted to the sliding, splined portion of the shaft and move the shaft outwards to separate the driving flange. This procedure is repeated on the other side of the vehicle.

Disconnect the propeller shaft flange from the pinion flange. Before separating the flanges mark them so that they can be refitted in the same relationship.

Release the clips which support the hand brake cables.

Remove the drive shafts by undoing the nuts in the flange centres when the shafts can be pulled clear of the case.

Extract each retaining bolt by rotating it to bring the splines into alignment.

First remove the drive shafts and then unscrew the four bolts holding the axle case to the mounting plates on each side (see Fig. Ha.1).

Support the axle casing underneath and, with a screwdriver, lever the mounting plates outwards away from the dowels on each side of the casing. It is then possible to edge the axle casing downwards and free from the dowels and mounting plates.

Reassembly is a reversal of the above procedure noting the following points.

When refitting a drive shaft first insert the retaining bolt as far as it will go and then follow up with the shaft until it comes into contact with the tongue on the bolt head. Gently rotate the bolt until the shaft can be pushed fully home.

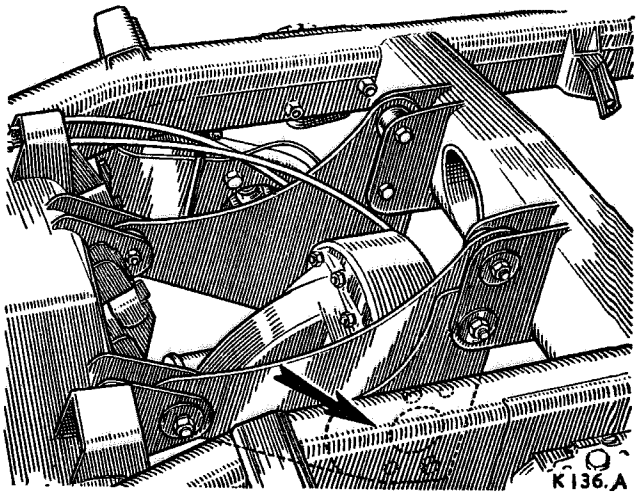

Fig. Ha.1

The rear axle drive unit mounting plates, showing the four retaining bolts at each side

Refit the retaining bolt nut and tighten it to a torque loading of 25 lb. ft. (3·46 kg.m.). Refit the open drive shaft and refill the axle case with the correct grade of oil.

Section Ha.3

REMOVING AND REPLACING THE DIFFERENTIAL ASSEMBLY

The differential gear carrier can be removed as a unit, leaving the axle casing in position in the chassis, by the following method after the oil has been drained.

Mark the propeller shaft and pinion flange. Dis-

		Gear carrier marking				
		0	1	2	3	4
		Thickness of shims required				
Markings on axle case	0	6	7	9	10	11
	1	7	9	10	11	12
	2	9	10	11	12	13
	3	10	11	12	13	14
	4	11	12	13	14	15
	5	12	13	14	15	16

Colour of shims			
Blue	Green	Clear	Black
·002 in. (·0508 mm.)	·003 in. (·0762 mm.)	·006 in. (·1524 mm.)	·010 in. (·254 mm.)

connect and lower the propeller shaft (front or rear).

Disconnect the drive shaft flanges as detailed in Section Ha.2.

Pull the drive shafts out of the differential as detailed in Section Ha.2.

Remove the nuts securing the carrier to the axle casing and remove the carrier.

NOTE.—Take care not to damage the shims fitted between the carrier flange and the axle casing.

When refitting, the same number and thickness of shims must be used unless a new gear carrier or axle case has been fitted, in which case the shimming, which governs the centralization of the drive shafts in their bearing housings, will have to be adjusted in accordance with the table on page Ha.4. The axle case and carrier are marked with figures similar to those in the table, and from these the thickness of shims is calculated. Ensure that the markings made upon the propeller and pinion shaft flanges are in register to maintain the balance.

Section Ha.4

RENEWING THE BEVEL PINION OIL SEAT

Follow the instructions given in Section H.7.

Section Ha.5

RENEWING A DRIVE SHAFT OIL SEAL

After the drive shafts have been removed from the axle case as described in Section Ha.2 the oil seals can be removed and new ones inserted as follows:

Carefully prise the oil seal out of its housing.

Press a new seal into position with the lip facing inwards. Make sure that the seal is properly home and square.

Section Ha.6

RENEWING THE DRIVE SHAFT NEEDLE-ROLLER BEARINGS

Remove the axle from the vehicle as a unit.

Remove the drive shafts as in Section Ha.2.

Prise out the oil seal.

Using a suitable extractor, pull the needle-roller bearings, in their housing, out of the axle case.

Fit new rollers by carefully drifting them into position so that they are centralized in the housing.

Carefully fit a new oil seal as described in Section Ha.5.

Section Ha.7

DISMANTLING THE CROWN WHEEL AND PINION

Follow the instructions given in Section H.4.

Section Ha.8

ASSEMBLING AND SETTING THE CROWN WHEEL AND PINION

Follow the instructions given in Section H.5.

Section Ha.9

REMOVING AND REPLACING THE DIFFERENTIAL PINIONS

Follow the instructions given in Section H.6.

Section Ha.10

REMOVING AND REPLACING A HUB

Jack up the vehicle and remove the road wheel concerned.

Unscrew the dust cover on the sliding splines of the drive shaft. Punch-mark the two parts of the shaft.

Disconnect the hydraulic brake flexible hose from the brake plate.

The hand brake cable must be disconnected from the lever on the brake backplate.

Take out the securing bolts and separate the hub from the swinging arm.

The punch-marks which were made on the sliding and fixed halves of the drive shaft must be in register when the splines are re-entered.

Ensure that the hub is correctly positioned on the swinging arm in relation to the brake hydraulic pipelines and hand brake cables.

Section Ha.11

DISMANTLING AND REASSEMBLING A HUB

Take off the brake-drum.

Remove the split pin and undo the hub nut.

Using a suitable extractor, pull the drive flange off the shaft splines.

Using a soft-faced hammer, tap the drive shaft rearwards out of the hub. It will carry with it the rear distance piece and the inner race of the inner bearing. These items can now be removed from the shaft.

Extract the inner race of the outer bearing and retrieve the distance tube and shims (distance washers on later models) if these did not come away with the shaft.

Remove the inner and outer oil seals.

Extract the outer races of the bearings from the hub.

SECTION OF THE REAR HUB

(WITH FLEXITOR-TYPE SUSPENSION)

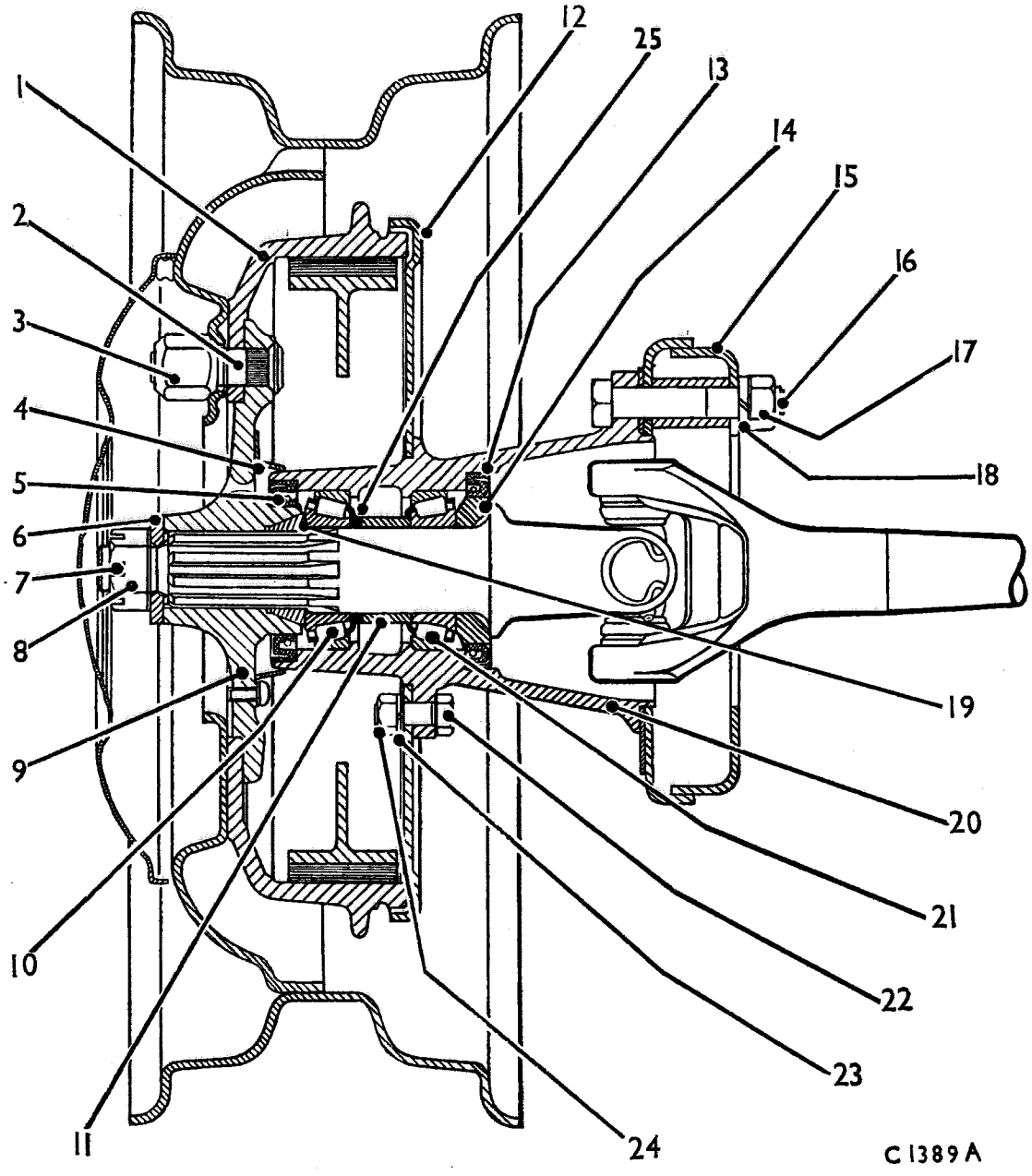

No.	Description	No.	Description	No.	Description	No.	Description
1.	Brake-drum.	7.	Split pin.	13.	Oil seal.	19.	Cone.
2.	Wheel stud.	8.	Nut.	14.	Distance piece.	20.	Hub casting.
3.	Wheel nut.	9.	Drive flange.	15.	Trailing arm.	21.	Taper-roller bearing.
4.	Oil guard.	10.	Taper-roller bearing.	16.	Trailing arm hub bolt.	22.	Backplate bolt.
5.	Oil seal.	11.	Distance tube.	17.	Nut.	23.	Spring washer.
6.	Washer.	12.	Backplate.	18.	Spring washer.	24.	Nut.

25. Distance washer.

NOTE.—On reassembly the following procedure must be carried out with the components 'dry'.

Position the outer races of the inner and outer bearings in the hub by using a suitable drift.

Insert the rear oil seal into the hub, ensuring that its lip is leading (facing inwards) and that it is square in its housing.

Position the rear distance piece (upon which the lip of the rear oil seal bears) on the drive shaft so that it abuts the shoulder.

Position the inner race of the inner bearing on the drive shaft so that it abuts the rear distance piece. Insert the drive shaft into position in the hub.

From the front of the hub insert the distance tube. Select the thickest distance washer and place it on the shaft next to the distance tube. The distance washers range from ·125 to ·175 in. (3·275 to 4·445 mm.) in steps of ·005 in. (·127 mm.).

Drive the inner race of the outer bearing into position on the shaft and, where fitted, refit the cone, with the larger face against the inner race.

Fit the driving flange to the shaft, followed by the washer and flange nut. Tighten the nut to a torque wrench setting of 120 to 140 lb. ft. (16·595 to 18·36 kg. m.).

NOTE.—Check that end-play is still present whilst tightening the nut. Damage to the bearing will occur if this precaution is not observed.

Mount the hub in a vice and rotate the drive shaft at the same time pulling and pushing on the shaft to centralize the bearings. By means of a suitably mounted dial gauge read off the end-play by pulling and pushing on the end of the drive shaft. The reading must be taken from the end of the shaft.

If the reading obtained on the dial gauge is ·034 in. (·8636 mm.) then by utilizing a washer ·030 in. (·762 mm.) thinner the end-play will be reduced to ·004 in. (·1016 mm.) which is within the recommended tolerance of ·002 in. to ·008 in. (·0508 to ·2032 mm.).

When the correct distance washer has been fitted pack the hub with the recommended grease and fit the inner race of the outer bearing. Follow up with the outer oil seal, its lip facing the bearing.

Refit the driving flange, washer, and nut. Tighten the nut to a figure of 120 to 140 lb. ft. (16·595 to 18·36 kg. m.). As the addition of grease may have slightly affected the tolerances, it is important that the end-play is re-checked once the hub nut has been fully tightened and the drive shaft rotated to disperse the grease.

Insert and open out the split pin. Refit the brake-drum.

SECTION J

THE STEERING GEAR
(With Leaf-spring Suspension)

	Section
Adjustments in the vehicle	J.2
Description	J.1
Steering gear	
Dismantling and assembling	J.4
Track- or side-rod—removing and replacing	J.5
Removing and replacing	J.3

THE STEERING-BOX COMPONENTS●
(WITH LEAF-SPRING SUSPENSION)

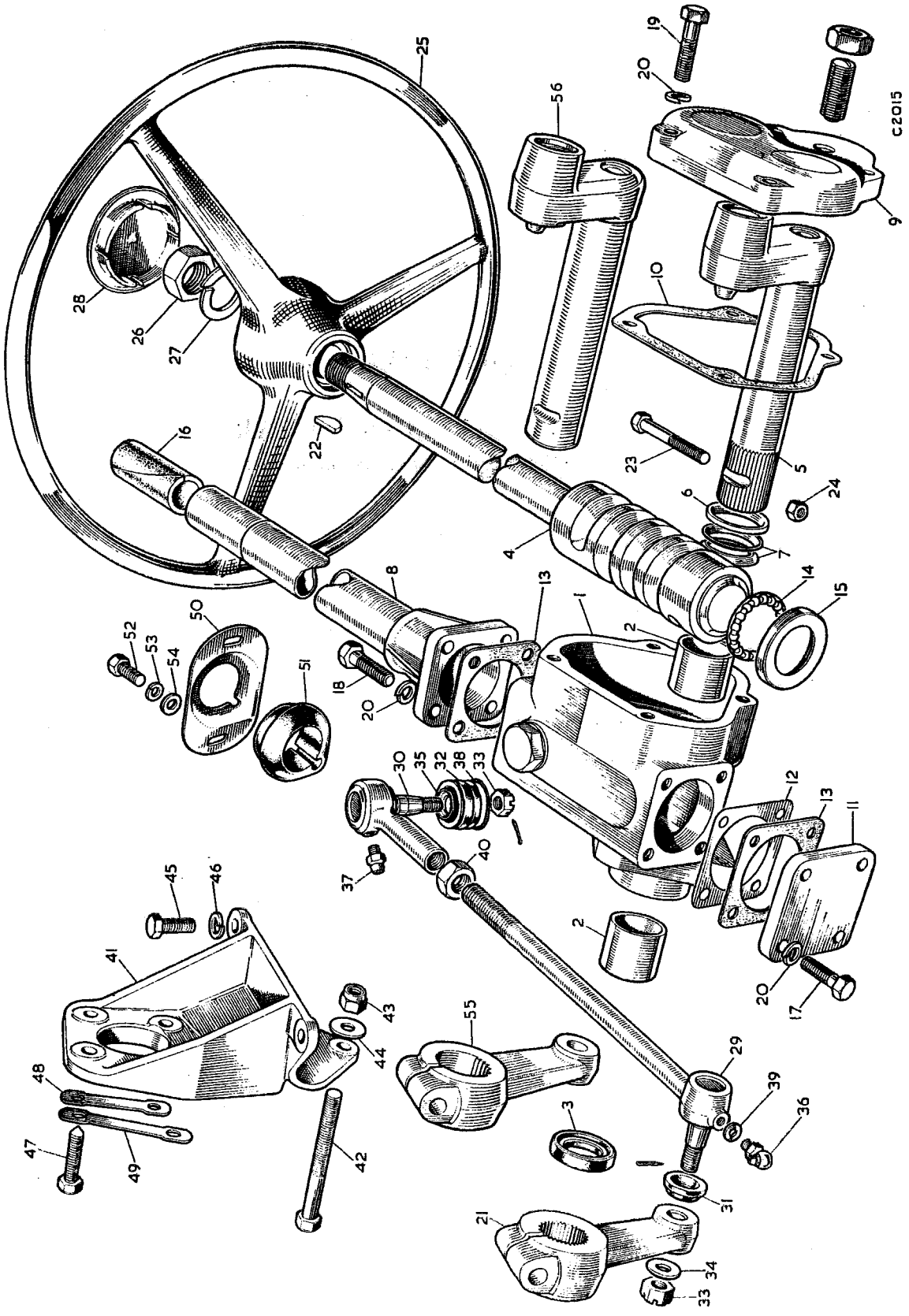

KEY TO THE STEERING-BOX COMPONENTS
(WITH LEAF-SPRING SUSPENSION)

● No.	Description	No.	Description	No.	Description
1.	Steering-box.	20.	Spring washer for bolt.	39.	Fibre washer.
2.	Bush.	21.	Drop-arm (Early models).	40.	Locknut—R.H.T.
3.	Oil seal.	22.	Key—steering-wheel to column.	41.	Steering-box bracket.
4.	Cam and steering shaft.	23.	Bolt—steering-arm to steering gear.	42.	Bolt—bracket to frame.
5.	Rocker shaft assembly (Early models).	24.	Nut for bolt.	43.	Nut for bolt.
6.	Thrust washer.	25.	Steering-wheel.	44.	Plain washer for bolt.
7.	Belleville washer.	26.	Steering-wheel nut.	45.	Screw—bracket to frame.
8.	Socket and outer tube assembly.	27.	Spring washer for nut.	46.	Spring washer for screw.
9.	Side cover.	28.	Steering-wheel cap.	47.	Screw—steering gear to bracket.
10.	Joint.	29.	End assembly—R.H.T. (male stem).	48.	Lock washer for screw.
11.	End cover.	30.	End assembly—R.H.T. (female stem).	49.	Lock washer for screw.
12.	Shim.	31.	Dust cover.	50.	Clamping plate.
13.	Joint.	32.	Dust cover.	51.	Rubber packing.
14.	Ball cage assembly.	33.	Nut for ball.	52.	Screw—clamping plate to support bracket.
15.	Ball cup.	34.	Plain washer for nut.	53.	Spring washer for screw.
16.	Felt bush.	35.	Dished washer for nut.	54.	Plain washer for screw.
17.	Bolt—$\frac{5}{16} \times \frac{3}{4}$ in. (7·94 × 19·05 mm.).	36.	Lubricator—angular.	55.	Drop-arm. } Later models.●
18.	Bolt—$\frac{5}{16} \times \frac{7}{8}$ in. (7·94 × 22·22 mm.).	37.	Lubricator—straight.	56.	Rocker shaft assembly. } Later models.●
19.	Bolt—$\frac{5}{16} \times 1\frac{1}{8}$ in. (7·94 × 28·57 mm.).	38.	Clip.		

Section J.1

DESCRIPTION

The steering gear is the cam and lever type, with a ratio of 17·5 : 1. The cam portion takes the form of a generated worm, integral with the steering shaft, moving in ball bearings. The rocker shaft moves in plain bushes, and the lever portion of the shaft carries the cam peg and roller assembly. The conical end of the peg engages the cam, and as the peg does not touch the bottom of the cam groove, adjustment for wear is effected by increasing the depth of engagement by means of an adjusting screw in the side cover. All working parts are immersed in oil and an oil seal is fitted round the rocker shaft to prevent oil leakage. A felt bush is fitted in the top of the steering-column tube and serves as a third steady bearing for the steering-column shaft. The steering-box arm is attached to the rocker shaft on parallel splines by a clamping bolt.

The steering-box arm (drop-arm) is connected by an adjustable side-rod (drag-link) to the upper steering-arm mounted on top of the swivel housing. The lower steering-arms mounted on the bottom of the swivel housings are connected by an adjustable track-rod.

Self-adjusting ball joint connections, each having a grease nipple, are fitted to the ends of both the side- and track-rods.

Section J.2

ADJUSTMENTS IN THE VEHICLE

The following adjustments maintain the performance of the steering at its maximum and consist of aligning the front wheels and taking up backlash in the steering gear. Proceed as detailed below. Other faults should be diagnosed by referring to Section J.6.

(1) It is most important that the front wheels should toe in $\frac{3}{32}$ in. (2·38 mm.), and this is governed by the length of the track-rod. An adjustment is provided so that the track-rod may be lengthened or shortened to maintain the correct alignment. The track-rod should not be adjusted to correct a bent steering-arm. To check and adjust the alignment of the front wheels it is advisable to use a trammel, and with the tyres correctly inflated proceed as follows:

(*a*) Turn the front wheels to the straight-ahead position and set both pointers of the alignment trammel against the inner rims of the wheels at centre height in front of the hub. Mark the points of contact of the pointers on the wheel rims, lock the trammel pointers, and withdraw the trammel.

(*b*) Move the vehicle forward so that the wheels make exactly half a revolution.

(*c*) Place the trammel at the rear of and parallel with the hub so that one pointer registers with the mark on one of the wheel rims; the pointer on the other end should then be $\frac{3}{32}$ in. (2·38 mm.) away from the mark on the other wheel rim. This can be checked by measurement or preferably with a $\frac{1}{8}$ in. (3·175 mm.) gauge plate.

(*d*) If the alignment is incorrect slacken the nuts securing both ball joint assemblies to the track-rod tube and rotate the tube until the required alignment is obtained.

NOTE.—The ball joints have right- and left-hand threads respectively, thus the toe-in can be either increased or decreased as required by rotating the track-rod tube in the required direction. After each adjustment of the track-rod length tighten the nuts and re-check the wheels for correct alignment.

If the wheels are badly out of alignment, this may be due to the track-rod, side-rod, or steering-arms being bent through accidental damage. In such cases the arms and rods should be removed and checked.

(2) Steering cam bearing adjustment should be carried out to eliminate all perceptible end-play. To adjust the cam bearings proceed as follows:

(*a*) Disconnect the steering-box arm from the side-rod to free the gears of all loads.

(*b*) Place an oil-tray under the steering-box.

(*c*) Remove the end cover by unscrewing the four retaining bolts.

(*d*) Add or remove shims as necessary to obtain the correct adjustment. The steering-wheel should turn freely when held lightly at the rim with the thumb and forefinger, but should have no end-play.

(3) Rocker shaft adjustment should be carried out after adjusting the cam bearings (described above).

(*a*) With the steering-box arm still disconnected from the side-rod, slacken the adjusting screw locknut and screw in the adjusting screw.

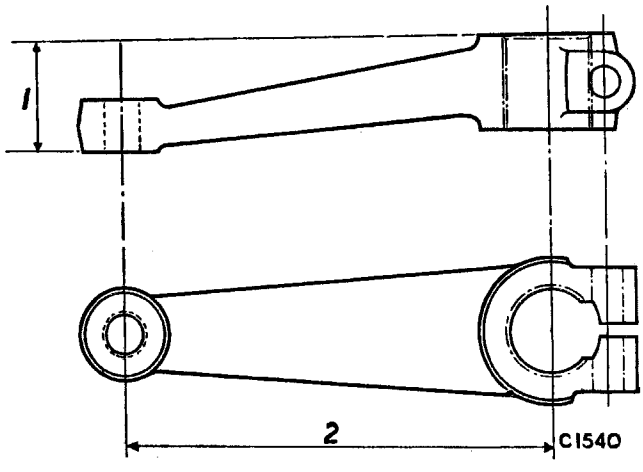

Fig. J.1

The steering-box arm checking dimensions (right-hand). Left-hand is opposite

1. 1·325 to 1·425 in. (32·655 to 36·195 mm.).
2. $5\frac{1}{4}$ in. (133·35 mm.).

(*b*) Check for backlash by exerting a light pressure on the upper end of the steering-box arm alternately in both directions while an assistant turns the steering-wheel slowly from lock to lock. It will be noticed that the amount of slackness is not constant, there being less slackness in the centre than in the full-lock position. If slackness appears at all positions of the steering-box arm the adjusting screw should be screwed in farther. After further adjustment test again in the same manner. The correct adjustment is such that a 'tight spot' will barely be apparent as the steering-wheel is moved past the centre position with no backlash at the steering-arm. At this position tighten the adjusting screw locknut.

(*c*) Reconnect the steering-box arm and side-rod.

(*d*) Refill the steering-box with the correct grade of oil.

Section J.3

REMOVING AND REPLACING THE STEERING GEAR

Carefully prise out the centre button of the steering-wheel to expose the securing nut. Unscrew the nut and pull the steering-wheel off the column. Take care of the Woodruff key.

Remove the two set pins from the horn/dip switch bracket to release the bracket from the column.

Remove the two set pins from the plate which surrounds the column behind the fascia. Slide the plate and rubber grommet off the column when the column is being removed from the vehicle.

Remove the curved lower section of the radiator grille.

Jack up the front of the vehicle and remove the road wheel from the same side as the steering-box.

Extract the steering-box arm (drop-arm) from the rocker shaft after first removing the clamping bolt.

Release the steering-box bracket from the chassis.

Separate the steering-box from its bracket and remove the bracket from beneath the wing.

Rotate the column and withdraw it from the vehicle.

Reassembly is a reversal of the removal procedure, except that care must be taken to ensure that the steering-box arm is positioned correctly on its splines, i.e. so that the clamp bolt hole in the arm lines up with the groove in the rocker shaft.

Section J.4

DISMANTLING AND ASSEMBLING THE STEERING GEAR

Remove the steering-column from the vehicle as described in Section J.3.

Remove the side cover and joint gasket and drain off the oil.

Withdraw the rocker shaft and oil seal.

Press out the cam roller peg assembly from the rocker shaft.

Remove the end cover, shims, and joint gasket.

Gently tap out the steering-shaft from the top, using a soft-faced mallet. The lower ball cup and ball cage will thus be forced out of the steering-box, and the shaft and cam assembly can be withdrawn complete with the upper ball cage loose on the shaft.

Extract the upper ball cup from the steering-box.

Extract the felt bush from the top of the steering-shaft.

Clean all components in paraffin and blow them dry with compressed air.

Examine the rocker shaft bushes for wear and tap out, using a drift if a replacement is necessary. Press in new bushes.

Examine the rocker shaft for wear on the shank, and examine the splines for wear and twisting; renew if badly worn.

Ensure that the thrust plug in the rocker shaft is in good condition.

The conical peg on the rocker shaft lever must be free from flats. The peg, rollers, and balls can be renewed as a sub-assembly if signs of wear are apparent.

Examine the steering-column shaft cam for excessive wear in the grooves and examine the ball tracks formed at each end of the cam for signs of pitting. If either defect is noted the shaft and cam assembly must be renewed.

Examine the ball cages and cups for pitting in their racks. Renew if necessary.

Carefully examine the steering-box arm for cracks and accidental damage, and check with the dimensional drawing. Renew if damaged or if dimensions differ from those given.

Before or during assembly lubricate the cam bearings and rocker shaft bushes in the steering-box with the recommended grade of oil and soak a new oil seal in engine oil. Proceed as follows.

Press the upper ball cup into the steering-box.

Hold the steering-box in a vice so that the cam and shaft assembly can be inserted.

Thread the upper ball cage and balls over the shaft, lip of the cage foremost, and insert the assembly into the steering-box, engaging the ball race with the ball cup.

Insert the lower ball cage and balls, lip of the cage foremost, followed by the ball cup.

Fit a new joint washer, the original shims, and then secure the end cover in position.

Holding the steering gear in the vice so that the column is horizontal, fit the steering-wheel temporarily, test for end-play, and adjust (see Section J.2).

Fit a new rocker shaft oil seal into the housing.

Insert the rocker shaft into the steering-box and install a new joint gasket and the side cover.

Fit the drop-arm, ensuring that the scribed marks coincide, test for backlash in the central position, and adjust (see Section J.2).

Remove the steering-wheel and insert a new felt bush in the top of the steering-column.

Refill the steering-box with the recommended grade of oil.

SECTION Ja

THE STEERING GEAR
(with Flexitor-type suspension)

	Section
Adjustments in vehicle	Ja.2
Description	Ja.1
Relay shaft—removing and refitting	Ja.5
Service tools	End of Section
Steering gear—dismantling and reassembling	Ja.4
Steering gear—removing and replacing	Ja.3
Swivel pins and bushes—removing and replacing	Ja.6

Section Ja.1

DESCRIPTION

The steering gear is the cam and lever type, with a ratio of 14·5 : 1. The cam portion takes the form of a generated worm, integral with the steering shaft, moving in ball bearings. The rocker shaft moves in a phosphor-bronze bush, and the lever portion of the shaft carries the cam peg and roller assembly. The conical end of the peg engages the cam, and as the peg does not touch the bottom of the cam groove, adjustment for wear is effected by increasing the depth of engagement by means of an adjusting screw in the side cover. All working parts are immersed in oil and an oil seal is fitted round the rocker shaft to prevent oil leakage. A felt bush is fitted in the top of the steering column tube and serves as a third steady bearing for the steering column shaft. The steering box arm is attached to the rocker shaft on tapered splines.

The linkage between the steering-box and wheels is through a track rod which is divided centrally and is connected to the relay arm.

Two swivel pins, an upper and a lower, are fitted. They run in plain bushes, and thrust washers are interposed between the upper face of the hub casting and the lower face of the swivel pin housing.

Section Ja.2

ADJUSTMENTS IN THE VEHICLE

Toe-in

It is most important that the front wheels should toe in $\frac{1}{8}$ to $\frac{3}{16}$ in. (3·175 to 4·763 mm.), and this is governed by the length of the track-rod. An adjustment is provided so that the track-rod may be lengthened or shortened to maintain the correct alignment. The track-rod should not be adjusted to correct a bent steering arm. To check and adjust the alignment of the front wheels it is advisable to use a trammel, and with the tyres correctly inflated proceed as follows:

Turn the front wheels to the straight-ahead position and set both pointers of the alignment trammel against the inner rims of the wheels at centre height in front of the hub. Mark the points of contact of the pointers on the wheel rims, lock the trammel pointers, and withdraw the trammel. Move the vehicle forward so that the wheels make exactly half a revolution.

Place the trammel at the rear of and parallel with the hub so that one pointer registers with the mark on one of the wheel rims; the pointer on the other end should then be $\frac{1}{8}$ in. (3·175 mm.) away from the mark on the other wheel rim. This can be checked by measurement or preferably with a $\frac{1}{8}$ in. (3·175 mm.) gauge plate.

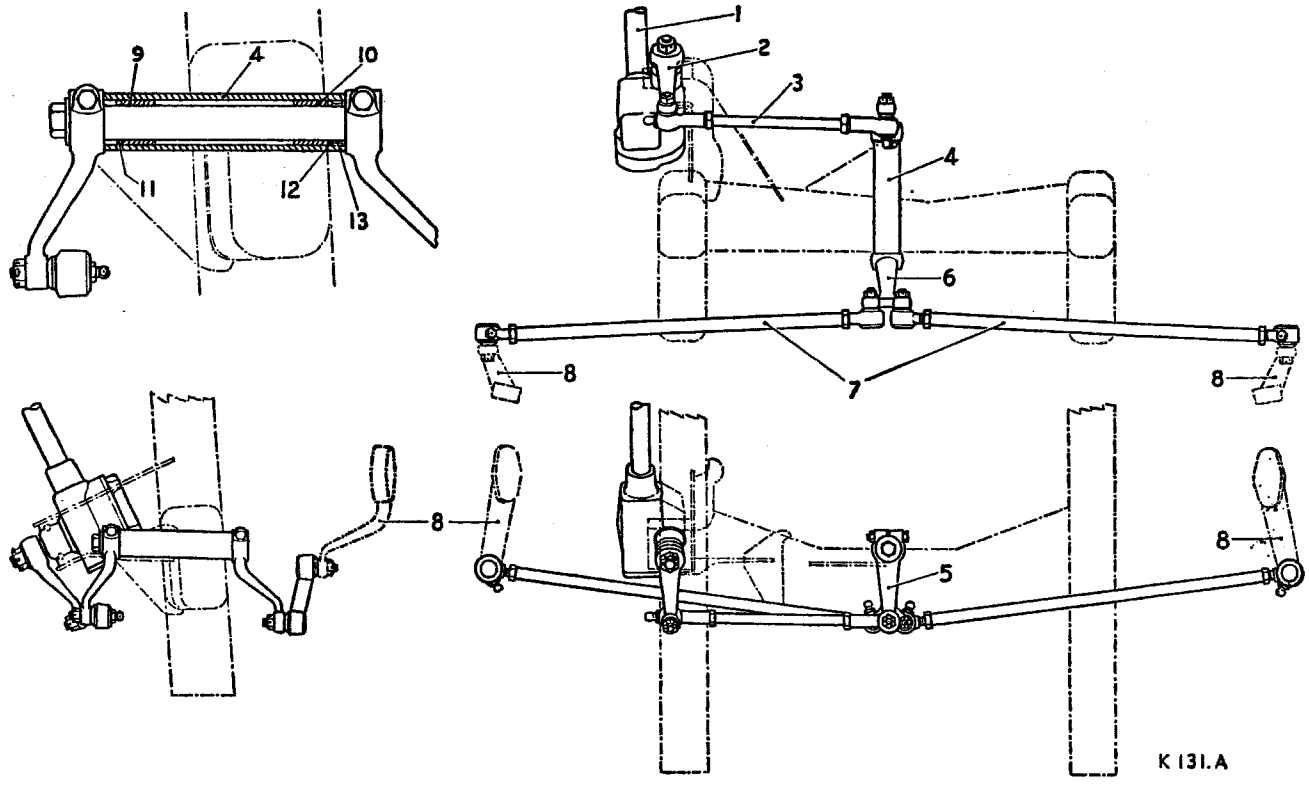

Fig. Ja.1
Details of steering (right hand)

1. Steering column.
2. Steering box arm.
3. Side-rod.
4. Relay shaft housing.
5. Relay lever (upper).
6. Relay lever (lower).
7. Track-rod.
8. Steering arm.
9. Relay shaft top bush.
10. Relay shaft bottom bush.
11. Sealing ring (top).
12. Sealing ring (bottom).
13. Seal retainer.

If the alignment is incorrect slacken the nuts securing both ball joint assemblies to the track-rod tube and rotate the tube until the required alignment is obtained.

NOTE.—The ball joints have right- and left-hand threads respectively, thus the toe-in can be either increased or decreased as required by rotating the track-rod tube in the required direction. After each adjustment of the track-rod length tighten the nuts and re-check the wheels for correct alignment.

With the divided track-rod the adjustment must be undertaken by turning each track-rod tube an equal amount.

If the wheels are badly out of alignment, this may be due to the track-rod, upper and lower relay levers, or steering arms being bent through accidental damage. In such cases the arms and levers should be removed and checked.

Steering box

Steering cam bearing adjustment should be carried out to eliminate all perceptible end-play. To adjust the cam bearings proceed as follows:

Disconnect the steering arm from the upper relay levers to free the gear of all loads.

Place an oil-tray under the steering box.

Remove the end cover by unscrewing the four retaining bolts.

Add or remove shims as necessary to obtain the correct adjustment. The steering wheel should turn freely when held lightly at the rim with the thumb and forefinger, but should have no end-play.

Rocker shaft adjustment should be carried out after adjusting the cam bearings (described above).

(*a*) With the steering arm still disconnected from the upper relay levers, slacken the adjusting screw locknut and screw in the adjusting screw.

NOTE.—It is necessary to pull the box outwards to allow the adjusting screw to be clear of the frame side-member. To do this detach the bracket on the lower half of the steering column and remove the two steering box clamp bolts.

(*b*) Check for backlash by exerting a light pressure on the upper end of the steering box arm alternately in both directions while an assistant turns the steering wheel slowly from lock to lock. It will be noticed that the amount of slackness is not constant, there being less slackness in the centre than in the full-lock position. If slackness appears at all positions of the steering box arm the adjusting screw should be screwed in farther. After further adjustment test again in the same manner. The correct adjustment is such that a 'tight spot' will barely be apparent as the steering wheel is moved past the centre position with no backlash at the steering arm. At this position tighten the adjusting screw locknut.

Refit the steering box and column bracket.

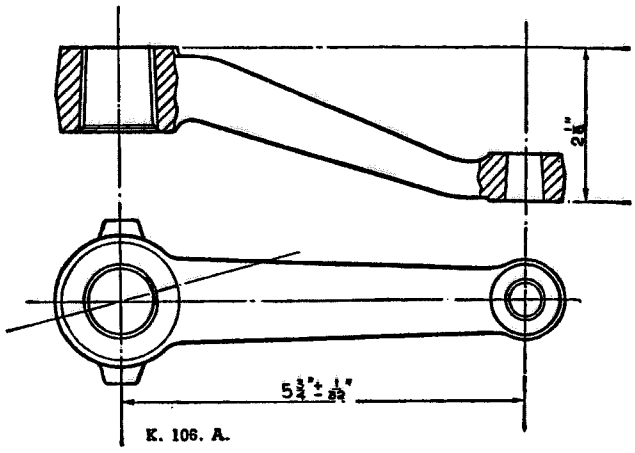

Fig. Ja.2

The steering box arm checking dimensions (right hand)

Reconnect the steering arm and linkage.

Refill the steering box with the correct grade of oil.

Section Ja.3

REMOVING AND REPLACING THE STEERING GEAR

To remove the steering box and column it is necessary to move the wing outwards a few inches; to do this proceed as follows:

Disconnect the front grille tie-rods.

Withdraw two bolts at the radiator side mounting and remove the steady bracket.

Remove the corner plate at the top of the grille.

Remove the body front mounting bolt.

Unscrew all bolts holding the wing and wing stay.

Lift the wing and move it sideways to clear the steering box.

Carefully prise out the centre button of the steering wheel to expose the securing nut. Unscrew the nut and

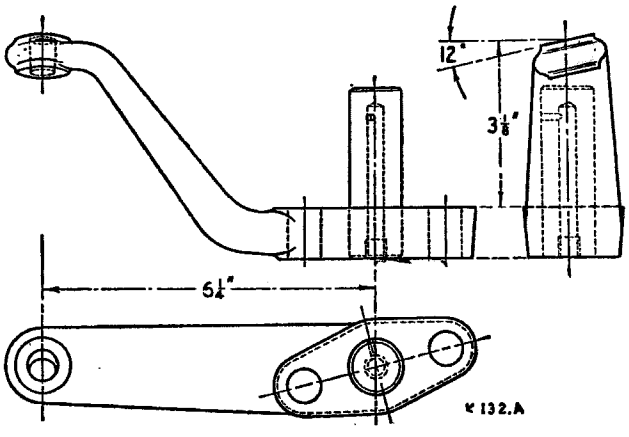

Fig. Ja.3

The steering arm checking dimensions

pull the steering wheel off the column. Take care of the Woodruff key.

Remove the two sets pins from the horn/dip switch bracket to release the bracket from the column.

Remove the two set pins from the plate which surrounds the column at the fascia. Slide the plate and rubber grommet off the column.

Take out the three set pins (into caged nuts) which secure the small flitch plate adjacent to the steering box. Remove the plate.

Remove the four set pins which secure the air cleaner strap to the brackets mounted on top of the flitch plate. Move the air cleaner over the engine to allow access to the steering box. Take care of the four distance pieces.

Disconnect the steering side rod from the steering box arm.

Remove from the chassis the shock absorber adjacent to the steering box.

Take out the split pin and unscrew the nut which secures the steering box arm.

Take out the two set pins from the steering box bracket.

Rotate the box so that the rocker shaft is vertical and the arm upwards. Use an extractor to pull the arm off the shaft.

Lift the box up towards the scuttle so that maximum clearance is obtained. Rotate the box so that the end of the shaft from which the arm was removed is pointing down. Slide the column down to the front road wheel hub. This will bring the column clear of the scuttle.

Draw the column out of the vehicle by moving the top end across the engine.

Reassembly is a reversal of the removal procedure, except that care must be taken to ensure that the steering box arm is positioned correctly on its splines. A register mark is scribed on both the arm and steering box rocker shaft. These marks must be together and in line.

When the box is clamped to its mounting bracket ensure that it is positioned hard up against the bottom of the bracket.

Section Ja.4

DISMANTLING AND ASSEMBLING THE STEERING GEAR

Follow the instructions given in Section J.4.

Section Ja.5

REMOVING AND REFITTING A RELAY SHAFT

To remove the relay shaft from the vehicle proceed as follows:

Remove the screws which secure the radiator top blanking plate. Lift off the plate.

With the blanking plate removed, access is gained to the relay shaft. Unscrew the central set pin from the top of the shaft and collect the flat washer positioned beneath its head.

Slacken the pinch-bolt of the upper relay lever. The pinch-bolt at the bottom end of the shaft locates into a groove round the shaft and must be completely withdrawn from the lower lever. Slide both upper and lower levers off the shaft.

The shaft can now be tapped out of its housing with a soft drift.

Remove the upper and lower oil seals. The upper one can be prised out of the housing, but the lower one can only be removed after its retaining ring has been taken out.

Using a suitable drift, drive out the upper and lower bushes—assuming that they are sufficiently worn to warrant removal.

Fit new upper and lower bushes by using a stepped drift having the form and dimensions given in Fig. Ja.5. The use of this drift will ensure that the bushes are properly located within their housing. The bushes must be pressed into the housing $\frac{5}{32}$ in. (12 mm.) below the top and bottom surfaces. Fit the oil seal against the bottom edge of the lower bush, following up with its retaining ring. The drift used to fit the bushes can also be used to square up the seal and the lower retaining ring. Fit the lower relay lever to the relay shaft and secure with the pinch-bolt and nut. Insert the shaft (pre-lubricated) upwards into its housing and hold it in its highest position by means of suitable wooden packing blocks. Top up the set pin hole in the top of the relay shaft with oil. Fit the upper oil seal.

If the steering side rod has for any reason had its length altered it must be reset to $13\frac{3}{4}$ in. (349 mm.) between the centres of the ball pin shanks, and the upper relay lever must be positioned on the relay shaft whilst the road wheels are in the straight-ahead position and the steering box cam is in its mid-lock or 'high' position.

Alteration may be necessary to the steering side rod so that an equal amount of 'cush' is felt at the steering wheel at each full lock.

When the upper relay lever has been positioned on the shaft, place the flat washer on its top surface and insert the set pin. Tighten the set pin sufficiently to pull the shaft into the relay arm splines.

NOTE.—Do not tighten the set pin to such an extent that the shaft housing is pinched between the upper and lower levers. It is essential that the shaft is free to rotate.

Remove the wooden packing and test the steering for freedom of movement with the wheels off the ground.

Section Ja.6

REMOVING AND REPLACING THE SWIVEL PINS AND BUSHES

To fit new swivel pins and bushes proceed as follows:

Jack up under the front cross-member. Spring off the nave-plate and remove the road wheel concerned.

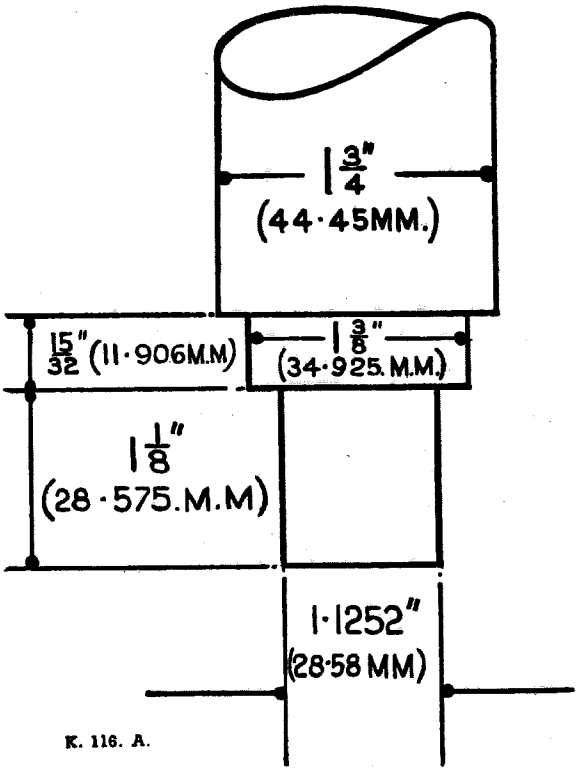

Fig. Ja.4

Dimensions of the drift used for fitting relay shaft bushes

Support the lower end of the swinging arm with wooden blocks.

Disconnect the track-rod from the steering arm.

Punch-mark the two halves of the drive shaft so that reassembly can be effected, keeping the same relationship. Unscrew the dust cap on the splines.

Take out the set pins which secure the hub steering arms and integral swivel pins to the hub casting. There is one steering arm only on each side. Take care of the locating dowels. Support the hub whilst withdrawing the swivel pins, using tool 18G605.

Pull the hub assembly away from the swivel pin bush housing. Retrieve the three thrust washers and dust cap fitted below the lower face of the bush housing.

Tap out the welch plugs, and using tool 18G57, remove the bushes from their housings.

Fit the new bushes, using tool 18G57, so that they are flush with the bearing faces of the housings.

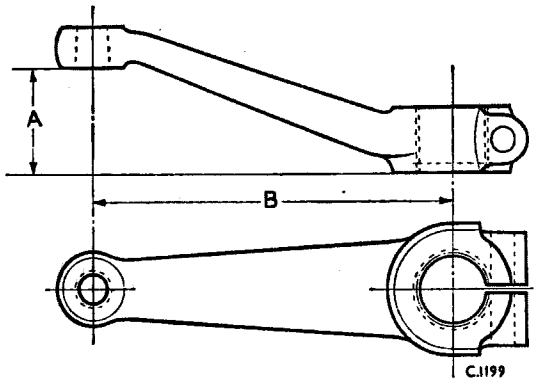

Fig. Ja.5

The relay upper lever checking dimensions

A. 1 11/16 in. (42·86 mm.)
B. 5¾ in. (146 mm.)

NOTE.—The split in the bushes must be towards the centre-line of the vehicle. The oil groove run-out must be at the top in the case of the upper bush and at the bottom in the lower bush.

The top and bottom bushes are interchangeable.

Line-ream the bushes, using tools 18G66 and 18G68.

Insert two new welch plugs.

As the steering arms are shrunk onto the swivel pins, each arm and pin must be serviced as an assembly should the swivel pins require renewal.

Oil the bushes and swivel pins, offer up the hub to the swivel pin housing, guiding the splines of the drive shaft into their housing with the register marks in line. Insert the swivel pins in position and secure with the set pins. Tighten up the dust cover on the drive shaft splines and relubricate through the nipple provided. In the case of the lower swivel pins do not omit the thrust washers and dust cap. The order of assembly is as follows: (*a*) Dust cover; (*b*) Steel washer; (*c*) Oilite

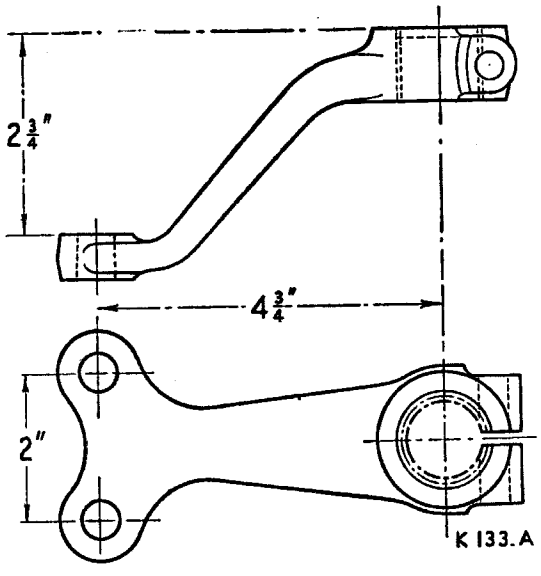

Fig. Ja.6

The relay lower lever checking dimensions

SECTIONAL VIEW OF THE SWIVEL PINS

(WITH FLEXITOR-TYPE SUSPENSION)

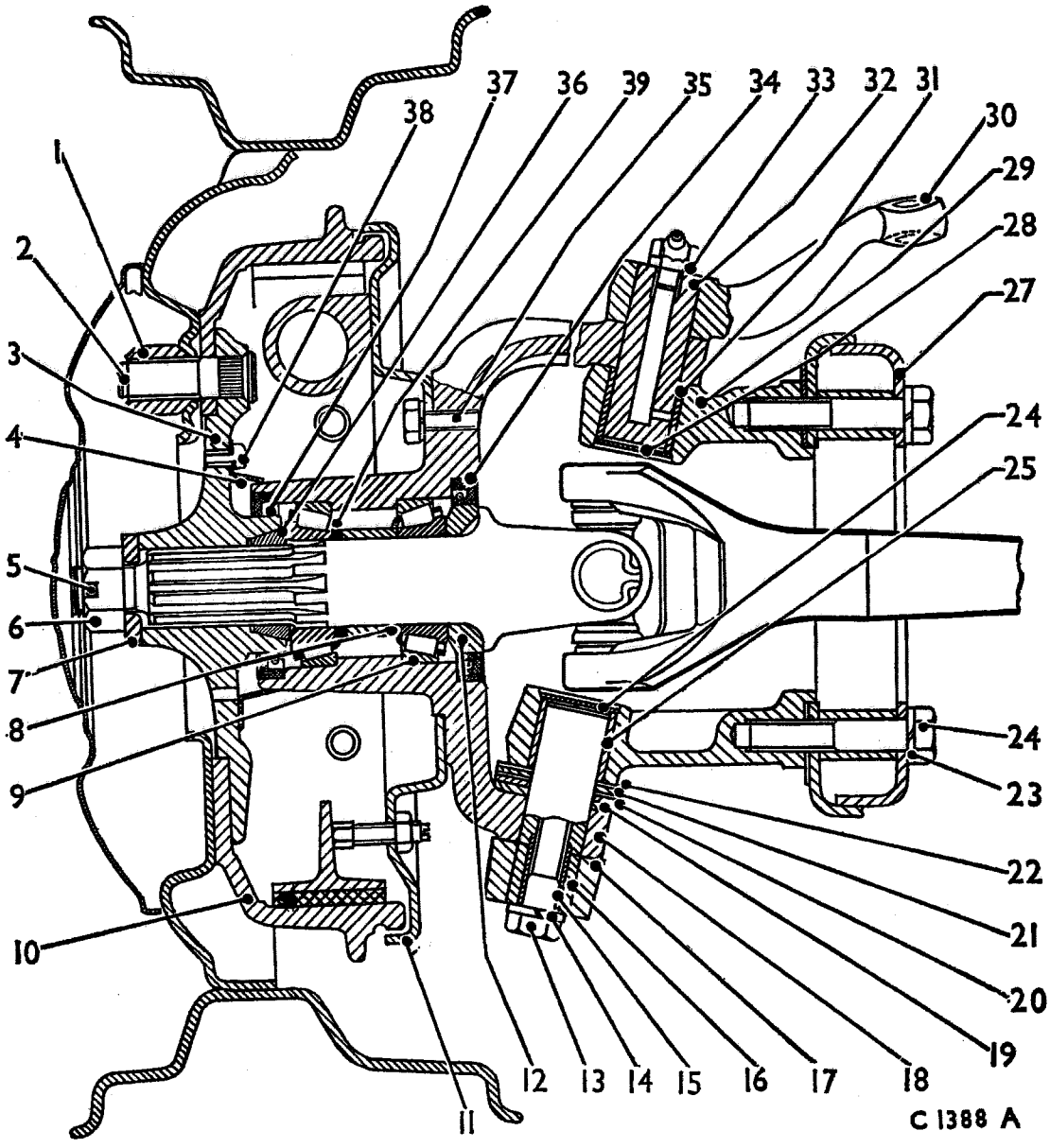

No.	Description	No.	Description	No.	Description	No.	Description
1.	Wheel nut.	11.	Brake backplate.	21.	Steel washer.	31.	Swivel pin bush.
2.	Wheel stud.	12.	Distance piece.	22.	Dust cover.	32.	Upper swivel pin.
3.	Drive flange.	13.	Set pin.	23.	Spring washer.	33.	Oil nipple.
4.	Oil guard.	14.	Spring washer.	24.	Set pin to swivel pin housing.	34.	Oil seal.
5.	Split pin.	15.	Dowel for arm.	25.	Swivel pin bush.	35.	Backplate set pin.
6.	Nut.	16.	Lower swivel pin.	26.	Welch plug.	36.	Cone.
7.	Washer.	17.	Lower steering arm.	27.	Trailing arm.	37.	Oil seal.
8.	Distance tube.	18.	Hub casting.	28.	Welch plug.	38.	Oil guard screw.
9.	Taper-roller race.	19.	Steel washer.	29.	Swivel pin housing.	39.	Distance washer.
10.	Brake-drum.	20.	Oilite Superload washer.	30.	Upper steering arm.		

Superload washer; (*d*) Steel washer. The dust cover is positioned with its recess downwards so that it shrouds the washers.

For 'Service Tools' refer to page Ja.8.

Reconnect the ball joints of the steering linkage.

Refit the road wheel and lower the vehicle to the ground.

SERVICE TOOLS

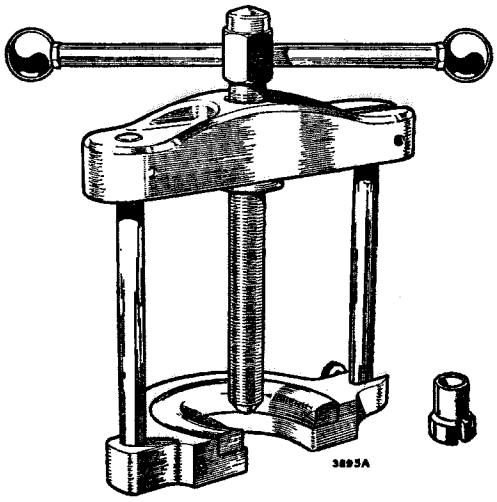

18G70. Steering Wheel Remover

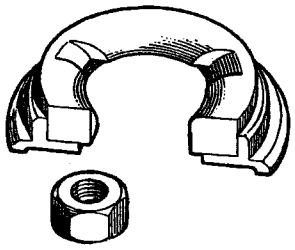

18G70A. Steering Wheel Remover Adaptor

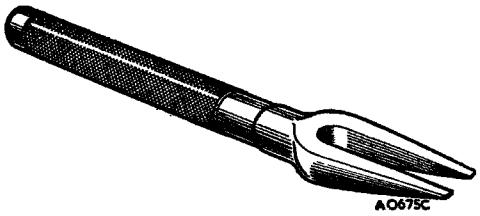

18G125. Steering Ball Joint Separator

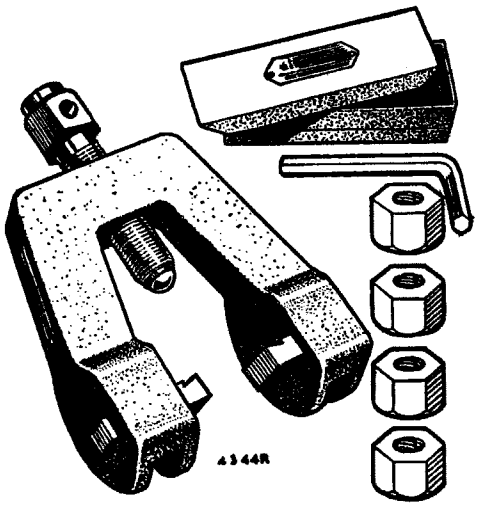

18G754A. Steering Arm Remover

18G75B. Steering Arm Remover Thread Protectors—UNF.

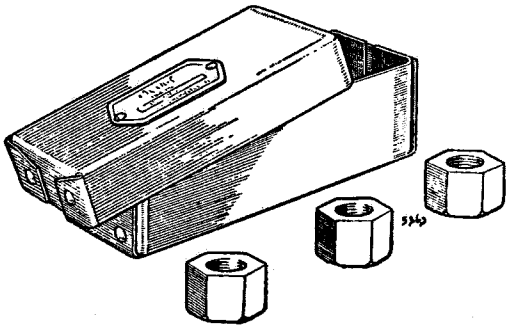

18G57. Swivel Axle Bush Remover and Replacer

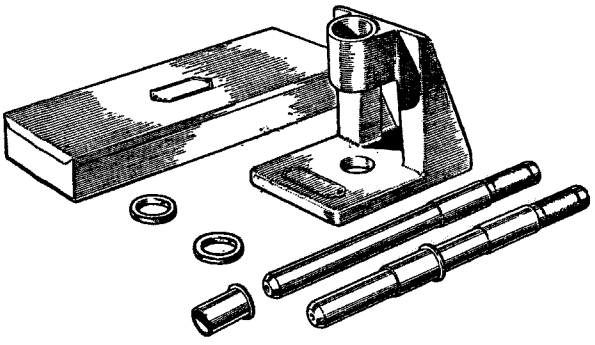

18G66. Swivel Axle Bush Reamer

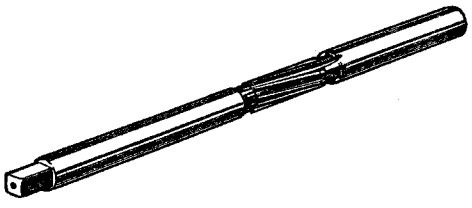

18G68. Swivel Axle Bush Reamer Wrench

●18G605. Swivel Axle Pin Remover●

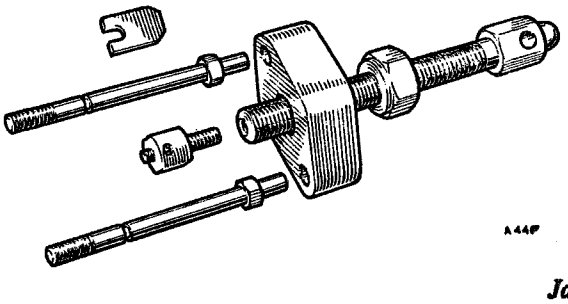

SECTION K

THE FRONT AXLE

(With Leaf-spring Suspension)

	Section
Axle assembly—removing and replacing	K.2
Crown wheel and pinion	
Assembling and setting	K.5
Dismantling	K.4
Description	K.1
Differential assembly—removing and replacing	K.3
Differential pinions—removing and replacing	K.6
Hub—removing and replacing	K.9
Pinion oil seal—renewing	K.7
Service tools	End of Section
Swivel housing and axle shaft—removing and replacing	K.8

THE FRONT AXLE COMPONENTS (WITH LEAF-SPRING SUSPENSION)

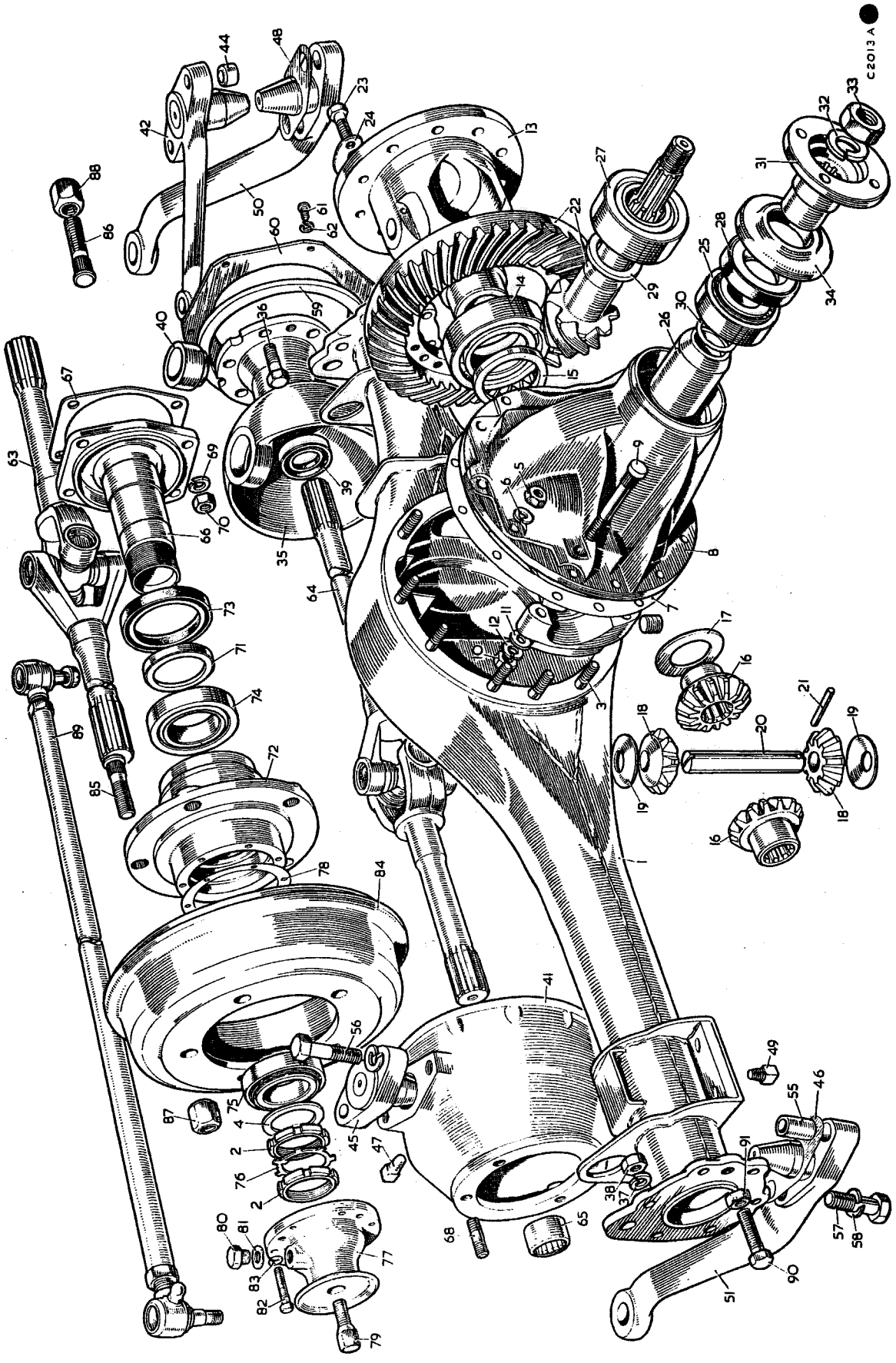

KEY TO THE FRONT AXLE COMPONENTS
(WITH LEAF-SPRING SUSPENSION)

●No.	Description
1.	Centre case assembly.
2.	Bearing retaining nut.
3.	Differential carrier bolt.
4.	Washer for bearing retaining nut.
5.	Gear carrier to axle case nut.
6.	Spring washer for nut.
7.	Gear carrier to axle case joint.
8.	Carrier assembly.
9.	Cap to carrier bolt (serrated).
10.	Nut for bolt.
11.	Plain washer for nut.
12.	Spring washer for nut.
13.	Differential cage.
14.	Differential bearing.
15.	Distance collar.
16.	Differential wheel.
17.	Differential wheel thrust washer.
18.	Differential pinion.
19.	Differential pinion thrust washer.
20.	Pin for differential pinion.
21.	Lock pin for pinion pin.
22.	Crown wheel and pinion.
23.	Crown wheel to cage bolt.
24.	Lock washer for bolt.
25.	Pinion outer bearing.
26.	Pinion bearing spacer.
27.	Pinion inner bearing.
28.	Oil seal.
29.	Pinion head washer.
30.	Pinion head shim.

No.	Description
31.	Universal joint flange.
32.	Spring washer for flange.
33.	Nut for flange.
34.	Dust cover.
35.	Universal joint housing.
36.	Housing to axle case bolt.
37.	Spring washer for bolt.
38.	Nut for bolt.
39.	Swivel housing oil seal.
40.	Swivel pin bush.
41.	Swivel pin housing.
42.	Steering lever upper—R.H.
44.	Hollow dowel for steering lever.
45.	Top pivot flange.
46.	Swivel axle pin—lower—shim.
47.	Swivel pin housing taper plug.
48.	Swivel axle pin—lower—shim.
49.	Swivel pin housing taper plug.
50.	Steering lever—lower—R.H.
51.	Steering lever—lower—L.H.
55.	Steering lever hollow dowel.
56.	Bolt—upper steering lever and top flange to housing.
57.	Bolt—lower steering lever to housing.
58.	Spring washer for bolt.
59.	Swivel housing spherical oil seal.
60.	Cover-plate for seal.
61.	Cover-plate to housing screw.
62.	Spring washer for screw.

No.	Description
63.	Front axle shaft assembly—R.H.
64.	Front axle shaft assembly—L.H.
65.	Shaft needle-roller bearing.
66.	Front wheel hub—inner.
67.	Joint washer for hub.
68.	Swivel pin housing stud.
69.	Spring washer for stud.
70.	Nut—hub to stud.
71.	Distance piece for wheel hub—inner.
72.	Front wheel hub—outer.
73.	Oil seal for hub.
74.	Hub bearing—inner.
75.	Hub bearing—outer.
76.	Tab washer for nut.
77.	Driving flange assembly.
78.	Joint washer for flange.
79.	Screw for hub shaft.
80.	Driving flange filler plug.
81.	Joint washer.
82.	Bolt—flange to hub—outer.
83.	Spring washer for bolt.
84.	Brake-drum.
85.	Wheel stud—R.H.
86.	Wheel stud—L.H.
87.	Wheel nut—R.H.
88.	Wheel nut—L.H.
89.	Cross-tube assembly.
90.	Lockstop.
91.	Nut.●

Section K.1

DESCRIPTION

The front axle is of the fully floating type, incorporating hypoid final reduction gears. The axle shafts and swivel housing assemblies and the differential assembly can be withdrawn without removing the axle from the vehicle.

To enable the front wheels to drive and steer the vehicle at the same time the differential shafts are connected to the swivel axle shafts by universal joints running in oil inside the swivel housing assemblies.

The front hub assemblies run on taper-roller bearings mounted on the bearing inner housings and are secured by circular nuts and lock washers. The bearings are lubricated by oil from the swivel housings.

Wheel studs in the hubs pass through the brake-drums, which are located on the hub flanges. Each swivel axle shaft driving flange is secured direct to the hub by six bolts and spring washers.

The differential and pinion shaft bearings are preloaded, the amount of preload being adjustable by shims. The position of the pinion in relation to the crown wheel is determined by a pinion head washer. The backlash between the gears is adjustable by collars.

Section K.2

REMOVING AND REPLACING THE AXLE ASSEMBLY

Drain the oil from the axle case.

Jack up the front of the vehicle and support it with stands positioned beneath the chassis side-members.

Remove the road wheels and position a trolley jack under the centre of the axle case.

Disconnect the propeller shaft flange from the pinion flange and support the propeller shaft. Before separating the flanges mark them so that they can be refitted in the same relationship.

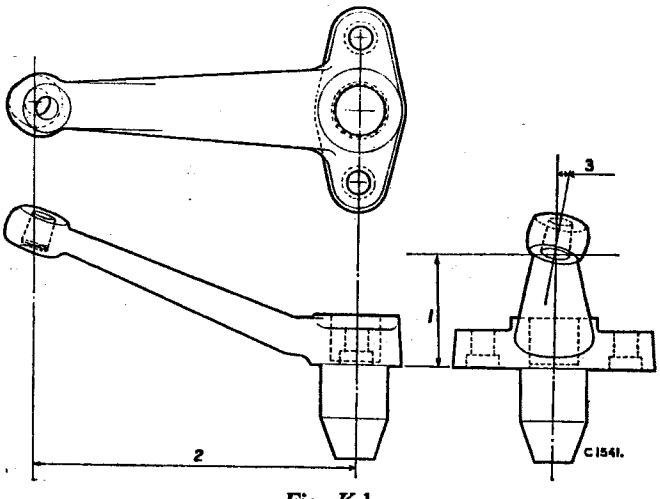

Fig. K.1

The steering-arm checking dimensions (right-hand). Left-hand is opposite

2 1/16 in. (54·7687 mm.). 2. 6 1/16 in. (157·1625 mm.). 3. 10°.

Disconnect the side-rod from the upper steering-arm.

Release the radius rods from the axle and pivot them out of the way.

Disconnect the brake flexible hose from the bracket on the chassis and plug the ends of the pipes to prevent loss of fluid.

Remove the nuts and spring washers from the 'U' bolts, remove the 'U' bolts, and pivot the dampers and mounting clamp plates out of the way.

Raise the axle clear of the springs, remove the front bolts, and lower the springs to the ground. The complete axle can now be removed forwards clear of the vehicle.

Refitting the axle is a reversal of the removal procedure, but care should be taken to line up the marks made on the propeller and pinion shaft flanges in order to maintain their balance.

Refill the axle case with oil to the correct level and bleed the brakes as detailed in Section M.6. Check the alignment of the front wheels.

Section K.3

REMOVING AND REPLACING THE DIFFERENTIAL ASSEMBLY

The instructions given under Section H.3 should be followed, noting that in this case it will be necessary to separate the hub and swivel housing assemblies from the axle tube at the flanged joints. Support the assemblies to avoid damaging the oil seals in the ball housings.

Section K.4

DISMANTLING THE CROWN WHEEL AND PINION

The instructions given under Section H.4 should be followed.

Section K.5

ASSEMBLING AND SETTING THE CROWN WHEEL AND PINION

The instructions given under Section H.5 should be followed.

Section K.6

REMOVING AND REPLACING THE DIFFERENTIAL PINIONS

The instructions given under Section H.6 should be followed.

Section K.7

RENEWING THE PINION OIL SEAL

The instructions given under Section H.7 should be followed.

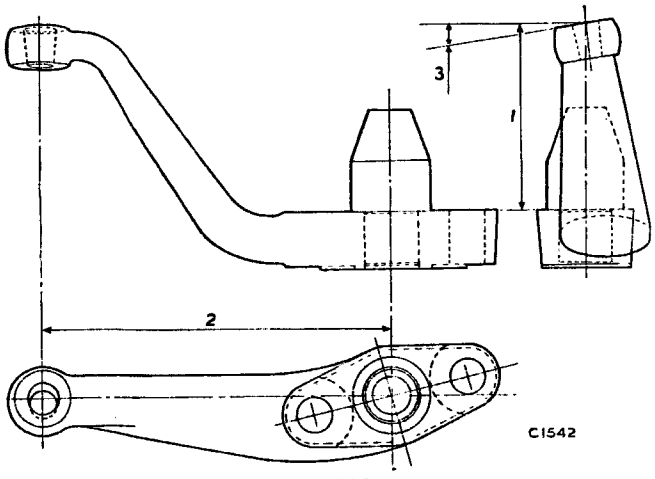

Fig. K.2

The steering side- and track-rod arm checking dimensions (right-hand). Left-hand is opposite

1. 3 7/32 in. (81·7562 mm.). 2. 6 7/32 in. (157·9562 mm.). 3. 8½°.

Section K.8

REMOVING AND REPLACING A SWIVEL HOUSING AND AXLE SHAFT

Jack up the front of the vehicle and remove the road wheel concerned.

Remove the hub shaft screw and the flange bolts from the driving flange and extract the flange.

Disconnect the brake flexible hose from the bracket on the chassis.

Remove one of the bottom swivel pin securing bolts and allow the oil to drain from the housing.

Remove the swivel pin to ball housing oil seal and the oil seal retainer.

Remove the top and bottom swivel pins. The shims fitted between the swivel pins and swivel housing must be refitted in their original positions when reassembling.

Pull off the hub and swivel pin housing and extract the axle shaft. Be careful not to damage the oil seal in the ball housing.

To replace the axle shaft and swivel housing reverse the removal procedure. Before refilling the swivel housing with the recommended oil, it is necessary to check the preload on the swivel pins as described below.

The preload on the swivel pins must be such that there is a resistance to turning when a pull of 15 lb. (6·80 kg.) is applied at right angles to the lower steering arm. However, if new swivel pins and bushes have been fitted the preload must be set to 20 to 25 lb. (9·07 to 11·36 kg.) to allow for initial settling. Add or remove shims to obtain the required setting.

Section K.9

REMOVING AND REPLACING A HUB

Jack up the front of the vehicle and remove the road wheel concerned.

Remove the brake-drum and driving flange. Place a clean receptacle under the hub to catch any oil that may run out.

●Knock back the tabs of the lock washer and remove the outer slotted nut. Remove the lock washer, inner slotted nut, and distance washer (use tool 18G1005 to remove the nuts).●

Extract the hub. The inner race and roller assembly, oil seal, and distance piece will remain on the hub inner support.

Extract the outer races of the inner and outer bearings from the hub.

Refit the outer races to the hub, making sure that they are hard up against the abutment shoulders inside the hub.

Position the inner race and roller assemblies in their outer races and pack the bearings with grease.

Fit a new oil seal with the lip facing the bearing.

Position the distance piece up against the shoulder on the hub inner support.

Slide the hub onto its inner support, locating the inner and outer races of the inner bearing, and carefully drift the inner race of the outer bearing onto the hub inner support. It is essential that this race assembly should not be forced hard against its outer race as there is a danger of the bearing surfaces being damaged.

Fit the keyed distance washer and screw up one of the circular nuts finger tight. Rotate the hub to distribute the grease and check that there is still play in the bearings.

Tighten the slotted nut until there is ·004 to ·006 in. (·10 to ·15 mm.) end-play in the bearings, using a suitably mounted dial gauge. Fit the lock washer and ascertain that one of the tabs lines up with a slot in the nut; do not secure it at this stage.

Screw up the second slotted nut and tighten it, using 18G1005, at the same time making sure that the first nut does not move. Re-check the end-play, and if still within the above limits, lock both nuts in position with the lock washer in one of the slots. The outer nut must, of course, line up with one of the six remaining tabs of the lock washer.

Refit the driving flange, brake-drum, and road wheel. Top up the hub with the oil that drained out on removal.

SERVICE TOOLS

Refer to 'SERVICE TOOLS', Section H.

SECTION Ka

THE FRONT AXLE

(With Flexitor-type Suspension)

	Section
Axle drive unit—removing and replacing	Ka.2
Bevel pinion oil seal—renewing	Ka.4
Crown wheel and pinion—assembling and setting	Ka.8
Crown wheel and pinion—dismantling	Ka.7
Description	Ka.1
Differential assembly—removing and replacing	Ka.3
Differential pinions—removing and replacing	Ka.9
Drive shaft needle roller bearings	Ka.6
Drive shaft oil seal	Ka.5
Hub—dismantling and reassembling	Ka.11
Hub—removing and replacing	Ka.10

Section Ka.1

DESCRIPTION

For detailed description of front axle see Section Ha.1.

Section Ka.2

REMOVING AND REPLACING THE AXLE DRIVE UNIT ASSEMBLY

Follow the instructions given in Section Ha.2.

Section Ka.3

REMOVING AND REPLACING THE DIFFERENTIAL ASSEMBLY

Follow the instructions given in Section Ha.3.

Section Ka.4

RENEWING THE BEVEL PINION OIL SEAL

Follow the instructions given in Section H.7.

Section Ka.5

RENEWING A DRIVE SHAFT OIL SEAL

Follow the instructions given in Section Ha.5.

Section Ka.6

RENEWING THE DRIVE SHAFT NEEDLE-ROLLER BEARINGS

Follow the instructions given in Section Ha.6.

Section Ka.7

DISMANTLING THE CROWN WHEEL AND PINION

Follow the instructions given in Section H.4.

Section Ka.8

ASSEMBLING AND SETTING THE CROWN WHEEL AND PINION

Follow the instructions given in Section H.5.

Section Ka.9

REMOVING AND REPLACING A HUB

Follow the instructions given in Section H.6.

Section Ka.10

REMOVING AND REPLACING A HUB

Jack up the vehicle and remove the road wheel concerned.

Unscrew the dust cover on the sliding splines of the drive shaft. Punch-mark the two parts of the shaft.

Disconnect the hydraulic brake flexible hose from the brake backplate.

Remove the upper and lower swivel pins as described in Section Ja.

Pull the complete hub and drive shaft away from the vehicle.

The punch-marks which were made on the sliding and fixed halves of the drive shaft must be in register when the splines are re-entered.

Ensure that the hub is correctly positioned on the swinging arm in relation to the brake hydraulic pipelines.

Section Ka.11

DISMANTLING AND REASSEMBLING A HUB

Follow the instructions given in Section Ha.11.

SECTION OF THE FRONT HUB
WITH FLEXITOR TYPE SUSPENSION

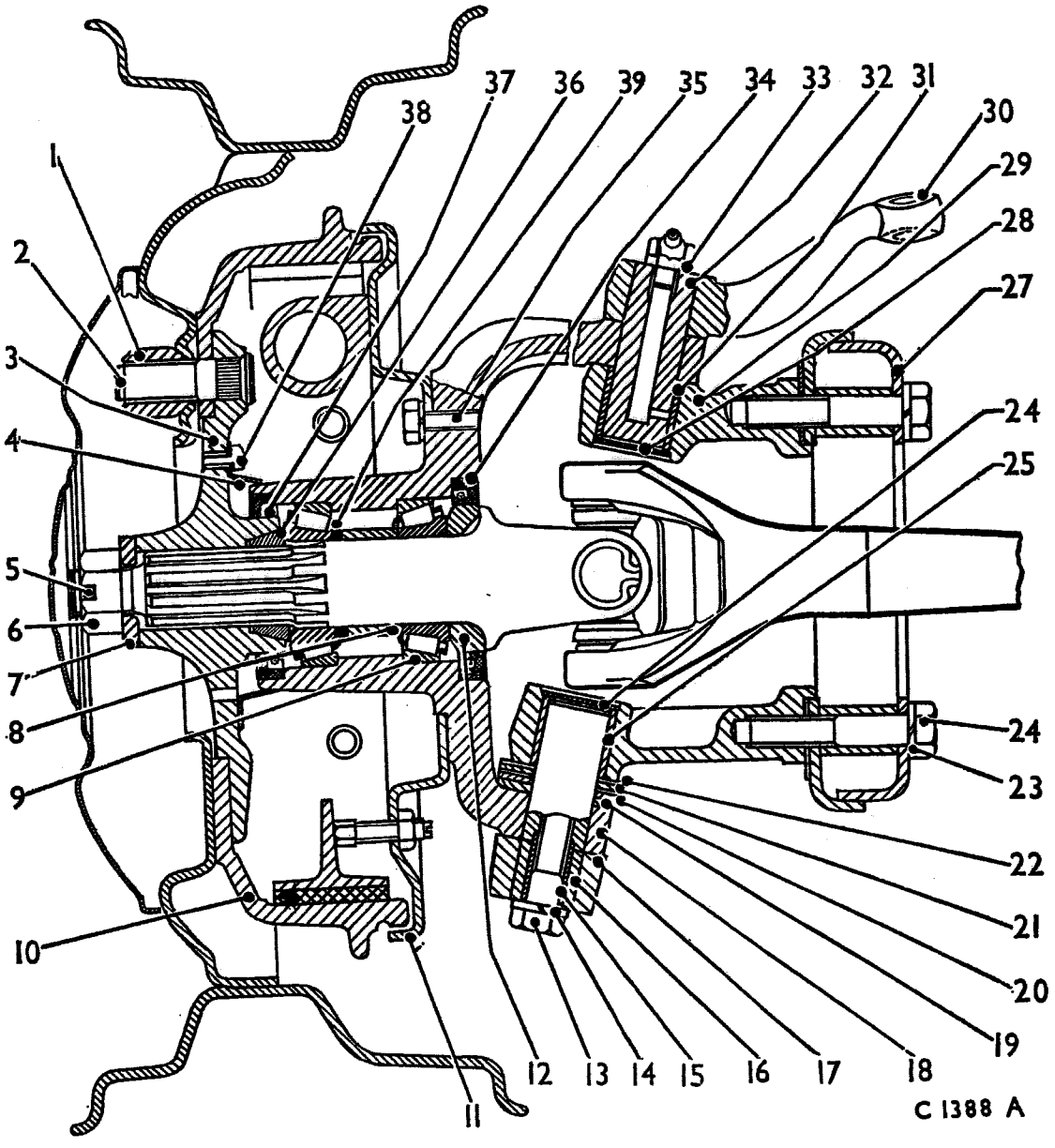

No.	Description	No.	Description	No.	Description	No.	Description
1.	Wheel nut.	11.	Brake backplate.	21.	Steel washer.	30.	Upper steering arm.
2.	Wheel stud.	12.	Distance piece.	22.	Dust cover.	31.	Swivel pin bush.
3.	Drive flange.	13.	Set pin.	23.	Spring washer.	32.	Upper swivel pin.
4.	Oil guard.	14.	Spring washer.	24.	Set pin to swivel pin housing.	33.	Oil nipple.
5.	Split pin.	15.	Dowel for arm.			34.	Oil seal.
6.	Nut.	16.	Lower swivel pin.	25.	Swivel pin bush.	35.	Backplate set pin.
7.	Washer.	17.	Lower steering arm.	26.	Welch plug.	36.	Cone.
8.	Distance tube.	18.	Hub casting.	27.	Trailing arm.	37.	Oil seal.
9.	Taper-roller race.	19.	Steel washer.	28.	Welch plug.	38.	Oil guard screw.
10.	Brake-drum.	20.	Oilite Superload washer.	29.	Swivel pin housing.	39.	Distance washer.

SECTION L

THE FRONT AND REAR SUSPENSIONS
(Road Springs and Dampers)

	Section
Description	L.1
Front spring	
Dismantling and reassembling	L.3
Removing and replacing	L.2
Rear spring	
Dismantling and reassembling	L.5
Removing and replacing	L.4
Spring dampers	
Removing and replacing (front)	L.6
Removing and replacing (rear)	L.7
Testing	L.8
Topping up (rear)	L.9

Section L.1

DESCRIPTION

The road springs are the semi-elliptical leaf-type, the rear ends of which pivot in shackles to allow for variant lengths of the springs as they are flexed to load or rebound. The front ends of the springs are mounted in rigid brackets on the frame; the driving and braking forces are transmitted from the axles to the frame through this end of the springs. The springs are mounted on Silentbloc rubber bushes and require no lubrication.

A rubber bump stop attached to a bracket on the chassis side-member and a check strap (rear axle only), which is also fixed to this member and passes under the axle case, limit any excessive up-and-down movement of the axle.

The front spring dampers are of the telescopic, hydraulic type and require no topping-up. The dampers are mounted to the frame and axles through rubber bushings.

The rear spring dampers are of the lever, hydraulic type and are mounted on brackets attached to the chassis side-member. The damper arms are connected to the spring seats by ball-type link assemblies. A filler plug is located in the top of each damper.

Section L.2

REMOVING AND REPLACING A FRONT SPRING

Using jacks, support under the front axle and the frame to relieve the springs of the weight of the vehicle and axle.

Release the spring damper bottom mounting, unscrew the 'U' bolt nuts, and remove the 'U' bolts and plate.

Adjust the jacks until the spring is just free of the spring seat on the axle.

Remove the nuts from the front anchor pin and the rear shackle pins. Drive out the front pin, using a copper drift to avoid damage to the threads.

As each rear shackle plate has a pin fixed to it there is no need to drive out the rear pins unless the bushes are to be renewed.

Withdraw the spring from under the front of the vehicle.

The replacement of the spring is a reversal of the removal procedure. All anchor and shackle pin nuts should be fully tightened. Make sure that the spring centre-bolt (or toe-bolt) seats properly in the spring seat on the axle. Check and tighten the 'U' bolt nuts with the wheels on the ground and the vehicle laden.

Section L.3

DISMANTLING AND REASSEMBLING A FRONT SPRING

Grip the spring in a vice between the top and bottom leaves.

Unscrew the nuts and remove the bolts and the spring clips. The clip screws are secured by centre-punching. Remove the safety clip from either end of the spring.

Unscrew the centre dowel bolt nut and withdraw the bolt to separate the spring leaves.

Remove the spring leaves from the vice. Particular note should be made of the positions of the respective leaves.

Use paraffin and a wire brush to remove dirt and rust from the spring leaves.

If examination reveals excessive wear or cracks the leaves should be renewed. Normally only the main leaf is available for service and the spring assembly should be renewed if further damage is evident.

Indentations caused by the leaf ends should be smoothed off by grinding.

Inspect the anchor and shackle pins and bushes for wear, renewing parts as required. New bushes should be pressed into the spring eyes flush with the outside faces.

The reassembly of the spring is a reversal of the dismantling procedure. Fit new rollers if necessary, tighten the nuts, and secure them in position by centre-punching.

Section L.4

REMOVING AND REPLACING A REAR SPRING

Follow the instructions given in Section L.2, with the exception of the spring damper mounting.

Section L.5

DISMANTLING AND REASSEMBLING A REAR SPRING

Follow the instructions given in Section L.3.

Section L.6

REMOVING AND REPLACING A FRONT DAMPER

Remove the nut from the top mounting of the damper and extract the washer and rubber bush.

Release the bottom mounting nut and bush and withdraw the damper from its fulcrum pin.

When replacing the damper avoid overtightening the mounting nuts as this will distort the rubber bushes. (See also Section L.8.)

Section L.7

REMOVING AND REPLACING A REAR SPRING DAMPER

Disconnect the hydraulic damper link from the spring seat, remove the two bolts securing the damper body to

the chassis side-member, and remove the damper complete with link from beneath the vehicle.

Refitting is a reversal of the removal procedure, but before reconnecting the link to the spring seat work the damper arm a few times through its full travel to expel any air which may be trapped in the operating chamber.

Section L.8

TESTING THE SPRING DAMPERS

If there is any doubt that the road springs are adequately damped the condition of the springs and the tyre pressures should also be considered, as these have an appreciable bearing on the results obtained.

If the hydraulic dampers do not appear to function satisfactorily an indication of their resistance can be obtained by carrying out the following check.

Front

The condition of the damper can be tested whilst off the vehicle by extending the damper to its fullest extent and pushing against the pressure of the fluid (do not place the unit in a vice because pressure on the cylinder may bind the sliding parts). If no resistance is felt, then the unit must be primed, as described below, or renewed. No topping up or other service is required apart from the occasional renewal of the rubber bushes on the fulcrum pins.

To prime the damper, hold it upright and operate throughout its full movement about 10 times. After priming, the damper must always be kept in the upright position. When storing the damper this upright position must be maintained, otherwise the priming operation will have to be repeated before fitting the damper to the vehicle.

If a squeak develops in the damper this may be due to a dry piston rod gland, and this may be overcome by extending the damper fully and lubricating the piston rod with damper fluid.

Other noises may be due to damper fixings or bushes. A little damper fluid on the rubber bushes may overcome this.

In all cases of doubt it is advisable to renew the damper.

Rear

Remove the damper from the vehicle.

Hold it in a vice and move the lever arm up and down through its complete stroke. A moderate resistance throughout the full stroke should be felt; if, however, the resistance is erratic, or free movement in the lever is noted, lack of fluid is indicated, or there may be air in front of the piston. The free movement should not exceed $\frac{1}{8}$ in. (3 mm.) at the outer end of the arm.

If the addition of fluid and working the arm over its full range of travel a number of times give no improvement a new damper should be fitted.

Too much resistance, i.e. when it is not possible to move the lever arm slowly by hand, indicates a broken internal part or a seized piston; in such cases the damper should be changed for a new or reconditioned one.

Section L.9

TOPPING UP A REAR DAMPER

The dampers may be replenished in position, provided the tops have been thoroughly cleaned to ensure that when the filler plug is extracted no dirt falls into the filler orifice.

This is most important, as it is absolutely vital that no dirt or foreign matter should enter the operating chamber.

The use of Armstrong Super (Thin) Shock Absorber Fluid in the dampers is recommended. (If this fluid is not available any good-quality mineral oil to Specification S.A.E. 20/20W should be used, but this alternative is **not** suitable for low-temperature operation.)

Fluid should be added to the level of the bottom of the filler plug hole.

When fluid has been added the damper arm should be worked throughout its full stroke before the filler plug is replaced to expel any air that might be present in the operating chamber.

SECTION La

THE FRONT AND REAR SUSPENSIONS

(Flexitor-type)

	Section
Description	La.1
Hydraulic dampers—removing and refitting	La.5
Suspension adjustment	La.4
Suspension unit—removal and refitting	La.2
Trailing arms—removal and refitting	La.3

Section La.1

DESCRIPTION

The suspension on all four wheels is by independent trailing arms which are bolted to Flexitor suspension units. The suspension units, one at the front and two at the rear of the vehicle, consist of a steel tube to the outside of which torsional rubber is bonded. The tube carries a flange to which is bolted the trailing arm. The rubber is also bonded to the lower half of a two-piece outer tube. The upper half of the tube is pressed into position during manufacture, putting the rubber under compression. Finally, the top half of the tube is bolted to the lower half. Once assembled, the suspension units will last indefinitely, all suspension deflections being taken by the torsional loading of the rubber. The single front suspension unit casing contains two separate tubes which operate independently.

Provision is made for adjustment of the trailing arms to allow for suspension settling (see Section La.4).

Front and rear units are not interchangeable.

The front and rear dampers are of the lever hydraulic type and are mounted on the chassis side-members.

Section La.2

REMOVING AND REFITTING THE SUSPENSION UNIT

Jack up the vehicle under the front or rear cross-member according to requirements so that work can be carried out from below, **but leaving the wheels in contact with the ground.** If the wheels are off the ground the trailing arms will hang on the Flexitor units, causing the rubber to be in tension. The aim is to obtain the neutral position of the rubber (by careful adjustment of the jack height and with the wheel on the ground) so that the trailing arm to the suspension unit bolts unscrew easily without binding in their holes.

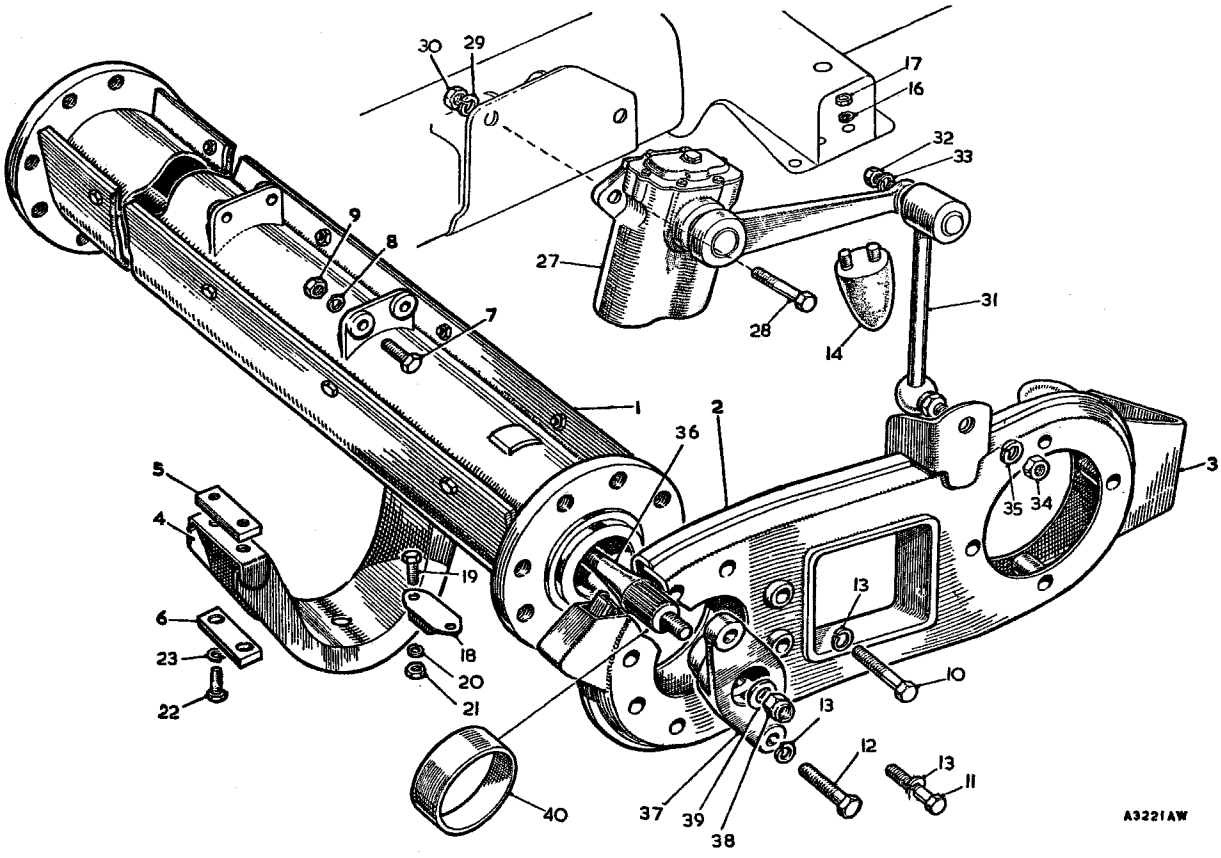

Fig. La.1

The front suspension

1. Flexitor suspension unit.
2. Suspension arm.
3. Bracket—bump stop.
4. Support bracket—Flexitor to frame—outer.
5. Tapping block.
6. Stiffening block.
7. Screw (Flexitor to frame steady bracket).
8. Spring washer.
9. Nut.
10. Bolt (Flexitor to suspension arm).
11. Bolt (Flexitor to suspension arm).
12. Bolt (Flexitor to suspension arm).
13. Spring washer.
14. Front bump stop.
16. Spring washer (bump stop to frame).
17. Nut.
18. Rebound stop.
19. Screw (stop to frame).
20. Spring washer.
21. Nut.
22. Screw (Flexitor support bracket to frame).
23. Spring washer for screw.
27. Hydraulic damper.
28. Bolt (hydraulic damper to frame).
29. Spring washer.
30. Nut.
31. Hydraulic damper link.
32. Nut (link to hydraulic damper).
33. Spring washer.
34. Nut (link to suspension arm).
35. Spring washer.
36. Torsion bar.
37. Attachment plate.
38. Nut.
39. Plain washer.
40. Distance tube.

Remove the torsion bar on the front suspension. Mark across the suspension flange and trailing arm. Take out the four bolts which secure the trailing arms to each of the suspension unit flanges. Remove the bolts which secure the 'U' clips to the chassis and lower the suspension units.

When refitting the trailing arms to the suspension units it may be necessary (according to the amount the vehicle was jacked up) to adjust the height of the jack so that the bolt holes in the trailing arms and suspension unit flange register. Make sure that the arms are refitted in the same angular position from which they were taken, i.e. that the marks made prior to dismantling are in register.

Section La.3

REMOVING AND REFITTING TRAILING ARMS

Front

Remove the road wheel concerned.

Take off the brake-drum.

Disconnect the brake pipe from the backplate.

Remove the track-rod ends from the side levers.

Disconnect the lower draglink from the steering lever, which is integral with the upper swivel pin.

Slacken off the oil seal cap fitted to the splined sliding portion of the drive shaft.

Take out the securing bolts which pass into the rim of the king pin casting and remove it complete with hub and outer part of the open half-shaft.

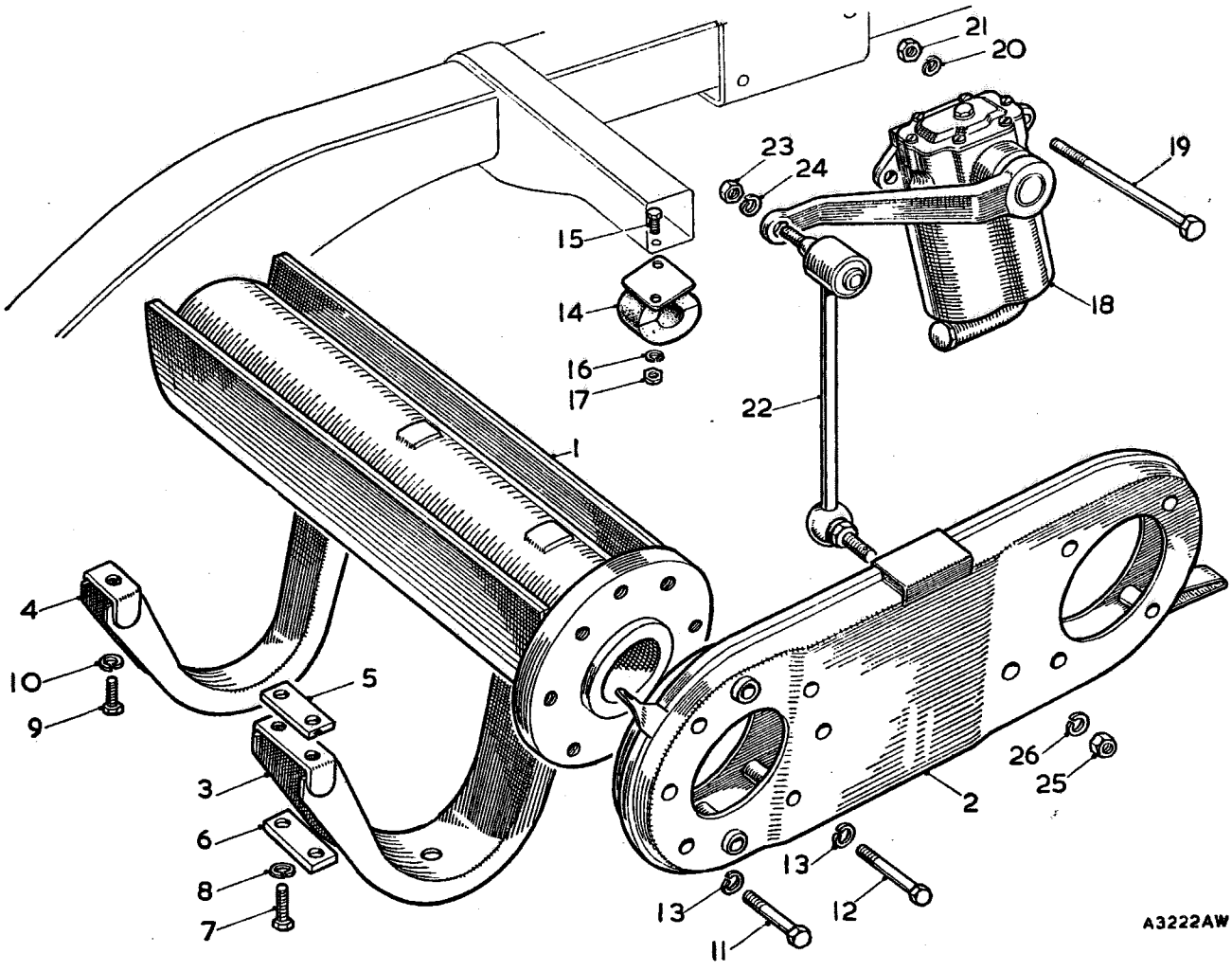

Fig. La.2

The rear suspension

1. Flexitor suspension unit.
2. Suspension arm.
3. Support bracket—Flexitor to frame—outer.
4. Support bracket—Flexitor to frame—inner.
5. Tapping block for brackets.
6. Stiffening block for brackets.
7. Screw (cutter support bracket to frame).
8. Spring washer.
9. Screw (inner support bracket to frame).
10. Spring washer.
11. Bolt (Flexitor to suspension arm).
12. Bolt (Flexitor to suspension arm).
13. Spring washer.
14. Rear bump stop.
15. Screw (bump stop to frame).
16. Spring washer for screw.
17. Nut for screw.
18. Hydraulic damper.
19. Pin (mounting) for hydraulic damper
20. Spring washer for nut.
21. Nut (mounting pin to frame).
22. Hydraulic damper.
23. Nut (hydraulic damper).
24. Washer (hydraulic damper link).
25. Flexitor arm nut.
26. Flexitor arm washer.

Disconnect the hydraulic damper link from the swinging arm.

Make a mark across the swinging arm and the mounting flange. Remove four bolts from the arm, detach the torsion bar (see Fig. La.1), which runs through the suspension unit, then take the arm off its mounting flange.

Refitting is a reversal of the dismantling procedure but note the following points. Ensure that the marks made across the swinging arm and flange are in alignment and that the shorter bolts which pass into the flange are inserted into the two front holes. The bolts are of different lengths to allow for the varying thickness of the swinging arm.

Rear

Take off the road wheel concerned, remove the brake and hub assembly, and slacken the oil seal cap fitted to the splined portion of the open shaft.

Release the brake pipe-line from the bracket at the upper forward end of the swinging arm.

Detach the hand brake cable from the swinging arm.

Disconnect the hydraulic damper linkage from the swinging arm.

Make a mark across the swinging arm and the mounting flange.

Take out the four bolts which secure the swinging arm to the flange and remove the arm.

Reassembly is a reversal of the dismantling procedure, but care must be taken to line up the marks made upon the arm and flange and to insert the longer of the mounting bolts through the wider part of the swinging arm.

The hub can now be removed from the swinging arm by taking out the securing bolts from the flange.

Section La.4

SUSPENSION ADJUSTMENT

The Flexitors, which rely on rubber suspensions, may initially settle during the first few hundred miles' running and then become stable. Adjustment is provided to allow for this possible initial settling.

To carry out this adjustment on the front suspension proceed as follows:

Remove the rebound stops.

Raise the front of the vehicle on stands so that the front wheels are clear of the ground.

Remove the front wheels.

Remove the torsion bar and its attachment plates from the unit.

Working on one side at a time, support the hub end of the trailing arm and remove the two remaining bolts holding the arm to the Flexitor flange. Separate the arm from, and allow it to hang clear of, the flange. Mark the flange holes previously used and run a ½ in. UNF. tap through the four remaining holes to clean the threads. Replace the four bolts in the trailing arm so that each bolt occupies the hole adjacent to its previous one, working in a clockwise direction for the L.H. side and anti-clockwise for the R.H. side. Reposition the trailing

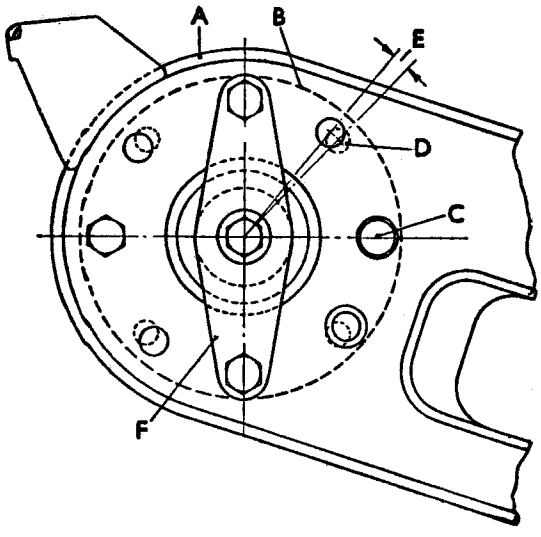

Fig. La.3

Original position, free of load

A. Trailing arm.
B. Flange (dotted).
C. Bolt through arm and flange.
D. Flange secondary bolt holes.
E. Amount of movement to locate holes.
F. Torsion bar plate.

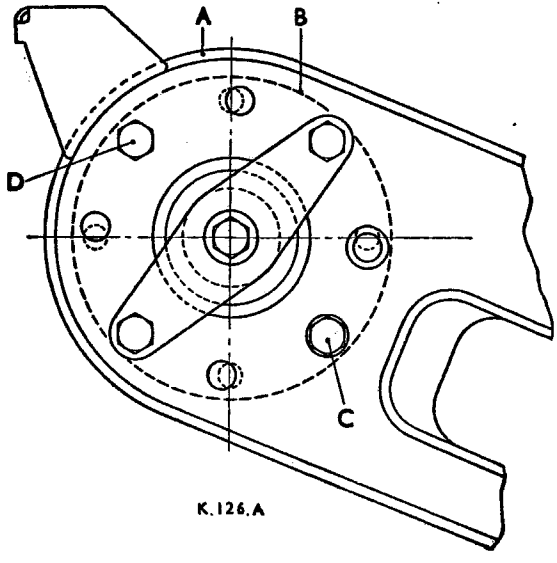

Fig. La.4

New position, free of load

A. Trailing arm.
B. Flange (dotted).
C and D. Bolts free of torsion bar plate.

arm in its original position on the flange, and rotate the arm about the flange approximately $\frac{3}{8}$in. (9.525 mm.) (E, Fig. La.3), thus bringing the bolts in line with the newly cleaned flange holes. Screw up each bolt for a few threads, then fully tighten bolts (C) and (D) (Fig. La.4).

Repeat the procedure given under the preceding paragraph for the other side.

Refit the torsion bar so that the attachment plates take up the position shown in Fig. La.4.

Refit the front wheels and lower the vehicle to the ground.

Refit the rebound stops.

The adjustment to the rear suspension is carried out in a similar manner to the front adjustment, with the exception that there is no torsion bar.

Section La.5

REMOVING AND REFITTING HYDRAULIC DAMPERS

Front and Rear

Disconnect the hydraulic damper link from the suspension arm, remove the two bolts securing the damper body to the chassis side-member and remove the damper complete with link from beneath the vehicle.

Refitting is a reversal of the removal procedure but before reconnecting the link to the suspension arm, work the damper arm a few times through its full travel to expel any air which may have found its way into the operating chamber.

For details testing and topping up of dampers, see Section L.

SECTION M

THE BRAKING SYSTEM

	Section
Bleeding the system	M.2
Brake-shoes	
Adjusting	M.3
Removing and replacing	M.4
Description	M.1
Front wheel cylinder	
Dismantling and reassembling	M.8
Removing and replacing	M.7
Hand brake	M.13
Master cylinder	
Dismantling and reassembling	M.6
Removing and replacing	M.5
Pipes and hoses—removing and replacing	M.12
●Preventive maintenance	M.15●
Rear brake adjuster—dismantling and reassembling	M.11
Rear wheel cylinder	
Dismantling and reassembling	M.10
Removing and replacing	M.9
Road-testing after brake servicing	M.14
Service tools	End of Section

Section M.1

DESCRIPTION

The brakes on all four wheels are hydraulically operated by foot pedal application directly coupled to a master cylinder in which the hydraulic pressure of the brake operating fluid is originated. A supply tank cast integrally with the master cylinder provides a reservoir by which the fluid is replenished, and a pipe-line consisting of tube, flexible hose, and unions interconnects the master cylinder and the wheel cylinders.

The pressure generated in the master cylinder by application with the foot pedal is transmitted with equal and undiminished force to all wheel cylinders simultaneously. This moves the pistons outwards, which in turn expand the brake-shoes, thus producing automatic equalization and efficiency in direct proportion to the effort supplied at the pedal.

When the pedal is released the brake-shoe springs return the shoes, which then return the wheel cylinder pistons, and therefore the fluid, back into the pipe-lines and master cylinder.

An independent mechanical linkage actuated by a hand brake operates the rear wheels by mechanical expanders attached to the rear wheel cylinder bodies.

The front brakes are operated by two wheel cylinders situated diametrically opposite each other on the inside of the backplate and interconnected by a bridge pipe on the outside.

Each shoe is located in the slot of one wheel cylinder and expanded by the piston of the other with the leading edges of both shoes making initial contact with the drum. The shoes are allowed to slide and centralize during the actual braking operation, which distributes the braking force equally over the lining area, ensuring high efficiency and even lining wear.

Adjustment for lining wear is by means of two knurled snail cam adjusters, each operating against a peg at the actuating end of each shoe.

The brake-shoes rest on steady posts and are held in position by two return springs which pass from a hole in each web to anchorages adjacent to the wheel cylinders.

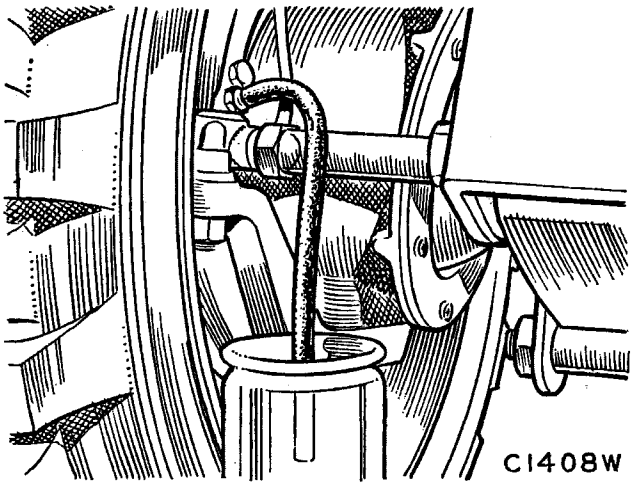

Fig. M.1
Bleeding the front brakes

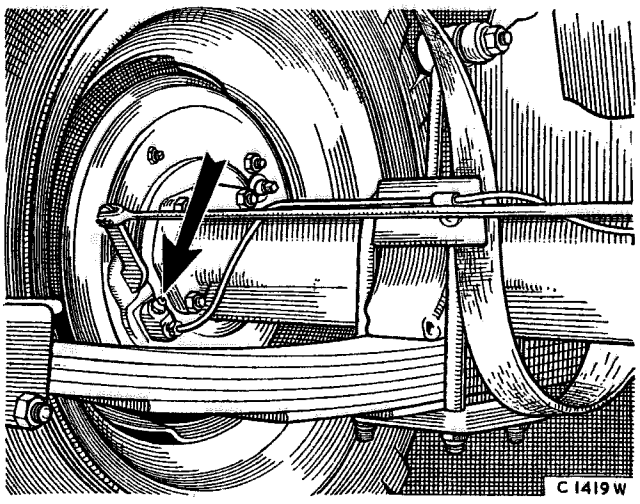

Fig. M.2
Showing the rear brake-bleed nipple

The rear brake-shoes are not fixed but are allowed to slide and centralize, with the same effect as in the front brakes. They are hydraulically operated by a single-acting wheel cylinder incorporating the hand brake mechanism. At the cylinder end the leading shoe is located in a slot in the piston while the trailing shoe rests in a slot formed in the cylinder body. At the adjuster end they rest in slots in the adjuster links. Both shoes are supported by steady posts on the backplate and are held in position by two return springs fitted from shoe to shoe with the weaker spring nearer the adjuster.

Adjustment for lining wear is made by the brake-shoe adjuster. This has a steel housing which is spigoted and bolted firmly to the inside of the backplate. The housing carries two opposed steel links, the outer end slotted to carry the shoes and the inclined inner faces bearing on inclined faces of the hardened-steel wedge.

The wedge has a finely threaded spindle with a square end (enabling a spanner to be used for adjustment purposes) which projects on the outside of the backplate.

The hand brake lever is pivoted in the cylinder body and, when operated, the lever tip expands the trailing shoe and the pivot moves the cylinder body and with it the piston to operate the leading shoe.

Section M.2

BLEEDING THE SYSTEM
(Expelling Air)

Bleeding the system is not a routine maintenance job, and should only be necessary when some portion of the hydraulic equipment has been disconnected or the fluid drained off, or if the level of the fluid has been allowed to fall so low that air has entered the master cylinder.

●Fill the master cylinder reservoir with **Castrol/Girling Brake Fluid Crimson** (if this fluid is not available an●

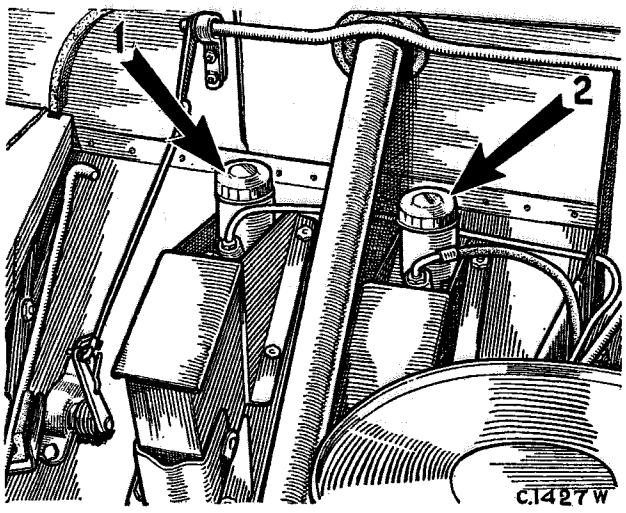

Fig. M.3

The brake (1) *and clutch* (2) *fluid reservoir are accessible from under the bonnet*

alternative fluid conforming to Specification S.A.E. 70.R3 should be used.

During the bleeding operation maintain the fluid level in the reservoir to within ½ in. (13 mm.) below the bottom of the filler neck and ensure that all union and pipe connections are tight and leakproof.

NOTE.—Pressure-bleeding methods are not suitable for Girling systems and are not recommended. For pressure bleeding to be successful it must be accompanied by manual bleeding.

Rear brakes

Scotch the wheels and release the hand brake fully. Check that the wheel cylinder is free to slide and turn the adjuster clockwise until the shoes are fully locked on the drum. The wheel cylinder pistons will then be pushed into the bore with the minimum of air to be expelled.

Front brakes

Slacken off the adjusters to allow the shoe springs to push the pistons into the wheel cylinder bore, leaving the minimum amount of space for air or fluid.

Commence bleeding on the rear brakes, starting with the wheel cylinder farthest away from the master cylinder. Clean off all dirt from around the bleed nipple and remove the protective rubber cap. Fit the bleed tube over the nipple and immerse the free end in a clean jar containing a little fluid. Unscrew the nipple about three-quarters of a turn, and commence bleeding with a fairly fast full stroke of the brake pedal followed by two or three short rapid strokes, allowing the pedal to fly back unassisted. Repeat this procedure until it is apparent that all air has been excluded, closing the nipple during the last slow pedal application. At no time during the bleeding operation must the fluid level fall to a point where air may be drawn into the system.

Repeat with each wheel cylinder in turn, finishing with the cylinder situated nearest the master cylinder.

If the bleeding of any cylinder continues without

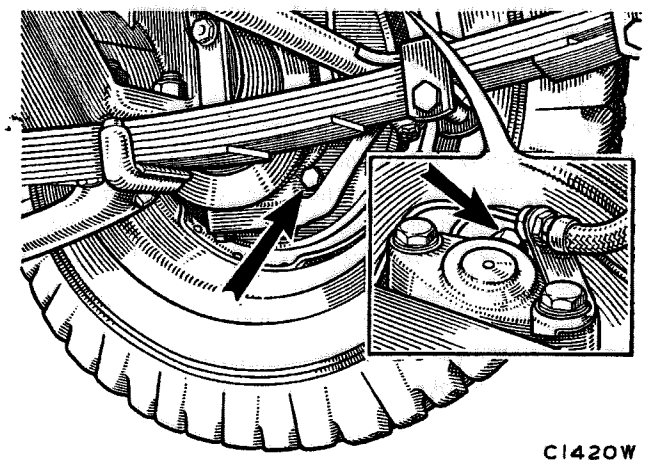

Fig. M.4

The front wheel brake adjusters

clearing the air bubbles it may be that air is being drawn into the system via the bleed nipple threads. In these cases the bleed nipple should be tightened at the end of each downward stroke, allowing the pedal to return before reopening.

Never use fluid which has just been bled from the system for topping up the supply tank: it will most certainly be aerated and must be allowed to stand for at least 24 hours before re-use. Contaminated fluid must be discarded.

Tighten the bleed nipples to a torque wrench reading of 4 to 4·5 lb. ft. (·5 to ·6 kg. m.) and replace the dust seal on all nipples.

NOTE.—Clean fluid bled from the system should be allowed to stand until it is clear of all air bubbles before being used again. Used fluid, if not contaminated, may be filtered and used again.

Readjust the brakes to obtain the correct shoe-to-drum clearance.

Section M.3

ADJUSTING THE BRAKE-SHOES

Front

Jack up the front of the vehicle until the wheels are free to rotate. Fully release the two hexagon-headed adjuster

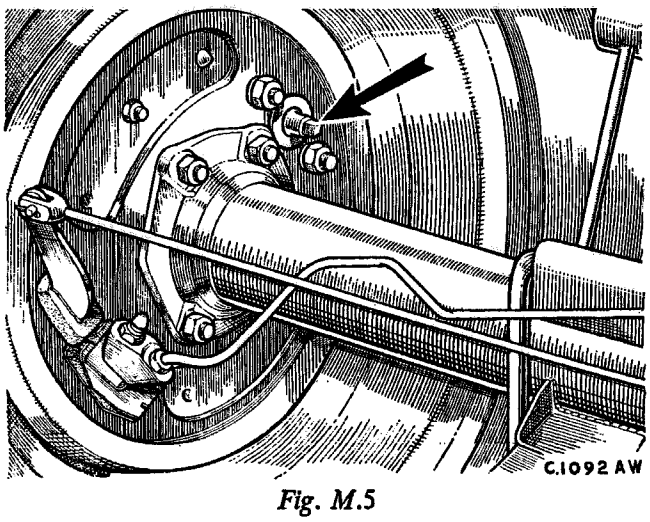

Fig. M.5

The rear wheel brake adjuster

bolts on the outside of the backplate by turning them with an open-ended spanner in an anti-clockwise direction. Turn one of the adjuster bolts in a clockwise direction, slowly and progressively so as to avoid the shoe disengaging from the wheel cylinder, until the brake-shoe concerned touches the brake-drum, then back off the adjustment the least possible amount until the drum is free to revolve. One notch should provide the correct clearance. Repeat the process for the second adjuster and shoe. Apply the foot brake to centralize the shoes and check that the drum is free to rotate when the pedal pressure is relieved. Carry out the same operations for the other front wheel and remove the jack.

Rear

Scotch the front wheels, **release the hand brake fully,** and jack up the rear axle until the wheels are free to rotate. Using an open-ended spanner, turn the squared end of the adjuster in a clockwise direction until resistance is felt. Back off the adjuster two 'clicks' which can be felt or heard, when the drum should rotate freely. It should be noted that only one adjuster is provided for both shoes. Apply the foot brake to centralize the shoes and check that the drum is free to rotate when the pedal pressure is relieved. Carry out the same operations for the other rear wheel, apply the hand brake, and remove the jack.

NOTE.—Do not adjust the brakes while the drums are hot, as after cooling has taken place the drums contract and brake drag is likely to result.

On no account must the brake-rods be used as a means of taking up brake lining or drum wear as they are correctly set at the Works on erection. All hand brake adjustment is automatically dealt with by the rear brake-shoe adjustment described in the foregoing instructions.

Section M.4

REMOVING AND REPLACING THE BRAKE-SHOES

Front

Jack up and remove the wheel and brake-drum.

Lift the trailing end of a shoe from the abutment on the wheel cylinder and the leading end from the piston

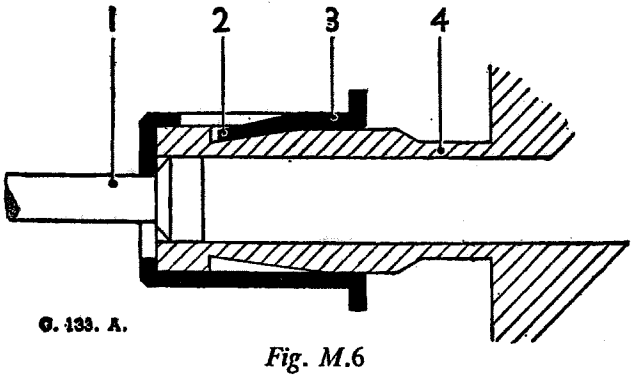

Fig. M.6

Diagrammatic section of the master cylinder

1. Valve stem.
2. Thimble leaf.
3. Thimble.
4. Plunger.

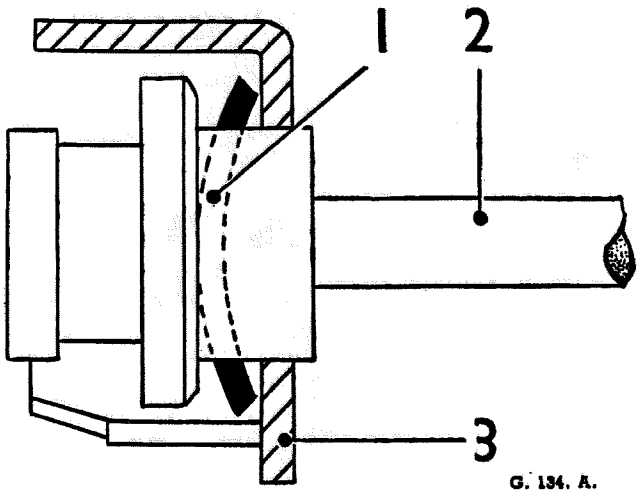

Fig. M.7

Further section of the master cylinder

1. Washer. 2. Valve stem. 3. Valve spacer.

of the opposite cylinder; detach the spring and shoe. Repeat with the other shoe. Prevent the pistons from falling out of the cylinders by the use of rubber bands or wire.

Before refitting the shoes lightly smear the steady posts and both ends of the shoes with Girling White Brake Grease, but take care to keep all grease from the rubber parts and pistons, and from the linings.

Fit the shoes firmly in the slotted end of the cylinders. The swan-necked end of the spring must be connected to the shoe web and the hooked end to the lug adjacent to the wheel cylinder. Fit the brake-drum and adjust as detailed in Section M.3.

Rear

Jack up and remove the wheel and brake-drum; it may be necessary to slacken off all the adjustment in order to fit replacement shoes. Note that the lining of the leading shoe is fitted towards the trailing end and that of the trailing shoe towards the leading end. Both springs are connected between the shoes, the lighter spring at the wheel cylinder ends.

Before fitting the shoes lightly smear the steady posts and both ends of the shoes with Girling White Brake Grease, but take care to keep all grease from the rubber parts and pistons, and from the linings.

Fit the shoes firmly in the slotted ends of the cylinder and adjuster and drum, and adjust as detailed in Section M.3.

Section M.5

REMOVING AND REPLACING THE MASTER CYLINDER

Unhook the brake pedal pull-off spring.

Undo the pressure pipe at its union on the master cylinder.

Remove the 10 nuts and bolts which secure the cylinder housing to the bulkhead and lift the housing out of the vehicle.

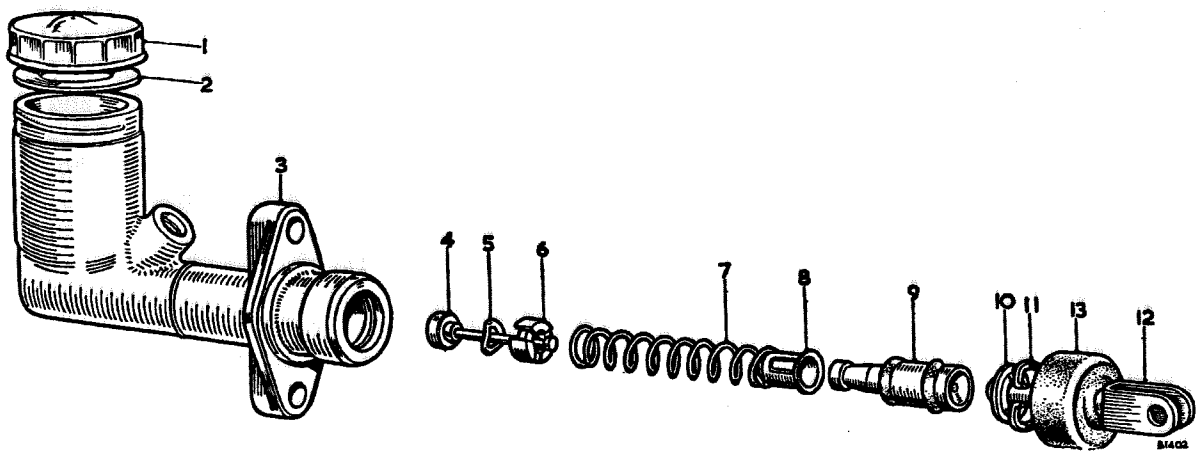

Fig. M.8

Components of the master cylinder and reservoir

1. Filler cap.
2. Washer.
3. Master cylinder.
4. Valve stem.
5. Spring washer.
6. Valve spacer.
7. Return spring.
8. Thimble.
9. Plunger.
10. Dished washer.
11. Circlip.
12. Fork.
13. Dust cover.

Slide the cover-plate off the cylinder housing.

Remove the clevis pin from the push-rod yoke.

Undo the nut and tap out the pedal pivot pin.

Separate the housing from the cylinder by removing the two bolts from the mounting flange.

Refitting is a reversal of the removal procedure, but care should be taken to fit the pedal pivot pin into the lower hole in the cylinder housing.

The brake system must be bled as described in Section M.2.

Section M.6

DISMANTLING AND REASSEMBLING THE MASTER CYLINDER

Remove the filler cap and drain out the fluid. Pull back the rubber dust cover and remove the circlip with a pair of long-nosed pliers. The push-rod and dished washer can then be removed. When the push-rod has been removed the plunger with seal attached will be exposed, therefore remove the plunger assembly complete. The assembly can be separated by lifting the thimble leaf over the shouldered end of the plunger.

Depress the plunger return spring, allowing the valve stem to slide through the elongated hole of the thimble, spring, and valve complete. Detach the valve spacer, taking care of the spacer spring washer which is located under the valve head. Remove the seals from the valve head and plunger.

Examine all parts, especially the seals, for wear or distortion and replace with new parts where necessary.

Replace the valve seal so that the flat side is correctly seated on the valve head. The spring washer should then be located with the dome side against the under side of the valve head and held in position by the valve spacer, the legs of which face towards the valve seal. Replace the plunger return spring centrally on the spacer, insert the thimble into the spring, and depress until the valve stem engages through the elongated hole of the thimble, making sure the stem is correctly located in the centre of the thimble. Check that the spring is still central on the spacer. Refit a new plunger seal on the plunger with the flat of the seal against the face of the plunger. Refit the plunger end seal, using a new seal if necessary. Insert the reduced end of the plunger into the thimble until the thimble leaf engages under the shoulder of the plunger. Press home the thimble leaf.

Smear the assembly well with the recommended brake fluid and insert the assembly into the bore of the cylinder valve end, first easing the plunger seal lips in the bore. Replace the push-rod, with the dished side of the washer under the spherical head, into the cylinder, followed by the circlip which engages into the groove machined in he cylinder body.

Replace the rubber dust cover.

Section M.7

REMOVING AND REPLACING A FRONT WHEEL CYLINDER

Jack up and remove the wheel, drum, and shoes.

Disconnect the bridge pipe unions from the cylinder.

Unscrew the two securing nuts and remove the cylinder.

When refitting, tighten the wheel cylinder nuts to a torque wrench reading of 5 to 7·5 lb. ft. (·69 to 1·03 kg. m.).

After refitting bleed the brakes.

Section M.8

DISMANTLING AND REASSEMBLING A FRONT WHEEL CYLINDER

Remove the cylinder as detailed in Section M.7.

Remove the rubber dust cover; withdraw the piston seal, spreader, and spring; use air pressure to extract the remaining components from the cylinder.

Replacement is a reversal of the dismantling procedure.

Section M.9

REMOVING AND REPLACING A REAR WHEEL CYLINDER

Jack up the wheel and remove the wheel, drum, and shoes.

Disconnect the pipe from the union, the rod at the hand brake lever, and remove the rubber boot from the rear of the backplate.

With a screwdriver prise the retainer and spring plates apart and tap the retaining plate from below the neck of the wheel cylinder.

Withdraw the hand brake lever from between the backplate and wheel cylinder.

Remove the spring plate and distance pieces, and finally the cylinder from the backplate.

To refit, smear the backplate and cylinder with Girling White Brake Grease and mount the cylinder onto the backplate with the neck through the large slot. Replace the distance piece between the cylinder neck and the backplate with the open end away from the hand brake location; the two cranked lips must also be away from the backplate.

Replace the hand brake lever. Locate the retaining plate between the distance piece and the spring plate (open end towards the hand brake lever) and tap into position until the two cranked lips of the spring plate locate in the retaining plate.

Fit the rubber cover. Connect the pipe to the union and the rod to the hand brake lever. Replace the shoes, drum, and wheel.

Bleed and adjust the brakes.

Section M.10

DISMANTLING AND REASSEMBLING A REAR WHEEL CYLINDER

Remove the cylinder as detailed in Section M.9.

Remove the spring clip and rubber dust cover.

Blow out the piston and seal.

Replacement is a reversal of the dismantling procedure.

Section M.11

DISMANTLING AND REASSEMBLING A REAR BRAKE ADJUSTER

Jack up and remove the wheel, drum, and shoes.

To prevent loss of brake fluid slip an elastic band over the wheel cylinder piston to hold it in place.

Remove the adjuster securing set bolts and withdraw the adjuster assembly.

Remove the two links from the adjuster housing.

Unscrew the wedge from the adjuster housing.

Clean the components of the adjuster in paraffin.

Inspect the inclined faces of the wedge and links for excessive wear. It is recommended that when renewing parts of the adjuster do so as a set.

Lightly smear the wedge and links with Girling Brake Grease (White).

Screw the wedge fully into the adjuster housing.

Bolt the adjuster onto the backplate.

Slide the links into the adjuster housing.

Remove the elastic band from the wheel cylinder.

Fit the shoes and drum and adjust as detailed in Section M.3.

Section M.12

REMOVING AND REPLACING PIPES AND HOSES

During service operations which involve the removal or replacement of the flexible hoses great care must be

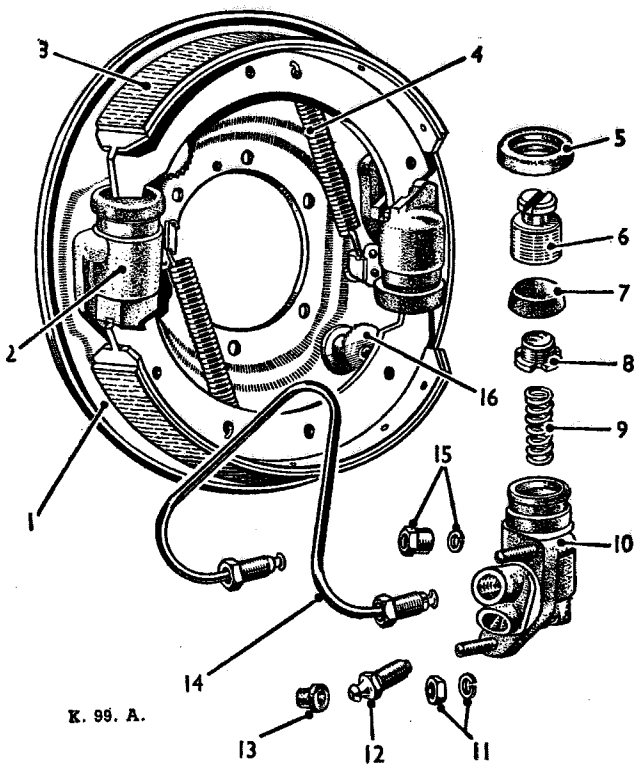

Fig. M.9

Front brake backplate

1. Backplate.
2. Wheel cylinder.
3. Shoe lining.
4. Shoe return spring.
5. Rubber dust cover.
6. Piston.
7. Seal.
8. Seal support.
9. Spring.
10. Cylinder housing.
11. Washer and nut.
12. Bleed screw.
13. Bleed screw cover
14. Cylinder connecting pipe.
15. Washer and nut.
16. Cam adjuster.

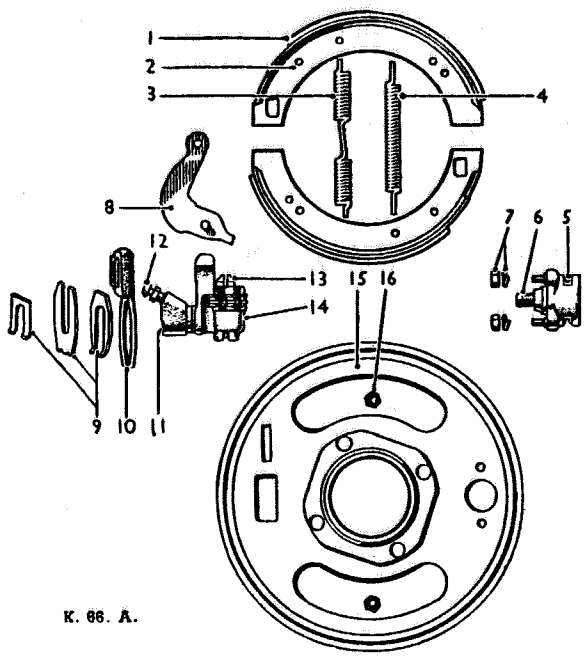

Fig. M.10

Rear brake backplate

1. Shoe lining.
2. Shoe.
3. Shoe return spring.
4. Shorter return spring.
5. Adjuster body.
6. Adjuster wedge.
7. Nut and washer.
8. Hand brake lever.
9. Cylinder securing clips.
10. Rubber washer.
11. Pipe orifice.
12. Bleed screw.
13. Slot for shoe.
14. Cylinder body.
15. Backplate.
16. Backplate dimple.

taken to avoid damaging them by twisting or straining. Place a tray under the pipe and hose connections to catch the fluid and proceed as follows.

Release the locknut on the hose adjacent to the pipe union nut and, whilst holding the hexagon of the hose with an open-ended spanner to prevent the hose from turning, unscrew the pipe union nut and withdraw the hose. The front hose may now be unscrewed from the swivel housing bracket or, in the case of the rear hose, from the three-way connection on the rear axle.

The steel pipes may be removed by unscrewing their union nuts from the connectors and wheel cylinders and releasing them from their frame clips.

Examine all pipes and hoses for leakage. Check the pipes carefully for bends or twisting likely to cause restriction. Examine the hoses for signs of perishing and weakness. Renew any damaged hoses or pipes.

Thoroughly flush the pipes and hoses with brake fluid or alcohol, and to further ensure that no obstructions or foreign matter are present apply an air pressure line to blow them out.

The replacement of the pipes and hoses is a reversal of the removal procedure, noting the following points.

Do not make pipe joints with packing compound; make clean metal-to-metal joints only.

Bleed the system (see Section M.2).

Section M.13

HAND BRAKE

The hand brake linkage is set when leaving the Works and should not require any attention under normal maintenance. Only when a complete overhaul is necessary should the hand brake linkage require resetting. Under these circumstances adjust the linkage as follows.

Jack up the rear of the vehicle and adjust the rear brakes as described in Section M.3.

Before reconnecting the hand brake linkage set the fork ends on the short control rod so that each end of the rod protrudes one complete thread beyond the fork end. The fork end on the front end of the long control rod should be similarly set.

With the hand brake lever in the 'off' position, refit the two control rods and secure them in position with clevis pins, washers, and split pins. Do not tighten the fork end locknuts at this stage.

The hand brake should be hard on when the lever has been pulled up four notches on the ratchet. If necessary, alter the effective length of the short control rod to obtain this condition.

Tighten the fork end locknuts and lower the vehicle to the ground.

Section M.14

ROAD-TESTING AFTER BRAKE SERVICING

After servicing the brake equipment it is advisable to test the operation of the brakes by driving the vehicle on

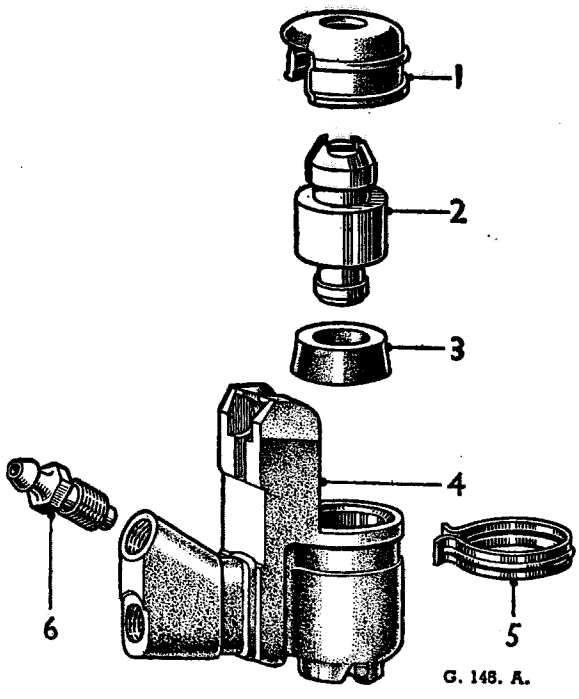

Fig. M.11

Rear brake cylinder (exploded)

1. Dust cover.
2. Piston.
3. Seal.
4. Cylinder body.
5. Clip.
6. Bleed screw.

a hard, dry, level road of concrete or similar road surface at 20 m.p.h. (32 km.p.h.) and then bringing the vehicle to rest by applying the foot brake. Check all four wheels for uneven braking; this will probably be apparent until any new linings installed have properly bedded down.

After bedding down, the brakes should be checked, and readjusted if necessary (see Section M.3).

Test the hand brake, which should be capable of holding the vehicle stationary on a steep gradient.

Check the braking efficiency with the table below.

TABLE OF BRAKE EFFICIENCIES AND STOPPING DISTANCES

Speed		*Rate of retardation*									
		70 *per cent. Very good*		60 *per cent. Good*		50 *per cent. Fair*		40 *per cent. Require attention*		30 *per cent. Dangerous*	
m.p.h.	*km.p.h.*	*Feet*	*Metres*	*Feet*	*Metres*	*Feet*	*Metres*	*Feet*	*Metres*	*Feet*	*Metres*
20	32	19	5·8	22	6·7	27	8·2	34	10·4	45	13·7
30	48	43	13·1	50	15·2	60	18·3	75	22·8	100	30·5
40	64	77	23·5	89	27·1	107	32·6	134	40·8	178	54·3

●Section M.15

PREVENTIVE MAINTENANCE

To safeguard against the possible effects of wear or deterioration it is recommended that:

(1) Disc brake pads, drum brake linings, hoses, and pipes should be examined at intervals no greater than those laid down in the Passport to Service.

(2) Brake fluid should be changed completely every 18 months or 24,000 miles (40000 km.) whichever is the sooner.

(3) All fluid seals in the hydraulic system and all flexible hoses should be examined and renewed if necessary every 3 years or 40,000 miles (65000 km.) whichever is the sooner. At the same time the working surface of the pistons and of bores of the master cylinder, wheel cylinders, and other slave cylinders should be examined and new parts fitted where necessary.

Care must be taken always to observe the following points:

(*a*) At all times use the recommended brake fluid.

(*b*) Never leave fluid in unsealed containers. It absorbs moisture quickly and this can be dangerous.

(*c*) Fluid drained from the system or used for bleeding is best discarded.

(*d*) The necessity for absolute cleanliness throughout cannot be overemphasized.●

SERVICE TOOLS

18G536. Torque Wrench—2 to 8 lb. ft.

A universal torque wrench for use with standard sockets. This type of tool is essential if the recommended maximum torque for various nuts is not to be exceeded.

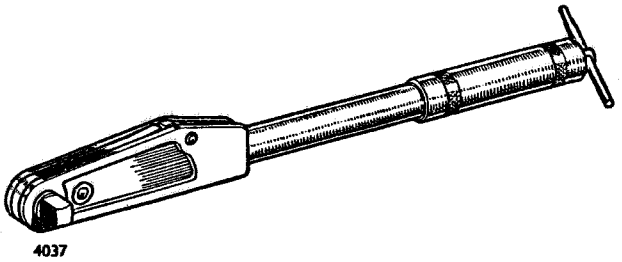

SECTION N

THE ELECTRICAL EQUIPMENT

(PETROL MODELS)

	Section
Adjusting the horn	N.18
●Alternator	
Description	N.28
Dismantling and reassembling	N.31
Removing and replacing	N.29
Testing	N.30●
Battery maintenance	N.2
Control box	
Description	N.10
Servicing	N.11
●Control unit	N.32●
Description of the electrical equipment	N.1
Dynamo	
Dismantling and reassembling	N.5
Removing and replacing	N.4
Testing	N.3
●Field isolating relay	N.33●
Fitting a windscreen wiper arm	N.15
Flashing direction indicators	N.17
Fuses	N.16
Headlamp unit (sealed beam)	N.25
Renewing bulbs	
Headlamps	N.19
Rear flashing direction indicator lamps	N.22
Rear number-plate lamp	N.24
Side and flashing direction indicator lamps	N.21
Tail and stop lamps	N.23
Warning and panel lamps	N.26
Replacement bulbs	N.27
Setting the headlamps	N.20
Starter motor	
Checking the circuit	N.7
Description	N.6
Dismantling and reassembling	N.9
Removing and replacing	N.8
●Warning lamp control unit	N.34●
Windscreen wiper motor	
Dismantling and reassembling	N.14
Servicing	N.13
Windscreen wipers (operation and maintenance)	N.12

Section N.1

DESCRIPTION OF THE ELECTRICAL EQUIPMENT

The 12-volt electrical equipment incorporates compensated voltage control for the charging circuit. The positive earth system of wiring is employed.

Battery details may be found in 'GENERAL DATA'.

The dynamo is mounted on the right of the cylinder block and driven by endless belt from the crankshaft pulley. A rotatable mounting enables the belt tension to be adjusted.

The voltage control unit adjustment is sealed and should not normally require attention. The fuses are carried in external holders mounted in an accessible position together with spare fuses.

The starter motor is mounted on the flywheel housing on the right-hand side of the engine unit and operates on the flywheel through the usual sliding pinion device.

The headlamps employ the double-filament dipping system. Both lamps are fitted with double-filament bulbs, both dipping either vertically or to the left or right according to the regulations existing in the country concerned.

Section N.2

BATTERY MAINTENANCE

In order to keep the battery in good condition a periodical inspection must be made: the cell specific gravity should be checked, and the electrolyte should be topped up if necessary.

Boost charging and arc welding

Always disconnect the battery earth lead when boost charging, or arc welding on the body. Considerable damage may be done to electrical components, particularly those incorporating semi-conductors, if the ignition/master switch is turned while the battery remains connected to the vehicle electrical system.

Topping up

Remove the filler plug from each cell and examine the level of the electrolyte. Add distilled water as required to bring the level of the electrolyte in each cell just above the separators.

NOTE.—Do not use tap-water and do not use a naked light when examining the condition of the cells. Wipe away all dirt and moisture from the top of the battery.

Testing the condition of the battery

At the recommended periods examine the condition of the battery by taking hydrometer readings. The specific gravity readings and their indications are as follows:

Climates normally below 27° C. (80° F.)

1·270 to 1·290	Cell fully charged.
1·190 to 1·210	Cell about half-discharged.
1·110 to 1·130	Cell completely discharged.

Climates frequently above 27° C. (80° F.)

1·210 to 1·230	Cell fully charged.
1·130 to 1·150	Cell about half-discharged.
1·050 to 1·070	Cell completely discharged.

These figures are given assuming an electrolyte temperature of 16° C. (60° F.). If the temperature of the electrolyte exceeds this ·002 must be added to hydrometer readings for each 5° F. rise to give the true specific gravity. Similarly, ·002 must be subtracted from hydrometer readings for every 5° F. below 60° F.

The readings of all the cells should be approximately the same. If one cell gives a reading very different from the rest it may be that the electrolyte has been spilled or has leaked from the cell or there may be an internal fault. In this case it is advisable to have the battery examined by a battery specialist. Should a battery be in a low state of charge, it should be recharged by taking the vehicle for a long daytime run or by charging from an external source of D.C. supply at a current rate of 6·5 amps. until the cells are gassing freely.

After examining the battery check the vent plugs, making sure that the air passages are clear, and screw the plugs into position. Wipe the top of the battery to remove all dirt and moisture.

Storage

If a battery is to be out of use for any length of time it should first be fully charged and then given a freshening charge about every fortnight.

A battery must never be allowed to remain in a discharged condition as this will cause the plates to become sulphated.

Initial filling and charging

The specific gravity of the electrolyte necessary to fill a new battery which has been supplied dry and the specific gravity at the end of the charge are as follows:

Climate	*S.G. of filling acid (corrected to*	*S.G. at end of charge 16° C. [60° F.])*
Normally—below 27° C. (80° F.)	1·260	1·270 to 1·290
Frequently over 27° C. (80° F.)	1·210	1·210 to 1·230

The electrolyte is prepared by mixing distilled water and concentrated sulphuric acid 1·840 S.G. The mixing must be carried out in a lead-lined tank or a suitable glass or earthenware vessel. Steel or iron containers must not be used. The acid must be added slowly to the water while the mixture is stirred with a glass rod. **Never add the water to the acid,** as the severity of the resulting chemical reaction may have dangerous consequences.

Heat is produced by the mixture of acid and water, and electrolyte should, therefore, be allowed to cool before it is poured into the battery, otherwise the plates, separators, and moulded container may be damaged.

The temperature of the filling-in acid, battery, and charging room should be above 0° C. (32° F.).

To produce electrolyte of the correct specific gravity:

To obtain specific gravity (corrected to 60°F. [16°C.])	*Add 1 part by volume of 1·840 S.G. acid to distilled water by volume as below*
1·260	3·2 parts
1·210	4·3 parts

Carefully break the seals in the filling holes and half-fill each cell in the battery with dilute sulphuric acid solution of the appropriate specific gravity (according to temperature) (see table above). The quantity of electrolyte required to half-fill a two-volt cell is ½ pint (·28 litre). Allow to stand for at least six hours, then complete the filling of the cells by the addition of more diluted acid of the same specific gravity as before until the level reaches the bottom of the filling holes, and allow the battery to stand for at least another two hours before commencing the first charge.

Charge at a constant current of 4·5 amps. until the voltage and temperature-corrected specific gravity readings show no increase over five successive hourly readings. This period is dependent upon the length of time the battery has been stored since manufacture, and will be from 48 to 80 hours, but usually not more than 60.

Throughout the charge the acid must be kept level with the tops of the separators in each cell by the addition of acid solution of the same specific gravity as the original filling-in acid.

Maximum permissable electrolyte temperature during charge

Climates normally below 27° C. (80° F.) .. .. .. 38° C. (100° F.).

Climates normally above 27° C. (80° F.) .. .. .. 49° C. (120° F.).

At the end of the first charge, i.e. when specific gravity and voltage measurements remain substantially constant, carefully check the specific gravity in each cell to ensure that it lies within the limits specified. If any cell requires adjustment the electrolyte above the plates must be siphoned off and replaced either with acid of the strength used for the original filling in, or distilled water, according to whether the specific gravity is too low or too high respectively. After such adjustment the gassing charge should be continued for one or two hours to ensure adequate mixing of the electrolyte. Re-check, repeating the procedure, if necessary, until the desired result is obtained.

Section N.3

TESTING THE DYNAMO IN POSITION

In the event of the dynamo failing to charge or if the charging rate becomes intermittent the following tests should be carried out before removing the dynamo from the engine:

(1) Check the fan and dynamo driving belt for slipping and correct tension. It should be possible to deflect the fan belt 1 in. (25·4 mm.) at the centre of its longest run. If the tension is incorrect the belt should be adjusted as described in Section C.6.

(2) Check that the dynamo and control box are connected correctly. The dynamo terminal 'D' should be connected to the control box terminal 'D' and the dynamo terminal 'F' connected to the control box terminal 'F'.

(3) Disconnect the cables from the dynamo terminals and bridge the two terminals with a short piece of copper wire. Start and set the engine to run at normal idling speed.

Clip the negative lead of a moving-coil-type voltmeter, calibrated 0–20 volts, to one dynamo terminal and the other lead to a good earthing point on the dynamo yoke.

Gradually increase the engine speed, when the voltmeter reading should rise rapidly and without fluctuation. Do not allow the voltmeter reading to reach 20 volts. Do not race the engine in an attempt to increase the voltage. It is sufficient to run the dynamo up to a speed of 1,000 r.p.m.

If there is no reading check the brush gear (see Section N.5).

If the reading is low (approximately 1 volt) the field winding may be faulty.

If the reading is approximately 6 volts the armature winding may be faulty.

If the dynamo is in good order, test the cables connecting the terminals on the dynamo to the terminals on the control box for continuity. Finally, remove the bridging wire from the terminals on the dynamo and restore the connections.

Section N.4

REMOVING AND REPLACING THE DYNAMO

Disconnect the cables from the dynamo terminals.

Slacken the nut securing the dynamo adjusting link to the engine front plate.

Support the dynamo, and unscrew and remove the adjusting link to dynamo set screw and the two bolts and nuts which secure the dynamo to the water pump body and the bracket on the cylinder block.

Disengage the drive belt from the pulley and withdraw the dynamo from the engine.

Replacement is a reversal of the above procedure, ensuring that the fan and dynamo drive belt is tensioned correctly (see Section C.6) before tightening the dynamo attachment bolts.

Section N.5

DISMANTLING AND REASSEMBLING THE DYNAMO

Remove the nut and spring washer from the armature shaft and withdraw the pulley and dynamo fan.

Remove the key and distance collar from the armature shaft.

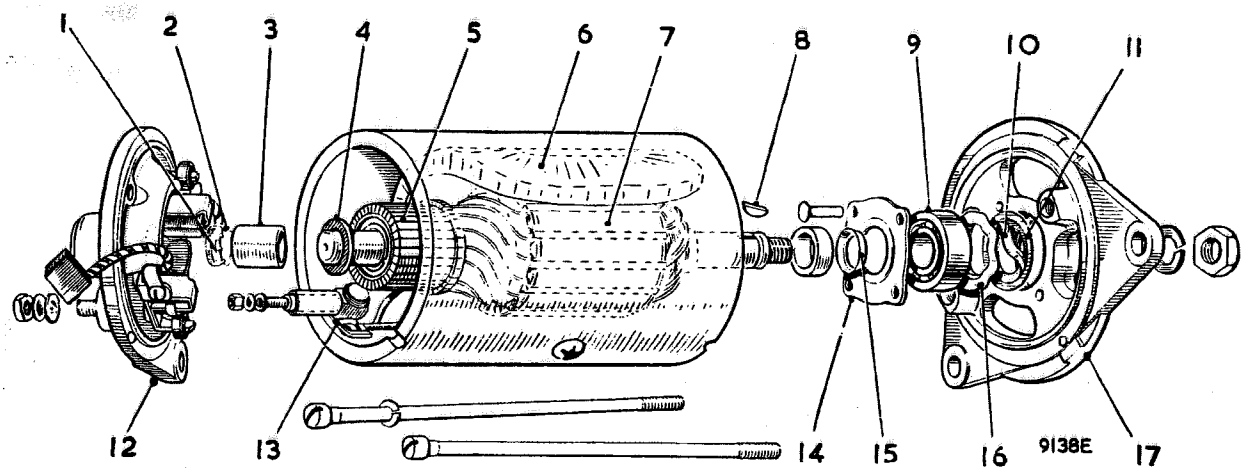

Fig. N.1

Components of the Dynamo

1. Felt ring.
2. Felt ring retainer.
3. Porous bronze bush.
4. Fibre thrust washer.
5. Commutator.
6. Field coil
7. Armature.
8. Key.
9. Bearing.
10. Felt washer.
11. Oil retaining washer.
12. Commutator end bracket.
13. Field coil terminal assembly.
14. Bearing retaining plate.
15. Cup washer.
16. Corrugated washer.
17. Driving end bracket.

Remove the two through-bolts securing the drive and commutator end brackets to the yoke, and withdraw the commutator end bracket complete with brush gear.

Withdraw the armature complete with drive end bracket by tapping the bracket with a hide or wooden mallet. Take care of the fibre thrust washer from the commutator end of the armature shaft.

Press the armature out of the drive end bracket bearing.

Test the field coils before removal as follows:

(1) Measure the resistance of the field coils, using an ohmmeter connected between the field terminal and the dynamo yoke, which should give a reading of 6·0 ohms.

(2) If an ohmmeter is not available, connect a 12-volt D.C. supply between the field terminal and the dynamo yoke with an ammeter in series. The ammeter reading should be approximately 2 amps.

An 'infinity' ohmmeter reading or a zero ammeter reading indicates an open circuit in the field winding, while an ohmmeter reading much below 6·0 ohms or an excessive ammeter reading is an indication that the insulation of one the field coils has broken down.

In either event the field coils must be renewed.

Drill out the rivet securing the field coil terminal assembly to the dynamo yoke. Remove the insulation sleeve from the terminal blade and unsolder the connections to the terminal blade and earthing eyelet.

Remove the insulation piece, which prevents the junction of the field coils contacting the yoke.

Mark the yoke and pole-shoes so that the latter may be refitted in their original positions and unscrew the two pole-shoe retaining screws, using a wheel-operated screwdriver.

Draw the pole-shoes and coils out of the dynamo yoke and lift off the coils.

Clean all parts thoroughly with paraffin, but do not place the armature or field coils in the liquid.

Check for sticking of the brushes in their holders.

Assemble the commutator end bracket to the armature with the brushes held in position on the commutator by their springs. Hold back each of the brush springs in turn and check each brush for freedom of movement by pulling gently on its flexible connection.

To free sticking brushes clean all the carbon deposit away from the brush holders with petrol and, if necessary, ease the brushes by lightly polishing the sides with a smooth file. Check the brushes for excessive wear, and renew if necessary. The minimum permissible length of brush is $\frac{9}{32}$ in. (7 mm.). New brushes are preformed and do not require bedding to the commutator.

Check the brush spring tension. Refit the commutator end bracket to the armature as previously described and, using a small spring balance, measure the spring tension, which should be 30 oz. (850 gm.) maximum with a commutator diameter of 1·485 to 1·490 in. (37·72 to 37·85 mm.) and new brushes. When the brushes are worn to $\frac{9}{32}$ in. (7 mm.) the spring tension should not be less than 13 oz. (369 gm.).

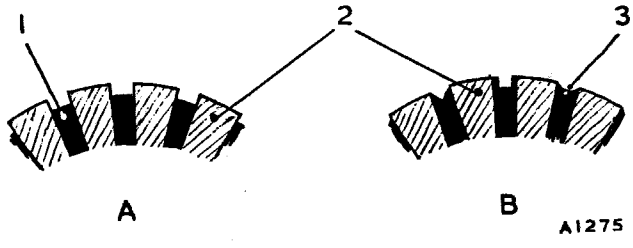

Fig. N.2

Undercutting the commutator (A) *the right way and* (B) *the wrong way*

1. Insulator. 2. Segments. 3. Insulator.

Test the bush in the commutator end bracket for wear; if side-movement of the armature shaft in the bush is apparent the bush should be renewed, using a self-extracting tool as shown in Fig. N.4. The diameter of the mandrel portion of the tool fitting pin must be ·5924 in. (15·047 mm.) and highly polished. After pressing in the bush withdraw the tool by tightening the nut against the sleeve, preventing the fitting pin from turning by gripping its squared end. The visible end of the bush must be flush with the inner face of the end bracket.

Before fitting, the new bush should be immersed in thin engine oil for 24 hours to fill the pores of the bush with lubricant.

Do not open out the bush after fitting as this will interfere with its porosity and impair lubrication.

To make a thorough check on the condition of the armature the use of a voltage drop test and growler is essential. If these are not available, the armature should be checked by substitution. No attempt should be made to machine the armature core or to true a distorted armature shaft.

Clean the commutator of the old armature with a cloth moistened with petrol. If this is ineffective, carefully polish with a strip of fine glass-cloth **(not emery)**. Pass the glass-cloth round the commutator and draw it backwards and forwards while the armature is slowly rotated.

A moulded-type commutator is fitted to some dynamos, and should skimming be necessary, care must be taken to ensure that the finished diameter is not less than 1·45 in. (36·83 mm.). The process of reskimming consists of rough-turning (this is dependent upon the severity of the wear), undercutting, and diamond turning, in that order. The armature should be renewed if the commutator cannot be cleaned up without going below the diameter of 1·45 in. (36·83 mm.). Undercut the insulation between the commutator segments to a depth of ·020 to ·035 in. (·51 to ·89 mm.), ensuring that the slot width does not exceed ·040 in. (1·02 mm.). It is important that the insulation material is cleared from the sides of the slots to a mimimum depth of ·015 in. (·38 mm.). When skimming the fabricated-type commutator undercut the insulation between the segments to a depth of $\frac{1}{32}$ in. (·8 mm.) and then take a light skim, using a very sharp tool. If the tool does not have a diamond tip the commutator should be polished with very fine glass-cloth **(not emery)**.

Test the ball bearing in the drive end bracket. The bearing should be renewed if it is worn to such an extent that it will allow side-movement of the armature shaft. To remove the bearing, drill out the four rivets securing the bearing retaining plate and press the bearing out of the bracket. Thoroughly clean the new bearing and pack it with high-melting-point grease before pressing it into the drive end bracket. Install the bearing retaining plate

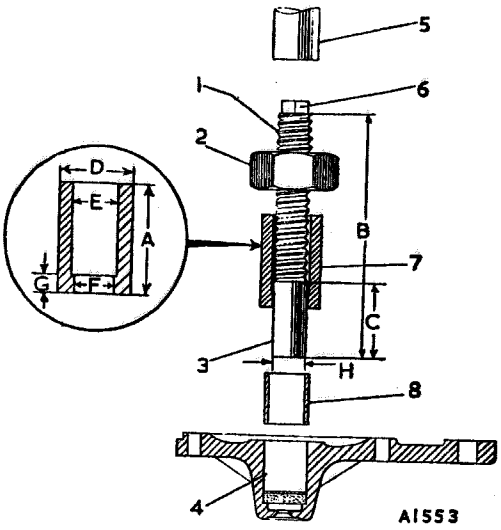

Fig. N.4

Using a self-extracting-type tool to fit the dynamo end bracket bush

1.	$\frac{5}{8}$ in. B.S.F. truncated thread.	A.	$1\frac{1}{2}$ in. (38 mm.).
2.	Extracting nut.	B.	4 in. (10·2 cm.).
3.	Fitting pin.	C.	$1\frac{1}{4}$ in. (31·8 mm.).
4.	Bearing housing.	D.	$1\frac{5}{16}$ in. (33·3 mm.).
5.	Hand press.	E.	·625 in. (15·87 mm.).
6.	Squared end.	F.	·605 in. (16·51 mm.).
7.	Sleeve.	G.	$\frac{1}{4}$ in. (6·35 mm.).
8.	Bush.	H.	·5924 in. (15·05 mm.).

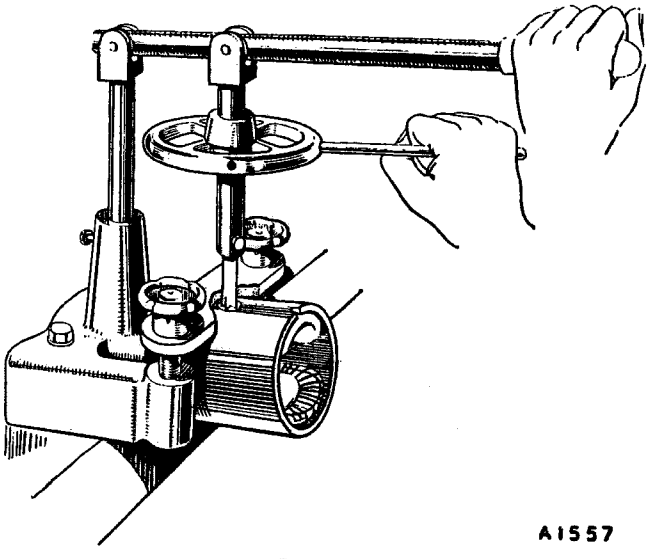

Fig. N.3

Tightening the dynamo pole-shoe retaining screws, using a wheel-operated screwdriver

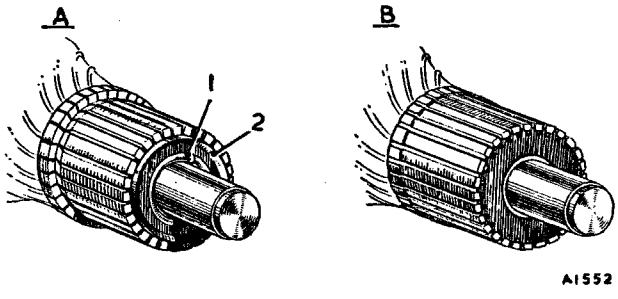

Fig. N.5

The dynamo commutator

1.	Metal roll-over.	A.	Fabricated type.
2.	Insulating cone.	B.	Moulded type.

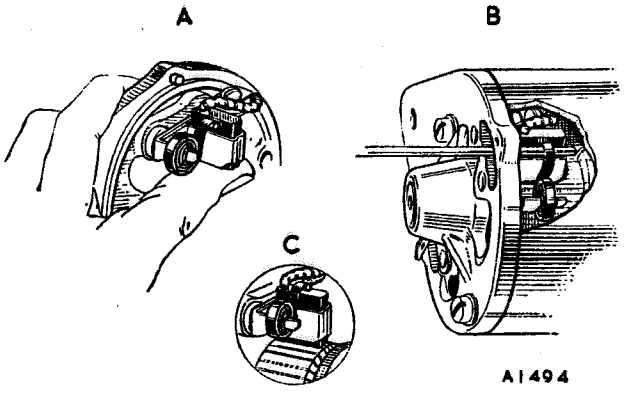

Fig. N.6

Fitting the dynamo commutator end bracket

A. Brush trapped by spring in the raised position.
B. Releasing the brush onto the commutator.
C. Normal position of brush.

and secure in position by riveting, inserting the rivets into the end bracket from the outside.

Reassembly of the dynamo is a reversal of the dismantling procedure, noting the following points.

Press the drive end of the armature shaft into the ball bearing in the drive end bracket. During the pressing operation support the bearing inner race, using a length of suitable tubing. **Do not** use the drive end bracket to support the bearing.

Locate the field coils and pole-shoes by lightly tightening the securing screws, ensuring that the taping of the field coils is not trapped between the pole-shoes and the yoke, Finally, tighten the screws, using a wheel-operated screwdriver.

When reassembling the commutator end bracket the brushes must be held clear of the commutator. Partially withdraw each brush until it is trapped in position in the brush box by the side pressure of its spring. Assemble the end bracket to the yoke, ensuring that the dowel on the end bracket engages the slot in the yoke. Insert a thin screwdriver through the appropriate ventilator holes in the end bracket and gently lever up the brush spring arms to release the brushes onto the commutator.

After reassembly the dynamo should be checked on a test bench against the following performance data:

(1) Cutting-in speed	..	1,250 to 1,450 r.p.m. at 13·0 dynamo volts.
(2) Maximum output	..	22 amps. at 2,050 to 2,250 r.p.m. at 13·5 dynamo volts and a resistance load of ·61 ohm.
(3) Field resistance	..	6·0 ohms.

Section N.6

DESCRIPTION OF THE STARTER MOTOR

The starter motor is a series-wound, four-pole electric motor incorporating an inertia-operated pinion designed to turn the engine and automatically disengage when the engine starts.

The principal features are a field system housed in a yoke (cylindrical frame), brush gear integrated with the commutator end bracket, an armature carrying the drive mechanism, and a drive end bracket, the yoke and end brackets being secured together by two through-bolts.

Incorporated in the inboard-type drive is the main spring so arranged to counteract shock loading upon engagement of the pinion with the flywheel gear. A pinion-restraining spring is also provided to prevent the pinion vibrating into mesh with the flywheel gear whilst the engine is running.

The drive assembly consists of a plain sleeve mounted on the splined armature shaft and butting against the drive end bearing journal. The restraining spring is located over the plain sleeve and seats in a collar which contacts the pinion. The pinion screwed sleeve, which is splined on the shaft, is interposed between the end of the plain sleeve and the thrust washer against which the main spring butts, the complete assembly being retained on the shaft by the shaft nut, which is split-pinned.

With the starter switch in the closed position the battery supplies energy to the starter motor via the connecting cables, causing the armature to be electrically rotated. At the moment of closing the starter switch a heavy current flows around the armature windings and series field coil windings, causing a strong turning movement of the armature, resulting in rapid acceleration.

Rotation of the armature causes the pinion to move along the screwed sleeve and engage with the flywheel gear. When fully in mesh further forward movement of the pinion is prevented by the collar contacting the shoulder of the sleeve, and the pinion drive is taken via the screwed sleeve and the splines on the armature shaft. As the screwed sleeve, however, is a sliding fit on the shaft the sleeve can move towards the rear of the shaft against the resistance of the main spring, and in this manner the shock loading of initial pinion engagement is absorbed.

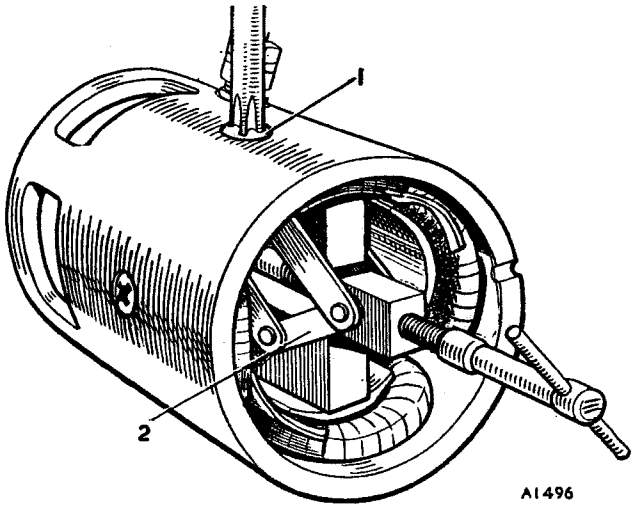

Fig. N.7

Assembling the dynamo field coils

1. Pole-shoe retaining screw. 2. Pole-shoe expander.

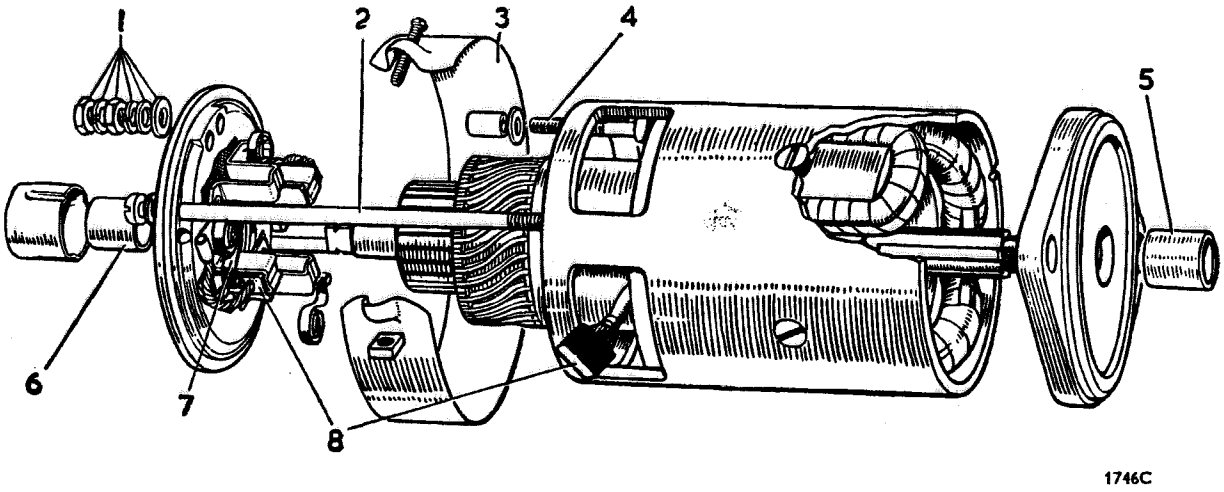

Fig. N.8

The starter motor components

1. Terminal nuts and washers.
2. Through-bolt.
3. Cover band.
4. Terminal post.
5. Bearing bush.
6. Bearing bush.
7. Brush spring.
8. Brushes.

Section N.7

CHECKING THE STARTER CIRCUIT

If the starter motor does not operate, or is sluggish, the following points should be checked prior to removal of the starter. If, however, the motor is heard to operate but does not attempt to crank the engine, indicating a damaged drive, remove the starter for inspection.

Connect a voltmeter (0–20) across the battery terminals and operate the starter control.

(1) If the voltmeter reading drops to about 6 volts, but the starter motor is not heard to operate, this indicates that current is flowing through the motor windings, but that the armature is not rotating. Remove the starter from the engine for examination.

(2) If the voltmeter remains steady at about 12 volts, check the circuit for continuity as described below and examine the connections throughout the circuit.

Connect the voltmeter between the push-button supply terminal on the solenoid and earth and operate the button. No reading indicates a faulty switch or a loose connection.

Connect the voltmeter between the battery supply terminal on the solenoid and earth. No reading indicates a completely discharged battery, faulty cable, or loose connection.

Connect the voltmeter between the large output terminal on the solenoid and earth and operate the starter push-button. No reading indicates a faulty solenoid.

If the above are in order check with the voltmeter between the starter motor yoke terminal and earth. Operate the starter, when a reading of 6 to 7 volts should be obtained if the starter is operating normally. A lower or zero reading indicates a faulty internal connection. Remove the starter for servicing.

Section N.8

REMOVING AND REPLACING THE STARTER MOTOR

Disconnect the cable from the positive battery terminal to avoid any danger of causing short circuits.

Disconnect the heavy and light cables from the starter motor and solenoid switch.

The starter motor is secured by two nuts and bolts to the flywheel housing. Take out these and draw the starter motor towards the front of the engine.

The replacement of the starter motor is a reversal of the removal procedure.

Section N.9

DISMANTLING AND REASSEMBLING THE STARTER MOTOR

Before dismantling the starter motor consideration should be given to the advisability of using a factory replacement unit, otherwise the starter motor may be dismantled as follows.

Remove the cover from the squared end of the armature shaft.

Withdraw the split pin from the end of the drive shaft and, holding the squared end of the shaft with a spanner, remove the shaft nut, which has a left-hand thread.

Remove from the drive shaft the main spring, thrust washer, pinion, and screwed sleeve, collar, restraining spring, and shaft sleeve.

Remove the cover band from the yoke and test the tension of the brush springs with a small spring balance.

Remove the insulated brushes from the holders and lift the other two brushes, and wedge them by placing the brush spring on the side of the brush so that they are clear of the commutator.

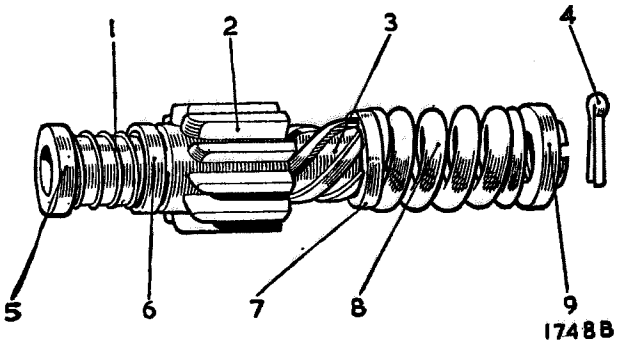

Fig. N.9

Components of the starter motor drive

1. Restraining spring.
2. Pinion.
3. Screwed sleeve.
4. Split pin.
5. Restraining spring sleeve.
6. Collar.
7. Washer.
8. Main spring.
9. Shaft nut.

Remove the two through-bolts securing the drive and commutator end brackets to the yoke.

Tap the drive end bracket away from the yoke and shaft.

Withdraw the armature.

Remove the nuts and washers from the field terminal post.

Remove the commutator end bracket assembly, taking care of the insulated bush as it becomes disengaged from the bracket.

Remove the two fibre washers and the insulated sleeve from the field terminal post.

Test the field coils before removal as follows:

(1) Test the field coils for an open circuit with a 12-volt bulb wired in series with two test leads connected to a 12-volt battery and connected to the tapping-point of the field coils to which the brushes are connected and the field terminal post. If the test lamp does not light there is an open circuit and the field coils should be renewed.

(2) If the test lamp lights at test (1) above it does not necessarily mean that the field coils are in order, as it is possible that one of them may be earthed. This may be checked by connecting the test leads between the field terminal post and earth. If the test lamp lights it indicates that the field coils are earthed, and they should be renewed.

Unscrew the four pole-shoe retaining screws and remove the pole-shoes and field coils in a similar manner to the procedure detailed in Section N.5.

Clean all parts thoroughly in paraffin but do not place the armature or field coils in paraffin.

Check for sticking of the brushes in their holders. To free sticking brushes clean the holders of all carbon and copper deposit with petrol, and, if necessary, ease the brushes by lightly polishing the sides with a smooth file. Check the brushes for excessive wear.

Check the brush holders for security.

Renew the brush springs if necessary, as indicated by the tension check made prior to removal. Spring tension limits are 30 to 40 oz. (850 to 1135 gm.).

Test the bushes in the end brackets for wear. Press the worn bushes out of the end brackets. The new bushes should be allowed to stand completely immersed in thin engine oil for 24 hours, or alternatively for two hours in oil which has been heated to 212° F. (100° C.), before pressing them into the end brackets.

To make a thorough check on the condition of the armature the use of a voltage drop test or a growler is essential. If these are not available the armature should be checked by substitution. No attempt should be made to machine the armature core or to true a distorted armature shaft.

Clean the commutator of the old armature with a cloth moistened with petrol. If this is ineffective carefully polish with a strip of fine glass-cloth **(not emery)**. Pass the glass-cloth round the commutator and draw it backwards and forwards while the armature is slowly rotated. If necessary, take a light skim off the commutator. Do not remove any more metal than is necessary, and finally finish off by polishing with glass-cloth. **Do not undercut the insulation between the segments.**

Examine the drive pinion and screwed sleeve for wear or damage. If necessary, the pinion and screwed sleeve must be renewed together—they should not be renewed individually. Ensure that the pinion will spin freely along the threads of the screwed sleeve.

Examine the drive pinion restraining and main springs. If they are broken or appear to be weak they should be renewed. A simple method for checking for weakness is to compare the springs against new counterparts.

Reassembly of the starter motor is a reversal of the dismantling procedure, noting the following points.

The fitting of the field coil requires the use of a pole-shoe expander, which, after locating the field coils and pole-shoes by lightly tightening the fixing screws, is inserted between the pole-shoes and opened to its fullest extent. Finally, tighten the screws, using a special pole-shoe screwdriver.

If new brushes have been installed or the old armature skimmed ensure that the brushes contact the commutator properly. If necessary, a piece of fine glass-cloth (cut to the width of the commutator) should be passed between the commutator and the brushes. Turn the armature in the normal direction of rotation for about half a dozen revolutions, then remove the glass-cloth and blow out all particles of carbon and glass dust with compressed air.

After reassembly the starter motor should be checked for operation before installation as follows.

Secure the yoke of the starter motor in a vice.

Connect heavy-gauge cables from a 12-volt battery to the starter motor, one cable to the starter motor terminal post and the other to the starter motor yoke.

Under these light load conditions the starter should run at a very high speed.

Section N.10

DESCRIPTION OF THE CONTROL BOX

The control box houses the dynamo voltage regulator unit and the cut-out. Although combined structurally,

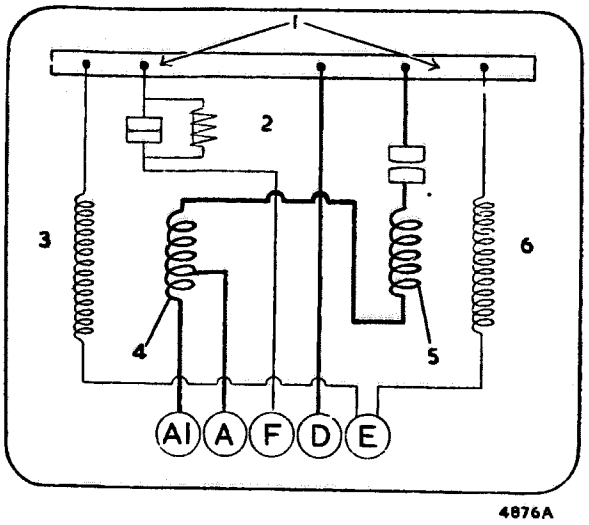

Fig. N.10

The internal wiring and connections of the regulator and cut-out

1. Regulator and cut-out frame.
2. Field resistance.
3. Shunt coil.
4. Tapped series coil.
5. Series coil.
6. Shunt coil.

the regulator and the cut-out are electrically separate. Both are accurately adjusted during assembly, after which the cover protecting them should not be removed unnecessarily.

The regulator unit is arranged to work in conjunction with the dynamo and is set to maintain a predetermined voltage at all speeds above the regulating point, the field strength being controlled by the automatic insertion and withdrawal of a resistance in the dynamo field circuit. When the dynamo voltage reaches a predetermined value the magnetic field due to the shunt or voltage winding becomes sufficiently strong to attract the armature. This causes the contacts to open, thereby inserting the resistance in the field circuit. The consequent reduction in field current lowers the dynamo voltage, and this in turn weakens the magnetic field in the regulator core. The armature is allowed to return to its original position, thus closing the contacts so that the voltage returns to the predetermined maximum. The cycle is then repeated and the armature is set into vibration. As the speed of the dynamo rises above that at which the regulator comes into operation the amplitude of vibration increases and the periods of interruption increase in length, with the result that the mean value of dynamo output undergoes practically no increase once the regulating speed has been attained.

The series or current winding provides a compensation on this system of control, for if the control were arranged entirely on the basis of voltage there would be a risk of very seriously overloading the dynamo when the battery was in a low state of charge, particularly if the lamps were simultaneously in use. Under these conditions, with a battery of low internal resistance the dynamo would be forced to give an output to bring the voltage of the system up to the same value as if the battery were fully charged. This would necessitate an extremely heavy current far beyond the normal capacity of the machine.

The series winding assists the shunt winding, so that when the dynamo is delivering a heavy current into a discharged battery the regulator comes into operation at a somewhat reduced voltage, thus limiting the output accordingly. A split series winding is used, the centre tapping carrying the battery charging current while the complete winding carries lighting and ignition loads. By means of a temperature-compensating device the voltage characteristic of the dynamo is caused to conform more closely to that of the battery under all climatic conditions.

In cold weather the voltage required to charge the battery increases, whilst in warm weather the voltage of the battery is lower.

The cut-out is an automatic switch connected between the dynamo and the battery. It consists of a pair of contacts held open by a spring, and is closed magnetically when the engine is running fast enough to cause the dynamo voltage to exceed that of the battery. The battery will then be charged by the dynamo. On the other hand, when the speed is low or the engine is stationary the contacts open, thus disconnecting the dynamo from the battery and preventing current flowing from the battery through the windings.

Setting data

(*a*) *Regulator*

Open-circuit setting at 20° C. (68° F.) and 1,500 dynamo r.p.m... .. 15·6 to 16·2 volts

NOTE.—For ambient temperatures other than 20° C. (68° F.) the following allowances should be made to the above setting:

For every 10° C. (18° F.) above 20° C. subtract 0·3 volt.

For every 10° C. below 20° C. add 0·3 volt.

(*b*) *Cut-out*

Cut-in voltage	..	.. 12·7 to 13·3
Drop-off voltage	..	.. 8·5 to 10·0
Reverse current	..	.. 3·5 to 5·0 amps.

Section N.11

SERVICING THE CONTROL BOX

Testing in position

To locate a fault in the charging circuit. If the generator and battery are in order check as follows:

(1) Ensure that the wiring between battery and regulator is in order. To do this disconnect the wire from control box terminal 'A' and connect the end removed to the negative terminal of a voltmeter.

Connect the positive voltmeter terminal to an earthing point on the chassis. If a voltmeter reading is given the wiring is in order and the regulator must be examined.

(2) If there is no reading examine the wiring between the battery and the control box for defective cables or loose connections.

(3) Reconnect the wire to control box terminal 'A'.

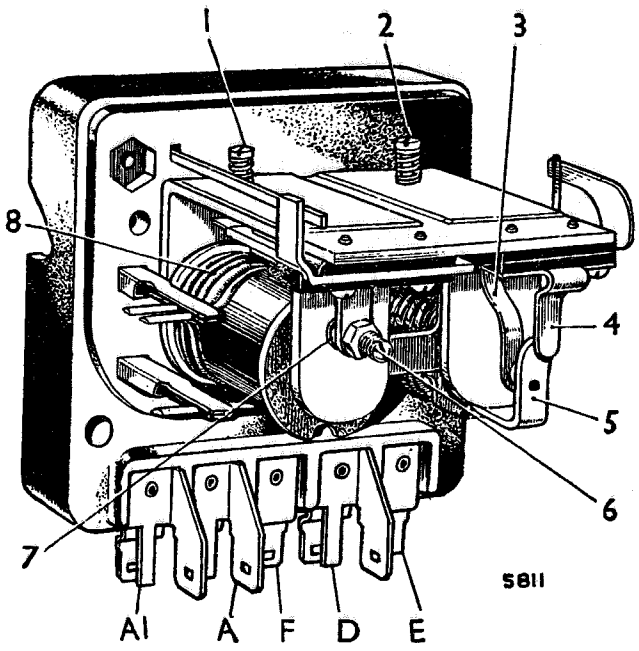

Fig. N.11
The control box

1. Regulator adjusting screw.
2. Cut-out adjusting screw.
3. Fixed contact blade.
4. Stop arm.
5. Armature tongue and moving contact.
6. Regulator fixed contact screw
7. Regulator moving contact.
8. Regulator series winding.

Regulator adjustment

The regulator is carefully set during manufacture and in general it should not be necessary to make further adjustment. If, however, the battery does not keep in a charged condition, or if the generator output does not fall when the battery is fully charged, the setting should be checked and, if necessary, corrected.

It is important before altering the regulator setting to check that the low state of charge of the battery is not due to a battery defect or to slipping of the generator belt.

Electrical setting

It is important that only a good-quality moving-coil voltmeter (0 to 20 volts) is used when checking the regulator. The electrical setting can be checked without removing the cover from the control box.

Withdraw the cables from control box terminals 'A' and 'A1' and connect these cables together.

Connect the negative lead of the voltmeter to control box terminal 'D' and connect the other lead to terminal 'E'.

Slowly increase the speed of the engine until the voltmeter needle 'flicks' and then steadies. This should occur at a voltmeter reading between the appropriate limits previously given according to the ambient temperature existing.

If the voltage at which the reading becomes steady occurs outside these limits the regulator must be adjusted.

Shut off the engine and remove the control box cover.

Turn the regulator adjusting screw (1, Fig. N.11) in a clockwise direction to raise the setting or in an anti-clockwise direction to lower the setting. Turn the screw only a fraction of a turn at a time. Repeat as above until the correct setting is obtained.

Adjustment of the regulator open-circuit voltage should be completed within 30 seconds, otherwise heating of the shunt winding will cause false settings to be made.

Remake the original connections.

A generator run at high speed on open circuit will build up a high voltage. Therefore, when adjusting the regulator do not run the engine up to more than half-throttle or a false setting will be made.

Mechanical setting

The mechanical or air-gap settings of the regulator (shown in Fig. N.12) are accurately adjusted before leaving the Works and, provided that the armature carrying the moving contact is not removed, these settings should not be tampered with. If, however, the armature has been removed the regulator will have to be reset. To do this proceed as follows:

Slacken the fixed contact locking nut (3) and unscrew the contact screw until it is well clear of the armature moving contact.

Slacken the voltage adjusting screw locking nut and unscrew the adjuster until it is well clear of the armature tension spring.

Slacken the two armature assembly securing screws.

Using a 0·015 in. (·38 mm.) thick feeler gauge, wide enough to cover completely the core face, insert the gauge between the armature and core shim, taking care not to turn up or damage the edge of the shim.

Press the armature **squarely** down against the gauge and retighten the two armature assembly securing screws.

With the gauge still in position, screw the adjustable contact down until it just touches the armature contact. Retighten the locking nut. Reset the voltage adjusting screw.

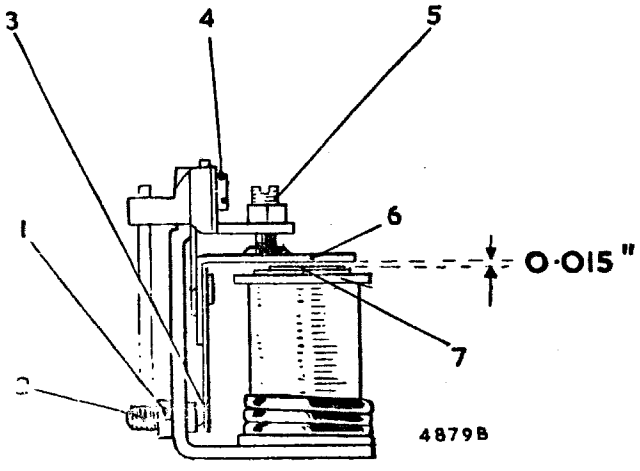

Fig. N.12
Mechanical setting of the regulator

1. Locknut.
2. Voltage adjusting screw.
3. Armature tension spring.
4. Armature securing screws.
5. Fixed contact adjustment screw.
6. Armature.
7. Core face and shim.

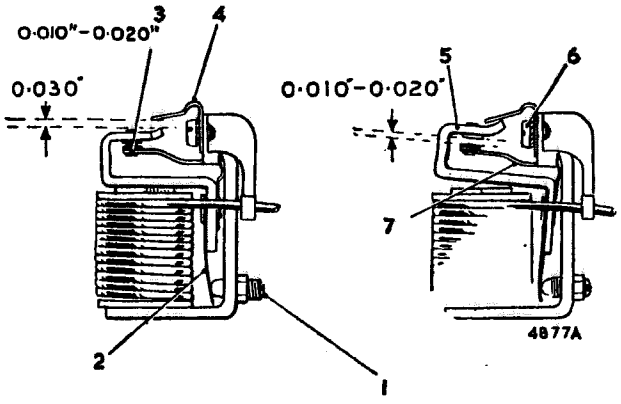

Fig. N.13

Mechanical setting of the cut-out

1. Cut-out adjusting screw.
2. Armature tension spring.
3. 'Follow through'—·010 to ·020 in. (·254 to ·508 mm.).
4. Stop arm.
5. Armature tongue and moving contact.
6. Armature securing screws.
7. Fixed contact blade.

Cleaning contacts

After long periods of service it may be found necessary to clean the regulator contacts. Clean the contacts by means of a fine carborundum stone or fine emery-cloth.

Carefully wipe away all traces of dust or other foreign matter with methylated spirits (de-natured alcohol).

Cut-out adjustment

Electrical setting

If the regulator is correctly set but the battery is still not being charged the cut-out may be out of adjustment. To check the voltage at which the cut-out operates remove the control box cover and connect the voltmeter between terminals 'D' and 'E'. Start the engine and slowly increase its speed until the cut-out contacts are seen to close, noting the voltage at which this occurs. This should be 12·7 to 13·3 volts.

If operation of the cut-out takes place outside these limits it will be necessary to adjust. Turn the cut-out adjusting screw (2, Fig. N.11) in a clockwise direction to raise the voltage setting or in an anti-clockwise direction to reduce the setting. Turn the screw only a fraction of a turn at a time. Test after each adjustment by increasing the engine speed and noting the voltmeter readings at the instant of contact closure. Electrical settings of the cut-out, like the regulator, must be made as quickly as possible because of temperature-rise effects. Tighten the locknut after making the adjustment. Adjustment of the drop-off voltage is effected by carefully bending the fixed contact blade. If the cut-out does not operate there may be an open circuit in the wiring of the cut-out and regulator unit, in which case the unit should be removed for examination or renewal.

Mechanical setting

If for any reason the cut-out armature has to be removed from the frame care must be taken to obtain the correct air-gap settings on reassembly. These can be obtained as follows.

Slacken the adjusting screw locking nut (Fig. N.13) and unscrew the adjusting screw until it is well clear of the armature tension spring. Slacken the two armature assembly securing screws (Fig. N.13).

Press the armature squarely down against the copper-sprayed core face and retighten the two armature assembly securing screws.

Using a pair of round-nosed pliers, adjust the gap between the armature stop arm and the armature tongue by bending the stop arm. The gap must be ·030 in. (·762 mm.) when the armature is pressed squarely down on the core face.

Similarly, the insulated contact blade must be bent so that, when the armature is pressed squarely down against the core face, there is a 'follow through' or contact deflection of ·010 to ·020 in. (·25 to ·51 mm.). Reset the cut-out adjusting screw as described under **'Cut-out Adjustment**—*Electrical setting*'.

Section N.12

WINDSCREEN WIPERS

Operation

To start either of the windscreen wipers pull out the handle and turn it to disengage the switch lever and to bring the wiper blade on the windscreen; turn the switch in the direction away from the wiper spindle. To stop, turn the switch to the horizontal position, pull out the handle, and turn the end of the handle into the top of the control switch.

Maintenance

Occasionally inspect the rubber wiper blades, which, after long service, become worn and should be renewed. Methylated spirits (de-natured alcohol) should be used to remove tar spots and other stains from the windscreen. It has been found that the use of some silicone and wax-based polishes for this purpose can be detrimental to the wiper blades.

The gearbox is packed with grease during manufacture and in normal service needs no further lubrication.

Section N.13

SERVICING THE WINDSCREEN WIPER MOTOR

Checking current consumption

If the wiper fails to operate or operates unsatisfactorily connect a 0 to 10 amp. moving-coil ammeter in the wiper circuit, switch on the wiper, and note the current being supplied. Then proceed as follows.

Wiper takes no current

Examine the fuse protecting the wiper circuit. If the fuse has blown examine the wiring of all circuits protected by that fuse. Renew all cables which are worn or chafed; if necessary, fit protective sleeving over them to prevent a recurrence of the fault. If the external circuits are found to be in order replace the fuse with one of the recommended size, then proceed as for the wiper taking abnormally high current.

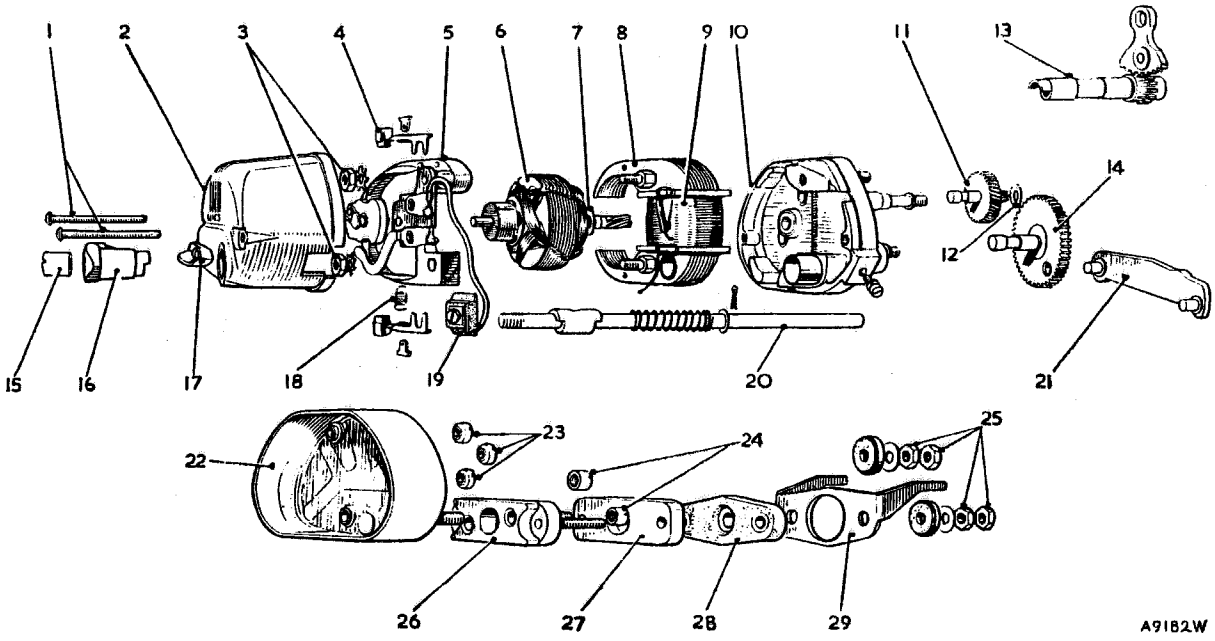

Fig. N.14

Windscreen wiper components

1. Cover screws.
2. Cover.
3. Commutator end bracket screws.
4. Brush.
5. Commutator end bracket.
6. Armature.
7. Thrust washer.
8. Pole assembly.
9. Field coil.
10. Central plate.
11. Intermediate gear.
12. Brass washer.
13. Oscillating gear and sector gear.
14. Final gear.
15. Nit.
16. Parking handle.
17. Switch lever.
18. Brush spring.
19. Terminal blocks.
20. Wiping spindle.
21. Connecting rod.
22. Gearbox covers.
23. Gearbox nuts.
24. Front bearing block nuts.
25. Wipers securing nuts.
26. Front bearing block.
27. Packing block.
28. Rubber seal.
29. Stop plate.

If the fuse is intact examine the wiper circuit for faulty connections. Then dismantle the motor and examine the component parts (Fig. N.13).

Wiper takes abnormally low current

Check that normal battery voltage is applied to the wiper terminals. If the voltage is low check the condition of the battery and wiper circuit connections.

If the voltage is correct check that the wiper arm is firmly secured to the wiper spindle. If the connection is sound dismantle the wiper motor and examine the component parts.

Wiper takes abnormally high current

Check that the wiper blade is correctly positioned and can move freely. If the wiper blade is correct dismantle the motor and examine the component parts.

Section N.14

DISMANTLING AND REASSEMBLING THE WINDSCREEN WIPER MOTOR

Unscrew the collet nut on the wiper arm until the arm is freed from the wiper spindle.

Disconnect the electrical connections to the motor.

Unscrew the wiper securing nuts and withdraw the washers, stop plate, and rubber seal.

Remove the wiper from the vehicle.

Remove the packing block(s).

Unscrew the securing nuts and withdraw the front bearing block.

Press back the spindle spring, take out the split pin, and withdraw the washer and spring. Withdraw the spindle complete with parking handle.

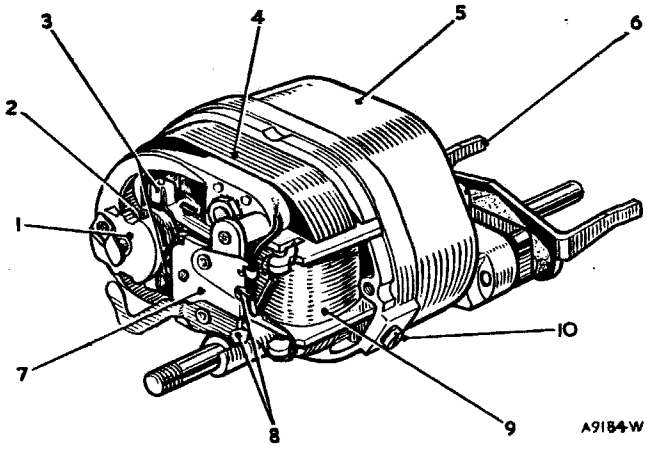

Fig. N.15

The wiper with cover removed

1. Commutator end bracket bearing.
2. Commutator.
3. Brush gear.
4. Pole assembly.
5. Gearbox cover.
6. Stop plate.
7. Brush mounting plate.
8. Field coil connectors.
9. Field coil.
10. Earth terminal.

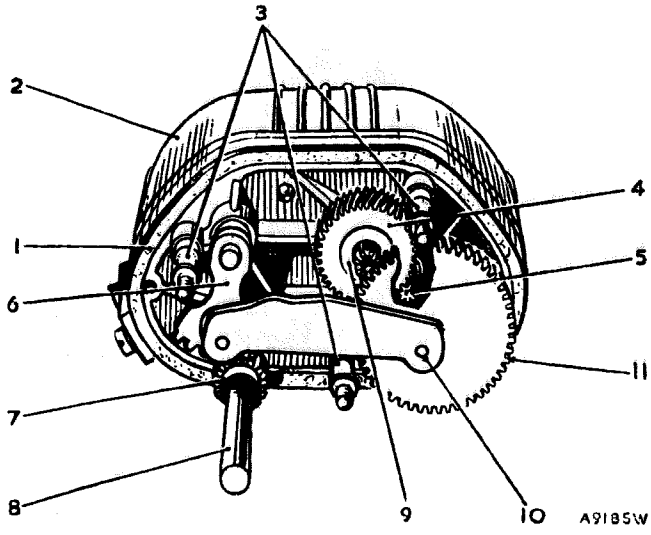

Fig. N.16
The wiper with the gearbox cover removed

1. Gasket.
2. Motor cover.
3. Cover studs.
4. Intermediate gear.
5. Armature drive gear.
6. Sector gear.
7. Oscillating gear.
8. Wiping spindle.
9. Brass washer.
10. Connecting rod.
11. Final gear.

Unscrew the three slotted nuts and remove the gearbox cover.

Withdraw the connecting rod, sector gear, geared driving sleeve, final gear, and intermediate gear. Note that a thin pen steel washer is located below the final gear and a brass washer above the intermediate gear.

Unscrew the two securing bolts and withdraw the motor cover. Press the moulded terminal block off the motor cover. Unsolder the two field coil connections at the brush mounting plate. Unscrew the two commutator end bracket securing nuts and remove the serrated washers.

Lift off the commutator end bracket complete with brush gear. Remove the brush gear from the commutator end bracket. Lift out the armature and thrust washers. Unscrew the two pole assembly securing studs and remove the pole assembly.

If the bearing bushes in the central plate are worn they must be pressed out and replacements fitted.

The armature commutator must be clean and have a polished appearance. Clean the commutator with a petrol-moistened cloth or, if necessary, with a strip of very fine emery-cloth. Ensure that the spaces between the commutator segments are free from carbon and copper dust.

Check the resistance between adjacent commutator segments with an ohmmeter. The resistance between segments should be 1·95 to 2·3 ohms.

Check the resistance of the field coil. The resistance should be 11·5 to 12·5 ohms.

Fit new brushes if the old ones are badly worn. Ensure that the brushes bear firmly on the commutator.

Check the bearings for wear.

Before reassembling, the following components should be lubricated, using the lubricants recommended.

Grease the bearings (except the commutator end bracket bearing) liberally as recommended for front hubs.

Smear the armature shaft (drive end) with S.A.E. 20 engine oil.

Smear the gear teeth with grease, as recommended for front hubs.

Fill the wiper spindle water seal recess with grease, as recommended for front hubs.

Apply a film of S.A.E. 40 engine oil to the intermediate gear shaft.

If a replacement commutator end bracket is fitted the bearing must be soaked in Oiline BBB for at least 24 hours immediately before assembling.

Reassembling is in the main a reversal of the dismantling procedure.

Before refitting the armature in its bearing in the central plate refit the brush gear to the commutator end bracket and locate the armature in the commutator end bracket bearing.

After tightening the nuts securing the commutator end bracket check that the armature is free to rotate.

Section N.15

FITTING A WINDSCREEN WIPER ARM

The wiper arm is secured to the spindle by a screw-on collet nut. To remove the wiper arm unscrew the collet nut until the arm is freed from the spindle.

When fitting a wiper arm, position the wiper arm on the wiper spindle to give the correct area of wipe on the windscreen and tighten up the collet nut.

The wiper blade is secured to the wiper arm by a rubber plug. A tongue on the wiper blade passes through a slot in the wiper arm and is secured there by the insertion of the rubber plug.

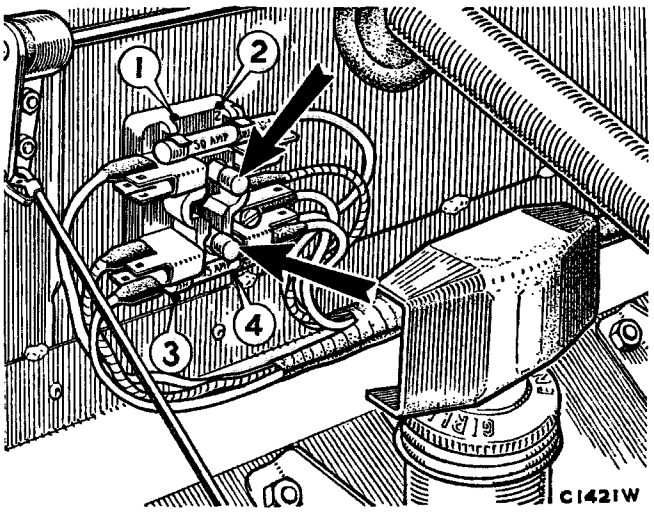

Fig. N.17
The fuse holder with the spare fuses arrowed

Section N.16

FUSES

The fuse holder is located under the bonnet on the right-hand side of the bulkhead.

The fuse between '1' and '2' protects the accessories which operate irrespective of whether the ignition/master switch is off or on. The fuse between '3' and '4' protects the accessories which operate only when the ignition/master switch is on.

Two spare fuses are provided, and it is important that only the correct replacement fuses are used.

If a new fuse blows immediately on replacement trace the fault before inserting another one of the same fusing value (marked inside the fuse tube).

The units which are protected by the fuses can readily be identified on the wiring diagram. A blown fuse is indicated by the failure of the units protected by it, and is confirmed by examination of the fuse when withdrawn. Before renewing a blown fuse inspect the wiring of the units that have failed for evidence of a short circuit or other fault. Remedy the cause of the trouble before fitting a new fuse.

Section N.17

FLASHING DIRECTION INDICATORS

In the event of trouble occurring with a flashing light direction indicator system the following procedure should be followed:

(1) Check for broken filaments.
(2) Refer to the vehicle wiring diagram and check all flasher circuit connections.
(3) Switch on the ignition.
(4) Check with a voltmeter that flasher unit terminal 'B' is at battery voltage with respect to earth.
(5) Connect together flasher unit terminals 'B' (or 'X') and 'L' and operate the direction indicator switch. If the flasher lamps now light the flasher unit is defective and must be renewed.

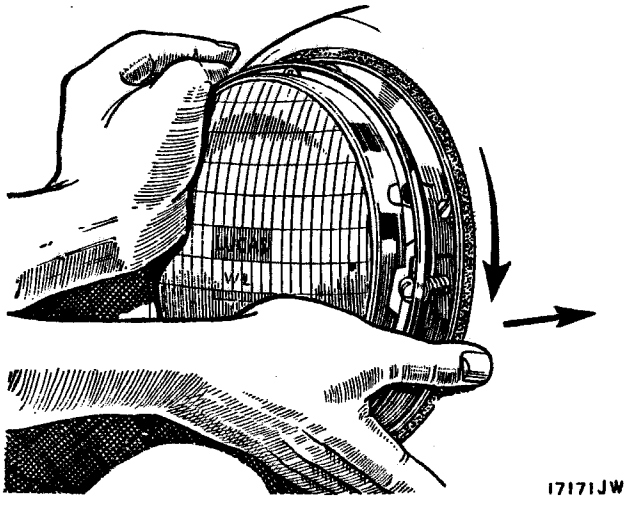

Fig. N.18

Push in the headlamp light unit and turn in an anti-clockwise direction to remove. Push in and turn (as shown) when replacing

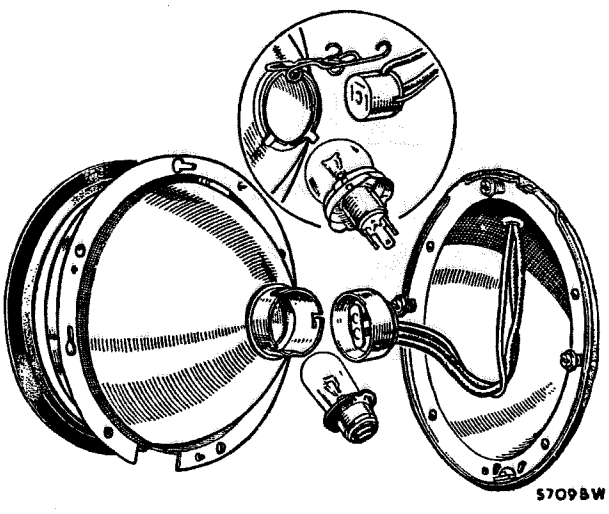

Fig. N.19

Headlamp dismantled showing alternative fittings

Section N.18

ADJUSTING THE HORN

To adjust, slack off the locking ring nut and withdraw the magnet screw about ¼ in. (6·35 mm.). Turn the rocker adjusting screw either clockwise or anti-clockwise until the greatest volume is obtained, then screw in the magnet screw carefully until the note of the horn is sharp and lock up the nut. The armature face should just hit the screw when the horn is vibrating.

The two accurate distances are from the face of the armature to the clamping edge of the diaphragm and from the face of the casting to the insulator on the top of the trembler blade.

Make sure that the contact assembly lies parallel with the face of the casting when checking distances.

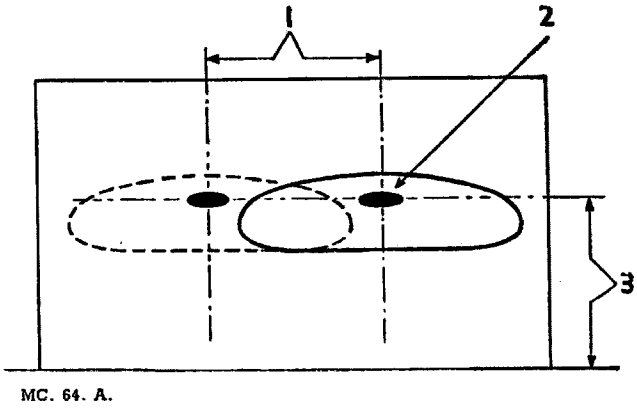

Fig. N.20

Headlamp beam setting

1. Distance between lamp centres.
2. Concentrated area of light.
3. Height of lamp centres from ground.

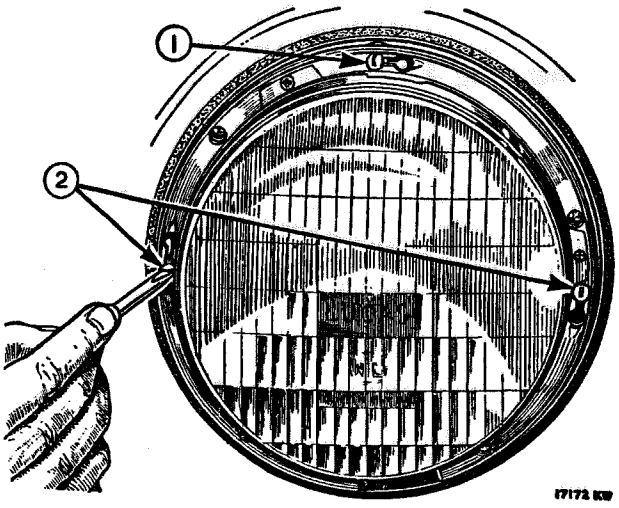

Fig. N.21
The headlamp setting screws

1. Vertical setting adjusting screw.
2. Horizontal setting adjusting screws.

Section N.19

RENEWING A HEADLAMP BULB

Remove the front rim by unscrewing the rim securing screw and lifting off the rim. Next remove the dust-excluding rubber, when three spring-loaded adjustment screws will be visible. Press the light unit in against the tension of the adjustment screw springs and turn it in an anti-clockwise direction until the heads of the screws can be disengaged through the slotted holes in the light unit rim. Do not disturb the screws when removing the light unit as this will alter the lamp setting.

Twist the back-shell in an anti-clockwise direction and pull it off. The bulb can then be removed.

Place the replacement bulb in the holder, taking care to locate it correctly. Engage the projections on the inside of the back-shell with the slots in the holder, press on, and secure by twisting it to the right.

Position the light unit so that the heads of the adjusting

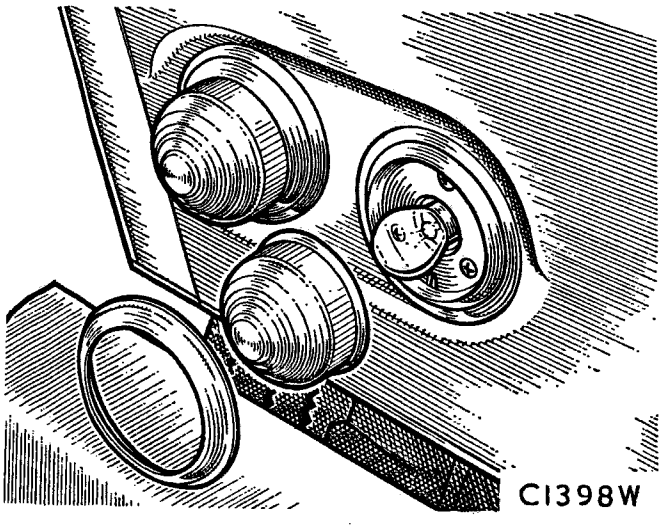

Fig. N.22
Access to the side and flasher lamp bulbs

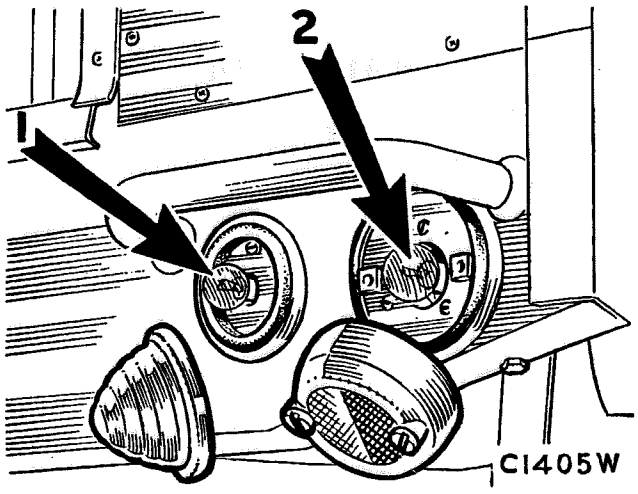

Fig. N.23
Access to the stop/tail and flasher lamps bulb

screws protrude through the slotted holes in the flange, press the unit in, and turn in a clockwise direction. Replace the dust-excluding rubber so that its thicker inner edge rests in the recess around the light unit rim. Refit the front rim, locating the top of the rim first and securing by means of the fixing screw.

Section N.20

SETTING THE HEADLAMPS

The lamps should be set so that the main driving beams are straight ahead and parallel with the road surface and with each other. If adjustment is required remove the rim as previously described. Set each lamp to the correct position in the vertical plane by means of the vertical adjustment screw at the top of the reflector unit. Turn the screw in a clockwise direction to raise the beam and in an anti-clockwise direction to lower it. Horizontal adjustment can be altered by turning the adjustment screws on each side of the light unit. On later models, and models fitted with sealed beam units, only one horizontal adjustment screw is provided.

The setting of the lamps can be best carried out by placing the vehicle in front of a blank wall at a distance of 25 feet, taking care, of course, that the surface on which the vehicle is standing is level and not sloping relative to the wall. It will be found an advantage to cover one lamp while setting the other.

Section N.21

RENEWING A SIDE AND FLASHING DIRECTION INDICATOR LAMP BULB

To gain access to the bulb pull back the outer rubber lip to release the rim and the inner rubber lip to release the lens.

Remove the defective bulb and replace with the type listed. (This bulb is manufactured with offset securing pins, thus ensuring that the bulb is fitted into the holder the correct way round.) Refit firstly the lens and secondly the rim to the inner and outer rubber lips respectively.

●WIRING DIAGRAM (with D.C. Generating Equipment)●

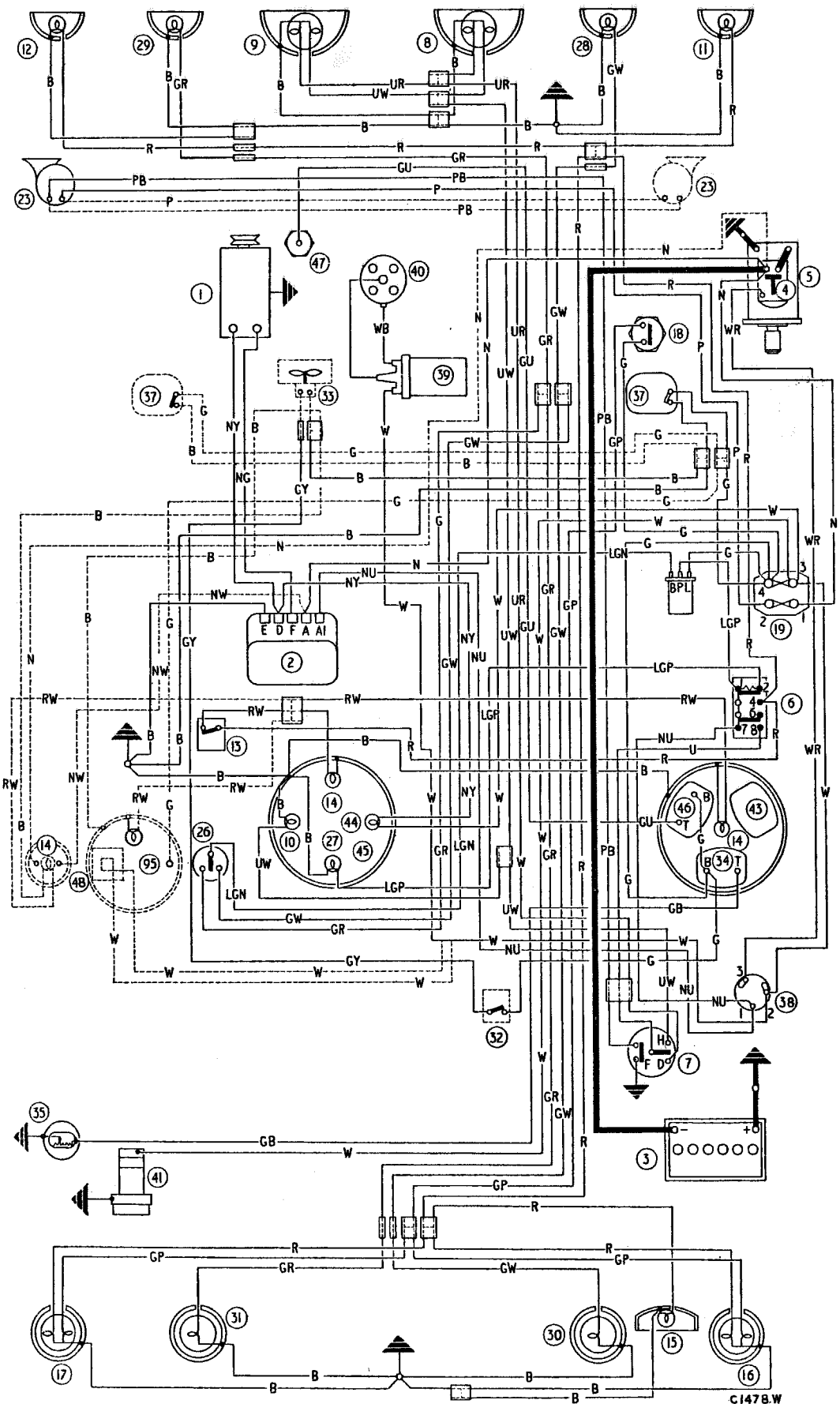

●KEY TO WIRING DIAGRAM (with D.C. Generating Equipment)●

No.	*Description*
1.	Dynamo.
2.	Control box.
3.	12-volt battery.
4.	Starter solenoid.
5.	Starter.
6.	Lighting switch.
7.	Horn-push and dip switch.
8.	R.H. headlamp.
9.	L.H. headlamp.
10.	Main beam warning lamp.
11.	R.H. sidelamp.
12.	L.H. sidelamp.
13.	Panel lamp switch.
14.	Panel lamps.
15.	Number-plate lamp.
16.	R.H. tsop and tail lamp.
17.	L.H. stop and tail lamp.
18.	Stop lamp switch.
19.	Fuse unit.
23.	Horn.
25.	Flasher unit.
26.	Direction indicator switch.
27.	Direction indicator warning lamp.
28.	R.H. flasher lamp.
29.	L.H. flasher lamp.
30.	R.H. flasher lamp.
31.	L.H. flasher lamp.
32.	Heater switch (when fitted).
33.	Heater motor (when fitted).
34.	Fuel gauge.
35.	Tank unit.
37.	Windscreen wiper.
38.	Ignition starter switch.
39.	Ignition coil.
40.	Distributor.
41.	Fuel pump.
43.	Oil pressure gauge.
44.	Ignition warning lamp.
45.	Speedometer.
46.	Water temperature gauge.
47.	Water temperature transmitter.
48.	Ammeter (when fitted).
95.	Revolution indicator.

CABLE COLOUR CODE

B.	Black.	G.	Green.	R.	Red.
U.	Blue.	L.G.	Light Green.	W.	White.
N.	Brown.	P.	Purple.	Y.	Yellow.

When a cable has two colour code letters the first denotes the main colour and the second denotes the tracer colour.

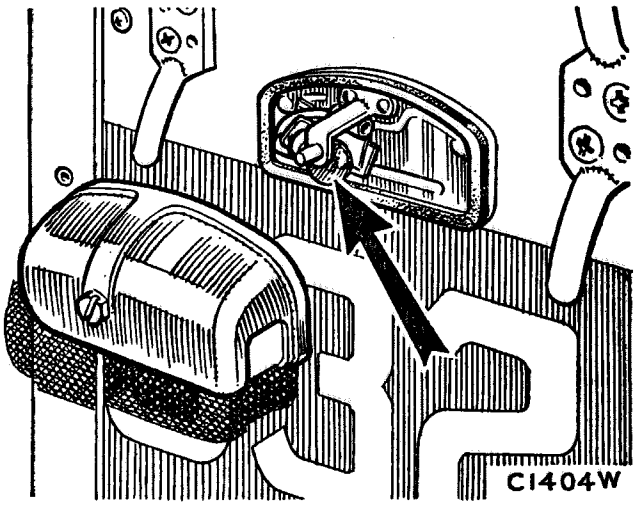

Fig. N.24

Access to the rear number-plate lamp bulbs

Section N.22

RENEWING A REAR FLASHING DIRECTION INDICATOR LAMP BULB

Remove the chromium bezel from the lamp by peeling back the rubber flange and inserting a small screwdriver behind the bezel. Run the screwdriver round the lamp and the bezel may be withdrawn. Remove the lamp glass in a similar manner. The bulb is of the single-filament type which may be replaced either way round.

Section N.23

RENEWING A TAIL AND STOP LAMP BULB

Access to a flashing indicator lamp bulb is gained after unscrewing the two screws securing the lamp glass in position. The bulb is of the double-filament type and has offset bayonet pegs, ensuring replacement the correct way round.

Section N.24

RENEWING A REAR NUMBER-PLATE LAMP BULB

The cover is secured by a single screw which, when removed, allows access to the bulb for replacement purposes.

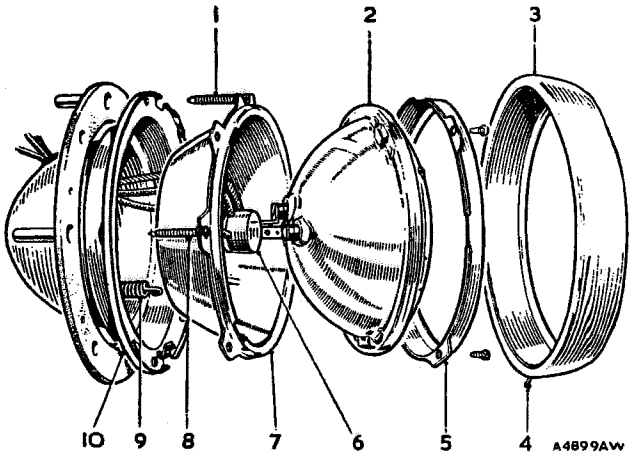

Fig. N.25

The sealed-beam light unit

1. Vertical adjustment screw.
2. Light unit.
3. Front rim.
4. Front rim fixing screw.
5. Light unit rim.
6. Three-pin socket.
7. Seating rim.
8. Horizontal adjusting screw.
9. Tensioning screw.
10. Back-shell.

Section N.25

SEALED-BEAM LIGHT UNIT

To change a sealed-beam light unit remove the rim. Remove the three retaining screws securing the inner light rim and remove the rim assembly. Pull the unit forward and disconnect the three-pin socket to release it from the back-shell.

When refitting the light unit ensure that the registers moulded on the rear edge of the unit engage in the slots on the back-shell.

Section N.26

RENEWING WARNING LAMP AND PANEL LAMP BULBS

The ignition/master switch, direction indicator, and main beam warning lights positioned in the speedometer, and the instrument panel illumination lamps are accessible from behind the instrument panel.

Section N.27

REPLACEMENT BULBS

	Watts	*BMC Part No.*
Headlamps (left dip—all R.H.D. except Sweden)	50/40	BFS 414
Headlamps (vertical dip—all L.H.D. Europe, except France)	45/40	BFS 410
Headlamps (vertical dip—France only, yellow)	45/40	BFS 411
Headlamps (vertical dip—Sweden only)	45/50	BFS 410
Headlamps (right dip—all L.H.D. except Europe and U.S.A.)	50/40	BFS 415
Sidelamps	6	BFS 207
Flashing direction indicators	21	BFS 382
Tail and stop lamps	21/6	BFS 380
Rear number-plate lamp	6	BFS 989
Panel lamps	2·2	BFS 987
Direction indicator warning light	2·2	BFS 987
Ignition/master switch warning light	2·2	BFS 987
Main beam warning light	2·2	BFS 987

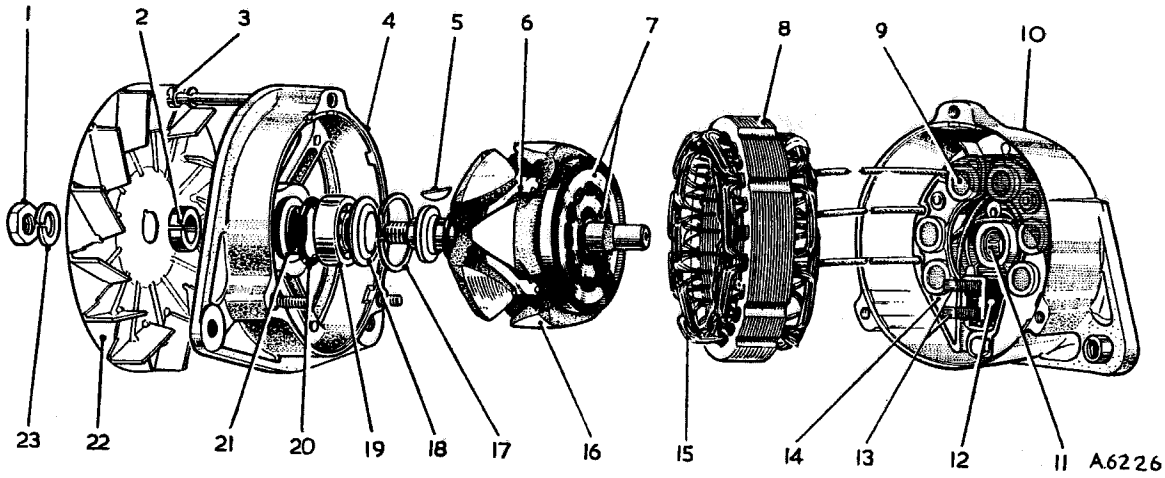

Fig. N.26

Alternator components (Lucas type 11AC)

1. Nut.
2. Bearing collar.
3. Through-bolt.
4. Drive end bracket.
5. Key.
6. Field winding.
7. Slip-rings.
8. Stator laminations.
9. Diode.
10. Slip-ring end bracket.
11. Needle-roller bearing.
12. Brush box.
13. Brushes.
14. Heat sink.
15. Output windings.
16. Rotor.
17. Bearing circlip.
18. Bearing retaining plate.
19. Ball bearing.
20. 'O' ring.
21. 'O' ring retaining washer.
22. Fan.
23. Spring washer.

Section N.28

DESCRIPTION OF THE ALTERNATOR (Lucas type 11AC)

The alternator incorporates a stator output winding, built-in rectifier diodes, and a rotor field winding which is energized by the battery through a pair of slip-rings.

The stator is of laminated construction and carries the three-phase star-connected output winding. The rotor is of eight-pole construction and carries the slip-ring-fed field winding. It is supported by a ball bearing in the drive end bracket and a needle-roller bearing in the slip-ring end cover.

The field system brush gear is mounted on the slip-ring end cover, which also carries the six silicon diodes. These are connected in a three-phase bridge circuit to give rectification of the generated A.C. output.

A fan, mounted in tandem with the driving pulley, draws air through the alternator to cool the diodes and the stator windings.

The alternator is designed for use in conjunction with an output control unit which limits the alternator output voltage to a preset value, and a field isolating device which switches the field windings out of circuit when the charging switch is in the 'off' position.

Section N.29

REMOVING AND REPLACING THE ALTERNATOR (Lucas type 11AC)

The alternator mounting is similar to that of the dynamo and the instructions in Section C.6 should be followed to adjust the belt tension, applying leverage only to the alternator drive end bracket.

Section N.30

TESTING THE ALTERNATOR IN POSITION (Lucas type 11AC)

Ensure that the drive belt is not slipping.

Disconnect the earthing cable from the battery.

Disconnect the two cables from the alternator main output terminal and connect a moving coil type ammeter (range 0 to 75 amperes) between the terminal and the two disconnected cables.

Disconnect the cables from terminals 'F' and '—' on the output control unit and join the ends of these two cables. The alternator field winding is now connected across the battery terminals with the field isolating relay only in circuit.

Reconnect the battery earth lead and start the engine. Increase the engine speed slowly until the alternator speed is approximately 4,000 r.p.m., when the ammeter reading should be approximately 40 amps.

If the current reading is low, check the external wiring circuit for loose connections and bad earthing, then repeat the foregoing test. A low current reading will now indicate a faulty alternator, and the field windings should be tested by measuring their resistance with an ohmmeter. Disconnect the cables from the two field terminals on the alternator and connect the ohmmeter across these terminals, when a reading of approximately 3·77 ohms should be obtained. In the absence of an ohmmeter the field windings may be checked by connecting a 12-volt D.C. supply across the alternator field terminals with an ammeter in series. The ammeter reading should be approximately 3·2 amperes.

An infinity ohmmeter reading or a zero ammeter reading indicates an open circuit in the field system—that is, the brush gear, slip-ring, or field winding. An

●WIRING DIAGRAM (with A.C. Generating Equipment)

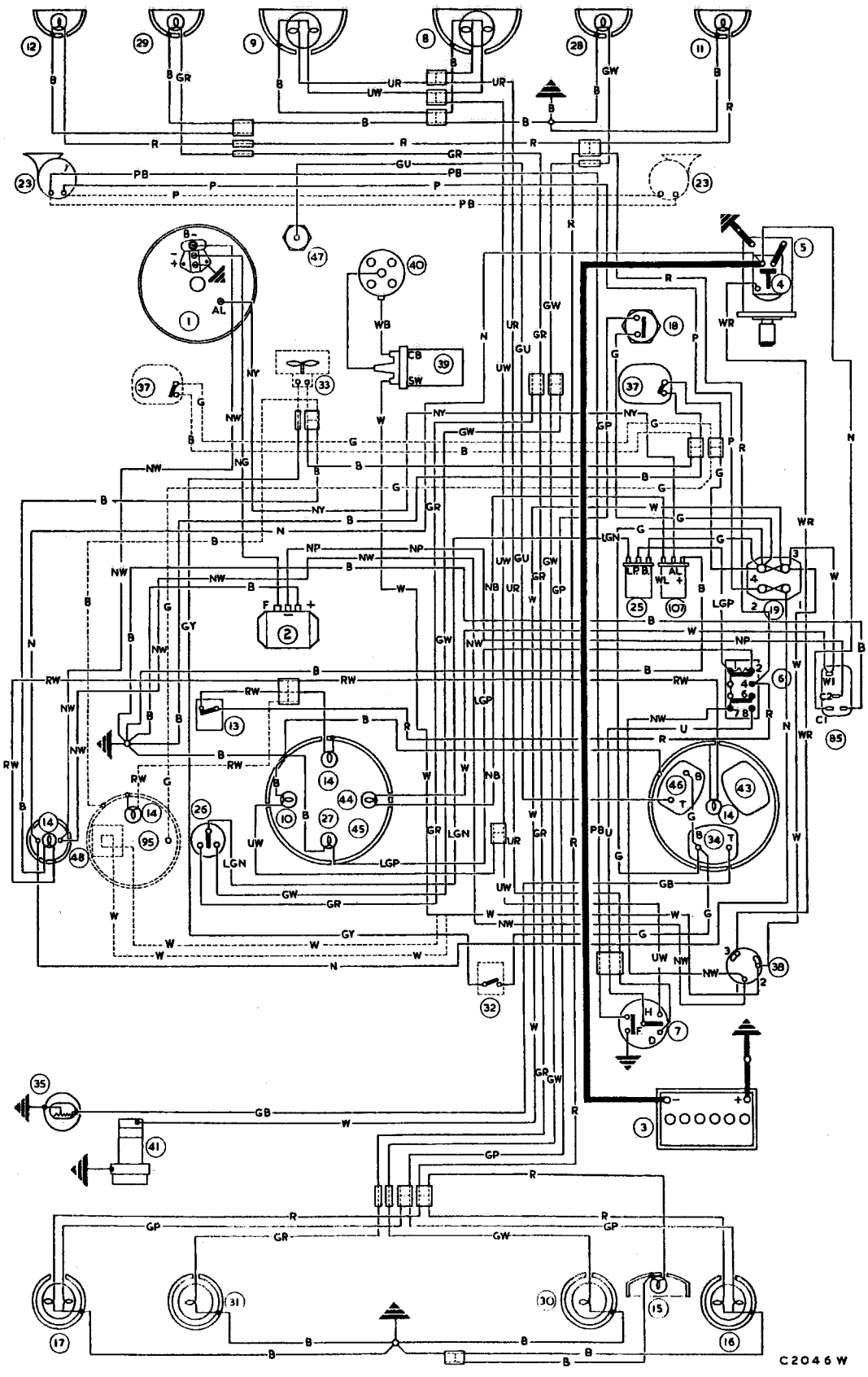

●KEY TO WIRING DIAGRAM (with A.C. Generating Equipment)

No.	Description
1.	Alternator.
2.	Control unit.
3.	Battery.
4.	Starter solenoid.
5.	Starter motor.
6.	Lighting switch.
7.	Horn-push and dip switch.
8.	R.H. headlamp.
9.	L.H. headlamp.
10.	Main-beam warning lamp.
11.	R.H. sidelamp.
12.	L.H. sidelamp.
13.	Panel lamps switch.
14.	Panel lamps.
15.	Number-plate lamp.
16.	R.H. stop and tail lamp.
17.	L.H. stop and tail lamp.
18.	Stop lamp switch.
19.	Fuse unit.
23.	Horn.
25.	Flasher unit.
26.	Direction indicator switch.
27.	Direction indicator warning lamp.
28.	R.H. front flasher lamp.
29.	L.H. front flasher lamp.
30.	R.H. rear flasher lamp.
31.	L.H. rear flasher lamp.
32.	Heater switch (when fitted).
33.	Heater motor (when fitted).
34.	Fuel gauge.
35.	Fuel gauge tank unit.
37.	Windscreen wiper.
38.	Ignition and starter switch.
39.	Ignition coil.
40.	Distributor.
41.	Fuel pump.
43.	Oil pressure gauge.
44.	Ignition warning lamp.
45.	Speedometer.
46.	Water temperature gauge.
47.	Water temperature transmitter.
48.	Ammeter.
85.	Field isolating relay.
95.	Revolution indicator.
107.	Warning lamp control unit.

CABLE COLOUR CODE

B. Black.	G. Green.	R. Red.
U. Blue.	L.G. Light Green.	W. White.
N. Brown.	P. Purple.	Y. Yellow.

When a cable has two colour code letters the first denotes the main colour and the second denotes the tracer colour. ●

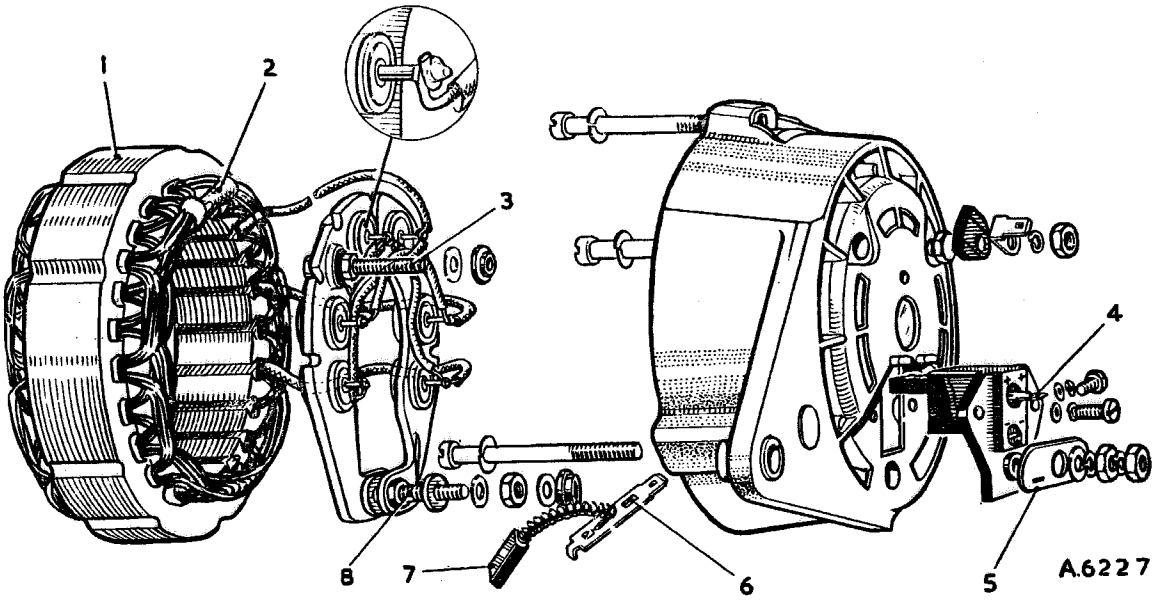

Fig. N.27

Slip-ring end cover and stator components

1. Stator.
2. Output winding star point.
3. Warning light terminal.
4. Field terminal blade.
5. Output terminal plastic strip.
6. Terminal blade retaining tongue.
7. Brush.
8. Output terminal.

ohmmeter reading much below 3·77 ohms or an excessive ammeter reading is an indication of a short circuit in the field winding.

In the event of a zero current reading, turn on the charging switch and check that battery voltage is being applied to the field windings, using a voltmeter connected between the two cables normally attached to the alternator field terminals. A zero reading in this test indicates a fault in the field isolating relay or in the wiring associated with this circuit.

Section N.31

DISMANTLING AND REASSEMBLING THE ALTERNATOR

(Lucas type 11AC)

Remove the nut and spring washer from the drive end of the rotor shaft and withdraw the pulley and fan.

Thoroughly clean the exterior of the alternator and then mark the drive end bracket, the stator lamination pack, and the slip-ring end cover so that they may be assembled in correct angular relation to each other.

Unscrew and remove the three through-bolts and withdraw the drive end bracket complete with rotor.

Remove the key and bearing collar from the rotor shaft and press the rotor out of the drive end bracket bearing.

Remove the terminal nuts, washers, and insulating pieces, the brush-box retaining screws and the heat sink securing bolt, and withdraw the stator and heat sink assemblies from the slip ring end cover.

Close up the retaining tongue, located at the root of each brush terminal blade, and withdraw the terminal blade and brush assemblies from the brush box.

Check that the brushes move freely in their holders. If their movement is sluggish clean their surfaces with a petrol-moistened cloth. If this is ineffective, lightly polish the brush sides on a smooth file. Brushes that are worn to $\frac{5}{32}$ in. (4·0 mm.) in length should be renewed.

Test the brush spring pressure, which should be 4 to 5 oz. (113 to 142 gm.) with the spring compressed to $\frac{25}{32}$ in. (19·8 mm.) in length, and $7\frac{1}{2}$ to $8\frac{1}{2}$ oz. (212 to 242 gm.) with the spring compressed to $\frac{13}{32}$ in. (10·3 mm.) in length.

Inspect the slip-rings, the surfaces of which should be smooth. Clean the surfaces with a petrol-moistened cloth or, if there is any evidence of burning, with very fine glass-paper. Do not clean up the slip-rings by machining, as any eccentricity in the machining may have an adverse effect on the alternator performance at high speed.

Test the field windings as described in Section N.30 connecting the ohmmeter or the 12-volt D.C. supply across the slip-rings.

Check the field winding for defective insulation by connecting a 110-volt A.C. mains supply, with a 15-watt test lamp in circuit, between each slip-ring and one of the rotor poles. If the lamp lights, the field winding is earthing and the rotor assembly should be renewed.

To check the stator windings, separate the three stator cables from the heat sink assembly by unsoldering, avoiding overheating of the diodes and bending of the diode pins. When soldering or unsoldering the cables the diode pins should be lightly gripped with a pair of long-nosed pliers, which act as a thermal shunt, and the operation should be carried out as quickly as possible.

Connect any two of the stator cables in series with a 1·5-watt test lamp and a 12-volt battery. Repeat this

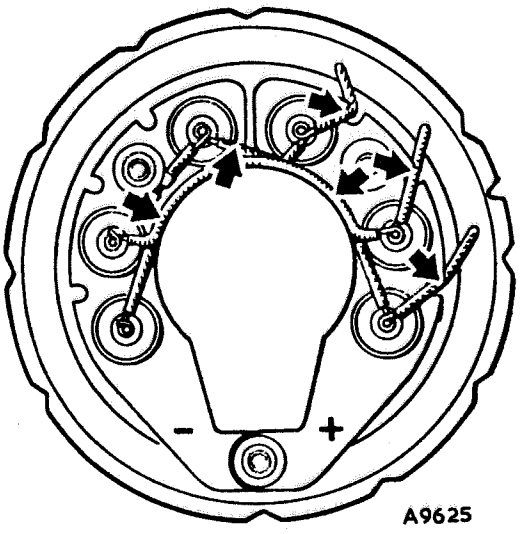

Fig. N.28

Secure the diode connections to the heat sink at the points indicated by the arrows, using a high-temperature-resistant adhesive

test, replacing one of the two cables by the third cable. Failure of the test lamp to light in either test indicates an open circuit in the stator winding.

Check the stator winding for defective insulation by connecting a 110-volt A.C. main supply, with a 15-watt test lamp in circuit between any one of the three cables and the lamination pack. If the test lamp lights, the stator winding is earthing and the stator assembly should be renewed.

Test each diode in turn by connecting it in series with a 1·5 watt test bulb across a 12-volt D.C. supply and then reversing the connections. Current should flow and the test lamp light in one direction only. If the bulb lights in both tests, or does not light in either test, the diode is defective and the appropriate part of the heat sink assembly should be renewed as diodes are not individually renewable. The heat sink assembly comprises two main parts each of which carries three diodes. One part is of positive polarity and the diodes are marked red while the diodes on the other part, which is of negative polarity, are marked black. The interconnections should be soldered, using 'M' grade 45–55 tin–lead solder, and care must be exercised to avoid overheating the diodes or bending the diode pins. The diode pins should be lightly gripped with a pair of long-nosed pliers, which act as a thermal shunt, and the operation of soldering carried out as quickly as possible. After soldering, arrange the connections neatly around the heat sink to ensure adequate clearance of the rotor, and secure them to the heat sink, using high-temperature-resistant adhesive, in the positions indicated in Fig. N.28.

Ensure that the bearings do not allow excessive side movement of the rotor shaft. If the needle-roller bearing is worn, the slip-ring end cover should be renewed as an assembly. To renew the ball bearing, remove the bearing-retaining circlip and press the bearing out of the end bracket, noting the assembly order of the 'O' ring and retaining washer. Before installing a new bearing pack it with high-melting-point grease.

Reassembly is a reversal of the foregoing procedure, noting the following:

(1) When pressing the rotor into the drive-end bracket support the inner race of the bearing, do not use the drive-end bracket as a support for the bearing.

(2) Insert the field terminal blades into the brush box and lever up the blade-retaining tongues to an angle of 30° to secure the blades in the box.

(3) Ensure that the marks scribed on the drive-end bracket, stator lamination pack, and slip-ring end cover prior to dismantling are in alignment.

(4) Tighten the three through-bolts evenly to a torque figure of 45 to 50 lb. in. (·52 to ·58 kg. m.).

Section N.32

CONTROL UNIT
(Lucas type 4TR)

Description

This is an electronic control unit, its action being similar to that of the vibrating contact type. The switching of the field circuits is achieved by the use of transistors instead of vibrating contacts, while a Zener-diode provides the voltage reference in place of the voltage coil and tension spring system. No cut-out is required, since the diodes incorporated in the alternator prevent reverse currents from flowing.

No current regulator is required as the inherent self-regulating properties of the alternator limit the output current to a safe value.

The control unit and alternator field windings are isolated from the battery when the engine is stationary by a special double-pole ignition/master switch or by means of an isolating relay.

A temperature compensating device takes the form of a thermistor connected in parallel with one of the Zener-

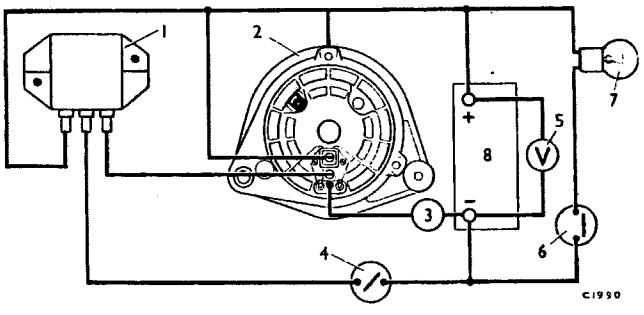

Fig. N.29

Lucas type 4TR control unit test circuit

1. 4TR control unit.
2. Alternator.
3. Ammeter.
4. Field isolating relay.
5. Voltmeter.
6. Side and tail lamp switch.
7. Side and tail lamps.
8. 12-volt battery.

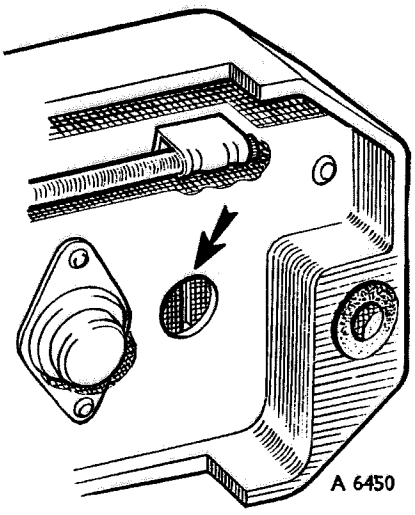

Fig. N.30

Control unit potentiometer adjuster

biasing resistors. The thermistor is a device whose resistance increases as the temperature falls or vice versa. Any alteration in its ohmic value will cause the Zener-diode to begin to conduct at a modified value of alternator output voltage, so matching the changes which take place in 'on charge' battery terminal voltage due to temperature change.

NOTE.—The battery must never be disconnected while the alternator is running. Failure to observe this warning will cause irreparable damage to the control unit. Care must be taken at all times to ensure that the battery, alternator, and control unit are correctly connected. Reversed connections will damage the semi-conductor devices employed in the alternator and control unit.

Maintenance

The output control does not require any regular maintenance, but the moulded cover can be occasionally wiped clean and a check made that the terminal connector is secure.

Testing and adjusting

When testing and adjusting the control unit it must be established that the alternator and the charging unit circuit wiring are in good order, also the battery to control unit wiring which incorporates the field isolating device. To ensure the correct working of the control unit the resistance of this complete circuit, including the isolating device, must not exceed ·1 ohm. Any unduly high resistance must be traced and remedied.

Testing

Leave the existing connections to the alternator and control unit undisturbed. Connect a voltmeter of 1 per cent. or better accuracy or appropriate range between the battery terminals (Fig. N.31), and note the reading with all electrical equipment switched off. If available, use a voltmeter of the suppressed-zero type, giving a reading of 12 to 15 volts.

Switch on the side and tail lights to give an electrical load of approximately 2 amperes. Start the engine, and run the alternator at approximately 3,000 r.p.m. for at least eight minutes; (this will ensure that the system voltage has stabilized). If the charging current is still greater than 10 amperes, continue to run the engine until this figure is reached; the voltmeter should now read 13·9 to 14·3 volts. If the reading obtained is stable but outside these limits the unit can be adjusted to control at the correct voltage.

If, however, the voltmeter reading remains unchanged (at open circuit battery terminal voltage) or, conversely, increases in an uncontrolled manner, then the control unit is faulty and a replacement unit must be fitted.

Adjusting

Stop the engine and withdraw the control unit mounting screws. Invert the unit, and carefully remove the sealing compound which conceals the potentiometer adjuster (Fig. N.30). Ensure that the voltmeter is firmly connected between the battery terminals. Start the engine, and while running the alternator at 3,000 r.p.m. turn the potentiometer adjuster slot clockwise to increase the setting, or anti-clockwise to decrease it, until the required setting is obtained.

NOTE.—A small amount of adjuster movement results in an appreciable difference in the voltage reading.

Check the setting by stopping then re-starting the engine, and running the alternator at 3,000 r.p.m.

Remount the control unit and disconnect the voltmeter.

Section N.33

FIELD ISOLATING RELAY
(Lucas type 6RA)

Description

The field isolating relay is used for de-energizing the alternator rotor field winding when the engine is stationary, by disconnecting the supply from the rotor field, immediately the ignition/master switch is turned to the 'off' position.

This allows the contacts 'C1' and 'C2' to part and open-circuit the rotor field winding. The alternator will not generate if the contacts fail to close when the ignition/master switch is switched on.

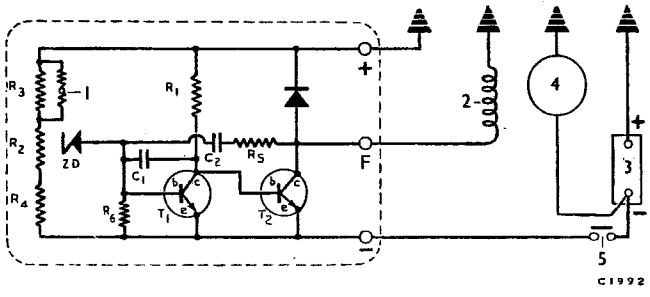

Fig. N.31

Internal and external circuits of the Lucas type 4TR control unit

1. Thermistor.
2. Alternator rotor field winding.
3. 12-volt battery.
4. Alternator stator winding (rectified output).
5. Field isolating relay.

To test the relay

With D.C. ammeter connected as detailed in Section N.30, remove the Brown/Purple lead from terminal 'C2' and temporarily connect it to the spare 'C1' terminal. This terminal has two blades connected to it which are electrically common.

If the alternator generates its specified output with the two leads in position as described, a faulty relay is indicated, and must be replaced with a new relay. Make the usual checks for continuity of relay operating winding, relay circuit wiring, and earth connections.

If the relay and associated circuit is satisfactory apply test as described in Section N.32, **'Testing and adjusting (the control unit)'.**

Section N.34

WARNING LAMP CONTROL UNIT

Description

This unit is a thermally operated relay for controlling the switching on and off of the warning lamp in the instrument panel. It is connected, through alternator terminal 'AL', to the centre point of one pair of the six alternator diodes, and to earth (or return) wiring. The indication given by the warning lamp is similar to that provided by the ignition or 'no-charge' warning lamp used with dynamo charging systems, i.e. the warning lamp is illuminated when the alternator is stationary or is being driven very slowly (engine 'tick-over' speed), but gradually dims and then goes out as soon as the alternator voltage begins to rise with increased engine speed.

Basically, the unit consists of a pair of contacts held closed against spring tension by a length of nickel–chrome resistance wire. When cold, the wire is in tension; when current flows through the wire it heats up and lengthens, allowing the contacts to open. The circuit is shown in Fig. N.32.

WARNING.—Due to the external similarity of this unit to the Lucas type FL5 flasher unit, a distinctive green label is applied to the case. Furthermore, care must be taken to avoid connecting either of these units into the circuit designed for the other.

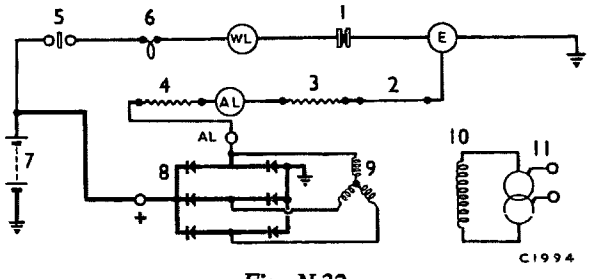

Fig. N.32

Circuit of the Lucas type 3AW warning lamp control unit, battery, and alternator

1. Contacts.
2. Actuating wire.
3. Internal ballast resistor.
4. External ballast resistor (24-volt).
5. Ignition/master switch.
6. Warning lamp.
7. Battery.
8. Alternator diodes.
9. Stator.
10. Rotor.
11. Slip-rings.

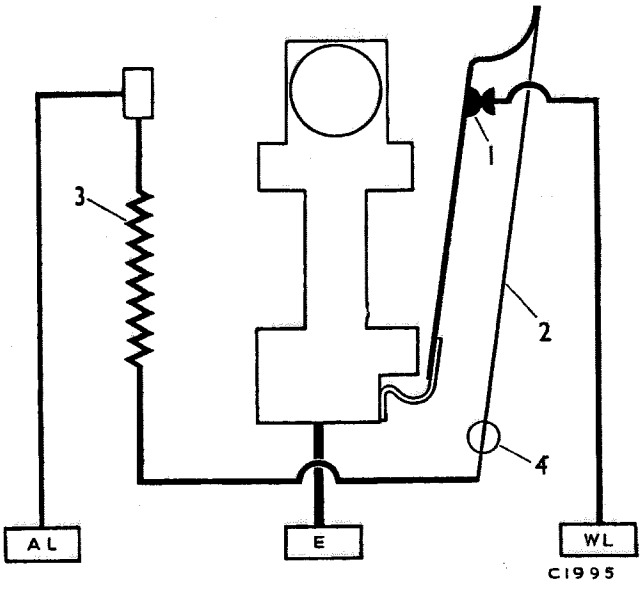

Fig. N.33

Internal arrangement and circuit of the Lucas type 3AW warning lamp control unit

1. Contacts.
2. Actuating wire.
3. Ballast resistor.
4. Glass bead.

Operation

When the ignition or master switch is turned to the 'on' position current flows from the battery through the switch and panel warning lamp to terminal 'WL' on the unit, thence across closed contacts, down the moving contact arm and hinge spring to terminal 'E', and back to the battery. The warning lamp is then illuminated.

When the engine is started (and providing the charging circuit is operating and in working order), a small low-voltage current from the alternator enters the unit by terminal 'AL', passes through the internal ballast resistor and actuating wire, down the moving contact arm and out through terminal 'E'. This current heats the actuating wire and causes it to lengthen. The actuating wire is resistance-brazed to the upper end of the moving contact arm which, being spring-loaded at its lower end by the hinge spring, moves away from the fixed contact and interrupts the warning lamp circuit, thus causing the lamp to go out.

Testing in position

The following symptoms and remedies assume that the remainder of the charging system (including the belt drive) is functioning satisfactorily.

(1) If the warning lamp fails to illuminate when the ignition or master switch is turned on:

(*a*) Check the warning lamp bulb by substitution.

(*b*) Check the warning lamp control unit by substitution.

(*c*) Test the continuity of each part of the warning lamp circuit, i.e. from the alternator to terminal 'AL'; from the ignition or master switch to terminal 'WL'; and from the terminal 'E' to earth (or return) wiring.

(2) If the warning lamp fails to go out when the alternator is being driven:
   (*a*) Check the warning lamp control unit by substitution.
   (*b*) Check the continuity of the circuit between the alternator and the terminal 'AL' on the warning lamp control unit.
(3) If the warning lamp shows intermittent flickering light:
   (*a*) Check bulb and circuit connections, and tighten as required.
   (*b*) Check warning lamp control unit by substitution.

Testing on the bench

The performance of the warning lamp control unit can be checked by carrying out the following simple test procedure.

(1) Connect the circuit as shown in Fig. N.34, leaving battery clips 'A' and 'B' disconnected at this stage.
(2) Connect battery clip 'A' to the battery 12-volt tapping. The bulb should light up immediately.
(3) Leaving battery clip 'A' connected, connect battery clip 'B' to the battery 6-volt tapping. The bulb should go out within five seconds.
(4) Disconnect battery clip 'B' and transfer it to the battery 12-volt for 10 seconds only, then quickly transfer it to the battery two-volt tapping. The bulb should light up within five seconds.

Should the performance of the unit differ appreciably from either test requirements, a replacement must be fitted.

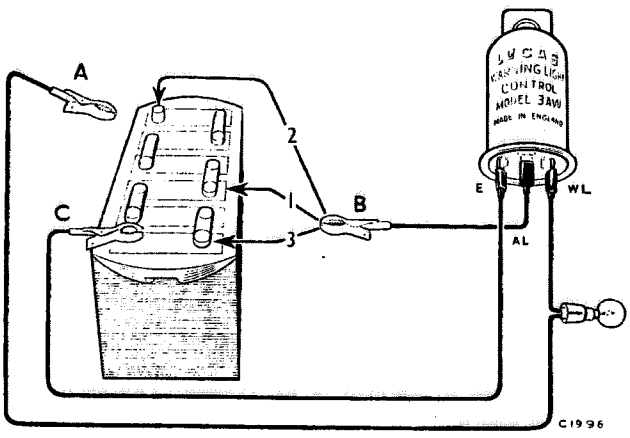

Fig. N.34

Simple bench test for the Lucas type 3AW warning lamp control unit, showing connection sequence for battery clip 'B'

Replacement procedure

A defective unit must be replaced by another identical unit, but before doing so establish that the fault is not the result of excessive voltages, by making the following checks.

(1) Measure the voltage between the alternator terminal 'AL' and earth (or return) wiring. With the alternator running at 3,000 r.p.m. on light load this should be of the order 7·0 to 7·5 volts.
(2) If a higher voltage is indicated, first check all charging circuit connections and then the alternator diodes.

SECTION Na

THE ELECTRICAL EQUIPMENT
(DIESEL MODELS)

	Section
Dynamo	Na.11
●Field isolation switch	Na.12●
Heater plugs	Na.10
Starter motor	
Bench-testing the motor	Na.5
Checking the circuit	Na.2
Description	Na.1
Dismantling and reassembling the drive	Na.6
Dismantling and reassembling the motor	Na.4
Removing and replacing the motor	Na.3
Starter solenoid	
Description	Na.7
Dismantling and reassembling	Na.8
Testing	Na.9

For all other information of electrical equipment for diesel models refer to Section N

WIRING DIAGRAM (Diesel Engine)

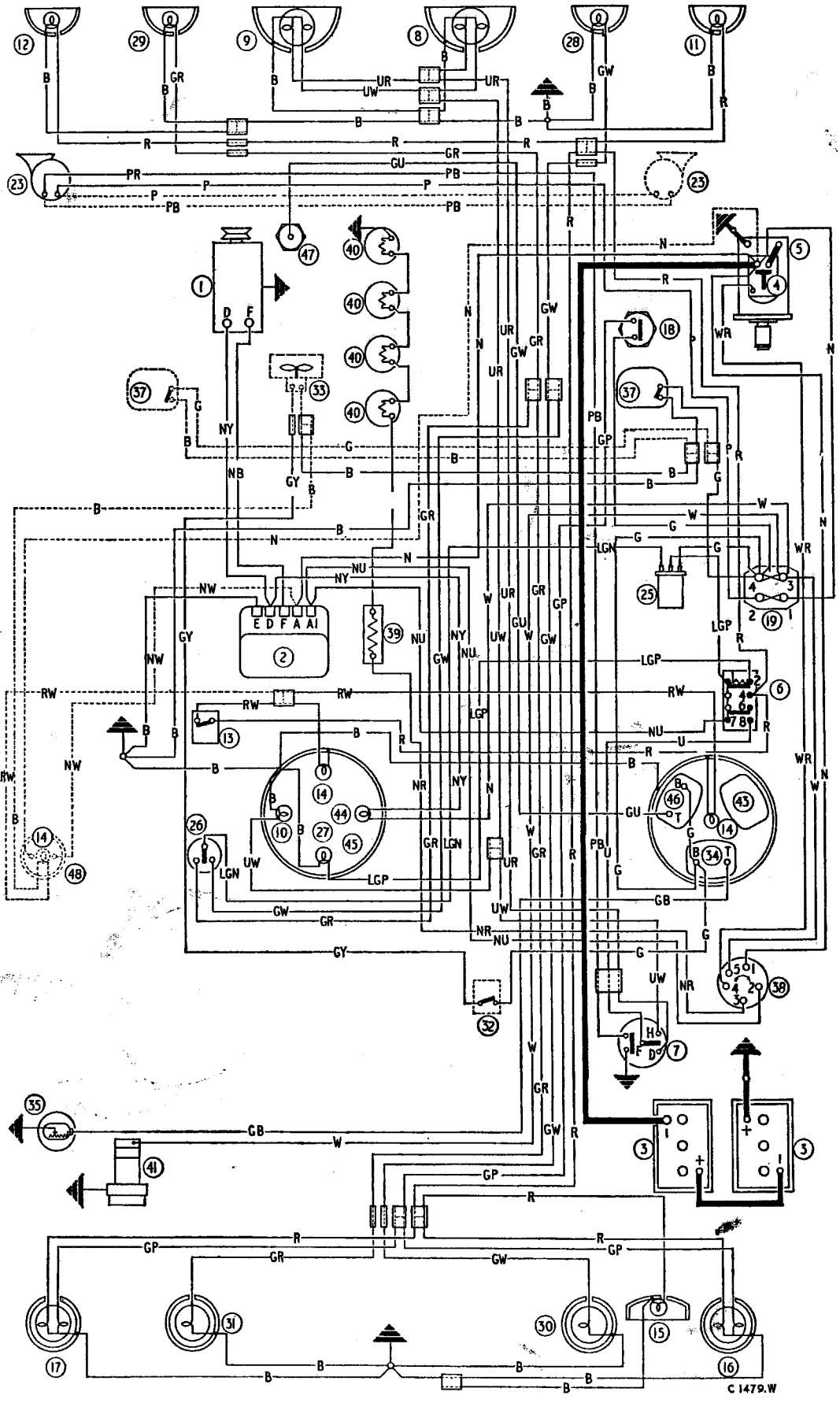

KEY TO WIRING DIAGRAM (Diesel Engine)

No.	*Description*
1.	Dynamo.
2.	Control box.
3.	Two 6-volt batteries.
4.	Starter solenoid.
5.	Starter.
6.	Lighting switch.
7.	Horn-push and dip switch.
8.	R.H. headlamp.
9.	L.H. headlamp.
10.	Main-beam warning lamp.
11.	R.H. sidelamp.
12.	L.H. sidelamp.
13.	Panel lamp switch.
14.	Panel lamps.
15.	Number-plate lamp.
16.	R.H. stop and tail lamp.
17.	L.H. stop and tail lamp.
18.	Stop lamp switch.
19.	Fuse unit.
23.	Horn.
25.	Flasher unit.

No.	*Description*
26.	Direction indicator switch.
27.	Direction indication warning lamp.
28.	R.H. flasher.
29.	L.H. flasher lamp.
30.	R.H. flasher lamp.
31.	L.H. flasher lamp.
32.	Heater switch (when fitted).
33.	Heater motor (when fitted).
34.	Fuel gauge.
35.	Tank unit.
37.	Windscreen wiper.
38.	Starter and heater plug switch.
39.	Ballast resistor.
40.	Heater plugs.
41.	Fuel pump.
43.	Oil pressure gauge.
44.	No-charge warning lamp.
45.	Speedometer.
46.	Water temperature gauge.
47.	Water temperature transmitter.
48.	Ammeter (when fitted).

CABLE COLOUR CODE

B. Black.	G. Green.	R. Red.
U. Blue.	LG. Light Green.	W. White.
N. Brown.	P. Purple.	Y. Yellow

When a cable has two colour code letters the first denotes the main colour and the second denotes the tracer colour.

Section Na.1

DESCRIPTION OF THE STARTER MOTOR

The starter motor is a pre-engaged self-indexing drive, four-pole, four-brush, earth-return machine with series-parallel-connected field coils.

The drive assembly incorporates a dual-purpose clutch to protect the motor from overload in the event of the engine backfiring and overspeeding when the engine fires and drives the pinion.

When the starter switch is operated a solenoid unit mounted on the starter motor yoke is energized and actuates a forked lever to engage the drive pinion with the engine flywheel.

In the event of tooth-to-tooth abutment axial movement of the pinion is arrested whilst a helically splined sleeve on which the pinion is carried continues to move forward. This causes the pinion to rotate relative to the flywheel. When the teeth become aligned spring pressure slides the pinion into mesh with the flywheel.

When the pinion is properly engaged with the flywheel teeth a pair of contacts are closed in the rear of the solenoid unit. Closure of the contacts connects the motor to the battery, the armature rotates, and the starter pinion commences to crank the engine. Also, as will be seen in Fig. Na.8, closure at the starter switch contacts shorts out the closing coil and the plunger is retained in the fully home position by the hold-on coil until the starter switch is released.

When the engine fires and the starter switch is released the solenoid unit is de-energized and the spring-loaded plunger withdraws the starter pinion to its out-of-mesh position. The armature is brought rapidly to rest by the centrifugal action of a pair of spring-loaded brake-shoes bearing against a brake-drum inside the intermediate bracket.

Provision is made to ensure that in the case of the pinion jamming in mesh (this may occur with an engine which fails to start), there is sufficient free movement in the engagement lever-to-solenoid plunger linkage to permit the solenoid switch contacts to open.

In the event of the drive remaining in mesh with the flywheel after the engine has run up to speed, the starting motor armature is protected from overspeeding by the plate clutch assembly. This clutch allows torque to be transmitted from the starting motor to the engine, but not in the reverse direction, which is free-running.

The clutch is set to slip at between two and three times normal starting torque, thus providing overload protection for the starting motor.

Section Na.2

CHECKING THE STARTER CIRCUIT

If the starter motor is heard to operate but does not attempt to crank the engine, a damaged drive is indicated, and the starter should be removed for inspection. If, however the starter does not operate, or is sluggish, the following points should be checked prior to removal of the starter.

Connect a voltmeter (0–20) across the battery terminals and operate the starter control.

(1) If the voltmeter reading drops to about 6 volts but the starter motor is not heard to operate, this indicates that current is flowing through the motor windings, but that the armature is not rotating. Remove the starter from the engine for examination.

(2) If the voltmeter remains steady at about 12 volts, check the circuit for continuity as described below and examine the connections throughout the circuit.

Connect the voltmeter between the switch supply terminal on the solenoid and earth and operate the switch. No reading indicates a faulty switch or a loose connection.

Connect the voltmeter between the battery supply terminal on the solenoid and earth. No reading indicates a completely discharged battery, faulty cable, or loose connection.

Connect the voltmeter between the large output terminal on the solenoid and earth and operate the starter switch, when a reading of 6 to 7 volts should be obtained if the starter is operating normally. A zero reading indicates a faulty solenoid switch, while a reading of 12 volts indicates that the current is not flowing through the motor windings. Remove the starter from the engine for servicing.

Section Na.3

REMOVING AND REPLACING THE STARTER MOTOR

Disconnect the battery to prevent possible short-circuiting and detach the heavy and light cables from the terminals on the base of the starter solenoid and the earthing strap from the starter end plate.

Unscrew the three nuts securing the motor to the flywheel housing and withdraw the motor forward and away from the engine.

Replacement of the starter motor is a reversal of the above procedure. If, however, a replacement motor is to be fitted or in the event of the driving end bracket being renewed during overhaul, the pinion out-of-mesh clearance must be checked when assembling the starter to the engine. The clearance should be $\frac{1}{8} \pm \frac{1}{32}$ in. ($3{\cdot}2 \pm {\cdot}8$ mm.) between the leading edge of the starter pinion and the flywheel starter ring.

Section Na.4

DISMANTLING AND REASSEMBLING THE STARTER MOTOR

Disconnect the copper link from the lower terminal on the solenoid and the yoke of the starter motor. Un-

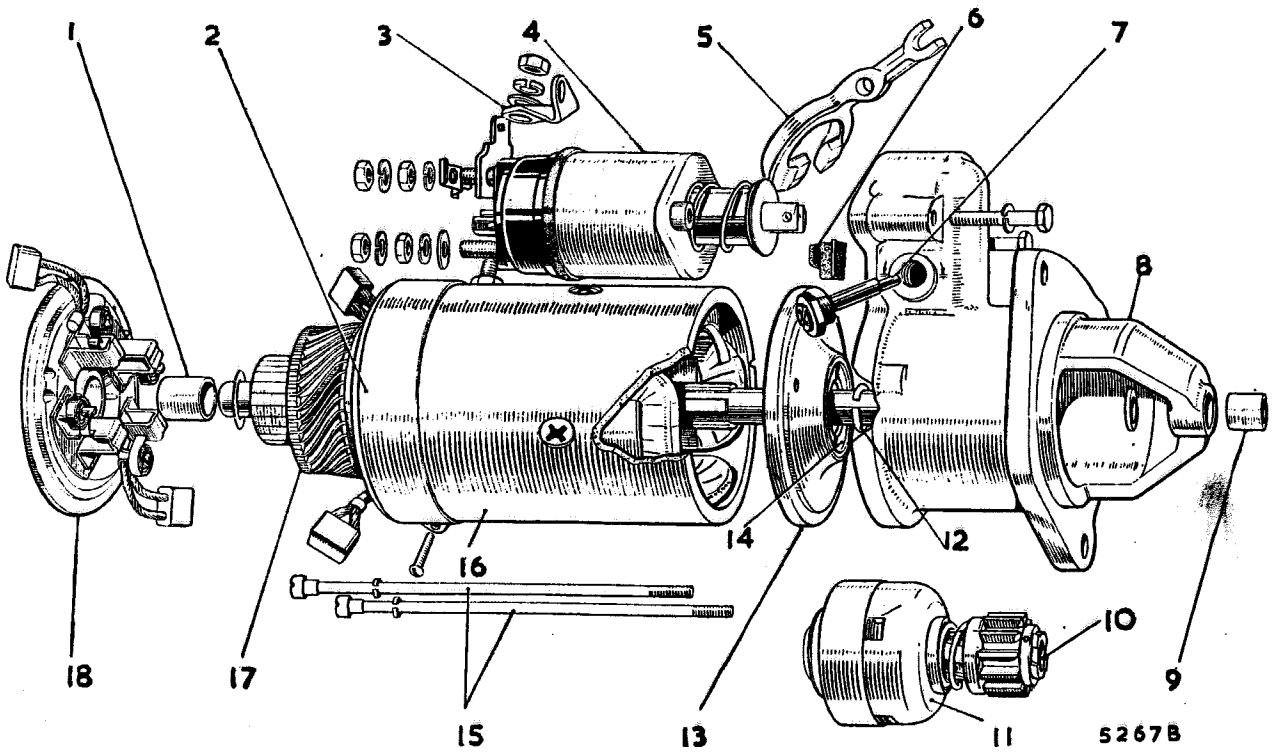

Fig. Na.1

Starter motor components

1. Bearing bush.
2. Cover band.
3. Copper link.
4. Solenoid unit.
5. Engagement lever.
6. Rubber seal.
7. Eccentric pivot pin.
8. Drive end bracket.
9. Bearing bush.
10. Pinion sleeve bearing.
11. Drive assembly.
12. Retaining ring.
13. Intermediate bracket.
14. Centrifugal brake-shoes.
15. Through-bolts.
16. Yoke.
17. Armature.
18. Commutator end bracket.

screw the two bolts with the spring washers securing the solenoid to the starter driving end bracket and withdraw the solenoid, carefully disengaging the solenoid plunger from the starter drive engagement lever.

Remove the cover band, hold back the brush springs, and withdraw the brushes from their holders.

Unscrew and withdraw the two through-bolts from the commutator end bracket. The commutator end bracket and yoke can now be removed from the intermediate and drive end brackets.

Extract the rubber seal from the drive end bracket.

Slacken the locknut securing the eccentric pin and withdraw the pin.

Separate the drive end bracket from the armature and intermediate bracket assembly.

Remove the washer from the armature shaft extension and slide the drive assembly and engagement lever off the shaft.

Dismantle the drive assembly as described in Section Na.6.

Remove the intermediate bracket retaining ring from the armature shaft extension and slide the bracket and brake assembly from the shaft.

Test the field coils for continuity before removing them from the yoke. Connect a 12-volt test lamp and battery between the insulated terminal on the yoke and each of the brushes connected to the field coils in turn. If the test lamp does not light, an open circuit in the field coils is indicated and the field coils should be renewed. When carrying out this test ensure that both brushes and their flexible connectors do not contact the yoke.

Test the field coils for insulation from the starter yoke, ensuring that the brushes and their connectors are clear of the yoke. Connect a 110-volt A.C. test lamp between the terminal post and a clean part of the yoke. Lighting of the test lamp indicates that the field coils are earthed to the yoke and they should be renewed.

Unscrew the four pole-shoe retaining screws, using a wheel-operated screwdriver, remove the insulation piece, and draw the pole-shoes and coils from the yoke. Lift off the coils.

Check for sticking of the brushes in their holders. To free sticking brushes, clean all carbon and copper deposits away, using a petrol-moistened cloth; if necessary, ease the brushes by lightly polishing the sides with a smooth file.

Always refit brushes in their original positions. Renew the brushes when they have worn to $\frac{5}{16}$ in. (8·0 mm.) in length. Failure to do this will result in exposure of the brush flexible connector at the running face of the brush, with consequent damage to the commutator.

The brushes are removed by unsoldering the flexible connectors from the eyelets. Two are connected to

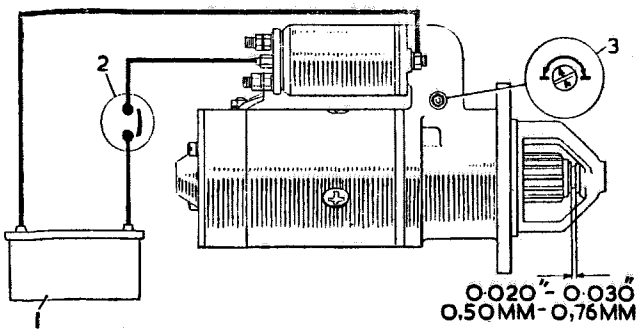

Fig. Na.2

Setting the pinion movement limit

1. 6-volt battery. 2. Switch. 3. Eccentric pivot pin.

brush boxes on the commutator end bracket and two are connected to the free ends of the series field coils. The brushes are preformed, so that bedding to the commutator is unnecessary.

Check the brush holders for security on the commutator end bracket and, using a mains supply of 110 volts and a test lamp, test the insulation of the two insulated brush holders. Connect the test lamp between the end bracket and each brush holder in turn. If the lamp lights, the insulation is faulty and the end bracket should be renewed.

With the brushes held in position on the commutator by the brush springs, check the tension of the brush springs, using a spring balance. The correct tension is 30 to 40 oz. (850 to 1134 gm.). The springs should be renewed if their tension has dropped to below 25 oz. (708 gm.).

A commutator in good condition will be burnished and free from pits or burned spots. Clean the commutator with a petrol-moistened cloth. Should this be ineffective, spin the armature and polish the commutator with fine glass-paper, removing all abrasive dust with a dry air blast. If the commutator is badly worn, mount the armature between centres in a lathe, rotate at high speed, and make a light cut with a very sharp tool. Do not remove more metal than is necessary. Finally, polish with very fine glass-paper. **The insulators between the commutator segments must not be undercut.**

A visual examination should be made of the commutator for conductors which have lifted from the risers, indicating overspeeding. In this event the drive clutch should be checked to ensure that it is disengaging correctly when the engine fires.

If signs of fouling between the armature core and the pole-shoe faces are apparent the armature shaft should be checked for distortion and the bearings in the end brackets checked for wear.

A damaged armature should in all cases be renewed, and no attempt should be made to machine the armature core or to true a distorted armature shaft.

To make a thorough check on the condition of the armature the use of a volt-drop test or a growler is essential. The armature insulation, however, can be checked by connecting a 110-volt A.C. test lamp between the armature shaft and each commutator segment in turn. If the test lamp lights when contact is made with any commutator segment the armature insulation is faulty and the armature should be renewed.

In the absence of the above equipment a suspect armature should be checked by substitution after ensuring that the fault is not caused by solder which has run due to overheating, short-circuiting the commutator segments.

The armature is supported by three bearing bushes mounted in the intermediate and end brackets. The commutator and driving end brackets each carry porous bronze bushes, whilst the intermediate bracket carries an indented bronze bearing.

Bearings which are worn to such an extent that they will allow excessive side-play of the armature shaft should be renewed.

In the case of the commutator end bracket bearing this is best removed by screwing an $\frac{11}{16}$ in. (17·5 mm.) tap squarely into the bearing and then withdrawing the tap complete with bearing. The driving end and intermediate bracket bearings may be pressed out.

Before installing, new porous bronze bushes should be immersed in clean engine oil (S.A.E. 30/40) for a period of 24 hours. In an emergency this period may be shortened by heating and maintaining the oil at a temperature of 100° C. (212° F.) for two hours and then allowing the oil to cool before removing the bushes. New bushes should be pressed into position, using a shouldered, highly polished mandrel ·0005 in. (·013 mm.) greater in diameter than the shaft which is to run in the bush. Porous bronze bearings must not be reamed after installation as the porosity of the bearing will be impaired.

The indented bronze bearing should be lubricated with Ragosine Molypad molybdenized non-creep oil after installation in the intermediate bracket.

Reassembly is a reversal of the dismantling procedure, but the following points should be noted:

(1) Assemble the field coils to the pole-shoes and position them inside the yoke. Insert the pole-shoe retaining screws and partially tighten them, at the same time ensuring that the field taping is not trapped between the pole-shoes and the yoke. Replace the inter-coil connector insulation piece and, with the pole-shoes held in position with

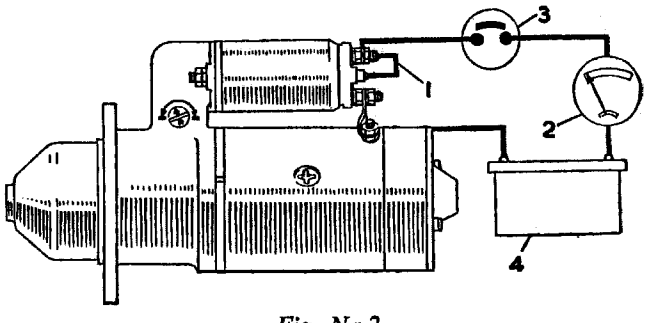

Fig. Na.3

Measuring the light running current

1. Connecting link. 3. Switch.
2. Ammeter. 4. 12-volt battery.

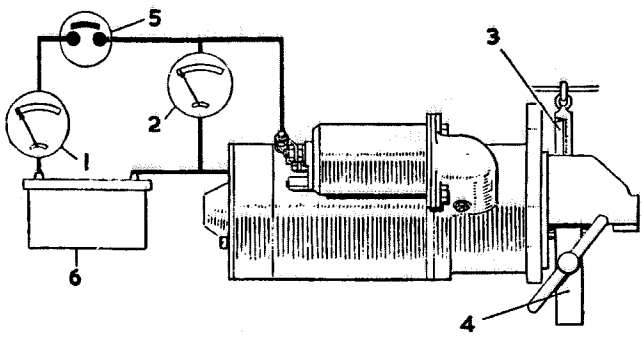

Fig. Na.4

Measuring lock torque and lock current

1. Ammeter.
2. Voltmeter.
3. Spring balance.
4. Torque arm pinion clamp.
5. Switch.
6. 12-volt battery.

a pole-shoe expander, fully tighten the pole-shoe retaining screws, using a wheel-operated screw-driver.

(2) Lubricate the intermediate bracket bearing with Ragosine Molypad molybdenized non-creep oil.

(3) Before fitting the drive assembly lightly smear the armature shaft and pack the space between the bearings inside the helically splined sleeve with a bentonite-based grease such as Ragosine Bentone. If at any time the operation of the drive assembly becomes sluggish it should be removed and the bearings cleaned and lubricated as above.

(4) The fitting of the solenoid unit to the drive end bracket can be facilitated by easing the drive assembly forward along the armature shaft. The solenoid must be fitted so that the copper link between the solenoid and the starter is connected to the solenoid terminal marked 'STA'.

(5) With the starter motor completely assembled, but before tightening the engagement lever pivot pin locknut, set the pinion movement as follows:

(*a*) When the assembly of the starter motor is complete connect the small centre terminal on the solenoid through a switch to a 6-volt supply. Connect the other terminal of the supply to one of the solenoid fixing studs (Fig. Na.2).

(*b*) Close the switch, thus moving the drive assembly forward into the engaged position. Measure the distance between the pinion and the washer on the armature shaft extension, pressing the pinion lightly towards the armature to take up any clearance in the engagement linkage. The correct setting is ·020 to ·030 in. (·50 to ·76 mm.).

To adjust the setting slacken the eccentric pivot pin locknut and carefully rotate the pin until the correct setting is obtained. The arc of adjustment is 180° and the head of the arrow stamped on the pivot pin should be set only between the arrows on the arc embossed on the drive end bracket housing. When the setting is correct tighten the locknut to retain the pin in the selected position (Fig. Na.2).

Section Na.5

BENCH-TESTING THE STARTER MOTOR

The operational efficiency of the starter motor may be checked by the following tests, using a fully charged 12-volt battery having a capacity of 128 amp.-hr. at the 10-hr. rate.

Light running test

Clamp the starter motor in a vice and connect it to a fully charged 12-volt battery, with a switch and ammeter in circuit, using heavy-gauge cables.

Under these light load conditions the starter motor should run freely at 8,000 to 9,000 r.p.m. with a maximum current of 90 amperes.

Torque test

If the necessary test equipment is available (see Figs. Na.4 and Na.5 for lock torque test), check the lock and running torque. Should a constant-voltage supply be used, it is imperative to adjust the voltage at the starter terminal to the value given in the following table when testing.

Test	*Voltage at starter terminal*	*Current*	*Torque*
Lock torque	6·4	900 amps.	32·5 lb. ft. (4·49 kg. m.)
Running torque at 1,000 r.p.m.	8·8	570 amps.	15·5 lb. ft. (2·1 kg. m.)

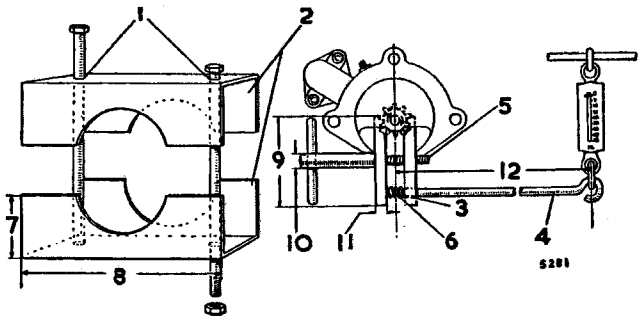

Fig. Na.5

Apparatus for measuring lock torque

1. ½ in. (12·7 mm.) diameter holes.
2. 3 in. (76 mm.) channel iron machined to suit yoke.
3. ⅜ in. (9·5 mm.) clearance.
4. ⅜ in. (9·5 mm.) mild steel rod.
5. ⅜ in. B.S.F. thread.
6. Spring.
7. 3 in. (76 mm.).
8. 10 in. (25 cm.).
9. 3 in. (76 mm.).
10. ⅝ in. (16 mm.).
11. ⅜ in. (9·5 mm.).
12. 12 in. (30·5 cm.).

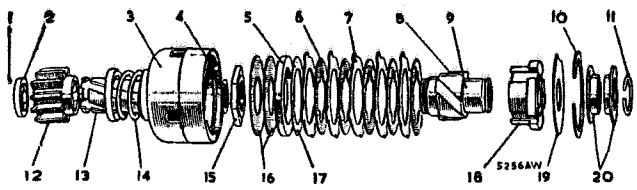

Fig. Na.6

Starter drive components

1. Rivet.
2. Pinion retaining ring.
3. Barrel unit.
4. Thrust washer.
5. Backing ring.
6. Clutch plates—inner.
7. Clutch plates—outer.
8. Helical splines.
9. Driving sleeve.
10. Circlip.
11. Lock ring.
12. Pinion.
13. Helical splined sleeve.
14. Cushion spring.
15. Ring nut.
16. Pressure plates.
17. Shim.
18. Moving member.
19. Retaining washer.
20. Engagement bush.

Section Na.6

DISMANTLING AND REASSEMBLING THE STARTER DRIVE

Remove the lock ring from the driving sleeve and withdraw the two halves of the engagement bush.

Using a suitable circlip extracting tool, extract the clutch retaining circlip from the barrel unit and withdraw the driving sleeve and clutch unit.

The clutch assembly can now be dismantled by removing all the parts from the driving sleeve, with the exception of the two pressure plates, which are held in position by the ring nut.

To remove the two pressure plates slide the driving sleeve onto the splined armature shaft and clamp the armature in a vice, using soft-metal jaw plates. File away the peened rim of the ring nut and remove the nut with a spanner measuring $1\frac{5}{16}$ in. (33·3 mm.) across the flats.

To remove the pinion from the helically splined sleeve knock out the rivet which secures the pinion retaining ring and separate the retaining ring, pinion, cushion spring with cup washers, and the sleeve.

Examine the pinion teeth for wear and damage; renew the pinion and barrel unit if necessary.

Examine the clutch plates for wear on the friction faces; ensure that they are free in their engagement splines.

Test the cushion spring for weakness. The correct cushion spring tension is 11 lb. (44·99 kg.) measured with the spring compressed to $\frac{7}{8}$ in. (22·2 mm.) and 16 lb. (7·26 kg.) with the spring compressed to $\frac{1}{2}$ in. (12·7 mm.).

Reassembly of the starter drive is a reversal of the dismantling procedure. A new ring nut should be used to secure the pressure plates to the driving sleeve. Peen the rim of the ring nut over the notch in the driving sleeve to lock the nut in position.

Test the clutch slipping torque. Fit the drive assembly onto the splined armature shaft and clamp the armature between soft-metal jaws in a vice. Apply an anti-clockwise torque to the pinion with a suitable torque wrench fastened on the pinion teeth. The clutch should slip between 800 and 950 lb. in. (9·21 to 10·95 kg. m.). If the clutch slips at below the minimum torque figure, dismantle again and **add** shims until the correct figure is obtained. If the clutch does not slip, even at the maximum torque figure, dismantle again and **remove** shims until the correct figure is obtained. The shims available are in thicknesses of ·004 in. (·102 mm.), ·005 in. (·127 mm.), and ·006 in. (·152 mm.).

Section Na.7

DESCRIPTION OF THE STARTER MOTOR SOLENOID

The solenoid unit consists of a closing coil, a hold-on coil, and a plunger operating a set of contacts. The coils are wound on the same core, while the contacts are housed in a moulded cover at the front of the unit.

When the starter switch is operated the coils are energized and draw the plunger into the core of the solenoid. Closure of the starter switch contacts shorts out the closing coil and the plunger is retained fully home by the hold-on coil until the starter switch is released.

Section Na.8

DISMANTLING AND REASSEMBLING THE STARTER MOTOR SOLENOID

Unscrew the two smaller nuts on the moulded cover; unsolder the wires attached to the terminal strips and lift off the moulded cover. Remove the nuts from the

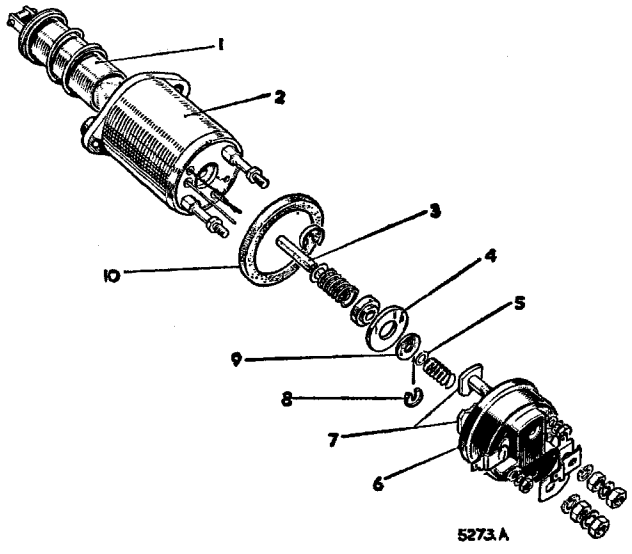

Fig. Na.7

Starter solenoid components

1. Plunger.
2. Solenoid unit.
3. Push-rod.
4. Moving contact disc.
5. Plain washer.
6. Moulded cover.
7. Terminal studs.
8. Cup washer.
9. Fibre washer.
10. Rubber sealing washer.

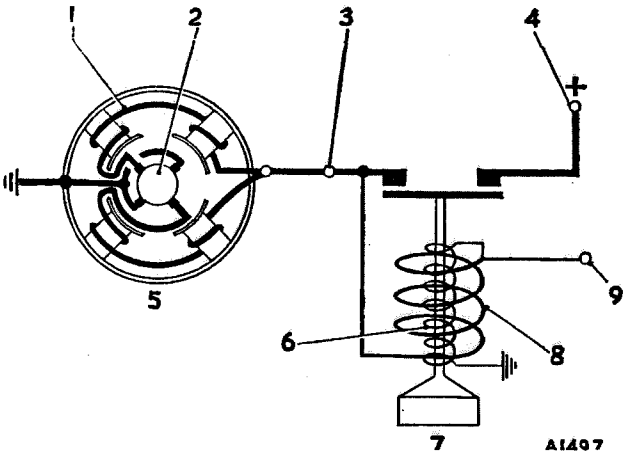

Fig. Na.8

Starter and solenoid circuit

1. Field coils.
2. Armature.
3. Solenoid terminal 'STA'.
4. Solenoid positive terminal.
5. Starter motor.
6. Hold-on winding.
7. Solenoid unit.
8. Closing winding.
9. Solenoid small terminal block.

two large terminal studs and withdraw the studs from the moulded cover.

Remove the push-rod assembly from the solenoid body; take off the plain washer, slotted cup washer, and fibre washer and remove the moving contact disc from the push-rod.

Reassembling is a reversal of the dismantling procedure.

Section Na.9

TESTING THE STARTER MOTOR SOLENOID

A suspect solenoid may be checked both mechanically and electrically in the manner described below.

The electrical tests must be carried out with the solenoid cold and a constant-voltage 4-volt D.C. supply should be used. If a constant-voltage supply is not available an accurate method of low-resistance measurement, such as a Wheatstone bridge, should be used to check the coil resistances.

All connections should be made with cables of adequate size.

Closing coil

Connect the supply or measuring instrument between the solenoid terminal marked 'STA' and the small terminal on the moulded cover. A coil in good condition will allow a current of 24 to 28 amperes to pass or will have a resistance of ·144 to ·166 ohm.

Hold-on coil

Connect the supply or measuring instrument between the solenoid body and the small terminal on the moulded cover. A coil in good condition will allow a current of 5·1 to 5·8 amperes to pass or will have a resistance of ·688 to ·792 ohm.

Mechanical testing

Remove the solenoid plunger spring, replace the plunger, and check the plunger movement and pressure required to close the solenoid contacts. The plunger movement should be ·116 to ·189 in. (2·95 to 4·80 mm.) and the pressure should be 4 to 7 lb. (1·81 to 3·18 kg.).

In a similar manner check the total plunger movement and the pressure required to push the plunger fully home. The plunger movement should be ·263 to ·273 in. (6·68 to 6·93 mm.) and the pressure should be 10·5 to 16 lb. (4·77 to 7·26 kg.).

If the solenoid is proved to be faulty by the above tests it should be renewed. The only permissible repair that may be carried out is the replacement of the fixed contact studs and moving contact disc, which must be renewed as a set.

Section Na.10

HEATER PLUGS

To assist starting under cold conditions a 2-volt Lodge heater plug is installed in each combustion chamber in the cylinder head. The plugs are connected in series with a resistance unit which reduces the battery voltage to the requirements of the heater plugs.

When starting the engine under cold conditions the heater plugs should be switched on for approximately 15 seconds before operating the starter. Immediately the engine fires release the starter control.

Operation of the heater plugs while the engine is running will result in their rapid destruction due to the elements overheating. This is caused by the 'blow-lamp' effect on the elements during the engine compression strokes.

Servicing

Apart from ensuring that the exterior of the heater plugs are kept clean and the electrical connections are tight, the plugs require no attention during service.

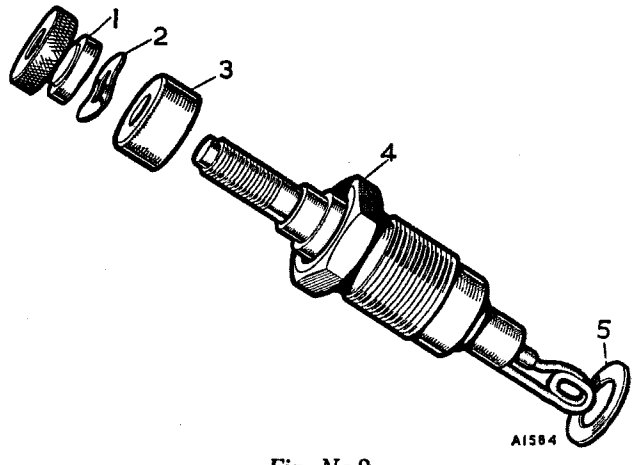

Fig. Na.9

Heater plug components

1. Terminal nut.
2. Lock washer.
3. Insulator.
4. Body.
5. Seal washer.

●WIRING DIAGRAM (with D.C. Generating Equipment) (Later Models)●

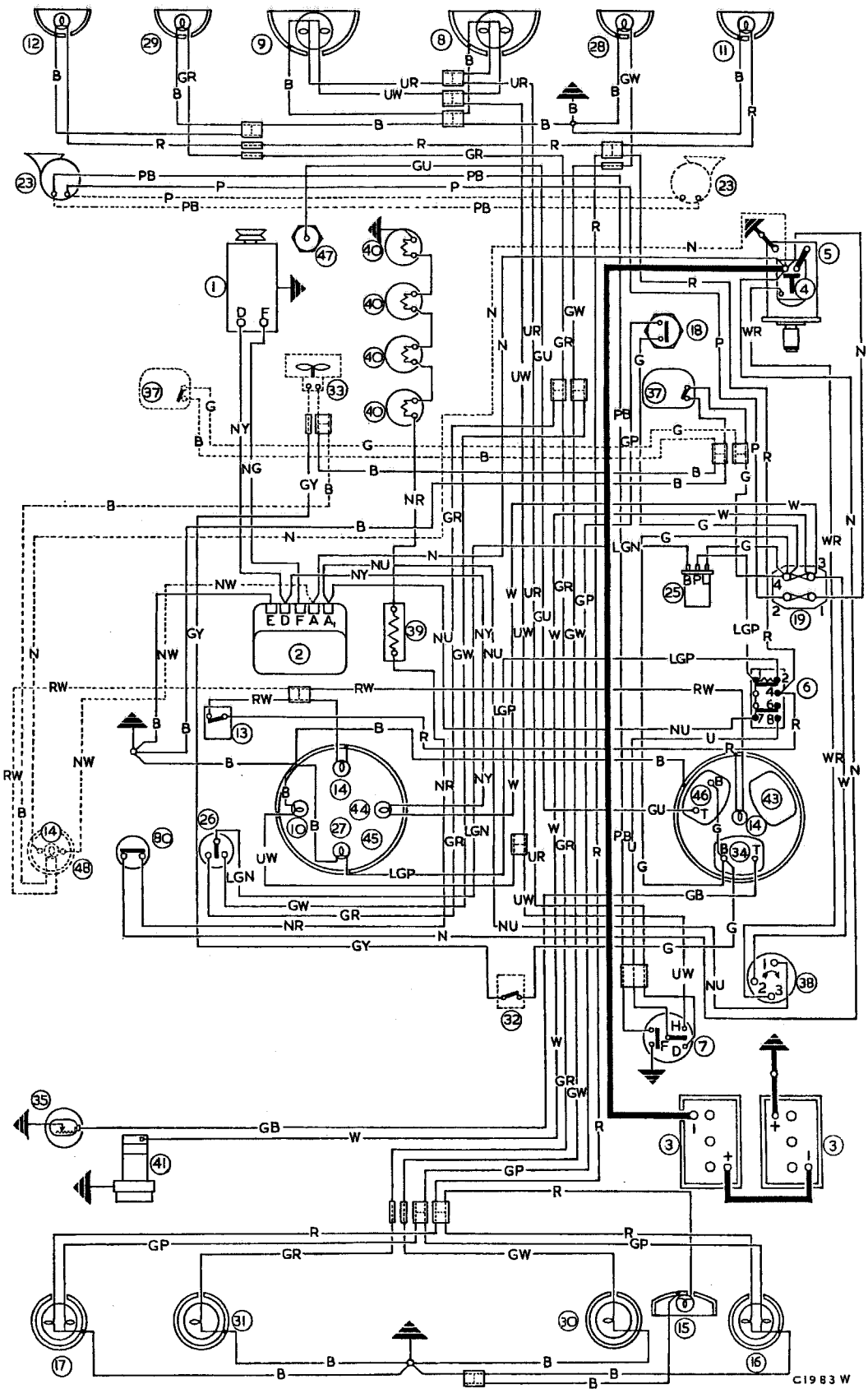

●KEY TO WIRING DIAGRAM (with D.C. Generating Equipment) (Later Models)●

No.	*Description*
1.	Dynamo.
2.	Control box.
3.	Batteries.
4.	Starter solenoid switch.
5.	Starter.
6.	Lighting switch.
7.	Main-beam dipping switch and horn button.
8.	R.H. headlamp.
9.	L.H. headlamp.
10.	Main-beam warning light.
11.	R.H. sidelamp.
12.	L.H. sidelamp.
13.	Panel lamp switch.
14.	Panel illumination lamps.
15.	Number-plate lamp.
16.	R.H. stop and tail lamp.
17.	L.H. stop and tail lamp.
18.	Stop lamp switch.
19.	Fuse unit.
23.	Horn.
25.	Flasher unit.

No.	*Description*
26.	Flasher light switch.
27.	Flasher warning lamp.
28.	R.H. front flasher lamp.
29.	L.H. front flasher lamp.
30.	R.H. rear flasher lamp.
31.	L.H. rear flasher lamp.
32.	Heater switch.
33.	Heater.
34.	Fuel gauge.
35.	Fuel gauge tank unit.
37.	Windscreen wiper.
38.	Master/starter switch.
39.	Ballast resistor.
40.	Heater plugs.
41.	Fuel pump.
43.	Oil pressure gauge.
44.	No-charge warning light.
45.	Speedometer.
46.	Temperature gauge.
47.	Temperature transmitter.
48.	Ammeter.
80.	Heater plug switch.

CABLE COLOUR CODE

B. Black.	G. Green	R. Red.
U. Blue.	LG. Light Green.	W. White.
N. Brown.	P. Purple.	Y. Yellow.

When a cable has two colour code letters the first denotes the main colour and the second denotes the tracer colour.

●WIRING DIAGRAM (with A.C. Generating Equipment) (Later Models)

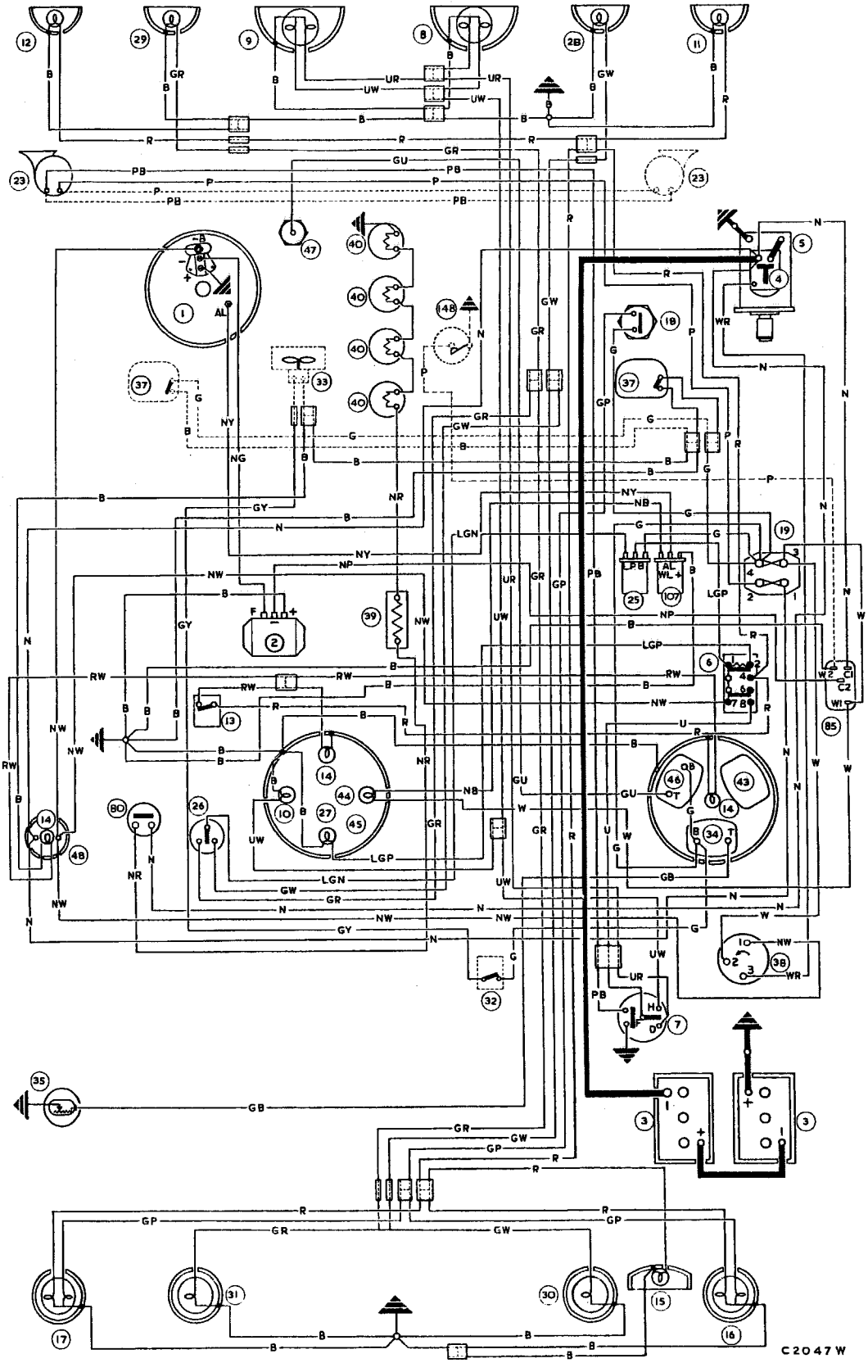

●KEY TO WIRING DIAGRAM (with A.C. Generating Equipment) (Later Models)

No.	*Description*
1.	Alternator.
2.	Control unit.
3.	Batteries.
4.	Starter solenoid.
5.	Starter motor.
6.	Lighting switch.
7.	Horn-push and dip switch.
8.	R.H. headlamp.
9.	L.H. headlamp.
10.	Main-beam warning lamp.
11.	R.H. sidelamp.
12.	L.H. sidelamp.
13.	Panel lamps switch.
14.	Panel lamps.
15.	Number-plate lamp.
16.	R.H. stop and tail lamp.
17.	L.H. stop and tail lamp.
18.	Stop lamp switch.
19.	Fuse unit.
23.	Horn.
25.	Flasher unit.
26.	Direction indicator switch.
27.	Direction indicator warning lamp.
28.	R.H. front flasher lamp.
29.	L.H. front flasher lamp.
30.	R.H. rear flasher lamp.
31.	L.H. rear flasher lamp.
32.	Heater switch (when fitted).
33.	Heater motor (when fitted).
34.	Fuel gauge.
35.	Fuel gauge tank unit.
37.	Windscreen wiper.
38.	Master and starter switch.
39.	Ballast resistor.
40.	Heater plugs.
43.	Oil pressure gauge.
44.	No-charge warning lamp.
45.	Speedometer.
46.	Water temperature gauge.
47.	Water temperature transmitter.
48.	Ammeter.
80.	Heater plug switch.
85.	Field isolating relay.
107.	Warning lamp control unit.
148.	Field isolation switch.

CABLE COLOUR CODE

B. Black.	G. Green.	R. Red.
U. Blue.	L.G. Green.	W. White.
N. Brown.	P. Purple.	Y. Yellow.

When a cable has two colour code letters the first denotes the main colour and the second denotes the tracer colour. ●

Cleaning of the plug element is unnecessary as the heat generated during combustion is sufficient to keep it free from deposits.

In the event of failure a faulty plug should be renewed. Disconnect the cables from the plug and, using a suitable spanner, slacken the plug two or three turns. Using a compressed-air line, blow the area surrounding the plug clear of dirt and then remove the plug and its copper sealing washer. The aperture in the cylinder head should be plugged immediately with clean rag to prevent the ingress of foreign matter into the combustion chamber and cylinder.

When refitting ensure that the copper sealing washer is in good condition and will make a gas-tight joint.

The cable eyelets on each plug must be separated by the insulator and the eyelet with the larger hole must be on the inside.

Section Na.11

DYNAMO

The servicing instructions given in Sections N.3, N.4, and N.5 are applicable, but the following points should be noted.

(1) Three types of Lucas dynamo are in use, the C42 and C45PV–6 being fitted on some engines and the C40–1 being fitted as standard.

(2) The Type C42 dynamo is fitted with non-magnetic through-bolts. If these bolts are renewed the replacements must be of non-ferrous material.

(3) When measuring the resistance of the field coils on a Type C42 dynamo the ohmmeter reading should be 4·5 ohms. The ammeter reading where a 12-volt D.C. supply is used should be 2·5 amps.

(4) Maximum permissible brush wear and bush spring tension are dependent on the dynamo type. Appropriate figures for the three types of dynamo are as follows.

Dynamo type	*Minimum permissible brush length*	*Brush spring tension*	
		Minimum with worn brushes	*Maximum with new brushes*
C40–1	$\frac{9}{32}$ in. (7 mm.)	13 oz. (369 gm.)	30 oz. (850 gm.)
C42	$\frac{1}{4}$ in. (6 mm.)	16 oz. (454 gm.)	33 oz. (936 gm.)
C45PV–6	$\frac{11}{32}$ in. (9 mm.)	25 oz. (708 gm.)	33 oz. (936 gm.)

(5) After reassembly the dynamo should be checked on a test bench against the following performance data.

Dynamo type	*Cutting-in speed*	*Maximum output*	*Field resistance*
C40–1	1,450 r.p.m. (max.) at 13·0 dynamo volts	22 amps. at 2,250 r.p.m. (max.) at 13·5 dynamo volts and a resistance load of ·61 ohm	6·0 ohms
C42	1,250 r.p.m. (max.) at 13·0 dynamo volts	30 amps. at 2,200 r.p.m. (max.) at 13·5 dynamo volts and a resistance load of ·45 ohm	4·5 ohms
C45PV–6	1,300 r.p.m. (max.) at 13·0 dynamo volts	25 amps. at 2,050 r.p.m. (max.) at 13·5 dynamo volts and a resistance load of ·54 ohm	6·0 ohms

SECTION O

THE WHEELS AND TYRES

	Section
Tubeless tyre	
Removing and replacing	O.5
Repairing	O.6
Tubeless tyre valves	O.4
Tyre and tube—removing and replacing	O.3
Tyre maintenance	O.1
Wheel—removing and replacing	O.2

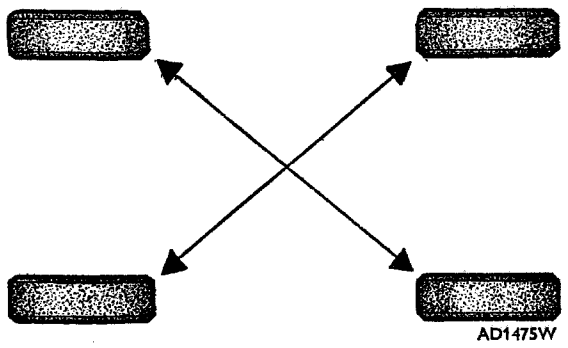

Fig. O.1

Changing the wheels round to regularize tyre wear (when a spare is not carried)

Section O.1

TYRE MAINTENANCE

Even tyre wear is promoted by changing the positions of the tyres on the vehicle at the recommended intervals.

Attention should be paid to the following points with a view to obtaining the maximum service from the tyre equipment of the vehicle.

Test the pressures of the tyres regularly by means of a suitable gauge and restore any lost air. It is not sufficient to make a visual inspection of the tyre for correct inflation. Inflate the spare wheel tyre to the correct pressure.

Vehicles leaving the Factory do so with a reduced tyre pressure, which should be corrected before the vehicle is put into service. The only correct method of arriving at the approximate pressure is by weighing the front axle and rear axle separately when the vehicle is laden to the maximum load it is expected to carry and adjusting the pressures accordingly.

Keep the treads free from grit and stones and carry out any necessary repairs. Clean the wheel rims and keep them free from rust. Paint the wheels if necessary.

Keep the brakes adjusted correctly and in good order. Fierceness or uneven action has a destructive effect upon the tyres.

Misalignment is a very costly error. Suspect it if rapid wear of the front tyres is noticed and correct the fault at once.

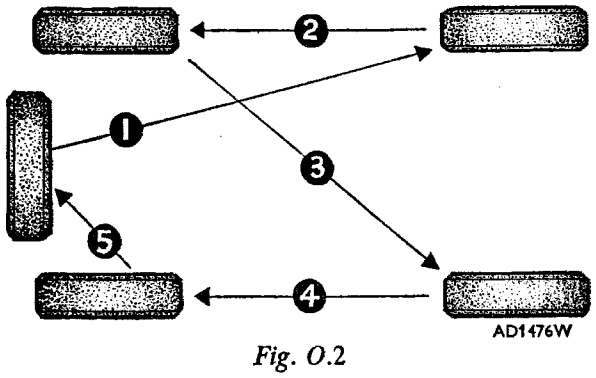

Fig. O.2

Changing the wheels round to regularize tyre wear (when a spare is carried)

Should the tyres get oily, petrol should be applied sparingly and wiped off at once.

Avoid under- and over-inflation.

Avoid kerbing and other causes of severe impact.

Have any damage repaired immediately.

Remove tyres when smooth for remoulding.

Section O.2

REMOVING AND REPLACING A WHEEL

Slacken the five nuts securing the road wheel to the hub. Lift the vehicle with the jack, remove the nuts, which have right-hand threads on right-hand wheels and left-hand threads on left-hand wheels, and lift the wheel from the hub.

Refitting a wheel is a reversal of these instructions, but ensure that the wheel nuts are fitted with the tapered side towards the wheel and tighten them in the order illustrated.

The wheel nuts should be tightened to the correct torque figure given in **'GENERAL DATA'**.

Section O.3

REMOVING AND REPLACING A TYRE AND TUBE

It is as well to remember that for removing or replacing a tyre force is unnecessary and can be dangerous, as it merely tends to damage the cover beads.

To remove a tyre first withdraw all valve parts to deflate it, then push both tyre beads off the rim seats.

Commence to remove the bead on the valve side of the cover by inserting a lever at the valve position, and while pulling on this lever push the bead into the well of the rim diametrically opposite the valve. Insert a second lever about 2 in. (5 cm.) away from the first and gradually prise the bead over the rim flange.

Continue round the rim, prising the bead over the rim with one lever while holding the removed portion of the bead with the other.

With one bead thus freed from the wheel rim the tube can be withdrawn.

Next, stand the cover upright with the freed bead

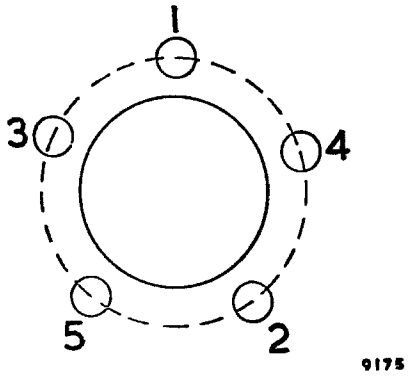

Fig. O.3

Order of tightening the wheel nuts

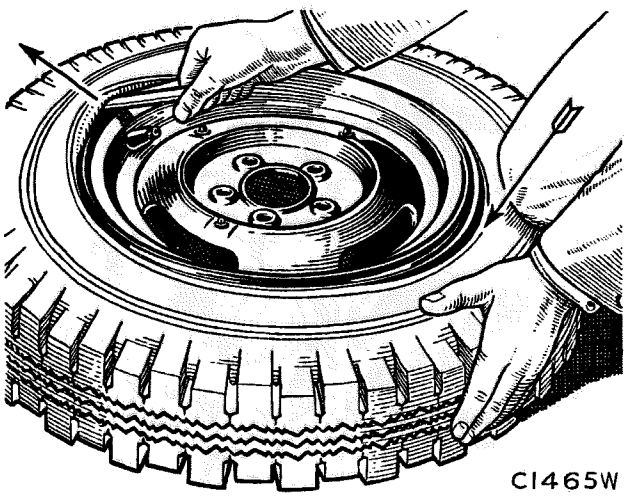

Fig. O.4

With the bead of the tyre held in the base of the rim, insert a lever close to the valve and lift the tyre bead over the rim

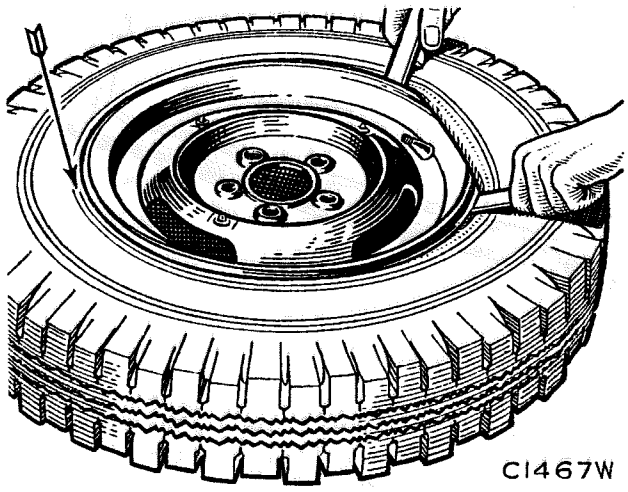

Fig. O.6

With the tyre held in the base of the rim opposite the valve, the final fitting can be carried out without undue force

nearest the operator, then insert a lever from the front between the second bead and the flange. Pull the cover back over the flange. Should the operation prove difficult, keep the strain on the lever and tap the tyre off with a rubber mallet.

In refitting a tyre, first place the cover on top of the wheel and push as much as possible of the lower bead, by hand, into the well of the rim. Using a tyre lever, prise the remaining portion of the lower bead over the rim flange.

Now slightly inflate the tube until it just begins to round out and insert it in the cover, making sure that the valve, which is fitted in the side of the tube, is on the correct side of the rim and properly entered into the hole provided.

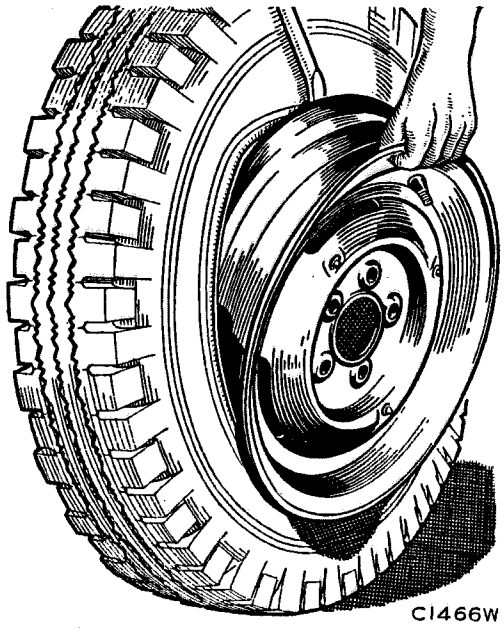

Fig. O.5

With the bead of the tyre in the base of the rim, the upper part of the tyre can be levered off the wheel

Commence to fit the second bead by pushing it into the well of the rim diametrically opposite the valve. Lever the bead over the flange, starting at either side of this position and finishing at the valve.

Ease the valve in the rim hole and push upwards by hand to enable the beads to seat correctly, then pull the valve firmly back into position.

Finally, inflate the tyre to the correct pressure, ensuring in the process that the beads are seated evenly round the rim, a factor which may be checked by the line on the cover.

It may be noted that water on levers considerably eases the fitting and removing of beads.

Section O.4

TUBELESS TYRE VALVES

A mushroom-headed rubber valve is used with tubeless tyres. The valve is secured in the wheel by a small stepped flange on the rubber valve and by the pressure of air inside the tyre.

A simple but effective tool for fitting the valve can be made up from a 7 in. (18 cm.) length of ½ in. (13 mm.) steel bar or 13 S.W.G. steel tubing. Using a letter 'S' (8·83 mm.) drill, in one end drill a hole to a depth of approximately ⅝ in. (16 mm.).

Obtain an ordinary valve dust cap and solder the cap in the drilled hole.

The opposite end of the tool requires a hole drilling

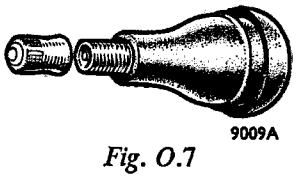

Fig. O.7

Valve for tubeless tyres

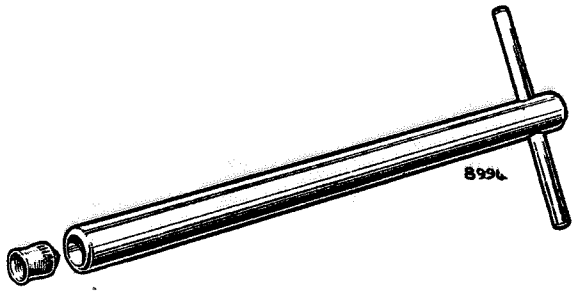

Fig. O.8
Tool for fitting tubeless tyre valves

about ½ in. (13 mm.) from the end to accept a short piece of ¼ in. (6 mm.) diameter rod to provide a handle.

To fit the valve with the aid of the tool first liberally coat the rubber valve and the perimeter of the valve hole in the wheel with soapy water. Insert the valve into the hole and screw on the special tool. A sharp pull will seat the valve correctly.

The valves may be tested for airtightness by rotating the wheel until the valve is at the top and inserting the end of the valve in a small container of water. If bubbles appear the seating is faulty and the valve interior should be replaced with a new one.

It is advisable to change the valve interiors every 12 months.

Valve caps, in addition to preventing dirt entering the valve, form a secondary air seal and should always be fitted.

Section O.5

REMOVING AND REPLACING A TUBELESS TYRE

Remove the valve interior to completely deflate the tyre.

Push both cover edges into the well-base of the wheel, and at a point diametrically opposite lever the cover edge over the rim of the wheel, using two levers at intervals of 6 in. (15 cm.) apart. Continue working round the wheel until the cover on one side is completely free.

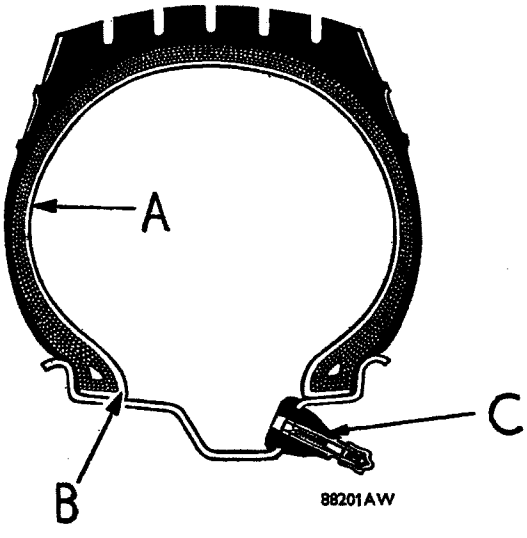

Fig. O.9
A section through a tubeless tyre

A. Air-retaining liner. B. Rubber air seal.
C. Rubber-sealed valve.

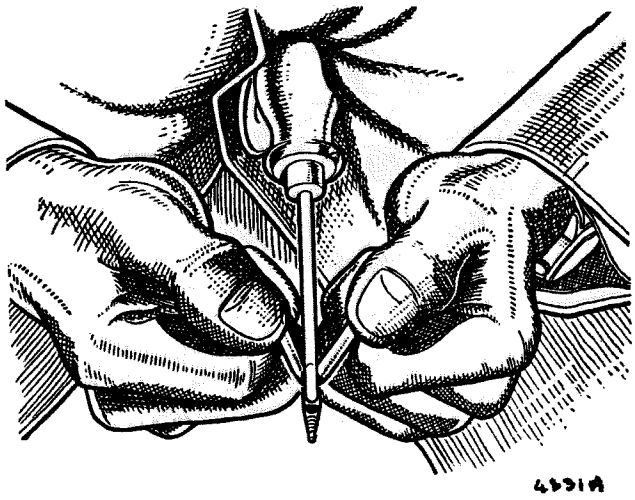

Fig. O.10
Rolling the plug into the needle eye

NOTE.—Do not attempt to stretch the edges of the tyre cover over the rim edge and only use thin, narrow levers in good condition without rust or burrs. Do not widely space the levers.

Force is entirely unnecessary and is detrimental, as it tends to damage the wire edges. Fitting or removing is quite easy if the tyre edges are carefully adjusted into the rim base; if found difficult, the operation is not being performed correctly.

Stand the tyre and wheel upright, keeping the bead in the base of the rim. Lever the bead over the rim flange and at the same time push the cover away from the wheel with the other hand.

The tubeless tyre relies primarily on a good air seal between the tyre bead and the rim, and also between the rim and the valve. Great care is therefore necessary to avoid the slightest damage to the tyre bead, and the following instructions are of great importance.

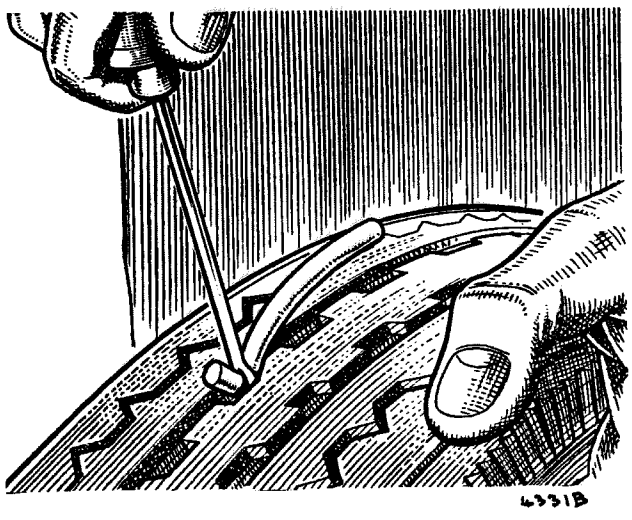

Fig. O.11
Inserting the plug and needle through the hole in the tyre

Rim preparation

(1) Remove any visible dents in the flange by careful hammering.

(2) Clean the flange and rim seat with steel wool, emery, or other cleaning medium and remove all foreign matter, rust, rubber, etc. Paint need not be removed but irregularities in the surface should be smoothed out. In extreme cases of rusting it may be necessary to use a wire brush or a file.

(3) File or buff away any high-spot at the butt-weld joint.

(4) Wipe the flange and bead seat with a water-moistened cloth.

Before fitting moisten the beads of the tyre, the rim flange, and the tyre levers with water; **do not use petrol.** Mount the tyre on the rim and push one edge of the cover over the edge of the rim; continue working round the tyre towards the valve position. The portion of the tyre first fitted should be kept pushed into the well-base of the wheel rim and then no difficulty will be encountered in fitting the last portion of the cover.

Before inflation bounce the crown of the tyre on the ground at various points to snap home the beads of the tyre against the rim of the wheel and provide a partial seal.

With the wheel in an upright position inflate the tyre. If a seal cannot be obtained at the first rush of air bounce the tyre again with the air-line attached. In cases of difficulty apply a tourniquet of strong cord around the circumference of the tyre and tighten. When a seal is obtained inflate until the beads are completely forced against both rim flanges. Remove the air-line, insert the valve interior, and inflate to 50 lb./sq. in. (3·5 kg./cm.^{2}) for testing.

Allow the tyre to stand for a few minutes so that any free air trapped between the flange and the bead clinch can escape. Test the complete assembly in a water tank, paying special attention to the areas at the beads, valve, and wheel rivets.

Sealing leaks located during testing

Loss of air may occur at any or all of the following points:

(1) The area of the bead seat, showing as a leak at the top of the flange.

This is normally due to a high-spot on the rim and can usually be cured by holding the bead away from the rim to allow further cleaning.

(2) The wheel rivets. In this case, and in extreme cases of leakage in the area of the bead seat, it is necessary to remove the tyre. Before doing so mark the position of the leak on the tyre and rim.

Loss of air at the rivets can be cured by peening over the rivet heads.

(3) The base of the valve or its interior. Provided the valve is correctly fitted, this may be due only to dirt under the valve seat. Clean the area of the valve seat on the wheel and fit a new valve interior.

Inflate the tyre to the correct pressure before fitting the wheel assembly to the vehicle and driving.

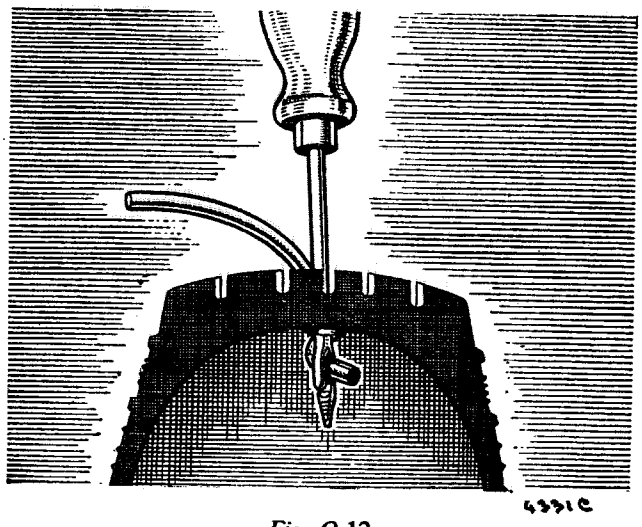

Fig. O.12

The inserted plug prior to withdrawing the needle

Section O.6

REPAIRING A TUBELESS TYRE

Penetrations

Normally a tubeless tyre will not leak as the result of penetration by a nail or other puncturing object, provided that it is left in the tyre. It is necessary to examine the tyres at the recommended intervals and to withdraw such objects at a time when loss of air pressure will cause least inconvenience.

Use of plugging kit—location and preparation

If a hole fails to seal mark the spot and extract the puncturing object, taking note of the direction of penetration. If the tyre is leaking and the puncturing object cannot be located by sight it is necessary to immerse the inflated tyre in water.

Dip the plugging kit needle into the flask of solution and insert it into the hole in the tyre, following the same direction as the penetration.

Repeat the operation until the hole is well lubricated with solution.

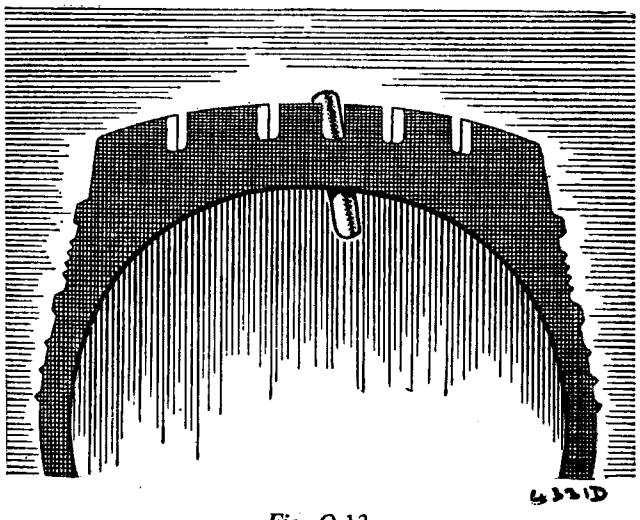

Fig. O.13

Plug inserted in tyre and cut off to the correct length

Repair

Select a plug about twice the diameter of the puncturing object, stretch it, and roll it into the eye of the needle ¼ in. (6 mm.) from the end. After dipping the plug into the solution insert the needle into the hole and push the plug through the tyre.

Withdraw the needle and cut off the surplus plug about ⅛ in. (3 mm.) from the surface of the tread. The tyre can now be inflated and used immediately. More severe injuries which are outside the scope of simple puncture repair methods are dealt with in nearly the same way as similar injuries to conventional covers.

If the tyre deflates on the road following an unusually large penetration a tube can be fitted to enable the driver to remain on the road until it is convenient for the necessary repairs to be carried out. (The valve used for the tubeless tyre must be removed before the fitting of the tube.)

SECTION Q

CHASSIS DIMENSIONS

CHASSIS CHECKING DIMENSIONS (G4M10)

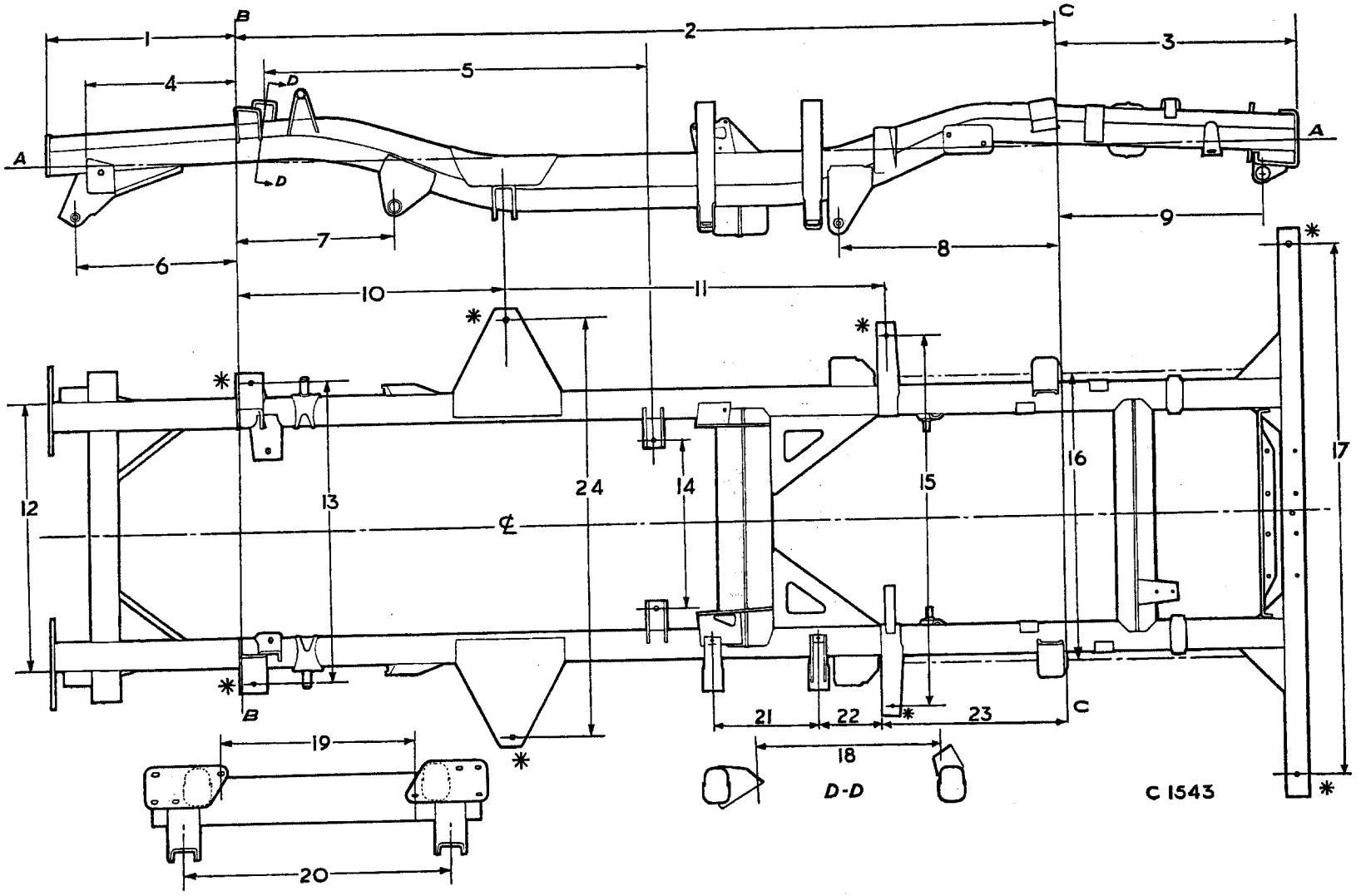

KEY TO CHASSIS CHECKING DIMENSIONS (G4M10)

No.	*Dimension*
1.	$20\frac{7}{8}$ in. (530·22 mm.).
2.	$90 \pm \frac{1}{8}$ in. (2286±3·17 mm.).
3.	$26\frac{1}{4}$ in. (666·75 mm.).
4.	$16\frac{9}{16}$ in. (420·68 mm.).
5	$42\frac{1}{2} \pm \frac{1}{16}$ in. (1079·5±1·58 mm.).
6.	$18 \pm \frac{1}{32}$ in. (457·2±0·79 mm.).
7.	$16\frac{7}{8} \pm \frac{1}{32}$ in. (428·62±0·79 mm.).
8.	$23\frac{15}{16} \pm \frac{1}{32}$ in. (608·01±0·79 mm.).
9.	$22\frac{7}{8} \pm \frac{1}{32}$ in. (581·02±0·79 mm.).
10.	$29 \pm \frac{1}{32}$ in. (736·6±0·79 mm.).
11.	$42 \pm \frac{1}{32}$ in. (1066·8±0·79 mm.).
●12.	$29 \pm \frac{1}{8}$ in. (736·6±3·17 mm.).*
13.	$32\frac{1}{2} \pm \frac{1}{32}$ in. (812·8±0·79 mm.).*
14.	$18\frac{1}{8} \pm \frac{1}{32}$ in. (460·37±0·79 mm.).
15.	$40 \pm \frac{1}{16}$ in. (1016±1·58 mm.).*
16.	$32 \pm \frac{1}{32}$ in. (812·8±0·79 mm.).*
17.	$56\frac{3}{4} \pm \frac{1}{16}$ in. (1422·4±1·58 mm.).
18.	$20\frac{7}{8} \pm \frac{1}{16}$ in. (530·22±1·58 mm.).
19.	$21 \pm \frac{1}{32}$ in.(533·4±0·79 mm.). (Front end of frame)
20.	$29 \pm \frac{1}{32}$ in. (736·6±0·79 mm.).* (Front end of frame)
21.	$11\frac{3}{4}$ in. (298·45 mm.).
22.	$6\frac{7}{8}$ in. (174·62 mm.).
23.	$19\frac{7}{8}$ in. (524·82 mm.).
24.	$45 \pm \frac{1}{16}$ in. (1143±1·58 mm.).*●

A—A=Top of frame datum line.

B—B=Front axle datum line.

C—C=Rear axle datum line.

—=Body mounting points.

C/L =Centre-line of chassis.

●* These dimensions have been increased by $\frac{1}{16}$ in. (1·58 mm.) from Chassis No. 16417 onwards.●

CHASSIS CHECKING DIMENSIONS (G4 M15)

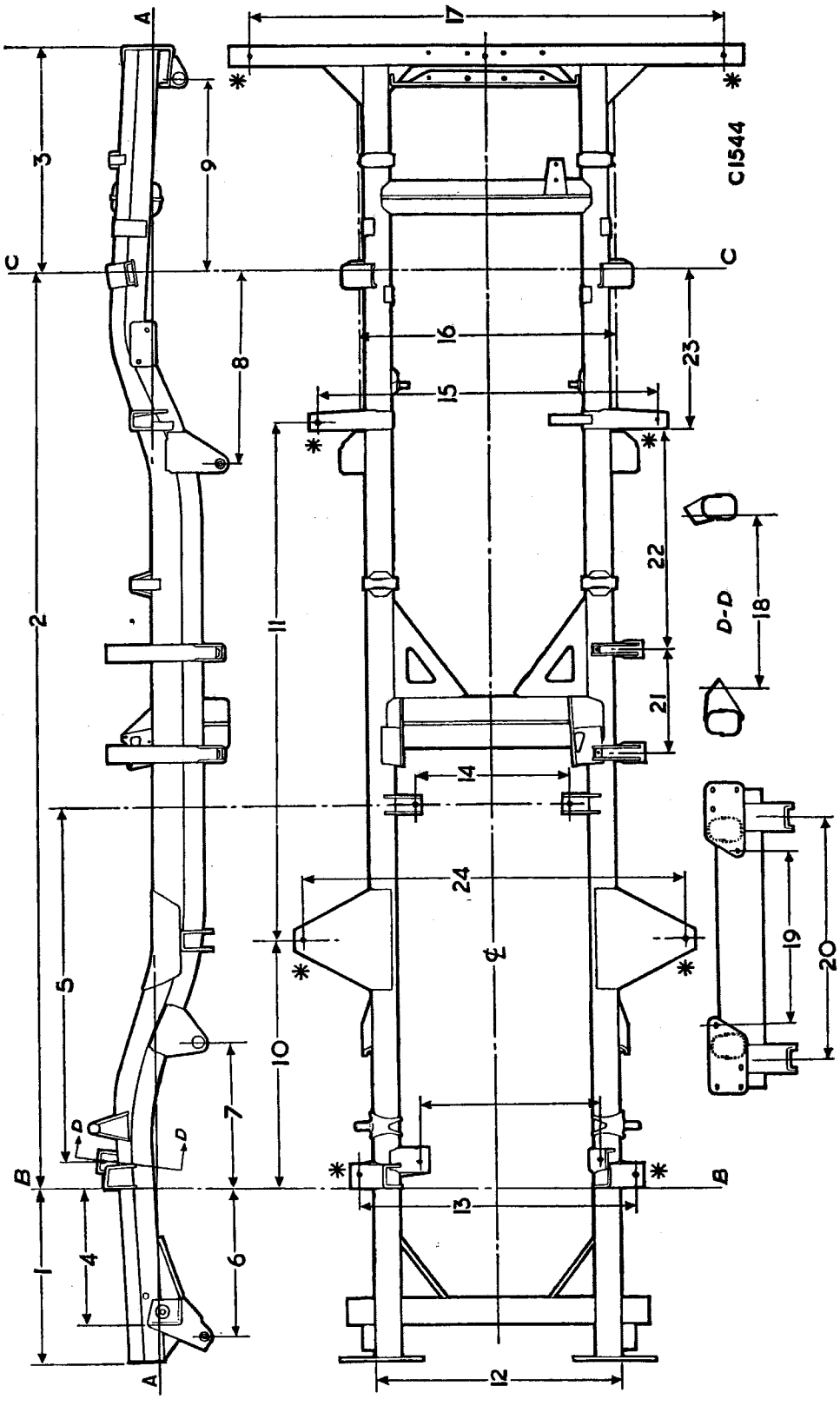

KEY TO CHASSIS CHECKING DIMENSIONS (G4M15)

No.	Dimension
1.	$20\frac{7}{8}$ in. (530·22 mm.).
2.	$111 \pm \frac{1}{8}$ in. (2794±3·17 mm.).
3.	$26\frac{1}{4}$ in. (666·75 mm.).
4.	$16\frac{9}{16}$ in. (420·68 mm.).
5.	$42\frac{1}{2} \pm \frac{1}{16}$ in. (1079·5±1·58 mm.).
6.	$18 \pm \frac{1}{32}$ in. (457·2±0·79 mm.).
7.	$16\frac{7}{8} \pm \frac{1}{32}$ in. (428·62±0·79 mm.).
8.	$23\frac{11}{16} \pm \frac{1}{32}$ in. (608·01±0·79 mm.).
9.	$22\frac{7}{8} \pm \frac{1}{32}$ in. (581·02±0·79 mm.).
10.	$29\frac{1}{32}$ in. (736·6±0·79 mm.).
11.	$63 \pm \frac{1}{32}$ in. (1600·2±0·79 mm.).
●12.	$29 \pm \frac{1}{8}$ in. (736·6±3·17 mm.).*
13.	$32\frac{1}{2} \pm \frac{1}{32}$ in. (812·8±0·79 mm.).*
14.	$18\frac{1}{8} \pm \frac{1}{32}$ in. (460·37±0·79 mm.).
15.	$40 \pm \frac{1}{16}$ in. (1016±1·58 mm.).*
16.	$32 \pm \frac{1}{32}$ in. (812·8±0·79 mm.).*
17.	$56\frac{3}{4} \pm \frac{1}{16}$ in. (1422·4±1·58 mm.).
18.	$20\frac{7}{8} \pm \frac{1}{16}$ in. (530·22±1·58 mm.).
19.	$21 \pm \frac{1}{32}$ in. (533·4±0·79 mm.). (Front end of frame)
20.	$29 \pm \frac{1}{32}$ in. (736·6±0·79 mm.).* (Front end of frame)
21.	$11\frac{3}{4}$ in. (298·45 mm.).
22.	$27\frac{7}{8}$ in. (708·02 mm.).
23	$19\frac{7}{8}$ in. (524·82 mm.).
24.	$45 \pm \frac{1}{16}$ in. (1143±1·58 mm.).*●

A—A=Top of frame datum line.

B—B=Front axle datum line.

C—C=Rear axle datum line.

—=Body mounting points.

C/L =Centre-line of chassis.

● * These dimensions have been increased by $\frac{1}{16}$ in. (1·58 mm.) from Chassis No. 16417 onwards. ●

SECTION R

THE BODY

	Section
Body—removing and replacing	R.1
Front wing—removing and replacing	R.2
Maintenance of bodywork and upholstery	R.4
Repair procedure—steel panels	R.5
Service tools	End of Section
Sliding windows—removing and replacing	R.3
Torch-soldering	R.8
Welding	
Methods	R.6
Technique	R.7

Section R.1

REMOVING AND REPLACING THE BODY

Disconnect the battery and drain the cooling system (two taps).

Take out the screws which secure the radiator top blanking plate and remove the plate. This will give access to the radiator mounting points.

Release the upper and lower hoses from the radiator.

Remove the four set pins (two each side) which secure the radiator to its mounting frame. Lift out the radiator.

Release the air intake hoses from the air cleaner.

Undo one of the set pins which hold the air cleaner strap in position. Swing the strap to one side and remove the air cleaner.

Remove the steering-column as detailed in Section J.

Remove the exhaust system by disconnecting it at the inlet manifold and at the two further securing points—one at the silencer and the other on the down pipe.

Disconnect the throttle linkage at the upper ball joint on the short arm which operates the carburetter butterfly.

Disconnect the brake pipe from the union at the top of the three-way connection.

Release the electrical leads from the starter motor.

Release the electrical leads from the generator.

Disconnect the choke wire.

From the coil release the 'CB' and 'SW' leads and the low-tension lead from the distributor.

In the case of diesel models release the controls from the fuel injection pump and the fuel feed and return pipes.

Disconnect the hydraulic pipeline from the clutch slave cylinder. This is facilitated by removing the access plate for the gearbox from the floor of the vehicle.

Release the speedometer drive from the gearbox.

Disconnect the earth strap from the bell housing.

Disconnect the oil pressure gauge pipe from the instrument.

Release the electrical wiring from the stop light switch and the petrol tank gauge unit.

Remove the two set pins which secure the hand brake quadrant to the chassis. The hand brake lever can now pivot to pass through the aperture in the body when the body is lifted off the chassis.

Remove the mounting bolts securing the body to chassis and using suitable slings, lift the body off the chassis complete with steering-column.

Replacement is a reversal of the removal procedure.

Section R.2

REMOVING AND REPLACING A FRONT WING

Remove the screws which secure the radiator top blanking plate and release the electrical harness.

Release the air intake pipes from the air cleaner. Detach the securing strap and remove the air cleaner.

Bend back the clips which secure the electrical wiring to the wing and release the wiring at the snap connectors.

Take out the mounting bolt which passes through the bracket on the wing.

Release the fixing points securing the wing to body.

Replacement is a reversal of the removal procedure.

Section R.3

REMOVING AND REPLACING DOOR SLIDING WINDOWS

Remove the screws and capping surrounding the windows on the inside of the door.

Carefully remove the sliding glass and its channels.

Remove the blanking strips and the fixed glass followed by its sealing strip.

Replacement is a reversal of the removal procedure.

Section R.4

MAINTENANCE OF BODYWORK AND UPHOLSTERY

Coachwork

Regular care of the body finish is necessary if the new appearance is to be maintained against the effects of air pollution, rain, and mud.

Wash the bodywork frequently, using a soft sponge and plenty of water containing a mild detergent. Large deposits of mud must be softened with water before using the sponge. Smears should be removed by a second wash in clean water, and with the sponge if necessary. When dry, clean the surface of the vehicle with a damp chamois-leather. In addition to the regular maintenance, special attention is required if the vehicle is driven in extreme conditions such as sea spray, or on salted roads. In these conditions and with other forms of severe contamination an additional washing operation is necessary which should include underbody hosing. Any damaged areas should be immediately covered with paint and a complete repair effected as soon as possible. Before touching-in light scratches and abrasions with paint thoroughly clean the surface. Use petrol/white spirit (gasoline/hydrocarbon solvent) to remove spots of grease or tar.

The application of B.M.C. Car Polish is all that is required to remove traffic film and to ensure the retention of the new appearance.

Bright trim

Never use an abrasive on stainless, chromium, aluminium, or plastic bright parts and on no account clean them with metal polish. Remove spots of grease or tar with petrol/white spirit (gasoline/hydrocarbon solvent) and wash frequently with water containing a mild detergent. When the dirt has been removed polish with a clean dry cloth or chamois-leather until bright. Any slight tarnish found on stainless or plated components which have not received regular washing may be removed with B.M.C. Chrome Cleaner. An occasional application of mineral light oil or grease will help to preserve the finish, particularly during winter, when salt may be used on the roads, but these protectives must not be applied to plastic finishes.

Windshield

If windshield smearing has occurred it can be removed with B.M.C. Screen Cleaner.

Interior

The upholstery may be treated with B.M.C. 2-way Cleaner applied with a damp cloth and a light rubbing action.

A razor blade will remove transfer from the window glass.

Section R.5

REPAIR PROCEDURE—STEEL PANELS

Body jack

The specially designed body jack, tool 18G308B, is an absolutely essential item when rectifying any misalignment of the all-steel body. The jack is provided with a ratchet turnscrew, and the pitch of the centre spindle thread is such that considerable force (either pulling or pushing) can be exerted. The extension pieces are made from solid drawn steel tubes and their lengths are such that the effective length of the jack can be made to vary between 21 and 94 in. (53·3 and 238·7 cm.).

The body jack is supplied in a metal box by B.M.C. Service Ltd. at current prices.

When using the jack, care must be taken to use it in the correct positions to rectify the fault or misalignment.

With the addition of a suitable oxy-acetylene outfit almost any type of repair can be effected. The initial outlay need only be small, and, considering the wide range of operations covered, there should be no hesitation in deciding that the kit must figure as part of the equipment of your repair shop.

Rectification of buckled panels

Experience will prove that parts of the body which at first sight would be considered beyond repair can be rectified easily by the use of the body jack.

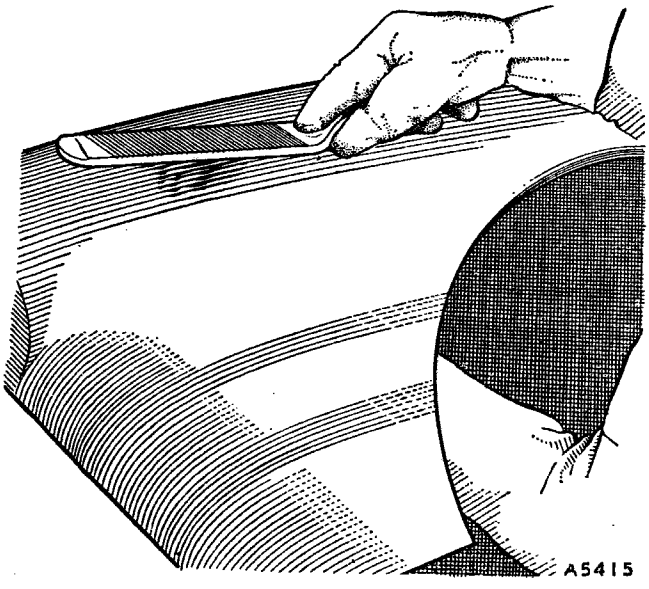

Fig. R.1

Removing a dent by tapping with a spoon; a dolly is held below the dent

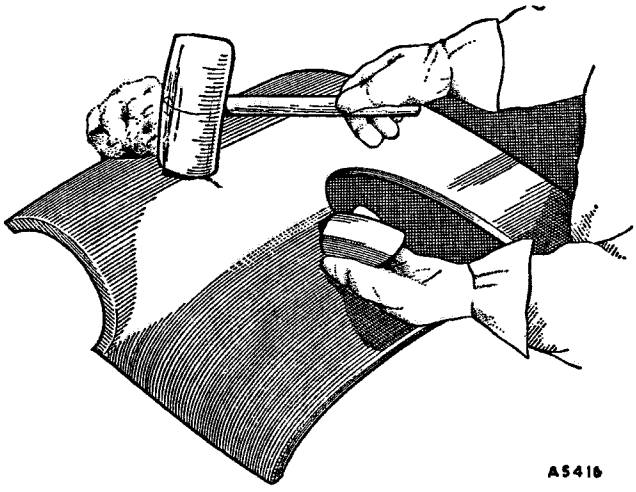

Fig. R.2

A dolly block and mallet

It is of paramount importance to return the damaged portion of the body to its original position before deciding whether replacement panels are necessary or not.

With the use of the body jack this method enables a buckled or damaged structure to be returned to its original relative position without straining the surrounding metal, which would be the inevitable result if the damaged portion were pounded by means of a hammer. At this stage a decision can be reached as to whether any damaged panel is to be repaired or renewed.

Spoon for removal of small dents

To remove small dents a spoon made from a coarse-cut file, specially shaped and having the teeth intact, is used in conjunction with a suitably shaped dolly block.

The use of a hammer to remove small dents is to be deprecated, as hammer-blows tend to stretch the surrounding metal, giving rise to further complications. It is for this reason that the spoon is recommended, as by its use a depression can be raised to its original level without stretching.

On panel work such as doors, or where inside reinforcements prevent the use of a dolly block, a hole can be punched or drilled through the inside panel and a suitable drift pin, about ½ in. (13 mm.) in diameter, used in conjunction with the spoon in place of the dolly block.

Sharper dents or a dent or collection of dents covering a large area will require the use of heat, a dolly, and a spoon in the following manner.

With the welding torch heat a small area at the outside of the collection of dents, then, holding the dolly below, hammer the raised portion with a wooden mallet. When the metal cools remove the dolly and place a large handful of wet asbestos over the heated area to prevent the heat spreading. Continue to heat and tap, working from the outside of the damaged area, until something like the original contour and level is attained.

Lightly file the surface to show up the high-spots and remove these with the dolly and spoon without further heating.

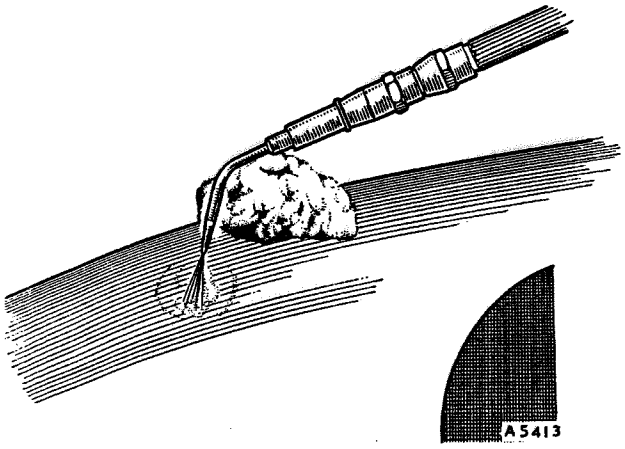

Fig. R.3
Heating the damaged area before tapping with a mallet

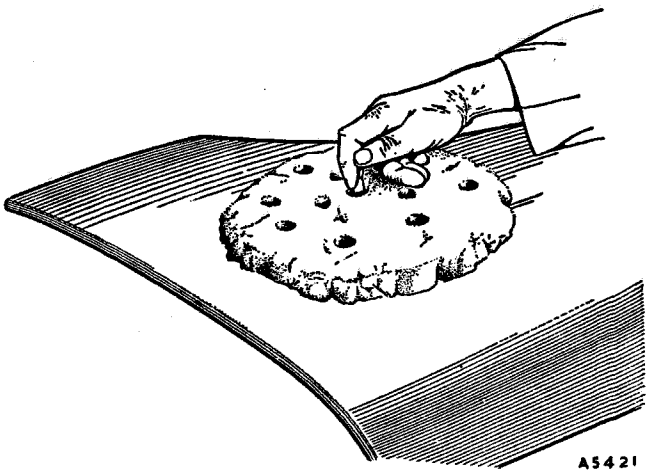

Fig. R.5
Piercing holes in the wet asbestos prior to heating

Take care when using the file not to thin the metal more than is necessary to show up the high-spots.

Alternate checking by filing and raising with the dolly block and spoon will eventually produce a flat and clean surface without weakening the metal unduly, provided excessive filing is avoided. Care should be exercised to reduce filing to a minimum as otherwise the thickness of the panel will be seriously reduced.

On completion, the surface may be tinned and any small indentations filled with plumber's solder.

Preservation of paintwork

A special spoon, having the teeth removed and its surface planished and polished, is required to enable small dents to be removed without damage to paintwork. Where it is possible to preserve paintwork when rectifying comparatively large dents a sandbag should be placed against the painted surface of the panel and the dent removed from the under side by the use of a wooden mallet. A suitable sandbag for this operation may be made from a leather oval bag 8 in. (20 cm.) long, 6 in. (15 cm.) wide, and 4 in. (10 cm.) thick which is packed tightly with sand.

Stretched panels

Stretched panels which are liable to cause drumming can be rectified by local shrinking. A liberal heap of wet asbestos is placed over the stretched panel at the point of greatest resiliency, and a hole just large enough to apply the flame of the oxy-acetylene torch is made with a finger through the centre of the asbestos. The portion of the panel which is visible is heated to a cherry-red colour and is afterwards cooled off by the wet asbestos which surrounds it. For large panels it may be necessary to repeat this operation several times at different locations over the area.

Where a panel is stretched over a fairly extensive area and produces what is known as an 'oilcan' effect the following shrinking method should be used to restore the original contour.

Mix a quantity of wet asbestos sufficient to cover the damaged area with a thickness as shown in the illustration. Press the asbestos down firmly to ensure that no air is trapped below, as it is important to confine the applied heat to the points of application.

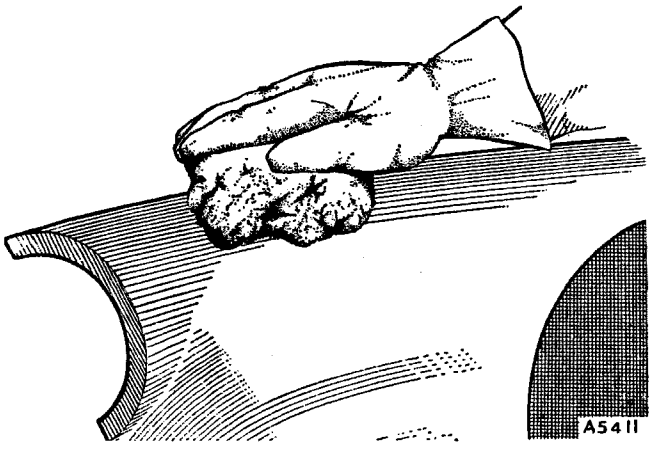

Fig. R.4
Cooling the damaged area with wet asbestos

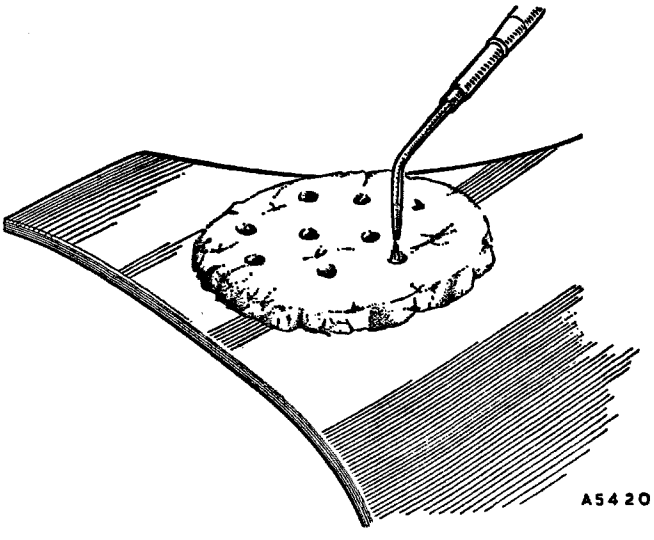

Fig. R.6
Heating a stretched panel through holes in the asbestos

With a finger pierce a series of holes in the asbestos extending to the surface of the metal. Direct the flame of the welding torch to one of the holes near the perimeter of the asbestos and heat the metal to cherry red, remove the torch, and immediately press the surrounding asbestos into the hole.

Carry out the same procedure with the remaining holes, working around the asbestos and inwards towards the centre. When the asbestos is removed the surface is cleaned up in the usual manner.

Patching

It is frequently more economical to patch an extensively damaged panel than to renew the entire assembly. This type of repair does not in the least weaken the surrounding structure, as a patch which is correctly gas-welded in

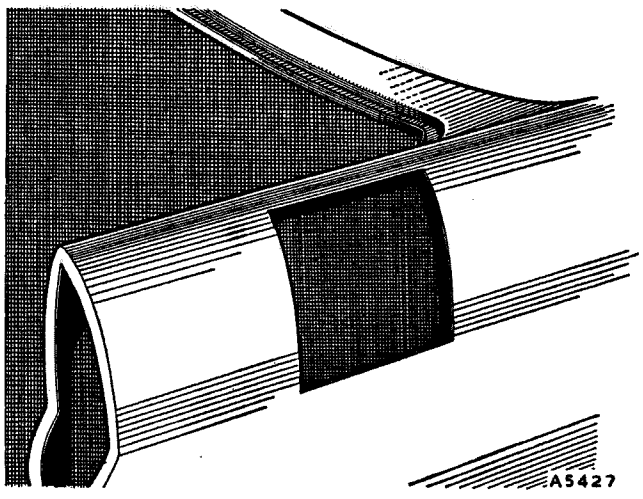

Fig. R.7

A damaged panel with piece removed for patching

position is equal in strength to the original structure. A patch can be introduced so efficiently that it is impossible to trace its presence.

The damaged portion of the panel should be cut out with a cold chisel or, if possible, by means of a hacksaw. The edges of the opening should then be filed until an even contour is obtained.

The patch to be fitted should preferably be cut from sheet metal of similar gauge and specification to that being repaired. First, it is rough-shaped to the contour of the panel, after which it is fitted to the opening to allow a clearance on all sides equal to the gauge of the metal.

In all probability, particularly during welding operations, difficulty will be experienced in holding the patch in place. This can be overcome satisfactorily by welding one or two short pieces of welding wire to act as convenient handles.

The patch is now fastened at intervals of 2 to 3 in. (5 to 8 cm.) to the panel by means of gas-weld tacks. During the tacking operation it should be reshaped to the panel to ensure that the contour is correct.

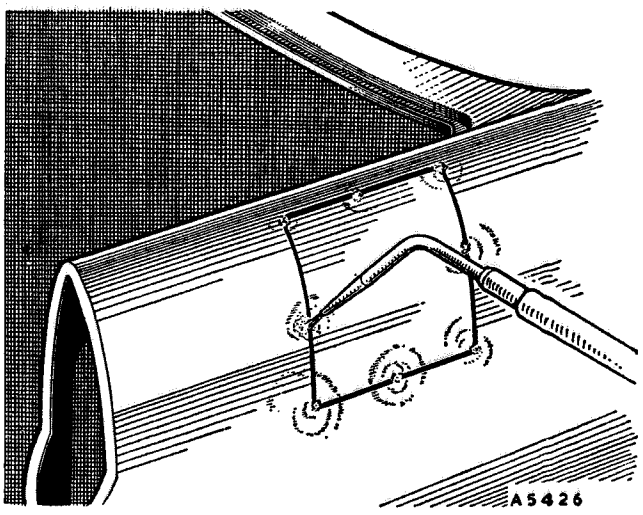

Fig. R.8

After the patch is formed clamp it in position and tack by gas-welding

To prevent expansion and possible buckling of the surrounding panel during the welding operation a liberal quantity of wet asbestos must be placed on the panel round the patch, approximately ¼ in. (6 mm.) away from the joint. The joint is now gas-welded between the tacks, whilst precautions are taken to keep the patch to the correct contour by using a suitable dolly block and bumping hammer. On completion, any excrescences in the welding are removed by filing and, after straightening with the dolly block and bumping hammer, the patching

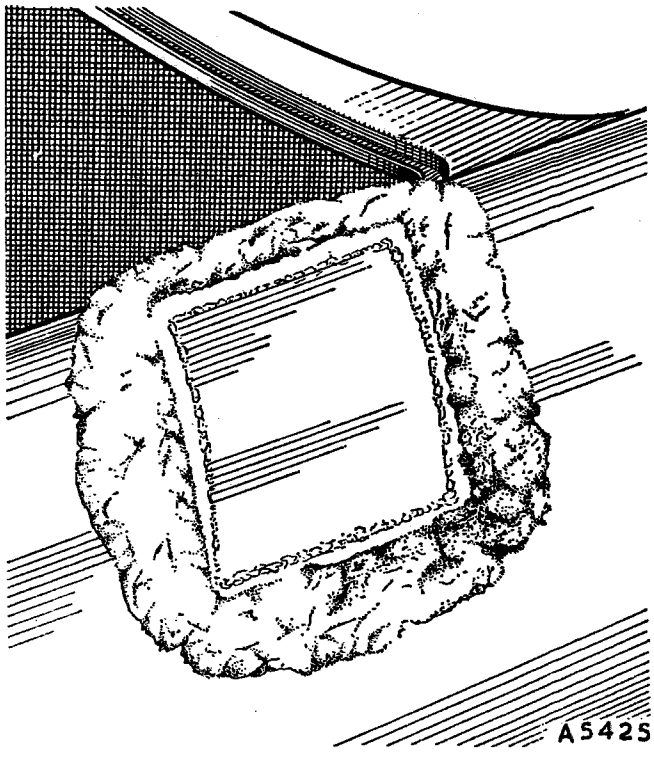

Fig. R.9

Surround the joint with wet asbestos to prevent buckling during welding

is finally finished by tinning and solder-filling as described in Section R.6.

Patch forming

Where it is necessary to 'form' a patch from the flat sheet to any particular contour a wooden or lead raising block is generally employed. The raising block should have several elliptical depressions of varying depths and diameters.

The patch is placed over the selected depression and is raised by hammering with the ball-peen end of a hammer, starting from the outer edges and gradually working towards the centre. A mistake frequently made is to strike too hard whilst raising the centre, with the result that the curve is of greater depth than that required.

Repair of beadings and mouldings

Where difficulty is experienced in straightening or renewing a beading, moulding, or corner the original contour may be obtained by careful tinning and filling with plumber's solder. The finished work will be equal in appearance and equal in strength, whilst the substitution of soldering for straightening, or renewing, will save the necessity for removing inside trimmings, etc.

Filing

It should be clearly understood that in every case filing must be reduced to a minimum owing to the thinness of the material. Wrinkles or ridges should be removed by the spoon or dolly block, and finished finally by tinning and soldering.

Replacing panels

In cases of extreme damage it will be found more economical to remove the damaged portions and replace them with new panels which are obtainable from B.M.C. Service Ltd.

Owing to the fact that damage is usually localized, it will only infrequently be found necessary to remove a complete panel or unit. In the great majority of cases the damaged portion can be removed and a corresponding part cut from a replacement unit and located in position by gas-welding.

Section R.6

WELDING METHODS

Spot-welds

The units to be joined are pressed together between two copper electrodes through which an electric current of low voltage and high amperage is passed. The resistance of the steel to the electric current raises the metal to welding temperature and the pressure between the electrodes produces complete fusion. The resulting joint is as strong as the surrounding structure, and a correctly made spot-weld will not break or become loose by vibration.

Spot-welds cannot be broken satisfactorily by inserting a cold chisel or lever between the two panels. Each weld must be carefully drilled in the centre, using a drill approximately $\frac{3}{16}$ in. (4·76 mm.) in diameter. There is no necessity to drill through both panels as it is sufficient if the point of the drill merely penetrates the second panel. The weld is finally broken by inserting a thin, sharp, cold chisel between the joint and tapping it lightly.

On panels where the spot-welds are covered by paint it is necessary to use a suitable paint remover to clean the joints. The spot-welds will easily be located by the discoloration of the metal. Reference to the cab build-up illustrations will facilitate tracing the various joints.

Gas-welds

A gas-weld may be broken either by cutting with a hacksaw or, alternatively, with a sharp cold chisel. Place a suitable support at the back of the panel to act as an anvil whenever possible.

Lap-welds

Most lap-welds used in the cab are hidden from view by solder-filling. Reference should be made to the illustrations showing the build-up of the cab in order to

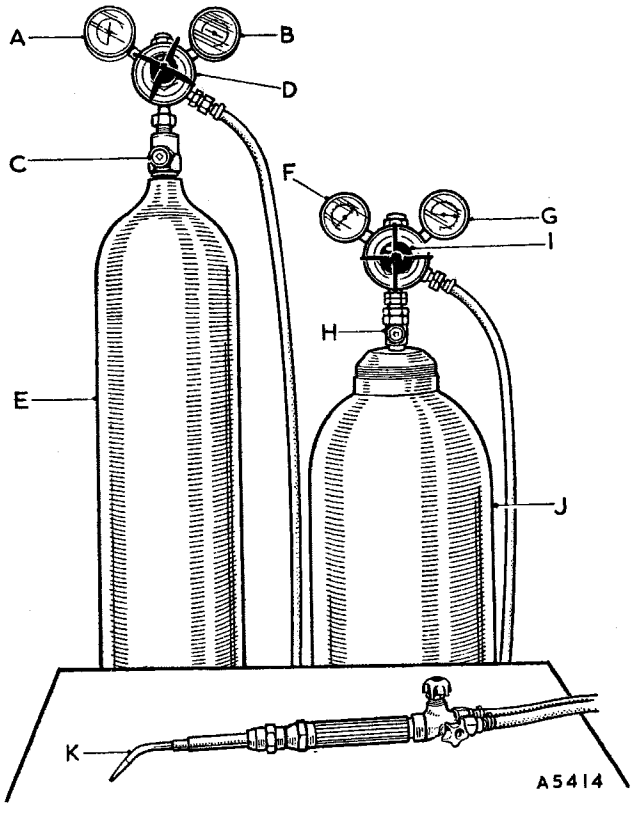

Fig. R.10

High-pressure oxy-acetylene welding outfit

A. Outlet pressure gauge (O).
B. Cylinder contents gauge (O).
C. Valve.
D. Pressure regulating screw.
E. Oxygen cylinder (BLACK).
F. Outlet pressure gauge (A).
G. Cylinder contents gauge (A).
H. Valve.
I. Pressure regulating screw.
J. Acetylene cylinder (MAROON).
K. Blowpipe interchangeable nozzles.

obtain the location of the various lap joints. This will enable the operator to direct the flame of the oxy-acetylene blowpipe onto the joint so that the solder-filling can be melted and removed by the use of a duster. A lap-weld is broken by drilling out the spot-welds as previously explained.

Butt-welds

A butt-weld can be broken by the use of a hammer and chisel, the blows being directed against the panel which is to be renewed. If this method does not quickly break the weld heat applied from the oxy-acetylene torch will soften the fused edges, thus assisting the operation. Alternatively, the joint may be cut by a hacksaw.

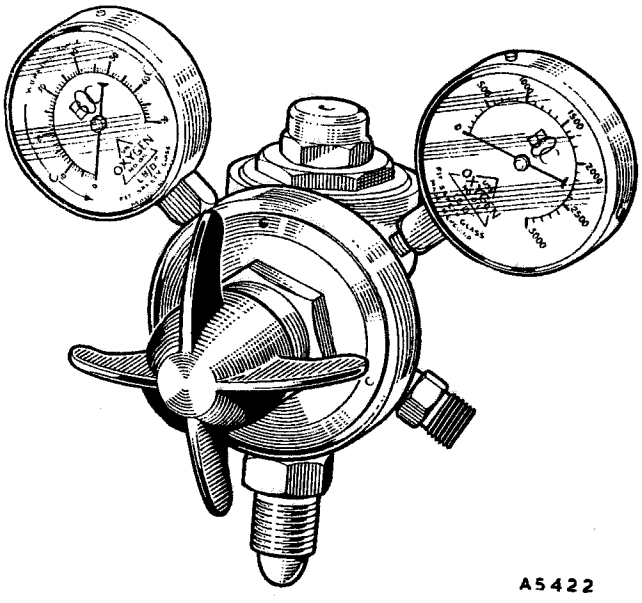

*Fig. R.*11

Type B.O.R. 12*A two-stage oxygen regulator*

Remaking welds

The special section of this Manual devoted to welding should be studied carefully before any attempt is made to re-weld a joint by an operator who has not had the necessary experience in this class of work.

When a joint is remade it is necessary, prior to painting, to clean the surface of the weld. During this operation, as previously mentioned, care should be taken to see that the structure is not unnecessarily weakened by excessive grinding or filing. It is preferable to hammer the joint so that it lies slightly lower than the surrounding metal and to flow solder into the depression. No amount of filing on the surface of the solder can reduce the strength of the joint below (see Section R.9).

When placing a new panel in position it should be joined where possible by gas-welding through the holes drilled in breaking the original spot-welds. During the welding operations a liberal heap of wet asbestos should be placed over the surrounding panels to prevent buckling and distortion due to heat.

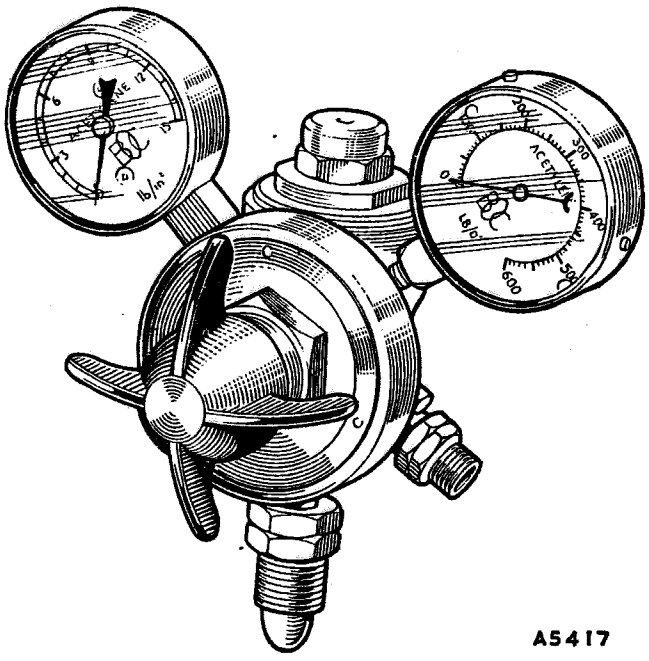

*Fig. R.*12

*Type B.A.R.*9 *two-stage acetylene regulator*

Section R.7

WELDING TECHNIQUF

The following apply to equipment supplied by the British Oxygen Co. Ltd., although they also apply, in the main, to other similar equipment.

Welding equipment

High-pressure oxy-acetylene welding equipment using dissolved acetylene is recommended. This consists of:

(1) Supply of acetylene in cylinders.
(2) Supply of oxygen in cylinders.
(3) Blowpipe with necessary nozzles.
(4) Acetylene pressure regulator.
(5) Oxygen pressure regulator.
(6) Two lengths of rubber-canvas hose.
(7) Set of spanners and spindle key.
(8) Welding goggles and spark lighter.
(9) Welding rods.
(10) Welding fluxes.
(11) Trolley for accommodating complete equipment and cylinders.

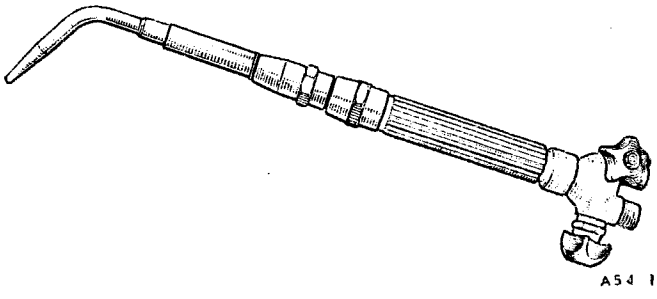

*Fig. R.*13

The welding blowpipe

WELDING

HIGH-PRESSURE BLOWPIPES

Nozzle Sizes, Working Pressures, and Gas Consumptions for Various Metal Thicknesses

M.S. plate thickness		*Nozzle size*	*Regulator pressures, oxygen and acetylene Saffire equipment*		*Approximate consumption of each gas*	
in.	*mm. (approx.)*		*lb./sq. in.*	*kg./cm.²*	*cu. ft./hr.*	*m.³/hr.*
$\frac{1}{32}$	·8	1	2	·14	1	·028
$\frac{3}{64}$	1·2	2	2	·14	2	·056
$\frac{1}{16}$	1·6	3	2	·14	3	·084
$\frac{3}{32}$	2·4	5	2	·14	5	·140
$\frac{1}{8}$	3·2	7	2	·14	7	·196
$\frac{5}{32}$	4·0	10	3	·21	10	·283
$\frac{3}{16}$	4·8	13	3	·21	13	·367
$\frac{1}{4}$	6·4	18	3	·21	18	·504
$\frac{5}{16}$	8·0	25	4	·28	25	·700

Assembling

Stand both cylinders vertically on the ground or on a trolley. Oxygen cylinders are painted BLACK. Acetylene cylinders are painted MAROON. Never attempt to interfere with the colour of cylinders or to repaint them.

See that jointing surfaces in cylinder valves and regulators are free from oil or grease.

Open the valve on the oxygen cylinder momentarily in order to dislodge dirt or obstruction in the cylinder valve, then close.

Screw the oxygen regulator (painted BLACK) into the oxygen cylinder valve. The oxygen cylinder valve outlet and oxygen regulator connection have **right-hand** screw threads.

Screw the acetylene regulator (painted MAROON) into the acetylene cylinder valve. The acetylene cylinder valve outlet and acetylene regulator connection have **left-hand** screw threads.

Tighten the regulator in the cylinder valve. Do not use excessive force, but make certain that the joints are gastight.

Connect the hose (acetylene RED, oxygen BLACK) to the screwed outlets of the regulators by means of the screwed connections secured in the ends of the hose. Blow the hose through before attaching to the regulator or blowpipe in order to remove dust or dirt and to remove chalk when the hose is new.

Connect the other end of the hose, that fitted with a hose protector, to the blowpipe—the acetylene hose to the connection marked 'A', the oxygen to the connection marked 'O'. Keep the blowpipe control valves closed. (A high- or low-pressure blowpipe can be used with the dissolved acetylene. If a low-pressure blowpipe is used the acetylene pressure should never exceed 2 lb./sq. in. [·14 kg./cm.²].)

Fix the appropriate nozzle to the blowpipe. (See the table.)

Open the cylinder valves very slowly by means of the cylinder key. Do not open suddenly, or there may be serious damage to the regulator and the possibility of an accident. Open the cylinder valve spindle one turn only.

Set the regulators at the correct working pressures. (See the table.)

Open the acetylene control valve on the blowpipe, wait a few seconds until air is blown out and pure acetylene is coming from the blowpipe nozzle, then light, preferably by means of a spark lighter, type S.L.1.

Reduce or increase the acetylene supply by the blowpipe valve until the flame just ceases to smoke.

Turn on the oxygen by the blowpipe control valve until the white inner cone in the flame is sharply defined, with the merest trace of an acetylene haze.

The blowpipe is now adjusted for welding steel, and work may be commenced.

The size of nozzle given for a particular thickness of steel is for general guidance only and will vary according to the skill of the welder, mass of metal, etc. The capacity of each nozzle overlaps the capacities of those next in size to it. The values given are for downhand butt-welds in mild steel. For other techniques nozzle size and pressure may have to be varied slightly—for example, for copper select a larger nozzle, for aluminium a smaller nozzle.

On thin-gauge steel up to and including $\frac{1}{16}$ in. (1·6 mm.) thickness tacks should be slightly closer together—say, 1 to $1\frac{1}{2}$ in. (25 to 38 mm.) apart—to keep the edges in alignment and minimize distortion.

For the same reason patches should, wherever possible, be oval or circular. Before welding, these should be slightly 'dished' below the level of the surface to be patched, since welding—even by the correct 'sequence'—will cause them to expand and rise.

Do not light the blowpipe until everything else has been prepared for welding in accordance with the

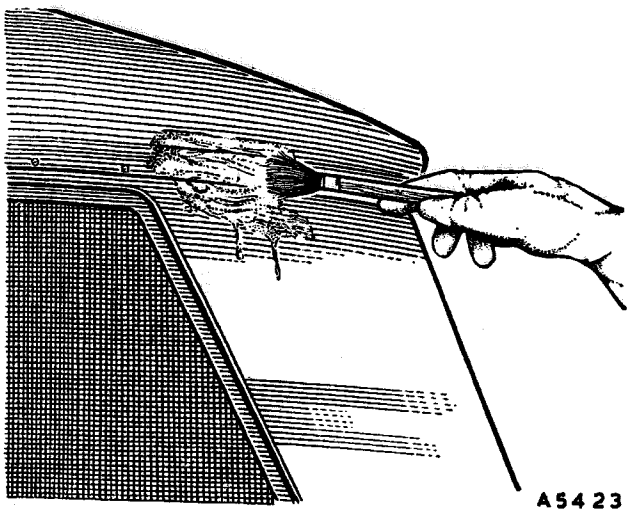

Fig. R.14
Painting the hollow area with flux

instructions given above. On completion of the job proceed as follows.

Turn off the acetylene first by the blowpipe control valve, and then the oxygen.

Close the cylinder valves.

Open the blowpipe valves one at a time to release the pressure in the hose—open the oxygen valve and shut it, open the acetylene valve and shut it.

Unscrew the pressure regulating screws on the oxygen and acetylene regulators.

In the case of **backfire** turn off the **oxygen** first.

Section R.8

TORCH-SOLDERING

Torch-soldering is the method employed to obtain the desired contour of a panel without weakening the structure and with the minimum amount of straightening, filing, and polishing.

The solder used is an alloy of lead and tin. Lead melts at a temperature of 621° F. (327° C.) and tin at 450° F.

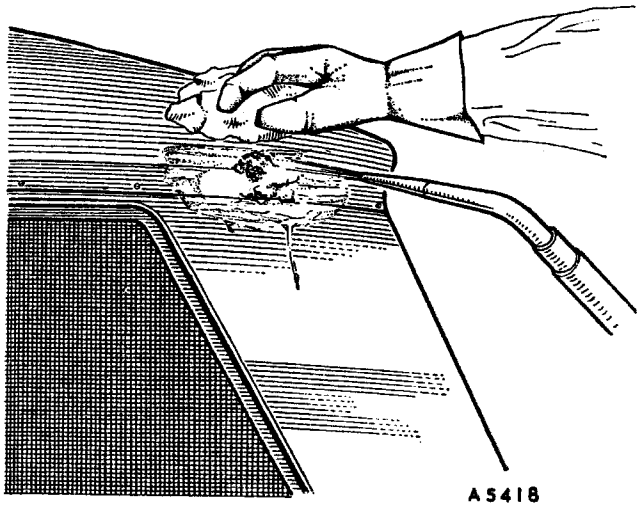

Fig. R.15
Tinning by heating the flux-painted area

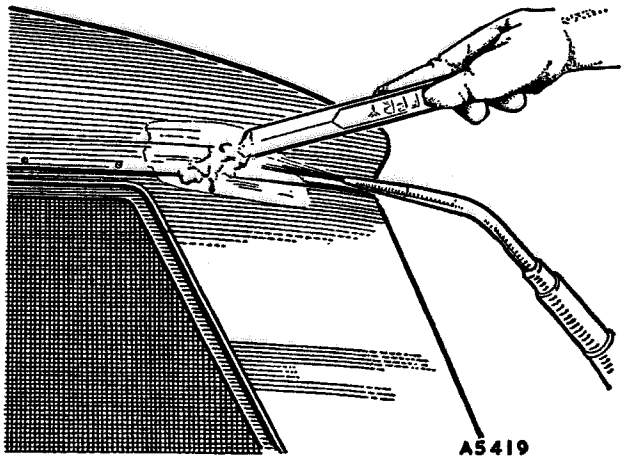

Fig. R.16
Applying the solder

(232° C.). Alloys of the two metals change from a solid to a liquid state over this range of temperature within which they are in a plastic condition. The alloys used for torch-soldering are known as tinman's solder (which contains 60 per cent. lead and 40 per cent. tin) and plumber's solder (which contains 70 per cent. lead and 30 per cent. tin). Tinman's solder, as a result of its higher tin content, alloys more readily with the surface of the sheet steel and is applied as a 'base' to which the plumber's solder adheres firmly. Plumber's solder remains plastic over a wide range of temperature (from 358 to 509° F. [181 to 265° C.]) and within this range can be moulded to any desired shape. For this reason it is used to obtain the required contours.

Where it is desired to build up a contour with solder the surface of the steel must first of all be cleaned thoroughly. Rust, scale, welding oxide, or any other impurity must be removed by means of a wire brush, file, and emery-cloth. A polishing-wheel, if available, is useful for this operation.

The surface of the metal is heated gently with a blowlamp or gas-torch, and soldering flux applied with a brush.

The flux will melt and act upon the heated surface so that when tinman's solder is applied and rubbed with a

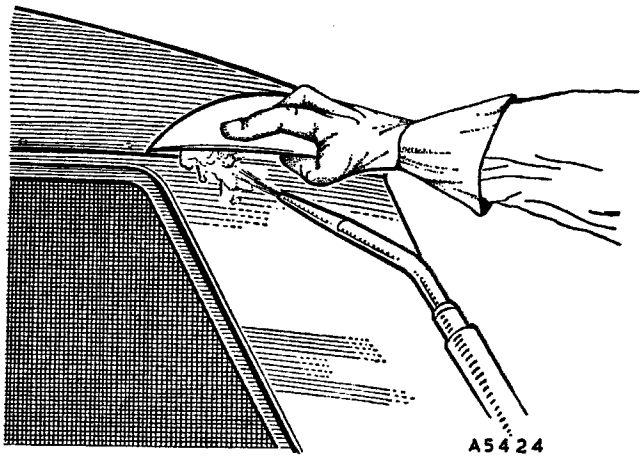

Fig. R.17
Spreading the solder

wad of hemp the metal will become evenly coated with a thin layer of solder, or 'tinned'. The secret of successful torch-soldering lies in the thoroughness with which the tinning operation is carried out as it is the foundation on which the plumber's solder is to be built up.

A second application of flux should be made and gently heated by means of the torch. When wiped by the wad of hemp the entire surface of the metal should have a spotlessly clean and bright appearance.

Plumber's solder is now melted onto the surface and maintained by careful use of the torch in the plastic condition whilst it is moulded to the desired contour with a hardwood paddle coated with palm oil. During the moulding operation frequent immersion of the paddle in palm oil assists in the manipulation of the solder. If palm oil is not available boiled linseed, lard, or machine oil will be found satisfactory.

The final contour is obtained by filing or, if available, by the use of a polishing-wheel. If the work is carefully carried out it should be impossible to trace the presence of the filling.

SERVICE TOOLS

18G308B. Body Jack and Case

This jack has been designed to deal with repairs to cabs and bodies of all-steel construction. It is supplied complete with the various attachments and will be found capable of dealing with all normal requirements.

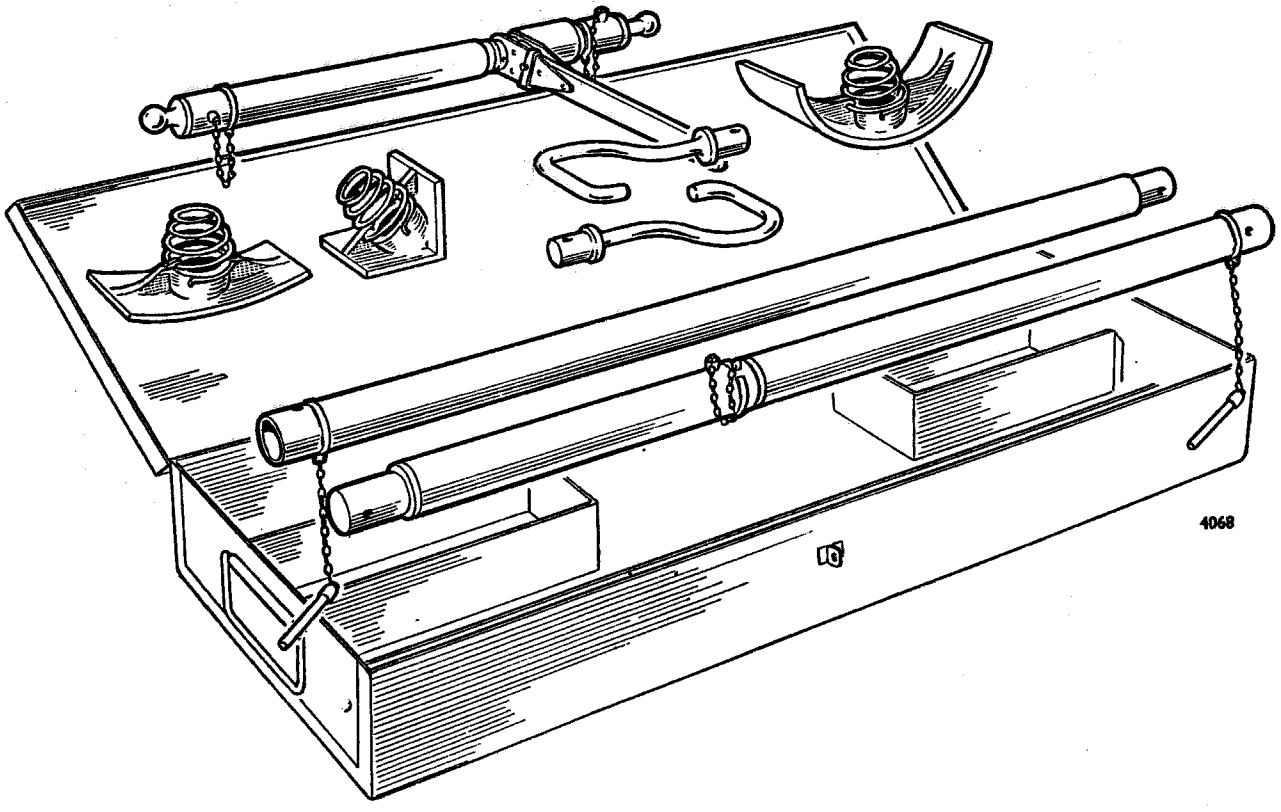

RECOMMENDED LUBRICANTS

(DIESEL MODELS)

● Component	† Engine, Air Cleaner, and Oilcan				Main and Transfer Gearboxes, Steering Gearbox, Swivel Housings, and Front and Rear Axles		Lubricating Nipples and Water Pump
Climatic conditions	**All temperatures above 32° C. (90° F.)**	**32° C. (90° F.) down to —12° C. (10° F.)**	**—12° C. (10° F.) down to —18° C. (0° F.)**	**Below —18° C. (0° F.)**	**Above —12° C. (10° F.)**	**Below —12° C. (10° F.)**	**All conditions**
CASTROL	Castrol CRI 30	Castrol CRI 20	Castrol CRI 10	Castrol CR 5W/20	Castrol Hypoy	Castrol Hypoy Light	Castrolease LM
ESSO	Essofleet HDX 30	Essofleet HDX 20	Essofleet HDX 10W	Esso Extra Motor Oil 5W/20	Esso Gear Oil G.P. 90/140 or G.P. 90	Esso Gear Oil G.P. 80	Esso Multipurpose Grease H
BP	Vanellus S.A.E. 30	Vanellus S.A.E. 20	Vanellus S.A.E. 10W	—	BP Gear Oil S.A.E. 90 E.P.	BP Gear Oil S.A.E. 80 E.P.	Energrease L. 2
DUCKHAM'S	Fleetol HDX 30	Fleetol HDX 20	Fleetol HDX 10	Duckham's Q. 5–30	Duckham's Hypoid 90	Duckham's Hypoid 80	Duckham's L.B. 10 Grease
MOBIL	Delvac 1130	Delvac 1120	Delvac 1110	Mobiloil 5W/20	Mobilube G.X. 90	Mobilube G.X. 80	Mobilgrease M.P.
SHELL	Shell Rotella S Oil 30	Shell Rotella S Oil 20/20W	Shell Rotella S Oil 10W	Shell Winter Special Motor Oil or Shell Super Motor Oil 5W/30	Spirax 90 E.P.	Spirax 80 E.P.	Shell Retinax A
FILTRATE	Filtrate Diesel 30	Filtrate Diesel 20	Filtrate Diesel 10W	Filtrate 5W/20	Filtrate E.P. Gear 90	Filtrate E.P. Gear 80	Filtrate Super Lithium Grease
STERNOL	Panther 30	Panther 20	Panther 10	Sternol W.W. Multigrade 5W/20	Ambroleum E.P. 90	Ambroleum E.P. 80	Ambroline L.H.T.

† In addition to the lubricants listed we approve the use of the appropriate multigrade oils for the particular conditions prevailing down to —18° C. (0° F.). Below —18° C. (0° F.) use a 5W/20 oil or the current practice of the country concerned.●

RECOMMENDED LUBRICANTS

(PETROL MODELS)

Component	* Engine, Air Cleaner, Distributor, and Oilcan		Main and Transfer Gearboxes, Steering Gearbox, Swivel Housings, and Front and Rear Axles		Water Pump and Lubricating Nipples	Upper Cylinder Lubrication
Climatic conditions	**All temperatures above −18° C. (0° F.)**	**Below −18° C. (0° F.)●**	**All conditions down to −12° C. (10° F.)**	**Arctic conditions consistently below −12° C. (10° F.)**	**All conditions**	**All conditions**
DUCKHAM'S	Q. 5500	Q. 5–30	Duckham's Hypoid 90	Duckham's Hypoid 80	Duckham's L.B. 10 Grease	Duckham's Adcoid Liquid
ESSO	Esso Extra Motor Oil 10W/30	Esso Extra Motor Oil 5W/20	Esso Gear Oil G.P. 90/140 or Esso Gear Oil G.P. 90●	Esso Gear Oil G.P. 80	Esso Multipurpose Grease H	Esso Upper Cylinder Lubricant
MOBIL	Mobiloil Special 10W/30 or Mobiloil Super 10W/40●	Mobiloil 5W/20	Mobilube G.X. 90	Mobilube G.X. 80	Mobilgrease M.P.	Mobil Upperlube
BP	Visco-Static or Super Visco-Static●	—	BP Gear Oil S.A.E. 90 E.P.	BP Gear Oil S.A.E. 80 E.P.	Energrease L. 2	BP Upper Cylinder Lubricant
SHELL	Shell Super Motor Oil	Shell Winter Special Motor Oil Shell Super Motor Oil 5W/30	Shell Spirax 90 E.P.	Shell Spirax 80 E.P.	Shell Retinax A	Shell Upper Cylinder Lubricant
FILTRATE	Filtrate 10W/30 Multigrade	Filtrate 5W/20	Filtrate E.P. Gear Oil 90●	Filtrate E.P. Gear Oil 80●	Filtrate Super Lithium Grease	Filtrate Petroyle
STERNOL	Sternol W.W. Multi-grade 10W/40	Sternol W.W. Multi-grade 5W/20	Ambroleum E.P. 90	Ambroleum E.P. 80	Ambroline L.H.T. Grease	Sternol Magikoyl
CASTROL	Castrolite	Castrol CR 5W/20	Castrol Hypoy	Castrol Hypoy Light	Castrolease LM	Castrollo

●* Approval is given to Duckham's Q. 20–50, Esso Extra Motor Oil 20W/40, Mobiloil Special 20W/40, BP Super Visco-Static 20W/50, Shell X–100 Multigrade 20W/50, Filtrate 20W/50, Sternol W.W. Multigrade 20W/50, and Castrol XL for temperatures down to −12° C. (10° F.). Monograde single-viscosity detergent/dispersant lubricants (S.A.E. 30 down to 0° C. [32° F.], S.A.E. 20/20W down to −12° C. [10° F.], and S.A.E. 10W below −12° C. [10° F.]) supplied by the companies listed above are also approved.●

PRINTED IN ENGLAND BY
THE NUFFIELD PRESS LIMITED
COWLEY, OXFORD
29/21 (73681) 6/66—512