GMC

2017

Acadia/Acadia Denali Owner's Manual

gmc.com (U.S.)
gmc.gm.ca (Canada)

Contents

Introduction 2
In Brief 5
Keys, Doors, and Windows 28
Seats and Restraints 54
Storage 107
Instruments and Controls 114
Lighting 169
Infotainment System 178
Climate Controls 202
Driving and Operating 209
Vehicle Care 280
Service and Maintenance 365
Technical Data 379
Customer Information 382
Reporting Safety Defects 393
OnStar 396
Index 406

Introduction

The names, logos, emblems, slogans, vehicle model names, and vehicle body designs appearing in this manual including, but not limited to, GM, the GM logo, GMC, the GMC Truck Emblem, ACADIA, and DENALI are trademarks and/or service marks of General Motors LLC, its subsidiaries, affiliates, or licensors.

For vehicles first sold in Canada, substitute the name “General Motors of Canada Company” for GMC wherever it appears in this manual.

This manual describes features that may or may not be on the vehicle because of optional equipment that was not purchased on the vehicle, model variants, country specifications, features/applications that may not be available in your region, or changes subsequent to the printing of this owner manual.

Refer to the purchase documentation relating to your specific vehicle to confirm the features.

Keep this manual in the vehicle for quick reference.

Canadian Vehicle Owners

A French language manual can be obtained from your dealer, at www.helminc.com, or from:

Propriétaires Canadiens

On peut obtenir un exemplaire de ce guide en français auprès du concessionnaire ou à l'adresse suivante:

Helm, Incorporated
Attention: Customer Service
47911 Halyard Drive
Plymouth, MI 48170
USA

Using this Manual

To quickly locate information about the vehicle, use the Index in the back of the manual. It is an alphabetical list of what is in the manual and the page number where it can be found.

Danger, Warning, and Caution

Warning messages found on vehicle labels and in this manual describe hazards and what to do to avoid or reduce them.

Litho in U.S.A.
Part No. 23116133 A First Printing

©2016 General Motors LLC. All Rights Reserved.

⚠ Danger

Danger indicates a hazard with a high level of risk which will result in serious injury or death.

⚠ Warning

Warning indicates a hazard that could result in injury or death.

Caution

Caution indicates a hazard that could result in property or vehicle damage.

A circle with a slash through it is a safety symbol which means “Do Not,” “Do not do this,” or “Do not let this happen.”

Symbols

The vehicle has components and labels that use symbols instead of text. Symbols are shown along with the text describing the operation or information relating to a specific component, control, message, gauge, or indicator.

: Shown when the owner manual has additional instructions or information.

: Shown when the service manual has additional instructions or information.

: Shown when there is more information on another page — “see page.”

Vehicle Symbol Chart

Here are some additional symbols that may be found on the vehicle and what they mean. For more information on the symbol, refer to the Index.

: Airbag Readiness Light

: Antilock Brake System (ABS)

: Audio Steering Wheel Controls or OnStar® (if equipped)

: Brake System Warning Light

: Charging System

: Cruise Control

: Do Not Puncture

: Do Not Service

: Engine Coolant Temperature

: Exterior Lamps

: Flame/Fire Prohibited

: Fog Lamps

: Fuel Gauge

: Fuses

: Headlamp High/Low-Beam Changer

: LATCH System Child Restraints

: Malfunction Indicator Lamp

: Oil Pressure

: Outside Power Foldaway Mirrors

: Power

: Remote Vehicle Start

: Safety Belt Reminders

: Tire Pressure Monitor

: Tow/Haul Mode

: Traction Control/StabiliTrak®

: Under Pressure

: Windshield Washer Fluid

In Brief

Instrument Panel

Instrument Panel 6

Initial Drive Information

Initial Drive Information 8
Stop/Start System 8
Remote Keyless Entry (RKE) System 8
Remote Vehicle Start 8
Door Locks 9
Liftgate 10
Windows 10
Seat Adjustment 11
Memory Features 12
Second Row Seats 12
Third Row Seats 13
Heated and Ventilated Seats . . . 13
Head Restraint Adjustment 14
Safety Belts 14
Passenger Sensing System . . . 14
Mirror Adjustment 14
Steering Wheel Adjustment 15
Interior Lighting 16
Exterior Lighting 17
Windshield Wiper/Washer 17
Climate Controls 18
Transmission 19

Vehicle Features

Infotainment System 19
Radio(s) 19
Satellite Radio 19
Portable Audio Devices 20
Bluetooth® 20
Steering Wheel Controls 20
Cruise Control 21
Driver Information Center (DIC) 21
Forward Collision Alert (FCA) System 22
Forward Automatic Braking (FAB) 22
Front Pedestrian Braking (FPB) System 22
Lane Keep Assist (LKA) 23
Lane Change Alert (LCA) 23
Surround Vision 23
Rear Vision Camera (RVC) 23
Rear Cross Traffic Alert (RCTA) System 23
Parking Assist 24
Power Outlets 24
Universal Remote System 24
Sunroof 24

Performance and Maintenance

Traction Control/Electronic Stability Control 25
Tire Pressure Monitor 25
Fuel 26
E85 or FlexFuel 26
Engine Oil Life System 26
Driving for Better Fuel Economy 26
Roadside Assistance Program 27

Instrument Panel

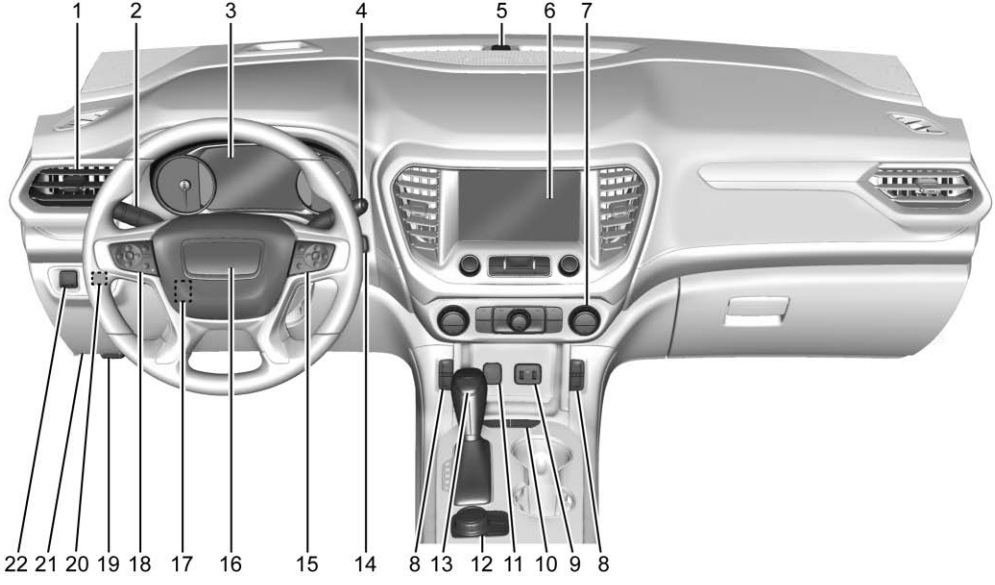

1. *Air Vents* ⇨ *207*.
2. *Exterior Lamp Controls* ⇨ *169*.

   Turn Signal Lever. See *Turn and Lane-Change Signals* ⇨ *173*.
3. *Instrument Cluster* ⇨ *123*.
4. *Windshield Wiper/Washer* ⇨ *117* (Out of View).

   Rear Window Wiper/ Washer ⇨ *118*.
5. Light Sensor. See *Automatic Headlamp System* ⇨ *172*.
6. *Infotainment* ⇨ *178*.
7. *Dual Automatic Climate Control System* ⇨ *202*.
8. *Heated and Ventilated Front Seats* ⇨ *61* (If Equipped).
9. USB Port (If Equipped). See *USB Port* ⇨ *186*.

   Auxiliary Input Jack. See *Auxiliary Devices* ⇨ *191*.
10. *Hazard Warning Flashers* ⇨ *173*.

    Traction Control/Electronic Stability Control ⇨ *241*.
11. *Power Outlets* ⇨ *121*.
12. *Driver Mode Control* ⇨ *243*.

    Assistance Systems for Parking or Backing ⇨ *255* (If Equipped).

    Lane Keep Assist (LKA) ⇨ *266* (If Equipped).
13. Shift Lever. See *Automatic Transmission* ⇨ *233*.
14. ENGINE START/STOP Button. See *Starting the Engine* ⇨ *227*.
15. *Steering Wheel Controls* ⇨ *116* (If Equipped).

    Driver Information Center (DIC) Buttons. See *Driver Information Center (DIC) (Base and Midlevel)* ⇨ *141* or *Driver Information Center (DIC) (Uplevel)* ⇨ *144*.
16. *Horn* ⇨ *116*.
17. *Steering Wheel Adjustment* ⇨ *115*.
18. *Cruise Control* ⇨ *244*.

    Adaptive Cruise Control ⇨ *246* (If Equipped).

    Forward Collision Alert (FCA) System ⇨ *258* (If Equipped).

    Heated Steering Wheel ⇨ *116* (If Equipped).
19. Hood Release. See *Hood* ⇨ *283*.
20. *Instrument Panel Illumination Control* ⇨ *174* (Out of View).
21. Data Link Connector (DLC) (Out of View). See *Malfunction Indicator Lamp (Check Engine Light)* ⇨ *132*.
22. *Electric Parking Brake* ⇨ *238*.

Initial Drive Information

This section provides a brief overview about some of the important features that may or may not be on your specific vehicle.

For more detailed information, refer to each of the features which can be found later in this owner manual.

Stop/Start System

The vehicle may have a fuel saving stop/start system to shut off the engine and help conserve fuel.

When the brakes are applied and the vehicle is at a complete stop, the engine may turn off. When the brake pedal is released or the accelerator pedal is pressed, the engine will restart. See *Starting the Engine* ⇨ *227*.

Remote Keyless Entry (RKE) System

The Remote Keyless Entry (RKE) transmitter may be used to lock and unlock the doors from up to 60 m (197 ft) away from the vehicle.

With Remote Start Shown

Press the key release button near the bottom of the transmitter to remove the key. The key can be used for the driver door.

: Press to lock all doors.

: Press to unlock the driver door or all doors depending on the vehicle personalization settings.

Lock and unlock feedback can be personalized.

See *Vehicle Personalization* ⇨ *157*.

: Press and release one time to initiate vehicle locator.

Press and hold for three seconds to sound the panic alarm.

: Press twice quickly to open or close the liftgate. Press once to stop the liftgate from moving.

See *Keys* ⇨ *28* and *Remote Keyless Entry (RKE) System Operation* ⇨ *29*.

Remote Vehicle Start

If equipped, the engine can be started from outside of the vehicle.

Starting the Vehicle

1. Press and release on the RKE transmitter.
2. Immediately press and hold for at least four seconds or until the turn signal lamps flash.

Start the vehicle normally after entering.

When the vehicle starts, the parking lamps will turn on.

Remote start can be extended.

Canceling a Remote Start

To cancel a remote start, do one of the following:

- Press and hold ⟲ until the parking lamps turn off.
- Turn on the hazard warning flashers.
- Turn the vehicle on and then off.

See *Remote Vehicle Start* ⇨ *35*.

Door Locks

To lock or unlock the vehicle from the outside:

- Use the key. The key lock cylinder is covered with a cap. See *Door Locks* ⇨ *37*.
- Press 🔒 or 🔓 on the Remote Keyless Entry (RKE) transmitter.

To lock or unlock the vehicle from the inside, use the power door lock switch.

Power Door Locks

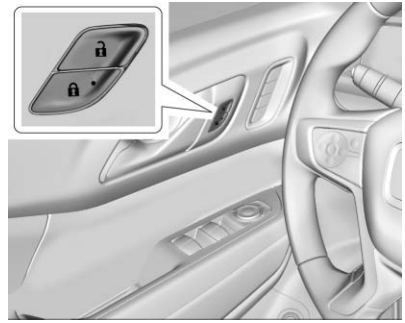

🔓 **:** Press to unlock the doors.

🔒 **:** Press to lock the doors.

Keyless Access

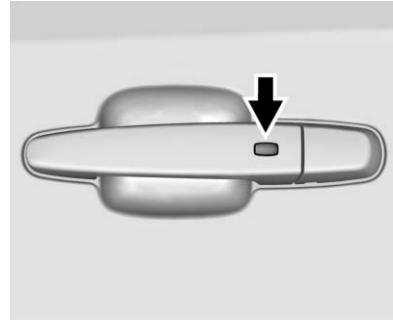

If equipped, press the button on the driver door handle when the RKE transmitter is within 1 m (3 ft) of the driver door handle. When unlocking from the driver door, the first press unlocks that door; press again within five seconds to unlock all passenger doors. See *Remote Keyless Entry (RKE) System Operation* ⇨ *29*.

Liftgate

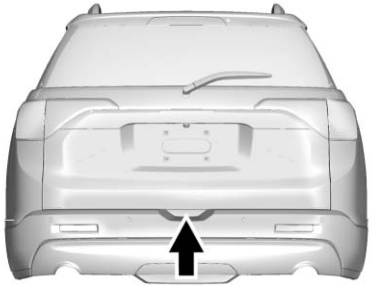

To unlock the liftgate, press on the power door lock switch or press on the Remote Keyless Entry (RKE) transmitter twice to unlock all doors. Press the touch pad on the underside of the liftgate handle and lift up. See *Remote Keyless Entry (RKE) System Operation* ⇨ *29*.

Use the pull cup to lower and close the liftgate. Do not press the touch pad while closing the liftgate. This will cause the liftgate to be unlatched.

Power Liftgate Operation

If equipped with a power liftgate, the switch is on the driver door. The vehicle must be in P (Park).

Choose the power liftgate mode by selecting MAX or 3/4. Press . The driver door must be unlocked. On the RKE transmitter press twice quickly until the liftgate starts moving.

Press any liftgate button while the liftgate is moving to stop it. Pressing again reverses the direction.

To close, press on the bottom of the liftgate next to the pull cup.

To disable the power liftgate function, select OFF on the liftgate switch. See *Liftgate* ⇨ *41*.

Windows

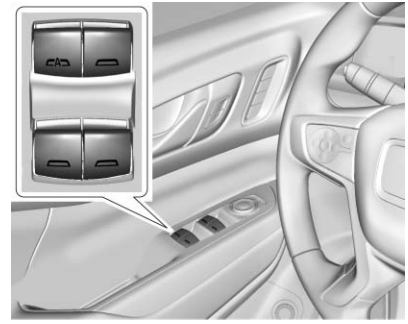

Press or pull the switch to open or close the window.

Fully press the switch down or pull it up, and release it to express-down and express up, if equipped.

Press to activate the window lockout on the rear doors.

See *Power Windows* ⇨ *50*.

Seat Adjustment

Manual Seats

1. Seat Adjustment Handle
2. Driver Seat Height Adjustment Lever
3. Seatback Lever

To adjust a manual seat:

1. Lift the handle (1) under the seat to unlock it.
2. Slide the seat to the desired position, and then release the handle (1).
3. Try to move the seat back and forth to be sure it is locked in place.

Move the lever (2) up or down to raise or lower the seat.

Use the lever (3) to adjust the seatback.

See *Seat Adjustment* ⇨ *57* and *Reclining Seatbacks* ⇨ *58*.

Power Seats

1. Seat Adjustment Control
2. Seatback Control
3. Lumbar Control

To adjust a power seat, if equipped:

- Move the seat forward or rearward by sliding the control (1) forward or rearward.
- Raise or lower the front part of the seat cushion by moving the front of the control (1) up or down.
- Raise or lower the entire seat by moving the rear of the control (1) up or down.
- Adjust the seatback by tilting the top of the control (2) forward or rearward.

  See *Reclining Seatbacks* ⇨ *58*.
- Increase or decrease lumbar support by pressing the front or rear of the control (3).

  See *Lumbar Adjustment* ⇨ *58*.

See *Power Seat Adjustment* ⇨ *57*.

Memory Features

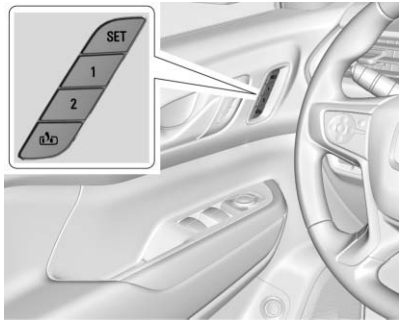

If equipped, the SET, 1, 2, and (Exit) buttons on the driver door are used to manually store and recall memory settings for the driver seat. The driver memory buttons also store outside mirror, and power tilt and telescoping steering wheel positions (if equipped).

When Auto Memory Recall is enabled in the personalization menu, positions previously stored to memory buttons 1 and 2 are recalled when the ignition is changed from OFF to ON/RUN or ACC/ACCESSORY.

When Easy Exit Options is enabled in the personalization menu, the feature automatically recalls the current driver's previously stored exit position when exiting the vehicle.

See *Memory Seats* ⇨ *60* and *Vehicle Personalization* ⇨ *157*.

Second Row Seats

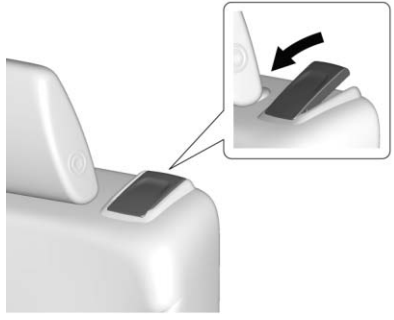

The second row seat can be folded to access the third row. Pull the handle located on top of the seat and slide the seat forward.

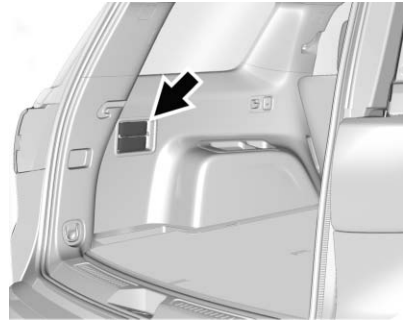

The second row seatbacks can also be folded forward by pulling the levers located on the drivers side of the rear cargo area. The top lever folds the drivers side seatback and the bottom lever folds the passenger side seatback.

See *Rear Seats* ⇨ *63*.

Third Row Seats

The third row seatbacks can be folded forward.

To fold the third row seatback:

1. If the second row seat is in the full rear position, adjust it forward to allow the third row seat to fold fully flat.
2. Remove anything on or under the seat.

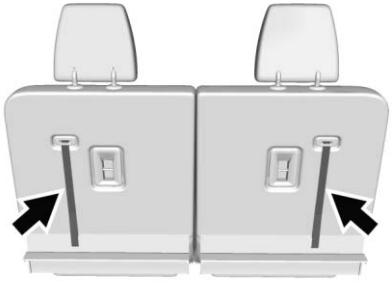

3. Pull the strap on the seatback.
4. Push the seatback forward to lay flat.

See *Third Row Seats* ⇨ *66*.

Heated and Ventilated Seats

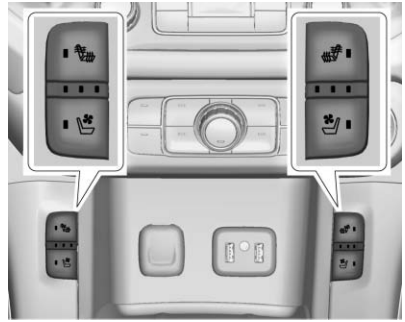

Heated and Ventilated Seat Buttons Shown, Heated Seat Buttons Similar

If available, the buttons are near the climate controls on the center stack. To operate, the ignition must be in ON/RUN.

Press or to heat the driver or passenger seat.

Press or , if available, to ventilate the driver or passenger seat. A ventilated seat has a fan that pulls or pushes air through the seat. The air is not cooled.

Press the button once for the highest setting. With each press of the button, the seat will change to the next lower setting, and then to the off setting. The indicator lights next to the buttons indicate three for the highest setting and one for the lowest. If the front heated seats are on high, the level may automatically be lowered after approximately 30 minutes.

See *Heated and Ventilated Front Seats* ⇨ *61*.

The heated and ventilated front seats can also be programmed to come on during a remote start. See *Vehicle Personalization* ⇨ *157*.

Head Restraint Adjustment

Do not drive until the head restraints for all occupants are installed and adjusted properly.

To achieve a comfortable seating position, change the seatback recline angle as little as necessary while keeping the seat and the head restraint height in the proper position.

See *Head Restraints* ⇨ *55* and *Seat Adjustment* ⇨ *57*.

Safety Belts

Refer to the following sections for important information on how to use safety belts properly:

- *Safety Belts* ⇨ *68*.
- *How to Wear Safety Belts Properly* ⇨ *69*.
- *Lap-Shoulder Belt* ⇨ *70*.
- *Lower Anchors and Tethers for Children (LATCH System)* ⇨ *94*.

Passenger Sensing System

United States and Canada

Mexico

The passenger sensing system turns off the front outboard passenger frontal airbag under certain conditions. No other airbag is affected by the passenger sensing system. See *Passenger Sensing System* ⇨ *81*.

The passenger airbag status indicator will light on the overhead console when the vehicle is started. See *Passenger Airbag Status Indicator* ⇨ *131*.

Mirror Adjustment

Interior Mirror

Adjust the rearview mirror for a clear view of the area behind your vehicle.

Manual Rearview Mirror

If equipped, push the tab forward for daytime use and pull it rearward for nighttime use to avoid glare of the headlamps from behind.

Automatic Dimming Rearview Mirror

If equipped, the mirror will automatically reduce the glare of the headlamps from behind. The dimming feature comes on when the vehicle is started.

See *Automatic Dimming Rearview Mirror* ⇨ *49*.

Exterior Mirrors

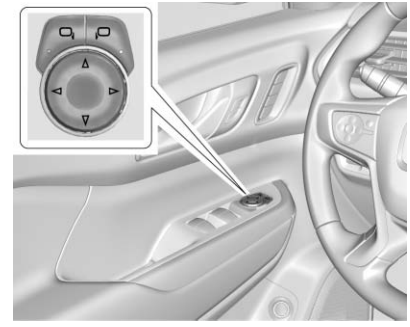

To adjust a mirror:

1. Press ▭ or ▭ to choose the driver or passenger mirror.
2. Press the arrows on the control pad to move each mirror in the desired direction.

See *Power Mirrors* ⇨ *48*.

Steering Wheel Adjustment

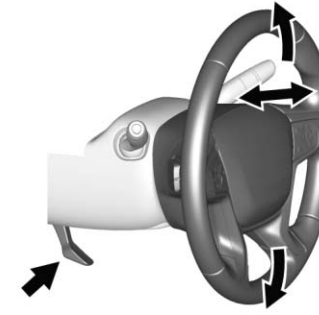

To adjust the steering wheel:

1. Pull the lever down.
2. Move the steering wheel up or down.
3. Pull or push the steering wheel closer or away from you.
4. Pull the lever up to lock the wheel in place.

Do not adjust the steering wheel while driving.

Power Tilt and Telescoping Steering Wheel

To adjust the power tilt and telescoping steering wheel, if equipped:

Press the control to move the steering wheel up and down or forward and rearward.

Do not adjust the steering wheel while driving.

Interior Lighting

Dome Lamp

The dome lamp is in the overhead console.

To operate, press the following buttons:

OFF : Press to turn off the dome lamps when a door is open. An indicator light on the button will turn on when the dome lamp override is activated. Press OFF again to deactivate this feature and the indicator light will turn off. The dome lamps will come on when doors are opened.

ON/OFF : Press to turn the dome lamps on manually.

Reading Lamps

There are front and rear reading lamps on the overhead console and in the headliner. These lamps come on when any door is opened.

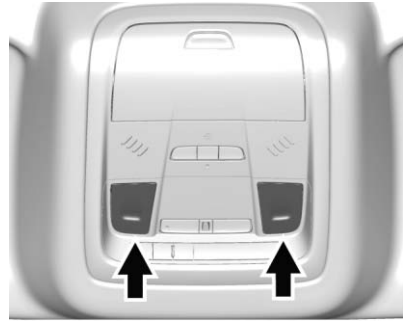

Front Reading Lamps

Press the lamp lenses to turn the front reading lamps on or off.

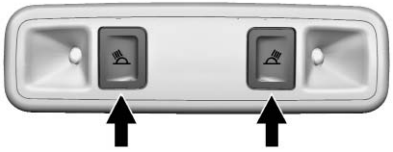

Rear Reading Lamps

Press the buttons to turn the rear passenger reading lamps on or off.

For more information on interior lighting, see *Instrument Panel Illumination Control* ⇨ *174*.

Exterior Lighting

The exterior lamp control is on the turn signal lever.

Turn the control to the following positions:

⏻ **:** Turns off the exterior lamps. The knob returns to the AUTO position after it is released. Turn to ⏻ again to reactivate the AUTO mode.

AUTO : Automatically turns the exterior lamps on and off, depending on outside lighting.

: Turns on the parking lamps including all lamps, except the headlamps.

: Turns on the headlamps together with the parking lamps and instrument panel lights.

See:

- *Exterior Lamp Controls* ⇨ *169*.
- *Turn and Lane-Change Signals* ⇨ *173*.

Windshield Wiper/Washer

With the ignition in ACC/ACCESSORY or ON/RUN/START, move the lever to select the wiper speed.

HI : Use for fast wipes.

LO : Use for slow wipes.

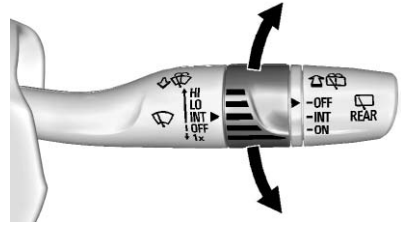

INT : Move the windshield wiper lever to INT. Turn the band up for more frequent wipes or down for less frequent wipes.

OFF : Use to turn the wipers off.

1X : For a single wipe, briefly move the lever down. For several wipes, hold the lever down.

: Pull the lever toward you to spray windshield washer fluid and activate the wipers.

See *Windshield Wiper/Washer* ⇨ *117* and *Rear Window Wiper/Washer* ⇨ *118*.

Climate Controls

Use this system to control the heating, cooling, and ventilation.

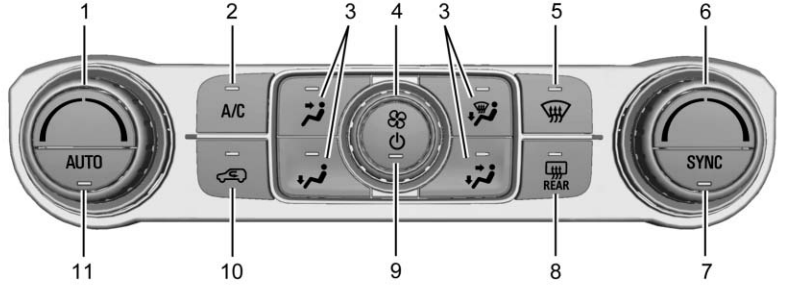

1. Driver Temperature Control
2. A/C (Air Conditioning)
3. Air Delivery Mode Controls
4. Fan Control
5. Defrost
6. Passenger Temperature Control
7. SYNC (Synchronized Temperature)
8. Rear Window Defogger
9. Power Button
10. Air Recirculation
11. AUTO (Automatic Operation)

See *Dual Automatic Climate Control System* ⇨ *202*. For more information about the rear climate control, see *Rear Climate Control System* ⇨ *205*.

Transmission

Electronic Range Select (ERS) Mode

ERS mode allows you to choose the top-gear limit of the transmission and the vehicle's speed while driving downhill or towing a trailer. The vehicle has an electronic shift position indicator within the instrument cluster. When using the ERS mode a number will display next to the L, indicating the maximum gear allowed for the range selected.

To use this feature:

1. Move the shift lever to L (Low).
2. Press + (Plus) or − (Minus) on the shift lever to increase or decrease the gear range available.

See *Manual Mode* ⇨ *235*.

Vehicle Features

Infotainment System

The base radio with touchscreen information is included in this manual. See the infotainment manual for information on the uplevel radios, audio players, phone, navigation system, Rear Seat Entertainment (RSE), and voice or speech recognition, if equipped.

Radio(s)

⏻ :

- Press to turn the power on.
- Press and hold to turn the power off.
- Press to mute/unmute the system when on.
- Turn to decrease or increase the volume.

⏮ :

- Radio: Press and release to fast seek the strongest previous station or channel.
- USB/Music/Pictures: Press to go to the previous content. Press and hold to fast rewind.

⏭ :

- Radio: Press and release to fast seek the next strongest station or channel.
- USB/Music/Pictures: Press to go to the next content. Press and hold to fast forward.

📞 :

- Press and release to access the phone screen, answer an incoming call, or access the device home screen.

See *Overview* ⇨ *180*.

Satellite Radio

Vehicles with a SiriusXM® satellite radio tuner and a valid SiriusXM satellite radio subscription can receive SiriusXM programming.

SiriusXM Satellite Radio Service

SiriusXM is a satellite radio service based in the 48 contiguous United States and 10 Canadian provinces. SiriusXM satellite radio has a wide variety of programming and commercial-free music, coast to coast, and in digital-quality sound. A fee is required to receive the SiriusXM service.

Refer to:

- www.siriusxm.com or call 1-866-635-2349 (U.S.).
- www.xmradio.ca or call 1-877-209-0079 (Canada).

See *Satellite Radio* ⇨ *183*.

Portable Audio Devices

This vehicle has a 3.5 mm (1/8 in) auxiliary input and two USB ports in the center stack. External devices such as iPods®, MP3 players, and USB storage devices may be connected.

See *Auxiliary Devices* ⇨ *191* and *USB Port* ⇨ *186*.

Bluetooth®

The Bluetooth® system allows users with a Bluetooth-enabled mobile phone to make and receive hands-free calls using the vehicle audio system and controls.

The Bluetooth-enabled mobile phone must be paired with the in-vehicle Bluetooth system before it can be used in the vehicle. Not all phones will support all functions.

See *Bluetooth (Overview)* ⇨ *192* or *Bluetooth (Infotainment Controls)* ⇨ *193*.

Steering Wheel Controls

If equipped, some audio controls can be adjusted at the steering wheel.

: For vehicles with OnStar® or a Bluetooth® system, press to interact with those systems. See *OnStar Overview* ⇨ *396* or “Bluetooth (Overview)” in the infotainment manual.

: Press to reject an incoming call, or end a current call. Press to mute or unmute the infotainment system when not on a call.

◁ **or** ▷ **:** Press to go to the previous or next menu option.

△ **or** ▽ **:** Press to go to the next or previous selection.

✓ **:** Press to select a highlighted menu option.

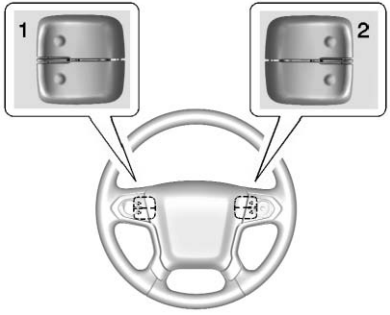

The favorite and volume switches are on the back of the steering wheel.

1. Favorite: When on a radio source, press to select the next or previous favorite. When on a media source, press to select the next or previous track.
2. Volume: Press to increase or decrease the volume.

See *Steering Wheel Controls* ⇨ *116*.

Cruise Control

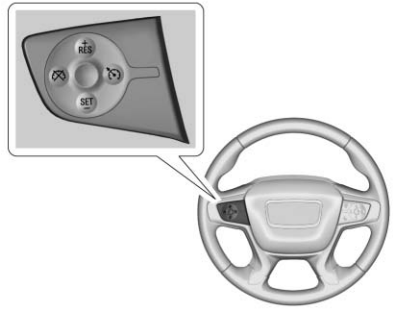

: Press to turn the system on and off. A white indicator appears in the instrument cluster when turned on.

RES+ : If there is a set speed in memory, press briefly to resume to that speed or press and hold to accelerate. If the cruise control is already active, use to increase vehicle speed.

SET− : Press briefly to set the speed and activate cruise control. If the cruise control is already active, use to decrease vehicle speed.

: Press to disengage cruise control without erasing the set speed from memory.

See *Cruise Control* ⇨ *244* or *Adaptive Cruise Control* ⇨ *246* (if equipped).

Driver Information Center (DIC)

The DIC display is in the instrument cluster. It shows the status of many vehicle systems.

△ **or** ▽ **:** Press to move up or down in a list.

◁ **or** ▷ **:** Press to move between the interactive display zones in the cluster.

✓ **:** Press to open a menu or select a menu item. Press and hold to reset values on certain screens.

See *Driver Information Center (DIC) (Base and Midlevel)* ⇨ *141* or *Driver Information Center (DIC) (Uplevel)* ⇨ *144*.

Forward Collision Alert (FCA) System

If equipped, FCA may help avoid or reduce the harm caused by front-end crashes. FCA provides a green indicator, , when a vehicle is detected ahead. This indicator displays amber if you follow a vehicle much too closely. When approaching a vehicle ahead too quickly, FCA provides a flashing red alert on the windshield and rapidly beeps or pulses the driver seat.

See *Forward Collision Alert (FCA) System* ⇨ *258*.

Forward Automatic Braking (FAB)

If the vehicle has Forward Collision Alert (FCA), it also has FAB, which includes Intelligent Brake Assist (IBA). When the system detects a vehicle ahead in your path that is traveling in the same direction that you may be about to crash into, it can provide a boost to braking or automatically brake the vehicle. This can help avoid or lessen the severity of crashes when driving in a forward gear.

See *Forward Automatic Braking (FAB)* ⇨ *261*.

Front Pedestrian Braking (FPB) System

If equipped, the FPB system may help avoid or reduce the harm caused by front-end crashes with nearby pedestrians when driving in a forward gear. FPB displays an amber indicator, , when a nearby pedestrian is detected directly ahead. When approaching a detected pedestrian too quickly, FPB provides a red flashing alert on the windshield and rapidly beeps or pulses the driver seat. FPB can provide a boost to braking or automatically brake the vehicle.

See *Front Pedestrian Braking (FPB) System* ⇨ *262*.

Lane Keep Assist (LKA)

If equipped, LKA may help avoid crashes due to unintentional lane departures. It may assist by gently turning the steering wheel if the vehicle approaches a detected lane marking without using a turn signal in that direction. It may also provide a Lane Departure Warning (LDW) alert as the lane marking is crossed. The system will not assist or alert if it detects that you are actively steering. Override LKA by turning the steering wheel. LKA uses a camera to detect lane markings between 60 km/h (37 mph) and 180 km/h (112 mph).

See *Lane Departure Warning (LDW)* ⇨ *266* and *Lane Keep Assist (LKA)* ⇨ *266*.

Lane Change Alert (LCA)

If equipped, the LCA system is a lane-changing aid that assists drivers with avoiding lane change crashes that occur with moving vehicles in the side blind zone (or spot) areas or with vehicles rapidly approaching these areas from behind. The LCA warning display will light up in the corresponding outside side mirror and will flash if the turn signal is on. The Side Blind Zone Alert (SBZA) system is included as part of the LCA system.

See *Side Blind Zone Alert (SBZA)* ⇨ *264* and *Lane Change Alert (LCA)* ⇨ *264*.

Surround Vision

If equipped, views around the vehicle display on the center stack to aid with parking and low-speed maneuvers.

See “Surround Vision” under *Assistance Systems for Parking or Backing* ⇨ *255*.

Front Vision Camera

If equipped, a view of the area in front of the vehicle displays on the center stack to aid with parking and low-speed maneuvers.

See “Front Vision Camera” under *Assistance Systems for Parking or Backing* ⇨ *255*.

Rear Vision Camera (RVC)

If equipped, RVC displays a view of the area behind the vehicle on the infotainment display when the vehicle is shifted into R (Reverse) to aid with parking and low-speed backing maneuvers.

See *Assistance Systems for Parking or Backing* ⇨ *255*.

Rear Cross Traffic Alert (RCTA) System

If equipped, the RCTA system uses a triangle with an arrow displayed on the RVC screen to warn of traffic behind your vehicle that may cross your vehicle's path while in R (Reverse). In addition, beeps will sound, or the driver seat will pulse.

See *Assistance Systems for Parking or Backing* ⇨ *255*.

Parking Assist

If equipped, Rear Parking Assist (RPA) uses sensors on the rear bumper to assist with parking and avoiding objects while in R (Reverse). It operates at speeds less than 8 km/h (5 mph). RPA may display a warning triangle on the Rear Vision Camera screen and a graphic on the instrument cluster to provide the object distance. In addition, multiple beeps or seat pulses may occur if very close to an object.

The vehicle may also have the Front Parking Assist system.

See *Assistance Systems for Parking or Backing* ⇨ *255*.

Power Outlets

The vehicle has two 12-volt accessory power outlets, which can be used to plug in electrical equipment, such as a cell phone or MP3 player.

The power outlets are located:

- On the center stack below the climate controls.
- In the rear cargo area.

To use the outlets, remove the cover.

See *Power Outlets* ⇨ *121*.

Universal Remote System

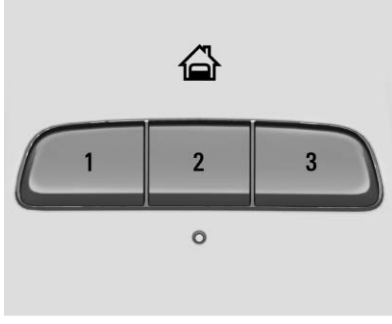

If equipped, the Universal Home Remote System allows for garage door openers, security systems, and home automation devices to be programmed to work with these buttons in the vehicle.

See *Universal Remote System* ⇨ *165*.

Sunroof

If equipped, the ignition must be in ON/RUN or ACC/ACCESSORY, or in Retained Accessory Power (RAP) to operate the sunroof.

See *Ignition Positions* ⇨ *225* and *Retained Accessory Power (RAP)* ⇨ *230*.

1. Sunroof Switch (SLIDE)
2. Vent Switch (TILT)

Open/Close (Manual Mode) : Fully press SLIDE (1) to open the sunroof. The sunshade automatically opens and will stay open. Release to stop at the desired position. Fully press (1) to close the sunroof. Release to stop at the desired position.

Express-Open/Express-Close : Press and release SLIDE (1) to express-open the sunroof. The sunshade automatically opens and will stay open. Press and release to express-close the sunroof.

Vent Feature : Press TILT (2) to vent the sunroof. Press again and hold to open the sunroof. Release to stop at the desired position. The sunshade automatically opens and will stay open. Press (2) to express-close the sunroof. Press again to stop the movement.

See *Sunroof* ⇨ *52*.

Performance and Maintenance

Traction Control/ Electronic Stability Control

The Traction Control System (TCS) limits wheel spin. The system is on when the vehicle is started.

The StabiliTrak system assists with directional control of the vehicle in difficult driving conditions. The system is on when the vehicle is started.

- To turn off TCS, press and release OFF. illuminates in the instrument cluster and the appropriate DIC message displays. See *Ride Control System Messages* ⇨ *154*.
- Press and release OFF again to turn TCS back on.
- To turn off both TCS and StabiliTrak, press and hold OFF until OFF and illuminate in the instrument cluster. The appropriate DIC message displays. See *Ride Control System Messages* ⇨ *154*.
- Press and release OFF again to turn on both systems.

See *Traction Control/Electronic Stability Control* ⇨ *241*.

Tire Pressure Monitor

This vehicle may have a Tire Pressure Monitor System (TPMS).

The low tire pressure warning light alerts to a significant loss in pressure of one of the vehicle's tires. If the warning light comes on, stop as soon as possible and inflate the tires to the recommended pressure shown on the Tire and Loading Information label. See

Vehicle Load Limits ⇨ *221*. The warning light will remain on until the tire pressure is corrected.

The low tire pressure warning light may come on in cool weather when the vehicle is first started, and then turn off as the vehicle is driven. This may be an early indicator that the tire pressures are getting low and the tires need to be inflated to the proper pressure.

The TPMS does not replace normal monthly tire maintenance. Maintain the correct tire pressures.

See *Tire Pressure Monitor System* ⇨ *323*.

Fuel

Regular Fuel

Use only unleaded gasoline rated 87 octane or higher in your vehicle. Do not use gasoline with an octane rating lower as it may result in vehicle damage and lower fuel economy. See *Fuel* ⇨ *268*.

E85 or FlexFuel

No E85 or FlexFuel

Gasoline-ethanol fuel blends greater than E15 (15% ethanol by volume), such as E85, cannot be used in this vehicle.

Engine Oil Life System

The engine oil life system calculates engine oil life based on vehicle use and displays the CHANGE ENGINE OIL SOON message when it is time to change the engine oil and filter.

The oil life system should be reset to 100% only following an oil change.

Resetting the Oil Life System

1. Display the REMAINING OIL LIFE on the DIC. See *Driver Information Center (DIC) (Base and Midlevel)* ⇨ *141* or *Driver Information Center (DIC) (Uplevel)* ⇨ *144*.
2. Press and hold ✓ on the DIC while the Oil Life display is active. The oil life will change to 100%.

See *Engine Oil Life System* ⇨ *289*.

Driving for Better Fuel Economy

Driving habits can affect fuel mileage. Here are some driving tips to get the best fuel economy possible.

- On AWD vehicles, use FWD Mode when conditions permit.
- Avoid fast starts and accelerate smoothly.

- Brake gradually and avoid abrupt stops.
- Avoid idling the engine for long periods of time.
- When road and weather conditions are appropriate, use cruise control.
- Always follow posted speed limits or drive more slowly when conditions require.
- Keep vehicle tires properly inflated.
- Combine several trips into a single trip.
- Replace the vehicle's tires with the same TPC Spec number molded into the tire's sidewall near the size.
- Follow recommended scheduled maintenance.

Roadside Assistance Program

U.S.: 1-888-881-3302

TTY Users (U.S. Only): 1-888-889-2438

Canada: 1-800-268-6800

New GMC owners are automatically enrolled in the Roadside Assistance Program.

See *Roadside Assistance Program* ⇨ *386*.

Keys, Doors, and Windows

Keys and Locks
Keys 28
Remote Keyless Entry (RKE) System 29
Remote Keyless Entry (RKE) System Operation 29
Remote Vehicle Start 35
Door Locks 37
Power Door Locks 39
Delayed Locking 39
Automatic Door Locks 39
Lockout Protection 39
Safety Locks 40

Doors
Liftgate 41

Vehicle Security
Vehicle Security 45
Vehicle Alarm System 45
Immobilizer 47
Immobilizer Operation 47

Exterior Mirrors
Convex Mirrors 48
Power Mirrors 48
Folding Mirrors 48
Heated Mirrors 48
Automatic Dimming Mirror 48
Reverse Tilt Mirrors 49

Interior Mirrors
Interior Rearview Mirrors 49
Manual Rearview Mirror 49
Automatic Dimming Rearview Mirror 49

Windows
Windows 49
Power Windows 50
Sun Visors 51

Roof
Sunroof 52

Keys and Locks

Keys

⚠ Warning

Leaving children in a vehicle with a Remote Keyless Entry (RKE) transmitter is dangerous and children or others could be seriously injured or killed. They could operate the power windows or other controls or make the vehicle move. The windows will function with the RKE transmitter in the vehicle, and children or others could be caught in the path of a closing window. Do not leave children in a vehicle with an RKE transmitter.

The key, inside the Remote Keyless Entry (RKE) transmitter, is used for the driver door.

To remove the key, press the button near the bottom of the transmitter, and pull the key out. Never pull the key out without pressing the button.

If it becomes difficult to turn the key, inspect the key blade for debris.

See your dealer if a new key is needed.

Contact Roadside Assistance if locked out of the vehicle. See *Roadside Assistance Program* ⇨ *386*.

With an active OnStar subscription, an OnStar Advisor may remotely unlock the vehicle. See *OnStar Overview* ⇨ *396*.

Remote Keyless Entry (RKE) System

See *Radio Frequency Statement* ⇨ *392*.

If there is a decrease in the Remote Keyless Entry (RKE) operating range:

- Check the distance. The transmitter may be too far from the vehicle.
- Check the location. Other vehicles or objects may be blocking the signal.
- Check the transmitter's battery. See “Battery Replacement” later in this section.
- If the transmitter is still not working correctly, see your dealer or a qualified technician for service.

Remote Keyless Entry (RKE) System Operation

The Keyless Access system allows for vehicle entry when the transmitter is within range. See “Keyless Access Operation” following.

The RKE transmitter functions may work up to 60 m (197 ft) away from the vehicle.

Keep in mind that other conditions, such as those previously stated, can impact the performance of the transmitter.

With Remote Start Shown, Without Similar

: Press to lock all doors. The turn signal indicators may flash and/or the horn may sound on the second press to indicate locking. See *Vehicle Personalization* ⇨ *157*.

If the driver door is open when is pressed, all doors will lock and then the driver door will immediately unlock, if enabled through vehicle personalization. If the passenger door is open when is pressed, all doors lock.

Pressing may also arm the theft-deterrent system. See *Vehicle Alarm System* ⇨ *45*.

: Press to unlock the driver door. Press unlock again within five seconds to unlock all doors. The RKE transmitter can be programmed to unlock all doors on the first button press. See *Vehicle Personalization* ⇨ *157*. When remotely unlocking the vehicle at night the fog lamps and back-up lamps will come on for about 20 seconds to light your approach to the vehicle. The turn signal indicators may flash to indicate unlocking. See *Vehicle Personalization* ⇨ *157*.

Pressing will disarm the theft-deterrent system. See *Vehicle Alarm System* ⇨ *45*.

On some models, pressing and holding will open all of the windows, if enabled in vehicle personalization.

: If equipped, press and release and then immediately press and hold for at least four seconds to start the engine from outside the vehicle using the RKE transmitter. See *Remote Vehicle Start* ⇨ *35*.

: Press and release one time to initiate vehicle locator. The exterior lamps flash and the horn chirps three times. Press and hold for three seconds to sound the panic alarm. The horn sounds and the turn signal lamps flash for 30 seconds, or until is pressed again or the vehicle is started.

: Press twice quickly to open or close the liftgate.

Press once to stop the liftgate from moving.

Keyless Access Operation

With the Keyless Access system, you can lock and unlock the doors and access the liftgate without removing the RKE transmitter from your pocket, purse, briefcase, etc. The RKE transmitter should be within 1 m (3 ft) of the door or liftgate being opened.

Keyless Access can be programmed to unlock all doors on the first lock/unlock press from the driver door. See *Vehicle Personalization* ⇨ *157*.

Keyless Unlocking/Locking from the Driver Door

When the doors are locked and the RKE transmitter is within 1 m (3 ft) of the driver door handle, pressing the lock/unlock button on the driver door handle will unlock the driver door. If the lock/unlock button is pressed again within five seconds, all passenger doors will unlock.

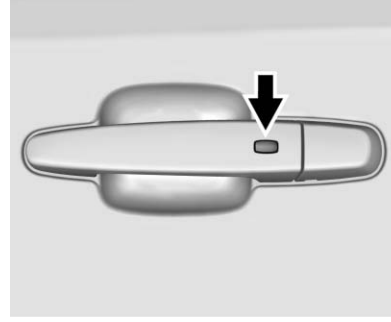

Driver Shown, Passenger Similar

Pressing the lock/unlock button will cause all doors to lock if any of the following occur:

- It has been more than five seconds since the first lock/unlock button press.
- Two lock/unlock button presses were used to unlock all doors.
- Any vehicle door has opened and all doors are now closed.

Keyless Unlocking/Locking from Passenger Doors

When the doors are locked and the RKE transmitter is within 1 m (3 ft) of the door handle, pressing the lock/unlock button on that door handle will unlock all doors. Pressing the lock/unlock button will cause all doors to lock if any of the following occur:

- The lock/unlock button was used to unlock all doors.
- Any vehicle door has opened and all doors are now closed.

Passive Locking

If equipped with Keyless Access, this vehicle will lock several seconds after all doors are closed if the vehicle is off and at least one RKE transmitter has been removed or none remain in the interior.

If other electronic devices interfere with the RKE transmitter signal, the vehicle may not detect the RKE transmitter inside the vehicle. If passive locking is enabled, the doors may lock with the RKE

transmitter inside the vehicle. Do not leave the RKE transmitter in an unattended vehicle.

To customize the doors to automatically lock when exiting the vehicle, see “Remote Lock, Unlock, Start” under *Vehicle Personalization* ⇨ *157*.

Temporary Disable of Passive Locking Feature

Temporarily disable the passive locking by pressing and holding 🔒 on the interior door switch with a door open for at least four seconds, or until three chimes are heard. Passive locking will then remain disabled until 🔒 on the interior door is pressed, or until the vehicle is turned on.

Remote Left in Vehicle Alert

When the vehicle is turned off and an RKE transmitter is left in the vehicle, the horn will chirp three times after all doors are closed. To turn on or off *Vehicle Personalization* ⇨ *157*.

Remote No Longer in Vehicle

If the vehicle is on, with a door open, and then all doors are closed, the vehicle will check for RKE transmitter(s) inside. If an RKE transmitter is not detected, the DIC will display NO REMOTE DETECTED and the horn will chirp three times. This occurs only once each time the vehicle is driven.

Keyless Liftgate Opening

Press the touch pad on the liftgate handle to open the liftgate if the RKE transmitter is within 1 m (3 ft).

Programming Transmitters to the Vehicle

Only RKE transmitters programmed to the vehicle will work. If a transmitter is lost or stolen, a replacement can be purchased and programmed through your dealer. The vehicle can be reprogrammed so that lost or stolen transmitters no longer work. Each vehicle can have up to eight transmitters matched to it.

Programming with Recognized Transmitters

A new transmitter can be programmed to the vehicle when there are two recognized transmitters.

To program, the vehicle must be off and all of the transmitters, both currently recognized and new, must be with you.

1. Place the two recognized transmitters in the cupholder.
2. Remove the key lock cylinder cap on the driver door handle. See *Door Locks* ⇨ *37*. Insert the vehicle key of the new transmitter into the key lock cylinder on the driver door handle and turn the key, counterclockwise, to the unlock position five times within 10 seconds.

   The Driver Information Center (DIC) displays READY FOR REMOTE #2, 3, 4, ETC.

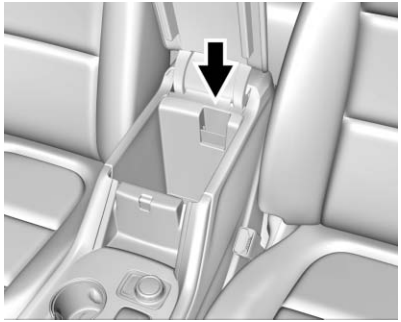

3. Place the new transmitter into the transmitter pocket. The transmitter pocket is inside the center console storage area between the driver and front passenger seats.
4. Press ENGINE START/STOP. When the transmitter is learned the DIC display will show that it is ready to program the next transmitter.
5. Remove the transmitter from the transmitter pocket and press the transmitter 🔓 or 🔒 button.

   To program additional transmitters, repeat Steps 3–5.

   When all additional transmitters are programmed, press and hold ENGINE START/STOP for 12 seconds to exit programming mode.
6. Put the key back into the transmitter.

Programming without Recognized Transmitters

If two currently recognized transmitters are not available, follow this procedure to program up to eight transmitters. This feature is not available in Canada. This procedure will take approximately 30 minutes to complete. The vehicle must be off and all of the transmitters you wish to program must be with you.

1. Remove the key lock cylinder cap on the driver door handle. See *Door Locks* ⇨ *37*. Insert the vehicle key of the transmitter into the key lock cylinder on the driver door handle and turn the key, counterclockwise, to the unlock position five times within 10 seconds.

   The Driver Information Center (DIC) displays REMOTE LEARN PENDING, PLEASE WAIT.
2. Wait for 10 minutes until the DIC displays PRESS ENGINE START BUTTON TO LEARN and then press ENGINE START/STOP.

   The DIC display will again show REMOTE LEARN PENDING, PLEASE WAIT.
3. Repeat Step 2 two additional times. After the third time all previously known transmitters will no longer work with the vehicle. Remaining transmitters can be relearned during the next steps.

   The DIC display should now show READY FOR REMOTE # 1.

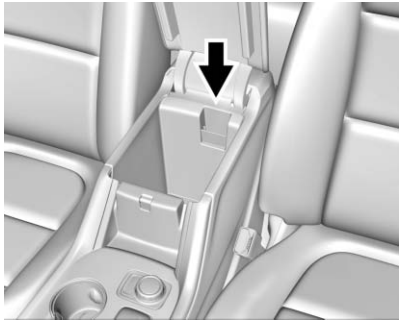

4. Place the new transmitter into the transmitter pocket. The transmitter pocket is inside the center console storage area between the driver and front passenger seats.
5. Press ENGINE START/STOP. When the transmitter is learned the DIC display will show that it is ready to program the next transmitter.
6. Remove the transmitter from the transmitter pocket and press the transmitter 🔓 or 🔒 button.

   To program additional transmitters, repeat Steps 4–6.

   When all additional transmitters are programmed, press and hold ENGINE START/STOP for 12 seconds to exit programming mode.
7. Put the key back into the transmitter.

Starting the Vehicle with a Low Transmitter Battery

When the vehicle is started, if the transmitter battery is weak, the DIC may display NO REMOTE DETECTED or NO REMOTE KEY WAS DETECTED PLACE KEY IN TRANSMITTER POCKET THEN START YOUR VEHICLE. The REPLACE BATTERY IN REMOTE KEY message may also be displayed at this time.

To start the vehicle:

1. Open the center console storage area by opening the armrest.

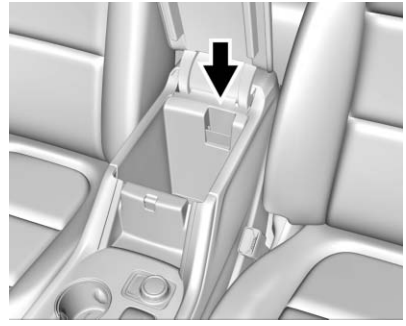

2. Place the transmitter in the transmitter pocket.
3. With the vehicle in P (Park) or N (Neutral), press the brake pedal and ENGINE START/STOP.

   Replace the transmitter battery as soon as possible.

Battery Replacement

Replace the battery in the transmitter soon if the REPLACE BATTERY IN REMOTE KEY message displays in the DIC.

Caution
When replacing the battery, do not touch any of the circuitry on the transmitter. Static from your body could damage the transmitter.

To replace the battery:

1. Insert a flat, thin object in the center of the transmitter to separate and remove the back cover.

2. Lift the battery with a flat object.
3. Remove the battery.
4. Insert the new battery, positive side toward the back cover. Replace with a CR2032 or equivalent battery.
5. Push together the transmitter.

Remote Vehicle Start

If available, this feature allows the engine to be started from outside of the vehicle.

: This button will be on the RKE transmitter if the vehicle has remote start.

The climate control system will use the previous settings during a remote start. The rear defog may come on during a remote start based on cold ambient conditions. The rear fog indicator light does not come on during a remote start.

If the vehicle has heated or ventilated seats, they may come on during a remote start. See *Heated and Ventilated Front Seats* ⇨ *61*.

Laws in some local communities may restrict the use of remote starters. For example, some laws may require a person using remote start to have the vehicle in view. Check local regulations for any requirements.

Other conditions can affect the performance of the transmitter. See *Remote Keyless Entry (RKE) System* ⇨ *29*.

Starting the Engine Using Remote Start

1. Press and release on the RKE transmitter.
2. Immediately press and hold for at least four seconds or until the turn signal lamps flash. The turn signal lamps flashing confirms the request to remote start the vehicle has been received.

   During the remote start the doors will be locked and the parking lamps will remain on as long as the engine is running.

   The engine will shut off after 15 minutes unless a time extension is done or the ignition is put in ON/RUN/START.
3. With the RKE transmitter in the vehicle, press the brake pedal and select the ON/RUN/START ignition mode to drive.

Extending Engine Run Time

The engine run time can also be extended by another 15 minutes, if during the first 15 minutes Steps 1 and 2 are repeated while the engine is still running. An extension can be requested 30 seconds after starting. This provides a total of 30 minutes.

The remote start can only be extended once.

When the remote start is extended, the second 15-minute period is added on to the first 15 minutes for a total of 30 minutes.

A maximum of two remote starts, or a remote start with an extension, are allowed between ignition cycles.

The vehicle's ignition must be changed to ON/RUN/START and then back to OFF before the remote start procedure can be used again.

Canceling a Remote Start

To cancel a remote start, do any of the following:

- Press and hold until the parking lamps turn off.
- Turn on the hazard warning flashers.
- Turn the vehicle on and then off.

Conditions in Which Remote Start Will Not Work

The remote start will not operate if any of the following occur:

- A transmitter is in the vehicle.
- The hood is not closed.
- The hazard warning flashers are on.
- There is an emission control system malfunction.
- The engine coolant temperature is too high.
- The oil pressure is low.
- Two remote vehicle starts or a start with an extension have already been used.
- The vehicle is not in P (Park).

Door Locks

⚠ Warning

Unlocked doors can be dangerous.

- Passengers, especially children, can easily open the doors and fall out of a moving vehicle. The doors can be unlocked and opened while the vehicle is moving. The chance of being thrown out of the vehicle in a crash is increased if the doors are not locked. So, all passengers should wear safety belts properly and the doors should be locked whenever the vehicle is driven.
- Young children who get into unlocked vehicles may be unable to get out. A child can be overcome by extreme heat and can suffer permanent injuries or even

(Continued)

Warning (Continued)

death from heat stroke. Always lock the vehicle whenever leaving it.

- Outsiders can easily enter through an unlocked door when you slow down or stop the vehicle. Locking the doors can help prevent this from happening.

To lock or unlock the doors from the outside:

- Press 🔒 or 🔓 on the Remote Keyless Entry (RKE) transmitter. See *Remote Keyless Entry (RKE) System Operation* ⇨ *29*.
- Use the key in the driver door. The key lock cylinder is covered with a cap.

To lock or unlock the doors from the inside:

- Press 🔒 or 🔓 on the power door lock switch.
- Push down on the door lock knob to lock a door.
- Pull the door handle once to unlock the door. Pull the handle again to unlatch it.

Keyless Access

If equipped, the RKE transmitter must be within 1 m (3 ft) of the door being opened. Press the button on the door handle to open. See “Keyless Access Operation” in *Remote Keyless Entry (RKE) System Operation* ⇨ *29*.

Key Cylinder Access

To access the key cylinder:

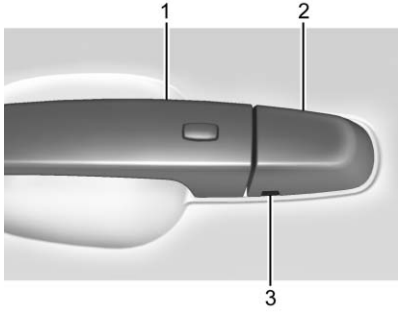

1. Pull the door handle (1) to the open position.
2. Insert the key into the slot (3) on the bottom of the cap (2) and pry outward.
3. Move the cap (2) rearward and remove.
4. Use the key in the cylinder.

To replace the cap:

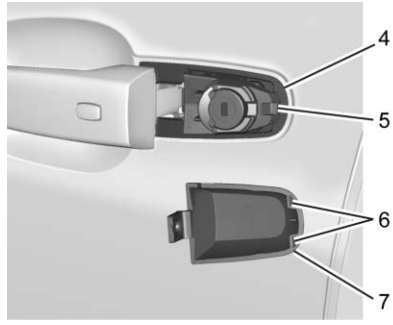

1. Pull the door handle to the open position.
2. Insert the two tabs (6) at the back of the cap (7) between the seal (4) and the metal base (5).

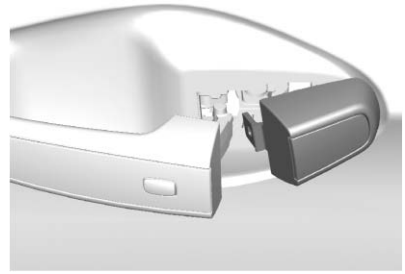

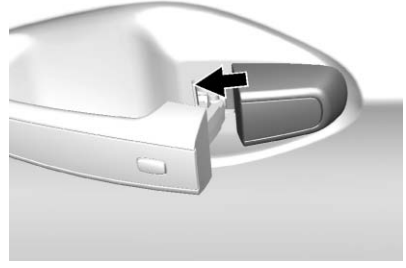

3. Move the cap forward and press to snap the cap in place.
4. Release the door handle.

Power Door Locks

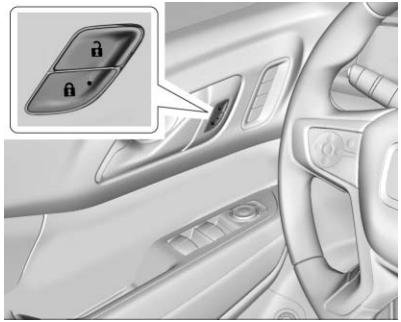

🔒 : Press to lock the doors.

🔓 : Press to unlock the doors.

Delayed Locking

This feature delays the locking of the doors until five seconds after all doors are closed.

When 🔒 is pressed on the power door lock switch while the door is open, a chime will sound three times indicating delayed locking is active.

The doors will lock automatically five seconds after all doors are closed. If a door is reopened before that time, the five-second timer will reset when all doors are closed again.

Press 🔒 on the door lock switch again or press 🔒 on the RKE transmitter to lock the doors immediately.

This feature can also be programmed. See *Vehicle Personalization* ⇨ *157*.

Automatic Door Locks

The vehicle is programmed so that when the doors are closed, the ignition is on, and the shift lever is moved out of P (Park), the doors will lock.

To unlock the doors:

- Press 🔓 on a door.
- Shift the transmission into P (Park).

Automatic door locking cannot be disabled. Automatic door unlocking can be programmed. See *Vehicle Personalization* ⇨ *157*.

Lockout Protection

If the vehicle is in ACC/ACCESSORY or ON/RUN/START and the power door lock switch is pressed with the driver door open, all the doors will lock and only the driver door will unlock.

If the vehicle is off and locking is requested while a door is open, when all doors are closed the vehicle will check for RKE transmitters inside. If an RKE transmitter is detected and the number of RKE transmitters inside has not reduced, the driver door will unlock and the horn will chirp three times.

Lockout Protection can be manually overridden with the driver door open by pressing and holding 🔒 on the power door lock switch.

Unlocked Door Anti-Lockout

If Unlocked Door Anti-Lockout is turned on and the vehicle is off, the driver door is open, and locking is requested, all the doors will lock and only the driver door will unlock. The Unlocked Door Anti-Lockout feature can be turned on or off using the vehicle personalization menus. See *Vehicle Personalization* ⇨ *157*.

Safety Locks

The rear door safety locks prevent passengers from opening the rear doors from inside the vehicle.

Manual Safety Locks

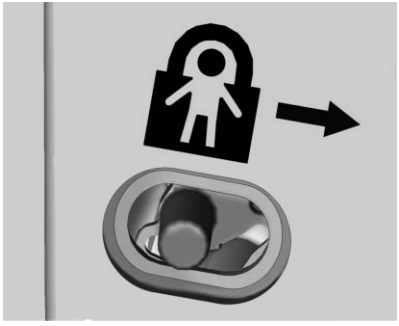

If equipped, the safety lock is on the inside edge of the rear doors. To use the safety lock:

1. Move the lever down to the lock position.
2. Close the door.
3. Do the same for the other rear door.

To open a rear door when the safety lock is on:

1. Unlock the door by activating the inside handle, by pressing the power door lock switch, or by using the Remote Keyless Entry (RKE) transmitter.
2. Open the door from the outside.

When the safety lock is enabled, adults and older children will not be able to open the rear door from the inside. Cancel the safety locks to enable the doors to open from the inside.

To cancel the safety lock:

1. Unlock the door and open it from the outside.
2. Move the lever up to unlock. Do the same for the other door.

Doors

Liftgate

⚠ Warning

Exhaust gases can enter the vehicle if it is driven with the liftgate or trunk/hatch open, or with any objects that pass through the seal between the body and the trunk/hatch or liftgate. Engine exhaust contains carbon monoxide (CO) which cannot be seen or smelled. It can cause unconsciousness and even death.

If the vehicle must be driven with the liftgate or trunk/hatch open:

- Close all of the windows.
- Fully open the air outlets on or under the instrument panel.
- Adjust the climate control system to a setting that brings in only outside air

(Continued)

Warning (Continued)

and set the fan speed to the highest setting. See "Climate Control Systems" in the Index.

- If the vehicle is equipped with a power liftgate, disable the power liftgate function.

See *Engine Exhaust* ⇨ *232*.

Caution

To avoid damage to the liftgate or liftgate glass, make sure the area above and behind the liftgate is clear before opening it.

Manual Liftgate

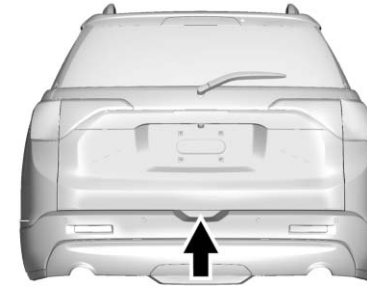

To unlock the liftgate, press 🔓 on the power door lock switch or press 🔓 on the RKE transmitter twice to unlock all doors. Press the touch pad on the bottom of the liftgate and lift up.

Use the pull cup to lower and close the liftgate. Do not press the touch pad while closing the liftgate. This will cause the liftgate to be unlatched.

If equipped with Keyless Access, the liftgate can be opened when locked if the RKE transmitter is

within 1 m (3 ft) of the touch pad. See *Remote Keyless Entry (RKE) System Operation* ⇨ *29*.

The liftgate has an electric latch. If the battery is disconnected or has low voltage, the liftgate will not open. The liftgate will resume operation when the battery is reconnected and charged.

Power Liftgate Operation

⚠ Warning

You or others could be injured if caught in the path of the power liftgate. Make sure there is no one in the way of the liftgate as it is opening and closing.

Caution

Driving with an open and unsecured liftgate may result in damage to the power liftgate components.

If equipped with a power liftgate, the switch is on the driver door. The vehicle must be in P (Park).

The modes are:

- MAX: Opens to maximum height.
- 3/4: Opens to a reduced height that can be set from 3/4 to fully open. Use to prevent the liftgate from opening into overhead obstructions such as a garage door or roof-mounted cargo. The liftgate can be manually opened all the way.
- OFF: Opens manually only.

To power open or close the liftgate, select MAX or 3/4 mode.

- Press x2 twice quickly on the RKE transmitter until the liftgate moves.
- Press on the driver door. The driver door must either be unlocked or locked without the security armed.
- Press the touch pad on the bottom of the liftgate after unlocking all doors. If equipped with Keyless Access, the RKE transmitter must be within 1 m (3 ft).

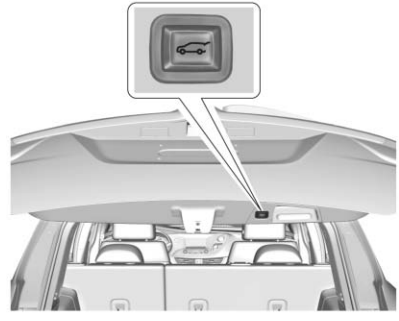

- Press on the bottom of the liftgate next to the pull cup to close.

Press any liftgate button or the touch pad while the liftgate is moving to stop it. Pressing again restarts the operation in the reverse direction. The touch pad on the liftgate handle cannot be used to close the liftgate.

Caution
Manually forcing the liftgate to open or close during a power cycle can damage the vehicle. Allow the power cycle to complete.

The power liftgate may be temporarily disabled under extreme low temperatures, or after repeated power cycling over a short period of time. If this occurs, the liftgate can still be operated manually.

If the vehicle is shifted out of P (Park) while the power function is in progress, the liftgate will continue to completion. If the vehicle is accelerated before the liftgate has completed moving, the liftgate may stop or reverse direction. Check for DIC messages and make sure the liftgate is closed and latched before driving.

Falling Liftgate Detection

The power liftgate will automatically close if the support strut has lost pressure. See your dealer for service before using the power liftgate.

Obstacle Detection Features

If the liftgate encounters an obstacle during a power open or close cycle, the liftgate will automatically reverse direction and move a short distance away from the obstacle. After removing the obstruction, the power liftgate operation can be used again. If the liftgate encounters multiple obstacles on the same power cycle, the power function will deactivate. After removing the obstructions, manually close the liftgate which will allow normal power operation functions to resume.

If the vehicle is locked while the liftgate is closing, and an obstacle is encountered that prevents the liftgate from completely closing, the horn will sound as an alert that the liftgate did not close.

Pinch sensors are on the side edges of the liftgate. If an object is caught between the liftgate and the vehicle and presses against this sensor, the liftgate will reverse direction and open fully. The liftgate will remain open until it is activated again or closed manually.

Setting the 3/4 Mode

To change the position the liftgate stops at when opening:

1. Select MAX or 3/4 mode and power open the liftgate.
2. Stop the liftgate movement at the desired height by pressing any liftgate switch. Manually adjust the liftgate position if needed.
3. Press and hold next to the pull cup on the outside of the liftgate until the turn signals

flash and a beep sounds. This indicates the setting has been recorded.

The liftgate cannot be set below a minimum programmable height. If there is no light flash or sound, then the height adjustment may be too low.

Manual Operation

Select OFF to manually operate the liftgate. See “Manual Liftgate” at the beginning of this section.

Caution
Attempting to move the liftgate too quickly and with excessive force may result in damage to the vehicle.

Operate the liftgate manually with a smooth motion and moderate speed. The system includes a feature which limits the manual closing speed to protect the components.

Hands-Free Operation

If equipped, the liftgate may be operated with a kicking motion under the left corner of the rear bumper.

The liftgate will not operate if the RKE transmitter is not within 1 m (3 ft).

The hands-free feature will not work while the liftgate is moving. To stop the liftgate while in motion use one of the liftgate switches.

Length of Kick Zone

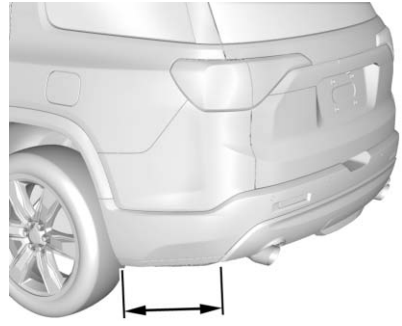

To operate, kick your foot straight up in one swift motion under the left corner of the rear bumper, then pull it back.

Caution

Splashing water may cause the liftgate to open. Keep the RKE transmitter away from the rear bumper detection area or turn the liftgate mode to OFF when cleaning or working near the rear bumper to avoid accidental opening.

- Do not sweep your foot side to side.
- Do not keep your foot under the bumper; the liftgate will not activate.
- Do not touch the liftgate until it has stopped moving.
- This feature may be temporarily disabled under some conditions. If the liftgate does not respond to the kick, open or close the liftgate by another method or start the vehicle. The feature will be re-enabled.

When closing the liftgate using this feature, there will be a short delay. The taillamps will flash and a chime will sound. Step away from the liftgate before it starts moving.

Vehicle Security

This vehicle has theft-deterrent features; however, they do not make the vehicle impossible to steal.

Vehicle Alarm System

This vehicle has an anti-theft alarm system.

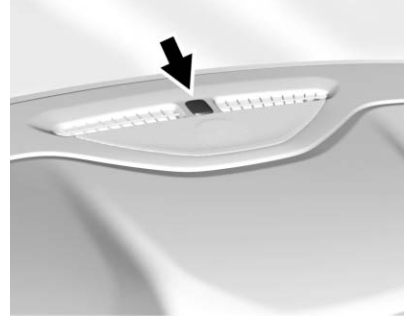

The indicator light, on the instrument panel near the windshield, indicates the status of the system.

Off : Alarm system is disarmed.

On Solid : Vehicle is secured during the delay to arm the system.

Fast Flash : Vehicle is unsecured. A door, the hood, or the liftgate is open.

Slow Flash : Alarm system is armed.

Arming the Alarm System

1. Close the liftgate and the hood. Turn off the vehicle.
2. Lock the vehicle in one of three ways:
   - Use the RKE transmitter.
   - Use the Keyless Access system.
   - With a door open, press the inside 🔒.
3. After 30 seconds the alarm system will arm, and the indicator light will begin to slowly flash indicating the alarm system is operating. Pressing 🔒 on the RKE transmitter a second time will bypass the 30-second delay and immediately arm the alarm system.

The vehicle alarm system will not arm if the doors are locked with the key.

If the driver door is opened without first unlocking with the RKE transmitter, the horn will chirp and the lights will flash to indicate pre-alarm. If the vehicle is not started, or the door is not unlocked by pressing 🔓 on the RKE transmitter during the 10-second pre-alarm, the alarm will be activated.

The alarm will also be activated if a passenger door, the liftgate, or the hood is opened without first disarming the system. When the alarm is activated, the turn signals flash and the horn sounds for about 30 seconds. The alarm system will then re-arm to monitor for the next unauthorized event.

Disarming the Alarm System

To disarm the alarm system or turn off the alarm if it has been activated:

- Press 🔓 on the RKE transmitter.
- Unlock the vehicle using the Keyless Access system.
- Start the vehicle.

To avoid setting off the alarm by accident:

- Lock the vehicle after all occupants have left the vehicle and all doors are closed.
- Always unlock a door with the RKE transmitter or use the Keyless Access system.

Unlocking the driver door with the key will not disarm the system or turn off the alarm.

How to Detect a Tamper Condition

If 🔓 is pressed and the horn chirps and the lights flash three times, the alarm was activated while the alarm system was armed.

If the alarm system has been activated, a message will appear on the DIC. See *Security Messages* ⇨ *155*.

Immobilizer

See *Radio Frequency Statement* ⇨ *392*.

Immobilizer Operation

This vehicle has a passive theft-deterrent system.

The system does not have to be manually armed or disarmed.

The vehicle is automatically immobilized when the vehicle is turned off.

The immobilization system is disarmed when the pushbutton start is activated to enter the ACC/ACCESSORY mode or the ON/RUN/START mode and a valid transmitter is present in the vehicle.

The security light, in the instrument cluster, comes on if there is a problem with arming or disarming the theft-deterrent system.

The system has one or more RKE transmitters matched to an immobilizer control unit in your vehicle. Only a correctly matched RKE transmitter will start the vehicle. If the transmitter is ever damaged, you may not be able to start your vehicle.

When trying to start the vehicle, the security light may come on briefly when the ignition is turned on.

If the engine does not start and the security light stays on, there is a problem with the system. Turn the ignition off and try again.

If the vehicle will not change ignition modes (ACC/ACCESSORY, ON/RUN/START, OFF), and the RKE transmitter appears to be undamaged, try another transmitter. Or, you may try placing the transmitter in the transmitter pocket located in the center console. See “NO REMOTE DETECTED” under *Key and Lock Messages* ⇨ *151*.

If the ignition mode will not change with the other transmitter, your vehicle needs service. If the ignition does change modes, the first transmitter may be faulty. See your dealer who can service the theft-deterrent system and have a new RKE transmitter programmed to the vehicle.

It is possible for the immobilizer system to learn new or replacement RKE transmitters. Up to eight transmitters can be programmed for the vehicle. To program additional transmitters, see “Programming Transmitters to the Vehicle” under *Remote Keyless Entry (RKE) System Operation* ⇨ *29*.

Do not leave the key or device that disarms or deactivates the theft-deterrent system in the vehicle.

Exterior Mirrors

Convex Mirrors

⚠ Warning

A convex mirror can make things, like other vehicles, look farther away than they really are. If you cut too sharply into the right lane, you could hit a vehicle on the right. Check the inside mirror or glance over your shoulder before changing lanes.

The passenger side mirror is convex shaped. A convex mirror's surface is curved so more can be seen from the driver seat.

Power Mirrors

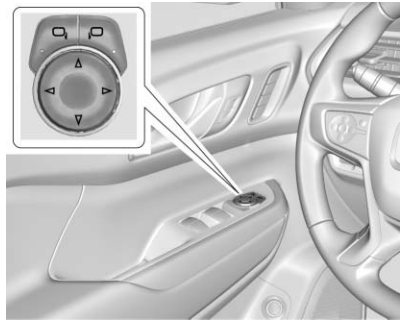

To adjust a mirror:

1. Press ▭ or ▭ to choose the driver or passenger mirror.
2. Press the arrows on the control pad to move each mirror in the desired direction.

Folding Mirrors

Manual Folding Mirrors

The mirrors can be folded inward toward the vehicle to prevent damage when going through an automatic car wash. Push the mirror outward to return it to the original position.

Memory Mirrors

The vehicle may have memory mirrors. See *Memory Seats* ⇨ *60*.

Lane Change Alert (LCA)

The vehicle may have LCA. See *Lane Change Alert (LCA)* ⇨ *264*.

Side Blind Zone Alert

The vehicle may have Side Blind Zone Alert. See *Side Blind Zone Alert (SBZA)* ⇨ *264*.

Heated Mirrors

REAR : Press to heat the mirrors.

See “Rear Window Defogger” under *Dual Automatic Climate Control System* ⇨ *202*.

Automatic Dimming Mirror

If the vehicle has the automatic dimming mirror, the driver outside mirror automatically adjusts for the glare of headlamps behind you.

Reverse Tilt Mirrors

If equipped with memory seats, the passenger and/or driver mirror tilts to a preselected position when the vehicle is in R (Reverse). This allows the curb to be seen when parallel parking.

The mirror(s) return to the original position when:

- The vehicle is shifted out of R (Reverse), or remains in R (Reverse) for about 30 seconds.
- The ignition is turned off.
- The vehicle is driven in R (Reverse) above a set speed.

To turn this feature on or off, see *Vehicle Personalization* ⇨ *157*.

Interior Mirrors

Interior Rearview Mirrors

Adjust the rearview mirror for a clear view of the area behind the vehicle.

Do not spray glass cleaner directly on the mirror. Use a soft towel dampened with water.

Manual Rearview Mirror

If equipped, push the tab forward for daytime use and pull it rearward for nighttime use to avoid glare of the headlamps from behind.

Automatic Dimming Rearview Mirror

If equipped, automatic dimming reduces the glare of headlamps from behind. The dimming feature comes on when the vehicle is started.

Windows

⚠ Warning

Never leave a child, a helpless adult, or a pet alone in a vehicle, especially with the windows closed in warm or hot weather. They can be overcome by the extreme heat and suffer permanent injuries or even death from heat stroke.

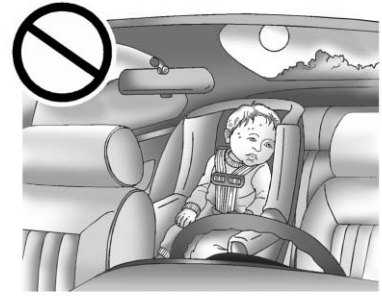

The vehicle aerodynamics are designed to improve fuel economy performance. This may result in a

pulsing sound when either rear window is down and the front windows are up. To reduce the sound, open either a front window or the sunroof, if equipped.

Power Windows

⚠ Warning

Children could be seriously injured or killed if caught in the path of a closing window. Never leave the Remote Keyless Entry (RKE) transmitter in a vehicle with children. When there are children in the rear seat, use the window lockout switch to prevent operation of the windows. See *Keys* ⇨ *28*.

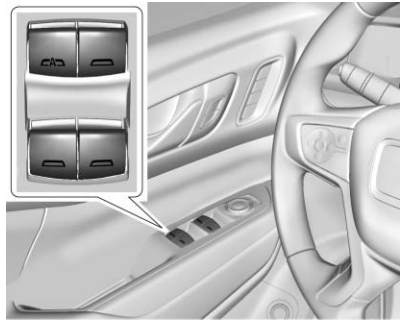

The windows work when the vehicle is in ON/RUN, ACC/ACCESSORY, or Retained Accessory Power (RAP). See *Retained Accessory Power (RAP)* ⇨ *230*.

Press or pull the switch to open or close the window.

The windows will be temporarily disabled if the window switches are used repeatedly within a short time.

Window Lockout

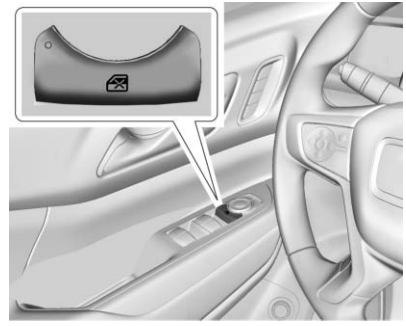

This feature stops the rear door passenger window switches from working.

Press to engage the rear window lockout feature. The indicator light is on when engaged.

Press again to disengage.

Window Express Movement

The window has express-down windows and may have express-up windows. This allows the windows to be opened or closed without holding the window switch. Press

the window switch fully down or pull it up, and quickly release it to engage. Briefly press or pull the same switch to stop window movement.

Express Window Obstacle Detection

The express-up feature will reverse window movement if it comes in contact with an object. Extreme cold or ice could cause the window to auto-reverse. The window will operate as normal after the object or condition is removed.

Obstacle Detection Override

⚠ Warning

If obstacle detection override is activated, the window will not reverse automatically. You or others could be injured and the window could be damaged. Before you use obstacle detection override, make sure that all people and obstructions are clear of the window path.

The window can be closed by holding the window switch in the up position if conditions prevent it from express closing.

Programming the Power Windows

Programming may be necessary if the vehicle's battery has been disconnected or discharged. If the window is unable to express-up, follow these steps to program the window:

1. Close all doors.
2. Place the ignition in ACC/ ACCESSORY or ON/RUN.
3. Partially open the window to be programmed, then close it and continue to pull the switch briefly after the window has fully closed.
4. Press the power window switch until the window is fully open and briefly hold.

Remote Window Operation

If equipped, this feature allows all windows to be opened remotely. If enabled in vehicle personalization, press and hold 🔓 on the Remote Keyless Entry (RKE) transmitter to open all windows. See *Vehicle Personalization* ⇨ *157*.

Sun Visors

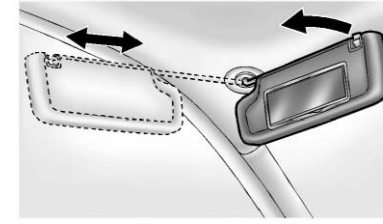

Pull the sun visor down to block glare. Detach the sun visor from the center mount to pivot to the side window or, if equipped, extend along the rod.

Roof

Sunroof

If equipped, the ignition must be in ON/RUN or ACC/ACCESSORY, or in Retained Accessory Power (RAP) to operate the sunroof. See *Ignition Positions* ⇨ *225* and *Retained Accessory Power (RAP)* ⇨ *230*.

1. Sunroof Switch (SLIDE)
2. Vent Switch (TILT)

Open/Close (Manual Mode) : Fully press SLIDE (1) to open the sunroof. The sunshade automatically opens and will stay open. Release to stop at the desired position. Fully press (1) to close the sunroof. Release to stop at the desired position.

Express-Open/Express-Close : Press and release SLIDE (1) to express-open the sunroof. The sunshade automatically opens and will stay open. Press and release to express-close the sunroof.

Vent Feature : Press TILT (2) to vent the sunroof. Press again and hold to open the sunroof. Release to stop at the desired position. The sunshade automatically opens and will stay open. Press (2) to express-close the sunroof. Press again to stop the movement.

The sunshade can be manually opened but must be manually closed. If equipped, the rear sunshade can only be opened or closed manually.

The sunroof cannot be opened or closed if the vehicle has an electrical failure.

Automatic Reversal System

The sunroof is equipped with an automatic reversal system that is only active when the sunroof is being operated in express mode. If an object is in the path of the sunroof while it is express-closing, the reversal system will detect the object and stop. In the event of closing difficulties like frost or other conditions, it is possible to override the reversal system. To override the reversal system, close in manual mode. To stop the movement, release the switch.

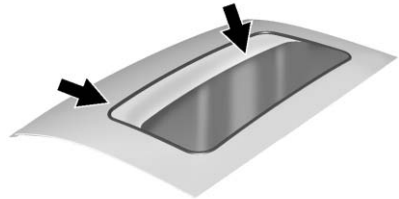

Dirt and debris may collect on the sunroof seal or in the track. This could cause an issue with sunroof operation or noise. It could also plug the water drainage system.

Periodically open the sunroof and remove any obstacles or loose debris. Wipe the sunroof seal and roof sealing area using a clean cloth, mild soap, and water. Do not remove grease from the sunroof.

If water is seen dripping into the water drainage system, this is normal.

Seats and Restraints

Head Restraints
Head Restraints 55

Front Seats
Seat Adjustment 57
Power Seat Adjustment 57
Lumbar Adjustment 58
Reclining Seatbacks 58
Memory Seats 60
Heated and Ventilated Front Seats 61

Rear Seats
Rear Seats 63
Heated Rear Seats 66
Third Row Seats 66

Safety Belts
Safety Belts 68
How to Wear Safety Belts Properly 69
Lap-Shoulder Belt 70
Safety Belt Use During Pregnancy 73
Safety Belt Extender 74
Safety System Check 74
Safety Belt Care 74
Replacing Safety Belt System Parts after a Crash 74

Airbag System
Airbag System 75
Where Are the Airbags? 77
When Should an Airbag Inflate? 78
What Makes an Airbag Inflate? 79
How Does an Airbag Restrain? 79
What Will You See after an Airbag Inflates? 80
Passenger Sensing System . . . 81
Servicing the Airbag-Equipped Vehicle 85
Adding Equipment to the Airbag-Equipped Vehicle 86
Airbag System Check 86
Replacing Airbag System Parts after a Crash 87

Child Restraints
Older Children 87
Infants and Young Children 89
Child Restraint Systems 91
Where to Put the Restraint 93
Lower Anchors and Tethers for Children (LATCH System) 94
Replacing LATCH System Parts After a Crash 101
Securing Child Restraints (With the Safety Belt in the Rear Seat) 101
Securing Child Restraints (With the Safety Belt in the Front Seat) 103

Head Restraints

Front Seats

⚠ Warning

With head restraints that are not installed and adjusted properly, there is a greater chance that occupants will suffer a neck/spinal injury in a crash. Do not drive until the head restraints for all occupants are installed and adjusted properly.

The vehicle's front seats have adjustable head restraints in the outboard seating positions.

Adjust the head restraint so that the top of the restraint is at the same height as the top of the occupant's head. This position reduces the chance of a neck injury in a crash.

The height of the head restraint can be adjusted.

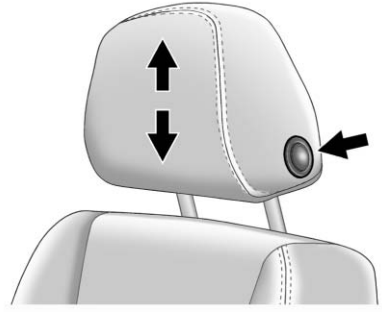

To raise or lower the head restraint, press the button located on the side of the head restraint, and pull up or push the head restraint down, and release the button. Pull and push on the head restraint after the button is released to make sure that it is locked in place.

The front seat outboard head restraints are not removable.

Rear Seats

Second Row Seats

The vehicle’s rear second row seats have adjustable head restraints in the outboard seating positions.

The height of the head restraint can be adjusted. Pull the head restraint up to raise it. Try to move the head restraint to make sure that it is locked in place.

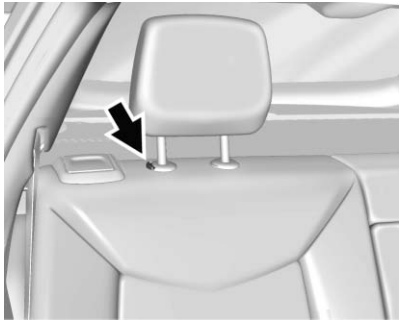

To lower the head restraint, press the button, located on the top of the seatback, and push the head restraint down. Try to move the head restraint after the button is released to make sure that it is locked in place.

The second row head restraints are not removable.

Folding the Second Row Head Restraint

The head restraint can be folded rearward to allow for better visibility when the rear seat is unoccupied.

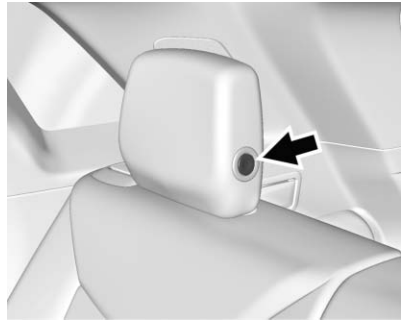

To fold the head restraint, press the button on the side of the head restraint.

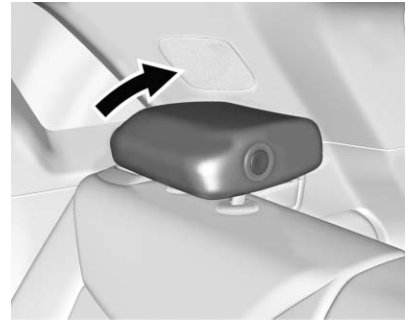

The head restraint will fold rearward automatically.

When an occupant or child restraint is in the seat, always return the head restraint to the full upright position. Pull head restraint up and forward until it locks into place. Push and pull on the head restraint to make sure that it is locked.

Always adjust the head restraint so that the top of the restraint is at the same height as the top of the occupant's head.

Third Row Seats

The vehicle's rear third row seats have head restraints in the outboard seating positions that cannot be adjusted up or down.

The rear third row outboard head restraints are not removable.

The rear third row outboard head restraints are designed to be folded.

The head restraint can be folded to allow for better visibility when the rear seat is unoccupied.

When folding the seatback down, the head restraint will automatically fold out of the way as the seat is folded down.

Return the lowered head restraint to the upright position until it locks into place. Push and pull on the head restraint to make sure it is locked.

Front Seats

Seat Adjustment

⚠ Warning

You can lose control of the vehicle if you try to adjust a driver seat while the vehicle is moving. Adjust the driver seat only when the vehicle is not moving.

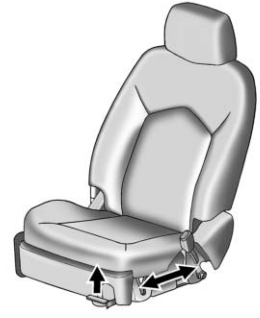

To adjust a manual seat:

1. Pull the handle at the front of the seat cushion.
2. Move the seat forward or rearward to adjust the seat position.
3. Release the handle to stop the seat from moving.
4. Try to move the seat back and forth to be sure it is locked in place.

Power Seat Adjustment

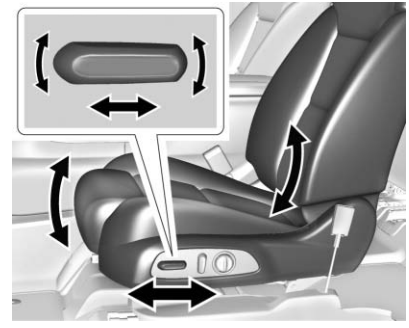

To adjust a power seat, if equipped:

- Move the seat forward or rearward by sliding the control forward or rearward.

- Raise or lower the front part of the seat cushion by moving the front of the control up or down.
- Raise or lower the entire seat by moving the rear of the control up or down.

To adjust the seatback, see *Reclining Seatbacks* ⇨ *58*.

To adjust the lumbar support, see *Lumbar Adjustment* ⇨ *58*.

Some vehicles are equipped with a feature that activates a vibration in the driver seat to help the driver avoid crashes. See *Driver Assistance Systems* ⇨ *254*.

Lumbar Adjustment

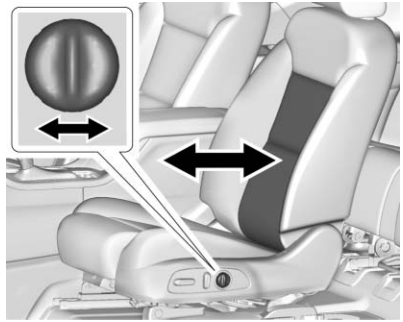

To adjust:

- Press and hold the control forward to increase or rearward to decrease support.
- Press and hold the control upward to raise or downward to lower the height of the support.

Reclining Seatbacks

⚠ Warning

Sitting in a reclined position when the vehicle is in motion can be dangerous. Even when buckled up, the safety belts cannot do their job.

The shoulder belt will not be against your body. Instead, it will be in front of you. In a crash, you could go into it, receiving neck or other injuries.

The lap belt could go up over your abdomen. The belt forces would be there, not at your pelvic bones. This could cause serious internal injuries.

For proper protection when the vehicle is in motion, have the seatback upright. Then sit well back in the seat and wear the safety belt properly.

Do not have a seatback reclined if the vehicle is moving.

Manual Reclining Seatbacks

⚠ Warning

If either seatback is not locked, it could move forward in a sudden stop or crash. That could cause injury to the person sitting there. Always push and pull on the seatbacks to be sure they are locked.

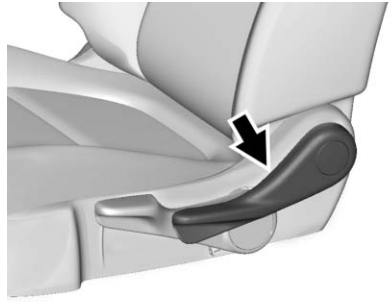

To recline the seatback:

1. Lift the lever.
2. Move the seatback to the desired position, and then release the lever to lock the seatback in place.
3. Push and pull on the seatback to make sure it is locked.

To return the seatback to the upright position:

1. Lift the lever fully without applying pressure to the seatback, and the seatback will return to the upright position.
2. Push and pull on the seatback to make sure it is locked.

Power Reclining Seatbacks

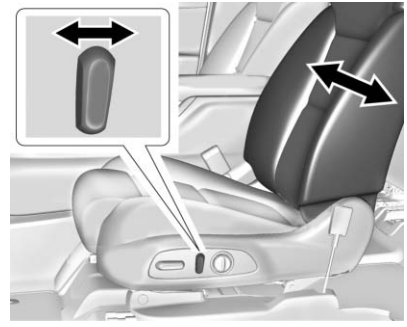

- Tilt the top of the control rearward to recline.
- Tilt the top of the control forward to raise.

Memory Seats

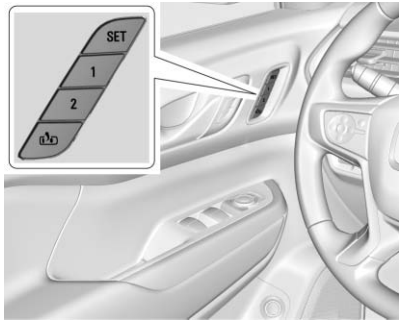

If equipped, the SET, 1, 2, and (Exit) buttons on the driver door are used to manually store and recall memory settings for the driver seat. The driver memory buttons also store outside mirror, and power tilt and telescoping steering wheel positions, if equipped.

Storing Memory Positions

To store positions to the 1 and 2 buttons:

1. The ignition must be in ON/RUN or ACC/ACCESSORY.
2. Adjust the driver seat, power tilt and telescoping steering wheel, if equipped, and the outside mirrors.
3. Press and release SET. A beep will sound.
4. Immediately press and hold 1 until two beeps sound.
5. Repeat Steps 1–4 for a second driver using 2.

To store exit positions and easy exit features to the (Exit) button, repeat Steps 1–4 using to store your positions for getting out of the vehicle.

Manually Recalling Memory Positions

Press and hold 1, 2, or to manually recall the previously stored memory positions. Releasing 1, 2, or before the stored positions are reached stops the recall.

Automatically Recalling Memory Positions (Auto Memory Recall)

If programmed in vehicle personalization, the Auto (Automatic) Memory Recall feature automatically recalls the current driver's previously stored 1 or 2 position when the ignition is changed from OFF to ON/RUN or ACC/ACCESSORY.

See "Auto Memory Recall" under "Comfort and Convenience" in *Vehicle Personalization* ⇨ *157*.

To stop recall movement, press one of the memory, power mirror, or power seat controls; or press the power tilt and telescoping steering wheel control, if equipped.

RKE transmitters are not labeled with a number. If your memory seat position is stored to 1 or 2 but this position is not automatically recalling, then store your positions to the other button or switch RKE transmitters with the other driver.

If the vehicle's driver has changed, in some vehicles the Driver ID may be displayed for the next few ignition cycles.

Easy Exit Recall

If programmed on in the vehicle personalization menu, the easy exit feature automatically recalls the previously stored exit positions when leaving the vehicle. See "Storing Memory Positions" earlier in this section. See also *Vehicle Personalization* ⇨ *157*.

Easy exit recall automatically activates when one of the following occurs:

- The vehicle is turned off and the driver door is opened within a short time.
- The vehicle is turned off with the driver door open.

Obstructions

If something has blocked the driver seat while recalling a memory position, the recall may stop. Remove the obstruction. Then do one of the following:

- If automatically or manually recalling the stored memory position, press and hold the appropriate manual control for two seconds. Try recalling again by pressing the appropriate memory button. If automatically recalling the position, try recalling again by opening the driver door and pressing 🔓 on the RKE transmitter.
- If recalling the exit position, press and hold the appropriate manual control for the exit feature not recalling for two seconds. Then try recalling the exit position again.

If the memory position is still not recalling, see your dealer for service.

Heated and Ventilated Front Seats

⚠ Warning

If you cannot feel temperature change or pain to the skin, the seat heater may cause burns. To reduce the risk of burns, people with such a condition should use care when using the seat heater, especially for long periods of time. Do not place anything on the seat that insulates against heat, such as a blanket, cushion, cover, or similar item. This may cause the seat heater to overheat. An overheated seat heater may cause a burn or may damage the seat.

Heated and Ventilated Seat

If equipped, the buttons are near the climate controls on the center stack. To operate, the ignition must be in ON/RUN.

Press or , if available, to heat the driver or passenger seatback only.

Press or to heat the driver or passenger cushion and seatback.

Press or , if available, to ventilate the driver or passenger seat. A ventilated seat has a fan that pulls or pushes air through the seat. The air is not cooled.

When this feature is off, the heated and ventilated seat symbols on the buttons are white. When a heated seat is turned on, the symbol turns red. When a ventilated seat is turned on, the symbol turns blue.

Press the button once for the highest setting. With each press of the button, the seat will change to the next lower setting, and then to the off setting. The indicator lights next to the buttons indicate three for the highest setting and one for the lowest. If the heated seats are on high, the level may automatically be lowered after approximately 30 minutes.

The passenger seat may take longer to heat up.

Remote Start Heated and Ventilated Seats

During a remote start, the heated or ventilated seats, if equipped, can be turned on automatically. When it is cold outside, the heated seats turn on, and when it is hot outside the ventilated seats turn on. The heated or ventilated seats are canceled when the ignition is turned on. Press the heated or ventilated seat button to use the heated or ventilated seats after the vehicle is started.

The heated or ventilated seat indicator lights do not turn on during a remote start.

The temperature performance of an unoccupied seat may be reduced. This is normal.

The remote start heated or ventilated seats may be enabled or disabled in the vehicle personalization menu. See *Remote Vehicle Start* ⇨ *35* and *Vehicle Personalization* ⇨ *157*.

Rear Seats

Rear Seat Reminder

Look in Rear Seat Reminder Feature

This message displays under certain conditions indicating there may be an item or passenger in the rear seat. Check before exiting the vehicle.

This feature will activate when a second row door is opened while the vehicle is on or up to 10 minutes before the vehicle is turned on, including if the vehicle was started remotely. There will be an alert when the vehicle is turned off. The alert does not directly detect objects in the rear seat; instead, under certain conditions, it detects when a rear door is opened and closed, indicating that there may be something in the rear seat.

The feature is active only once each time the vehicle is turned on and off, and will require reactivation by opening and closing the second row doors. There may be an alert even when there is nothing in the rear seat; for example, if a child entered the vehicle through the rear door and left the vehicle without the vehicle being shut off.

The feature can be turned on or off through *Vehicle Personalization* ⇨ *157*.

Rear Seat Adjustment

The second row seats slide forward for more room.

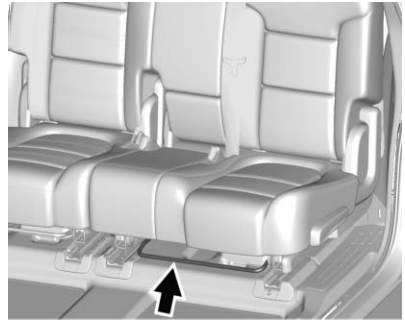

To adjust the seat position:

1. Remove objects on the floor in front of or on the second row seat, or in the seat tracks on the floor.
2. Lift the lever below the seat cushion and slide the seat forward or backward.
3. Push and pull on the seatback to ensure the seat is locked in place.

Entering and Exiting the Third Row

⚠ Warning

Using the third row seating position while the second row is folded, or folded and tumbled, could cause injury in a sudden stop or crash. Be sure to return the seat to the passenger seating position. Push and pull on the seat to make sure it is locked into place.

⚠ Warning

If the seatback and floor latches are not locked, the seat could move forward in a sudden stop or crash and injure the occupant. Always push and pull on the seatbacks to be sure the seatback and floor latches are locked.

Caution

Folding a rear seat with the safety belts still fastened may cause damage to the seat or the safety belts. Always unbuckle the safety belts and return them to their normal stowed position before folding a rear seat.

To access the third row from the driver side:

1. Remove objects on the floor in front of or on the second row seat, or in the seat tracks on the floor.
2. Make sure that the safety belt is unfastened and in the stowed position.

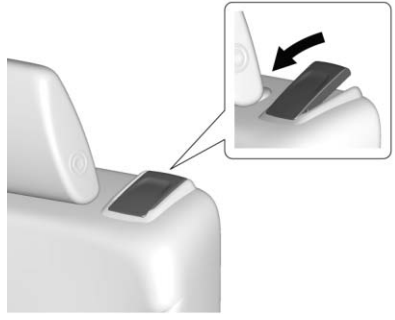

3. Pull the handle on top of the seat forward and pull the seat forward.

To access the third row from the passenger side:

Remove objects on the floor in front of the second row seat, or in the seat tracks on the floor.

The second row passenger side seat can be easily moved for third row entry or exit with a forward facing child restraint installed.

Remove a rearward facing child restraint before moving the seat for third row entry or exit.

⚠ Warning

Remove the child from the child restraint before moving the seat forward for third row entry or exit. Failure to do so may result in injury to the child.

Pull the handle on top of the seat forward and pull the seat forward.

Returning the Seat to the Seating Position

To return the second row seat to its normal seating position:

1. Remove objects on the floor behind the second row seat or in the seat tracks on the floor.
2. Push on the seatback until the seat is locked into place.
3. Push and pull on the seatback and seat cushion to make sure they are locked in place.

4. Check that the safety belt is not under the seat cushion.

Reclining the Seatbacks

To recline the seatbacks:

1. Leaning rearward in the seat, pull the reclining seatback handle.
2. Move the seatback to the desired position, and then release the handle to lock the seatback in place.
3. Push and pull on the seatback to make sure it is locked.

Folding the Seatbacks

To fold the second row seatbacks:

1. Remove anything on or under the seat.
2. Fold the head restraint rearward. See *Head Restraints* ⇨ *55*.
3. Pull forward on the reclining seatback handle.

To return the seatback to the seating position, lift the seatback and push it rearward until it locks into place. Push and pull on the seatback to make sure it is locked. Push on the head restraint to return it to the upright, locked position.

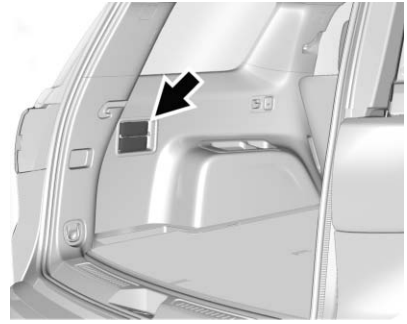

The second row seatbacks can also be folded forward by pulling the levers located on the drivers side of the rear cargo area. The top lever folds the drivers side seatback and the bottom lever folds the passenger side seatback.

Heated Rear Seats

⚠ Warning

If you cannot feel temperature change or pain to the skin, the seat heater may cause burns. See the Warning under *Heated and Ventilated Front Seats* ⇨ 61.

If available, the buttons are on the rear of the center console.

With the ignition in ON/RUN/START, press or to heat the left or right outboard seat cushion. On vehicles without rear climate controls, an indicator light on the button will turn on when the heated seat is on. On vehicles with rear climate controls, an indicator on the climate control display appears when this feature is on.

On vehicles without rear climate controls but equipped with heated rear seats, press the button again to turn this feature off. The light on the button will turn off. On vehicles with rear climate controls, this feature turns on at the highest setting. With each press of the button, the heated seat changes to the next lower setting, and then the off setting. Three lights indicate the highest setting, and one light indicates the lowest. If the heated seats are on high, the level may automatically be lowered after approximately 30 minutes.

Third Row Seats

⚠ Warning

Using the third row seating position while the second row is folded, or pushed forward in the entry position, could cause injury in a sudden stop or crash. Be sure to return the seat to the passenger seating position. Push and pull on the seat to make sure it is locked into place.

Folding the Seatback

Caution

Folding a rear seat with the safety belts still fastened may cause damage to the seat or the safety belts. Always unbuckle the safety belts and return them to their normal stowed position before folding a rear seat.

To fold the third row seatback:

1. Remove objects on the floor in front of or on the second row seat, or in the seat tracks on the floor.
2. If the second row seat is in the full rear position, adjust it forward to allow the third row seat to fold fully flat.
3. Remove anything on or under the seat.

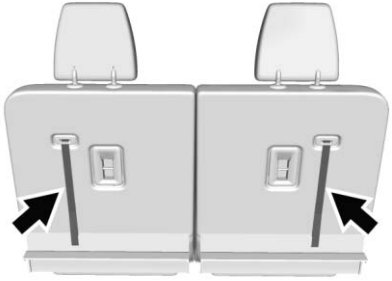

4. Pull the strap on the seatback.
5. Push the seatback forward to lay flat.
6. Repeat for the other seatback, if necessary.

Returning the Seat to the Seating Position

To return the seatback to the seating position:

1. From the rear of the vehicle, raise the seatback to the upright position using the strap on the back of the third row seat, or lift the seatback and push it into place from inside the vehicle.

⚠ Warning

If either seatback is not locked, it could move forward in a sudden stop or crash. That could cause injury to the person sitting there. Always push and pull on the seatbacks to be sure they are locked.

2. Push and pull on the seatback to make sure it is locked in place.

⚠ Warning

A safety belt that is improperly routed, not properly attached, or twisted will not provide the protection needed in a crash. The person wearing the belt could be seriously injured. After raising the rear seatback, always check to be sure that the safety belts are properly routed and attached, and are not twisted.

Safety Belts

This section describes how to use safety belts properly, and some things not to do.

⚠ Warning

Do not let anyone ride where a safety belt cannot be worn properly. In a crash, if you or your passenger(s) are not wearing safety belts, injuries can be much worse than if you are wearing safety belts. You can be seriously injured or killed by hitting things inside the vehicle harder or by being ejected from the vehicle. In addition, anyone who is not buckled up can strike other passengers in the vehicle.

It is extremely dangerous to ride in a cargo area, inside or outside of a vehicle. In a collision, passengers riding in these areas are more likely to be seriously injured or killed. Do not allow

(Continued)

Warning (Continued)

passengers to ride in any area of the vehicle that is not equipped with seats and safety belts.

Always wear a safety belt, and check that all passenger(s) are restrained properly too.

This vehicle has indicators as a reminder to buckle the safety belts. See *Safety Belt Reminders* ⇨ *130*.

Why Safety Belts Work

When riding in a vehicle, you travel as fast as the vehicle does. If the vehicle stops suddenly, you keep going until something stops you. It could be the windshield, the instrument panel, or the safety belts!

When you wear a safety belt, you and the vehicle slow down together. There is more time to stop because you stop over a longer distance and, when worn properly, your strongest bones take the forces from the safety belts. That is why wearing safety belts makes such good sense.

Questions and Answers About Safety Belts

Q: Will I be trapped in the vehicle after a crash if I am wearing a safety belt?

A: You *could* be — whether you are wearing a safety belt or not. Your chance of being conscious during and after a crash, so you *can* unbuckle and get out, is *much* greater if you are belted.

Q: If my vehicle has airbags, why should I have to wear safety belts?

A: Airbags are supplemental systems only. They work *with* safety belts — not instead of them. Whether or not an airbag is provided, all occupants still have to buckle up to get the most protection.

Also, in nearly all states and in all Canadian provinces, the law requires wearing safety belts.

How to Wear Safety Belts Properly

This section is only for people of adult size.

There are special things to know about safety belts and children, and there are different rules for smaller children and infants. If a child will be riding in the vehicle, see *Older Children* ⇨ *87* or *Infants and Young Children* ⇨ *89*. Follow those rules for everyone's protection.

It is very important for all occupants to buckle up. Statistics show that unbelted people are hurt more often in crashes than those who are wearing safety belts.

There are important things to know about wearing a safety belt properly.

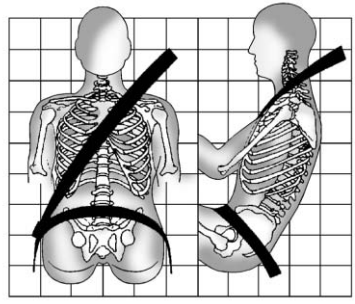

- Sit up straight and always keep your feet on the floor in front of you.
- Always use the correct buckle for your seating position.
- Wear the lap part of the belt low and snug on the hips, just touching the thighs. In a crash, this applies force to the strong pelvic bones and you would be less likely to slide under the lap belt. If you slid under it, the belt would apply force on your abdomen. This could cause serious or even fatal injuries.
- Wear the shoulder belt over the shoulder and across the chest. These parts of the body are best able to take belt restraining forces. The shoulder belt locks if there is a sudden stop or crash.

⚠ Warning

You can be seriously injured, or even killed, by not wearing your safety belt properly.

- Never allow the lap or shoulder belt to become loose or twisted.
- Never wear the shoulder belt under both arms or behind your back.
- Never route the lap or shoulder belt over an armrest.

Lap-Shoulder Belt

All seating positions in the vehicle have a lap-shoulder belt.

The following instructions explain how to wear a lap-shoulder belt properly.

1. Adjust the seat, if the seat is adjustable, so you can sit up straight. To see how, see “Seats” in the Index.

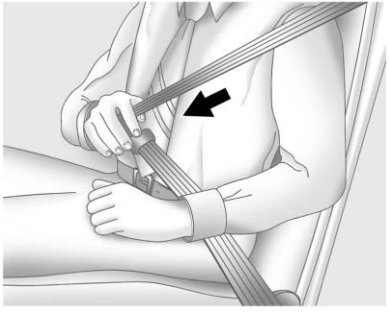

2. Pick up the latch plate and pull the belt across you. Do not let it get twisted.

The lap-shoulder belt may lock if you pull the belt across you very quickly. If this happens, let the belt go back slightly to unlock it. Then pull the belt across you more slowly.

If the shoulder portion of a passenger belt is pulled out all the way, the child restraint locking feature may be engaged. If this happens, let the belt go back all the way and start again.

Engaging the child restraint locking feature in the front outboard seating position may affect the passenger sensing system. See *Passenger Sensing System* ⇨ *81*.

If the webbing locks in the latch plate before it reaches the buckle, tilt the latch plate flat to unlock.

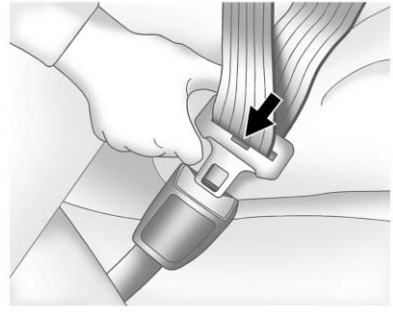

3. Push the latch plate into the buckle until it clicks.

   Pull up on the latch plate to make sure it is secure. If the belt is not long enough, see *Safety Belt Extender* ⇨ *74*.

   Position the release button on the buckle so that the safety belt could be quickly unbuckled if necessary.

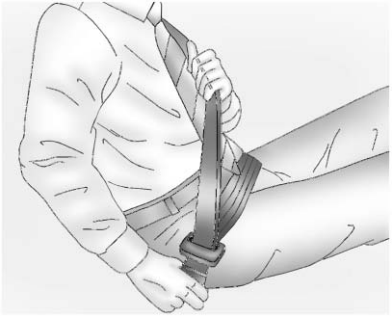

4. To make the lap part tight, pull up on the shoulder belt.

To unlatch the belt, push the button on the buckle. The belt should return to its stowed position.

Always stow the safety belt slowly. If the safety belt webbing returns quickly to the stowed position, the retractor may lock and cannot be pulled out. If this happens, pull the safety belt straight out firmly to unlock the webbing, and then release it. If the webbing is still locked in the retractor, see your dealer.

Before a door is closed, be sure the safety belt is out of the way. If a door is slammed against a safety belt, damage can occur to both the safety belt and the vehicle.

Safety Belt Pretensioners

This vehicle has safety belt pretensioners for front outboard occupants. Although the safety belt pretensioners cannot be seen, they are part of the safety belt assembly. They can help tighten the safety belts during the early stages of a moderate to severe frontal, near frontal, or rear crash if the threshold conditions for pretensioner activation are met. Safety belt pretensioners can also help tighten the safety belts in a side crash or a rollover event.

Pretensioners work only once. If the pretensioners activate in a crash, the pretensioners and probably other parts of the vehicle's safety belt system will need to be replaced. See *Replacing Safety Belt System Parts after a Crash* ⇨ *74*.

Do not sit on the outboard safety belt while entering or exiting the vehicle or at any time while sitting in the seat. Sitting on the safety belt can damage the webbing and hardware.

Rear Safety Belt Comfort Guides

⚠ Warning

A safety belt that is not properly worn may not provide the protection needed in a crash. The person wearing the belt could be seriously injured. The shoulder belt should go over the shoulder and across the chest. These parts of the body are best able to take belt restraining forces.

Rear safety belt comfort guides may provide added safety belt comfort for older children who have outgrown booster seats and for some adults. When installed on a shoulder belt, the comfort guide positions the shoulder belt away from the neck and head.

Second Row Outboard Seating Positions

The vehicle has comfort guides for the second row outboard seating positions. The comfort guides are stored in a pocket on the side of the seatback.

To install:

1. Remove the guide from its storage pocket on the side of the seat.

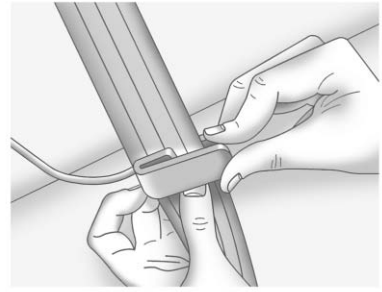

2. Place the guide over the belt, and insert the two edges of the belt into the slots of the guide.

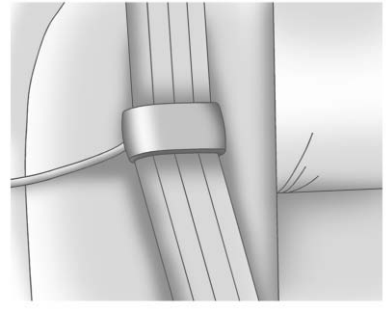

3. Be sure that the belt is not twisted and it lies flat. The elastic cord must be behind the belt with the plastic guide on the front.

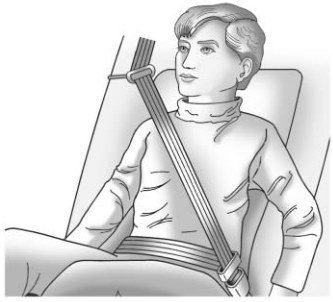

4. Buckle, position, and release the safety belt as described previously in this section. Make sure the shoulder portion of the belt is on the shoulder and not falling off of it. The belt should be close to, but not contacting, the neck.

To remove and store the comfort guide, squeeze the belt edges together so that the safety belt can be removed from the guide. Slide the guide back into its storage pocket on the side of the seatback.

Third Row Seating Positions

Comfort guides are available through your dealer for the third row seating positions. Instructions are included with the guide.

Safety Belt Use During Pregnancy

Safety belts work for everyone, including pregnant women. Like all occupants, they are more likely to be seriously injured if they do not wear safety belts.

A pregnant woman should wear a lap-shoulder belt, and the lap portion should be worn as low as possible, below the rounding, throughout the pregnancy.

The best way to protect the fetus is to protect the mother. When a safety belt is worn properly, it is more likely that the fetus will not be hurt in a crash. For pregnant women, as for anyone, the key to making safety belts effective is wearing them properly.

Safety Belt Extender

If the vehicle's safety belt will fasten around you, you should use it.

But if a safety belt is not long enough, your dealer will order you an extender. When you go in to order it, take the heaviest coat you will wear, so the extender will be long enough for you. To help avoid personal injury, do not let someone else use it, and use it only for the seat it is made to fit. The extender has been designed for adults. Never use it for securing child restraints. To wear it, attach it to the regular safety belt. For more information, see the instruction sheet that comes with the extender.

Safety System Check

Check that the safety belt reminder, safety belts, buckles, latch plates, and retractors, are all working properly. Look for any other loose or damaged safety belt system parts that might keep a safety belt system from performing properly. See your dealer to have it repaired. Torn or frayed safety belts may not protect you in a crash. They can rip apart under impact forces. If a belt is torn or frayed, have it replaced immediately.

Make sure the safety belt reminder light is working. See *Safety Belt Reminders* ⇨ *130*.

Keep safety belts clean and dry. See *Safety Belt Care* ⇨ *74*.

Safety Belt Care

Keep belts clean and dry.

⚠ Warning

Do not bleach or dye safety belt webbing. It may severely weaken the webbing. In a crash, they might not be able to provide adequate protection. Clean and rinse safety belt webbing only with mild soap and lukewarm water. Allow the webbing to dry.

Safety belts should be properly cared for and maintained.

Safety belt hardware should be kept dry and free of dust or debris. As necessary exterior hard surfaces and safety belt webbing may be lightly cleaned with mild soap and water. Ensure there is not excessive dust or debris in the mechanism.
If dust or debris exists in the system please see the dealer. Parts may need to be replaced to ensure proper functionality of the system.

Replacing Safety Belt System Parts after a Crash

⚠ Warning

A crash can damage the safety belt system in the vehicle.
A damaged safety belt system may not properly protect the person using it, resulting in serious injury or even death in a crash. To help make sure the safety belt systems are working properly after a crash, have them

(Continued)

Warning (Continued)

inspected and any necessary replacements made as soon as possible.

After a minor crash, replacement of safety belts may not be necessary. But the safety belt assemblies that were used during any crash may have been stressed or damaged. See your dealer to have the safety belt assemblies inspected or replaced.

New parts and repairs may be necessary even if the safety belt system was not being used at the time of the crash.

Have the safety belt pretensioners checked if the vehicle has been in a crash, or if the airbag readiness light stays on after you start the vehicle or while you are driving. See *Airbag Readiness Light* ⇨ *131*.

Airbag System

The vehicle has the following airbags:

- A frontal airbag for the driver.
- A frontal airbag for the front outboard passenger.
- A knee airbag for the driver.
- A front center airbag for the driver and front outboard passenger.
- A seat-mounted side impact airbag for the driver.
- A seat-mounted side impact airbag for the front outboard passenger.
- A roof-rail airbag for the driver and for the second and third row passengers seated directly behind the driver.
- A roof-rail airbag for the front outboard passenger and the second and third row passengers seated directly behind the front outboard passenger.

All vehicle airbags have the word AIRBAG on the trim or on a label near the deployment opening.

For frontal airbags, the word AIRBAG is on the center of the steering wheel for the driver and on the instrument panel for the front outboard passenger.

For knee airbags, the word AIRBAG is on the lower part of the instrument panel.

For the front center airbag, the word AIRBAG is on the inboard side of the driver seatback.

For seat-mounted side impact airbags, the word AIRBAG is on the side of the seat closest to the door.

For roof-rail airbags, the word AIRBAG is on the ceiling or trim.

Airbags are designed to supplement the protection provided by safety belts. Even though today's airbags are also designed to help reduce the risk of injury from the force of an inflating bag, all airbags must inflate very quickly to do their job.

Here are the most important things to know about the airbag system:

⚠ Warning

You can be severely injured or killed in a crash if you are not wearing your safety belt, even with airbags. Airbags are designed to work with safety belts, not replace them. Also, airbags are not designed to inflate in every crash. In some crashes safety belts are the only restraint. See *When Should an Airbag Inflate?* ⇨ *78*.

Wearing your safety belt during a crash helps reduce your chance of hitting things inside the vehicle or being ejected from it. Airbags are “supplemental restraints” to the safety belts. Everyone in the vehicle should wear a safety belt properly, whether or not there is an airbag for that person.

⚠ Warning

Because airbags inflate with great force and faster than the blink of an eye, anyone who is up against, or very close to any airbag when it inflates can be seriously injured or killed. Do not sit unnecessarily close to any airbag, as you would be if sitting on the edge of the seat or leaning forward. Safety belts help keep you in position before and during a crash. Always wear a safety belt, even with airbags. The driver should sit as far back as possible while still maintaining control of the vehicle. The safety belts and the front outboard passenger airbags are most effective when you are sitting well back and upright in the seat with both feet on the floor.

Occupants should not lean on or sleep against the front center armrest or console in vehicles with a front center airbag.

(Continued)

Warning (Continued)

Occupants should not lean on or sleep against the door or side windows in seating positions with seat-mounted side impact airbags and/or roof-rail airbags.

⚠ Warning

Children who are up against, or very close to, any airbag when it inflates can be seriously injured or killed. Always secure children properly in the vehicle. To read how, see *Older Children* ⇨ *87* or *Infants and Young Children* ⇨ *89*.

There is an airbag readiness light on the instrument cluster, which shows the airbag symbol.

The system checks the airbag electrical system for malfunctions. The light tells you if there is an electrical problem. See *Airbag Readiness Light* ⇨ *131* for more information.

Where Are the Airbags?

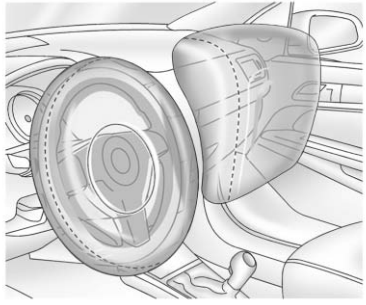

The driver frontal airbag is in the center of the steering wheel.

The front outboard passenger frontal airbag is in the passenger side instrument panel.

The driver knee airbag is below the steering column.

The front center airbag is in the inboard side of the driver seatback.

Driver Side Shown, Passenger Side Similar

The seat-mounted side impact airbags for the driver and front outboard passenger are in the sides of the seatbacks closest to the door.

Driver Side Shown, Passenger Side Similar

The roof-rail airbags for the driver, front outboard passenger, and second and third row outboard passengers are in the ceiling above the side windows.

⚠ Warning

If something is between an occupant and an airbag, the airbag might not inflate properly or it might force the object into that person causing severe injury or even death. The path of an

(Continued)

Warning (Continued)

inflating airbag must be kept clear. Do not put anything between an occupant and an airbag, and do not attach or put anything on the steering wheel hub or on or near any other airbag covering.

Do not use seat or console accessories that block the inflation path of a seat-mounted side impact airbag or the front center airbag.

Never secure anything to the roof of a vehicle with roof-rail airbags by routing a rope or tie-down through any door or window opening. If you do, the path of an inflating roof-rail airbag will be blocked.

When Should an Airbag Inflate?

This vehicle is equipped with airbags. See *Airbag System* ⇨ *75*. Airbags are designed to inflate if the impact exceeds the specific airbag system's deployment threshold. Deployment thresholds are used to predict how severe a crash is likely to be in time for the airbags to inflate and help restrain the occupants. The vehicle has electronic sensors that help the airbag system determine the severity of the impact. Deployment thresholds can vary with specific vehicle design.

Frontal airbags are designed to inflate in moderate to severe frontal or near frontal crashes to help reduce the potential for severe injuries, mainly to the driver's or front outboard passenger's head and chest.

Whether the frontal airbags will or should inflate is not based primarily on how fast the vehicle is traveling. It depends on what is hit, the direction of the impact, and how quickly the vehicle slows down.

Frontal airbags may inflate at different crash speeds depending on whether the vehicle hits an object straight on or at an angle, and

whether the object is fixed or moving, rigid or deformable, narrow or wide.

Frontal airbags are not intended to inflate during vehicle rollovers, in rear impacts, or in many side impacts.

In addition, the vehicle has advanced technology frontal airbags. Advanced technology frontal airbags adjust the restraint according to crash severity.

Knee airbags are designed to inflate in moderate to severe frontal or near frontal impacts. Knee airbags are not designed to inflate during vehicle rollovers, in rear impacts, or in many side impacts.

The front center airbag is designed to inflate in moderate to severe side crashes depending upon the location of the impact, when either side of the vehicle is struck. In addition, the front center airbag is designed to inflate when the sensing system predicts that the vehicle is about to roll over on its side. The front center airbag is not designed to inflate in frontal impacts, near frontal impacts, or rear impacts.

Seat-mounted side impact airbags are designed to inflate in moderate to severe side crashes depending on the location of the impact. Seat-mounted side impact airbags are not designed to inflate in frontal impacts, near frontal impacts, rollovers, or rear impacts.
A seat-mounted side impact airbag is designed to inflate on the side of the vehicle that is struck.

Roof-rail airbags are designed to inflate in moderate to severe side crashes depending on the location of the impact. In addition, these roof-rail airbags are designed to inflate during a rollover or in a severe frontal impact. Roof-rail airbags are not designed to inflate in rear impacts. Both roof-rail airbags will inflate when either side of the vehicle is struck, if the sensing system predicts that the vehicle is about to roll over on its side, or in a severe frontal impact.

In any particular crash, no one can say whether an airbag should have inflated simply because of the vehicle damage or repair costs.

What Makes an Airbag Inflate?

In a deployment event, the sensing system sends an electrical signal triggering a release of gas from the inflator. Gas from the inflator fills the airbag causing the bag to break out of the cover. The inflator, the airbag, and related hardware are all part of the airbag module.

For airbag locations, see *Where Are the Airbags?* ⇨ *77*.

How Does an Airbag Restrain?

In moderate to severe frontal or near frontal collisions, even belted occupants can contact the steering wheel or the instrument panel. In moderate to severe side collisions, even belted occupants can contact the inside of the vehicle.

Airbags supplement the protection provided by safety belts by distributing the force of the impact more evenly over the occupant's body.

Rollover capable roof-rail airbags are also designed to help contain the head and chest of occupants in the outboard seating positions in the first, second, and third rows. The rollover capable roof-rail airbags are designed to help reduce the risk of full or partial ejection in rollover events, although no system can prevent all such ejections.

But airbags would not help in many types of collisions, primarily because the occupant's motion is not toward those airbags. See *When Should an Airbag Inflate?* ⇨ *78*.

Airbags should never be regarded as anything more than a supplement to safety belts.

What Will You See after an Airbag Inflates?

After frontal, knee, and seat-mounted side impact airbags inflate, they quickly deflate, so quickly that some people may not even realize the airbags inflated. The front center airbag and roof-rail airbags may still be at least partially inflated for some time after they inflate. Some components of the airbag module may be hot for several minutes. For location of the airbags, see *Where Are the Airbags?* ⇨ *77*.

The parts of the airbag that come into contact with you may be warm, but not too hot to touch. There may be some smoke and dust coming from the vents in the deflated airbags. Airbag inflation does not prevent the driver from seeing out of the windshield or being able to steer the vehicle, nor does it prevent people from leaving the vehicle.

⚠ Warning

When an airbag inflates, there may be dust in the air. This dust could cause breathing problems for people with a history of asthma or other breathing trouble. To avoid this, everyone in the vehicle should get out as soon as it is safe to do so. If you have breathing problems but cannot get out of the vehicle after an airbag inflates, then get fresh air by opening a window or a door. If you experience breathing problems following an airbag deployment, you should seek medical attention.

The vehicle has a feature that may automatically unlock the doors, turn on the interior lamps and hazard warning flashers, and shut off the fuel system after the airbags inflate. The feature may also activate, without airbag inflation, after an event that exceeds a predetermined threshold. You can lock the doors,

and turn off the interior lamps and hazard warning flashers by using the controls for those features.

⚠ Warning

A crash severe enough to inflate the airbags may have also damaged important functions in the vehicle, such as the fuel system, brake and steering systems, etc. Even if the vehicle appears to be drivable after a moderate crash, there may be concealed damage that could make it difficult to safely operate the vehicle.

Use caution if you should attempt to restart the engine after a crash has occurred.

In many crashes severe enough to inflate the airbag, windshields are broken by vehicle deformation. Additional windshield breakage may also occur from the front outboard passenger airbag.

- Airbags are designed to inflate only once. After an airbag inflates, you will need some new parts for the airbag system. If you do not get them, the airbag system will not be there to help protect you in another crash. A new system will include airbag modules and possibly other parts. The service manual for the vehicle covers the need to replace other parts.
- The vehicle has a crash sensing and diagnostic module which records information after a crash. See *Vehicle Data Recording and Privacy* ⇨ *394* and *Event Data Recorders* ⇨ *394*.
- Let only qualified technicians work on the airbag systems. Improper service can mean that an airbag system will not work properly. See your dealer for service.

Passenger Sensing System

The vehicle has a passenger sensing system for the front outboard passenger position. The passenger airbag status indicator will light on the overhead console when the vehicle is started.

United States and Canada

Mexico

The words ON and OFF, or the symbols for on and off, will be visible during the system check. When the system check is complete, either the word ON or

OFF, or the symbol for on or off, will be visible. See *Passenger Airbag Status Indicator* ⇨ *131*.

The passenger sensing system turns off the front outboard passenger frontal airbag under certain conditions. No other airbag is affected by the passenger sensing system.

The passenger sensing system works with sensors that are part of the front outboard passenger seat and safety belt. The sensors are designed to detect the presence of a properly seated occupant and determine if the front outboard passenger frontal airbag should be allowed to inflate or not.

According to accident statistics, children are safer when properly secured in a rear seat in the correct child restraint for their weight and size.

Whenever possible, children aged 12 and under should be secured in a rear seating position.

Never put a rear-facing child seat in the front. This is because the risk to the rear-facing child is so great, if the airbag inflates.

⚠ Warning

A child in a rear-facing child restraint can be seriously injured or killed if the passenger frontal airbag inflates. This is because the back of the rear-facing child restraint would be very close to the inflating airbag. A child in a forward-facing child restraint can be seriously injured or killed if the passenger frontal airbag inflates and the passenger seat is in a forward position.

Even if the passenger sensing system has turned off the passenger frontal airbag, no system is fail-safe. No one can guarantee that an airbag will not deploy under some unusual circumstance, even though the airbag is turned off.

(Continued)

Warning (Continued)

Never put a rear-facing child restraint in the front seat, even if the airbag is off. If securing a forward-facing child restraint in the front outboard passenger seat, always move the seat as far back as it will go. It is better to secure child restraints in the rear seat. Consider using another vehicle to transport the child when a rear seat is not available.

The passenger sensing system is designed to turn off the front outboard passenger frontal airbag if:

- The front outboard passenger seat is unoccupied.
- The system determines an infant is present in a child restraint.
- A front outboard passenger takes his/her weight off of the seat for a period of time.
- There is a critical problem with the airbag system or the passenger sensing system.

When the passenger sensing system has turned off the front outboard passenger frontal airbag, the off indicator will light and stay lit as a reminder that the airbag is off. See *Passenger Airbag Status Indicator* ⇨ *131*.

The passenger sensing system is designed to turn on the front outboard passenger frontal airbag anytime the system senses that a person of adult size is sitting properly in the front outboard passenger seat.

When the passenger sensing system has allowed the airbag to be enabled, the on indicator will light and stay lit as a reminder that the airbag is active.

For some children, including children in child restraints, and for very small adults, the passenger sensing system may or may not turn off the front outboard passenger frontal airbag, depending upon the person's seating posture and body build. Everyone in the vehicle who has outgrown child restraints should wear a safety belt properly — whether or not there is an airbag for that person.

⚠ Warning

If the airbag readiness light ever comes on and stays on, it means that something may be wrong with the airbag system. To help avoid injury to yourself or others, have the vehicle serviced right away. See *Airbag Readiness Light* ⇨ *131* for more information, including important safety information.

If the On Indicator is Lit for a Child Restraint

The passenger sensing system is designed to turn off the front outboard passenger frontal airbag if the system determines that an infant is present in a child restraint. If a child restraint has been installed and the on indicator is lit:

1. Turn the vehicle off.
2. Remove the child restraint from the vehicle.
3. Remove any additional items from the seat such as blankets, cushions, seat covers, seat heaters, or seat massagers.
4. Reinstall the child restraint following the directions provided by the child restraint manufacturer and refer to *Securing Child Restraints (With the Safety Belt in the Front Seat)* ⇨ *103* or *Securing Child Restraints (With the Safety Belt in the Rear Seat)* ⇨ *101*.

   Make sure the safety belt retractor is locked by pulling the shoulder belt all the way out of the retractor when installing the child restraint, even if the child restraint is equipped with a safety belt lock-off. When the retractor lock is set, the belt can be tightened but not pulled out of the retractor.
5. If, after reinstalling the child restraint and restarting the vehicle, the on indicator is still

lit, turn the vehicle off. Then slightly recline the vehicle seatback and adjust the seat cushion, if adjustable, to make sure that the vehicle seatback is not pushing the child restraint into the seat cushion.

Also make sure the child restraint is not trapped under the vehicle head restraint. If this happens, adjust the head restraint. See *Head Restraints* ⇨ *55*.

6. Restart the vehicle.

The passenger sensing system may or may not turn off the airbag for a child in a child restraint depending upon the child's size. It is better to secure the child restraint in a rear seat. Never put a rear-facing child restraint in the front seat, even if the on indicator is not lit.

If the Off Indicator Is Lit for an Adult-Sized Occupant

If a person of adult size is sitting in the front outboard passenger seat, but the off indicator is lit, it could be because that person is not sitting properly in the seat or that the child restraint locking feature is engaged. Use the following steps to allow the system to detect that person and enable the front outboard passenger frontal airbag:

1. Turn the vehicle off.
2. Remove any additional material from the seat, such as blankets, cushions, seat covers, seat heaters, or seat massagers.
3. Place the seatback in the fully upright position.
4. Have the person sit upright in the seat, centered on the seat cushion, with legs comfortably extended.
5. If the shoulder portion of the belt is pulled out all the way, the child restraint locking feature will be engaged. This may unintentionally cause the passenger sensing system to turn the airbag off for some adult-sized occupants. If this happens, unbuckle the belt, let the belt go back all the way, and then buckle the belt again without pulling the belt out all the way.
6. Restart the vehicle and have the person remain in this position for two to three minutes after the on indicator is lit.

⚠ Warning

If the front outboard passenger airbag is turned off for an adult-sized occupant, the airbag will not be able to inflate and help protect that person in a crash, resulting in an increased risk of serious injury or even death. An adult-sized occupant should not ride in the front outboard passenger seat, if the passenger airbag off indicator is lit.

Additional Factors Affecting System Operation

Safety belts help keep the passenger in position on the seat during vehicle maneuvers and braking, which helps the passenger sensing system maintain the passenger airbag status. See “Safety Belts” and “Child Restraints” in the Index for additional information about the importance of proper restraint use.

A thick layer of additional material, such as a blanket or cushion, or aftermarket equipment such as seat covers, seat heaters, and seat massagers can affect how well the passenger sensing system operates. We recommend that you not use seat covers or other aftermarket equipment except when approved by GM for your specific vehicle. See *Adding Equipment to the Airbag-Equipped Vehicle* ⇨ *86* for more information about modifications that can affect how the system operates.

The on indicator may be lit if an object, such as a briefcase, handbag, grocery bag, laptop, or other electronic device, is put on an unoccupied seat. If this is not desired, remove the object from the seat.

⚠ Warning

Stowing of articles under the passenger seat or between the passenger seat cushion and

(Continued)

Warning (Continued)

seatback may interfere with the proper operation of the passenger sensing system.

Servicing the Airbag-Equipped Vehicle

Airbags affect how the vehicle should be serviced. There are parts of the airbag system in several places around the vehicle. Your dealer and the service manual have information about servicing the vehicle and the airbag system. To purchase a service manual, see *Service Publications Ordering Information* ⇨ *391*.

⚠ Warning

For up to 10 seconds after the vehicle is turned off and the battery is disconnected, an airbag can still inflate during improper service. You can be injured if you

(Continued)

Warning (Continued)

are close to an airbag when it inflates. Avoid yellow connectors. They are probably part of the airbag system. Be sure to follow proper service procedures, and make sure the person performing work for you is qualified to do so.

Adding Equipment to the Airbag-Equipped Vehicle

Adding accessories that change the vehicle's frame, bumper system, height, front end, or side sheet metal may keep the airbag system from working properly.

The operation of the airbag system can also be affected by changing any parts of the front seats, safety belts, airbag sensing and diagnostic module, steering wheel, instrument panel, any of the airbag modules, ceiling or pillar garnish trim, overhead console, front sensors, side impact sensors, airbag wiring, or front center console.

Your dealer and the service manual have information about the location of the airbag sensors, sensing and diagnostic module, and airbag wiring.

In addition, the vehicle has a passenger sensing system for the front outboard passenger position, which includes sensors that are part of the passenger's seat. The passenger sensing system may not operate properly if the original seat trim is replaced with non-GM covers, upholstery, or trim, or with GM covers, upholstery, or trim designed for a different vehicle. Any object, such as an aftermarket seat heater or a comfort enhancing pad or device, installed under or on top of the seat fabric, could also interfere with the operation of the passenger sensing system. This could either prevent proper deployment of the passenger airbag(s) or prevent the passenger sensing system from properly turning off the passenger airbag(s). See *Passenger Sensing System* ⇨ *81*.

If the vehicle has rollover roof-rail airbags, see *Different Size Tires and Wheels* ⇨ *330* for additional important information.

If you have to modify your vehicle because you have a disability and you have questions about whether the modifications will affect the vehicle's airbag system, or if you have questions about whether the airbag system will be affected if the vehicle is modified for any other reason, call Customer Assistance. See *Customer Assistance Offices* ⇨ *384*.

Airbag System Check

The airbag system does not need regularly scheduled maintenance or replacement. Make sure the airbag readiness light is working. See *Airbag Readiness Light* ⇨ *131*.

Caution

If an airbag covering is damaged, opened, or broken, the airbag may not work properly. Do not

(Continued)

Caution (Continued)

open or break the airbag coverings. If there are any opened or broken airbag coverings, have the airbag covering and/or airbag module replaced. For the location of the airbags, see *Where Are the Airbags?* ⇨ 77. See your dealer for service.

Replacing Airbag System Parts after a Crash

⚠ Warning

A crash can damage the airbag systems in the vehicle.
A damaged airbag system may not properly protect you and your passenger(s) in a crash, resulting in serious injury or even death. To help make sure the airbag systems are working properly after a crash, have them

(Continued)

Warning (Continued)

inspected and any necessary replacements made as soon as possible.

If an airbag inflates, you will need to replace airbag system parts. See your dealer for service.

If the airbag readiness light stays on after the vehicle is started or comes on when you are driving, the airbag system may not work properly. Have the vehicle serviced right away. See *Airbag Readiness Light* ⇨ 131.

Child Restraints

Older Children

Older children who have outgrown booster seats should wear the vehicle's safety belts.

The manufacturer instructions that come with the booster seat state the weight and height limitations for that booster. Use a booster seat with a lap-shoulder belt until the child passes the fit test below:

- Sit all the way back on the seat. Do the knees bend at the seat edge? If yes, continue. If no, return to the booster seat.
- Buckle the lap-shoulder belt. Does the shoulder belt rest on the shoulder? If yes, continue. If no, try using the rear safety belt comfort guide, if available. See “Rear Safety Belt Comfort Guides” under *Lap-Shoulder Belt* ⇨ *70*. If a comfort guide is not available, or if the shoulder belt still does not rest on the shoulder, then return to the booster seat.
- Does the lap belt fit low and snug on the hips, touching the thighs? If yes, continue. If no, return to the booster seat.
- Can proper safety belt fit be maintained for the length of the trip? If yes, continue. If no, return to the booster seat.

Q: What is the proper way to wear safety belts?

A: An older child should wear a lap-shoulder belt and get the additional restraint a shoulder belt can provide. The shoulder belt should not cross the face or neck. The lap belt should fit snugly below the hips, just touching the top of the thighs. This applies belt force to the child's pelvic bones in a crash. It should never be worn over the abdomen, which could cause severe or even fatal internal injuries in a crash.

Also see “Rear Safety Belt Comfort Guides” under *Lap-Shoulder Belt* ⇨ *70*.

According to accident statistics, children are safer when properly restrained in a rear seating position.

In a crash, children who are not buckled up can strike other people who are buckled up, or can be thrown out of the vehicle. Older children need to use safety belts properly.

⚠ Warning

Never allow more than one child to wear the same safety belt. The safety belt cannot properly spread the impact forces. In a crash, they can be crushed together and seriously injured. A safety belt must be used by only one person at a time.

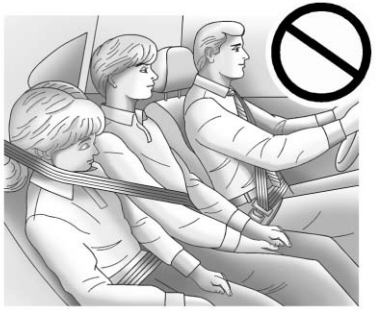

⚠ Warning

Never allow a child to wear the safety belt with the shoulder belt behind their back. A child can be seriously injured by not wearing the lap-shoulder belt properly. In a crash, the child would not be restrained by the shoulder belt. The child could move too far forward increasing the chance of head and neck injury. The child might also slide under the lap belt. The belt force would then be applied right on the abdomen.

(Continued)

Warning (Continued)

That could cause serious or fatal injuries. The shoulder belt should go over the shoulder and across the chest.

Infants and Young Children

Everyone in a vehicle needs protection! This includes infants and all other children. Neither the distance traveled nor the age and size of the traveler changes the need, for everyone, to use safety restraints. In fact, the law in every state in the United States and in every Canadian province says children up to some age must be restrained while in a vehicle.

⚠ Warning

Children can be seriously injured or strangled if a shoulder belt is wrapped around their neck. The shoulder belt can tighten but cannot be loosened if it is locked. The shoulder belt locks when it is pulled all the way out of the retractor. It unlocks when the shoulder belt is allowed to go all the way back into the retractor, but it cannot do this if it is wrapped around a child's neck. If the shoulder belt is locked and tightened around a child's neck, the only way to loosen the belt is to cut it.

Never leave children unattended in a vehicle and never allow children to play with the safety belts.

Every time infants and young children ride in vehicles, they should have the protection provided by appropriate child restraints. Neither the vehicle's safety belt system nor its airbag system is designed for them.

Children who are not restrained properly can strike other people, or can be thrown out of the vehicle.

⚠ Warning

Never hold an infant or a child while riding in a vehicle. Due to crash forces, an infant or a child will become so heavy it is not possible to hold it during a crash. For example, in a crash at only 40 km/h (25 mph), a 5.5 kg (12 lb) infant will suddenly become a 110 kg (240 lb) force on a person's arms. An infant or child should be secured in an appropriate restraint.

⚠ Warning

Children who are up against, or very close to, any airbag when it inflates can be seriously injured or killed. Never put a rear-facing child restraint in the front passenger seat. Secure a rear-facing child restraint in a rear seat.

It is also better to secure a forward-facing child restraint in a rear seat. If a forward-facing child restraint must be secured in the

(Continued)

Warning (Continued)

front passenger seat, always move the front passenger seat as far back as it will go.

If a child restraint is installed in the second row center seat, move the second row seat to the rearward position, whenever possible, to minimize contact with the front center airbag.

Child restraints are devices used to restrain, seat, or position children in the vehicle and are sometimes called child seats or car seats.

There are three basic types of child restraints:

- Forward-facing child restraints
- Rearward-facing child restraints
- Belt-positioning booster seats

The proper child restraint for your child depends on their size, weight, and age, and also on whether the child restraint is compatible with the vehicle in which it will be used.

For each type of child restraint, there are many different models available. When purchasing a child restraint, be sure it is designed to be used in a motor vehicle. If it is, the restraint will have a label saying that it meets federal motor vehicle safety standards. The restraint manufacturer's instructions that come with the restraint state the weight and height limitations for a particular child restraint. In addition, there are many kinds of restraints available for children with special needs.

⚠ Warning

To reduce the risk of neck and head injury in a crash, infants and toddlers should be secured in a rear-facing child restraint until age two, or until they reach the maximum height and weight limits of their child restraint.

⚠ Warning

A young child's hip bones are still so small that the vehicle's regular safety belt may not remain low on the hip bones, as it should. Instead, it may settle up around the child's abdomen. In a crash, the belt would apply force on a body area that is unprotected by any bony structure. This alone could cause serious or fatal

(Continued)

Warning (Continued)

injuries. To reduce the risk of serious or fatal injuries during a crash, young children should always be secured in appropriate child restraints.

Child Restraint Systems

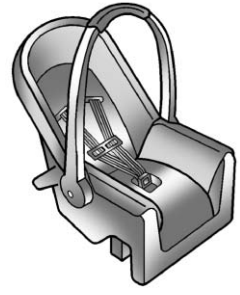

Rear-Facing Infant Seat

A rear-facing child restraint provides restraint with the seating surface against the back of the infant.

The harness system holds the infant in place and, in a crash, acts to keep the infant positioned in the restraint.

Forward-Facing Child Seat

A forward-facing child restraint provides restraint for the child's body with the harness.

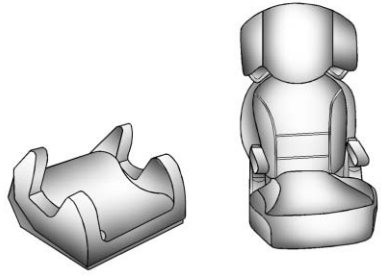

Booster Seats

A belt-positioning booster seat is used for children who have outgrown their forward-facing child restraint. Boosters are designed to improve the fit of the vehicle's safety belt system until the child is large enough for the vehicle safety belts to fit properly without a booster seat. See the safety belt fit test in *Older Children* ⇨ *87*.

Securing an Add-On Child Restraint in the Vehicle

⚠ Warning

A child can be seriously injured or killed in a crash if the child restraint is not properly secured in the vehicle. Secure the child restraint properly in the vehicle using the vehicle’s safety belt or LATCH system, following the instructions that came with that child restraint and the instructions in this manual.

To help reduce the chance of injury, the child restraint must be secured in the vehicle. Child restraint systems must be secured in vehicle seats by lap belts or the lap belt portion of a lap-shoulder belt, or by the LATCH system. See *Lower Anchors and Tethers for Children (LATCH System)* ⇨ *94* for more information. Children can be endangered in a crash if the child restraint is not properly secured in the vehicle.

When securing an add-on child restraint, refer to the instructions that come with the restraint which may be on the restraint itself or in a booklet, or both, and to this manual. The child restraint instructions are important, so if they are not available, obtain a replacement copy from the manufacturer.

Keep in mind that an unsecured child restraint can move around in a collision or sudden stop and injure people in the vehicle. Be sure to properly secure any child restraint in the vehicle — even when no child is in it.

In some areas of the United States and Canada, Certified Child Passenger Safety Technicians (CPSTs) are available to inspect and demonstrate how to correctly use and install child restraints. In the U.S., refer to the National Highway Traffic Safety Administration (NHTSA) website to locate the nearest child safety seat inspection station. For CPST availability in Canada, check with Transport Canada or the Provincial Ministry of Transportation office.

Securing the Child Within the Child Restraint

⚠ Warning

A child can be seriously injured or killed in a crash if the child is not properly secured in the child restraint. Secure the child properly following the instructions that came with that child restraint.

Where to Put the Restraint

According to accident statistics, children and infants are safer when properly restrained in an appropriate child restraint secured in a rear seating position.

Whenever possible, children aged 12 and under should be secured in a rear seating position.

The vehicle is equipped with a front center airbag in the inboard side of the driver seat. Even with a front center airbag, a child restraint can be installed in any second row seating position.

Never put a rear-facing child restraint in the front. This is because the risk to the rear-facing child is so great if the airbag deploys.

⚠ Warning

A child in a rear-facing child restraint can be seriously injured or killed if the front passenger airbag inflates. This is because the back of the rear-facing child restraint would be very close to the inflating airbag. A child in a forward-facing child restraint can be seriously injured or killed if the front passenger airbag inflates and the passenger seat is in a forward position.

Even if the passenger sensing system has turned off the front passenger frontal airbag, no system is fail-safe. No one can guarantee that an airbag will not deploy under some unusual circumstance, even though it is turned off. Secure rear-facing

(Continued)

Warning (Continued)

child restraints in a rear seat, even if the front passenger frontal airbag is off.

It is also better to secure a forward-facing child restraint in a rear seat. If a forward-facing child restraint must be secured in the front passenger seat, always move the front passenger seat as far back as it will go.

See *Passenger Sensing System* ⇨ *81* for additional information.

If a child restraint is installed in a second row center seat, move the second row seat to the rearward position, whenever possible, to minimize contact with the front center airbag.

When securing a child restraint in a rear seating position, study the instructions that came with the child restraint to make sure it is compatible with this vehicle.

Child restraints and booster seats vary considerably in size, and some may fit in certain seating positions better than others.

Depending on where you place the child restraint and the size of the child restraint, you may not be able to access adjacent safety belts or LATCH anchors for additional passengers or child restraints. Adjacent seating positions should not be used if the child restraint prevents access to or interferes with the routing of the safety belt.

Wherever a child restraint is installed, be sure to follow the instructions that came with the child restraint system and secure the child restraint system properly.

Keep in mind that an unsecured child restraint can move around in a collision or sudden stop and injure people in the vehicle. Be sure to properly secure any child restraint in the vehicle — even when no child is in it.

Lower Anchors and Tethers for Children (LATCH System)

The LATCH system secures a child restraint during driving or in a crash. LATCH attachments on the child restraint are used to attach the child restraint to the anchors in the vehicle. The LATCH system is designed to make installation of a child restraint easier.

In order to use the LATCH system in your vehicle, you need a child restraint that has LATCH attachments. LATCH-compatible rear-facing and forward-facing child seats can be properly installed using either the LATCH anchors or the vehicle's safety belts. Do not use both the safety belts and the LATCH anchorage system to secure a rear-facing or forward-facing child seat.

Booster seats use the vehicle's safety belts to secure the child in the booster seat. If the manufacturer recommends that the booster seat be secured with the LATCH system,

this can be done as long as the booster seat can be positioned properly and there is no interference with the proper positioning of the lap-shoulder belt on the child.

Make sure to follow the instructions that came with the child restraint, and also the instructions in this manual.

When installing a child restraint with a top tether, you must also use either the lower anchors or the safety belts to properly secure the child restraint. A child restraint must never be attached using only the top tether.

The LATCH anchorage system can be used until the combined weight of the child plus the child restraint is 29.5 kg (65 lbs). Use the safety belt alone instead of the LATCH anchorage system once the combined weight is more than 29.5 kg (65 lbs).

See *Securing Child Restraints (With the Safety Belt in the Front Seat)* ⇨ *103* or *Securing Child Restraints (With the Safety Belt in the Rear Seat)* ⇨ *101*.

Child restraints built after March 2014 will be labeled with the specific child weight up to which the LATCH system can be used to install the restraint.

The following explains how to attach a child restraint with these attachments in the vehicle.

Not all vehicle seating positions or child restraints have lower anchors and attachments or top tether anchors and attachments. In this case, the safety belt must be used (with top tether where available) to secure the child restraint. See *Securing Child Restraints (With the Safety Belt in the Front Seat)* ⇨ *103* or *Securing Child Restraints (With the Safety Belt in the Rear Seat)* ⇨ *101*.

Lower Anchors

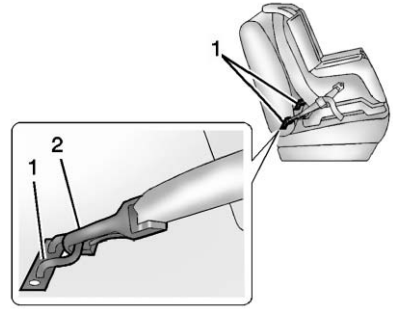

Lower anchors (1) are metal bars built into the vehicle. There are two lower anchors for each LATCH seating position that will accommodate a child restraint with lower attachments (2).

Top Tether Anchor

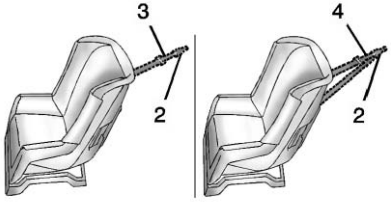

A top tether (3, 4) anchors the top of the child restraint to the vehicle. A top tether anchor is built into the vehicle. The top tether attachment (2) on the child restraint connects to the top tether anchor in the vehicle in order to reduce the forward movement and rotation of the child restraint during driving or in a crash.

The child restraint may have a single tether (3) or a dual tether (4). Either will have a single attachment (2) to secure the top tether to the anchor.

Some child restraints with top tethers are designed for use with or without the top tether being attached. Others require the top tether always to be attached. In Canada, the law requires that forward-facing child restraints have a top tether, and that the tether be attached. Be sure to read and follow the instructions for your child restraint.

Lower Anchor and Top Tether Anchor Locations

Second Row — Bucket

: Seating positions with top tether anchors.

: Seating positions with two lower anchors.

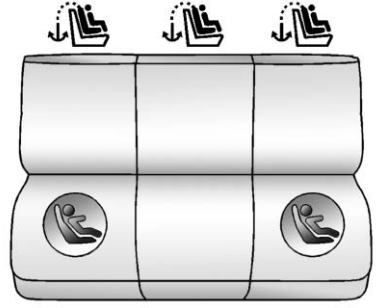

Second Row — 60/40 Bench

: Seating positions with top tether anchors.

: Seating positions with two lower anchors.

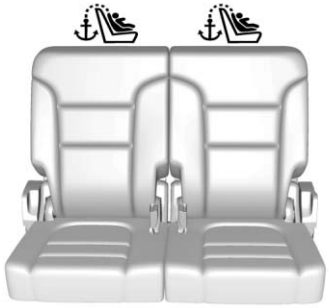

Third Row

: Seating positions with top tether anchors.

To assist in locating the lower anchors, each second row anchor position has a label, near the crease between the seatback and the seat cushion.

To assist in locating the top tether anchors, the top tether anchor symbol is near the anchor.

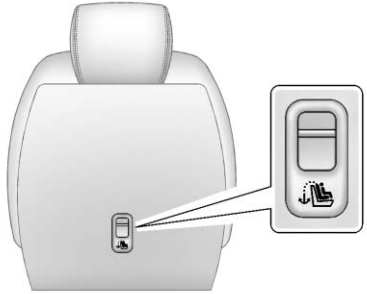

Second Row — Bucket Shown, Bench Similar

The top tether anchors are at the bottom rear of the seatback for each seating position in the second row.

Be sure to use an anchor on the same side of the vehicle as the seating position where the child restraint will be placed.

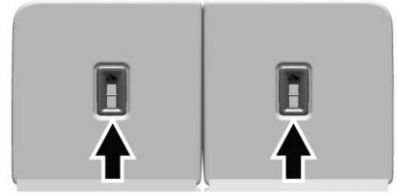

Third Row

The top tether anchors are on the rear of the seatback for each seating position in the third row.

Be sure to use an anchor on the same side of the vehicle as the seating position where the child restraint will be placed.

Do not secure a child restraint in a position without a top tether anchor if a national or local law requires that the top tether be attached, or if

the instructions that come with the child restraint say that the top tether must be attached.

According to accident statistics, children and infants are safer when properly restrained in a child restraint system or infant restraint system secured in a rear seating position. See *Where to Put the Restraint* ⇨ *93* for additional information.

Securing a Child Restraint Designed for the LATCH System

⚠ Warning

If a LATCH-type child restraint is not attached to anchors, the child restraint will not be able to protect the child correctly. In a crash, the child could be seriously injured or killed. Install a LATCH-type child restraint properly using the anchors, or use the vehicle's safety belts to secure the restraint, following the instructions

(Continued)

Warning (Continued)

that came with the child restraint and the instructions in this manual.

⚠ Warning

To reduce the risk of serious or fatal injuries during a crash, do not attach more than one child restraint to a single anchor. Attaching more than one child restraint to a single anchor could cause the anchor or attachment to come loose or even break during a crash. A child or others could be injured.

⚠ Warning

Children can be seriously injured or strangled if a shoulder belt is wrapped around their neck. The

(Continued)

Warning (Continued)

shoulder belt can tighten but cannot be loosened if it is locked. The shoulder belt locks when it is pulled all the way out of the retractor. It unlocks when the shoulder belt is allowed to go all the way back into the retractor, but it cannot do this if it is wrapped around a child's neck. If the shoulder belt is locked and tightened around a child's neck, the only way to loosen the belt is to cut it.

Buckle any unused safety belts behind the child restraint so children cannot reach them. Pull the shoulder belt all the way out of the retractor to set the lock, and tighten the belt behind the child restraint after the child restraint has been installed.

Caution

Do not let the LATCH attachments rub against the vehicle's safety belts. This may damage these parts. If necessary, move buckled safety belts to avoid rubbing the LATCH attachments.

Do not fold the rear seatback when the seat is occupied. Do not fold the empty rear seat with a safety belt buckled. This could damage the safety belt or the seat. Unbuckle and return the safety belt to its stowed position, before folding the seat.

The vehicle is equipped with a front center airbag in the inboard side of the driver seat. Even with a front center airbag, a child restraint can be installed in any second row seating position. If a child restraint is installed in a second row center seat, move the second row seat to the rearward position, whenever possible, to minimize contact with the front center airbag.

If you need to secure more than one child restraint in the rear seat, see *Where to Put the Restraint* ⇨ *93*.

This system is designed to make installation of child restraints easier. When using lower anchors, do not use the vehicle's safety belts. Instead, use the vehicle's anchors and child restraint attachments to secure the restraints. Some restraints also use another vehicle anchor to secure a top tether.

1. Attach and tighten the lower attachments to the lower anchors. If the child restraint does not have lower attachments or the desired seating position does not have lower anchors, secure the child restraint with the top tether and the safety belts. Refer to your child restraint manufacturer instructions and the instructions in this manual.
   1.1. Find the lower anchors for the desired seating position.
   1.2. To access the lower anchors in the second row, it may help to recline the seatback.

        Third row seatbacks must be upright before placing the child restraint on the seat.
   1.3. Put the child restraint on the seat.
   1.4. Attach and tighten the lower attachments on the child restraint to the lower anchors.

        If necessary, adjust the angle of the second row seatback to achieve a tight installation. Make sure the second row bench seatbacks are aligned at the same angle.
2. If the child restraint manufacturer recommends that the top tether be attached,

attach and tighten the top tether to the top tether anchor, if the vehicle has one. Refer to the child restraint instructions and the following steps:

2.1. Find the top tether anchor.

2.2. Route, attach, and tighten the top tether according to your child restraint instructions and the following instructions:

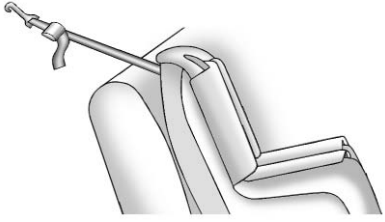

If the position you are using does not have a headrest or head restraint and you are using a single tether, route the tether over the seatback.

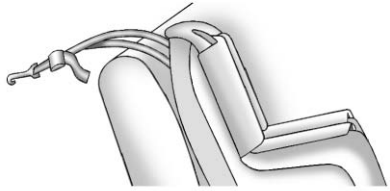

If the position you are using does not have a headrest or head restraint and you are using a dual tether, route the tether over the seatback.

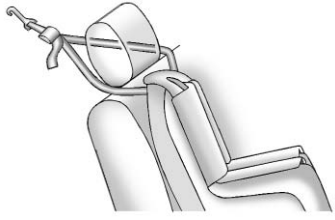

If the position you are using has a fixed headrest or head restraint and you are using a dual tether, route the tether around the headrest or head restraint.

If the position you are using has a fixed headrest or head restraint and you are using a single tether, route the tether under the headrest or head restraint.

3. Before placing a child in the child restraint, make sure it is securely held in place. To check, grasp the child restraint at the LATCH path and attempt to move it side to side and back and forth. There should

be no more than 2.5 cm (1 in) of movement, for proper installation.

Replacing LATCH System Parts After a Crash

⚠ Warning

A crash can damage the LATCH system in the vehicle. A damaged LATCH system may not properly secure the child restraint, resulting in serious injury or even death in a crash. To help make sure the LATCH system is working properly after a crash, see your dealer to have the system inspected and any necessary replacements made as soon as possible.

If the vehicle has the LATCH system and it was being used during a crash, new LATCH system parts may be needed.

New parts and repairs may be necessary even if the LATCH system was not being used at the time of the crash.

Securing Child Restraints (With the Safety Belt in the Rear Seat)

The vehicle is equipped with a front center airbag in the inboard side of the driver seat. Even with a front center airbag, a child restraint can be installed in any second row seating position. If you install a child restraint in a second row center seat, move the second row seat to the rearward position, whenever possible, to minimize contact with the front center airbag.

When securing a child restraint in a rear seating position, study the instructions that came with the child restraint to make sure it is compatible with this vehicle.

If the child restraint has the LATCH system, see *Lower Anchors and Tethers for Children (LATCH System)* ⇨ *94* for how and where to install the child restraint using LATCH. If a child restraint is secured in the vehicle using a safety belt and it uses a top tether, see *Lower Anchors and Tethers for Children (LATCH System)* ⇨ *94* for top tether anchor locations.

Do not secure a child seat in a position without a top tether anchor if a national or local law requires that the top tether be anchored, or if the instructions that come with the child restraint say that the top strap must be anchored.

In Canada, the law requires that forward-facing child restraints have a top tether, and that the tether be attached.

If the child restraint or vehicle seat position does not have the LATCH system, you will be using the safety belt to secure the child restraint. Be sure to follow the instructions that came with the child restraint.

If more than one child restraint needs to be installed in the rear seat, be sure to read *Where to Put the Restraint* ⇨ *93*.

1. Put the child restraint on the seat.
2. Pick up the latch plate, and run the lap and shoulder portions of the vehicle's safety belt through or around the restraint. The child restraint instructions will show you how.

3. Push the latch plate into the buckle until it clicks.

   Position the release button on the buckle, away from the child restraint system, so that the safety belt could be quickly unbuckled if necessary.

4. Pull the shoulder belt all the way out of the retractor to set the lock. When the retractor lock is set, the shoulder belt can be tightened but not pulled out of the retractor.

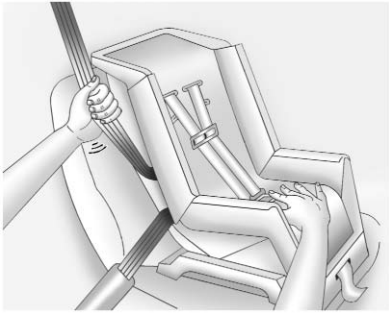

5. To tighten the belt, push down on the child restraint, pull the shoulder portion of the belt to tighten the lap portion of the belt, and feed the shoulder belt back into the retractor. When installing a forward-facing child restraint, it may be helpful to use your knee to push down on the child restraint as you tighten the belt.

   Try to pull the belt out of the retractor to make sure the retractor is locked. If the retractor is not locked, repeat Steps 4 and 5.

6. If the child restraint has a top tether, follow the child restraint manufacturer's instructions regarding the use of the top tether. See *Lower Anchors and Tethers for Children (LATCH System)* ⇨ *94*.
7. Before placing a child in the child restraint, make sure it is securely held in place. To check, grasp the child restraint at the safety belt path and attempt to move it side to side and back and forth. When the child restraint is properly installed, there should be no more than 2.5 cm (1 in) of movement.

To remove the child restraint, unbuckle the vehicle safety belt and let it return to the stowed position. If the top tether is attached to a top tether anchor, disconnect it.

Securing Child Restraints (With the Safety Belt in the Front Seat)

This vehicle has airbags. A rear seat is a safer place to secure a forward-facing child restraint. See *Where to Put the Restraint* ⇨ *93*.

In addition, the vehicle has a passenger sensing system which is designed to turn off the front outboard passenger frontal airbag under certain conditions. See *Passenger Sensing System* ⇨ *81* and *Passenger Airbag Status Indicator* ⇨ *131* for more information, including important safety information.

Never put a rear-facing child seat in the front. This is because the risk to the rear-facing child is so great, if the airbag deploys.

⚠ Warning

A child in a rear-facing child restraint can be seriously injured or killed if the front outboard passenger frontal airbag inflates. This is because the back of the rear-facing child restraint would be very close to the inflating airbag. A child in a forward-facing child restraint can be seriously injured or killed if the front outboard passenger frontal airbag inflates and the passenger seat is in a forward position.

Even if the passenger sensing system has turned off the front outboard passenger frontal airbag, no system is fail-safe. No one can guarantee that an airbag will not deploy under some unusual circumstance, even though it is turned off.

Secure rear-facing child restraints in a rear seat, even if the airbag is off. If you secure a

(Continued)

Warning (Continued)

forward-facing child restraint in the front outboard passenger seat, always move the seat as far back as it will go. It is better to secure the child restraint in a rear seat.

See *Passenger Sensing System* ⇨ *81* for additional information.

If the child restraint uses a top tether, see *Lower Anchors and Tethers for Children (LATCH System)* ⇨ *94* for top tether anchor locations.

Do not secure a child seat in a position without a top tether anchor if a national or local law requires that the top tether be anchored, or if the instructions that come with the child restraint say that the top strap must be anchored.

In Canada, the law requires that forward-facing child restraints have a top tether, and that the tether be attached.

When using the lap-shoulder belt to secure the child restraint in this position, follow the instructions that came with the child restraint and the following instructions:

1. Move the seat as far back as it will go before securing the forward-facing child restraint. Move the seat upward or the seatback to an upright position, if needed, to get a tight installation of the child restraint.

   When the passenger sensing system has turned off the front outboard passenger frontal airbag, the off indicator on the passenger airbag status indicator should light and stay lit when you start the vehicle. See *Passenger Airbag Status Indicator* ⇨ *131*.

2. Put the child restraint on the seat.

3. Pick up the latch plate, and run the lap and shoulder portions of the vehicle's safety belt through or around the restraint. The child restraint instructions will show you how.

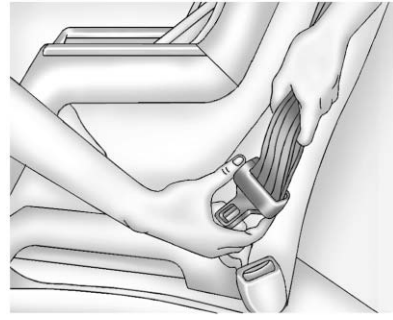

   Tilt the latch plate to adjust the belt if needed.

4. Push the latch plate into the buckle until it clicks.

   Position the release button on the buckle, away from the child restraint system, so that the safety belt could be quickly unbuckled if necessary.

5. Pull the shoulder belt all the way out of the retractor to set the lock. When the retractor lock is set, the belt can be tightened but not pulled out of the retractor.

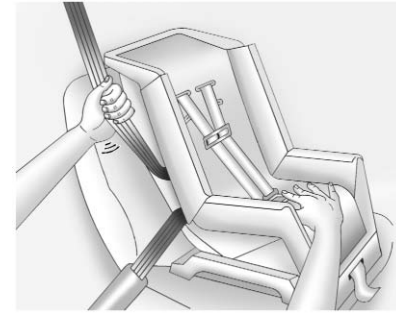

6. To tighten the belt, push down on the child restraint, pull the shoulder portion of the belt to tighten the lap portion of the belt, and feed the shoulder belt back into the retractor. When installing a forward-facing child restraint, it may be helpful to use your knee to push down on the child restraint as you tighten the belt.

   Try to pull the belt out of the retractor to make sure the retractor is locked. If the retractor is not locked, repeat Steps 5 and 6.

7. Before placing a child in the child restraint, make sure it is securely held in place. To check, grasp the child restraint at the safety belt path and attempt to move it side to side and back and forth. When the child restraint is properly installed, there should be no more than 2.5 cm (1 in) of movement.

If the airbag is off, the off indicator in the passenger airbag status indicator will come on and stay on when the vehicle is started.

If a child restraint has been installed and the on indicator is lit, see “If the On Indicator Is Lit for a Child Restraint” under *Passenger Sensing System* ⇨ *81*.

To remove the child restraint, unbuckle the vehicle safety belt and let it return to the stowed position.

Storage

Storage Compartments
Storage Compartments 107
Glove Box 107
Armrest Storage 107
Rear Storage 108
Center Console Storage 108

Additional Storage Features
Cargo Cover 108
Cargo Tie-Downs 109
Cargo Management System 109

Roof Rack System
Roof Rack System 112

Storage Compartments

⚠ Warning

Do not store heavy or sharp objects in storage compartments. In a crash, these objects may cause the cover to open and could result in injury.

Glove Box

Lift up on the glove box lever to open it.

Armrest Storage

If equipped, the rear seat armrest may have cupholders. Pull the armrest down to access the cupholders.

Rear Storage

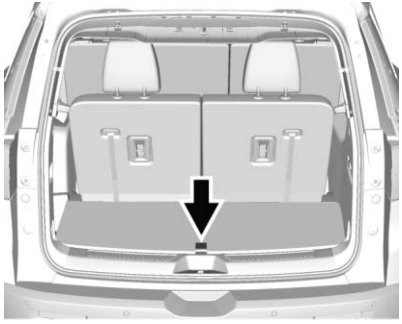

There is storage in the floor of the rear cargo area. Lift the handle to access the removable cargo management system.

Center Console Storage

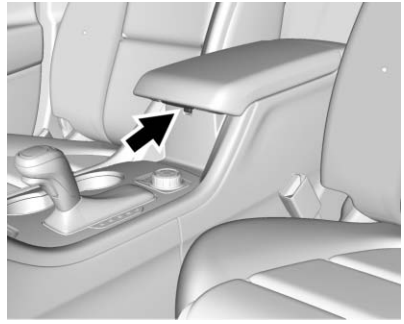

The center console has storage under the armrest. Pull up the latch and lift to open.

The center console also has the following:

- A forward bin
- An open or covered storage bin on the back of the console

Additional Storage Features

Cargo Cover

⚠ Warning

An unsecured cargo cover could strike people in a sudden stop or turn, or in a crash. Store the cargo cover securely or remove it from the vehicle.

For vehicles with a cargo cover, it can be used to cover items in the rear of the vehicle. Unroll the cover toward the rear of the vehicle. Insert the cover pins into the channels on both sides. To store, carefully remove the cover from the channels and let it roll back up. The cover should be stored securely when not in use.

Cargo Tie-Downs

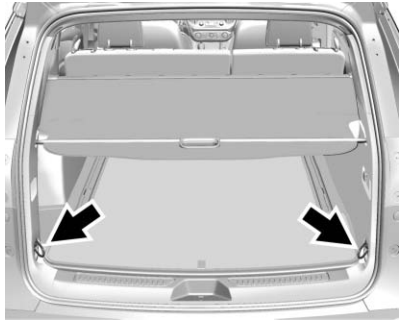

Two cargo tie-downs are located in the rear compartment of the vehicle. The tie-downs can be used to secure small loads.

Cargo Management System

Tray Option

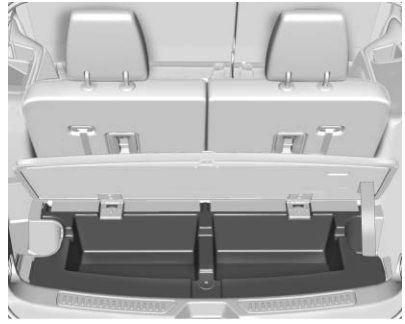

Lift the load floor to access the cargo management system, if equipped with the tray option.

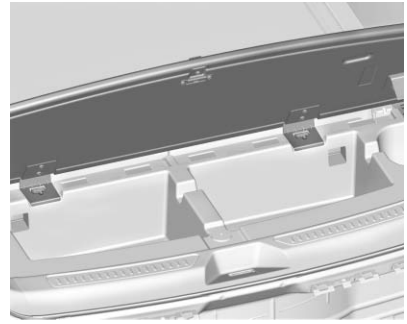

The cargo management system is used to organize storage in the cargo area.

Cargo Management System Tray Removal

To access the spare tire or the tire sealant and compressor kit, the cargo management system tray must be removed.

1. Turn the right side wing nut to remove.
2. Remove the strap.

   Make sure the strap is secure after service or reinstalling the cargo management system.

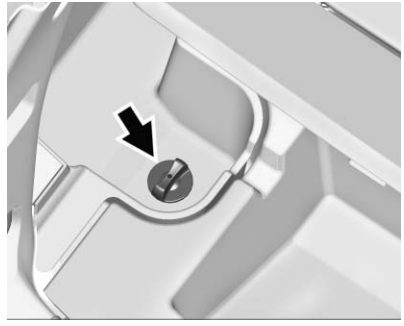

3. Turn the left side wing nut to remove.

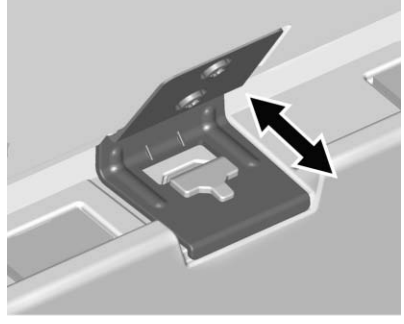

4. Unsnap the hinges on the load floor from the cargo management system.

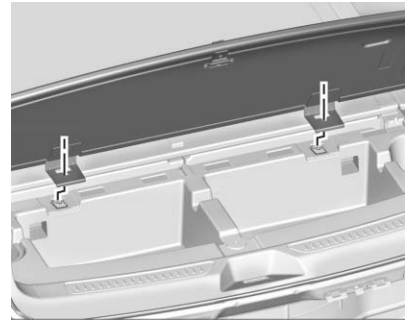

5. Pull up to remove the load floor.
6. Lift up on both sides to remove the cargo management system to access the spare tire.

All Terrain

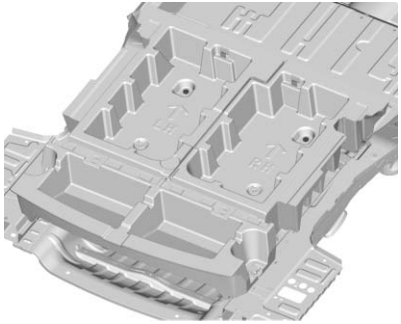

The rear trays do not need to be removed to access the spare tire.

Rail and Divider Option

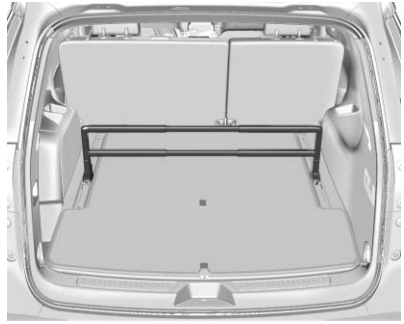

Cargo Management System

Cargo Management System Unlock

Cargo Management System Installation

1. Turn both knobs to the unlock position.
2. Slide the divider along the rail to the desired position until it clicks into place.
3. Make sure the divider is locked into place in the rail grooves.

Cargo Management System Lock

4. Turn both knobs to the lock position.

Cargo Management System Removal

1. Turn both knobs to the unlock position.
2. Press the buttons and pull up to remove the divider.
3. Store the divider outside of the vehicle.

Roof Rack System

⚠ Warning

If something is carried on top of the vehicle that is longer or wider than the roof rack — like paneling, plywood, or a mattress — the wind can catch it while the vehicle is being driven. The item being carried could be violently torn off, and this could cause a collision and damage the vehicle. Never carry something longer or wider than the roof rack on top of the vehicle unless using a GM certified accessory carrier.

If equipped, the roof rack can be used to load items. For roof racks that do not have crossrails included, GM certified crossrails can be purchased as an accessory. See your dealer.

Caution

Loading cargo on the roof rack that weighs more than 100 kg (220 lb) or hangs over the rear or sides of the vehicle may damage the vehicle. Load cargo so that it rests evenly between the crossrails, making sure to fasten cargo securely.

To prevent damage or loss of cargo when driving, check to make sure crossrails and cargo are securely fastened. Loading cargo on the roof rack will make the vehicle's center

of gravity higher. Avoid high speeds, sudden starts, sharp turns, sudden braking, or abrupt maneuvers; otherwise it may result in loss of control. If driving for a long distance, on rough roads, or at high speeds, occasionally stop the vehicle to make sure the cargo remains in its place. Do not exceed the maximum vehicle capacity when loading the vehicle. For more information on vehicle capacity and loading, see *Vehicle Load Limits* ⇨ *221*.

Instruments and Controls

Controls

Steering Wheel Adjustment ... 115
Steering Wheel Controls 116
Heated Steering Wheel 116
Horn 116
Windshield Wiper/Washer 117
Rear Window Wiper/ Washer 118
Compass 118
Clock 119
Power Outlets 121

Warning Lights, Gauges, and Indicators

Warning Lights, Gauges, and Indicators 122
Instrument Cluster 123
Speedometer 127
Odometer 127
Trip Odometer 127
Tachometer 127
Fuel Gauge 128
Engine Coolant Temperature Gauge 129
Safety Belt Reminders 130
Airbag Readiness Light 131
Passenger Airbag Status Indicator 131
Charging System Light 132
Malfunction Indicator Lamp (Check Engine Light) 132
Brake System Warning Light 134
Electric Parking Brake Light 135
Service Electric Parking Brake Light 135
Antilock Brake System (ABS) Warning Light 135
Tow/Haul Mode Light 136
Hill Descent Control Light 136
Lane Keep Assist (LKA) Light 136
Vehicle Ahead Indicator 136
Pedestrian Ahead Indicator ... 137
Traction Off Light 137
StabiliTrak® OFF Light 137
Traction Control System (TCS)/ StabiliTrak® Light 137
Tire Pressure Light 138
Engine Oil Pressure Light 138
Low Fuel Warning Light (Base Level) 139
Low Fuel Warning Light (Midlevel and Uplevel) 139
Security Light 139
High-Beam On Light 140
Front Fog Lamp Light 140
Lamps On Reminder 140
Cruise Control Light 140
Door Ajar Light 141

Information Displays

Driver Information Center (DIC) (Base and Midlevel) 141
Driver Information Center (DIC) (Uplevel) 144

Vehicle Messages

Vehicle Messages 147
Battery Voltage and Charging Messages 147
Brake System Messages 148
Compass Messages 149
Cruise Control Messages 149
Door Ajar Messages 149
Engine Cooling System Messages 150
Engine Oil Messages 150
Engine Power Messages 151
Fuel System Messages 151
Key and Lock Messages 151
Lamp Messages 152
Object Detection System Messages 152
Ride Control System Messages 154
Airbag System Messages 155

Security Messages 155
Service Vehicle Messages 155
Steering System Messages 155
Starting the Vehicle Messages 156
Tire Messages 156
Transmission Messages 156
Vehicle Reminder Messages 157
Vehicle Speed Messages 157
Washer Fluid Messages 157

Vehicle Personalization
Vehicle Personalization 157

Universal Remote System
Universal Remote System 165
Universal Remote System Programming 165
Universal Remote System Operation 168

Controls

Steering Wheel Adjustment

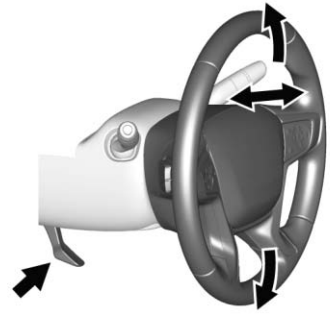

To adjust the steering wheel:

1. Pull the lever down.
2. Move the steering wheel up or down.
3. Pull or push the steering wheel closer or away from you.
4. Pull the lever up to lock the wheel in place.

Do not adjust the steering wheel while driving.

Power Tilt and Telescoping Steering Wheel

To adjust the power tilt and telescoping steering wheel, if equipped:

Press the control to move the steering wheel up and down or forward and rearward.

Do not adjust the steering wheel while driving.

Steering Wheel Controls

If equipped, some audio controls can be adjusted at the steering wheel.

: For vehicles with OnStar® or a Bluetooth® system, press to interact with those systems. See *OnStar Overview* ⇨ *396* or “Bluetooth (Overview)” in the infotainment manual.

: Press to reject an incoming call or end a current call. Press to mute or unmute the infotainment system when not on a call.

◁ **or** ▷ **:** Press to go to the previous or next menu option.

△ **or** ▽ **:** Press to go to the next or previous selection.

✓ **:** Press to select a highlighted menu option.

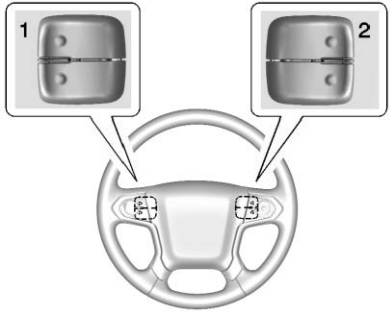

The favorite and volume switches are on the back of the steering wheel.

1. Favorite: When on a radio source, press to select the next or previous favorite. When on a media source, press to select the next or previous track.
2. Volume: Press to increase or decrease the volume.

Heated Steering Wheel

: If equipped, press to turn it on or off. A light next to the button displays when the feature is turned on.

The steering wheel takes about three minutes to start heating.

Horn

Press on the steering wheel pad to sound the horn.

Windshield Wiper/Washer

With the ignition in ACC/ACCESSORY or ON/RUN/START, move the windshield wiper lever to select the wiper speed.

HI : Use for fast wipes.

LO : Use for slow wipes.

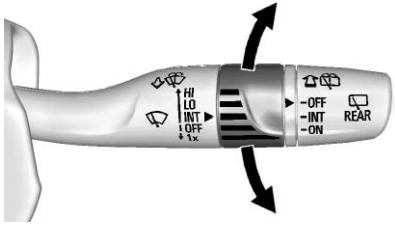

INT : Move the windshield wiper lever to INT. Turn the band up for more frequent wipes or down for less frequent wipes.

OFF : Use to turn the wipers off.

1X : For a single wipe, briefly move the wiper lever down. For several wipes, hold the wiper lever down.

: Pull the windshield wiper lever toward you to spray windshield washer fluid and activate the windshield wipers. The wipers will continue until the lever is released or the maximum wash time is reached. When the windshield wiper lever is released, additional wipes may occur depending on how long the windshield washer had been activated. See *Washer Fluid* ⇨ *297* for information on filling the windshield washer fluid reservoir.

⚠ Warning

In freezing weather, do not use the washer until the windshield is warmed. Otherwise the washer fluid can form ice on the windshield, blocking your vision.

Clear snow and ice from the wiper blades and windshield before using them. If frozen to the windshield, carefully loosen or thaw them. Damaged blades should be replaced. See *Wiper Blade Replacement* ⇨ *302*.

Heavy snow or ice can overload the wiper motor. See *Electrical System Overload* ⇨ *304*.

Wiper Parking

If the ignition is put in OFF while the wipers are on LO, HI, or INT, they will immediately stop.

If the windshield wiper lever is then moved to OFF before the driver door is opened or within 10 minutes, the wipers will restart and move to the base of the windshield.

If the ignition is put in OFF while the wipers are performing wipes due to windshield washing, the wipers continue to run until they reach the base of the windshield.

Rear Window Wiper/ Washer

The rear window wiper/washer controls are on the end of the windshield wiper lever.

Turn the controls to adjust the setting.

OFF : Turns the wiper off.

INT : Turns on the rear wiper with a delay between wipes.

ON : Turns on the rear wiper.

: Push the windshield wiper lever forward to spray washer fluid on the rear window. The wipers will clear the rear window and either stop or return to your preset speed. For more washer cycles, press and hold the button.

The rear window wiper/washer will not operate if the liftgate is open or ajar. If the liftgate is opened while the rear wiper is on, the wiper returns to the parked position and stops.

Rear Wiper Arm Assembly Protection

When using an automatic car wash, move the rear wiper control to OFF to disable the rear wiper. In some vehicles, if the transmission is in N (Neutral) and the vehicle speed is very slow, the rear wiper will automatically park.

The wiper operations return to normal when the transmission is no longer in N (Neutral) or the vehicle speed has increased.

Reverse Gear Wipes

If the rear wiper control is off, the rear wiper will automatically operate continuously when the shift lever is in R (Reverse) and the front windshield wiper is performing low or high speed wipes. If the rear wiper control is off, the shift lever is in R (Reverse), and the front windshield wiper is performing interval wipes, then the rear wiper automatically performs interval wipes.

This feature can be turned on or off. See *Vehicle Personalization* ⇨ *157*.

The windshield washer reservoir is used for the windshield and the rear window. Check the fluid level in the reservoir if either washer is not working. See *Washer Fluid* ⇨ *297*.

Compass

The vehicle may have a compass display on the Driver Information Center (DIC). The compass receives its heading and other information from the Global Positioning

System (GPS) antenna, StabiliTrak®, and vehicle speed information.

The compass system is designed to operate for a certain number of miles or degrees of turn before needing a signal from the GPS satellites. When the compass display shows CAL, drive the vehicle for a short distance in an open area where it can receive a GPS signal. The compass system will automatically determine when a GPS signal is restored and provide a heading again. See *Compass Messages* ⇨ *149* for the messages that may be displayed for the compass.

Clock

Base Radio

The infotainment system controls are used to access the time and date settings through the menu system. See *Operation* ⇨ *181* on how to use the menu system.

Setting the Time and Date

When Auto Set is enabled the time cannot be manually set.

1. Press ⌂, then touch SETTINGS.
2. Touch Time and Date, then Set Time or Set Date.
3. Touch + or − to adjust the value.
4. Touch ▼ or ▲ to adjust AM or PM for 12 hour format.
5. Touch ↩.

Auto Set

1. Press ⌂, then touch SETTINGS.
2. Touch Time and Date, then Auto Set.
3. Select from the available selections.
4. Touch ↩.

Setting the 12/24 Hour Format

1. Press ⌂, then touch SETTINGS.
2. Touch Time and Date, then select 12h or 24h format.
3. Touch ↩.

Setting the Month and Day Format

1. Press ⌂, then touch SETTINGS.
2. Touch Time and Date, then Set Date Format.
3. Select DD/MM/YYYY (day/month/year), MM/DD/YYYY (month/day/year), or YYYY/MM/DD (year/month/day) format.
4. Touch ↩.

Uplevel Radio Using Faceplate Controls

To set the time or date:

1. Select Home Page, then select SETTINGS.
2. Select Time and Date, then the desired function.
3. Turn the MENU knob to increase or decrease the value.

4. Press the MENU knob to go to the next value. After the last value is selected, the system will update and return to the Settings menu. Press ◁ BACK to go to the last menu and save the changes.

Auto Set requires OnStar subscription.

If auto timing is set, the time displayed on the clock may not update immediately when driving into a new time zone.

To set the clock display:

1. Select SETTINGS from the Home Page, then select Time and Date.
2. Select Clock Display.
3. Turn the MENU knob to Off or On.
4. Press the MENU knob to select.

Press ◁ BACK to go to the last menu and save the changes.

Uplevel Radio Using Touchscreen Controls

The infotainment system controls are used to access the time and date settings through the menu system. See “Using the System” under “Introduction” in the infotainment manual.

To set the time:

1. Touch SETTINGS from the Home Page, then touch Time and Date.
2. Touch Set Time and touch ∧ or ∨ to increase or decrease hours, minutes, and AM or PM. Touch 12–24 Hr for 12 or 24 hour clock.
3. Touch ⬅ to go back to the previous menu.

Auto Set requires OnStar subscription.

If auto timing is set, the time displayed on the clock may not update immediately when driving into a new time zone.

To set the date:

1. Touch SETTINGS from the Home Page, then touch Time and Date.
2. Touch Set Date and touch ∧ or ∨ to increase or decrease month, day, or year.
3. Touch ⬅ to go back to the previous menu.

To set the clock display:

1. Touch SETTINGS and touch Time and Date.
2. Touch Clock Display and touch OFF or ON to turn the clock display off or on.
3. Touch ⬅ to go back to the previous menu.

The clock settings can also be accessed by touching the time display, then touching Set.

Power Outlets

Power Outlets 12 Volt Direct Current

The vehicle has two 12-volt outlets that can be used to plug in electrical equipment, such as a cell phone or MP3 player.

The power outlets are located:

- On the center stack below the climate controls.
- In the rear cargo area.

Lift the cover to access the outlet and replace when not in use.

⚠ Warning

Power is always supplied to the rear cargo power outlet. Do not leave electrical equipment plugged in when the vehicle is not in use because the vehicle could catch fire and cause injury or death.

Caution

Leaving electrical equipment plugged in for an extended period of time while the ignition is in LOCK/OFF will drain the battery. Always unplug electrical equipment when not in use and do not plug in equipment that exceeds the maximum 15 ampere rating.

Certain accessory plugs may not be compatible with the accessory power outlet and could overload vehicle and adapter fuses. If a problem is experienced, see your dealer.

When adding electrical equipment, be sure to follow the proper installation instructions included with the equipment. See *Add-On Electrical Equipment* ⇨ *279*.

Caution

Hanging heavy equipment from the power outlet can cause damage not covered by the vehicle warranty. The power outlets are designed for accessory power plugs only, such as cell phone charge cords.

Power Outlet 110V/120V Alternating Current

If equipped with this power outlet it can be used to plug in electrical equipment that uses a maximum limit of 150 watts.

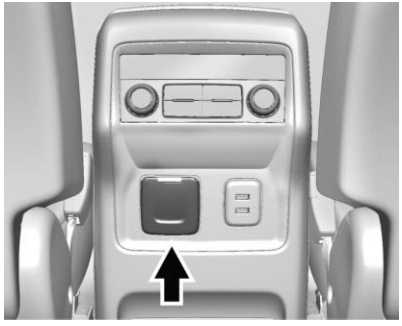

The power outlet is on the rear of the center console.

An indicator light on the outlet turns on to show it is in use. The light comes on when the ignition is in ON/RUN, equipment requiring less than 150 watts is plugged into the outlet, and no system fault is detected.

The indicator light does not come on when the ignition is in LOCK/OFF or if the equipment is not fully seated into the outlet.

If equipment is connected using more than 150 watts or a system fault is detected, a protection circuit shuts off the power supply and the indicator light turns off. To reset the circuit, unplug the item and plug it back in or turn the Retained Accessory Power (RAP) off and then back on. See *Retained Accessory Power (RAP)* ⇨ *230*. The power restarts when equipment using 150 watts or less is plugged into the outlet and a system fault is not detected.

The power outlet is not designed for and may not work properly, if the following are plugged in:

- Equipment with high initial peak wattage, such as compressor-driven refrigerators and electric power tools.
- Other equipment requiring an extremely stable power supply, such as microcomputer-controlled electric blankets and touch sensor lamps.
- Medical equipment.

See *High Voltage Devices and Wiring* ⇨ *304*.

Warning Lights, Gauges, and Indicators

Warning lights and gauges can signal that something is wrong before it becomes serious enough to cause an expensive repair or replacement. Paying attention to the warning lights and gauges could prevent injury.

Some warning lights come on briefly when the engine is started to indicate they are working. When one of the warning lights comes on and stays on while driving, or when one of the gauges shows there may be a problem, check the section that explains what to do. Waiting to do repairs can be costly and even dangerous.

Instrument Cluster

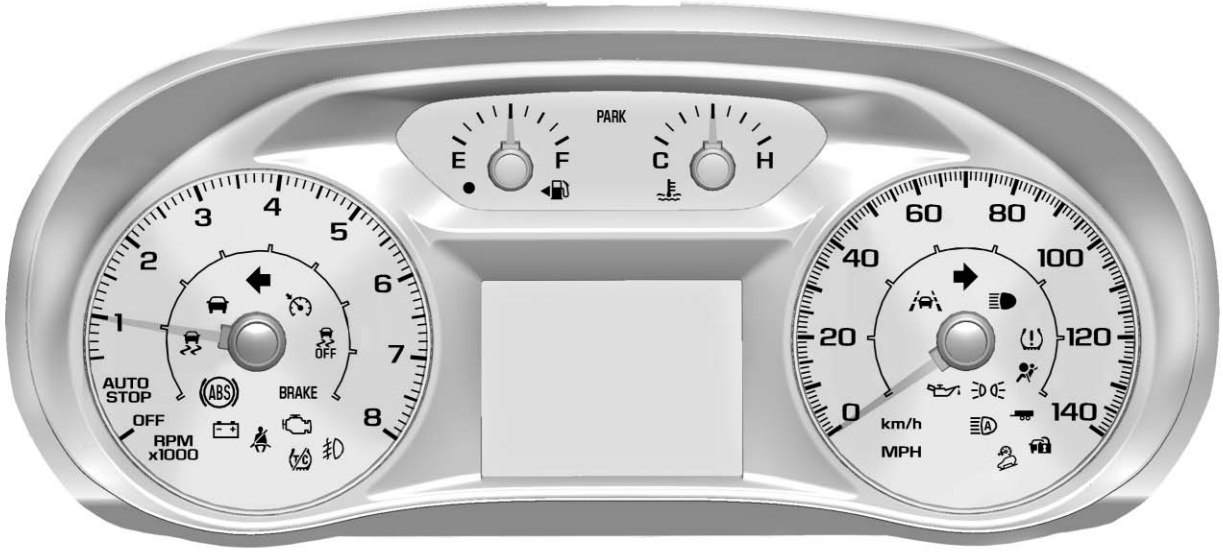

Base Level English Shown, Metric Similar

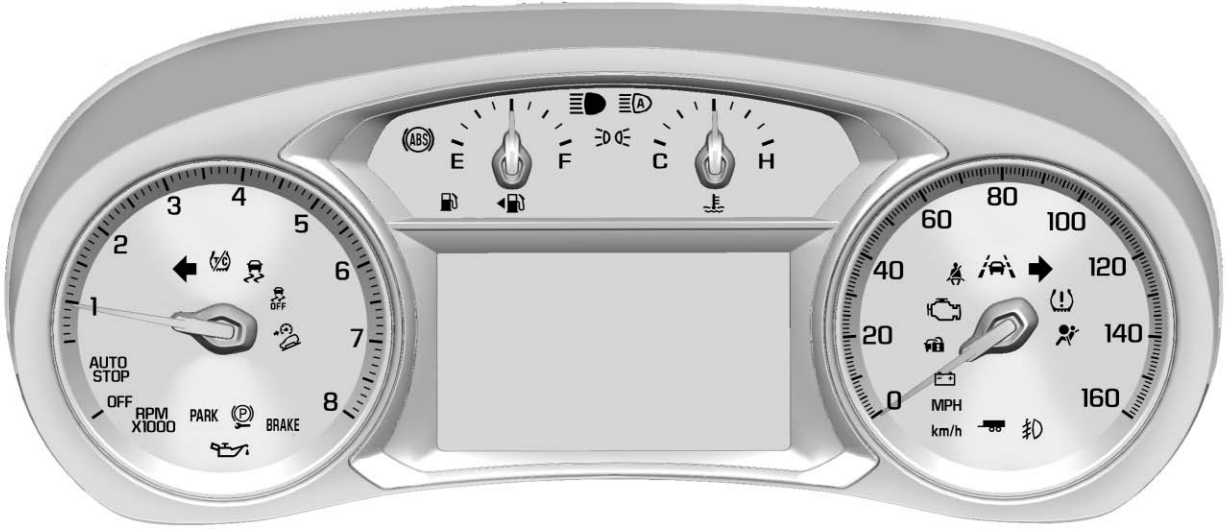

Midlevel English Shown, Metric Similar

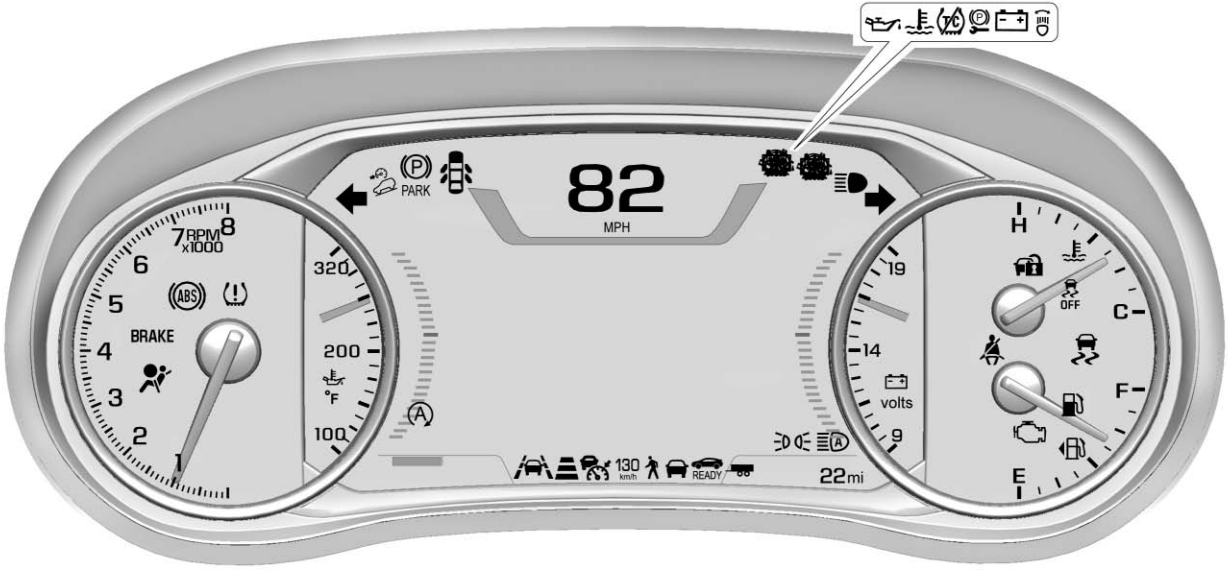

English Standard Theme Shown, Metric Similar

Cluster Menu

There is an interactive display area in the center of the instrument cluster.

Use the right steering wheel control to open and scroll through the different items and displays.

Press ◁ to access the cluster applications. Use △ or ▽ to scroll through the list of available applications. Not all applications will be available on all vehicles.

- Info App. This is where the selected Driver Information Center (DIC) displays can be viewed. See *Driver Information Center (DIC) (Base and Midlevel)* ⇨ *141* or *Driver Information Center (DIC) (Uplevel)* ⇨ *144*.
- Audio
- Phone
- Navigation
- Options

Audio

Press ✓ to select the Audio app, then press ▷ to enter the Audio menu. In the Audio menu browse for music, select from the favorites, or change the audio source. Use △ or ▽ to change the station or go to the next or previous track.

Phone

Press ✓ to select the Phone app, then press ▷ to enter the Phone menu. In the Phone menu, if there is no active phone call, view recent calls, or scroll through contacts. If there is an active call, mute the phone or switch to handset operation.

Navigation

Press ✓ to select the Navigation app, then press ▷ to enter the Navigation menu. If there is no active route, you can resume the last route and turn the voice prompts on/off. If there is an active route, press ✓ to cancel or resume route guidance or turn the voice prompts on or off.

Options

Press ✓ to select the Options app, then press ▷ to enter the Options menu. Use △ or ▽ to scroll through items in the Options menu.

Units : Press ▷ while Units is displayed to enter the Units menu. Choose English, Imperial, or metric units by pressing ✓ while the desired item is highlighted.
A checkmark will be displayed next to the selected item.

Display Themes : There are three instrument cluster display configurations to choose from: Standard, Technology, and Media.

Display Themes (Uplevel) : There are two instrument cluster display configurations to choose from: Sport and Touring.

Info Pages : Press ▷ while Info Pages is displayed to enter the Info Pages menu and select the items to be displayed in the Info app. See *Driver Information Center (DIC) (Base and Midlevel)* ⇨ *141* or *Driver Information Center (DIC) (Uplevel)* ⇨ *144*.

Speed Warning : The Speed Warning display allows the driver to set a speed that they do not want to exceed. To set the Speed Warning press ▷ when Speed Warning is displayed.

For the Base and Midlevel Cluster, press △ or ▽ to adjust the value. Press ✓ to set the speed.

For the Uplevel Cluster, scroll to set speed and press ▷. Press △ or ▽ to adjust the value. Press ✓ to set the speed.

Once the speed is set, this feature can be turned off by pressing ✓ while viewing this page. If the selected speed limit is exceeded, a pop-up warning is displayed with a chime.

Software Information : Displays open source software information.

Speedometer

The speedometer shows the vehicle's speed in either kilometers per hour (km/h) or miles per hour (mph).

Odometer

The odometer shows how far the vehicle has been driven, in either kilometers or miles.

Trip Odometer

The trip odometer shows how far the vehicle has been driven since the trip odometer was last reset.

The trip odometer is accessed and reset through the Driver Information Center (DIC). See *Driver Information Center (DIC) (Base and Midlevel)* ⇨ *141* or *Driver Information Center (DIC) (Uplevel)* ⇨ *144*.

Tachometer

The tachometer displays the engine speed in revolutions per minute (rpm).

For vehicles with the Stop/Start system, when the ignition is in ON/RUN, the tachometer indicates the vehicle status. When pointing to AUTO STOP, the engine is off but the vehicle is on and can move. The engine could auto start at any time. When the indicator points to OFF, the vehicle is off.

When the engine is on, the tachometer will indicate the engine’s revolutions per minute (rpm). The tachometer may vary by several

hundred rpm's, during Auto Stop mode, when the engine is shutting off and restarting.

A slight bump may be felt when the transmission is determining the most fuel efficient operating range.

Fuel Gauge

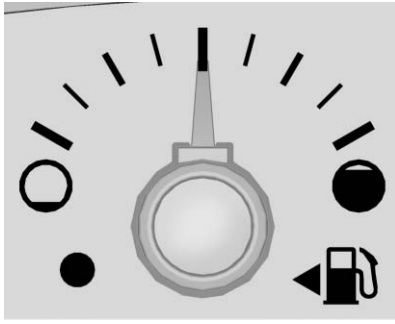

Metric Base Level, Midlevel Similar

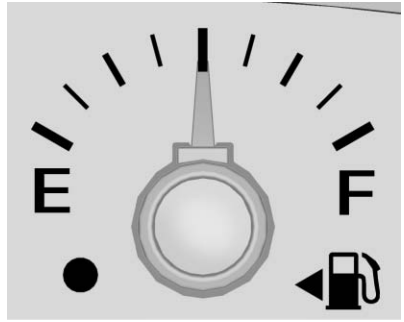

English Base Level, Midlevel Similar

Metric Uplevel

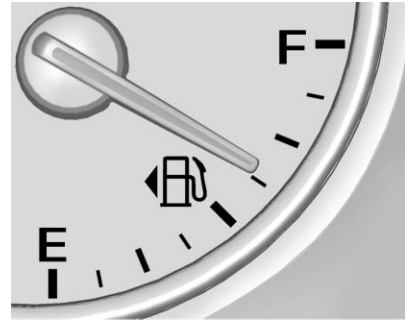

English Uplevel

When the ignition is on, the fuel gauge indicates about how much fuel is left in the tank.

An arrow on the fuel gauge indicates the side of the vehicle the fuel door is on.

When the indicator nears empty, the low fuel light comes on. There is a small amount of fuel left, but the fuel tank should be filled soon.

Here are things that some owners ask about. None of these show a problem with the fuel gauge:

- At the service station, the fuel pump shuts off before the gauge reads full.
- It takes a little more or less fuel to fill up than the gauge indicated. For example, the gauge indicated the tank was half full, but it actually took a little more or less than half the tank's capacity to fill the tank.
- The gauge moves a little while turning a corner or speeding up.
- The gauge takes a few seconds to stabilize after the ignition is turned on, and goes back to empty when the ignition is turned off.

Engine Coolant Temperature Gauge

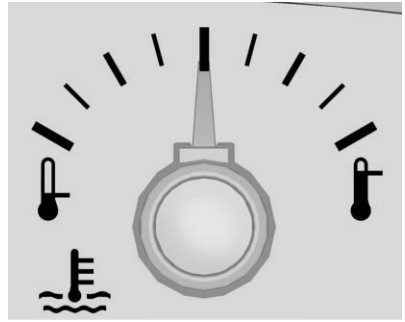

Metric Base Level, Midlevel Similar

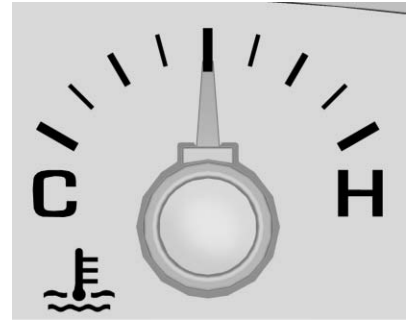

English Base Level, Midlevel Similar

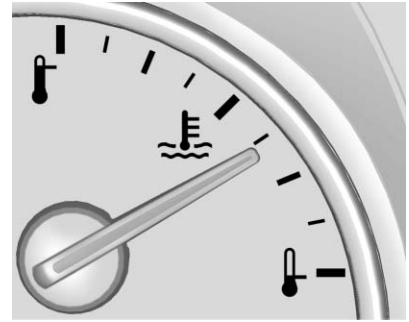

Metric Uplevel

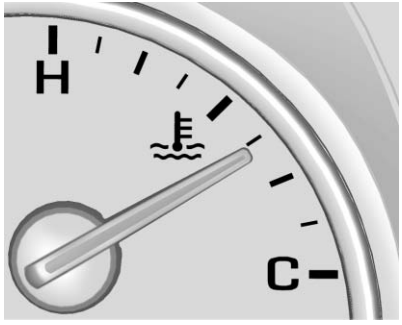

English Uplevel

This gauge shows the engine coolant temperature.

If the pointer moves toward the warning area at the high end of the gauge, the engine is too hot.

If the engine coolant has overheated and the vehicle has been operating under normal driving conditions, pull off the road, stop the vehicle, and turn off the engine as soon as possible. See *Engine Overheating* ⇨ *296*.

Safety Belt Reminders

Driver Safety Belt Reminder Light

There is a driver safety belt reminder light on the instrument cluster.

When the vehicle is started, this light flashes and a chime may come on to remind the driver to fasten their safety belt. Then the light stays on solid until the belt is buckled. This cycle may continue several times if the driver remains or becomes unbuckled while the vehicle is moving.

If the driver safety belt is buckled, neither the light nor the chime comes on.

Passenger Safety Belt Reminder Light

There is a passenger safety belt reminder light near the passenger airbag status indicator. See *Passenger Sensing System* ⇨ *81*.

When the vehicle is started, this light flashes and a chime may come on to remind passengers to fasten their safety belt. Then the light stays on solid until the belt is buckled. This cycle continues several times if the passenger remains or becomes unbuckled while the vehicle is moving.

If the passenger safety belt is buckled, neither the chime nor the light comes on.

The front passenger safety belt reminder light and chime may turn on if an object is put on the seat such as a briefcase, handbag,

grocery bag, laptop, or other electronic device. To turn off the reminder light and/or chime, remove the object from the seat or buckle the safety belt.

Airbag Readiness Light

This light shows if there is an electrical problem with the airbag system. The system check includes the airbag sensor(s), the passenger sensing system, the pretensioners, the airbag modules, the wiring, and the crash sensing and diagnostic module. For more information on the airbag system, see *Airbag System* ⇨ *75*.

The airbag readiness light comes on for several seconds when the vehicle is started. If the light does not come on then, have it fixed immediately.

⚠ Warning

If the airbag readiness light stays on after the vehicle is started or comes on while driving, it means the airbag system might not be working properly. The airbags in the vehicle might not inflate in a crash, or they could even inflate without a crash. To help avoid injury, have the vehicle serviced right away.

If there is a problem with the airbag system, a Driver Information Center (DIC) message may also come on. See *Airbag System Messages* ⇨ *155*.

Passenger Airbag Status Indicator

The vehicle has a passenger sensing system. See *Passenger Sensing System* ⇨ *81* for important safety information. The overhead console has a passenger airbag status indicator.

United States and Canada

Mexico

When the vehicle is started, the passenger airbag status indicator will light ON and OFF, or the symbol for on and off, for several seconds as a system check. Then, after several more seconds, the status indicator will light either ON or OFF, or either the on or off symbol, to let you know the status of the front outboard passenger frontal airbag.

If the word ON or the on symbol is lit on the passenger airbag status indicator, it means that the front outboard passenger frontal airbag is allowed to inflate.

If the word OFF or the off symbol is lit on the airbag status indicator, it means that the passenger sensing system has turned off the front outboard passenger frontal airbag.

If, after several seconds, both status indicator lights remain on, or if there are no lights at all, there may be a problem with the lights or the passenger sensing system. See your dealer for service.

⚠ Warning

If the airbag readiness light ever comes on and stays on, it means that something may be wrong with the airbag system. To help avoid injury to yourself or others, have the vehicle serviced right away. See *Airbag Readiness Light* ⇨ *131* for more information, including important safety information.

Charging System Light

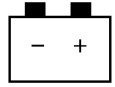

The charging system light comes on briefly when the ignition is turned on, but the engine is not running, as a check to show the light is working. It should go out when the engine is started.

If the light stays on or comes on while driving, there may be a problem with the electrical charging system. Have it checked by your dealer. Driving while this light is on could drain the battery.

When this light comes on, the Driver Information Center (DIC) also displays a message. See *Battery Voltage and Charging Messages* ⇨ *147*.

If a short distance must be driven with the light on, be sure to turn off all accessories, such as the radio and air conditioner.

Malfunction Indicator Lamp (Check Engine Light)

This light is part of the vehicle's emission control on-board diagnostic system. If this light is on while the engine is running, a malfunction has been detected and the vehicle may require service. The light should come on to show that it is working when the ignition is in Service Only Mode. See *Ignition Positions* ⇨ *225*.

Malfunctions are often indicated by the system before any problem is noticeable. Being aware of the light and seeking service promptly when it comes on may prevent damage.

Caution

If the vehicle is driven continually with this light on, the emission control system may not work as well, the fuel economy may be lower, and the vehicle may not run smoothly. This could lead to costly repairs that might not be covered by the vehicle warranty.

Caution

Modifications to the engine, transmission, exhaust, intake, or fuel system, or the use of replacement tires that do not meet the original tire specifications, can cause this light to come on. This could lead to costly repairs not covered by the vehicle warranty. This could also affect the vehicle's ability to pass an Emissions Inspection/ Maintenance test. See *Accessories and Modifications* ⇨ *281*.

If the light is flashing : A malfunction has been detected that could damage the emission control system and increase vehicle emissions. Diagnosis and service may be required.

To help prevent damage, reduce vehicle speed and avoid hard accelerations and uphill grades. If towing a trailer, reduce the amount of cargo being hauled as soon as possible.

If the light continues to flash, find a safe place to park. Turn the vehicle off and wait at least 10 seconds before restarting the engine. If the light is still flashing, follow the previous guidelines and see your dealer for service as soon as possible.

If the light is on steady : A malfunction has been detected. Diagnosis and service may be required.

Check the following:

- If fuel has been added to the vehicle using the capless funnel adapter, make sure that it has been removed. See "Filling the Tank with a Portable Gas Can" under *Filling the Tank* ⇨ *270*. The diagnostic system can detect if the adapter has been left installed in the vehicle, allowing fuel to evaporate into the atmosphere. A few driving trips with the adapter removed may turn off the light.
- Poor fuel quality can cause inefficient engine operation and poor driveability, which may go away once the engine is warmed up. If this occurs, change the fuel brand. It may require at least one full tank of the proper fuel to turn the light off. See *Fuel* ⇨ *268*.

If the light remains on, see your dealer.

Emissions Inspection and Maintenance Programs

If the vehicle requires an Emissions Inspection/Maintenance test, the test equipment will likely connect to the vehicle's Data Link Connector (DLC).

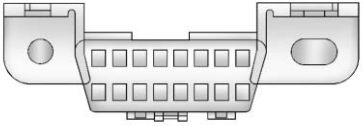

The DLC is under the instrument panel to the left of the steering wheel. Connecting devices that are not used to perform an Emissions Inspection/Maintenance test or to service the vehicle may affect vehicle operation. See *Add-On Electrical Equipment* ⇨ *279*. See your dealer if assistance is needed.

The vehicle may not pass inspection if:

- The light is on when the engine is running.
- The light does not come on when the ignition is in Service Only Mode.
- Critical emission control systems have not been completely diagnosed. If this happens, the vehicle would not be ready for inspection and might require several days of routine driving before the system is ready for inspection. This can happen if the 12-volt battery has recently been replaced or run down, or if the vehicle has been recently serviced.

See your dealer if the vehicle will not pass or cannot be made ready for the test.

Brake System Warning Light

The vehicle brake system consists of two hydraulic circuits. If one circuit is not working, the remaining circuit can still work to stop the vehicle. For normal braking performance, both circuits need to be working.

If the warning light comes on, there is a brake problem. Have the brake system inspected right away.

Metric

BRAKE

English

This light should come on briefly when the engine is started. If it does not come on then, have it fixed so it will be ready to warn you if there is a problem.

If the light comes on and stays on, there is a brake problem.

⚠ Warning

The brake system might not be working properly if the brake system warning light is on. Driving with the brake system warning light on can lead to a crash. If the light is still on after the vehicle has been pulled off the road and carefully stopped, have the vehicle towed for service.

Electric Parking Brake Light

PARK

Metric **English**

This light comes on when the parking brake is applied. If the light continues flashing after the parking brake is released, or while driving, there is a problem with the Electric Parking Brake system or another system. A message may also display in the Driver Information Center (DIC). See *Brake System Messages* ⇨ *148*.

If the light does not come on, or remains flashing, see your dealer.

Service Electric Parking Brake Light

This light should come on briefly when starting the vehicle. If it does not come on, have it fixed so it will be ready to warn if there is a problem.

If this light stays on, the vehicle should be taken to your dealer as soon as possible. See the information for the Electric Parking Brake under *Electric Parking Brake* ⇨ *238*. If a message displays in the Driver Information Center (DIC), see *Brake System Messages* ⇨ *148*.

Antilock Brake System (ABS) Warning Light

This light comes on briefly when the engine is started.

If the light does not come on, have it fixed so it will be ready to warn if there is a problem.

If the light comes on while driving, stop as soon as it is safely possible and turn off the vehicle. Then start the engine again to reset the system. If the ABS light stays on, or comes on again while driving, the vehicle needs service. A chime may also sound when the light comes on steady.

If the ABS light is the only light on, the vehicle has regular brakes, but the antilock brakes are not functioning.

If both the ABS and the brake system warning light are on, the vehicle's antilock brakes are not functioning and there is a problem with the regular brakes. See your dealer for service.

See *Brake System Warning Light* ⇨ *134* and *Brake System Messages* ⇨ *148*.

Tow/Haul Mode Light

For vehicles with the Tow/Haul Mode feature, this light comes on when the Tow/Haul Mode has been activated.

See *Tow/Haul Mode* ⇨ *236*.

Hill Descent Control Light

If equipped, the Hill Descent Control light comes on when the system is ready for use. When the light flashes, the system is active.

See *Hill Descent Control (HDC)* ⇨ *242*.

Lane Keep Assist (LKA) Light

This light is green if LKA is available to assist.

LKA may assist by gently turning the steering wheel if the vehicle approaches a detected lane marking without using the turn signal in that direction. The LKA light will turn amber.

This light is amber and flashes as a Lane Departure Warning (LDW) alert, to indicate that the lane marking has been crossed.

See *Lane Keep Assist (LKA)* ⇨ *266*.

Vehicle Ahead Indicator

If equipped, this indicator will display green when a vehicle is detected ahead and amber when you are following a vehicle ahead much too closely.

See *Forward Collision Alert (FCA) System* ⇨ *258*.

Pedestrian Ahead Indicator

If equipped, this indicator will display amber when a nearby pedestrian is detected directly in front of the vehicle.

See *Front Pedestrian Braking (FPB) System* ⇨ *262*.

Traction Off Light

This light comes on briefly while starting the engine. If it does not, have the vehicle serviced by your dealer. If the system is working normally, the indicator light then turns off.

The traction off light comes on when the Traction Control System (TCS) has been turned off by pressing and releasing the TCS/StabiliTrak button.

This light and the StabiliTrak OFF light come on when StabiliTrak is turned off.

If the TCS is off, wheel speed will be limited when necessary to protect the driveline from damage. Adjust driving accordingly.

See *Traction Control/Electronic Stability Control* ⇨ *241*.

StabiliTrak® OFF Light

This light comes on briefly while starting the engine. If it does not, have the vehicle serviced by your dealer.

This light comes on when the StabiliTrak system is turned off. If StabiliTrak is off, the Traction Control System (TCS) is also off.

If StabiliTrak and TCS are off, the system does not assist in controlling the vehicle. Turn on the TCS and the StabiliTrak systems, and the warning light turns off.

See *Traction Control/Electronic Stability Control* ⇨ *241*.

Traction Control System (TCS)/StabiliTrak® Light

This light comes on briefly when the engine is started.

If the light does not come on, have the vehicle serviced by your dealer. If the system is working normally, the indicator light turns off.

If the light is on and not flashing, the TCS and potentially the StabiliTrak system have been disabled.
A Driver Information Center (DIC) message may display. Check the DIC messages to determine which feature(s) is no longer functioning and whether the vehicle requires service. See *Ride Control System Messages* ⇨ *154*.

If the light is on and flashing, the TCS and/or the StabiliTrak system is actively working.

See *Traction Control/Electronic Stability Control* ⇨ *241*.

Tire Pressure Light

For vehicles with the Tire Pressure Monitor System (TPMS), this light comes on briefly when the engine is started. It provides information about tire pressures and the TPMS.

When the Light Is On Steady

This indicates that one or more of the tires are significantly underinflated.

A Driver Information Center (DIC) tire pressure message may also display. See *Tire Messages* ⇨ *156*. Stop as soon as possible, and inflate the tires to the pressure value shown on the Tire and Loading Information label. See *Tire Pressure* ⇨ *321*.

When the Light Flashes First and Then Is On Steady

If the light flashes for about a minute and then stays on, there may be a problem with the TPMS. If the problem is not corrected, the light will come on at every ignition cycle. See *Tire Pressure Monitor Operation* ⇨ *324*.

Engine Oil Pressure Light

Oil pressure can vary with engine speed, outside temperature, and oil viscosity.

On some models, the oil pump will vary engine oil pressure according to engine needs. Oil pressure may change quickly as the engine speed or load varies. This is normal. If the oil pressure warning light or Driver Information Center (DIC) message indicates oil pressure outside the normal operating range, check the vehicle's oil as soon as possible. See *Engine Oil Messages* ⇨ *150*.

Caution

Lack of proper engine oil maintenance can damage the engine. Driving with the engine oil low can also damage the engine. The repairs would not be covered by the vehicle warranty. Check the oil level as soon as possible. Add oil if required, but if the oil level is within the operating range

(Continued)

Caution (Continued)

and the oil pressure is still low, have the vehicle serviced. Always follow the maintenance schedule for changing engine oil.

This light should come on briefly as the engine is started. If it does not come on, have the vehicle serviced by your dealer.

If the light comes on and stays on, it means that oil is not flowing through the engine properly. The vehicle could be low on oil and might have some other system problem. See your dealer.

Low Fuel Warning Light (Base Level)

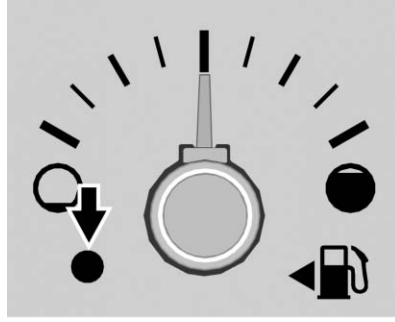

Metric Shown

This light comes on for a few seconds when the ignition is turned on as a check to indicate it is working. If it does not come on, have it fixed.

The low fuel warning light comes on and a chime sounds when the vehicle is low on fuel. The light turns off when fuel is added to the fuel tank.

Low Fuel Warning Light (Midlevel and Uplevel)

This light is near the fuel gauge and comes on briefly when the ignition is turned on as a check to show it is working.

It also comes on when the fuel tank is low on fuel. The light turns off when fuel is added. If it does not, have the vehicle serviced.

Security Light

The security light should come on briefly as the engine is started. If it does not come on, have the vehicle

serviced by your dealer. If the system is working normally, the indicator light turns off.

If the light stays on and the engine does not start, there could be a problem with the theft-deterrent system. See *Immobilizer Operation* ⇨ *47*.

High-Beam On Light

This light comes on when the high-beam headlamps are in use.

See *Headlamp High/Low-Beam Changer* ⇨ *171*.

IntelliBeam® Light

This light comes on when the IntelliBeam system, if equipped, is enabled.

See *Exterior Lamp Controls* ⇨ *169*.

Front Fog Lamp Light

The fog lamp light comes on when the fog lamps are in use.

The light goes out when the fog lamps are turned off. See *Fog Lamps* ⇨ *173* for more information.

Lamps On Reminder

This light comes on when the exterior lamps are in use. See *Exterior Lamp Controls* ⇨ *169*.

Cruise Control Light

The cruise control light is white when the cruise control is on and ready, and turns green when the cruise control is set and active.

See *Cruise Control* ⇨ *244*.

Adaptive Cruise Control Light

This light is white when the Adaptive Cruise Control (ACC, if equipped) is on and ready, and turns green when the ACC is set and active. See *Adaptive Cruise Control* ⇨ *246*.

Door Ajar Light

This light comes on when a door is open or not securely latched. Before driving, check that all doors are properly closed.

Information Displays

Driver Information Center (DIC) (Base and Midlevel)

The DIC displays are shown in the center of the instrument cluster in the Info app. See *Instrument Cluster* ⇨ *123*. The displays show the status of many vehicle systems. The controls for the DIC are on the right steering wheel control.

△ or ▽ : Press to move up or down in a list.

◁ or ▷ : Press to move between the interactive display zones in the cluster.

✓ : Press to open a menu or select a menu item. Press and hold to reset values on certain screens.

DIC Info Page Options

The info pages on the DIC can be turned on or off through the Options menu.

1. Press ◁ to access the cluster applications.
2. Press △ or ▽ to scroll to the Options application.
3. Press ✓ to enter the Options menu.
4. Scroll to Info Pages and press ▷.
5. Press △ or ▽ to move through the list of possible information displays.

6. Press ✓ while an item is highlighted to select or deselect that item. When an item is selected, a checkmark will appear next to it.

DIC Info Pages

The following is the list of all possible DIC info page displays. Some may not be available for your particular vehicle. Some items may not be turned on by default but can be turned on through the Options app. See “DIC Info Page Options” earlier in this section.

Speed : Shows the vehicle speed in either kilometers per hour (km/h) or miles per hour (mph).

Trip A or Trip B : Shows the current distance traveled, in either kilometers (km) or miles (mi), since the trip odometer was last reset.

This also shows the approximate average liters per 100 kilometers (L/100 km) or miles per gallon (mpg). This number is calculated based on the number of L/100 km (mpg) recorded since the last time this menu item was reset. This number reflects only the approximate average fuel economy that the vehicle has right now, and will change as driving conditions change.

Press and hold ✓ while this display is active to reset the trip odometer and the average fuel economy. Trip A and Trip B can also be reset by pressing ▷ and choosing reset.

Fuel Range : Shows the approximate distance the vehicle can be driven without refueling. LOW will be displayed when the vehicle is low on fuel. The fuel range estimate is based on an average of the vehicle's fuel economy over recent driving history and the amount of fuel remaining in the fuel tank.

Remaining Oil Life : Shows an estimate of the oil's remaining useful life. If REMAINING OIL LIFE 99% is displayed, that means 99% of the current oil life remains.

When the remaining oil life is low, the CHANGE ENGINE OIL SOON message will appear on the display. See *Engine Oil Messages* ⇨ *150*. The oil should be changed as soon as possible. See *Engine Oil* ⇨ *287*. In addition to the engine oil life system monitoring the oil life, additional maintenance is recommended in the Maintenance Schedule. See *Maintenance Schedule* ⇨ *366*.

The Oil Life display must be reset after each oil change. It will not reset itself. Do not to reset the Oil Life display at any time other than when the oil has just been changed. It cannot be reset accurately until the next oil change. To reset the engine oil life system, press and hold ✓ for several seconds while the Oil Life display is active. See *Engine Oil Life System* ⇨ *289*.

Tire Pressure : Shows the approximate pressures of all four tires. Tire pressure is displayed in either kilopascal (kPa) or in pounds per square inch (psi). If the pressure is low, the value for that tire is shown in amber. See *Tire Pressure Monitor System* ⇨ *323* and *Tire Pressure Monitor Operation* ⇨ *324*.

Instantaneous Fuel Economy (Mid-Level) : Displays the current fuel economy in liters per 100 kilometers (L/100 km) or miles per gallon (mpg). This number reflects only the approximate fuel economy that the vehicle has right now and changes frequently as driving conditions change. This display cannot be reset.

Average Vehicle Speed : Displays the average vehicle speed of the vehicle in kilometers per hour (km/h) or miles per hour (mph). This average is based on the various vehicle speeds recorded since the last reset. Reset the average speed by pressing ✓ when it is displayed.

Fuel Economy : The center displays the approximate instantaneous fuel economy as a number and bar graph. Displayed above the bar graph is a running average of fuel economy for the most recently traveled selected distance. Displayed below the bar graph is the best average fuel economy that has been achieved for the selected distance. The selected distance is displayed at the top of the page as “last xxx mi/km.”

Press ▷ to select the distance or reset best value. Use △ and ▽ to choose the distance and press ✓. Press △ and ▽ to select “Reset Best Score.” Press ✓ to reset the best average fuel economy. After reset, the best value displays “-,-” until the selected distance has been traveled.

The display provides information on how current driving behavior affects the running average and how well recent driving compares to the best that has been achieved for the selected distance.

Economy Trend : Shows history of the Average Fuel Economy from the last 50 km (30 mi). Each bar represents about 5 km (3 mi) of driving. During driving the bars will shift to always reflect the most recent distance on the right side.

Press and hold ✓ to clear the graph or press ▷ to reset through the menu.

ECO Index : Provides feedback on the efficiency of current driving behavior. The bar graph shows a value that is based on current fuel consumption compared to what is expected from the vehicle with good and bad driving habits.

Timer : This display can be used as a timer. To start the timer, press ✓ while this display is active. The display will show the amount of time that has passed since the timer was last reset. To stop the timer, press ✓ briefly while this display is active and the timer is running. To reset the timer to zero, press and hold ✓ while this display is active, or press ▷ and select reset.

Speed Limit (Mid-Level) : Shows sign information, which comes from a roadway database in the onboard navigation, if equipped.

Battery Voltage : Displays the current battery voltage, if equipped. Battery voltage changes are normal while driving. See *Charging System Light* ⇨ *132*. If there is a problem with the battery charging system, the DIC will display a message. See *Battery Voltage and Charging Messages* ⇨ *147*.

Transmission Fluid Temperature : Shows the temperature of the automatic transmission fluid in either degrees Celsius (°C) or degrees Fahrenheit (°F).

Trailer Brake (If Equipped) : TRAILER GAIN shows the trailer gain setting. This setting can be adjusted from 0.0 to 10.0 with either a trailer connected or disconnected.

OUTPUT shows the power output to the trailer anytime a trailer with electric brakes is connected. Output is displayed as a bar graph. Dashes may appear in the OUTPUT display if a trailer is not connected.

Blank Page : Shows no information.

Driver Information Center (DIC) (Uplevel)

The DIC displays are shown in the center of the instrument cluster in the Info app. See *Instrument Cluster* ⇨ *123*. The displays show the status of many vehicle systems. The controls for the DIC are on the right steering wheel control.

△ **or** ▽ **:** Press to move up or down in a list.

◁ **or** ▷ **:** Press to move between the interactive display zones in the cluster.

✓ **:** Press to open a menu or select a menu item. Press and hold to reset values on certain screens.

DIC Info Page Options

The info pages on the DIC can be turned on or off through the Options menu.

1. Press ◁ to access the cluster applications.
2. Press △ or ▽ to scroll to the Options application.
3. Press ✓ to enter the Options menu.
4. Scroll to Info Pages and press ▷.
5. Press △ or ▽ to move through the list of possible information displays.
6. Press ✓ while an item is highlighted to select or deselect that item. When an item is selected, a checkmark will appear next to it.

DIC Info Pages

The following is the list of all possible DIC info page displays. Some may not be available for your particular vehicle. Some items may not be turned on by default but can be turned on through the Options app. See “DIC Info Page Options” earlier in this section.

Speed : Shows the vehicle speed in either kilometers per hour (km/h) or miles per hour (mph). The vehicle odometer is also shown on this page.

Trip A or Trip B, Average Fuel Economy, and Average Speed : Shows the current distance traveled, in either kilometers (km) or miles (mi), since the trip odometer was last reset.

The Average Fuel Economy display shows the approximate average liters per 100 kilometers (L/100 km) or miles per gallon (mpg). This number is calculated based on the number of L/100 km (mpg) recorded since the last time this menu item was reset. This number reflects only the approximate average fuel economy that the vehicle has right now, and will change as driving conditions change.

The Average Speed display shows the average speed of the vehicle in kilometers per hour (km/h) or miles per hour (mph). This average is calculated based on the various vehicle speeds recorded since the last reset of this value.

Press and hold ✓ while this display is active to reset the trip odometer, the average fuel economy, and the average speed. Or press ▷ and select reset in the menu.

Fuel Range and Instantaneous Fuel Economy : Shows the approximate distance the vehicle can be driven without refueling. LOW will be displayed when the vehicle is low on fuel. The fuel range estimate is based on an average of the vehicle's fuel economy over recent driving history and the amount of fuel remaining in the fuel tank.

The Instantaneous Fuel Economy display shows the current fuel economy in either liters per 100 kilometers (L/100 km) or miles per gallon (mpg). This number reflects only the approximate fuel economy that the vehicle has right now and changes frequently as driving conditions change.

Timer and Fuel Used : Can be used as a timer. To start the timer, press ✓ while this display is active. The display will show the amount of time that has passed since the timer was last reset. To stop the timer, press ✓ briefly while this display is active and the timer is running. To reset the timer to zero, press and hold ✓ while this display is active.

This also shows the number of liters (L) or gallons (gal) of fuel used since the last reset of this menu item.

Oil Life : Shows an estimate of the oil's remaining useful life. If REMAINING OIL LIFE 99% is displayed, that means 99% of the current oil life remains.

When the remaining oil life is low, the CHANGE ENGINE OIL SOON message will appear on the display. See *Engine Oil Messages* ⇨ *150*. The oil should be changed as soon as possible. See *Engine Oil* ⇨ *287*. In addition to the engine oil life system monitoring the oil life, additional maintenance is recommended in the Maintenance Schedule. See *Maintenance Schedule* ⇨ *366*.

The Oil Life display must be reset after each oil change. It will not reset itself. Do not to reset the Oil Life display at any time other than when the oil has just been changed. It cannot be reset accurately until the next oil change. To reset the engine oil life system, press and hold ✓ for several seconds while the Oil Life display is active. See *Engine Oil Life System* ⇨ *289*.

Tire Pressure : Shows the approximate pressures of all four tires. Tire pressure is displayed in either kilopascal (kPa) or in pounds per square inch (psi). If the pressure is low, the value for that tire is shown in amber. See *Tire Pressure Monitor System* ⇨ *323* and *Tire Pressure Monitor Operation* ⇨ *324*.

Best Fuel Economy : Displays average fuel economy, the best fuel economy over the selected distance, and a bar graph showing instantaneous fuel economy.

Press ▷ to change the selected distance. Press and hold ✓ while this display is active to reset the best fuel economy and average fuel economy. This display can also be reset by selecting reset in the menu.

Top Consumers : Shows a list of the features that are currently impacting the fuel economy, in order from highest to lowest. If a feature is turned off, it will be removed from the list.

Economy Trend : Shows history of the Average Fuel Economy from the last 50 km (30 mi). Each bar represents about 5 km (3 mi) of driving. During driving the bars will shift to always reflect the most recent distance on the right side.

Press and hold ✓ to clear the graph or press ▷ to reset through the menu.

ECO Index : Provides feedback on the efficiency of current driving behavior. The bar graph shows a value that is based on current fuel consumption compared to what is expected from the vehicle with good and bad driving habits.

Trailer Brake : Displays on vehicles with the Integrated Trailer Brake Control (ITBC) system.

TRAILER GAIN shows the trailer gain setting.

OUTPUT shows the power output to the trailer any time a trailer with electric brakes is connected. Output is displayed in 0 to 10 bars. Dashes may appear in the OUTPUT display if a trailer is not connected.

Speed Signs : Shows sign information, which comes from a roadway database in the onboard navigation.

Off Road : Displays vehicle pitch and roll information, road wheel angle, and four-wheel drive (4WD) status.

Following Distance : The following distance to a moving vehicle ahead in your path is indicated in following time in seconds. See *Forward Collision Alert (FCA) System* ⇨ *258*.

Blank Page : Shows no information.

Transmission Fluid Temperature Gauge : Shows the temperature of the automatic transmission fluid in either degrees Celsius (°C) or degrees Fahrenheit (°F).

Vehicle Messages

Messages displayed on the DIC indicate the status of the vehicle or some action that may be needed to correct a condition. Multiple messages may appear one after another.

The messages that do not require immediate action can be acknowledged and cleared by pressing ✓.

The messages that require immediate action cannot be cleared until that action is performed.

All messages should be taken seriously; clearing the message does not correct the problem.

The following are the possible messages and some information about them.

Battery Voltage and Charging Messages

BATTERY LOW START VEHICLE

When the vehicle's battery is severely discharged, this message will display and four chimes will sound. Start the vehicle immediately. If the vehicle is not started and the battery continues to discharge, the climate controls, heated seats, and audio systems will shut off and the vehicle may require a jump start. These systems will function again after the vehicle is started.

BATTERY SAVER ACTIVE

This message displays when the battery voltage drops below expected levels and features are disabled. Turn off all unnecessary accessory features.

SERVICE BATTERY CHARGING SYSTEM

On some vehicles, this message displays if there is a problem with the battery charging system. Under certain conditions, the charging system light may also turn on in the instrument cluster. See *Charging System Light* ⇨ *132*. Driving with this problem could drain the battery. Turn off all unnecessary accessories. Have the electrical system checked as soon as possible. See your dealer.

TRANSPORT MODE ON

This message is displayed when the vehicle is in transport mode. Some features can be disabled while in this mode, including Remote Keyless Entry (RKE), remote start, and the vehicle alarm system. Take the vehicle to your dealer for service to turn transport mode off.

Brake System Messages

BRAKE FLUID LOW

This message is displayed when the brake fluid level is low. See *Brake Fluid* ⇨ *299*.

HILL START ASSIST ACTIVE

This message is displayed when the vehicle is stopped on a grade sufficient to activate HSA. HSA holds the braking pressure for a maximum of two seconds to ensure that there is no rolling, which will assist the driver to transition between releasing the brake pedal and accelerating to drive off while on the grade. The brakes will automatically release when the accelerator pedal is applied within the two-second window. See *Automatic Vehicle Hold* ⇨ *240*.

RELEASE PARKING BRAKE

This message is displayed if the Electric Parking Brake is on while the vehicle is in motion. See *Electric Parking Brake* ⇨ *238*.

SERVICE BRAKE ASSIST

This message may be displayed when there is a problem with the brake boost assist system. When this message is displayed, the brake boost assist motor may be heard operating and you might notice pulsation in the brake pedal. This is normal under these conditions. Take the vehicle to your dealer for service.

SERVICE PARKING BRAKE

This message is displayed when there is a problem with the parking brake. Take the vehicle to your dealer for service.

STEP ON BRAKE TO RELEASE PARK BRAKE

This message is displayed if you attempt to release the Electric Parking Brake without the brake pedal applied. See *Electric Parking Brake* ⇨ *238*.

Compass Messages

Dashes may be displayed if the vehicle temporarily loses communication with the Global Positioning System (GPS).

Cruise Control Messages

ADAPTIVE CRUISE SET TO XXX

This message displays when the Adaptive Cruise Control (ACC) speed is set. See *Adaptive Cruise Control* ⇨ *246*.

ADAPTIVE CRUISE TEMPORARILY UNAVAILABLE

This message displays when attempting to activate Adaptive Cruise Control (ACC) when it is temporarily unavailable. The ACC system does not need service.

This can occur under the following conditions:

- The radar is not clean. Keep the radar sensors free of mud, dirt, snow, ice, and slush. Clean the entire front and/or rear of the vehicle. For cleaning instructions, see *Exterior Care* ⇨ *355*.
- Heavy rain or snow is interfering with the radar object detection or camera performance.

CRUISE SET TO XXX

This message displays when the cruise control speed is set. See *Cruise Control* ⇨ *244*.

NO CRUISE BRAKING GAS PEDAL APPLIED

This message displays when Adaptive Cruise Control (ACC) is active and the driver is pressing the gas pedal. When this occurs, ACC will not brake. See *Adaptive Cruise Control* ⇨ *246*.

SERVICE ADAPTIVE CRUISE CONTROL

This message displays when the Adaptive Cruise Control (ACC) needs service. Take the vehicle to your dealer.

SHIFT TO PARK BEFORE EXITING

This message may display if Adaptive Cruise Control (ACC) is engaged holding the vehicle at a stop, and the driver attempts to exit the vehicle. Put the vehicle in P (Park) before exiting.

Door Ajar Messages

DOOR OPEN

This message displays and a chime may sound if a door is not fully closed. Stop and turn off the vehicle, check the door for obstructions, and close the door again. Check to see if the message still appears on the DIC.

HOOD OPEN

This message displays and a chime may sound if the hood is not fully closed. Stop and turn off the vehicle, check the hood for obstructions, and close the hood again. Check to see if the message still appears on the DIC.

Engine Cooling System Messages

AIR CONDITIONING OFF

This message displays when the engine coolant becomes hotter than the normal operating temperature. See *Engine Coolant Temperature Gauge* ⇨ *129*. To avoid added strain on a hot engine, the air conditioning compressor automatically turns off. When the coolant temperature returns to normal, the air conditioning compressor turns back on. You can continue to drive your vehicle.

If this message continues to appear, have the system repaired by your dealer as soon as possible to avoid damage to the engine.

ENGINE OVERHEATING, IDLE ENGINE

This message displays when the engine coolant temperature is too hot. Stop and allow the vehicle to idle until it cools down. See *Engine Coolant Temperature Gauge* ⇨ *129*.

When towing, use Tow/Haul Mode to prevent damage to the engine or transmission. See *Tow/Haul Mode* ⇨ *236*.

ENGINE OVERHEATED STOP ENGINE

This message displays and a chime may sound if the engine cooling system reaches unsafe temperatures for operation. Stop and turn off the vehicle as soon as it is safe to do so to avoid severe damage. This message clears when the engine has cooled to a safe operating temperature.

Engine Oil Messages

CHANGE ENGINE OIL SOON

This message displays when the engine oil needs to be changed. When you change the engine oil, be sure to reset the CHANGE ENGINE OIL SOON message. See *Engine Oil Life System* ⇨ *289* for information on how to reset the message. See *Engine Oil* ⇨ *287* and *Maintenance Schedule* ⇨ *366*.

ENGINE OIL LOW ADD OIL

On some vehicles, this message displays when the engine oil level may be too low. Check the oil level before filling to the recommended level. If the oil is not low and this message remains on, take the vehicle to your dealer for service. See *Engine Oil* ⇨ *287*.

ENGINE OIL HOT IDLE ENGINE

This message displays when the engine oil becomes hotter than the normal operating temperature. Stop and allow the vehicle to idle until it cools down. See *Engine Coolant Temperature Gauge* ⇨ *129*.

OIL PRESSURE LOW STOP ENGINE

This message displays if low oil pressure levels occur. Stop the vehicle as soon as safely possible and do not operate it until the cause of the low oil pressure has been corrected. Check the oil as soon as possible and have the vehicle serviced by your dealer. See *Engine Oil* ⇨ *287*.

Engine Power Messages

ENGINE POWER IS REDUCED

This message displays and a chime may sound when the cooling system temperature gets too hot and the engine further enters the engine coolant protection mode. See *Engine Overheating* ⇨ *296* for more information.

This message also displays when the vehicle's engine power is reduced. Reduced engine power can affect the vehicle's ability to accelerate. If this message is on, but there is no reduction in performance, proceed to your destination. The performance may be reduced the next time the vehicle is driven. The vehicle may be driven at a reduced speed while this message is on, but acceleration and speed may be reduced. Anytime this message stays on, the vehicle should be taken to your dealer for service as soon as possible.

Fuel System Messages

FUEL LEVEL LOW

This message displays when the vehicle is low on fuel. Refuel as soon as possible.

Key and Lock Messages

NO REMOTE KEY WAS DETECTED PLACE KEY IN TRANSMITTER POCKET THEN START YOUR VEHICLE

This message displays when trying to start the vehicle if an RKE transmitter is not detected. The transmitter battery may be weak. See “Starting the Vehicle with a Low Transmitter Battery” under *Remote Keyless Entry (RKE) System Operation* ⇨ *29*.

NO REMOTE DETECTED

This message displays when the transmitter battery may be weak. See “Starting the Vehicle with a Low Transmitter Battery” under *Remote Keyless Entry (RKE) System Operation* ⇨ *29*.

NO REMOTE DETECTED PRESS BRAKE TO RESTART

This message displays when attempting to turn off the vehicle and the RKE transmitter is no longer detected. Restarting is allowed without the RKE transmitter for five minutes. Press the brake pedal and ENGINE START/STOP to restart the vehicle.

NUMBER OF KEYS PROGRAMMED

This message displays when programming new keys to the vehicle.

REMOTE LEFT IN VEHICLE

This message displays when leaving the vehicle with the RKE transmitter still inside.

REPLACE BATTERY IN REMOTE KEY

This message displays when the battery in the RKE transmitter needs to be replaced.

Lamp Messages

TURN SIGNAL ON

This message displays and a chime sounds if a turn signal is left on for 1.2 km (0.75 mi). Move the turn signal lever to the off position.

Object Detection System Messages

24 GHz RADARS OFF

This message displays when driving in certain areas where there may be radar interference. Adaptive Cruise Control (ACC), Forward Collision Alert (FCA), and the Forward Automatic Braking (FAB) may not work or may not work as well. The vehicle does not need service.

FORWARD COLLISION ALERT OFF

This message displays when the Forward Collision Alert has been turned off.

FORWARD COLLISION SYSTEM OFF

This message displays when the Forward Automatic Braking (FAB) has been turned off. See *Forward Automatic Braking (FAB)* ⇨ *261*.

FORWARD COLLISION SYSTEM REDUCED

If the vehicle has Adaptive Cruise Control (ACC), this message displays when the Forward Automatic Braking (FAB) has been set to the Alert setting. This setting disables FAB functions but if the vehicle has Adaptive Cruise Control (ACC), some last-second automatic braking capability is still provided, though less likely to occur. See *Forward Automatic Braking (FAB)* ⇨ *261*.

FORWARD COLLISION SYSTEM UNAVAILABLE

This message displays when the Forward Automatic Braking (FAB) has been unavailable for some time. The FAB System does not need service. This message can display under the following conditions:

- The front of the vehicle or windshield is not clean. Keep these areas clean and free of mud, dirt, snow, ice, and slush. For cleaning instructions, see *Exterior Care* ⇨ *355*.
- Heavy rain or snow is interfering with the object detection performance.

This message may also be displayed if there is a problem with the StabiliTrak system. See *Traction Control/Electronic Stability Control* ⇨ *241*.

FRONT CAMERA BLOCKED CLEAN WINDSHIELD

This message displays when the camera is blocked. The Front Pedestrian Braking (FPB), Forward Collision Alert (FCA), Forward Automatic Braking (FAB), Lane Keep Assist (LKA), and Lane Departure Warning (LDW) features will not operate. Cleaning the outside of the windshield behind the rearview mirror may correct the issue.

LANE CHANGE ALERT OFF

This message indicates that the driver has turned the Side Blind Zone Alert (SBZA) and Lane Change Alert (LCA) systems off.

LANE KEEPING ASSIST UNAVAILABLE

This message displays when the Lane Keep Assist (LKA) and Lane Departure Warning (LDW) system is temporarily unavailable. The LKA system does not need service.

This message could be due to the camera being blocked. Clean the outside of the windshield behind the rearview mirror.

PARK ASSIST OFF

This message displays when the Parking Assist system has been turned off or when there is a temporary condition causing the system to be disabled.

SERVICE DRIVER ASSIST SYSTEM

If this message displays, take the vehicle to your dealer to repair the system.

Adaptive Cruise Control (ACC), Forward Collision Alert (FCA), Forward Automatic Braking (FAB), Assistance Systems for Parking or Backing, Lane Keep Assist (LKA), and/or Lane Departure Warning (LDW) system may not work. Do not use these systems until the vehicle has been repaired.

SERVICE FORWARD COLLISION SYSTEM

If this message displays, take the vehicle to your dealer to repair the system. Adaptive Cruise Control (ACC), Forward Collision Alert (FCA), and/or the Forward Automatic Braking (FAB) may not work. Do not use these systems until the vehicle has been repaired.

SERVICE FRONT CAMERA

If this message remains on after continued driving, the vehicle needs service. Take the vehicle to your dealer. Do not use the Front Pedestrian Braking (FPB), Forward Collision Alert (FCA), Front Automatic Braking (FAB), Lane Keep Assist (LKA), and Lane Departure Warning (LDW) features.

SERVICE PARK ASSIST

This message displays if there is a problem with the Parking Assist system. Do not use this system to help you park. See your dealer for service.

SERVICE SIDE DETECTION SYSTEM

If this message remains on after continued driving, the vehicle needs service. Take the vehicle to your dealer. Side Blind Zone Alert (SBZA), Lane Change Alert (LCA), and Rear Cross Traffic Alert (RCTA) features will not work.

SIDE DETECTION SYSTEM UNAVAILABLE

This message indicates that Side Blind Zone Alert (SBZA), Lane Change Alert (LCA), and Rear Cross Traffic Alert (RCTA) are disabled either because the sensor is blocked and cannot detect vehicles in the blind zone, or the vehicle is passing through an open area, such as the desert, where there is insufficient data for operation. This message may also activate during heavy rain or due to road spray. The vehicle does not need service. For cleaning, see "Washing the Vehicle" under *Exterior Care* ⇨ *355*.

TAKE STEERING

If LKA does not detect active driver steering, an alert and chime may be provided. Move the steering wheel to dismiss. See *Lane Keep Assist (LKA)* ⇨ *266*.

Ride Control System Messages

AWD OFF

This message displays when All-Wheel Drive (AWD) is temporarily unavailable. The vehicle will be in Front-Wheel Drive (FWD). This could be caused by:

- Extended driving on slippery surfaces or severe driving conditions. AWD enters protective mode to prevent damage.
- A compact spare tire on the vehicle. See *Compact Spare Tire* ⇨ *348*.

This message turns off when the compact spare tire is replaced or the conditions are no longer present. To reset the message manually, turn the ignition off and then back on after 30 seconds. If the message stays on, see your dealer.

AWD RECOMMENDED CHANGE DRIVER MODE

This message displays if the AWD system detects too much wheel slip while operating in Front-Wheel Drive (FWD). See *All-Wheel Drive* ⇨ *237*.

SERVICE ALL WHEEL DRIVE

This message displays when there is a problem with the AWD system. A number of issues could cause this message. The AWD system may require service.

The vehicle will operate in FWD. Stop when it is safe and turn off the ignition for 30 seconds. Restart the vehicle and check for the message. If the message does not appear, service is not required. If the message displays again, the system needs service. Contact your dealer.

SERVICE STABILITRAK

This message displays if there is a problem with the StabiliTrak system. See *Traction Control/Electronic Stability Control* ⇨ *241*.

SERVICE TRACTION CONTROL

This message displays if there is a problem with the Traction Control System (TCS). See *Traction Control/Electronic Stability Control* ⇨ *241*.

TRACTION CONTROL OFF

This message displays when the Traction Control System (TCS) has been turned off. See *Traction Control/Electronic Stability Control* ⇨ *241*.

TRACTION CONTROL ON

This message displays when the Traction Control System (TCS) has been turned on. See *Traction Control/Electronic Stability Control* ⇨ *241*.

Airbag System Messages

SERVICE AIRBAG

This message displays if there is a problem with the airbag system. Take the vehicle to your dealer for service.

Security Messages

SERVICE THEFT DETERRENT SYSTEM

This message displays when there is a problem with the theft-deterrent system. The vehicle may or may not restart, so you may want to take the vehicle to your dealer before turning off the engine. See *Immobilizer Operation* ⇨ *47*.

Service Vehicle Messages

SERVICE POWER STEERING

This message displays and a chime may sound when there may be a problem with the power steering system. If this message displays and a reduction in steering performance or loss of power steering assistance is noticed, see your dealer.

SERVICE VEHICLE SOON

This message is displayed if there is a problem with the vehicle. Take the vehicle to your dealer for service.

Steering System Messages

STEERING ASSIST IS REDUCED DRIVE WITH CARE

This message may display if a problem occurs with the electric power steering system. If this message appears, steering effort may be slightly higher than normal. The vehicle is still safe to drive. Use caution while in reduced assist mode. If this message is persistent or appears repeatedly, take the vehicle to your dealer for service. See *Steering* ⇨ *212*.

SERVICE POWER STEERING

This message displays when there is a problem with electric power steering. If this message displays and a reduction in steering performance or loss of power steering assistance is noticed, see your dealer. See *Steering* ⇨ *212*.

Starting the Vehicle Messages

PRESS BRAKE TO START

This message is displayed when attempting to start the vehicle without first pressing the brake pedal.

SERVICE KEYLESS START SYSTEM

This message is displayed if there is a problem with the pushbutton start system. Take the vehicle to your dealer for service.

Tire Messages

SERVICE TIRE MONITOR SYSTEM

If equipped with the Tire Pressure Monitor System (TPMS), this message displays if a part on the system is not working properly. The tire pressure light also flashes and then remains on during the same ignition cycle. See *Tire Pressure Light* ⇨ *138*. Several conditions may cause this message to appear. See *Tire Pressure Monitor Operation* ⇨ *324*. If the warning comes on and stays on, there may be a problem with the TPMS. See your dealer.

TIRE LEARNING ACTIVE

If equipped with the Tire Pressure Monitor System (TPMS), this message displays when the system is relearning the tire positions on your vehicle. The tire positions must be relearned after rotating the tires or after replacing a tire or sensor. See *Tire Inspection* ⇨ *327*, *Tire Rotation* ⇨ *327*, *Tire Pressure Monitor System* ⇨ *323*, and *Tire Pressure* ⇨ *321*.

TIRE PRESSURE LOW ADD AIR TO TIRE

If equipped with the Tire Pressure Monitor System (TPMS), this message displays when the pressure in one or more of the vehicle's tires is low. This message also displays with a vehicle picture to indicate the location of the low tire. The low tire pressure warning light will also come on. See *Tire Pressure Light* ⇨ *138*. You can receive more than one tire pressure message at a time. If a tire pressure message appears on the DIC, stop as soon as you can. Have the tire pressures checked and set to those shown on the Tire and Loading Information label. See *Tires* ⇨ *314*, *Vehicle Load Limits* ⇨ *221*, and *Tire Pressure* ⇨ *321*. The DIC also shows the tire pressure values. See *Driver Information Center (DIC) (Base and Midlevel)* ⇨ *141* or *Driver Information Center (DIC) (Uplevel)* ⇨ *144*.

Transmission Messages

SERVICE TRANSMISSION

This message displays if there is a problem with the transmission. See your dealer.

SHIFT DENIED

This message displays when using Manual Mode and attempting to shift to a gear not appropriate for the vehicle speed and engine revolutions per minute (rpm). See *Manual Mode* ⇨ *235*.

SHIFT TO PARK

This message displays when the transmission needs to be shifted to P (Park). This may appear when turning the ignition off if the vehicle is not in P (Park).

TRANSMISSION HOT — IDLE ENGINE

This message displays and a chime sounds if the transmission fluid in the vehicle gets hot. Driving with the transmission fluid temperature high can cause damage to the vehicle. Stop the vehicle and let it idle to allow the transmission to cool. This message clears when the fluid temperature reaches a safe level.

Vehicle Reminder Messages

ICE POSSIBLE DRIVE WITH CARE

This message is displayed when ice conditions are possible.

REAR SEAT REMINDER

This message displays under certain conditions indicating there may be an item or passenger in the rear seat. Check before exiting the vehicle.

Vehicle Speed Messages

REDUCE SPEED FOR HILL DESCENT CONTROL

This message displays when attempting to enable Hill Descent Control (HDC) when the vehicle speed is too high. See *Hill Descent Control (HDC)* ⇨ *242*.

Washer Fluid Messages

WASHER FLUID LOW ADD FLUID

This message may display when the washer fluid level is low. Fill the windshield washer reservoir as soon as possible. See *Engine Compartment Overview* ⇨ *284* for the location of the windshield washer reservoir. Also, see *Washer Fluid* ⇨ *297*.

Vehicle Personalization

Use the audio system controls to access the personalization menus for customizing vehicle features.

The following are all possible personalization features. Depending on the vehicle, some may not be available.

Base Radio with Touchscreen Audio System Controls

⌂ : Press to access the Home Page Menu.

▲ or ▼ : Touch to scroll through the menus or setup items.

⮌ : Touch to exit or return to the previous screen or menu.

Uplevel Radio Audio System Controls

1. Press the desired feature to display a list of available options.
2. Press to select the desired feature setting.

3. Press ◁ BACK on the faceplate or the ⬅ screen button to return to the previous menu or exit.

Personalization Menus

The following list of menu items may be available:

- Time and Date
- Rear Seat Reminder
- Language
- Valet Mode
- Teen Driver
- Radio
- Vehicle
- Bluetooth
- Apple CarPlay
- Android Auto
- USB Auto Launch
- Voice
- Display
- Rear Camera
- Return to Factory Settings
- Software Information
- Wi-Fi

Each menu is detailed in the following information.

Time and Date

Manually set the time and date. See *Clock* ⇨ *119*.

Rear Seat Reminder

This allows for a chime and a message ‘Look in Rear Seat’ when the rear door has been opened before or during operation of the vehicle.

Select Off or On.

Language (Language)

Select Language, then select from the available language(s).

The selected language will display on the system, and voice recognition will reflect the selected language.

Valet Mode

This will lock the infotainment system and steering wheel controls. It may also limit access to vehicle storage locations (if equipped).

To enable valet mode:

1. Enter a four-digit code on the keypad.
2. Select Enter to go to the confirmation screen.
3. Re-enter the four-digit code.

Press LOCK or UNLOCK to lock or unlock the system. Press Back to go back to the previous menu.

Teen Driver

See “Teen Driver” under “Settings” in the infotainment manual.

Radio

Touch and the following may display:

- Manage Favorites
- Number of Favorites Shown
- Audible Touch Feedback
- Text Scroll

- Tone Settings
- Auto Volume
- Bose Audio Pilot
- Maximum Start Up Volume

Manage Favorites

This allows favorites to be edited. See “Manage Favorites” in “Settings” under “Radio” in the infotainment manual.

Number of Favorites Shown

Touch to set the number of favorites to display.

Select the desired number or select Auto and the infotainment system will automatically adjust the number of favorites shown.

Audible Touch Feedback

This allows Audible Touch Feedback to be turned on or off.

Select Off or On.

Text Scroll

Select to see text scroll on the screen.

Select Off or On.

Auto Volume

This feature adjusts the volume based on vehicle speed and ambient noise.

Select Off, Low, Medium-Low, Medium, Medium-High, or High.

Bose Audio Pilot

This feature adjusts the volume based on the noise in the vehicle. See “Bose AudioPilot Noise Compensation Technology” under “Infotainment System Settings” in the infotainment manual.

Select Off or On.

Maximum Start Up Volume

This feature sets the maximum startup volume. If the vehicle is started and the volume is greater than this level, the volume is adjusted to this level.

To set the maximum startup volume, touch + or − to increase or decrease.

Vehicle

Select and the following may display:

- Climate and Air Quality
- Collision/Detection Systems
- Comfort and Convenience
- Lighting
- Power Door Locks
- Remote Lock, Unlock, Start

Climate and Air Quality

Select and the following may display:

- Auto Fan Speed
- Auto Defog
- Auto Rear Defog

Auto Fan Speed

This feature will set the maximum auto fan speed.

Select Low, Medium, or High.

Auto Defog

When set to On, the front defog will automatically react to temperature and humidity conditions that may cause fogging.

Select Off or On.

Auto Rear Defog

If equipped, this allows the Auto Rear Defog to be turned on or off. This feature will automatically turn on the rear window defogger when it is cold outside.

Select Off or On.

Collision/Detection Systems

Select the Collision/Detection Systems menu and the following may be displayed if equipped:

- Alert Type
- Auto Collision Preparation or Forward Collision System
- Front Pedestrian Detection
- Rear Cross Traffic Alert
- Go Notifier or Adaptive Cruise Go Notifier
- Lane Change Alert

Alert Type

This feature will set crash alerts to beeps or seat vibrations. This setting affects all crash alerts including Forward Collision, Lane Departure Warning, Adaptive Cruise Control, Parking Assist, and Backing Warning alerts.

Select Beeps or Safety Alert Seat.

Auto Collision Preparation or Forward Collision System

This feature will turn on or off the Forward Collision Alert (FCA) and Forward Automatic Braking (FAB). The Off setting disables all FCA and FAB functions. With the Alert and Brake setting, both FCA and FAB are available. The Alert setting disables FAB. See *Forward Automatic Braking (FAB)* ⇨ *261*.

Select Off, Alert and Brake, or Alert.

Front Pedestrian Detection

This feature may help avoid or reduce the harm caused by front-end crashes with nearby pedestrians.

See *Front Pedestrian Braking (FPB) System* ⇨ *262*.

Select Off, Alert, or Alert and Brake.

Rear Cross Traffic Alert

This allows the Rear Cross Traffic Alert feature to be turned on or off.

Select Off or On.

Go Notifier or Adaptive Cruise Go Notifier

This feature will give a reminder that Adaptive Cruise Control provides when it has brought the vehicle to a complete stop behind another stopping vehicle, and then that vehicle drives on.

Select Off or On.

Lane Change Alert

This allows the feature to be turned on or off. See *Lane Change Alert (LCA)* ⇨ *264*.

Select Off or On.

Comfort and Convenience

Select and the following may display:

- Auto Memory Recall
- Easy Exit Options
- Chime Volume

- Reverse Tilt Mirror
- Auto Wipe in Reverse Gear
- Automatic Vehicle Hold

Auto Memory Recall

This feature automatically recalls the current driver's previously stored 1 or 2 button positions when entering the vehicle. See *Memory Seats* ⇨ *60*.

Select Off or On.

Easy Exit Options

This feature automatically recalls the current driver's previously stored Exit button position when exiting the vehicle. See *Memory Seats* ⇨ *60*.

Select Off or On.

Chime Volume

This allows the selection of the chime volume level.

Touch + or − to adjust the volume.

Reverse Tilt Mirror

When on, both the driver and passenger outside mirrors will tilt downward when the vehicle is shifted to R (Reverse) to improve visibility of the ground near the rear wheels. They will return to their previous driving position when the vehicle is shifted out of R (Reverse) or the engine is turned off.

Select Off, On - Driver and Passenger, On - Driver, or On - Passenger.

Auto Wipe in Reverse Gear

When on and the front wiper is on, the rear wiper will automatically activate when the vehicle is shifted to R (Reverse).

Select Off or On.

Automatic Vehicle Hold

This allows the duration of the Automatic Vehicle Hold to be changed. See *Automatic Vehicle Hold (AVH)* ⇨ *240*.

Select Long and Auto Park Brake On or Short and Auto Park Brake Off.

Lighting

Select and the following may display:

- Vehicle Locator Lights
- Exit Lighting

Vehicle Locator Lights

This feature will flash the exterior lamps and allows some of the exterior lamps and most of the interior lamps to turn on briefly when 🔓 on the Remote Keyless Entry (RKE) transmitter is pressed to locate the vehicle.

Select Off or On.

Exit Lighting

This allows the selection of how long the exterior lamps stay on when leaving the vehicle when it is dark outside.

Select Off, 30 Seconds, 60 Seconds, or 120 Seconds.

Power Door Locks

Select and the following may display:

- Unlocked Door Anti-Lockout
- Auto Door Unlock
- Delayed Door Lock

Unlocked Door Anti-Lockout

When on, this feature will keep the driver door from locking when the door is open. If Off is selected, the Delayed Door Lock menu will be available.

Select Off or On.

Auto Door Unlock

This allows selection of which of the doors will automatically unlock when the vehicle is shifted into P (Park).

Select Off, All Doors, or Driver Door.

Delayed Door Lock

When on, this feature will delay the locking of the doors. To override the delay, press the power door lock switch on the door.

Select Off or On.

Remote Lock, Unlock, Start

Select and the following may display:

- Remote Unlock Light Feedback
- Remote Lock Feedback
- Remote Door Unlock
- Remote Start Auto Cool Seats
- Remote Start Auto Heat Seats
- Remote Window Operation
- Passive Door Unlock
- Passive Door Lock
- Remote Left in Vehicle Alert

Remote Unlock Light Feedback

When on, the exterior lamps will flash when unlocking the vehicle with the RKE transmitter.

Select Off or Flash Lights.

Remote Lock Feedback

This allows selection of what type of feedback is given when locking the vehicle with the RKE transmitter.

Select Off, Lights and Horn, Lights Only, or Horn Only.

Remote Door Unlock

This allows selection of which doors will unlock when pressing 🔓 on the RKE transmitter.

Select All Doors or Driver Door.

Remote Start Auto Cool Seats

If equipped and turned on, this feature will turn the ventilated seats on when using remote start on warm days.

Select Off or On.

Remote Start Auto Heat Seats

If equipped and turned on, this feature will turn the heated seats on when using remote start on cold days.

Select Off or On.

Remote Window Operation

If equipped, this feature enables the remote operation of all windows from the RKE transmitter. See “Remote Window Operation” in *Power Windows* ⇨ *50*.

Select Off or On.

Passive Door Unlock

This allows the selection of what doors will unlock when using the button on the driver door to unlock the vehicle.

Select All Doors or Driver Door.

Passive Door Lock

This allows passive locking to be turned on or off and selects feedback. See *Remote Keyless Entry (RKE) System Operation* ⇨ *29*.

Select Off, On with Horn Chirp, or On.

Remote Left in Vehicle Alert

This feature sounds an alert when the RKE transmitter is left in the vehicle.

Select Off or On.

Bluetooth

Select and the following may display:

- Device Information
- Pair New Device
- Device Management
- Change Pairing PIN
- Ringtones
- Sort Order
- Voice Mail Numbers
- Text Message Alerts

Device Information

See information about the device name, address, and PIN code.

Pair New Device

Select to pair a new device. See “Pairing” in “Infotainment Controls” under “Bluetooth” in the infotainment manual.

Device Management

Select to connect to a different phone source, disconnect a phone, or delete a phone.

Change Pairing PIN

Select to change the PIN of a device.

Ringtones

Touch to change the ring tone for the specific phone. The phone does not need to be connected to change the ring tone.

Sort Order

Select to change the order of the contacts list.

Select First/Last or Last/First.

Voice Mail Numbers

This feature displays the voice mail number for all connected phones. To change the voice mail number, select EDIT or press the EDIT button. Type a new number, then select SAVE or press the SAVE button.

Text Message Alerts

This allows the feature to be turned on or off.

Select Off or On.

Apple CarPlay

Select and the following may display:

- Apple CarPlay
- Manage Apple CarPlay Devices

Apple CarPlay

This feature allows Apple devices to be connected to the infotainment system through a USB port.

Select Off or On.

Manage Apple CarPlay Devices

Select to manage Apple devices. Apple CarPlay must be on for this feature to be accessed.

Android Auto

Select and the following may display:

- Android Auto
- Manage Android Auto Devices

Android Auto

This feature allows Android devices to be connected to the infotainment system through a USB port.

Select Off or On.

Manage Android Auto Devices

Select to manage Android devices. Android Auto must be on for this feature to be accessed.

USB Auto Launch

This allows Android and Apple CarPlay devices to automatically connect when plugged into the USB port.

Select Off or On.

Voice

Select and the following may display:

- Confidence Threshold
- Prompt Length
- Audio Feedback Speed
- Display “What Can I Say?” Tips

Confidence Threshold

This feature allows the adjustment of the sensitivity of the speech recognition system.

Select Confirm More or Confirm Less.

Prompt Length

This feature adjusts the voice prompt length.

Select Short or Long.

Audio Feedback Speed

This feature adjusts the audio feedback speed.

Select Slow, Medium, or Fast.

Display “What Can I Say?” Tips

This feature gives voice command tips.

Select Off or On.

Display

Select and the following may display:

- Mode
- Calibrate Touchscreen
- Turn Display Off

Mode

Select to change the display screen for day or night driving.

Select Auto, Day, or Night.

Calibrate Touchscreen

Select to calibrate the touchscreen, then follow the prompts.

Turn Display Off

Select to turn the display off. Touch anywhere on the display area or any faceplate button to turn the display on.

Rear Camera

This allows for Rear Parking Assist Symbols and Guidance Lines to be turned off or on.

Select Off or On for the desired feature.

See *Assistance Systems for Parking or Backing* ⇨ *255*.

Return to Factory Settings

Select and the following may display:

- Restore Vehicle Settings
- Clear All Private Data
- Restore Radio Settings

Restore Vehicle Settings

This allows selection of restoring vehicle settings.

Select Restore or Cancel.

Clear All Private Data

This allows selection to clear all private information from the vehicle.

Select Delete or Cancel.

Restore Radio Settings

This allows selection to restore radio settings.

Select Restore or Cancel.

Software Information

Touch to view the version of the infotainment system software.

Wi-Fi

Select and the following may display:

- Wi-Fi
- Manage Wi-Fi Networks

Wi-Fi

This feature allows Wi-Fi networks to be turned of or on.

Select Off or On.

Manage Wi-Fi Networks

Select to manage Wi-Fi networks. Wi-Fi must be on for this feature to be accessed.

Universal Remote System

See *Radio Frequency Statement* ⇨ *392*.

Universal Remote System Programming

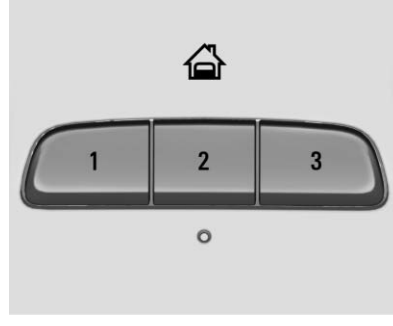

If equipped, these buttons are in the overhead console.

This system can replace up to three remote control transmitters used to activate devices such as garage door openers, security systems, and home automation devices. These

instructions refer to a garage door opener, but can be used for other devices.

Do not use the Universal Remote system with any garage door opener that does not have the stop and reverse feature. This includes any garage door opener model manufactured before April 1, 1982.

Read these instructions completely before programming the Universal Remote system. It may help to have another person assist with the programming process.

Keep the original hand-held transmitter for use in other vehicles as well as for future programming. Erase the programming when vehicle ownership is terminated. See “Erasing Universal Remote System Buttons” later in this section.

To program a garage door opener, park outside directly in line with and facing the garage door opener receiver. Clear all people and objects near the garage door.

Make sure the hand-held transmitter has a new battery for quicker and more accurate transmission of the radio-frequency signal.

Programming the Universal Remote System

For questions or help programming the Universal Remote system, call 1-800-355-3515 or see www.homelink.com.

Programming involves time-sensitive actions, and may time out causing the procedure to be repeated.

To program up to three devices:

1. Hold the end of the hand-held transmitter about 3 to 8 cm (1 to 3 in) away from the Universal Remote system buttons with the indicator light in view. The hand-held transmitter was supplied by the manufacturer of the garage door opener receiver.
2. At the same time, press and hold both the hand-held transmitter button and one of the three Universal Remote system buttons to be used to operate the garage door. Do not release either button until the indicator light changes from a slow to a rapid flash. Then release both buttons.

   Some garage door openers may require substitution of Step 2 with the procedure under “Radio Signals for Canada and Some Gate Operators” later in this section.
3. Press and hold the newly programmed Universal Remote system button for five seconds while watching the indicator light and garage door activation.
   - If the indicator light stays on continuously or the garage door moves when the button is pressed, then programming is complete. There is no need to complete Steps 4–6.
   - If the indicator light does not come on or the garage door does not move, a second button press may

be required. For a second time, press and hold the newly programmed button for five seconds. If the light stays on or the garage door moves, programming is complete.

- If the indicator light blinks rapidly for two seconds, then changes to a solid light and the garage door does not move, continue with programming Steps 4–6.

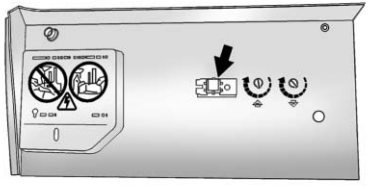

Learn or Smart Button

4. After completing Steps 1–3, locate the Learn or Smart button inside the garage on the garage door opener receiver. The name and color of the button may vary by manufacturer.
5. Press and release the Learn or Smart button. Step 6 must be completed within 30 seconds of pressing this button.
6. Inside the vehicle, press and hold the newly programmed Universal Remote system button for two seconds, then release it. If the garage door does not move or the lamp on the garage door opener receiver does not flash, press and hold the same button a second time for two seconds, then release it. Again, if the door does not move or the garage door lamp does not flash, press and hold the same button a third time for two seconds, then release it.

The Universal Remote system should now activate the garage door.

Repeat the process for programming the two remaining buttons.

Radio Signals for Canada and Some Gate Operators

For questions or programming help, call 1-800-355-3515 or see www.homelink.com.

Canadian radio-frequency laws and some U.S. gate operators require transmitter signals to time out or quit after several seconds of transmission. This may not be long enough for the Universal Remote system to pick up the signal during programming.

If the programming did not work, replace Step 2 under “Programming the Universal Remote System” with the following:

Press and hold the Universal Remote system button while pressing and releasing the hand-held transmitter button every two seconds until the signal has been successfully accepted by the Universal Remote system. The Universal Remote system indicator light will flash slowly at first and then rapidly. Proceed with Step 3 under “Programming the Universal Remote System” to complete.

Universal Remote System Operation

Using the Universal Remote System

Press and hold the appropriate Universal Remote system button for at least one-half second. The indicator light will come on while the signal is being transmitted.

Erasing Universal Remote System Buttons

Erase all programmed buttons when vehicle ownership is terminated.

To erase:

1. Press and hold the two outside buttons until the indicator light begins to flash. This should take about 10 seconds.
2. Release both buttons.

Reprogramming a Single Universal Remote System Button

To reprogram any of the system buttons:

1. Press and hold any one of the buttons. Do not release the button.
2. The indicator light will begin to flash after 20 seconds. Without releasing the button, proceed with Step 1 under “Programming the Universal Remote System.”

Lighting

Exterior Lighting
Exterior Lamp Controls 169
Exterior Lamps Off Reminder 171
Headlamp High/Low-Beam Changer 171
Flash-to-Pass 171
Daytime Running Lamps (DRL) 171
Automatic Headlamp System 172
Hazard Warning Flashers 173
Turn and Lane-Change Signals 173
Fog Lamps 173

Interior Lighting
Instrument Panel Illumination Control 174
Courtesy Lamps 174
Dome Lamps 174
Reading Lamps 175

Lighting Features
Entry Lighting 175
Exit Lighting 176
Battery Load Management . . . 176
Battery Power Protection 176
Exterior Lighting Battery Saver 177

Exterior Lighting

Exterior Lamp Controls

The exterior lamp control is on the turn signal lever.

Turn the control to the following positions:

⏻ **:** Turns off the exterior lamps. The knob returns to the AUTO position after it is released. Turn to ⏻ again to reactivate the AUTO mode.

In Canada, the headlamps will automatically reactivate when the vehicle is shifted out of P (Park).

AUTO : Automatically turns the exterior lamps on and off, depending on outside lighting.

: Turns on the parking lamps including all lamps, except the headlamps.

: Turns on the headlamps together with the parking lamps and instrument panel lights.

IntelliBeam® System

If equipped, this system turns the vehicle's high-beam headlamps on and off according to surrounding traffic conditions.

The system turns the high-beam headlamps on when it is dark enough and there is no other traffic present.

This light comes on in the instrument cluster when the IntelliBeam system is enabled.

Turning On and Enabling IntelliBeam

To enable the IntelliBeam system, press the button on the end of the turn signal lever when the exterior lamp control is in the AUTO or position. The blue high-beam on light appears on the instrument cluster when the high beams are on.

Driving with IntelliBeam

The system only activates the high beams when driving over 40 km/h (25 mph).

There is a sensor near the top center of the windshield that automatically controls the system. Keep this area of the windshield clear of debris to allow for best system performance.

The high-beam headlamps remain on, under the automatic control, until one of the following situations occurs:

- The system detects an approaching vehicle's headlamps.
- The system detects a preceding vehicle's taillamps.
- The outside light is bright enough that high-beam headlamps are not required.
- The vehicle's speed drops below 20 km/h (12 mph).
- The IntelliBeam system is disabled by the high/low-beam changer or the flash-to-pass feature. If this happens, press the button on the end of the turn signal lever when the exterior lamp control is in the AUTO or position. The instrument cluster light will come on to indicate the IntelliBeam is reactivated. See *Headlamp High/Low-Beam Changer* ⇨ *171* and *Flash-to-Pass* ⇨ *171*.

The high beams may not turn off automatically if the system cannot detect another vehicle's lamps because of any of the following:

- The other vehicle's lamps are missing, damaged, obstructed from view, or otherwise undetected.
- The other vehicle's lamps are covered with dirt, snow, and/or road spray.
- The other vehicle's lamps cannot be detected due to dense exhaust, smoke, fog, snow, road spray, mist, or other airborne obstructions.
- The vehicle's windshield is dirty, cracked, or obstructed by something that blocks the view of the light sensor.
- The vehicle is loaded such that the front end points upward, causing the light sensor to aim high and not detect headlamps and taillamps.
- Driving on winding or hilly roads.

The automatic high-beam headlamps may need to be disabled if any of the above conditions exist.

Exterior Lamps Off Reminder

A warning chime sounds if the driver door is opened while the ignition is off and the exterior lamps are on.

Headlamp High/ Low-Beam Changer

: Push the turn signal lever away from you and release, to turn the high beams on. To return to low beams, push the lever again or pull it toward you and release.

This indicator light turns on in the instrument cluster when the high-beam headlamps are on.

Flash-to-Pass

This feature is used to signal to the vehicle ahead that you want to pass.

If the headlamps are off or in the low-beam position, pull the turn signal lever toward you to momentarily switch to high beams.

Release the lever to turn the high-beam headlamps off.

Daytime Running Lamps (DRL)

DRL can make it easier for others to see the front of your vehicle during the day. Fully functional DRL are required on all vehicles first sold in Canada.

If equipped with High Intensity Discharge (HID) headlamps, the dedicated DRL will come on when all of the following conditions are met:

- The ignition is on.
- The exterior lamp control is in AUTO.

- The light sensor determines it is daytime.
- The parking brake is released or the vehicle is not in P (Park).

When the DRL are on, the taillamps and other lamps will not be on.

The DRL turn off when the headlamps are turned to ⏻ or the ignition is off.

Automatic Headlamp System

When the exterior lamp control is set to AUTO and it is dark enough outside, the headlamps come on automatically.

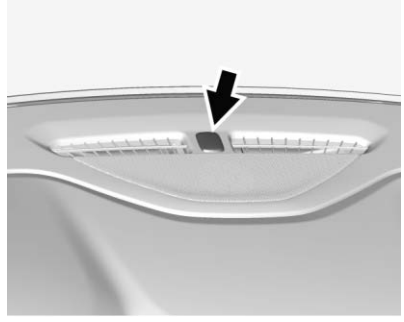

There is a light sensor on top of the instrument panel. Do not cover the sensor.

The system may also turn on the headlamps when driving through a parking garage or tunnel.

If the vehicle is started in a dark garage, the automatic headlamp system comes on immediately. If it is light outside when the vehicle leaves the garage, there is a slight delay before the automatic headlamp system changes to the Daytime Running Lamps (DRL). During that delay, the instrument cluster may not be as bright as usual. Make sure the instrument panel brightness control is in the full bright position. See *Instrument Panel Illumination Control* ⇨ *174*.

When it is bright enough outside, the headlamps will turn off or may change to DRL.

The automatic headlamp system turns off when the exterior lamp control is turned to ⏻ or the ignition is off.

For vehicles sold in Canada, this control only works when the transmission is in P (Park).

Lights On with Wipers

If the windshield wipers are activated in daylight with the engine on, and the exterior lamp control is in AUTO, the headlamps, parking lamps, and other exterior lamps come on. The transition time for the lamps coming on varies based on wiper speed. When the wipers are not operating, these lamps turn off. Move the exterior lamp control to ⏻ or ≡DO≡ to disable this feature.

Hazard Warning Flashers

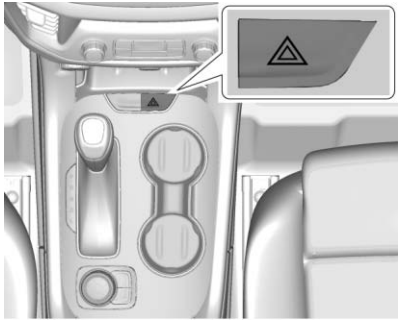

⚠ **:** Press this button to make the front and rear turn signal lamps flash on and off. This warns others that you are having trouble. Press again to turn the flashers off.

The turn signals do not work while the hazard warning flashers are on.

Turn and Lane-Change Signals

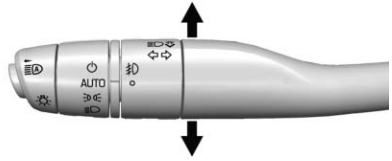

Move the lever all the way up or down to signal a turn.

An arrow on the instrument cluster flashes in the direction of the turn or lane change.

Raise or lower the lever until the arrow starts to flash to signal a lane change. Hold it there until the lane change is completed. If the lever is briefly pressed and released, the turn signal flashes three times.

The turn and lane-change signal can be turned off manually by moving the lever back to its original position.

If after signaling a turn or lane change, the arrow flashes rapidly or does not come on, a signal bulb may be burned out.

Replace any burned out bulbs. If a bulb is not burned out, check the fuse. See *Fuses and Circuit Breakers* ⇨ *305*.

Fog Lamps

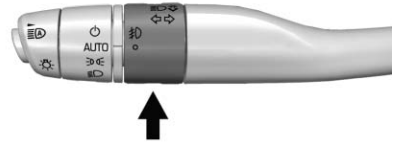

Use the fog lamps for better vision in foggy or misty conditions.

: Turn the band down and release to turn the fog lamps on or off. A light comes on in the instrument cluster when the fog lamps are in use. The ignition must be on for the fog lamps to work.

When the headlamps are changed to high beam, the fog lamps turn off. The fog lamps come back on again when the high-beam headlamps are turned off.

Some localities have laws that require the headlamps to be on along with the fog lamps.

Interior Lighting

Instrument Panel Illumination Control

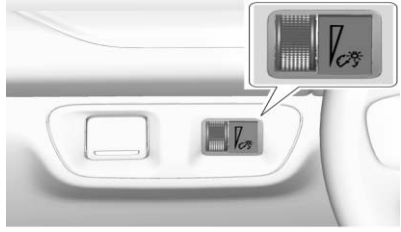

The brightness of the instrument panel lighting and steering wheel controls can be adjusted.

: Move the thumbwheel up or down to brighten or dim the lights.

Courtesy Lamps

The courtesy lamps come on when any door is opened unless the dome lamp override is activated. To deactivate the dome lamp override, press OFF and the indicator light on the button will turn off.

Dome Lamps

The dome lamp is in the overhead console.

To operate, press the following buttons:

OFF : Press to turn off the dome lamps when a door is open. An indicator light on the button will turn on when the dome lamp override is activated. Press OFF again to deactivate this feature and the indicator light will turn off. The dome lamps will come on when the doors are opened.

ON/OFF : Press to turn the dome lamps on manually.

Reading Lamps

There are front and rear reading lamps on the overhead console and in the headliner. These lamps come on when any door is opened.

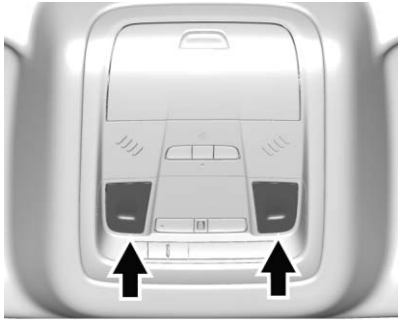

Front Reading Lamps

Press the lamp lenses to turn the front reading lamps on or off.

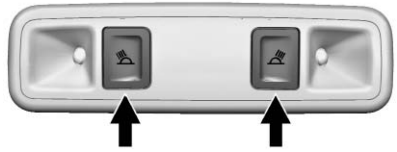

Rear Reading Lamps

Press the buttons to turn the rear passenger reading lamps on or off.

Lighting Features

Entry Lighting

Some exterior lamps and most of the interior lights turn on briefly at night, or in areas of limited lighting when 🔓 is pressed on the Remote Keyless Entry (RKE) transmitter. See *Remote Keyless Entry (RKE) System Operation* ⇨ *29*. When the driver door is opened, all control lights, Driver Information Center (DIC) lights, and door pocket lights turn on. After about 30 seconds the exterior lamps turn off, then the remaining interior lights dim to off. Entry lighting can be disabled manually by changing the ignition out of the OFF position, or by pressing 🔒 on the RKE transmitter.

This feature can be changed. See “Vehicle Locator Lights” under *Vehicle Personalization* ⇨ *157*.

Exit Lighting

Some exterior lamps and interior lights come on at night, or in areas with limited lighting, when the driver door is opened after the ignition is turned off. The dome lamp comes on after the ignition is changed to the OFF position. The exterior lamps and dome lamp remain on for a set amount of time, then automatically turn off.

The exterior lamps turn off immediately by turning the exterior lamp control off.

This feature can be changed. See *Vehicle Personalization* ⇨ *157*.

Battery Load Management

The vehicle has Electric Power Management (EPM) that estimates the battery's temperature and state of charge. It then adjusts the voltage for best performance and extended life of the battery.

When the battery's state of charge is low, the voltage is raised slightly to quickly bring the charge back up. When the state of charge is high, the voltage is lowered slightly to prevent overcharging. If the vehicle has a voltmeter gauge or a voltage display on the Driver Information Center (DIC), you may see the voltage move up or down. This is normal. If there is a problem, an alert will be displayed.

The battery can be discharged at idle if the electrical loads are very high. This is true for all vehicles. This is because the generator (alternator) may not be spinning fast enough at idle to produce all of the power needed for very high electrical loads.

A high electrical load occurs when several of the following are on, such as: headlamps, high beams, rear window defogger, climate control fan at high speed, heated seats, engine cooling fans, trailer loads, and loads plugged into accessory power outlets.

EPM works to prevent excessive discharge of the battery. It does this by balancing the generator's output and the vehicle's electrical needs. It can increase engine idle speed to generate more power whenever needed. It can temporarily reduce the power demands of some accessories.

Normally, these actions occur in steps or levels, without being noticeable. In rare cases at the highest levels of corrective action, this action may be noticeable to the driver. If so, a DIC battery voltage and charging message displays, it is recommended that the driver reduce the electrical loads as much as possible. See *Battery Voltage and Charging Messages* ⇨ *147* and *Driver Information Center (DIC) (Base and Midlevel)* ⇨ *141* or *Driver Information Center (DIC) (Uplevel)* ⇨ *144*.

Battery Power Protection

The battery saver feature is designed to protect the vehicle's battery.

If some interior lamps are left on and the ignition is turned off, the battery rundown protection system automatically turns the lamp off after some time.

Exterior Lighting Battery Saver

The exterior lamps turn off about 10 minutes after the ignition is turned off, if the parking lamps or headlamps have been manually left on. This protects against draining the battery. To restart the 10-minute timer, turn the exterior lamp control to the off position and then back to the parking lamp or headlamp position.

To keep the lamps on for more than 10 minutes, the ignition must be in the ACC/ACCESSORY or ON/RUN position.

Infotainment System

Introduction
Infotainment 178
Theft-Deterrent Feature 179
Overview 180
Home Page 181
Operation 181

Radio
AM-FM Radio 182
Satellite Radio 183
Radio Reception 185
Multi-Band Antenna 185

Audio Players
USB Port 186
Auxiliary Devices 191

Phone
Bluetooth (Overview) 192
Bluetooth (Infotainment Controls) 193
Apple CarPlay and Android Auto 197
Hands-Free Phone 198

Trademarks and License Agreements
Trademarks and License Agreements 200

Introduction

Infotainment

Base radio information is included in this manual. See the infotainment manual for information on other available infotainment systems.

Read the following pages to become familiar with these features.

⚠ Warning

Taking your eyes off the road for too long or too often while using any infotainment feature can cause a crash. You or others could be injured or killed. Do not give extended attention to infotainment tasks while driving. Limit your glances at the vehicle displays and focus your attention on driving. Use voice commands whenever possible.

The infotainment system has built-in features intended to help avoid distraction by disabling some functions when driving. These

functions may gray out when they are unavailable. Many infotainment features are also available through the instrument cluster and steering wheel controls.

Before driving:

- Become familiar with the operation, faceplate buttons, and screen buttons.
- Set up the audio by presetting favorite stations, setting the tone, and adjusting the speakers.
- Set up phone numbers in advance so they can be called easily by pressing a single button or by using a single voice command if equipped with Bluetooth phone capability.

See *Defensive Driving* ⇨ *211*.

To play the infotainment system with the ignition off, see *Retained Accessory Power (RAP)* ⇨ *230*.

Theft-Deterrent Feature

The infotainment system has an electronic security system installed to prevent theft.

The infotainment system only works in the vehicle in which it was first installed, and cannot be used in another vehicle.

Overview

1. ⌂
   - Press to go to the Home Page. See *Home Page* ⇨ *181*.
2. ⏮
   - Radio: Press and release to fast seek the strongest previous station or channel.
   - USB/Music/Pictures: Press to go to the previous content. Press and hold to fast rewind.
3. ⏻
   - Press to turn the power on.
   - Press and hold to turn the power off.
   - Press to mute/unmute the system when on.
   - Turn to decrease or increase the volume.
4. ⏭
   - Radio: Press and release to fast seek the next strongest station or channel.

- USB/Music/Pictures: Press to go to the next content. Press and hold to fast forward.

5. 📞

- Press and release to access the phone screen, answer an incoming call, or access the device home screen.

Home Page

Touchscreen Buttons

Touchscreen buttons show on the screen when available. When a function is unavailable, the button may gray out. When a function is selected, the button may highlight.

Home Page Features

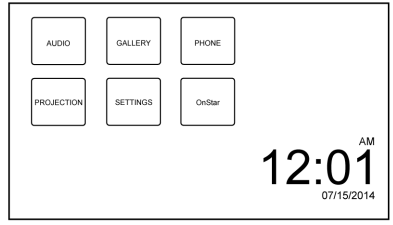

Press 🏠 to go to the Home Page.

Audio : Touch to select AM, FM, SiriusXM® (if equipped), USB/iPod/ Bluetooth Audio, or AUX.

Gallery : Touch to view a picture.

Phone : Touch to activate the phone features (if equipped). See *Bluetooth (Overview)* ⇨ *192* or *Bluetooth (Infotainment Controls)* ⇨ *193*.

Projection : Touch to access supported (Android Auto/CarPlay) devices when connected. See *USB Port* ⇨ *186*.

Settings : Touch to access the Personalization menu. See *Vehicle Personalization* ⇨ *157*.

OnStar : If equipped, touch to access the OnStar menu. See *OnStar Overview* ⇨ *396*.

Operation

Radio Controls

The infotainment system is operated by using the pushbuttons, menus shown on the display, and steering wheel controls.

Turning the System On or Off

⏻ **:** Press to turn the radio on. Press and hold to turn the radio off.

Automatic Switch-Off

If the infotainment system has been turned on after the ignition is turned off, the system will turn off automatically after 10 minutes.

Volume Control

⏻ **:** Turn to increase or decrease. Press when the system is on to mute and unmute the system.

System Settings

Auto Volume

This feature automatically adjusts the radio volume to compensate for road and wind noise.

The level of volume compensation can be selected, or the feature can be turned off.

Tone Settings

The tone settings can be set for each radio band and each audio player source.

Custom Tone Settings

1. Touch SETTINGS from the home screen.
2. Select Radio.
3. Select Tone Settings.
   - Bass, Midrange, or Treble: Touch − or +.
   - Fader or Balance: Adjust the front/rear or left/right speakers by dragging the dot in the vehicle image on the screen.
4. Touch ⮌ to go back to the source screen.

Radio

AM-FM Radio

Playing the Radio

Audio Source Menu

⌂ **:** Press to go to the Home Page.

⏻ **:** Press to turn on, mute, or unmute the system. Press and hold to turn off the system.

Selecting a Band

1. Press ⌂.
2. Touch AUDIO.
3. Touch Source.
4. Select AM, FM, or SXM (if equipped).

The last station that was playing starts playing again.

Selecting a Station

Seek Tuning

If the radio station is not known:

Press ⏮ or ⏭ to automatically search for available radio stations.

Direct Tune

From the AM or FM menu:

1. Touch Tune.
2. Enter the station number.
3. Touch Go.

Favorites

1. Touch < or > to scroll through the favorite pages.
2. Touch the station to select it.

Update Station List

- From the AM or FM menu, touch Menu, then touch Update Station List. The broadcasting list updating will begin.
- During the AM or FM broadcasting list update, touch Cancel to stop the updates.

Station List

1. From the AM or FM menu, touch Menu.
2. Select Station List.
3. Touch ▲ or ▼ to scroll through the list. Touch the station to select it.

Menu

Touch to choose between available menus for the current source.

Storing a Station as a Favorite

Stations from all bands can be stored in any order in the favorite pages.

Up to 25 stations can be stored.

Storing Stations

To store the station to a position in the list, touch the corresponding button 1−5 until a beep is heard.

1. Select the desired station.
2. Touch < or > to select the desired page of saved favorites.
3. Touch and hold any of the preset buttons to save the current radio station to that button of the selected favorites page.

To change a preset button, tune to the new desired radio station and touch and hold the preset button.

Satellite Radio

If equipped, vehicles with an SiriusXM® Satellite Radio tuner and a valid SiriusXM Satellite Radio subscription can receive SiriusXM programming.

SiriusXM Satellite Radio Service

SiriusXM is a satellite radio service based in the 48 contiguous United States and 10 Canadian provinces. SiriusXM Satellite Radio has a wide variety of programming and commercial-free music, coast to coast, and in digital-quality sound. During your trial or when you subscribe, you will get unlimited access to SiriusXM Radio Online for when you are not in the vehicle.
A service fee is required to receive the SiriusXM service. If SiriusXM service needs to be reactivated, the radio will display "No Subscription Please Renew" on channel SXM1. For more information, contact SiriusXM at www.siriusxm.com or 1-866-635-2349 (U.S.), and www.xmradio.ca or 1-877-209-0079 (Canada).

Listening to SiriusXM Radio

1. Press ⌂.
2. Touch AUDIO.
3. Touch Source.
4. Touch SXM and the most recent listened to SiriusXM channel will display.

Selecting a Category

From Menu, touch Categories, then touch the desired category or from Categories, touch ▲ or ▼ to find the desired channel. Touch the channel to select it.

Selecting a Channel

Press ⏮ or ⏭ to seek the previous or next channel.

Using the Preset Buttons

Up to five favorites pages can be saved, and each page can store up to five channels.

To change a preset button, tune to the new desired channel and hold the button.

Listening to Preset Channels

1. Touch < or > repeatedly to select the desired favorites page.
2. Touch the preset button to listen to the channel.

Using the SiriusXM Menu

Operation

1. Touch MENU on the SXM radio screen.
2. Touch the menu to select the desired item or to display the detail menu item.
3. Touch ↩ to return to the previous menu.

Channel List

1. Touch Channel List from the SXM menu. The channel list is displayed.
2. Touch ▲ or ▼ to find the desired channel. Touch the channel to select it.

Tone Settings

1. Touch Tone Settings. See “Tone Settings” under *Operation* ⇨ *181*.
2. Touch ↩.

Auto Volume

1. Touch Auto Volume. See “Auto Volume” under *Operation* ⇨ *181*.
2. Touch ↩.

Categories

1. Touch Categories.
2. Touch ▲ or ▼ to find the desired category. Touch the category to select it.

Explicit Content Filter

When on, only a filtered list of channels will be received. When off, all regular SXM programming subscribed to will be received.

1. Touch SXM Explicit Filter.
2. Select to enable or disable.

Radio Reception

Frequency interference and static can occur during normal radio reception if items such as mobile phone chargers, vehicle convenience accessories, and external electronic devices are plugged into the accessory power outlet. If there is interference or static, unplug the item from the accessory power outlet.

FM

FM signals only reach about 16 to 65 km (10 to 40 mi). Although the radio has a built-in electronic circuit that automatically works to reduce interference, some static can occur, especially around tall buildings or hills, causing the sound to fade in and out.

AM

The range for most AM stations is greater than for FM, especially at night. The longer range can cause station frequencies to interfere with each other. Static can occur when things like storms and power lines interfere with radio reception. When this happens, try reducing the treble on the radio.

SiriusXM® Satellite Radio Service

SiriusXM Satellite Radio Service gives digital radio reception from coast to coast in the 48 contiguous United States, and in Canada. Just as with FM, tall buildings or hills can interfere with satellite radio signals, causing the sound to fade in and out. In addition, traveling or standing under heavy foliage, bridges, garages, or tunnels may cause loss of the SiriusXM signal for a period of time.

Cell Phone Usage

Cell phone usage, such as making or receiving phone calls, charging, or just having the phone on may cause static interference in the radio. Unplug the phone or turn it off if this happens.

Multi-Band Antenna

The multi-band antenna is on the roof of the vehicle. The antenna is used for the AM-FM radio, OnStar, the SiriusXM Satellite Radio Service System, and GPS (Global Positioning System), if the vehicle has these features. Keep the antenna clear of obstructions for clear reception.

If the vehicle has a sunroof, and it is open, reception can also be affected.

Audio Players

USB Port

Using the USB Port

The infotainment system can play music by connecting an auxiliary device to the USB port.

USB Support

If equipped, the USB ports are located in the center stack, and use the USB 2.0 standard.

USB Supported Devices

- USB Flash Drives
- Portable USB Hard Drives

Not all iPods and USB drives are compatible with the USB port.

Make sure the iPod has the latest firmware from Apple® for proper operation. iPod firmware can be updated using the latest iTunes® application. See www.apple.com/itunes.

For help with identifying your iPod, go to www.apple.com/support.

The USB port can play both lower and upper case .mp3, .wma, .ogg, and .wav files stored on a USB storage device.

Supported Apple® Devices

To view supported devices in the U.S., see my.gmc.com/learn.

To view supported devices in Canada, see gmcowner.ca.

To view supported devices in Mexico, see gmc.com.mx/gmcintellilink.html.

USB Supported File and Folder Structure

The infotainment system supports:

- FAT16
- FAT32
- exFAT

Connecting a USB Storage Device or iPod/iPhone

To connect a USB storage device, connect the device to the USB port.

To connect an iPod/iPhone, connect one end of the device's cable to the iPod/iPhone and the other end to the USB port.

The iPod/iPhone charges while it is connected to the vehicle if the vehicle is in ACC/ACCESSORY or ON/RUN. See *Ignition Positions* ⇨ *225*. When the vehicle is turned off, the iPod/iPhone automatically powers off and will not charge or draw power from the vehicle's battery.

For more information on USB usage, see "Audio System Information" following.

Audio System Information

The infotainment system can play the music files contained in the USB storage device or iPod/iPhone products.

Using MP3/WMA/OGG/WAV Files

- Music files with .mp3, .wma, .ogg, and .wav file name extensions can be played.

- MP3 files that can be played: Bit rate: 8 kbps to 320 kbps. Sampling frequency: 48 kHz, 44.1 kHz, 32 kHz, 24 kHz, 22.05 kHz, and 16 kHz.
- Files with a bit rate above 128 kbps will result in higher quality sound.
- ID3 Tag information for MP3 files, such as the album name and the artist, can be played.
- To display album title, track title, and artist information, the file should be compatible with the ID3 Tag V1 and V2 formats.

Using USB Storage Devices and iPod/iPhone

- Use a USB or flash memory type storage device. Do not connect using a USB adaptor.
- Do not connect and reconnect the USB device repeatedly in a short time, as this may cause static electricity and problems using the device.
- Use a USB device with a metal connecting terminal.
- Connection with i-Stick Type USB storage devices may be faulty due to vehicle vibration.
- Do not touch the USB connecting terminal.
- Only USB storage devices formatted in FAT16/32 or exFAT file systems are recognized. NTFS and other file systems are not recognized.
- The time it takes to process files will depend on the USB storage device type and capacity, and the type of files stored.
- Some USB storage device files may not be compatible.
- Up to two USB devices and one iPod can be played through a USB hub. All devices may not be supported, depending on the performance of the USB hub. If there is not enough power supply, it may not operate normally.
- Do not disconnect the USB storage device while it is playing. This may cause damage to the product or affect the performance of the USB device.
- Disconnect the USB storage device when the ignition is turned off. If the ignition is turned on while the USB device is connected, the USB device may be damaged or may not operate normally.
- USB storage devices can only be connected for playing music, viewing photo files, or upgrading.
- Do not use the USB terminal to charge USB accessory equipment. The heat generated may cause performance issues or damage.
- Music files to which Digital Right Management (DRM) is applied cannot be played.
- USB storage devices can have a capacity with a limit of 5,000 files, such as music, photo, video, 15 stages of folder

structure. Normal usage cannot be guaranteed for a storage device that exceeds this limit. The iPod/iPhone can play all music files that are supported. The music file lists will only display up to 5,000 files on the screen. These files are sorted in alphabetical order.

- Some iPod/iPhone product models may not support the connectivity or functionality of this product.
- Only connect the iPod/iPhone with connection cables supported by iPod/iPhone products. Other connection cables cannot be used.
- The iPod/iPhone may be damaged if it is connected to the vehicle with the ignition on. When not in use, disconnect the iPod/iPhone.
- When the iPod/iPhone is connected to the USB port by using the iPod/iPhone cable, the Bluetooth music is not supported.
- The iPod/iPhone playback functions and the information displayed may be different when played on the infotainment system.

	Step 1	Step 2
Playlists	Playlists	Songs
Artists	Albums/All Songs	Songs
Albums	Albums	Songs
Songs	Songs	
Genres	Albums/All Songs	Songs
Composer	Albums/All Songs	Songs
Audiobooks	Songs	

- Refer to the table for the classification items related to the search function provided by the iPod/iPhone.

USB Player

Playing Music from a USB Device

- Connect the USB device to the USB port.
- Play will start automatically after the system has finished reading the USB device.
- If a non-readable USB device is connected, an error message displays and the system will switch to the previous audio function.

If the USB device is already connected:

1. Press ⌂.
2. Touch AUDIO.
3. Touch Source.
4. Touch USB.

To stop the USB device and select another media source, touch Source, then select the other source.

To remove the USB device, select another function, then remove the USB device.

Pause

- Touch ❚❚ to pause.
- Touch ▶ to resume.

Changing to Next/Previous Files

- Touch ▶▶❚ to change to the next file.

- Touch ⏮ within five seconds of the playback time to play the previous file.

Returning to the Beginning of the Current File

Touch ⏮ after five seconds of the playback time.

Scanning Forward or Backward

Touch and hold ⏮ or ⏭ during playback to rewind or fast forward. Release the button to resume playback at normal speed.

Playing a File Randomly

Touch ⤮ during playback.

- ON: Plays all files randomly.
- OFF: Returns to normal playback.

Using the USB Music Menu

- Touch Menu during playback.

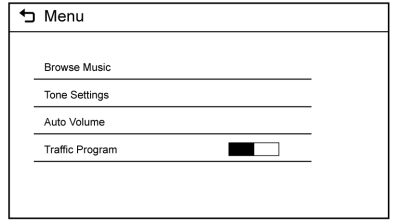

- Touch the desired menu.

Browse Music

1. Touch Browse Music.
2. Touch the desired music.

Tone Settings

- Touch Tone Settings. The Tone Settings menu is displayed. See “Tone Settings” under “Radio Controls” in *Operation* ⇨ *181*.

Auto Volume

- Touch Auto Volume. The Auto Volume menu is displayed. See “Auto Volume” under “Radio Controls” in *Operation* ⇨ *181*.

Traffic Program (If Equipped)

- Touch On or Off.

MTP (Media Transfer Protocol)

- Connect an MTP supported device.
- Play will start automatically after the system has finished reading the MTP device.
- If a non-readable MTP device is connected, an error message displays and the system will switch to the previous audio function.

iPod/iPhone Player

This feature is limited to models supporting the iPod/iPhone connection.

Playing Music Files

- Connect the iPod/iPhone to the USB port.
- Play will start from the previously played point after the system has finished reading the USB device.
- If a non-readable USB device is connected, an error message displays and the system will switch to the previous audio function.

If the iPod/iPhone is already connected:

1. Press ⌂.
2. Touch AUDIO.
3. Touch Source.
4. Touch iPod.

To stop the device and select another media source, touch Source, then select the other source.

To remove the device, select another function, then remove the device.

Pause

- Touch ❚❚ to pause.
- Touch ▶ to resume.

Changing to the Next/ Previous Song

- Touch ⏭ to change to the next song.
- Touch ⏮ within two seconds of the playback time to play the previous file.

Returning to the Beginning of the Current File

Touch ⏮ after two seconds of the playback time.

Scanning Forward or Backward

Touch and hold ⏮ or ⏭ during playback to rewind or fast forward. Release the button to resume playback at normal speed.

Playing a File Randomly

Touch ⤮ during playback.

- ON: Plays all files randomly.
- OFF: Returns to normal playback.

Using the iPod Menu

- Touch Menu during playback.
- Touch the appropriate play mode.

Browse Music

1. Touch Browse Music.
2. Touch the desired music.

Tone Settings

- Touch Tone Settings. The Tone Settings menu is displayed. See “Tone Settings” under “Radio Controls” in *Operation* ⇨ *181*.

Auto Volume

- Touch Auto Volume. The Auto Volume menu is displayed. See “Auto Volume” under “Radio Controls” in *Operation* ⇨ *181*.

Picture System Information

The infotainment system can view picture files stored on a USB storage device and devices that support Media Transfer Protocol (MTP).

- Supported file extensions: .jpg, .bmp, .png, .gif.
- Animated GIF files are not supported.
- Some files may not operate due to a different recording format or the condition of the file.

Viewing Pictures

1. Connect the USB device to the USB port.

2. Touch the screen to open to full screen. Touch the screen again to return to the previous screen.

If the USB device is already connected:

1. Press ⌂.
2. Touch GALLERY.

Some features are disabled while the vehicle is in motion.

Viewing a Slide Show

1. Touch ▶ from the picture screen.
2. Touch the screen to cancel the slide show during the slide show playback.

Viewing a Previous or Next Picture

Touch < or > from the picture screen.

Rotating a Picture

Touch ↺ from the picture screen.

Enlarging a Picture

Touch 🔍 from the picture screen.

Using the USB Picture Menu

1. Touch MENU from the picture screen.
2. Touch the appropriate menu:
   - Slide Show Time: Allows selection of the slide show interval.
   - Clock, Temp. Display: Allows selection of On or Off to show the clock and temperature on the full screen.
   - Display Settings: Adjusts for Brightness and Contrast.
3. Touch ↩ to exit.

Auxiliary Devices

Using the Auxiliary Input Jack

Settings menus and functions may vary depending on vehicle options.

The auxiliary input jack can be used to connect external audio devices such as an iPod®, iPhone®, MP3 player, CD player, and other supported devices for use as another source for audio listening. This input jack is not an audio output; do not plug headphones into the front auxiliary input jack.

The auxiliary input jack is in the center stack. The infotainment system can play music connected by the auxiliary device.

Play will begin when the system has finished reading the information on the device.

Playing Music

To play music from the device, if the device is already connected:

1. Press ⌂.
2. Touch AUDIO.
3. Touch Source.
4. Touch AUX.

To adjust the tone settings, see “Tone Settings” in *Operation* ⇨ *181*.

Phone

Bluetooth (Overview)

If equipped with Bluetooth® capability, the system can interact with many Bluetooth phones, PDAs, or other devices to:

- Place and receive hands-free calls.
- Transmit hands-free data.
- Play audio streaming files.

The device must be paired first. See “Pairing” under “Bluetooth (Infotainment Controls)” later in this section.

To minimize driver distraction, before driving, and with the vehicle parked:

- Become familiar with the features of the cell phone. Organize the phone book and contact lists clearly and delete duplicate or rarely used entries. If possible, program speed dial or other shortcuts.
- Review the controls and operation of the infotainment system.
- Pair cell phone(s) to the vehicle. The system may not work with all cell phones. See “Pairing” under “Bluetooth (Infotainment Controls)” later in this section.

⚠ Warning

When using a cell phone, it can be distracting to look too long or too often at the screen of the phone or the infotainment system. Taking your eyes off the road too long or too often could cause a crash resulting in injury or death. Focus your attention on driving.

Vehicles with a Bluetooth system can use a Bluetooth-capable cell phone with a Hands-Free Profile to make and receive phone calls. The infotainment system is used to control the system. The system can be used while in ACC/ACCESSORY or ON/RUN. See *Ignition Positions* ⇨ *225*. Not all phones support all functions and not all phones work with the Bluetooth system. In the U.S. and Canada, see www.gm.com/bluetooth for more information about compatible phones.

The Bluetooth system range can be up to 9.1 m (30 ft).

There may be restrictions on using Bluetooth wireless technology in some locations.

Due to the variety of Bluetooth devices and their firmware versions, the device may respond differently when performing over Bluetooth.

On a current phone call, an image of the current contact from the phone's contact list may be displayed. Not all phones are compatible with this feature.

Refer to the cell phone manufacturer’s user guide for questions about the phone's Bluetooth functionality.

Bluetooth Controls

If equipped with Bluetooth capability, use the buttons on the infotainment system and the steering wheel to operate the system.

Steering Wheel Controls

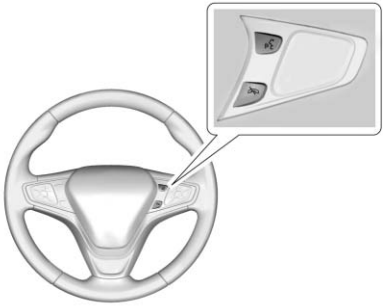

: Press to interact with Bluetooth or OnStar, if equipped. See *Bluetooth (Overview)* ⇨ *192* or *Bluetooth (Infotainment Controls)* ⇨ *193* or *OnStar Overview* ⇨ *396*.

: Press to decline an incoming call or end a current call. Press to mute or unmute the infotainment system when not on a call.

Bluetooth (Infotainment Controls)

To use infotainment controls to access the menu system, see *Overview* ⇨ *180*.

Pairing

A Bluetooth-enabled cell phone must be paired to the Bluetooth system and then connected to the vehicle before it can be used. See your cell phone manufacturer's user guide for Bluetooth functions before pairing the cell phone. If a Bluetooth phone is not connected, calls will be made using OnStar Hands-Free Calling, if available. See *OnStar Overview* ⇨ *396*.

Pairing Information

- A Bluetooth phone with MP3 capability cannot be paired to the vehicle as a phone and an MP3 player at the same time.
- Up to 10 cell phones can be paired to the Bluetooth system.
- The pairing process is disabled when the vehicle is moving.
- Pairing only needs to be completed once, unless the pairing information on the cell phone changes or the cell phone is deleted from the system.
- Only one paired cell phone can be connected to the Bluetooth system at a time.
- If multiple paired cell phones are within range of the system, the system connects to the first available paired cell phone in the order that they were first paired.

When the Bluetooth device and infotainment system are successfully paired, the phone book is downloaded automatically. This is dependent on the type of phone paired. If the automatic download does not occur, proceed with the phone book download on the phone.

Pairing a Phone – SSP and No Paired Device

When there is no paired device on the infotainment system and Simple Secure Pairing (SSP) is supported:

1. Press .

2. Touch PHONE, press on the faceplate, or press on the steering wheel without OnStar.
3. Touch Search Device.
4. Touch the desired device to pair on the searched list screen.
5. Touch Yes on the pop-up screen of the Bluetooth device and infotainment system.
6. When the Bluetooth device and infotainment system are successfully paired, the phone screen is displayed on the infotainment system.

Pairing a Phone – SSP and Paired Device

When a paired device is on the infotainment system and SSP is supported:

1. Press .
2. Touch SETTINGS.
3. Touch Bluetooth, then Device Management.
4. Touch the desired device to pair. When the Bluetooth device and infotainment system are successfully paired, / is displayed on the pair device screen. If no desired device is available go to Step 5.
5. Touch Search Device to search for the desired device.
6. Touch the desired device to pair on the searched list screen.
7. Touch Yes on the pop-up screen of the Bluetooth device and infotainment system.

- The connected phone is highlighted by .
- / indicates the hands-free and phone music functions are enabled.
- indicates only the hands-free function is enabled.
- indicates only Bluetooth music is enabled.

Pairing a Phone – No SSP and No Paired Device

When there is no paired device on the infotainment system and SSP is not supported:

1. Press .
2. Touch PHONE, press on the faceplate, or press on the steering wheel without OnStar.
3. Touch Search Device.
4. Touch the desired device to pair on the searched list screen.
5. Input the Personal Identification Number (PIN) code (default: 1234) to the Bluetooth device. When the Bluetooth device and infotainment system are successfully paired, the PHONE screen is displayed on the infotainment system.

When the connection fails, a failure message is displayed on the infotainment system.

If a Bluetooth device was previously connected, the infotainment system executes the auto connection. However, if the Bluetooth setting on the Bluetooth device is turned off, a failure message is displayed on the infotainment system.

Pairing a Phone – No SSP and Paired Device

When a paired device is on the infotainment system and SSP is not supported:

1. Press ⌂.
2. Touch SETTINGS.
3. Touch Bluetooth, then Device Management.
4. Touch the desired device to pair. When the Bluetooth device and infotainment system are successfully paired, ♪ / ☎ is displayed on the pair device screen. If no desired device is available go to Step 5.
5. Touch Search Device to search for the desired device.
6. Touch the desired device to pair on the searched list screen.
7. Input the Personal Identification Number (PIN) code (default: 1234) to the Bluetooth device. When the Bluetooth device and infotainment system are successfully paired, ♪ / ☎ is displayed on the pair device screen.

- The connected phone is highlighted by ☎.
- ♪ / ☎ indicates the hands-free and phone music functions are enabled.
- ☎ indicates only the hands-free function is enabled.
- ♪ indicates only Bluetooth music is enabled.

Connecting a Paired Bluetooth Device

1. Press ⌂.
2. Touch SETTINGS.
3. Touch Bluetooth, then Device Management.
4. Touch the device to be connected.

Checking the Bluetooth Connection

1. Press ⌂.
2. Touch SETTINGS.
3. Touch Bluetooth, then Device Management.
4. The paired device will show.

Disconnecting a Bluetooth Device

1. Press ⌂.
2. Touch SETTINGS.
3. Touch Bluetooth, then Device Management.
4. Touch the name of the device to be disconnected.
5. Touch Disconnect.

Deleting a Bluetooth Device

1. Press ⌂.
2. Touch SETTINGS.

3. Touch Bluetooth, then Device Management.
4. Touch the device to delete.
5. Touch 🗑
6. Touch Delete.

Bluetooth Music

Before playing Bluetooth music, read the following information:

- A cell phone or Bluetooth device that supports Advanced Audio Distribution Profile (A2DP) versions over 1.2 must be registered and connected to the product.
- From the cell phone or Bluetooth device, find the Bluetooth device type to set/connect the item as a stereo headset.
- ♪ will appear on the screen if the stereo headset is successfully connected.
- The sound played by the Bluetooth device is delivered through the infotainment system.
- Bluetooth music can be played only when a Bluetooth device has been connected. To play Bluetooth music, connect the Bluetooth phone to the infotainment system.
- If the Bluetooth device is disconnected while playing phone music, the music is discontinued. The audio streaming function may not be supported in some Bluetooth phones. Only one function can be used at a time between the Bluetooth hands-free or Phone music function. For example, if you convert to Bluetooth hands-free while playing Phone music, the music is discontinued. Playing music from the car is not possible when there are no music files stored in the cell phone.

Playing Bluetooth Music

1. Press ⌂.
2. Touch AUDIO.
3. Touch Source.
4. Touch Bluetooth.

Pause

Touch ❚❚ to pause.

Touch ▶ to resume.

Playing the Next Song

Touch ⏭.

Playing the Previous Song

Touch ⏮ within two seconds of playback time to play the previous song.

Returning to the Beginning of the Current Song

Touch ⏮ after two seconds of playback time.

Search

Touch and hold ⏮ or ⏭ to rewind or fast forward.

Playing Music Randomly

Touch ⤮ during playback. Touch again to return to normal play.

This function may not be supported depending on the Bluetooth device.

Do not change the track too quickly when playing Bluetooth music.

Conditions that may occur when playing Bluetooth music:

- It takes time to transmit data from the Bluetooth device to the infotainment system.
- If the cell phone or Bluetooth device is not in the waiting screen mode, it may not automatically play.
- The infotainment system transmits the order to play from the Bluetooth device in the Bluetooth music play mode. If this is done in a different mode, then the device transmits the order to stop. Depending on the Bluetooth device options, this order to play/stop may take time to activate.
- If the Bluetooth music playback is not functioning, then check to see if the Bluetooth device is in the waiting screen mode.
- Sounds may be cut off during the Bluetooth music playback.
- The infotainment system outputs the audio from the cell phone or Bluetooth device as it is transmitted.

Apple CarPlay and Android Auto

If equipped, Android Auto™ and/or Apple CarPlay™ capability may be available through a compatible smartphone. If available, a PROJECTION icon will appear on the Home Page of the infotainment display.

To use Android Auto and/or Apple CarPlay:

1. Download the Android Auto app to your phone from the Google™ Play store. There is no app required for Apple CarPlay.
2. Connect your Android phone or Apple iPhone by using the compatible phone USB cable and plugging into a USB data port. For best performance, use the device's factory-provided USB cable. Aftermarket or third-party cables may not work.

The PROJECTION icon on the Home Page will change to ANDROID AUTO or APPLE CARPLAY depending on the phone. Android Auto and/or Apple CarPlay may automatically launch upon USB connection. If not, press the ANDROID AUTO and/or APPLE CARPLAY icon on the Home Page to launch.

For further information on how to set up Android Auto and Apple CarPlay in the vehicle, see my. gmc.com or see *Customer Assistance Offices ⇨ 384*.

Android Auto is provided by Google and is subject to Google's terms and privacy policy. CarPlay is provided by Apple and is subject to Apple's terms and privacy policy. For Android Auto support see https://support.google.com/androidauto or Apple CarPlay support at https://www.apple.com/ios/carplay/ for more information. Apple or Google may change or

suspend availability at any time. Android Auto is a trademark of Google Inc.; Apple CarPlay is a trademark of Apple Inc.

Hands-Free Phone

General Information

Vehicles with a Hands-Free Phone system can use a Bluetooth-capable cell phone with a hands-free profile to make and receive phone calls. The infotainment system and voice control are used to operate the system. Not all phones support all functions and not all phones work with the Hands-Free Phone system.

Hands-Free Phone Controls

Use the buttons on the infotainment system and the steering wheel to operate the Hands-Free Phone system.

Steering Wheel Controls

Steering wheel controls can be used to:

- Answer incoming calls.
- Confirm system information.
- End a call.
- Decline a call.
- Cancel an operation.
- Make outgoing calls using the call list.

: Press to answer incoming calls.

: Press to end a call, decline a call, or cancel an operation.

Making a Call by Entering a Phone Number

- Press on the faceplate.
- Press , then touch PHONE on the screen.
- Press on the steering wheel.

If a wrong number is entered, touch to delete the number one digit at a time, or touch and hold to delete all digits of the number.

Switching a Call to the Cell Phone (Private Mode)

To switch the call from the cell phone to hands-free:

1. Touch .
2. Touch again to switch back to hands-free.

Turning the Microphone On and Off

Touch to turn the microphone on or off.

Calling by Redial

To call by using redial:

- Press on the steering wheel controls to display the redial guidance screen.
- Touch on the screen.

Redialing is not possible when there is no call history.

Taking Calls

When a phone call comes through the connected Bluetooth cell phone, the audio system will be muted or paused and the phone will ring with the relevant information displayed.

Press on the steering wheel controls, touch on the screen, or press on the faceplate.

To decline the call, press on the steering wheel controls or touch Reject on the screen.

Using the Contacts Menu

1. Touch contacts on the phone screen.
2. Touch ▲ or ▼ to scroll through the list.
3. Touch the phone book entry to call.
4. If there is more than one number associated with the name, touch the number to dial.

Searching for Contacts Entries

1. Touch contacts on the phone screen.
2. Touch on the contacts screen.
3. Use the keypad to input the name to search. For details, see “Searching for a Name” following.
4. Touch the phone book entry to call.
5. If there is more than one number associated with the name, touch the number to dial.

When the Bluetooth device and infotainment system are successfully paired, the phone book will download. Some phones may not download automatically. If this happens, connect it again or proceed with the phone book download on the phone.

Searching for a Name

Select characters by using the keypad on the phone book screen. As characters are selected, the names that include those characters will display on the phone book screen. As more characters of the name are entered, the list of possible names is shortened.

To search for the name Alex:

1. Touch (abc) to select the first character.
2. Touch (jkl) three times to select the second character.
3. Touch (def) two times to select the third character.
4. Touch (wxy) two times to select the fourth character.

Making a Call from Call History

1. Touch Call History on the phone screen.
2. Touch one of the following for:
   - All calls history.
   - Dialed calls.
   - Missed calls.
   - Received calls.
3. Select the contact entry to call.

Making a Call with Speed Dial Numbers

Touch and hold the speed dial number using the keypad on the phone screen.

Only speed dial numbers already stored on the cell phone can be used for speed dial calls. Up to two-digit speed dial numbers are supported.

For two-digit speed dial numbers, touch and hold the second digit to make a call to the speed dial number.

Trademarks and License Agreements

FCC Information

See *Radio Frequency Statement* ⇨ *392*.

Bluetooth®

The Bluetooth word mark and logos are owned by the Bluetooth® SIG, Inc. and any use of such marks by General Motors is under license. Other trademarks and trade names are those of their respective owners.

DivX Certified® to play DivX® video, including premium content.

Covered by one or more of the following U.S. patents: 7,295,673; 7,460,668; 7,515,710; 7,519,274.

DivX®, DivX Certified® and associated logos are trademarks of Rovi Corporation or its subsidiaries and are used under license.

Made for iPod iPhone

"Made for iPod" and "Made for iPhone" mean that an electronic accessory has been designed to connect specifically to iPod or iPhone and has been certified by the developer to meet Apple performance standards.

iPod and iPhone are trademarks of Apple Computer, Inc., registered in the U.S. and other countries.

SiriusXM SATELLITE RADIO

Fees and Taxes: Subscription fee, taxes, one time activation fee, and other fees may apply. Subscription fee is consumer only. All fees and programming subject to change. Subscriptions subject to Customer Agreement available at www.siriusxm.com. SiriusXM® service only available in the 48 contiguous United States and Canada.

In Canada: Some deterioration of service may occur in extreme northern latitudes. This is beyond the control of SiriusXM® Satellite Radio.

It is prohibited to copy, decompile, disassemble, reverse engineer, hack, manipulate, or otherwise make available any technology or software incorporated in receivers compatible with the SiriusXM Satellite Radio System or that support the SiriusXM website, the Online Service or any of its content. Furthermore, the AMBER voice compression software included in this product is protected by intellectual property rights including patent rights, copyrights, and trade secrets of Digital Voice Systems, Inc.

General Requirements:

1. A License Agreement from SiriusXM is required for any product that incorporates SiriusXM Technology and/or for use of any of the SiriusXM marks to be manufactured, distributed, or marketed in the SiriusXM Service Area.
2. For products to be distributed, marketed, and/or sold in Canada, a separate agreement is required with Canadian Satellite Radio Inc. (operating as SiriusXM Canada).

FreeType 2

Portions of this software are copyright © 2007-2012 The FreeType Project (www.freetype.org). All rights reserved.

Libjpeg

The navigation software is based in part on the work of the independent JPEG Group.

Climate Controls

Climate Control Systems
Dual Automatic Climate Control System 202
Rear Climate Control System 205

Air Vents
Air Vents 207

Maintenance
Passenger Compartment Air Filter 208

Climate Control Systems

Dual Automatic Climate Control System

With this system the heating, cooling, and ventilation in the vehicle can be controlled.

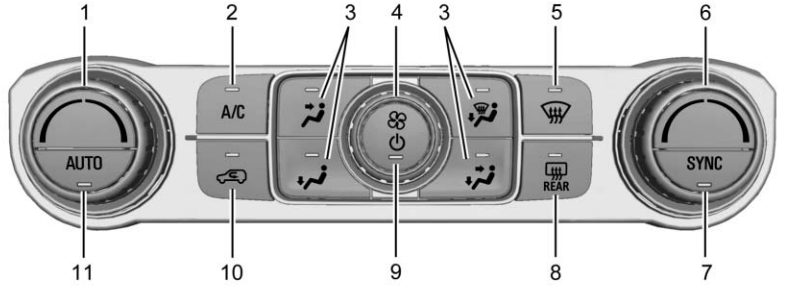

1. Driver Temperature Control
2. A/C (Air Conditioning)
3. Air Delivery Mode Controls
4. Fan Control
5. Defrost
6. Passenger Temperature Control
7. SYNC (Synchronized Temperature)
8. Rear Window Defogger
9. Power Button
10. Air Recirculation
11. AUTO (Automatic Operation)

Automatic Operation

The system automatically controls the following four functions to heat or cool the vehicle to the desired temperature:

- Fan Speed
- Air Delivery Mode
- Air Conditioning
- Recirculation

When the AUTO indicator light is lit, all four functions are operating automatically. Each function can be manually set and the selected setting will be shown. This cancels full automatic operation and the AUTO indicator light turns off. Functions that are not manually set will continue to be automatically controlled, although the AUTO indicator light will not be lit.

To place the system in automatic mode:

1. Press AUTO.
2. Set the driver and passenger temperature.

   To find your comfort setting, start with 22 °C (72 °F) and allow the system time to stabilize. Then adjust the temperature as needed for best comfort.

To improve fuel efficiency and to cool the vehicle faster, recirculation may be automatically selected in warm weather.

The recirculation light will not come on when automatically controlled.

Press to manually select recirculation; press it again to select outside air.

Do not cover the solar sensor on the top of the instrument panel near the windshield. This sensor regulates air temperature based on sun load. See “Sensors” later in this section.

Manual Operation

: Press to turn the climate control system on or off. Outside air still enters the vehicle and is directed to the floor. This direction can be changed by pressing the air delivery mode.

: Turn clockwise or counterclockwise to increase or decrease the fan speed. Press the knob to turn the fan off.

Press AUTO to return to automatic operation.

Driver and Passenger Temperature Control : The temperature can be adjusted separately for the driver and passenger.

Turn the knob clockwise or counterclockwise to increase or decrease the driver or passenger temperature setting.

SYNC : Press to link the passenger and rear climate temperature settings to the driver setting. The SYNC indicator light will turn on. When the passenger or rear climate temperature settings are adjusted, the SYNC indicator light is off.

The driver side or passenger side temperature display shows the temperature setting increasing or decreasing.

Air Delivery Mode Control : Press , , , or to change the direction of the airflow. An indicator light comes on in the selected mode button.

Changing the mode cancels the automatic operation and the system goes into manual mode. Press AUTO to return to automatic operation.

: Air is directed to the instrument panel outlets.

: Air is divided between the instrument panel and floor outlets. Some air is directed toward the windshield and side window outlets.

: Air is directed to the floor outlets, with some to the windshield, side window outlets, and second row floor outlets.

: This mode clears the windows of fog or moisture. Air is directed to the windshield, floor outlets, and side window vents. The system automatically forces outside air into the vehicle and the air conditioning compressor will run, unless the outside temperature is close to freezing.

: Press to clear the windshield of fog or frost more quickly. Air is directed to the windshield and the side window vents. The air conditioning compressor also comes on, unless the outside temperature is below freezing.

Do not drive the vehicle until all windows are clear.

See *Air Vents* ⇨ *207*.

A/C : Press to turn the air conditioning system on or off. An indicator light comes on to show that the air conditioning is enabled. If the fan is turned off, the air conditioner will not run. The A/C light will stay on even if the outside temperatures are below freezing.

: Press to turn on recirculation. An indicator light comes on. Air is recirculated to quickly cool the inside of the vehicle. It can also be used to help reduce outside air and odors that enter the vehicle. The air conditioning compressor also comes on when this mode is activated.

Rear Window Defogger

The rear window defogger uses a warming grid to remove fog from the rear window.

REAR **:** Press to turn the rear window defogger on or off. An indicator light on the button comes on to show that the rear window defogger is on.

The rear window defogger only works when the ignition is in ON/RUN. The defogger turns off if the ignition is turned to ACC/ACCESSORY or LOCK/OFF.

Caution

Using a razor blade or sharp object to clear the inside rear window can damage the rear window defogger. Repairs would not be covered by the vehicle warranty. Do not clear the inside rear window with sharp objects.

Heated Mirror : If equipped with heated outside rearview mirrors, the mirrors heat to help clear fog or frost from the surface of the mirror when the rear window defog button is pressed. See *Heated Mirrors* ⇨ *48*.

Sensors

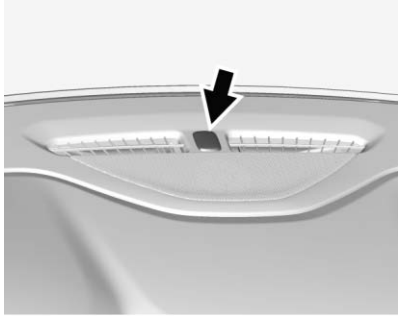

The solar sensor, located in the defrost grille in the middle of the instrument panel, monitors the solar heat. Do not cover the solar sensor or the system will not work properly.

There is also an exterior temperature sensor behind the front grille. This sensor reads the outside air temperature and helps maintain the temperature inside the vehicle. Any cover on the front of the vehicle, could cause a false reading in the displayed temperature.

The climate control system uses the information from these sensors to maintain comfort settings by adjusting the outlet temperature, fan speed, and air delivery mode. The system may also supply cooler air to the side of the vehicle facing the sun. The recirculation mode will also be used as needed to maintain cool outlet temperatures.

Rear Climate Control System

If equipped, the rear climate control system is on the rear of the center console storage. The rear climate settings can be adjusted with this system.

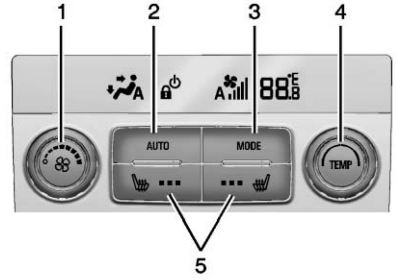

1. Fan Control
2. AUTO (Automatic Operation)
3. MODE (Air Delivery Mode Control)
4. TEMP (Temperature Control)
5. Heated Rear Seats (If Equipped)

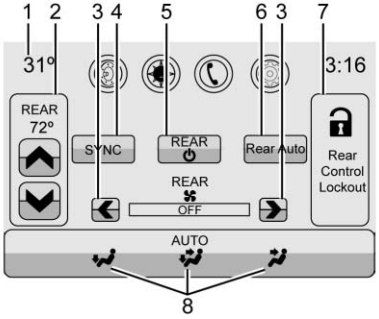

Rear Climate Touch Screen Controls

1. Outside Temperature Display
2. Rear Climate Temperature Control
3. Fan Control
4. SYNC (Synchronized Temperatures)
5. REAR ⏻ (On/Off)
6. Rear AUTO (Automatic Operation)
7. Rear Control Lockout
8. Air Delivery Mode Control

REAR ⏻ : Press REAR ⏻ to turn the rear climate control on or off. If the rear climate control is turned off using REAR ⏻ on the touch screen.

SYNC : Press SYNC on the touch screen to match the rear climate control temperature to the front climate control driver temperature. The SYNC button will be lit. Adjust the rear climate control temperature to change the linked temperature. The SYNC button turns off.

Rear Control Lockout : Press Rear Control Lockout on the touch screen to lock or unlock control of the rear climate control system from the front seat. When locked the rear climate control cannot be adjusted from the rear climate control faceplate.

Automatic Operation

AUTO : Press AUTO or Rear AUTO on the touch screen to automatically control air delivery and fan speed. A is indicated in the display when automatic operation is active. If any of the climate control settings are manually adjusted, this cancels full automatic operation.

The display only indicates climate control functions when the system is in rear independent mode. When SYNC is active the display is not shown.

Manual Operation

: Turn the knob clockwise or counterclockwise or press and hold the touch screen to increase or decrease the fan speed.

TEMP : Turn the knob clockwise or counterclockwise or press and hold the touch screen temperature controls to adjust the rear passenger temperature. If SYNC is lit, the rear climate temperature is linked to the driver temperature setting.

/ / or MODE : Press the desired mode button on the touch screen or MODE on the rear faceplate to change the direction of the airflow in the rear seating area.

Repeatedly press the MODE button until the desired mode appears on the display.

or : If equipped, press or to heat the left or right outboard seat. See *Heated Rear Seats* ⇨ *66*.

Air Vents

To adjust the center and side air outlets on the instrument panel, use the slider switch in the center of the outlet to change the direction of the airflow and also to shut off the airflow.

There may be outlets overhead in the rear passenger area; adjust as needed.

Keep all outlets open whenever possible for best system performance.

Operation Tips

- Clear away any ice, snow, or leaves from the air inlets at the base of the windshield that can block the flow of air into the vehicle.
- Use of non-GM approved hood deflectors can adversely affect the performance of the system.
- Keep the path under all seats clear of objects to help circulate the air inside the vehicle more effectively.
- If fogging reoccurs while in or modes with mild temperature throughout the vehicle, turn on the air conditioner to reduce windshield fogging.

Maintenance

Passenger Compartment Air Filter

The filter reduces the dust, pollen, and other airborne irritants from outside air and inside air when in recirculation mode.

The filter should be replaced as part of routine scheduled maintenance. See *Maintenance Schedule* ⇨ *366*.

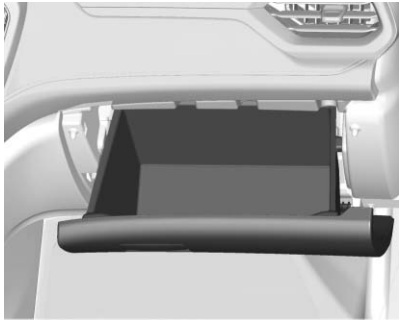

1. Open the glove box completely.
2. Disconnect the glove box door dampener arm from the glove box door assembly.
3. Squeeze both sides of the glove box door to open beyond the stops.

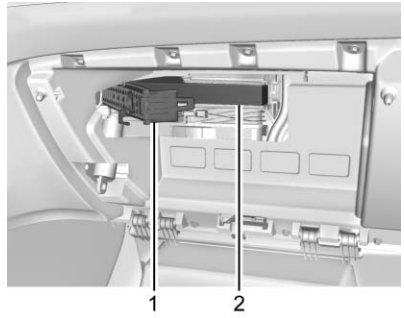

4. Release the retainer clips holding the service door. Open the service door (1) slightly and slide toward the center of the vehicle to disengage the hinge. Remove the old air filter (2).
5. Install the new air filter.
6. Reattach the service door and close.
7. Reverse the steps to reinstall the glove box.

See your dealer if additional assistance is needed.

Driving and Operating

Driving Information
Distracted Driving 210
Defensive Driving 211
Drunk Driving 211
Control of a Vehicle 211
Braking 211
Steering 212
Off-Road Recovery 212
Loss of Control 213
Off-Road Driving 213
Driving on Wet Roads 218
Hill and Mountain Roads 218
Winter Driving 219
If the Vehicle Is Stuck 220
Vehicle Load Limits 221

Starting and Operating
New Vehicle Break-In 225
Ignition Positions 225
Starting the Engine 227
Engine Heater 228
Retained Accessory Power (RAP) 230
Shifting Into Park 230
Shifting out of Park 231
Parking over Things That Burn 231
Extended Parking 232

Engine Exhaust
Engine Exhaust 232
Running the Vehicle While Parked 233

Automatic Transmission
Automatic Transmission 233
Manual Mode 235
Tow/Haul Mode 236

Drive Systems
All-Wheel Drive 237

Brakes
Antilock Brake System (ABS) 237
Electric Parking Brake 238
Brake Assist 240
Automatic Vehicle Hold (AVH) 240

Ride Control Systems
Traction Control/Electronic Stability Control 241
Hill Descent Control (HDC) . . . 242
Driver Mode Control 243

Cruise Control
Cruise Control 244
Adaptive Cruise Control 246

Driver Assistance Systems
Driver Assistance Systems . . . 254
Assistance Systems for Parking or Backing 255
Assistance Systems for Driving 258
Forward Collision Alert (FCA) System 258
Forward Automatic Braking (FAB) 261
Front Pedestrian Braking (FPB) System 262
Side Blind Zone Alert (SBZA) 264
Lane Change Alert (LCA) 264
Lane Departure Warning (LDW) 266
Lane Keep Assist (LKA) 266

Fuel
Fuel 268
California Fuel Requirements 269
Fuels in Foreign Countries . . . 269
Fuel Additives 269
Filling the Tank 270
Filling a Portable Fuel Container 271

Trailer Towing
General Towing Information 272
Driving Characteristics and Towing Tips 272
Trailer Towing 275
Towing Equipment 277

Conversions and Add-Ons
Add-On Electrical Equipment 279

Driving Information

Distracted Driving

Distraction comes in many forms and can take your focus from the task of driving. Exercise good judgment and do not let other activities divert your attention away from the road. Many local governments have enacted laws regarding driver distraction. Become familiar with the local laws in your area.

To avoid distracted driving, always keep your eyes on the road, hands on the wheel, and mind on the drive.

- Do not use a phone in demanding driving situations. Use a hands-free method to place or receive necessary phone calls.
- Watch the road. Do not read, take notes, or look up information on phones or other electronic devices.
- Designate a front seat passenger to handle potential distractions.
- Become familiar with vehicle features before driving, such as programming favorite radio stations and adjusting climate control and seat settings. Program all trip information into any navigation device prior to driving.
- Wait until the vehicle is parked to retrieve items that have fallen to the floor.
- Stop or park the vehicle to tend to children.
- Keep pets in an appropriate carrier or restraint.
- Avoid stressful conversations while driving, whether with a passenger or on a cell phone.

⚠ Warning

Taking your eyes off the road too long or too often could cause a crash resulting in injury or death. Focus your attention on driving.

Refer to the Infotainment section and the infotainment manual for more information on using that system, including pairing and using a cell phone.

Defensive Driving

Defensive driving means “always expect the unexpected.” The first step in driving defensively is to wear the safety belt. See *Safety Belts* ⇨ *68*.

- Assume that other road users (pedestrians, bicyclists, and other drivers) are going to be careless and make mistakes. Anticipate what they might do and be ready.
- Allow enough following distance between you and the driver in front of you.
- Focus on the task of driving.

Drunk Driving

Death and injury associated with drinking and driving is a global tragedy.

⚠ Warning

Drinking and then driving is very dangerous. Your reflexes, perceptions, attentiveness, and judgment can be affected by even a small amount of alcohol. You can have a serious — or even fatal — collision if you drive after drinking.

Do not drink and drive or ride with a driver who has been drinking. Ride home in a cab; or if you are with a group, designate a driver who will not drink.

Control of a Vehicle

Braking, steering, and accelerating are important factors in helping to control a vehicle while driving.

Braking

Braking action involves perception time and reaction time. Deciding to push the brake pedal is perception time. Actually doing it is reaction time.

Average driver reaction time is about three-quarters of a second. In that time, a vehicle moving at 100 km/h (60 mph) travels 20 m (66 ft), which could be a lot of distance in an emergency.

Helpful braking tips to keep in mind include:

- Keep enough distance between you and the vehicle in front of you.
- Avoid needless heavy braking.
- Keep pace with traffic.

If the engine ever stops while the vehicle is being driven, brake normally but do not pump the brakes. Doing so could make the pedal harder to push down. If the engine stops, there will be some power brake assist but it will be used when the brake is applied. Once the power assist is used up, it can take longer to stop and the brake pedal will be harder to push.

Steering

Electric Power Steering

The vehicle has electric power steering. It does not have power steering fluid. Regular maintenance is not required.

If power steering assist is lost due to a system malfunction, the vehicle can be steered, but may require increased effort.

See your dealer if there is a problem.

If the steering wheel is turned until it reaches the end of its travel and is held against that position for an extended period of time, power steering assist may be reduced.

If the steering assist is used for an extended period of time, power assist may be reduced.

Normal use of the power steering assist should return when the system cools down.

See specific vehicle steering messages under *Service Vehicle Messages* ⇨ *155*. See your dealer if there is a problem.

Curve Tips

- Take curves at a reasonable speed.
- Reduce speed before entering a curve.
- Maintain a reasonable steady speed through the curve.
- Wait until the vehicle is out of the curve before accelerating gently into the straightaway.

Steering in Emergencies

- There are some situations when steering around a problem may be more effective than braking.
- Holding both sides of the steering wheel allows you to turn 180 degrees without removing a hand.
- The Antilock Brake System (ABS) allows steering while braking.

Off-Road Recovery

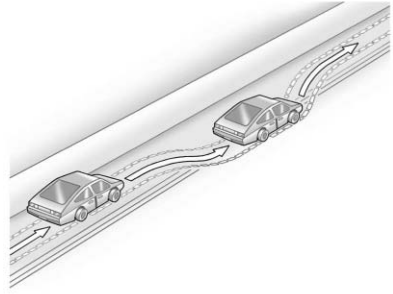

The vehicle's right wheels can drop off the edge of a road onto the shoulder while driving. Follow these tips:

1. Ease off the accelerator and then, if there is nothing in the way, steer the vehicle so that it straddles the edge of the pavement.
2. Turn the steering wheel about one-eighth of a turn, until the right front tire contacts the pavement edge.

3. Turn the steering wheel to go straight down the roadway.

Loss of Control

Skidding

There are three types of skids that correspond to the vehicle's three control systems:

- Braking Skid — wheels are not rolling.
- Steering or Cornering Skid — too much speed or steering in a curve causes tires to slip and lose cornering force.
- Acceleration Skid — too much throttle causes the driving wheels to spin.

Defensive drivers avoid most skids by taking reasonable care suited to existing conditions, and by not overdriving those conditions. But skids are always possible.

If the vehicle starts to slide, follow these suggestions:

- Ease your foot off the accelerator pedal and steer the way you want the vehicle to go. The vehicle may straighten out. Be ready for a second skid if it occurs.
- Slow down and adjust your driving according to weather conditions. Stopping distance can be longer and vehicle control can be affected when traction is reduced by water, snow, ice, gravel, or other material on the road. Learn to recognize warning clues — such as enough water, ice, or packed snow on the road to make a mirrored surface — and slow down when you have any doubt.
- Try to avoid sudden steering, acceleration, or braking, including reducing vehicle speed by shifting to a lower gear. Any sudden changes could cause the tires to slide.

Remember: Antilock brakes help avoid only the braking skid.

Off-Road Driving

All-wheel-drive vehicles can be used for off-road driving. Vehicles without all-wheel drive and vehicles not equipped with All Terrain (AT) or On-Off Road (OOR) tires must not be driven off-road except on a level, solid surface. To contact the tire manufacturer for more information about the original equipment tires, see the warranty manual.

Controlling the vehicle is the key to successful off-road driving. One of the best ways to control the vehicle is to control the speed.

⚠ Warning

When driving off-road, bouncing and quick changes in direction can easily throw you out of position. This could cause you to lose control and crash. You and your passengers should always wear safety belts.

Before Driving Off-Road

- Have all necessary maintenance and service work completed.
- Fuel the vehicle, fill fluid levels, and check inflation pressure in all tires, including the spare, if equipped.
- Read all the information about all-wheel-drive vehicles in this manual.
- Make sure all underbody shields, if equipped, are properly attached.
- Know the local laws that apply to off-road driving.

To gain more ground clearance if needed, it may be necessary to remove the front fascia lower air dam. However, driving without the air dam reduces fuel economy.

Caution

Operating the vehicle for extended periods without the front fascia lower air dam installed can

(Continued)

Caution (Continued)

cause improper airflow to the engine. Reattach the front fascia air dam after off-road driving.

Loading the Vehicle for Off-Road Driving

⚠ Warning

- Unsecured cargo on the load floor can be tossed about when driving over rough terrain. You or your passengers can be struck by flying objects. Secure the cargo properly.
- Keep cargo in the cargo area as far forward and as low as possible. The heaviest things should be on the floor, forward of the rear axle.
- Heavy loads on the roof raise the vehicle's center of gravity, making it more likely

(Continued)

Warning (Continued)

to roll over. You can be seriously or fatally injured if the vehicle rolls over. Put heavy loads inside the cargo area, not on the roof.

For more information about loading the vehicle, see *Vehicle Load Limits* ⇨ *221*.

Environmental Concerns

- Always use established trails, roads, and areas that have been set aside for public off-road recreational driving and obey all posted regulations.
- Do not damage shrubs, flowers, trees, or grasses or disturb wildlife.
- Do not park over things that burn. See *Parking over Things That Burn* ⇨ *231*.

Driving on Hills

Driving safely on hills requires good judgment and an understanding of what the vehicle can and cannot do.

⚠ Warning

Many hills are simply too steep for any vehicle. Driving up hills can cause the vehicle to stall. Driving down hills can cause loss of control. Driving across hills can cause a rollover. You could be injured or killed. Do not drive on steep hills.

Before driving on a hill, assess the steepness, traction, and obstructions. If the terrain ahead cannot be seen, get out of the vehicle and walk the hill before driving further.

When driving on hills:

- Use a low gear and keep a firm grip on the steering wheel.
- Maintain a slow speed.
- When possible, drive straight up or down the hill.
- Slow down when approaching the top of the hill.
- Use headlamps even during the day to make the vehicle more visible.

⚠ Warning

Driving to the top of a hill at high speed can cause an accident. There could be a drop-off, embankment, cliff, or even another vehicle. You could be seriously injured or killed. As you near the top of a hill, slow down and stay alert.

- Never go downhill forward or backward with the transmission in N (Neutral). The brakes could overheat and you could lose control.
- When driving down a hill, keep the vehicle headed straight down. Use a low gear because the engine will work with the brakes to slow the vehicle and help keep the vehicle under control.

⚠ Warning

Heavy braking when going down a hill can cause your brakes to overheat and fade. This could cause loss of control and you or others could be injured or killed. Apply the brakes lightly when descending a hill and use a low gear to keep vehicle speed under control.

If the vehicle stalls on a hill:

1. Apply the brakes to stop the vehicle, and then apply the parking brake.
2. Shift into P (Park) and then restart the engine.
   - If driving uphill when the vehicle stalls, shift to R (Reverse), release the parking brake, and back straight down.

- Never try to turn the vehicle around. If the hill is steep enough to stall the vehicle, it is steep enough to cause it to roll over.
- If you cannot make it up the hill, back straight down the hill.
- Never back down a hill in N (Neutral) using only the brake.
- The vehicle can roll backward quickly and you could lose control.
- If driving downhill when the vehicle stalls, shift to a lower gear, release the parking brake, and drive straight down the hill.

3. If the vehicle cannot be restarted after stalling, set the parking brake, shift an automatic transmission into P (Park), and turn the vehicle off.

   3.1. Leave the vehicle and seek help.

   3.2. Stay clear of the path the vehicle would take if it rolled downhill.

- Avoid turns that take the vehicle across the incline of the hill. A hill that can be driven straight up or down might be too steep to drive across. Driving across an incline puts more weight on the downhill wheels which could cause a downhill slide or a rollover.
- Surface conditions can be a problem. Loose gravel, muddy spots, or even wet grass can cause the tires to slip sideways, downhill. If the vehicle slips sideways, it can hit something that will trip it – a rock, a rut, etc. – and roll over.
- Hidden obstacles can make the steepness of the incline more severe. If a rock is driven across with the uphill wheels, or if the downhill wheels drop into a rut or depression, the vehicle can tilt even more.
- If an incline must be driven across, and the vehicle starts to slide, turn downhill. This should help straighten out the vehicle and prevent the side slipping.

⚠ Warning

Getting out of the vehicle on the downhill side when stopped across an incline is dangerous. If the vehicle rolls over, you could be crushed or killed. Always get out on the uphill side of the vehicle and stay well clear of the rollover path.

Driving in Mud, Sand, Snow, or Ice

Use a low gear when driving in mud – the deeper the mud, the lower the gear. Keep the vehicle moving to avoid getting stuck.

Traction changes when driving on sand. On loose sand, such as on beaches or sand dunes, the tires tend to sink into the sand. This affects steering, accelerating, and

braking. Drive at a reduced speed and avoid sharp turns or abrupt maneuvers.

Traction is reduced on hard packed snow and ice and it is easy to lose control. Reduce vehicle speed when driving on hard packed snow and ice.

⚠ Warning

Driving on frozen lakes, ponds, or rivers can be dangerous. Ice conditions vary greatly and the vehicle could fall through the ice; you and your passengers could drown. Drive your vehicle on safe surfaces only.

Driving in Water

⚠ Warning

Driving through rushing water can be dangerous. Deep water can sweep your vehicle downstream and you and your passengers

(Continued)

Warning (Continued)

could drown. If it is only shallow water, it can still wash away the ground from under your tires. Traction could be lost, and the vehicle could roll over. Do not drive through rushing water.

Caution

Do not drive through standing water if it is deep enough to cover the wheel hubs, axles, or exhaust pipe. Deep water can damage the axle and other vehicle parts.

If the standing water is not too deep, drive slowly through it. At faster speeds, water splashes on the ignition system and the vehicle can stall. Stalling can also occur if you get the exhaust pipe under water. While the exhaust pipe is under water, you will not be able to start the engine. When going through water, the brakes get wet, and it might take longer to stop. See *Driving on Wet Roads* ⇨ *218*.

After Off-Road Driving

Remove any brush or debris that has collected on the underbody or chassis, or under the hood. These accumulations can be a fire hazard.

After operation in mud or sand, have the brake linings cleaned and checked. These substances can cause glazing and uneven braking. Check the body structure, steering, suspension, wheels, tires, and exhaust system for damage and check the fuel lines and cooling system for any leakage.

More frequent maintenance service is required. See *Maintenance Schedule* ⇨ *366*.

Driving on Wet Roads

Rain and wet roads can reduce vehicle traction and affect your ability to stop and accelerate. Always drive slower in these types of driving conditions and avoid driving through large puddles and deep-standing or flowing water.

⚠ Warning

Wet brakes can cause crashes. They might not work as well in a quick stop and could cause pulling to one side. You could lose control of the vehicle.

After driving through a large puddle of water or a car/vehicle wash, lightly apply the brake pedal until the brakes work normally.

Flowing or rushing water creates strong forces. Driving through flowing water could cause the vehicle to be carried away. If this happens, you and other vehicle

(Continued)

Warning (Continued)

occupants could drown. Do not ignore police warnings and be very cautious about trying to drive through flowing water.

Hydroplaning

Hydroplaning is dangerous. Water can build up under the vehicle's tires so they actually ride on the water. This can happen if the road is wet enough and you are going fast enough. When the vehicle is hydroplaning, it has little or no contact with the road.

There is no hard and fast rule about hydroplaning. The best advice is to slow down when the road is wet.

Other Rainy Weather Tips

Besides slowing down, other wet weather driving tips include:

- Allow extra following distance.
- Pass with caution.
- Keep windshield wiping equipment in good shape.
- Keep the windshield washer fluid reservoir filled.
- Have good tires with proper tread depth. See *Tires* ⇨ *314*.
- Turn off cruise control.
- Activate All-Wheel Drive (AWD) mode. See *Driver Mode Control* ⇨ *243*.

Hill and Mountain Roads

Driving on steep hills or through mountains is different than driving on flat or rolling terrain. Tips include:

- Keep the vehicle serviced and in good shape.
- Check all fluid levels and brakes, tires, cooling system, and transmission.
- Shift to a lower gear when going down steep or long hills.

⚠ Warning

Using the brakes to slow the vehicle on a long downhill slope can cause brake overheating, can reduce brake performance, and could result in a loss of braking. Shift the transmission to a lower gear to let the engine assist the brakes on a steep downhill slope.

⚠ Warning

Coasting downhill in N (Neutral) or with the ignition off is dangerous. This can cause overheating of the brakes and loss of steering. Always have the engine running and the vehicle in gear.

- Drive at speeds that keep the vehicle in its own lane. Do not swing wide or cross the center line.
- Be alert on top of hills; something could be in your lane (e.g., stalled car, accident).
- Pay attention to special road signs (e.g., falling rocks area, winding roads, long grades, passing or no-passing zones) and take appropriate action.
- Select All-Wheel Drive (AWD) Mode. See *Driver Mode Control* ⇨ *243* and *All-Wheel Drive* ⇨ *237*.

Winter Driving

Driving on Snow or Ice

Snow or ice between the tires and the road creates less traction or grip, so drive carefully. Wet ice can occur at about 0 °C (32 °F) when freezing rain begins to fall. Avoid driving on wet ice or in freezing rain until roads can be treated.

For Slippery Road Driving:

- Accelerate gently. Accelerating too quickly causes the wheels to spin and makes the surface under the tires slick.
- Turn on Traction Control. See *Traction Control/Electronic Stability Control* ⇨ *241*.
- The Antilock Brake System (ABS) improves vehicle stability during hard stops, but the brakes should be applied sooner than when on dry pavement. See *Antilock Brake System (ABS)* ⇨ *237*.
- Allow greater following distance and watch for slippery spots. Icy patches can occur on otherwise clear roads in shaded areas. The surface of a curve or an overpass can remain icy when the surrounding roads are clear. Avoid sudden steering maneuvers and braking while on ice.
- Turn off cruise control.
- Select All-Wheel Drive (AWD) Mode. See *Driver Mode Control* ⇨ *243* and *All-Wheel Drive* ⇨ *237*.

Blizzard Conditions

Stop the vehicle in a safe place and signal for help. Stay with the vehicle unless there is help nearby.
If possible, use Roadside Assistance. See *Roadside Assistance Program* ⇨ *386*. To get help and keep everyone in the vehicle safe:

- Turn on the hazard warning flashers.
- Tie a red cloth to an outside mirror.

⚠ Warning

Snow can trap engine exhaust under the vehicle. This may cause exhaust gases to get inside. Engine exhaust contains carbon monoxide (CO), which cannot be seen or smelled. It can cause unconsciousness and even death.

(Continued)

Warning (Continued)

If the vehicle is stuck in snow:

- Clear snow from the base of the vehicle, especially any blocking the exhaust pipe.
- Open a window about 5 cm (2 in) on the vehicle side that is away from the wind, to bring in fresh air.
- Fully open the air outlets on or under the instrument panel.
- Adjust the climate control system to circulate the air inside the vehicle and set the fan speed to the highest setting. See “Climate Control Systems.”

For more information about CO, see *Engine Exhaust* ⇨ *232*.

To save fuel, run the engine for short periods to warm the vehicle and then shut the engine off and partially close the window. Moving about to keep warm also helps.

If it takes time for help to arrive, when running the engine, push the accelerator pedal slightly so the engine runs faster than the idle speed. This keeps the battery charged to restart the vehicle and to signal for help with the headlamps. Do this as little as possible, to save fuel.

If the Vehicle Is Stuck

Slowly and cautiously spin the wheels to free the vehicle when stuck in sand, mud, ice, or snow.

If stuck too severely for the traction system to free the vehicle, turn the traction system off and use the rocking method. See *Traction Control/Electronic Stability Control* ⇨ *241*.

⚠ Warning

If the vehicle's tires spin at high speed, they can explode, and you or others could be injured. The vehicle can overheat, causing an engine compartment fire or other

(Continued)

Warning (Continued)

damage. Spin the wheels as little as possible and avoid going above 56 km/h (35 mph).

Select All-Wheel Drive (AWD) Mode. See *Driver Mode Control* ⇨ *243* and *All-Wheel Drive* ⇨ *237*.

Rocking the Vehicle to Get it Out

Turn the steering wheel left and right to clear the area around the front wheels. Turn off any traction system. Shift back and forth between R (Reverse) and a low forward gear, spinning the wheels as little as possible. To prevent transmission wear, wait until the wheels stop spinning before shifting gears. Release the accelerator pedal while shifting, and press lightly on the accelerator pedal when the transmission is in gear. Slowly spinning the wheels in the forward and reverse directions causes a rocking motion that could free the vehicle. If that does not get the vehicle out after a few tries, it might need to be towed out. If the vehicle does need to be towed out, see *Towing the Vehicle* ⇨ *352*.

Vehicle Load Limits

It is very important to know how much weight the vehicle can carry. This weight is called the vehicle capacity weight and includes the weight of all occupants, cargo, and all nonfactory-installed options. Two labels on the vehicle may show how much weight it may properly carry, the Tire and Loading Information label and the Certification/Tire label.

⚠ Warning

Do not load the vehicle any heavier than the Gross Vehicle Weight Rating (GVWR), or either the maximum front or rear Gross

(Continued)

Warning (Continued)

Axle Weight Rating (GAWR). This can cause systems to break and change the way the vehicle handles. This could cause loss of control and a crash. Overloading can also reduce stopping distance, damage the tires, and shorten the life of the vehicle.

Tire and Loading Information Label

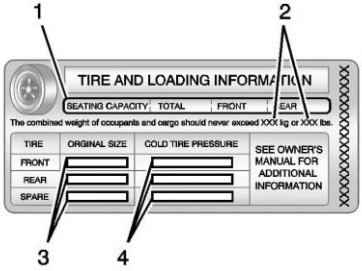

Example Label

A vehicle-specific Tire and Loading Information label is attached to the center pillar (B-pillar). The tire and loading information label shows the number of occupant seating positions (1), and the maximum vehicle capacity weight (2) in kilograms and pounds.

The Tire and Loading Information label also shows the size of the original equipment tires (3) and the recommended cold tire inflation pressures (4). For more information on tires and inflation see *Tires* ⇨ *314* and *Tire Pressure* ⇨ *321*.

There is also important loading information on the vehicle Certification/Tire label. It may show the Gross Vehicle Weight Rating (GVWR) and the Gross Axle Weight Rating (GAWR) for the front and rear axle. See “Certification/Tire Label” later in this section.

“Steps for Determining Correct Load Limit–

1. Locate the statement "The combined weight of occupants and cargo should never exceed XXX kg or XXX lbs." on your vehicle’s placard.
2. Determine the combined weight of the driver and passengers that will be riding in your vehicle.
3. Subtract the combined weight of the driver and passengers from XXX kg or XXX lbs.
4. The resulting figure equals the available amount of cargo and luggage load capacity. For example, if the "XXX" amount equals 1400 lbs. and there will be five 150 lb passengers in your vehicle, the amount of available cargo and luggage load capacity is 650 lbs. (1400-750 (5 x 150) = 650 lbs.)
5. Determine the combined weight of luggage and cargo being loaded on the vehicle. That weight may not safely exceed the available cargo and luggage load capacity calculated in Step 4.
6. If your vehicle will be towing a trailer, load from your trailer will be transferred to

your vehicle. Consult this manual to determine how this reduces the available cargo and luggage load capacity of your vehicle."

See *Trailer Towing* ⇨ *275* for important information on towing a trailer, towing safety rules and trailering tips.

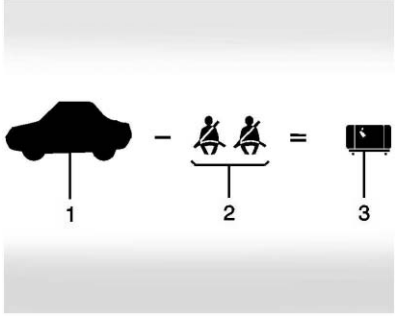

Example 1

1. Vehicle Capacity Weight for Example 1 = 453 kg (1,000 lbs).
2. Subtract Occupant Weight @ 68 kg (150 lbs) × 2 = 136 kg (300 lbs).
3. Available Occupant and Cargo Weight = 317 kg (700 lbs).

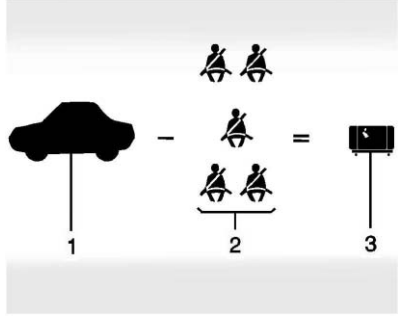

Example 2

1. Vehicle Capacity Weight for Example 2 = 453 kg (1,000 lbs).
2. Subtract Occupant Weight @ 68 kg (150 lbs) × 5 = 340 kg (750 lbs).
3. Available Cargo Weight = 113 kg (250 lbs).

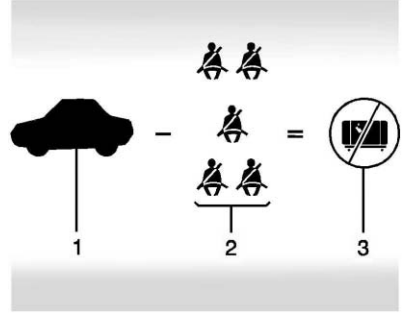

Example 3

1. Vehicle Capacity Weight for Example 3 = 453 kg (1,000 lbs).
2. Subtract Occupant Weight @ 91 kg (200 lbs) × 5 = 453 kg (1,000 lbs).
3. Available Cargo Weight = 0 kg (0 lbs).

Refer to the vehicle's tire and loading information label for specific information about the vehicle's capacity weight and seating positions. The combined

weight of the driver, passengers, and cargo should never exceed the vehicle's capacity weight.

Certification/Tire Label

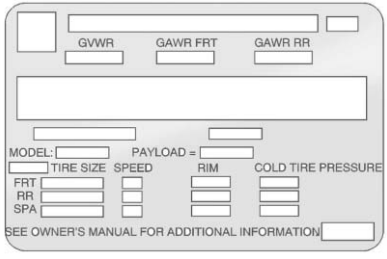

Label Example

A vehicle-specific Certification/Tire label is attached to the center pillar (B-pillar).

The label may show the size of the vehicle's original tires and the inflation pressures needed to obtain the gross weight capacity of the vehicle. The label shows the gross weight capacity of the vehicle. This is called the Gross Vehicle Weight Rating (GVWR). The GVWR includes the weight of the vehicle, all occupants, fuel, and cargo.

The Certification/Tire label may also show the maximum weights for the front and rear axles, called the Gross Axle Weight Rating (GAWR). To find out the actual loads on the front and rear axles, weigh the vehicle at a weigh station. Your dealer can help with this. Be sure to spread the load equally on both sides of the centerline.

Caution

Overloading the vehicle may cause damage. Repairs would not be covered by the vehicle warranty. Do not overload the vehicle.

⚠ Warning

Things inside the vehicle can strike and injure people in a sudden stop or turn, or in a crash.

- Put things in the cargo area of the vehicle. In the cargo area, put them as far forward as possible. Try to spread the weight evenly.
- Never stack heavier things, like suitcases, inside the vehicle so that some of them are above the tops of the seats.
- Do not leave an unsecured child restraint in the vehicle.
- Secure loose items in the vehicle.
- Do not leave a seat folded down unless needed.

Starting and Operating

New Vehicle Break-In

Caution

The vehicle does not need an elaborate break-in. But it will perform better in the long run if you follow these guidelines:

- Do not drive at any one constant speed, fast or slow, for the first 805 km (500 mi). Do not make full-throttle starts. Avoid downshifting to brake or slow the vehicle.
- Avoid making hard stops for the first 322 km (200 mi) or so. During this time the new brake linings are not yet broken in. Hard stops with new linings can mean premature wear and earlier replacement. Follow this

(Continued)

Caution (Continued)

breaking-in guideline every time you get new brake linings.

Following break-in, engine speed and load can be gradually increased.

Ignition Positions

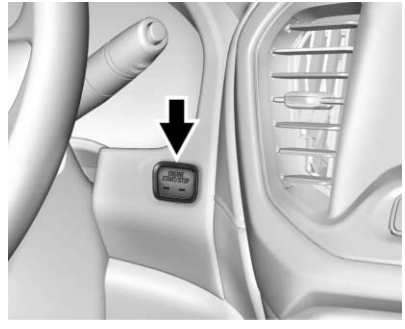

Vehicles with Keyless Access have pushbutton starting.

Pressing the button cycles it through three modes: ACC/ACCESSORY, ON/RUN/START, and Stopping the Engine/LOCK/OFF.

The Remote Keyless Entry (RKE) transmitter must be in the vehicle for the system to operate. If the pushbutton start is not working, the vehicle may be near a strong radio antenna signal causing interference to the Keyless Access system. See *Remote Keyless Entry (RKE) System Operation* ⇨ *29*.

To shift out of P (Park), the vehicle must be in ACC/ACCESSORY or ON/RUN and the brake pedal must be applied.

Stopping the Engine/LOCK/OFF (No Indicator Lights) : When the vehicle is stopped, press ENGINE START/STOP once to turn the engine off.

If the vehicle is in P (Park), the ignition will turn off, and Retained Accessory Power (RAP) will remain active. See *Retained Accessory Power (RAP)* ⇨ *230*.

If the vehicle is not in P (Park), the ignition will return to ACC/ACCESSORY and display the message SHIFT TO PARK in the Driver Information Center (DIC). See *Transmission Messages* ⇨ *156*. When the vehicle is shifted into P (Park), the ignition system will switch to OFF.

Do not turn the engine off when the vehicle is moving. This will cause a loss of power assist in the brake and steering systems and disable the airbags.

If the vehicle must be shut off in an emergency:

1. Brake using a firm and steady pressure. Do not pump the brakes repeatedly. This may deplete power assist, requiring increased brake pedal force.
2. Shift the vehicle to N (Neutral). This can be done while the vehicle is moving. After shifting to N (Neutral), firmly apply the brakes and steer the vehicle to a safe location.
3. Come to a complete stop, shift to P (Park), and turn the ignition to OFF. On vehicles with an automatic transmission, the shift lever must be in P (Park) to turn the ignition switch to the OFF position.
4. Set the parking brake. See *Electric Parking Brake* ⇨ *238*.

⚠ Warning

Turning off the vehicle while moving may cause loss of power assist in the brake and steering systems and disable the airbags. While driving, only shut the vehicle off in an emergency.

If the vehicle cannot be pulled over, and must be shut off while driving, press and hold ENGINE START/STOP for longer than two seconds, or press twice in five seconds.

ACC/ACCESSORY (Amber Indicator Light) : This mode allows some electrical accessories to be used when the engine is off.

With the ignition off, pressing the button one time without the brake pedal applied will place the ignition system in ACC/ACCESSORY.

The ignition will switch from ACC/ACCESSORY to OFF after five minutes to prevent battery rundown.

ON/RUN/START (Green Indicator Light) : This mode is for driving and starting. With the ignition off, and the brake pedal applied, pressing the button once will place the ignition system in ON/RUN/START. Once engine cranking begins, release the button. Engine cranking will continue until the engine starts. See *Starting the Engine* ⇨ *227*. The ignition will then remain in ON/RUN.

Service Only Mode

This power mode is available for service and diagnostics, and to verify the proper operation of the malfunction indicator lamp as may be required for emission inspection purposes. With the vehicle off, and the brake pedal not applied, pressing and holding the button for more than five seconds will place

the vehicle in Service Only Mode. The instruments and audio systems will operate as they do in ON/RUN, but the vehicle will not be able to be driven. The engine will not start in Service Only Mode. Press the button again to turn the vehicle off.

Starting the Engine

Move the shift lever to P (Park) or N (Neutral). The engine will not start in any other position. To restart the engine when the vehicle is already moving, use N (Neutral) only.

Caution

Do not try to shift to P (Park) if the vehicle is moving. If you do, you could damage the transmission. Shift to P (Park) only when the vehicle is stopped.

Caution

If you add electrical parts or accessories, you could change the way the engine operates. Any resulting damage would not be covered by the vehicle warranty. See *Add-On Electrical Equipment* ⇨ *279*.

Starting Procedure

1. With the Keyless Access system, the RKE transmitter must be in the vehicle. Press ENGINE START/STOP with the brake pedal applied. When the engine begins cranking, let go of the button.

   The idle speed will go down as the engine gets warm. Do not race the engine immediately after starting it.

   If the RKE transmitter is not in the vehicle, if there is interference, or if the RKE battery is low, the Driver Information Center (DIC) will display a message. See *Key and Lock Messages* ⇨ *151*.

Caution

Cranking the engine for long periods of time, by returning the ignition to the START position immediately after cranking has ended, can overheat and damage the cranking motor, and drain the battery. Wait at least 15 seconds between each try, to let the cranking motor cool down.

2. If the engine does not start after five to 10 seconds, especially in very cold weather (below −18 °C or 0 °F), it could be flooded with too much gasoline. Try pushing the accelerator pedal all the way to the floor and holding it there as you press ENGINE START/STOP, for up to a maximum of 15 seconds. Wait at least 15 seconds between each try, to allow the cranking motor to cool down. When the engine

starts, let go of the button and the accelerator. If the vehicle starts briefly but then stops again, do the same thing. This clears the extra gasoline from the engine. Do not race the engine immediately after starting it. Operate the engine and transmission gently until the oil warms up and lubricates all moving parts.

Stop/Start System

⚠ Warning

Exiting the vehicle without first shifting into P (Park) may cause the vehicle to move. You or others may be injured. Because the vehicle has the auto engine stop/start feature, the vehicle's engine might seem to be shut off; however, once the brake pedal is released, the engine will start up again.

Shift to P (Park) and turn the ignition to LOCK/OFF, before exiting the vehicle.

If equipped with the 2.5L L4 engine, the vehicle has a fuel saving stop/start system to shut off the engine to help conserve fuel.

Auto Engine Stop/Start

When the brakes are applied and the vehicle is at a complete stop, the engine may turn off. When stopped, the tachometer displays AUTO STOP. See *Tachometer* ⇨ *127*. When the brake pedal is released or the accelerator pedal is pushed, the engine will restart.

Auto Stop may be deactivated if:

- A minimum vehicle speed is not reached.
- The engine or transmission is not at the required operating temperature.
- The outside temperature is not in the required operating range, typically between −10 °C (14 °F) and 50 °C (122 °F).
- The shift lever is in any gear other than D (Drive).
- The battery charge is low.
- The interior comfort level has not reached the required level for the climate control system or defog settings.
- The Auto Stop time is greater than two minutes.

Engine Heater

The engine coolant heater can provide easier starting and better fuel economy during engine warm-up in cold weather conditions at or below 0 °F (−18 °C). Vehicles with an engine coolant heater should be plugged in at least four hours before starting. Some models may have an internal thermostat in the cord which will prevent engine coolant heater operation at temperatures above 0 °F (−18 °C).

To Use the Engine Coolant Heater

1. Turn off the engine.

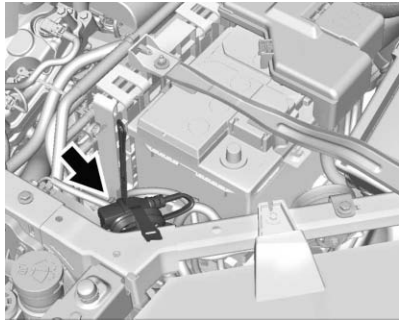

2. Open the hood and unwrap the electrical cord. The bundled cord is on the driver side of the engine compartment, in front of the battery. See *Engine Compartment Overview* ⇨ *284*.

   Check the heater cord for damage. If it is damaged, do not use it. See your dealer for a replacement. Inspect the cord for damage yearly.

3. Plug the cord into a normal, grounded 110-volt AC outlet.

⚠ Warning

Improper use of the heater cord or an extension cord can damage the cord and may result in overheating and fire.

- Plug the cord into a three-prong electrical utility receptacle that is protected by a ground fault detection function. An ungrounded outlet could cause an electric shock.
- Use a weatherproof, heavy-duty, 15 amp-rated extension cord if needed. Failure to use the recommended extension cord in good operating condition, or using a damaged heater or extension cord, could make

(Continued)

Warning (Continued)

it overheat and cause a fire, property damage, electric shock, and injury.

- Do not operate the vehicle with the heater cord permanently attached to the vehicle. Possible heater cord and thermostat damage could occur.
- While in use, do not let the heater cord touch vehicle parts or sharp edges. Never close the hood on the heater cord.
- Before starting the vehicle, unplug the cord, reattach the cover to the plug, and securely fasten the cord. Keep the cord away from any moving parts.

4. Before starting the engine, be sure to unplug and store the cord as it was before to keep it

away from moving engine parts. If you do not, it could be damaged.

The length of time the heater should remain plugged in depends on several factors. Ask a dealer in the area where you will be parking the vehicle for the best advice on this.

Retained Accessory Power (RAP)

The following vehicle accessories may be used for up to 10 minutes after the engine is turned off:

- Audio System
- Power Windows
- Sunroof (if equipped)

Power to the windows and sunroof will work up to 10 minutes or until any door is opened.

The audio system continues to work for 10 minutes or until the driver door is opened.

For an additional 10 minutes of operation, close all the doors and place the ignition to ACC/ACCESSORY or ON/RUN, and then back to LOCK/OFF.

All of these features will work when the ignition is in the ON/RUN or ACC/ACCESSORY positions.

Shifting Into Park

1. Hold the brake pedal down and set the parking brake. See *Electric Parking Brake* ⇨ *238*.
2. Move the shift lever into P (Park) by holding in the button on the shift lever and pushing the shift lever all the way toward the front of the vehicle.
3. Turn the ignition to LOCK/OFF.

Leaving the Vehicle with the Engine Running

⚠ Warning

It can be dangerous to leave the vehicle with the engine running. It could overheat and catch fire.

It is dangerous to get out of the vehicle if the shift lever is not fully in P (Park) with the parking brake firmly set. The vehicle can roll.

Do not leave the vehicle when the engine is running. If you have left the engine running, the vehicle can move suddenly. You or others could be injured. To be sure the vehicle will not move, even when you are on fairly level ground, always set the parking brake and move the shift lever to P (Park). See *Shifting Into Park* ⇨ *230*.
If you are towing a trailer, see *Driving Characteristics and Towing Tips* ⇨ *272*.

If you have to leave the vehicle with the engine running, be sure the vehicle is in P (Park) and the parking brake is firmly set before you leave it. After you have moved the shift lever into P (Park), hold the regular brake pedal down. Then, see if you can move the shift lever away from P (Park) without first pressing the button.

If you can, it means that the shift lever was not fully locked in P (Park).

Torque Lock

Torque lock is when the weight of the vehicle puts too much force on the parking pawl in the transmission. This happens when parking on a hill and shifting the transmission into P (Park) is not done properly and then it is difficult to shift out of P (Park). To prevent torque lock, set the parking brake and then shift into P (Park). To find out how, see “Shifting Into Park” listed previously.

If torque lock does occur, your vehicle may need to be pushed uphill by another vehicle to relieve the parking pawl pressure, so you can shift out of P (Park).

Shifting out of Park

The vehicle is equipped with an electronic shift lock release system. The shift lock release is designed to prevent movement of the shift lever out of P (Park), unless the ignition is in ON/RUN or ACC/ACCESSORY and the regular brake pedal is applied.

The shift lock release is always functional except in the case of an uncharged or low voltage (less than 9-volt) battery.

If the vehicle has an uncharged battery or a battery with low voltage, try charging or jump starting the battery. See *Jump Starting - North America* ⇨ *349* for more information.

To shift out of P (Park):

1. Place the ignition in ON/RUN.
2. Apply the brake pedal.
3. Press the shift lever button.
4. Move the shift lever to the desired position.

If you still are unable to shift out of P (Park):

1. Fully release the shift lever button.
2. While holding down the brake pedal, press the shift lever button again.
3. Move the shift lever to the desired position.

If you still cannot move the shift lever from P (Park), see your dealer.

Parking over Things That Burn

⚠ Warning

Things that can burn could touch hot exhaust parts under the vehicle and ignite. Do not park over papers, leaves, dry grass, or other things that can burn.

Extended Parking

It is better not to park with the vehicle running. If the vehicle is left while running, follow the proper steps to be sure the vehicle will not move and there is adequate ventilation. See *Shifting Into Park* ➪ *230* and *Engine Exhaust* ➪ *232*.

If the vehicle is left in P (Park) while running and the Remote Keyless Entry (RKE) transmitter is outside the vehicle, the vehicle will turn off after one hour.

If the vehicle is left in P (Park) while running and the RKE transmitter is inside, the vehicle will run for two hours. At the end of the second hour, the vehicle will turn off.

The timer will reset if the vehicle is taken out of P (Park) while it is running.

Engine Exhaust

⚠ Warning

Engine exhaust contains carbon monoxide (CO), which cannot be seen or smelled. Exposure to CO can cause unconsciousness and even death.

Exhaust may enter the vehicle if:

- The vehicle idles in areas with poor ventilation (parking garages, tunnels, deep snow that may block underbody airflow or tail pipes).
- The exhaust smells or sounds strange or different.
- The exhaust system leaks due to corrosion or damage.
- The vehicle exhaust system has been modified, damaged, or improperly repaired.

(Continued)

Warning (Continued)

- There are holes or openings in the vehicle body from damage or aftermarket modifications that are not completely sealed.

If unusual fumes are detected or if it is suspected that exhaust is coming into the vehicle:

- Drive it only with the windows completely down.
- Have the vehicle repaired immediately.

Never park the vehicle with the engine running in an enclosed area such as a garage or a building that has no fresh air ventilation.

Running the Vehicle While Parked

It is better not to park with the engine running.

If the vehicle is left with the engine running, follow the proper steps to be sure the vehicle will not move. See *Shifting Into Park* ⇨ *230* and *Engine Exhaust* ⇨ *232*.

If parking on a hill and pulling a trailer, see *Driving Characteristics and Towing Tips* ⇨ *272*.

Automatic Transmission

P : This position locks the front wheels. It is the best position to use when starting the engine because the vehicle cannot move easily.

⚠ Warning

It is dangerous to get out of the vehicle if the shift lever is not fully in P (Park) with the parking brake firmly set. The vehicle can roll.

(Continued)

Warning (Continued)

Do not leave the vehicle when the engine is running. If you have left the engine running, the vehicle can move suddenly. You or others could be injured. To be sure the vehicle will not move, even when you are on fairly level ground, always set the parking brake and move the shift lever to P (Park). See *Shifting Into Park* ⇨ *230* and *Driving Characteristics and Towing Tips* ⇨ *272*.

Make sure the shift lever is fully in P (Park) before starting the engine. The vehicle has an automatic transmission shift lock control system. With the ignition in ON/RUN, fully apply the regular brake, then press the button on the back of the shift lever before shifting from P (Park). If you cannot shift out of P (Park), ease pressure on the shift lever, then push the shift lever all the way into P (Park) as you maintain brake application. Then

press the shift lever button and move the shift lever into another gear. See *Shifting out of Park* ⇨ *231*.

R : Use this gear to back up.

Caution

Shifting to R (Reverse) while the vehicle is moving forward could damage the transmission. The repairs would not be covered by the vehicle warranty. Shift to R (Reverse) only after the vehicle is stopped.

To rock the vehicle back and forth to get out of snow, ice, or sand without damaging the transmission, see *If the Vehicle Is Stuck* ⇨ *220*.

N : In this position, the engine does not connect with the wheels. To restart the engine when the vehicle is already moving, use N (Neutral) only. Also, use N (Neutral) when the vehicle is being towed.

⚠ Warning

Shifting into a drive gear while the engine is running at high speed is dangerous. Unless your foot is firmly on the brake pedal, the vehicle could move very rapidly. You could lose control and hit people or objects. Do not shift into a drive gear while the engine is running at high speed.

Caution

Shifting out of P (Park) or N (Neutral) with the engine running at high speed may damage the transmission. The repairs would not be covered by the vehicle warranty. Be sure the engine is not running at high speed when shifting the vehicle.

D : This position is for normal driving. It provides the best fuel economy. If you need more power for passing, and you are:

- Going less than 56 km/h (35 mph), push the accelerator pedal about halfway down.
- Going about 56 km/h (35 mph) or more, push the accelerator all the way down.

Caution

If the vehicle does not shift gears, the transmission could be damaged. Have the vehicle serviced right away.

If the vehicle is stopped on a hill, with your foot off the brake pedal, the vehicle may roll. This is normal and is due to the torque converter designed to improve fuel economy and performance. Use the brake to hold the vehicle on a hill. Do not use the accelerator pedal.

L : This position gives you access to gear ranges. This provides more engine braking but lower fuel

economy than D (Drive). You can use it on very steep hills, or in deep snow or mud. See *Manual Mode* ⇨ *235*.

Operating Modes : The transmission may operate in a lower gear than normal to improve vehicle performance. The engine speed may be higher and there may be an increase in noise during the following conditions:

- When climbing a grade.
- When driving downhill.
- When driving in hot temperatures, or at high altitude.

Manual Mode

Electronic Range Select (ERS) Mode

ERS mode allows you to choose the top-gear limit of the transmission and the vehicle's speed while driving downhill or towing a trailer. The vehicle has an electronic shift position indicator within the instrument cluster. When using the ERS mode a number will display next to the L, indicating the highest gear available for the range selected.

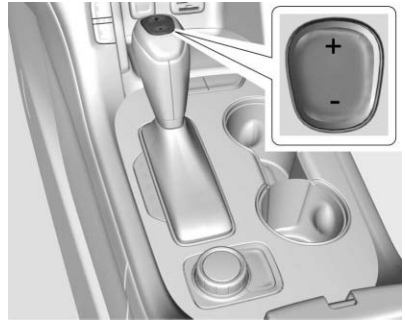

To use this feature:

1. Move the shift lever to L (Low).
2. Press + (Plus) or − (Minus) on the shift lever to increase or decrease the gear range available.

When you shift from D (Drive) to L (Low), the transmission will shift to a pre-determined lower gear range. The highest gear available for this pre-determined range is displayed next to the L in the DIC. See *Driver Information Center (DIC) (Base and Midlevel)* ⇨ *141* or *Driver Information Center (DIC) (Uplevel)* ⇨ *144*. The number displayed in the DIC is the highest gear that the transmission will be allowed to operate in. This means that all gears below that number are available. For example, when 4 (Fourth) is shown next to the L, 1 (First) through 4 (Fourth) gears are automatically shifted by the vehicle. The transmission will not shift into 5 (Fifth) until the + (Plus) button is used or you shift back into D (Drive).

If the transmission is in 6 (Sixth) gear when L (Low) is selected, a downshift to 4 (Fourth) will be commanded. If in 5 (Fifth) through 2 (Second) a single downshift will occur.

While in L (Low), the transmission will prevent shifting to a lower gear range if the engine speed is too high. You have a brief period of time to slow the vehicle. If vehicle speed is not reduced within the time

allowed, the lower gear range shift will not be completed. You must further slow the vehicle, then press − (Minus) to the desired lower gear range.

Automatic Engine Grade Braking is not available when the ERS is active. It is available in D (Drive) for both normal driving and Tow/Haul Mode. While using the ERS, cruise control and the Tow/Haul Mode can be used. See “Tow/Haul Mode” following.

Tow/Haul Mode

This feature can assist when towing or hauling a heavy load.

: Select Tow/Haul Mode with the knob on the center console.

When Tow/Haul is activated, the Tow/Haul symbol will come on in the instrument cluster. See *Driving Characteristics and Towing Tips* ⇨ *272* and *Driver Mode Control* ⇨ *243*.

Automatic Engine Grade Braking

Automatic Engine Grade Braking assists when driving downhill. It maintains vehicle speed by automatically implementing a shift pattern that uses the engine and the transmission to slow the vehicle. The system will automatically command downshifts to reduce vehicle speed. The normal shift pattern will return once the vehicle is on a low grade or when the accelerator pedal is pressed.

While in the Electronic Range Select (ERS) mode, grade braking is deactivated, allowing the driver to select a range and limiting the highest gear available. Grade braking is available for normal driving and in Tow/Haul Mode.

See *Automatic Transmission* ⇨ *233*.

Drive Systems

All-Wheel Drive

Vehicles with this feature can operate in AWD Mode.

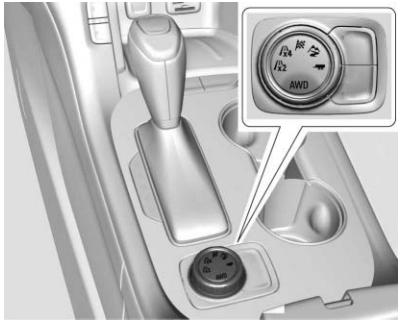

Turn the knob to /X4 to select All-Wheel Drive (AWD).

AWD is active in both AWD and Sport Mode.

The AWD Mode will stay selected until the mode is changed. If the vehicle is placed in Sport Mode, see *Driver Mode Control* ⇨ *243*.

Sport Mode is canceled with each ignition cycle. See *Driver Mode Control* ⇨ *243*.

When operated in FWD, the vehicle will deliver power to the front wheels only and may provide better fuel economy.

When using a compact spare tire on an AWD vehicle, the system automatically detects the compact spare and reduces AWD performance to protect the system. To restore full AWD operation and prevent excessive wear on the system, replace the compact spare with a full-size tire as soon as possible. See *Compact Spare Tire* ⇨ *348*.

Brakes

Antilock Brake System (ABS)

This vehicle has an Antilock Brake System (ABS), an advanced electronic braking system that helps prevent a braking skid.

When the vehicle begins to drive away, ABS checks itself.
A momentary motor or clicking noise may be heard while this test is going on, and it may even be noticed that the brake pedal moves a little. This is normal.

If there is a problem with ABS, this warning light stays on. See *Antilock Brake System (ABS) Warning Light* ⇨ *135*.

If driving safely on a wet road and it becomes necessary to slam on the brakes and continue braking to avoid a sudden obstacle, a computer senses the wheels are slowing down. If one of the wheels is about to stop rolling, the computer will separately work the brakes at each wheel.

ABS can change the brake pressure to each wheel, as required, faster than any driver could. This can help you steer around the obstacle while braking hard.

As the brakes are applied, the computer keeps receiving updates on wheel speed and controls braking pressure accordingly.

Remember: ABS does not change the time needed to get a foot up to the brake pedal or always decrease stopping distance. If you get too close to the vehicle in front of you, there will not be enough time to apply the brakes if that vehicle suddenly slows or stops. Always leave enough room up ahead to stop, even with ABS.

Using ABS

Do not pump the brakes. Just hold the brake pedal down firmly and let ABS work. You may hear the ABS pump or motor operating and feel the brake pedal pulsate. This is normal.

Braking in Emergencies

ABS allows you to steer and brake at the same time. In many emergencies, steering can help more than even the very best braking.

Electric Parking Brake

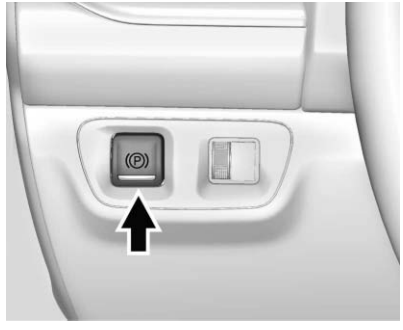

The Electric Parking Brake (EPB) switch is on the instrument panel, to the left of the steering wheel. The EPB can always be activated, even if the ignition is off. To prevent draining the battery, avoid repeated cycles of the EPB when the engine is not running.

The system has a red parking brake status light and an amber parking brake warning light. See *Electric Parking Brake Light* ⇨ *135* and *Service Electric Parking Brake Light* ⇨ *135*. There are also parking brake-related Driver Information Center (DIC) messages. See *Brake System Messages* ⇨ *148*. In case of insufficient electrical power, the EPB cannot be applied or released.

Before leaving the vehicle, check the red parking brake status light to ensure that the parking brake is applied.

EPB Apply

To apply the EPB:

1. Be sure the vehicle is at a complete stop.
2. Press the switch momentarily.

The red parking brake status light will flash and then stay on once the EPB is fully applied. If the red parking brake status light flashes continuously, then the EPB is only partially applied or there is a problem with the EPB. A DIC message will display. Release the EPB and try to apply it again. If the light does not come on, or keeps flashing, have the vehicle serviced. Do not drive the vehicle if the red parking brake status light is flashing. See your dealer. See *Electric Parking Brake Light* ⇨ *135*.

If the amber parking brake warning light is on, hold down the EPB switch. Continue to hold the switch until the red parking brake status light remains on. If the amber parking brake warning light remains on, see your dealer.

If the EPB is applied while the vehicle is moving, the vehicle will decelerate as long as the switch is pressed. If the switch is pressed until the vehicle comes to a stop, the EPB will remain applied.

The EPB applies automatically when shifting to P (Park) on a steep incline. The EPB releases as soon as the vehicle is shifted out of P (Park) and the vehicle accelerates.

If the EPB fails to apply, the rear wheels should be blocked to prevent vehicle movement.

EPB Release

To release the EPB:

1. Place the ignition in ACC/ACCESSORY or ON/RUN.
2. Apply and hold the brake pedal.
3. Press the EPB switch momentarily.

The EPB is released when the red parking brake status light is off.

If the amber parking brake warning light is on, release the EPB by pressing and holding the EPB switch. Continue to hold the switch until the red parking brake status light is off. If either light stays on after release is attempted, see your dealer.

Caution

Driving with the parking brake on can overheat the brake system and cause premature wear or damage to brake system parts. Make sure that the parking brake is fully released and the brake warning light is off before driving.

Automatic EPB Release

Avoid rapid acceleration when the EPB is applied, to preserve parking brake lining life.

The EPB will automatically release when the engine is running, the transmission is placed into gear, and an attempt is made to drive away by pressing the accelerator pedal.

If parking on a hill, or if the vehicle is pulling a trailer, see *Driving Characteristics and Towing Tips* ⇨ *272*.

Brake Assist

The Brake Assist feature is designed to assist the driver in stopping or decreasing vehicle speed in emergency driving conditions. This feature uses the stability system hydraulic brake control module to supplement the power brake system under conditions where the driver has quickly and forcefully applied the brake pedal in an attempt to quickly stop or slow down the vehicle. The stability system hydraulic brake control module increases brake pressure at each corner of the vehicle until the ABS activates. Minor brake pedal pulsation or pedal movement during this time is normal and the driver should continue to apply the brake pedal as the driving situation dictates. The Brake Assist feature will automatically disengage when the brake pedal is released or brake pedal pressure is quickly decreased.

Automatic Vehicle Hold (AVH)

The Automatic Vehicle Hold (AVH) feature provides Hill Start Assist (HSA). This feature will activate when the vehicle is stopped on a moderate to steep grade to help prevent it from rolling in an unintended direction. After the brake pedal has been released and before the accelerator pedal has been pressed, AVH uses braking pressure to hold the vehicle stationary. If AVH is holding the vehicle, a DIC message displays. AVH will not activate in a forward drive gear when facing downhill, or in R (Reverse) when facing uphill.

Select the duration of the AVH feature on the center stack touchscreen by choosing the submenu for Automatic Vehicle Hold. See “Comfort and Convenience” in *Vehicle Personalization* ⇨ *157*. When Short and Auto Park Brake Off is selected, the vehicle is held stationary for up to two seconds after the brake pedal is released. When Long and Auto Park Brake On is selected, the vehicle is held stationary for up to five minutes after the brake pedal is released. In either case, override the hold feature by pressing the accelerator pedal and attempting to drive away.

If Short and Auto Park Brake Off is selected in the Settings menu, it will hold the vehicle for two seconds unless the driver door is opened or the driver safety belt is unbuckled after releasing the brake pedal.
If Long and Auto Park Brake On is selected, it will hold the vehicle for five minutes unless the driver door is opened and the driver safety belt is unbuckled prior to releasing the brake pedal. When deactivated after five minutes, or if it is deactivated when the driver safety belt is unlatched or the driver door is opened, the Electric Parking Brake will engage to prevent vehicle movement.

Ride Control Systems

Traction Control/ Electronic Stability Control

System Operation

The vehicle has a Traction Control System (TCS) and StabiliTrak®, an electronic stability control system. These systems help limit wheel spin and assist the driver in maintaining control, especially on slippery road conditions.

TCS activates if it senses that any of the drive wheels are spinning or beginning to lose traction. When this happens, TCS applies the brakes to the spinning wheels and reduces engine power to limit wheel spin.

StabiliTrak activates when the vehicle senses a difference between the intended path and the direction the vehicle is actually traveling. StabiliTrak selectively applies braking pressure to any one of the vehicle wheel brakes to assist the driver in keeping the vehicle on the intended path.

If cruise control is being used and TCS or StabiliTrak begins to limit wheel spin, cruise control will disengage. Cruise control may be turned back on when road conditions allow. TCS and StabiliTrak will automatically turn on when cruise control is set.

Both systems come on automatically when the vehicle is started and begins to move. The systems may be heard or felt while they are operating or while performing diagnostic checks. This is normal and does not mean there is a problem with the vehicle.

It is recommended to leave both systems on for normal driving conditions, but it may be necessary to turn TCS off if the vehicle gets stuck in sand, mud, ice, or snow. See *If the Vehicle Is Stuck* ⇨ *220* and “Turning the Systems Off and On” later in this section.

The indicator light for both systems is in the instrument cluster. This light will:

- Flash when TCS is limiting wheel spin.
- Flash when StabiliTrak is activated.
- Turn on and stay on when either system is not working.

If either system fails to turn on or to activate, a message displays in the Driver Information Center (DIC), and comes on and stays on to indicate that the system is inactive and is not assisting the driver in maintaining control. The vehicle is safe to drive, but driving should be adjusted accordingly.

If comes on and stays on:

1. Stop the vehicle.

2. Turn the engine off and wait 15 seconds.
3. Start the engine.
4. Drive the vehicle.

If comes on and stays on, the vehicle may need more time to diagnose the problem. If the condition persists, see your dealer.

Turning the Systems Off and On

Caution

Do not repeatedly brake or accelerate heavily when TCS is off. The vehicle driveline could be damaged.

To turn off only TCS, press and release . The Traction Off light displays in the instrument cluster and the appropriate DIC message displays. See *Ride Control System Messages* ⇨ *154*.

To turn TCS on again, press and release . The Traction Off light displayed in the instrument cluster will turn off.

If TCS is limiting wheel spin when is pressed, the system will not turn off until the wheels stop spinning.

To turn off both TCS and StabiliTrak, press and hold until the Traction Off light and StabiliTrak OFF light come on and stay on in the instrument cluster. The appropriate DIC message displays. See *Ride Control System Messages* ⇨ *154*.

To turn TCS and StabiliTrak on again, press and release . The Traction Off light and StabiliTrak OFF light in the instrument cluster turn off.

Adding accessories can affect the vehicle performance. See *Accessories and Modifications* ⇨ *281*.

Hill Descent Control (HDC)

If equipped, HDC can be used when driving downhill. It sets and maintains vehicle speed while descending a very steep incline in a forward or reverse gear.

The HDC switch is on the center console, behind the transmission shift lever.

Press to enable or disable HDC. Vehicle speed must be below 50 km/h (31 mph).

The HDC light displays on the instrument cluster when enabled.

HDC can maintain vehicle speeds between 3 and 22 km/h (2 and 14 mph) on an incline greater than or equal to a 10% grade. A blinking HDC light indicates the system is actively applying the brakes to maintain vehicle speed.

When HDC is activated, the initial HDC speed is set to the current driving speed. It can be increased or decreased by pressing the RES+ or SET– steering wheel controls or by applying the accelerator or brake pedal. This adjusted speed becomes the new set speed.

HDC will remain enabled between 22 and 60 km/h (14 and 37 mph); however vehicle speed cannot be set or maintained in this range. It will automatically disable if the vehicle speed is above 80 km/h (50 mph) or above 60 km/h (37 mph) for at least 30 seconds. Press again to re-enable HDC.

When enabled, if the vehicle is at a speed above 22 km/h (14 mph) and less than 60 km/h (37 mph), a DIC message will display. See *Vehicle Speed Messages* ⇨ *157*.

Driver Mode Control

If equipped, the Driver Mode Control has the following Modes: Front-Wheel Drive (FWD), Sport, All −Wheel Drive (AWD), Snow/Ice, Tow/Haul, and Off-Road. Rotate the Driver Mode Control knob on the center console to make a mode selection. Continue turning the knob through the available modes.

If the vehicle is in FWD or AWD, it will stay in that mode through future ignition cycles. If the vehicle is in any other mode, it will revert back to FWD when the vehicle is restarted.

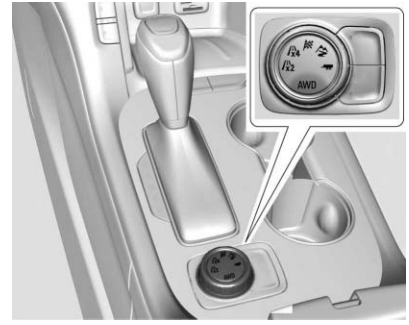

Driver Mode Control Knob

x2 or FWD : Vehicle is in FWD Mode. Use this mode during normal driving conditions. See *Driving for Better Fuel Economy* ⇨ *26*. FWD Mode operates in Front-Wheel Drive to improve fuel economy.

Sport : Sport Mode improves vehicle handling and acceleration on dry pavement. When active, Sport Mode modifies steering efforts, transmission shifting, AWD torque, and suspension tuning (when properly equipped). For AWD vehicles, choosing Sport Mode also engages AWD Mode.

AWD (AWD Only) : AWD Mode provides drive torque to all four wheels. Select AWD to improve traction and control on slippery road surfaces, such as gravel, sand, wet pavement, snow, and ice. When in AWD Mode, the AWD Mode indicator will be on. For more information on the AWD Mode, see *All-Wheel Drive* ⇨ *237*.

Snow/Ice (FWD Only) : Snow/Ice Mode improves vehicle acceleration on snow and ice covered roads.

Tow Haul : Available when the vehicle is in FWD or AWD Mode. Use this mode to assist in maintaining desired vehicle speeds when driving on downhill grades by using the engine and transmission to slow the vehicle. See *Tow/Haul Mode* ⇨ *236*.

Off-Road (AWD Only) : Vehicle is in AWD Mode. Use this mode for off-road recreational driving. For more information on Off-Road Mode, see *Off-Road Driving* ⇨ *213*.

Cruise Control

⚠ Warning

Cruise control can be dangerous where you cannot drive safely at a steady speed. Do not use cruise control on winding roads or in heavy traffic.

Cruise control can be dangerous on slippery roads. On such roads, fast changes in tire traction can cause excessive wheel slip, and you could lose control. Do not use cruise control on slippery roads.

With cruise control, a speed of about 40 km/h (25 mph) or more can be maintained without keeping your foot on the accelerator. Cruise control does not work at speeds below about 40 km/h (25 mph).

If the Traction Control System (TCS) or StabiliTrak® electronic stability control system begins to limit wheel spin while using cruise control, the cruise control automatically disengages. See *Traction Control/ Electronic Stability Control* ⇨ *241*. If a collision alert occurs when cruise control is activated, cruise control is disengaged. See *Forward Collision Alert (FCA) System* ⇨ *258*. When road conditions allow the cruise control to be safely used, cruise control can be turned back on.

Turning off the TCS or StabiliTrak system will disengage the cruise control.

If the brakes are applied, cruise control disengages.

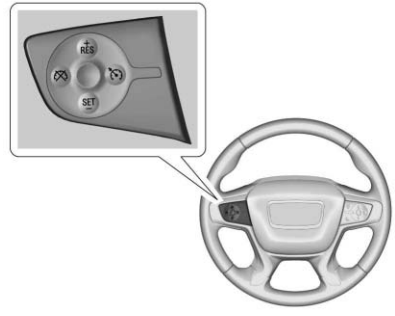

: Press to turn the system on and off. A white indicator appears in the instrument cluster when cruise is turned on.

RES+ : If there is a set speed in memory, press briefly to resume to that speed or press and hold to accelerate. If the cruise control is already active, use to increase vehicle speed.

SET− : Press briefly to set the speed and activate cruise control. If the cruise control is already active, use to decrease vehicle speed.

: Press to disengage cruise control without erasing the set speed from memory.

Setting Cruise Control

If is on when not in use, SET− or RES+ could get pressed and go into cruise when not desired. Keep off when cruise is not being used.

1. Press .
2. Get up to the desired speed.
3. Press and release SET−. The desired set speed briefly appears in the instrument cluster.
4. Remove your foot from the accelerator.

When the cruise control has been set to the desired speed, a green cruise control indicator appears on the instrument cluster.

Resuming a Set Speed

If the cruise control is set at a desired speed and then the brakes are applied or is pressed, the cruise control is disengaged without erasing the set speed from memory.

Once the vehicle speed reaches about 40 km/h (25 mph) or more, press RES+ briefly. The vehicle returns to the previous set speed.

Increasing Speed While Using Cruise Control

If the cruise control system is already activated:

- Press and hold RES+ up until the desired speed is reached, then release it.
- To increase vehicle speed in small increments, briefly press RES+. For each press, the vehicle goes about 1 km/h (1 mph) faster.

The speedometer reading can be displayed in either English or metric units. See *Instrument Cluster* ⇨ *123*. The increment value used depends on the units displayed.

Reducing Speed While Using Cruise Control

If the cruise control system is already activated:

- Press and hold SET− until the desired lower speed is reached, then release it.
- To decrease the vehicle speed in small increments, briefly press SET−. For each press, the vehicle goes about 1 km/h (1 mph) slower.

The speedometer reading can be displayed in either English or metric units. See *Instrument Cluster* ⇨ *123*. The increment value used depends on the units displayed.

Passing Another Vehicle While Using Cruise Control

Use the accelerator pedal to increase the vehicle speed. When you take your foot off the pedal, the vehicle will slow down to the previous set cruise speed.

While pressing the accelerator pedal or shortly following the release to override cruise, briefly applying SET − will result in cruise set to the current vehicle speed.

Using Cruise Control on Hills

How well the cruise control will work on hills depends upon the vehicle speed, load, and the steepness of the hills. When going up steep hills, you might have to step on the accelerator pedal to maintain your speed. While on a hill, the transmission may downshift in order to use engine braking to slow the vehicle and maintain the set speed. Also, you may have to brake or shift to a lower gear to keep your speed down. If the brake pedal is applied, cruise control disengages.

Ending Cruise Control

There are four ways to end cruise control:

- Step lightly on the brake pedal.
- Press .
- Shift the transmission to N (Neutral).
- Press .

Erasing Speed Memory

The cruise control set speed is erased from memory if is pressed or if the ignition is turned off.

Adaptive Cruise Control

If equipped with Adaptive Cruise Control (ACC), it allows the driver to select the cruise control set speed and following gap. Read this entire section before using this system. The following gap is the following time between your vehicle and a vehicle detected directly ahead in your path, moving in the same direction. If no vehicle is detected in your path, ACC works like regular cruise control. ACC uses camera and radar sensors. See *Radio Frequency Statement* ⇨ *392*.

If a vehicle is detected in your path, ACC can apply acceleration or limited, moderate braking to maintain the selected following gap. To disengage ACC, apply the brake. If ACC is controlling your vehicle speed when the Traction Control System (TCS) or StabiliTrak® electronic stability control system activates, the ACC may automatically disengage. See *Traction Control/Electronic Stability Control* ⇨ *241*. When road conditions allow ACC to be safely used, the ACC can be turned back on.

Turning off the TCS or StabiliTrak system will disengage the cruise control.

⚠ Warning

ACC has limited braking ability and may not have time to slow the vehicle down enough to avoid

(Continued)

Warning (Continued)

a collision with another vehicle you are following. This can occur when vehicles suddenly slow or stop ahead, or enter your lane. Also see “Alerting the Driver” in this section. Complete attention is always required while driving and you should be ready to take action and apply the brakes. See *Defensive Driving* ⇨ *211*.

⚠ Warning

ACC will not detect or brake for children, pedestrians, animals, or other objects.

Do not use ACC when:

- On winding and hilly roads or when the sensors are blocked by snow, ice, or dirt. The system may not detect

(Continued)

Warning (Continued)

a vehicle ahead. Keep the entire front of the vehicle clean.

- Visibility is low, such as in fog, rain, or snow conditions. ACC performance is limited under these conditions.
- On slippery roads where fast changes in tire traction can cause excessive wheel slip.

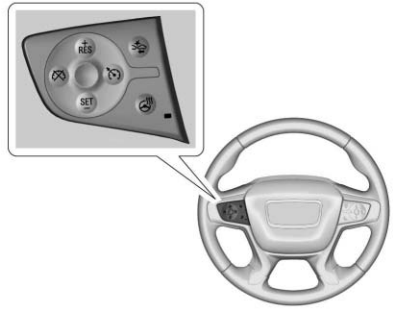

: Press to turn the system on or off. The indicator turns white on the instrument cluster when ACC is turned on.

RES+ : Press briefly to resume the previous set speed or to increase vehicle speed if ACC is already activated. To increase speed by 1 km/h (1 mph), press RES+ to the first detent. To increase speed to the next 5 km/h (5 mph) mark on the speedometer, press RES+ to the second detent.

SET– : Press briefly to set the speed and activate ACC or to decrease vehicle speed if ACC is already activated. To decrease speed by 1 km/h (1 mph), press SET − to the first detent. To decrease speed to the next 5 km/h (5 mph) mark on the speedometer, press SET− to the second detent.

: Press to disengage ACC without erasing the selected set speed.

: Press to select a following gap time (or distance) setting for ACC of Far, Medium, or Near.

Setting Adaptive Cruise Control

If is on when not in use, it could get pressed and go into cruise when not desired. Keep off when cruise is not being used.

Select the set speed desired for cruise. This is the vehicle speed when no vehicle is detected in its path.

ACC will not set at a speed less than 25 km/h (16 mph), although it can be resumed when driving at lower speeds.

To set ACC:

1. Press .
2. Get up to the desired speed.
3. Press and release SET–.
4. Remove foot from the accelerator.

After ACC is set, it may immediately apply the brakes if a vehicle ahead is detected closer than the selected following gap.

The ACC indicator displays on the instrument cluster. When ACC is active, the indicator will be lit green.

Be mindful of speed limits, surrounding traffic speeds, and weather conditions when selecting the set speed.

Resuming a Set Speed

If the ACC is set at a desired speed and then the brakes are applied, ACC is disengaged without erasing the set speed from memory.

To begin using ACC again, press RES+ up briefly. The vehicle returns to the previous set speed.

Increasing Speed While ACC is at a Set Speed

If ACC is already activated, do one of the following:

- Use the accelerator to get to the higher speed. Press SET– . Release the control and the accelerator pedal. The vehicle will now cruise at the higher speed.

  When the accelerator pedal is pressed, ACC will not brake because it is overridden. A warning message will appear on the Driver Information Center (DIC). See *Cruise Control Messages* ⇨ *149*.
- Press and hold RES+ until the desired set speed appears on the display, then release it.
- To increase vehicle speed in small increments, press RES+ to the first detent. For each press, the vehicle goes 1 km/h (1 mph) faster.
- To increase vehicle speed in larger increments, press RES+ to the second detent. For each press, the vehicle speed increases to the next 5 km/h (5 mph) mark on the speedometer.

When it is determined that there is no vehicle ahead or the vehicle ahead is beyond the selected following gap, then the vehicle speed will increase to the set speed.

The speedometer reading can be displayed in either English or metric units. See *Instrument Cluster* ⇨ *123*. The increment value used depends on the units displayed.

Reducing Speed While ACC is at a Set Speed

If ACC is already activated, do one of the following:

- Use the brake to get to the desired lower speed. Press SET– and release the accelerator pedal. The vehicle will now cruise at the lower speed.
- Press and hold SET– until the desired lower speed is reached, then release it.
- To decrease the vehicle speed in smaller increments, press SET− to the first detent. For each press, the vehicle goes about 1 km/h (1 mph) slower.
- To decrease the vehicle speed in larger increments, press SET− to the second detent. For each press, the vehicle speed decreases to the next 5 km/h (5 mph) mark on the speedometer.

The speedometer reading can be displayed in either English or metric units. See *Instrument Cluster* ⇨ *123*. The increment value used depends on the units displayed.

Selecting the Follow Distance Gap

When a slower moving vehicle is detected ahead within the selected following gap, ACC will adjust the vehicle's speed and attempt to maintain the follow distance gap selected.

Press on the steering wheel to adjust the following gap. Each press cycles the gap button through three settings: Far, Medium, or Near.

When pressed, the current gap setting displays briefly on the instrument cluster. The gap setting will be maintained until it is changed.

Since each gap setting corresponds to a following time (Far, Medium, or Near), the following distance will vary based on vehicle speed. The faster the vehicle speed, the further back your vehicle will follow a vehicle detected ahead. Consider traffic and weather conditions when selecting the following gap. The range of selectable gaps may not be appropriate for all drivers and driving conditions.

Changing the gap setting automatically changes the alert timing sensitivity (Far, Medium, or Near) for the Forward Collision Alert (FCA) feature. See *Forward Collision Alert (FCA) System* ⇨ *258*.

Alerting the Driver

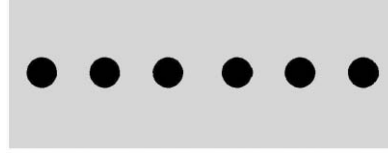

If ACC is engaged, driver action may be required when ACC cannot apply sufficient braking because of approaching a vehicle too rapidly.

When this condition occurs, six red lights will flash on the windshield. Either eight beeps will sound from the front, or both sides of the Safety Alert Seat will pulse five times. See “Collision/Detection Systems” under *Vehicle Personalization* ⇨ *157*.

See *Defensive Driving* ⇨ *211*.

Approaching and Following a Vehicle

The vehicle ahead indicator is in the instrument cluster.

The vehicle ahead indicator only displays when a vehicle is detected in your vehicle’s path moving in the same direction.

If this symbol is not displaying, ACC will not respond to or brake for vehicles ahead.

ACC automatically slows the vehicle down and adjusts vehicle speed to follow the vehicle in front at the selected follow gap. The vehicle speed increases or decreases to follow the vehicle in front of you, but will not exceed the set speed. It may apply limited braking, if necessary. When braking is active, the brake lights will come on. The automatic braking may feel or sound different than if the brakes were applied manually. This is normal.

Stationary or Very Slow-Moving Objects

⚠ Warning

ACC may not detect and react to stopped or slow-moving vehicles ahead of you. For example, the system may not brake for a vehicle it has never detected moving. This can occur in

(Continued)

Warning (Continued)

stop-and-go traffic or when a vehicle suddenly appears due to a vehicle ahead changing lanes. Your vehicle may not stop and could cause a crash. Use caution when using ACC. Your complete attention is always required while driving and you should be ready to take action and apply the brakes.

ACC Automatically Disengages

ACC may automatically disengage and the driver will need to manually apply the brakes to slow the vehicle when:

- The sensors are blocked.
- The Traction Control System (TCS) or electronic stability control system has activated or been disabled.
- No traffic or other objects are being detected.
- There is a fault in the system.

The ACC active symbol will not be displayed when ACC is no longer active.

Notification to Resume ACC

ACC will maintain a follow gap behind a detected vehicle and slow your vehicle to a stop behind that vehicle.

If the stopped vehicle ahead has driven away and ACC has not resumed, the vehicle ahead indicator will flash as a reminder to check traffic ahead before proceeding. In addition, the left and right sides of the Safety Alert Seat will pulse three times, or three beeps will sound. See ”Alert Type” and “Adaptive Cruise Go Notifier” in “Collision/Detection Systems” under *Vehicle Personalization* ⇨ *157*.

When the vehicle ahead drives away, press RES+ or the accelerator pedal to resume cruise control. If stopped for more than two minutes or if the driver door is opened and the driver safety belt is unbuckled, the ACC automatically applies the Electric Parking Brake (EPB) to hold the vehicle. The Electric Parking Brake status light will turn on. See *Electric Parking Brake* ⇨ *238*. To resume ACC and release the EPB, press the accelerator pedal.

A DIC warning message may display indicating to shift to P (Park) before exiting the vehicle. See *Vehicle Messages* ⇨ *147*.

⚠ Warning

If ACC has stopped the vehicle, and if ACC is disengaged, turned off, or canceled, the vehicle will no longer be held at a stop. The vehicle can move. When ACC is holding the vehicle at a stop, always be prepared to manually apply the brakes.

⚠ Warning

Leaving the vehicle without placing it in P (Park) can be dangerous. Do not leave the

(Continued)

Warning (Continued)

vehicle while it is being held at a stop by ACC. Always place the vehicle in P (Park) and turn off the ignition before leaving the vehicle.

ACC Override

If using the accelerator pedal while ACC is active, a DIC warning message will indicate that automatic braking will not occur. See *Vehicle Messages* ⇨ *147*. ACC will resume operation when the accelerator pedal is not being pressed.

⚠ Warning

The ACC will not automatically apply the brakes if your foot is resting on the accelerator pedal. You could crash into a vehicle ahead of you.

Curves in the Road

⚠ Warning

On curves, ACC may not detect a vehicle ahead in your lane. You could be startled if the vehicle accelerates up to the set speed, especially when following a vehicle exiting or entering exit ramps. You could lose control of the vehicle or crash. Do not use ACC while driving on an entrance or exit ramp. Always be ready to use the brakes if necessary.

⚠ Warning

On curves, ACC may respond to a vehicle in another lane, or may not have time to react to a vehicle in your lane. You could crash into a vehicle ahead of you, or lose control of your vehicle. Give extra attention in curves and be ready

(Continued)

Warning (Continued)

to use the brakes if necessary. Select an appropriate speed while driving in curves.

ACC may operate differently in a sharp curve. It may reduce the vehicle speed if the curve is too sharp.

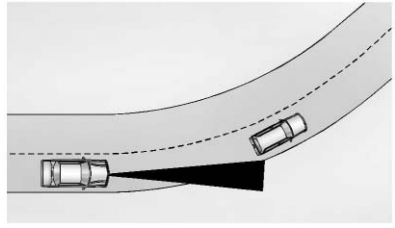

When following a vehicle and entering a curve, ACC may not detect the vehicle ahead and accelerate to the set speed. When this happens, the vehicle ahead indicator will not appear.

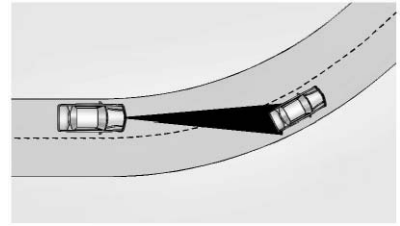

ACC may detect a vehicle that is not in your lane and apply the brakes.

ACC may occasionally provide an alert and/or braking that is considered unnecessary. It could respond to vehicles in different lanes, signs, guardrails, and other stationary objects when entering or exiting a curve. This is normal operation. The vehicle does not need service.

Other Vehicle Lane Changes

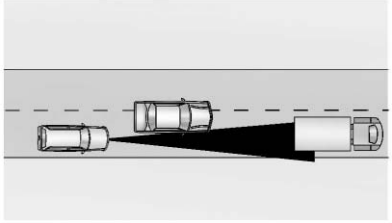

ACC will not detect a vehicle ahead until it is completely in the lane. The brakes may need to be manually applied.

Do Not Use ACC on Hills and When Towing a Trailer

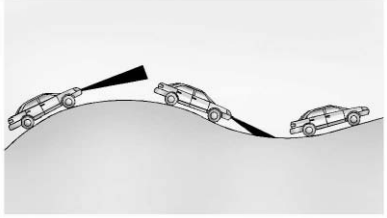

Do not use ACC when driving on steep hills or when towing a trailer. ACC will not detect a vehicle in the lane while driving on steep hills. The driver will often need to take over acceleration and braking on steep hills, especially when towing a trailer. If the brakes are applied, the ACC disengages.

Disengaging ACC

There are three ways to disengage ACC:

- Step lightly on the brake pedal.
- Press .
- Press .

Erasing Speed Memory

The cruise control set speed is erased from memory if is pressed or if the ignition is turned off.

Cleaning the Sensing System

The camera sensor on the windshield behind the rearview mirror and the radar sensors on the front of the vehicle can become blocked by snow, ice, dirt, or mud. These areas need to be cleaned for ACC to operate properly.

For cleaning instructions, see “Washing the Vehicle” under *Exterior Care* ⇨ *355*.

System operation may also be limited under snow, heavy rain, or road spray conditions.

Driver Assistance Systems

This vehicle may have features that work together to help avoid crashes or reduce crash damage while driving, backing, and parking. Read this entire section before using these systems.

⚠ Warning

Do not rely on the Driver Assistance Systems. These systems do not replace the need for paying attention and driving safely. You may not hear or feel alerts or warnings provided by these systems. Failure to use proper care when driving may result in injury, death, or vehicle damage. See *Defensive Driving* ⇨ *211*.

(Continued)

Warning (Continued)

Under many conditions, these systems will not:

- Detect children, pedestrians, bicyclists, or animals.
- Detect vehicles or objects outside the area monitored by the system.
- Work at all driving speeds.
- Warn you or provide you with enough time to avoid a crash.
- Work under poor visibility or bad weather conditions.
- Work if the detection sensor is not cleaned or is covered by ice, snow, mud, or dirt.

(Continued)

Warning (Continued)

- Work if the detection sensor is covered up, such as with a sticker, magnet, or metal plate.
- Work if the area surrounding the detection sensor is damaged or not properly repaired.

Complete attention is always required while driving, and you should be ready to take action and apply the brakes and/or steer the vehicle to avoid crashes.

Audible or Safety Alert Seat

Some driver assistance features alert the driver of obstacles by beeping. To change the volume of the warning chime, see “Comfort and Convenience” under *Vehicle Personalization* ⇨ *157*.

If equipped with the Safety Alert Seat, the driver seat cushion may provide a vibrating pulse alert instead of beeping. To change this,

see “Collision/Detection Systems” under *Vehicle Personalization* ⇨ *157*.

Assistance Systems for Parking or Backing

If equipped, the Rear Vision Camera (RVC), Rear Parking Assist (RPA), Front Parking Assist (FPA), Surround Vision, Front Vision Camera, and Rear Cross Traffic Alert (RCTA) may help the driver park or avoid objects. Always check around the vehicle when parking or backing.

Rear Vision Camera (RVC)

When the vehicle is shifted into R (Reverse), the RVC displays an image of the area behind the vehicle in the infotainment display. The previous screen displays when the vehicle is shifted out of R (Reverse) after a short delay. To return to the previous screen sooner, press a button on the infotainment display, shift into P (Park), or reach a vehicle speed of 8 km/h (5 mph). Select Front or Rear Camera on the camera screen to view the front or rear camera views. Select Guidance Lines on the camera screen to enable or disable the guidance lines.

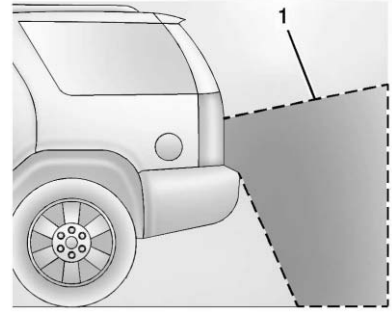

1. View Displayed by the Rear Vision Camera

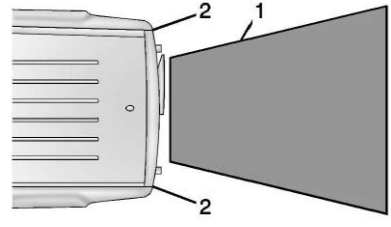

1. View Displayed by the Rear Vision Camera
2. Corners of the Rear Bumper

Displayed images may be farther or closer than they appear. The area displayed is limited and objects that are close to either corner of the bumper or under the bumper do not display.

A warning triangle may display on the RVC screen to show that Rear Parking Assist (RPA) has detected an object. This triangle changes from amber to red and increases in size the closer the object.

Active Tow

This feature displays a single, centered guideline on the camera display to assist with aligning a vehicle’s hitch bar with a trailer coupler. Select the trailer guidance line button, then align the trailer guidance line over the trailer coupler. Continuously steer the vehicle to keep the guidance line centered on the coupler when backing. RVC Parking Assist overlays will not display when the trailer guidance line is active.

To check the trailer when in a forward gear above 8 km/h (5 mph), touch CAMERA on the infotainment display to view the rear camera. Press X to exit the view or it will be removed automatically after eight seconds.

Surround Vision

If equipped, Surround Vision displays an image of the area surrounding the vehicle, along with the front or rear camera views in the infotainment display. The front camera is in the grille or near the front emblem, the side cameras are on the bottom of the outside rearview mirrors, and the rear camera is above the license plate.

⚠ Warning

The Surround Vision cameras have blind spots and will not display all objects near the corners of the vehicle. Folding side mirrors that are out of position will not display surround

(Continued)

Warning (Continued)

view correctly. Always check around the vehicle when parking or backing.

1. Views Displayed by the Surround Vision Cameras
2. Area Not Shown

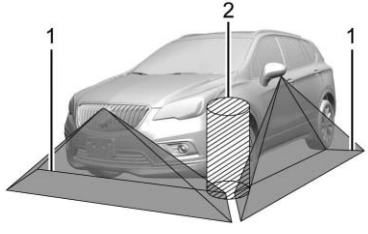

1. Views Displayed by the Surround Vision Cameras
2. Area Not Shown

Front Vision Camera

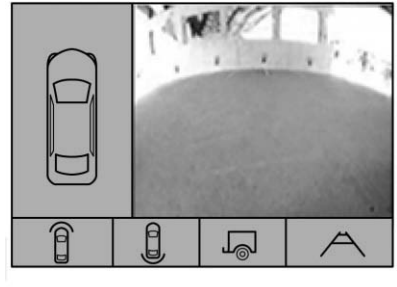

If equipped, a view of the area in front of the vehicle displays. The view displays after shifting from R (Reverse) to a forward gear, or by touching CAMERA in the infotainment display, and when the vehicle is moving forward slower than 8 km/h (5 mph). If equipped, the Front Vision Camera also displays when the Parking Assist system detects an object within 30 cm (12 in).

⚠ Warning

The camera(s) do not display children, pedestrians, bicyclists, crossing traffic, animals, or any other object outside of the cameras' field of view, below the bumper, or under the vehicle. Shown distances may be different from actual distances. Do not drive or park the vehicle using only these camera(s). Always check behind and around the vehicle before driving. Failure to use proper care may result in injury, death, or vehicle damage.

Parking Assist

With RPA, and if equipped with FPA, as the vehicle moves at speeds of less than 8 km/h (5 mph) the sensors on the bumpers may detect objects up to 2.5 m (8 ft) behind the vehicle and 1.2 m (4 ft) in front of the vehicle within a zone 25 cm (10 in) high off the ground and below bumper level. These detection distances may be shorter during warmer or humid weather. Blocked sensors will not detect objects and can also cause false detections. Keep the sensors clean of mud, dirt, snow, ice, and slush; and clean sensors after a car wash in freezing temperatures.

⚠ Warning

The Parking Assist system does not detect children, pedestrians, bicyclists, animals, or objects located below the bumper or that are too close or too far from the vehicle. It is not available at speeds greater than 8 km/h (5 mph). To prevent injury, death, or vehicle damage, even with parking assist, always check the area around the vehicle and check all mirrors before moving forward or backing.

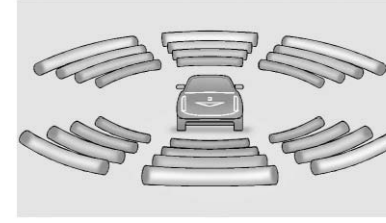

The instrument cluster may have a parking assist display with bars that show "distance to object" and object location information for the Parking Assist system. As the object gets closer, more bars light up and the bars change color from yellow to amber to red.

When an object is first detected in the rear, one beep will be heard from the rear, or both sides of the Safety Alert Seat will pulse two times. When an object is very close (<0.6 m (2 ft) in the vehicle rear, or <0.3 m (1 ft) in the vehicle front), five beeps will sound from the front or rear depending on object location, or both sides of the Safety Alert Seat will pulse five times. Beeps for FPA are higher pitched than for RPA.

Rear Cross Traffic Alert (RCTA)

If equipped, when the vehicle is shifted into R (Reverse), RCTA displays a red warning triangle with a left or right pointing arrow on the RVC screen to warn of traffic coming from the left or right. This system detects objects coming from up to 20 m (65 ft) from the left or right side of the vehicle. When an object is detected, either three beeps sound from the left or right or three Safety Alert Seat pulses occur on the left or right side, depending on the direction of the detected vehicle.

Use caution while backing up when towing a trailer, as the RCTA detection zones that extend out from the back of the vehicle do not move further back when a trailer is towed.

Turning the Features On or Off

The P button on the center stack is used to turn on or off the Front and Rear Parking Assist and the Rear Cross Traffic Alert (RCTA). The indicator light in the button comes on when the features are on and turns off when the features have been disabled.

Turn off parking assist and RCTA when towing a trailer.

To turn off the RPA symbols or guidance lines (on some models) see “Rear Camera” under *Vehicle Personalization* ⇨ *157*.

RCTA can be turned off through “Collision/Detection Systems” under *Vehicle Personalization* ⇨ *157*

Assistance Systems for Driving

If equipped, when driving the vehicle in a forward gear, Forward Collision Alert (FCA), Lane Departure Warning (LDW), Lane Keep Assist (LKA), Side Blind Zone Alert (SBZA), Lane Change Alert (LCA), Forward Automatic Braking (FAB), and/or the Front Pedestrian Braking (FPB) System can help to avoid a crash or reduce crash damage.

Forward Collision Alert (FCA) System

If equipped, the FCA system may help to avoid or reduce the harm caused by front-end crashes. When approaching a vehicle ahead too quickly, FCA provides a red flashing alert on the windshield and rapidly beeps or pulses the driver seat. FCA also lights an amber visual alert if following another vehicle much too closely.

FCA detects vehicles within a distance of approximately 60 m (197 ft) and operates at speeds above 40 km/h (25 mph). If the vehicle has Adaptive Cruise Control (ACC), it can detect vehicles to distances of approximately 110 m (360 ft) and operates at all speeds. See *Adaptive Cruise Control* ⇨ *246*.

⚠ Warning

FCA is a warning system and does not apply the brakes. When approaching a slower-moving or

(Continued)

Warning (Continued)

stopped vehicle ahead too rapidly, or when following a vehicle too closely, FCA may not provide a warning with enough time to help avoid a crash. It also may not provide any warning at all. FCA does not warn of pedestrians, animals, signs, guardrails, bridges, construction barrels, or other objects. Be ready to take action and apply the brakes. See *Defensive Driving* ⇨ *211*.

FCA can be disabled with the FCA steering wheel control, or if your vehicle is equipped with Adaptive Cruise Control (ACC), through vehicle personalization. See "Collision/Detection Systems" under *Vehicle Personalization* ⇨ *157*.

Detecting the Vehicle Ahead

FCA warnings will not occur unless the FCA system detects a vehicle ahead. When a vehicle is detected, the vehicle ahead indicator will display green. Vehicles may not be detected on curves, highway exit ramps, or hills, due to poor visibility; or if a vehicle ahead is partially blocked by pedestrians or other objects. FCA will not detect another vehicle ahead until it is completely in the driving lane.

⚠ Warning

FCA does not provide a warning to help avoid a crash, unless it detects a vehicle. FCA may not detect a vehicle ahead if the FCA sensor is blocked by dirt, snow,

(Continued)

Warning (Continued)

or ice, or if the windshield is damaged. It may also not detect a vehicle on winding or hilly roads, or in conditions that can limit visibility such as fog, rain, or snow, or if the headlamps or windshield are not cleaned or in proper condition. Keep the windshield, headlamps, and FCA sensors clean and in good repair.

Collision Alert

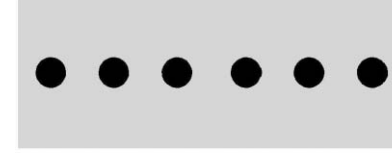

When your vehicle approaches another detected vehicle too rapidly, the red FCA display will flash on the windshield. Also, eight rapid high-pitched beeps will sound from the front, or both sides of the Safety Alert Seat will pulse five times. When this Collision Alert occurs, the

brake system may prepare for driver braking to occur more rapidly which can cause a brief, mild deceleration. Continue to apply the brake pedal as needed. Cruise control may be disengaged when the Collision Alert occurs.

Tailgating Alert

The vehicle ahead indicator will display amber when you are following a vehicle ahead much too closely.

Selecting the Alert Timing

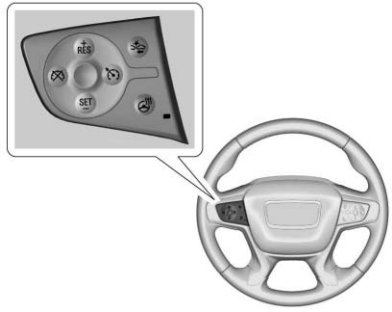

The Collision Alert control is on the steering wheel. Press to set the FCA timing to Far, Medium, or Near, or on some vehicles, Off. The first button press shows the current setting on the DIC. Additional button presses will change this setting. The chosen setting will remain until it is changed and will affect the timing of both the Collision Alert and the Tailgating Alert features. The timing of both alerts will vary based on vehicle speed. The faster the vehicle speed, the farther away the alert will occur. Consider traffic and weather conditions when selecting the alert timing. The range of selectable alert timings may not be appropriate for all drivers and driving conditions.

If your vehicle is equipped with Adaptive Cruise Control (ACC), changing the FCA timing setting automatically changes the following gap setting (Far, Medium, or Near).

Unnecessary Alerts

FCA may provide unnecessary alerts for turning vehicles, vehicles in other lanes, objects that are not vehicles, or shadows. These alerts are normal operation and the vehicle does not need service.

Cleaning the System

If the FCA system does not seem to operate properly, cleaning the outside of the windshield in front the rearview mirror, and cleaning the front of the vehicle where radar sensors are located, may correct the issue.

Forward Automatic Braking (FAB)

If the vehicle has Forward Collision Alert (FCA), it also has FAB, which includes Intelligent Brake Assist (IBA). When the system detects a vehicle ahead in your path that is traveling in the same direction that you may be about to crash into, it can provide a boost to braking or automatically brake the vehicle. This can help avoid or lessen the severity of crashes when driving in a forward gear. Depending on the situation, the vehicle may automatically brake moderately or hard. This forward automatic braking can only occur if a vehicle is detected. This is shown by the FCA vehicle ahead indicator being lit. See *Forward Collision Alert (FCA) System* ⇨ *258*.

The system works when driving in a forward gear between 8 km/h (5 mph) and 80 km/h (50 mph), or on vehicles with Adaptive Cruise Control (ACC), above 4 km/h (2 mph). It can detect vehicles up to approximately 60 m (197 ft).

⚠ Warning

FAB is an emergency crash preparation feature and is not designed to avoid crashes. Do not rely on FAB to brake the vehicle. FAB will not brake outside of its operating speed range and only responds to detected vehicles.

FAB may not:

- Detect a vehicle ahead on winding or hilly roads.
- Detect all vehicles, especially vehicles with a trailer, tractors, muddy vehicles, etc.
- Detect a vehicle when weather limits visibility, such as in fog, rain, or snow.
- Detect a vehicle ahead if it is partially blocked by pedestrians or other objects.

(Continued)

Warning (Continued)

Complete attention is always required while driving, and you should be ready to take action and apply the brakes and/or steer the vehicle to avoid crashes.

FAB may slow the vehicle to a complete stop to try to avoid a potential crash. If this happens, FAB may engage the Electric Parking Brake (EPB) to hold the vehicle at a stop. Release the EPB or firmly press the accelerator pedal.

⚠ Warning

FAB may automatically brake the vehicle suddenly in situations where it is unexpected and undesired. It could respond to a turning vehicle ahead, guardrails, signs, and other non-moving objects. To override FAB, firmly press the accelerator pedal, if it is safe to do so.

Intelligent Brake Assist (IBA)

IBA may activate when the brake pedal is applied quickly by providing a boost to braking based on the speed of approach and distance to a vehicle ahead.

Minor brake pedal pulsations or pedal movement during this time is normal and the brake pedal should continue to be applied as needed. IBA will automatically disengage only when the brake pedal is released.

⚠ Warning

IBA may increase vehicle braking in situations when it may not be necessary. You could block the flow of traffic. If this occurs, take your foot off the brake pedal and then apply the brakes as needed.

FAB and IBA can be disabled through vehicle personalization. See "Collision/Detection Systems" under *Vehicle Personalization* ⇨ *157*.

⚠ Warning

Using FAB or IBA while towing a trailer could cause you to lose control of the vehicle and crash. Turn the system to Alert, or if the vehicle has ACC to Off, when towing a trailer.

Front Pedestrian Braking (FPB) System

If equipped, the FPB system may help avoid or reduce the harm caused by front-end crashes with nearby pedestrians when driving in a forward gear. FPB displays an amber indicator, 🚶, when a nearby pedestrian is detected directly ahead. When approaching a detected pedestrian too quickly, FPB provides a red flashing alert on the windshield and rapidly beeps or pulses the driver seat. FPB can provide a boost to braking or automatically brake the vehicle. This system includes Intelligent Brake Assist (IBA), and the Forward Automatic Braking (FAB) system may also respond to pedestrians. See *Forward Automatic Braking (FAB)* ⇨ *261*.

The FPB system can detect and alert to pedestrians in a forward gear at speeds between 8 km/h (5 mph) and 80 km/h (50 mph). During daytime driving, the system detects pedestrians up to a distance of approximately 40 m (131 ft). During nighttime driving, system performance is very limited.

⚠ Warning

FPB does not provide an alert or automatically brake the vehicle, unless it detects a pedestrian. FPB may not detect pedestrians, including children:

- When the pedestrian is not directly ahead, fully visible, or standing upright, or when part of a group.

(Continued)

Warning (Continued)

- Due to poor visibility, including nighttime conditions, fog, rain, or snow.
- If the FPB sensor is blocked by dirt, snow, or ice.
- If the headlamps or windshield are not cleaned or in proper condition.

Be ready to take action and apply the brakes. For more information, see *Defensive Driving* ⇨ *211*. Keep the windshield, headlamps, and FPB sensor clean and in good repair.

FPB can be set to Off, Alert, or Alert and Brake through vehicle personalization. See "Collision/ Detection Systems" under *Vehicle Personalization* ⇨ *157*.

Detecting the Pedestrian Ahead

FPB alerts and automatic braking will not occur unless the FPB system detects a pedestrian. When a nearby pedestrian is detected directly in front of the vehicle, the pedestrian ahead indicator will display amber.

Front Pedestrian Alert

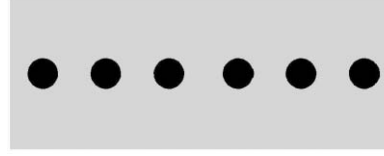

When the vehicle approaches a pedestrian ahead too rapidly, the red FPB alert display will flash on the windshield. Eight rapid high-pitched beeps will sound from the front, or both sides of the Safety Alert Seat will pulse five times. When this Pedestrian Alert occurs, the brake system may prepare for driver braking to occur more rapidly which can cause a brief, mild deceleration. Continue to apply the brake pedal as needed. Cruise control may be disengaged when the Front Pedestrian Alert occurs.

Automatic Braking

If FPB detects it is about to crash into a pedestrian directly ahead, and the brakes have not been applied, FPB may automatically brake moderately or brake hard. This can help to avoid some very low speed pedestrian crashes or reduce pedestrian injury. FPB can automatically brake to detected pedestrians between 8 km/h (5 mph) and 80 km/h (50 mph). Automatic braking levels may be reduced under certain conditions, such as higher speeds.

If this happens, Automatic Braking may engage the Electric Parking Brake (EPB) to hold the vehicle at a stop. Release the EPB. A firm press

of the accelerator pedal will also release Automatic Braking and the EPB.

⚠ Warning

FPB may alert or automatically brake the vehicle suddenly in situations where it is unexpected and undesired. It could falsely alert or brake for objects similar in shape or size to pedestrians, including shadows. This is normal operation and the vehicle does not need service. To override Automatic Braking, firmly press the accelerator pedal, if it is safe to do so.

Automatic Braking can be disabled through vehicle personalization. See “Front Pedestrian Detection” in “Collision/Detection Systems” under *Vehicle Personalization* ⇨ *157*.

⚠ Warning

Using the Front Pedestrian Braking system while towing a trailer could cause you to lose control of the vehicle and crash. Turn the system to Alert or Off when towing a trailer.

Cleaning the System

If FPB does not seem to operate properly, cleaning the outside of the windshield in front of the rearview mirror may correct the issue.

Side Blind Zone Alert (SBZA)

If equipped, the SBZA system is a lane-changing aid that assists drivers with avoiding crashes that occur with moving vehicles in the side blind zone (or spot) areas. When the vehicle is in a forward gear, the left or right side mirror display will light up if a moving vehicle is detected in that blind zone. If the turn signal is activated and a vehicle is also detected on the same side, the display will flash as an extra warning not to change lanes. Since this system is part of the Lane Change Alert (LCA) system, read the entire LCA section before using this feature.

Lane Change Alert (LCA)

If equipped, the LCA system is a lane-changing aid that assists drivers with avoiding lane change crashes that occur with moving vehicles in the side blind zone (or spot) areas or with vehicles rapidly approaching these areas from behind. The LCA warning display will light up in the corresponding outside side mirror and will flash if the turn signal is on.

⚠ Warning

LCA does not alert the driver to vehicles outside of the system detection zones, pedestrians, bicyclists, or animals. It may not provide alerts when changing lanes under all driving conditions.

(Continued)

Warning (Continued)

Failure to use proper care when changing lanes may result in injury, death, or vehicle damage. Before making a lane change, always check mirrors, glance over your shoulder, and use the turn signals.

LCA Detection Zones

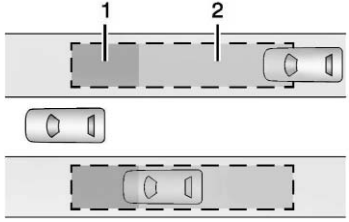

1. SBZA Detection Zone
2. LCA Detection Zone

The LCA sensor covers a zone of approximately one lane over from both sides of the vehicle, or 3.5 m (11 ft). The height of the zone is approximately between 0.5 m (1.5 ft) and 2 m (6 ft) off the ground. The Side Blind Zone Alert (SBZA) warning area starts at approximately the middle of the vehicle and goes back 5 m (16 ft). Drivers are also warned of vehicles rapidly approaching from up to 70 m (230 ft) behind the vehicle.

How the System Works

The LCA symbol lights up in the side mirrors when the system detects a moving vehicle in the next lane over that is in the side blind zone or rapidly approaching that zone from behind. A lit LCA symbol indicates it may be unsafe to change lanes. Before making a lane change, check the LCA display, check mirrors, glance over your shoulder, and use the turn signals.

Left Side Mirror Display

Right Side Mirror Display

When the vehicle is started, both outside mirror LCA displays will briefly come on to indicate the system is operating. When the vehicle is in a forward gear, the left or right side mirror display will light up if a moving vehicle is detected in the next lane over in that blind zone or rapidly approaching that zone. If the turn signal is activated in the same direction as a detected vehicle, this display will flash as an extra warning not to change lanes.

LCA can be disabled through vehicle personalization using the Side Blind Zone Alert option. See “Collision/Detection Systems” under *Vehicle Personalization* ⇨ *157*. If LCA is disabled by the driver, the LCA mirror displays will not light up.

When the System Does Not Seem to Work Properly

The LCA system requires some driving for the system to calibrate to maximum performance. This calibration may occur more quickly if the vehicle is driving on a straight

highway road with traffic and roadside objects (e.g., guardrails, barriers).

LCA displays may not come on when passing a vehicle quickly, for a stopped vehicle, or when towing a trailer. The LCA detection zones that extend back from the side of the vehicle do not move further back when a trailer is towed. Use caution while changing lanes when towing a trailer. LCA may alert to objects attached to the vehicle, such as a trailer, bicycle, or object extending out to either side of the vehicle. Attached objects may also interfere with the detection of vehicles. This is normal system operation; the vehicle does not need service.

LCA may not always alert the driver to vehicles in the next lane over, especially in wet conditions or when driving on sharp curves. The system does not need to be serviced. The system may light up due to guardrails, signs, trees, shrubs, and other non-moving objects. This is normal system operation; the vehicle does not need service.

LCA may not operate when the LCA sensors in the left or right corners of the rear bumper are covered with mud, dirt, snow, ice, or slush, or in heavy rainstorms. For cleaning instructions, see "Washing the Vehicle" under *Exterior Care* ⇨ *355*. If the DIC still displays the system unavailable message after cleaning both sides of the vehicle toward the rear corners of the vehicle, see your dealer.

If the LCA displays do not light up when moving vehicles are in the side blind zone or are rapidly approaching this zone and the system is clean, the system may need service. Take the vehicle to your dealer.

When LCA is disabled for any reason other than the driver turning it off, the Side Blind Zone Alert On option will not be available on the personalization menu.

Radio Frequency Information

See *Radio Frequency Statement* ⇨ *392*.

Lane Departure Warning (LDW)

If equipped, LDW may help avoid crashes due to unintentional lane departures. It may provide a warning if the vehicle is crossing a detected lane marking without using a turn signal in the lane departure direction. Since this system is part of the Lane Keep Assist (LKA) system, read the entire LKA section before using this feature.

Lane Keep Assist (LKA)

If equipped, LKA may help avoid crashes due to unintentional lane departures. It may assist by gently turning the steering wheel if the vehicle approaches a detected lane marking without using a turn signal in that direction. It may also provide a Lane Departure Warning (LDW) system alert as the lane marking is crossed. The LKA system will not assist or provide an LDW alert if it detects that you are actively steering. Override LKA by turning the steering wheel. LKA uses a

camera to detect lane markings between 60 km/h (37 mph) and 180 km/h (112 mph).

⚠ Warning

The LKA system does not continuously steer the vehicle. It may not keep the vehicle in the lane or give a Lane Departure Warning (LDW) alert, even if a lane marking is detected.

The LKA and LDW systems may not:

- Provide an alert or enough steering assist to avoid a lane departure or crash.
- Detect lane markings under poor weather or visibility conditions. This can occur if the windshield or headlamps are blocked by dirt, snow, or ice, if they are not in proper condition, or if the sun shines directly into the camera.
- Detect road edges.

(Continued)

Warning (Continued)

- Detect lanes on winding or hilly roads.

If LKA only detects lane markings on one side of the road, it will only assist or provide an LDW alert when approaching the lane on the side where it has detected a lane marking. Even with LKA and LDW, you must steer the vehicle. Always keep your attention on the road and maintain proper vehicle position within the lane, or vehicle damage, injury, or death could occur. Always keep the windshield, headlamps, and camera sensors clean and in good repair. Do not use LKA in bad weather conditions.

⚠ Warning

Using LKA while towing a trailer or on slippery roads could cause loss of control of the vehicle and a crash. Turn the system off.

How the System Works

The LKA camera sensor is on the windshield ahead of the rearview mirror.

To turn LKA on and off, press on the center stack.

When on, is green if LKA is available to assist and provide LDW alerts. It may assist by gently turning the steering wheel and display as amber if the vehicle approaches a detected lane marking without using a turn signal in that direction. It may also provide an LDW alert by flashing amber as the lane marking is crossed. Additionally, there will be three beeps, or the driver seat will pulse

three times, on the right or left, depending on the lane departure direction.

The LKA system does not continuously steer the vehicle. If LKA does not detect active driver steering, an alert and chime may be provided. Move the steering wheel to dismiss.

When the System Does Not Seem to Work Properly

The system performance may be affected by:

- Close vehicles ahead.
- Sudden lighting changes, such as when driving through tunnels.
- Banked roads.
- Roads with poor lane markings, such as two-lane roads.

If the LKA system is not functioning properly when lane markings are clearly visible, cleaning the windshield may help.

LKA assistance and/or LDW alerts may occur due to tar marks, shadows, cracks in the road, temporary or construction lane markings, or other road imperfections. This is normal system operation; the vehicle does not need service. Turn LKA off if these conditions continue.

Fuel

GM recommends the use of TOP TIER Detergent Gasoline to keep the engine cleaner and reduce engine deposits. See www.toptiergas.com for a list of TOP TIER Detergent Gasoline marketers and applicable countries.

TOP TIER™ Detergent Gasoline

CATEGORIE SUPERIEURE™ Essences Détergentes

Do not use any fuel labeled E85 or FlexFuel. Do not use gasoline with ethanol levels greater than 15% by volume.

Use regular unleaded gasoline meeting ASTM specification D4814 with a posted octane rating of 87 or higher. Do not use gasoline with a

posted octane rating of less than 87, as this may cause engine knock and will lower fuel economy.

Prohibited Fuels

Caution

Do not use fuels with any of the following conditions; doing so may damage the vehicle and void its warranty:

- For vehicles which are not FlexFuel, fuel labeled greater than 15% ethanol by volume, such as mid-level ethanol blends (16 – 50% ethanol), E85, or FlexFuel.
- Fuel with any amount of methanol, methylal, and aniline. These fuels can corrode metal fuel system parts or damage plastic and rubber parts.
- Fuel containing metals such as methylcyclopentadienyl manganese tricarbonyl

(Continued)

Caution (Continued)

(MMT), which can damage the emissions control system and spark plugs.

- Fuel with a posted octane rating of less than the recommended fuel. Using this fuel will lower fuel economy and performance, and may decrease the life of the emissions catalyst.

California Fuel Requirements

If the vehicle is certified to meet California Emissions Standards, it is designed to operate on fuels that meet California specifications. See the underhood emission control label. If this fuel is not available in states adopting California Emissions Standards, the vehicle will operate satisfactorily on fuels meeting federal specifications, but emission control system performance may be affected. The malfunction indicator lamp could turn on and the vehicle may not pass a smog-check test. See *Malfunction Indicator Lamp (Check Engine Light)* ⇨ *132*. If this occurs, return to your authorized dealer for diagnosis. If it is determined that the condition is caused by the type of fuel used, repairs may not be covered by the vehicle warranty.

Fuels in Foreign Countries

The U.S., Canada, and Mexico post fuel octane ratings in anti-knock index (AKI). For fuel not to use in a foreign country, see “Prohibited Fuels” in *Fuel* ⇨ *268*.

Fuel Additives

To keep fuel systems clean, TOP TIER Detergent Gasoline is recommended. See *Fuel* ⇨ *268*.

If TOP TIER Detergent Gasoline is not available, one bottle of GM Fuel System Treatment Cleaner added to the fuel tank at every engine oil change, can help. GM Fuel System Treatment Cleaner is the only

gasoline additive recommended by General Motors. It is available at your dealer.

Filling the Tank

⚠ Warning

Fuel vapors and fuel fires burn violently and can cause injury or death.

- To help avoid injuries to you and others, read and follow all the instructions on the fuel pump island.
- Turn off the engine when refueling.
- Keep sparks, flames, and smoking materials away from fuel.
- Do not leave the fuel pump unattended.
- Do not use a cell phone while refueling.
- Do not reenter the vehicle while pumping fuel.

(Continued)

Warning (Continued)

- Keep children away from the fuel pump and never let children pump fuel.
- Fuel can spray out if the refueling nozzle is inserted too quickly. This spray can happen if the tank is nearly full, and is more likely in hot weather. Insert the refueling nozzle slowly and wait for any hiss noise to stop prior to beginning to flow fuel.

To open the fuel door, push and release the rearward center edge of the door.

The vehicle has a capless refueling system and does not have a fuel cap. The filling nozzle must be fully inserted and latched prior to starting fuel flow.

⚠ Warning

Overfilling the fuel tank by more than three clicks of a standard fill nozzle may cause:

- Vehicle performance issues, including engine stalling and damage to the fuel system.
- Fuel spills.
- Potential fuel fires.

Be careful not to spill fuel. Wait a few seconds after you have finished pumping before removing the nozzle. Clean fuel from painted surfaces as soon as possible. See *Exterior Care* ⇨ *355*.

⚠ Warning

If a fire starts while you are refueling, do not remove the nozzle. Shut off the flow of fuel by shutting off the pump or by notifying the station attendant. Leave the area immediately.

Filling the Tank with a Portable Gas Can

If the vehicle runs out of fuel and must be filled from a portable gas can:

1. Locate the capless funnel adapter from the rear cargo area under the load floor.
2. Insert and latch the funnel into the capless fuel system.

⚠ Warning

Attempting to refuel without using the funnel adapter may cause fuel spillage and damage the capless fuel system. This could cause a fire and you or others could be badly burned and the vehicle could be damaged.

3. Remove and clean the funnel adapter and return it to the storage location.

Filling a Portable Fuel Container

⚠ Warning

Filling a portable fuel container while it is in the vehicle can cause fuel vapors that can ignite either by static electricity or other means. You or others could be badly burned and the vehicle could be damaged. Always:

(Continued)

Warning (Continued)

- Use approved fuel containers.
- Remove the container from the vehicle, trunk, or pickup bed before filling.
- Place the container on the ground.
- Place the nozzle inside the fill opening of the container before dispensing fuel, and keep it in contact with the fill opening until filling is complete.
- Fill the container no more than 95% full to allow for expansion.
- Do not smoke, light matches, or use lighters while pumping fuel.
- Avoid using cell phones or other electronic devices.

Trailer Towing

General Towing Information

Only use towing equipment that has been designed for the vehicle. Contact your dealer or trailering dealer for assistance with preparing the vehicle for towing a trailer. Read the entire section before towing a trailer.

For towing a disabled vehicle, see *Towing the Vehicle* ⇨ *352*. For towing the vehicle behind another vehicle such as a motor home, see *Recreational Vehicle Towing* ⇨ *352*.

Driving Characteristics and Towing Tips

Driving with a Trailer

When towing a trailer:

- Become familiar with the state and local laws that apply specifically to trailer towing.
- Do not tow a trailer during the first 800 km (500 mi), to prevent damage to the engine, axle or other parts.
- Then, during the first 800 km (500 mi) trailer towing, do not drive over 80 km/h (50 mph) and do not make starts at full throttle.
- The vehicle can tow in D (Drive) but Manual Mode is recommended. See *Manual Mode* ⇨ *235*. Use a lower gear if the transmission shifts too often.
- Turn off Parking Assist and Rear Cross Traffic Alert (RCTA) when towing.
- Turn off Lane Keep Assist (LKA) when towing.
- Do not use Adaptive Cruise Control (ACC) when towing a trailer.

⚠ Warning

When towing a trailer, exhaust gases may collect at the rear of the vehicle and enter if the liftgate, trunk/hatch, or rear-most window is open.

When towing a trailer:

- Do not drive with the liftgate, trunk/hatch, or rear-most window open.
- Fully open the air outlets on or under the instrument panel.
- Also adjust the climate control system to a setting that brings in only outside air. See “Climate Control Systems” in the Index.

For information about carbon monoxide, see *Engine Exhaust* ⇨ *232*.

Towing a trailer requires a certain amount of experience. The combination you are driving is longer and not as responsive as the

vehicle itself. Get acquainted with the handling and braking of the rig before setting out for the open road.

Before starting, check all trailer hitch parts and attachments, safety chains, electrical connectors, lamps, tires, and mirrors. If the trailer has electric brakes, start the combination moving and then apply the trailer brake controller by hand to be sure the brakes work.

During the trip, check occasionally to be sure that the load is secure and the lamps and any trailer brakes still work.

Towing with a Stability Control System

When towing, the sound of the stability control system might be heard. The system is reacting to the vehicle movement caused by the trailer, which mainly occurs during cornering. This is normal when towing heavier trailers.

Following Distance

Stay at least twice as far behind the vehicle ahead as you would when driving the vehicle without a trailer. This can help to avoid situations that require heavy braking and sudden turns.

Passing

More passing distance is needed when towing a trailer. Because the rig is longer, it is necessary to go farther beyond the passed vehicle before returning to the lane.

Backing Up

Hold the bottom of the steering wheel with one hand. To move the trailer to the left, move your hand to the left. To move the trailer to the right, move your hand to the right. Always back up slowly and, if possible, have someone guide you.

Making Turns

Caution

Making very sharp turns while trailering could cause the trailer to come in contact with the vehicle. The vehicle could be damaged. Avoid making very sharp turns while trailering.

When turning with a trailer, make wider turns than normal so the trailer will not strike soft shoulders, curbs, road signs, trees, or other objects. Use the turn signal well in advance and avoid jerky or sudden maneuvers.

Turn Signals When Towing a Trailer

The turn signal indicators on the instrument cluster flash whenever signaling a turn or lane change. Properly hooked up, the trailer lamps also flash, telling other drivers the vehicle is turning, changing lanes, or stopping.

When towing a trailer, the arrows on the instrument cluster flash for turns even if the bulbs on the trailer are burned out. Check occasionally to be sure the trailer bulbs are still working.

Driving on Grades

Reduce speed and shift to a lower gear before starting down a long or steep downgrade. If the transmission is not shifted down, the brakes might have to be used so much that they would get hot and no longer work well.

The vehicle can tow in D (Drive). Use a lower gear if the transmission shifts too often.

The Tow/Haul Mode may be used if the transmission shifts too often. See *Tow/Haul Mode* ⇨ *236*.

When towing at high altitude on steep uphill grades, engine coolant boils at a lower temperature than at normal altitudes. If the engine is turned off immediately after towing at high altitude on steep uphill grades, the vehicle could show signs similar to engine overheating. To avoid this, let the engine run while parked, preferably on level ground, with the transmission in P (Park) for a few minutes before turning the engine off. If the overheat warning comes on, see *Engine Overheating* ⇨ *296*.

Parking on Hills

⚠ Warning

Parking the vehicle on a hill with the trailer attached can be dangerous. If something goes wrong, the rig could start to move. People can be injured, and both the vehicle and the trailer can be damaged. When possible, always park the rig on a flat surface.

If parking the rig on a hill:

1. Press the brake pedal, but do not shift into P (Park) yet. Turn the wheels into the curb if facing downhill or into traffic if facing uphill.
2. Have someone place chocks under the trailer wheels.
3. When the wheel chocks are in place, release the brake pedal until the chocks absorb the load.
4. Reapply the brake pedal. Then apply the parking brake and shift into P (Park).
5. Release the brake pedal.

Leaving After Parking on a Hill

1. Apply and hold the brake pedal while you:
   - Start the engine.
   - Shift into a gear.
   - Release the parking brake.
2. Let up on the brake pedal.
3. Drive slowly until the trailer is clear of the chocks.
4. Stop and have someone pick up and store the chocks.

Maintenance When Trailer Towing

The vehicle needs service more often when pulling a trailer. See *Maintenance Schedule* ⇨ *366*. Things that are especially important

in trailer operation are automatic transmission fluid, engine oil, axle lubricant, belts, cooling system and brake system. Inspect these before and during the trip.

Check periodically to see that all hitch nuts and bolts are tight.

Engine Cooling When Trailer Towing

The cooling system may temporarily overheat during severe operating conditions. See *Engine Overheating* ⇨ *296*.

Trailer Towing

Three important considerations have to do with weight:

- The weight of the trailer.
- The weight of the trailer tongue.
- The total weight on the vehicle's tires.

Weight of the Trailer

How heavy can a trailer safely be?

Speed, altitude, road grades, outside temperature, special equipment, and the amount of tongue weight the vehicle can carry must be considered. See “Weight of the Trailer Tongue” later in this section.

Maximum trailer weight is calculated assuming only the driver is in the tow vehicle and it has all the required trailering equipment. The weight of additional optional equipment, passengers, and cargo in the tow vehicle must be subtracted from the maximum trailer weight.

Use the following chart to determine how much the vehicle can weigh, based upon the vehicle model and options.

Vehicle	Maximum Trailer Weight	*GCWR
2.5L and 3.6L Engines	454 kg (1,000 lb)	2 722 kg (6,000 lb)
3.6L Engine With V92 Trailer Towing Package	1 814 kg (4,000 lb)	4 075 kg (8,984 lb)
*The Gross Combination Weight Rating (GCWR) is the total allowable weight of the completely loaded vehicle and trailer including any passengers, cargo, equipment, and conversions. The GCWR for the vehicle should not be exceeded.		

Ask your dealer for trailering information or advice.

Weight of the Trailer Tongue

The tongue load (1) of any trailer is an important weight to measure because it affects the total gross weight of the vehicle. The Gross Vehicle Weight (GVW) includes the curb weight of the vehicle, any cargo carried in it, and the people who will be riding in the vehicle. If there are a lot of options, equipment, passengers or cargo in the vehicle, it will reduce the tongue weight the vehicle can carry, which will also reduce the trailer weight the vehicle can tow. If towing a trailer, the tongue load must be added to the GVW because the vehicle will be carrying that weight, too. See *Vehicle Load Limits* ⇨ *221*.

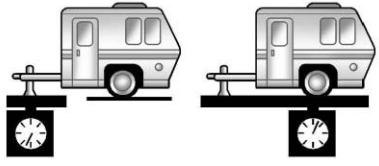

If a weight-carrying hitch or a weight-distributing hitch is being used, the trailer tongue (1) should weigh 10-15 percent of the total loaded trailer weight (2).

After loading the trailer, weigh the trailer and then the tongue, separately, to see if the weights are proper. If they are not, adjustments might be made by moving some items around in the trailer.

Trailering may be limited by the vehicle's ability to carry tongue weight. Tongue weight cannot cause the vehicle to exceed the GVWR (Gross Vehicle Weight Rating) or the RGAWR (Rear Gross Axle Weight Rating). The effect of

additional weight may reduce the trailering capacity more than the total of the additional weight.

It is important that the vehicle does not exceed any of its ratings — GCWR, GVWR, RGAWR, Maximum Trailer Rating or Tongue Weight. The only way to be sure it is not exceeding any of these ratings is to weigh the vehicle and trailer.

Total Weight on the Vehicle's Tires

Inflate the vehicle's tires to the upper limit for cold tires. These numbers can be found on the Certification label or see *Vehicle Load Limits* ⇨ *221* for more information. Do not go over the GVW limit for the vehicle, or the GAWR, including the weight of the trailer tongue. If using a weight distributing hitch, do not go over the rear axle limit before applying the weight distribution spring bars.

Towing Equipment

Hitches

It is important to have the correct hitch equipment. Crosswinds, large trucks going by, and rough roads are a few reasons why the right hitch is needed.

- The rear bumper on the vehicle is not intended for hitches. Do not attach rental hitches or other bumper-type hitches to it. Use only a frame-mounted hitch that does not attach to the bumper.
- Will any holes be made in the body of the vehicle when the trailer hitch is installed? If so, then be sure to seal the holes when the hitch is removed. If the holes are not sealed, dirt, water, and deadly carbon monoxide (CO) from the exhaust may get into the vehicle. See *Engine Exhaust* ⇨ *232*.

Weight-Distributing Hitches and Weight Carrying Hitches

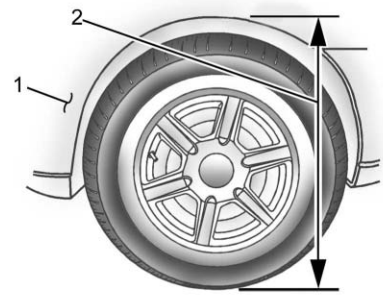

1. Front of Vehicle
2. Body-to-Ground Distance

When using a weight-distributing hitch, the hitch must be adjusted so that the distance (2) remains the same both before and after coupling the trailer to the tow vehicle.

Safety Chains

Always attach chains between the vehicle and the trailer. Cross the safety chains under the tongue of the trailer to help prevent the tongue from contacting the road if it

becomes separated from the hitch. Always leave just enough slack so the rig can turn. Never allow safety chains to drag on the ground.

Trailer Brakes

A loaded trailer that weighs more than 450 kg (1,000 lb) needs to have its own brake system that is adequate for the weight of the trailer. Be sure to read and follow the instructions for the trailer brakes so they are installed, adjusted, and maintained properly.

Because the vehicle has antilock brakes, do not try to tap into the vehicle's hydraulic brake system. If you do, both brake systems will not work well, or at all.

Trailer Wiring Harness

Basic Trailer Wiring

The trailer wiring harness, with a seven-pin connector, is located at the rear of the vehicle and is tied to the vehicle's frame. The harness connector can be plugged into a seven-pin universal heavy-duty trailer connector available through your dealer.

Use only a round, seven-wire connector with flat blade terminals meeting SAE J2863 specifications for proper electrical connectivity.

The seven-wire harness contains the following trailer circuits:

- Yellow/Gray: Stop/Turn Signal Left
- Green/Violet: Stop/Turn Signal Right
- Gray/Brown: Parking Lamps
- White/Green: Back-up Lamps
- Red/Green: Back-up Lamps
- Black: Ground
- Blue: Electric Brake*

*The fuse for this circuit is installed in the underhood electrical center, but the wires are not connected. They should be connected by your dealer or a qualified service center.

If the back-up lamp circuit is not functional, contact your dealer.

If a remote (non-vehicle) battery is being charged, turn the Tow/Haul Mode knob on the center console. This will boost the vehicle system voltage and properly charge the battery. If the trailer is too light for Tow/Haul Mode, turn on the headlamps (non-HID only) as a second way to boost the vehicle system and charge the battery.

Electric Trailer Brake Control Wiring Provisions

These wiring provisions for an electric trailer brake controller are included with the vehicle as part of the trailer wiring package. The instrument panel contains blunt cut wires above the parking brake assembly for the electric trailer brake controller. The harness contains the following wires:

- Blue: “To Trailer”
- Red/Black or Red/Blue: Battery Feed
- White/Blue: Brake Apply Signal
- Black: Ground

The electric trailer brake controller should be installed by your dealer or a qualified service center.

Conversions and Add-Ons

Add-On Electrical Equipment

⚠ Warning

The Data Link Connector (DLC) is used for vehicle service and Emission Inspection/Maintenance testing. See *Malfunction Indicator Lamp (Check Engine Light)* ⇨ *132*. A device connected to the DLC — such as an aftermarket fleet or driver-behavior tracking device — may interfere with vehicle systems. This could affect vehicle operation and cause a crash. Such devices may also access information stored in the vehicle’s systems.

Caution

Some electrical equipment can damage the vehicle or cause components to not work and would not be covered by the vehicle warranty. Always check with your dealer before adding electrical equipment.

Add-on equipment can drain the vehicle's 12-volt battery, even if the vehicle is not operating.

The vehicle has an airbag system. Before attempting to add anything electrical to the vehicle, see *Servicing the Airbag-Equipped Vehicle* ⇨ *85* and *Adding Equipment to the Airbag-Equipped Vehicle* ⇨ *86*.

Vehicle Care

General Information
General Information 281
California Proposition 65 Warning 281
California Perchlorate Materials Requirements 281
Accessories and Modifications 281

Vehicle Checks
Doing Your Own Service Work 282
Hood 283
Engine Compartment Overview 284
Engine Oil 287
Engine Oil Life System 289
Automatic Transmission Fluid 290
Engine Air Cleaner/Filter 290
Cooling System 292
Engine Coolant 293
Engine Overheating 296
Washer Fluid 297
Brakes 298
Brake Fluid 299
Battery - North America 300
All-Wheel Drive 300
Starter Switch Check 300
Automatic Transmission Shift Lock Control Function Check 301
Park Brake and P (Park) Mechanism Check 301
Wiper Blade Replacement 302
Windshield Replacement 303

Headlamp Aiming
Headlamp Aiming 303

Bulb Replacement
Bulb Replacement 303
Halogen Bulbs 303
LED Lighting 303
License Plate Lamp 304

Electrical System
High Voltage Devices and Wiring 304
Electrical System Overload . . . 304
Fuses and Circuit Breakers . . . 305
Engine Compartment Fuse Block 305
Instrument Panel Fuse Block 309
Rear Compartment Fuse Block 311

Wheels and Tires
Tires 314
All-Season Tires 315
Winter Tires 315
Summer Tires 315
Tire Sidewall Labeling 316
Tire Designations 318
Tire Terminology and Definitions 318
Tire Pressure 321
Tire Pressure for High-Speed Operation 322
Tire Pressure Monitor System 323
Tire Pressure Monitor Operation 324
Tire Inspection 327
Tire Rotation 327
When It Is Time for New Tires 328
Buying New Tires 329
Different Size Tires and Wheels 330
Uniform Tire Quality Grading 331
Wheel Alignment and Tire Balance 332
Wheel Replacement 332
Tire Chains 333
If a Tire Goes Flat 334
Tire Sealant and Compressor Kit 335

Storing the Tire Sealant and Compressor Kit 342
Tire Changing 342
Compact Spare Tire 348

Jump Starting
Jump Starting - North America 349

Towing the Vehicle
Towing the Vehicle 352
Recreational Vehicle Towing 352

Appearance Care
Exterior Care 355
Interior Care 360
Floor Mats 363

General Information

For service and parts needs, visit your dealer. You will receive genuine GM parts and GM-trained and supported service people.

Genuine GM parts have one of these marks:

California Proposition 65 Warning

WARNING: Most motor vehicles, including this one, as well as many of its service parts and fluids, contain and/or emit chemicals known to the State of California to cause cancer and birth defects or other reproductive harm. Engine exhaust, many parts and systems, many fluids, and some component wear by-products contain and/or emit these chemicals.

See *Battery - North America* ⇨ *300* and *Jump Starting - North America* ⇨ *349*.

California Perchlorate Materials Requirements

Certain types of automotive applications, such as airbag initiators, safety belt pretensioners, and lithium batteries contained in Remote Keyless Entry transmitters, may contain perchlorate materials. Special handling may be necessary. For additional information, see www.dtsc.ca.gov/hazardouswaste/perchlorate.

Accessories and Modifications

Adding non-dealer accessories or making modifications to the vehicle can affect vehicle performance and

safety, including such things as airbags, braking, stability, ride and handling, emissions systems, aerodynamics, durability, and electronic systems like antilock brakes, traction control, and stability control. These accessories or modifications could even cause malfunction or damage not covered by the vehicle warranty.

Damage to suspension components caused by modifying vehicle height outside of factory settings will not be covered by the vehicle warranty.

Damage to vehicle components resulting from modifications or the installation or use of non-GM certified parts, including control module or software modifications, is not covered under the terms of the vehicle warranty and may affect remaining warranty coverage for affected parts.

GM Accessories are designed to complement and function with other systems on the vehicle. See your dealer to accessorize the vehicle using genuine GM Accessories installed by a dealer technician.

Also, see *Adding Equipment to the Airbag-Equipped Vehicle* ⇨ *86*.

Vehicle Checks

Doing Your Own Service Work

⚠ Warning

It can be dangerous to work on your vehicle if you do not have the proper knowledge, service manual, tools, or parts. Always follow owner manual procedures and consult the service manual for your vehicle before doing any service work.

If doing some of your own service work, use the proper service manual. It tells you much more about how to service the vehicle than this manual can. To order the proper service manual, see *Service Publications Ordering Information* ⇨ *391*.

This vehicle has an airbag system. Before attempting to do your own service work, see *Servicing the Airbag-Equipped Vehicle* ⇨ *85*.

Keep a record with all parts receipts and list the mileage and the date of any service work performed. See *Maintenance Records* ⇨ *378*.

Caution
Even small amounts of contamination can cause damage to vehicle systems. Do not allow contaminants to contact the fluids, reservoir caps, or dipsticks.

Hood

To open the hood:

1. Pull the hood release handle with this symbol on it. It is under the instrument panel on the driver side of the vehicle.

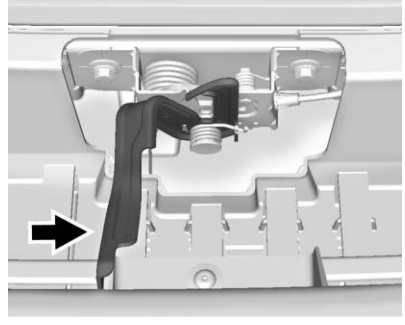

2. At the front of the vehicle, pull up on the center of the hood, and push the secondary hood release to the right.
3. After you have partially lifted the hood, gas struts will automatically take over to lift and hold the hood in the fully open position.

Before closing the hood, be sure all filler caps are on properly.

Pull the hood down to close. Lower the hood until the lifting pressure of the strut is reduced. Then allow the hood to fall and latch into place under its own weight. Check to make sure the hood is closed. If the hood does not fully latch, gently push the hood down at the front and center of the hood until it is completely latched.

Engine Compartment Overview

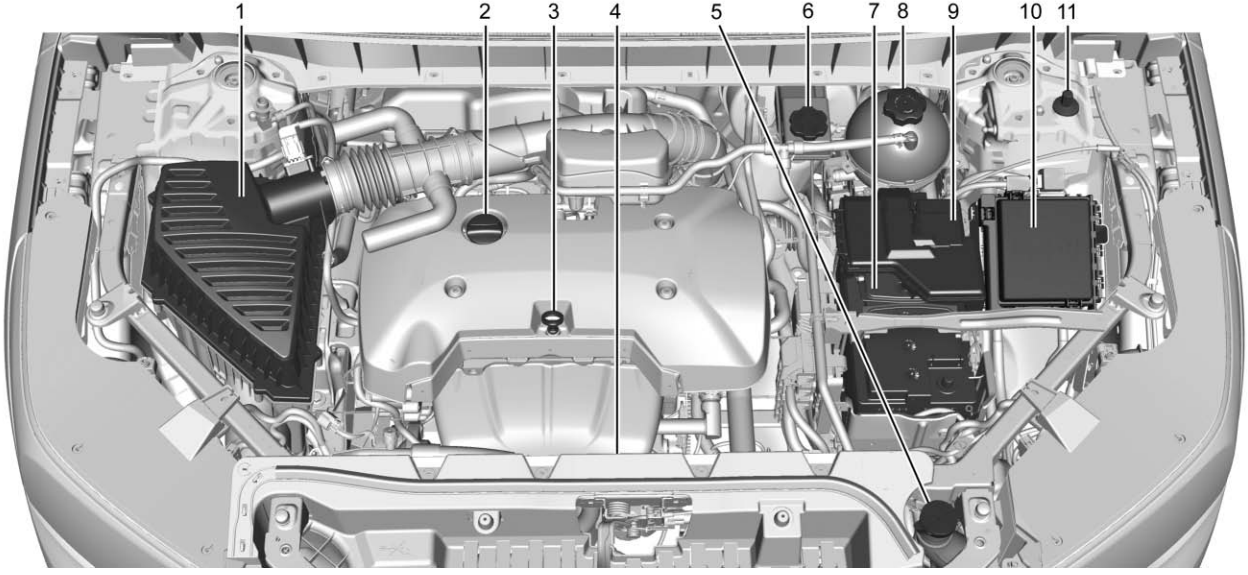

2.5L L4 Engine

1. *Engine Air Cleaner/Filter* ⇨ *290*.
2. Engine Oil Fill Cap. See *Engine Oil* ⇨ *287*.
3. Engine Oil Dipstick. See *Engine Oil* ⇨ *287*.
4. Engine Cooling Fan (Out of View). See *Cooling System* ⇨ *292*.
5. Windshield Washer Fluid Reservoir. See *Washer Fluid* ⇨ *297*.
6. Brake Fluid Reservoir. See *Brake Fluid* ⇨ *299*.
7. *Battery - North America* ⇨ *300*.
8. Engine Coolant Surge Tank and Pressure Cap. See *Cooling System* ⇨ *292*.
9. Positive (+) Battery Terminal (Under Cover). See *Jump Starting - North America* ⇨ *349*.
10. *Engine Compartment Fuse Block* ⇨ *305*.
11. Remote Negative (-) Battery Terminal. See *Jump Starting - North America* ⇨ *349*.

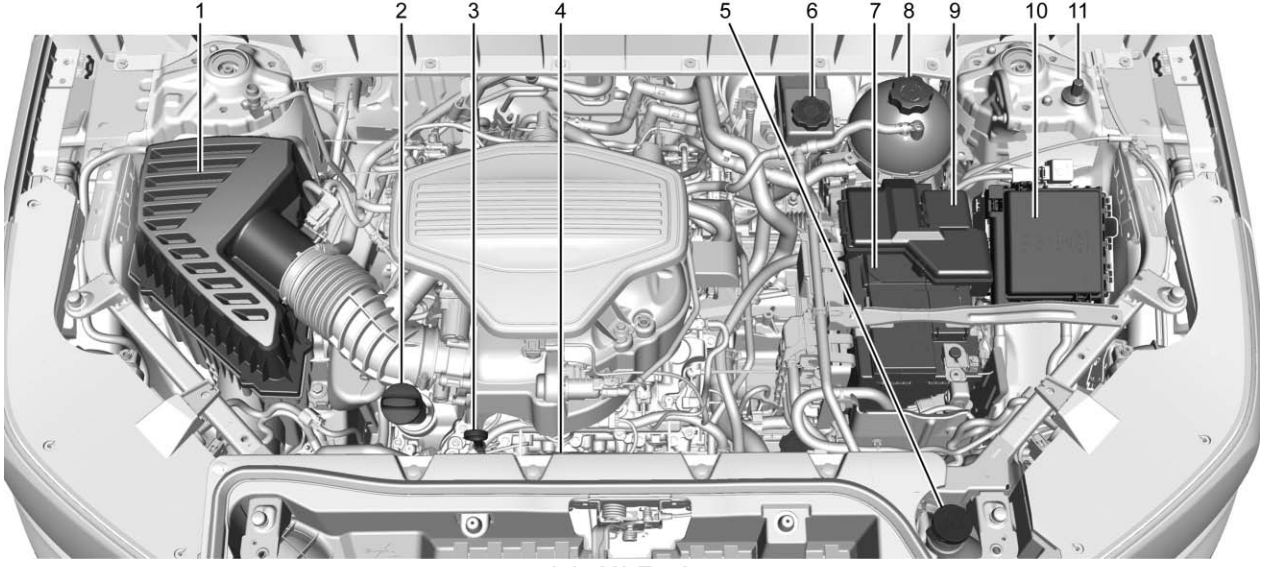

3.6L V6 Engine

1. *Engine Air Cleaner/Filter* ⇨ *290*.
2. Engine Oil Fill Cap. See *Engine Oil* ⇨ *287*.
3. Engine Oil Dipstick. See *Engine Oil* ⇨ *287*.
4. Engine Cooling Fan (Out of View). See *Cooling System* ⇨ *292*.
5. Windshield Washer Fluid Reservoir. See *Washer Fluid* ⇨ *297*.
6. Brake Fluid Reservoir. See *Brake Fluid* ⇨ *299*.
7. *Battery - North America* ⇨ *300*.
8. Engine Coolant Surge Tank and Pressure Cap. See *Cooling System* ⇨ *292*.
9. Positive (+) Battery Terminal. See *Jump Starting - North America* ⇨ *349*.
10. *Engine Compartment Fuse Block* ⇨ *305*.
11. Remote Negative (-) Battery Terminal. See *Jump Starting - North America* ⇨ *349*.

Engine Oil

To ensure proper engine performance and long life, careful attention must be paid to engine oil. Following these simple, but important steps will help protect your investment:

- Use engine oil approved to the proper specification and of the proper viscosity grade. See “Selecting the Right Engine Oil” in this section.
- Check the engine oil level regularly and maintain the proper oil level. See “Checking Engine Oil” and “When to Add Engine Oil” in this section.
- Change the engine oil at the appropriate time. See *Engine Oil Life System* ⇨ *289*.
- Always dispose of engine oil properly. See “What to Do with Used Oil” in this section.

Checking Engine Oil

It is a good idea to check the engine oil level at each fuel fill. In order to get an accurate reading, the vehicle must be on level ground. The engine oil dipstick handle is a loop. See *Engine Compartment Overview* ⇨ *284* for the location of the engine oil dipstick.

Obtaining an accurate oil level reading is essential:

1. If the engine has been running recently, turn off the engine and allow several minutes for the oil to drain back into the oil pan. Checking the oil level too soon after engine shutoff will not provide an accurate oil level reading.

⚠ Warning

The engine oil dipstick handle may be hot; it could burn you. Use a towel or glove to touch the dipstick handle.

2. Pull out the dipstick and wipe it with a clean paper towel or cloth, then push it back in all the way. Remove it again, keeping the tip down, and check the level.

When to Add Engine Oil

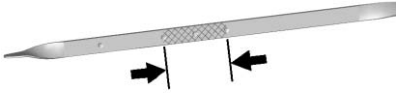

2.5L L4 Engine

3.6L V6 Engine

If the oil is below the cross-hatched area at the tip of the dipstick, add 1 L (1 qt) of the recommended oil and then recheck the level. See "Selecting the Right Engine Oil" in this section for an explanation of what kind of oil to use. For engine oil crankcase capacity, see *Capacities and Specifications* ⇨ *380*.

Caution

Do not add too much oil. Oil levels above or below the acceptable operating range shown on the dipstick are harmful to the engine. If you find that you have an oil level above the operating range, i.e., the engine has so much oil that the oil level gets above the cross-hatched area that shows the proper operating range, the engine could be damaged. You should drain out the excess oil or limit driving of the vehicle and seek a service professional to remove the excess amount of oil.

See *Engine Compartment Overview* ⇨ *284* for the location of the engine oil fill cap.

Add enough oil to put the level somewhere in the proper operating range. Push the dipstick all the way back in when through.

Selecting the Right Engine Oil

Selecting the right engine oil depends on both the proper oil specification and viscosity grade. See *Recommended Fluids and Lubricants* ⇨ *375*.

Specification

Ask for and use engine oils that meet the dexos1™ specification. Engine oils that have been approved by GM as meeting the dexos1 specification are marked with the dexos1 approved logo. See www.gmdexos.com.

Caution

Failure to use the recommended engine oil or equivalent can result in engine damage not covered by the vehicle warranty.

Viscosity Grade

Use SAE 5W-20 viscosity grade engine oil for the 2.5L L4 engine. SAE 0W-20 may be used as an alternative.

Use SAE 5W-30 viscosity grade engine oil for the 3.6L V6 engine. Cold Temperature Operation: In an area of extreme cold, where the temperature falls below −29 °C (−20 °F), an SAE 0W-30 oil may be used. An oil of this viscosity grade will provide easier cold starting for the engine at extremely low temperatures.

When selecting an oil of the appropriate viscosity grade, it is recommended to select an oil of the correct specification. See “Specification” earlier in this section.

Engine Oil Additives/Engine Oil Flushes

Do not add anything to the oil. The recommended oils meeting the dexos1 specification are all that is needed for good performance and engine protection.

Engine oil system flushes are not recommended and could cause engine damage not covered by the vehicle warranty.

What to Do with Used Oil

Used engine oil contains certain elements that can be unhealthy for your skin and could even cause cancer. Do not let used oil stay on your skin for very long. Clean your skin and nails with soap and water, or a good hand cleaner. Wash or properly dispose of clothing or rags containing used engine oil. See the manufacturer's warnings about the use and disposal of oil products.

Used oil can be a threat to the environment. If you change your own oil, be sure to drain all the oil from the filter before disposal. Never dispose of oil by putting it in the trash or pouring it on the ground, into sewers, or into streams or bodies of water. Recycle it by taking it to a place that collects used oil.

Engine Oil Life System

When to Change Engine Oil

This vehicle has a computer system that indicates when to change the engine oil and filter. This is based on a combination of factors which include engine revolutions, engine temperature, and miles driven. Based on driving conditions, the mileage at which an oil change is indicated can vary considerably. For the oil life system to work properly, the system must be reset every time the oil is changed.

When the system has calculated that oil life has been diminished, it indicates that an oil change is necessary. A CHANGE ENGINE OIL SOON message comes on. Change the oil as soon as possible within the next 1 000 km (600 mi). It is possible that, if driving under the best conditions, the oil life system might indicate that an oil change is not necessary for up to a year. The engine oil and filter must be changed at least once a year and, at this time, the system must be reset. Your dealer has trained

service people who will perform this work and reset the system. It is also important to check the oil regularly over the course of an oil drain interval and keep it at the proper level.

If the system is ever reset accidentally, the oil must be changed at 5 000 km (3,000 mi) since the last oil change. Remember to reset the oil life system whenever the oil is changed.

How to Reset the Engine Oil Life System

Reset the system whenever the engine oil is changed so that the system can calculate the next engine oil change. To reset the system:

1. Display the REMAINING OIL LIFE on the DIC. See *Driver Information Center (DIC) (Base and Midlevel)* ⇨ *141* or *Driver Information Center (DIC) (Uplevel)* ⇨ *144*.
2. Press and hold ✓ on the DIC while the Oil Life display is active. The oil life will change to 100%.

If the CHANGE ENGINE OIL SOON message comes back on when the vehicle is started, the engine oil life system has not been reset. Repeat the procedure.

Automatic Transmission Fluid

It is not necessary to check the transmission fluid level.
A transmission fluid leak is the only reason for fluid loss. If a leak occurs, take the vehicle to the dealer and have it repaired as soon as possible.

Change the fluid at the intervals listed in *Maintenance Schedule* ⇨ *366*, and be sure to use the transmission fluid listed in *Recommended Fluids and Lubricants* ⇨ *375*.

Caution

Use of the incorrect automatic transmission fluid may damage the vehicle, and the damage may not be covered by the vehicle warranty. Always use the automatic transmission fluid listed in *Recommended Fluids and Lubricants* ⇨ *375*.

The transmission fluid will not reach the end of the dipstick unless the transmission is at operating temperature. If you need to check the transmission fluid level, please take the vehicle to your dealer.

Engine Air Cleaner/Filter

The engine air cleaner/filter is in the engine compartment on the passenger side of the vehicle. See *Engine Compartment Overview* ⇨ *284* for location.

When to Inspect the Engine Air Cleaner/Filter

For intervals on changing and inspecting the engine air cleaner/filter, see *Maintenance Schedule* ⇨ *366*.

How to Inspect the Engine Air Cleaner/Filter

Do not start the engine or have the engine running with the engine air cleaner/filter housing open. Before removing the engine air cleaner/filter, make sure that the engine air cleaner/filter housing and nearby components are free of dirt and debris. Remove the engine air cleaner/filter. Lightly tap and shake the engine air cleaner/filter (away from the vehicle), to release loose dust and dirt. Inspect the engine air cleaner/filter for damage, and replace if damaged. Do not clean the engine air cleaner/filter or components with water or compressed air.

To inspect or replace the air cleaner/filter:

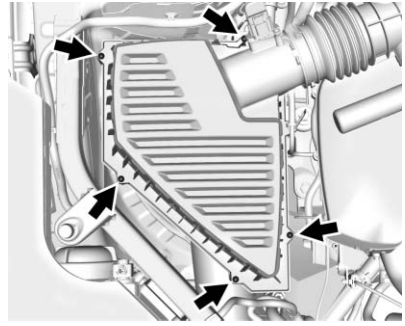

2.5L L4 Engine

1. Remove the five screws and lift the cover out of the assembly.
2. Inspect or replace the engine air cleaner/filter.
3. Lower the cover and secure with the five screws.

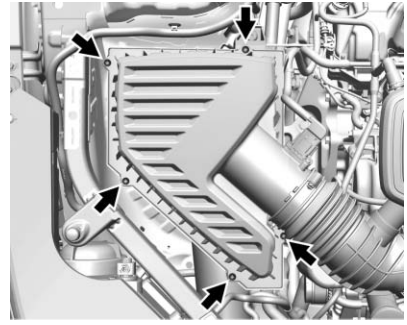

3.6L V6 Engine

1. Remove the five screws and lift the cover out of the assembly.
2. Inspect or replace the engine air cleaner/filter.
3. Lower the cover and secure with the five screws.

⚠ Warning

Operating the engine with the air cleaner/filter off can cause you or others to be burned. The air cleaner not only cleans the air; it helps to stop flames if the engine

(Continued)

Warning (Continued)

backfires. Use caution when working on the engine and do not drive with the air cleaner/filter off.

Caution

If the air cleaner/filter is off, dirt can easily get into the engine, which could damage it. Always have the air cleaner/filter in place when you are driving.

Cooling System

The cooling system allows the engine to maintain the correct working temperature.

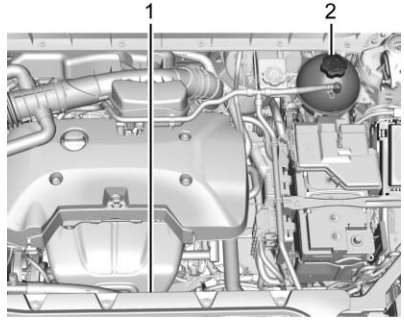

2.5L L4 Engine

1. Engine Cooling Fan (Out of View)
2. Engine Coolant Surge Tank and Pressure Cap

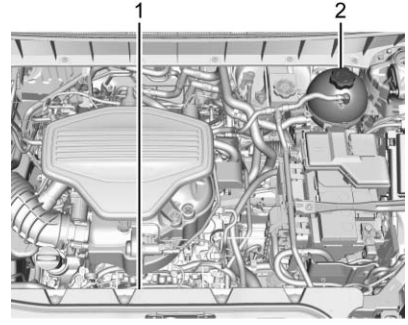

3.6L V6 Engine

1. Engine Cooling Fan (Out of View)
2. Engine Coolant Surge Tank and Pressure Cap

⚠ Warning

An electric engine cooling fan under the hood can start up even when the engine is not running and can cause injury. Keep hands, clothing, and tools away from any underhood electric fan.

⚠ Warning

Heater and radiator hoses, and other engine parts, can be very hot. Do not touch them. If you do, you can be burned.

Do not run the engine if there is a leak. If you run the engine, it could lose all coolant. That could cause an engine fire, and you could be burned. Get any leak fixed before you drive the vehicle.

Caution

Using coolant other than DEX-COOL® can cause premature engine, heater core, or radiator corrosion. In addition, the engine coolant could require changing sooner. Any repairs would not be covered by the vehicle warranty. Always use DEX-COOL (silicate-free) coolant in the vehicle.

Engine Coolant

The cooling system in the vehicle is filled with DEX-COOL® engine coolant. This coolant needs to be checked and replaced at appropriate intervals. See *Maintenance Schedule* ⇨ *366*.

The following explains the cooling system and how to check and add coolant when it is low. If there is a problem with engine overheating, see *Engine Overheating* ⇨ *296*.

What to Use

⚠ Warning

Adding only plain water or some other liquid to the cooling system can be dangerous. Plain water and other liquids, can boil before the proper coolant mixture will. The coolant warning system is set for the proper coolant mixture. With plain water or the wrong mixture, the engine could get too hot but you would not get the

(Continued)

Warning (Continued)

overheat warning. The engine could catch fire and you or others could be burned. Use a 50/50 mixture of clean, drinkable water and DEX-COOL coolant.

Use a 50/50 mixture of clean, drinkable water and DEX-COOL coolant. If using this mixture, nothing else needs to be added. This mixture:

- Gives freezing protection down to −37 °C (−34 °F), outside temperature.
- Gives boiling protection up to 129 °C (265 °F), engine temperature.
- Protects against rust and corrosion.
- Will not damage aluminum parts.
- Helps keep the proper engine temperature.

Caution

If improper coolant mixture, inhibitors, or additives are used in the vehicle cooling system, the engine could overheat and be damaged. Too much water in the mixture can freeze and crack engine cooling parts. The repairs would not be covered by the vehicle warranty. Use only the proper mixture of engine coolant for the cooling system. See *Recommended Fluids and Lubricants* ⇨ *375*.

Never dispose of engine coolant by putting it in the trash, pouring it on the ground, or into sewers, streams, or bodies of water. Have the coolant changed by an authorized service center, familiar with legal requirements regarding used coolant disposal. This will help protect the environment and your health.

Checking Coolant

The vehicle must be on a level surface when checking the coolant level.

Check to see if coolant is visible in the coolant surge tank. If the coolant inside the coolant surge tank is boiling, do not do anything else until it cools down. If coolant is visible but the coolant level mark is not visible, add a 50/50 mixture of clean, drinkable water and DEX-COOL coolant at the coolant surge tank to the top rib on the middle of the tank, but be sure the cooling system is cool before this is done. See *Engine Overheating* ⇨ *296*.

The coolant surge tank is located in the engine compartment on the driver side of the vehicle. See *Engine Compartment Overview* ⇨ *284*.

How to Add Coolant to the Coolant Surge Tank

Caution

This vehicle has a specific coolant fill procedure. Failure to follow this procedure could cause the engine to overheat and be severely damaged.

If no problem is found, check to see if coolant is visible in the coolant surge tank. If coolant is visible but the coolant level is not at the indicated level mark, add a 50/50 mixture of clean, drinkable water and DEX-COOL coolant at the coolant surge tank, but be sure the cooling system, including the coolant surge tank pressure cap, is cool before you do it.

⚠ Warning

Steam and scalding liquids from a hot cooling system can blow out and burn you badly. Never turn

(Continued)

Warning (Continued)

the cap when the cooling system, including the surge tank pressure cap, is hot. Wait for the cooling system and surge tank pressure cap to cool.

⚠ Warning

Adding only plain water or some other liquid to the cooling system can be dangerous. Plain water and other liquids, can boil before the proper coolant mixture will. The coolant warning system is set for the proper coolant mixture. With plain water or the wrong mixture, the engine could get too hot but you would not get the overheat warning. The engine could catch fire and you or others could be burned. Use a 50/50 mixture of clean, drinkable water and DEX-COOL coolant.

Caution

In cold weather, water can freeze and crack the engine, radiator, heater core, and other parts. Use the recommended coolant and the proper coolant mixture.

⚠ Warning

You can be burned if you spill coolant on hot engine parts. Coolant contains ethylene glycol and it will burn if the engine parts are hot enough. Do not spill coolant on a hot engine.

1. Remove the coolant surge tank pressure cap when the cooling system, including the coolant surge tank pressure cap and upper radiator hose, is no longer hot.

   Turn the pressure cap slowly counterclockwise about one-quarter of a turn. If you hear a hiss, wait for that to stop. This will allow any pressure still left to be vented out the discharge hose.

2. Keep turning the pressure cap slowly and remove it.

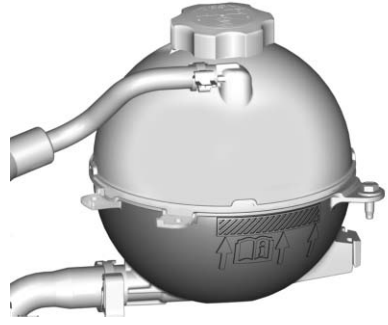

3. Fill the coolant surge tank with the proper mixture to the indicated level mark.
4. With the coolant surge tank pressure cap off, start the engine and let it run until you can feel the upper radiator hose getting hot. Watch out for the engine cooling fan.

By this time, the coolant level inside the coolant surge tank may be lower. If the level is lower, add more of the proper mixture to the coolant surge tank until the level reaches the indicated level mark.

5. Replace the pressure cap tightly.
6. Verify coolant level after the engine is shut off and the coolant is cold. If necessary, repeat coolant fill procedure Steps 1–6.

   If the coolant still is not at the proper level when the system cools down again, see your dealer.

Caution

If the pressure cap is not tightly installed, coolant loss and possible engine damage may occur. Be sure the cap is properly and tightly secured.

Engine Overheating

The vehicle has several indicators to warn of the engine overheating.

There is an engine coolant temperature gauge on the instrument cluster. See *Engine Coolant Temperature Gauge* ⇨ *129*. The vehicle may also display a message on the Driver Information Center (DIC). See *Engine Cooling System Messages* ⇨ *150*.

If the decision is made not to lift the hood when this warning appears, get service help right away. See *Roadside Assistance Program* ⇨ *386*.

If the decision is made to lift the hood, make sure the vehicle is parked on a level surface. Then check to see if the engine cooling fan is running. If the engine is overheating, the fan should be running. If it is not, do not continue to run the engine. Have the vehicle serviced.

Caution

Running the engine without coolant may cause damage or a fire. Vehicle damage would not be covered by the vehicle warranty.

If Steam Is Coming from the Engine Compartment

⚠ Warning

Steam from an overheated engine can burn you badly, even if you just open the hood. Stay away from the engine if you see or hear steam coming from it. Just turn it off and get everyone away from the vehicle until it cools down. Wait until there is no sign of steam or coolant before you open the hood.

If you keep driving when the engine is overheated, the liquids in it can catch fire. You or others could be badly burned. Stop the

(Continued)

Warning (Continued)

engine if it overheats, and get out of the vehicle until the engine is cool.

If No Steam Is Coming from the Engine Compartment

If an engine overheat warning is displayed but no steam can be seen or heard, the problem may not be too serious. Sometimes the engine can get a little too hot when the vehicle:

- Climbs a long hill on a hot day.
- Stops after high-speed driving.
- Idles for long periods in traffic.

If the overheat warning is displayed with no sign of steam:

1. Turn the air conditioning off.
2. Turn the heater on to the highest temperature and to the highest fan speed. Open the windows as necessary.
3. When it is safe to do so, pull off the road, shift to P (Park) or N (Neutral), and let the engine idle.

If the engine coolant temperature gauge is no longer in the overheated area, the vehicle can be driven. Continue to drive the vehicle slowly for about 10 minutes. Keep a safe distance from the vehicle in front. If the warning does not come back on, continue to drive normally and have the cooling system checked for proper fill and function.

If the warning continues, pull over, stop, and park the vehicle right away.

If there is no sign of steam, idle the engine for three minutes while parked. If the warning is still displayed, turn off the engine until it cools down.

Washer Fluid

What to Use

When windshield washer fluid is needed, be sure to read the manufacturer's instructions before use. If operating the vehicle in an area where the temperature may fall below freezing, use a fluid that has sufficient protection against freezing.

Adding Washer Fluid

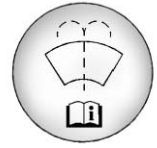

Open the cap with the washer symbol on it. Add washer fluid until the tank is full. See *Engine Compartment Overview* ⇨ *284* for reservoir location.

Caution

- Do not use washer fluid that contains any type of water repellent coating. This can cause the wiper blades to chatter or skip.

(Continued)

Caution (Continued)

- Do not use engine coolant (antifreeze) in the windshield washer. It can damage the windshield washer system and paint.
- Do not mix water with ready-to-use washer fluid. Water can cause the solution to freeze and damage the washer fluid tank and other parts of the washer system.
- When using concentrated washer fluid, follow the manufacturer instructions for adding water.
- Fill the washer fluid tank only three-quarters full when it is very cold. This allows for fluid expansion if freezing occurs, which could damage the tank if it is completely full.

Brakes

Disc brake pads have built-in wear indicators that make a high-pitched warning sound when the brake pads are worn and new pads are needed. The sound can come and go or can be heard all the time when the vehicle is moving, except when applying the brake pedal firmly.

⚠ Warning

The brake wear warning sound means that soon the brakes will not work well. That could lead to a crash. When the brake wear warning sound is heard, have the vehicle serviced.

Caution

Continuing to drive with worn-out brake pads could result in costly brake repair.

Some driving conditions or climates can cause a brake squeal when the brakes are first applied or lightly applied. This does not mean something is wrong with the brakes.

Properly torqued wheel nuts are necessary to help prevent brake pulsation. When tires are rotated, inspect brake pads for wear and evenly tighten wheel nuts in the proper sequence to torque specifications. See *Capacities and Specifications* ⇨ *380*.

Brake pads should be replaced as complete sets.

Brake Pedal Travel

See your dealer if the brake pedal does not return to normal height, or if there is a rapid increase in pedal travel. This could be a sign that brake service may be required.

Replacing Brake System Parts

Always replace brake system parts with new, approved replacement parts. If this is not done, the brakes may not work properly. The braking performance expected can change in many other ways if the wrong

replacement brake parts are installed or if parts are improperly installed.

Brake Fluid

The brake master cylinder reservoir is filled with GM approved DOT 3 brake fluid as indicated on the reservoir cap. See *Engine Compartment Overview* ⇨ *284* for the location of the reservoir.

Checking Brake Fluid

With the vehicle in P (Park) on a level surface, the brake fluid level should be between the minimum and maximum marks on the brake fluid reservoir.

There are only two reasons why the brake fluid level in the reservoir may go down:

- Normal brake lining wear. When new linings are installed, the fluid level goes back up.
- A fluid leak in the brake hydraulic system. Have the brake hydraulic system fixed. With a leak, the brakes will not work well.

Always clean the brake fluid reservoir cap and the area around the cap before removing it.

Do not top off the brake fluid. Adding fluid does not correct a leak. If fluid is added when the linings are worn, there will be too much fluid when new brake linings are installed. Add or remove fluid, as necessary, only when work is done on the brake hydraulic system.

⚠ Warning

If too much brake fluid is added, it can spill on the engine and burn, if the engine is hot enough. You or others could be burned, and the vehicle could be damaged.

(Continued)

Warning (Continued)

Add brake fluid only when work is done on the brake hydraulic system.

When the brake fluid falls to a low level, the brake warning light comes on. See *Brake System Warning Light* ⇨ *134*.

Brake fluid absorbs water over time which degrades the effectiveness of the brake fluid. Replace brake fluid at the specified intervals to prevent increased stopping distance. See *Maintenance Schedule* ⇨ *366*.

What to Add

Use only GM approved DOT 3 brake fluid from a clean, sealed container. See *Recommended Fluids and Lubricants* ⇨ *375*.

⚠ Warning

The wrong or contaminated brake fluid could result in damage to the brake system. This could result in the loss of braking leading to a possible injury. Always use the proper GM approved brake fluid.

Caution

If brake fluid is spilled on the vehicle's painted surfaces, the paint finish can be damaged. Immediately wash off any painted surface.

Battery - North America

The original equipment battery is maintenance free. Do not remove the cap and do not add fluid.

Refer to the replacement number on the original battery label when a new battery is needed.

⚠ Warning

WARNING: Battery posts, terminals, and related accessories contain lead and lead compounds, chemicals known to the State of California to cause cancer and birth defects or other reproductive harm. Batteries also contain other chemicals known to the State of California to cause cancer. **WASH HANDS AFTER HANDLING.**

See *California Proposition 65 Warning* ⇨ *281*.

Vehicle Storage

⚠ Warning

Batteries have acid that can burn you and gas that can explode. You can be badly hurt if you are not careful. See *Jump Starting - North America* ⇨ *349* for tips on working around a battery without getting hurt.

Infrequent Usage: Remove the black, negative (−) cable from the battery to keep the battery from running down.

Extended Storage: Remove the black, negative (−) cable from the battery or use a battery trickle charger.

All-Wheel Drive

Transfer Case

Under normal driving conditions, transfer case fluid does not require maintenance unless there is a fluid leak or unusual noise. If required, have the transfer case serviced by your dealer.

Starter Switch Check

⚠ Warning

When you are doing this inspection, the vehicle could move suddenly. If the vehicle moves, you or others could be injured.

1. Before starting this check, be sure there is enough room around the vehicle.
2. Apply both the parking brake and the regular brake.

   Do not use the accelerator pedal, and be ready to turn off the engine immediately if it starts.
3. Try to start the engine in each gear. The vehicle should start only in P (Park) or N (Neutral). If the vehicle starts in any other position, contact your dealer for service.

Automatic Transmission Shift Lock Control Function Check

⚠ Warning

When you are doing this inspection, the vehicle could move suddenly. If the vehicle moves, you or others could be injured.

1. Before starting this check, be sure there is enough room around the vehicle. It should be parked on a level surface.
2. Apply the parking brake. Be ready to apply the regular brake immediately if the vehicle begins to move.
3. With the engine off, turn the ignition on, but do not start the engine. Without applying the regular brake, try to move the shift lever out of P (Park) with normal effort. If the shift lever moves out of P (Park), contact your dealer for service.

Park Brake and P (Park) Mechanism Check

⚠ Warning

When you are doing this check, the vehicle could begin to move. You or others could be injured and property could be damaged. Make sure there is room in front

(Continued)

Warning (Continued)

of the vehicle in case it begins to roll. Be ready to apply the regular brake at once should the vehicle begin to move.

Park on a fairly steep hill, with the vehicle facing downhill. Keeping your foot on the regular brake, set the parking brake.

- To check the parking brake's holding ability: With the engine running and the transmission in N (Neutral), slowly remove foot pressure from the regular brake pedal. Do this until the vehicle is held by the parking brake only.
- To check the P (Park) mechanism's holding ability: With the engine running, shift to P (Park). Then release the parking brake followed by the regular brake.

Contact your dealer if service is required.

Wiper Blade Replacement

Windshield wiper blades should be inspected for wear or cracking.

It is a good idea to clean or replace the wiper blade assembly on a regular basis or when worn. For proper windshield wiper blade length and type, see *Maintenance Replacement Parts* ⇨ *376*.

Caution
Allowing the wiper arm to touch the windshield when no wiper blade is installed could damage the windshield. Any damage that occurs would not be covered by the vehicle warranty. Do not allow the wiper arm to touch the windshield.

Front Wiper Blade Replacement

To replace the wiper blade assembly:

1. Pull the windshield wiper assembly away from the windshield.

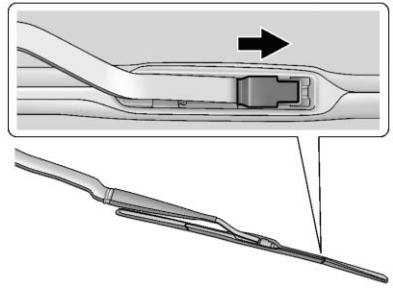

2. Lift up on the latch in the middle of the wiper blade where the wiper arm attaches.
3. With the latch open, pull the wiper blade down toward the windshield far enough to release it from the J-hooked end of the wiper arm.
4. Remove the wiper blade.
5. Reverse Steps 1–3 for wiper blade replacement.

Rear Wiper Blade Replacement

To remove the wiper blade:

1. Lift the wiper arm away from the window. The rear wiper arm will only lift off the glass at a small angle to allow for wiper blade removal. The rear wiper arm will not lock in a service up position so care should be taken when replacing the rear wiper blade.

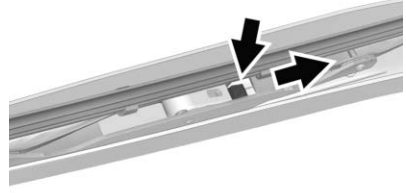

2. Push the release lever to disengage the hook and push the wiper arm toward the center of the vehicle and out of the blade assembly.

3. Push the new blade assembly securely on the wiper arm until the release lever clicks into place.

Windshield Replacement

Driver Assistance Systems

When a windshield replacement is needed and the vehicle is equipped with a front-looking camera sensor for the Driver Assistance Systems, the windshield must be installed according to GM specifications for these systems to work properly. If it is not, there may be unexpected behavior and/or messages from these systems. See *Object Detection System Messages* ⇨ *152*.

Headlamp Aiming

Headlamp aim has been preset and should need no further adjustment.

If the vehicle is damaged in a crash, the headlamp aim may be affected. If adjustment to the headlamps is necessary, see your dealer.

Bulb Replacement

For the proper type of replacement bulbs, or any bulb changing procedure not listed in this section, contact your dealer.

Halogen Bulbs

⚠ Warning

Halogen bulbs have pressurized gas inside and can burst if you drop or scratch the bulb. You or others could be injured. Be sure to read and follow the instructions on the bulb package.

LED Lighting

This vehicle has several LED lamps. For replacement of any LED lighting assembly, contact your dealer.

License Plate Lamp

To replace one of these bulbs:

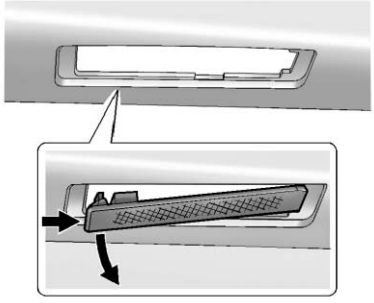

Passenger Side Shown, Driver Side Similar

1. Push the left end of the lamp assembly toward the right.
2. Turn the lamp assembly down to remove it from the liftgate.

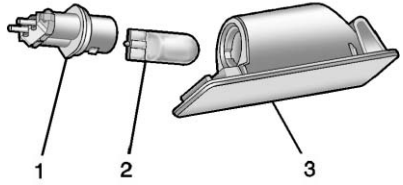

3. Turn the bulb socket (1) counterclockwise to remove it from the lamp assembly (3).
4. Pull the bulb (2) straight out of the bulb socket.
5. Push the replacement bulb straight into the bulb socket and turn the bulb socket clockwise to install into the lamp assembly.
6. Turn the lamp assembly into the liftgate, engaging the clip side first.
7. Push on the lamp side opposite the clip until the lamp assembly snaps into place.

Electrical System

High Voltage Devices and Wiring

⚠ Warning

Exposure to high voltage can cause shock, burns, and even death. The high voltage components in the vehicle can only be serviced by technicians with special training.

High voltage components are identified by labels. Do not remove, open, take apart, or modify these components. High voltage cable or wiring has orange covering or labels. Do not probe, tamper with, cut, or modify high voltage cable or wiring.

Electrical System Overload

The vehicle has fuses and circuit breakers to protect against an electrical system overload.

When the current electrical load is too heavy, the circuit breaker opens and closes, protecting the circuit until the current load returns to normal or the problem is fixed. This greatly reduces the chance of circuit overload and fire caused by electrical problems.

Fuses and circuit breakers protect power devices in the vehicle.

Replace a bad fuse with a new one of the identical size and rating.

If there is a problem on the road and a fuse needs to be replaced, the same amperage fuse can be borrowed. Choose some feature of the vehicle that is not needed to use and replace it as soon as possible.

Headlamp Wiring

An electrical overload may cause the lamps to go on and off, or in some cases to remain off. Have the headlamp wiring checked right away if the lamps go on and off or remain off.

Windshield Wipers

If the wiper motor overheats due to heavy snow or ice, the windshield wipers will stop until the motor cools and will then restart.

Although the circuit is protected from electrical overload, overload due to heavy snow or ice may cause wiper linkage damage. Always clear ice and heavy snow from the windshield before using the windshield wipers.

If the overload is caused by an electrical problem and not snow or ice, be sure to get it fixed.

Fuses and Circuit Breakers

The wiring circuits in your vehicle are protected from short circuits by a combination of fuses, circuit breakers and fusible thermal links. This greatly reduces the chance of fires caused by electrical problems.

Look at the silver-colored band inside the fuse. If the band is broken or melted, replace the fuse. Be sure you replace a bad fuse with a new one of the identical size and rating.

Fuses of the same amperage can be temporarily borrowed from another fuse location, if a fuse goes out. Replace the fuse as soon as you can.

Engine Compartment Fuse Block

The underhood fuse block is in the engine compartment, on the driver side of the vehicle.

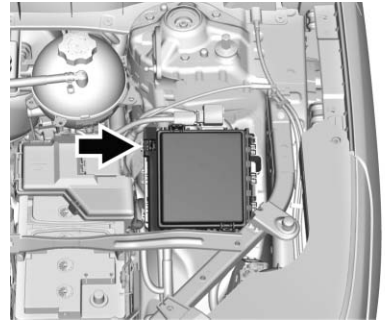

Caution
Do not pull the engine compartment fuse block lever, since it is intended only for service purposes. If pulled, vehicle malfunction may occur.

To remove the fuse block cover, press the clips on the cover and lift it straight up.

Caution
Spilling liquid on any electrical component on the vehicle may damage it. Always keep the covers on any electrical component.

To remove fuses, hold the end of the fuse between your thumb and index finger and pull straight out.

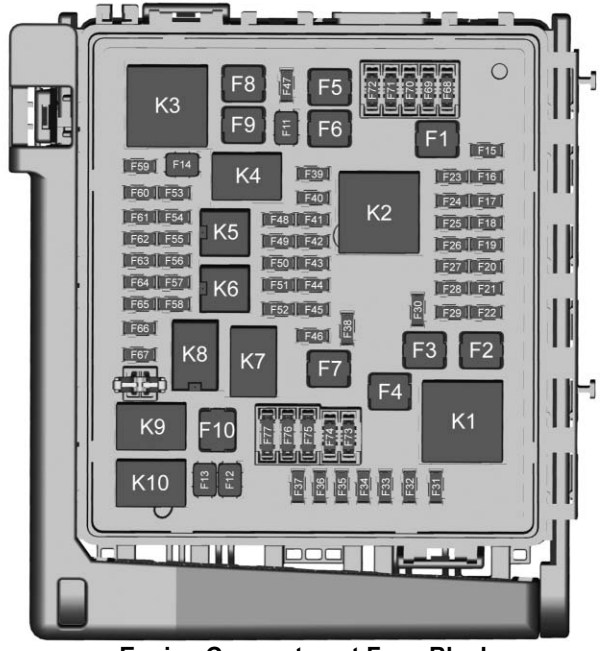

Engine Compartment Fuse Block

The vehicle may not be equipped with all of the fuses, relays, and features shown.

Fuses	Usage
F1	ABS pump

Fuses	Usage
F2	Starter 1
F3	DC DC transformer 1
F4	–
F5	–
F6	–
F7	DC DC transformer 2
F8	Starter 3
F9	–
F10	–
F11	–
F12	Front wiper
F13	Starter 2
F14	LED/Automatic headlamp leveling (if equipped)
F15	Rear wiper 1
F16	–
F17	–

Fuses	Usage
F18	Automatic headlamp leveling (if equipped)
F19	–
F20	–
F21	–
F22	Electronic brake control module
F23	Parking/ Trailer lamp
F24	Right trailer stoplamp/ Turnlamps
F25	Steering column lock
F26	–
F27	Left trailer stoplamp/ Turnlamps
F28	–
F29	–
F30	Washer pump

Fuses	Usage
F31	Right low-beam headlamp
F32	Left low-beam headlamp
F33	Front fog lamps
F34	Horn
F35	–
F36	Left high-beam headlamp
F37	Right high-beam headlamp
F38	Automatic headlamp leveling (if equipped)
F39	Transmission control module 1
F40	Left rear bus electrical center/ Ignition
F41	Instrument cluster
F42	HVAC
F43	Head-up display
F44	–

Fuses	Usage
F45	–
F46	–
F47	–
F48	Rear wiper 2
F49	Interior rearview mirror/Trailer
F50	Fuel system control module
F51	Heated steering wheel
F52	A/C clutch
F53	Transmission range control module
F54	Coolant pump
F55	–
F56	–
F57	Engine control module/Ignition
F58	Transmission control module/ Ignition
F59	Engine control module battery
F60	Transmission control module 2
F61	O2 sensor 1/ Aeroshutter
F62	Engine control module – odd
F63	O2 sensor 2
F64	Engine control module – even
F65	Engine control module powertrain 1
F66	Engine control module powertrain 2
F67	Powertrain TRCM
F68	–
F69	–
F70	–
F71	–
F72	–
F73	–
F74	–
F75	–
F76	–
F77	–
K1	Starter 1
K2	Run/Crank
K3	Starter 3
K4	LED/Automatic headlamp (if equipped)
K5	–
K6	Coolant pump
K7	Engine control module
K8	A/C
K9	–
K10	Starter 2

Instrument Panel Fuse Block

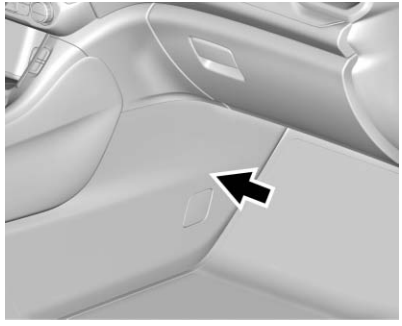

The instrument panel fuse block is inside the center console on the passenger side of the vehicle.

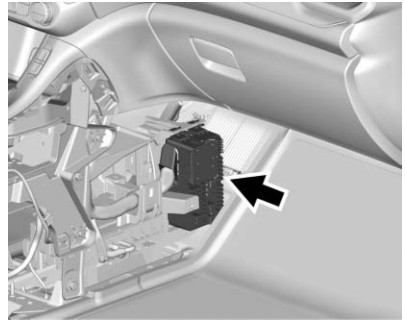

Remove the bolt cap and the screw that attaches the console side trim. Then remove the console side trim to access the fuse block.

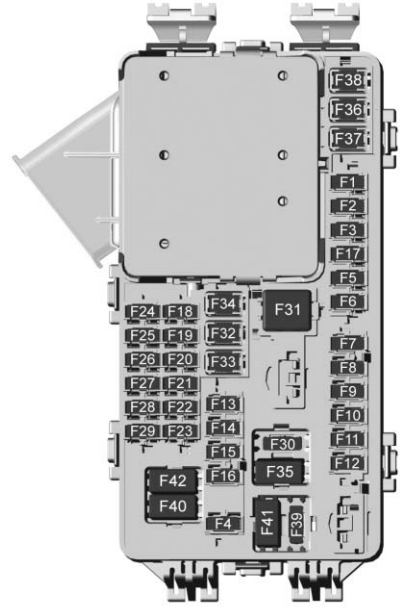

Instrument Panel Fuse Block

The vehicle may not be equipped with all of the fuses, relays, and features shown.

Fuses	Usage
F1	Body control module 6
F2	Diagnostic link
F3	Electric steering column lock
F4	–
F5	Logistics
F6	HVAC
F7	Body control module 3
F8	Head-up display
F9	Right front heated seat
F10	Airbag
F11	Electronic transmission range system
F12	Amplifier
F13	Body control module 7
F14	Left front heated seat
F15	Instrument panel switch bank
F16	Sunroof
F17	Body control module 1
F18	Instrument cluster
F19	–
F20	Rear seat entertainment
F21	Body control module 4
F22	Infotainment
F23	Body control module 2
F24	USB charge/ Wireless charging module
F25	Parking assist
F26	CIM
F27	–
F28	HVAC display
F29	Radio
F30	Steering wheel controls
F31	Blower front
F32	AC DC inverter
F33	Driver power seat
F34	Passenger power seat
F35	Battery IEC 1 feed
F36	Electric power steering
F37	Rear seat entertainment/USB charge/Wireless charging module
F38	Body control module 8
F39	–
F40	–
F41	–
F42	Auxiliary power outlet/Lighter

Rear Compartment Fuse Block

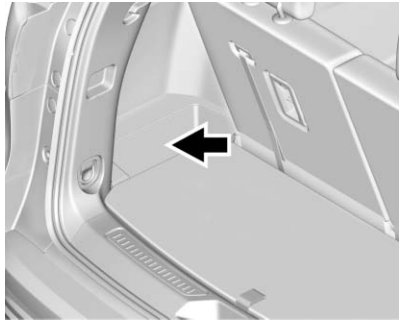

The rear compartment fuse block is behind a trim panel on the driver side of the rear storage compartment.

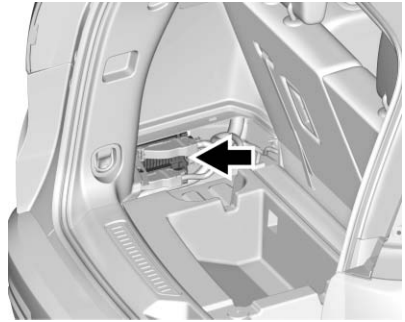

Remove Side Bin, Load Floor and foam. See *Cargo Management System* ⇨ *109*

Remove the trim plate to access the fuse block.

The label for this fuse block is in the spare tire area, on the foam under the cargo floor.

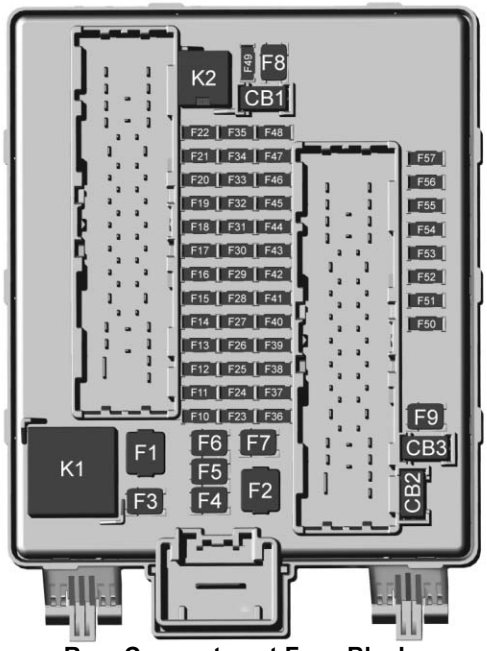

Rear Compartment Fuse Block

Fuses	Usage
F1	–
F2	Trailer battery 1
F3	Driver safety belt
F4	Rear blower
F5	Rear drive control
F6	Passenger safety belt
F7	Right window
F8	Rear defogger
F9	Left window
F10	–
F11	Trailer reverse
F12	–
F13	–
F14	–
F15	–
F16	–
F17	Rear vision camera
F18	Trailer module
F19	Ventilated seats
F20	–
F21	Trailer connector

Fuses	Usage
F22	–
F23	–
F24	Passenger window switch
F25	–
F26	Trailer brake lamps
F27	Driver seat ventilation/Lumbar
F28	Passive entry/ Passive start
F29	–
F30	Canister vent
F31	–
F32	Heated mirrors
F33	–
F34	Logic mode
F35	Fuel system control module
F36	Passenger seat ventilation/Lumbar
F37	–
F38	Window module

Fuses	Usage
F39	Rear closure
F40	Memory seat module
F41	Automatic occupancy sensor
F42	Trailer battery 2
F43	–
F44	–
F45	Liftgate
F46	Rear heated seats
F47	–
F48	Glass break sensor
F49	–
F50	–
F51	–
F52	Semi-active dampening system module
F53	Rear parking aid module

Fuses	Usage
F54	External object calculating remote system
F55	–
F56	Universal garage door-opener/Rain sensor
F57	Theft deterrent system
CB1	–
CB2	–
CB3	Rear accessory power outlet
K1	–
K2	–

Wheels and Tires

Tires

Every new GM vehicle has high-quality tires made by a leading tire manufacturer. See the warranty manual for information regarding the tire warranty and where to get service. For additional information refer to the tire manufacturer.

⚠ Warning

- Poorly maintained and improperly used tires are dangerous.
- Overloading the tires can cause overheating as a result of too much flexing. There could be a blowout and a serious crash. See *Vehicle Load Limits* ⇨ *221*.

(Continued)

Warning (Continued)

- Underinflated tires pose the same danger as overloaded tires. The resulting crash could cause serious injury. Check all tires frequently to maintain the recommended pressure. Tire pressure should be checked when the tires are cold.
- Overinflated tires are more likely to be cut, punctured, or broken by a sudden impact — such as when hitting a pothole. Keep tires at the recommended pressure.
- Worn or old tires can cause a crash. If the tread is badly worn, replace them.

(Continued)

Warning (Continued)

- Replace any tires that have been damaged by impacts with potholes, curbs, etc.
- Improperly repaired tires can cause a crash. Only the dealer or an authorized tire service center should repair, replace, dismount, and mount the tires.
- Do not spin the tires in excess of 56 km/h (35 mph) on slippery surfaces such as snow, mud, ice, etc. Excessive spinning may cause the tires to explode.

See *Tire Pressure for High-Speed Operation* ⇨ *322* for inflation pressure adjustment for high-speed driving.

All-Season Tires

This vehicle may come with all-season tires. These tires are designed to provide good overall performance on most road surfaces and weather conditions. Original equipment tires designed to GM's specific tire performance criteria have a TPC specification code molded onto the sidewall. Original equipment all-season tires can be identified by the last two characters of this TPC code, which will be “MS.”

Consider installing winter tires on the vehicle if frequent driving on snow or ice-covered roads is expected. All-season tires provide adequate performance for most winter driving conditions, but they may not offer the same level of traction or performance as winter tires on snow or ice-covered roads. See *Winter Tires* ⇨ *315*.

Winter Tires

This vehicle was not originally equipped with winter tires. Winter tires are designed for increased traction on snow and ice-covered roads. Consider installing winter tires on the vehicle if frequent driving on ice or snow covered roads is expected. See your dealer for details regarding winter tire availability and proper tire selection. Also, see *Buying New Tires* ⇨ *329*.

With winter tires, there may be decreased dry road traction, increased road noise, and shorter tread life. After changing to winter tires, be alert for changes in vehicle handling and braking.

If using winter tires:

- Use tires of the same brand and tread type on all four wheel positions.
- Use only radial ply tires of the same size, load range, and speed rating as the original equipment tires.

Winter tires with the same speed rating as the original equipment tires may not be available for H, V, W, Y, and ZR speed rated tires. If winter tires with a lower speed rating are chosen, never exceed the tire's maximum speed capability.

Summer Tires

This vehicle may come with high performance summer tires. These tires have a special tread and compound that are optimized for maximum dry and wet road performance. This special tread and compound will have decreased performance in cold climates, and on ice and snow. It is recommended that winter tires be installed on the vehicle if frequent driving at temperatures below approximately 5 °C (40 °F) or on ice or snow covered roads is expected. See *Winter Tires* ⇨ *315*.

Caution

High performance summer tires have rubber compounds that lose flexibility and may develop surface cracks in the tread area at temperatures

(Continued)

Caution (Continued)

below −7 °C (20 °F). Always store high performance summer tires indoors and at temperatures above −7 °C (20 °F) when not in use. If the tires have been subjected to −7 °C (20 °F) or less, let them warm up in a heated space to at least 5 °C (40 °F) for 24 hours or more before being installed or driving a vehicle on which they are installed. Do not apply heat or blow heated air directly on the tires. Always inspect tires before use. See *Tire Inspection* ⇨ *327*.

Tire Sidewall Labeling

Useful information about a tire is molded into its sidewall. The examples show a typical passenger vehicle tire and a compact spare tire sidewall.

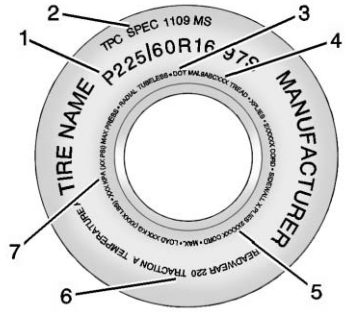

Passenger (P-Metric) Tire Example

(1) Tire Size : The tire size is a combination of letters and numbers used to define a particular tire's width, height, aspect ratio, construction type, and service description. See the “Tire Size” illustration later in this section.

(2) TPC Spec (Tire Performance Criteria Specification) : Original equipment tires designed to GM's specific tire performance criteria have a TPC specification code molded onto the sidewall. GM's TPC specifications meet or exceed all federal safety guidelines.

(3) DOT (Department of Transportation) : The Department of Transportation (DOT) code indicates that the tire is in compliance with the U.S. Department of Transportation Motor Vehicle Safety Standards.

DOT Tire Date of Manufacture : The last four digits of the TIN indicate the tire manufactured date. The first two digits represent the week (01–52) and the last two digits, the year. For example, the third week of the year 2010 would have a four-digit DOT date of 0310.

(4) Tire Identification Number (TIN) : The letters and numbers following the DOT (Department of Transportation) code are the Tire Identification Number (TIN). The TIN shows the

manufacturer and plant code, tire size, and date the tire was manufactured. The TIN is molded onto both sides of the tire, although only one side may have the date of manufacture.

(5) Tire Ply Material : The type of cord and number of plies in the sidewall and under the tread.

(6) Uniform Tire Quality Grading (UTQG) : Tire manufacturers are required to grade tires based on three performance factors: treadwear, traction, and temperature resistance. For more information see *Uniform Tire Quality Grading* ⇨ *331*.

(7) Maximum Cold Inflation Load Limit : Maximum load that can be carried and the maximum pressure needed to support that load.

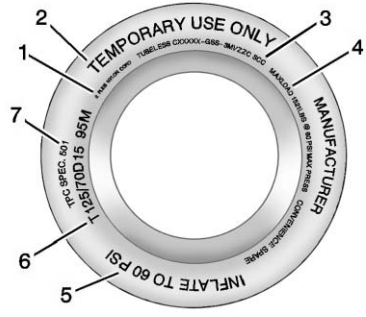

Compact Spare Tire Example

(1) Tire Ply Material : The type of cord and number of plies in the sidewall and under the tread.

(2) Temporary Use Only : The compact spare tire or temporary use tire should not be driven at speeds over 80 km/h (50 mph). The compact spare tire is for emergency use when a regular road tire has lost air and gone flat. If the vehicle has a compact spare tire, see *Compact Spare Tire* ⇨ *348* and *If a Tire Goes Flat* ⇨ *334*.

(3) Tire Identification Number (TIN) : The letters and numbers following the DOT (Department of Transportation) code are the Tire Identification Number (TIN). The TIN shows the manufacturer and plant code, tire size, and date the tire was manufactured. The TIN is molded onto both sides of the tire, although only one side may have the date of manufacture.

(4) Maximum Cold Inflation Load Limit : Maximum load that can be carried and the maximum pressure needed to support that load.

(5) Tire Inflation : The temporary use tire or compact spare tire should be inflated to 420 kPa (60 psi). For more information on tire pressure and inflation see *Tire Pressure* ⇨ *321*.

(6) Tire Size : A combination of letters and numbers define a tire's width, height, aspect ratio,

construction type, and service description. The letter T as the first character in the tire size means the tire is for temporary use only.

(7) TPC Spec (Tire Performance Criteria Specification) : Original equipment tires designed to GM's specific tire performance criteria have a TPC specification code molded onto the sidewall. GM's TPC specifications meet or exceed all federal safety guidelines.

Tire Designations

Tire Size

The following is an example of a typical passenger vehicle tire size.

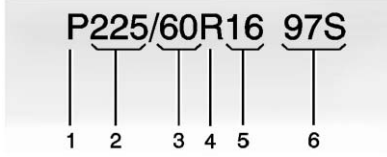

(1) Passenger (P-Metric) Tire : The United States version of a metric tire sizing system. The letter P as the first character in the tire size means a passenger vehicle tire engineered to standards set by the U.S. Tire and Rim Association.

(2) Tire Width : The three-digit number indicates the tire section width in millimeters from sidewall to sidewall.

(3) Aspect Ratio : A two-digit number that indicates the tire height-to-width measurements. For example, if the tire size aspect ratio is 60, as shown in item 3 of the illustration, it would mean that the tire's sidewall is 60 percent as high as it is wide.

(4) Construction Code : A letter code is used to indicate the type of ply construction in the tire. The letter R means radial ply construction; the letter D means diagonal or bias ply construction; and the letter B means belted-bias ply construction.

(5) Rim Diameter : Diameter of the wheel in inches.

(6) Service Description : These characters represent the load index and speed rating of the tire. The load index represents the load carrying capacity a tire is certified to carry. The speed rating is the maximum speed a tire is certified to carry a load.

Tire Terminology and Definitions

Air Pressure : The amount of air inside the tire pressing outward on each square inch of

the tire. Air pressure is expressed in kPa (kilopascal) or psi (pounds per square inch).

Accessory Weight : The combined weight of optional accessories. Some examples of optional accessories are automatic transmission, power windows, power seats, and air conditioning.

Aspect Ratio : The relationship of a tire's height to its width.

Belt : A rubber coated layer of cords between the plies and the tread. Cords may be made from steel or other reinforcing materials.

Bead : The tire bead contains steel wires wrapped by steel cords that hold the tire onto the rim.

Bias Ply Tire : A pneumatic tire in which the plies are laid at alternate angles less than 90 degrees to the centerline of the tread.

Cold Tire Pressure : The amount of air pressure in a tire, measured in kPa (kilopascal) or psi (pounds per square inch) before a tire has built up heat from driving. See *Tire Pressure* ⇨ *321*.

Curb Weight : The weight of a motor vehicle with standard and optional equipment including the maximum capacity of fuel, oil, and coolant, but without passengers and cargo.

DOT Markings : A code molded into the sidewall of a tire signifying that the tire is in compliance with the U.S. Department of Transportation (DOT) Motor Vehicle Safety Standards. The DOT code includes the Tire Identification Number (TIN), an alphanumeric designator which can also identify the tire manufacturer, production plant, brand, and date of production.

GVWR : Gross Vehicle Weight Rating. See *Vehicle Load Limits* ⇨ *221*.

GAWR FRT : Gross Axle Weight Rating for the front axle. See *Vehicle Load Limits* ⇨ *221*.

GAWR RR : Gross Axle Weight Rating for the rear axle. See *Vehicle Load Limits* ⇨ *221*.

Intended Outboard Sidewall : The side of an asymmetrical tire that must always face outward when mounted on a vehicle.

Kilopascal (kPa) : The metric unit for air pressure.

Light Truck (LT-Metric) Tire : A tire used on light duty trucks and some multipurpose passenger vehicles.

Load Index : An assigned number ranging from 1 to 279 that corresponds to the load carrying capacity of a tire.

Maximum Inflation Pressure : The maximum air pressure to which a cold tire can be inflated. The maximum air pressure is molded onto the sidewall.

Maximum Load Rating : The load rating for a tire at the maximum permissible inflation pressure for that tire.

Maximum Loaded Vehicle Weight : The sum of curb weight, accessory weight, vehicle capacity weight, and production options weight.

Normal Occupant Weight : The number of occupants a vehicle is designed to seat multiplied by 68 kg (150 lb). See *Vehicle Load Limits* ⇨ *221*.

Occupant Distribution : Designated seating positions.

Outward Facing Sidewall : The side of an asymmetrical tire that has a particular side that faces outward when mounted on a vehicle. The side of the tire that contains a whitewall, bears white lettering, or bears manufacturer, brand, and/or model name molding that is higher or deeper than the same moldings on the other sidewall of the tire.

Passenger (P-Metric) Tire : A tire used on passenger cars and some light duty trucks and multipurpose vehicles.

Recommended Inflation Pressure : Vehicle manufacturer's recommended tire inflation pressure as shown on the tire placard. See *Tire Pressure* ⇨ *321* and *Vehicle Load Limits* ⇨ *221*.

Radial Ply Tire : A pneumatic tire in which the ply cords that extend to the beads are laid at 90 degrees to the centerline of the tread.

Rim : A metal support for a tire and upon which the tire beads are seated.

Sidewall : The portion of a tire between the tread and the bead.

Speed Rating : An alphanumeric code assigned to a tire indicating the maximum speed at which a tire can operate.

Traction : The friction between the tire and the road surface. The amount of grip provided.

Tread : The portion of a tire that comes into contact with the road.

Treadwear Indicators : Narrow bands, sometimes called wear bars, that show across the tread of a tire when only 1.6 mm (1/16 in) of tread remains. See *When It Is Time for New Tires* ⇨ *328*.

UTQGS (Uniform Tire Quality Grading Standards) : A tire information system that provides consumers with ratings for a tire's traction, temperature, and treadwear. Ratings are

determined by tire manufacturers using government testing procedures. The ratings are molded into the sidewall of the tire. See *Uniform Tire Quality Grading* ⇨ *331*.

Vehicle Capacity Weight : The number of designated seating positions multiplied by 68 kg (150 lb) plus the rated cargo load. See *Vehicle Load Limits* ⇨ *221*.

Vehicle Maximum Load on the Tire : Load on an individual tire due to curb weight, accessory weight, occupant weight, and cargo weight.

Vehicle Placard : A label permanently attached to a vehicle showing the vehicle capacity weight and the original equipment tire size and recommended inflation pressure. See “Tire and Loading Information Label” under *Vehicle Load Limits* ⇨ *221*.

Tire Pressure

Tires need the correct amount of air pressure to operate effectively.

Caution

Neither tire underinflation nor overinflation is good. Underinflated tires, or tires that do not have enough air, can result in:

- Tire overloading and overheating which could lead to a blowout.
- Premature or irregular wear.
- Poor handling.
- Reduced fuel economy.

Overinflated tires, or tires that have too much air, can result in:

- Unusual wear.

(Continued)

Caution (Continued)

- Poor handling.
- Rough ride.
- Needless damage from road hazards.

The Tire and Loading Information label on the vehicle indicates the original equipment tires and the correct cold tire inflation pressures. The recommended pressure is the minimum air pressure needed to support the vehicle's maximum load carrying capacity. See *Vehicle Load Limits* ⇨ *221*.

How the vehicle is loaded affects vehicle handling and ride comfort. Never load the vehicle with more weight than it was designed to carry.

When to Check

Check the tires once a month or more. Do not forget the compact spare, if the vehicle has one. The cold compact spare tire pressure should be at 420 kPa (60 psi). See *Compact Spare Tire* ⇨ *348*.

How to Check

Use a good quality pocket-type gauge to check tire pressure. Proper tire inflation cannot be determined by looking at the tire. Check the tire inflation pressure when the tires are cold, meaning the vehicle has not been driven for at least three hours or no more than 1.6 km (1 mi).

Remove the valve cap from the tire valve stem. Press the tire gauge firmly onto the valve to get a pressure measurement. If the cold tire inflation pressure matches the recommended pressure on the Tire and Loading Information label, no further adjustment is necessary. If the inflation pressure is low, add air until the recommended pressure is reached. If the inflation pressure is high, press on the metal stem in the center of the tire valve to release air.

Recheck the tire pressure with the tire gauge.

Put the valve caps back on the valve stems to keep out dirt and moisture and prevent leaks. Use only valve caps designed for the vehicle by GM. TPMS sensors could be damaged and would not be covered by the vehicle warranty.

Tire Pressure for High-Speed Operation

⚠ Warning

Driving at high speeds, 160 km/h (100 mph) or higher, puts additional strain on tires.

(Continued)

Warning (Continued)

Sustained high-speed driving causes excessive heat buildup and can cause sudden tire failure. This could cause a crash, and you or others could be killed. Some high-speed rated tires require inflation pressure adjustment for high-speed operation. When speed limits and road conditions allow the vehicle to be driven at high speeds, make sure the tires are rated for high-speed operation, are in excellent condition, and are set to the correct cold tire inflation pressure for the vehicle load.

Vehicles with 235/65R18, 235/55R20 or 245/65R17 size tires require inflation pressure adjustment when driving the vehicle at speeds of 160 km/h (100 mph) or higher. Set the cold inflation pressure to the maximum inflation pressure shown on the tire sidewall, or 280 kPa (41 psi), whichever is lower. Return the tires to the recommended cold

tire inflation pressure when high-speed driving has ended. See *Vehicle Load Limits* ⇨ *221* and *Tire Pressure* ⇨ *321*.

The maximum load and inflation pressure is molded on the tire sidewall, in small letters, near the rim flange. It will read something like this: Maximum load
690 kg (1,521 lbs) 300 kPa (44 psi) Max. Press.

Tire Pressure Monitor System

The Tire Pressure Monitor System (TPMS) uses radio and sensor technology to check tire pressure levels. The TPMS sensors monitor the air pressure in your tires and transmit tire pressure readings to a receiver located in the vehicle.

Each tire, including the spare (if provided), should be checked monthly when cold and inflated to the inflation pressure recommended by the vehicle manufacturer on the vehicle placard or tire inflation pressure label. (If your vehicle has tires of a different size than the size indicated on the vehicle placard or tire inflation pressure label, you should determine the proper tire inflation pressure for those tires.)

As an added safety feature, your vehicle has been equipped with a tire pressure monitoring system (TPMS) that illuminates a low tire pressure telltale when one or more of your tires is significantly under-inflated.

Accordingly, when the low tire pressure telltale illuminates, you should stop and check your tires as soon as possible, and inflate them to the proper pressure. Driving on a significantly under-inflated tire causes the tire to overheat and can lead to tire failure. Under-inflation also reduces fuel efficiency and tire tread life, and may affect the vehicle's handling and stopping ability.

Please note that the TPMS is not a substitute for proper tire maintenance, and it is the driver's responsibility to maintain correct tire pressure, even if under-inflation has not reached the level to trigger illumination of the TPMS low tire pressure telltale.

Your vehicle has also been equipped with a TPMS malfunction indicator to indicate when the system is not operating properly. The TPMS malfunction indicator is combined with the low tire pressure telltale. When the system detects a malfunction, the telltale will flash for approximately one minute and then remain continuously illuminated. This sequence will continue upon subsequent vehicle start-ups as long as the malfunction exists.

When the malfunction indicator is illuminated, the system may not be able to detect or signal low tire pressure as intended. TPMS malfunctions may occur for a variety of reasons, including the installation of replacement or alternate tires or wheels on the vehicle that prevent the TPMS from functioning properly. Always check the TPMS malfunction telltale after replacing one or more tires or wheels on your vehicle to ensure that the replacement or

alternate tires and wheels allow the TPMS to continue to function properly.

See *Tire Pressure Monitor Operation* ⇨ *324*.

See *Radio Frequency Statement* ⇨ *392*.

Tire Pressure Monitor Operation

This vehicle may have a Tire Pressure Monitor System (TPMS). The TPMS is designed to warn the driver when a low tire pressure condition exists. TPMS sensors are mounted onto each tire and wheel assembly, excluding the spare tire and wheel assembly. The TPMS sensors monitor the air pressure in the tires and transmits the tire pressure readings to a receiver located in the vehicle.

When a low tire pressure condition is detected, the TPMS illuminates the low tire pressure warning light located on the instrument cluster. If the warning light comes on, stop as soon as possible and inflate the tires to the recommended pressure shown on the Tire and Loading Information label. See *Vehicle Load Limits* ⇨ *221*.

A message to check the pressure in a specific tire displays in the Driver Information Center (DIC). The low tire pressure warning light and the DIC warning message come on at each ignition cycle until the tires are inflated to the correct inflation pressure. Using the DIC, tire pressure levels can be viewed. For additional information and details about the DIC operation and displays see *Driver Information Center (DIC) (Base and Midlevel)* ⇨ *141* or *Driver Information Center (DIC) (Uplevel)* ⇨ *144*.

The low tire pressure warning light may come on in cool weather when the vehicle is first started, and then turn off as the vehicle is driven. This could be an early indicator that the air pressure is getting low and needs to be inflated to the proper pressure.

A Tire and Loading Information label, attached to your vehicle, shows the size of the original equipment tires and the correct inflation pressure for the tires when they are cold. See *Vehicle Load Limits* ⇨ *221*, for an example of the Tire and Loading Information label and its location. Also see *Tire Pressure* ⇨ *321*.

The TPMS can warn about a low tire pressure condition but it does not replace normal tire maintenance. See *Tire Inspection* ⇨ *327*, *Tire Rotation* ⇨ *327* and *Tires* ⇨ *314*.

Caution

Tire sealant materials are not all the same. A non-approved tire sealant could damage the TPMS sensors. TPMS sensor damage caused by using an incorrect tire sealant is not covered by the vehicle warranty. Always use only the GM approved tire sealant available through your dealer or included in the vehicle.

Factory-installed Tire Inflator Kits use a GM-approved liquid tire sealant. Using non-approved tire sealants could damage the TPMS sensors. See *Tire Sealant and Compressor Kit* ⇨ *335* for information regarding the inflator kit materials and instructions.

TPMS Malfunction Light and Message

The TPMS will not function properly if one or more of the TPMS sensors are missing or inoperable. When the system detects a malfunction, the low tire warning light flashes for about one minute and then stays on for the remainder of the ignition cycle. A DIC warning message also displays. The malfunction light and DIC warning message come on at each ignition cycle until the problem is corrected. Some of the conditions that can cause these to come on are:

- One of the road tires has been replaced with the spare tire. The spare tire does not have a TPMS sensor. The malfunction light and DIC message should go off after the road tire is replaced and the sensor matching process is performed successfully. See “TPMS Sensor Matching Process” later in this section.
- The TPMS sensor matching process was not done or not completed successfully after rotating the tires. The malfunction light and the DIC message should go off after successfully completing the sensor matching process. See "TPMS Sensor Matching Process" later in this section.
- One or more TPMS sensors are missing or damaged. The malfunction light and the DIC message should go off when the TPMS sensors are installed and the sensor matching process is performed successfully. See your dealer for service.
- Replacement tires or wheels do not match the original equipment tires or wheels. Tires and wheels other than those recommended could prevent the TPMS from functioning properly. See *Buying New Tires* ⇨ *329*.
- Operating electronic devices or being near facilities using radio wave frequencies similar to the TPMS could cause the TPMS sensors to malfunction.

If the TPMS is not functioning properly it cannot detect or signal a low tire condition. See your dealer for service if the TPMS malfunction light and DIC message comes on and stays on.

TPMS Sensor Matching Process

Each TPMS sensor has a unique identification code. The identification code needs to be matched to a new tire/wheel position after rotating the vehicle's tires or replacing one or more of the TPMS sensors. The TPMS sensor matching process should also be performed after replacing a spare tire with a road tire containing the TPMS sensor. The malfunction light and the DIC message should go off at the next ignition cycle. The sensors are matched to the tire/wheel positions, using a TPMS relearn tool, in the following order: driver side front tire, passenger side front tire, passenger side rear tire, and driver side rear. See your dealer for service or to purchase a relearn tool. A TPMS relearn tool can also be purchased. See Tire Pressure Monitor Sensor Activation Tool at www.gmtoolsandequipment.com or call 1-800-GM TOOLS (1-800-468-6657).

There are two minutes to match the first tire/wheel position, and five minutes overall to match all four tire/wheel positions. If it takes longer, the matching process stops and must be restarted.

The TPMS sensor matching process is:

1. Set the parking brake.
2. Place the vehicle in ON/RUN/START. See *Ignition Positions* ⇨ *225*.
3. Make sure the Tire Pressure info page option is turned on. The info pages on the DIC can be turned on and off through the Settings menu. See *Driver Information Center (DIC) (Base and Midlevel)* ⇨ *141* or *Driver Information Center (DIC) (Uplevel)* ⇨ *144*.
4. Use the DIC controls on the right side of the steering wheel to scroll to the Tire Pressure screen under the DIC info page.
5. Press and hold ✓ in the center of the DIC controls. The horn sounds twice to signal the receiver is in relearn mode and the TIRE LEARNING ACTIVE message displays on the DIC screen.
6. Start with the driver side front tire.
7. Place the relearn tool against the tire sidewall, near the valve stem. Then press the button to activate the TPMS sensor. A horn chirp confirms that the sensor identification code has been matched to this tire and wheel position.
8. Proceed to the passenger side front tire, and repeat the procedure in Step 7.
9. Proceed to the passenger side rear tire, and repeat the procedure in Step 7.
10. Proceed to the driver side rear tire, and repeat the procedure in Step 7. The horn sounds two times to indicate the sensor identification code has been matched to the driver side rear tire, and the TPMS sensor

matching process is no longer active. The TIRE LEARNING ACTIVE message on the DIC display screen goes off.

11. Turn the ignition off.
12. Set all four tires to the recommended air pressure level as indicated on the Tire and Loading Information label.

Tire Inspection

We recommend that the tires, including the spare tire, if the vehicle has one, be inspected for signs of wear or damage at least once a month.

Replace the tire if:

- The indicators at three or more places around the tire can be seen.
- There is cord or fabric showing through the tire's rubber.
- The tread or sidewall is cracked, cut, or snagged deep enough to show cord or fabric.
- The tire has a bump, bulge, or split.
- The tire has a puncture, cut, or other damage that cannot be repaired well because of the size or location of the damage.

Tire Rotation

Tires should be rotated every 12 000 km (7,500 mi). See *Maintenance Schedule* ⇨ *366*.

Tires are rotated to achieve a uniform wear for all tires. The first rotation is the most important.

Anytime unusual wear is noticed, rotate the tires as soon as possible, check for proper tire inflation pressure, and check for damaged tires or wheels. If the unusual wear continues after the rotation, check the wheel alignment. See *When It Is Time for New Tires* ⇨ *328* and *Wheel Replacement* ⇨ *332*.

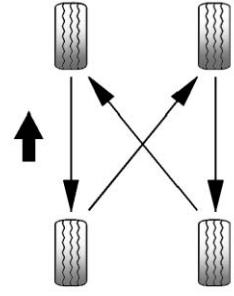

Use this rotation pattern when rotating the tires.

If the vehicle has a compact spare tire, do not include it in the tire rotation.

Adjust the front and rear tires to the recommended inflation pressure on the Tire and Loading Information label after

the tires have been rotated. See *Tire Pressure* ⇨ *321* and *Vehicle Load Limits* ⇨ *221*.

Reset the Tire Pressure Monitor System. See *Tire Pressure Monitor Operation* ⇨ *324*.

Check that all wheel nuts are properly tightened. See “Wheel Nut Torque” under *Capacities and Specifications* ⇨ *380*.

⚠ Warning

Rust or dirt on a wheel, or on the parts to which it is fastened, can make wheel nuts become loose after time. The wheel could come off and cause an accident. When changing a wheel, remove any rust or dirt from places where the wheel attaches to the vehicle. In an emergency, a cloth or a paper towel can be used; however, use a scraper or wire brush later to remove all rust or dirt.

Lightly coat the center of the wheel hub with wheel bearing grease after a wheel change or tire rotation to prevent corrosion or rust build-up. Do not get grease on the flat wheel mounting surface or on the wheel nuts or bolts.

Check that the spare tire, if the vehicle has one, is stored properly. Push, pull, and then try to rotate or turn the tire. If it moves, tighten the cable. See *Tire Changing* ⇨ *342*.

When It Is Time for New Tires

Factors such as maintenance, temperatures, driving speeds, vehicle loading, and road conditions affect the wear rate of the tires.

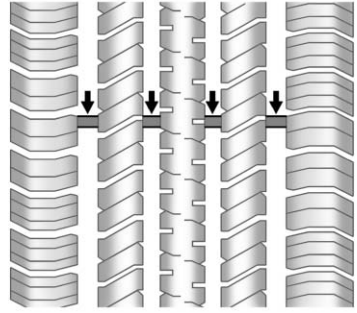

Treadwear indicators are one way to tell when it is time for new tires. Treadwear indicators appear when the tires have only 1.6 mm (1/16 in) or less of tread remaining. See *Tire Inspection* ⇨ *327* and *Tire Rotation* ⇨ *327*.

The rubber in tires ages over time. This also applies to the spare tire, if the vehicle has one, even if it is never used. Multiple factors including temperatures, loading conditions, and inflation pressure maintenance affect how fast aging takes place. GM recommends that tires, including the spare if equipped, be replaced after six years, regardless of tread wear. The

tire manufacture date is the last four digits of the DOT Tire Identification Number (TIN) which is molded into one side of the tire sidewall. The first two digits represent the week (01–52) and the last two digits, the year. For example, the third week of the year 2010 would have a four-digit DOT date of 0310.

Vehicle Storage

Tires age when stored normally mounted on a parked vehicle. Park a vehicle that will be stored for at least a month in a cool, dry, clean area away from direct sunlight to slow aging. This area should be free of grease, gasoline, or other substances that can deteriorate rubber.

Parking for an extended period can cause flat spots on the tires that may result in vibrations while driving. When storing a vehicle for at least a month, remove the tires or raise the vehicle to reduce the weight from the tires.

Buying New Tires

GM has developed and matched specific tires for the vehicle. The original equipment tires installed were designed to meet General Motors Tire Performance Criteria Specification (TPC Spec) system rating. When replacement tires are needed, GM strongly recommends buying tires with the same TPC Spec rating.

GM's exclusive TPC Spec system considers over a dozen critical specifications that impact the overall performance of the vehicle, including brake system performance, ride and handling, traction control, and tire pressure monitoring performance. GM's TPC Spec number is molded onto the tire's sidewall near the tire size. If the tires have an all-season tread design, the TPC Spec number will be followed by MS for mud and snow. See *Tire Sidewall Labeling* ⇨ *316*.

GM recommends replacing worn tires in complete sets of four. Uniform tread depth on all tires will help to maintain the performance of the vehicle. Braking and handling performance may be adversely affected if all the tires are not replaced at the same time. If proper rotation and maintenance have been done, all four tires should wear out at about the same time. See *Tire Rotation* ⇨ *327*. However, if it is necessary to replace only one axle set of worn tires, place the new tires on the rear axle.

Winter tires with the same speed rating as the original equipment tires may not be available for H, V, W, Y and ZR speed rated tires. Never exceed the winter

tires' maximum speed capability when using winter tires with a lower speed rating.

⚠ Warning

Tires could explode during improper service. Attempting to mount or dismount a tire could cause injury or death. Only your dealer or authorized tire service center should mount or dismount the tires.

⚠ Warning

Mixing tires of different sizes, brands, or types may cause loss of control of the vehicle, resulting in a crash or other vehicle damage. Use the correct size, brand, and type of tires on all wheels.

⚠ Warning

Using bias-ply tires on the vehicle may cause the wheel rim flanges to develop cracks after many miles of driving. A tire and/or wheel could fail suddenly and cause a crash. Use only radial-ply tires with the wheels on the vehicle.

If the vehicle tires must be replaced with a tire that does not have a TPC Spec number, make sure they are the same size, load range, speed rating, and construction (radial) as the original tires.

Vehicles that have a tire pressure monitoring system could give an inaccurate low-pressure warning if non-TPC Spec rated tires are installed. See *Tire Pressure Monitor System* ⇨ *323*.

The Tire and Loading Information label indicates the original equipment tires on the vehicle. See *Vehicle Load Limits* ⇨ *221*.

Different Size Tires and Wheels

If wheels or tires are installed that are a different size than the original equipment wheels and tires, vehicle performance, including its braking, ride and handling characteristics, stability, and resistance to rollover may be affected. If the vehicle has electronic systems such as antilock brakes, rollover airbags, roll bars, traction control, electronic stability control, or All-Wheel Drive, the performance of these systems can also be affected.

⚠ Warning

If different sized wheels are used, there may not be an acceptable level of performance and safety if

(Continued)

Warning (Continued)

tires not recommended for those wheels are selected. This increases the chance of a crash and serious injury. Only use GM specific wheel and tire systems developed for the vehicle, and have them properly installed by a GM certified technician.

See *Buying New Tires* ⇨ *329* and *Accessories and Modifications* ⇨ *281*.

Uniform Tire Quality Grading

The following information relates to the system developed by the United States National Highway Traffic Safety Administration (NHTSA), which grades tires by treadwear, traction, and temperature performance. This applies only to vehicles sold in the United States. The grades are molded on the sidewalls of most passenger car tires. The Uniform Tire Quality Grading (UTQG) system does not apply to deep tread, winter tires, compact spare tires, tires with nominal rim diameters of 10 to 12 inches (25 to 30 cm), or to some limited-production tires.

While the tires available on General Motors passenger cars and light trucks may vary with respect to these grades, they must also conform to federal safety requirements and additional General Motors Tire Performance Criteria (TPC) standards.

Quality grades can be found where applicable on the tire sidewall between tread shoulder and maximum section width. For example:

Treadwear 200 Traction AA Temperature A

All Passenger Car Tires Must Conform to Federal Safety Requirements In Addition To These Grades.

Treadwear

The treadwear grade is a comparative rating based on the wear rate of the tire when tested under controlled conditions on a specified government test course. For example, a tire graded 150 would wear one and one-half (1½) times as well on the government course as a tire graded 100. The relative performance of tires depends upon the actual conditions of their use, however, and may depart significantly from the norm due to variations in driving habits, service practices and differences in road characteristics and climate.

Traction

The traction grades, from highest to lowest, are AA, A, B, and C. Those grades represent the tire's ability to stop on wet pavement as measured under controlled conditions on specified government test surfaces of asphalt and concrete. A tire marked C may have poor traction performance. Warning: The traction grade assigned to this tire is based on straight-ahead braking traction tests, and does not include acceleration, cornering, hydroplaning, or peak traction characteristics.

Temperature

The temperature grades are A (the highest), B, and C, representing the tire's resistance to the generation of heat and its ability to dissipate heat when tested under controlled conditions on a specified indoor laboratory test wheel. Sustained high temperature can cause the material of the tire to degenerate and reduce tire life, and excessive temperature can lead to sudden tire failure. The grade C corresponds to a level of performance which all passenger car tires must meet under the Federal Motor Safety Standard No. 109. Grades B and A represent higher levels of performance on the laboratory test wheel than the minimum required by law. Warning: The temperature grade for this tire is established for a tire that is properly inflated and not overloaded. Excessive speed, underinflation, or excessive loading, either separately or in combination, can cause heat buildup and possible tire failure.

Wheel Alignment and Tire Balance

The tires and wheels were aligned and balanced at the factory to provide the longest tire life and best overall performance. Adjustments to wheel alignment and tire balancing are not necessary on a regular basis. Consider an alignment check if there is unusual tire wear or the vehicle is significantly pulling to one side or the other. Some slight pull to the left or right, depending on the crown of the road and/or other road surface variations such as troughs or ruts, is normal. If the vehicle is vibrating when driving on a smooth road, the tires and wheels may need to be rebalanced. See your dealer for proper diagnosis.

Wheel Replacement

Replace any wheel that is bent, cracked, or badly rusted or corroded. If wheel nuts keep coming loose, the wheel, wheel bolts, and wheel nuts should be replaced.
If the wheel leaks air, replace it.

Some aluminum wheels can be repaired. See your dealer if any of these conditions exist.

Your dealer will know the kind of wheel that is needed.

Each new wheel should have the same load-carrying capacity, diameter, width, offset, and be mounted the same way as the one it replaces.

Replace wheels, wheel bolts, wheel nuts, or Tire Pressure Monitor System (TPMS) sensors with new GM original equipment parts.

⚠ Warning

Using the wrong replacement wheels, wheel bolts, or wheel nuts can be dangerous. It could affect the braking and handling of the vehicle. Tires can lose air, and cause loss of control, causing a crash. Always use the correct wheel, wheel bolts, and wheel nuts for replacement.

Caution

The wrong wheel can also cause problems with bearing life, brake cooling, speedometer or odometer calibration, headlamp aim, bumper height, vehicle ground clearance, and tire or tire chain clearance to the body and chassis.

Used Replacement Wheels

⚠ Warning

Replacing a wheel with a used one is dangerous. How it has been used or how far it has been driven may be unknown. It could fail suddenly and cause a crash. When replacing wheels, use a new GM original equipment wheel.

Tire Chains

⚠ Warning

If the vehicle has a tire size other than 235/65R18, do not use tire chains. There is not enough clearance. Tire chains used on a vehicle without the proper amount of clearance can cause damage to the brakes, suspension, or other vehicle parts. The area damaged by the tire chains could cause loss of control and a crash. Use another type of traction device only if its manufacturer recommends it for the vehicle's tire size combination and road conditions. Follow that manufacturer's instructions. To avoid vehicle damage, drive slow and readjust or remove the traction device if it contacts the vehicle. Do not spin the wheels. If traction devices are used, install them on the front tires.

Caution

If the vehicle is equipped with 235/65R18 size tires, use tire chains only where legal and only when necessary. Use low profile chains that add no more than 12 mm thickness to the tire tread and inner sidewall. Use chains that are the proper size for the tires. Install them on the tires of the front axle. Do not use chains on the tires of the rear axle. Tighten them as tightly as possible with the ends securely fastened. Drive slowly and follow the chain manufacturer's instructions. If the chains contact the vehicle, stop and retighten them. If the contact continues, slow down until it stops. Driving too fast or spinning the wheels with chains on will damage the vehicle.

If a Tire Goes Flat

It is unusual for a tire to blow out while driving, especially if the tires are maintained properly. See *Tires* ⇨ *314*. If air goes out of a tire, it is much more likely to leak out slowly. But if there is ever a blowout, here are a few tips about what to expect and what to do:

If a front tire fails, the flat tire creates a drag that pulls the vehicle toward that side. Take your foot off the accelerator pedal and grip the steering wheel firmly. Steer to maintain lane position, and then gently brake to a stop, well off the road, if possible.

A rear blowout, particularly on a curve, acts much like a skid and may require the same correction as used in a skid. Stop pressing the accelerator pedal and steer to straighten the vehicle. It may be very bumpy and noisy. Gently brake to a stop, well off the road, if possible.

⚠ Warning

Driving on a flat tire will cause permanent damage to the tire. Re-inflating a tire after it has been driven on while severely underinflated or flat may cause a blowout and a serious crash. Never attempt to re-inflate a tire that has been driven on while severely underinflated or flat. Have your dealer or an authorized tire service center repair or replace the flat tire as soon as possible.

⚠ Warning

Lifting a vehicle and getting under it to do maintenance or repairs is dangerous without the appropriate safety equipment and training. If a jack is provided with the vehicle, it is designed only for changing a flat tire. If it is used for anything else, you or others could

(Continued)

Warning (Continued)

be badly injured or killed if the vehicle slips off the jack. If a jack is provided with the vehicle, only use it for changing a flat tire.

If a tire goes flat, avoid further tire and wheel damage by driving slowly to a level place, well off the road, if possible. Turn on the hazard warning flashers. See *Hazard Warning Flashers* ⇨ *173*.

⚠ Warning

Changing a tire can be dangerous. The vehicle can slip off the jack and roll over or fall causing injury or death. Find a level place to change the tire. To help prevent the vehicle from moving:

1. Set the parking brake firmly.

(Continued)

Warning (Continued)

2. Put an automatic transmission in P (Park) or a manual transmission in 1 (First) or R (Reverse).
3. Turn off the engine and do not restart while the vehicle is raised.
4. Do not allow passengers to remain in the vehicle.
5. Place wheel blocks, if equipped, on both sides of the tire at the opposite corner of the tire being changed.

This vehicle may come with a jack and spare tire or a tire sealant and compressor kit. To use the jacking equipment to change a spare tire safely, follow the instructions below. Then see *Tire Changing* ⇨ *342*. To use the tire sealant and compressor kit, see *Tire Sealant and Compressor Kit* ⇨ *335*.

When the vehicle has a flat tire (2), use the following example as a guide to assist you in the placement of wheel blocks (1), if equipped.

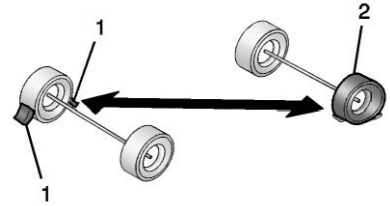

1. Wheel Block (If Equipped)
2. Flat Tire

The following information explains how to repair or change a tire.

Tire Sealant and Compressor Kit

⚠ Warning

Idling a vehicle in an enclosed area with poor ventilation is dangerous. Engine exhaust may

(Continued)

Warning (Continued)

enter the vehicle. Engine exhaust contains carbon monoxide (CO) which cannot be seen or smelled. It can cause unconsciousness and even death. Never run the engine in an enclosed area that has no fresh air ventilation. For more information, see *Engine Exhaust* ⇨ *232*.

⚠ Warning

Overinflating a tire could cause the tire to rupture and you or others could be injured. Be sure to read and follow the tire sealant and compressor kit instructions and inflate the tire to its recommended pressure. Do not exceed the recommended pressure.

⚠ Warning

Storing the tire sealant and compressor kit or other equipment in the passenger compartment of the vehicle could cause injury. In a sudden stop or collision, loose equipment could strike someone. Store the tire sealant and compressor kit in its original location.

If this vehicle has a tire sealant and compressor kit, there may not be a spare tire or tire changing equipment, and on some vehicles there may not be a place to store a tire.

The tire sealant and compressor can be used to temporarily seal punctures up to 6 mm (0.25 in) in the tread area of the tire. It can also be used to inflate an underinflated tire.

If the tire has been separated from the wheel, has damaged sidewalls, or has a large puncture, the tire is too severely damaged for the tire sealant and compressor kit to be effective. See *Roadside Assistance Program* ⇨ *386*.

Read and follow all of the tire sealant and compressor kit instructions.

The kit includes:

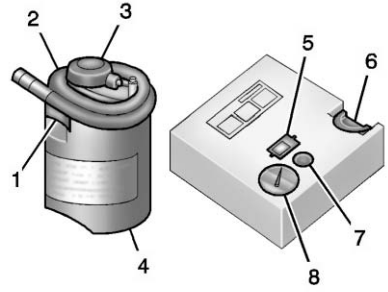

1. Sealant Canister Inlet Valve
2. Sealant/Air Hose
3. Base of Sealant Canister
4. Tire Sealant Canister
5. On/Off Button
6. Slot on Top of Compressor
7. Pressure Deflation Button
8. Pressure Gauge

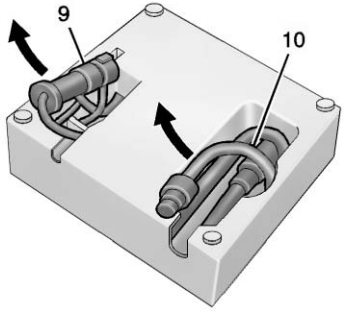

9. Power Plug
10. Air Only Hose

Tire Sealant

Read and follow the safe handling instructions on the label adhered to the tire sealant canister (4).

Check the tire sealant expiration date on the tire sealant canister. The tire sealant canister (4) should be replaced before its expiration date. Replacement tire sealant canisters are available at your local dealer.

There is only enough sealant to seal one tire. After usage, the tire sealant canister must be replaced.

Using the Tire Sealant and Compressor Kit to Temporarily Seal and Inflate a Punctured Tire

When using the tire sealant and compressor kit during cold temperatures, warm the kit in a heated environment for five minutes. This will help to inflate the tire faster.

If a tire goes flat, avoid further tire and wheel damage by driving slowly to a level place. Turn on the hazard warning flashers. See *Hazard Warning Flashers* ⇨ *173*.

See *If a Tire Goes Flat* ⇨ *334* for other important safety warnings.

Do not remove any objects that have penetrated the tire.

1. Remove the tire sealant canister (4) and compressor from its storage location. See *Storing the Tire Sealant and Compressor Kit* ⇨ *342*.
2. Remove the air only hose (10) and the power plug (9) from the bottom of the compressor.
3. Place the compressor on the ground near the flat tire.

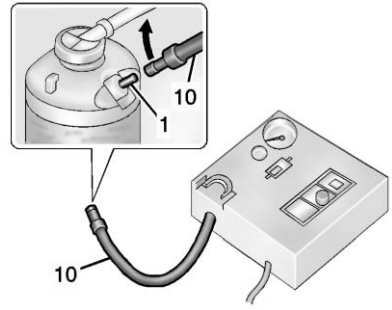

4. Attach the air only hose (10) to the sealant canister inlet valve (1) by turning it clockwise until tight.

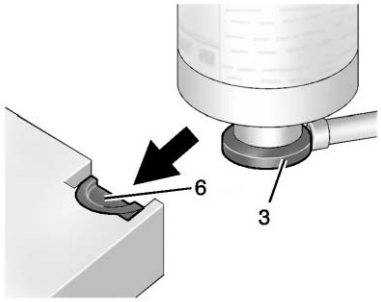

5. Slide the base of the tire sealant canister (3) into the slot on the top of the compressor (6) to hold it upright.

   Make sure the tire valve stem is positioned close to the ground so the hose will reach it.

6. Remove the valve stem cap from the flat tire by turning it counterclockwise.

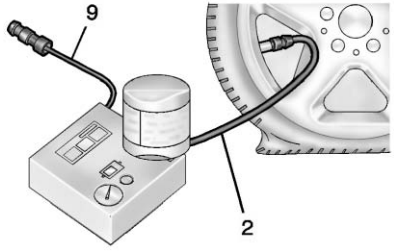

7. Attach the sealant/air hose (2) to the tire valve stem by turning it clockwise until tight.

8. Plug the power plug (9) into the accessory power outlet in the vehicle. Unplug all items from other accessory power outlets. See *Power Outlets* ⇨ *121*.

   If the vehicle has an accessory power outlet, do not use the cigarette lighter.

   If the vehicle only has a cigarette lighter, use the cigarette lighter.

   Do not pinch the power plug cord in the door or window.

9. Start the vehicle. The vehicle must be running while using the air compressor.

10. Press the on/off button (5) to turn the tire sealant and compressor kit on.

    The compressor will inject sealant and air into the tire.

    The pressure gauge (8) will initially show a high pressure while the compressor pushes the sealant into the tire. Once the sealant is completely dispersed into the tire, the pressure will quickly drop and start to rise again as the tire inflates with air only.

11. Inflate the tire to the recommended inflation pressure using the pressure gauge (8). The recommended inflation pressure can be found on the Tire and Loading Information label. See *Tire Pressure* ⇨ *321*.

    The pressure gauge (8) may read higher than the actual tire pressure while the compressor

is on. Turn the compressor off to get an accurate pressure reading. The compressor may be turned on/off until the correct pressure is reached.

Caution

If the recommended pressure cannot be reached after approximately 25 minutes, the vehicle should not be driven farther. The tire is too severely damaged and the tire sealant and compressor kit cannot inflate the tire. Remove the power plug from the accessory power outlet and unscrew the inflating hose from the tire valve. See *Roadside Assistance Program* ⇨ *386*.

12. Press the on/off button (5) to turn the tire sealant and compressor kit off.

    The tire is not sealed and will continue to leak air until the vehicle is driven and the sealant is distributed in the tire. Therefore, Steps 13–21 must be done immediately after Step 12.

    Be careful while handling the tire sealant and compressor kit as it could be warm after usage.

13. Unplug the power plug (9) from the accessory power outlet in the vehicle.
14. Turn the sealant/air hose (2) counterclockwise to remove it from the tire valve stem.
15. Replace the tire valve stem cap.
16. Remove the tire sealant canister (4) from the slot on top of the compressor (6).
17. Turn the air only hose (10) counterclockwise to remove it from the tire sealant canister inlet valve (1).
18. Turn the sealant/air hose (2) clockwise onto the sealant canister inlet valve (1) to prevent sealant leakage.
19. Return the air only hose (10) and power plug (9) back to their original storage location.

20. If the flat tire was able to inflate to the recommended inflation pressure, remove the maximum speed label from the sealant canister and place it in a highly visible location.

    Do not exceed the speed on this label until the damaged tire is repaired or replaced.

21. Return the equipment to its original storage location in the vehicle.
22. Immediately drive the vehicle 8 km (5 mi) to distribute the sealant in the tire.
23. Stop at a safe location and check the tire pressure. Refer to Steps 1–10 under “Using the

Tire Sealant and Compressor Kit without Sealant to Inflate a Tire (Not Punctured).”

If the tire pressure has fallen more than 68 kPa (10 psi) below the recommended inflation pressure, stop driving the vehicle. The tire is too severely damaged and the tire sealant cannot seal the tire. See *Roadside Assistance Program* ⇨ *386*.

If the tire pressure has not dropped more than 68 kPa (10 psi) from the recommended inflation pressure, inflate the tire to the recommended inflation pressure.

24. Wipe off any sealant from the wheel, tire, or vehicle.
25. Dispose of the used tire sealant canister (4) at a local dealer or in accordance with local state codes and practices.
26. Replace it with a new canister available from your dealer.
27. After temporarily sealing a tire using the tire sealant and compressor kit, take the vehicle to an authorized dealer within 161 km (100 mi) of driving to have the tire repaired or replaced.

Using the Tire Sealant and Compressor Kit without Sealant to Inflate a Tire (Not Punctured)

The kit includes:

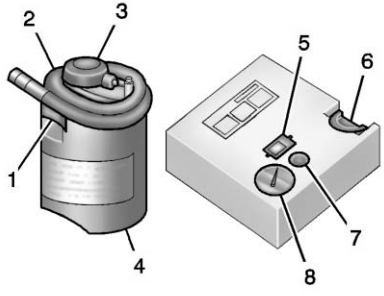

1. Sealant Canister Inlet Valve
2. Sealant/Air Hose
3. Base of Sealant Canister
4. Tire Sealant Canister
5. On/Off Button
6. Slot on Top of Compressor
7. Pressure Deflation Button
8. Pressure Gauge

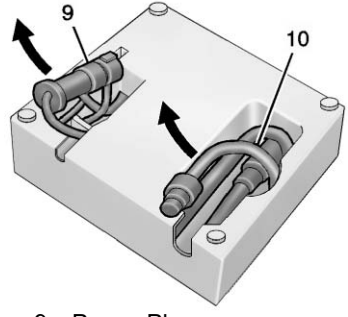

9. Power Plug
10. Air Only Hose

If a tire goes flat, avoid further tire and wheel damage by driving slowly to a level place. Turn on the hazard warning flashers. See *Hazard Warning Flashers* ⇨ *173*.

See *If a Tire Goes Flat* ⇨ *334* for other important safety warnings.

1. Remove the compressor from its storage location. See *Storing the Tire Sealant and Compressor Kit* ⇨ *342*.
2. Remove the air only hose (10) and the power plug (9) from the bottom of the compressor.
3. Place the compressor on the ground near the flat tire.

   Make sure the tire valve stem is positioned close to the ground so the hose will reach it.
4. Remove the valve stem cap from the flat tire by turning it counterclockwise.
5. Attach the air only hose (10) to the tire valve stem by turning it clockwise until tight.
6. Plug the power plug (9) into the accessory power outlet in the vehicle. Unplug all items from other accessory power outlets. See *Power Outlets* ⇨ *121*.

   If the vehicle has an accessory power outlet, do not use the cigarette lighter.

   If the vehicle only has a cigarette lighter, use the cigarette lighter.

   Do not pinch the power plug cord in the door or window.
7. Start the vehicle. The vehicle must be running while using the air compressor.
8. Press the on/off button (5) to turn the tire sealant and compressor kit on.

   The compressor will inflate the tire with air only.
9. Inflate the tire to the recommended inflation pressure using the pressure gauge (8). The recommended inflation pressure can be found on the Tire and Loading Information label. See *Tire Pressure* ⇨ *321*.

   The pressure gauge (8) may read higher than the actual tire pressure while the compressor is on. Turn the compressor off to get an accurate pressure reading. The compressor may be turned on/off until the correct pressure is reached.

Caution

If the recommended pressure cannot be reached after approximately 25 minutes, the vehicle should not be driven farther. The tire is too severely damaged and the tire sealant and compressor kit cannot inflate the tire. Remove the power plug from the accessory power outlet and unscrew the inflating hose from the tire valve. See *Roadside Assistance Program* ⇨ *386*.

10. Press the on/off button (5) to turn the tire sealant and compressor kit off.

    Be careful while handling the compressor as it could be warm after usage.
11. Unplug the power plug (9) from the accessory power outlet in the vehicle.

12. Turn the air only hose (10) counterclockwise to remove it from the tire valve stem.
13. Replace the tire valve stem cap.
14. Return the air only hose (10) and power plug (9) back to their original storage location.
15. Return the equipment to its original storage location in the vehicle.

The tire sealant and compressor kit has accessory adapters located in a compartment on the bottom of its housing that can be used to inflate air mattresses, balls, etc.

Storing the Tire Sealant and Compressor Kit

The tire sealant and compressor kit is in a bag in the rear compartment storage area.

1. Open the liftgate. See *Liftgate* ⇨ *41*.

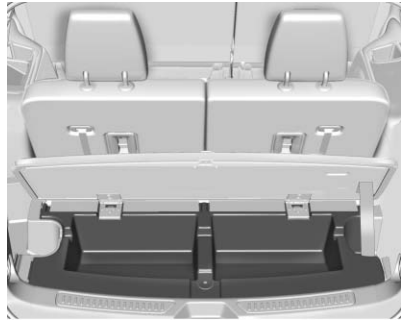

2. Lift the load floor.
3. Remove the cargo management system. See *Cargo Management System* ⇨ *109*.

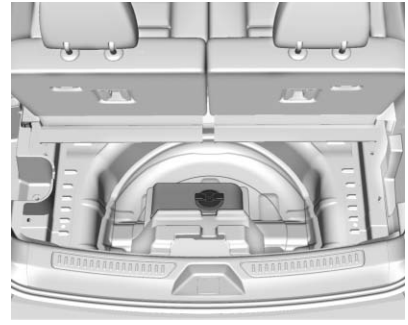

4. Turn the retainer nut counterclockwise to remove the tire sealant and compressor kit bag.
5. Remove the tire sealant and compressor kit from the bag.

To store the tire sealant and compressor kit, reverse the steps.

Tire Changing

Removing the Spare Tire and Tools

To access the spare tire and tools:

1. Open the liftgate. See *Liftgate* ⇨ *41*.

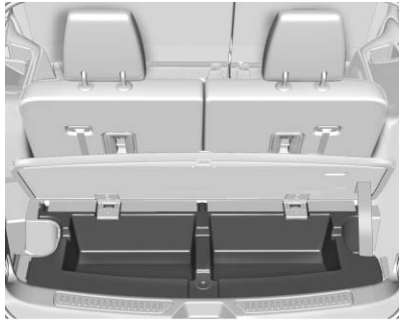

2. Lift the load floor.
3. Remove the cargo management system. See *Cargo Management System* ⇨ *109*.

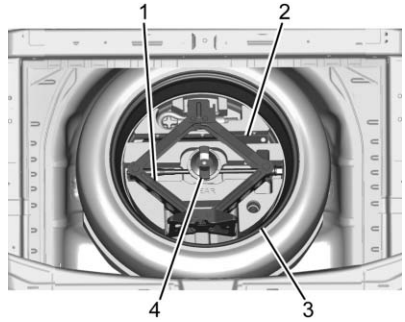

4. Turn the wing nut (4) counterclockwise to remove the jack (1), wheel wrench (2), and strap (3). Place the tool container near the tire being changed.
5. Remove the spare tire and place it next to the tire being changed.

Removing the Flat Tire and Installing the Spare Tire

1. Do a safety check before proceeding. See *If a Tire Goes Flat* ⇨ *334*.

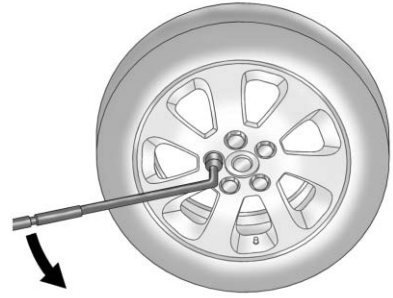

2. Turn the wheel wrench counterclockwise to loosen all the wheel nuts, but do not remove them yet.
3. Place the jack near the flat tire.

Caution
Make sure that the jack lift head is in the correct position or you may damage your vehicle. The repairs would not be covered by your warranty.

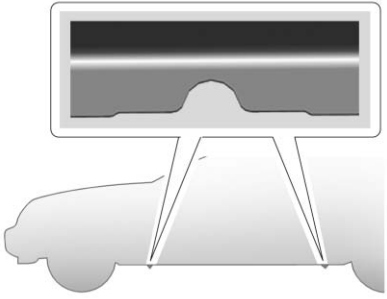

4. Position the jack lift head at the jack location nearest the flat tire.

   The jacking location is indicated by a half circle notch in the metal flange. The jack must not be used in any other position.

⚠ Warning

Getting under a vehicle when it is lifted on a jack is dangerous. If the vehicle slips off the jack, you could be badly injured or

(Continued)

Warning (Continued)

killed. Never get under a vehicle when it is supported only by a jack.

⚠ Warning

Raising the vehicle with the jack improperly positioned can damage the vehicle and even make the vehicle fall. To help avoid personal injury and vehicle damage, be sure to fit the jack lift head into the proper location before raising the vehicle.

⚠ Warning

Lifting a vehicle and getting under it to do maintenance or repairs is dangerous without the appropriate safety equipment and training. If a jack is provided with

(Continued)

Warning (Continued)

the vehicle, it is designed only for changing a flat tire. If it is used for anything else, you or others could be badly injured or killed if the vehicle slips off the jack. If a jack is provided with the vehicle, only use it for changing a flat tire.

5. Turn the wheel wrench clockwise to raise the jack lift head until the slots in the jack head fit into the metal flange behind the cut out on the plastic molding. Do not raise the vehicle yet.
6. Put the compact spare tire near you.

Caution

Using a jack to raise the vehicle without positioning it correctly could damage your vehicle. When raising your vehicle on a jack, be

(Continued)

Caution (Continued)

sure to position it correctly under the frame and avoid contact with the plastic molding.

7. Turn the wrench clockwise in the jack to raise the vehicle. Raise the vehicle far enough off the ground so that there is enough room for the spare tire to fit under the wheel well.

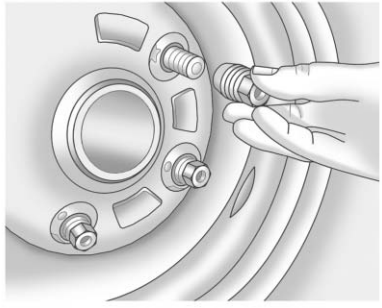

8. Remove all of the wheel nuts.
9. Remove the flat tire.

⚠ Warning

Rust or dirt on a wheel, or on the parts to which it is fastened, can make wheel nuts become loose after time. The wheel could come off and cause an accident. When changing a wheel, remove any rust or dirt from places where the wheel attaches to the vehicle. In an emergency, a cloth or a paper towel can be used; however, use a scraper or wire brush later to remove all rust or dirt.

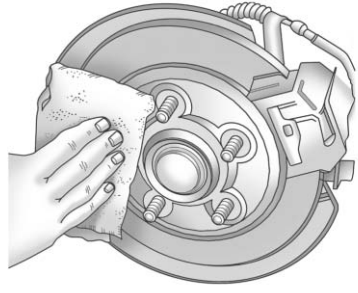

10. Remove any rust or dirt from the wheel bolts, mounting surfaces, and spare wheel.
11. Place the compact spare tire on the wheel-mounting surface.

⚠ Warning

Never use oil or grease on bolts or nuts because the nuts might come loose. The vehicle's wheel could fall off, causing a crash.

12. Reinstall the wheel nuts. Tighten each nut by hand until the wheel is held against the hub.
13. Lower the vehicle by turning the jack handle counterclockwise.

⚠ Warning

Wheel nuts that are improperly or incorrectly tightened can cause the wheels to become loose or come off. The wheel nuts should

(Continued)

Warning (Continued)

be tightened with a torque wrench to the proper torque specification after replacing. Follow the torque specification supplied by the aftermarket manufacturer when using accessory locking wheel nuts. See *Capacities and Specifications* ⇨ *380* for original equipment wheel nut torque specifications.

Caution

Improperly tightened wheel nuts can lead to brake pulsation and rotor damage. To avoid expensive brake repairs, evenly tighten the wheel nuts in the proper sequence and to the proper torque specification. See *Capacities and Specifications* ⇨ *380* for the wheel nut torque specification.

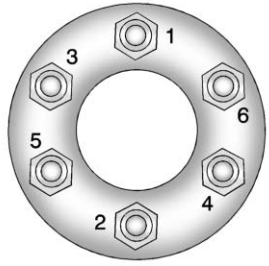

14. Tighten the wheel nuts firmly in a crisscross sequence, as shown.
15. Lower the jack all the way and remove the jack from under the vehicle.
16. Tighten the wheel nuts firmly with the wheel wrench.

When reinstalling the wheel cover or center cap on the full-size tire, tighten all six plastic caps hand snug with the aid of the wheel wrench and tighten them with the wheel wrench an additional one-quarter of a turn.

Caution

Wheel covers will not fit on the vehicle's compact spare. If you try to put a wheel cover on the compact spare, the cover or the spare could be damaged.

⚠ Warning

Storing a jack, a tire, or other equipment in the passenger compartment of the vehicle could cause injury. In a sudden stop or collision, loose equipment could strike someone. Store all these in the proper place.

Storing the Flat Tire

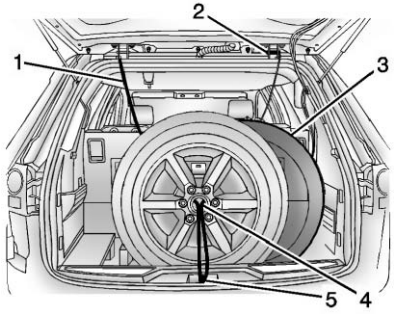

1. Cable
2. Liftgate Hinges
3. Spare Tire Heat Shield
4. Center of the Wheel
5. Door Striker

To store the flat tire:

1. Remove the cable package from the jack storage area.
2. Remove the small cap by tapping the back of the cap with the extension of the shaft, if the vehicle has aluminum wheels.
3. Put the flat tire in the rear storage area with the valve stem facing the rear of the vehicle.
4. Pull the cable through the door striker, the center of the wheel, and the plastic spare tire heat shield.

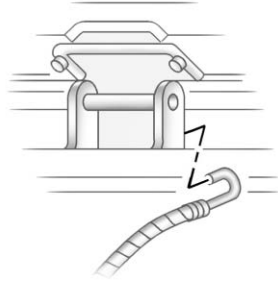

5. Hook the cable onto the outside portion of the liftgate hinges.
6. Hook the other end of the cable onto the outside portion of the liftgate hinge on the other side of the vehicle.
7. Pull on the cable to make sure it is secure.

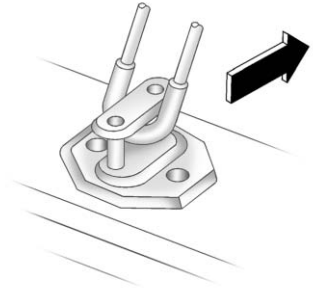

8. Make sure the metal tube is centered at the striker. Push the tube toward the front of the vehicle.

The compact spare is for temporary use only. Replace the compact spare tire with a full-size tire as soon as you can.

Storing the Compact Spare Tire and Tools

To store the spare tire and tools:

1. Open the liftgate. See *Liftgate* ⇨ *41*.

2. Lift the load floor.
3. Remove the cargo management system.
4. Put back the spare tire and all tools as they were stored in the rear storage compartment.
5. Install the cargo management system and load floor.

The compact spare is for temporary use only. Replace the compact spare tire with a full-size tire as soon as you can.

Compact Spare Tire

⚠ Warning

Driving with more than one compact spare tire at a time could result in loss of braking and handling. This could lead to a crash and you or others could be injured. Use only one compact spare tire at a time.

If this vehicle has a compact spare tire, it was fully inflated when new; however, it can lose air over time. Check the inflation pressure regularly. It should be 420 kPa (60 psi).

Stop as soon as possible and check that the spare tire is correctly inflated after being installed on the vehicle. The compact spare tire is designed for temporary use only. The vehicle will perform differently with the spare tire installed and it is recommended that the vehicle speed be limited to 80 km/h (50 mph). To conserve the tread of the spare tire, have the standard tire repaired or replaced as soon as convenient and return the spare tire to the storage area.

When using a compact spare tire, the ABS and Traction Control systems may engage until the spare tire is recognized by the vehicle, especially on slippery roads. Adjust driving to reduce possible wheel slip.

Performance of the All-Wheel Drive (AWD) system will be automatically reduced to protect the system when using the compact spare. To restore the AWD and prevent excessive wear on the clutch in the AWD, replace the compact spare tire with a full-size tire as soon as possible.

Caution

When the compact spare is installed, do not take the vehicle through an automatic car wash with guide rails. The compact spare can get caught on the rails which can damage the tire, wheel, and other parts of the vehicle.

Do not use the compact spare on other vehicles.

Do not mix the compact spare tire or wheel with other wheels or tires. They will not fit. Keep the spare tire and its wheel together.

Caution

Tire chains will not fit the compact spare. Using them can damage the vehicle and the chains. Do not use tire chains on the compact spare.

Jump Starting

Jump Starting - North America

For more information about the vehicle battery, see *Battery - North America* ⇨ *300*.

If the battery has run down, try to use another vehicle and some jumper cables to start your vehicle. Be sure to use the following steps to do it safely.

⚠ Warning

WARNING: Battery posts, terminals, and related accessories contain lead and lead compounds, chemicals known to the State of California to cause cancer and birth defects or other reproductive harm. Batteries also contain other chemicals known to the State of California to cause cancer. **WASH HANDS AFTER HANDLING.**

(Continued)

Warning (Continued)

See *California Proposition 65 Warning* ⇨ *281*.

⚠ Warning

Batteries can hurt you. They can be dangerous because:

- They contain acid that can burn you.
- They contain gas that can explode or ignite.
- They contain enough electricity to burn you.

If you do not follow these steps exactly, some or all of these things can hurt you.

Caution

Ignoring these steps could result in costly damage to the vehicle that would not be covered by the vehicle warranty. Trying to start the vehicle by pushing or pulling it will not work, and it could damage the vehicle.

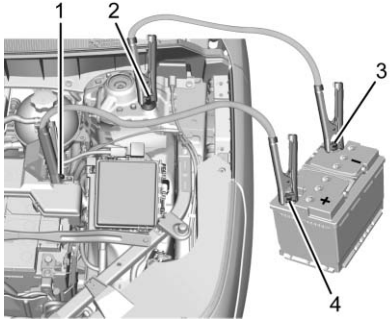

1. Discharged Battery Positive (+) Terminal
2. Discharged Battery Remote Negative (-) Terminal
3. Good Battery Negative (-) Terminal
4. Good Battery Positive (+) Terminal

The jump start positive (+) Terminal (1) and the negative remote negative terminal (2) for the discharged battery are on the driver side of the vehicle.

The jump start positive (+) terminal (4) and negative (-) terminal (3) are on the battery of the vehicle providing the jump start.

1. Check the other vehicle. It must have a 12-volt battery with a negative ground system.

Caution

If the other vehicle does not have a 12-volt system with a negative ground, both vehicles can be damaged. Only use a vehicle that has a 12-volt system with a negative ground for jump starting.

2. Position the two vehicles so that they are not touching.
3. Set the parking brake firmly and put the shift lever in P (Park) with an automatic transmission, or Neutral with a manual transmission. See *Shifting Into Park* ⇨ *230*.

Caution

If any accessories are left on or plugged in during the jump starting procedure, they could be damaged. The repairs would not be covered by the vehicle warranty. Whenever possible, turn off or unplug all accessories on either vehicle when jump starting.

4. Set the ignition to OFF. Turn off all lights and accessories in both vehicles, except the hazard warning flashers if needed.

⚠ Warning

An electric fan can start up even when the engine is not running and can injure you. Keep hands, clothing, and tools away from any underhood electric fan.

⚠ Warning

Using a match near a battery can cause battery gas to explode. People have been hurt doing this, and some have been blinded. Use a flashlight if you need more light.

Battery fluid contains acid that can burn you. Do not get it on you. If you accidentally get it in your eyes or on your skin, flush the place with water and get medical help immediately.

⚠ Warning

Fans or other moving engine parts can injure you badly. Keep your hands away from moving parts once the engine is running.

5. Connect one end of the red positive (+) cable to the positive (+) terminal on the discharged battery.
6. Connect the other end of the red positive (+) cable to the positive (+) terminal of the good battery.
7. Connect one end of the black negative (–) cable to the negative (–) terminal of the good battery.
8. Connect the other end of the black negative (–) cable to the remote negative (–) terminal for the discharged battery.
9. Start the engine in the vehicle with the good battery and run the engine at idle speed for at least four minutes.
10. Try to start the vehicle that had the dead battery. If it will not start after a few tries, it probably needs service.

Caution

If the jumper cables are connected or removed in the wrong order, electrical shorting may occur and damage the vehicle. The repairs would not be covered by the vehicle warranty. Always connect and remove the jumper cables in the correct order, making sure that the cables do not touch each other or other metal.

Jumper Cable Removal

Reverse the sequence exactly when removing the jumper cables.

After starting the disabled vehicle and removing the jumper cables, allow it to idle for several minutes.

Towing the Vehicle

Caution

Incorrectly towing a disabled vehicle may cause damage. The damage would not be covered by the vehicle warranty.

Do not lash or hook to suspension components. Use the proper straps around the tires to secure the vehicle.

Use only a flatbed tow truck for towing a disabled vehicle. Never use a sling type lift or damage will occur. Use ramps to help reduce approach angles if necessary. A towed vehicle should have its drive wheels off the ground.

Consult a professional towing service if the disabled vehicle must be towed.

Recreational Vehicle Towing

Recreational vehicle towing means towing the vehicle behind another vehicle, such as behind a motor home. The two most common types of recreational vehicle towing are known as dinghy towing and dolly towing. Dinghy towing is towing the vehicle with all four wheels on the ground. Dolly towing is towing the vehicle with two wheels on the ground and two wheels up on a device known as a dolly.

Here are some important things to consider before recreational vehicle towing:

- The towing capacity of the towing vehicle. Be sure to read the tow vehicle manufacturer's recommendations.
- How far the vehicle will be towed. Some vehicles have restrictions on how far and how long they can tow.
- The proper towing equipment. See your dealer or trailering professional for additional advice and equipment recommendations.
- If the vehicle is ready to be towed. Just as preparing the vehicle for a long trip, make sure the vehicle is prepared to be towed.

Caution

Use of a shield mounted in front of the vehicle grille could restrict airflow and cause damage to the transmission. The repairs would not be covered by the vehicle warranty. If using a shield, only use one that attaches to the towing vehicle.

Dinghy Towing (2.5L L4 Engine)

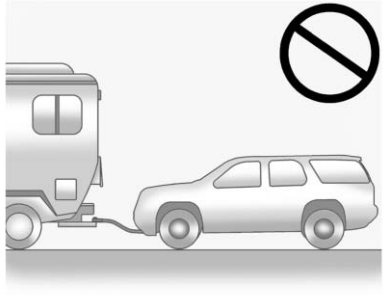

This vehicle was not designed or intended to be dinghy towed.

Dinghy Towing (3.6L V6 Engine)

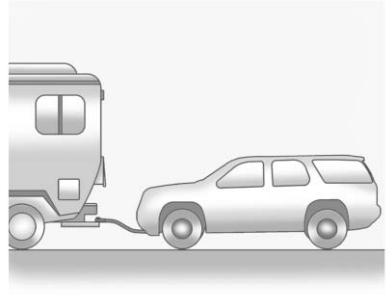

If the vehicle is front-wheel drive, it can be dinghy towed from the front. These vehicles may also be towed by putting the front wheels on a dolly. See “Dolly Towing” later in this section.

If the vehicle is all-wheel drive, it can be dinghy towed from the front. These vehicles can also be towed by placing them on a platform trailer with all four wheels off of the ground. These vehicles cannot be towed using a dolly.

For vehicles being dinghy towed, the vehicle should be run at the beginning of each day and at each RV fuel stop for about five minutes. This will ensure proper lubrication of transmission components. Reinstall the fuse to start the vehicle.

To tow the vehicle from the front with all four wheels on the ground:

1. Position the vehicle that will be towed and secure it to the towing vehicle.

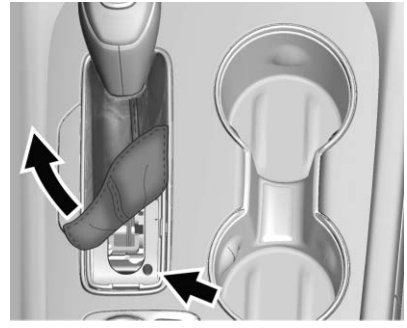

2. Remove the shift lever boot by pulling up on the rear of the trim plate.

3. Use a small screwdriver or tool to press and hold the manual release button on the front right.
4. Put the vehicle in N (Neutral).

Caution

If the vehicle is towed without performing each of the steps listed under “Dinghy Towing,” the automatic transmission could be damaged. Be sure to follow all steps of the dinghy towing procedure prior to and after towing the vehicle.

Caution

If 105 km/h (65 mph) is exceeded while towing the vehicle, it could be damaged. Never exceed 105 km/h (65 mph) while towing the vehicle.

Once the destination has been reached:

1. Shift the vehicle to P (Park).
2. Reinstall the shift lever boot by inserting the front edge and pressing the rear of the trim plate until it snaps into place.
3. Start the engine and let it idle for more than three minutes before driving the vehicle.

Caution

Too much or too little fluid can damage the transmission. Be sure that the transmission fluid is at the proper level before towing with all four wheels on the ground.

Caution

Do not tow a vehicle with the front drive wheels on the ground if one of the front tires is a compact spare tire. Towing with two different tire sizes on the front of the vehicle can cause severe damage to the transmission.

Dolly Towing

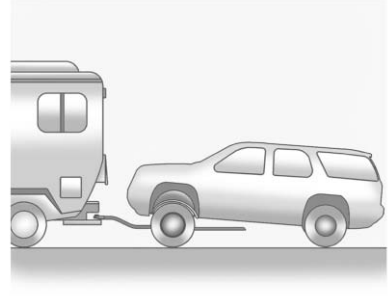

To tow the vehicle from the front with the rear wheels on the ground:

1. Put the front wheels on a dolly.
2. Move the shift lever to P (Park). See *Shifting Into Park* ⇨ *230*.
3. Set the parking brake.
4. Secure the vehicle to the dolly.
5. Follow the dolly manufacturer's instructions for preparing the vehicle and dolly for towing.
6. Release the parking brake.

Towing the Vehicle from the Rear

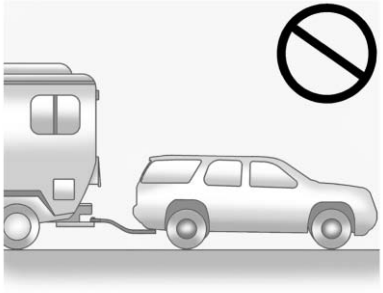

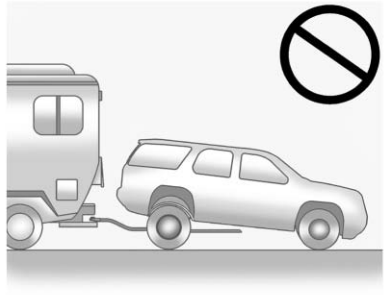

Caution

Towing the vehicle from the rear could damage it. Also, repairs would not be covered by the vehicle warranty. Never have the vehicle towed from the rear.

Appearance Care

Exterior Care

Locks

Locks are lubricated at the factory. Use a de-icing agent only when absolutely necessary, and have the locks greased after using. See *Recommended Fluids and Lubricants* ⇨ *375*.

Washing the Vehicle

To preserve the vehicle's finish, wash it often and out of direct sunlight.

Caution

Do not use petroleum-based, acidic, or abrasive cleaning agents as they can damage the vehicle's paint, metal, or plastic parts. If damage occurs, it would not be covered by the vehicle warranty. Approved cleaning products can be obtained from

(Continued)

Caution (Continued)

your dealer. Follow all manufacturer directions regarding correct product usage, necessary safety precautions, and appropriate disposal of any vehicle care product.

Caution

Avoid using high-pressure washes closer than 30 cm (12 in) to the surface of the vehicle. Use of power washers exceeding 8,274 kPa (1,200 psi) can result in damage or removal of paint and decals.

Caution

Do not power wash any component under the hood that has this symbol.

(Continued)

Caution (Continued)

This could cause damage that would not be covered by the vehicle warranty.

If using an automatic car wash, follow the car wash instructions. The windshield wiper and rear window wiper, if equipped, must be off. Remove any accessories that may be damaged or interfere with the car wash equipment.

Rinse the vehicle well, before washing and after, to remove all cleaning agents completely. If they are allowed to dry on the surface, they could stain.

Dry the finish with a soft, clean chamois or an all-cotton towel to avoid surface scratches and water spotting.

Finish Care

Application of aftermarket clearcoat sealant/wax materials is not recommended. If painted surfaces are damaged, see your dealer to have the damage assessed and repaired. Foreign materials such as calcium chloride and other salts, ice melting agents, road oil and tar, tree sap, bird droppings, chemicals from industrial chimneys, etc., can damage the vehicle's finish if they remain on painted surfaces. Wash the vehicle as soon as possible. If necessary, use non-abrasive cleaners that are marked safe for painted surfaces to remove foreign matter.

Occasional hand waxing or mild polishing should be done to remove residue from the paint finish. See your dealer for approved cleaning products.

Do not apply waxes or polishes to uncoated plastic, vinyl, rubber, decals, simulated wood, or flat paint as damage can occur.

Caution

Machine compounding or aggressive polishing on a basecoat/clearcoat paint finish

(Continued)

Caution (Continued)

may damage it. Use only non-abrasive waxes and polishes that are made for a basecoat/clearcoat paint finish on the vehicle.

To keep the paint finish looking new, keep the vehicle garaged or covered whenever possible.

Protecting Exterior Bright Metal Moldings

Caution

Failure to clean and protect the bright metal moldings can result in a hazy white finish or pitting. This damage would not be covered by the vehicle warranty.

The bright metal moldings on the vehicle are aluminum, chrome, or stainless steel. To prevent damage always follow these cleaning instructions:

- Be sure the molding is cool to the touch before applying any cleaning solution.
- Use only approved cleaning solutions for aluminum, chrome, or stainless steel. Some cleaners are highly acidic or contain alkaline substances and can damage the moldings.
- Always dilute a concentrated cleaner according to the manufacturer's instructions.
- Do not use cleaners that are not intended for automotive use.
- Use a nonabrasive wax on the vehicle after washing to protect and extend the molding finish.

Cleaning Exterior Lamps/Lenses, Emblems, Decals, and Stripes

Use only lukewarm or cold water, a soft cloth, and a car washing soap to clean exterior lamps, lenses, emblems, decals, and stripes. Follow instructions under "Washing the Vehicle" previously in this section.

Lamp covers are made of plastic, and some have a UV protective coating. Do not clean or wipe them when dry.

Do not use any of the following on lamp covers:

- Abrasive or caustic agents.
- Washer fluids and other cleaning agents in higher concentrations than suggested by the manufacturer.
- Solvents, alcohols, fuels, or other harsh cleaners.
- Ice scrapers or other hard items.
- Aftermarket appearance caps or covers while the lamps are illuminated, due to excessive heat generated.

Caution

Failure to clean lamps properly can cause damage to the lamp cover that would not be covered by the vehicle warranty.

Caution

Using wax on low gloss black finish stripes can increase the gloss level and create a non-uniform finish. Clean low gloss stripes with soap and water only.

Air Intakes

Clear debris from the air intakes, between the hood and windshield, when washing the vehicle.

Shutter System

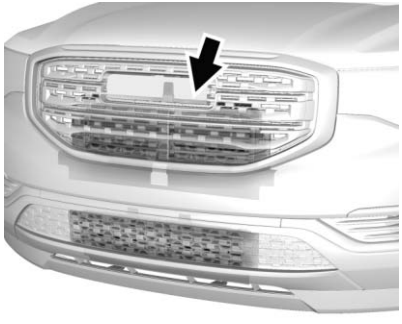

The vehicle may have a shutter system designed to help increase fuel economy. Keep the shutter system clean for proper operation.

Windshield and Wiper Blades

Clean the outside of the windshield with glass cleaner.

Clean rubber blades using a lint-free cloth or paper towel soaked with windshield washer fluid or a mild detergent. Wash the windshield thoroughly when cleaning the blades. Bugs, road grime, sap, and a buildup of vehicle wash/wax treatments may cause wiper streaking.

Replace the wiper blades if they are worn or damaged. Damage can be caused by extreme dusty conditions, sand, salt, heat, sun, snow, and ice.

Weatherstrips

Apply Dielectric silicone grease on weatherstrips to make them last longer, seal better, and not stick or squeak. Lubricate weatherstrips at least once a year. Hot, dry climates may require more frequent application. Black marks from rubber material on painted surfaces can be removed by rubbing with a clean cloth. See *Recommended Fluids and Lubricants* ⇨ *375*.

Tires

Use a stiff brush with tire cleaner to clean the tires.

Caution

Using petroleum-based tire dressing products on the vehicle may damage the paint finish and/or tires. When applying a tire dressing, always wipe off any overspray from all painted surfaces on the vehicle.

Wheels and Trim — Aluminum or Chrome

Use a soft, clean cloth with mild soap and water to clean the wheels. After rinsing thoroughly with clean water, dry with a soft, clean towel. A wax may then be applied.

Caution

Chrome wheels and other chrome trim may be damaged if the vehicle is not washed after driving on roads that have been sprayed with magnesium, calcium, or sodium chloride. These chlorides are used on roads for conditions such as ice and dust. Always wash the chrome with soap and water after exposure.

Caution

To avoid surface damage, do not use strong soaps, chemicals, abrasive polishes, cleaners, brushes, or cleaners that contain acid on aluminum or chrome-plated wheels. Use only approved cleaners. Also, never drive a vehicle with aluminum or chrome-plated wheels through an automatic car wash that uses silicone carbide tire cleaning

(Continued)

Caution (Continued)

brushes. Damage could occur and the repairs would not be covered by the vehicle warranty.

Brake System

Visually inspect brake lines and hoses for proper hook-up, binding, leaks, cracks, chafing, etc. Inspect disc brake pads for wear and rotors for surface condition. Inspect drum brake linings/shoes for wear or cracks. Inspect all other brake parts.

Steering, Suspension, and Chassis Components

Visually inspect steering, suspension, and chassis components for damaged, loose, or missing parts or signs of wear at least once a year.

Inspect power steering for proper attachment, connections, binding, leaks, cracks, chafing, etc.

Visually check constant velocity joint boots and axle seals for leaks.

Body Component Lubrication

Lubricate all key lock cylinders, hood hinges, liftgate hinges, and the steel fuel door hinges, unless the components are plastic. Applying silicone grease on weatherstrips with a clean cloth will make them last longer, seal better, and not stick or squeak.

Underbody Maintenance

At least twice a year, spring and fall, use plain water to flush any corrosive materials from the underbody. Take care to thoroughly clean any areas where mud and other debris can collect.

Do not directly power wash the transfer case and/or front/rear axle output seals. High pressure water can overcome the seals and contaminate the fluid. Contaminated fluid will decrease the life of the transfer case and/or axles and should be replaced.

Sheet Metal Damage

If the vehicle is damaged and requires sheet metal repair or replacement, make sure the body repair shop applies anti-corrosion material to parts repaired or replaced to restore corrosion protection.

Original manufacturer replacement parts will provide the corrosion protection while maintaining the vehicle warranty.

Finish Damage

Quickly repair minor chips and scratches with touch-up materials available from your dealer to avoid corrosion. Larger areas of finish damage can be corrected in your dealer's body and paint shop.

Chemical Paint Spotting

Airborne pollutants can fall upon and attack painted vehicle surfaces causing blotchy, ring-shaped discolorations, and small, irregular dark spots etched into the paint surface. See “Finish Care” previously in this section.

Interior Care

To prevent dirt particle abrasions, regularly clean the vehicle's interior. Immediately remove any soils. Newspapers or dark garments can transfer color to the vehicle’s interior.

Use a soft bristle brush to remove dust from knobs and crevices on the instrument cluster. Using a mild soap solution, immediately remove hand lotions, sunscreen, and insect repellent from all interior surfaces or permanent damage may result.

Use cleaners specifically designed for the surfaces being cleaned to prevent permanent damage. Apply all cleaners directly to the cleaning cloth. Do not spray cleaners on any switches or controls. Remove cleaners quickly.

Before using cleaners, read and follow all safety instructions on the label. While cleaning the interior, open the doors and windows to get proper ventilation.

To prevent damage, do not clean the interior using the following cleaners or techniques:

- Never use a razor or any other sharp object to remove soil from any interior surface.
- Never use a brush with stiff bristles.
- Never rub any surface aggressively or with too much pressure.
- Do not use laundry detergents or dishwashing soaps with degreasers. For liquid cleaners, use approximately 20 drops per 3.8 L (1 gal) of water.
  A concentrated soap solution will create streaks and attract dirt.
  Do not use solutions that contain strong or caustic soap.
- Do not heavily saturate the upholstery when cleaning.
- Do not use solvents or cleaners containing solvents.

Interior Glass

To clean, use a terry cloth fabric dampened with water. Wipe droplets left behind with a clean dry cloth. If necessary, use a commercial glass cleaner after cleaning with plain water.

Caution
To prevent scratching, never use abrasive cleaners on automotive glass. Abrasive cleaners or aggressive cleaning may damage the rear window defogger.

Cleaning the windshield with water during the first three to six months of ownership will reduce tendency to fog.

Speaker Covers

Vacuum around a speaker cover gently, so that the speaker will not be damaged. Clean spots with water and mild soap.

Coated Moldings

Coated moldings should be cleaned.

- When lightly soiled, wipe with a sponge or soft, lint-free cloth dampened with water.
- When heavily soiled, use warm soapy water.

Fabric/Carpet/Suede

Start by vacuuming the surface using a soft brush attachment. If a rotating vacuum brush attachment is being used, only use it on the floor carpet. Before cleaning, gently remove as much of the soil as possible:

- Gently blot liquids with a paper towel. Continue blotting until no more soil can be removed.
- For solid soils, remove as much as possible prior to vacuuming.

To clean:

1. Saturate a clean, lint-free colorfast cloth with water. Microfiber cloth is recommended to prevent lint transfer to the fabric or carpet.
2. Remove excess moisture by gently wringing until water does not drip from the cleaning cloth.
3. Start on the outside edge of the soil and gently rub toward the center. Fold the cleaning cloth to a clean area frequently to prevent forcing the soil in to the fabric.
4. Continue gently rubbing the soiled area until there is no longer any color transfer from the soil to the cleaning cloth.
5. If the soil is not completely removed, use a mild soap solution followed only by plain water.

If the soil is not completely removed, it may be necessary to use a commercial upholstery cleaner or spot lifter. Test a small hidden area for colorfastness before using a commercial upholstery cleaner or spot lifter. If ring formation occurs, clean the entire fabric or carpet.

After cleaning, use a paper towel to blot excess moisture.

Cleaning High Gloss Surfaces and Vehicle Information and Radio Displays

Use a microfiber cloth on high gloss surfaces or vehicle displays. First, use a soft bristle brush to remove dirt that can scratch the surface. Then gently clean by rubbing with a microfiber cloth. Never use window cleaners or solvents. Periodically hand wash the microfiber cloth separately, using mild soap. Do not use bleach or fabric softener. Rinse thoroughly and air dry before next use.

Caution

Do not attach a device with a suction cup to the display. This may cause damage and would not be covered by the vehicle warranty.

Instrument Panel, Leather, Vinyl, Other Plastic Surfaces, Low Gloss Paint Surfaces, and Natural Open Pore Wood Surfaces

Use a soft microfiber cloth dampened with water to remove dust and loose dirt. For a more thorough cleaning, use a soft microfiber cloth dampened with a mild soap solution.

Caution

Soaking or saturating leather, especially perforated leather, as well as other interior surfaces, may cause permanent damage. Wipe excess moisture from these surfaces after cleaning and allow them to dry naturally. Never use heat, steam, or spot removers. Do not use cleaners that contain silicone or wax-based products. Cleaners containing these solvents can permanently change

(Continued)

Caution (Continued)

the appearance and feel of leather or soft trim, and are not recommended.

Do not use cleaners that increase gloss, especially on the instrument panel. Reflected glare can decrease visibility through the windshield under certain conditions.

Caution

Use of air fresheners may cause permanent damage to plastics and painted surfaces. If an air freshener comes in contact with any plastic or painted surface in the vehicle, blot immediately and clean with a soft cloth dampened with a mild soap solution. Damage caused by air fresheners would not be covered by the vehicle warranty.

Cargo Cover and Convenience Net

Wash with warm water and mild detergent. Do not use chlorine bleach. Rinse with cold water, and then dry completely.

Care of Safety Belts

Keep belts clean and dry.

⚠ Warning

Do not bleach or dye safety belt webbing. It may severely weaken the webbing. In a crash, they might not be able to provide adequate protection. Clean and rinse safety belt webbing only with mild soap and lukewarm water. Allow the webbing to dry.

Floor Mats

⚠ Warning

If a floor mat is the wrong size or is not properly installed, it can interfere with the pedals. Interference with the pedals can cause unintended acceleration and/or increased stopping distance which can cause a crash and injury. Make sure the floor mat does not interfere with the pedals.

Use the following guidelines for proper floor mat usage.

- The original equipment floor mats were designed for your vehicle. If the floor mats need replacing, it is recommended that GM certified floor mats be purchased. Non-GM floor mats may not fit properly and may interfere with the accelerator or brake pedal. Always check that the floor mats do not interfere with the pedals.
- Do not use a floor mat if the vehicle is not equipped with a floor mat retainer on the driver side floor.
- Use the floor mat with the correct side up. Do not turn it over.
- Do not place anything on top of the driver side floor mat.
- Use only a single floor mat on the driver side.
- Do not place one floor mat on top of another.

Button Retainer

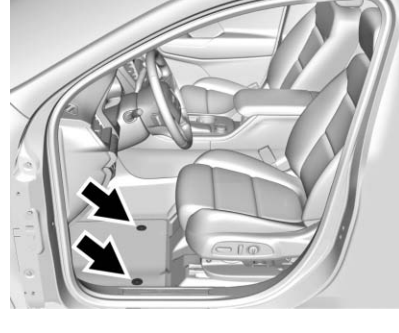

Some vehicles have floor mats with a button-type retainer.

Removing and Replacing the Floor Mat

1. Pull up on the rear of the mat to unlock and remove.
2. Reinstall the floor mat by lining up the floor mat opening over the carpet retainer and snapping into position.
3. Make sure the floor mat is properly secured. Verify the floor mat does not interfere with the pedals.

Service and Maintenance

General Information
General Information 365

Maintenance Schedule
Maintenance Schedule 366

Special Application Services
Special Application Services 372

Additional Maintenance and Care
Additional Maintenance and Care 372

Recommended Fluids, Lubricants, and Parts
Recommended Fluids and Lubricants 375
Maintenance Replacement Parts 376

Maintenance Records
Maintenance Records 378

General Information

Your vehicle is an important investment. This section describes the required maintenance for the vehicle. Follow this schedule to help protect against major repair expenses resulting from neglect or inadequate maintenance. It may also help to maintain the value of the vehicle if it is sold. It is the responsibility of the owner to have all required maintenance performed.

Your dealer has trained technicians who can perform required maintenance using genuine replacement parts. They have up-to-date tools and equipment for fast and accurate diagnostics. Many dealers have extended evening and Saturday hours, courtesy transportation, and online scheduling to assist with service needs.

Your dealer recognizes the importance of providing competitively priced maintenance and repair services. With trained technicians, the dealer is the place for routine maintenance such as oil changes and tire rotations and additional maintenance items like tires, brakes, batteries, and wiper blades.

Caution

Damage caused by improper maintenance can lead to costly repairs and may not be covered by the vehicle warranty. Maintenance intervals, checks, inspections, recommended fluids, and lubricants are important to keep the vehicle in good working condition.

The Tire Rotation and Required Services are the responsibility of the vehicle owner. It is recommended to have your dealer perform these services every 12 000 km/7,500 mi. Proper vehicle maintenance helps to keep the vehicle in good working condition, improves fuel economy, and reduces vehicle emissions.

Because of the way people use vehicles, maintenance needs vary. There may need to be more

frequent checks and services. The Additional Required Services - Normal are for vehicles that:

- Carry passengers and cargo within recommended limits on the Tire and Loading Information label. See *Vehicle Load Limits* ⇨ *221*.
- Are driven on reasonable road surfaces within legal driving limits.
- Use the recommended fuel. See *Fuel* ⇨ *268*.

Refer to the information in the Maintenance Schedule Additional Required Services - Normal chart.

The Additional Required Services - Severe are for vehicles that are:

- Mainly driven in heavy city traffic in hot weather.
- Mainly driven in hilly or mountainous terrain.
- Frequently towing a trailer.
- Used for high speed or competitive driving.
- Used for taxi, police, or delivery service.

Refer to the information in the Maintenance Schedule Additional Required Services - Severe chart.

⚠ Warning

Performing maintenance work can be dangerous and can cause serious injury. Perform maintenance work only if the required information, proper tools, and equipment are available.
If they are not, see your dealer to have a trained technician do the work. See *Doing Your Own Service Work* ⇨ *282*.

Maintenance Schedule

Owner Checks and Services

At Each Fuel Stop

- Check the engine oil level. See *Engine Oil* ⇨ *287*.

Once a Month

- Check the tire inflation pressures. See *Tire Pressure* ⇨ *321*.
- Inspect the tires for wear. See *Tire Inspection* ⇨ *327*.
- Check the windshield washer fluid level. See *Washer Fluid* ⇨ *297*.

Engine Oil Change

When the CHANGE ENGINE OIL SOON message displays, have the engine oil and filter changed within the next 1 000 km/600 mi. If driven under the best conditions, the engine oil life system may not indicate the need for vehicle service for up to a year. The engine oil and filter must be changed at least once

a year and the oil life system must be reset. Your trained dealer technician can perform this work. If the engine oil life system is reset accidentally, service the vehicle within 5 000 km/3,000 mi since the last service. Reset the oil life system when the oil is changed. See *Engine Oil Life System* ⇨ *289*.

Tire Rotation and Required Services Every 12 000 km/ 7,500 mi

Rotate the tires, if recommended for the vehicle, and perform the following services. See *Tire Rotation* ⇨ *327*.

- Check engine oil level and oil life percentage. If needed, change engine oil and filter, and reset oil life system. See *Engine Oil* ⇨ *287* and *Engine Oil Life System* ⇨ *289*.
- Check engine coolant level. See *Engine Coolant* ⇨ *293*.
- Check windshield washer fluid level. See *Washer Fluid* ⇨ *297*.
- Visually inspect windshield wiper blades for wear, cracking, or contamination. See *Exterior Care* ⇨ *355*. Replace worn or damaged wiper blades. See *Wiper Blade Replacement* ⇨ *302*.
- Check tire inflation pressures. See *Tire Pressure* ⇨ *321*.
- Inspect tire wear. See *Tire Inspection* ⇨ *327*.
- Visually check for fluid leaks.
- Inspect engine air cleaner filter. See *Engine Air Cleaner/ Filter* ⇨ *290*.
- Inspect brake system. See *Exterior Care* ⇨ *355*.
- Visually inspect steering, suspension, and chassis components for damaged, loose, or missing parts or signs of wear. See *Exterior Care* ⇨ *355*.
- Check restraint system components. See *Safety System Check* ⇨ *74*.
- Visually inspect fuel system for damage or leaks.
- Visually inspect exhaust system and nearby heat shields for loose or damaged parts.
- Lubricate body components. See *Exterior Care* ⇨ *355*.
- Check starter switch. See *Starter Switch Check* ⇨ *300*.
- Check automatic transmission shift lock control function. See *Automatic Transmission Shift Lock Control Function Check* ⇨ *301*.

- Check parking brake and automatic transmission park mechanism. See *Park Brake and P (Park) Mechanism Check* ⇨ *301*.
- Check accelerator pedal for damage, high effort, or binding. Replace if needed.
- Visually inspect gas strut for signs of wear, cracks, or other damage. Check the hold open ability of the strut. See your dealer if service is required.
- Check tire sealant expiration date, if equipped. See *Tire Sealant and Compressor Kit* ⇨ *335*.
- Inspect sunroof track and seal, if equipped. See *Sunroof* ⇨ *52*.

Maintenance Schedule Additional Required Services - Normal	12 000 km/7,500 mi	24 000 km/15,000 mi	36 000 km/22,500 mi	48 000 km/30,000 mi	60 000 km/37,500 mi	72 000 km/45,000 mi	84 000 km/52,500 mi	96 000 km/60,000 mi	108 000 km/67,500 mi	120 000 km/75,000 mi	132 000 km/82,500 mi	144 000 km/90,000 mi	156 000 km/97,500 mi	168 000 km/105,000 mi	180 000 km/112,500 mi	192 000 km/120,000 mi	204 000 km/127,500 mi	216 000 km/135,000 mi	228 000 km/142,500 mi	240 000 km/150,000 mi
Rotate tires and perform Required Services. Check engine oil level and oil life percentage. Change engine oil and filter, if needed.	✓	✓	✓	✓	✓	✓	✓	✓	✓	✓	✓	✓	✓	✓	✓	✓	✓	✓	✓	✓
Replace passenger compartment air filter. (1)			✓			✓			✓			✓			✓			✓		
Inspect evaporative control system. (2)						✓						✓						✓		
Replace engine air cleaner filter. (3)						✓						✓						✓		
Replace spark plugs. Inspect spark plug wires.													✓							
Drain and fill engine cooling system. (4)																				✓
Visually inspect accessory drive belts. (5)																				✓
Replace rear axle fluid. If equipped with positraction rear axle. (6)						✓						✓						✓		
Replace brake fluid. (7)																				

Footnotes — Maintenance Schedule Additional Required Services - Normal

(1) Or every two years, whichever comes first. More frequent passenger compartment air filter replacement may be needed if driving in areas with heavy traffic, poor air quality, high dust levels, or environmental allergens. Passenger compartment air filter replacement may also be needed if there is reduced airflow, window fogging, or odors. Your GM dealer can help determine when to replace the filter.

(2) Check all fuel and vapor lines and hoses for proper hook-up, routing, and condition.

(3) Or every four years, whichever comes first. If driving in dusty conditions, inspect the filter at each oil change or more often as needed.

(4) Or every five years, whichever comes first. See *Cooling System* ⇨ *292*.

(5) Or every 10 years, whichever comes first. Inspect for fraying, excessive cracking, or damage; replace, if needed.

(6) Do not directly power wash the transfer case and/or front/rear axle output seals. High pressure water can overcome the seals and contaminate the transfer case fluid. Contaminated fluid will decrease the life of the transfer case and/or axles and should be replaced.

(7) Replace brake fluid every five years. See *Brake Fluid* ⇨ *299*.

Maintenance Schedule Additional Required Services - Severe	12 000 km/7,500 mi	24 000 km/15,000 mi	36 000 km/22,500 mi	48 000 km/30,000 mi	60 000 km/37,500 mi	72 000 km/45,000 mi	84 000 km/52,500 mi	96 000 km/60,000 mi	108 000 km/67,500 mi	120 000 km/75,000 mi	132 000 km/82,500 mi	144 000 km/90,000 mi	156 000 km/97,500 mi	168 000 km/105,000 mi	180 000 km/112,500 mi	192 000 km/120,000 mi	204 000 km/127,500 mi	216 000 km/135,000 mi	228 000 km/142,500 mi	240 000 km/150,000 mi
Rotate tires and perform Required Services. Check engine oil level and oil life percentage. Change engine oil and filter, if needed.	✓	✓	✓	✓	✓	✓	✓	✓	✓	✓	✓	✓	✓	✓	✓	✓	✓	✓	✓	✓
Replace passenger compartment air filter. (1)			✓			✓			✓			✓			✓			✓		
Inspect evaporative control system. (2)						✓						✓						✓		
Replace engine air cleaner filter. (3)						✓						✓						✓		
Change automatic transmission fluid.						✓						✓						✓		
Replace spark plugs. Inspect spark plug wires.													✓							
Drain and fill engine cooling system. (4)																				✓
Visually inspect accessory drive belts. (5)																				✓
Replace rear axle fluid. If equipped with positraction rear axle. (6)						✓						✓						✓		
Replace brake fluid. (7)																				

Footnotes — Maintenance Schedule Additional Required Services - Severe

(1) Or every two years, whichever comes first. More frequent passenger compartment air filter replacement may be needed if driving in areas with heavy traffic, poor air quality, high dust levels, or environmental allergens. Passenger compartment air filter replacement may also be needed if there is reduced airflow, window fogging, or odors. Your GM dealer can help determine when to replace the filter.

(2) Check all fuel and vapor lines and hoses for proper hook-up, routing, and condition.

(3) Or every four years, whichever comes first. If driving in dusty conditions, inspect the filter at each oil change or more often as needed.

(4) Or every five years, whichever comes first. See *Cooling System* ⇨ *292*.

(5) Or every 10 years, whichever comes first. Inspect for fraying, excessive cracking, or damage; replace, if needed.

(6) Do not directly power wash the transfer case and/or front/rear axle output seals. High pressure water can overcome the seals and contaminate the transfer case fluid. Contaminated fluid will decrease the life of the transfer case and/or axles and should be replaced.

(7) Replace brake fluid every five years. See *Brake Fluid* ⇨ *299*.

Special Application Services

- Severe Commercial Use Vehicles Only: Lubricate chassis components every oil change.
- Have underbody flushing service performed. See "Underbody Maintenance" in *Exterior Care* ⇨ *355*.

Additional Maintenance and Care

Your vehicle is an important investment and caring for it properly may help to avoid future costly repairs. To maintain vehicle performance, additional maintenance services may be required.

It is recommended that your dealer perform these services — their trained dealer technicians know your vehicle best. Your dealer can also perform a thorough assessment with a multi-point inspection to recommend when your vehicle may need attention.

The following list is intended to explain the services and conditions to look for that may indicate services are required.

Battery

The 12-volt battery supplies power to start the engine and operate any additional electrical accessories.

- To avoid break-down or failure to start the vehicle, maintain a battery with full cranking power.
- Trained dealer technicians have the diagnostic equipment to test the battery and ensure that the connections and cables are corrosion-free.

Belts

- Belts may need replacing if they squeak or show signs of cracking or splitting.
- Trained dealer technicians have access to tools and equipment to inspect the belts and recommend adjustment or replacement when necessary.

Brakes

Brakes stop the vehicle and are crucial to safe driving.

- Signs of brake wear may include chirping, grinding, or squealing noises, or difficulty stopping.
- Trained dealer technicians have access to tools and equipment to inspect the brakes and recommend quality parts engineered for the vehicle.

Fluids

Proper fluid levels and approved fluids protect the vehicle's systems and components. See *Recommended Fluids and Lubricants* ⇨ *375* for GM approved fluids.

- Engine oil and windshield washer fluid levels should be checked at every fuel fill.
- Instrument cluster lights may come on to indicate that fluids may be low and need to be filled.

Hoses

Hoses transport fluids and should be regularly inspected to ensure that there are no cracks or leaks. With a multi-point inspection, your dealer can inspect the hoses and advise if replacement is needed.

Lamps

Properly working headlamps, taillamps, and brake lamps are important to see and be seen on the road.

- Signs that the headlamps need attention include dimming, failure to light, cracking, or damage. The brake lamps need to be checked periodically to ensure that they light when braking.
- With a multi-point inspection, your dealer can check the lamps and note any concerns.

Shocks and Struts

Shocks and struts help aid in control for a smoother ride.

- Signs of wear may include steering wheel vibration, bounce/sway while braking, longer stopping distance, or uneven tire wear.
- As part of the multi-point inspection, trained dealer technicians can visually inspect the shocks and struts for signs

of leaking, blown seals, or damage, and can advise when service is needed.

Tires

Tires need to be properly inflated, rotated, and balanced. Maintaining the tires can save money and fuel, and can reduce the risk of tire failure.

- Signs that the tires need to be replaced include three or more visible treadwear indicators; cord or fabric showing through the rubber; cracks or cuts in the tread or sidewall; or a bulge or split in the tire.
- Trained dealer technicians can inspect and recommend the right tires. Your dealer can also provide tire/wheel balancing services to ensure smooth vehicle operation at all speeds. Your dealer sells and services name brand tires.

Vehicle Care

To help keep the vehicle looking like new, vehicle care products are available from your dealer. For information on how to clean and protect the vehicle's interior and exterior, see *Interior Care* ⇨ *360* and *Exterior Care* ⇨ *355*.

Wheel Alignment

Wheel alignment is critical for ensuring that the tires deliver optimal wear and performance.

- Signs that the alignment may need to be adjusted include pulling, improper vehicle handling, or unusual tire wear.
- Your dealer has the required equipment to ensure proper wheel alignment.

Windshield

For safety, appearance, and the best viewing, keep the windshield clean and clear.

- Signs of damage include scratches, cracks, and chips.
- Trained dealer technicians can inspect the windshield and recommend proper replacement if needed.

Wiper Blades

Wiper blades need to be cleaned and kept in good condition to provide a clear view.

- Signs of wear include streaking, skipping across the windshield, and worn or split rubber.
- Trained dealer technicians can check the wiper blades and replace them when needed.

Recommended Fluids, Lubricants, and Parts

Recommended Fluids and Lubricants

Usage	Fluid/Lubricant
Automatic Transmission	DEXRON®-VI Automatic Transmission Fluid.
Carrier Assembly - Front Differential (Rear Drive Module) and Transfer Case	Dexron Synthetic Gear Lubricant 75W-90 (GM Part No. 88863089, in Canada 88863090).
Engine Coolant	50/50 mixture of clean, drinkable water and use only DEX-COOL® Coolant. See *Engine Coolant* ⇨ *293*.
Engine Oil	Engine oil meeting the dexos1™ specification of the proper SAE viscosity grade. ACDelco dexos1 Synthetic Blend is recommended. See *Engine Oil* ⇨ *287*.
Hood Latch Assembly, Secondary Latch, Pivots, Spring Anchor, and Release Pawl	Lubriplate Lubricant Aerosol (GM Part No. 89021668, in Canada 89021674) or lubricant meeting requirements of NLGI #2, Category LB or GC-LB.
Hydraulic Brake System	DOT 3 Hydraulic Brake Fluid (GM Part No. 19299818, in Canada 19299819).
Key Lock Cylinders, Hood and Door Hinges	Multi-Purpose Lubricant, Superlube (GM Part No. 12346241, in Canada 10953474).
Rear Axle	Dexron LS 75W-90 Gear Oil (GM Part No. 88862624, in Canada 88862625).

Usage	Fluid/Lubricant
Weatherstrip Conditioning	Weatherstrip Lubricant (GM Part No. 3634770, in Canada 10953518) or Dielectric Silicone Grease (GM Part No. 12345579, in Canada 10953481).
Windshield Washer	Automotive windshield washer fluid that meets regional freeze protection requirements.

Maintenance Replacement Parts

Replacement parts identified below by name, part number, or specification can be obtained from your dealer.

Part	GM Part Number	ACDelco Part Number
Engine Air Cleaner/Filter		
2.5L L4 Engine	23321606	A3212C
3.6L V6 Engine	15278634	A3083C
Engine Oil Filter		
2.5L L4 Engine	12640445	PF64
3.6L V6 Engine	19330000	PF63E
Passenger Compartment Air Filter	13508023	CF185
Spark Plugs		
2.5L L4 Engine	12627160	41-115
3.6L V6 Engine	12646780	41-130

Part	GM Part Number	ACDelco Part Number
Wiper Blades		
Front Driver – 63.0 cm (24.8 in)	23372088	—
Front Passenger – 50 cm (19.7 in)	23360287	—
Rear – 30.0 cm (11.8 in)	23299093	—

Maintenance Records

After the scheduled services are performed, record the date, odometer reading, who performed the service, and the type of services performed in the boxes provided. Retain all maintenance receipts.

Date	Odometer Reading	Serviced By	Services Performed

Technical Data

Vehicle Identification
Vehicle Identification Number (VIN) 379
Service Parts Identification Label 379

Vehicle Data
Capacities and Specifications 380
Engine Drive Belt Routing 381

Vehicle Identification

Vehicle Identification Number (VIN)

This legal identifier is in the front corner of the instrument panel, on the left side of the vehicle. It can be seen through the windshield from outside. The Vehicle Identification Number (VIN) also appears on the Vehicle Certification and Service Parts labels and certificates of title and registration.

Engine Identification

The eighth character in the VIN is the engine code. This code identifies the vehicle's engine, specifications, and replacement parts. See “Engine Specifications” under *Capacities and Specifications* ⇨ *380* for the vehicle's engine code.

Service Parts Identification Label

This label is in the rear compartment, under the load floor, inside the cargo storage shelf unit, and has the following information:

- Vehicle Identification Number (VIN).
- Model designation.
- Paint information.
- Production options and special equipment.

Do not remove this label from the vehicle.

Vehicle Data

Capacities and Specifications

The following approximate capacities are given in metric and English conversions. See *Recommended Fluids and Lubricants* ⇨ *375* for more information.

Application	Capacities	
	Metric	English
Air Conditioning Refrigerant	For the air conditioning system refrigerant type and charge amount, see the refrigerant label under the hood. See your dealer for more information.	
Cooling System	11.3 L	11.9 qt
Engine Oil with Filter		
2.5L L4 Engine FWD	4.7 L	5.0 qt
2.5L L4 Engine AWD	5.7 L	6.0 qt
3.6L V6 Engine	5.7 L	6.0 qt
Fuel Tank		
FWD	73.4 L	19.4 gal
AWD	82.1 L	21.7 gal
Transfer Case Fluid	1.0 L	1.0 qt
Wheel Nut Torque	190 N•m	140 lb ft
All capacities are approximate. When adding, be sure to fill to the approximate level, as recommended in this manual. Recheck fluid level after filling.		

Engine Specifications

Engine	VIN Code	Transmission	Spark Plug Gap
2.5L L4 Engine	A	Automatic	0.95–1.10 mm (0.037–0.043 in)
3.6L V6 Engine	S	Automatic	0.80–0.90 mm (0.031–0.035 in)

Engine Drive Belt Routing

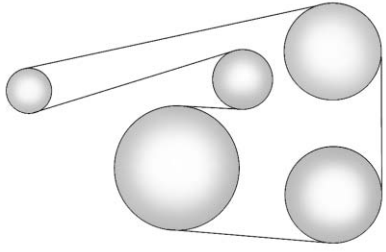

2.5L L4 Engine

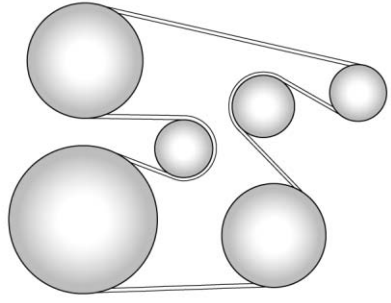

3.6L V6 Engine

Customer Information

Customer Information
Customer Satisfaction Procedure 382
Customer Assistance Offices 384
Customer Assistance for Text Telephone (TTY) Users 385
Online Owner Center 385
GM Mobility Reimbursement Program 386
Roadside Assistance Program 386
Scheduling Service Appointments 388
Courtesy Transportation Program 388
Collision Damage Repair 389
Service Publications Ordering Information 391
Radio Frequency Statement 392

Reporting Safety Defects
Reporting Safety Defects to the United States Government 393
Reporting Safety Defects to the Canadian Government 393
Reporting Safety Defects to General Motors 393

Vehicle Data Recording and Privacy
Vehicle Data Recording and Privacy 394
Event Data Recorders 394
Infotainment System 395

Customer Information

Customer Satisfaction Procedure

Your satisfaction and goodwill are important to your dealer and to GMC. Normally, any concerns with the sales transaction or the operation of the vehicle will be resolved by your dealer's sales or service departments. Sometimes, however, despite the best intentions of all concerned, misunderstandings can occur. If your concern has not been resolved to your satisfaction, the following steps should be taken:

STEP ONE : Discuss your concern with a member of dealership management. Normally, concerns can be quickly resolved at that level. If the matter has already been reviewed with the sales, service, or parts manager, contact the owner of your dealership or the general manager.

STEP TWO : If after contacting a member of dealership management, it appears your concern cannot be

resolved by your dealership without further help, in the U.S., call 1-800-462-8782. In Canada, call General Motors of Canada Customer Care Centre at 1-800-263-3777 (English), or 1-800-263-7854 (French).

We encourage you to call the toll-free number in order to give your inquiry prompt attention. Have the following information available to give the Customer Assistance representative:

- Vehicle Identification Number (VIN). This is available from the vehicle registration or title, or the plate at the top left of the instrument panel and visible through the windshield.
- Dealership name and location.
- Vehicle delivery date and present mileage.

When contacting GMC, remember that your concern will likely be resolved at a dealer's facility. That is why we suggest following Step One first.

STEP THREE — U.S. Owners : Both General Motors and your dealer are committed to making sure you are completely satisfied with your new vehicle. However, if you continue to remain unsatisfied after following the procedure outlined in Steps One and Two, you can file with the Better Business Bureau (BBB) Auto Line® Program to enforce your rights.

The BBB Auto Line Program is an out-of-court program administered by the Council of Better Business Bureaus to settle automotive disputes regarding vehicle repairs or the interpretation of the New Vehicle Limited Warranty. Although you may be required to resort to this informal dispute resolution program prior to filing a court action, use of the program is free of charge and your case will generally be heard within 40 days. If you do not agree with the decision given in your case, you may reject it and proceed with any other venue for relief available to you.

You may contact the BBB Auto Line Program using the toll-free telephone number or write them at the following address:

BBB Auto Line Program
Council of Better Business Bureaus, Inc.
3033 Wilson Blvd.
Suite 600
Arlington, VA 22203-1838

Telephone: 1-800-955-5100
http://www.bbb.org/council/programs-services/dispute-handling-and-resolution/bbb-auto-line

This program is available in all 50 states and the District of Columbia. Eligibility is limited by vehicle age, mileage, and other factors. General Motors reserves the right to change eligibility limitations and/or discontinue its participation in this program.

STEP THREE — Canadian Owners : In the event that you do not feel your concerns have been addressed after following the procedure outlined in Steps One and Two, General Motors of Canada

Company wants you to be aware of its participation in a no-charge Mediation/Arbitration Program. General Motors of Canada Company has committed to binding arbitration of owner disputes involving factory-related vehicle service claims. The program provides for the review of the facts involved by an impartial third party arbiter, and may include an informal hearing before the arbiter. The program is designed so that the entire dispute settlement process, from the time you file your complaint to the final decision, should be completed in about 70 days. We believe our impartial program offers advantages over courts in most jurisdictions because it is informal, quick, and free of charge.

For further information concerning eligibility in the Canadian Motor Vehicle Arbitration Plan (CAMVAP), call toll-free 1-800-207-0685, or call the General Motors Customer Care Centre, 1-800-263-3777 (English), 1-800-263-7854 (French), or write to:

Mediation/Arbitration Program
c/o Customer Care Centre
General Motors of Canada Company
Mail Code: CA1-163-005
1908 Colonel Sam Drive
Oshawa, Ontario L1H 8P7

Your inquiry should be accompanied by the Vehicle Identification Number (VIN).

Customer Assistance Offices

GMC encourages customers to call the toll-free number for assistance. However, if a customer wishes to write or e-mail GMC, the letter should be addressed to:

United States and Puerto Rico

GMC Customer Assistance Center
P.O. Box 33172
Detroit, MI 48232-5172

www.GMC.com

1-800-GMC-8782 (1-800-462-8782)
1-888-889-2438 (For Text Telephone devices (TTYs))
Roadside Assistance:
1-888-881-3302

From U.S. Virgin Islands:

1-800-496-9994

Canada

General Motors of Canada Company
Customer Care Centre, Mail Code: CA1-163-005
1908 Colonel Sam Drive
Oshawa, Ontario L1H 8P7
www.gmc.ca

1-800-263-3777 (English)
1-800-263-7854 (French)
1-800-263-3830 (For Text Telephone Devices (TTYs))
Roadside Assistance:
1-800-268-6800

Overseas

Please contact the local General Motors Business Unit.

Customer Assistance for Text Telephone (TTY) Users

To assist customers who are deaf, hard of hearing, or speech-impaired and who use Text Telephones (TTYs), GMC has TTY equipment available at its Customer Assistance Center. Any TTY user in the U.S. can communicate with GMC by dialing: 1-888-889-2438. TTY users in Canada can dial 1-800-263-3830.

Online Owner Center

Online Owner Experience (U.S.) my.gmc.com

The GMC online owner experience is a one-stop resource that allows interaction with GMC and keeps important vehicle-specific information in one place.

Membership Benefits

: Download owner manuals and view vehicle-specific how-to videos.

: View maintenance schedules, alerts, and OnStar onboard vehicle diagnostic information. Schedule service appointments.

: View and print dealer-recorded service records and self-recorded service records.

: Select a dealer and view locations, maps, phone numbers, and hours.

: Track your vehicle's warranty information.

: View active recalls by Vehicle Identification Number (VIN). See *Vehicle Identification Number (VIN)* ⇨ *379*.

: View GM Card, SiriusXM Satellite radio (if equipped), and OnStar account information (if equipped).

: Chat live with online help representatives.

Visit my.gmc.com to register your vehicle.

GMC Owner Centre (Canada) gmcowner.ca

Take a trip to the GMC Owner Centre:

- Chat live with online help representatives.
- Use the Vehicle Tools section.
- Access third party enthusiast sites and social media networks.
- Locate owner resources such as lease-end, financing, and warranty information.
- Retrieve your favorite articles, quizzes, tips, and multimedia galleries organized into the Features and Auto Care Sections.
- Download the owner manual for your vehicle, quickly and easily.
- Find the GMC-recommended maintenance services for your vehicle.

GM Mobility Reimbursement Program

This program is available to qualified applicants for cost reimbursement of eligible aftermarket adaptive equipment required for the vehicle, such as hand controls or a wheelchair/ scooter lift for the vehicle.

For more information on the limited offer, visit www.gmmobility.com or call the GM Mobility Assistance Center at 1-800-323-9935. Text Telephone (TTY) users, call 1-800-833-9935.

General Motors of Canada also has a Mobility Program. Visit www.gm.ca or call 1-800-GM-DRIVE (463-7483) for details. TTY users call 1-800-263-3830.

Roadside Assistance Program

For U.S.-purchased vehicles, call 1-888-881-3302; (Text Telephone (TTY): 1-888-889-2438).

For Canadian-purchased vehicles, call 1-800-268-6800.

Service is available 24 hours a day, 365 days a year.

Calling for Assistance

When calling Roadside Assistance, have the following information ready:

- Your name, home address, and home telephone number.
- Telephone number of your location.
- Location of the vehicle
- Model, year, color, and license plate number of the vehicle.
- Odometer reading, Vehicle Identification Number (VIN), and delivery date of the vehicle.
- Description of the problem.

Coverage

Services are provided for the duration of the vehicle's powertrain warranty.

In the U.S., anyone driving the vehicle is covered. In Canada, a person driving the vehicle without permission from the owner is not covered.

Roadside Assistance is not a part of the New Vehicle Limited Warranty. General Motors North America and GMC reserve the right to make any changes or discontinue the Roadside Assistance program at any time without notification.

General Motors North America and GMC reserve the right to limit services or payment to an owner or driver if they decide the claims are made too often, or the same type of claim is made many times.

Services Provided

- **Emergency Fuel Delivery:** Delivery of enough fuel for the vehicle to get to the nearest service station.

- **Lock-Out Service:** Service to unlock the vehicle if you are locked out. A remote unlock may be available if you have OnStar®. For security reasons, the driver must present identification before this service is given.
- **Emergency Tow from a Public Road or Highway:** Tow to the nearest GMC dealer for warranty service, or if the vehicle was in a crash and cannot be driven. Assistance is not given when the vehicle is stuck in the sand, mud, or snow.
- **Flat Tire Change:** Service to change a flat tire with the spare tire. The spare tire, if equipped, must be in good condition and properly inflated. It is the owner's responsibility for the repair or replacement of the tire if it is not covered by the warranty.
- **Battery Jump Start:** Service to jump start a dead battery.
- **Trip Interruption Benefits and Assistance:** If your trip is interrupted due to a warranty event, incidental expenses may be reimbursed within the Powertrain warranty period. Items considered are reasonable and customary hotel, meals, rental car, or a vehicle being delivered back to the customer, up to 805 km (500 mi).

Services Not Included in Roadside Assistance

- Impound towing caused by violation of any laws.
- Legal fines.
- Mounting, dismounting, or changing of snow tires, chains, or other traction devices.

Service is not provided if a vehicle is in an area that is not accessible to the service vehicle or is not a regularly traveled or maintained public road, which includes ice and winter roads. Off-road use is not covered.

Services Specific to Canadian-Purchased Vehicles

- **Fuel Delivery:** Reimbursement is up to 7 liters. Diesel fuel delivery may be restricted. Propane and other fuels are not provided through this service.
- **Lock-Out Service:** Vehicle registration is required.
- **Trip Interruption Benefits and Assistance:** Must be over 150 kilometers from where your trip was started to qualify. Pre-authorization, original detailed receipts, and a copy of the repair orders are required. Once authorization has been received, the Roadside Assistance advisor will help to make arrangements and explain how to receive payment.
- **Alternative Service:** If assistance cannot be provided right away, the Roadside Assistance advisor may give permission to get local emergency road service. You will receive payment, up to $100, after sending the original receipt

to Roadside Assistance. Mechanical failures may be covered, however any cost for parts and labor for repairs not covered by the warranty are the owner responsibility.

Scheduling Service Appointments

When the vehicle requires warranty service, contact your dealer and request an appointment. By scheduling a service appointment and advising the service consultant of your transportation needs, your dealer can help minimize your inconvenience.

If the vehicle cannot be scheduled into the service department immediately, keep driving it until it can be scheduled for service, unless, of course, the problem is safety related. If it is, please call your dealership, let them know this, and ask for instructions.

If your dealer requests you to bring the vehicle for service, you are urged to do so as early in the work day as possible to allow for same-day repair.

Courtesy Transportation Program

To enhance your ownership experience, we and our participating dealers are proud to offer Courtesy Transportation, a customer support program for vehicles with the Bumper-to-Bumper (Base Warranty Coverage period in Canada), extended powertrain, and/or hybrid-specific warranties in both the U.S. and Canada.

Several Courtesy Transportation options are available to assist in reducing inconvenience when warranty repairs are required.

Courtesy Transportation is not a part of the New Vehicle Limited Warranty. A separate booklet entitled “Limited Warranty and Owner Assistance Information” furnished with each new vehicle provides detailed warranty coverage information.

Transportation Options

Warranty service can generally be completed while you wait. However, if you are unable to do so, your dealer may offer the following transportation options:

Shuttle Service

This includes one-way or round-trip shuttle service within reasonable time and distance parameters of your dealer's area.

Public Transportation or Fuel Reimbursement

If overnight warranty repairs are needed, and public transportation is used, the expense must be supported by original receipts and within the maximum amount allowed by GM for shuttle service. If U.S. customers arrange their own transportation, limited reimbursement for reasonable fuel expenses may be available. Claim amounts should reflect actual costs

and be supported by original receipts. See your dealer for information.

Courtesy Rental Vehicle

For an overnight warranty repair, the dealer may provide an available courtesy rental vehicle or provide for reimbursement of a rental vehicle. Reimbursement is limited and must be supported by original receipts as well as a signed and completed rental agreement and meet state/provincial, local, and rental vehicle provider requirements. Requirements vary and may include minimum age requirements, insurance coverage, credit card, etc. Additional fees such as fuel usage charges, taxes, levies, usage fees, excessive mileage, or rental usage beyond the completion of the repair are also your responsibility.

It may not be possible to provide a like vehicle as a courtesy rental.

Additional Program Information

All program options, such as shuttle service, may not be available at every dealer. Contact your dealer for specific availability.

General Motors reserves the right to unilaterally modify, change, or discontinue Courtesy Transportation at any time and to resolve all questions of claim eligibility pursuant to the terms and conditions described herein at its sole discretion.

Collision Damage Repair

If the vehicle is involved in a collision and it is damaged, have the damage repaired by a qualified technician using the proper equipment and quality replacement parts. Poorly performed collision repairs diminish the vehicle resale value, and safety performance can be compromised in subsequent collisions.

Collision Parts

Genuine GM Collision parts are new parts made with the same materials and construction methods as the parts with which the vehicle was originally built. Genuine GM Collision parts are the best choice to ensure that the vehicle's designed appearance, durability, and safety are preserved. The use of Genuine GM parts can help maintain the GM New Vehicle Limited Warranty.

Recycled original equipment parts may also be used for repair. These parts are typically removed from vehicles that were total losses in prior crashes. In most cases, the parts being recycled are from undamaged sections of the vehicle. A recycled original equipment GM part may be an acceptable choice to maintain the vehicle's originally designed appearance and safety performance; however, the history of these parts is not known. Such parts are not covered by the GM New Vehicle Limited Warranty, and any related failures are not covered by that warranty.

Aftermarket collision parts are also available. These are made by companies other than GM and may not have been tested for the vehicle. As a result, these parts may fit poorly, exhibit premature durability/corrosion problems, and may not perform properly in subsequent collisions. Aftermarket parts are not covered by the GM New Vehicle Limited Warranty, and any vehicle failure related to such parts is not covered by that warranty.

Repair Facility

GM also recommends that you choose a collision repair facility that meets your needs before you ever need collision repairs. Your dealer may have a collision repair center with GM-trained technicians and state-of-the-art equipment, or be able to recommend a collision repair center that has GM-trained technicians and comparable equipment.

Insuring the Vehicle

Protect your investment in the GM vehicle with comprehensive and collision insurance coverage. There are significant differences in the quality of coverage afforded by various insurance policy terms. Many insurance policies provide reduced protection to the GM vehicle by limiting compensation for damage repairs through the use of aftermarket collision parts. Some insurance companies will not specify aftermarket collision parts. When purchasing insurance, we recommend that you ensure that the vehicle will be repaired with GM original equipment collision parts. If such insurance coverage is not available from your current insurance carrier, consider switching to another insurance carrier.

If the vehicle is leased, the leasing company may require you to have insurance that ensures repairs with Genuine GM Original Equipment Manufacturer (OEM) parts or Genuine Manufacturer replacement parts. Read the lease carefully, as you may be charged at the end of the lease for poor quality repairs.

If a Crash Occurs

If there has been an injury, call emergency services for help. Do not leave the scene of a crash until all matters have been taken care of. Move the vehicle only if its position puts you in danger, or you are instructed to move it by a police officer.

Give only the necessary information to police and other parties involved in the crash.

For emergency towing see *Roadside Assistance Program* ⇨ *386*.

Gather the following information:

- Driver name, address, and telephone number.
- Driver license number.
- Owner name, address, and telephone number.
- Vehicle license plate number.

- Vehicle make, model, and model year.
- Vehicle Identification Number (VIN).
- Insurance company and policy number.
- General description of the damage to the other vehicle.

Choose a reputable repair facility that uses quality replacement parts. See “Collision Parts” earlier in this section.

If the airbag has inflated, see *What Will You See after an Airbag Inflates?* ⇨ *80*.

Managing the Vehicle Damage Repair Process

In the event that the vehicle requires damage repairs, GM recommends that you take an active role in its repair. If you have a pre-determined repair facility of choice, take the vehicle there, or have it towed there. Specify to the facility that any required replacement collision parts be original equipment parts, either new Genuine GM parts or recycled original GM parts. Remember, recycled parts will not be covered by the GM vehicle warranty.

Insurance pays the bill for the repair, but you must live with the repair. Depending on your policy limits, your insurance company may initially value the repair using aftermarket parts. Discuss this with the repair professional, and insist on Genuine GM parts. Remember, if the vehicle is leased, you may be obligated to have the vehicle repaired with Genuine GM parts, even if your insurance coverage does not pay the full cost.

If another party's insurance company is paying for the repairs, you are not obligated to accept a repair valuation based on that insurance company's collision policy repair limits, as you have no contractual limits with that company. In such cases, you can have control of the repair and parts choices as long as the cost stays within reasonable limits.

Service Publications Ordering Information

Service Manuals

Service Manuals have the diagnosis and repair information on the engines, transmission, axle, suspension, brakes, electrical, steering, body, etc.

Service Bulletins

Service Bulletins give additional technical service information needed to knowledgeably service General Motors cars and trucks. Each bulletin contains instructions to assist in the diagnosis and service of the vehicle.

Owner Information

Owner publications are written specifically for owners and intended to provide basic operational information about the vehicle. The Owner Manual includes the Maintenance Schedule for all models.

In-Portfolio: Includes a Portfolio, Owner Manual, and Warranty Manual.

RETAIL SELL PRICE: $35.00 – $40.00 (U.S.) plus handling and shipping fees.

Without Pouch: Owner Manual only.

RETAIL SELL PRICE: $25.00 (U.S.) plus handling and shipping fees.

Current and Past Models

Technical Service Bulletins and Manuals are available for current and past model GM vehicles.

ORDER TOLL FREE:
1-800-551-4123 Monday – Friday 8:00 AM – 6:00 PM Eastern Time

For Credit Card Orders Only (VISA-MasterCard-Discover), see Helm, Inc. at: www.helminc.com.

Or write to:

Helm, Incorporated
Attention: Customer Service
47911 Halyard Drive
Plymouth, MI 48170

Prices are subject to change without notice and without incurring obligation. Allow ample time for delivery.

All listed prices are quoted in U.S. funds. Make checks payable in U.S. funds.

Radio Frequency Statement

This vehicle has systems that operate on a radio frequency that complies with Part 15/Part 18 of the Federal Communications Commission (FCC) rules and with Industry Canada Standards RSS-GEN/210/216/220/251/310, ICES-001.

Operation is subject to the following two conditions:

1. The device may not cause harmful interference.
2. The device must accept any interference received, including interference that may cause undesired operation of the device.

Changes or modifications to any of these systems by other than an authorized service facility could void authorization to use this equipment.

Reporting Safety Defects

Reporting Safety Defects to the United States Government

If you believe that your vehicle has a defect which could cause a crash or could cause injury or death, you should immediately inform the National Highway Traffic Safety Administration (NHTSA) in addition to notifying General Motors.

If NHTSA receives similar complaints, it may open an investigation, and if it finds that a safety defect exists in a group of vehicles, it may order a recall and remedy campaign. However, NHTSA cannot become involved in individual problems between you, your dealer, or General Motors.

To contact NHTSA, you may call the Vehicle Safety Hotline toll-free at 1-888-327-4236 (TTY: 1-800-424-9153); go to *http://www.safercar.gov;* or write to:

Administrator, NHTSA
1200 New Jersey Avenue, S.E.
Washington, D.C. 20590

You can also obtain other information about motor vehicle safety from *http://www.safercar.gov*.

Reporting Safety Defects to the Canadian Government

If you live in Canada, and you believe that the vehicle has a safety defect, notify Transport Canada immediately, and notify General Motors of Canada Company. Call Transport Canada at 1-800-333-0510 or write to:

Transport Canada
Road Safety Branch
80 rue Noel
Gatineau, QC J8Z 0A1

Reporting Safety Defects to General Motors

In addition to notifying NHTSA (or Transport Canada) in a situation like this, notify General Motors.

Call 1-800-GMC-8782 (1-800-462-8782), or write:

GMC Customer Assistance Center
P.O. Box 33172
Detroit, MI 48232-5172

In Canada, call 1-800-263-3777 (English) or 1-800-263-7854 (French), or write:

General Motors of Canada Company
Customer Care Centre, Mail Code: CA1-163-005
1908 Colonel Sam Drive
Oshawa, Ontario L1H 8P7

Vehicle Data Recording and Privacy

The vehicle has a number of computers that record information about the vehicle's performance and how it is driven. For example, the vehicle uses computer modules to monitor and control engine and transmission performance, to monitor the conditions for airbag deployment and deploy them in a crash, and, if equipped, to provide antilock braking to help the driver control the vehicle. These modules may store data to help the dealer technician service the vehicle. Some modules may also store data about how the vehicle is operated, such as rate of fuel consumption or average speed. These modules may retain personal preferences, such as radio presets, seat positions, and temperature settings.

Event Data Recorders

This vehicle is equipped with an event data recorder (EDR). The main purpose of an EDR is to record, in certain crash or near crash-like situations, such as an air bag deployment or hitting a road obstacle, data that will assist in understanding how a vehicle's systems performed. The EDR is designed to record data related to vehicle dynamics and safety systems for a short period of time, typically 30 seconds or less. The EDR in this vehicle is designed to record such data as:

- How various systems in your vehicle were operating;
- Whether or not the driver and passenger safety belts were buckled/fastened;
- How far (if at all) the driver was depressing the accelerator and/or brake pedal; and,
- How fast the vehicle was traveling.

These data can help provide a better understanding of the circumstances in which crashes and injuries occur.

Note

EDR data are recorded by your vehicle only if a non-trivial crash situation occurs; no data are recorded by the EDR under normal driving conditions and no personal data (e.g., name, gender, age, and crash location) are recorded. However, other parties, such as law enforcement, could combine the EDR data with the type of personally identifying data routinely acquired during a crash investigation.

To read data recorded by an EDR, special equipment is required, and access to the vehicle or the EDR is needed. In addition to the vehicle manufacturer, other parties, such as law enforcement, that have the special equipment, can read the information if they have access to the vehicle or the EDR.

GM will not access this data or share it with others except: with the consent of the vehicle owner or, if the vehicle is leased, with the consent of the lessee; in response to an official request by police or similar government office; as part of GM's defense of litigation through the discovery process; or, as required by law. Data that GM collects or receives may also be used for GM research needs or may be made available to others for research purposes, where a need is shown and the data is not tied to a specific vehicle or vehicle owner.

Infotainment System

If the vehicle is equipped with a navigation system as part of the infotainment system, use of the system may result in the storage of destinations, addresses, telephone numbers, and other trip information. See the infotainment manual for information on stored data and for deletion instructions.

OnStar

OnStar Overview
OnStar Overview 396

OnStar Services
Emergency 397
Security 397
Navigation 398
Connections 398
Diagnostics 400

OnStar Additional Information
OnStar Additional Information 401

OnStar Overview

Voice Command Button

Blue OnStar Button

Red Emergency Button

This vehicle may be equipped with a comprehensive, in-vehicle system that can connect to an OnStar Advisor for Emergency, Security, Navigation, Connections, and Diagnostics Services. OnStar services may require a paid subscription and data plan. OnStar requires the vehicle battery and electrical system, cellular service, and GPS satellite signals to be available and operating. OnStar acts as a link to existing emergency service providers. OnStar may collect information about you and your vehicle, including location information. See OnStar User Terms, Privacy Statement, and Software Terms for more details including system limitations at www.onstar.com (U.S.) or www.onstar.ca (Canada).

The OnStar system status light is next to the OnStar buttons. If the status light is:

- Solid Green: System is ready.
- Flashing Green: On a call.
- Red: Indicates a problem.
- Off: System is active. Press twice to speak with an OnStar Advisor.

Press or call 1-888-4ONSTAR (1-888-466-7827) to speak to an Advisor.

Press to:

- Make a call, end a call, or answer an incoming call.
- Give OnStar Hands-Free Calling voice commands.
- Give OnStar Turn-by-Turn Navigation voice commands.

- Obtain and customize the Wi-Fi® hotspot name or SSID and password, if equipped.

Press On to connect to an Advisor to:

- Verify account information or update contact information.
- Get driving directions.
- Receive a Diagnostic check of the vehicle's key operating systems.
- Receive Roadside Assistance.
- Manage Wi-Fi Settings, if equipped.

Press SOS to get a priority connection to an OnStar Advisor available 24/7 to:

- Get help for an emergency.
- Be a Good Samaritan or respond to an AMBER Alert.
- Get assistance in severe weather or other crisis situations and find evacuation routes.

OnStar Services

Emergency

Emergency Services require an active, OnStar service plan (excludes Basic Plan). With Automatic Crash Response, built-in sensors can automatically alert a specially trained OnStar Advisor who is immediately connected in to the vehicle to help.

Press SOS for a priority connection to an OnStar Advisor who can contact emergency service providers, direct them to your exact location, and relay important information.

With OnStar Crisis Assist, specially trained Advisors are available 24 hours a day, 7 days a week, to provide a central point of contact, assistance, and information during a crisis.

With Roadside Assistance, Advisors can locate a nearby service provider to help with a flat tire, a battery jump, or an empty gas tank.

Security

If equipped, OnStar provides these services:

- With Stolen Vehicle Assistance, OnStar Advisors can use GPS to pinpoint the vehicle and help authorities quickly recover it.
- With Remote Ignition Block™, if equipped, OnStar can block the engine from being restarted.
- With Stolen Vehicle Slowdown®, if equipped, OnStar can work with law enforcement to gradually slow the vehicle down.

Theft Alarm Notification

If equipped, if the doors are locked and the vehicle alarm sounds, a notification by text, e-mail, or phone call will be sent. If the vehicle is stolen, an OnStar Advisor can work with authorities to recover the vehicle.

Navigation

OnStar navigation requires a specific OnStar service plan.

Press to receive Turn-by-Turn directions or have them sent to the vehicle's navigation screen, if equipped.

Turn-by-Turn Navigation

1. Press to connect to an Advisor.
2. Request directions to be downloaded to the vehicle.
3. Follow the voice-guided commands.

Using Voice Commands During a Planned Route

Cancel Route

1. Press . System responds: "OnStar ready," then a tone.
2. Say "Cancel route." System responds: "Do you want to cancel directions?"
3. Say "Yes." System responds: "OK, request completed, thank you, goodbye."

Route Preview

1. Press . System responds: "OnStar ready," then a tone.
2. Say "Route preview." System responds with the next three maneuvers.

Repeat

1. Press . System responds: "OnStar ready," then a tone.
2. Say "Repeat." System responds with the last direction given, then responds with "OnStar ready," then a tone.

Get My Destination

1. Press . System responds: "OnStar ready," then a tone.
2. Say "Get my destination." System responds with the address and distance to the destination, then responds with "OnStar ready," then a tone.

Send Destination to Vehicle

Subscribers can have directions sent to the vehicle's navigation screen, if equipped.

Press , then ask the Advisor to download directions to the vehicle's navigation system, if equipped. After the call ends, the navigation screen will provide prompts to begin driving directions. Routes that are sent to the navigation screen can only be canceled through the navigation system.

See www.onstar.com (U.S.) or www.onstar.ca (Canada).

Connections

The following OnStar services help with staying connected.

For coverage maps, see www.onstar.com (U.S.) or www.onstar.ca (Canada).

Ensuring Security

- Change the default passwords for the Wi-Fi hotspot and RemoteLink mobile application. Make these passwords different

from each other and use a combination of letters, numbers, and symbols to increase the security.

- Change the default name of the SSID (Service Set Identifier). This is your network's name that is visible to other wireless devices. Choose a unique name and avoid family names or vehicle descriptions.

OnStar Wi-Fi® Hotspot (If Equipped)

The vehicle may have a built-in Wi-Fi hotspot that provides access to the Internet and web content at 4G LTE speed. Up to seven mobile devices can be connected. A data plan is required. Use the in-vehicle controls only when it is safe to do so.

1. To retrieve Wi-Fi hotspot information, press , wait for the prompt, then say "Wi-Fi settings." On some vehicles, touch Wi-Fi Settings on the screen.
2. The Wi-Fi settings will display the Wi-Fi hotspot name (SSID), password, and on some vehicles, the connection type (no Internet connection, 3G, 4G, 4G LTE), and signal quality (poor, good, excellent).
3. To change the SSID or password, press or call 1-888-4ONSTAR to connect with an Advisor.

After initial set-up, your vehicle's Wi-Fi hotspot will connect automatically to your mobile devices. Manage data usage by turning Wi-Fi on or off on your mobile device, using the RemoteLink mobile app, or by contacting an OnStar Advisor.

OnStar RemoteLink® Mobile App (If Equipped)

Download the OnStar RemoteLink mobile app to select Apple® iOS, Android™, BlackBerry®, or Windows® mobile devices. OnStar Subscribers can access the following services from a mobile device:

- Remotely start/stop the vehicle, if factory-equipped.
- Lock/unlock doors, if equipped with automatic locks.
- Activate the horn and lamps.
- Check the vehicle's fuel level, oil life, or tire pressure, if factory-equipped with the Tire Pressure Monitor System.
- Send directions to the vehicle.
- Locate the vehicle on a map (U.S. market only).
- Turn the vehicle's Wi-Fi hotspot on/off, manage settings, and monitor data consumption, if equipped.

For OnStar RemoteLink information and compatibility, see www.onstar.com (U.S.) or www.onstar.ca (Canada).

Remote Services

Contact an OnStar Advisor to unlock the doors or sound the horn and flash the lamps.

OnStar AtYourService

OnStar Advisors can provide offers from restaurants and retailers on your route, help locate hotels, or book a room. These services vary by market.

OnStar Hands-Free Calling

Make and receive calls with the built-in wireless calling service, which requires available minutes.

Make a Call

1. Press . System responds: “OnStar ready.”
2. Say “Call.” System responds: “Call. Please say the name or number to call.”
3. Say the entire number without pausing, including a “1” and the area code. System responds: “OK, calling.”

Calling 911 Emergency

1. Press . System responds: “OnStar ready.”
2. Say “Call.” System responds: “Call. Please say the name or number to call.”
3. Say “911” without pausing. System responds: “911.”
4. Say “Call.” System responds: “OK, dialing 911.”

Retrieve My Number

1. Press . System responds: “OnStar ready.”
2. Say “My number.” System responds: “Your OnStar Hands-Free Calling number is,” then says the number.

End a Call

Press . System responds: “Call ended.”

Verify Minutes and Expiration

Press and say “Minutes” then “Verify” to check how many minutes remain and their expiration date.

Diagnostics

Advanced Diagnostics provides a status of the vehicle’s key systems with a monthly e-mail, or by pressing . If equipped, Diagnostic Alerts can be received in real-time via e-mail or text. The Proactive Alerts feature (if available) can help predict and alert of potential upcoming maintenance issues with select components on the vehicle, before they become a problem.

OnStar can also monitor and report tire pressure, if the vehicle is equipped with a Tire Pressure Monitoring System.

OnStar Additional Information

In-Vehicle Audio Messages

Audio messages may play important information at the following times:

- Prior to vehicle purchase.
  Press On to set up an account.
- With the OnStar Basic Plan, every 60 days.
- After change in ownership and at 90 days.

Transferring Service

Press On to request account transfer eligibility information. The Advisor can cancel or change account information.

Selling/Transferring the Vehicle

Call 1-888-4ONSTAR (1-888-466-7827) immediately to terminate your OnStar services if the vehicle is disposed of, sold, transferred, or if the lease ends.

Reactivation for Subsequent Owners

Press On and follow the prompts to speak to an Advisor as soon as possible. The Advisor will update vehicle records and explain OnStar service options.

How OnStar Service Works

Automatic Crash Response, Emergency Services, Crisis Assist, Stolen Vehicle Assistance, Advanced Vehicle Diagnostics, Remote Services, Roadside Assistance, Turn-by-Turn Navigation, and Hands-Free Calling are available on most vehicles. Not all OnStar services are available everywhere or on all vehicles. For more information, a full description of OnStar services, system limitations, and OnStar User Terms, Privacy Statement, and Software Terms:

- Call 1-888-4ONSTAR (1-888-466-7827).
- See www.onstar.com (U.S.).
- See www.onstar.ca (Canada).
- Call TTY 1-877-248-2080.
- Press On to speak with an Advisor.

OnStar services cannot work unless the vehicle is in a place where OnStar has an agreement with a wireless service provider for service in that area. The wireless service provider must also have coverage, network capacity, reception, and technology compatible with OnStar services. Service involving location information about the vehicle cannot work unless GPS signals are available, unobstructed, and compatible with the OnStar hardware. OnStar services may not work if the OnStar equipment is not properly installed or it has not been properly maintained. If equipment or software is added, connected, or modified, OnStar services may not work. Other problems beyond the control of OnStar — such as hills, tall buildings, tunnels, weather, electrical system design and architecture of the vehicle, damage

to the vehicle in a crash, or wireless phone network congestion or jamming — may prevent service.

See *Radio Frequency Statement* ⇨ *392*.

Services for People with Disabilities

Advisors provide services to help Subscribers with physical disabilities and medical conditions.

Press On to help:

- Locate a gas station with an attendant to pump gas.
- Find a hotel, restaurant, etc., that meets accessibility needs.
- Provide directions to the closest hospital or pharmacy in urgent situations.

TTY Users

OnStar has the ability to communicate to deaf, hard-of-hearing, or speech-impaired customers while in the vehicle. The available dealer-installed TTY system can provide in-vehicle access to all OnStar services, except Virtual Advisor and OnStar Turn-by-Turn Navigation.

OnStar Personal Identification Number (PIN)

A PIN is needed to access some OnStar services. The PIN will need to be changed the first time when speaking with an Advisor. To change the OnStar PIN, contact an OnStar Advisor by pressing On or calling 1-888-4ONSTAR.

Warranty

OnStar equipment may be warranted as part of the vehicle warranty.

Languages

The vehicle can be programmed to respond in multiple languages. Press On and ask for an Advisor. Advisors are available in English, Spanish, and French. Available languages may vary by country.

Potential Issues

OnStar cannot perform Remote Door Unlock or Stolen Vehicle Assistance after the vehicle has been off continuously for 10 days without an ignition cycle. If the vehicle has not been started for five days, OnStar can contact Roadside Assistance or a locksmith to help gain access to the vehicle.

Global Positioning System (GPS)

- Obstruction of the GPS can occur in a large city with tall buildings; in parking garages; around airports; in tunnels and underpasses; or in an area with very dense trees. If GPS signals are not available, the OnStar system should still operate to call OnStar. However, OnStar could have difficulty identifying the exact location.
- In emergency situations, OnStar can use the last stored GPS location to send to emergency responders.

A temporary loss of GPS can cause loss of the ability to send a Turn-by-Turn Navigation route. The Advisor may give a verbal route or may ask for a call back after the vehicle is driven into an open area.

Cellular and GPS Antennas

Cellular reception is required for OnStar to send remote signals to the vehicle. Do not place items over or near the antenna to prevent blocking cellular and GPS signal reception.

Unable to Connect to OnStar Message

If there is limited cellular coverage or the cellular network has reached maximum capacity, this message may come on. Press to try the call again or try again after driving a few miles into another cellular area.

Vehicle and Power Issues

OnStar services require a vehicle electrical system, wireless service, and GPS satellite technologies to be available and operating for features to function properly. These systems may not operate if the battery is discharged or disconnected.

Add-on Electrical Equipment

The OnStar system is integrated into the electrical architecture of the vehicle. Do not add any electrical equipment. See *Add-On Electrical Equipment* ⇨ *279*. Added electrical equipment may interfere with the operation of the OnStar system and cause it to not operate.

Vehicle Software Updates

OnStar or GM may remotely deliver software updates or changes to the vehicle without further notice or consent. These updates or changes may enhance or maintain safety, security, or the operation of the vehicle or the vehicle systems. Software updates or changes may affect or erase data or settings that are stored in the vehicle, such as OnStar Hands-Free Calling name tags, saved navigation destinations, or pre-set radio stations. Neither OnStar nor GM is responsible for any affected or erased data or settings. These updates or changes may also collect personal information. Such collection is described in the OnStar privacy statement or separately disclosed at the time of installation. These updates or changes may also cause a system to automatically communicate with GM servers to collect information about vehicle system status, identify whether updates or changes are available, or deliver updates or changes. An active OnStar agreement constitutes consent to these software updates or changes and agreement that either OnStar or GM may remotely deliver them to the vehicle.

Privacy

The complete OnStar Privacy Statement may be found at www.onstar.com (U.S.), or www.onstar.ca (Canada). We recommend that you review it. If you have any questions, call 1-888-4ONSTAR (1-888-466-7827) or press to speak with an Advisor. Users of wireless communications are cautioned that

the privacy of any information sent via wireless cellular communications cannot be assured. Third parties may unlawfully intercept or access transmissions and private communications without consent.

OnStar - Software Acknowledgements

Certain OnStar components include libcurl and unzip software and other third party software. Below are the notices and licenses associated with libcurl and unzip and for other third party software please see http://www.lg.com/global/support/opensource/index and https://www.onstar.com/us/en/support/getdocuments.html

libcurl:

COPYRIGHT AND PERMISSION NOTICE

Copyright (c) 1996 - 2010, Daniel Stenberg, <daniel@haxx.se>.

All rights reserved.

Permission to use, copy, modify, and distribute this software for any purpose with or without fee is hereby granted, provided that the above copyright notice and this permission notice appear in all copies.

THE SOFTWARE IS PROVIDED "AS IS," WITHOUT WARRANTY OF ANY KIND, EXPRESS OR IMPLIED, INCLUDING BUT NOT LIMITED TO THE WARRANTIES OF MERCHANTABILITY, FITNESS FOR A PARTICULAR PURPOSE AND NONINFRINGEMENT OF THIRD PARTY RIGHTS. IN NO EVENT SHALL THE AUTHORS OR COPYRIGHT HOLDERS BE LIABLE FOR ANY CLAIM, DAMAGES OR OTHER LIABILITY, WHETHER IN AN ACTION OF CONTRACT, TORT OR OTHERWISE, ARISING FROM, OUT OF OR IN CONNECTION WITH THE SOFTWARE OR THE USE OR OTHER DEALINGS IN THE SOFTWARE.

Except as contained in this notice, the name of a copyright holder shall not be used in advertising or otherwise to promote the sale, use or other dealings in this Software without prior written authorization of the copyright holder.

unzip:

This is version 2005-Feb-10 of the Info-ZIP copyright and license. The definitive version of this document should be available at ftp://ftp.info-zip.org/pub/infozip/license.html indefinitely.

Copyright (c) 1990-2005 Info-ZIP. All rights reserved.

For the purposes of this copyright and license, "Info-ZIP" is defined as the following set of individuals:

Mark Adler, John Bush, Karl Davis, Harald Denker, Jean-Michel Dubois, Jean-loup Gailly, Hunter Goatley, Ed Gordon, Ian Gorman, Chris Herborth, Dirk Haase, Greg Hartwig, Robert Heath, Jonathan Hudson, Paul Kienitz, David Kirschbaum, Johnny Lee, Onno van der Linden, Igor Mandrichenko, Steve P. Miller, Sergio Monesi, Keith Owens, George Petrov, Greg Roelofs, Kai Uwe Rommel, Steve Salisbury, Dave Smith, Steven M. Schweda,

Christian Spieler, Cosmin Truta, Antoine Verheijen, Paul von Behren, Rich Wales, Mike White.

This software is provided “as is,” without warranty of any kind, express or implied. In no event shall Info-ZIP or its contributors be held liable for any direct, indirect, incidental, special or consequential damages arising out of the use of or inability to use this software.

Permission is granted to anyone to use this software for any purpose, including commercial applications, and to alter it and redistribute it freely, subject to the following restrictions:

1. Redistributions of source code must retain the above copyright notice, definition, disclaimer, and this list of conditions.
2. Redistributions in binary form (compiled executables) must reproduce the above copyright notice, definition, disclaimer, and this list of conditions in documentation and/or other materials provided with the distribution. The sole exception to this condition is redistribution of a standard UnZipSFX binary (including SFXWiz) as part of a self-extracting archive; that is permitted without inclusion of this license, as long as the normal SFX banner has not been removed from the binary or disabled.
3. Altered versions–including, but not limited to, ports to new operating systems, existing ports with new graphical interfaces, and dynamic, shared, or static library versions–must be plainly marked as such and must not be misrepresented as being the original source. Such altered versions also must not be misrepresented as being Info-ZIP releases–including, but not limited to, labeling of the altered versions with the names “Info-ZIP” (or any variation thereof, including, but not limited to, different capitalizations), “Pocket UnZip,” “WiZ” or “MacZip” without the explicit permission of Info-ZIP. Such altered versions are further prohibited from misrepresentative use of the Zip-Bugs or Info-ZIP e-mail addresses or of the Info-ZIP URL(s).
4. Info-ZIP retains the right to use the names “Info-ZIP,” “Zip,” “UnZip,” “UnZipSFX,” “WiZ,” “Pocket UnZip,” “Pocket Zip,” and “MacZip” for its own source and binary releases.

Index

A

Accessories and Modifications 281
Accessory Power 230
Adaptive Cruise Control 246
Add-On Electrical Equipment . . . 279
Additional Information
  OnStar® 401
Additional Maintenance and Care 372
Adjustments
  Lumbar, Front Seats 58
Agreements
  Trademarks and License 200
Air Cleaner/Filter, Engine 290
Air Filter, Passenger Compartment 208
Air Vents 207
Airbag System
  Check 86
  How Does an Airbag Restrain? 79
  Passenger Sensing System 81
  What Makes an Airbag Inflate? 79
  What Will You See after an Airbag Inflates? 80
Airbag System (cont'd)
  When Should an Airbag Inflate? 78
  Where Are the Airbags? 77
Airbags
  Adding Equipment to the Vehicle 86
  Passenger Status Indicator . . . 131
  Readiness Light 131
  Servicing Airbag-Equipped Vehicles 85
  System Check 75
Alarm
  Vehicle Security 45
Alert
  Lane Change 264
  Side Blind Zone (SBZA) 264
All-Season Tires 315
All-Wheel Drive 237, 300
AM-FM Radio 182
Antenna
  Multi-band 185
Antilock Brake System (ABS) . . . 237
  Warning Light 135
Appearance Care
  Exterior 355
  Interior 360

Apple CarPlay and
Android Auto 197
Armrest Storage 107
Assistance Program,
Roadside 386
Assistance Systems for
Driving 258
Assistance Systems for
Parking and Backing 255
Audio
Theft-Deterrent Feature 179
Automatic
Dimming Mirrors 48
Door Locks 39
Forward Braking 261
Headlamp System 172
Transmission 233
Transmission Fluid 290
Automatic Transmission
Manual Mode 235
Shift Lock Control Function
Check 301
Automatic Vehicle
Hold (AVH) 240
Auxiliary
Devices 191

B

Battery
Exterior Lighting Battery
Saver 177
Load Management 176
Power Protection 176
Voltage and Charging
Messages 147
Battery - North America 300, 349
Blade Replacement, Wiper 302
Bluetooth
Overview 192, 193
Brake
Parking, Electric 238
System Warning Light 134
Brakes 298
Antilock 237
Assist 240
Fluid 299
System Messages 148
Braking 211
Automatic Forward 261
Braking System
Front Pedestrian (FPB) 262
Break-In, New Vehicle 225
Bulb Replacement
Halogen Bulbs 303
Headlamp Aiming 303
Bulb Replacement (cont'd)
Headlamps 303
License Plate Lamps 304
Buying New Tires 329

C

Calibration 118
California
Fuel Requirements 269
Perchlorate Materials
Requirements 281
California
Proposition
65 Warning 281, 300, 349
Canadian Vehicle Owners 2
Capacities and
Specifications 380
Carbon Monoxide
Engine Exhaust 232
Liftgate 41
Winter Driving 219
Cargo
Cover 108
Management System 109
Tie-Downs 109
Caution, Danger, and Warning 2
Center Console Storage 108
Chains, Tire 333
Charging System Light 132

Check
Malfunction Indicator
Engine Light 132
Child Restraints
Infants and Young Children 89
Lower Anchors and Tethers
for Children 94
Older Children 87
Securing 101, 103
Systems 91
Circuit Breakers 305
Cleaning
Exterior Care 355
Interior Care 360
Climate Control Systems
Dual Automatic 202
Rear 205
Clock 119
Cluster, Instrument 123
Collision Damage Repair 389
Compact Spare Tire 348
Compartments
Storage 107
Compass 118
Messages 149
Compressor Kit, Tire Sealant ...335
Connections
OnStar® 398
Control 242
Traction and Electronic
Stability 241
Control Light
Hill Descent 136
Control of a Vehicle 211
Convex Mirrors 48
Coolant
Engine 293
Engine Temperature Gauge .. 129
Cooling System 292
Engine Messages 150
Courtesy Lamps 174
Courtesy Transportation
Program 388
Cover
Cargo 108
Cruise Control 244
Light 140
Messages 149
Cruise Control, Adaptive 246
Customer Assistance 385
Offices 384
Text Telephone (TTY)
Users 385
Customer Information
Service Publications
Ordering Information 391
Customer Satisfaction
Procedure 382

D

Damage Repair, Collision 389
Danger, Warning, and Caution 2
Data Collection
Infotainment System 395
Data Recorders, Event 394
Daytime Running
Lamps (DRL) 171
Defensive Driving 211
Delayed Locking 39
Devices
Auxiliary 191
Diagnostics
OnStar® 400
Distracted Driving 210
Dome Lamps 174
Door
Ajar Light 141
Ajar Messages 149
Delayed Locking 39
Locks 37
Power Locks 39
Drive Belt Routing, Engine 381
Drive Systems
All-Wheel Drive 237, 300
Driver Assistance Systems 254

Driver Information
Center (DIC) 141, 144
Driver Mode Control 243
Driving
Assistance Systems 258
Characteristics and
Towing Tips 272
Defensive 211
Drunk 211
For Better Fuel Economy 26
Hill and Mountain Roads 218
If the Vehicle is Stuck 220
Loss of Control 213
Off-Road 213
Off-Road Recovery 212
Vehicle Load Limits 221
Wet Roads 218
Winter 219
Dual Automatic Climate
Control System 202

E

Electric Parking Brake 238
Electric Parking Brake Light 135
Electrical Equipment,
Add-On 279
Electrical System
Engine Compartment Fuse
Block 305
Electrical System (cont'd)
Fuses and Circuit Breakers ... 305
Instrument Panel Fuse
Block 309
Overload 304
Rear Compartment Fuse
Block 311
Emergency
OnStar® 397
Engine
Air Cleaner/Filter 290
Check and Service Engine
Soon Light 132
Compartment Overview 284
Coolant 293
Coolant Temperature
Gauge 129
Cooling System 292
Cooling System Messages ... 150
Drive Belt Routing 381
Exhaust 232
Heater 228
Oil Life System 289
Oil Messages 150
Oil Pressure Light 138
Overheating 296
Power Messages 151
Running While Parked 233
Engine (cont'd)
Starting 227
Entry Lighting 175
Equipment, Towing 277
Event Data Recorders 394
Exit Lighting 176
Extended Parking 232
Extender, Safety Belt 74
Exterior Lamp Controls 169
Exterior Lamps Off Reminder ...171
Exterior Lighting Battery
Saver 177

F

Features
Memory 12
Filter,
Engine Air Cleaner 290
Flash-to-Pass 171
Flashers, Hazard Warning 173
Flat Tire 334
Changing 342
Floor Mats 363
Fluid
Automatic Transmission 290
Brakes 299
Washer 297
Fog Lamps 173
Folding Mirrors 48

Forward Automatic Braking 261
Forward Collision Alert
(FCA) System 258
Frequency Statement
Radio 392
Front Fog Lamp
Light 140
Front Pedestrian Braking
(FPB) System 262
Front Seats
Adjustment 57
Heated and Ventilated 61
Fuel 268
Additives 269
Economy Driving 26
Filling a Portable Fuel
Container 271
Filling the Tank 270
Foreign Countries 269
Gauge 128
Low Fuel Warning Light 139
Requirements, California 269
System Messages 151
Fuses
Engine Compartment Fuse
Block 305
Fuses and Circuit Breakers . . . 305
Fuses (cont'd)
Instrument Panel Fuse
Block 309
Rear Compartment Fuse
Block 311

G

Garage Door Opener 165
Programming 165
Gauges
Engine Coolant
Temperature 129
Fuel 128
Odometer 127
Speedometer 127
Tachometer 127
Trip Odometer 127
Warning Lights and
Indicators 122
General Information
Service and Maintenance 365
Towing 272
Vehicle Care 281
Glove Box 107
GM Mobility Reimbursement
Program 386

H

Halogen Bulbs 303
Hands-Free Phone 198
Hazard Warning Flashers 173
Head Restraints 55
Headlamps
Aiming 303
Automatic 172
Bulb Replacement 303
Daytime Running
Lamps (DRL) 171
Flash-to-Pass 171
High-Beam On Light 140
High/Low Beam Changer 171
Lamps On Reminder 140
Heated
Rear Seats 66
Steering Wheel 116
Heated and Ventilated Front
Seats 61
Heated Mirrors 48
Heater
Engine 228
High Voltage Devices and
Wiring 304
High-Beam On Light 140
High-Speed Operation 322
Hill and Mountain Roads 218

Hill Descent Control (HDC) 242
Hill Descent Control Light 136
Home Page 181
Hood 283
Horn 116
How to Wear Safety Belts Properly 69

I

Ignition Positions 225
Immobilizer 47
Indicator
  Pedestrian Ahead 137
  Vehicle Ahead 136
Infants and Young Children, Restraints 89
Infotainment 178
Infotainment System 395
Instrument Cluster 123
Interior Rearview Mirrors 49
Introduction 2

J

Jump Starting - North America 349

K

Key and Lock Messages 151
Keyless Entry
  Remote (RKE) System 29
Keys 28

L

Labeling, Tire Sidewall 316
Lamps
  Courtesy 174
  Daytime Running (DRL) 171
  Dome 174
  Exterior Controls 169
  Exterior Lamps Off Reminder 171
  Exterior Lighting Battery Saver 177
  License Plate 304
  Malfunction Indicator 132
  Messages 152
  On Reminder 140
  Reading 175
Lane Change Alert (LCA) 264
Lane Departure Warning (LDW) 266
Lane Keep Assist (LKA) 266
Lane Keep Assist Light 136
Lap-Shoulder Belt 70
LATCH System
  Replacing Parts after a Crash 101
LATCH, Lower Anchors and Tethers for Children 94
LED Lighting 303
Liftgate 41
Light
  Hill Decent Control 136
Lighting
  Entry 175
  Exit 176
  Illumination Control 174
  LED 303
Lights 136
  Airbag Readiness 131
  Antilock Brake System (ABS) Warning 135
  Brake System Warning 134
  Charging System 132
  Cruise Control 140
  Door Ajar 141
  Electric Parking Brake 135
  Engine Oil Pressure 138
  Flash-to-Pass 171
  Front Fog Lamp 140
  High-Beam On 140
  High/Low Beam Changer 171

Lights (cont'd)
Low Fuel Warning 139
Safety Belt Reminders 130
Security 139
Service Electric Parking Brake 135
StabiliTrak® OFF 137
Tire Pressure 138
Tow/Haul Mode 136
Traction Control System (TCS)/StabiliTrak® 137
Traction Off 137
Locks
Automatic Door 39
Delayed Locking 39
Door 37
Lockout Protection 39
Power Door 39
Safety 40
Loss of Control 213
Low Fuel Warning Light 139
Lower Anchors and Tethers for Children (LATCH System) 94
Lumbar Adjustment 58
Front Seats 58

M
Maintenance
Records 378
Maintenance and Care
Additional 372
Maintenance Schedule 366
Recommended Fluids and Lubricants 375
Malfunction Indicator Lamp 132
Manual Mode 235
Memory Features 12
Memory Seats 60
Messages
Airbag System 155
Battery Voltage and Charging 147
Brake System 148
Compass 149
Door Ajar 149
Engine Cooling System 150
Engine Oil 150
Engine Power 151
Fuel System 151
Key and Lock 151
Lamp 152
Object Detection System 152
Ride Control System 154
Security 155
Messages (cont'd)
Service Vehicle 155
Starting the Vehicle 156
Steering System 155
Tire 156
Transmission 156
Vehicle 147
Vehicle Reminder 157
Vehicle Speed 157
Washer Fluid 157
Mirrors
Automatic Dimming 48
Automatic Dimming Rearview 49
Convex 48
Folding 48
Heated 48
Manual Rearview 49
Power 48
Tilt in Reverse 49
Mirrors, Interior Rearview 49
Mode 243
Driver Control 243
Monitor System, Tire Pressure 323
Multi-band Antenna 185

N
Navigation
OnStar® 398
New Vehicle Break-In 225

O
Object Detection System
Messages 152
Odometer 127
Trip 127
Off-Road 213
Driving 213
Recovery 212
Oil
Engine 287
Engine Oil Life System 289
Messages 150
Pressure Light 138
Older Children, Restraints 87
Online Owner Center 385
OnStar® Additional
Information 401
OnStar® Connections 398
OnStar® Diagnostics 400
OnStar® Emergency 397
OnStar® Navigation 398
OnStar® Overview 396
OnStar® Security 397
Operation
Fog Lamps 173
Infotainment System 181
Ordering
Service Publications 391
Outlets
Power 121
Overheating, Engine 296
Overview 180

P
Park
Shifting Into 230
Shifting Out of 231
Parking
Brake and P (Park)
Mechanism Check 301
Extended 232
Over Things That Burn 231
Parking Assist 255
Parking or Backing
Assistance Systems 255
Passenger Airbag Status
Indicator 131
Passenger Compartment Air
Filter 208
Passenger Sensing System 81
Pedestrian Ahead Indicator 137
Perchlorate Materials
Requirements, California 281
Personalization
Vehicle 157
Phone
Apple CarPlay and
Android Auto 197
Bluetooth 192, 193
Hands-Free 198
Port
USB 186
Power
Door Locks 39
Mirrors 48
Outlets 121
Protection, Battery 176
Retained Accessory (RAP) . . . 230
Seat Adjustment 57
Windows 50
Pregnancy, Using Safety Belts . . . 73
Privacy
Vehicle Data Recording 394
Program
Courtesy Transportation 388
Proposition
65 Warning,
California 281, 300, 349

R

Radio Frequency Statement 392
Radio Reception 185
Radios
  AM-FM Radio 182
  Satellite 183
Reading Lamps 175
Rear Climate Control System ... 205
Rear Seats 63
  Heated 66
Rear Storage 108
Rear Vision Camera (RVC) 255
Rear Window Washer/Wiper 118
Rearview Mirrors 49
  Automatic Dimming 49
Reclining Seatbacks 58
Recommended Fluids and
  Lubricants 375
Records
  Maintenance 378
Recreational Vehicle Towing 352
Reimbursement Program,
  GM Mobility 386
Remote Keyless Entry (RKE)
  System 29
Remote Vehicle Start 35
Replacement Parts
  Airbags 87
Replacement Parts (cont'd)
  Maintenance 376
Replacing Airbag System 87
Replacing LATCH System
  Parts after a Crash 101
Replacing Safety Belt System
  Parts after a Crash 74
Reporting Safety Defects
  Canadian Government 393
  General Motors 393
  U.S. Government 393
Restraints
  Where to Put 93
Retained Accessory
  Power (RAP) 230
Reverse Tilt Mirrors 49
Ride Control Systems
  Messages 154
Roads
  Driving, Wet 218
Roadside Assistance
  Program 386
Roof
  Sunroof 52
Roof Rack System 112
Rotation, Tires 327
Routing, Engine Drive Belt 381
Running the Vehicle While
  Parked 233

S

Safety Belts 68
  Care 74
  Extender 74
  How to Wear Safety Belts
    Properly 69
  Lap-Shoulder Belt 70
  Reminders 130
  Replacing after a Crash 74
  Use During Pregnancy 73
Safety Defects Reporting
  Canadian Government 393
  General Motors 393
  U.S. Government 393
Safety Locks 40
Safety System Check 74
Satellite Radio 183
Scheduling Appointments 388
Sealant Kit, Tire 335
Seats
  Adjustment, Front 57
  Head Restraints 55
  Heated and Ventilated Front 61
  Heated, Rear 66
  Lumbar Adjustment, Front 58
  Memory 60

Seats (cont'd)
Power Adjustment, Front 57
Rear 63
Reclining Seatbacks 58
Third Row Seat 66
Securing Child
Restraints 101, 103
Security
Light 139
Messages 155
OnStar® 397
Vehicle 45
Vehicle Alarm 45
Service
Accessories and
Modifications 281
Doing Your Own Work 282
Engine Soon Light 132
Maintenance Records 378
Maintenance, General
Information 365
Parts Identification Label 379
Publications Ordering
Information 391
Scheduling Appointments 388
Vehicle Messages 155
Service Electric Parking
Brake Light 135
Services
Special Application 372
Servicing the Airbag 85
Shift Lock Control Function
Check, Automatic
Transmission 301
Shifting
Into Park 230
Out of Park 231
Side Blind Zone Alert (SBZA) ...264
Signals, Turn and
Lane-Change 173
Spare Tire
Compact 348
Special Application Services 372
Specifications and
Capacities 380
Speedometer 127
StabiliTrak
OFF Light 137
Start Vehicle, Remote 35
Starter Switch Check 300
Starting the Engine 227
Starting the Vehicle
Messages 156
Steering 212
Heated Wheel 116
Wheel Adjustment 115
Steering (cont'd)
Wheel Controls 116
Steering System Messages 155
Storage
Rear 108
Storage Areas
Armrest 107
Cargo Cover 108
Cargo Management
System 109
Center Console 108
Glove Box 107
Roof Rack System 112
Storage Compartments 107
Storing the Tire Sealant and
Compressor Kit 342
Stuck Vehicle 220
Summer Tires 315
Sun Visors 51
Sunroof 52
Symbols 3
System
Forward Collision
Alert (FCA) 258
Infotainment 178, 395
Roof Rack 112
Systems
Driver Assistance 254

T

Tachometer 127
Text Telephone (TTY) Users 385
Theft-Deterrent Systems 47
  Immobilizer 47
Third-Row Seats 66
Time 119
Tires 314
  All-Season 315
  Buying New Tires 329
  Chains 333
  Changing 342
  Compact Spare 348
  Designations 318
  Different Size 330
  If a Tire Goes Flat 334
  Inspection 327
  Messages 156
  Pressure 322
  Pressure Light 138
  Pressure Monitor Operation . . 324
  Pressure Monitor System 323
  Rotation 327
  Sealant and
    Compressor Kit 335
  Sealant and Compressor
    Kit, Storing 342
  Sidewall Labeling 316
Tires (cont'd)
  Terminology and Definitions . . 318
  Uniform Tire Quality
    Grading 331
  Wheel Alignment and Tire
    Balance 332
  Wheel Replacement 332
  When It Is Time for New
    Tires 328
  Winter 315
Tow/Haul Mode 236
Tow/Haul Mode Light 136
Towing
  Driving Characteristics 272
  Equipment 277
  General Information 272
  Recreational Vehicle 352
  Trailer 275
  Vehicle 352
Traction
  Control System (TCS)/
    StabiliTrak® Light 137
  Off Light 137
Traction Control/Electronic
  Stability Control 241
Trademarks and License
  Agreements 200
Trailer
  Towing 275
Transmission
  Automatic 233
  Fluid, Automatic 290
  Messages 156
Transportation Program,
  Courtesy 388
Trip Odometer 127
Turn and Lane-Change
  Signals 173

U

Uniform Tire Quality Grading . . . 331
Universal Remote System 165
  Operation 168
  Programming 165
USB Port 186
Using This Manual 2

V

Vehicle
  Alarm System 45
  Canadian Owners 2
  Control 211
  Identification Number (VIN) . . . 379
  Load Limits 221
  Messages 147
  Personalization 157

Vehicle (cont'd)
Reminder Messages 157
Remote Start 35
Security 45
Speed Messages 157
Towing 352
Vehicle Ahead Indicator 136
Vehicle Care
Storing the Tire Sealant and Compressor Kit 342
Tire Pressure 321
Vehicle Data Recording and Privacy 394
Vehicle Hold
Automatic 240
Vehicle Hold (AVH)
Automatic 240
Ventilation, Air 207
Visors 51
Voltage Devices and Wiring 304

W

Warning
Brake System Light 134
Caution and Danger 2
Lane Departure (LDW) 266
Warning Lights, Gauges, and Indicators 122
Warnings
Hazard Flashers 173
Washer Fluid 297
Messages 157
Wheels
Alignment and Tire Balance .. 332
Different Size 330
Replacement 332
When It Is Time for New Tires 328
Where to Put the Restraint 93
Wi-Fi 398
Windows 49
Power 50
Windshield
Replacement 303
Wiper/Washer 117
Winter
Driving 219
Winter Tires 315
Wiper Blade Replacement 302
Wipers
Rear Washer 118
Wiring, High Voltage Devices ...304