Workshop Manual

Audi A4 2008 ➤ ,
Audi A5 Cabriolet 2009 ➤ ,
Audi A5 Coupé 2008 ➤ , Audi A6 2011 ➤ ,
Audi A6 China 2012 ➤ ,
Audi A7 Sportback 2011 ➤

Servicing multitronic 0AW

Edition 06.2018

Protected by copyright. Copying for private or commercial purposes, in part or in whole, is not permitted unless authorised by AUDI AG. AUDI AG does not guarantee or accept any liability with respect to the correctness of information in this document. Copyright by AUDI AG.

List of Workshop Manual Repair Groups

Repair Group

00 - Technical data

37 - Controls, housing

38 - Gears, control

39 - Final drive - differential

Protected by copyright. Copying for private or commercial purposes, in part or in whole, is not permitted unless authorised by AUDI AG. AUDI AG does not guarantee or accept any liability with respect to the correctness of information in this document. Copyright by AUDI AG.

Technical information should always be available to the foremen and mechanics, because their careful and constant adherence to the instructions is essential to ensure vehicle road-worthiness and safety. In addition, the normal basic safety precautions for working on motor vehicles must, as a matter of course, be observed.

All rights reserved.
No reproduction without prior agreement from publisher.

Copyright © 2018 Audi AG, Ingolstadt

D3E8033D012

Contents

00 - Technical data . . . 1
- **1 Repair instructions** . . . 1
- 1.1 General repair instructions . . . 1
- 1.2 Contact corrosion . . . 2
- 1.3 Rules for cleanliness . . . 3
- 1.4 Common faults . . . 3

37 - Controls, housing . . . 4
- **1 ATF** . . . 4
- 1.1 Purging ATF . . . 4
- **2 Transporting gearbox** . . . 14
- **3 Securing to engine and gearbox support** . . . 15

38 - Gears, control . . . 17
- **1 Dismantling and assembling gearbox** . . . 17
- 1.1 Exploded view - dual-mass flywheel . . . 17
- 1.2 Exploded view - end cover . . . 18
- 1.3 Exploded view - input shaft . . . 20
- 1.4 Exploded view - intermediate housing . . . 21
- 1.5 Exploded view - pulley set I and II . . . 22
- 1.6 Exploded view - suction-jet pump, bearing flange . . . 23
- 1.7 Exploded view - ATF filter, valve unit . . . 25
- 1.8 Removing and installing dual-mass flywheel . . . 26
- 1.9 Removing and installing end cover . . . 28
- 1.10 Cleaning selector shaft . . . 29
- 1.11 Modifying thrust piece T40099 for use with multitronic gearbox 0AW, front-wheel drive . . . 30
- 1.12 Removing and installing input shaft . . . 31
- 1.13 Removing and installing input shaft cover . . . 37
- 1.14 Renewing ball bearing for input shaft . . . 42
- 1.15 Removing and installing pulley set I and II . . . 45
- 1.16 Removing and installing bearings . . . 58
- 1.17 Removing and installing suction-jet pump . . . 72
- 1.18 Wear assessment . . . 73
- **2 Clutch** . . . 78
- 2.1 Exploded view - reverse gear clutch . . . 78
- 2.2 Exploded view - input shaft with friction plates . . . 79
- 2.3 Removing and installing reverse gear clutch and determining shim thicknesses . . . 79
- 2.4 Dismantling and assembling input shaft . . . 86
- 2.5 Adjusting input shaft and checking clearance . . . 93
- 2.6 Assessing wear on input shaft . . . 99

39 - Final drive - differential . . . 102
- **1 Final drive** . . . 102
- 1.1 Exploded view - final drive . . . 102
- **2 Oil seals** . . . 105
- 2.1 Renewing oil seal (left-side) . . . 105
- 2.2 Renewing oil seal (right-side) . . . 108
- 2.3 Renewing oil seal for input shaft . . . 109
- 2.4 Renewing selector shaft oil seal . . . 110
- **3 Differential** . . . 114
- 3.1 Removing and installing flange shaft (left-side) . . . 114
- 3.2 Removing and installing flange shaft (right-side) . . . 117

Protected by copyright. Copying for private or commercial purposes, in part or in whole, is not permitted unless authorised by AUDI AG. AUDI AG does not guarantee or accept any liability with respect to the correctness of information in this document. Copyright by AUDI AG.

3.3 Preload of ball bearing for flange shaft (left-side) 118
3.4 Renewing mounting bracket and ball bearing for flange shaft (left-side) 124
4 Gearbox control system 127
4.1 Removing and installing gearbox control unit 127
4.2 Removing and installing hydraulic control unit 129

Protected by copyright. Copying for private or commercial purposes, in part or in whole, is not permitted unless authorised by AUDI AG. AUDI AG does not guarantee or accept any liability with respect to the correctness of information in this document. Copyright by AUDI AG.

00 – Technical data

1 Repair instructions

(ARL005868; Edition 06.2018)

⇒ "1.1 General repair instructions", page 1

⇒ "1.2 Contact corrosion", page 2

⇒ "1.3 Rules for cleanliness", page 3

⇒ "1.4 Common faults", page 3

1.1 General repair instructions

Proper tools and the maximum possible care and cleanliness are essential for satisfactory repairs to the transmission units. The usual basic safety precautions also naturally apply when carrying out repair work.

A number of generally applicable instructions for the various repair procedures - which were previously repeated at numerous places in the Workshop Manual - are summarised here. They apply to the work described in this Manual.

Gearbox

- Observe rules for cleanliness when working on gearbox ⇒ page 3 .
- Clean ATF lines and ATF cooler after performing repairs on the gearbox ⇒ multitronic 0AW, front-wheel drive; Rep. gr. 37 ; ATF circuit; Exploded view - ATF circuit .
- Components to be re-used must be cleaned, checked and if necessary renewed prior to installation ⇒ "2.6 Assessing wear on input shaft", page 99 .

After fitting the gearbox, check the following fluid levels and top up if necessary:

- ATF level ⇒ multitronic 0AW, front-wheel drive; Rep. gr. 37 ; ATF; Checking ATF level .
- Gear oil in front final drive ⇒ multitronic 0AW, front-wheel drive; Rep. gr. 39 ; Gear oil; Checking gear oil level .
- Capacities ⇒ multitronic 0AW, front-wheel drive; Rep. gr. 00 ; Technical data; Capacities .
- Specifications ⇒ Electronic parts catalogue .

O-rings, seals, oil seals and gaskets

- Always renew O-rings, seals, oil seals and gaskets.
- After removing gaskets and seals, always inspect the contact surface on the housing or shaft for burrs resulting from removal or for other signs of damage.
- The open side of the oil seals faces toward the side with fluid filling.
- Lightly lubricate the outer circumference and sealing lip of seals with ATF before installing.
- Lightly lubricate O-rings with ATF or vaseline before installation to prevent them getting crushed during assembly.
- Use only ATF or vaseline on all parts running in ATF. Other lubricants will cause malfunction of the gearbox hydraulics.

Protected by copyright. Copying for private or commercial purposes, in part or in whole, is not permitted unless authorised by AUDI AG. AUDI AG does not guarantee or accept any liability with respect to the correctness of information in this document. Copyright by AUDI AG.

- When installing a new oil seal, position the seal in the housing so that the sealing lip does not contact the shaft in the same place as the old seal (make use of installation depth tolerances).
- Renew paper gaskets, clean all sealing surfaces thoroughly and remove previous gaskets completely.

Nuts, bolts

- Loosen bolts in reverse sequence to specified tightening sequence.
- Bolts and nuts which secure covers and housings should be loosened and tightened in diagonal sequence and in stages if no tightening sequence is specified.
- The tightening torques stated apply to non-oiled nuts and bolts.
- Always renew self-locking bolts and nuts.

Locking elements

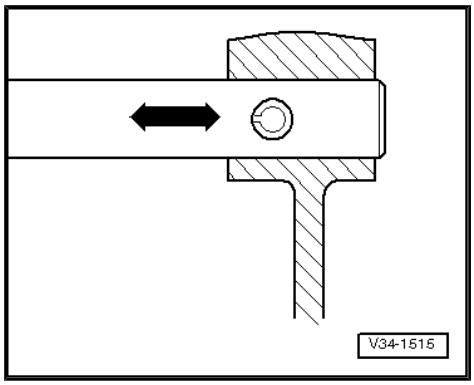

- Do not over-stretch circlips.
- Always renew circlips which have been damaged or over-stretched.
- Circlips must be properly seated in the base of the groove.
- Renew spring pins. Installation position: slot must be in line with direction of force.

Bearings

- Lightly lubricate bearings with ATF before inserting.
- Fit bearings and shims loosely with vaseline only. Other types of lubricant will cause the gearbox hydraulics to malfunction.

Shims

- Use a micrometer to measure the shims at several points. Different shim thicknesses make it possible to obtain the exact shim thickness required; if necessary, fit 2 shims.
- Check for burrs and damage. Install only shims which are in perfect condition.

Copyright by AUDI AG. Copying for private or commercial purposes, in part or in whole, is not permitted unless authorised by AUDI AG. AUDI AG does not guarantee or accept any liability with respect to the correctness of information in this document. Copyright by AUDI AG.

1.2 Contact corrosion

General information:

- Contact corrosion can occur if unsuitable fasteners are used (e.g. bolts, nuts, washers, etc.).
- For this reason, only fasteners with a special surface coating are fitted.
- Rubber or plastic parts and adhesives also consist of non-conductive materials.
- If you are not sure whether used parts can be re-installed, always fit new parts ⇒ Electronic parts catalogue .

Please note:

- Use only genuine spare parts: these have been fully tested and are compatible with magnesium.
- We recommend the use of accessories approved by Audi.
- Damage caused by contact corrosion is not covered by warranty.

1.3 Rules for cleanliness

- Thoroughly clean all joints and connections and the surrounding areas before disconnecting.
- Use cleaning fluid - D 009 401 04- to clean the gearbox and its components.
- Use lint-free cloths for cleaning, such as the “WYPALL X70 / WORKHORSE” cloth from Kimberly-Clark Professional.
- Seal off open lines and connections immediately with clean plugs or sealing caps from engine bung set - VAS 6122- immediately.
- After removal, place parts on a clean surface and cover them. Use sheeting or lint-free cloths.
- Carefully cover or seal open components if repairs cannot be carried out immediately.
- Only install clean components; replacement parts should only be unpacked immediately prior to installation.
- Protect unplugged electrical connectors against dirt and moisture and make sure connections are dry when attaching.

Protected by copyright. Copying for private or commercial purposes, in part or in whole, is not permitted unless authorised by AUDI AG. AUDI AG does not guarantee or accept any liability with respect to the correctness of information in this document. Copyright by AUDI AG.

1.4 Common faults

Note

- *Before commencing fault-finding, interrogate event memory of automatic gearbox control unit -J217- using vehicle diagnostic tester .*
- *In addition, interrogate event memory of engine control unit, because faults detected by the engine control unit can also cause malfunctions of the gearbox .*
- *Use the “Guided Fault Finding” mode with vehicle diagnostic tester .*
- *Also use all the indicated “Technical product information” (TPI) in the ⇒ Technical Service Handbook (HST)*
- *When assessing complaints and abnormal wear, refer to the training documentation ⇒ EX 335 “multitronic”, Part 2 .*
- *Before commencing fault-finding, check ATF level ⇒ multitronic 0AW, front-wheel drive; Rep. gr. 37 ; ATF; Checking ATF level .*

37 – Controls, housing

1 ATF

⇒ “1.1 Purging ATF”, page 4

1.1 Purging ATF

⇒ “1.1.1 ATF purging procedure”, page 4

⇒ “1.1.2 Draining ATF (for ATF purging procedure)”, page 5

⇒ “1.1.3 Filling up with ATF (for ATF purging procedure)”, page 8

⇒ “1.1.4 Road test (for ATF purging procedure)”, page 11

1.1.1 ATF purging procedure

Protected by copyright. Copying for private or commercial purposes, in part or in whole, is not permitted unless authorised by AUDI AG. AUDI AG does not guarantee or accept any liability with respect to the correctness of information in this document. Copyright by AUDI AG.

Special tools and workshop equipment required

- Vehicle diagnostic tester

Procedure

A normal ATF change involves replacing only approx. 55 ... 60 % of the total ATF in the gearbox.

The “ATF purging procedure” has to be employed if all the old ATF in the gearbox is to be removed.

ATF purging is always necessary when performing the following work:

- Renewing the input shaft
- Servicing the input shaft

This involves performing the road test twice, as described below, and then changing the ATF.

This is the only way to ensure complete renewal of the ATF in the gearbox.

The work required for the ATF purging procedure is described below in seven steps.

> ⚠ **Caution**
>
> *Risk of damage to gearbox*
>
> - *It is important to exactly follow all the described steps.*

– Fill up with ATF after installing gearbox
⇒ “1.1.3 Filling up with ATF (for ATF purging procedure)”, page 8 .

Purging ATF

1. ⇒ “1.1.4 Road test (for ATF purging procedure)”, page 11
2. ⇒ “1.1.2 Draining ATF (for ATF purging procedure)”, page 5
3. ⇒ “1.1.3 Filling up with ATF (for ATF purging procedure)”, page 8
4. ⇒ “1.1.4 Road test (for ATF purging procedure)”, page 11

5. ⇒ “1.1.2 Draining ATF (for ATF purging procedure)”, page 5
6. ⇒ “1.1.3 Filling up with ATF (for ATF purging procedure)”, page 8
7. Check and correct ATF level ⇒ multitronic 0AW, front-wheel drive; Rep. gr. 37 ; ATF; Checking ATF level .

Note

Observe all notes and test requirements for “Checking and correcting ATF level”.

Checking the ATF level completes the purging procedure.

1.1.2 Draining ATF (for ATF purging procedure)

Special tools and workshop equipment required

- Hook - 3438-

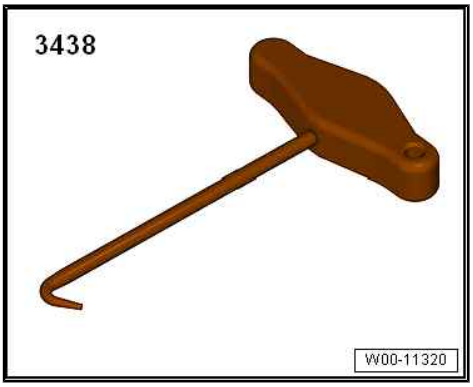

- Used oil collection and extraction unit - V.A.G 1782-

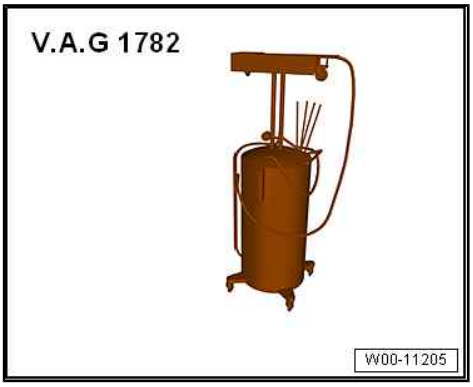

- Safety goggles

Protected by copyright. Copying for private or commercial purposes, in part or in whole, is not permitted unless authorised by AUDI AG. AUDI AG does not guarantee or accept any liability with respect to the correctness of information in this document. Copyright by AUDI AG.

Procedure

Caution

Risk of damage to gearbox

- *The engine must not be started when the ATF has been partly or completely drained from the gearbox.*

- Engine not running.
- Vehicle must be absolutely horizontal (drive it onto a four-pillar lifting platform or over an inspection pit).
- Selector lever in “P”.
- Electromechanical parking brake applied.
- Different versions have ATF inspection plugs -A- of different lengths. The ATF inspection plug must be renewed after checking the ATF level. Always select correct version according to gearbox code letters in ⇒ Electronic parts catalogue . To prevent damage to the gearbox, please check the new ATF inspection plug by comparing it with the old one.

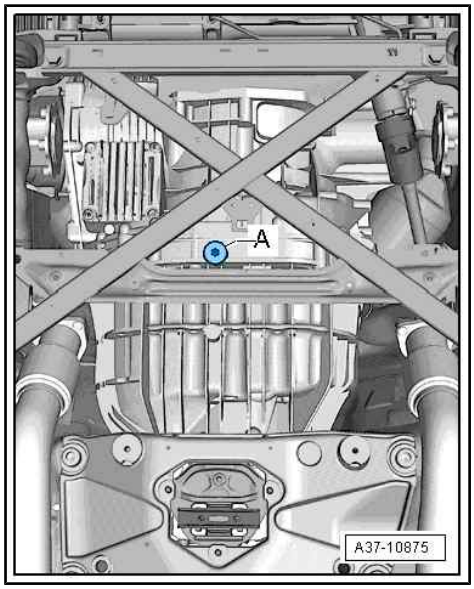

– Remove rear noise insulation ⇒ General body repairs, exterior; Rep. gr. 66 ; Noise insulation; Removing and installing noise insulation .
– Place used oil collection and extraction unit - V.A.G 1782- below gearbox.

WARNING

Risk of eye injury.

- *Put on safety goggles.*

Protected by copyright. Copying for private or c is not permitted unless authorised by AUDI AG. AUDI ility with respect to the correctness of information

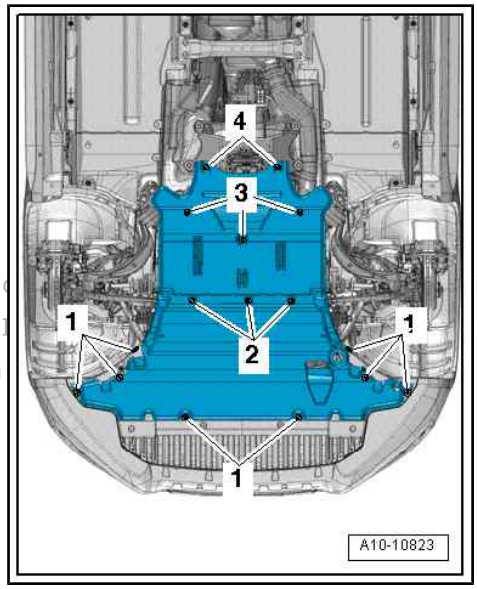

– Unscrew ATF inspection plug -A-.
– Drain ATF.

Note

- *Please observe requirements for disposal.*
- *Different versions have different ATF inspection plugs and different fluid level pipes. Always select correct version according to gearbox code letters in ⇒ Electronic parts catalogue .*

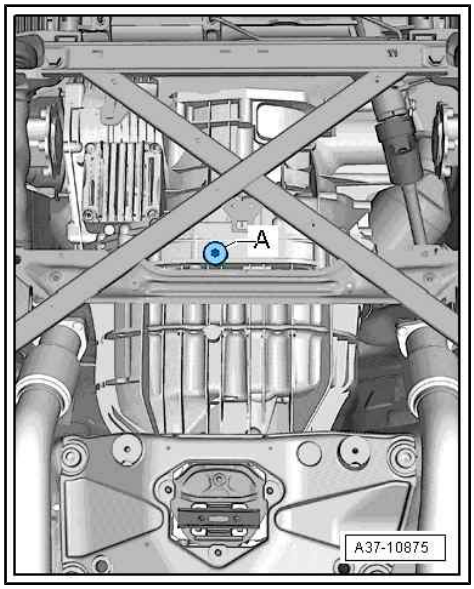

Gearbox with long, curved fluid level pipe:

– Pull fluid level pipe -A- out of ATF inspection hole using hook - 3438- and allow remaining ATF to drain off.

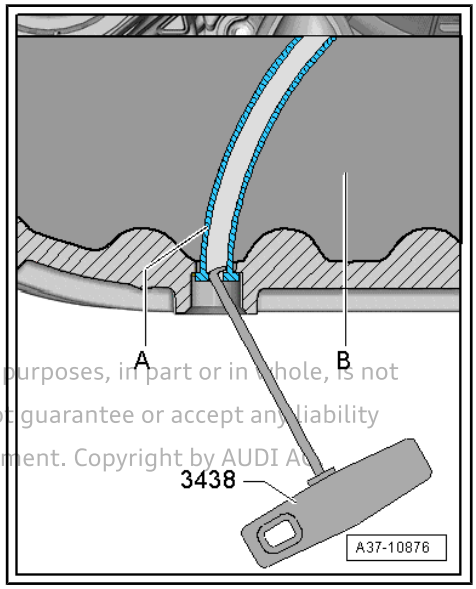

Protected by copyright. Copying for private or commercial purposes, in part or in whole, is not permitted unless authorised by AUDI AG. AUDI AG does not guarantee or accept any liability with respect to the correctness of information in this document. Copyright by AUDI AG.

– Press fluid level pipe -A- into ATF inspection hole -B- by hand.

• Installation position: large lug -1- on fluid level pipe should face recess -2- in ATF inspection hole.

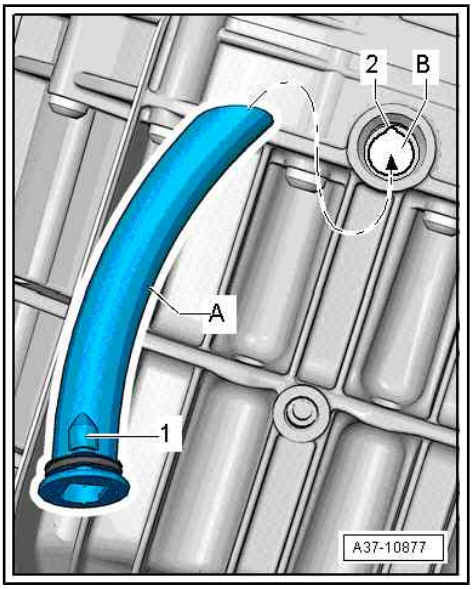

Note

The fluid level pipe -A- must be renewed after the second filling.

Gearbox with short, straight fluid level pipe:

– Pull fluid level pipe -A- out of ATF inspection hole using hook - 3438- and allow remaining ATF to drain off.

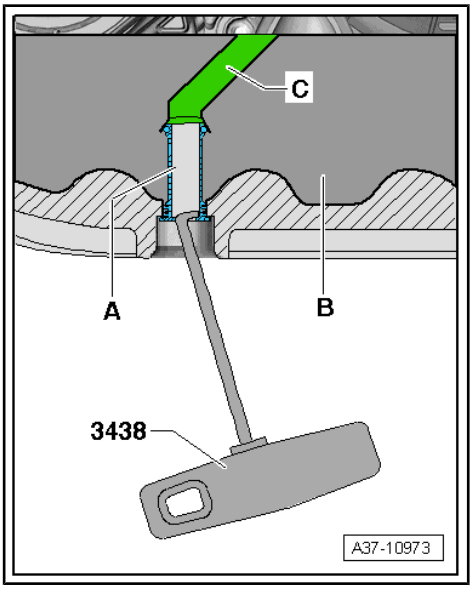

- O-ring -1- must be correctly fitted in groove on fluid level pipe.

– Carefully press fluid level pipe -A- into ATF inspection hole -B- by hand, taking care to keep pipe straight.

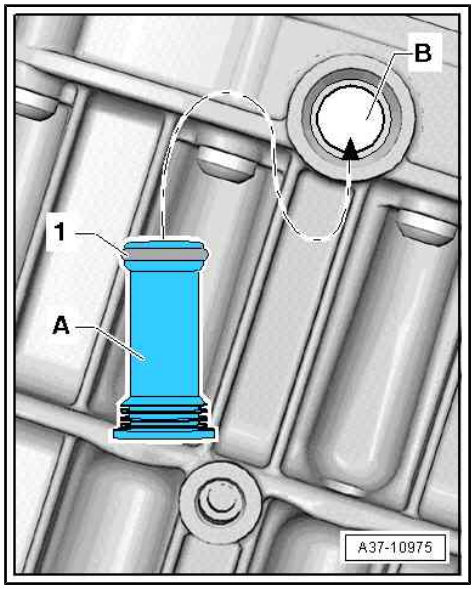

Note

- *O-ring on fluid level pipe -A- provides seal between this pipe and fluid level pipe -C-. Only then can the ATF level be topped up correctly.*
- *The fluid level pipe -A- must be renewed after the second filling.*
- *-3438- can be disregarded.*

– Continue ATF purging procedure ⇒ page 4 .

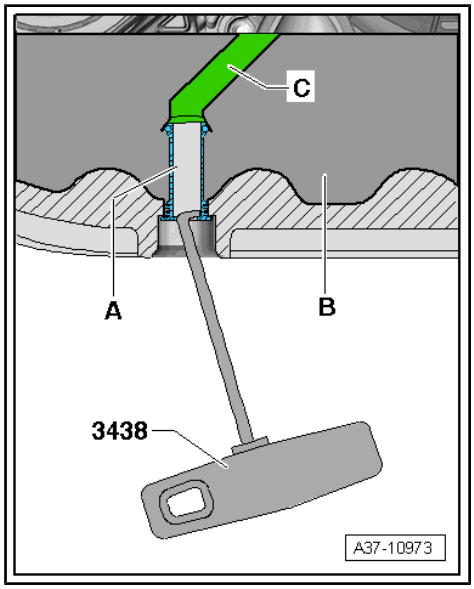

1.1.3 Filling up with ATF (for ATF purging procedure)

Special tools and workshop equipment required

- Used oil collection and extraction unit - V.A.G 1782-

Protected by copyright. Copying for private or commercial purposes, in part or in whole, is permitted unless authorised by AUDI AG. AUDI AG does not guarantee or accept any liabili with respect to the correctness of information in this document. Copyright by AUDI AG.

- ATF charging device for CVT gearboxes - VAS 5162-

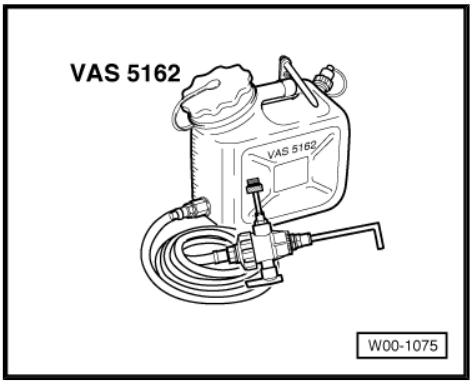

Preparations:

- ATF drained

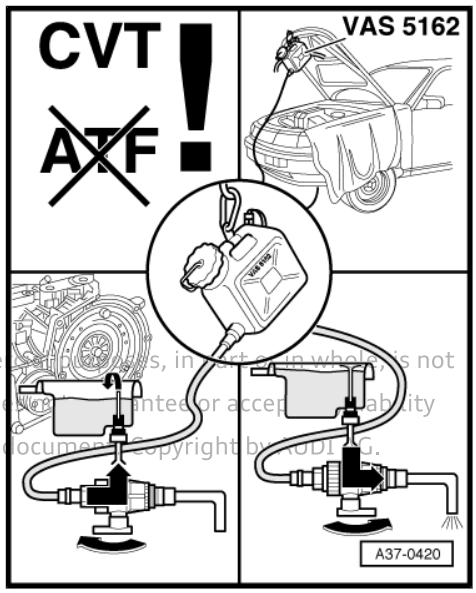

Caution

Risk of damage to gearbox

- *Only the ATF available as a replacement part for the "multitronic 0AW" gearbox may be used.*
- *Other, non-approved types of ATF or other oils cause malfunctions and/or failure of the gearbox.*
- *For the correct type, refer to ⇒ Electronic parts catalogue .*
- *The ATF charging device must be clean and the ATF must not be mixed with other types of ATF!*

Protected by copyright. Copying for private or commercial purposes, in part or in whole, is not permitted unless authorised by AUDI AG. AUDI AG does not guarantee or accept any liability whatsoever with respect to the correctness of information in this document. Copyright by AUDI AG.

Note

- *The illustration on the reservoir of the ATF charging device for CVT gearboxes - VAS 5162- displays a warning in the top left corner to use ONLY the ATF specially formulated for CVT gearboxes.*
- *The illustration also shows the steps to follow when filling up; these are also described below.*

Procedure

– Fill ATF charging device for CVT gearboxes - VAS 5162- with ATF for "multitronic 0AW" gearbox.

– Secure filled reservoir for ATF charging device as high as possible on vehicle.

- The stopcock on ATF charging device for CVT gearboxes - VAS 5162- must be closed.

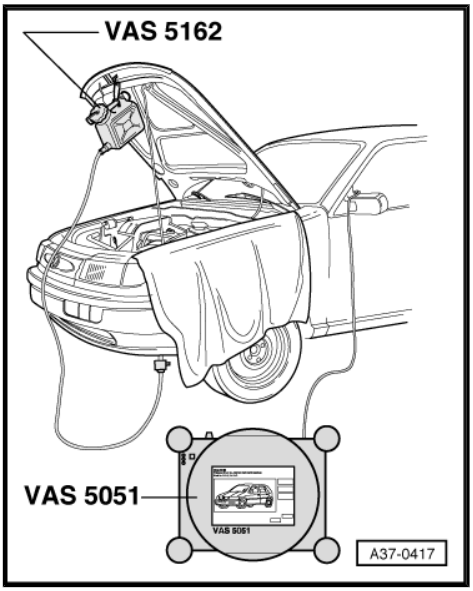

Caution

Risk of damage to gearbox

- *The engine must not be started when the ATF has been partly or completely drained from the gearbox.*
- *In this case you need to fill the gearbox first with between 5.5 and 6 litres of ATF.*

– Remove O-ring -1- at connection -2- on ATF charging device for CVT gearboxes - VAS 5162- .

Caution

There is a risk of filling the gearbox incorrectly.

- *The connection -2- must be screwed hand-tight all the way into the inspection hole on the gearbox with the O-ring removed.*
- *The O-ring must be removed at the connection -2- so that the fluid level pipe in the inspection hole can be pressed into the upper position.*
- *Only then can the ATF level be checked and topped up to the maximum correctly.*

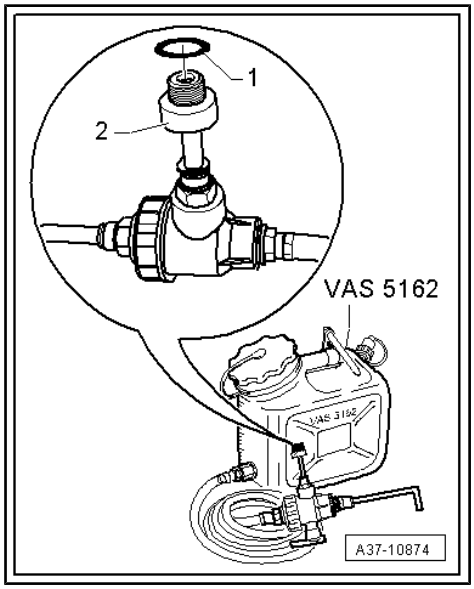

Protected by copyright. Copying for private or commercial purposes, in part or in whole, is not permitted unless authorised by AUDI AG. AUDI AG does not guarantee or accept any liability with respect to the correctness of information in this document. Copyright by AUDI AG.

– With O-ring removed, screw connection of ATF charging device for CVT gearboxes - VAS 5162- hand-tight all the way into threaded hole for ATF inspection plug.

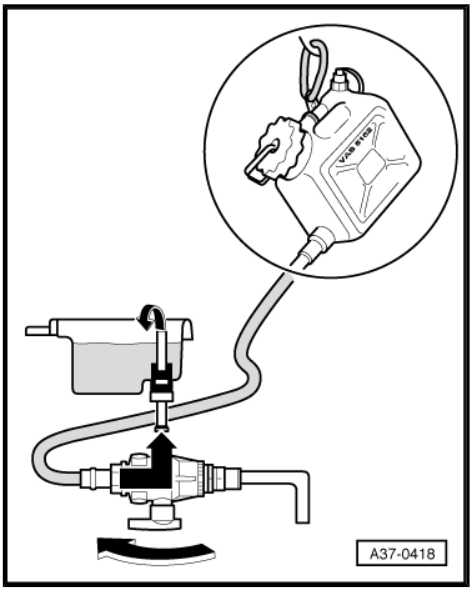

Note

This will push the fluid level pipe into the correct installation position.

– Turn stopcock in direction of filling hose -lower arrow-. ATF flows into gearbox.

– Fill gearbox with at least 5.5 … 6 ltr. of fresh ATF.

– Move selector lever to position “P”.

Caution

Rev engine up to approx. 2500 rpm immediately after starting.

- ***The engine must be revved up to vent air from the ATF pump after performing repairs on the gearbox.***
- ***If the engine is not revved up, the pump will run briefly without ATF and may be damaged.***

– Start engine.

– Press accelerator pedal to rev engine briefly up to 2500 rpm.

– Press and hold brake pedal.

– Shift through all selector lever positions “P, R, N, D, S” and leave for approx. two seconds in each position with engine running at idling speed.

– Move selector lever to position “P” and allow engine to continue running at idling speed.

– Unscrew connecting piece on stopcock of ATF charging device for CVT gearboxes - VAS 5162- from opening for ATF inspection plug.

– Allow excess ATF to drain off.

– Tighten old ATF inspection plug again.

• Tightening torque: 30 Nm

– Continue ATF purging procedure ⇒ page 4 .

– After second filling: Check ATF level and top up ⇒ multitronic 0AW, front-wheel drive; Rep. gr. 37 ; ATF; Checking ATF level .

Note

Observe all notes and test requirements for “Checking and correcting ATF level”.

1.1.4 Road test (for ATF purging procedure)

• ATF topped up ⇒ page 8 .

Protected by copyright. Copying for private or commercial purposes, in part or in whole, is not permitted unless authorised by AUDI AG. AUDI AG does not guarantee or accept any liability with respect to the correctness of information in this document. Copyright by AUDI AG.

Caution

Do not run the engine or tow the vehicle when there is no ATF in the gearbox.

– Drive vehicle off lifting platform.

Note

Observe notes on raising and lowering for vehicles with air suspension ⇒ Running gear, front-wheel drive and four-wheel drive; Rep. gr. 00 ; Repair notes; Raising and lowering vehicle when air spring system has / has not been opened .

– Follow these instructions exactly and observe all safety precautions.

Protected by copyright. Copying for private or commercial purposes, in part or in whole, is not permitted unless authorised by AUDI AG. AUDI AG does not guarantee or accept any liability with respect to the correctness of information in this document. Copyright by AUDI AG.

WARNING

When road-testing the vehicle as described below, observe all statutory regulations for driving on public roads. In some cases it may be necessary to drive the vehicle in a closed test area.

– Start engine.
– Shift selector lever to position “D”.
– Shift selector lever into “tiptronic” gate.
– Accelerate vehicle by pressing accelerator lightly.
– Watch gear display in instrument cluster.
– Shift through gears from 1st to top gear by moving selector lever to “+”.
– Then shift back to 1st gear by moving selector lever to “–”.

Note

Press brake pedal if necessary.

– Press brake pedal and brake wheels to 0 km/h.
– Shift selector lever to position “R”.
– Accelerate vehicle to 20 km/h by pressing accelerator lightly.
– Press brake pedal and brake wheels to 0 km/h.
– Shift selector lever back to position “D” and repeat complete procedure five times.

Note

The complete test cycle has to be repeated five times to ensure that all the old ATF is mixed with the new ATF.

– Finally, shift selector lever to position “P” and switch off engine.
– Continue ATF purging procedure ⇒ page 4 .

Caution

Risk of damage to gearbox

- *Filling up the ATF as part of the ATF purging procedure is not a substitute for checking the ATF level.*
- *After completing the ATF purging procedure, the ATF level must be checked and adjusted ⇒ multitronic 0AW, front-wheel drive; Rep. gr. 37 ; ATF; Checking ATF level .*

Protected by copyright. Copying for private or commercial purposes, in part or in whole, is not permitted unless authorised by AUDI AG. AUDI AG does not guarantee or accept any liability with respect to the correctness of information in this document. Copyright by AUDI AG.

Protected by copyright. Copying for private or commercial purposes, in part or in whole, is not permitted unless authorised by AUDI AG. AUDI AG does not guarantee or accept any liability with respect to the correctness of information in this document. Copyright by AUDI AG.

2 Transporting gearbox

Special tools and workshop equipment required

- Shackle - 10 - 222 A /12-

- Workshop hoist - VAS 6100-

Procedure

– Attach shackle - 10 - 222 A /12- to upper web of gearbox housing and secure in place.

– Engage hook of workshop hoist - VAS 6100- as shown in illustration.

– Lift gearbox with workshop hoist - VAS 6100- and shackle - 10 - 222 A /12- .

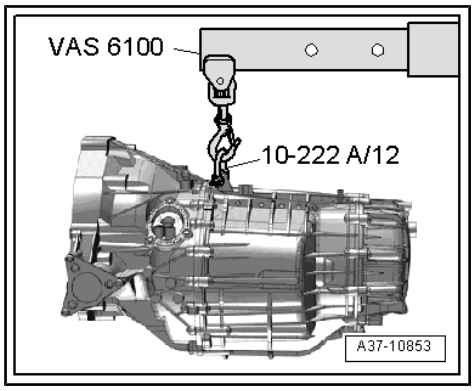

3 Securing to engine and gearbox support

Special tools and workshop equipment required

- Hook - 10 - 222 A /2-

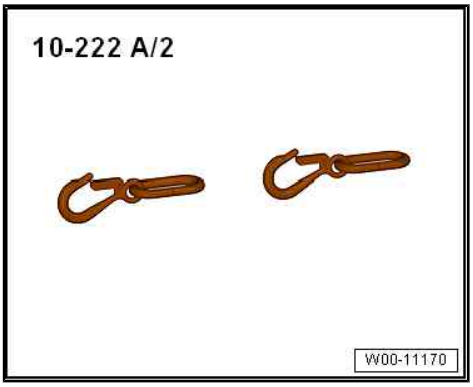

- Engine and gearbox support - VAS 6095-

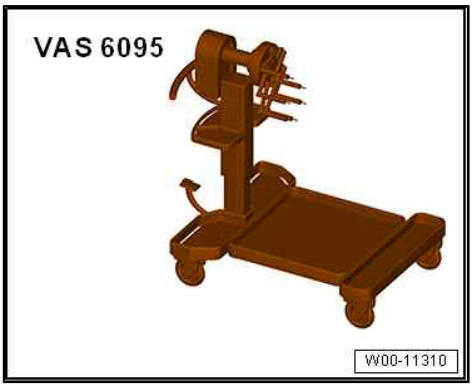

- Bracket - T10358-

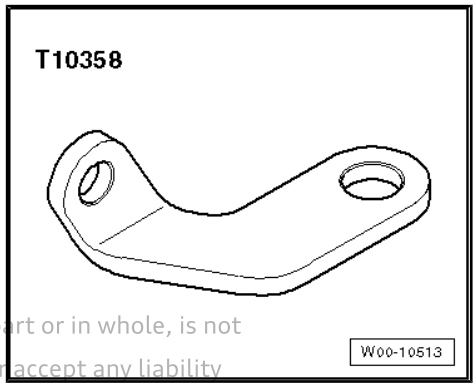

Protected by copyright. Copying for private or commercial purposes, in part or in whole, is not permitted unless authorised by AUDI AG. AUDI AG does not guarantee or accept any liability with respect to the correctness of information in this document. Copyright by AUDI AG.

- Gearbox support - T40206- with -T40206/1-

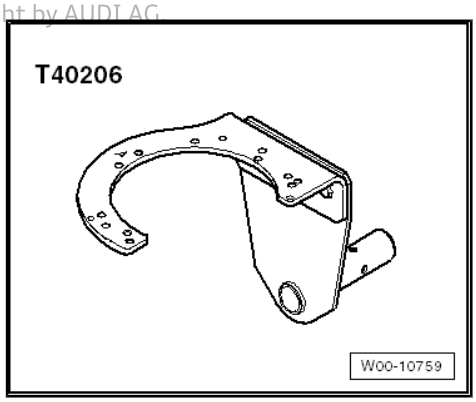

- Bolt M8x30, nut, 2x washer

Procedure

- ATF drained ⇒ multitronic 0AW, front-wheel drive; Rep. gr. 37 ; ATF; Draining and filling ATF
- Gear oil drained ⇒ multitronic 0AW, front-wheel drive; Rep. gr. 39 ; Gear oil; Draining and filling gear oil

– Bolt gearbox support - T40206- with -T40206/1- to gearbox as shown in illustration.

– Secure bracket - T10358- to lifting eye on right side of gearbox with M8x30 bolt -item 1-, nut and 2 washers.

– Attach workshop hoist - VAS 6100- to bracket - T10358- with hook - 10 - 222 A /2- .

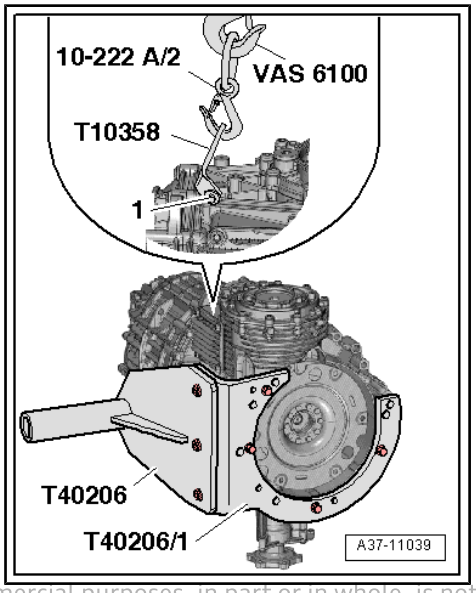

Protected by copyright. Copying for private or commercial purposes, in part or in whole, is not permitted unless authorised by AUDI AG. AUDI AG does not guarantee or accept any liability with respect to the correctness of information in this document. Copyright by AUDI AG.

– Lift gearbox and insert into engine and gearbox support - VAS 6095- .

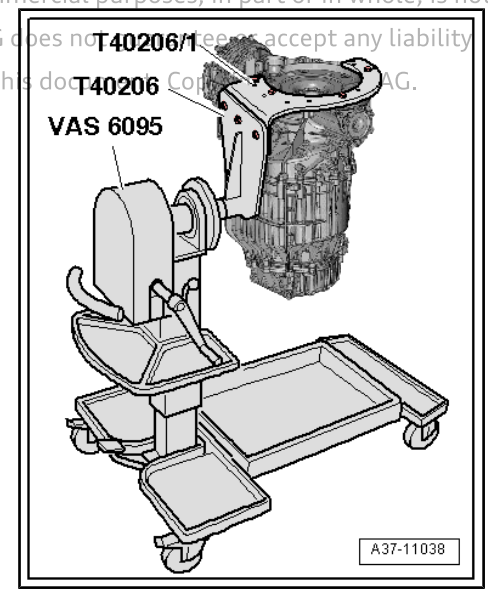

38 – Gears, control

1 Dismantling and assembling gearbox

⇒ “1.1 Exploded view - dual-mass flywheel”, page 17

⇒ “1.2 Exploded view - end cover”, page 18

⇒ “1.3 Exploded view - input shaft”, page 20

⇒ “1.4 Exploded view - intermediate housing”, page 21

⇒ “1.5 Exploded view - pulley set I and II”, page 22

⇒ “1.6 Exploded view - suction-jet pump, bearing flange”, page 23

⇒ “1.7 Exploded view - ATF filter, valve unit”, page 25

⇒ “1.8 Removing and installing dual-mass flywheel”, page 26

⇒ “1.9 Removing and installing end cover”, page 28

⇒ “1.10 Cleaning selector shaft”, page 29

⇒ “1.11 Modifying thrust piece T40099 for use with multitronic gearbox 0AW, front-wheel drive”, page 30

⇒ “1.12 Removing and installing input shaft”, page 31

⇒ “1.13 Removing and installing input shaft cover”, page 37

⇒ “1.14 Renewing ball bearing for input shaft”, page 42

1.1 Exploded view - dual-mass flywheel

Protected by copyright. Copying for private or commercial purposes, in part or in whole, is not permitted unless authorised by AUDI AG. AUDI AG does not guarantee or accept any liability with respect to the correctness of information in this document. Copyright by AUDI AG.

1 - Dual-mass flywheel

- ⇒ “1.8 Removing and installing dual-mass flywheel”, page 26

2 - Gearbox housing

3 - Input shaft oil seal

- ⇒ “2.3 Renewing oil seal for input shaft”, page 109

4 - Bolt

- Renew
- 4-cyl. engines: 3x
- 6x for 6-cyl. engines and Audi A6/A7 with 2.0 ltr. TDI engine
- Tightening torque and sequence ⇒ multitronic 0AW, front-wheel drive; Rep. gr. 37 ; Removing and installing gearbox; Installing gearbox

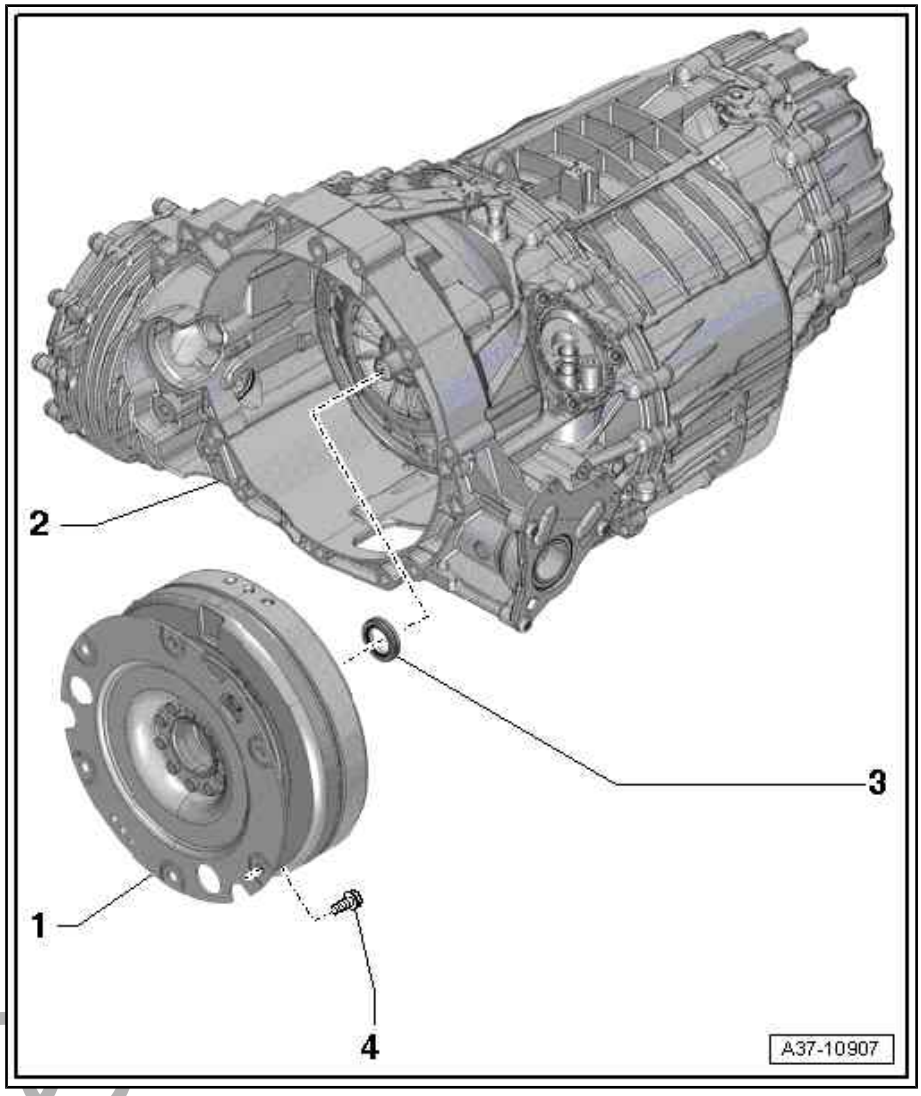

1.2 Exploded view - end cover

Protected by copyright. Copying for private or commercial purposes, in part or in whole, is not permitted unless authorised by AUDI AG. AUDI AG does not guarantee or accept any liability with respect to the correctness of information in this document. Copyright by AUDI AG.

Caution

Risk of damage to gearbox

- *Do not run engine or tow vehicle with end cover removed or when there is no ATF in the gearbox.*

Note

- *⇒ “1 Repair instructions”, page 1*
- *⇒ “1.3 Rules for cleanliness”, page 3*

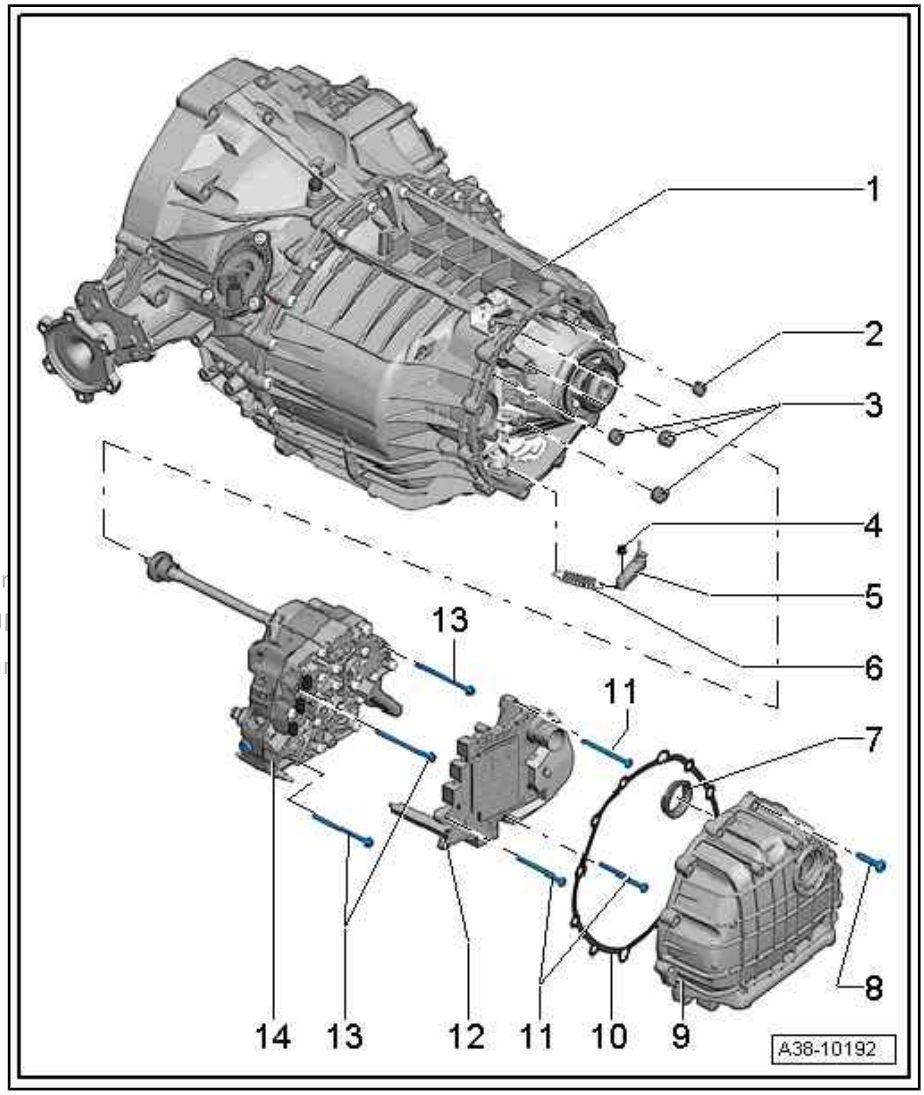

1 - Gearbox

2 - Axial sealing element, small
- ❑ Renew

3 - Axial sealing element, large
- ❑ Renew

4 - Roller

5 - Lever
- ❑ For selector shaft detent

6 - Spring

7 - Seal
- ❑ For connector on automatic gearbox control unit - J217-

8 - Bolt
- ❑ Renew
- ❑ 12x, tighten diagonally
- ❑ 10 Nm +90°

Protected by copyright. Copying for permitted unless authorised by AUDI with respect to the correctness of in

9 - End cover
- ❑ Removing and installing (with gearbox installed) ⇒ multitronic 0AW, front-wheel drive; Rep. gr. 38 ; Dismantling and assembling gearbox
- ❑ ⇒ “1.9 Removing and installing end cover”, page 28

10 - Gasket
- ❑ Renew

11 - Bolt
- ❑ 3x
- ❑ 5 Nm + 90°

12 - Automatic gearbox control unit - J217-
- ❑ ⇒ “4.1 Removing and installing gearbox control unit”, page 127

13 - Bolt
- ❑ 3x
- ❑ 5 Nm + 90°

14 - Hydraulic control unit
- ❑ ⇒ “4.2 Removing and installing hydraulic control unit”, page 129

1.3 Exploded view - input shaft

1 - Input shaft

- ❑ ⇒ “1.12 Removing and installing input shaft”, page 31

2 - Cover

- ❑ For input shaft
- ❑ ⇒ “1.13 Removing and installing input shaft cover”, page 37

3 - O-ring

- ❑ Renew

4 - Ball bearing

- ❑ For input shaft
- ❑ ⇒ “1.14 Renewing ball bearing for input shaft”, page 42

5 - Circlip

- ❑ Measure
- ❑ Renew

6 - Oil seal

- ❑ For input shaft
- ❑ ⇒ “2.3 Renewing oil seal for input shaft”, page 109

7 - Circlip

- ❑ Different versions, always renew
- ❑ Determining thickness ⇒ page 37

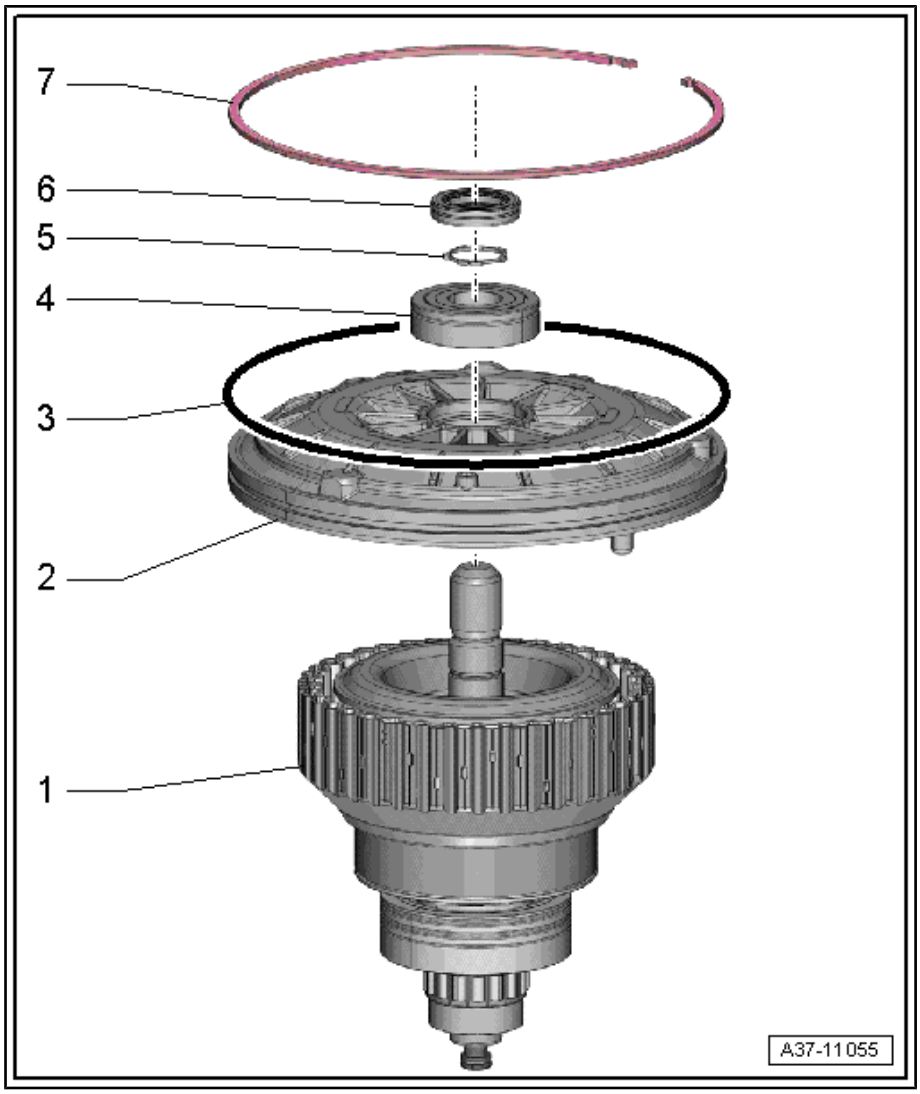

Protected by copyright. Copying for private or commercial purposes, in part or in whole, is not permitted unless authorised by AUDI AG. AUDI AG does not guarantee or accept any liability with respect to the correctness of information in this document. Copyright by AUDI AG.

1.4 Exploded view - intermediate housing

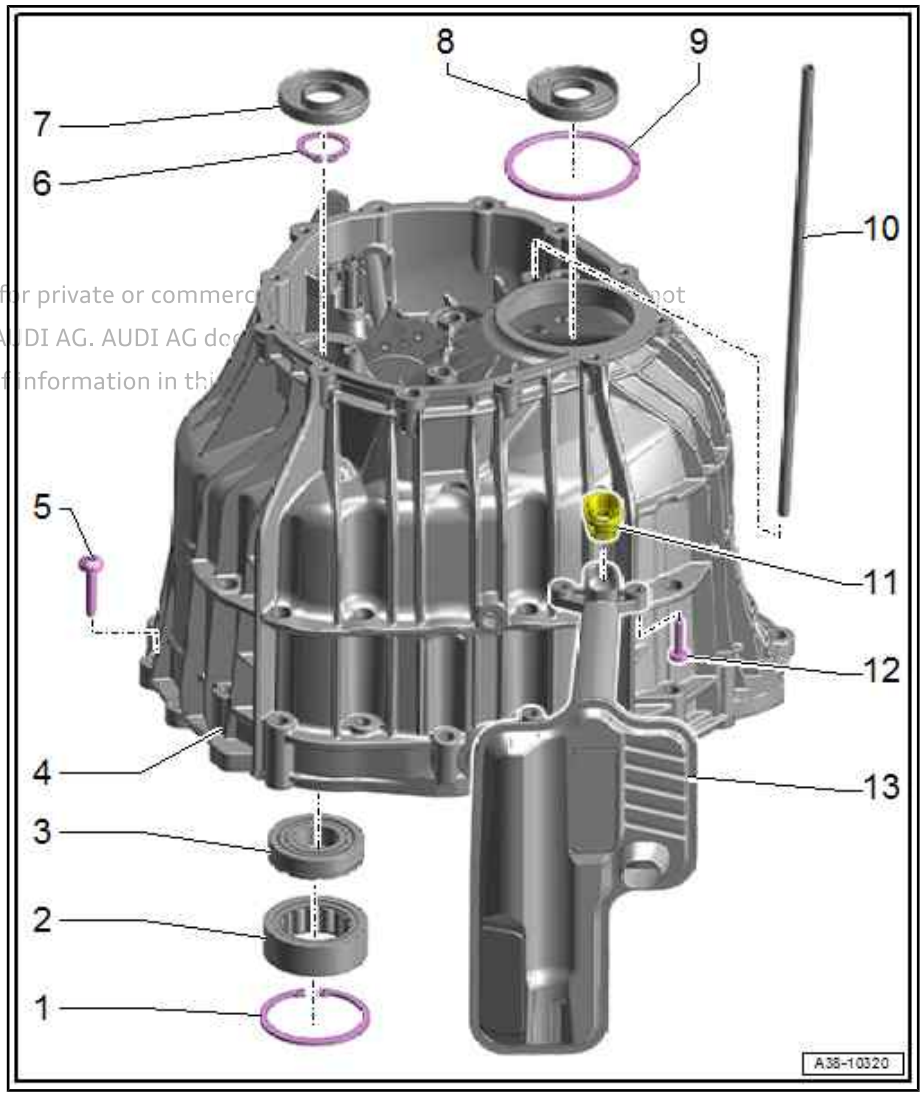

1 - Circlip

2 - Bearing "D" for pulley set "I"

- ❑ Checking for wear ⇒ page 73
- ❑ Removing and installing ⇒ "1.16.2 Removing and installing bearing D and E for pulley set I", page 61

Protected by copyright. Copying for private or commerc not permitted unless authorised by AUDI AG. AUDI AG do with respect to the correctness of information in th

3 - Bearing "E" for pulley set "I"

- ❑ Checking for wear ⇒ page 73
- ❑ Removing and installing ⇒ "1.16.2 Removing and installing bearing D and E for pulley set I", page 61

4 - Intermediate housing

- ❑ Removing and installing ⇒ page 45

5 - Bolt

- ❑ Renew
- ❑ 10 Nm + 90°
- ❑ Tighten evenly (working clockwise)

6 - Circlip

- ❑ For bearing "E"
- ❑ Determining thickness ⇒ page 57

7 - Sender wheel for pulley set "I"

- ❑ Removing and installing ⇒ "1.15 Removing and installing pulley set I and II", page 45
- ❑ Renew after removing

8 - Sender wheel for pulley set "II"

- ❑ Removing and installing ⇒ "1.15 Removing and installing pulley set I and II", page 45
- ❑ Renew after removing

9 - Circlip

- ❑ For bearing "G"
- ❑ Determining thickness ⇒ page 55

10 - Oil pipe

11 - Seal

- ❑ For ATF filter
- ❑ Renew after removing

12 - Bolt

- ❑ 5 Nm + 90°

13 - ATF filter

- ❑ Inside

- ❑ Renew after removing

1.5 Exploded view - pulley set I and II

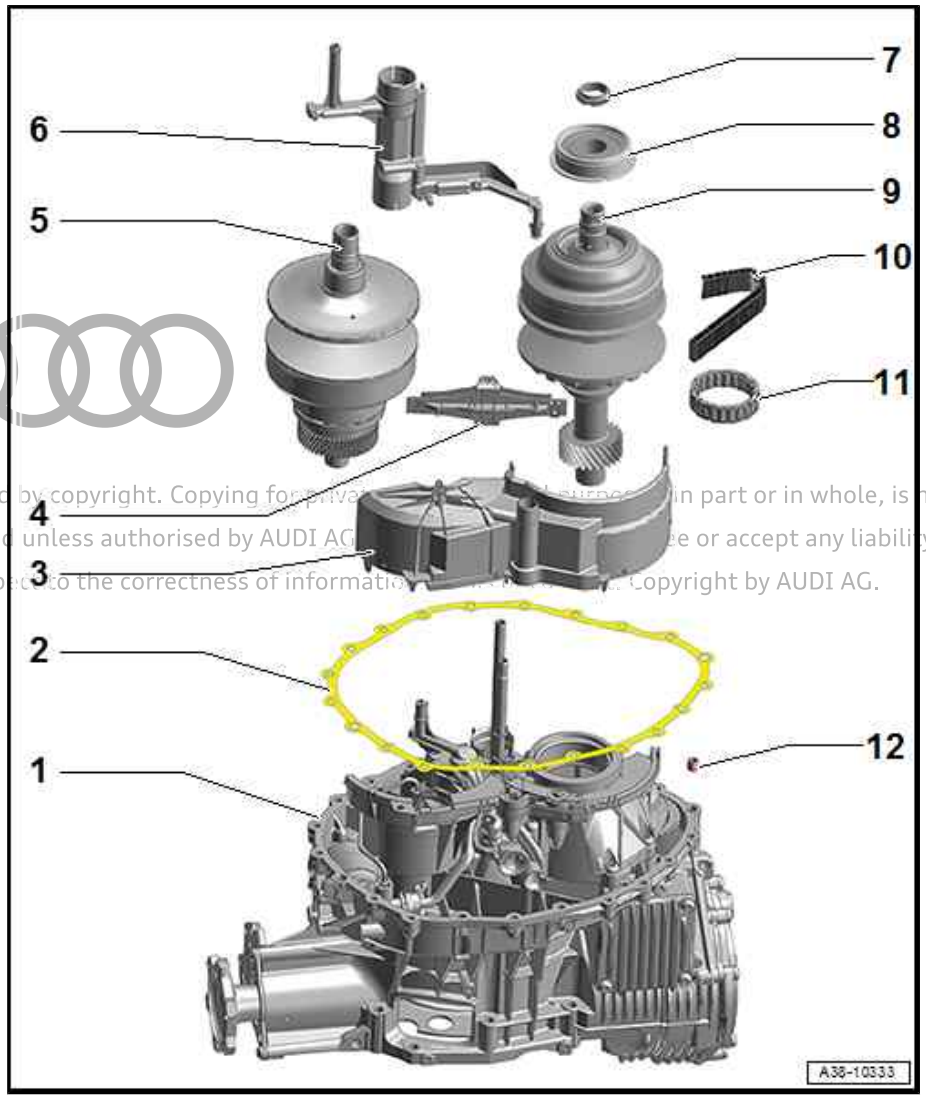

1 - Gearbox housing

2 - Gasket
- ❑ Renew after removing

3 - Oil guide "I"

4 - Guide rail
- ❑ Two-piece
- ❑ Renew

5 - Pulley set "I"

6 - Oil guide "II"

7 - Nut for bearing "G"
- ❑ Left-hand thread
- ❑ Renew
- ❑ Tightening sequence
  ⇒ Fig. ""Tightening sequence for bearing "G"", page 23

8 - Bearing "G"
- ❑ Removing and installing
  ⇒ "1.16.3 Removing and installing bearing "G"", page 63

9 - Pulley set "II"
- ❑ Removing and installing
  ⇒ page 45

10 - Chain
- ❑ Removing and installing
  ⇒ "1.15 Removing and installing pulley set I and II", page 45

11 - Bearing for pulley set "II"

12 - Dowel sleeve
- ❑ 2x

Protected by copyright. Copying for private or commercial purposes, in part or in whole, is not permitted unless authorised by AUDI AG. AUDI AG does not guarantee or accept any liability with respect to the correctness of information. Copyright by AUDI AG.

Tightening sequence for bearing “G”

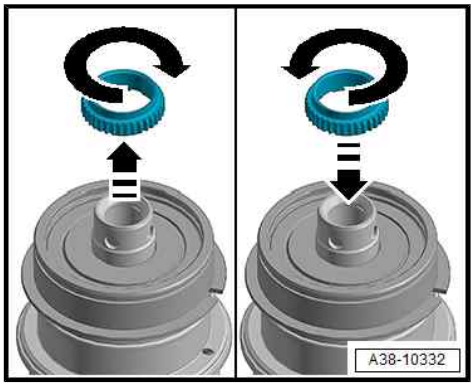

Note

Left-hand thread!

Stage	Nut
1.	Tighten to 450 Nm
2.	Slacken
3.	Tighten to 300 Nm
4.	Peen 4 times (offset by 90° each time)

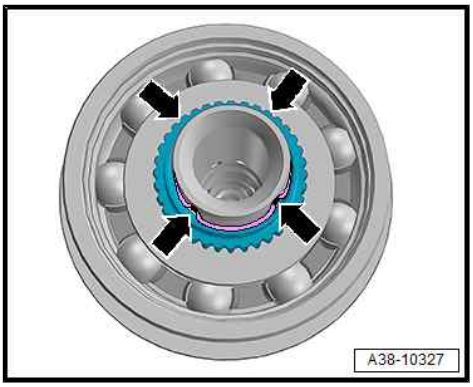

1.6 Exploded view - suction-jet pump, bearing flange

Protected by copyright. Copying for private or commercial purposes, in part or in whole, is not permitted unless authorised by AUDI AG. AUDI AG does not guarantee or accept any liability with respect to the correctness of information in this document. Copyright by AUDI AG.

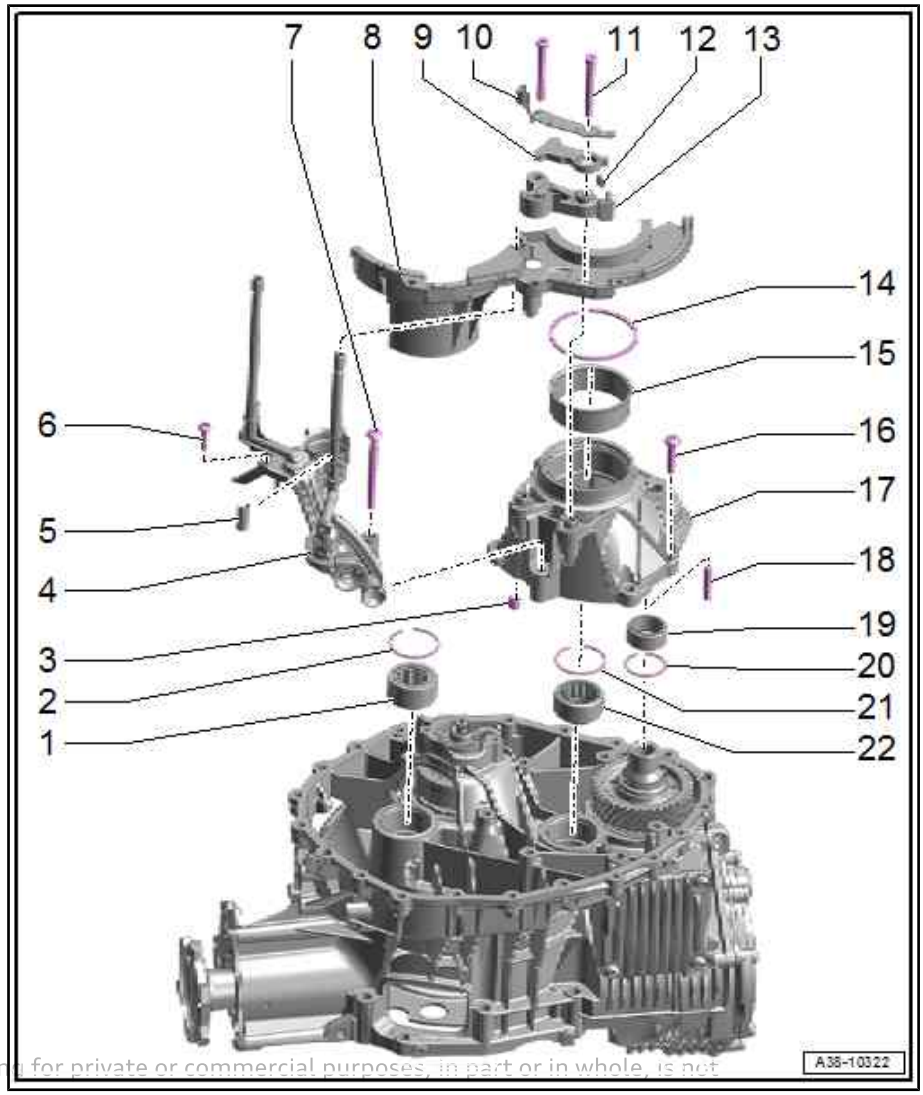

1 - Bearing “C” for pulley set “I”
- ❑ Removing and installing ⇒ page 58

2 - Circlip

3 - Dowel sleeve

4 - Suction-jet pump
- ❑ Removing and installing ⇒ page 72

5 - Clip

6 - Bolt
- ❑ 5 Nm + 90°

7 - Bolt
- ❑ Renew
- ❑ 15 Nm + 90°

8 - Plastic pan

9 - Pawl for parking lock

10 - Bracket for parking lock

11 - Bolt
- ❑ M8 × 70
- ❑ 15 Nm + 90°

12 - Spring for parking lock

13 - Parking lock

14 - Circlip

15 - Inner race for bearing “F”
- ❑ Installing ⇒ “1.16.5 Renewing bearing flange with bearing F and 11”, page 70

Protected by AUDI AG. Copying for private or commercial purposes, in part or in whole, is not permitted unless authorised by AUDI AG. AUDI AG does not guarantee or accept any liability with respect to the correctness of information in this document. Copyright by AUDI AG.

16 - Bolt
- ❑ Renew
- ❑ M8 × 40
- ❑ 10 Nm + 90°

17 - Bearing flange

18 - Dowel pin

19 - Bearing “11” for pinion shaft
- ❑ Removing and installing ⇒ page 67

20 - Circlip

21 - Circlip

22 - Bearing “10” for pulley set “II”
- ❑ Installing ⇒ “1.16.5 Renewing bearing flange with bearing F and 11”, page 70

1.7 Exploded view - ATF filter, valve unit

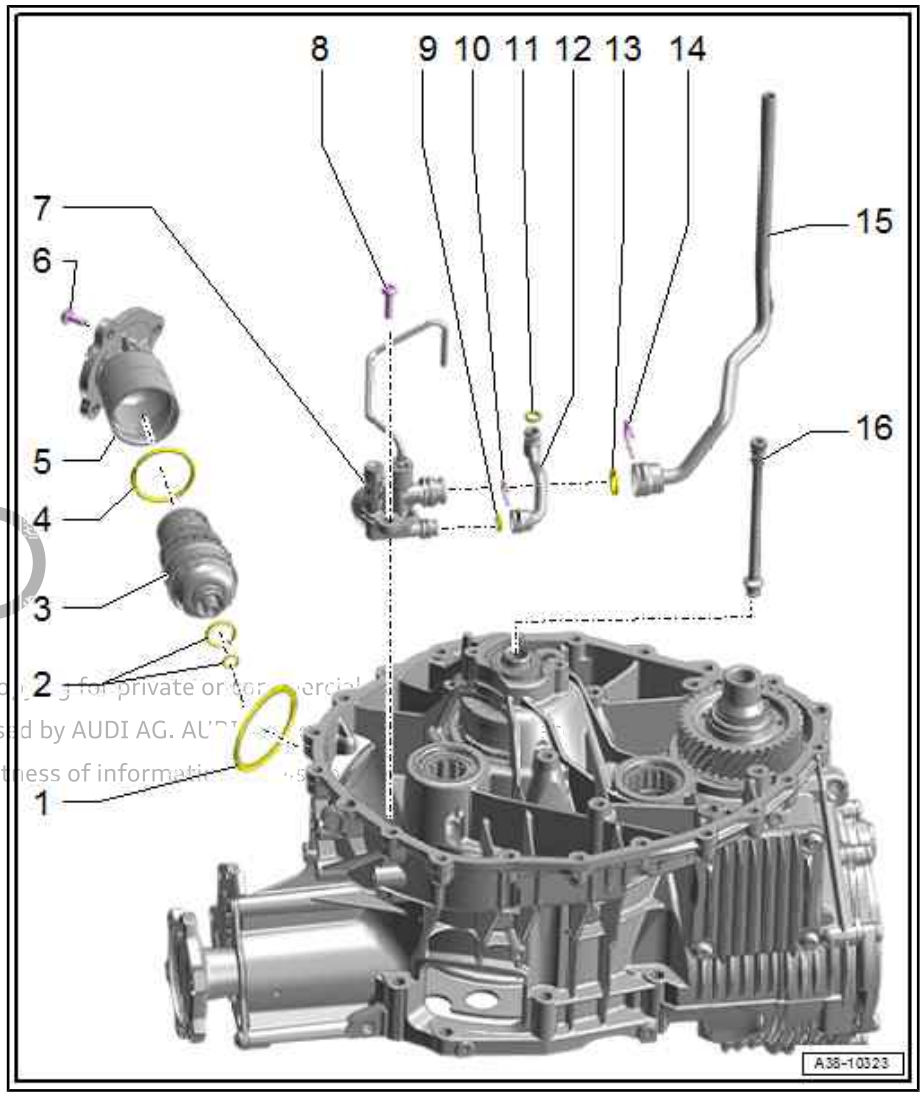

1 - Seal
- ❑ Renew after removing

2 - O-rings
- ❑ Renew after removing

3 - ATF filter
- ❑ Outside
- ❑ Renew after removing

4 - O-ring
- ❑ Renew after removing

5 - Housing
- ❑ For ATF filter

6 - Bolt
- ❑ Renew
- ❑ M6 x 16
- ❑ 5 Nm + 90°

7 - Valve unit

8 - Bolt
- ❑ M6 x 27
- ❑ 5 Nm + 90°

9 - O-ring
- ❑ Renew after removing

10 - Retaining clip

11 - O-ring
- ❑ Renew after removing

12 - Oil pipe

13 - O-ring
- ❑ Renew after removing

14 - Retaining clip

15 - Oil pipe

16 - Oil pipe
- ❑ Check installation depth ⇒ page 26 .

Protected by copyright. Copying for private or commercial purposes, in part or in whole, is not permitted unless authorised by AUDI AG. AUDI AG does not guarantee or assume any liability with respect to the correctness of information in this document.

Installation dimension of oil pipe

– Check installation dimension of oil pipe -arrow-:

• With oil pipe fully inserted, distance -a- from end of oil pipe to input shaft should be approx. 11.5 mm.

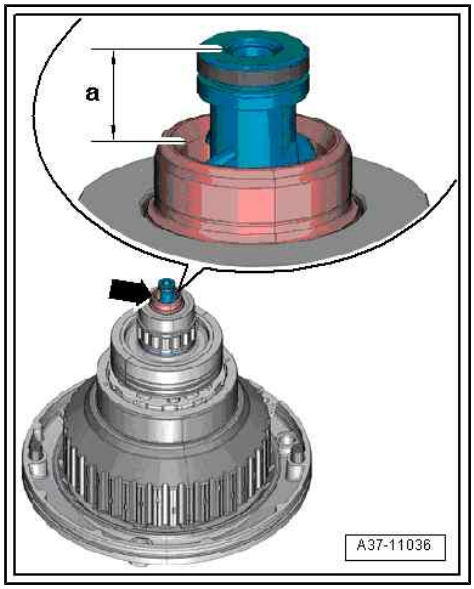

Note

♦ *If the distance is less, the oil pipe may be damaged (the end could have broken off if the oil pipe was pushed in too far).*

♦ *If the distance is larger, the oil pipe is not pushed in far enough.*

1.8 Removing and installing dual-mass flywheel

Protected by copyright. Copying for private or commercial purposes, in part or in whole, is not permitted unless authorised by AUDI AG. AUDI AG does not guarantee or accept any liability with respect to the correctness of information in this document. Copyright by AUDI AG.

Special tools and workshop equipment required

♦ Extractor - T40176-

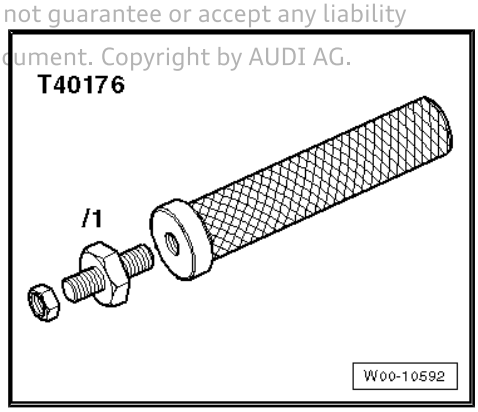

♦ Grease for clutch plate splines - G 000 100-

♦ Sealing grease - G 052 128 A1-

Removing

• Gearbox secured to engine and gearbox support ⇒ page 15 .

– Remove flange shaft (left-side) ⇒ multitronic 0AW, front-wheel drive; Rep. gr. 39 ; Differential; Removing and installing flange shaft (left-side) .

– Attach extractor - T40176- to dual-mass flywheel -A- using nut -B- -arrow-.

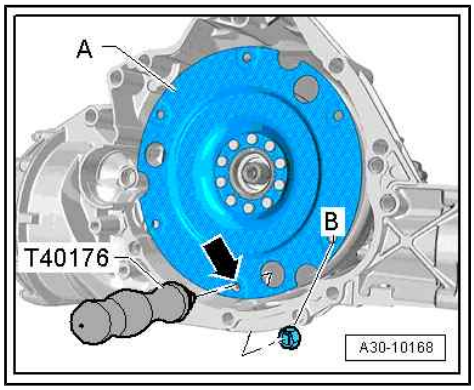

– Turn extractor - T40176- upwards.

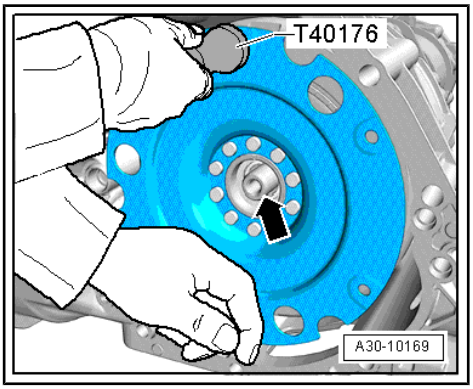

Note

Keep hold of the bottom of the dual-mass flywheel, as shown in the illustration, to prevent it from tilting over.

– Pull dual-mass flywheel off input shaft -arrow- keeping dual-mass flywheel straight.

Caution

Take care not to damage flange for drive plate on dual-mass flywheel.

- ***Do not lay down the dual-mass flywheel so that it rests on the flange -arrow- for the drive plate.***
- ***This could bend the flange -arrow- for the drive plate, which would cause problems with clutch operation.***

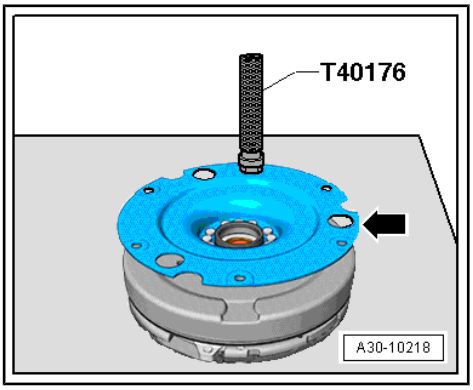

– Put dual-mass flywheel down carefully, e.g. on work bench.

Installing

Installation is carried out in the reverse order; note the following:

– Thoroughly clean area of clutch housing leading to differential -arrow A-, and oil seal -arrow B-.

Protected by copyright. Copying for private or commercial purpose
permitted unless authorised by AUDI AG. AUDI AG does not guara

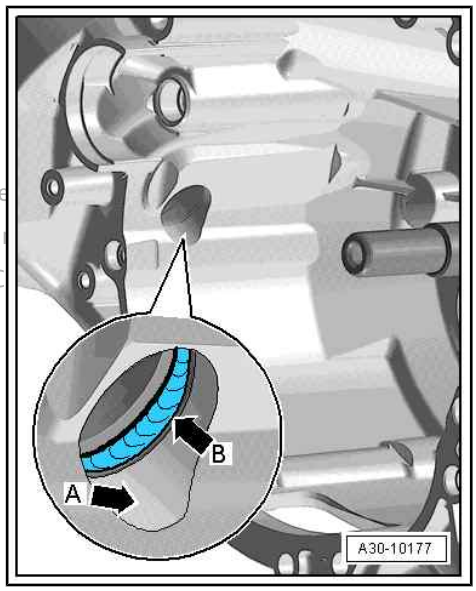

Note

If oil seal between differential and gearbox housing -arrow B- is damaged, it must be renewed *⇒ page 105* *.*

– Pack space between sealing lip and dust lip half-full with sealing grease - G 052 128 A1- .

– Clean input shaft -arrow-.

– Apply a thin coating of grease for clutch plate splines - G 000 100- to splines on input shaft.

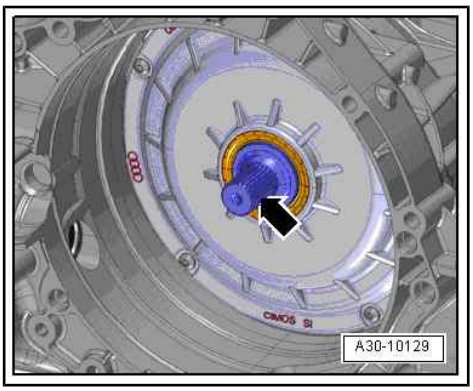

– Carefully slide dual-mass flywheel onto input shaft -arrow-, taking care to keep dual-mass flywheel straight.
– Install flange shaft (left-side) ⇒ page 114 .

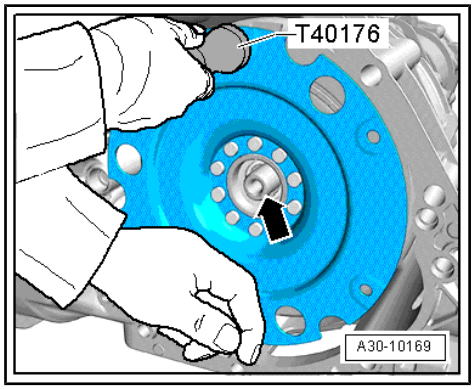

1.9 Removing and installing end cover

Note

The end cover can also be removed and installed with the gearbox in the vehicle ⇒ multitronic 0AW, front-wheel drive; Rep. gr. 38 ; Dismantling and assembling gearbox .

Special tools and workshop equipment required

♦ Used oil collection and extraction unit - V.A.G 1782-

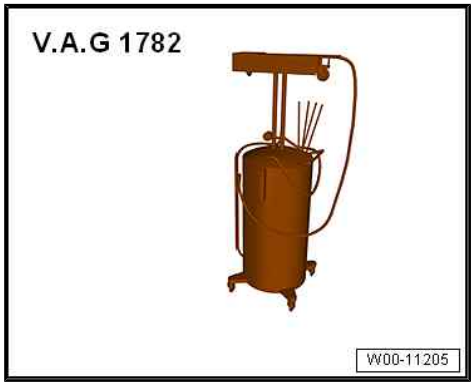

Removing

- Gearbox must be removed and secured to engine/gearbox support in horizontal position ⇒ page 15 .

– Place used oil collection and extraction unit - V.A.G 1782- below gearbox.
– Remove bolts -arrows- and take off end cover.

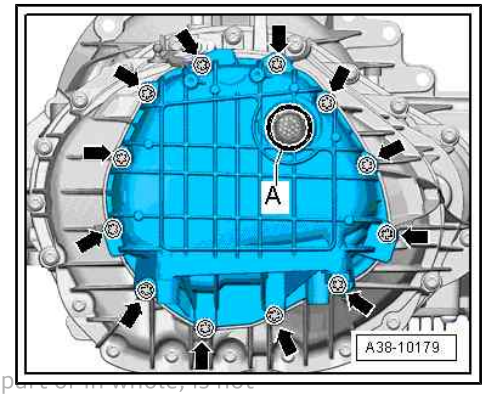

Protected by copyright. Copying for private or commercial purposes, in part or in whole, is not permitted unless authorised by AUDI AG. AUDI AG does not guarantee or accept any liability with respect to the correctness of information in this document. Copyright by AUDI AG.

Protected by copyright. Copying for private or commer
permitted unless authorised by AUDI AG. AUDI AG doe
with respect to the correctness of information in this d

Installing

Installation is carried out in reverse sequence; note the following:

- Tightening torques
  ⇒ "1.2 Exploded view - end cover", page 18

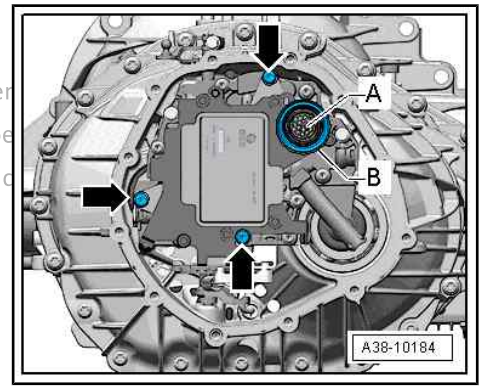

Note

- ♦ *Renew seals, gaskets and axial sealing elements.*
- ♦ *Renew bolts for end cover.*
- ♦ *Do not touch pins in connector -A- with bare hands.*

– Slide new seal -B- onto connector -A- of automatic gearbox control unit - J217- , with twin lips facing outwards.

– If fitted, attach displacer plate -A- to automatic gearbox control unit - J217- .

– Clean sealing surfaces on gearbox housing and end cover.

– Dowel sleeves in gearbox housing or end cover must be re-fitted in same places.

– Place new gasket for end cover onto gearbox housing.

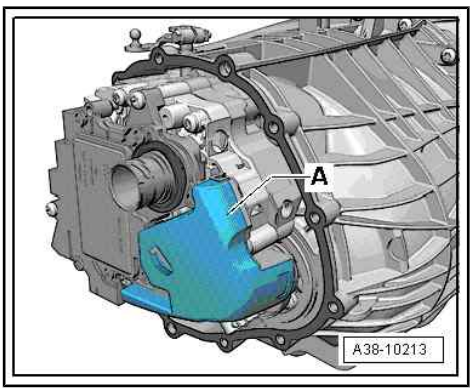

Note

Make sure dowel sleeves are correctly seated.

– Fit end cover and make sure that gasket does not move out of position.

– Check installation position of seal -A-:

- Seal must be flush fitted (the sealing lips must not be kinked).

– Screw in new bolts -arrows- in diagonal sequence until hand-tight and then tighten to specified torque.

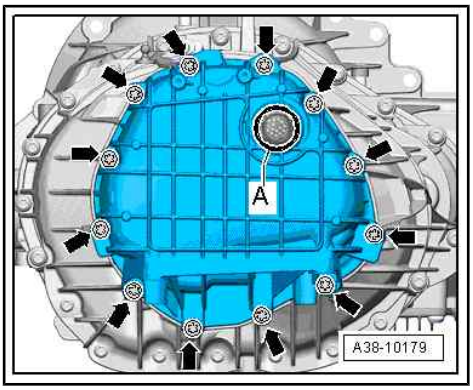

1.10 Cleaning selector shaft

Procedure

- End cover must be removed ⇒ page 28 .
- Automatic gearbox control unit - J217- must be removed ⇒ page 127 .

Note

- ♦ *⇒ "1 Repair instructions", page 1*
- ♦ *⇒ "1.3 Rules for cleanliness", page 3*

– Clean selector shaft detents -arrows-. Use lint-free cloths. When doing so, take particular care to remove metal swarf or the like from the contact surfaces of the magnets.

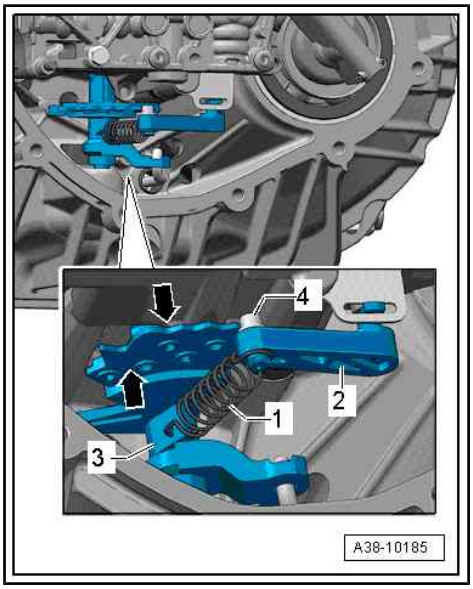

Note

Make sure that spring -1- and roller -4- are properly secured.

– Check roller -4- and spring -1- for damage; renew if necessary.

1.11 Modifying thrust piece - T40099- for use with multitronic gearbox 0AW, front-wheel drive

Procedure

- Input shaft is removed ⇒ page 31

– Place input shaft on thrust piece - T40099- so it is exactly centred.

– Make paint markings -arrow- at the points where the dowel pins -1- make contact with the top ring of -T40099- .

- The marked positions should be approximately half-way between the supports -2- of -T40099- .

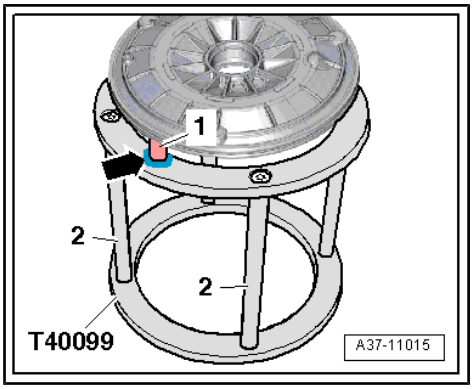

– Make a centre punch mark inside marked area at a distance -a- = 6 mm from inside edge and drill a ∅ 11 mm hole.

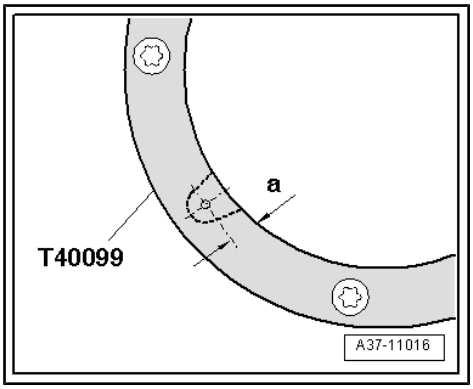

Protected by copyright. Copying for private or commercial purposes, in part or in whole, is not permitted unless authorised by AUDI AG. AUDI AG does not guarantee or accept any liability with respect to the correctness of information in this document. Copyright by AUDI AG.

– Make two saw cuts as shown -arrows-.
– Deburr saw cuts and drillings.

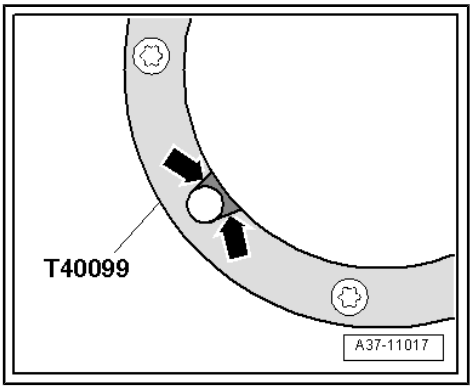

1.12 Removing and installing input shaft

Special tools and workshop equipment required

♦ Workshop hoist - VAS 6100-

♦ Puller - T40050-

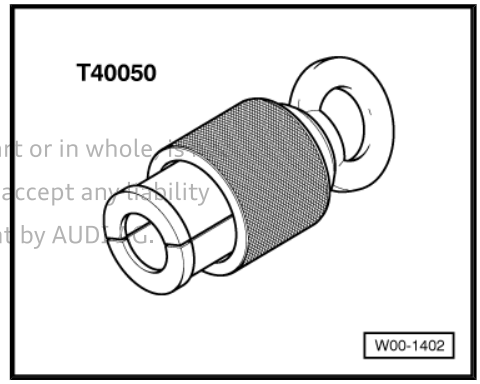

Protected by copyright. Copying for private or commercial purposes, in part or in whole, is not permitted unless authorised by AUDI AG. AUDI AG does not guarantee or accept any liability with respect to the correctness of information in this document. Copyright by AUDI AG.

♦ Thrust piece - T40099-

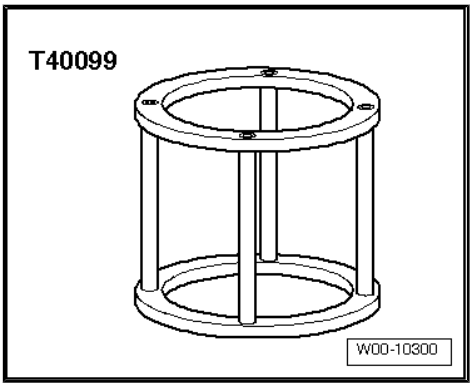

Removing

Note

- ⇒ *"1 Repair instructions", page 1*
- ⇒ *"1.3 Rules for cleanliness", page 3*

- Gearbox must be removed and secured in a vertical position on engine and gearbox support ⇒ page 15 .
- Thrust piece - T40099- must be modified for use with multi-tronic gearbox 0AW, front-wheel drive ⇒ page 30 .

– Drain ATF ⇒ page 5 . To do so, swivel gearbox into installation position (horizontal).

Note

Gearbox must not be turned such that flange points downwards.

– Mark installation position of input shaft cover with paint -arrows-.

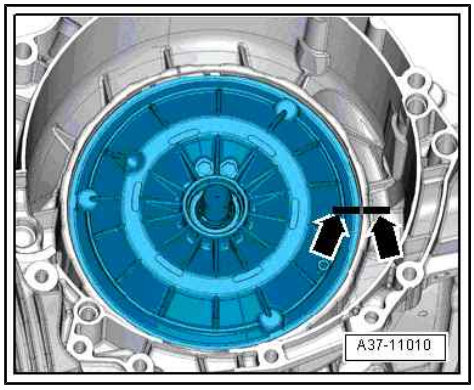

– Remove circlip -1-.

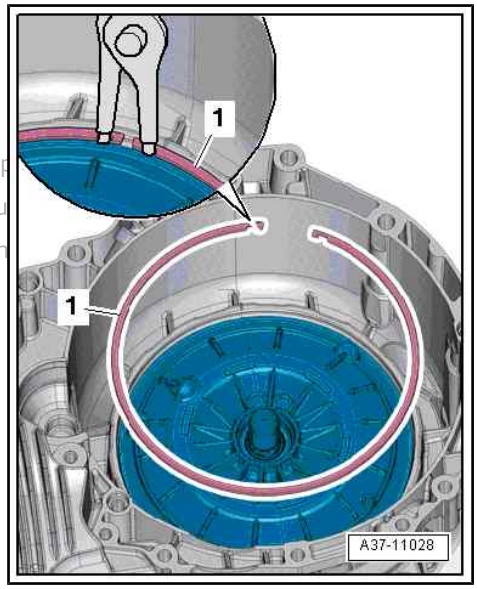

Note

- *Two different types of circlip are in use.*
- *The current circlips do not have a groove and can only be prised out using a screwdriver.*

Protected by copyright. Copying for private or commercial purp
permitted unless authorized by AUDI AG. AUDI AG does not gu
with respect to the correctness of information in this documen

– Apply puller - T40050- to input shaft.
– Check that puller is securely attached to input shaft.
• The circlip must be pushed all the way down.
– Use workshop hoist - VAS 6100- and puller - T40050- to pull input shaft together with cover and forward clutch out of gearbox housing -arrow-.

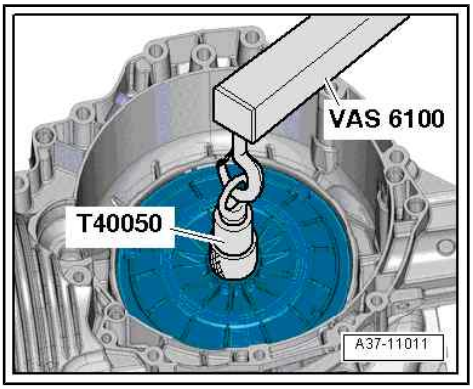

Note

The input shaft cover is difficult to remove from the gearbox housing. Apply tension to input shaft with workshop hoist - VAS 6100- and carefully apply hammer blows to flange of gearbox bellhousing using plastic hammer and a suitable piece of wood until cover comes loose.

Caution

A damaged oil pipe will cause problems when driving off from a standstill or complete gearbox failure.

- ***The input shaft must not be laid down on the projecting oil pipe -arrow-.***

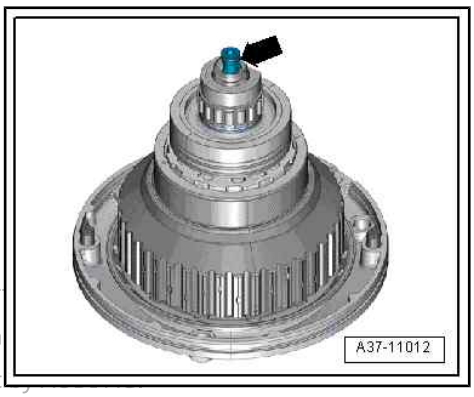

Protected by copyright. Copying for private or commercial purposes, in par
permitted unless authorised by AUDI AG. AUDI AG does not guarantee or a
with respect to the correctness of information in this document. Copyright

– Place input shaft on thrust piece - T40099- .

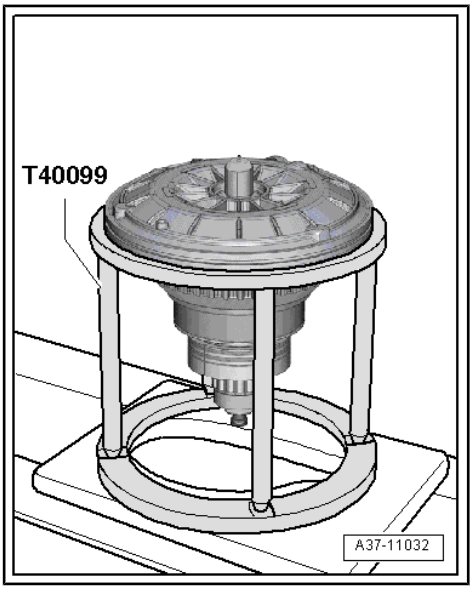

Installing

Installation is carried out in reverse sequence; note the following:

– Assess wear on gearbox components ⇒ page 99 .

– Remove bolts -arrows- and pull ATF filter out of gearbox housing.

– Clean sealing surfaces on gearbox housing and input shaft cover.

– Adjust and install reverse gear clutch ⇒ page 79 .

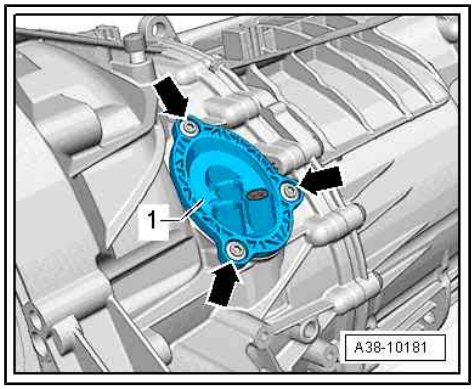

– Check that dowel sleeves -arrows- (for locating input shaft cover) are securely fitted.

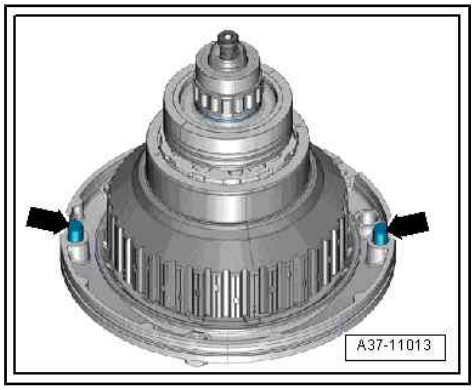

– Renew axial sealing element -arrow-.

• Installation position: sealing lip faces upwards towards input shaft cover.

– Renew O-ring for input shaft cover and lubricate lightly with ATF.

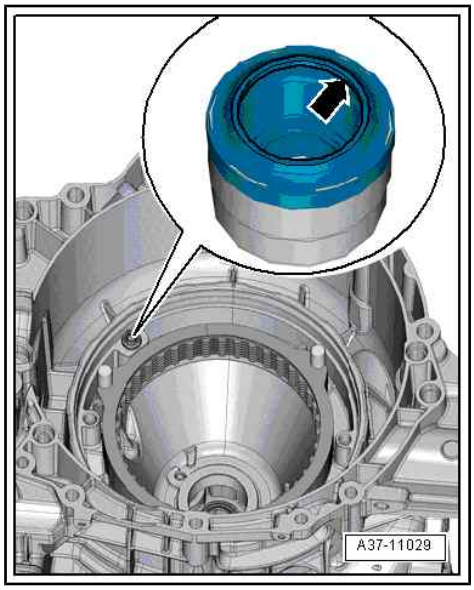

Protected by copyright. Copying for private or commercial purposes, in part or in whole, is not permitted unless authorised by AUDI AG. AUDI AG does not guarantee or accept any liability with respect to the correctness of information in this document. Copyright by AUDI AG.

– Align plates of reverse gear clutch using a straight-edge or similar.

Protected by copyright. Copying for private or commercial purposes, in pa
permitted unless authorised by AUDI AG. AUDI AG does not guarantee or
with respect to the correctness of information in this document. Copyrigh

• The teeth must be set exactly in line.

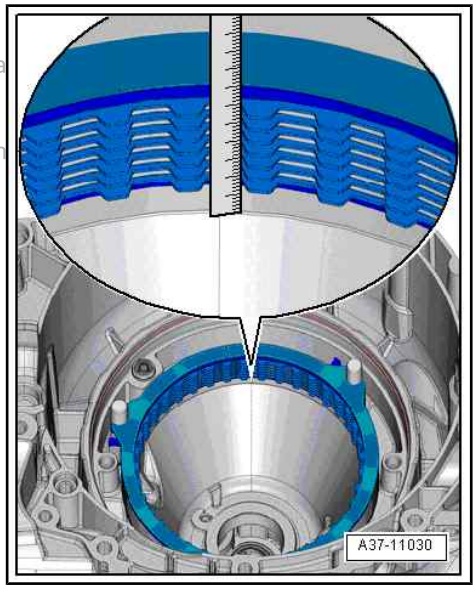

– Check installation dimension of oil pipe -arrow-:

• With oil pipe fully inserted, distance -a- from end of oil pipe to input shaft should be approx. 11.5 mm.

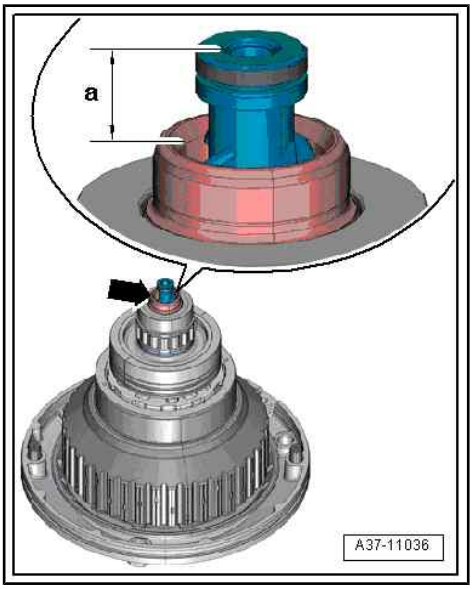

Note

♦ *If the distance is less, the oil pipe may be damaged (the end could have broken off if the oil pipe was pushed in too far).*

♦ *If the distance is larger, the oil pipe is not pushed in far enough.*

Caution

A damaged oil pipe will cause problems when driving off from a standstill or complete gearbox failure.

♦ ***The input shaft must not be laid down on the projecting oil pipe -arrow-.***

– Insert input shaft with input shaft cover in gearbox housing and align according to marks made before removal -arrows-.

– When doing this, rotate input shaft slightly in both directions until all reverse gear clutch plates have engaged.

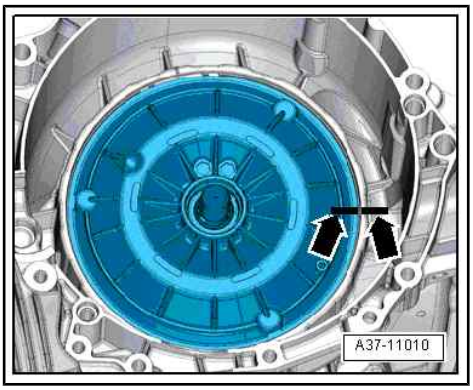

– Using a screwdriver -arrow- inserted through opening in housing for ATF filter, rotate gear -1- of intermediate gearing until it engages with gear on input shaft.

Protected by copyright. Copying for private or comme
permitted unless authorised by AUDI AG. AUDI AG doe
with respect to the correctness of information in this

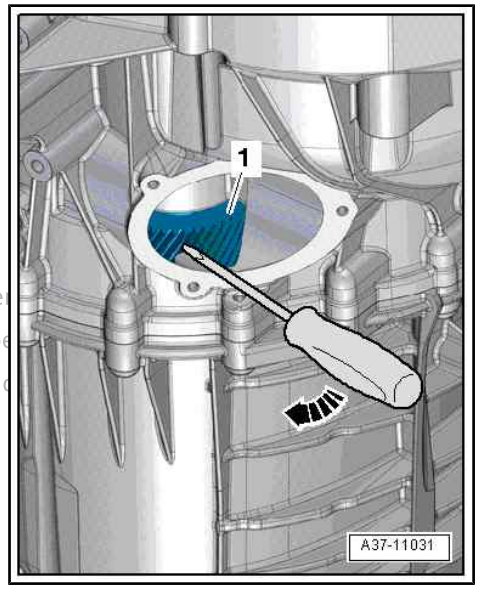

– Check that input shaft cover is flush with gearbox housing.
– After making sure that both components are flush, knock input shaft cover carefully and uniformly into gearbox housing all round as far as stop using a plastic hammer and a suitable piece of wood.

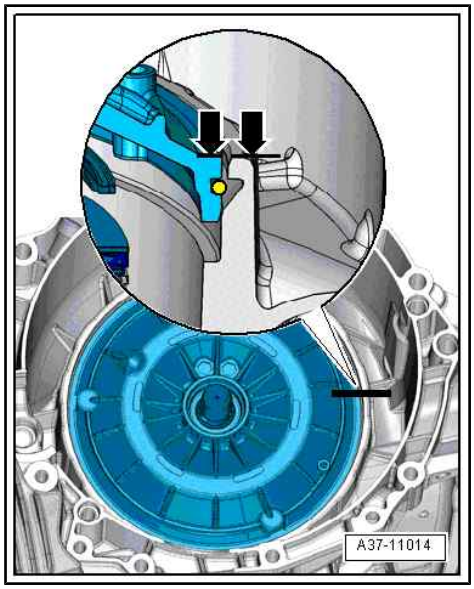

Note

- *If the original input shaft cover and gearbox housing are being reinstalled, use a new circlip -1- of the same thickness as that previously fitted.*
- *If a new input shaft cover and/or gearbox housing are being installed, you have to determine the thickness of the required circlip.*

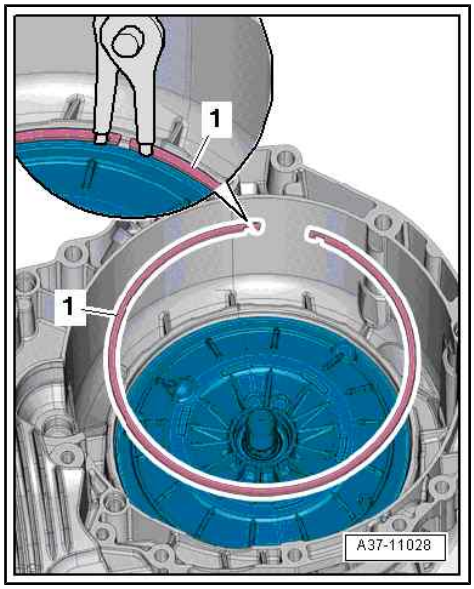

Determining thickness of circlip -1-

Available circlips - Thickness of circlips in mm		
3.035	3.080	3.125

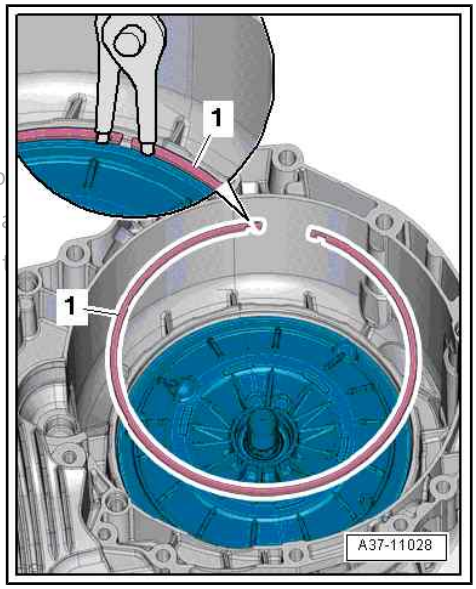

– First try to fit thickest circlip in groove in gearbox housing.

Protected by copyright. Copying for private or commercial purp
permitted unless authorised by AUDI AG. AUDI AG does not gua
with respect to the correctness of information in this document

- The circlip should fit without sticking.
- The circlip must be seated in the bottom of the groove.

– If the circlip cannot be fitted, try to insert the next thinnest circlip; if necessary use the thinnest circlip.

– Renew ATF filter ⇒ multitronic 0AW, front-wheel drive; Rep. gr. 37 ; ATF circuit; Removing and installing ATF filter .

– Fill up with ATF after installing gearbox
⇒ “1.1.3 Filling up with ATF (for ATF purging procedure)”, page 8 .

1.13 Removing and installing input shaft cover

Special tools and workshop equipment required

♦ Oil seal extractor - T40014-

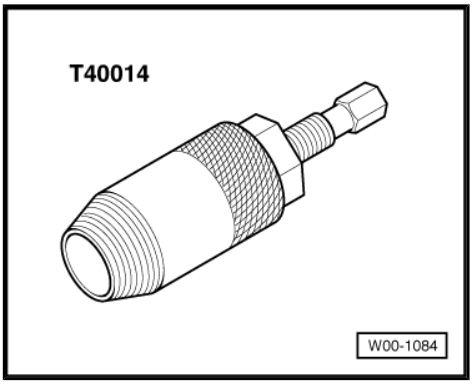

♦ Thrust piece - T40099-

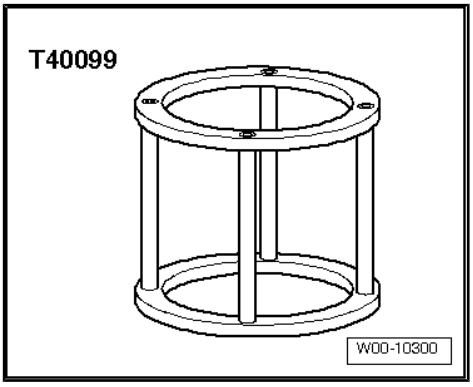

♦ Ice spray

♦ Protective gloves

♦ Safety goggles

Removing

- Input shaft is removed ⇒ page 31
- Thrust piece - T40099- must be modified for use with multi-tronic gearbox 0AW, front-wheel drive ⇒ page 30 .

– Pull out oil pipe -arrow- upwards so as to avoid damage.

Protected by copyright. Copying for private or commercia
permitted unless authorised by AUDI AG. AUDI AG does n
with respect to the correctness of information in this doc

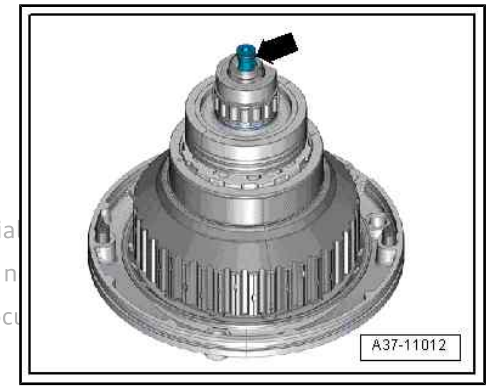

– Check all 8 bolts -arrows- of thrust piece -T40099- .

- Bolts should have been screwed in flush to 25 Nm ⇒ Assembly instructions for thrust piece -T40099- .

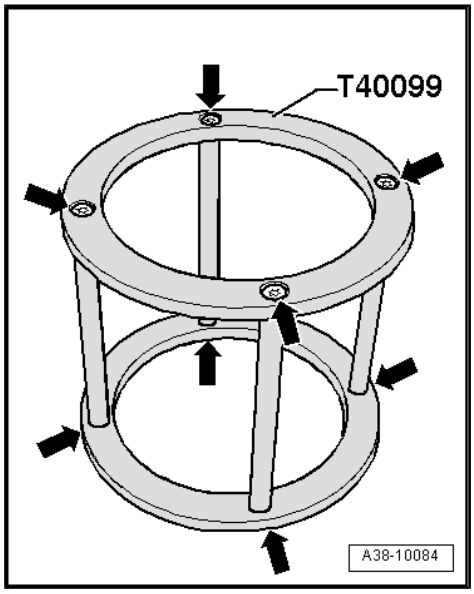

– Place input shaft in thrust piece - T40099- .

– Screw oil seal extractor - T40014- into oil seal by hand until tool grips securely in seal. Then tighten tool using an open-end spanner.

– Screwing in the rear bolt -arrow- will allow you to pull the oil seal out a little.

– Then re-apply the open-ended wrench so that the oil seal ex-tractor - T40014- firmly engages in the oil seal again and screw in the bolt to further extract the seal.

– Repeat procedure until oil seal is pulled out all the way.

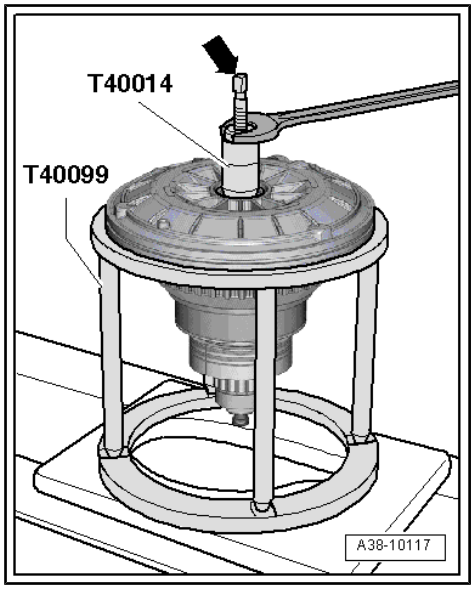

– Remove circlip -1- securing input shaft cover.

– Measure and note down thickness of circlip once removed.

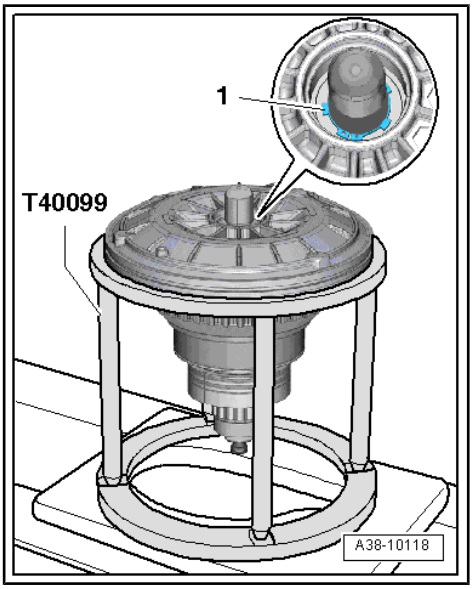

Note

When installing ball bearing, replace circlip with a new one of the same thickness.

– Clean contact surface for input shaft cover.

WARNING

Risk of injury from burns.

- ***Wear protective gloves and safety goggles!***

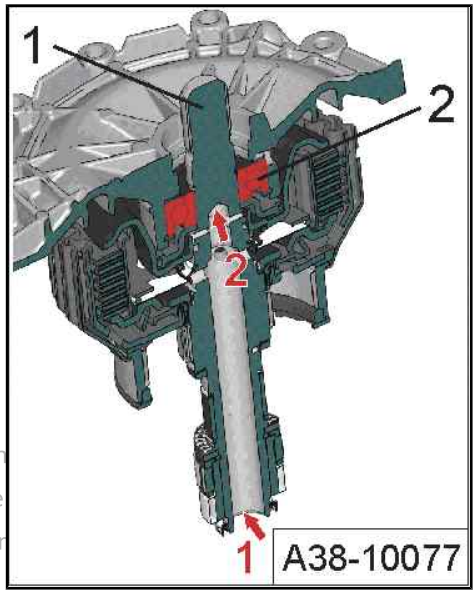

– Cool inside of hollow shaft -1- at seat -arrow 2- of input shaft ball bearing -2-, e.g. by applying ice spray through opening -arrow 1- left by removing oil pipe.

Note

- *The illustration shows a sectional view of the input shaft.*
- *The input shaft has to be cooled so that cover and ball bearing can be pressed off more easily without damage.*

Protected by copyright. Copying for private or commercial purposes, in
part is not permitted unless authorised by AUDI AG. AUDI AG does not guarantee
with respect to the correctness of information in this document. Copyr

– Clean surface of thrust piece -T40099- .
– Place input shaft on thrust piece.
• Contact surface of input shaft cover should be seated flush.
• There must be no metal particles or dirt between contact surface of input shaft cover and surface of thrust piece -T40099- .
– In addition, cool the input shaft from the outside -arrow- e.g. with ice spray.

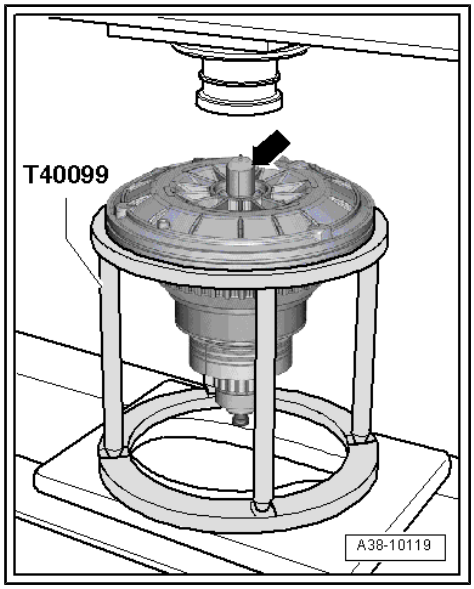

Note

The input shaft has to be cooled so that cover and ball bearing can be pressed off more easily without damage.

– Place input shaft together with thrust piece - T40099- on thrust plate of hydraulic press.

Note

The thrust piece - T40099- should rest as firmly as possible on the hydraulic press.

– Press input shaft out of cover with hydraulic press while holding input shaft from below.

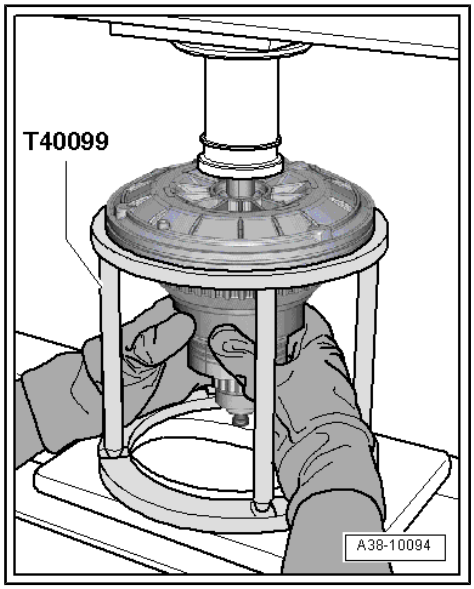

– Set down input shaft on assembly tool -T10219/1- .

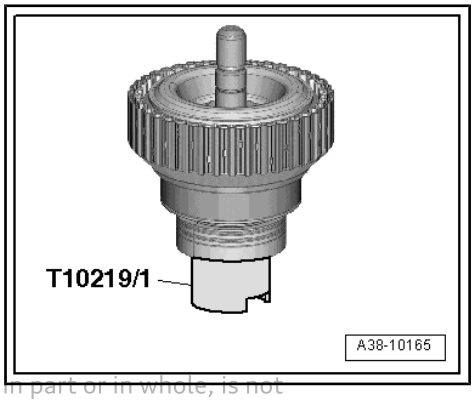

Protected by copyright. Copying for private or commercial purposes, in part or in whole, is not permitted unless authorised by AUDI AG. AUDI AG does not guarantee or accept any liability with respect to the correctness of information in this document. Copyright by AUDI AG.

Installing

– Renew ball bearing for input shaft ⇒ page 42 .

– Place input shaft cover on input shaft and press on as far as possible by hand.

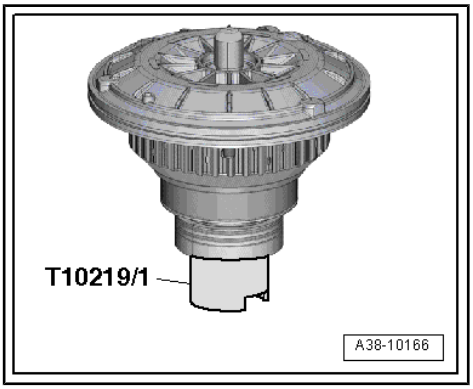

– Place input shaft -B- on thrust plate - VW 401- .

> **Caution**
>
> *Take care to keep the input shaft straight and aligned centrally when positioning it beneath the press tool of the hydraulic press, as the input shaft may otherwise tilt to one side when pressure is applied to the cover.*

Protected by copyright. Copying for private or commercial purposes, in part or in whole, is not permitted unless authorised by AUDI AG. AUDI AG does not guarantee or accept any liability with respect to the correctness of information in this document. Copyright by AUDI AG.

– Use hydraulic press and tube - VW 416 B- to press input shaft cover -A- all the way home on the input shaft.

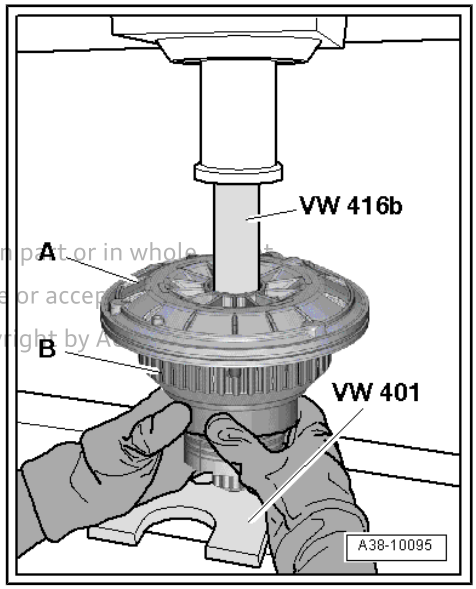

– Replace circlip -A- with a new one of the same thickness when installing.

• The circlip must be seated in the bottom of the groove.

– Assess wear on gearbox components ⇒ page 99 .

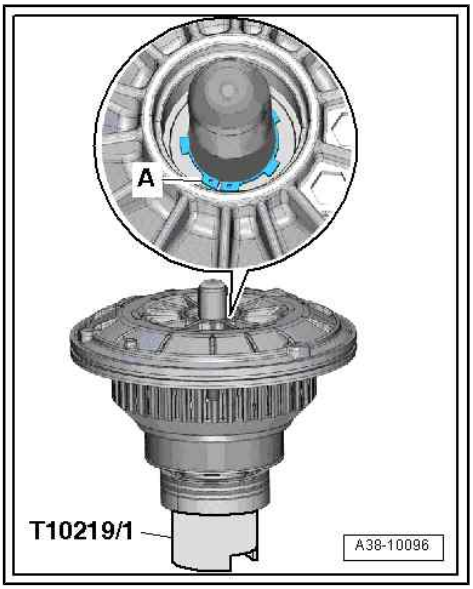

– Renew O-ring -2- on oil pipe.

- The oil pipe is pressed into the input shaft with the O-ring -2- first.
- You should feel oil pipe engage. Rotor vanes -arrow A- on oil pipe should be completely inside input shaft.

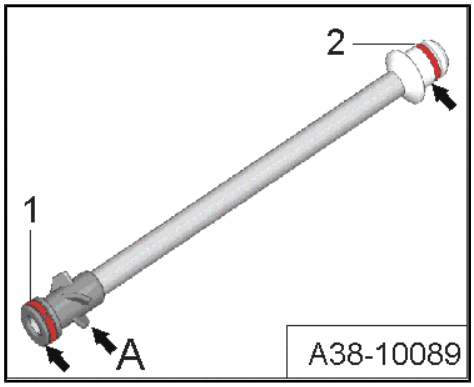

– Press oil pipe -arrow- down into input shaft as far as stop.

- With oil pipe fully inserted, distance -a- from end of oil pipe to input shaft should be approx. 11.5 mm.

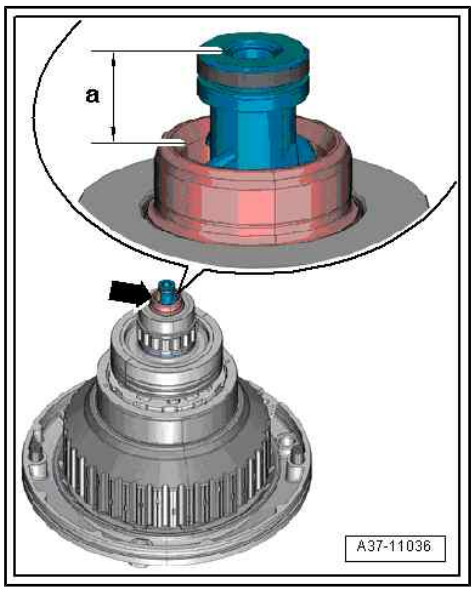

Note

- *If the distance is less, the oil pipe may be damaged (the end could have broken off if the oil pipe was pushed in too far).*
- *If the distance is larger, the oil pipe is not pushed in far enough.*

Caution

A damaged oil pipe will cause problems when driving off from a standstill or complete gearbox failure.

- ***The input shaft must not be laid down on the projecting oil pipe -arrow-.***

Protected by copyright. Copying for private or commercial purposes, in part or in whole, is not permitted unless authorised by AUDI AG. AUDI AG does not guarantee or accept any liability with respect to the correctness of information in this document. Copyright by AUDI AG.

1.14 Renewing ball bearing for input shaft

Special tools and workshop equipment required

- Thrust plate - VW 401-

♦ Tube - VW 416 B-

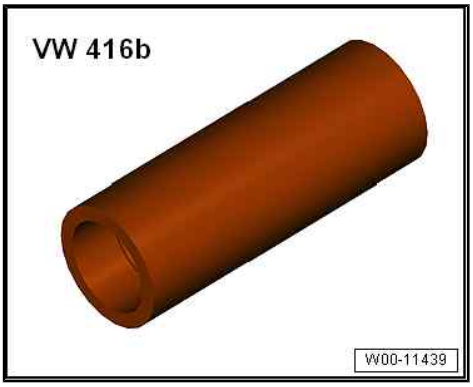

♦ Tube - 2010-

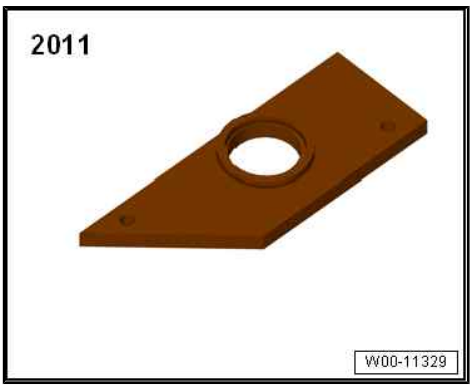

♦ Thrust piece - T40099-

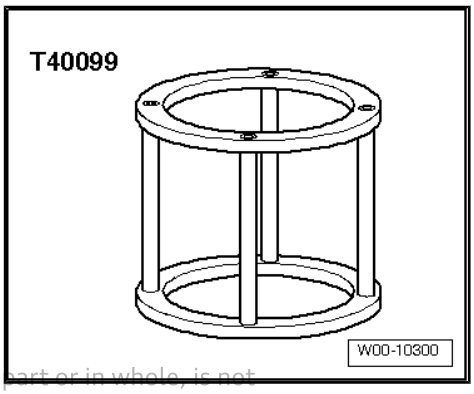

Protected by copyright. Copying for private or commercial purposes, in part or in whole, is not permitted unless authorised by AUDI AG. AUDI AG does not guarantee or accept any liability with respect to the correctness of information in this document. Copyri

Procedure

- Cover for input shaft is removed ⇒ page 37 .
- Thrust piece - T40099- must be modified for use with multi-tronic gearbox 0AW, front-wheel drive ⇒ page 30 .

– Remove circlip -1-.

– Measure and note down thickness of circlip once removed.

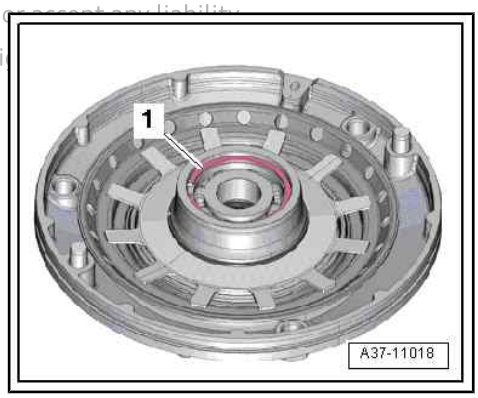

Note

When installing ball bearing, replace circlip with a new one of the same thickness.

– Position input shaft cover -1- on thrust piece - T40099- and place beneath hydraulic press.

– Press ball bearing for input shaft out of input shaft cover using tube - VW 416 B- .

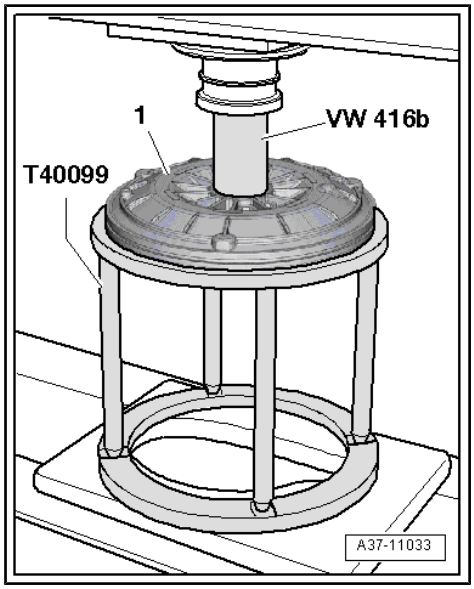

Note

- *In some cases, the input shaft ball bearing can be pressed out by hand without using the hydraulic press.*
- *The input shaft ball bearing must be renewed.*

Caution

Check the input shaft cover *⇒ page 101* *.*

Protected by copyright. Copying for private or commercial p
permitted unless authorised by AUDI AG. AUDI AG does no
with respect to the correctness of information in this docu

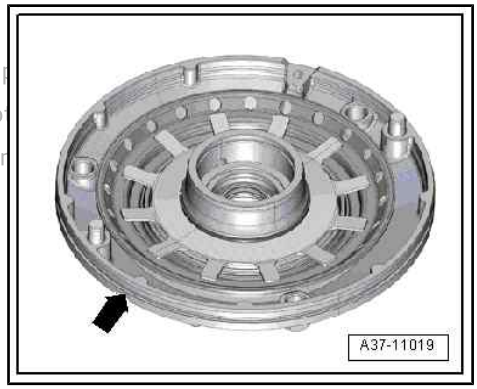

– If contact surface or cover is damaged, renew input shaft cover.

Note

New input shaft covers are already fitted with a new ball bearing.

– If contact surface and cover are not damaged, renew input shaft ball bearing -2-.

– Clean ball bearing seat in cover.

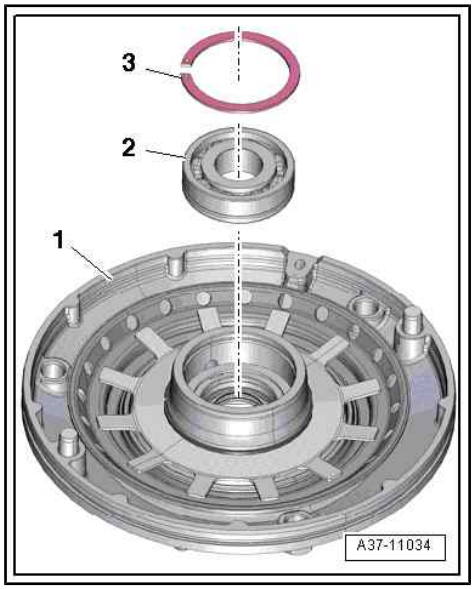

Caution

- *Ball bearing cage must face downwards into input shaft cover. Open side of ball bearing must face upwards, i.e. balls in bearing must be visible on insertion.*

– Fit ball bearing so that it is seated flush and then press in by hand straight and as far as possible.

Caution

Risk of damage to input shaft cover

- *To ensure that the input shaft cover rests flat on thrust plate - VW 401- make sure that the cast lug -arrow- is located in an aperture in the thrust plate.*

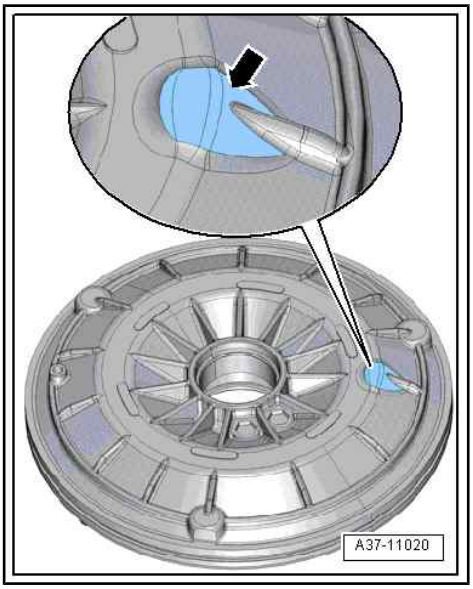

– Place input shaft cover on thrust plate - VW 401- .
– Press input shaft ball bearing in as far as stop using tube - 2010- .

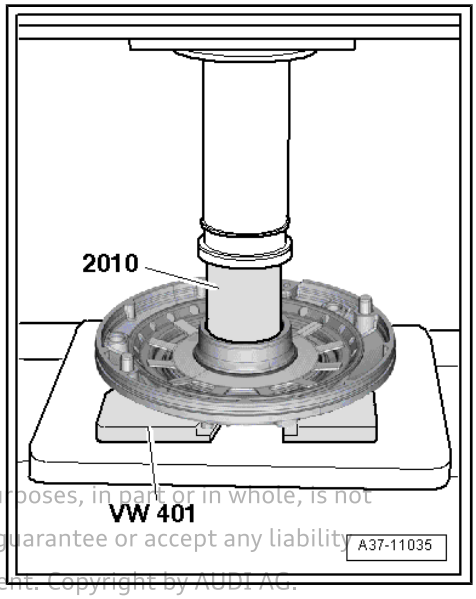

Protected by copyright. Copying for private or commercial purposes, in part or in whole, is not permitted unless authorised by AUDI AG. AUDI AG does not guarantee or accept any liability with respect to the correctness of information in this document. Copyright by AUDI AG.

– Replace circlip -1- with a new one of the same thickness when installing.
– Check correct positioning of the circlip. If necessary, press in the ball bearing further or use the next thinnest circlip.

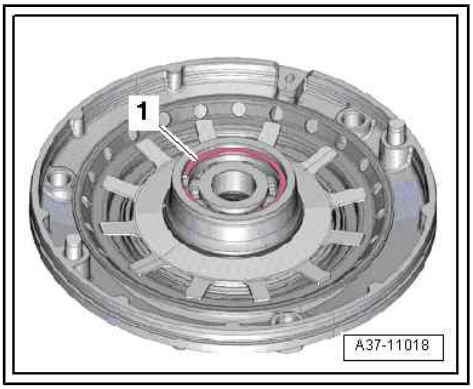

1.15 Removing and installing pulley set I and II

Special tools and workshop equipment required

- Tool set - T40387-

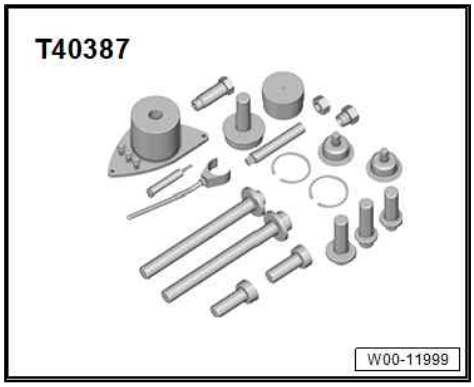

- Diesel extractor - VAS 5226-

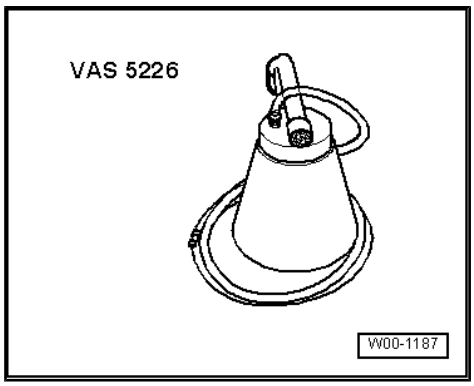

- Puller - T10055-

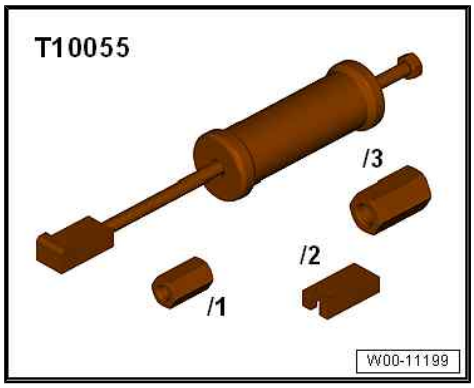

- Puller - T40132-

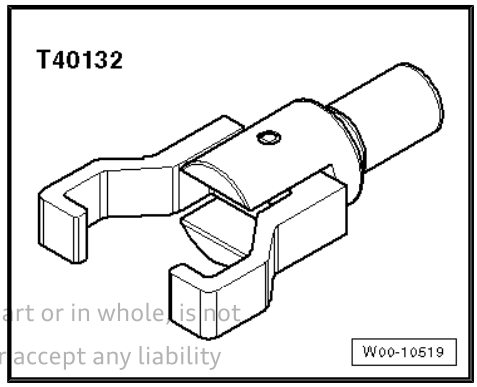

Protected by copyright. Copying for private or commercial purposes, in part or in whole is not permitted unless authorised by AUDI AG. AUDI AG does not guarantee or accept any liability with respect to the correctness of information in this document. Copyright by AUDI AG.

Removing

Note

- *⇒ "1 Repair instructions", page 1*
- *⇒ "1.3 Rules for cleanliness", page 3*

– Secure gearbox to engine and gearbox support ⇒ page 15 .

– Remove hydraulic control unit ⇒ page 129 .

Caution

Risk of damage to seal seats of pulley sets due to improper handling.

- ***Do not lever off sender rings.***
- ***Detach using only the tools listed.***

– Use puller - T40132- and puller - T10055- to remove sender wheel "I".

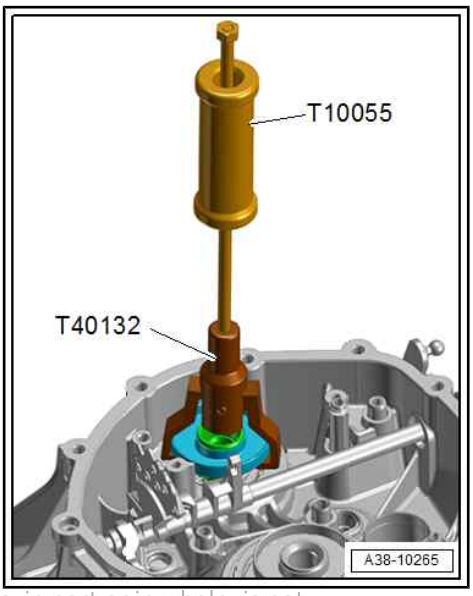

Protected by copyright. Copying for private or commercial purposes, in part or in whole, is not permitted unless authorised by AUDI AG. AUDI AG does not guarantee or accept any liability with respect to the correctness of information in this document. Copyright by AUDI A

– Use puller - T40132- and puller - T10055- to remove sender wheel "II".

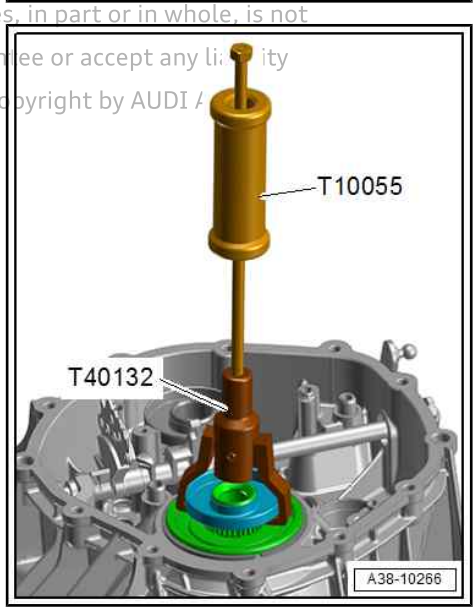

– Remove circlips -arrows-.

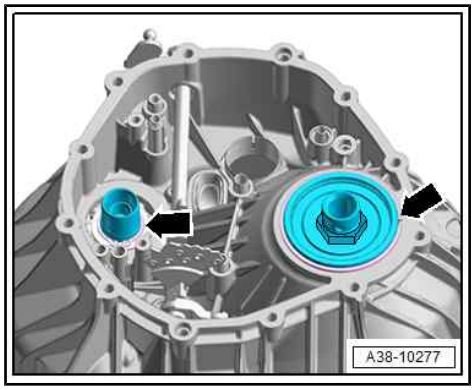

– Press selector shaft towards clutch end -arrow A- and secure in place with cable ties -arrow B-.

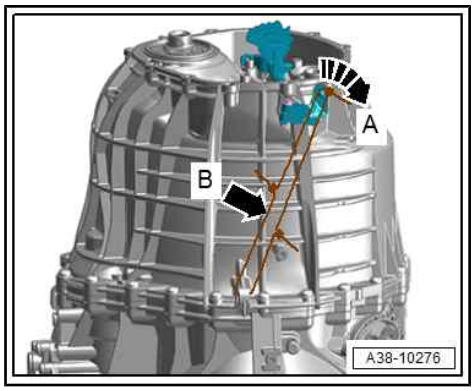

– Remove oil pipe -arrow-.

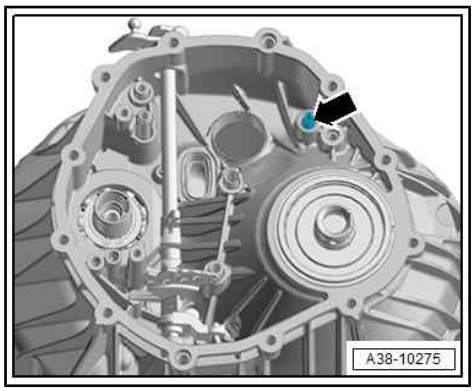

– Remove bolts -arrow- for intermediate housing.

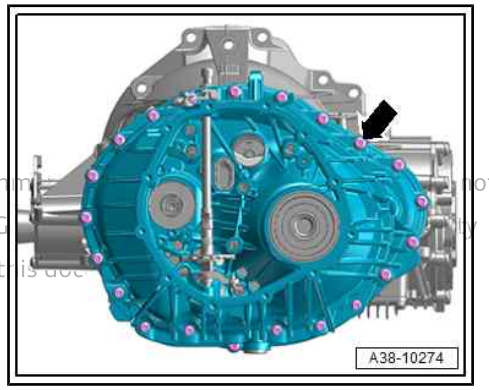

Protected by copyright. Copying for private or com not
permitted unless authorised by AUDI AG. AUDI AG y
with respect to the correctness of information in t is doc

– Place thrust piece - T40387/1-3- on bearing “G” for pulley set “II”.

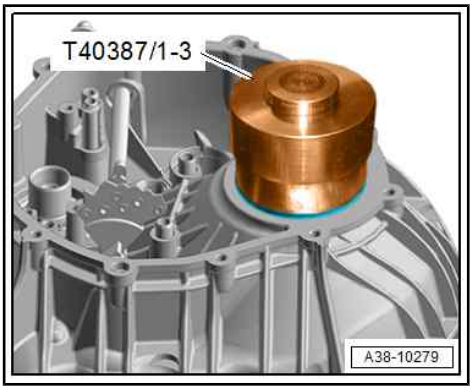

– Secure puller - T40387/1-1- to intermediate housing with bolts -arrows- (tighten to 20 Nm).
– Detach intermediate housing from bearing “G” using threaded spindle - T40387/1-2- .
– Remove intermediate housing, detach puller and remove it together with thrust piece - T40387/1-3- .

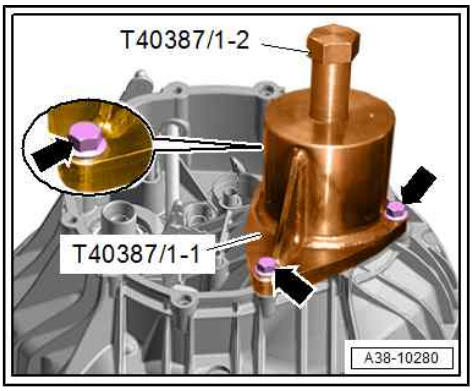

– Remove gasket -2- for intermediate housing.

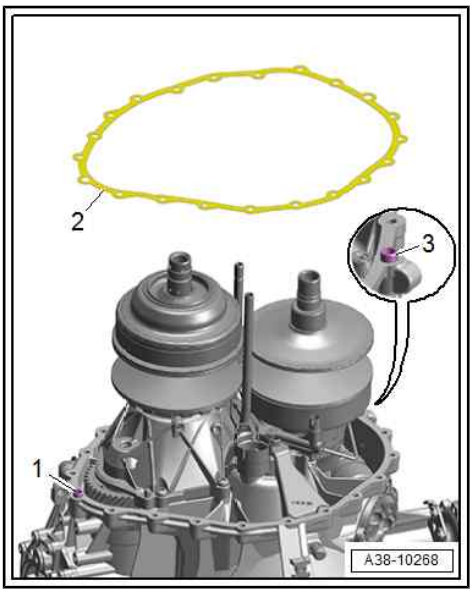

Protected by copyright. Copying for private or commercial purposes, in part or in whole, is not permitted unless authorised by AUDI AG. AUDI AG does not guarantee or accept any liability with respect to the correctness of information in this document. Copyright by AUDI AG.

– Carefully pull out retaining pins -arrows- and detach oil guide “I” -item 1-.

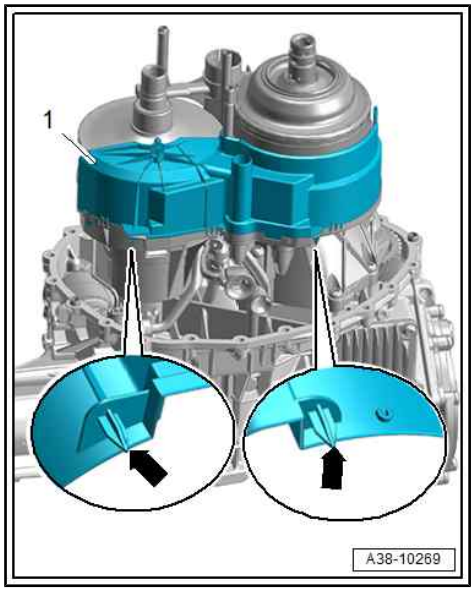

– Pull off oil guide “II” -item 1- upwards, paying attention to connection piece -arrow-.

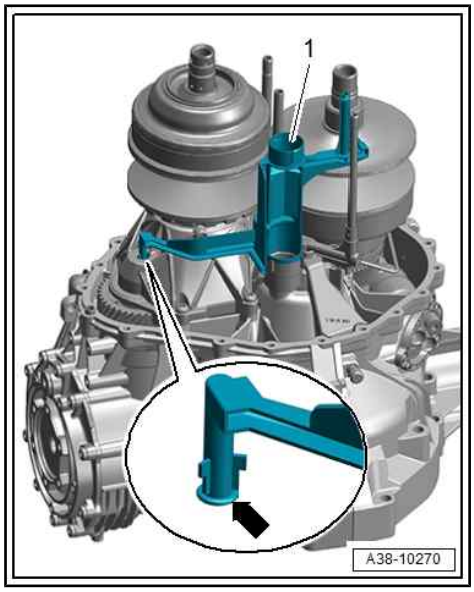

– Insert vacuum adapter - T40387/2- into pulley set “II” as far as stop and connect it to diesel extractor - VAS 5226- .

– Use hand pump to build up a vacuum.

• Pulley set “II” should open and chain should relax.

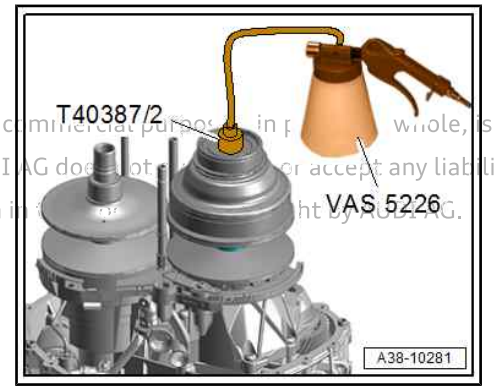

Protected by copyright. Copying for private or commercial purposes, in part or in whole, is not permitted unless authorised by AUDI AG. AUDI AG does not guarantee or accept any liability with respect to the correctness of information in this document. Copyright by AUDI AG.

Caution

Danger of injury as pulley set may close automatically.

- *Danger of trapping or pinching parts of the body.*
- *Lock pulley set in place immediately.*

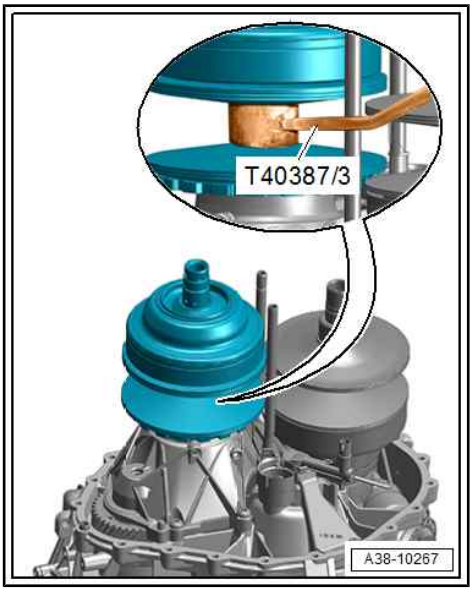

– Fit locking tool for pulley set - T40387/3- onto shaft of pulley set “II” and check that it is securely locked in place.

• The locking tool for pulley set remains fitted for the entire repair process.

– Dissipate vacuum and detach hand vacuum pump - VAS 6213- with vacuum adapter -T40387/2- .

– Unclip guide rail -2- from oil pipe -1-.

Protected by copyright. Copying for private or commercial purpose
permitted unless authorised by AUDI AG. AUDI AG does not guara
with respect to the correctness of information in this document. C

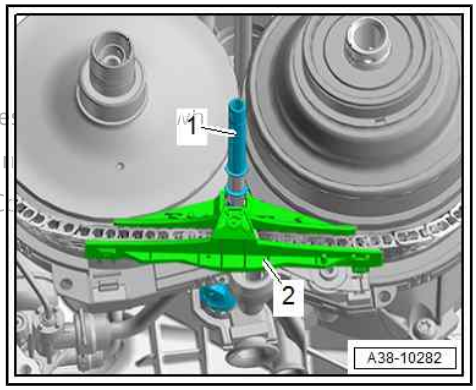

Caution

Risk of accident caused by weight of pulley sets.

- *Perform the following work with the assistance of a second mechanic.*

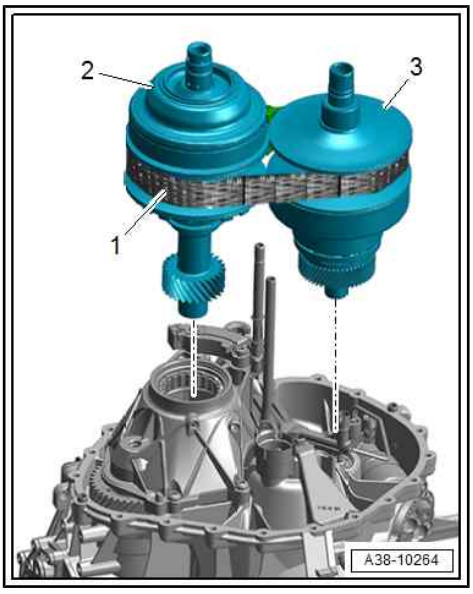

– Lift out pulley set “I” -item 3- together with pulley set “II” -item 2- and place on a soft surface.

– Remove chain -1- if necessary.

Installing

Tightening torques

- ⇒ “1.4 Exploded view - intermediate housing”, page 21
- ⇒ “1.5 Exploded view - pulley set I and II”, page 22

Note

When renewing pulley set “I”, you will need to re-determine the correct circlip for bearing “E”.

When renewing pulley set “II”, you will need to re-determine the correct circlip for bearing “G”.

Protected by copyright. Copying for private or commercial purposes, in whole or in part, is not permitted unless authorised by AUDI AG. AUDI AG does not guarantee or assume any liability with respect to the correctness of information in this document. Copyright by AUDI AG.

- Pulley set “II” locked in place with locking tool for pulley set -T40387/3- .
- Chain and guide rail in installation position.

– Assess wear level ⇒ page 73 .

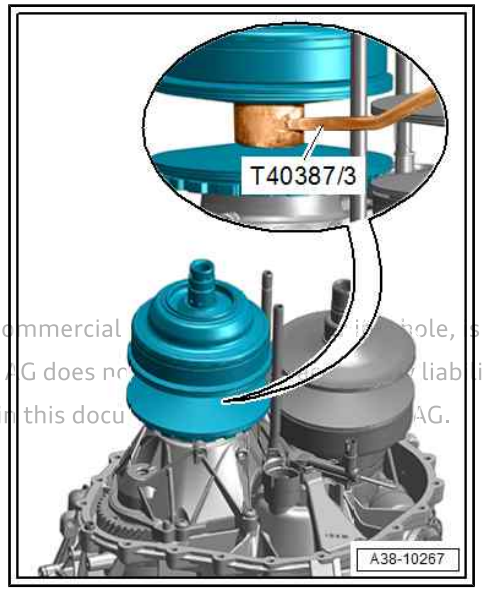

> **Caution**
>
> *Risk of accident caused by weight of pulley sets.*
>
> ◆ *Perform the following work with the assistance of a second mechanic.*

– Carefully insert pulley set “I” -item 3- together with pulley set “II” -item 2- into roller bearings and splines.

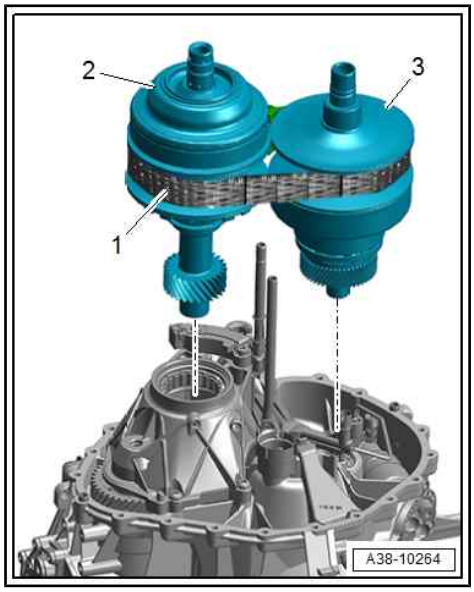

– Clip guide rail -2- onto oil pipe -1-.

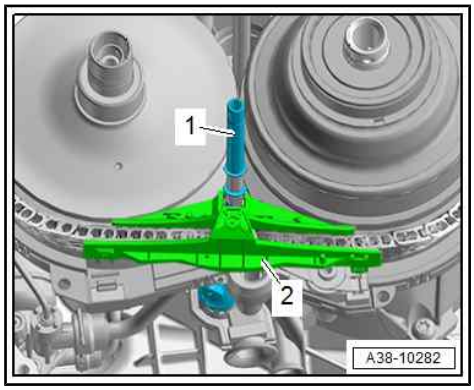

Protected by copyright. Copying for private or commercial purposes, in part or in whole, is not permitted unless authorised by AUDI AG. AUDI AG does not guarantee or assume any liability with respect to the correctness of information in this document. Copyright by AUDI AG.

– Insert vacuum adapter - T40387/2- into pulley set “II” as far as stop and connect it to diesel extractor - VAS 5226- .
– Use hand vacuum pump to build up a vacuum.
• The pulley set will open.

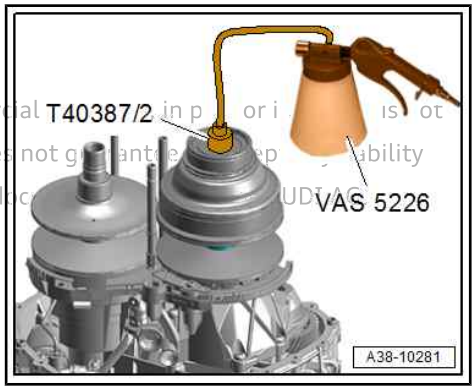

– Detach locking tool for pulley set “II” -T40387/3- .
– Slowly dissipate vacuum and detach hand vacuum pump - VAS 6213- with vacuum adapter -T40387/2- .
• The pulley set should close and the chain should tighten.

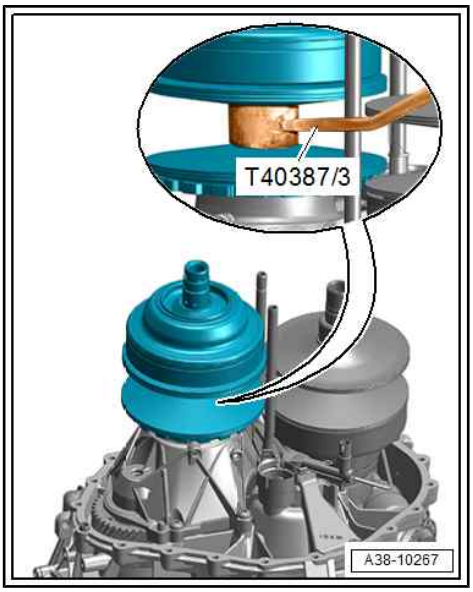

– Move oil guide “II” -item 1- into installation position; to do so, carefully insert connection piece -arrow-.

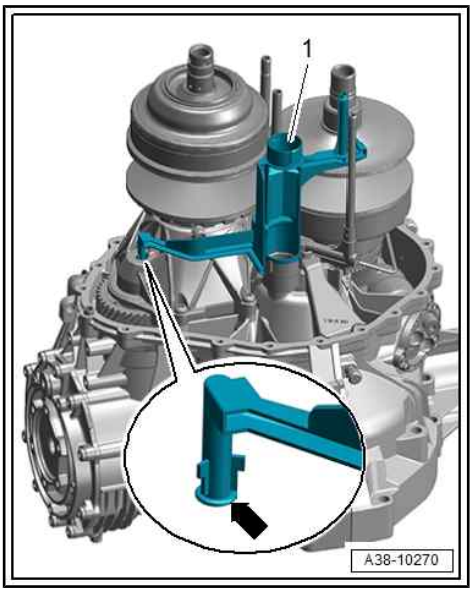

– Insert oil guide “I” -item 1-; retaining pins -arrows- must engage in holes on plastic pan.

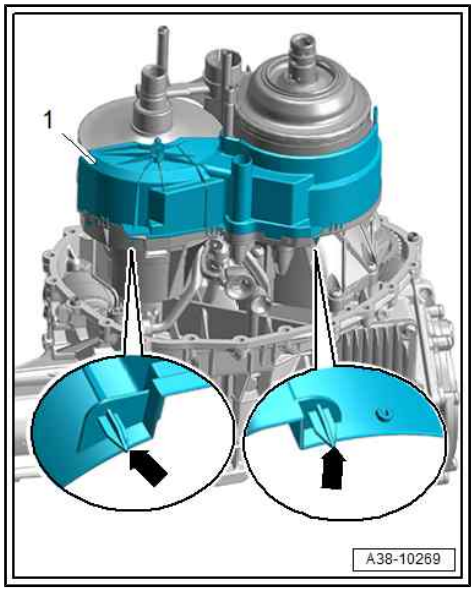

– Fit gasket -2- for intermediate housing.
– Check that dowel sleeves -1- and -3- are fitted and insert if necessary.

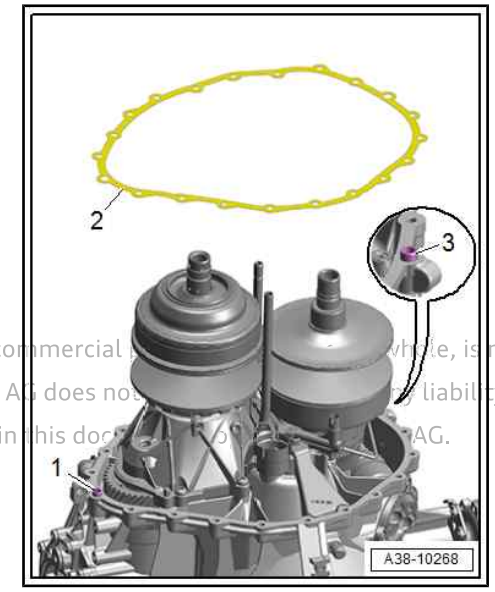

Protected by copyright. Copying for private or commercial purposes, in whole or in part, is not permitted unless authorised by AUDI AG. AUDI AG does not guarantee or assume any liability with respect to the correctness of information in this document. © 2019 AUDI AG.

– Screw in guide bolts - T40288- .

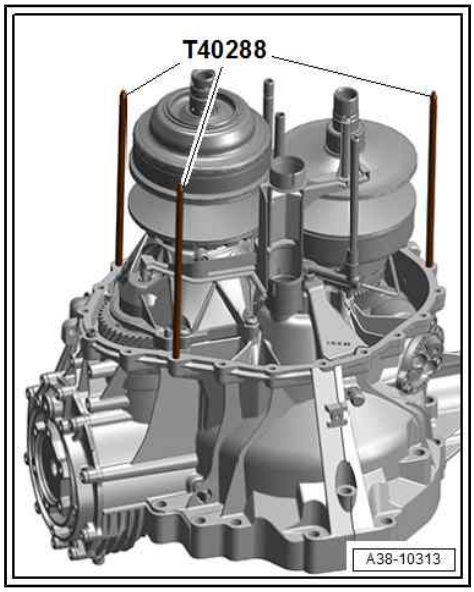

Protected by copyright. Copying for private or commercial purposes, in part or in [illegible] not permitted unless authorised by AUDI AG. AUDI AG does not guarantee or accept any liability with respect to the correctness of information in this document. Copyright by AUDI [illegible]

– Insert puller sleeve - T40387/1-4- with threaded spindle - T40387/1-6- into bearing “G” -item 1- and secure with circlip - T40387/1-8- .

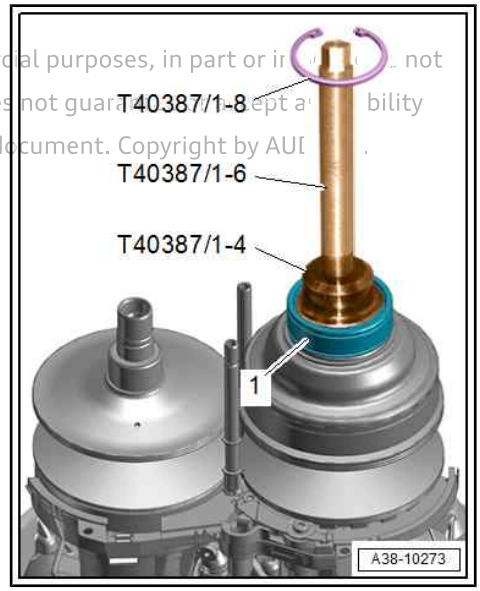

– Fit intermediate housing; guide oil guide “II” suction-jet pump and locating pin for parking lock when doing so.

– Secure puller - T40387/1-1- with sleeve - T40387/1-5- to intermediate housing using bolts -arrows- (tighten to 20 Nm).

• When carrying out the following step, keep checking that the locating pin for the parking lock moves freely; if necessary, rotate dual-mass flywheel slightly.

– Press intermediate housing onto bearing “G” using nut - T40387/1-7- ; counterhold at threaded spindle - T40387/1-6- when doing so.

– Unscrew nut from spindle, and unscrew and detach puller.

• Puller sleeve with threaded spindle and circlip remain fitted.

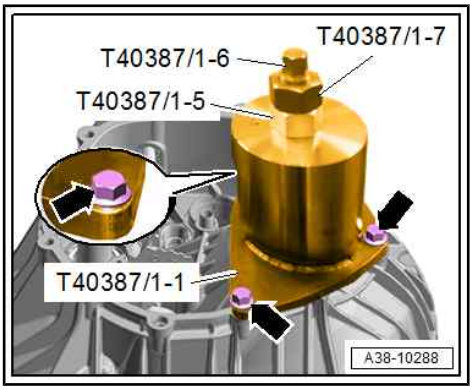

– Select circlip -1- from repair kit “circlips for bearing G” which just fits in groove -arrow- on bearing “G” -item 2-.

– Fit circlip.

Note

If pulley set “II” and bearing “G” have slid down due to a loose bearing seat, you will need to pull them upwards by hand to determine correct circlip.

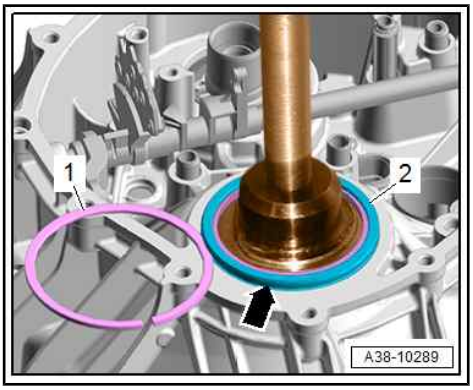

– Remove circlip - T40387/1-8- and detach threaded spindle - T40387/1-6- with puller sleeve - T40387/1-4- from bearing “G” -item 1-.

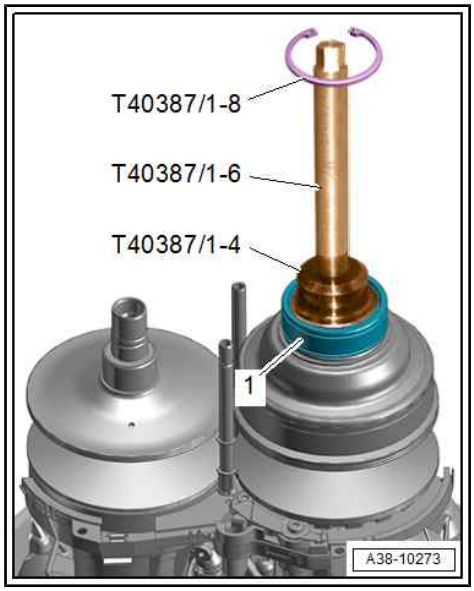

– Tighten bolts -arrows- for intermediate housing.

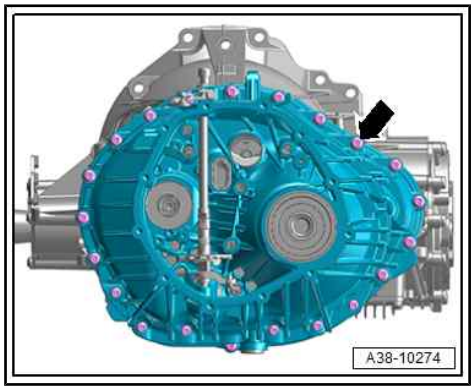

– Turn engine and gearbox support - VAS 6095A- to rotate gearbox by 180°.

• Open side now faces downwards; pulley set “I” will now slide all the way into bearing “E”.

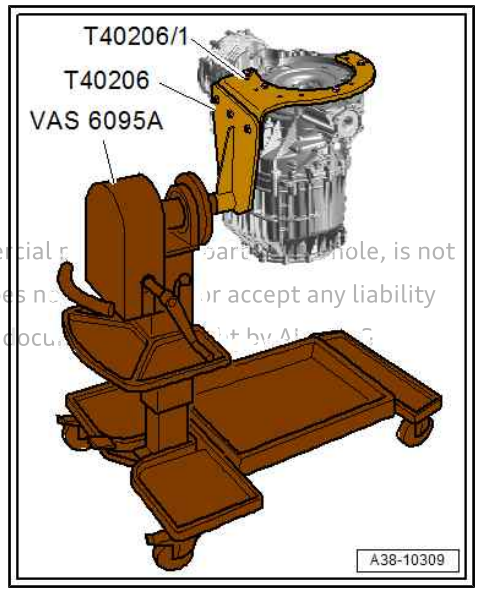

Protected by copyright. Copying for private or commercial p[illegible] part [illegible] whole, is not permitted unless authorised by AUDI AG. AUDI AG does n[illegible] or accept any liability with respect to the correctness of information in this docu[illegible]

– Select circlip -1- from repair kit “circlips for bearing E” which just fits in groove on pulley set “I” above bearing “E” -item 2-.
– Install circlip using circlip pliers.
– Turn engine and gearbox support - VAS 6095A- to rotate gearbox by 180° back to original position.
• Open side of gearbox now faces upwards.

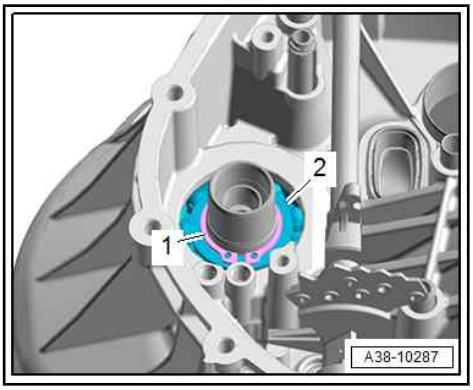

– Carefully insert oil pipe -arrow- as far as stop.
• Oil pipe is correctly inserted when it protrudes approx. 4.5 mm from housing.

Protected by copyright. Copying for private or commercial purposes, in part or in whole, is not permitted unless authorised by AUDI AG. AUDI AG does not guarantee or accept any liability with respect to the correctness of information in this document. Copyright by AUDI AG.

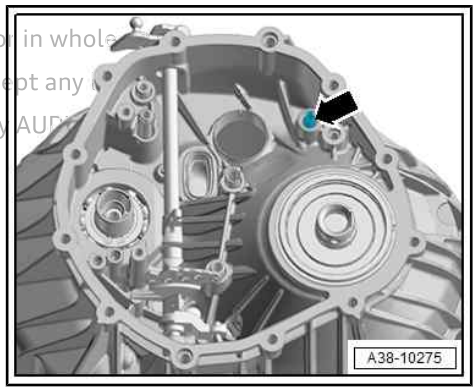

– Detach cable tie -arrow B- from selector shaft.

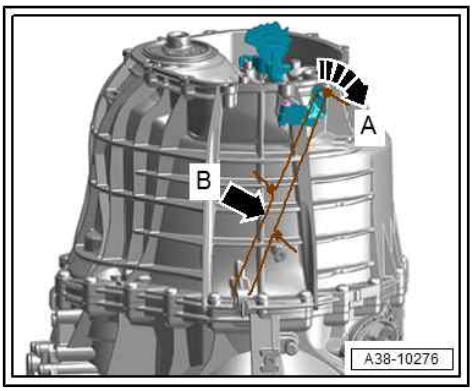

• Open side of sender wheel faces upwards.
– Using thrust piece - T40387/11- , press sender wheel -arrow- onto shaft of pulley set “II” as far as stop.

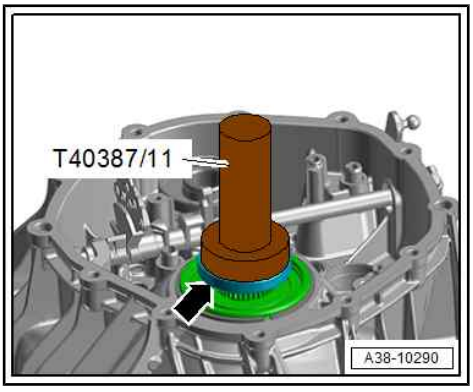

- Open side of sender wheel faces upwards.

– Using thrust piece - T40387/10- , press sender wheel -arrow- onto shaft of pulley set “I” as far as stop.

– Install hydraulic control unit ⇒ page 129 .

– Install automatic gearbox control unit - J217- ⇒ page 127 .

– Install end cover ⇒ page 28 .

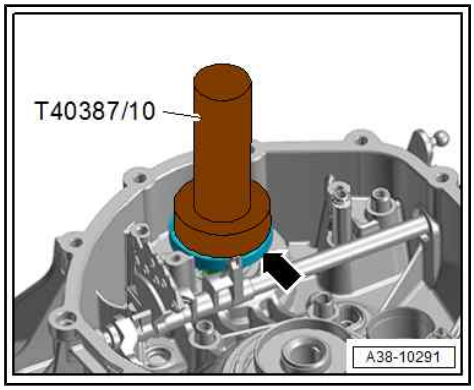

1.16 Removing and installing bearings

⇒ “1.16.1 Removing and installing bearing C for pulley set I”, page 58

⇒ “1.16.2 Removing and installing bearing D and E for pulley set I”, page 61

⇒ “1.16.4 Removing and installing bearing 10 for pulley set II”, page 67

⇒ “1.16.5 Renewing bearing flange with bearing F and 11”, page 70

Protected by copyright. Copying for private or commercial purposes, in part or in whole, is not permitted unless authorised by AUDI AG. AUDI AG does not guarantee or accept any liability with respect to the correctness of information in this document. Copyright by AUDI AG.

1.16.1 Removing and installing bearing C for pulley set I

Special tools and workshop equipment required

- -Spezialwerkzeugkoffer T40387-
- Internal puller, e.g. Kukko 21-5 - VAS 251 611-

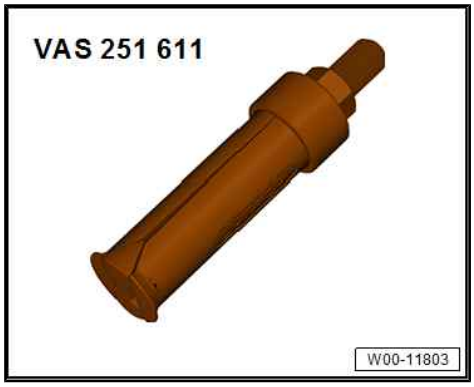

- Counter-support, e.g. Kukko 22/-2 - VAS 251 623-

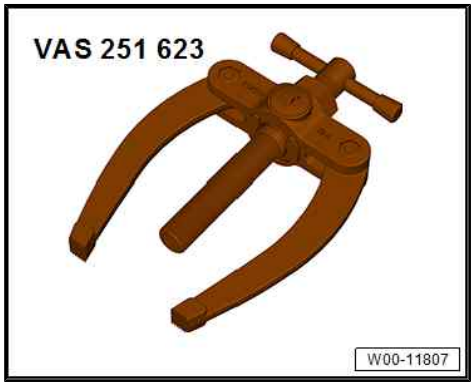

♦ Tool set - T40387-

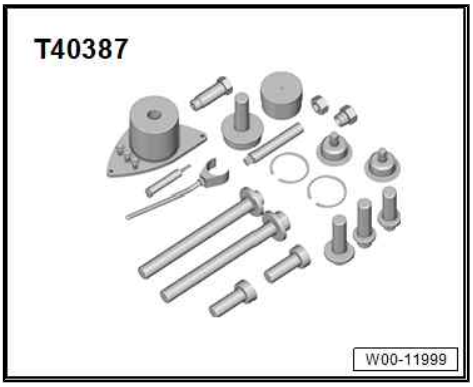

Removing

- Pulley set “I” and “II” removed ⇒ page 45

– Remove bolts -arrows- on ATF filter -1-.

– Pull ATF filter out of gearbox housing.

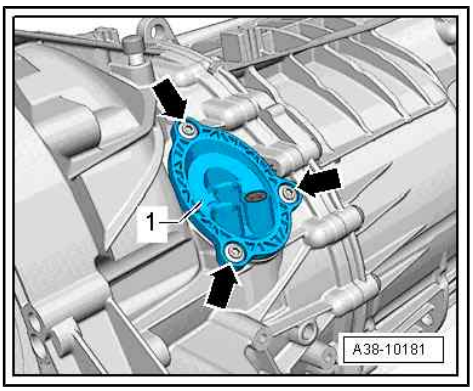

– Unscrew bolt -1- and detach securing clip -2-.

– Detach oil pipe -3- from valve unit -4- and press to one side.

– Unscrew bolts -arrows- and detach valve unit.

Protected by copyright. Copying for private or commercial purposes,
permitted unless authorised by AUDI AG. AUDI AG does not guarant
with respect to the correctness of information in this document. Cop

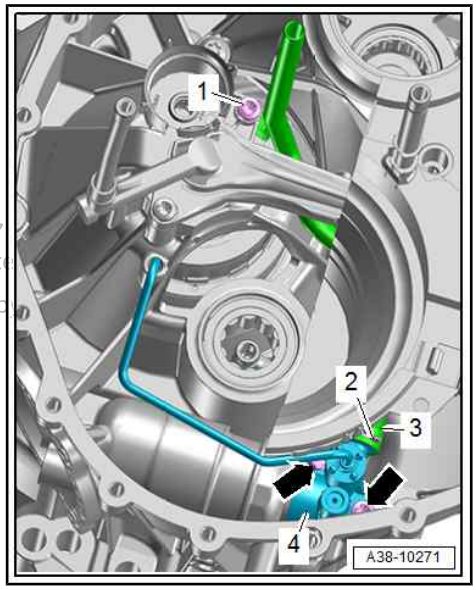

– Prise off circlip -arrow- using a small screwdriver.

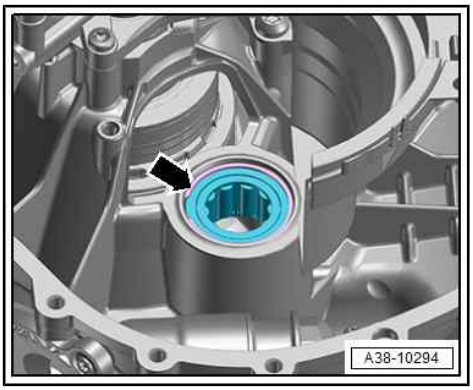

– Using internal puller, e.g. Kukko 21-5 - VAS 251 611- , and counter-support, e.g. Kukko 22-2 - VAS 251 623- , pull out bearing “C” for pulley set “I”.

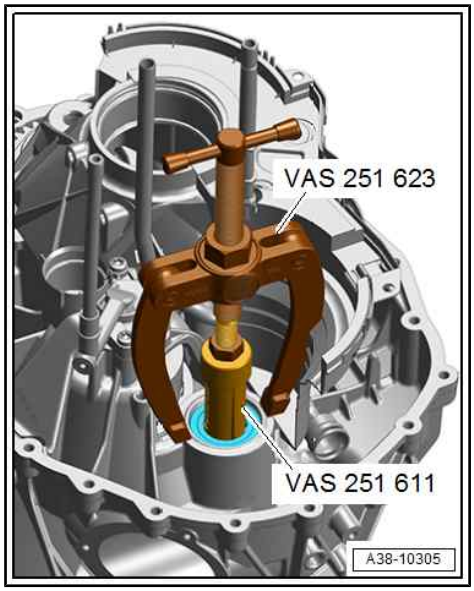

Installing

Installation is carried out in reverse order; note the following:

– Press in bearing “C” for pulley set “I” with thrust piece - T40387/7- as far as stop.

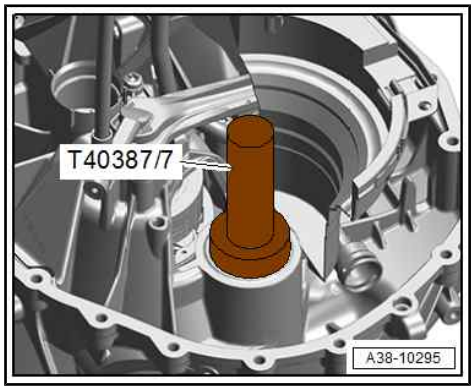

– Fit circlip -arrow-.

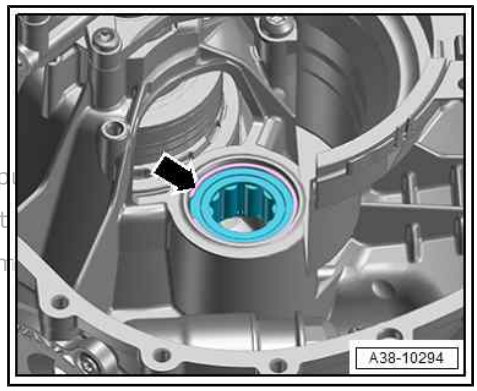

Protected by copyright. Copying for private or commercial p
permitted unless authorised by AUDI AG. AUDI AG does not
with respect to the correctness of information in this docum

– Move valve unit -4- into installation position and tighten bolts -arrows-.
– Press oil pipe -3- onto valve unit and secure with securing clip -2-.
– Tighten bolt -1-.
– Install ATF filter ⇒ Gearbox; Rep. gr. 37 ; ATF circuit; Removing and installing ATF filter .

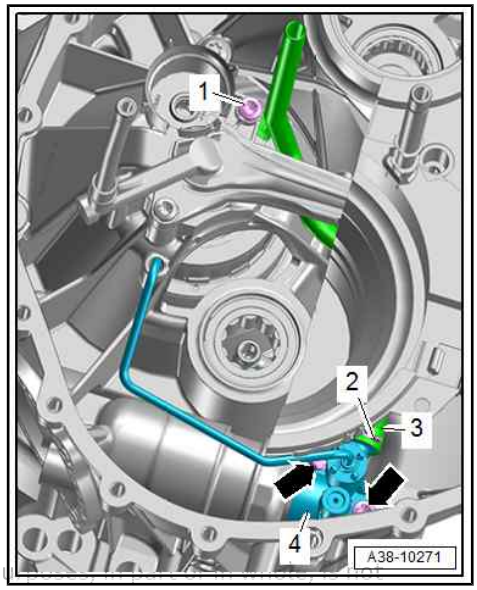

Protected by copyright. Copying for private or commercial purposes, in part or in whole, is not permitted unless authorised by AUDI AG. AUDI AG does not guarantee or accept any liability with respect to the correctness of information in this document. Copyright by AUDI AG.

1.16.2 Removing and installing bearing D and E for pulley set I

Special tools and workshop equipment required

♦ Internal puller, e.g. Kukko 21-5 - VAS 251 611-

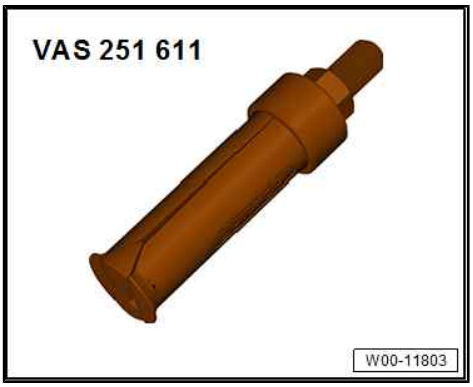

♦ Counter-support, e.g. Kukko 22/-2 - VAS 251 623-

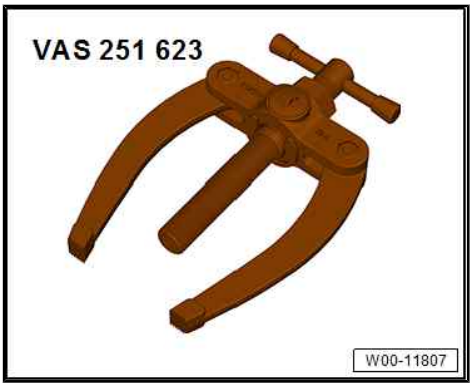

♦ Tool set - T40387-

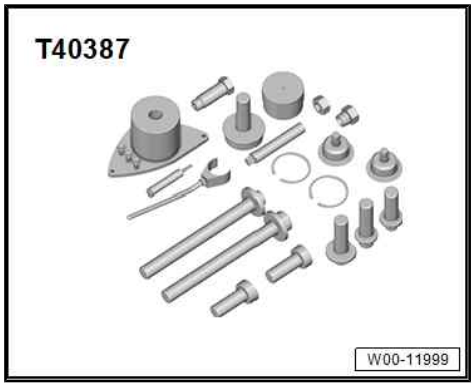

Removing

- Intermediate housing removed and placed on work bench ⇒ page 45 .

– Remove circlip -arrow- using circlip pliers.

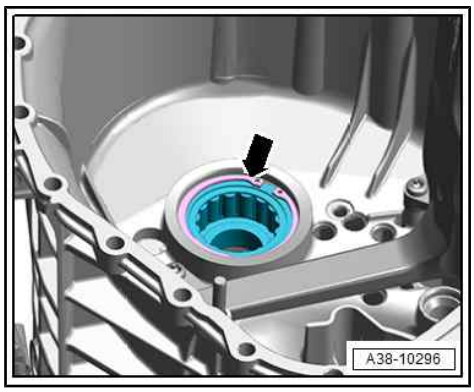

– Using internal puller, e.g. Kukko 21-5 - VAS 251 611- , and counter-support, e.g. Kukko 22-2 - VAS 251 623- , pull bearing “D” and “E” out of intermediate housing.

Protected by copyright. Copying for private or commercial
permitted unless authorised by AUDI AG. AUDI AG do
with respect to the correctness of information in this

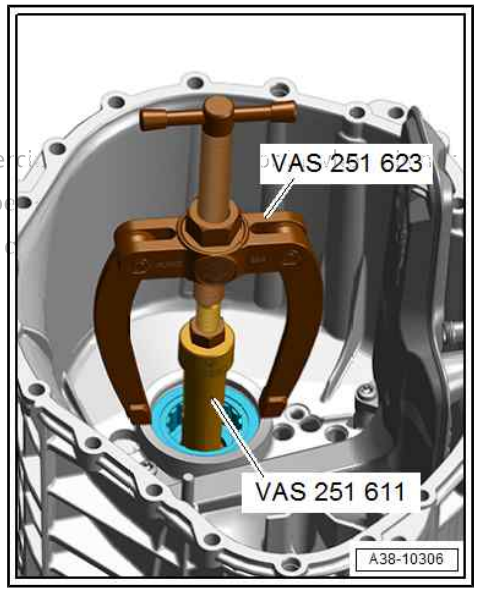

Installing

– Pay attention to installation position of bearing “E”.

- Grooves -arrow- in inner bearing race face upwards towards tool.

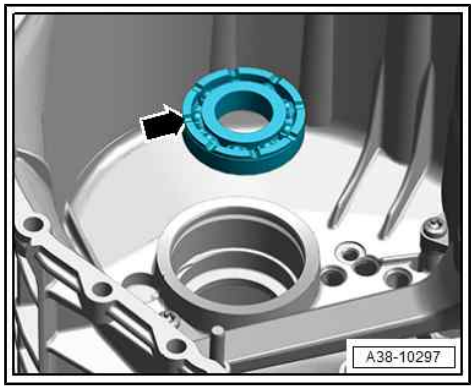

– Press in bearing “E” for pulley set “I” with thrust piece - T40387/8- as far as stop.

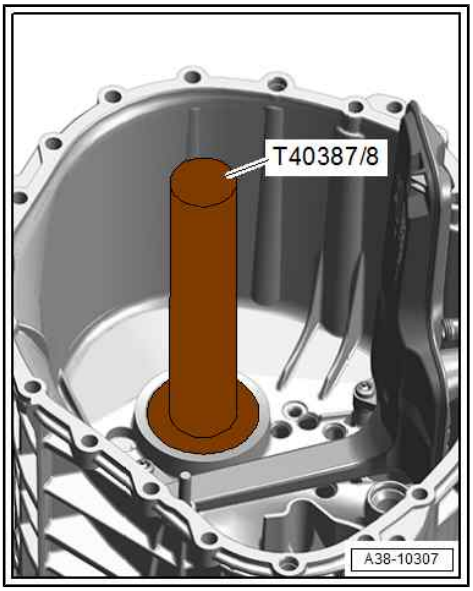

– Press in bearing “D” for pulley set “I” with thrust piece - T40387/9- as far as stop.

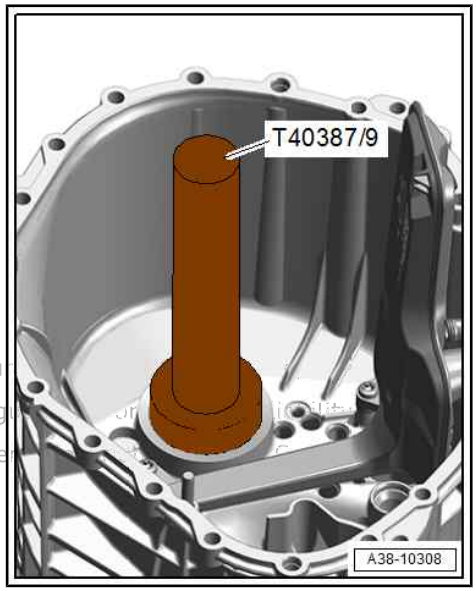

Protected by copyright. Copying for private or commercial pu
permitted unless authorised by AUDI AG. AUDI AG does not g
with respect to the correctness of information in this docume

– Install circlip -arrow- using circlip pliers.

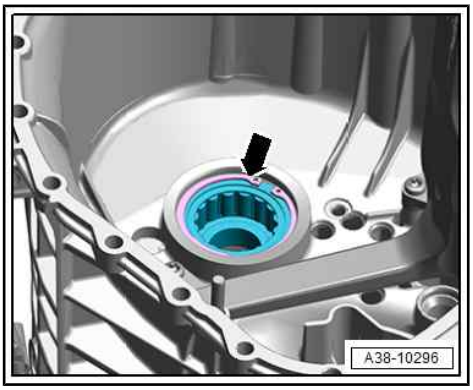

1.16.3 Removing and installing bearing “G”

Special tools and workshop equipment required

- Torque wrench - V.A.G 1601-

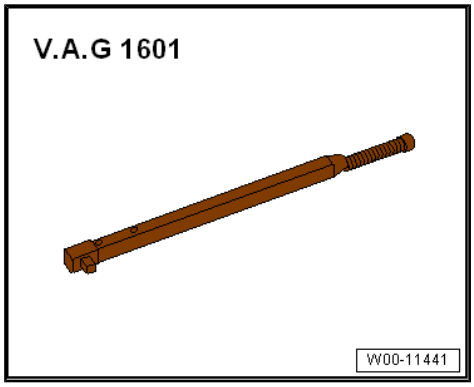

- Tool set - T40387-

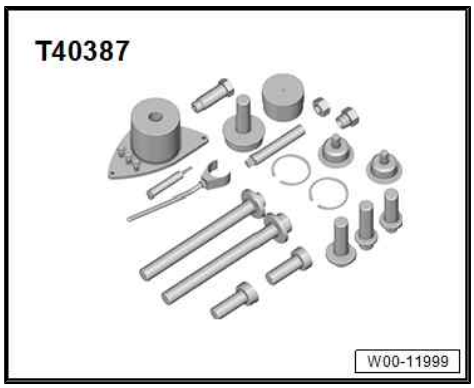

- Splitter, e.g. KUKKO 17-2 - VAS 251 411- with puller, e.g. KUKKO 18-2 - VAS 251 419-

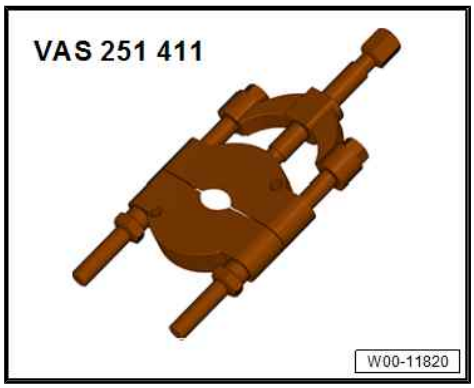

- Pressure washer - VW447H-

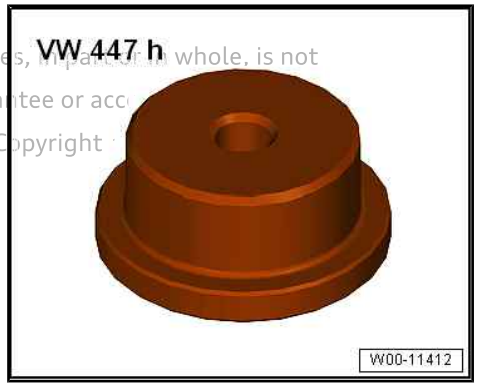

Protected by copyright. Copying for private or commercial purposes, in part or in whole, is not permitted unless authorised by AUDI AG. AUDI AG does not guarantee or acc
with respect to the correctness of information in this document. Copyright

♦ Pressure sleeve - T40103-

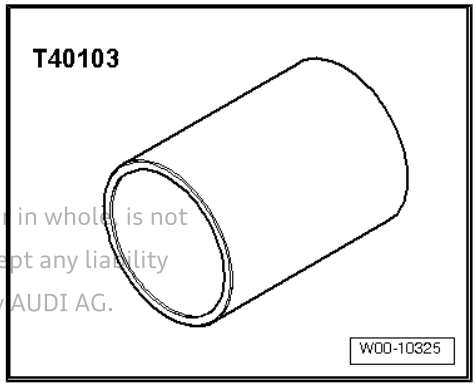

Protected by copyright. Copying for private or commercial purposes, in part or in whole, is not permitted unless authorised by AUDI AG. AUDI AG does not guarantee or accept any liability with respect to the correctness of information in this document. Copyright by AUDI AG.

♦ Workshop press - VAS 6654-

Removing

– Secure gearbox to engine and gearbox support ⇒ page 15 .

– Remove hydraulic control unit ⇒ page 129 .

> ⚠ **Caution**
>
> ***Risk of damage to seal seats of pulley sets due to improper handling.***
>
> - ***Do not lever off sender rings.***
> - ***Detach using only the tools listed.***

– Use puller - T40132- and puller - T10055- to remove sender wheel “I”.

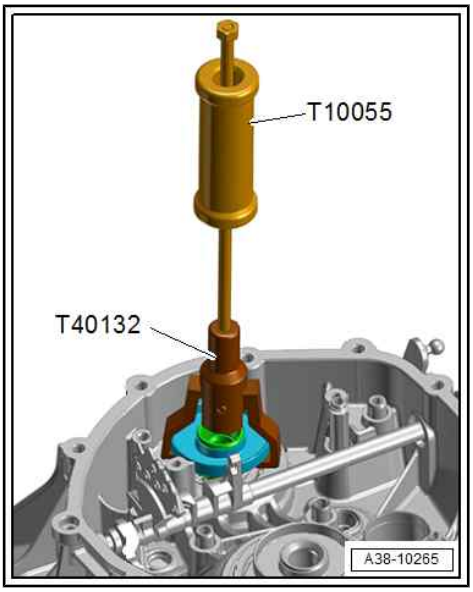

– Use puller - T40132- and puller - T10055- to remove sender wheel “II”.

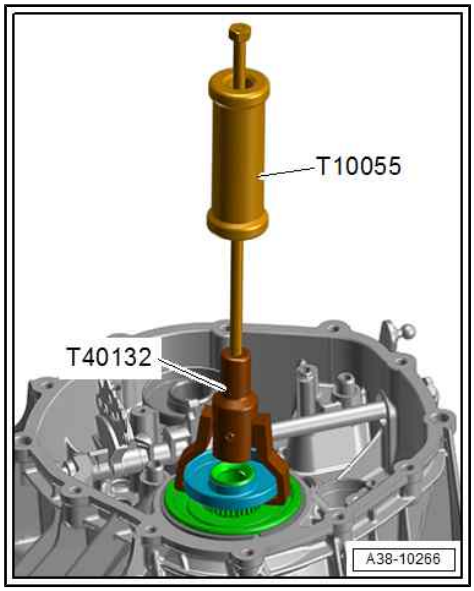

– Engage parking lock; to do so turn selector lever anti-clockwise as far as stop and secure with cable tie, as shown.

Protected by copyright. Copying for private or comm ole, is not permitted unless authorised by AUDI AG. AUDI AG ability with respect to the correctness of information in th .

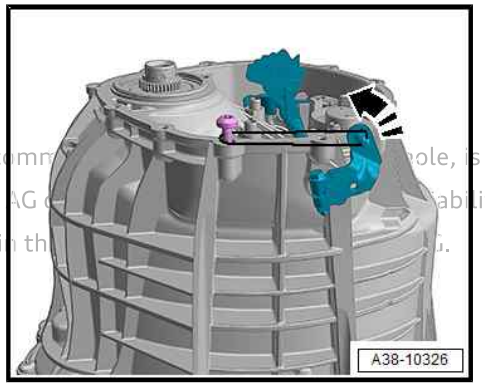

– Remove peening on securing nut.

> **Caution**
>
> *Risk of damage to pulley set and parking lock*
>
> - *The securing nut for bearing G has a left-hand thread and is loosened by turning it clockwise.*
> - *The release torque should not be more than 450 Nm; heat the securing nut with a hot air blower if necessary.*

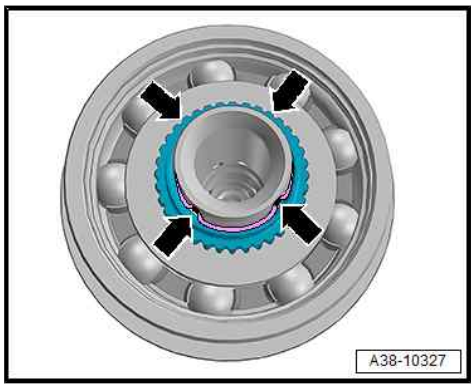

– Loosen nut in clockwise direction using torque wrench - V.A.G 1601- .

– Remove pulley set
⇒ “1.15 Removing and installing pulley set I and II”, page 45 .

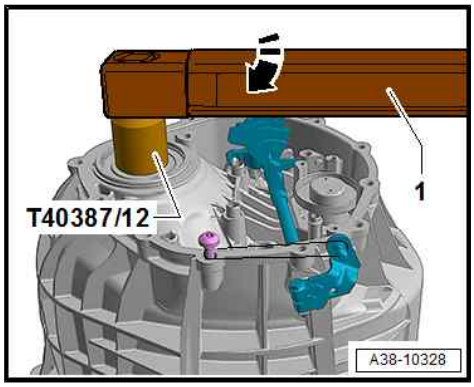

– Pull bearing G -1- off pulley set using splitter, e.g. KUKKO 17-2 - VAS 251 411- -A-, puller, e.g. KUKKO 18-2 - VAS 251 419- -B- and pressure washer - VW447H- -C-, as shown.

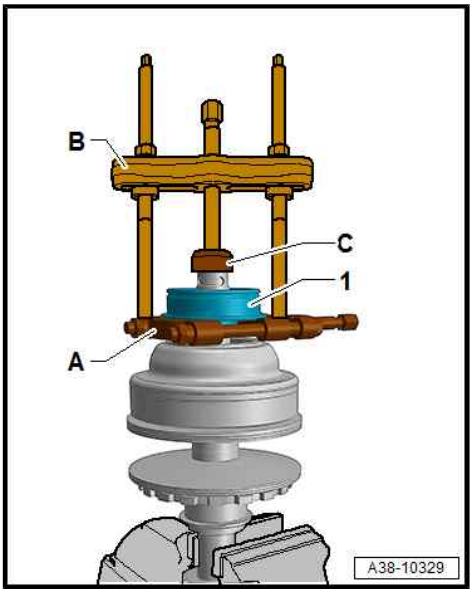

Installing

– Press bearing G -1- on as far as stop using workshop press - VAS 6654- -A- and pressure sleeve - T40103- -B-.

– Install pulley set and gearbox housing
⇒ “1.15 Removing and installing pulley set I and II”, page 45 .

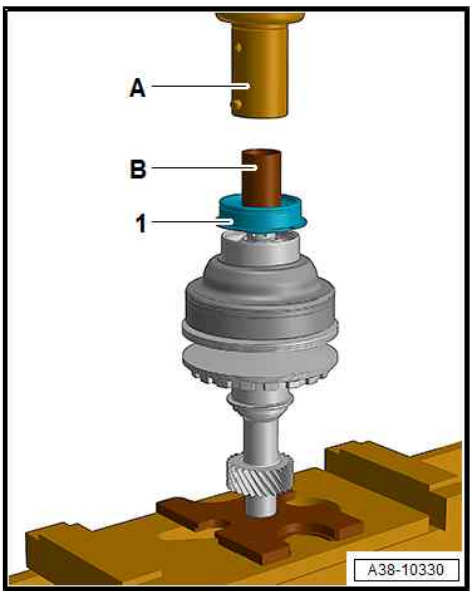

– Change position of square drive of torque wrench - V.A.G 1601- to position for tightening left-hand threads.

– Engage parking lock; to do so turn selector lever anti-clockwise as far as stop and secure with cable tie, as shown.

– Tighten securing bolt for bearing G in anti-clockwise direction following specified tightening sequence ⇒ page 23 .

– Perform remaining installation operations in reverse order of removal
⇒ “1.15 Removing and installing pulley set I and II”, page 45 .

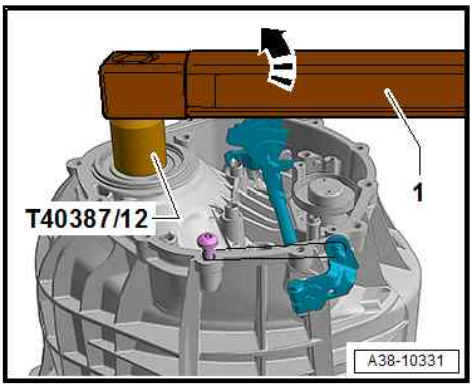

1.16.4 Removing and installing bearing 10 for pulley set II

Special tools and workshop equipment required

Protected by copyright. Copying for private or commercial purposes, in part or in whole, is not permitted unless authorised by AUDI AG. AUDI AG does not guarantee or accept any liability with respect to the correctness of information in this document. Copyright by AUDI AG.

- Internal puller, e.g. Kukko 21-6 - VAS 251 613-

Protected by copyright. Copying for private or commercial purposes, in part or in whole, is not permitted unless authorised by AUDI AG. AUDI AG does not guarantee or accept any liability with respect to the correctness of information in this document. Copyright by AUDI AG.

- Counter-support, e.g. Kukko 22/-2 - VAS 251 623-

- Tool set - T40387-

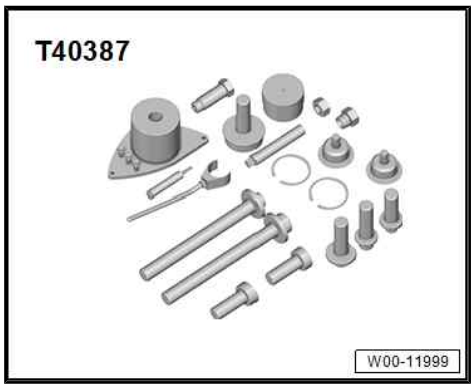

Removing

– Suction-jet pump removed ⇒ page 72 .

– Unscrew bolts -arrows- and detach bearing flange -1-.

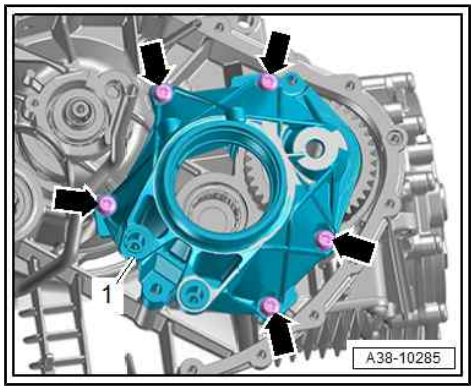

– Prise off circlip -arrow- using a small screwdriver.

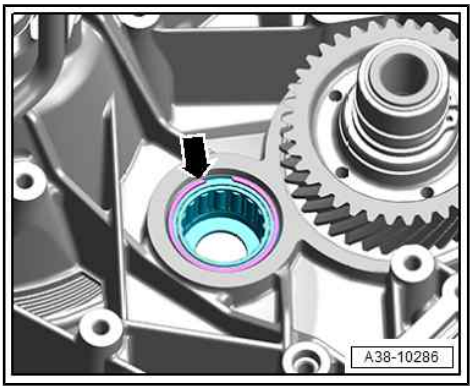

– Using internal puller, e.g. Kukko 21-6 - VAS 251 613- , and counter-support, e.g. Kukko 22-2 - VAS 251 623- , pull bearing “10” for pulley set “II” out of gearbox housing.

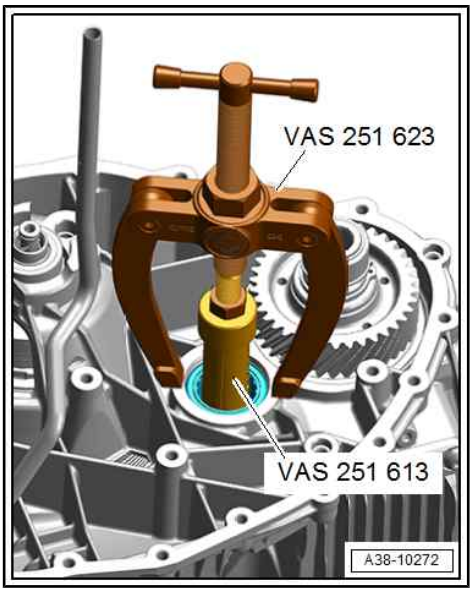

Installing

Installation is carried out in reverse order; note the following:

– Press in bearing “10” for pulley set “II” with thrust piece - T40387/5- as far as stop.

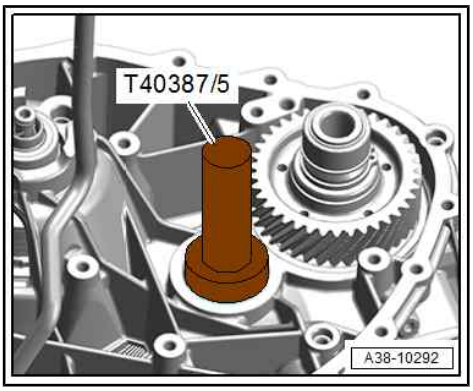

– Fit circlip -arrow-.
– Install bearing flange ⇒ page 70 .

Protected by copyright. Copying for private or commercial purpo
permitted unless authorised by AUDI AG. AUDI AG does not guar
with respect to the correctness of information in this document.

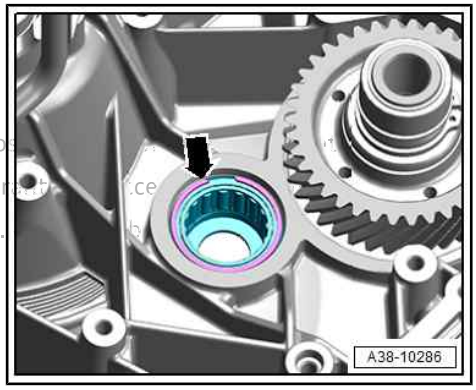

1.16.5 Renewing bearing flange with bearing F and 11

Bearing “11” and inner race for bearing “F” cannot be renewed individually. Bearing flange must be renewed, and bearing “11” and inner race of bearing “F” must be pressed in afterwards.

Special tools and workshop equipment required

- Tool set - T40387-

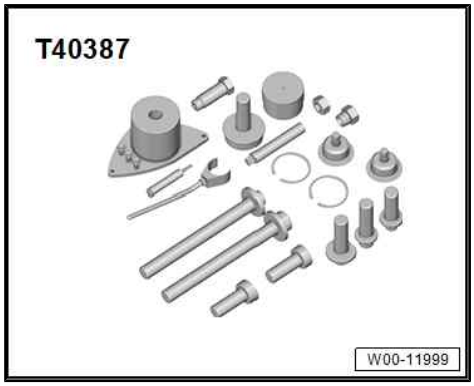

Removing

– Suction-jet pump removed ⇒ page 72 .

– Unscrew bolts -arrows- and detach bearing flange -1-.

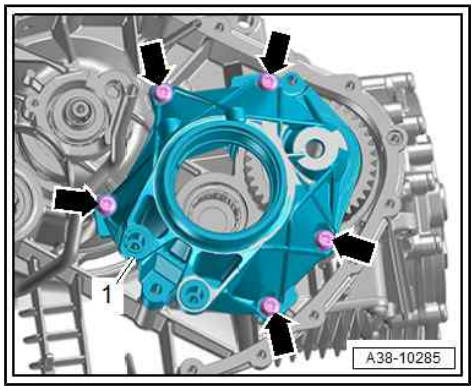

Assembling new bearing flange:

– Press bearing “11” into bearing flange using thrust piece - T40387/6- .

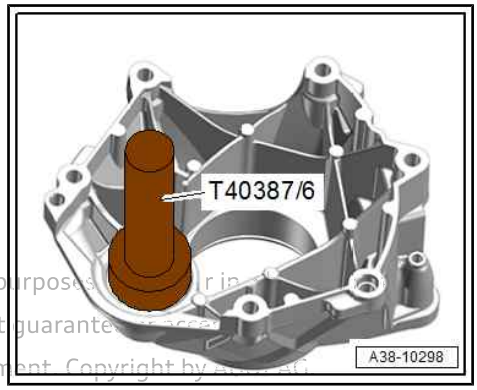

Protected by copyright. Copying for private or commercial purposes, in part or in whole, is not permitted unless authorised by AUDI AG. AUDI AG does not guarantee or assume liability with respect to the correctness of information in this document. Copyright by AUDI AG.

– Insert circlip -arrow-.

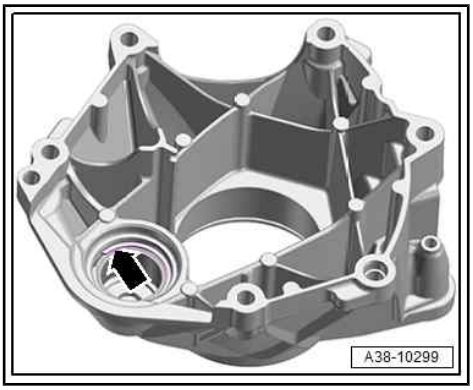

– Press in inner race for bearing “F” using thrust piece -T40387/4- .

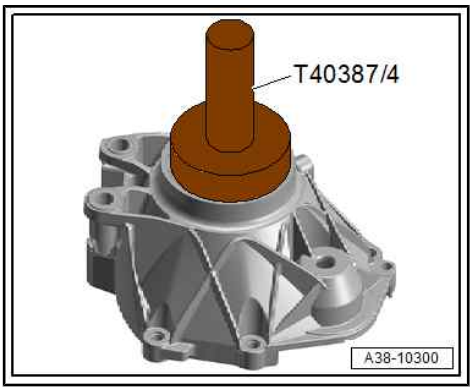

– Insert circlip -arrow-.

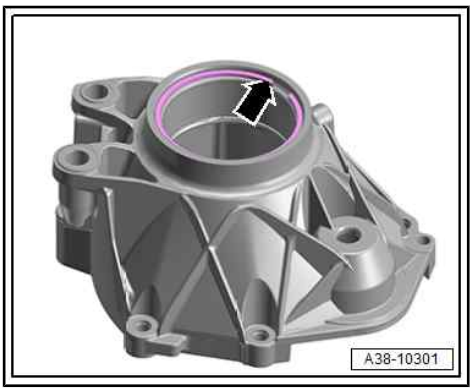

Detaching bearing “F”:

– Carefully separate bearing “F” -item 1- at separating groove -arrows- and detach from pulley set “II”.

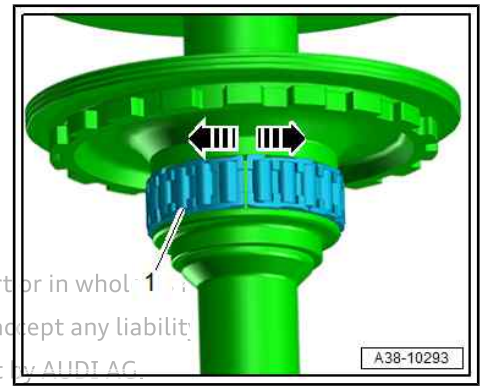

Protected by copyright. Copying for private or commercial purposes, in part or in whole, is not permitted unless authorised by AUDI AG. AUDI AG does not guarantee or accept any liability with respect to the correctness of information in this document. Copyright by AUDI AG.

Installing

Installation is carried out in reverse order; note the following:

- Tightening torques
  ⇒ "1.6 Exploded view - suction-jet pump, bearing flange", page 23

– Check that dowel pin -1- and dowel sleeve -2- are fitted and insert if necessary.

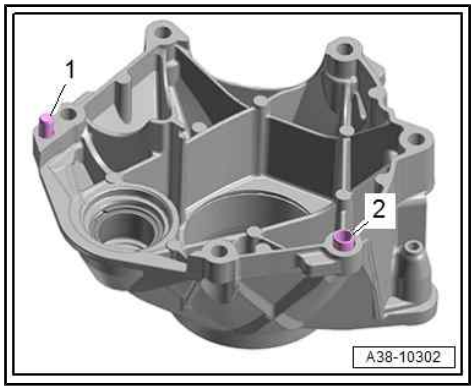

– Fit bearing flange -1- and tighten bolts -arrows-.

Protected by copyright. Copying for private or commercial purpose ot
permitted unless authorised by AUDI AG. AUDI AG does not guara
with respect to the correctness of information in this document. C

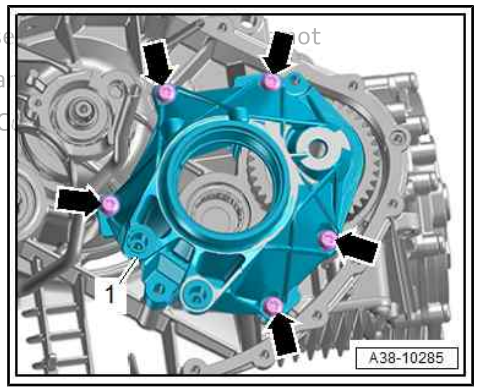

1.17 Removing and installing suction-jet pump

- Pulley set "I" and "II" removed ⇒ page 45

Note

Spring -arrow- may be ejected when the parking lock is removed.

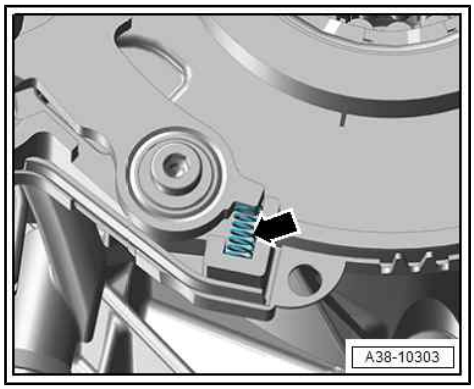

– Remove bolts -arrows- and detach bracket -1-.
– Carefully prise off parking lock -2-.
– Remove plastic floor pan -3-.

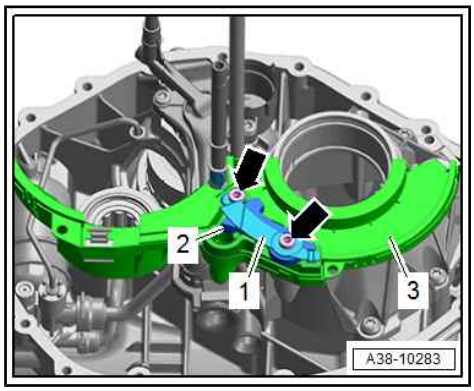

– Remove bolts -arrows-.

– Carefully pull out suction jet pump -1-.

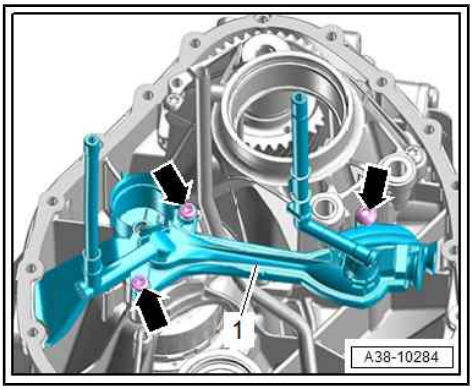

Installing

Installation is carried out in reverse order; note the following:

- Tightening torques
  ⇒ "1.6 Exploded view - suction-jet pump, bearing flange", page 23

1.18 Wear assessment

⇒ "1.18.1 Wear assessment on bearing D and bearing E", page 73

⇒ "1.18.2 Wear assessment of bearings F, G and 10 for pulley set II", page 74

⇒ "1.18.3 Wear assessment of bearings 11 and F in bearing flange", page 75

⇒ "1.18.4 Wear assessment on chain and pulley sets I and II", page 76

Protected by copyright. Copying for private or commercial purposes, in part or in whole, is not permitted unless authorised by AUDI AG. AUDI AG does not guarantee or accept any liability with respect to the correctness of information in this docu

1.18.1 Wear assessment on bearing D and bearing E

Checking bearing "D" (roller bearing for pulley set "I")

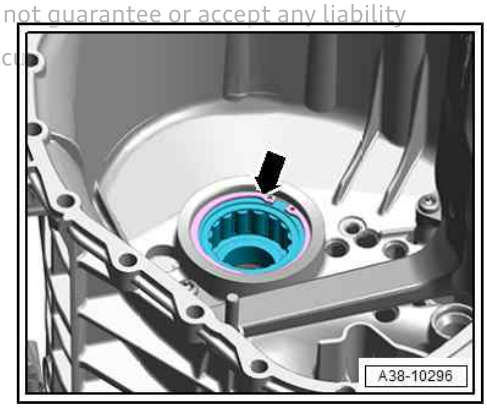

– Check bearing "D" -arrow- for damage:

- The roller bearings should not exhibit any signs of damage on the surface.
- There must be no cracks or chips on the bearing cage.

– Run your fingernail over the entire running surface to assess the damage on the roller bearings.

- Any very slight scores or damage that cannot be felt with the fingernail can be disregarded.
- If you feel any scores or damage with your fingernail, the bearing must be renewed.

– Check running surface on pulley set "I" ⇒ page 76 .

Checking bearing "E" (ball bearing for pulley set "I")

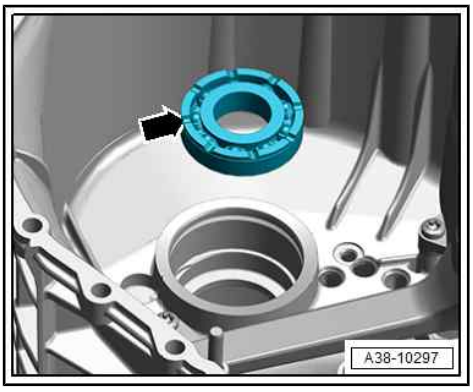

– Check bearing "E" -arrow- for damage:

- The balls and running surfaces should not exhibit any signs of damage.
- The ball bearing should run smoothly when the shaft is rotated.

– Check running surface on pulley set "I" ⇒ page 76 .

Checking bearing “C” (roller bearing for pulley set “I”)

– Check bearing “C” -arrow- for damage:

- The roller bearings should not exhibit any signs of damage on the surface.
- There must be no cracks or chips on the bearing cage.

– Run your fingernail over the entire running surface to assess the damage on the roller bearings.

- Any very slight scores or damage that cannot be felt with the fingernail can be disregarded.
- If you feel any scores or damage with your fingernail, the bearing must be renewed.

– Check running surface on pulley set “I” and in outer bearing race ⇒ page 76 .

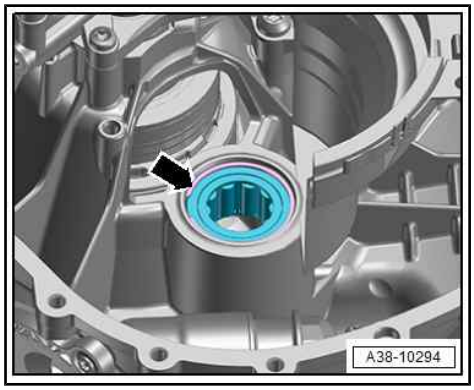

1.18.2 Wear assessment of bearings F, G and 10 for pulley set II

Checking bearing “F” for pulley set “II”

– Check bearing “F” -item 2- for damage:

- The roller bearings should not exhibit any signs of damage on the surface.
- There must be no cracks or chips on the bearing cage.

– Run your fingernail over the entire running surface to assess the damage on the roller bearings.

- Any very slight scores or damage that cannot be felt with the fingernail can be disregarded.
- If you feel any scores or damage with your fingernail, the bearing must be renewed.

– Check running surface on pulley set “II” and in outer bearing race ⇒ page 76 .

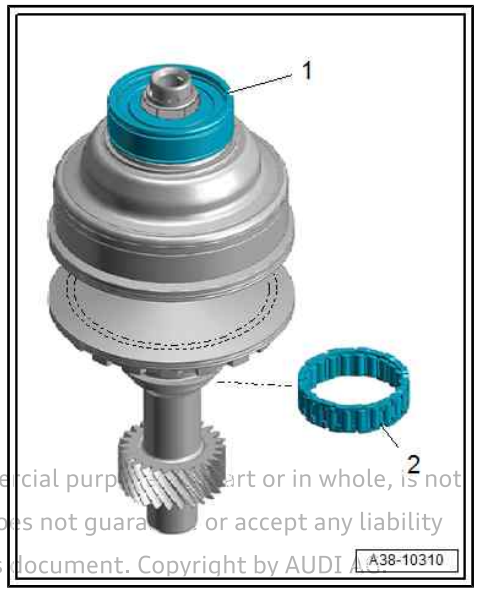

Protected by copyright. Copying for private or commercial purposes, in part or in whole, is not permitted unless authorised by AUDI AG. AUDI AG does not guarantee or accept any liability with respect to the correctness of information in this document. Copyright by AUDI AG.

Checking bearing “G” for pulley set “II”

– Check bearing “G” -item 2- for damage:

- The balls and running surfaces should not exhibit any signs of damage.
- The ball bearing should run smoothly when the shaft is rotated.

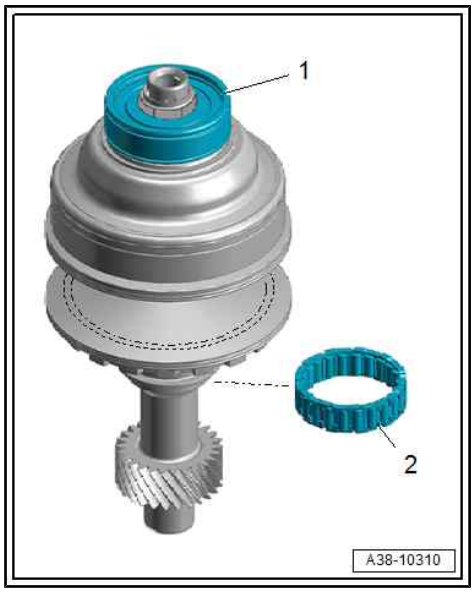

Checking bearing “10” for pulley set “II”

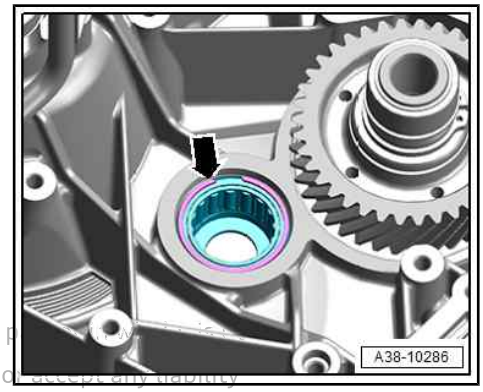

– Check bearing -arrow- for damage:

- The roller bearings should not exhibit any signs of damage on the surface.
- There must be no cracks or chips on the bearing cage.

– Run your fingernail over the entire running surface to assess the damage on the roller bearings.

- Any very slight scores or damage that cannot be felt with the fingernail can be disregarded.
- If you feel any scores or damage with your fingernail, the bearing must be renewed.

Protected by copyright. Copying for private or commercial purposes, in part or in whole, is not permitted unless authorised by AUDI AG. AUDI AG does not guarantee or accept any liability with respect to the correctness of information in this document. Copyright by AUDI AG.

– Check running surface on pulley set “II” ⇒ page 77 .

1.18.3 Wear assessment of bearings 11 and F in bearing flange

Checking bearing “11” for pinion shaft

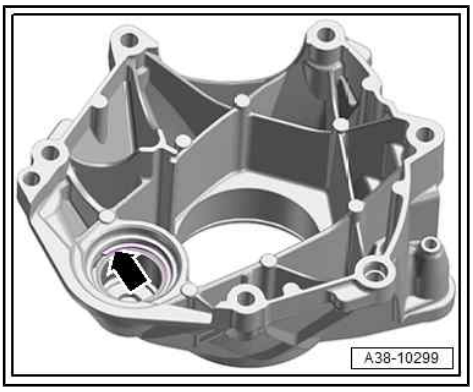

– Check bearing -arrow- for damage:

- The roller bearings should not exhibit any signs of damage on the surface.
- There must be no cracks or chips on the bearing cage.

– Run your fingernail over the entire running surface to assess the damage on the roller bearings.

- Any very slight scores or damage that cannot be felt with the fingernail can be disregarded.
- If you feel any scores or damage with your fingernail, the bearing must be renewed.

– Additionally check running surface on pinion shaft.

Inner race for bearing “F” for pulley set “II”

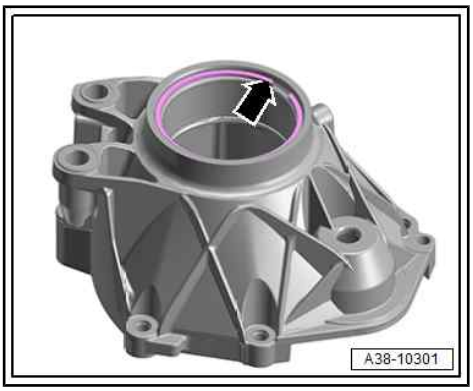

– Run your fingernail over the entire running surface to assess the damage on inner bearing race -arrow-.

- Any very slight scores or damage that cannot be felt with the fingernail can be disregarded.
- If you feel any scores or damage with your fingernail, the inner race of bearing “F” must be renewed.

1.18.4 Wear assessment on chain and pulley sets I and II

Protected by copyright. Copying for private or commercial purposes, in p
permitted unless authorised by AUDI AG. AUDI AG does not guarantee o
with respect to the correctness of information in this document. Copyrig

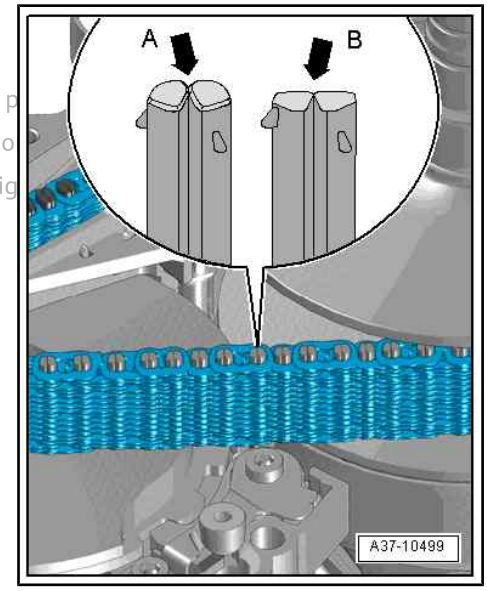

Checking chain

– Check that end faces of chain pins are still convex in shape with round edges -arrow A-.

– If edges of chain pins have become abraded or sharp, or if burrs have formed (due to wear or a slipping chain) -arrow B-, chain must be renewed.

– Also check running surface on pulley set “I” ⇒ page 76 and pulley set “II” ⇒ page 77 .

Checking tapered pulleys for pulley set “I”

– Check that tapered pulleys -arrow- for pulley set “I” are smooth with no traces of scoring.

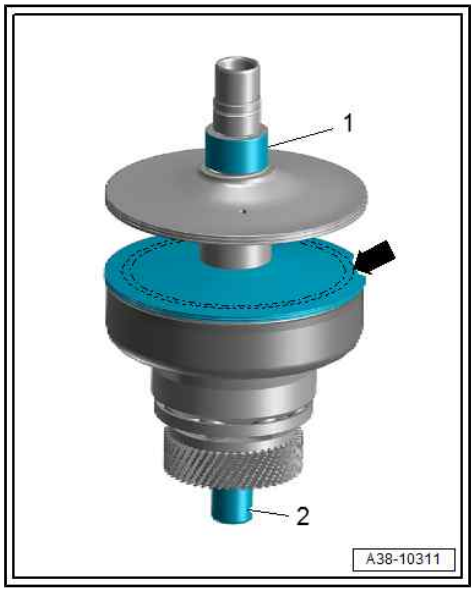

Note

Disregard items -1 and 2-.

– Run your fingernail from inside to outside over entire surface of tapered pulley to assess damage on running surface.

• Any very slight scores or damage that cannot be felt with the fingernail can be disregarded.

• If you feel any scores or damage with your fingernail, pulley set “I” must be renewed.

– Perform an additional visual inspection.

• Pulley set “I” must be renewed if there are any individual scores which appear polished (mirrored) with black edges.

Checking running surfaces for bearing “C” and bearing “D” (roller bearings for pulley set “I”)

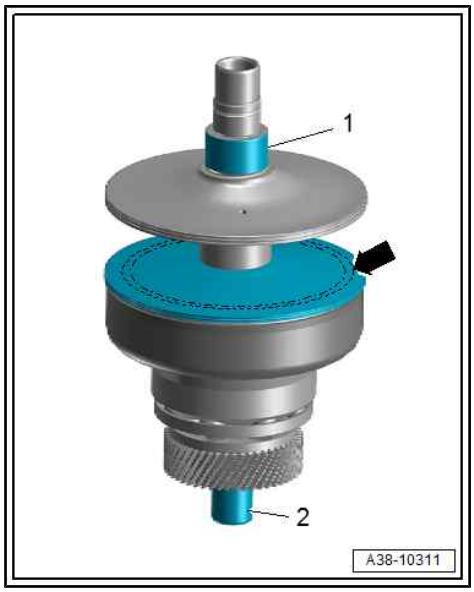

Note

-Arrow- can be disregarded.

• Running surfaces -2- for bearing “C” and -1- for bearing “D” should be in as-new condition.

– Run your fingernail from inside to outside over entire surface to assess damage on running surface.

• Any very slight scores or damage that cannot be felt with the fingernail can be disregarded.

• If you feel any scores or damage with your fingernail, pulley set “I” must be renewed.

Checking tapered pulleys for pulley set “II”

– Check that tapered pulleys -arrow- for pulley set “II” are smooth with no traces of scoring.

– Run your fingernail from inside to outside over entire surface of tapered pulley to assess damage on running surface.

• Any very slight scores or damage that cannot be felt with the fingernail can be disregarded.

• If you feel any scores or damage with your fingernail, pulley set “II” must be renewed.

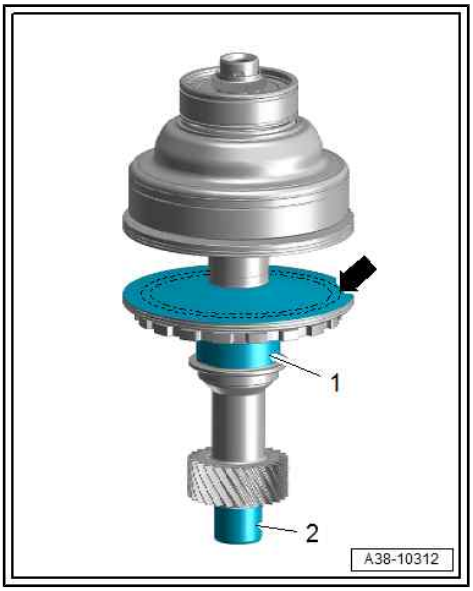

Checking running surface for bearing “10” for pulley set “II”

• Running surface -1- for bearing “10” should be in as-new condition.

– Run your fingernail from inside to outside over entire surface to assess damage on running surface.

• Any very slight scores or damage that cannot be felt with the fingernail can be disregarded.

• If you feel any scores or damage with your fingernail, pulley set “II” must be renewed.

– Check installation dimension of oil pipe -arrow-:

• With oil pipe fully inserted, distance -a- from end of oil pipe to input shaft should be approx. 11.5 mm.

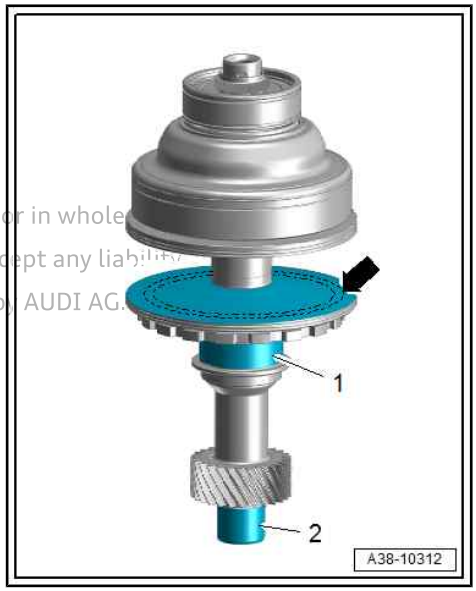

Protected by copyright. Copying for private or commercial purposes, in part or in whole, is not permitted unless authorised by AUDI AG. AUDI AG does not guarantee or accept any liability with respect to the correctness of information in this document. Copyright by AUDI AG.

2 Clutch

⇒ “2.1 Exploded view - reverse gear clutch”, page 78

⇒ “2.2 Exploded view - input shaft with friction plates”, page 79

⇒ “2.3 Removing and installing reverse gear clutch and determining shim thicknesses”, page 79

⇒ “2.4 Dismantling and assembling input shaft”, page 86

⇒ “2.5 Adjusting input shaft and checking clearance”, page 93

⇒ “2.6 Assessing wear on input shaft”, page 99

2.1 Exploded view - reverse gear clutch

Protected by copyright. Copying for private or commercial purposes, in part or in whole, is not permitted unless authorised by AUDI AG. AUDI AG does not guarantee or accept any liability with respect to the correctn

1 - Corrugated washer
- ❑ Renew

2 - Bottom shim
- ❑ Determining thickness “E_1” ⇒ page 81
- ❑ The thickness of the bottom shim “E_1” must be at least 2.15 mm
- ❑ Renew

3 - Friction plate
- ❑ 6x
- ❑ Renew

4 - Top shim
- ❑ Determining thickness “E_2” ⇒ page 81
- ❑ Renew

5 - Outer plate
- ❑ 5x
- ❑ Renew

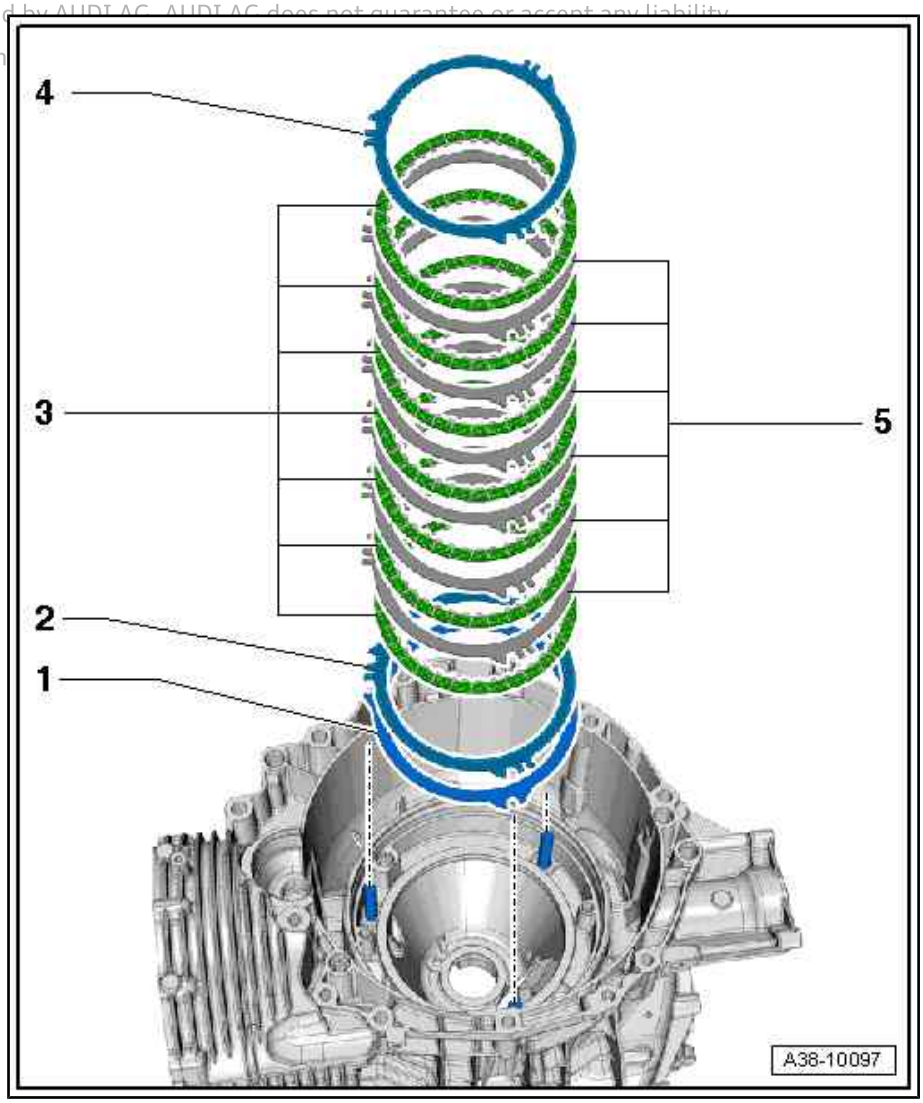

2.2 Exploded view - input shaft with friction plates

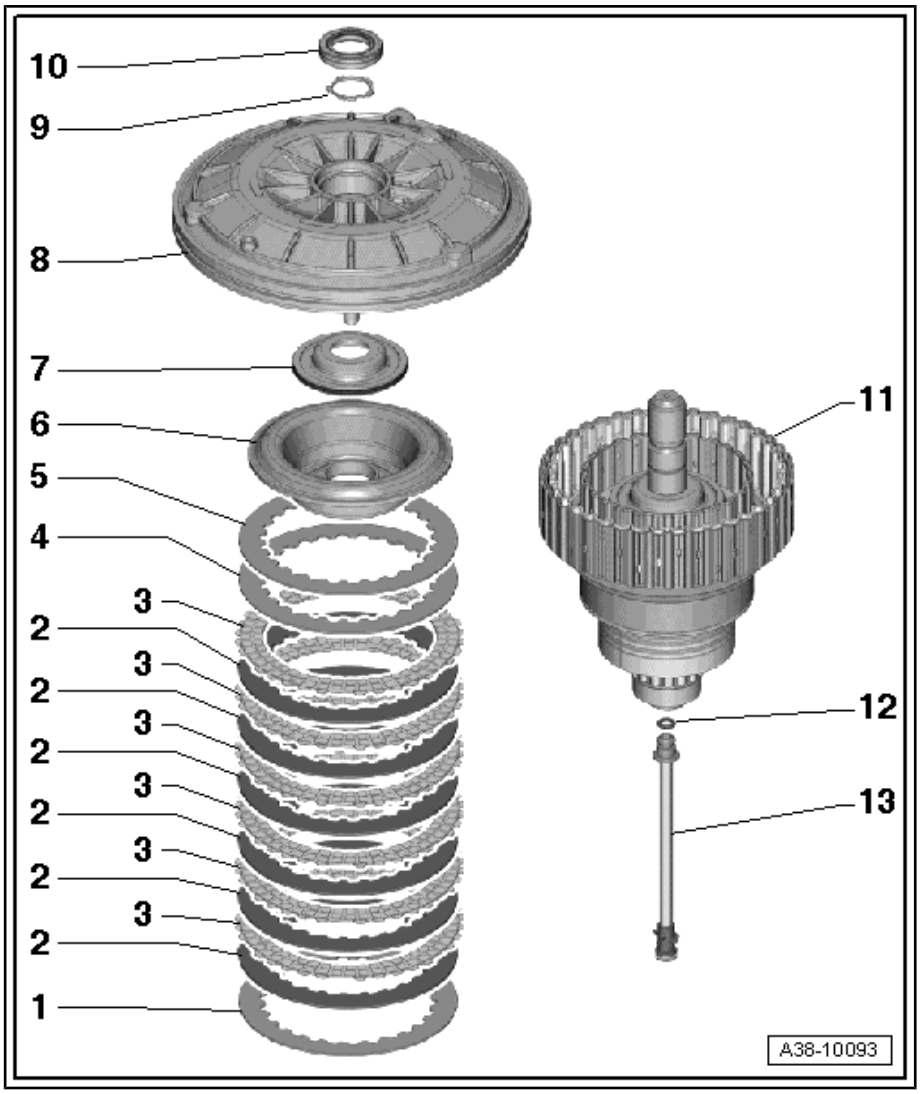

1 - Bottom shim
- ❑ Determining thickness ⇒ page 93
- ❑ Renew

2 - Outer plate
- ❑ 6x
- ❑ Renew

3 - Friction plate
- ❑ 7x
- ❑ Renew

4 - Top shim
- ❑ Determining thickness ⇒ page 93
- ❑ Renew

5 - Corrugated washer

6 - Thrust plate
- ❑ Assessing wear level ⇒ page 99

7 - Piston
- ❑ Assessing wear level ⇒ page 99

8 - Cover
- ❑ For input shaft
- ❑ After removing cover, renew ball bearing for input shaft ⇒ page 42

9 - Circlip
- ❑ For input shaft cover
- ❑ Replace with one of same thickness

10 - Oil seal
- ❑ For input shaft
- ❑ Renewing ⇒ page 109

11 - Input shaft
- ❑ Assessing wear level ⇒ page 99

12 - O-ring
- ❑ Renew

13 - Oil pipe
- ❑ Assessing wear level ⇒ page 99

2.3 Removing and installing reverse gear clutch and determining shim thicknesses

Special tools and workshop equipment required

Protected by copyright. Copies for private or commercial purposes, in part or in whole, is not permitted unless authorised by AUDI AG. AUDI AG does not guarantee or accept any liability with respect to the correctness of information in this document. Copyright by AUDI AG.

- Digital depth gauge - VAS 6087-

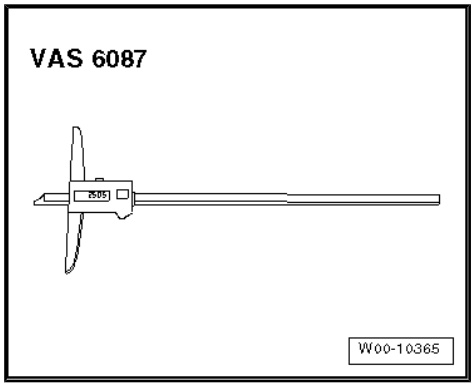

- Digital caliper, 150 mm - VAS 6335-
- 2x ruler - T40100-

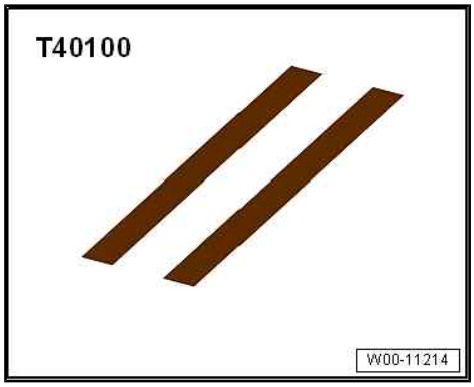

- Clean, flat measurement surface, e.g. compressor tool - T10285-

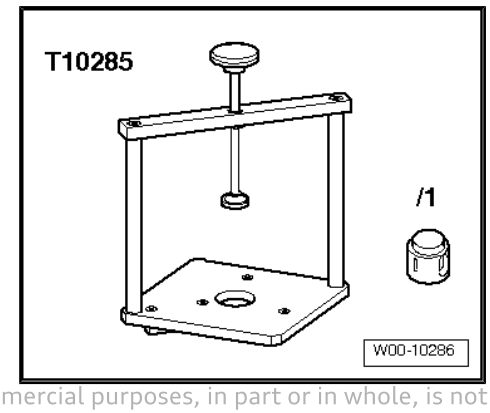

Protected by copyright. Copying for private or commercial purposes, in part or in whole, is not permitted unless authorised by AUDI AG. AUDI AG does not guarantee or accept any liability with respect to the correctness of information in this document. Copyright by AUDI AG.

Removing reverse gear clutch

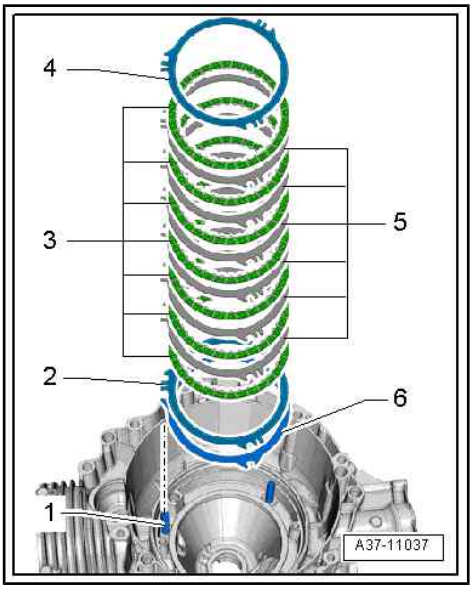

Note

- ⇒ *"1 Repair instructions", page 1*
- ⇒ *"1.3 Rules for cleanliness", page 3*

- Gearbox must be removed and secured in a vertical position on engine and gearbox support ⇒ page 15 .

– Remove input shaft ⇒ page 31 .

– Take reverse gear clutch with corrugated washers -1 ... 5- out of gearbox.

– Measure top shim -4- and bottom shim -2- and note down values.

Note

The purpose of noting down the values for the originally fitted top shim -4- and bottom shim -2- is to provide a check for the newly determined shims as described below. If there is a large difference between the values for the old shims and the new shims, the measurement must be repeated.

Adjusting reverse gear clutch by determining thickness of shims:

Note

The purpose of the following measurements is to determine the thickness of the top shim -4- and bottom shim -2- for setting the reverse gear clutch.

- To ensure accuracy, the surfaces of all tools and components must be absolutely clean when performing the following measurements.

Reproduction of this document or any part thereof for commercial purposes, in part or in whole, is not permitted unless authorised by AUDI AG. AUDI AG does not guarantee or accept any liability with respect to the correctness of information in this document. Copyright by AUDI AG.

1. Calculating dimension -B-; measurement from contact surface of input shaft cover to contact surface of corrugated washer:

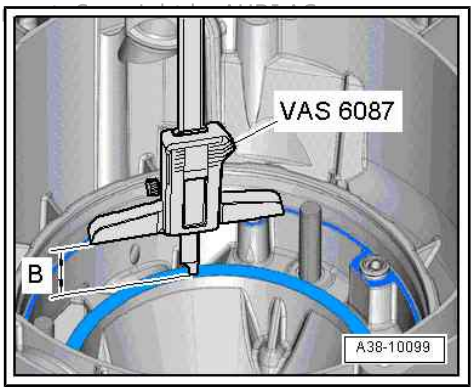

– Clean contact surfaces and sealing surfaces on gearbox housing. Completely remove any remaining sealing material.

– Use digital depth gauge -VAS 6087- to measure from contact surface of input shaft cover to contact surface of corrugated washer in gearbox housing.

– Note down dimension "B1".

– Repeat measurement at two other points on the circumference and note down dimensions "B2" and "B3".

– Calculate mean value -B- from the 3 measured values and note down.

Mean value: B1 + B2 + B33 = dimension -B-

– Note down dimension -B-.

Example:

29.0 mm + 28.9 mm + 29.0 mm3 = 28.97 mm

In this example, dimension -B- = 28.97 mm.

2. Calculating dimension -A-; measurement of compressed clutch pack:

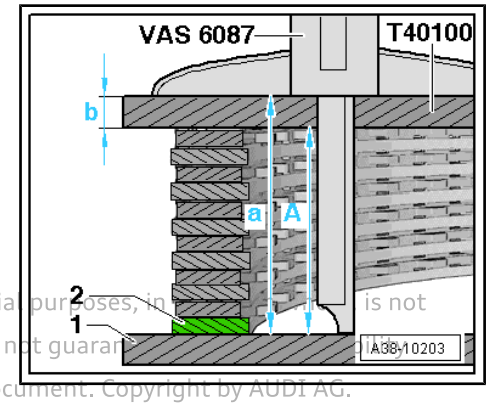

- The corrugated washer -2- is fitted beneath the clutch pack for the measurement.
- Use a clean, flat measurement surface -1- as a base. Compressor tool - T10285- is used in the following description.

Protected by copyright. Copying for private or commercial purposes, in part or in whole, is not permitted unless authorised by AUDI AG. AUDI AG does not guarantee or assume liability with respect to the correctness of information in this document. Copyright by AUDI AG.

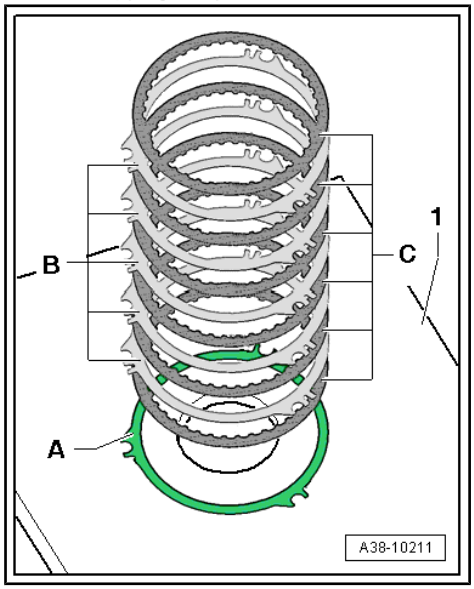

– First place corrugated washer -A- on measurement surface -1-.
– Then alternately place friction plates -C- (6x) and outer plates -B- (5x) one at a time on corrugated washer (all aligned in the same position).

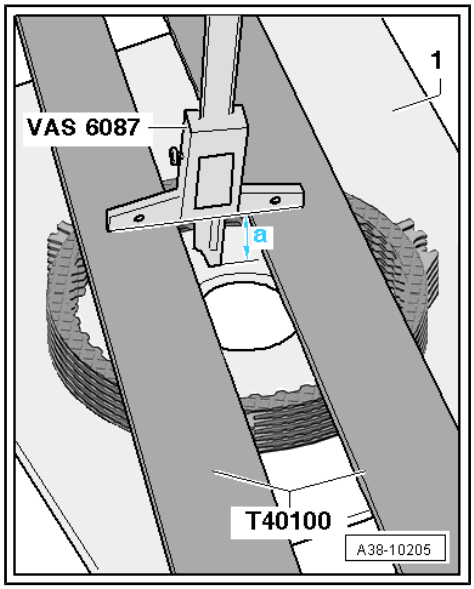

– Make sure that all plates are accurately aligned one on top of the other.
– Place two rulers -T40100- on top of clutch pack.

Note

The weight of the rulers -T40100- presses the air out from between the plates and exerts the specified 2.5 kg load on the corrugated washer so it is compressed.

– Use digital depth gauge -VAS 6087- to measure down to working surface -1- and note down measured value “a1”.
- When taking measurements, the digital depth gauge -VAS 6087- must make flush contact with both rulers -T40100- .
– Repeat measurement on opposite side of clutch pack and note down measured value “a2”.
– Move the two rulers -T40100- 90° from their first position.
– Repeat measurements and note down measured values “a3” and “a4”.
– Calculate mean value -a- from the 4 measured values and note down.

  Mean value: a1 + a2 + a3 + a44 = -a-

Calculating dimension -A-:

– Measure and note down thickness -b- of rulers -T40100- .

  The height of the compressed clutch pack is -a- – -b- = dimension -A-.

– Note down dimension -A-.

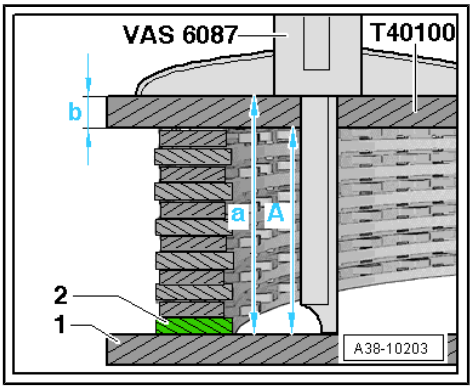

Example

Mean value measured with depth gauge 35.45 mm + 35.46 mm + 35.42 mm + 35.47 mm4 = -a-	35.45 mm
– Thickness -b- of rulers -T40100-	– 7.47 mm
= Dimension -A- of compressed clutch pack	= 27.98 mm

3. Calculating dimension -C-; measurement from contact surface of input shaft cover to piston of reverse gear clutch:

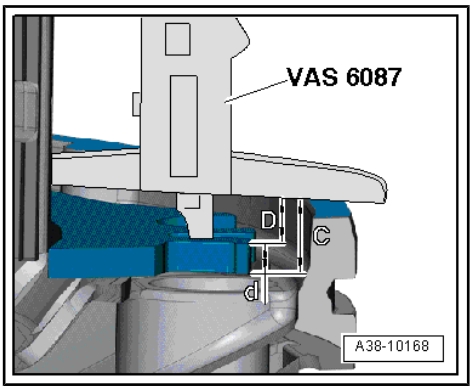

– Place a clean outer plate -1- on input shaft (removed from gearbox).

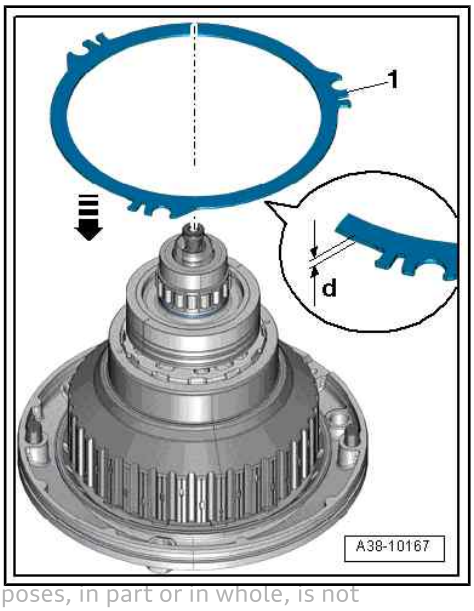

Note

The outer plate -1- is placed on the piston of the reverse gear clutch in order to obtain a correct measurement to the highest point of the piston. The thickness -d- of the outer plate -1- is subsequently added when calculating the height of the piston.

Protected by copyright. Copying for private or commercial purposes, in part or in whole, is not permitted unless authorised by AUDI AG. AUDI AG does not guarantee or accept any liability with respect to the correctness of information in this document. Copyright by AUDI AG.

– Use digital depth gauge -VAS 6087- to measure from contact surface -2- of input shaft cover to previously fitted outer plate -1- and note down measured value “D1”.
– Repeat measurement at another point on the circumference and note down measured value “D2”.
– Calculate mean value -D- from the 2 measured values and note down.

  Mean value: D1 + D22 = -D-

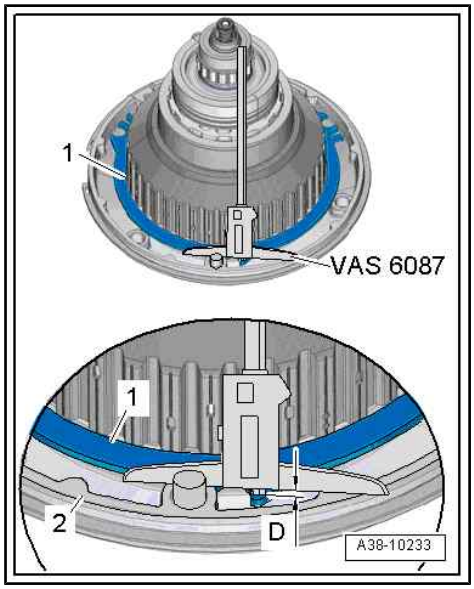

– Remove previously fitted outer plate from input shaft and measure thickness -d- using digital caliper, 150 mm - VAS 6335- .

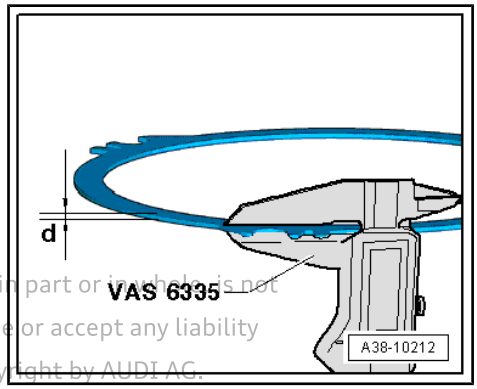

Protected by copyright. Copying for private or commercial purposes, in part or in whole, is not permitted unless authorised by AUDI AG. AUDI AG does not guarantee or accept any liability with respect to the correctness of information in this document. Copyright by AUDI AG.

Calculating dimension -C-:

Calculate dimension -C- from contact surface of input shaft cover to piston of reverse gear clutch:

-D- + -d- = dimension -C-

– Note down dimension -C-.

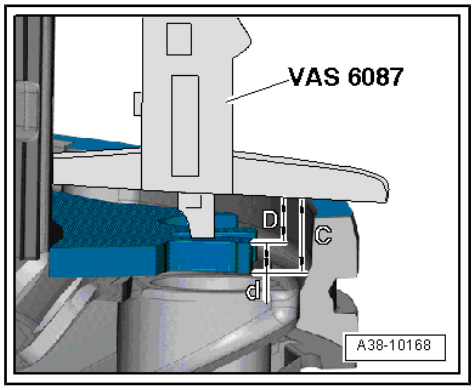

Example

	Mean value -D- = 4.51 mm + 4.49 mm2 =	4.50 mm
+	Thickness -d- of outer plate -1- fitted before measurement	+ 1.95 mm
=	Dimension -C- from contact surface of input shaft cover to piston of reverse gear clutch	= 6.45 mm

4. Determining thickness of the two shims “$E_{tot.}$”:

– Calculate thickness of shims according to the following formula from noted dimensions “A”, “B” and “C” and a constant value of 3.0 mm for clearance:

  “B” + “C” – “A” – 3.0 mm = “$E_{tot.}$”

– Determine bottom shim “E_1” and top shim “E_2” from table ⇒ page 85 .

Thickness of both shims “$E_{tot.}$” in mm	Thickness of bottom shim “E_1” in mm	Thickness of top shim “E_2” in mm
3.916 ... 4.165	1.90	2.15
4.166 ... 4.435	2.15	2.15
4.436 ... 4.675	1.90	2.65
4.676 ... 4.925	1.90	2.90
4.926 … 5.165	1.90	3.15
5.166 ... 5.425	2.15	3.15
5.426 ... 5.675	2.65	2.90
5.676 ... 5.925	2.65	3.15
5.926 ... 6.175	2.90	3.15
6.176 ... 6.400	3.15	3.15

Note

Select correct shims from ⇒ Electronic parts catalogue .

Example:

The example is based on the following values:

- Dimension “A” = 27.98 mm
- Dimension “B” = 28.97 mm
- Dimension “C” = 6.45 mm.
- Constant value for clearance = 3.0 mm

“B” + “C” – “A” – 3.0 mm = “$E_{tot.}$”

28.97 mm + 6.45 mm – 27.98 mm – 3.0 mm = 4.44 mm

“$E_{tot.}$” = 4.44 mm

– Thickness of bottom shim “E_1” from table: 1.90 mm

– Thickness of top shim “E_2” from table: 2.65 mm

Protected by copyright. Copying for private or commercial purposes, in part or in whole, is not permitted unless authorised by AUDI AG. AUDI AG does not guarantee or accept any liability with respect to the correctness of information in this document. Copyright by AUDI AG.

Installing reverse gear clutch

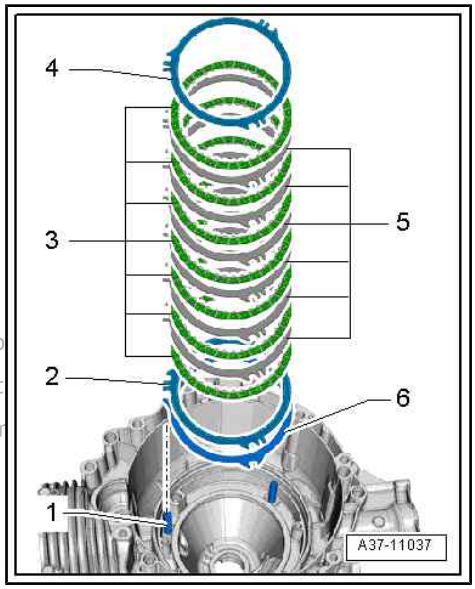

Note

As an additional check, compare the thickness of the new shims as determined above with the thickness of the old shims as measured at the beginning of the procedure ⇒ page 81 . If there is a large difference between the values for the old shims and the new shims, the measurement must be repeated.

- Thoroughly clean all components prior to installation.

Protected by copyright. Copying for private or commercial p
purposes, in whole or in part, is not permitted unless authorised by AUDI AG. AUDI AG does not
guarantee or accept any liability with respect to the correctness and completeness of this docum

– Insert corrugated washer -6- in guides -1- (3x) in gearbox.
– Insert bottom shim “E_1” -item 2- of calculated thickness in guides in gearbox.
– Then alternately fit friction plates -3- and outer plates -5- in guides in gearbox (all aligned in the same position).
– Finally insert top shim “E_2” -item 4- of calculated thickness in guides in gearbox.

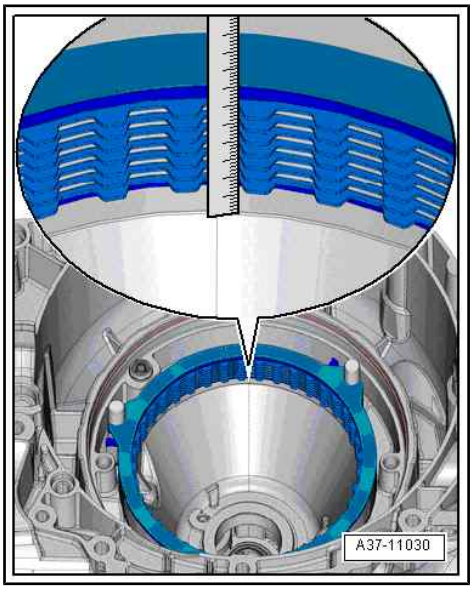

– Align plates of reverse gear clutch using a straight-edge or similar.
- The teeth must be set exactly in line.
– Install input shaft ⇒ page 31 .

2.4 Dismantling and assembling input shaft

Special tools and workshop equipment required

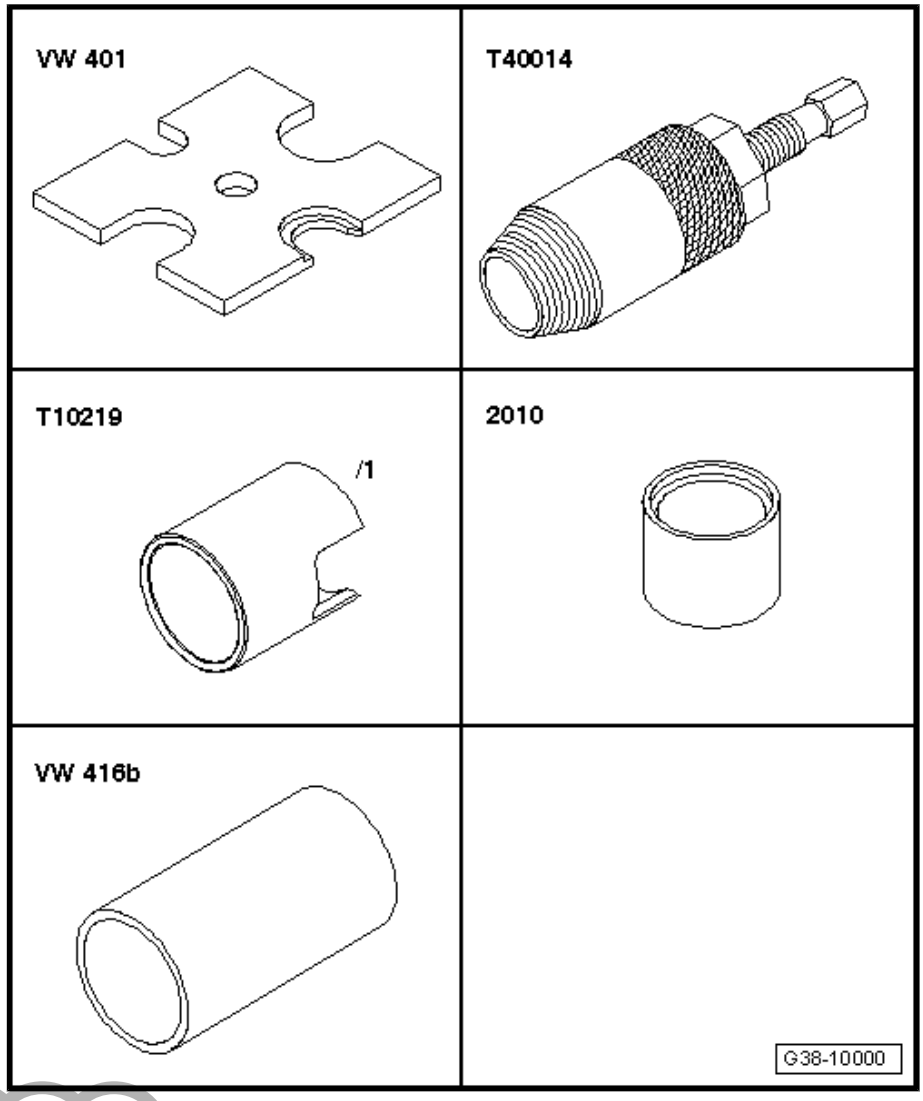

- Thrust plate - VW 401-
- Oil seal extractor - T40014-
- Assembly tool -T10219/1-
- Tube - 2010-
- Tube - VW 416 B-

Protected by copyright. Copying for private or commercial purposes, in part or in whole, is not permitted unless authorised by AUDI AG. AUDI AG does not guarantee or accept any liability with respect to the correctness of information in this document. Copyright by AUDI AG.

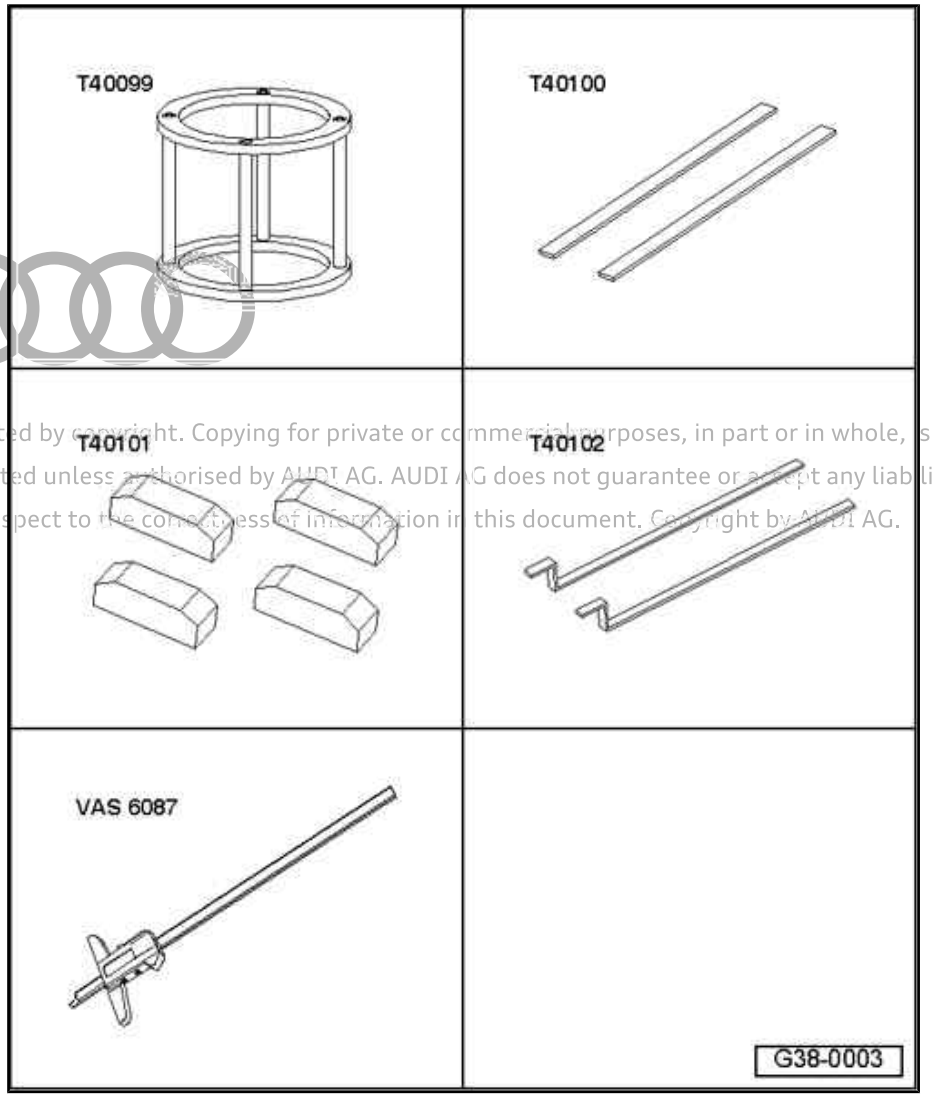

Protected by copyright. Copying for private or commercial purposes, in part or in whole, is not permitted unless authorised by AUDI AG. AUDI AG does not guarantee or accept any liability with respect to the correctness of information in this document. Copyright by AUDI AG.

- Thrust piece - T40099-
- 2x ruler - T40100-
- Gauge block - T40101-
- Feeler gauge - T40102-
- Digital depth gauge - VAS 6087-
- Protective gloves
- Ice spray

Dismantling input shaft

- Gearbox removed

Note

- ⇒ *"1 Repair instructions", page 1*
- ⇒ *"1.3 Rules for cleanliness", page 3*

– Remove input shaft ⇒ page 31 .

– Remove cover from input shaft ⇒ page 37 .

– Set down input shaft on assembly tool -T10219/1- .

– Use two screwdrivers -arrows- to carefully lift pressure plate with piston.

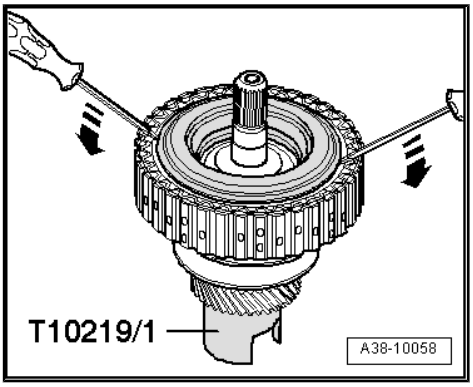

To prevent damage:

> ⚠ **Caution**
>
> - *The inner contact and sealing surfaces -arrow A- of the pressure plate and the piston -arrow C- must not be allowed to make contact with the shaft on removal/installation.*
> - *The contact and sealing surfaces must not exhibit the slightest signs of damage such as scratches or scoring caused by dismantling/assembly.*
> - *In the event of damage, the pressure plate or piston must be renewed.*

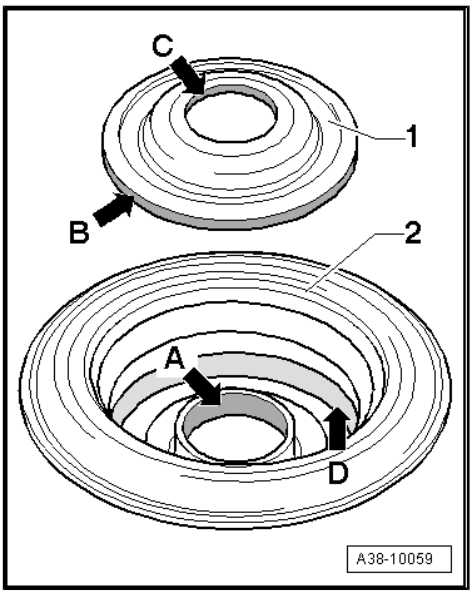

– Carefully guide the pressure plate -1- with piston -2- upwards over the shaft -3-.

- When doing so, the inner contact surfaces of the pressure plate -1- and of the piston -2- must not make contact with the shaft.

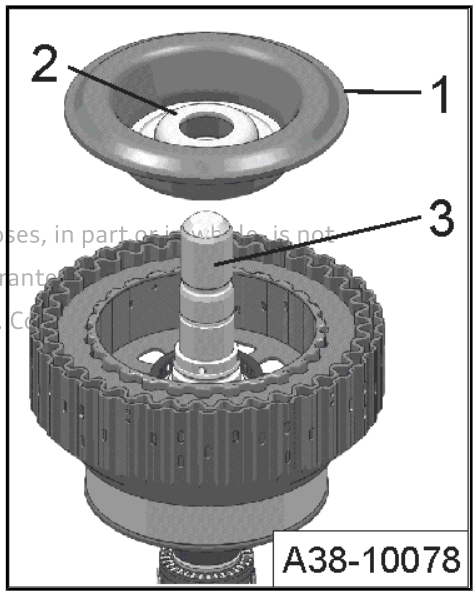

Protected by copyright. Copying for private or commercial purposes, in part or in whole, is not permitted unless authorised by AUDI AG. AUDI AG does not guarantee or assume liability with respect to the correctness of information in this document. Copyright by AUDI AG.

Removing clutch pack

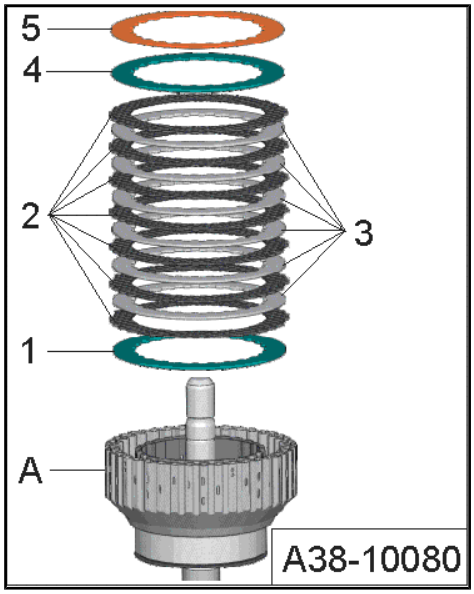

- Remove corrugated washer -5- (washer must be re-used).
- Take top shim -4- out of input shaft cylinder -A-.
- Measure thickness of shim -4- and note down value.
- Take all friction plates -2- and outer plates -3- out of input shaft cylinder -A-.
- Remove bottom shim -1- from input shaft cylinder -A-.
- Measure thickness of shim -1- and note down value.

> **Caution**
>
> - *Always renew old used shims, outer plates and friction plates. They must not be re-installed otherwise proper operation of the input shaft cannot be assured (due to the worn surface).*
> - *The corrugated washer must be re-used.*

Assembling input shaft

> **Caution**
>
> *Assess wear on gearbox components prior to assembly* ⇒ page 99 *.*

- Renew ball bearing for input shaft ⇒ page 42 .
- Adjust input shaft and determine clearance ⇒ page 93 .

> **Caution**
>
> - *Always renew old used shims, outer plates and friction plates. They must not be re-installed otherwise proper operation of the input shaft cannot be assured (due to the worn surface).*
> - *The corrugated washer must be re-used.*

- Set down input shaft on assembly tool -T10219/1- .

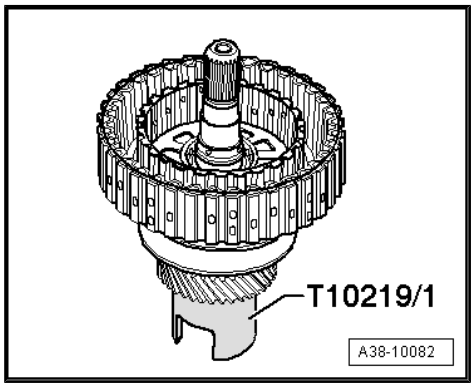

Protected by copyright. Copying for private or commercial purposes, in part or in whole, is not permitted unless authorised by AUDI AG. AUDI AG does not guarantee or accept any liability with respect to the correctness of information in this document. Copyright by AUDI AG.

– Insert chosen bottom shim -1- in input shaft cylinder -A-.
– Now build up the clutch pack by alternately inserting one friction plate -2- followed by one outer plate -3-, ensuring that they are aligned together.

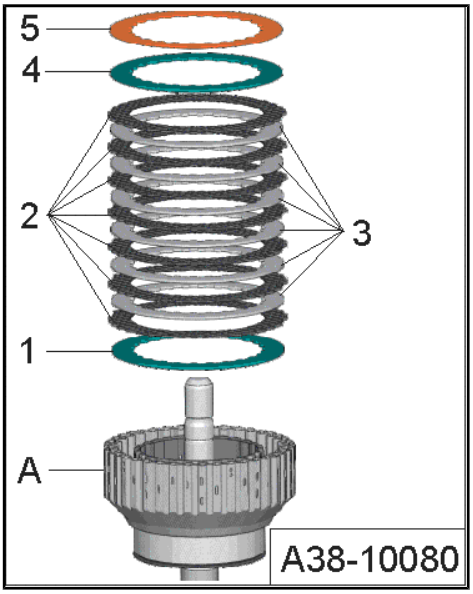

Protected by copyright. Copying for private or commercial purposes, in part or in whole, is not permitted unless authorised by AUDI AG. AUDI AG does not guarantee or accept any liability with respect to the correctness of information in this document. Copyright by AUDI AG.

Alignment of friction plates:

Caution

- *The friction plates must be aligned together when installed, i.e. the areas with no external teeth -arrows- must be stacked on top of each other. This is the only way to ensure correct adjustment. If necessary, mark the input shaft cylinder to ensure proper alignment on installation.*

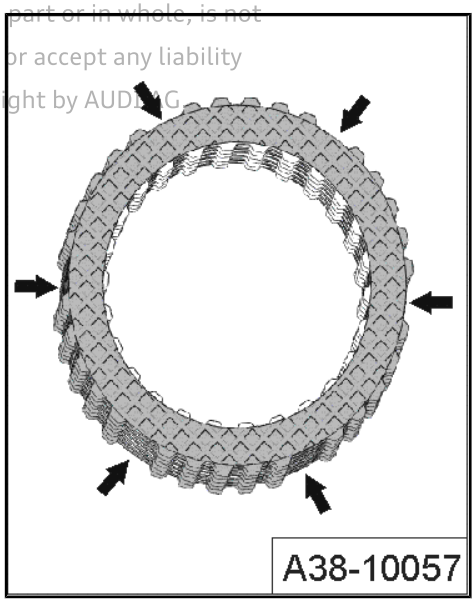

– Insert chosen top shim -4- in input shaft cylinder -A-.
– Finally insert corrugated washer -5-.

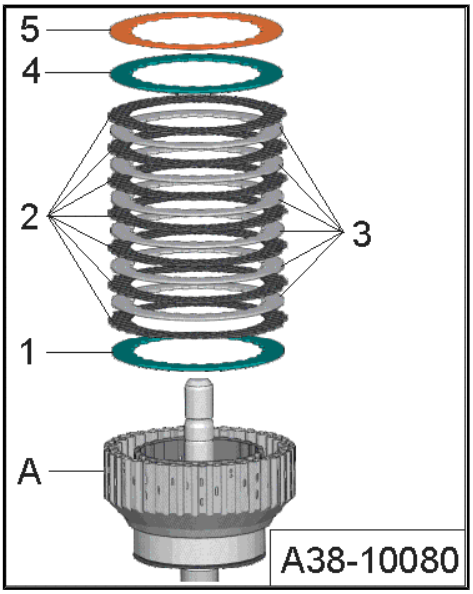

– Press home piston -1- in pressure plate -2-.

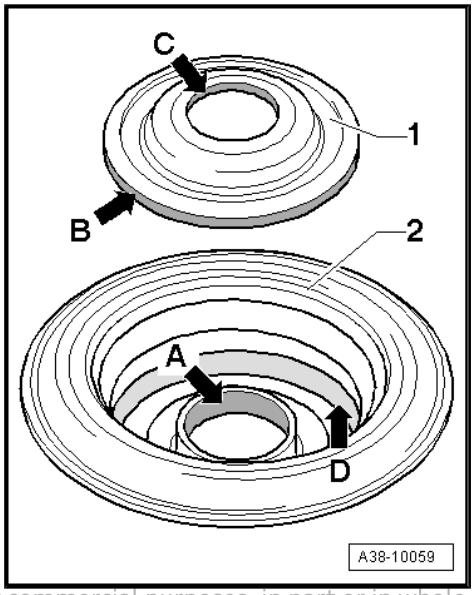

Caution

- *The inner contact and sealing surfaces -arrow A- of the pressure plate and the piston -arrow C- must not be allowed to make contact with the shaft on removal/installation.*
- *The contact and sealing surfaces must not exhibit the slightest signs of damage such as scratches or scoring caused by dismantling/assembly.*
- *In the event of damage, the pressure plate or piston must be renewed.*

Protected by copyright. Copying for private or commercial purposes, in part or in whole, is not permitted unless authorised by AUDI AG. AUDI AG does not guarantee or accept any liability with respect to the correctness of information in this document. Copyright by AUDI AG.

– Carefully guide pressure plate -1- with piston -2- downwards over shaft -3-.

- When doing so, the inner contact surfaces of the pressure plate -1- and of the piston -2- must not make contact with the shaft.

– Evenly press home the pressure plate with piston in the input shaft.

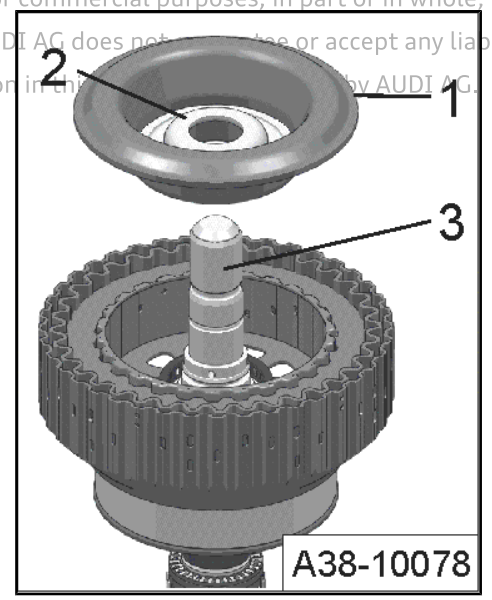

Checking clearance with feeler gauges - T40102-

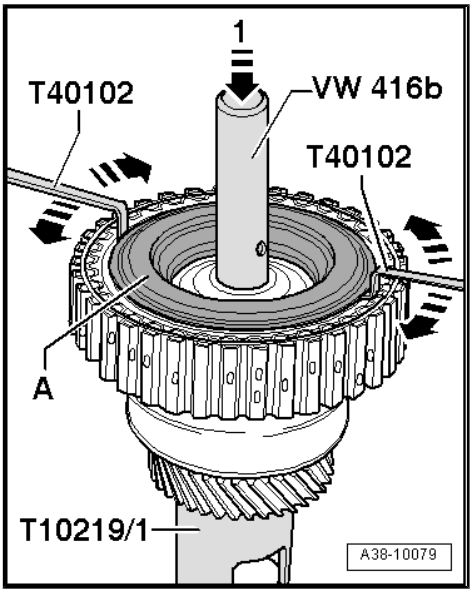

– Insert the two feeler gauges -T40102- underneath the pressure plate -A-.

– Have a second mechanic use the tube - VW 416 B- to press down the pressure plate -A- as far as it will go -arrow 1-.

– Move the two feeler gauges -T40102- back and forth in a circle beneath the pressure plate in direction of -arrow-.

- Apply the two feeler gauges -T40102- on opposite sides.
- Take care to keep the feeler gauges -T40102- straight.
- The entire circular area must be checked.
- The two feeler gauges -T40102- must always move freely without any resistance whatsoever.

If the feeler gauges -T40102- cannot be moved in direction of -arrow- without becoming blocked:

– Repeat the input shaft adjustment procedure ⇒ page 93 .

> **Caution**
>
> *It is essential to obtain a successful result when checking the clearance with the feeler gauges -T40102- , as gearbox problems will otherwise be encountered when driving off from a standstill.*

Protected by copyright. Copying for private or commercial purposes, in part or in whole, is not permitted unless authorised by AUDI AG. AUDI AG does not guarantee or accept any liability with respect to the correctness of information in this document. Copyright by AUDI AG.

If the feeler gauges -T40102- move freely in direction of -arrow-:

– Fit input shaft cover ⇒ page 37 .

– Install input shaft ⇒ page 31 .

– Fit input shaft oil seal ⇒ page 109 .

– Fill up with ATF after installing gearbox
⇒ “1.1.3 Filling up with ATF (for ATF purging procedure)”, page 8 .

2.5 Adjusting input shaft and checking clearance

Note

- *⇒ “1 Repair instructions”, page 1*
- *⇒ “1.3 Rules for cleanliness”, page 3*

Measuring the clutch

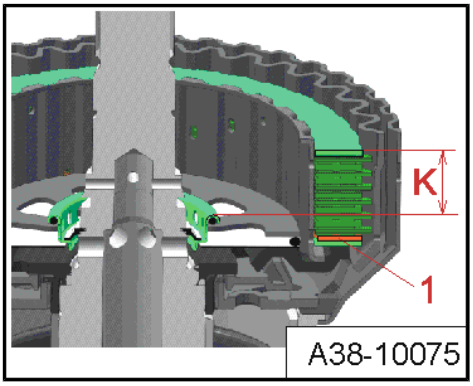

Note

- *This measurement determines the distance -K- on the clutch from the top shim to the stop ring at the shaft (contact surface of pressure plate).*
- *The corrugated washer -1- is fitted beneath the clutch pack for the measurement.*

- Thoroughly clean all components prior to installation.

– Set down input shaft on assembly tool -T10219/1- .

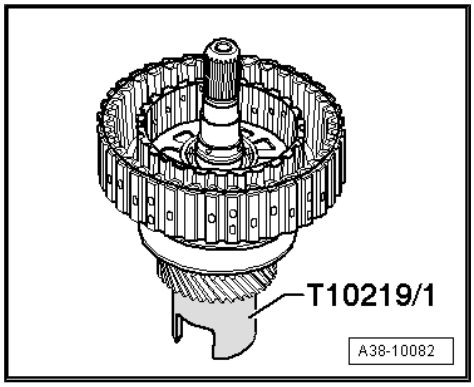

– Insert new bottom shim -1- of same thickness as old shim in cylinder of input shaft -A-.

– Then insert corrugated washer -2-.

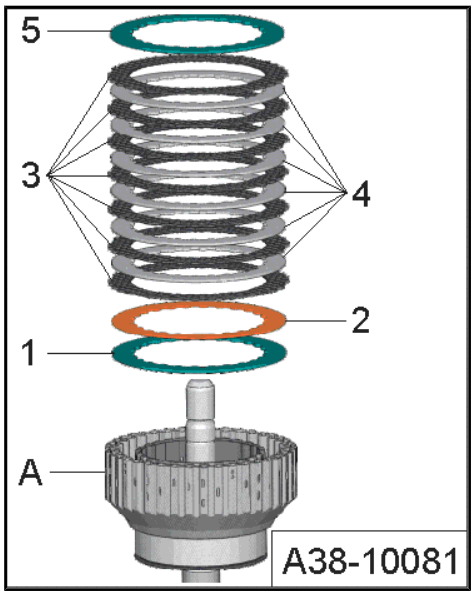

Note

The corrugated washer is only fitted at the bottom for measurement. On assembly it is fitted at the top again.

– Now build up the clutch pack by alternately inserting one friction plate -3- followed by one outer plate -4-, ensuring that they are aligned together.

Alignment of friction plates:

Caution

- ***The friction plates must be aligned together when installed, i.e. the areas with no external teeth -arrows- must be stacked on top of each other. This is the only way to ensure correct adjustment. If necessary, mark the input shaft cylinder to ensure proper alignment on installation.***

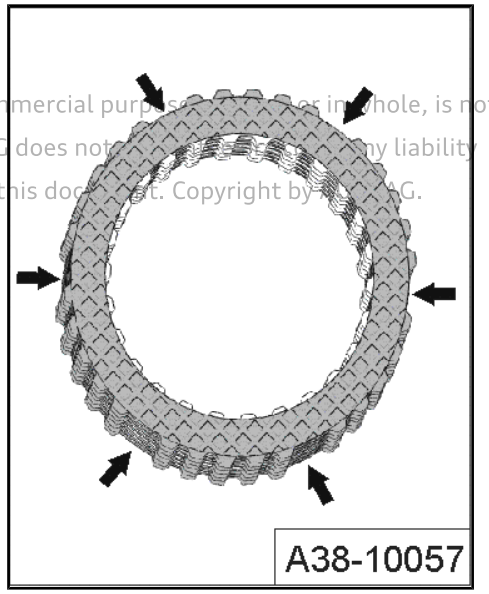

Protected by copyright. Copying for private or commercial purposes, in part or in whole, is not permitted unless authorised by AUDI AG. AUDI AG does not guarantee or assume any liability with respect to the correctness of information in this document. Copyright by AUDI AG.

– Finally insert new upper shim -5- of same thickness as old shim in input shaft.

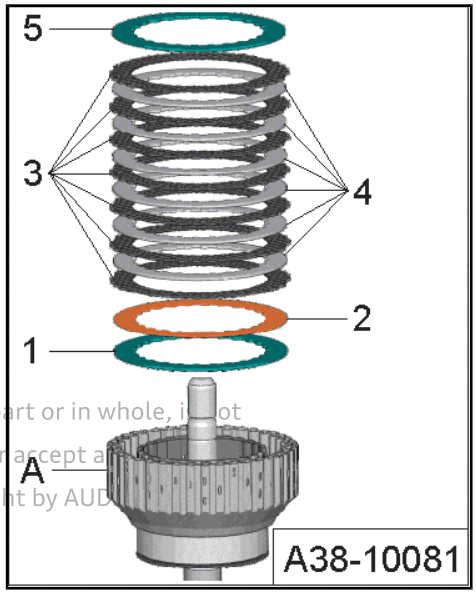

Protected by copyright. Copying for private or commercial purposes, in part or in whole, is not permitted unless authorised by AUDI AG. AUDI AG does not guarantee or accept any liability with respect to the correctness of information in this document. Copyright by AUDI AG.

Note

To ensure accuracy, the surfaces of all tools and components must be absolutely clean when performing the following measurements.

– Place the four gauge blocks -T40101- on the top shim.

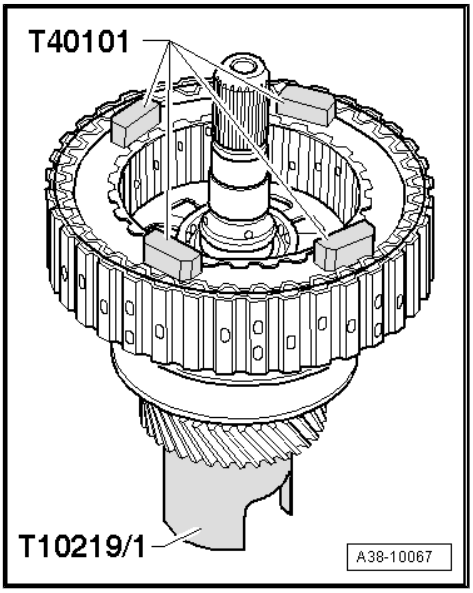

– Place a ruler -T40101- over the centre of each pair of gauge blocks -T40100- .

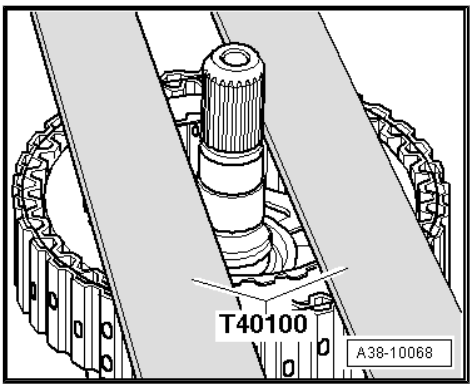

– Use digital depth gauge -VAS 6087- to measure down to shim and note down measured value -A-.

• When taking measurements, the digital depth gauge -VAS 6087- must make flush contact with both rulers -T40100- .

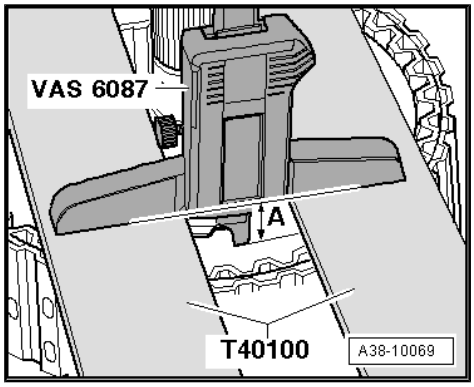

– Then use digital depth gauge -VAS 6087- to measure down to contact ring on shaft (contact surface of pressure plate) and note down measured value -B-.

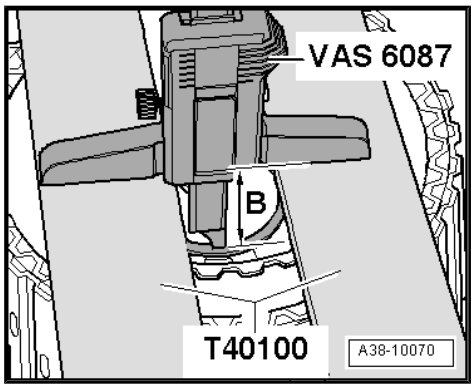

– Subtract the two measured values “B – A” to obtain the distance -K- of the clutch.

Calculating distance -K- of clutch: “B – A = K”

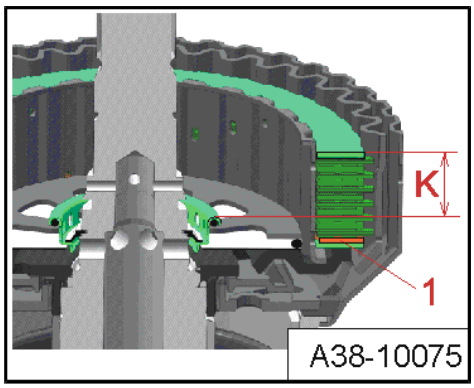

Note

The corrugated washer -1- is fitted beneath the clutch pack for the measurement.

– Repeat the measurement on the opposite side of the input shaft and again determine the distance -K- of the clutch.

– Move the four gauge blocks -T40101- and the two rulers -T40100- through 90° on the input shaft and repeat the measurements.

– Take the four values determined for the distance -K- of the clutch and calculate the mean value M_K.

Mean value: “(value 1 + value 2 + value 3 + value 4) : 4 = M_K”

Measuring the pressure plate

– First check for damage and renew if necessary.

– Turn the pressure plate over and set it down on a flat, clean surface.

– Place the two gauge blocks -T40101- on the cleaned contact surface of the pressure plate.

• The gauge blocks -T40101- must make full contact with the clean contact surface and not rest on the edge.

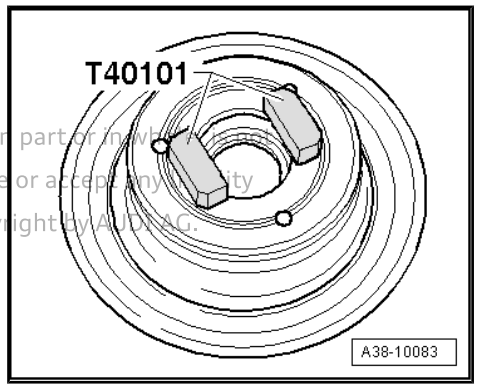

Protected by copyright. Copying for private or commercial purposes, in part or in whole, is not permitted unless authorised by AUDI AG. AUDI AG does not guarantee or accept any liability with respect to the correctness of information in this document. Copyright by AUDI AG.

– Place the rulers -T40100- over the centre of the gauge blocks -T40101- .
– Use digital depth gauge -VAS 6087- to measure down to upper contact surface and note down measured value -A-.

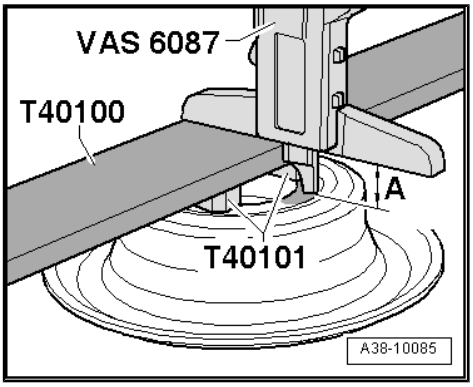

Protected by copyright. Copying for private or commercial purposes, in part or in whole, is not permitted unless authorised by AUDI AG. AUDI AG does not guarantee or accept any liability with respect to the correctness of information in this document. Copyright by AUDI AG.

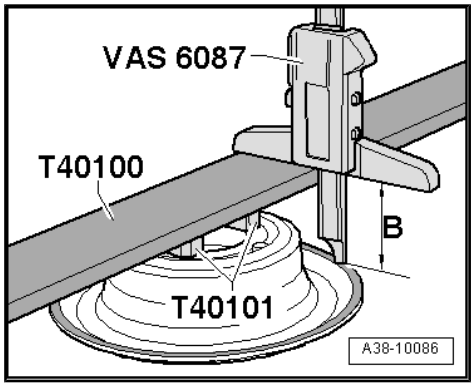

– Use digital depth gauge -VAS 6087- to measure down to lower contact surface and note down measured value -B-.

– Subtract the two measured values “B – A” to obtain the distance “D” of the two contact surfaces on the pressure plate.

Calculation of distance “D” on pressure plate: “B – A = D”

– Repeat the measurement at 2 further points on the pressure plate, offset by 120° in each case.

– Calculate the mean value for the pressure plate M_D from the three measured values.

Mean value: “(value 1 + value 2 + value 3) : 3 = M_D”

Determining the clearance

– Determine clearance using the following formula:

	Mean value of pressure plate measurements “M_D” (value 1 + value 2 + value 3) : 3
–	Mean value of clutch measurements “M_K” (value 1 + value 2 + value 3 + value 4) : 4
=	Clearance

Clearance = “M_D” – “M_K”

• Clearance specification: 1.8 ± 0.2 mm.

If result does not match specification:

A - Measured value too low:

– Insert appropriately thinner shim. It may also be necessary to renew the bottom shim.

– Check clearance again after inserting new shim ⇒ page 93 .

B - Measured value too high:

– Insert appropriately thicker shim. It may also be necessary to renew the bottom shim.

– Check clearance again after inserting new shim ⇒ page 93 .

The following shims are available:

Available shims [thickness in mm]		
1.90	2.15	2.65
2.90	3.15	

Protected by copyright. Copying for private or commercial purposes, in part or in whole, is not permitted unless authorised by AUDI AG. AUDI AG does not guarantee or accept any liability with respect to the correctness of information in this document. Copyright by AUDI AG.

Note

The clearance can be adjusted by means of the top and bottom shims.

If specification is obtained:

– Take all shims, friction plates, outer plates and the corrugated washer -5-, -4-, -3-, -2- and -1- out of input shaft cylinder -A-.

> ⚠ **Caution**
>
> *This step is necessary as the corrugated washer -2- is fitted above the bottom shim -1- only when adjusting the input shaft. When assembling the input shaft, the corrugated washer is fitted at the top.*

– Assemble the input shaft ⇒ page 90 .

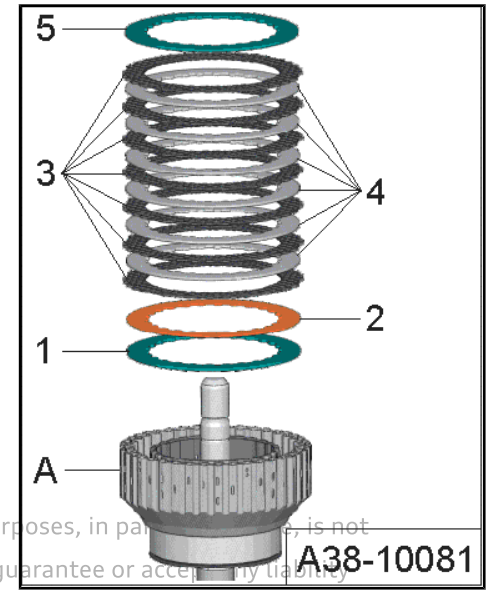

Protected by copyright. Copying for private or commercial purposes, in part or in whole, is not permitted unless authorised by AUDI AG. AUDI AG does not guarantee or accept any liability with respect to the correctness of information in this document. Copyright by AUDI AG.

2.6 Assessing wear on input shaft

3 - Friction plates

6 - Thrust plate

- ❑ Checking for wear ⇒ page 100

7 - Piston

- ❑ Checking for wear ⇒ page 100

8 - Cover

- ❑ For input shaft
- ❑ Checking ⇒ page 101

10 - Ball bearing

- ❑ For input shaft
- ❑ Renew ball bearing if input shaft cover has been removed

11 - Input shaft

- ❑ Checking contact and sealing surfaces for wear ⇒ page 100
- ❑ Checking for traces of scoring by friction plates ⇒ page 101

13 - Oil pipe

- ❑ Checking for wear ⇒ page 101

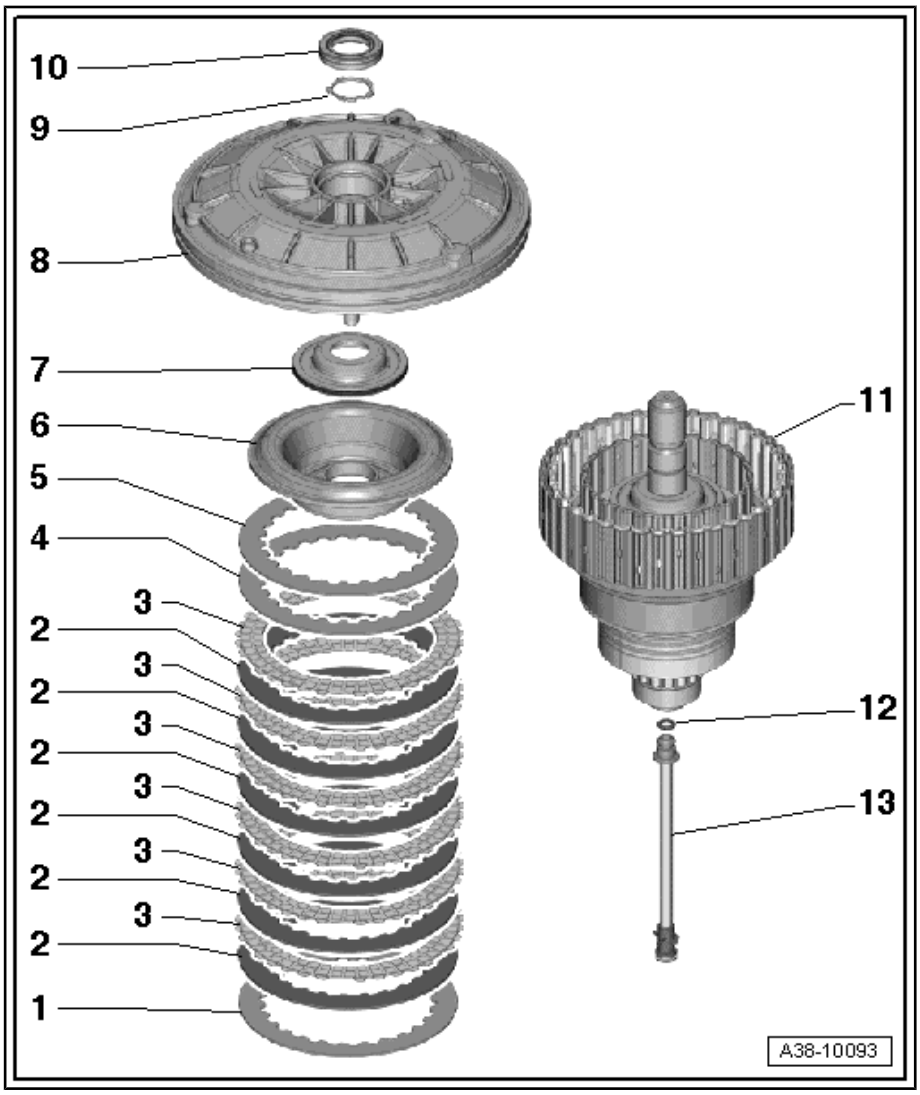

Protected by copyright. Copying for private or commercial purposes, in part or in whole, is not permitted unless authorised by AUDI AG. AUDI AG does not guarantee or accept any liability with respect to the correctness of information in this document. Copyright by AUDI AG.

Checking piston and pressure plate for wear

– Pull piston -1- out of pressure plate -2-.

Checking pressure plate -2-

– Check contact/sealing surface -arrow A- of pressure plate for wear.

– Check contact/sealing surface -arrow D- of pressure plate for wear.

• If the contact/sealing surface -arrow A- is scored or scratched, the pressure plate -2- must be renewed.

• If the contact/sealing surface -arrow D- is scored or scratched, the pressure plate -2- and the piston -1- must be renewed.

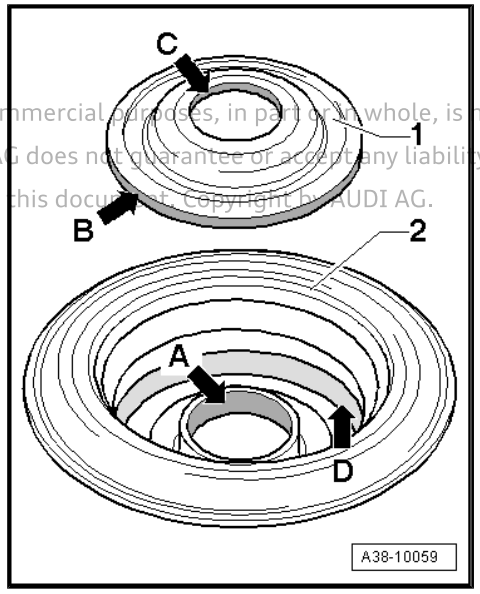

Checking piston -1-

– Check oil seal -arrow B- on outer circumference of piston -1- for damage.

– Check contact surface -arrow C- on inner circumference of piston -1- on shaft.

• If the oil seal -arrow B- is damaged or the contact surface -arrow C- of the piston is scored or scratched or of uneven thickness due to wear, the piston -1- must be renewed.

Checking contact and sealing surfaces of input shaft for wear

– Check contact/sealing surface -arrow A- of input shaft for wear.

Note

♦ *The oil seal in the input shaft cover provides a seal on this sealing surface -arrow A-.*

♦ *Slight scoring caused by the oil seal is normal.*

– Check contact surface -arrow B- of ball bearing for input shaft in input shaft cover for wear.

– Check oil seal -arrow C- on input shaft for damage.

• If oil seal -arrow C- is damaged or contact surfaces -arrow B- or -arrow A- on input shaft are severely scored, the entire input shaft must be renewed.

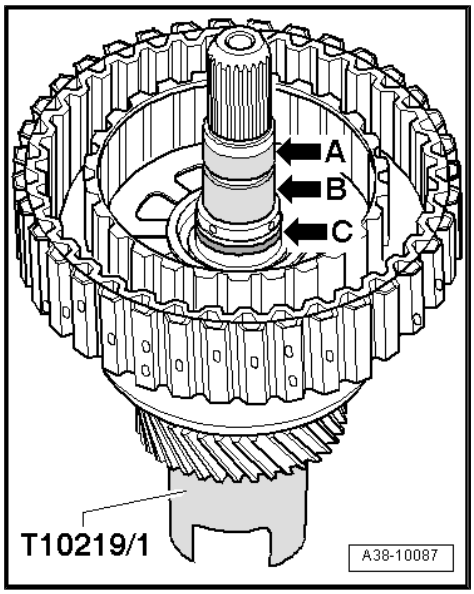

Checking for scoring caused by friction plates on inner circumference of input shaft cylinder

– Check inner circumference of input shaft cylinder for scoring caused by friction plates -arrows-.

• If scoring by friction plates -arrows- is found on inner circumference of input shaft cylinder, the entire input shaft must be renewed.

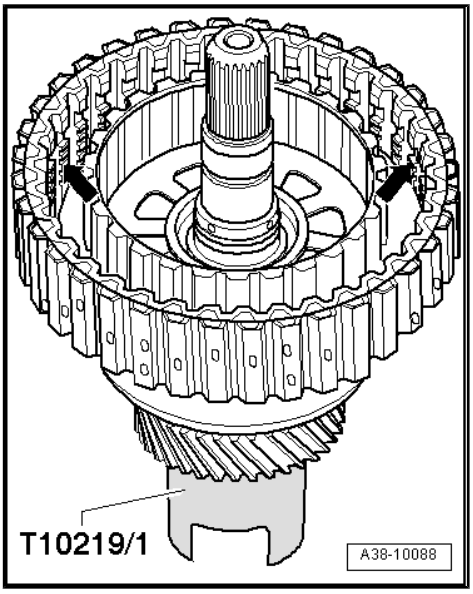

Assessing wear on oil pipe

– Check oil seal -1- on oil pipe for damage.

• There should be a gap on the seal -arrow B-.

• If gap -arrow B- is completely closed, oil pipe must be renewed.

– Check contact surfaces -arrows- and rotor vanes -arrow A- on oil pipe for wear and damage.

• Oil pipe must be renewed if oil seal -1- or rotor vanes -arrow A- are damaged or if contact surfaces -arrow- are severely scored.

• O-ring -2- must be renewed.

– Check contact surface of oil pipe in suction-jet pump.

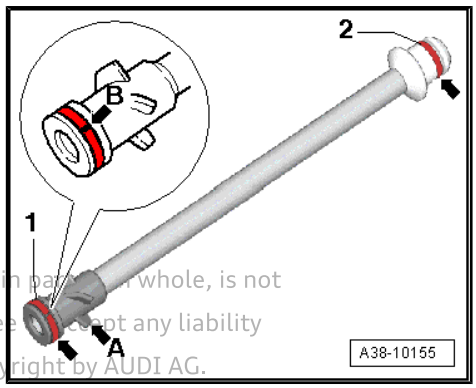

Protected by copyright. Copying for private or commercial purposes, in part or in whole, is not permitted unless authorised by AUDI AG. AUDI AG does not guarantee or accept any liability with respect to the correctness of information in this document. Copyright by AUDI AG.

Checking input shaft cover

– Check the contact surface of the cover -arrow- and the cover itself for damage.

• The contact surface must not exhibit any signs of damage.

• The input shaft cover must not be broken or cracked.

– If contact surface or cover is damaged, renew input shaft cover.

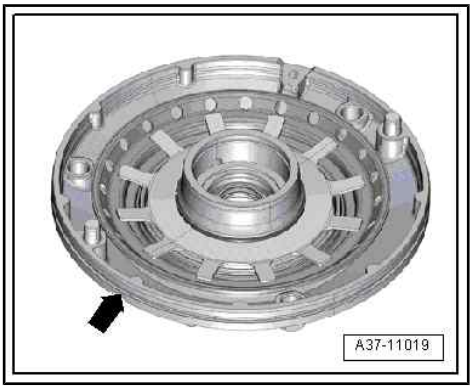

39 – Final drive - differential

1 Final drive

⇒ "1.1 Exploded view - final drive", page 102

1.1 Exploded view - final drive

Note

- ⇒ *"1 Repair instructions", page 1*
- ⇒ *"1.3 Rules for cleanliness", page 3*

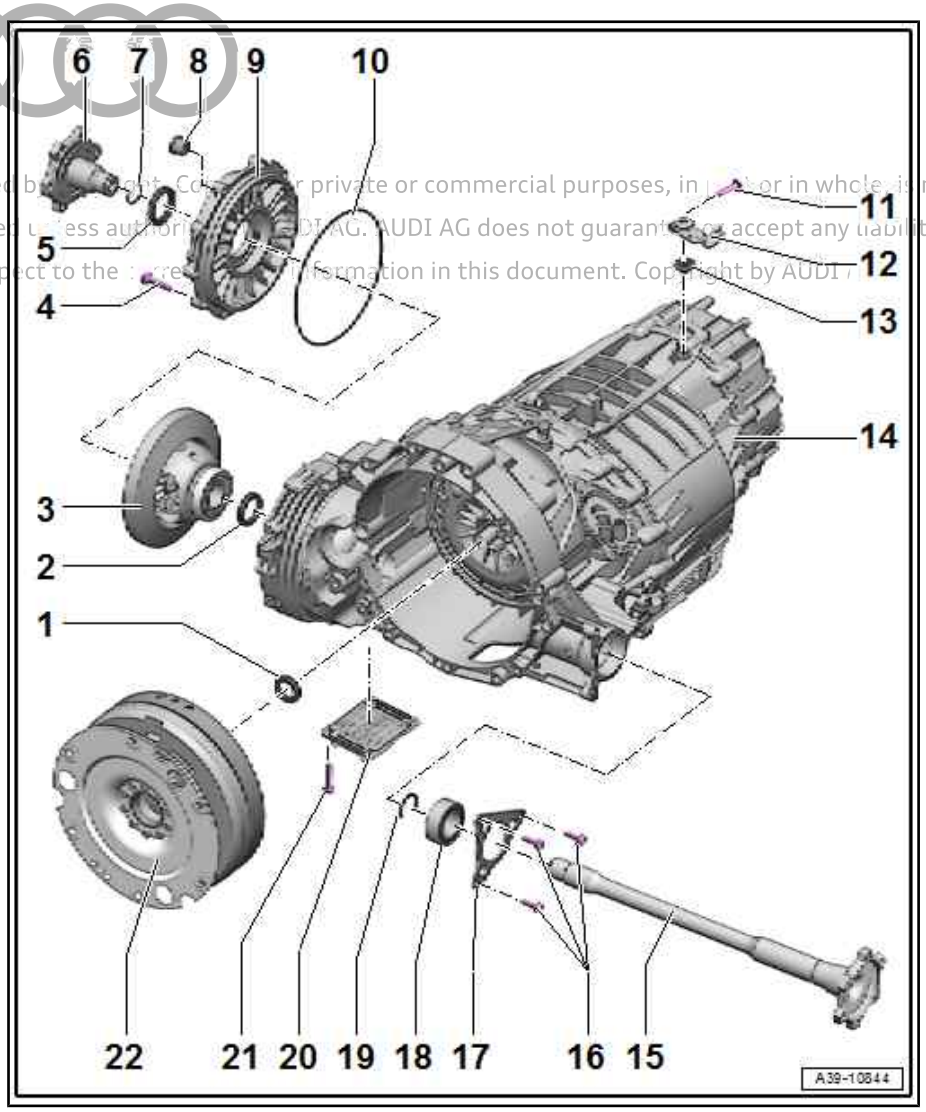

Protected by copyright. Copying for private or commercial purposes, in part or in whole, is not permitted unless authorised by AUDI AG. AUDI AG does not guarantee or accept any liability with respect to the correctness of information in this document. Copyright by AUDI AG.

1 - Oil seal
- For input shaft
- ⇒ "2.3 Renewing oil seal for input shaft", page 109

2 - Oil seal
- For flange shaft (left-side)
- ⇒ "2.1 Renewing oil seal (left-side)", page 105

3 - Differential

4 - Bolt
- Renew
- Tightening torque and sequence ⇒ page 104

5 - Oil seal
- For flange shaft (right-side)
- ⇒ "2.2 Renewing oil seal (right-side)", page 108

6 - Flange shaft (right-side)
- Removing and installing ⇒ multitronic 0AW, front-wheel drive; Rep. gr. 39 ; Differential; Removing and installing flange shaft (right-side)
- ⇒ "3.2 Removing and installing flange shaft (right-side)", page 117

7 - Circlip
- Renew

8 - Filler and inspection plug
- For gear oil in front final drive
- Renew
- 30 Nm

9 - Cover
- For front final drive

- ❑ Pay attention to dowel sleeves
- ❑ Removing and installing ⇒ page 105
- ❑ Pre-fill if cover for front final drive has been removed ⇒ multitronic 0AW front-wheel drive; Rep. gr. 39 ; Gear oil; Draining and filling gear oil

10 - O-ring

- ❑ On cover for front final drive
- ❑ Renew

11 - Bolt

- ❑ 10 Nm

12 - Gearbox selector lever

13 - Oil seal

- ❑ For selector shaft
- ❑ ⇒ “2.4 Renewing selector shaft oil seal”, page 110

14 - Gearbox

15 - Flange shaft (left-side)

- ❑ ⇒ “3.1 Removing and installing flange shaft (left-side)”, page 114

16 - Bolt

- ❑ Renew
- ❑ 10 Nm +90°

17 - Mounting bracket

- ❑ For flange shaft (left-side)
- ❑ Secured to flange shaft (left-side) together with ball bearing -item 17- by retaining clip -18-.
- ❑ If wear is visible on mounting bracket, check preload of ball bearing for flange shaft (left-side) ⇒ page 118
- ❑ Removing and installing ⇒ page 124

18 - Ball bearing

- ❑ For flange shaft (left-side)
- ❑ Checking preload of ball bearing for flange shaft (left-side) ⇒ page 118
- ❑ ⇒ “3.4 Renewing mounting bracket and ball bearing for flange shaft (left-side)”, page 124

19 - Retaining clip

- ❑ Renew

20 - Housing cover

- ❑ With gasket

21 - Bolt

- ❑ Renew
- ❑ 5 Nm +90°

Protected by copyright. Copying for private or commercial purposes, in part or in whole, is not permitted unless authorised by AUDI AG. AUDI AG does not guarantee or accept any liability with respect to the correctness of information in this document. Copyright by AUDI AG.

22 - Dual-mass flywheel

- ❑ ⇒ “1.8 Removing and installing dual-mass flywheel”, page 26

Cover for front final drive - tightening torque and sequence

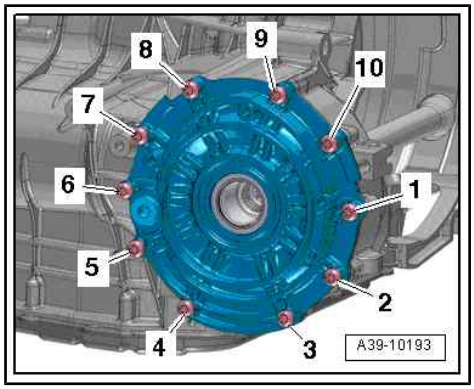

Note

Renew bolts which are tightened by turning through a specified angle.

– Tighten bolts in 3 stages in the sequence shown:

Stage	Bolts	Tightening torque/angle specification
1.	-1 … 10-	3 Nm
2.	-1 … 10-	20 Nm
3.	-1 … 10-	Turn 90° further

Protected by copyright. Copying for private or commercial purposes, in part or in whole, is not permitted unless authorised by AUDI AG. AUDI AG does not guarantee or accept any liability with respect to the correctness of information in this document. Copyright by AUDI AG.

2 Oil seals

⇒ “2.1 Renewing oil seal (left-side)”, page 105
⇒ “2.2 Renewing oil seal (right-side)”, page 108
⇒ “2.3 Renewing oil seal for input shaft”, page 109
⇒ “2.4 Renewing selector shaft oil seal”, page 110

2.1 Renewing oil seal (left-side)

Special tools and workshop equipment required

- Used oil collection and extraction unit - V.A.G 1782-

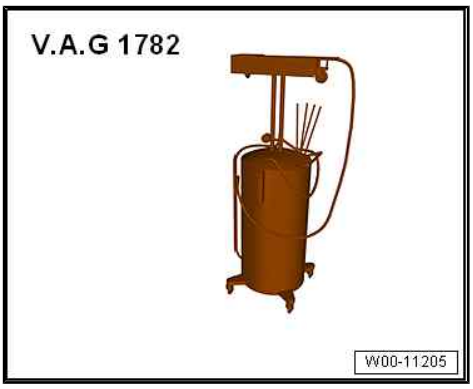

- Thrust piece - T40164-

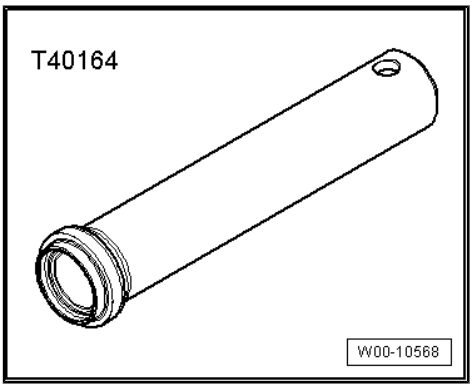

- Sealing grease - G 052 128 A1-

Protected by copyright. Copying for private or commercial purposes, in part or in whole, is not permitted unless authorised by AUDI AG. AUDI AG does not guarantee or accept any liability with respect to the correctness of information in this document. Copyright by AUDI AG.

Procedure

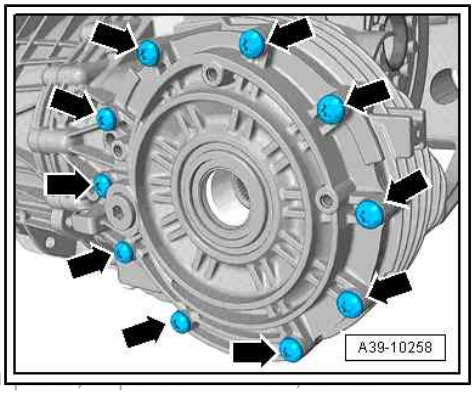

- Gearbox must be removed and secured to engine/gearbox support in horizontal position ⇒ page 15 .

– Place used oil collection and extraction unit - V.A.G 1782- below gearbox.

– Remove flange shaft (right-side) ⇒ page 117 .

– Remove bolts -arrows- in diagonal sequence.

– Carefully detach cover for front final drive (gear oil will drain off).

Protected by copyright. Copying for private or commercial pu
permitted unless authorised by AUDI AG. AUDI AG does not guarantee or accept any liability
with respect to the correctness of information in this document. Copyright by AUDI AG.

Caution

Risk of damage to the differential.

- *Detach differential slowly and carefully from gearbox housing. The differential may otherwise fall out of the gearbox.*
- *A differential which has fallen to the ground can no longer be installed. Renew gearbox if differential has fallen to the ground.*
- *Make sure that the tapered roller bearing races and shims of the differential do not fall out of the gearbox housing and the differential.*
- *Tapered roller bearing races and shims cannot be re-allocated to their original positions by the workshop if they have dropped out.*

– Carefully remove differential -arrow- and set it down on a soft surface.

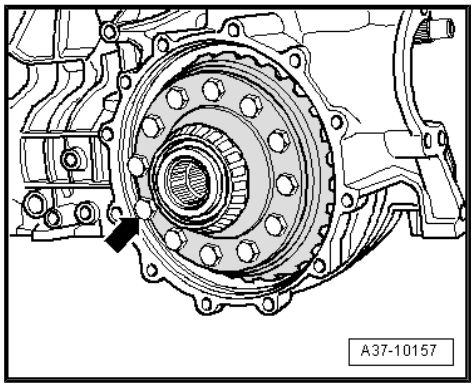

– Remove flange shaft (left-side) ⇒ page 114 .

Caution

Risk of damage to fitting surface in gearbox housing.

- *Apply screwdriver with care.*

– Press out oil seal from rear side using a screwdriver.

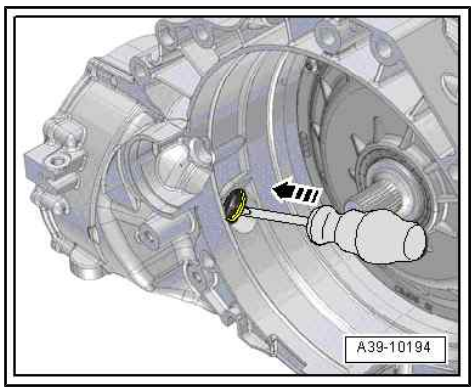

– Lightly oil outer circumference of new oil seal and slide onto thrust piece - T40164- .

• Open side of oil seal faces towards thrust piece - T40164- .

– Drive in oil seal for flange shaft (left-side) as far as stop using thrust piece - T40164- ; keep seal straight when installing.

– Pack space between sealing lip and dust lip half-full with sealing grease - G 052 128 A1- .

– Fit differential.

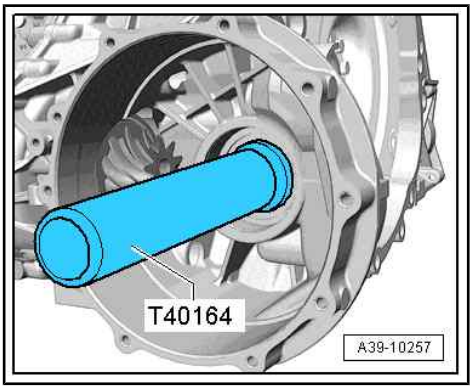

– Renew O-ring -A- on cover for front final drive and lubricate lightly with gear oil.

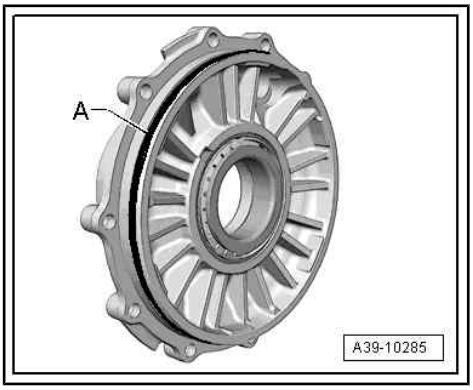

Protected by copyright. Copying for private or commercial purposes, in part or in whole, is not permitted unless authorised by AUDI AG. AUDI AG does not guarantee or accept any liability with respect to the correctness of information in this document. Copyright by AUDI AG.

– Install cover for front final drive with new O-ring and tighten bolts to specified torque ⇒ page 104 .

– Install flange shaft (left-side) ⇒ page 114 .

– Install flange shaft (right-side) ⇒ page 117 .

– Before installing gearbox, front final drive must be pre-filled with gear oil ⇒ multitronic 0AW, front-wheel drive; Rep. gr. 39 ; Gear oil; Draining and filling gear oil .

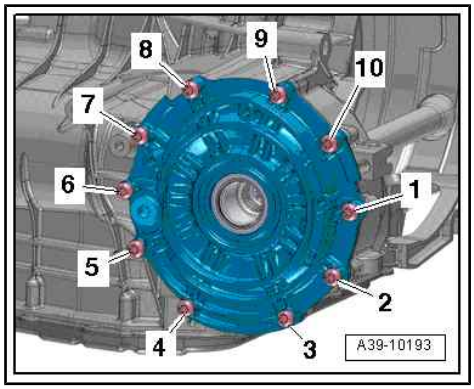

Caution

Risk of damage to gearbox

- *Different types of gear oil are available for the "multitronic 0AW" gearbox.*
- *Use only the correct type of gear oil, as assigned to the gearbox code letters.*
- *The gear oils must NOT be mixed, even in small quantities. This would result in leaks at the oil seals. Select correct gear oil for vehicle according to gearbox code letters ⇒ Electronic parts catalogue . Only the gear oil available as a replacement part for the "multitronic 0AW" may be used in the front final drive.*
- *The filler plug must always be renewed after checking the oil level. Always select correct version according to gearbox code letters in ⇒ Electronic parts catalogue . To prevent leaks on the gearbox, please check the new filler plug by comparing it with the old one.*
- *The gear oil must NOT be mixed with other types of gear oil, even in small quantities. This would cause leakage on the gearbox.*

– After installing gearbox, check gear oil level in front final drive and correct as necessary ⇒ multitronic 0AW, front-wheel drive; Rep. gr. 39 ; Gear oil; Checking gear oil level .

2.2 Renewing oil seal (right-side)

Protected by copyright. Copying for private or commercial purposes, in part or in whole, is not permitted unless authorised by AUDI AG. AUDI AG does not guarantee or accept any liability with respect to the correctness of information in this document. Copyright by AUDI AG.

Special tools and workshop equipment required

- Thrust piece - T40163-

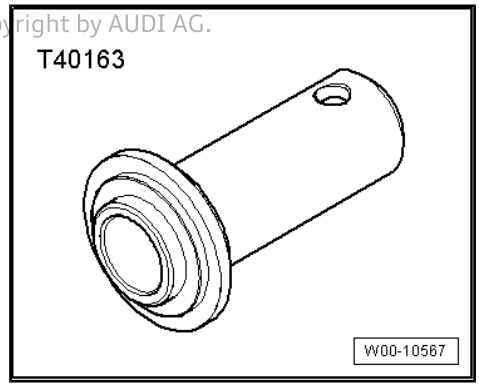

- Assembly lever

Procedure

– Remove flange shaft (right-side) ⇒ page 117 .
– Lever out oil seal for flange shaft -arrow-.
– Lightly oil outer circumference of new oil seal.

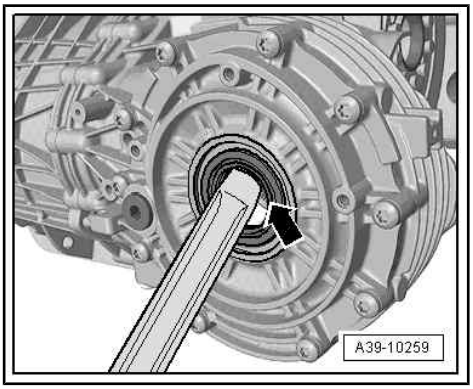

– Drive in oil seal for flange shaft (right-side) as far as stop using thrust piece - T40163- ; keep seal straight when installing.
– Pack space between sealing lip and dust lip half-full with sealing grease - G 052 128 A1- .
– Install flange shaft (right-side) ⇒ page 117 .

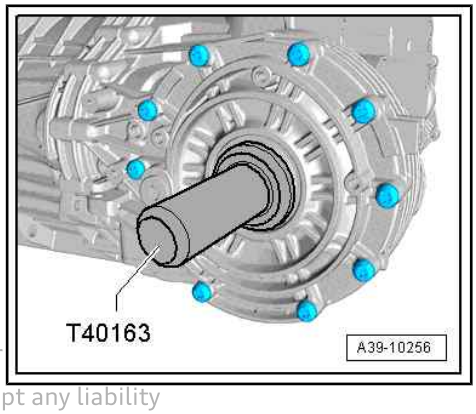

Protected by copyright. Copying for private or commercial purposes, in part or
permitted unless authorised by AUDI AG. AUDI AG does not guarantee or accept any liability
with respect to the correctness of information in this document. Copyright by AUDI AG.

2.3 Renewing oil seal for input shaft

- If ATF emerges at underside of gearbox bell housing, oil seal for input shaft may be leaking.
- If leaking, the input shaft oil seal must be renewed.

Special tools and workshop equipment required

- Oil seal extractor - T40014-

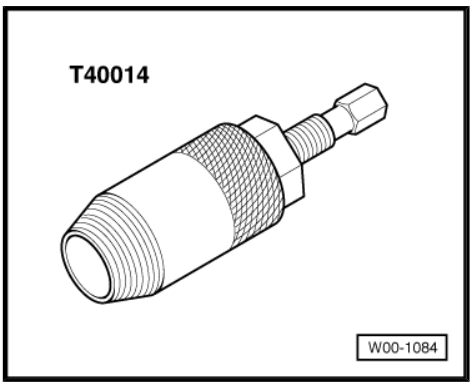

- Thrust piece - T40167-

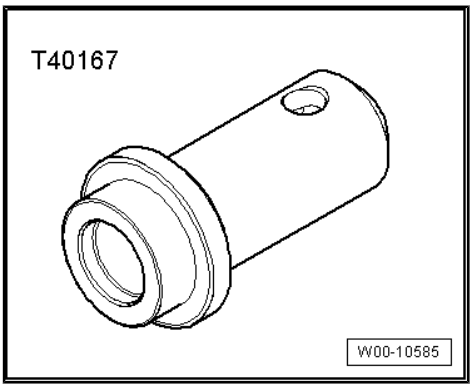

Procedure

- Gearbox removed

Note

- ⇒ *"1 Repair instructions", page 1*
- ⇒ *"1.3 Rules for cleanliness", page 3*

– Remove dual-mass flywheel ⇒ page 26 .

– Screw oil seal extractor - T40014- into oil seal by hand until tool grips securely in seal. Then tighten tool using an open-end spanner.

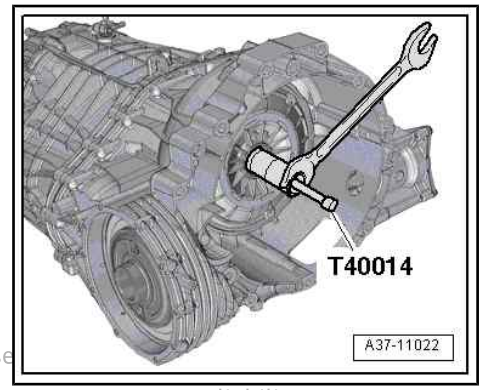

Note

The illustration shows a different gearbox.

– Screwing in the rear bolt of the oil seal extractor will allow you to pull the oil seal out a little.

– Then tighten again using open-end spanner so that oil seal extractor - T40014- once more engages securely in oil seal. Screw in the rear bolt of the extractor once more to pull the oil seal out a little further.

Copyright by AUDI AG. Reproduction and distribution in any form or for any purpose permitted unless authorised by AUDI AG. AUDI AG does not guarantee or accept any liability with respect to the correctness of information in this document. Copyright by AUDI AG.

– Repeat procedure until oil seal is pulled out all the way.

- The input shaft must be installed in the gearbox when installing the oil seal.

– Lubricate new oil seal -A- with ATF.

– Push oil seal onto input shaft (do not touch splines on shaft).

- Installation position: open side of oil seal points towards gearbox

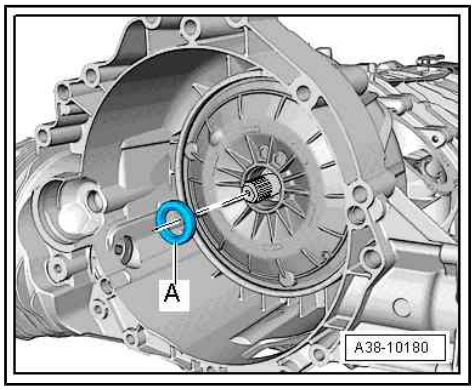

Note

- *Oil seal can be damaged if it touches splines on input shaft.*
- *Push oil seal as far as possible into cover to ensure that it remains straight when driving in.*

– Use thrust piece - T40167- to drive home oil seal (take care to keep oil seal straight).

– Install dual-mass flywheel ⇒ page 26 .

– Check and correct ATF level after installing gearbox ⇒ multitronic 0AW, front-wheel drive; Rep. gr. 37 ; ATF; Checking ATF level .

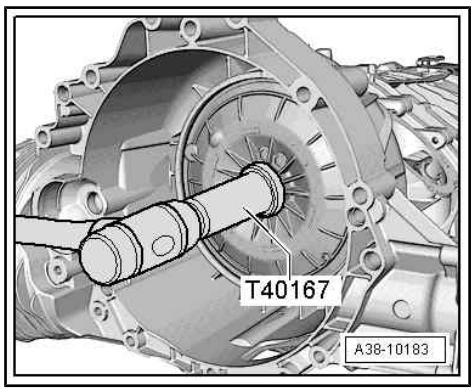

2.4 Renewing selector shaft oil seal

Special tools and workshop equipment required

- Tube - VW 418 A-

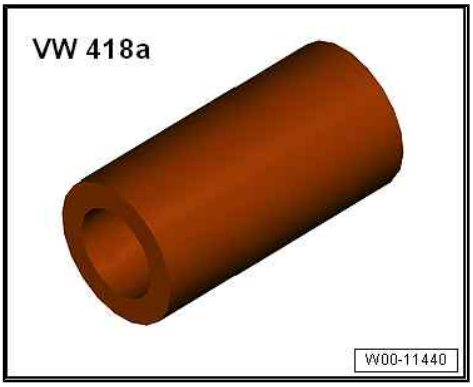

- Oil seal extractor - T40188-

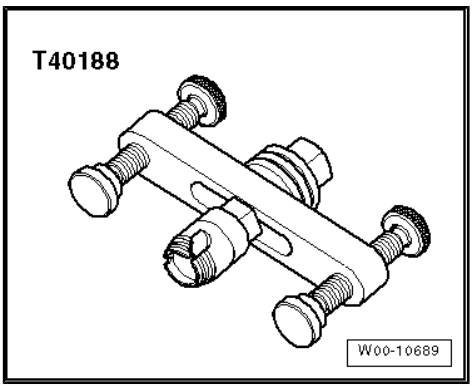

Procedure

- Gearbox must be removed and secured to engine/gearbox support in horizontal position ⇒ page 15 .

– Mark position of gearbox selector lever -A- relative to selector shaft with a waterproof pen.

Copyright by AUDI AG. Copying for private or commercial purposes, in part or in whole, is not permitted unless authorised by AUDI AG. AUDI AG does not guarantee or assume any liability with respect to the correctness of information in this document. Copyright by AUDI AG.

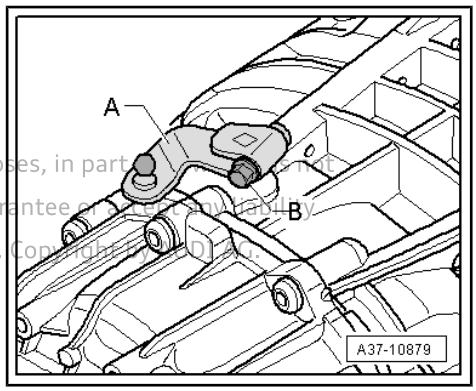

Note

The marking is to ensure that installation is performed correctly.

– Remove bolt -B- completely and lift off gearbox selector lever -A-.

Caution

Risk of damage to selector shaft (shown here from rear side with hydraulic control unit removed).

- ***The selector shaft must not be pressed into or pulled out of the gearbox.***
- ***The shifting cam -1- on the selector shaft will break off if an upward or downward force is applied to the selector shaft.***
- ***The gearbox must be renewed if the shifting cam is damaged.***

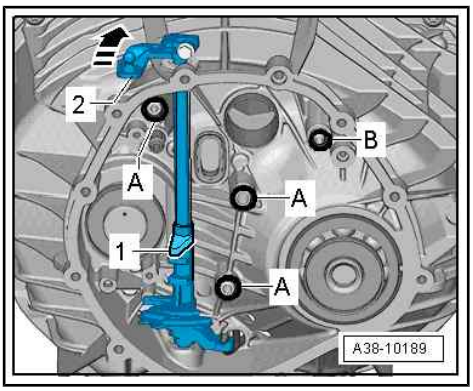

– Screw nut - T40188/1- onto puller - T40188/2- .
– Slide puller - T40188/2- over selector shaft.
– At the same time, press puller - T40188/2- firmly into oil seal -A- in direction of -arrow 1- and screw in -arrow 2-.

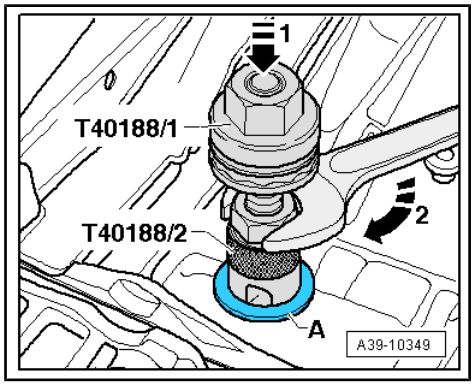

Note

♦ *The nut - T40188/1- was screwed onto the puller - T40188/2- so that greater hand pressure can be applied in the direction of -arrow 1-.*
♦ *The puller - T40188/2- cuts into the oil seal -A- when turned.*
♦ *Ensure that sealing surfaces on gearbox and selector shaft are not damaged.*

• Puller - T40188/2- must be seated very firmly in oil seal. If necessary, press in and turn puller - T40188/2- repeatedly.

– Set up cross member - T40188- and use screw feet at side to align horizontally.
• Cross member - T40188- must be aligned so that nut - T40188/1- can make flat contact.
• Distance -X- (approx. 8 mm) between lower edge of cross member and puller - T40188/2- must be maintained. If necessary, insert washers as spacers between gearbox and screw feet.

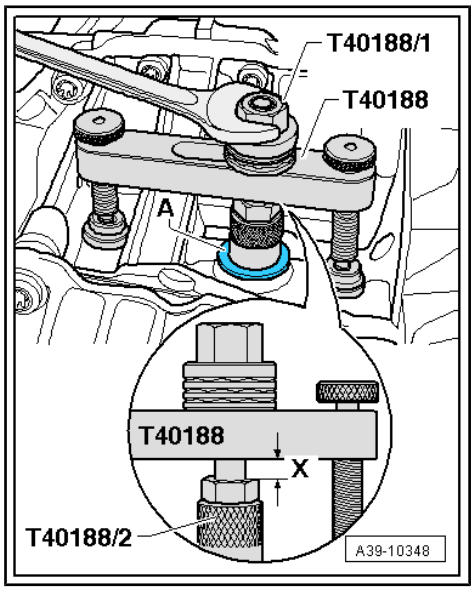

Note

The specified distance must be maintained so that the oil seal can be pulled up towards the cross member. The puller - T40188/2- will be damaged if it makes contact with the cross member before the oil seal has been removed completely.

– Screw on nut - T40188/1- and pull out oil seal for selector shaft -A-.
– Clean opening and vacuum out swarf.

– Lightly lubricate outer circumference and sealing lip of new oil seal with ATF.
– Slip new oil seal over selector shaft and press in.
– Use tube - VW 418 A- to drive home oil seal.

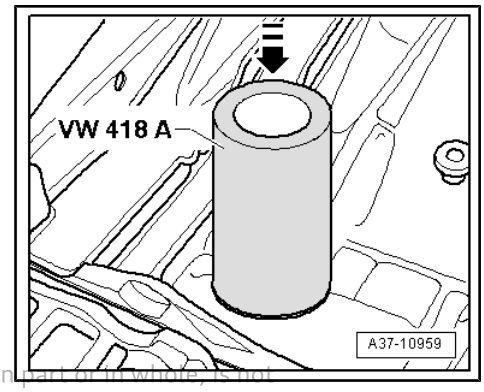

Protected by copyright. Copying for private or commercial purposes, in part or in whole, is not permitted unless authorised by AUDI AG. AUDI AG does not guarantee or accept any liability with respect to the correctness of information in this document. Copyright by AUDI AG.

– Fit gearbox selector lever -A- onto selector shaft in line with marking and tighten bolt -B-.

Tightening torque for bolt
⇒ “1.1 Exploded view - final drive”, page 102

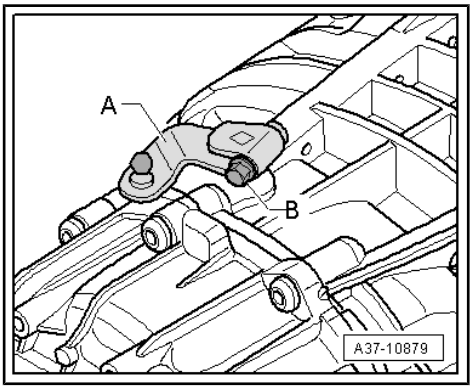

Protected by copyright. Copying for private or commercial purposes, in part or in whole, is not permitted unless authorised by AUDI AG. AUDI AG does not guarantee or accept any liability with respect to the correctness of information in this document. Copyright by AUDI AG.

3 Differential

⇒ “3.1 Removing and installing flange shaft (left-side)”, page 114

⇒ “3.2 Removing and installing flange shaft (right-side)”, page 117

⇒ “3.3 Preload of ball bearing for flange shaft (left-side)”, page 118

⇒ “3.4 Renewing mounting bracket and ball bearing for flange shaft (left-side)”, page 124

3.1 Removing and installing flange shaft (left-side)

Special tools and workshop equipment required

- ♦ Sealing grease - G 052 128 A1-

Removing

- Gearbox must be removed and secured to engine/gearbox support in horizontal position ⇒ page 15 .

– Tilt gearbox to rear on engine and gearbox support to prevent gear oil from escaping.

– Unscrew bolts -arrows- on mounting bracket for flange shaft.

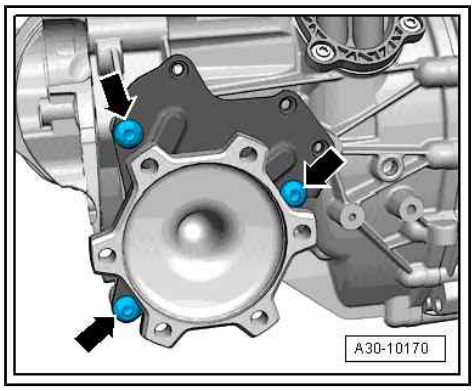

– Remove flange shaft (left-side) -2- from gearbox in direction of -arrow A-.

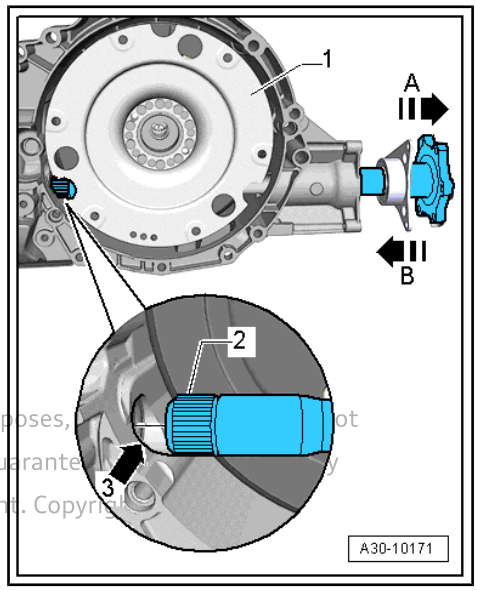

Note

-Item 1- and -arrows 3, B- can be disregarded.

Protected by copyright. Copying for private or commercial purposes, [illegible] not permitted unless authorised by AUDI AG. AUDI AG does not guarante[illegible] with respect to the correctness of information in this document. Copyr[illegible]

Note

- *If the flange shaft (left-side) cannot be removed by hand, pull it out carefully using multi-purpose tool - VW 771- .*
- *To do this, secure plate of puller - T10037- to flange shaft -arrows- and attach plate to spindle of multi-purpose tool - VW 771- (nuts -A-).*

– Remove dual-mass flywheel ⇒ page 26 .

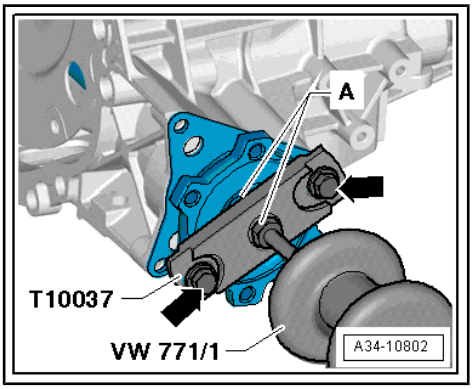

Installing

Installation is carried out in reverse sequence; note the following:

- Tightening torque
  ⇒ “1.1 Exploded view - final drive”, page 102

– Thoroughly clean flange shaft (left-side), area of gearbox housing leading to differential -arrow A-, and oil seal -arrow B-.

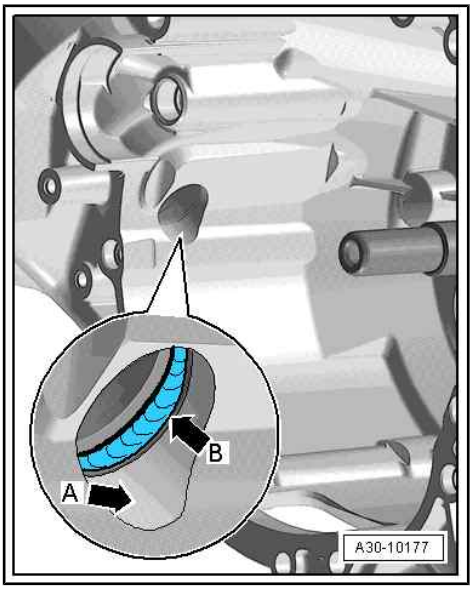

Note

If oil seal for flange shaft (left-side) between differential and gearbox housing -arrow B- is damaged, it must be renewed *⇒ page 105* *.*

– Pack space between sealing lip and dust lip half-full with sealing grease - G 052 128 A1- .

– Thoroughly clean flange shaft (left-side).

The following steps must be taken for vehicles listed below (up to vehicle identification number shown):

Vehicle model	Vehicle identification number	Place of manufacture
Audi A4 2008	up to WAUZZZ8K9BN034383	Germany, Neckarsulm
Audi A4 2008	up to WAUZZZ8KXBA082742	Germany, Ingolstadt
Audi A5 Cabriolet 2008	up to WAUVGAFH3BN009542	Germany, Neckarsulm
Audi A5 Coupé 2008	up to WAUZZZ8T9BA902081	Germany, Ingolstadt

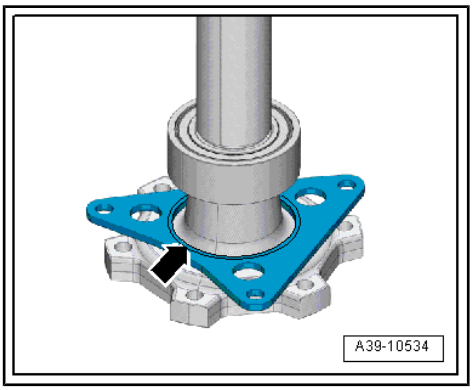

– Check preload of ball bearing for flange shaft (left-side) according to wear pattern on mounting bracket -arrow- ⇒ page 118 .

- Depending on wear pattern, optimise preload of ball bearing for flange shaft (left-side) as required ⇒ page 119 .
- Depending on wear pattern, adjust preload of ball bearing for flange shaft (left-side) as required ⇒ page 120 .

Protected by copyright. Copying for private or commercial purposes, in part or in whole, is not permitted unless authorised by AUDI AG. AUDI AG does not guarantee or accept any liability with respect to the correctness of information in this document. Copyright by AUDI AG.

Continued for all vehicle models

– Install dual-mass flywheel ⇒ page 26 .

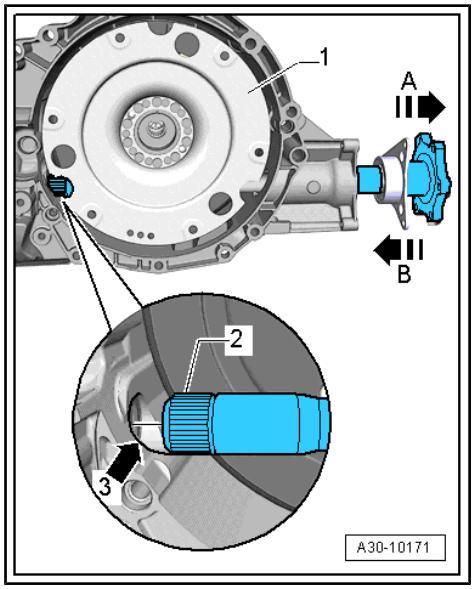

– Turn dual-mass flywheel -1- so that you can see opening to differential -arrow 3-.

– Slide flange-shaft (left-side) -2- into gearbox in direction of -arrow B- (keep end of shaft centred while guiding it into oil seal on front final drive -arrow 3-).

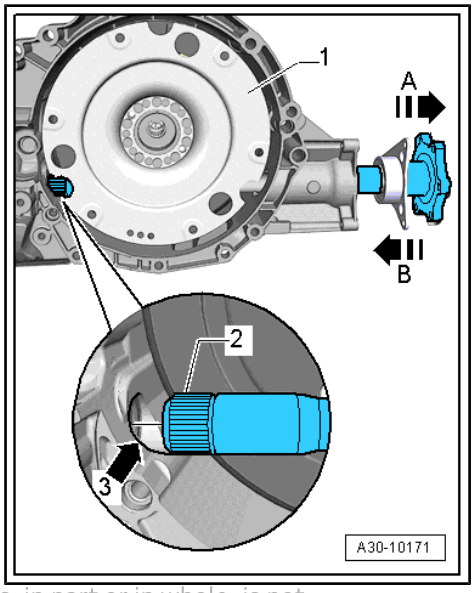

Note

- *The splines -2- on the flange shaft will damage the oil seal for the flange shaft (left-side) between the final drive and the gearbox housing if you do not keep the flange shaft centred.*
- *If the oil seal is damaged, it must be renewed.*
- *-Arrow A- can be disregarded.*

Protected by copyright. Copying for private or commercial purposes, in part or in whole, is not permitted unless authorised by AUDI AG. AUDI AG does not guaran
with respect to the correctness of information in this document. Co

– Tighten bolts -arrows-.

– After installing gearbox, fill up gear oil in front final drive and check gear oil level ⇒ multitronic 0AW, front-wheel drive; Rep. gr. 39 ; Gear oil; Checking gear oil level .

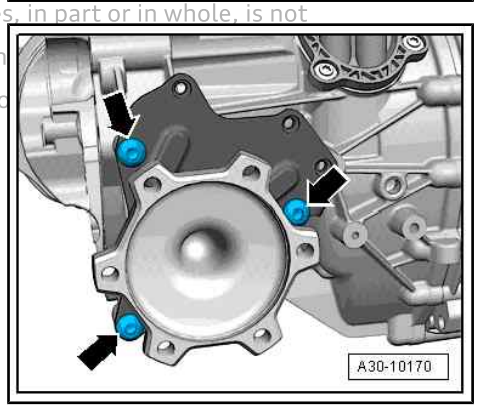

3.2 Removing and installing flange shaft (right-side)

Note

The flange shaft (right-side) can also be removed and installed with the gearbox in the vehicle ⇒ multitronic 0AW, front-wheel drive; Rep. gr. 39 ; Differential; Removing and installing flange shaft (right-side) .

Protected by copyright. Copies for private or commercial purposes, in part or in whole, is not permitted unless authorised by AUDI AG. AUDI AG does not guarantee or accept any liability with respect to the correctness of information in this document. Copyright by AUDI AG.

Special tools and workshop equipment required

- Drift - VW 295-

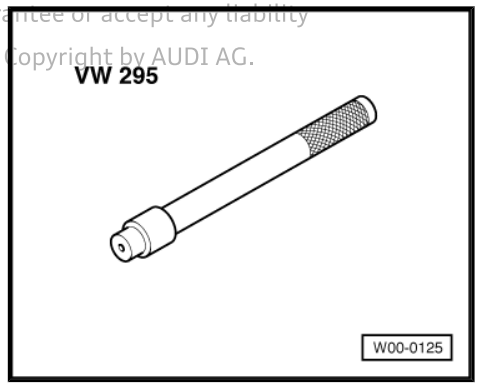

- Puller - T10037-

- Sealing grease - G 052 128 A1-

Removing

- Gearbox must be removed and secured to engine/gearbox support in horizontal position ⇒ page 15 .

– Remove flange shaft (right-side); to do so, secure puller - T10037- to gearbox housing -arrow-.

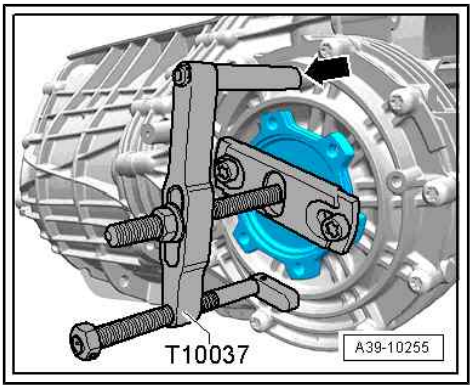

Installing

Installation is carried out in the reverse order; note the following:

– Always renew circlip for flange shaft -A-.
– Clamp flange shaft in vice, using jaw protectors. Use new circlip -A- to press old circlip out of groove in flange shaft.

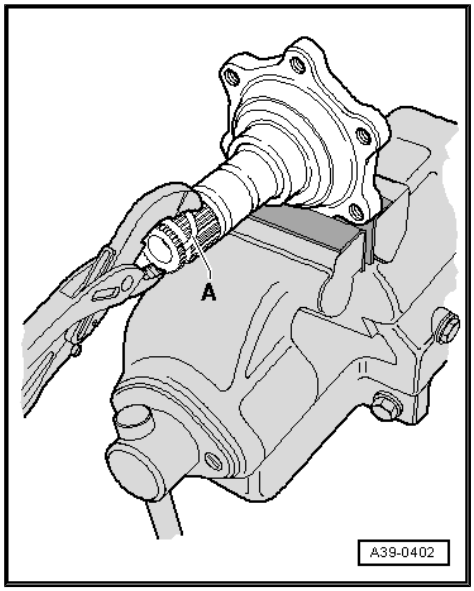

– Check flange shaft oil seal (right-side) -arrow- for damage and renew if necessary ⇒ page 108 .
– Pack space between sealing lip and dust lip half-full with sealing grease - G 052 128 A1- .
– Knock flange shaft in with drift - VW 295- .
– Fill up gear oil in front final drive and check gear oil level ⇒ multitronic 0AW, front-wheel drive; Rep. gr. 39 ; Gear oil; Checking gear oil level .

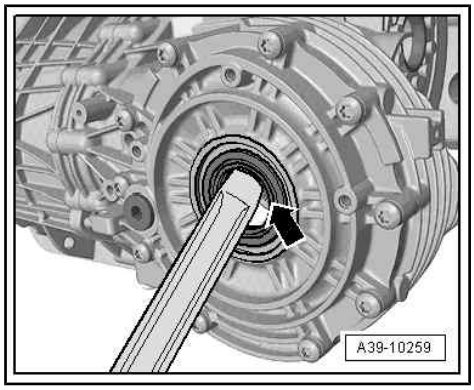

Protected by copyright. Copying for private or commercial purposes, in part or in whole, is not permitted unless authorised by AUDI AG. AUDI AG does not guarantee or accept any liability with respect to the correctness of information in this document. Copyright by AUDI AG.

3.3 Preload of ball bearing for flange shaft (left-side)

⇒ "3.3.1 Checking preload of ball bearing for flange shaft (left-side)", page 118

⇒ "3.3.2 Optimising preload of ball bearing for flange shaft (left-side)", page 119

⇒ "3.3.3 Adjusting preload of ball bearing for flange shaft (left-side)", page 120

3.3.1 Checking preload of ball bearing for flange shaft (left-side)

Check preload of ball bearing according to wear pattern on mounting bracket -arrow-.

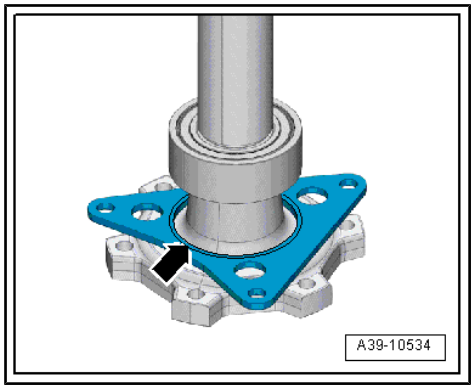

Note

- *It is only necessary to check preload of ball bearing for flange shaft (left-side) on certain vehicles; for list of vehicles see table* *⇒ page 115* .
- *This measure is not required on later vehicles because of a design change.*

⇒ page 114

Wear pattern “A”

- Slight impressions in vicinity of hole in mounting bracket -arrows-.
- No trace of scoring or material worn down around circumference.

– Optimise preload of ball bearing for flange shaft (left-side) ⇒ page 119 .

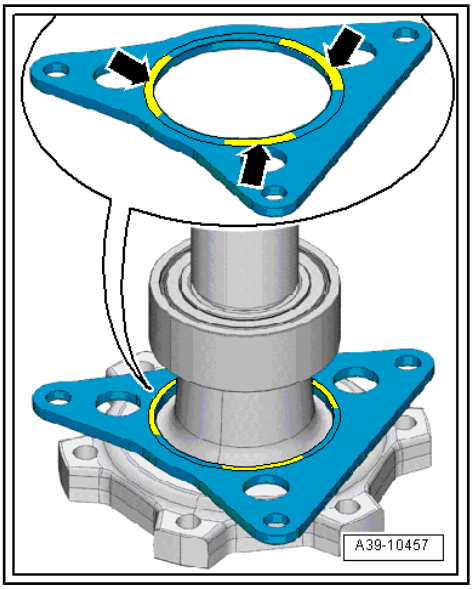

Wear pattern “B”

- Scoring and possibly material worn down around circumference of hole in mounting bracket -arrow-.

– Adjust preload of bearing for flange shaft (left-side) ⇒ page 120 .

– Renew mounting bracket, ball bearing and circlip ⇒ page 124 .

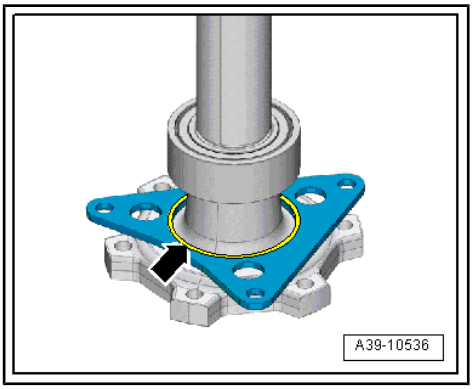

3.3.2 Optimising preload of ball bearing for flange shaft (left-side)

Protected by copyright. Copying for private or commercial purposes, in part or in whole, is not permitted unless authorised by AUDI AG. AUDI AG does not guarantee or accept any liability with respect to the correctness of information in this document. Copyright by AUDI AG.

Note

- *It is only necessary to optimise preload of ball bearing for flange shaft (left-side) on certain vehicles; for list of vehicles see table ⇒ page 115 .*
- *This measure is not required on later vehicles because of a design change.*

Procedure

- Flange shaft (left-side) must be removed ⇒ page 114 .

Requirements for optimising:

- Mounting bracket shows no trace of scoring or material worn down around circumference.
- Slight impressions in vicinity of hole in mounting bracket -arrows- are permissible.

Protected by copyright. Copying for private or commercial purposes, in whole or in part, is not permitted unless authorised by AUDI AG. AUDI AG does not guarantee or assume any liability with respect to the correctness of information in this document. © AUDI AG.

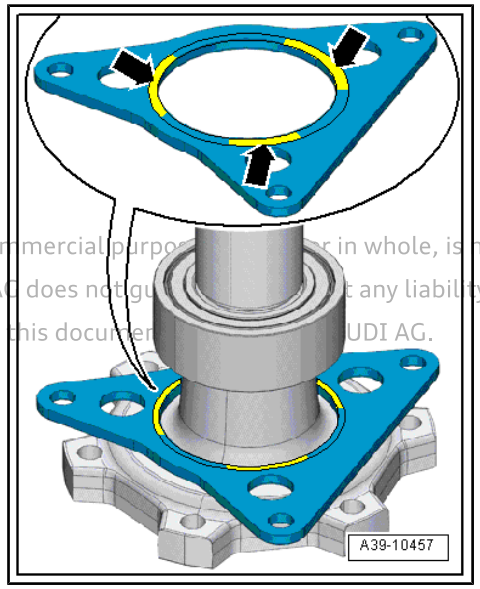

- Mounting bracket with wear pattern “A” ⇒ page 119 (mounting bracket has no traces of scoring or material worn down around circumference).
- A shim is inserted in the bearing seat in the gearbox to optimise the preload of the ball bearing.

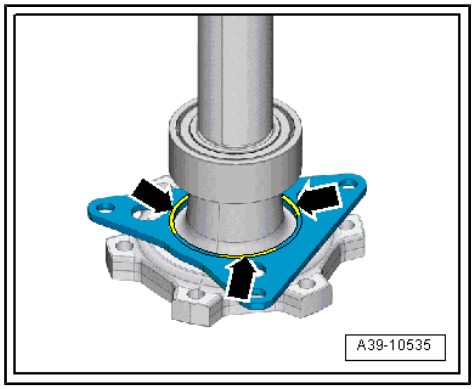

– Before installing flange shaft , insert shim - 0B4 409 227- -item 1- in bearing seat in gearbox to optimise preload of ball bearing.
– Install flange shaft (left-side) ⇒ page 115 .

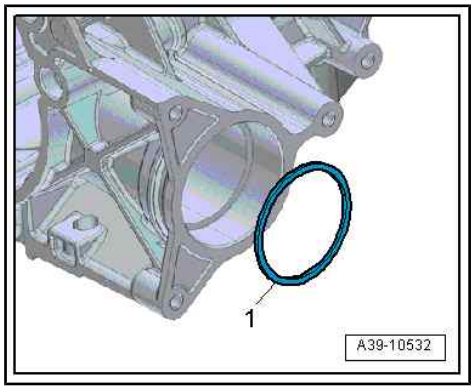

3.3.3 Adjusting preload of ball bearing for flange shaft (left-side)

Note

- *It is only necessary to optimise preload of ball bearing for flange shaft (left-side) on certain vehicles; for list of vehicles see table* *⇒ page 115* *.*
- *This measure is not required on later vehicles because of a design change.*

- Flange shaft (left-side) must be removed ⇒ page 114 .
- Mounting bracket with wear pattern “B” ⇒ page 119 (scoring and possibly material worn down around circumference of hole).
- Mounting bracket and ball bearing must be renewed ⇒ page 124 .

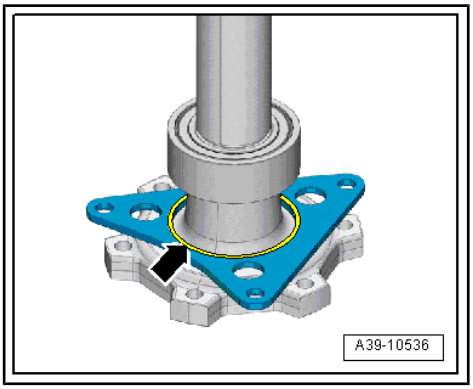

Procedure

Protected by copyright. Copying for private or commercial purpos
with respect to the correctness of information in this document.

– Attach emery cloth (grain size 150) to sanding block and clean coarse dirt and corrosion off contact surface -arrow-.

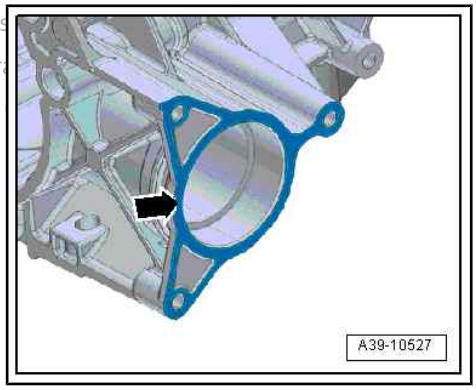

Note

The contact surface does not have to be sanded down to bare metal; it is sufficient to remove coarse dirt and corrosion.

– Clean contact surface and bearing seat.

– Fit new ball bearing -arrow- for flange shaft (left-side) in bearing seat.

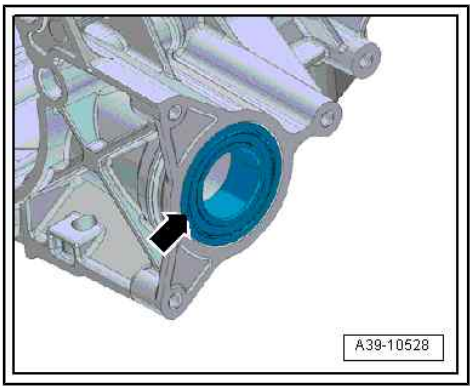

Continued procedure:

♦ If bearing protrudes slightly outside contact surface ⇒ page 122

♦ If bearing is below contact surface ⇒ page 123

Procedure if bearing protrudes outside contact surface

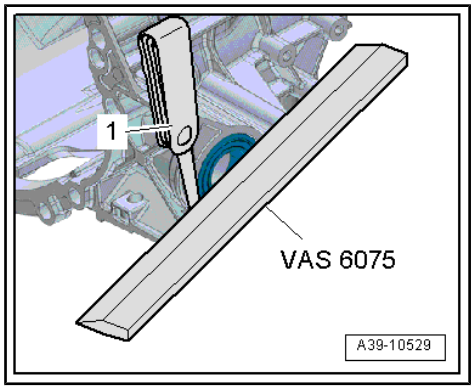

– Apply straight edge (500 mm) - VAS 6075- across bearing and measure distance to contact surface on gearbox housing on both sides using feeler gauge.
– Note down measured value.
– Re-apply straight edge at an angle of 90° across bearing and measure distance to contact surface on gearbox housing on both sides using feeler gauge.
– Note down measured value.

Determining shim(s):

Note

The smallest of the 4 measured values is used to determine the shim(s).

- Specification: bearing should protrude by 0.5 ... 0.8 mm

	Smallest amount of bearing protrusion (0.1 mm in this example)
+	Thickness of shim(s) (thickness 0.3 mm)
=	Bearing preload (specification 0.5 ... 0.8 mm)

Example:

1 shim:

0.1 mm + 0.3 mm = 0.4 mm, “bearing preload insufficient”

2 shims:

0.1 mm + 0.3 mm + 0.3 mm = 0.7 mm “bearing preload in specified range”

- Result: Inserting 2 shims of 0.3 mm thickness gives a bearing preload of 0.7 mm (inside tolerance range of 0.5 … 0.8 mm)

Protected by copyright. Copying for private or commercial purposes, in part or in whole, is not permitted unless authorised by AUDI AG. AUDI AG does not guarantee or accept any liability with respect to the correctness of information in this document. Copyright by AUDI AG.

Procedure if bearing is below contact surface

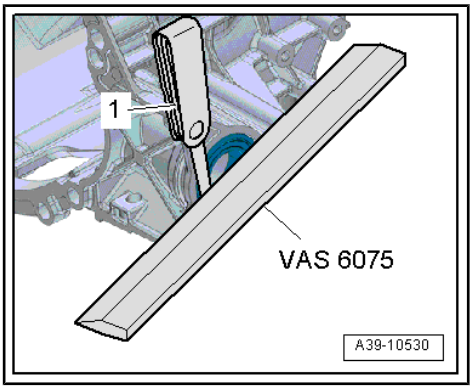

Note

Use only the method described here to measure the distance below the contact surface.

– Apply straight edge (500 mm) - VAS 6075- across contact surface on gearbox housing and measure distance to bearing on both sides using feeler gauge.
– Note down measured value.
– Re-apply straight edge at an angle of 90° across contact surface on gearbox housing and measure distance to bearing on both sides using feeler gauge.
– Note down measured value.

Determining shim(s):

Note

♦ *The largest of the 4 measured values is used to determine the shim(s).*

♦ *The measured distance below the contact surface is taken as a minus value ("–") for the calculation.*

• Specification: bearing should protrude by 0.5 ... 0.8 mm

–	Largest distance below surface (–0.15 mm in this example)
+	Thickness of shim(s) (thickness 0.3 mm)
=	Bearing preload (specification 0.5 ... 0.8 mm)

Example:

1 shim:

-0.15 mm + 0.3 mm = 0.15 mm, "bearing preload insufficient"

3 shims:

-0.15 mm + 0.3 mm + 0.3 mm + 0.3 mm = 0.75 mm, "bearing preload in specified range"

• Result: Inserting 3 shims of 0.3 mm thickness gives a bearing preload of 0.75 mm (inside tolerance range of 0.5 … 0.8 mm)

Continued for all vehicles:

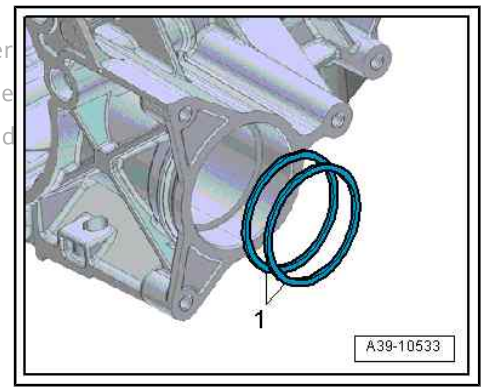

– Renew mounting bracket, ball bearing and circlip ⇒ page 124 .
– Before installing flange shaft fit calculated number of shims -0B4 409 227- -item 1- in bearing seat in gearbox.
– Install flange shaft (left-side) ⇒ page 115 .

Protected by copyright. Copying for private or commer
permitted unless authorised by AUDI AG. AUDI AG doe
in this d

3.4 Renewing mounting bracket and ball bearing for flange shaft (left-side)

Special tools and workshop equipment required

- Thrust plate - VW 401-

Protected by copyright. Copying for private or commercial purposes, in pa or in wi
permitted unless authorised by AUDI AG. AUDI AG does not guarantee or acce
with respect to the correctness of information in this document. Copyright by

- Thrust plate - VW 402-

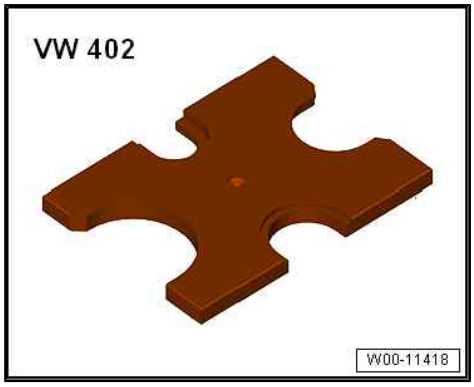

- Press tool - VW 412-

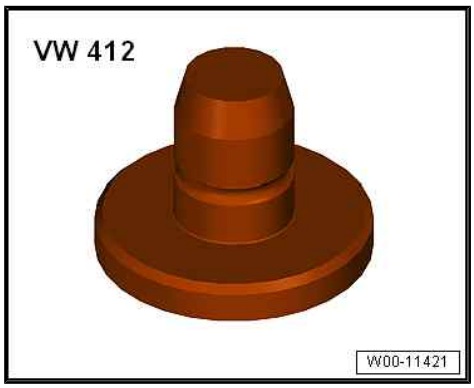

- Tube - VW 516-

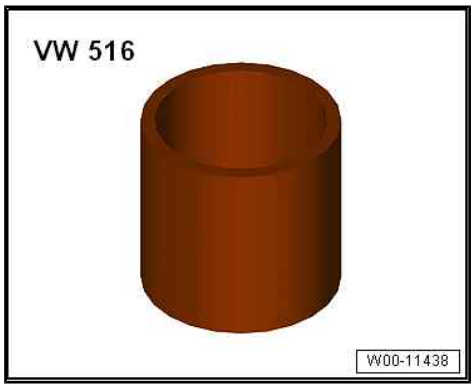

– Remove flange shaft (left-side) ⇒ page 114 .
– Remove circlip -1- from flange shaft.

Protected by copyright. Copying for private or commercial purposes, in part
permitted unless authorised by AUDI AG. AUDI AG does not guarantee or
with respect to the correctness of information in this document. Copyright b

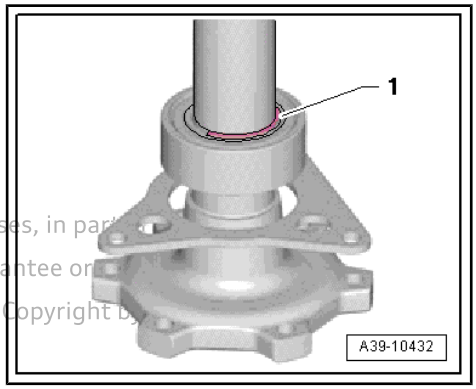

– Press ball bearing -A- off flange shaft.

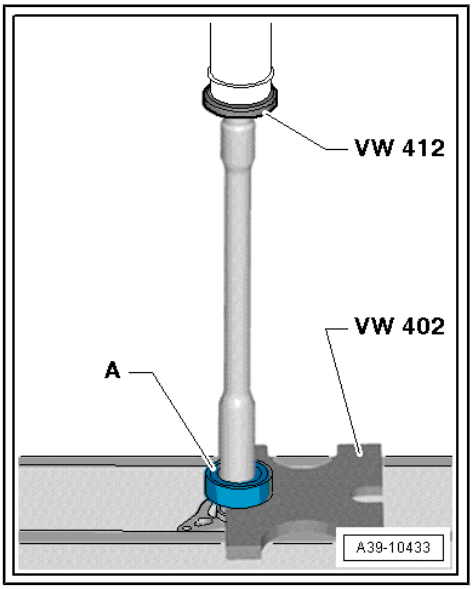

– Fit new mounting bracket -1-.
• Installation position: side with lettering faces towards flange for drive shaft.
– Fit new ball bearing -2-.

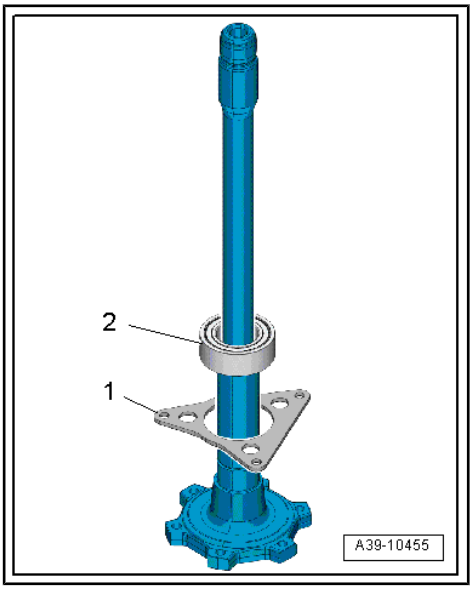

– With mounting bracket -B- installed, press on ball bearing -A- as far as stop.

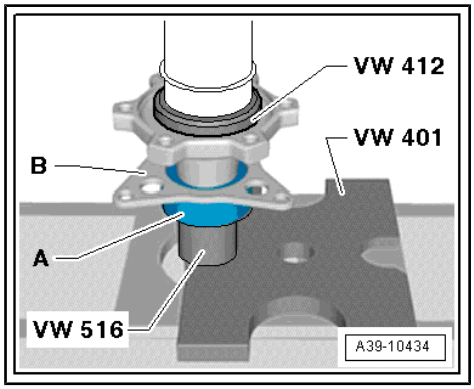

– Fit circlip -1- in annular groove on flange shaft.

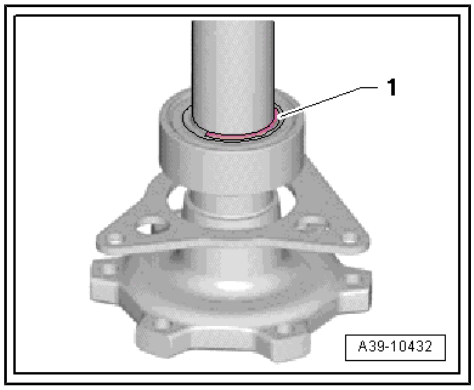

Protected by copyright. Copying for private or commercial purposes, in part or in whole, is not permitted unless authorised by AUDI AG. AUDI AG does not guarantee or accept any liability with respect to the correctness of information in this document. Copyright by AUDI AG.

4 Gearbox control system

⇒ "4.1 Removing and installing gearbox control unit", page 127

⇒ "4.2 Removing and installing hydraulic control unit", page 129

4.1 Removing and installing gearbox control unit

Removing

Note

- *⇒ "1 Repair instructions", page 1*
- *⇒ "1.3 Rules for cleanliness", page 3*

– Remove end cover ⇒ page 28 .

– If fitted, detach displacer plate -A-.

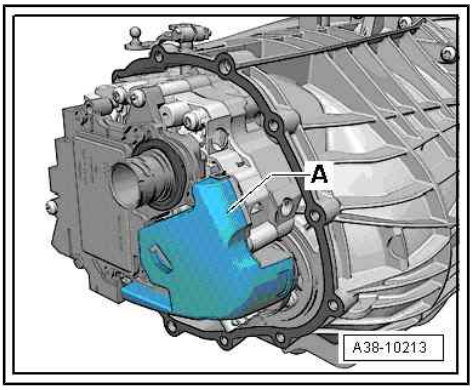

– Unscrew bolts -arrows- and pull out automatic gearbox control unit - J217- , taking care not to tilt it.

– Take twin-lip seal -B- off automatic gearbox control unit - J217- .

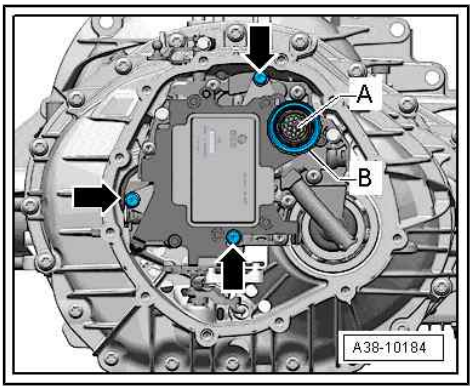

Note

- *Do not touch pins in connector -A- with bare hands.*
- *Take care that control unit senders are not damaged when placing automatic gearbox control unit - J217- to side.*

Installing

Installation is carried out in reverse sequence; note the following:

- Tightening torques
  ⇒ "1.2 Exploded view - end cover", page 18

Note

Renew gaskets and O-rings.

Protected by copyright. Copying for private or commercial purposes, in part or in whole, is not permitted unless authorised by AUDI AG. AUDI AG does not guarantee or accept any liability with respect to the correctness of information in this document. Copyright by AUDI AG.

– Clean senders -5 to 8- and connectors -1 to 3- to remove dirt and metal particles if necessary.

– Clean selector shaft ⇒ page 29 .

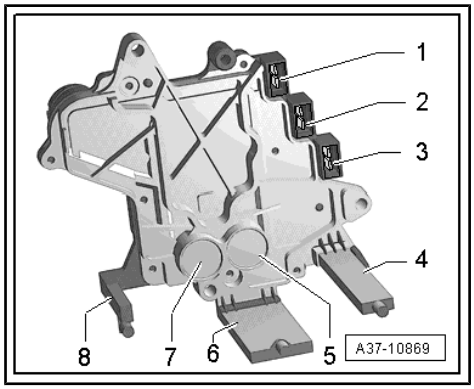

– Before fitting automatic gearbox control unit -J217- , lubricate new O-rings -A- on hydraulic control unit with ATF.

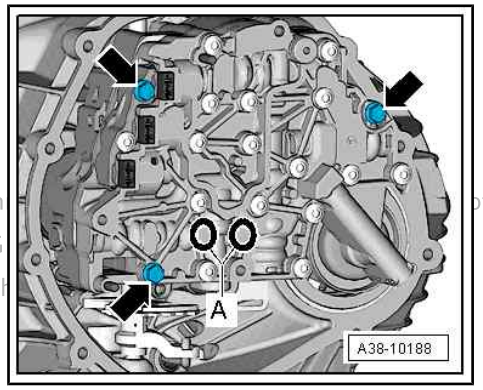

Note

Disregard -arrows-.

Protected by copyright. Copying for private or com ot
permitted unless authorised by AUDI AG. AUDI AG
with respect to the correctness of information in th

– Bring automatic gearbox control unit - J217- into position, taking care not to tilt it.

• Make sure that connectors on back of control unit mate correctly with connectors -A-, -B- and -C- on hydraulic control unit.

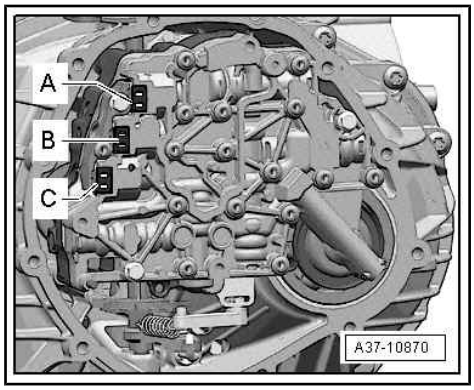

– Tighten bolts -arrows-.

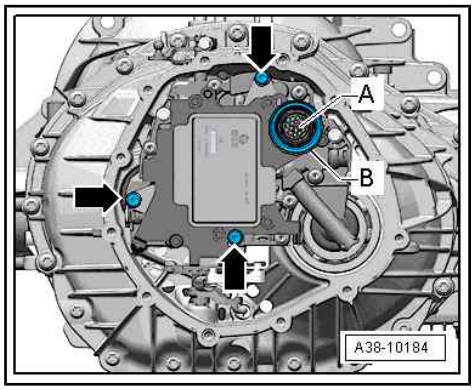

– If fitted, attach displacer plate -A- to automatic gearbox control unit - J217- .

– Install end cover ⇒ page 28 .

– Fill up ATF and check and correct ATF level ⇒ multitronic 0AW, front-wheel drive; Rep. gr. 37 ; ATF; Checking ATF level .

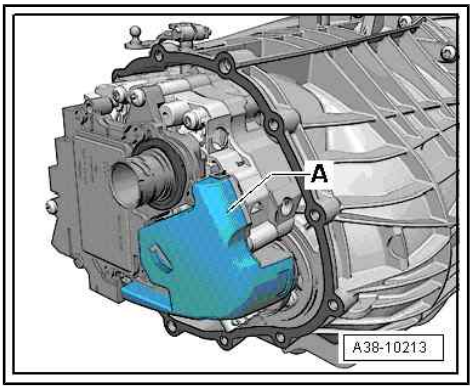

Caution

If the automatic gearbox control unit - J217- has been renewed, you must carry out the following steps using a vehicle diagnostic tester :

– Using the diagnostic tester in Guided Fault Finding mode, go to `Function/Component Selection` and select the following menu items:

- `Drive system`
- `0AW gearbox`
- `01 - Self-diagnosis compatible systems`
- `02 - Gearbox electronics`
- `02 - Gearbox electronics, Functions`
- `02 - Replace control unit`

4.2 Removing and installing hydraulic control unit

Removing

Note

- *⇒ "1 Repair instructions", page 1*
- *⇒ "1.3 Rules for cleanliness", page 3*

- End cover must be removed ⇒ page 28 .
- Automatic gearbox control unit - J217- must be removed ⇒ page 127 .

Protected by copyright. Copying for private or commercial purposes, in part or in whole, is not permitted unless authorised by AUDI AG. AUDI AG does not guarantee or accept any liability with respect to the correctness of information in this document. Copyright by AUDI AG.

Caution

Risk of damage to spring.

- *Do not use sharp pliers or similar when inserting or removing spring.*
- *The detent for the selector shaft will no longer function properly if the wire of the spring is damaged by incision or kinking.*

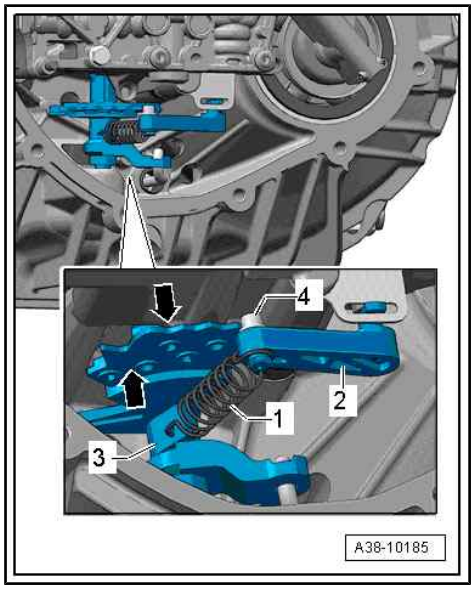

– Unhook spring -1- from lever for selector shaft detent -2- and from selector shaft -3-.

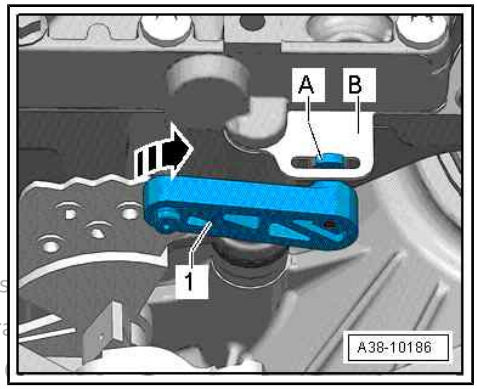

– Swivel lever for selector shaft detent -1- to right -arrow- so that retaining tab -A- is rotated out of slot on retaining plate -B-.

Protected by copyright. Copying for private or commercial purpos
permitted unless authorised by AUDI AG. AUDI AG does not guara
with respect to the correctness of information in this document.

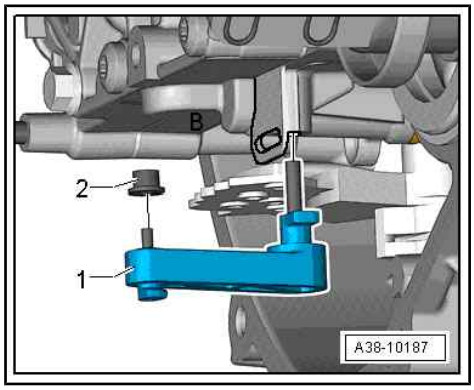

– Pull lever for selector shaft detent -1- downwards out of hole in housing of hydraulic control unit. Pay attention to the roller -2- when doing this.

– Remove bolts -arrows-.

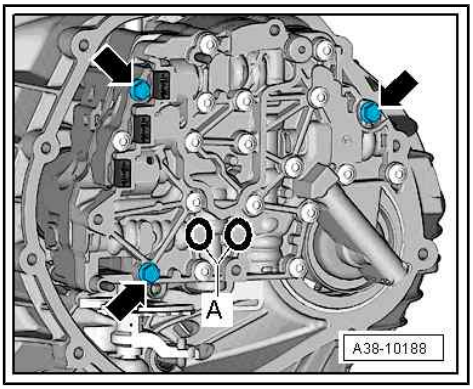

Caution

Take care not to damage hydraulic control unit.

- *NEVER suspend or lift the hydraulic control unit by the long pump shaft on the rear side of the hydraulic control unit!*
- *This would distort the vanes inside the vane pump and damage the pump. There is also a risk of damaging the bearing of the pump shaft.*

– Carefully pull hydraulic control unit out towards rear and then tilt it downwards so that the long pump shaft can be guided out.

Note

Item -A- can be disregarded.

– Remove axial sealing elements -A- and -B- from gearbox.

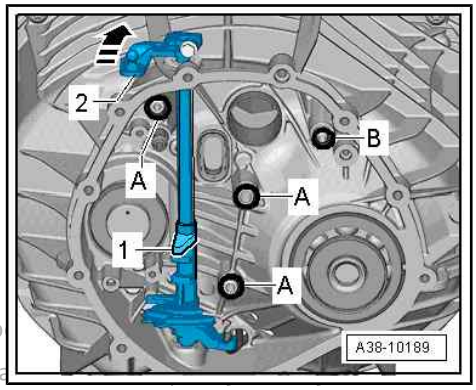

Installing

Installation is carried out in reverse sequence; note the following:

- Tightening torques
  ⇒ "1.2 Exploded view - end cover", page 18

Note

- *Always renew contaminated or defective hydraulic control units.*
- *Renew gaskets and O-rings.*

Protected by copyright. Copying for private or commercial purp
permitted unless authorised by AUDI AG. AUDI AG does not gua
with respect to the correctness of information in this document. Copyright by AUDI AG.

– Renew axial sealing elements -A- (3x) and -B-.

- Installation position: axial sealing elements -A- must be inserted with sealing lips facing upwards, as shown in sectional illustration.
- The coloured mark on the top edge must be visible.

– Coat axial sealing elements with ATF and insert in direction of -arrow-.

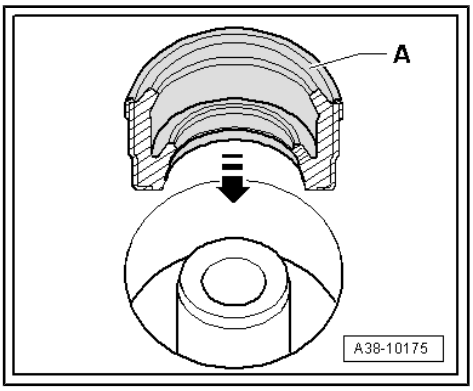

– Push gearbox selector lever -2- all the way to the front in direction of -arrow- until shifting cam -1- is almost vertical (with a slight inclination to the left).

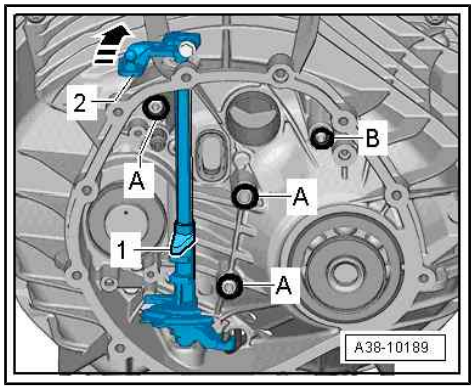

– Push control piston -B- on reverse side of hydraulic control unit outwards (to the right) until it clips into securing spring -A-.
– Tilt hydraulic control unit downwards and insert it into gearbox, long pump shaft first.

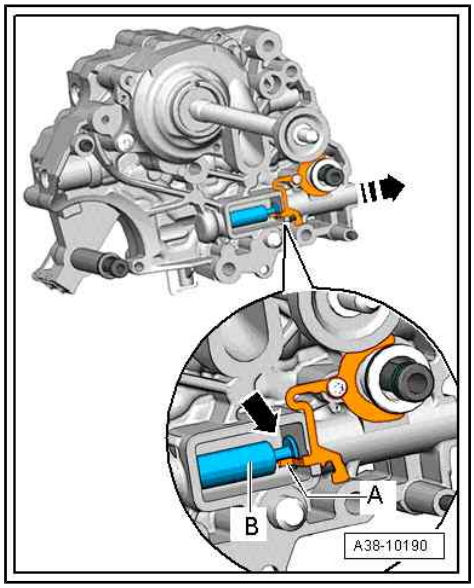

Note

When fitting the hydraulic control unit, make sure the shifting cam (-item 1- in illustration A38-10189 ⇒ page 132) engages in the vacant groove -arrow- on the control piston -B-.

Caution

Take care not to damage hydraulic control unit.

- ***The hydraulic control unit will be damaged if the shifting cam or the control piston are not in the correct position and the bolts are already tightened to torque in the following step.***

– Screw in bolts -arrows- hand-tight.

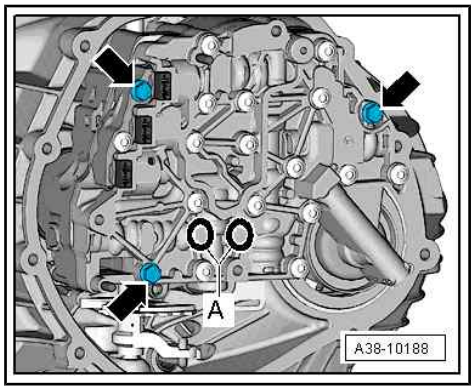

Protected by copyright. Copying for private or commercial purposes, in part or in whole, is not permitted unless authorised by AUDI AG. AUDI AG does not guarantee or accept any liability with respect to the correctness of information in this document. Copyright by AUDI AG.

Checking operation of control piston

– Move gearbox selector lever -A- forward and back several times -arrow 1-.

• The control piston -B- should travel in and out accordingly -arrow 2-.

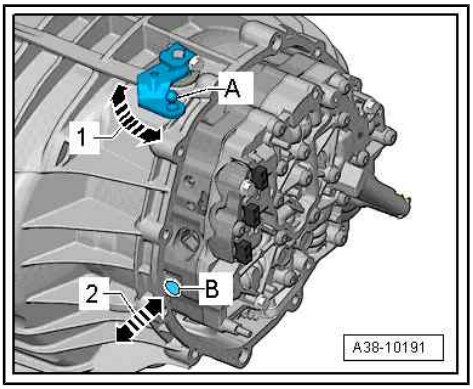

If control piston fails to move this means that shifting cam has not engaged in groove -arrow- of control piston on reverse side of hydraulic control unit. In that case:

– Detach hydraulic control unit again.

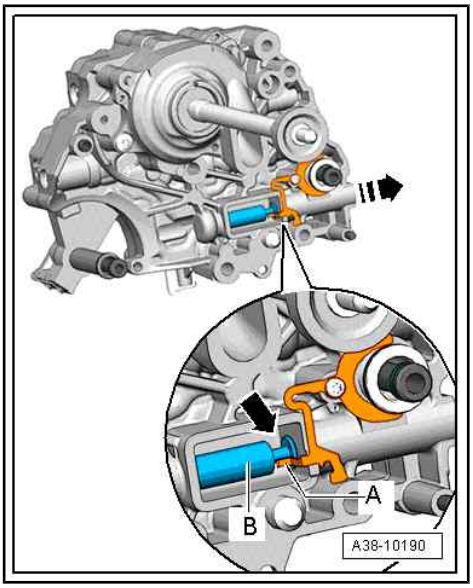

Check for damage due to incorrect installation:

• It must be possible to slide control piston -B- smoothly to left and right; if not, hydraulic control unit must be renewed.

• There must not be any damage to shifting cam -1- or selector shaft due to incorrect installation.

– Insert hydraulic control unit again ⇒ page 132 .

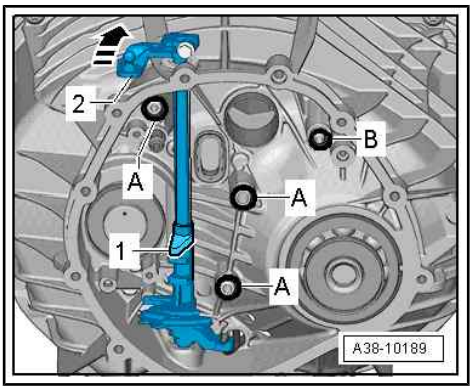

If it is possible to move control piston as described:

– Tighten bolts -arrows- to torque.

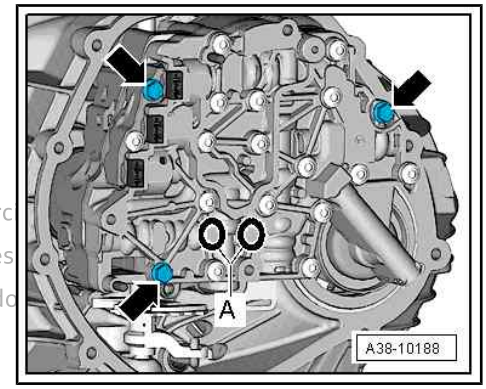

Protected by copyright. Copying for private or commerc
permitted unless authorised by AUDI AG. AUDI AG does
with respect to the correctness of information in this do

Installing lever for selector shaft detent

– Push roller -2- onto lever for selector shaft detent -1- (with collar facing lever for selector shaft detent).

– Push lever for selector shaft detent -1- into hole in housing of hydraulic control unit.

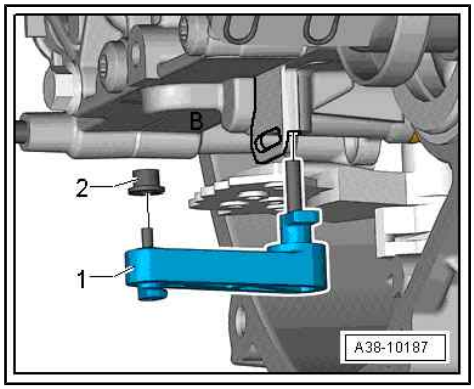

– Swivel lever for selector shaft detent -1- to left in opposite direction of -arrow- so that retaining tab -A- is rotated into slot on retaining plate -B- and engages.

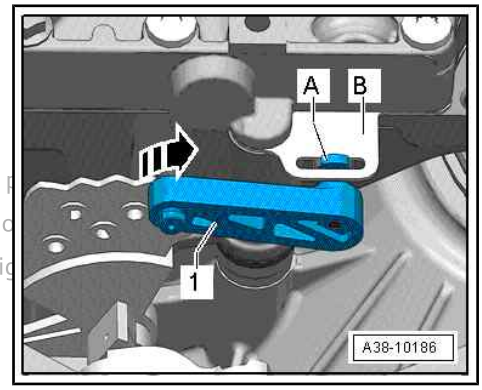

Caution

Protected by copyright. Copying for private or commercial purposes, in p
permitted unless authorised by AUDI AG. AUDI AG does not guarantee o
with regard to the correctness of information in this document. Copyrig

Risk of damage to spring.

- *Do not use sharp pliers or similar when inserting or removing spring.*
- *The detent for the selector shaft will no longer function properly if the wire of the spring is damaged by incision or kinking.*

– Hook spring -1- into selector shaft -3- and lever for selector shaft detent -2-.

Installation position of spring -1-:

- Bent end of spring must be hooked into selector shaft -3-.
- Round end of spring must be hooked into lever for selector shaft detent -2-.

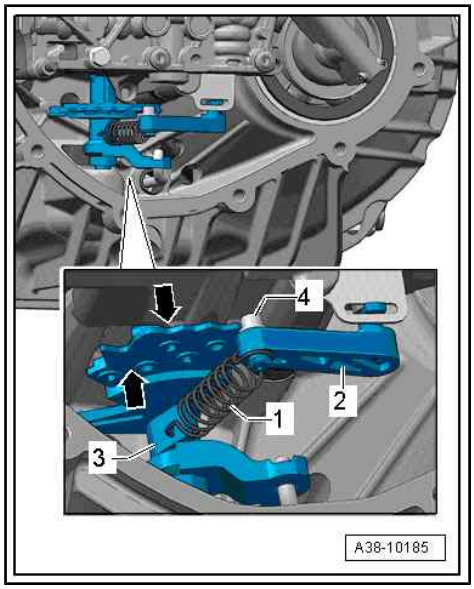

– Shift gearbox selector lever -A- forward and back as far as it will go -arrow 1-.

Note

-Arrow 2- and item -B- can be disregarded.

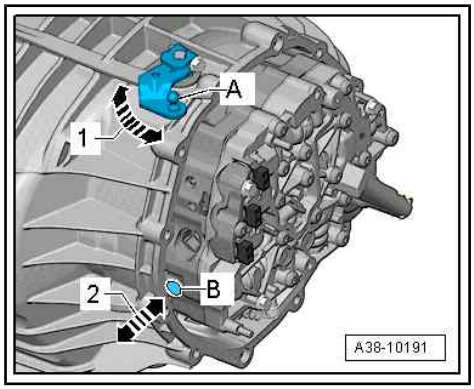

- The detent plate -top arrow- moves to the left and right.
- As it moves, the roller -4- should be able to engage in the individual notches one-by-one.
- Roller must be installed with the collar pointing downward, so that it cannot be pulled off upwards.

– Install automatic gearbox control unit - J217- ⇒ page 127 .

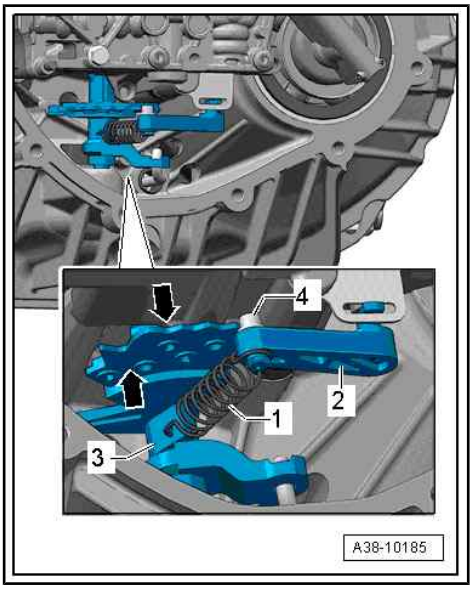

Caution

If the hydraulic control unit has been renewed, carry out the following steps using a vehicle diagnostic tester :

– Using the diagnostic tester in Guided Fault Finding mode, go to `Function/Component Selection` and select the following menu items:

- ◆ `Drive system`
- ◆ `0AW gearbox`
- ◆ `01 - Self-diagnosis compatible systems`
- ◆ `02 - Gearbox electronics`
- ◆ `02 - Gearbox electronics, Functions`
- ◆ `02 - Replace hydraulic control unit`

Protected by copyright. Copying for private or commercial purposes, in part or in whole, is not permitted unless authorised by AUDI AG. AUDI AG does not guarantee or accept any liability with respect to the correctness of information in this document. Copyright by AUDI AG.