Service Training

Audi A6´05

Self-Study Programme 323

Preface

The new Audi A6 – the most progressive vehicle takes the lead

Design and performance are the main driving elements on its way to the top position. Furthermore, the new Audi A6 embodies the consequent continuation of the familiar Audi brand values, sports appeal, progressiveness and intrinsic quality, which are evident in the fourth generation of this sporty business limousine.

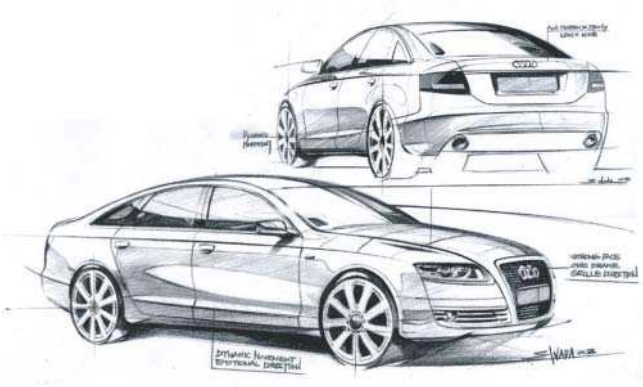

"Vorsprung durch Technik" – this guiding principle is consistently maintained in the new Audi A6´05 through its innovative technologies.
Highly dynamic chassis technologies are combined with consumption-optimized drives with the latest FSI or TDI technology for greater driving pleasure. Rounded off with servotronic and the 6-stage tiptronic system with sport programme, the new Audi A6´05 has optimal driving dynamics as well a sporty and comfortable tune-up.

The MMI operating system in the interior of the vehicle is the central control for the extensive functionalities. The driver-orientated cockpit design provides a perfect workplace, which is both stylish and sophisticated. The high functionality is emphasized by the customer-orientated features in the safety and convenience function areas.

Self-study programmes for the Audi A6´05

SSP 323 Audi A6´05

- Introduction to the vehicle
- Body technology
- Passenger protection
- Air conditioning

Order No.:
A04.5S00.06.20

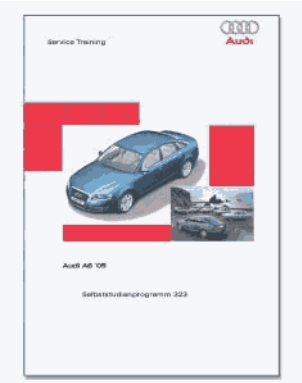

323_057

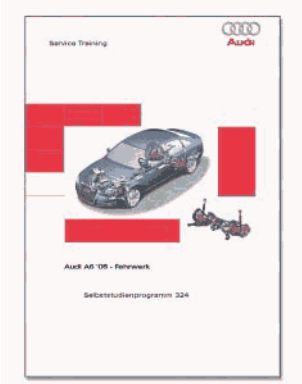

323_058

SSP 324 Audi A6´05 Chassis

- Front axle technology
- Rear axle technology
- Steering system
- ESP
- Electromechanical parking brake EPB

Order No.:
A04.5S00.07.20

SSP 325 Audi A6 ´05 Engines and Gears

- 3.0 V6 TDI Common Rail
- 3.2 litre V6 FSI
- Manual gearbox 01X, 02X, 0A3
- 6-stage automatic transmission 09L
- Multitronic 01J

Order No.:
A04.5S00.08.20

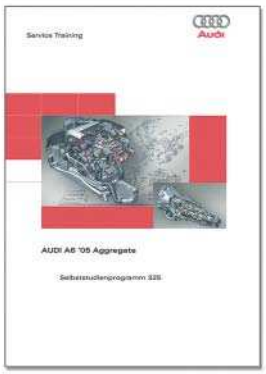

323_059

323_056

SSP 326 Audi A6 ´05 Electrics

- Networking
- Bus topologies
- Convenience electrics
- Infotainment

Order No.:
A04.5S00.09.20

The Self-Study Programme provides information on the fundamentals of the design and function of new vehicle models, new vehicle components or new technologies.

The Self-Study Programme is not a Workshop Manual!
Specified values serve only to make the information easier to understand and relate to the software version that was valid at the time the Self-Study Programme (SSP) was created.

For maintenance and repair work, please make sure to use the current technical documentation.

Reference

Note

Contents

Chapter 1 Introduction

Product highlights 6
Dimensions 7

Chapter 3 Passenger protection

Safety system 20
Airbag control unit J234 22
Data exchange 23
Sensors 24
Belt warning 26
Airbag 27
Airbag disabling key switch, front passenger side E224 31
Seat belts and belt tensioners N153 and N154 31
Active head restraints 33
Battery cut-off relay J655 34
Seat occupied recognition, not for USA 36
Seat occupied recognition for USA market 37
Seat occupied recognition control unit J706 40

Chapter 5 Engine / Gearbox

Overview of available engine / gearbox combinations 46

Chapter 7 Electrics

Bus topology 54
In/outputs on control units J393, J519 and J520 56

Contents

Chaper 2 Body

Body shell / connection technology 8
Materials 10
Blanks 12
Assemblies 14
Bumpers 16
Trailer coupling 17

Chapter 4 Diagnosis

VAS 5053 42
VAS 5051 43
VAS 5053/20 44
Recording the working time using the VAS 5051 / 5052 45

Chapter 6 Chassis

Overview 48
Front axle 48
Rear axle 49
Wheel brake 50
ESP 51
Electromechanical parking brake – EPB 51
Steering system 52
Wheels / tires 53
Tire pressure control system 53

Chapter 8 Air conditioning

Overview 58
Convenience automatic air conditioning and convenience automatic air conditioning plus 60
CAN networking 61
Components in the Audi A6 ´05 air conditioning unit 64
Replacing components 66
Control motor versions 68
In/output signals at Climatronic control unit J255 69
Additional electric air heater 71
Auxiliary / additional heating 72
Air conditioning diagnosis 74
Special tools for the Audi A6´05 air conditioning system 75

Product highlights

The product features which support the new Audi A6´05 on its way to the top, can be summarised as follows: One wing is the design, the other wing is the car's performance.

Performance

Power trains

- Power-controlled power trains, better than competition
- New FSI technology from motor racing
- New TDI technology common rail II with Piezo injectors
- Quattro:
- Multitronic
- 6-stage Tiptronic
- Wide selection of motors and gearboxes

Innovation

- FSI
- Common rail II with piezo injectors
- Expanded ESP
- MMI as standard
- Integrated driver cockpit
- Electromechanical parking brake
- Advanced key, adaptive light, LED brake lights, comfort climate control plus

Driving dynamics

- New dynamic chassis with trapezoidal-link rear axle and redesigned four-link front axle
- Increased body stiffness + 35 %
- Larger tyre diameter
- Servotronic now standard
- Wider tread widths, front +7 cm, rear +6 cm
- Excellent rear downforce for safe handling

Design

Quality

- Use of intrinsically valuable materials (aluminium, wood, leather)
- High-quality standard equipment (light-rain sensor, aluminium trim, active headrests in front, servotronic, EPB, fog headlights, ...)
- Highest safety standards (5 star Euro NCAP)
- Small gap widths, even joints

Package

- Premium vehicle dimensioning
- Rear knee room 8 cm
- Wider shoulder widths, front +23 mm, rear +6 mm
- Front headroom +7 mm
- Superior luggage compartment volume (546 l) for front-wheel and quattro models
- Wheelbase +9 cm

Exterior/Interior

- Completely new line design (roofline, shoulder line, dynamic line)
- Dynamic joint matching
- Coupe-like shape
- Separation edge on rear end
- Single frame
- Double-pipe exhaust for front-wheel and quattro models
- Full exterior surface painted

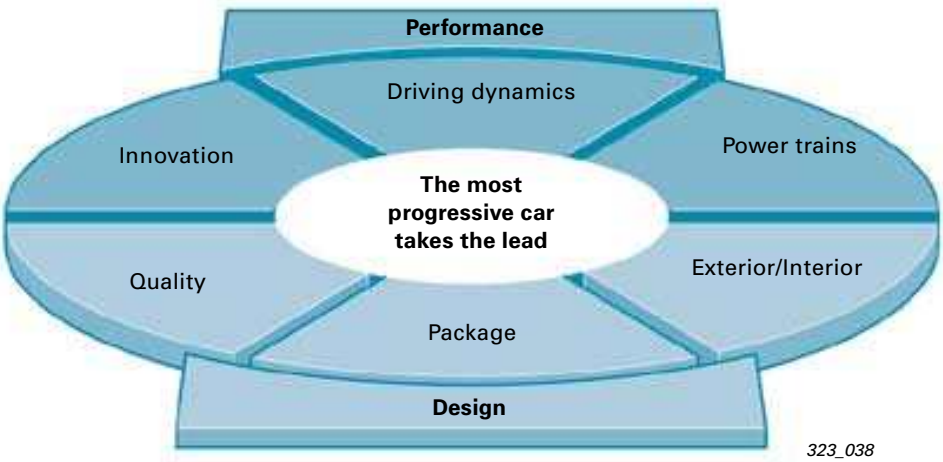

323_038

Dimensions

The new Audi A6´05 impresses with its imposing external dimensions.
The vehicle length has been increased to 4.92 m, which corresponds to an increase of 12 cm compared to its predecessor. The vehicle width has been increased by 4.5 cm to 1.86 m. The height of the new A6´05 has been increased by 0.8 cm to 1.46 m. The new Audi A6´05 has grown. For the dimensions, please refer to the diagrams.

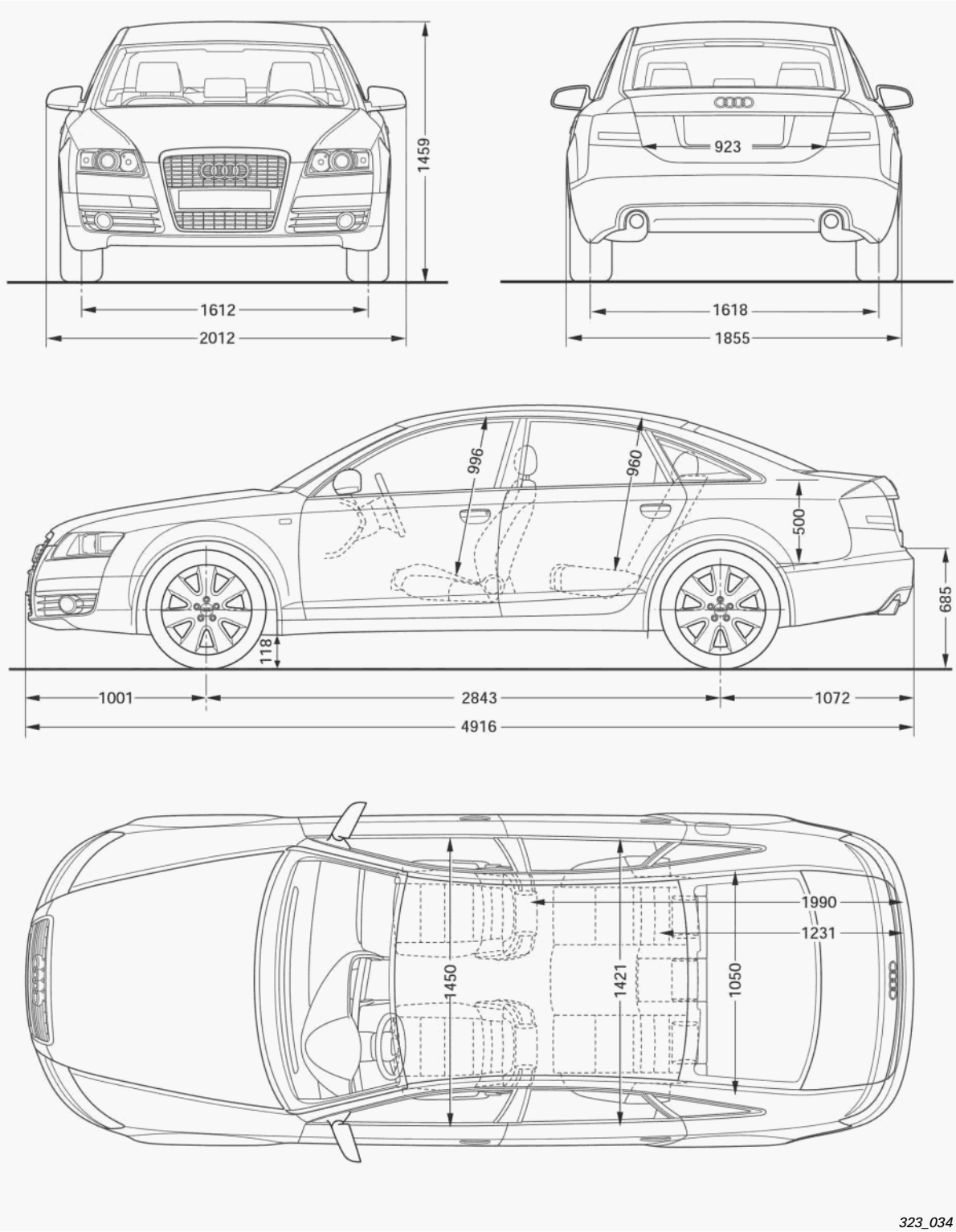

Body shell / connection technology

The main objectives during the development of the new Audi A6 body design were the realization of high passive safety characteristics and improved rigidity values as a precondition for optimizing vibration damping characteristics.

In spite of the greater demands compared with the previous model, the body weight has been kept at the same level.

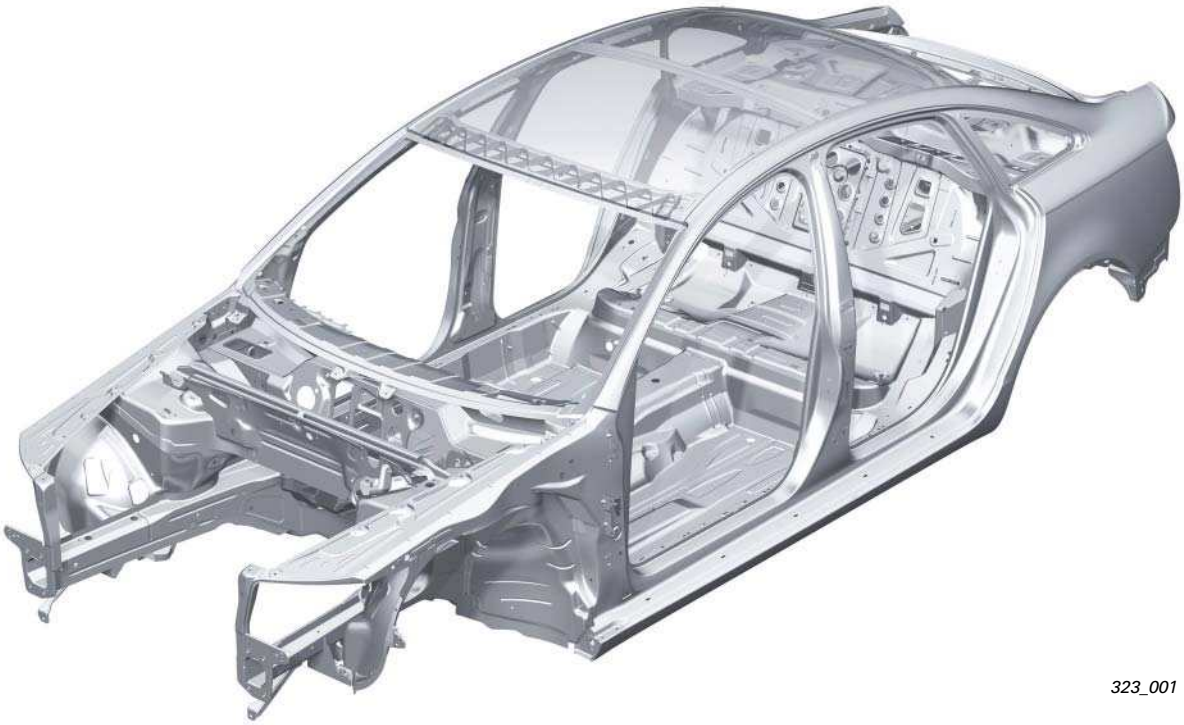

323_001

A further task during the body development process is to minimize the number of necessary body versions.

The new A6´05 uses four body shell versions:
- rigid rear panel
- with opening for loading
- without sliding sunroof
- with sliding sunroof

A standard rear section is used for the front-wheel drive and quattro vehicles.

In addition to classic resistance spot welding, the following connecting techniques are used on the new A6´05 body shell:
- Spot welding bonding
- Punch riveting
- Clinching (bonnet & rear opening hood)
- Laser soldering
- Laser welding
- as well as MIG soldering

Spot welding bonding, using a high-strength structural adhesive, is used for particularly crash-relevant and rigidity determining connections (length of the bonded seam factor 3 compared with predecessor).

The Aluminium components are joined to the galvanized steel sheets by means of punch rivets and by bonding.

These aluminium-steel connections are used on the following parts in the body:
- in the plenum chamber front panel
- sill reinforcement (with aluminium extruded section)
- rigid rear panel with rear shelf

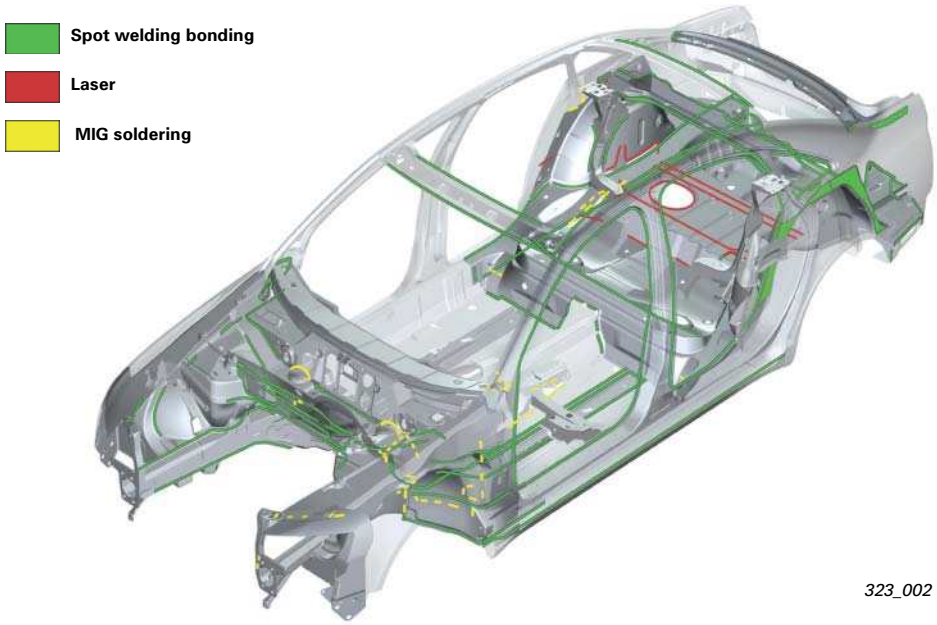

323_002

The roof and side panel frame are joined by laser-soldering.

Poorly accessible components are joined by laser-welding.
The laser-welding head is smaller and thus has greater flexibility than comparable spot welding tongs.
In addition, the weight can be reduced by reducing the flange widths.
MIG soldering is used for closed sectional bars which are only accessible from one side, e.g. longitudinal floor members.

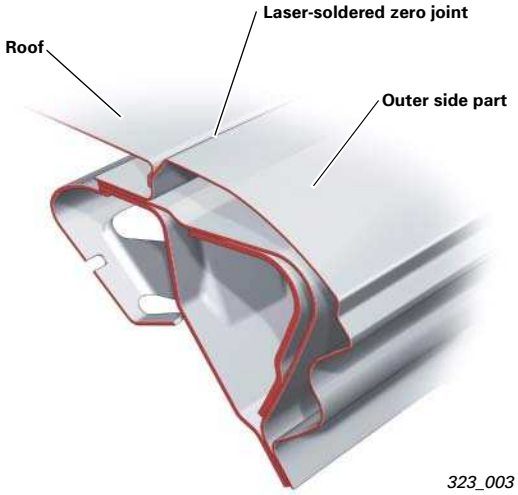

323_003

Materials

In addition to conventional deep-drawing steels, the following materials are used in the body structure of the new Audi A6´05:

- High tensile sheet steel
- Special sheet steel
- Aluminium sheets
- Aluminium extruded sections and
- Plastic-ribbed deep-drawing steel component (hybrid component)

High tensile steels (180 - 300 N/mm²)

Dual-phase steels (340 - 500 N/mm²)
Weight percentage of high-tensile steel sheets
Total: 45 %
Upper section: 42.3 %
Lower section: 46.7 %

Special steel (600 - 900 N/mm²)

Aluminium

Hybrid component

High-tensile steel sheets are used especially in areas which require strengthening and greater impact resistance.
Special steel sheets are also used in the body structure, e.g. front wheelhouse cross-member.
The engine bonnet and front mudguards are made of aluminium.
In addition to the add-on parts in the shell, aluminium sheets are used in the structure for large-area components which are not subject to excessive stress.

Large-volume aluminium extruded sections are used as sill reinforcements to stiffen the cell structure in the event of an offset or side crash.
The front roof frame is designed as a hybrid component in order to reduce the weight.

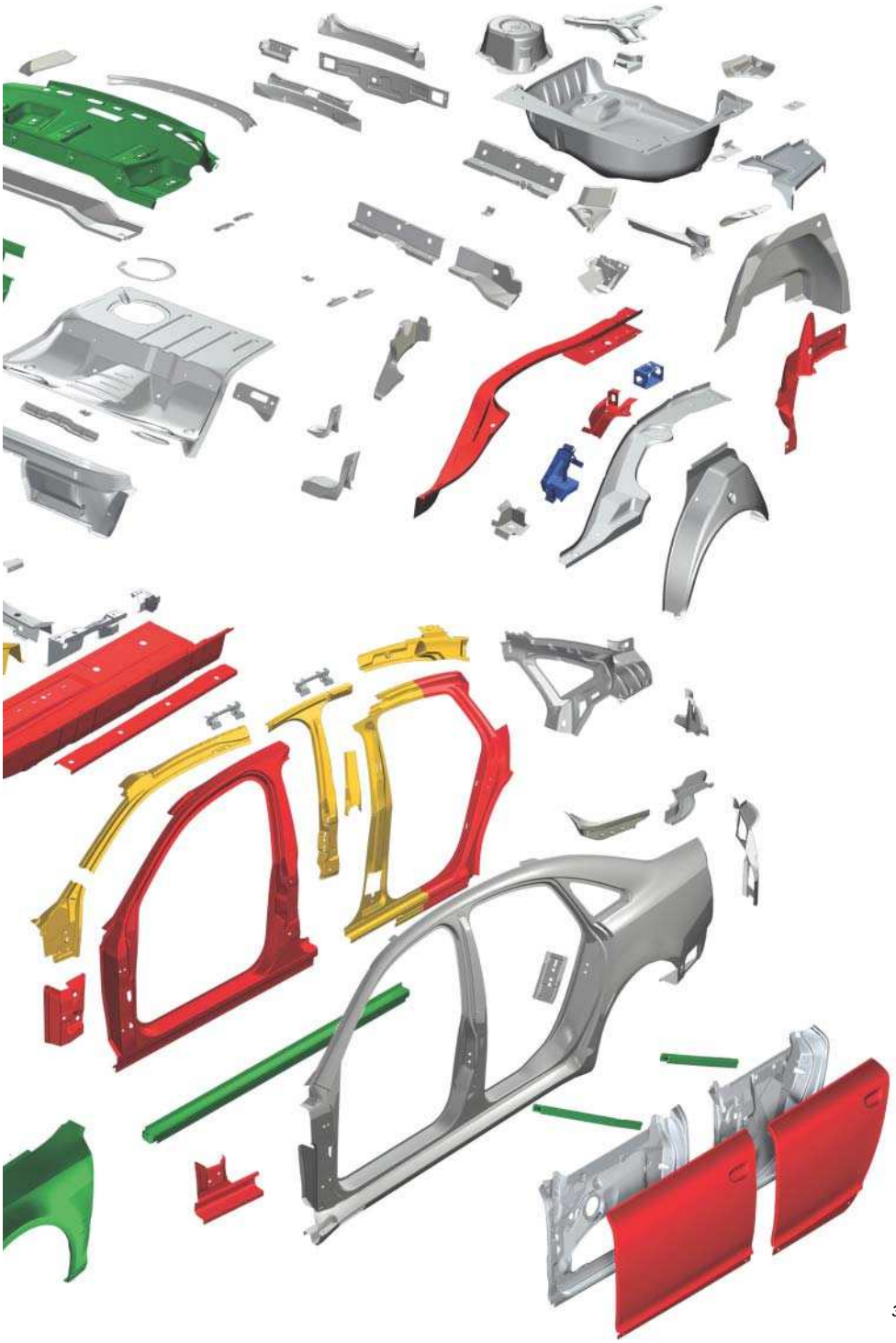

323_004

Blanks

Blanks with different wall thicknesses and material qualities are used to realize a stress-adapted material distribution for large-area components which are subject to high stress.

Laser-welded blanks, so-called tailored-blanks, are used for
- the front suspension strut cross member
- front floor panels
- inner side section
- rear longitudinal member
- and door inner panels

Tailored-rolled blanks, which have variable rolled wall thicknesses, have particular advantages. They can be used to produce continuous material thickness transitions which meet the local stress conditions. This technique is used to optimize the front longitudinal member structure.

In total, a weight reduction of 8 kg (without add-on parts) was realized through the material selection being adapted to the respective stress conditions. An additional weight reduction of 9 kg was realized by using blanks with different wall thicknesses.

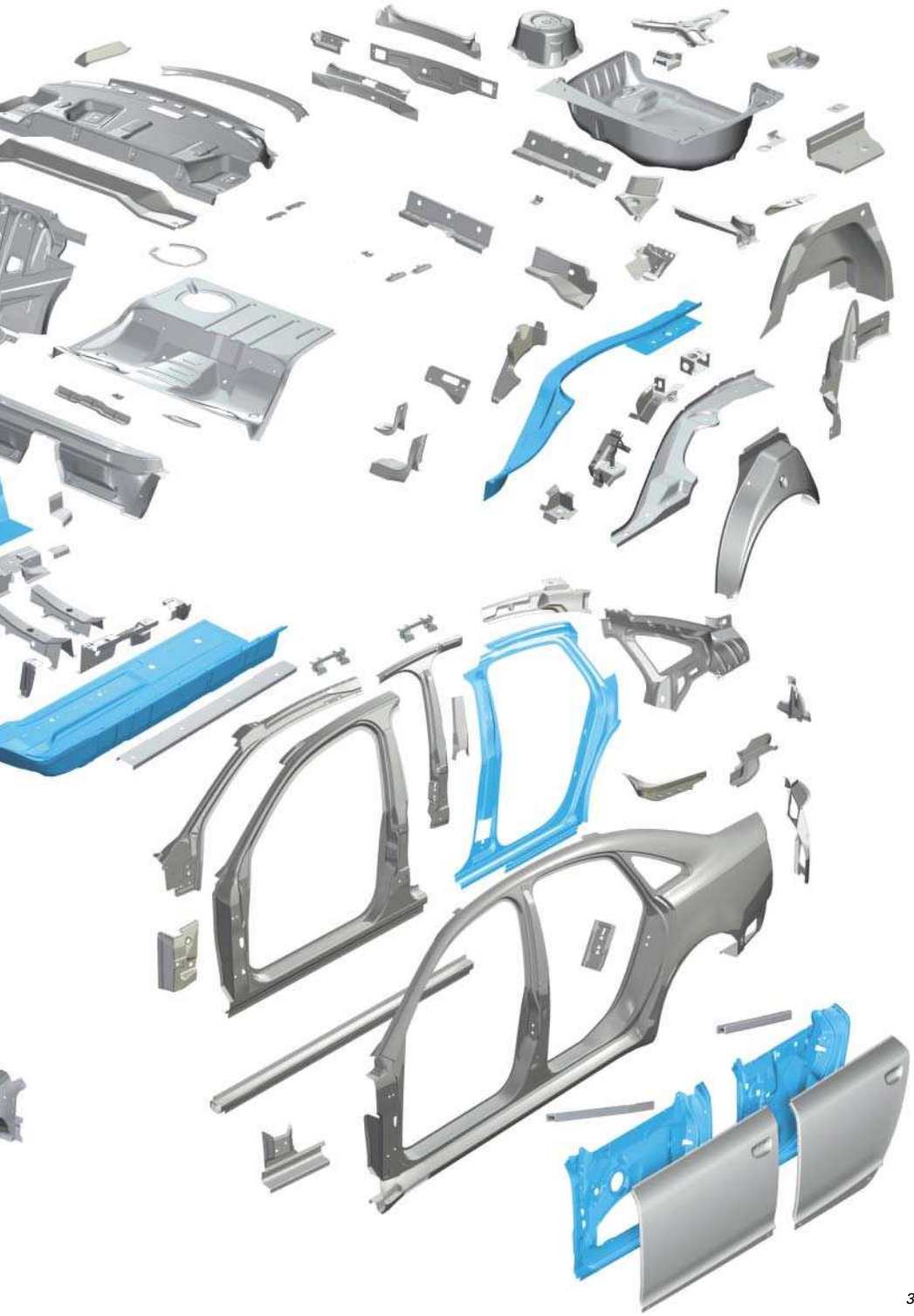

323_005

Assemblies

Plenum chamber

One application area for special steel is the chassis connection in the proximity of the spring and shock absorber seat.
It was possible to reduce the wall thickness of the respective parts from 2.5 to 1.4 mm.
The resulting loss of local rigidity was offset by creating an optimized profile.

In addition, a tailored blank is fitted in the plenum chamber.
This ensures the highest possible energy absorption in the event of a crash.
At the same time, the necessary rigidity and stability are ensured during normal driving.
Transverse rigidity is ensured by a rolled sectional bar as an additional reinforcement.

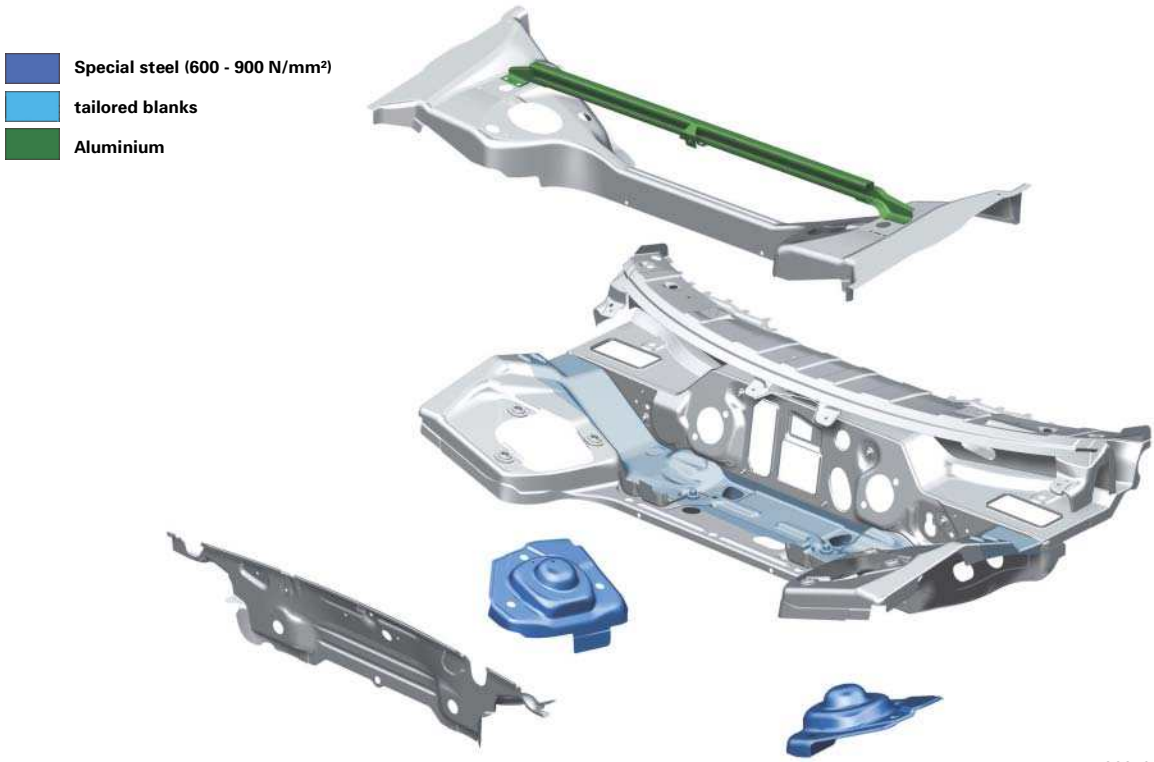

323_031

Wheelhouse

To ensure an optimum introduction of the crash energy from the front of the car into the passenger compartment, special steel components were used in the proximity of the wheelhouse.

323_030

B-pillar

Due to the increased requirements regarding the strength of the B-pillar, a combination of different materials is used.

- front inner side section (high tensile steels)
- rear inner side section, tailored blank (dual-phase steels, high tensile steels) t = 1.35 mm and 0.8 mm
- B-pillar reinforcement (dual-phase steels)
- B-pillar (dual-phase steels)

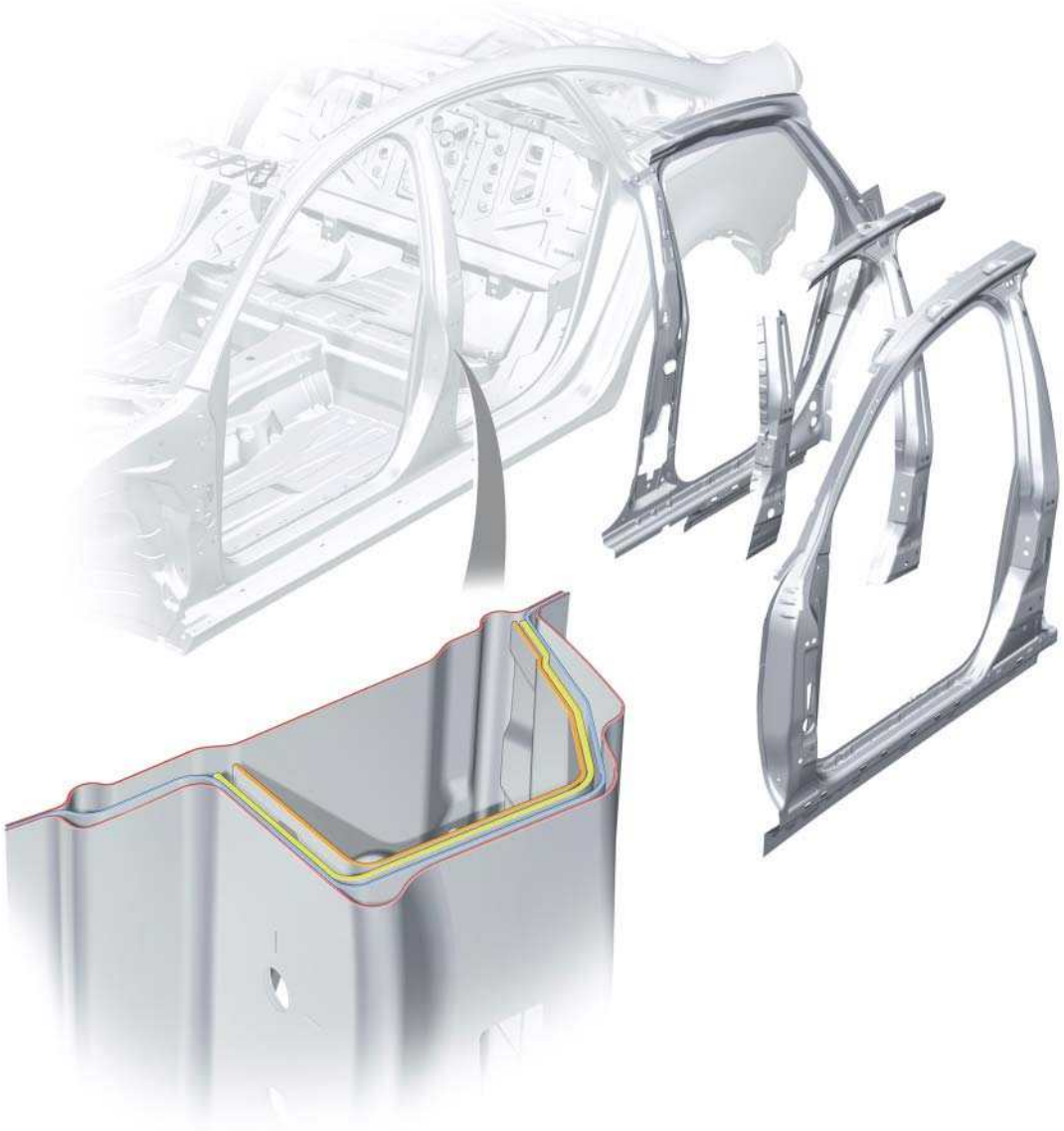

323_032

Bumpers

Front bumper

The bumper on the new Audi A6´05 is painted in the colour of the car.
It comprises the following components:
- Coating
- Top cover
- Towing lug cover
- Radiator grille with chrome frame
- Fog lamps
- Side air inlet grilles
- Bumper support

The number plate in the radiator grille is integrated stylishly and harmoniously within the overall design.

323_006

The bumper support comprises an open aluminium cross member, which is screwed on to the longitudinal member using newly developed shear boxes.
The shear box absorbs the crash energy from all centrical and slightly diagonal impacts through its shearing effect.
Expensive damage to the welded vehicle structure behind it is thus avoided up to a speed of 15 km/h.
In the event of diagonal impacts, the impact energy is absorbed by the bumper buckling (folding) and deforming.
The seat for the towing lug is integrated in the right-hand shear box.
The towing forces are guided centrically into the longitudinal member.

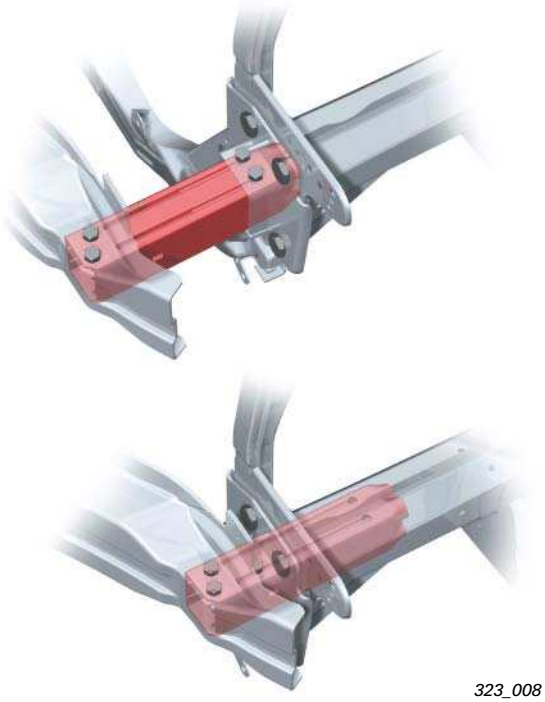

323_008

Rear bumper

The rear bumper assembly comprises the coating, spoiler, towing lug cover and closing part components. It is mounted on the vehicle by means of fixed guides on the body. The bumper support and the bracket for the bumper support are made of aluminium and are produced by extrusion moulding.

Compared to the previous model, the joints on the A6´05 have been noticeably reduced.
Due to a special adjusting/holding part below the rear light, the zero joint between the bumper coating and side part has been reduced to 0.8 mm.
A parking aid and a mechanically swivelling trailer coupling are available (optional).

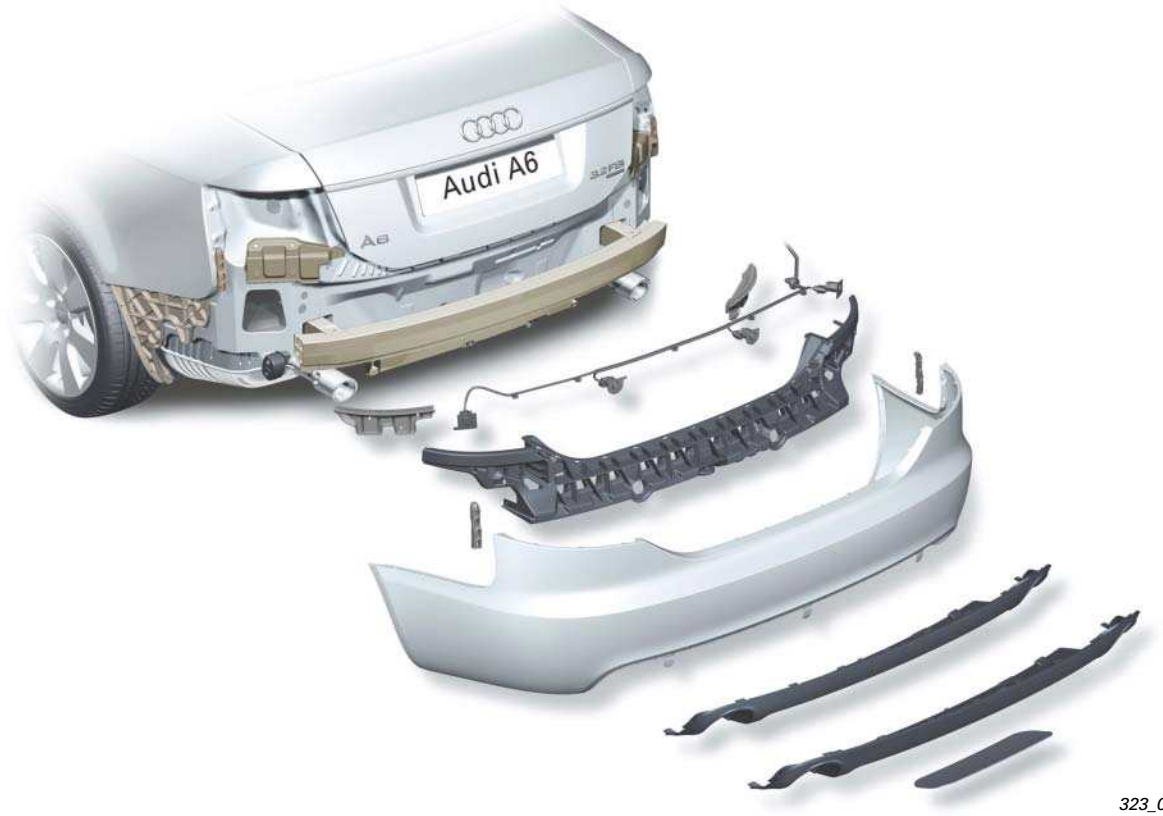

323_007

Trailer coupling

The newly developed trailer coupling fitted in the A6´05 is equipped with a mechanically swivelling ball rod.
The ball rod swivels around a rotation axis, which is angled at 45° to the longitudinal axis of the vehicle.
The swivel angle between the swivelled-out towing position and the idle position behind the bumper is 180°.
The system is unlocked by means of a handwheel located in the boot.

323_010

323_009

Control unit for trailer detection J345

Arrangement in the vehicle

The basic function of trailer detector control unit J345 corresponds to the control unit which has already been in use since the 2001 Audi A4.
To be used in the Audi A6´05, it was upgraded by the control function for the swivelling trailer coupling.

It now has the additional task of detecting the locking status of the mechanically swivelling trailer coupling and indicating this to the driver.

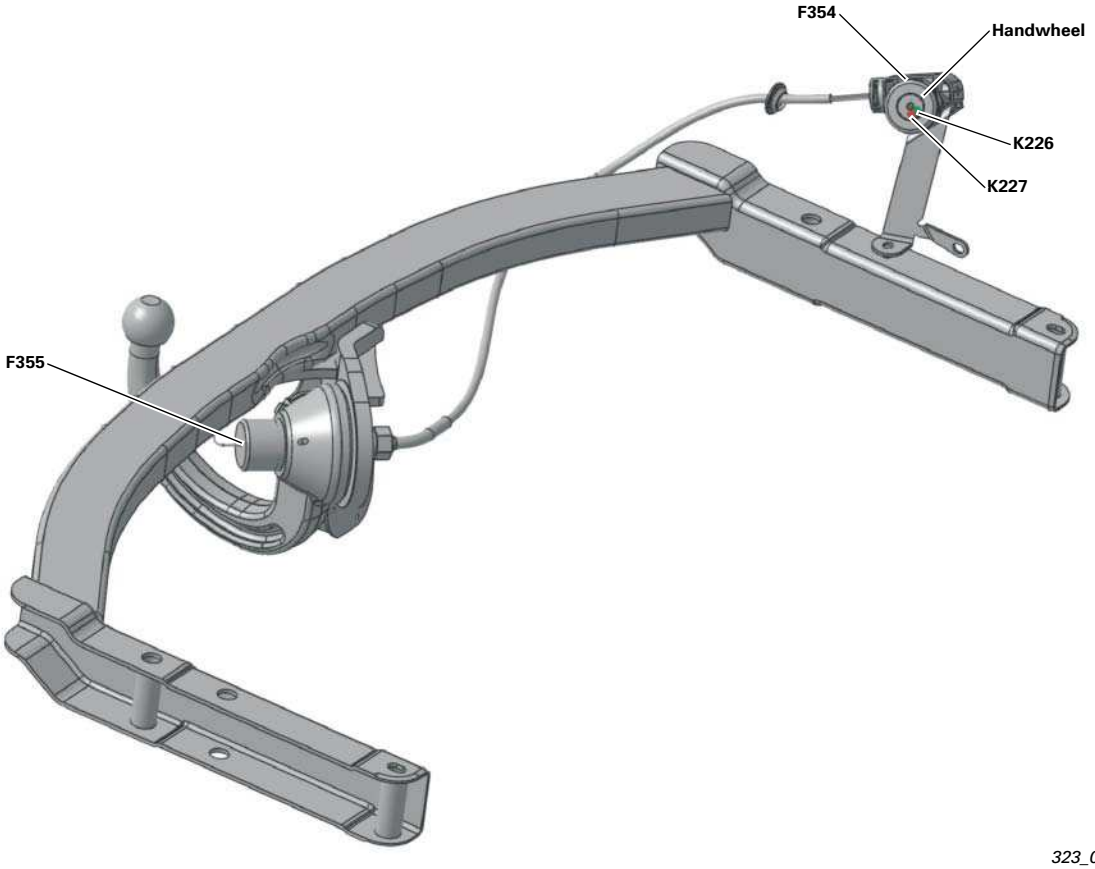

323_035

On pulling the handwheel in the boot, the contact switch on handwheel F354 is closed. On turning the handwheel, the locking bolt on the trailer coupling is unlocked mechanically by a Bowden cable and the contact switch on locking bolt F355 opens.

After being unlocked, the trailer coupling can be swivelled out/in mechanically. After being swivelled, it is automatically locked by spring power. The contact switches return to their initial position. The control unit cannot differentiate between a locked, swivelled-in trailer coupling and a locked, swivelled-out trailer coupling.

The locking state is indicated by two LEDs in the handwheel for the trailer coupling. When the green warning lamp for trailer coupling locked (K226) lights up continuously, it indicates that the trailer coupling is swivelled in/out correctly.

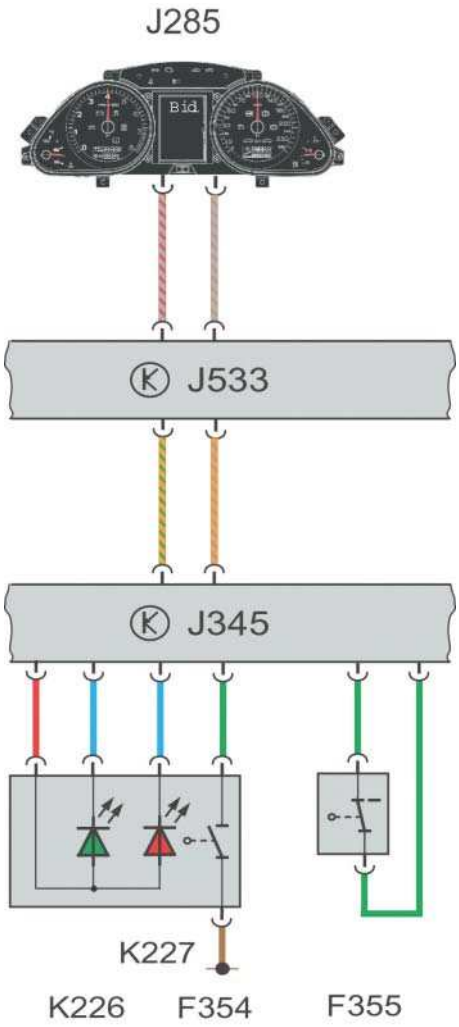

323_036

The red warning lamp for trailer coupling unlocked (K227) flashes when the trailer coupling is not locked. In addition, a message appears on the central display in dash panel insert J285.
When terminal 15 is switched off, the warning lamp for trailer coupling locked (K226) switches off if the tailgate/boot lid is closed or remains open for longer than 10 minutes. The warning lamp for trailer coupling unlocked (K227) switches off if the tailgate/boot lid is closed or remains open for longer than 20 minutes. The respective warning lamp switches on again when there is a control unit wake-up or a CAN wake-up.

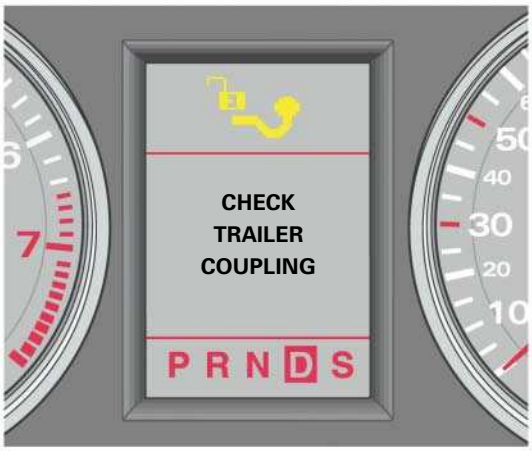

323_033

Safety system

A top-level safety system: The performance target is to increase the existing high safety level of the current Audi fleet.

The compliance with current laws and the completion User tests, in which the new Audi A6´05 was to gain a top position in the rating scheme, were only a part of the extensive safety requirements. In many cases, additional Audi in-house requirements increase the requirements which have to be met by the development team.

Particular attention was paid to a high protection potential in the event of an accident and the compatibility. Audis's policy of designing vehicles with high safety specifications is supplemented by scientifically gained knowledge of the actual accident and its effects.
For this, the AARU (Audi Accident Research Unit*) examines crashes involving relatively new Audi vehicles.
The development team's task is to analyse and reconstruct accidents and to draw up potential improvements.
In addition to this, the AARU evaluates the relevant accident databases.

The safety system in the Audi A6´05 comprises the following familiar components:

- Airbag control unit
- Driver and front passenger airbags, two-stage
- Front side airbags
- Sideguards (head airbags)
- Sensors for side crash detection
- Front belt tensioners

The Audi A6´05 has the following new components:

- Crash sensors for the front airbag, the so-called upfront sensors for frontal crash detection
- Battery cut-off relay
- Sensors for side crash detection in the doors
- Switches in the front belt locks
- Seat occupied recognition in the front passenger seat

The vehicle can be equipped with side airbags at the rear and a key switch for deactivating the front passenger airbag with a corresponding warning lamp (optional).

The safety system in the Audi A6´05 is rounded off by the active head restraints in the front seats.

The A6´05 thus constitutes a successful example of an overall vehicle development aimed at protecting the passengers.

Due to the different demands and legal provisions which car makers are subject to in the different markets, the equipment can vary for the US American market in particular.

* Audi Accident Research Unit

Note

Observe the respective safety instructions in the repair guide before carrying out any work on the airbag system!

Legend

E224	Airbag disabling key switch, front passenger side
E24	Belt switch, driver side
E25	Belt switch, front passenger side
G128	Seat occupied sensor, front passenger side
G179	Crash sensor for side airbag, driver side (front door)
G180	Crash sensor for side airbag, front passenger side (front door)
G256	Crash sensor for side airbag, rear, driver side
G257	Crash sensor for side airbag, rear, front passenger side
G283	Crash sensor for front airbag, driver side
G284	Crash sensor for front airbag, front passenger side

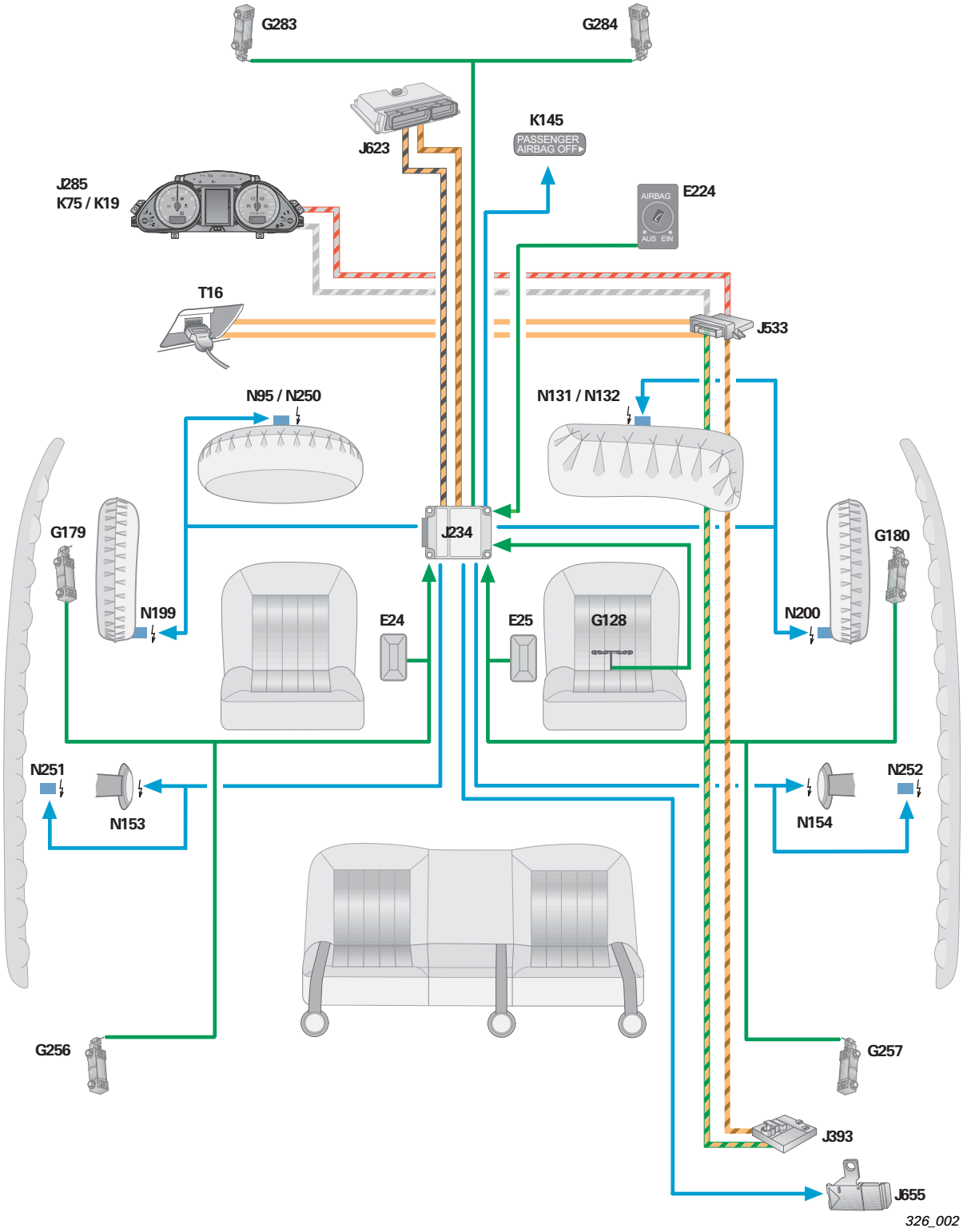

J234	Airbag control unit
J285	Control unit in dash panel insert
J393	Central control unit for convenience system
J533	Data bus diagnosis interface
J623	Engine control unit
J655	Battery cut-off relay
K19	Warning lamp for belt warning
K75	Airbag warning lamp
K145	Airbag warning lamp, front passenger side, off (PASSENGER AIRBAG OFF)
N95	Airbag igniter, driver side
N250	Airbag igniter 2, driver side
N131	Airbag igniter 1, front passenger side
N132	Airbag igniter 2, front passenger side
N153	Belt tensioner igniter 1, driver side
N154	Belt tensioner igniter 1, front passenger side
N199	Side airbag igniter, driver side
N200	Side airbag igniter, front passenger side
N251	Head airbag igniter, driver side
N252	Head airbag igniter, front passenger side
T16	Plug-in connection, 16x (diagnosis connection)

Airbag control unit J234

The task of the airbag electronics is to detect vehicle deceleration and evaluate it so that a collision is reliably detected. The control unit can detect frontal, side and tail accidents. In addition, the electronics also have the task of activating the respective restraint systems (airbags / belt tensioners) depending on the type of collision and its severity and activating the Crash output.

The airbag electronics have the following main tasks:

- Crash detection (front, side, tail)
- Defined triggering of the airbags, belt tensioners and battery cut-off
- Defined triggering of the second front airbag stage
- Evaluation of all input information
- Permanent monitoring of the entire airbag system
- Independent power supply via capacitor for a defined time (approx. 150 ms)
- Error indication via failure warning lamp
- Storage of error and crash information
- Notification of a crash event to other system components via drive CAN or discrete Crash output (conventional cabling)
- Activate belt warning

In addition to the internal sensors in the control unit, the external crash sensors are also used to detect vehicle deceleration during impact.

The electronics can only decide when and which safety components to activate after all the sensor information has been evaluated by the control unit electronics.

If an airbag control unit is replaced, then it must be coded and adapted to the respective.
These functions can only be peformed by means of the guided fault finding procedure and a diagnosis tester which can be used online. The Service technician needs access (with password) to the "FAZIT" database at Audi.
If the coding or adaptation is not carried out in the correct manner, malfunctions can occur in other vehicle systems such as the ESP, for example.

326_008

Airbag warning lamp K75

The airbag warning lamp, which is located in dash panel insert J285, is triggered via the bus CAN. If there is no data message from the airbag control unit, the warning lamp is automatically switched on from the dash panel insert.

Rear crash detection

In the event of a rear-end crash, the airbag control unit evaluates the information from the internal crash sensor and the crash sensors for front airbags G283 and G284. If their signals exceed a fixed value, the belt tensioners are ignited and the battery cut-off relay is activated.

Data exchange

The airbag control unit is integrated within the drive CAN.

The airbag control unit transmits the following information on the drive CAN:

- Trigger warning lamp K75
- Activate belt warning
- Diagnosis data
- Crash signal
- Crash information for the actuator test
- ESP data
- Front passenger airbag disabled (for USA only)

The airbag control unit evaluates the following information from the data bus:

- Dimming of the airbag warning light
  Passenger airbag off

Sensors

Crash sensor
(in the control unit)

The acceleration sensors are arranged in such a way that both deceleration in the vehicle's longitudinal axis (x-axis) and deceleration in the vehicle's transverse axis (y-axis) are detected.

326_015

Safety switch
(in the control unit)

The mechanical safing sensor in the airbag control unit for the Audi A6'05 has been replaced by a micromechanical acceleration sensor.
This sensor also detects the vehicle's deceleration in the direction of travel (x-axis) and sends this information to the control unit electronics for a plausibility check.

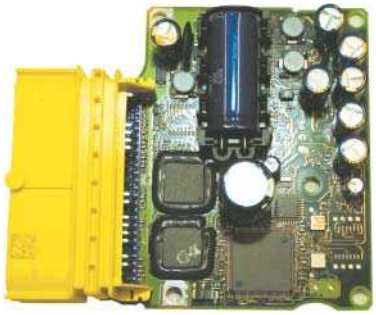

326_016

Crash sensors for front airbag G283 and G284
(upfront sensors at front end)

The severity of the crash changes the signal, which the front airbag crash sensor sends to the airbag control unit. Depending on the signal, a threshold reduction is activated in the airbag control unit, which improves the crash detection function and and thus enables the airbags to be ignited earlier. A greater protective effect can be attained by triggering the airbags earlier.

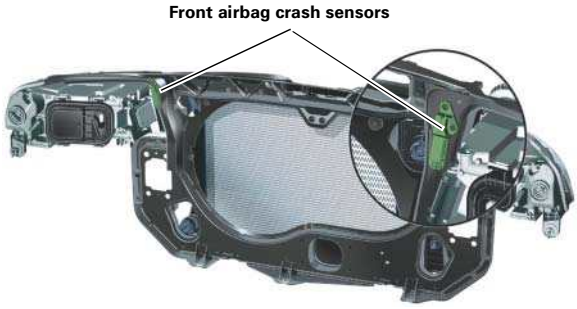

326_009

Crash sensors for side airbag G179 and G180
(in the front doors)

Pressure sensors are now used in both front doors (new).
The deformation of the vehicle in the event of a side crash causes a short-term increase in air pressure in the door. This pressure increase is detected by the sensor and is forwarded to the airbag control unit.

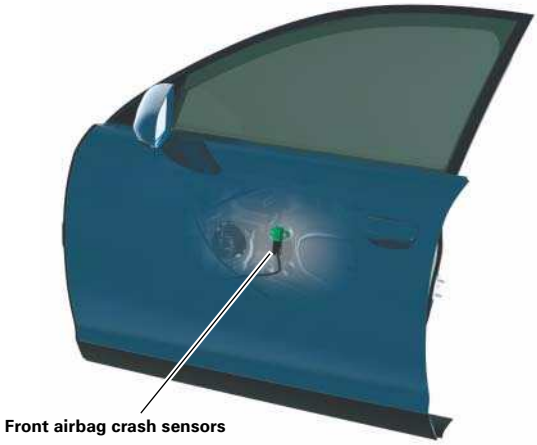

326_007

Crash sensors for side airbag, rear, G256 and G257

(C-pillar)

Both crash sensors for side airbag G256 and G257, which are fitted near the C-pillar (left and right), are conventional acceleration sensors, which were already used for the previous Audi A6 model.

How the crash sensors work

A crash sensor essentially comprises a housing, evaluation electronics and a micro-mechanical acceleration sensor.
Basically, the acceleration sensor is structured like a capacitor.
Some of the capacitor plates are fixed. The counterparts of these are movable and work like a seismic mass.
If the seismic mass is pushed into recording direction during an accident, the capacity of the capacitor changes. This information is evaluated by the evaluation electronics and is then digitally processed and transmitted to the airbag control unit.

Pressure sensors, on the other hand, react to a change in pressure conditions. The resistance of the micromechanical sensor unit is monitored and evaluated.

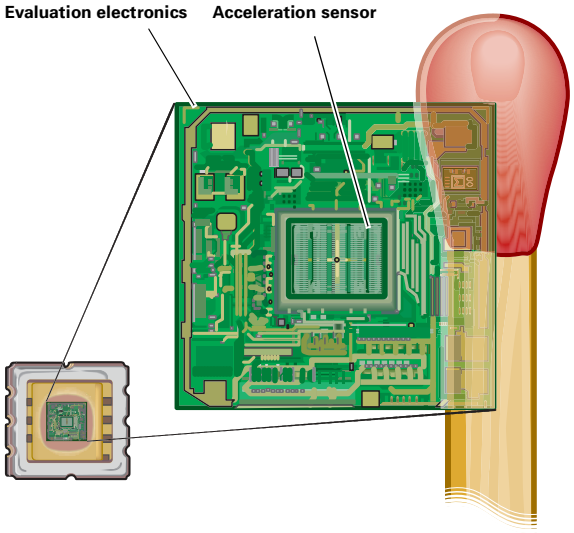

326_003

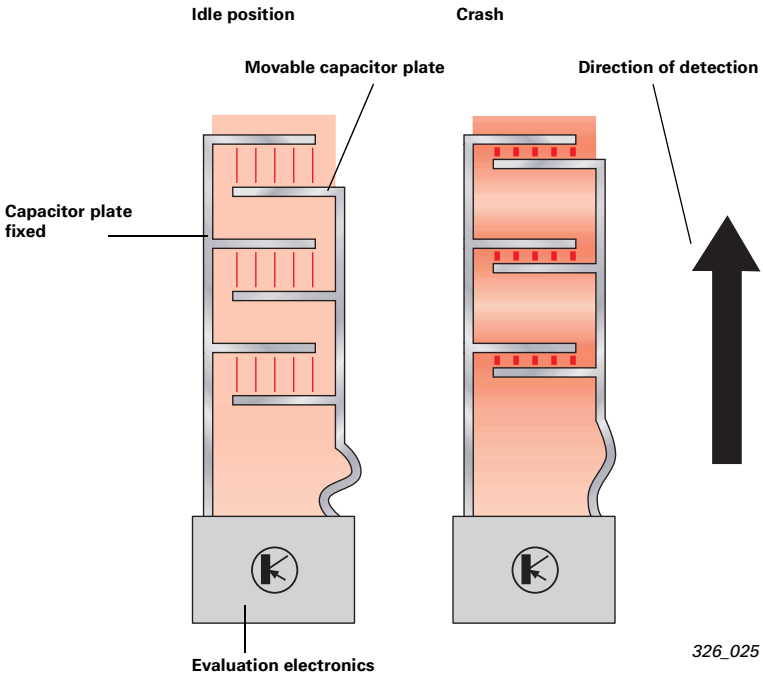

326_025

Belt warning

The new Audi A6´05 includes a belt warning function for both driver and passenger.
After switching on the ignition, the driver's belt lock switch and the front passenger's belt lock switch (in conjunction) with the seat occupation sensor on the front passenger side is evaluated by the airbag control unit. The control unit recognizes whether the front passenger seat is occupied on the basis of the resistance values from the seat occupied sensor.

If the driver or front passenger has not fastened the seat belt, a warning is given by means of belt warning warning lamp K19 in the dash panel insert and an acoustic signal.

Time diagrams for the belt warning

Optical and acoustic signals
- delayed belt fastened operation

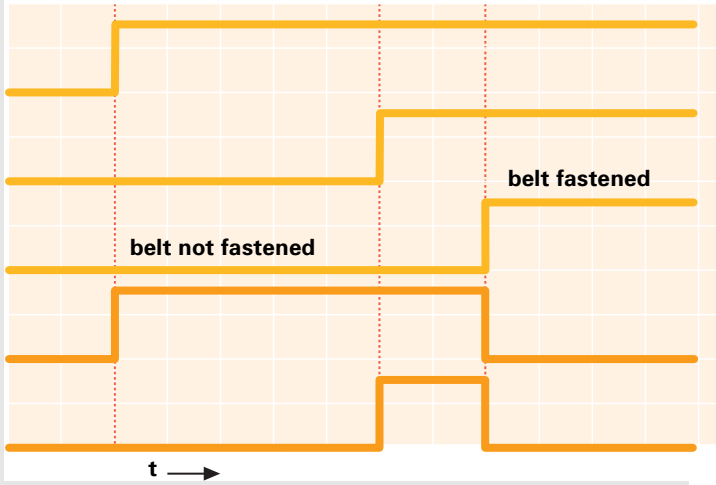

326_029

Optical and acoustic signals
- belt not fastened operation

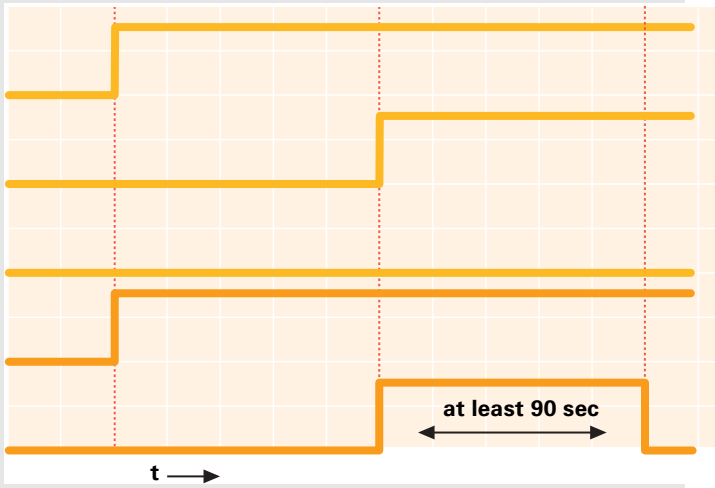

The warning is reactivated if the belt status is changed during "Tm. 15 on".

326_030

Airbag

Driver airbag N95 and N250

A two-stage gas generator is used as the driver's airbag.
The radial opening of the airbag and the delayed ignition of the propelling charges reduce the loads acting on the driver when the car crashes.
Depending on the seriousness and type of accident, the time lapse between the two ignitions can be approx. 5 ms to 50 ms.
The radial opening and stepped actuation of the front airbag is particularly advantageous when there is no sufficient clearance between the steering wheel and the upper part of the body.

In general, both propelling charges are always ignited. This prevents one propelling charge remaining active after the airbag has been actuated.

The gas generator in the driver's airbag is bedded in a rubber ring and swings.
This minimizes any vibrations at the steering wheel, as the gas generator acts as a vibration damper.

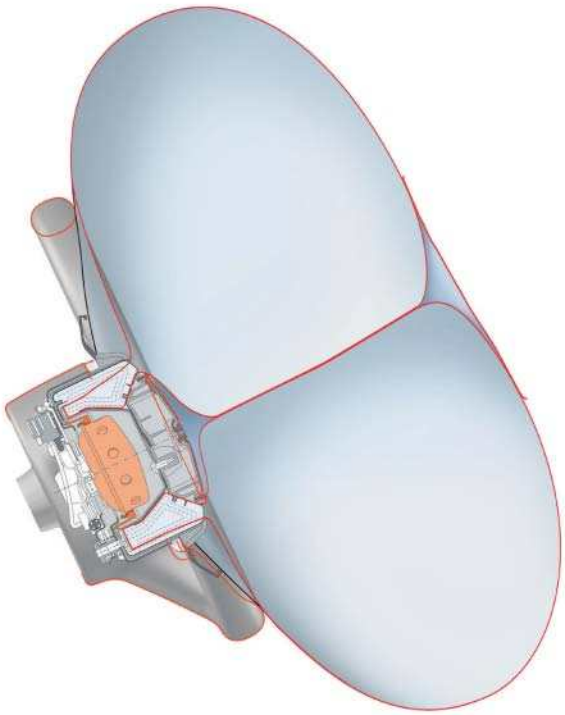

282_070

Front passenger airbag N131 and N132

Like the driver airbag, the passenger airbag also comes with a two-stage gas generator. In contrast to the driver's airbag, the gas generator in the front passenger airbag operates according to the hybrid gas technique. The gas generator comprises two pyrotechnical propelling charges and a compressed gas bottle. The airbag control unit ignites the first propelling charge. The pressure which is produced accelerates a piston, which opens the gas cylinder. The escaping gas inflates and fills the airbag. The ignition of the second propelling charge supplies the airbag with an additional volume of gas.

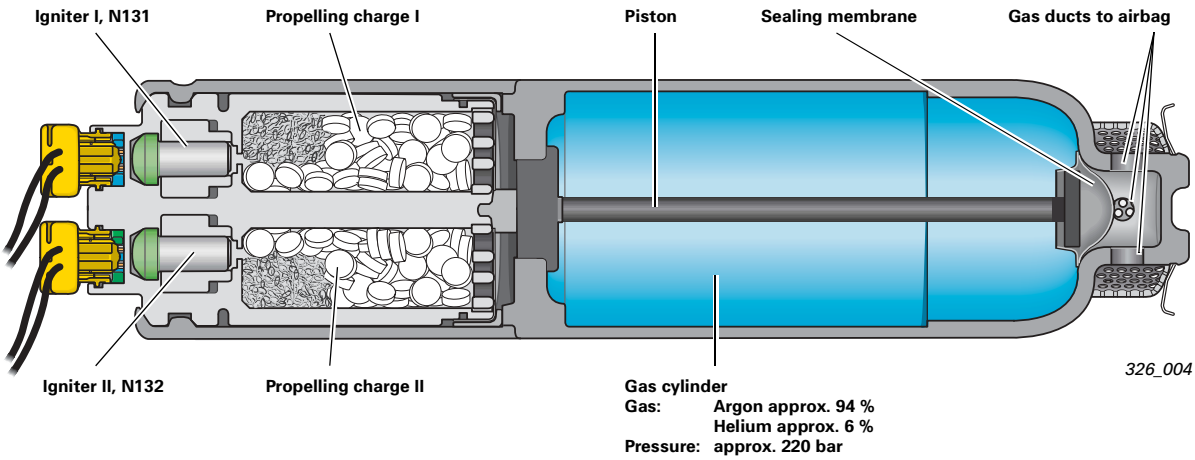

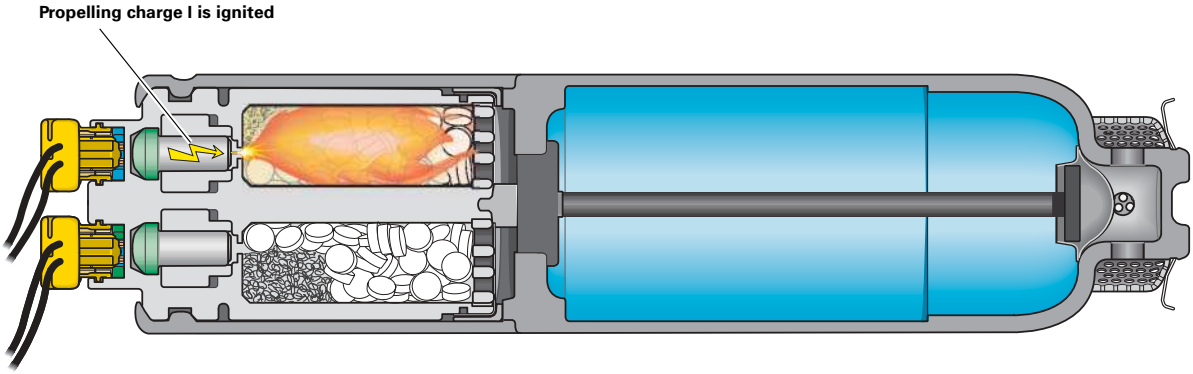

326_021

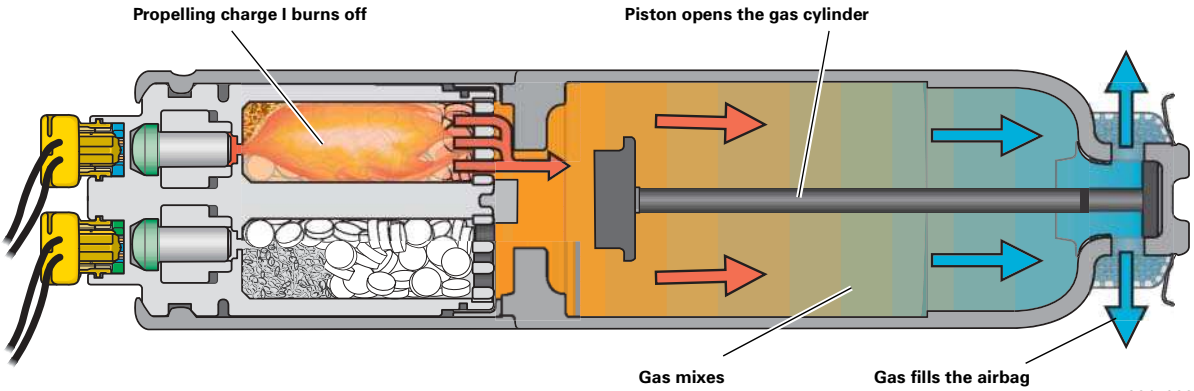

326_022

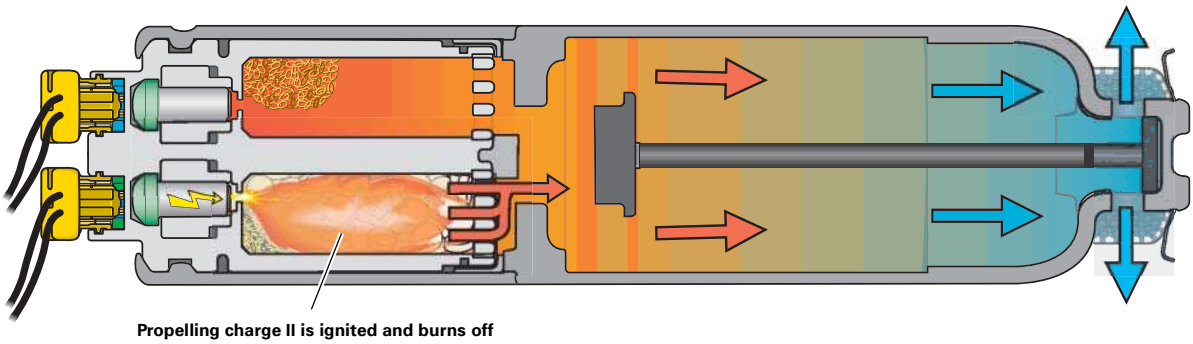

326_023

Side airbags N199 and N200

The side airbags have the same design and function as those fitted in other Audi models. However, they have been adapted to the new Audi A6'05.

Vehicles for the North American market are equipped with side airbags (front), which are adapted to meet the specific market requirements.

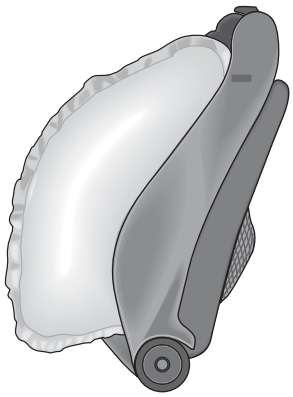

326_039

Side airbag RDW

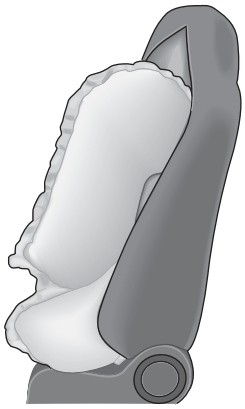

326_040

Side airbag NAR

Head airbags N251 and N252

Sideguards

The policy for the sideguard, like all Audi vehicles, is to cover the entire side window area. New head airbags are used in the Audi A6´05. The hybrid gas generator is no longer fitted in the proximity C-pillar, but in the upper area of the B-pillar. The centric location of the gas generator ensures an even filling of the airbag. In addition, the so-called gas lance is no longer required. As a result, not only has the total weight been reduced by approx. 50 per cent, but installation space has also been created for adjacent components.

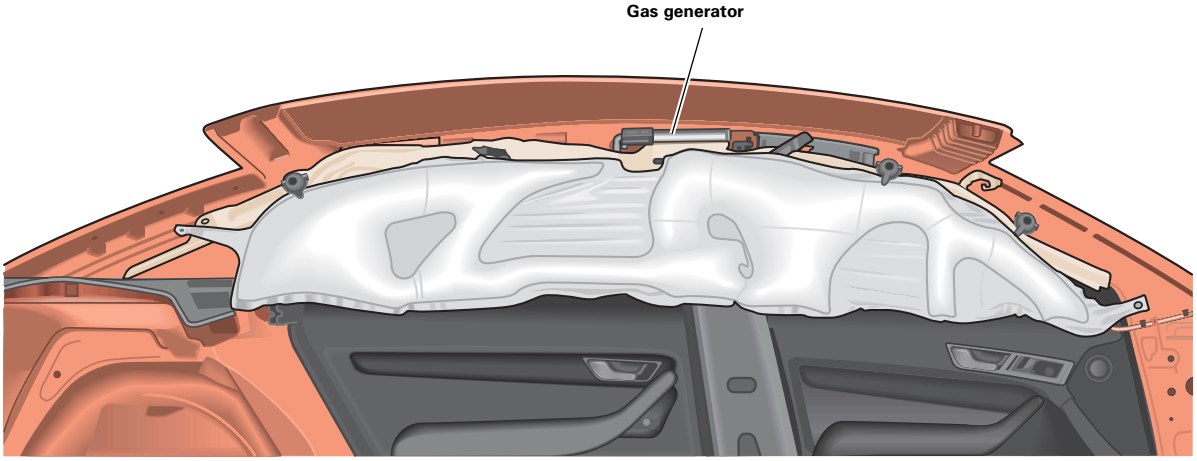

326_017

Key switch for disabling airbag, front passenger side E224

A key switch as shown in the adjacent block diagram is used to deactivate the front passenger airbag. Deactivation of the front passenger airbag is indicated by the airbag warning lamp, front passenger side, off (K145) (PASSENGER AIRBAG OFF) lighting up.

The layout of the four resistors, of which two are always connected in series, ensures correct detection of the switch position.

If a faulty key switch is detected by the Diagnosis, an entry is made in the fault memory. This is also indicated by a flashing airbag, front passenger side, off warning lamp.

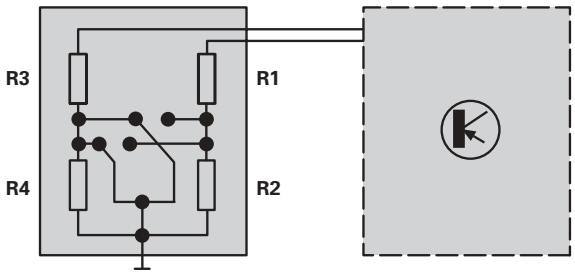

326_001

Seat belts and belt tensioners N153 and N154

The proven compact tensioners are used for the front seats in the Audi A6.
The electrically triggered tensioner units operate according to the "ball and gearwheel" principle.
The belt tensioner units are triggered before the front airbags.
To prevent passengers from being subjected to excessive loads, the automatic belt systems are equipped with a belt force limiter.
At a certain load level, the force limiter gives and makes the belt longer, thus permitting the passenger to sink into the airbag, which has already opened.

In the event of a side crash with side airbag actuation, the corresponding belt tensioner is also triggered.

Belt switches E24 and E25
(in the belt locks)

A belt lock interrogation procedure is planned for the driver / front passenger belt lock. The switch position can be determined by means of a resistance measurement. The measured resistance value tells the airbag control unit whether the safety belt has been fastened.

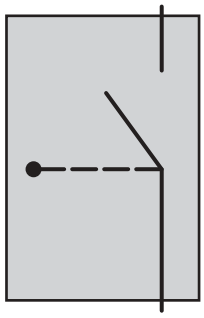

326_049

Belt switch, belt not fastened

326_057

Belt switch, belt fastened

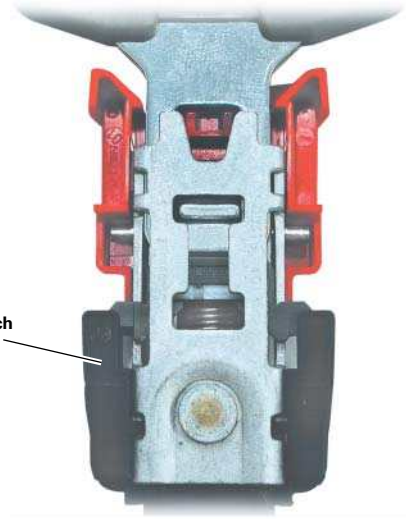

326_054

Active headrests

Active headrests are used on the front seats in the Audi A6'05.
With this system, the headrests move forward in the event of a rear-impact collision in order to reduce the distance between the head and the headrest. Reducing the relative acceleration between shoulder and head significantly reduces the risk of whiplash injuries.
A blocking of the mechanics in the event of a frontal impact, as in the case of the Audi A8'03, is not necessary, due to the lower mass of the head restraints.

During a rear-impact collision, the passenger is pressed against the backrest. This force is transferred via the backrest padding to the lumbar support plate in the backrest.
The lumbar support plate is linked to the "Active headrest" function unit in the backrest head via a lever mechanism. If the lumbar support plate moves backwards, the head restraint automatically moves forwards.

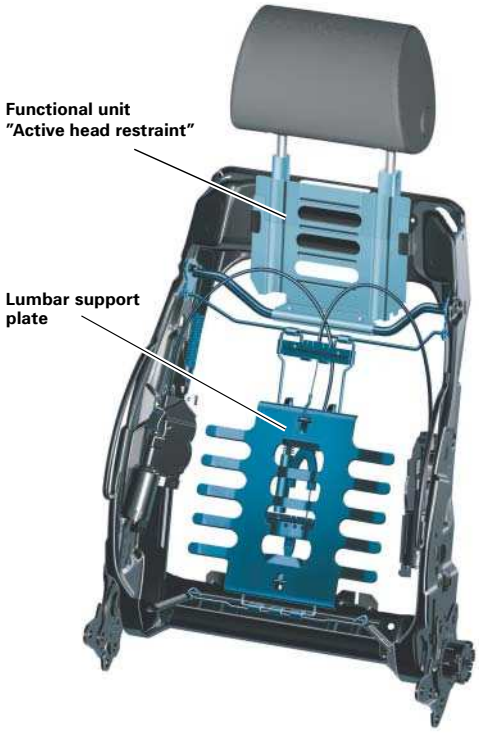

326_024

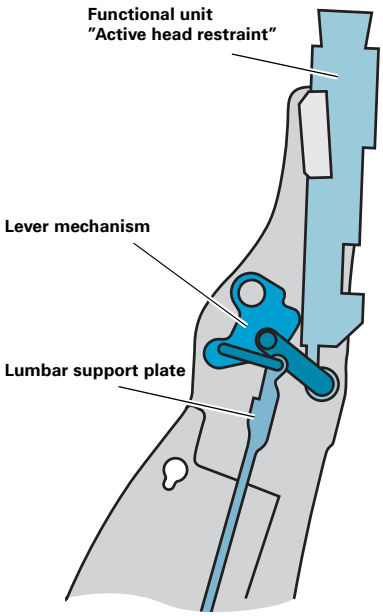

Idle position 326_012

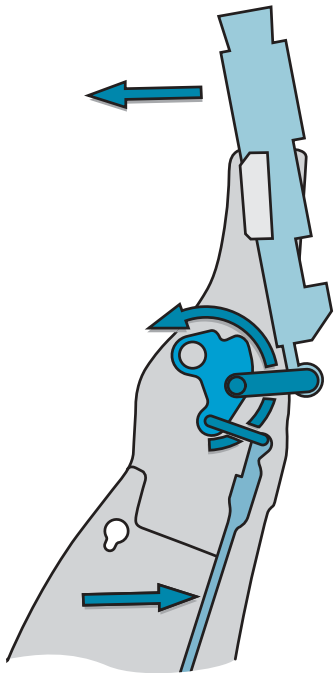

Activated 326_013

Battery cut-off relay J655

The Audi A6'05, like the Audi A8'03, will also be equipped with the battery cut-off function in the event of a crash.
The battery cut-off relay disconnects the starter and generator lines from the vehicle's battery (located in the boot) in the event of a crash. This avoids short-circuits, which could result in the vehicle catching fire.
On being triggered by the airbag control unit, a white field is visible in the element viewing window instead of a copper coil.
The airbag control unit monitors the diagnosis process and stores faults which have occurred.

The battery cut-off relay is activated every time an airbag is triggered and upon detection of a rear-end crash.

A battery cut-off relay which has triggered must always be replaced.

The electric battery cut-off relay will be replaced by a pyrotechnic one in the middle of 2004.

326_010

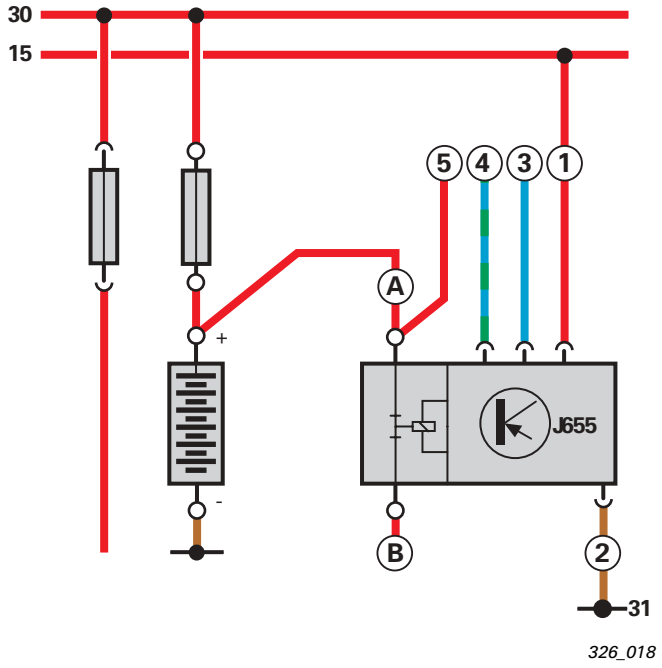

Pin	Terminal	Input / output	Description
A	30	input (screw-type terminal)	Battery +
B	87	output (screw-type terminal)	Output and starter
1	15	input (clamp-type terminal)	Switched +
2	31	input (clamp-type terminal)	Chassis ground
3	Crash signal	input (clamp-type terminal)	Activation from airbag control unit J234
4	Diagnosis	Input and output (clamp-type terminal)	Diagnosis line from airbag control unit J234
5	30	output (screw-type terminal)	Output to power management control unit J644

Seat occupied recognition, not for USA

Seat occupied sensor, front passenger side, G128 is a plastic foil, which covers the rear part of the front passenger seat. It consists of several individual pressure sensors. This ensures that the relevant part of the seat is sensed.

The seat occupied sensor, front passenger side, reacts to pressure and changes its resistance, depending on the load. If seat occupied sensor, front passenger side, G128 is subjected to a load greater than approx. 5 kg, the airbag control unit detects "Seat occupied". As long as the front passenger seat is unoccupied, the seat occupied sensor has a high resistance. If the seat is occupied, the resistance drops. If the resistance exceeds 480 ohms, the airbag control unit detects an interruption and sets a fault in the fault memory. The airbag control unit uses the information from the seat occupied sensor and the belt lock switch for the wearing belt detector.

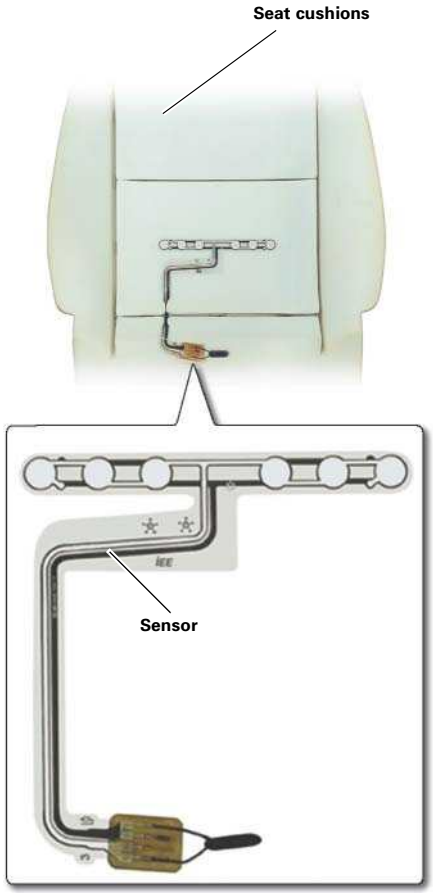

326_035

Resistance of G128	Evaluation
Approx. 430 - 480 ohm	Seat not occupied
At 120 ohms and less	Seat occupied
Above 480 ohm	Error, interruption

Seat occupied recognition for US American market

A separate system was developed in order to meet the legal requirements in this country. The system is responsible for deactivating the passenger's front airbag in certain circumstances.
If the front passenger seat is unoccupied or if a child seat is detected, the front passenger airbag is switched off by the airbag control unit.
A deactivated front passenger airbag is indicated by the PASSENGER AIRBAG OFF warning lamp and a corresponding message in the dash panel insert.
This type of seat occupied recognition in the Audi A4 will now be used for the USA (new).

The system comprises the following components:

- Seat cushions
- Mat for seat occupancy detection
- Pressure sensor for seat occupied recognition G452
- Seat occupied recognition control unit J706
- Wearing belt recognition switch E25
- Seat belt force sensor for seat occupied recognition G453
- Warning lamp for airbag, front passenger side, off, K145 (PASSENGER AIRBAG OFF)
- Airbag control unit J234

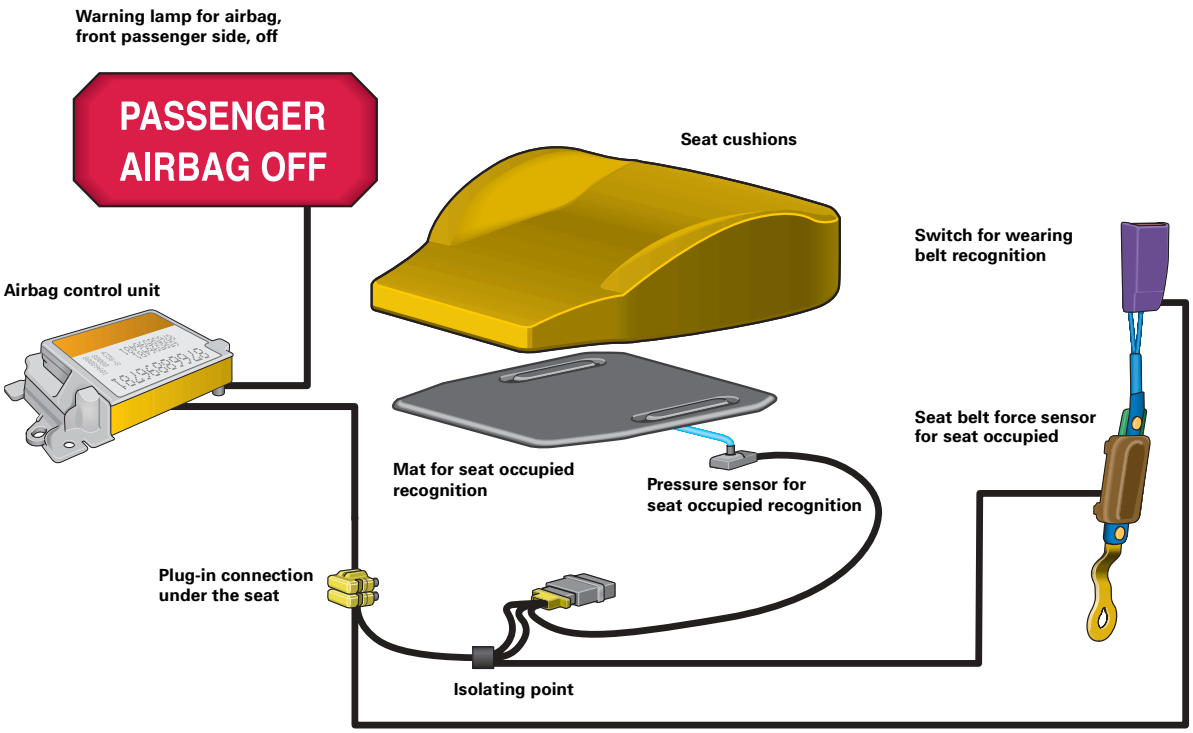

326_019

Pressure sensor for seat occupied recognition G452

Pressure sensor for seat occupied recognition G452 is connected to the mat for seat occupied recognition by means of a hose. The mat, which is filled with a silicone-like gel is fitted below the seat cushion. If the front passenger seat is occupied, pressure is applied to this mat via the seat cushion. Pressure sensor for seat occupied recognition G452 generates an analogue voltage signal based on this pressure. The seat occupied recognition control unit supplies the pressure sensor with a voltage of 5 volts. The signal generated by the pressure sensor lies between approx. 0.2 and 4.3 volts, depending on the load on the seat. The higher the load, the lower the voltage.

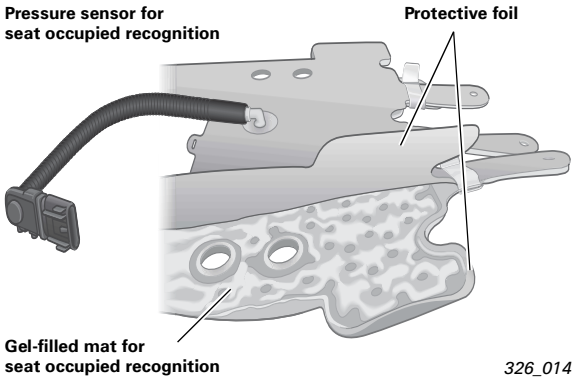

326_014

Seat belt force sensor for seat occupied recognition G453

The sensor element is located between the belt lock and the belt lock fastener, which is fixed to the seat frame. It consists of two movable parts. Both parts are held in their idle position by a defined spring. The seat belt force sensor operates by means of a hall sensor. On fitting the safety belt correctly, a tensile force is applied to the belt lock. The sensor measures the displacement distance of the parts to each other. The greater the tensile force, the greater the distance the parts are displaced. This changes the signal from the sensor. This information is evaluated by the seat occupied recognition control unit under the seat. A mechanical stop ensures that the sensor element is not torn apart in the event of a crash.

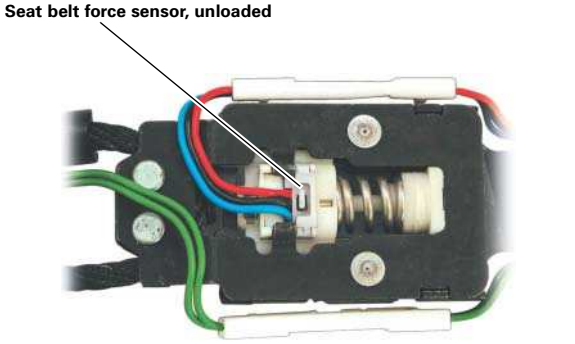

326_052

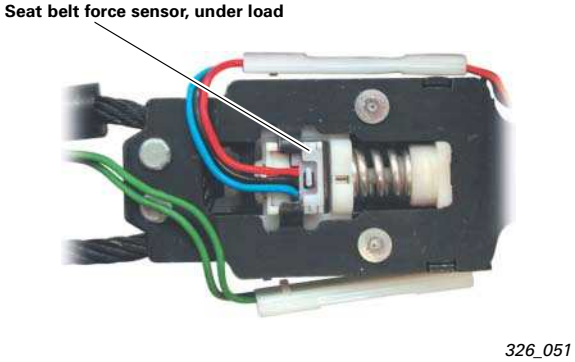

326_051

Wearing belt recognition switch E24 and E25

The wearing belt recognition switch is fitted directly in the belt lock. Two resistors are integrated within the switch. The measurement is effected via one or both of the resistors, depending on the switch position. The airbag control unit recognizes that the safety belt has been put on by means of the measured resistance.

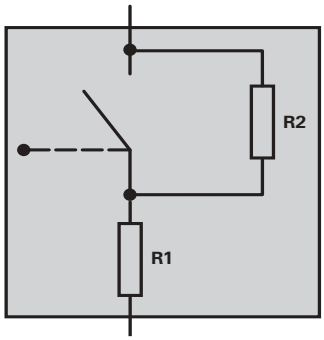

326_020

Switch for wearing belt recognition, belt not fastened

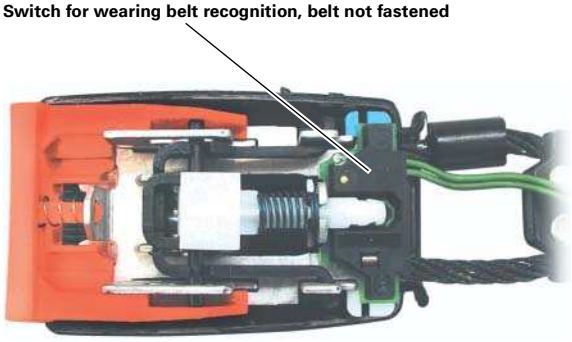

326_053

Switch for wearing belt recognition, belt fastened

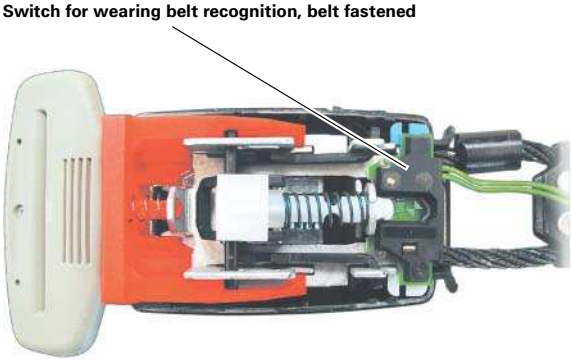

326_050

Seat occupied recognition control unit J706

The control unit evaluates the signals coming from the pressure sensor and the belt force sensor. The seat occupied recognition control unit uses the information it receives from the seat belt force sensor to monitor the tensile force acting on the safety belt. The voltage signal from the pressure sensor can be used to specify the weight of the load on the front passenger seat.

If the load is under approx. 20 kg, and a very small or no belt force is discernible, the control unit recognizes "child seat" and informs the airbag control unit. The front passenger airbag is disabled.
If the load on the seat is approx. 25 kg, for example, and the belt force exceeds a fixed value, the control unit recognizes that the safety belt is also pressing the child seat against the seat cushion. The control unit recognizes "child seat" and the airbag control unit disables the front passenger airbag.
From a load of approx. 25 kg and and a low belt force, the control unit assumes that the seat is occupied by an adult and the front passenger airbag remains active.

The data from the sensors is continuously evaluated when the ignition is switched on. This ensures that the control unit recognizes any seat occupancy changes and reacts accordingly.
When the vehicle is moving, the system no longer reacts spontaneously and only does so after a certain delay. This ensures that the front passenger airbag is not immediately deactivated when there is a load change on the seat whilst driving. The acceleration sensor in the control unit informs the electronics that the vehicle is moving.

Seat load	Belt force	Recognition
less than approx. 20 kg	very small / none	Child seat
e. g. 25 kg	very high	Child seat
greater than approx. 25 kg	low	Adult

Data exchange between the seat occupied recognition control unit and other vehicle systems is effected via the airbag control unit (by means of the LIN bus). The airbag control unit is thus the master control unit and the seat occupied recognition control unit (J706) the slave. The Diagnosis function is effected via the airbag control unit.

The positions of the installed components are fixed and must never be changed.

This also applies to individual system components. The system, comprising control unit, pressure sensor, pressure mat and seat cushion, is calibrated individually for each seat during production.
The connecting cable beween the control unit and pressure sensor is thus sealed at both ends in order to emphasize that they are not to be disconnected. Likewise, the pressure mat is connected to the foam by means of a clip, which cannot be removed without distroying it.

All parts must be replaced together in the event of a defective component. Pre-calibrated Service kits are available for this.
Components which are not installed correctly can cause malfunctions and the entire seat occupied recognition system can no longer operate reliably.
Characteristic maps in the control unit electronics ensure that the ageing of individual components is taken into account.

Diagnosis

As in the case of the Audi A8´03 and Audi A3´04, communication in the Audi A6´05 between the VAS tester and the vehicle is effected via CAN-Bus, CAN-Diagnosis.

The main Diagnosis modification is the Diagnosis tester online connection.
An adaptation of components belonging to the immobilizer or interrogation of the radio code, is only possible when the tester is directly connected to the company's "FAZIT" database.
Secret numbers are thus no longer disclosed.

294_001

Reference

For further information on the topic:
VAS 5051 online connection; please refer to self-study programme 294.

VAS 5053

The VAS 5053 tester was developed for vehicle acceptance and service procedures and for smaller repairs.
In addition to the "Self-diagnosis" function, excerpts from the ELSA and the "Guided functions" programme will be available on the tester.
Due to its compactness, the VAS 5053 is suitable for portable use, e.g. test drives. The data gathered during a test drive can be stored in the tester until it is printed out. The connection between the vehicle and VAS 5053 tester is established by means of a cable. In addition, the tester can be connected to the vehicle via the separate VAS 5053/20 wireless interface.

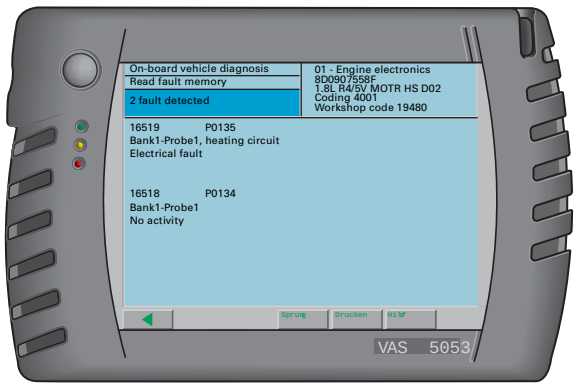

326_031

VAS 5051

The VAS 5051 A tester will be replaced by the VAS 5051 B in 2004. The hardware and design of the VAS 5051 have been revised and updated.
The 15" screen is the most noticeable feature of the VAS 5051 B.
The main objective of the revision was being able to use it on the existing instrument waggon and with the existing test cables.

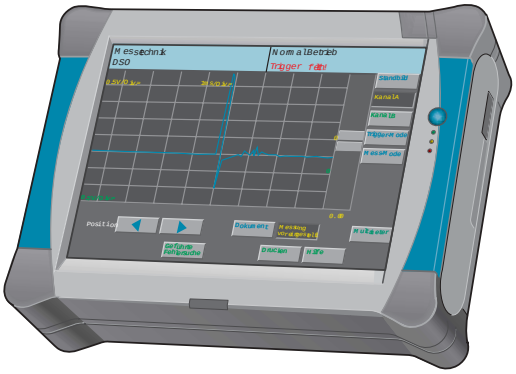

326_032

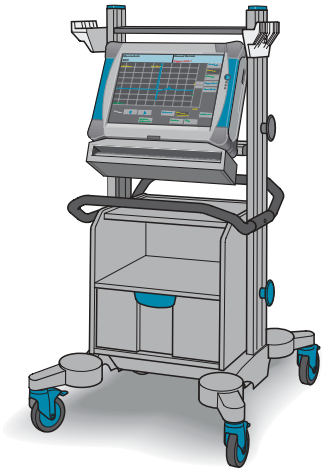

326_033

VAS 5053/20

The VAS 5053/20 wireless Diagnosis interface permits wireless communication between the Diagnosis socket in the vehicle and the VAS 5051 B, VAS 5052 and VAS 5053 Diagnosis testers.

326_034

Recording the working time using the VAS 5051/5052

From the basic CD 6.0 onwards, the actual working time in the "Guided fault finding" and "Guided functions" functions is logged by the tester and indicated in time units under "Diagnosis time" in the Diagnosis log print-out. The time required to uncover or remove and install components in the scope of the guided fault finding process is not recorded by the tester.

Workshop code:
02211 123 12312

Version:
Basic V06.02.00 19/06/2003
Audi V06.50.00 07/08/2003

Company code:
VK-31

Registration no.:
AB-CD 1234

Vehicle Ident. No.:
WAUZZZ.....

Vehicle:

Make:	Audi
Type:	Audi A6 1998>
Model year:	2000 (Y)
Variant:	Allroad
Engine identifier:	AKE 2.5l TDI / 132 kW

Diagnosis time: 36
Fault memory contents:

Motronic ME7 injection and ignition system
4Z7907401
2.5l/4VTEDC G200SG I02
Coding 1018
Company number 02325

1 fault detected

00575 008
Intake manifold pressure
Control limit exceeded

Overview of available engine / gearbox combinations

V6 3.0l TDI

V6 3.2l FSI

V8 4.2l

2.4l

Reference:

For information on the engines and gearboxes, refer to SSP 325

0A3/450Nm

09L/to 450Nm

01J/330Nm

01X/02Xqu 330Nm

09L/to 450Nm

01J/330Nm

01X/02Xqu 330Nm

Overview

The basic version of the Audi A6´05 is equipped with a steel spring chassis. There are three different types of running gear:

Normal chassis: Designation 1BA

Sports-style running gear: Designation: 1BE, vehicle trim is positioned 20 mm lower than on the normal running gear

Bad road chassis: Designation 1BR, vehicle trim position raised by 13 mm compared to the normal chassis

Front axle

The well-known four-link front axle also used in the new Audi A6'05.
Due to the geometric and kinematic modifications compared to the predecessor, all axle components, with the exception of the upper axle links and the wheel hubs (adopted from Audi A8), are new parts.

In addition to improved spring and shock absorber settings, spring travel has been increased by 30 mm. This results in a significant improvement in driving comfort and driving stability. With regard to the passenger compartment, the axle was moved forward by 83 mm. This provides better axle load distribution and has advantages from the point of view of driving dynamics.

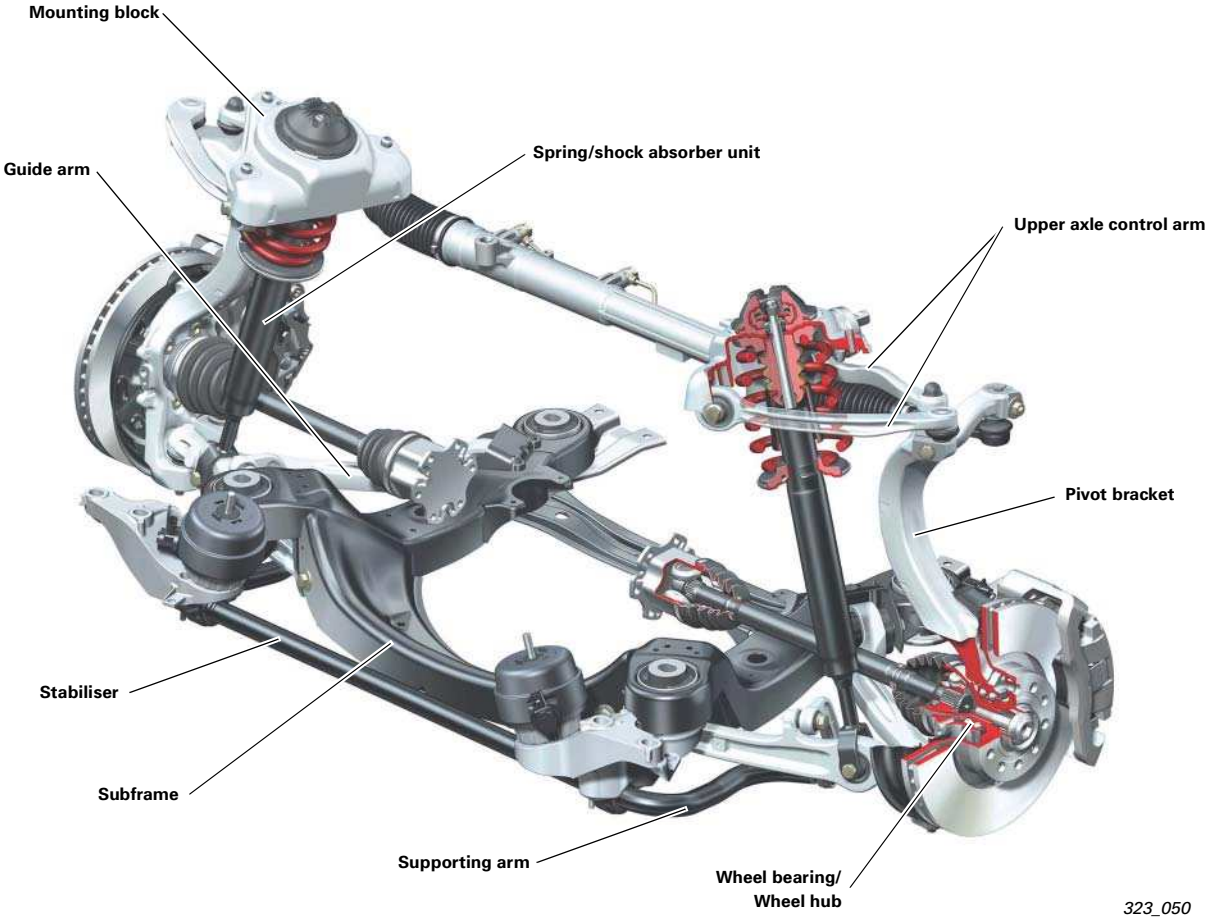

Rear axle

The rear axle represents a further development of the trapezoid link axle, with which you may be familiar from the A4'00. Because of the geometric and kinematic changes compared with the predecessor vehicle and the use of the trapezoid link axle, all axle components are new parts.

The axle struts are now longer compared with the A4'00 in order to guarantee a larger toe width. For vehicles with the V8 TDI engine with quattro drive, the rear axle track width will be reduced in order to fit wider tires. This will be realised by using modified wheel hubs and a greater wheel offset.

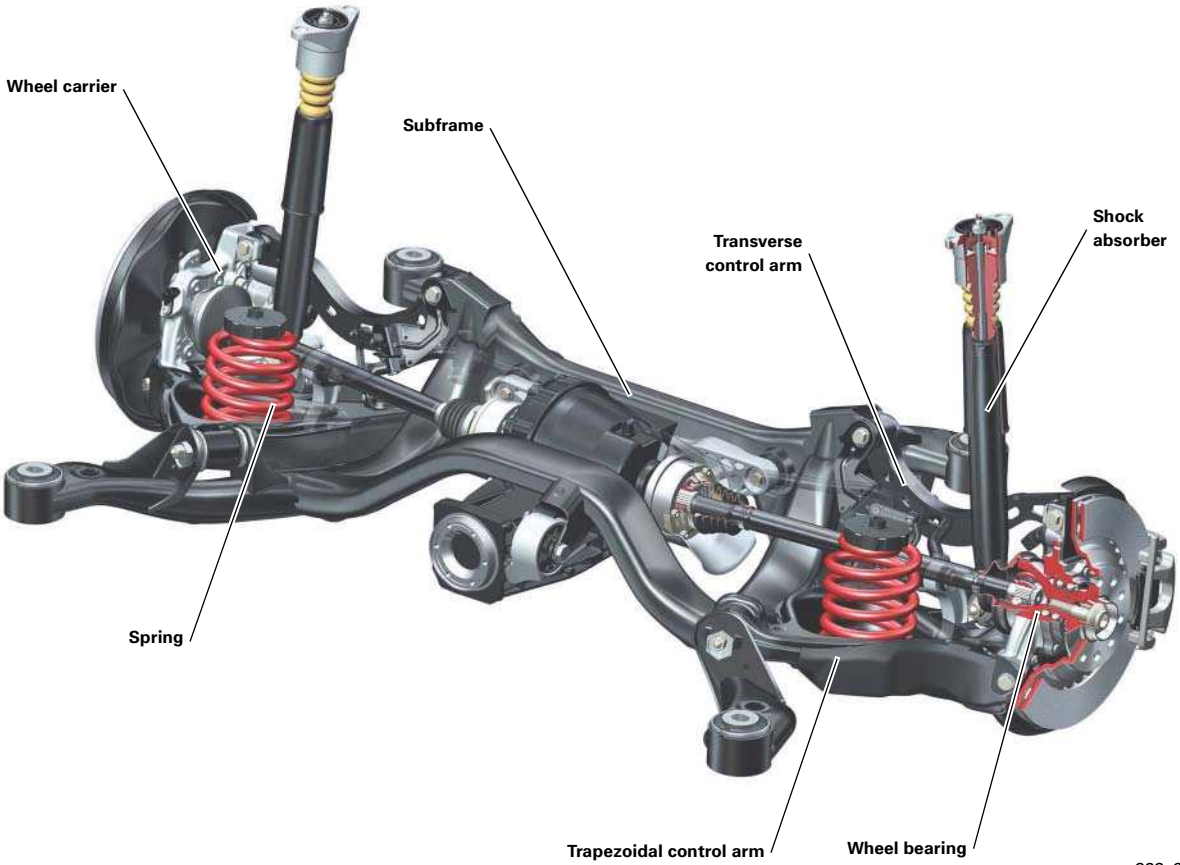

323_051

Wheel brake

Front-axle overview

Engine	3.0 litre V6 TDI	3.2 litre V6 FSI	4.2 litre V8 MPI
Minimum wheel size	16″	16″	17″
Brake type	FNR-G 60 16″	FNR-G 60 16″	FNR-G 60 17″
Number of pistons	2	2	2
Piston diameter (mm)	60	60	60
Brake disc diameter (mm) x thickness (mm)	321 x 30 Ventilated	321 x 30 Ventilated	347 x 30 Ventilated

Rear-axle overview

Engine	3.0 litre V6 TDI	3.2 litre V6 FSI	4.2 litre V8 MPI
Minimum wheel size	16″	16″	17″
Brake type	Colette II C41	Colette II C41	Colette II C43
Number of pistons	1	1	1
Piston diameter (mm)	41	41	43
Brake disc diameter (mm) x thickness (mm)	302 x 12 Not ventilated	302 x 12 Not ventilated	330 x 22 Not ventilated

ESP

A new ESP generation from Bosch in the form of ESP 8.0 is used in the Audi A6'05. The familiar basic functions already available in the other Audi models have been adapted to the conditions in the A6´05.

The basic functionalities of the subfunctions EBD, ABS, TCS, EDTC, EDL, ESP and ECD are the same as in the predecessor version 5.7. The control unit and hydraulic unit cannot be separated in Customer Service. There are two different parts for front-wheel-drive and quattro drive.

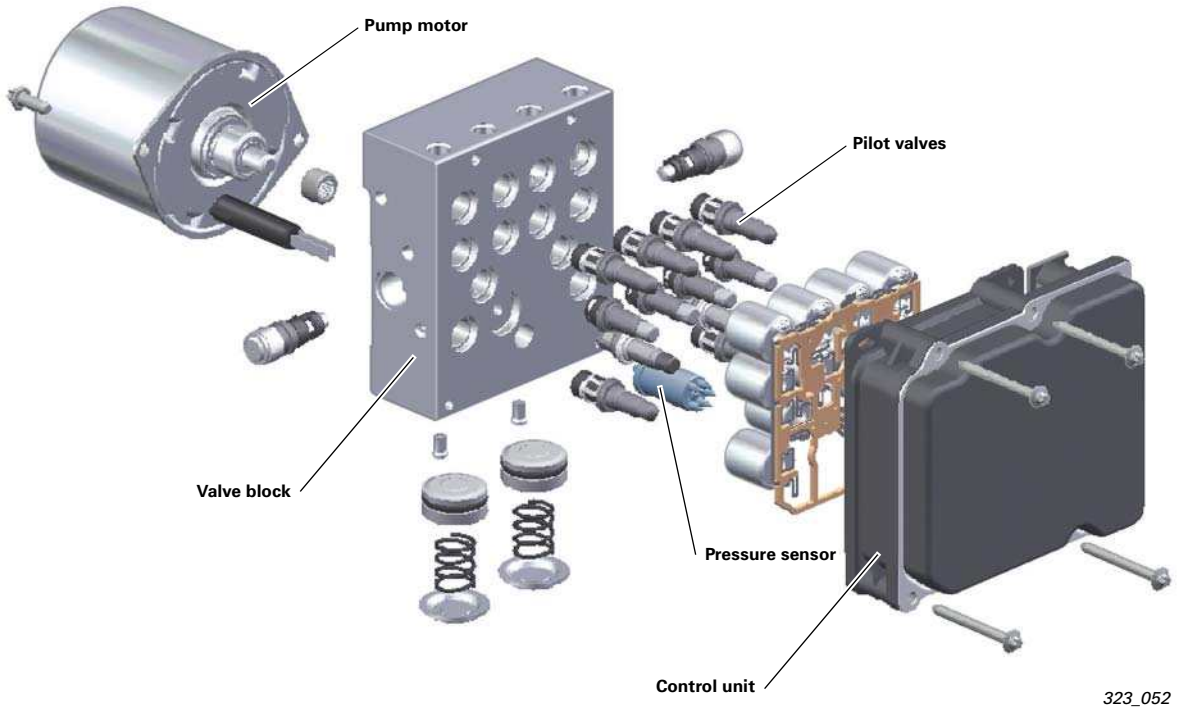

323_052

Electromechanical parking brake – EPB

Following its initial introduction in the Audi A8, the electromechanical parking brake EPB is now also used in the Audi A6´05. The basic mechanical design, the boost factor levels and the general functionality are still the same (see SSP 285). The innovations described in SSP 324 are due to its adaptation to the A6´05.

323_053

Steering system

A conventional, hydraulic rack-and-pinion servo steering system is used.
A high degree of sporty steering precision has been achieved through the consistent further development of the steering used in the predecessor model. The speed-dependent Servotronic servo-support is available as standard. Servotronic II, which was already used in the Audi A8, is used (set-up and mode of operation: see SSP 285).

A mechanically adjustable steering column is used in the basic model. Electrical adjustment is optional.
As in the case of the A8´03, the A6´05 also has an electrical steering lock.
A newly developed three/four-spoke steering-wheel generation is used.

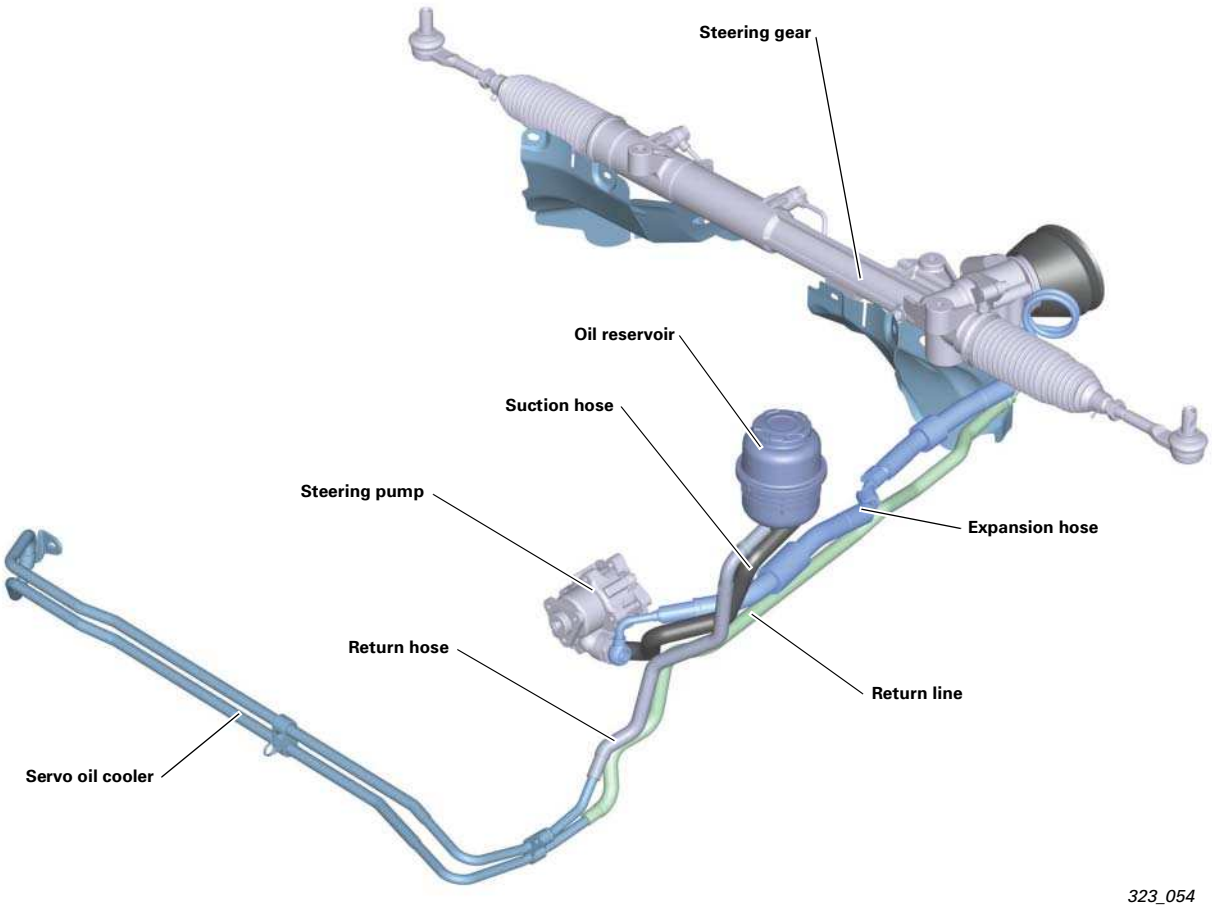

323_054

Wheels / tyres

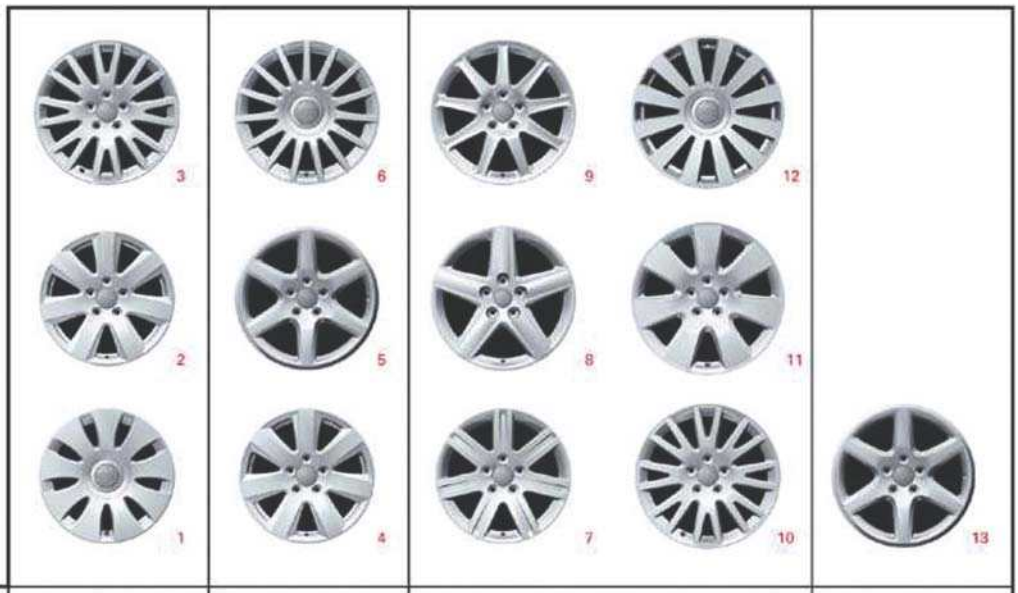

Engine	Basic wheels	Winter wheels	Optional wheels		Run flat system PAX
4 and 6-cylinder	7J x 16 ET 35 (1) Cast alum. wheel 205/60 R16	7J x 16 ET 42 (4) Forged alum. wheel 205/60 R16 or 225/55 R16	7.5J x 16 ET 45 (7) Cast alum. wheel 225/55 R16	8J x 17 ET 48 (10) Cast alum. wheel 245/45 R17	225 x 460 ET 46 (13) Cast alum. wh. (PAX) 235/660 – R460
	7.5J x 16 ET 45 (2) Forged alum. wheel 225/55 R16	225 x 460 ET 46 (5) Cast alum. wh. (PAX) 225/650 – 460	7.5J x 17 ET 45 (8) Cast alum. wheel 225/50 R17	8J x 18 ET 48 (11) Cast alum. wheel 245/40 R18	
8-cylinder	7.5J x 17 ET 45 (3) Cast alum. wheel 225/50 R17	7J x 17 ET 42 (6) Cast alum. wheel 225/50 R17 98 M+S	7.5J x 17 ET 45 (9) Cast alum. wheel 225/50 R17	8J x 18 ET 48 (12) Forged alum. wheel 245/40 R18	

323_055

Tyre pressure monitoring system

A new generation of the tyre pressure monitoring system is available for the Audi A6´05.

It is modular in design and is significantly different from the systems used up to now at Audi from the point of view of functionality and design.

Bus topology

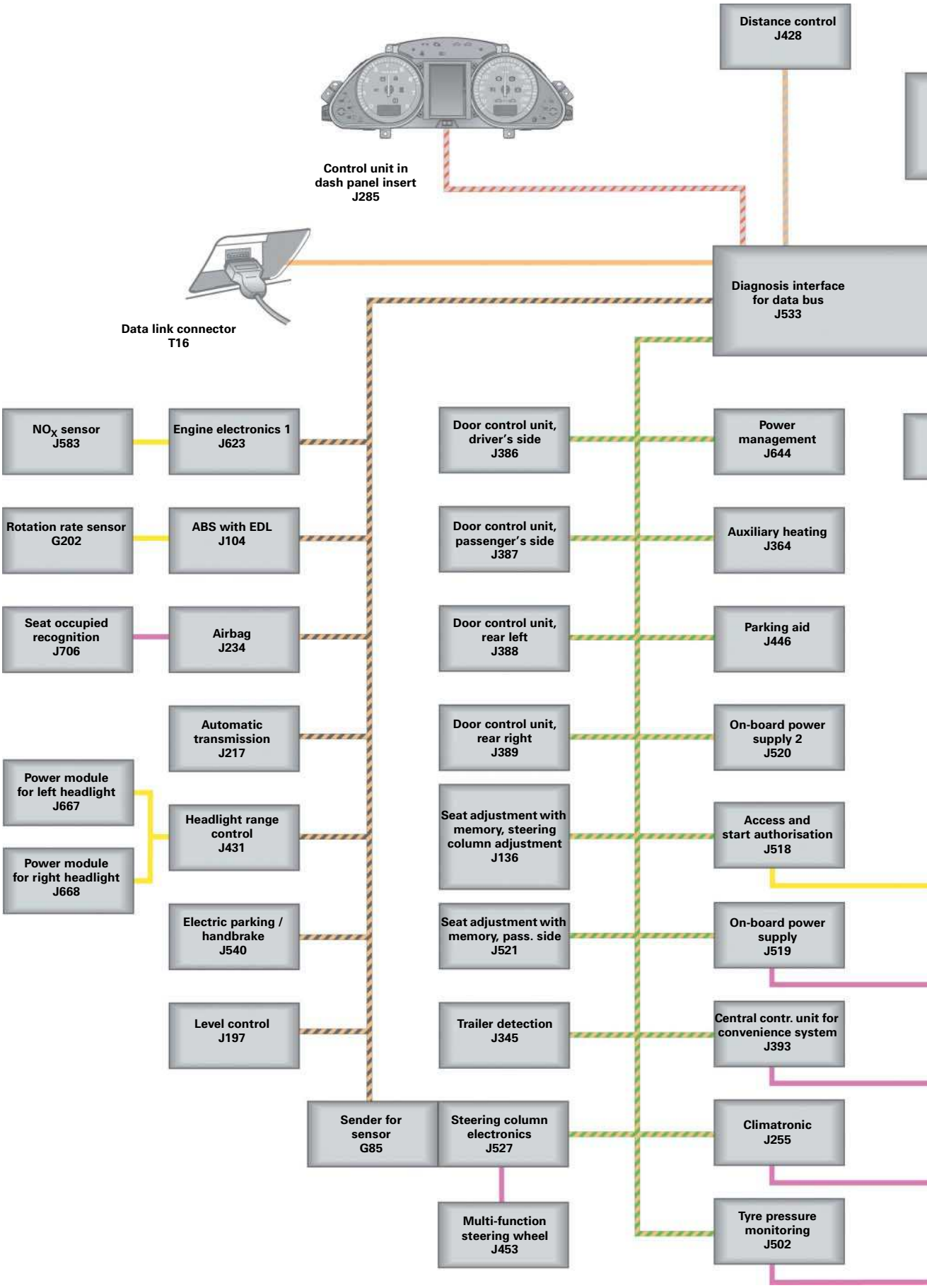

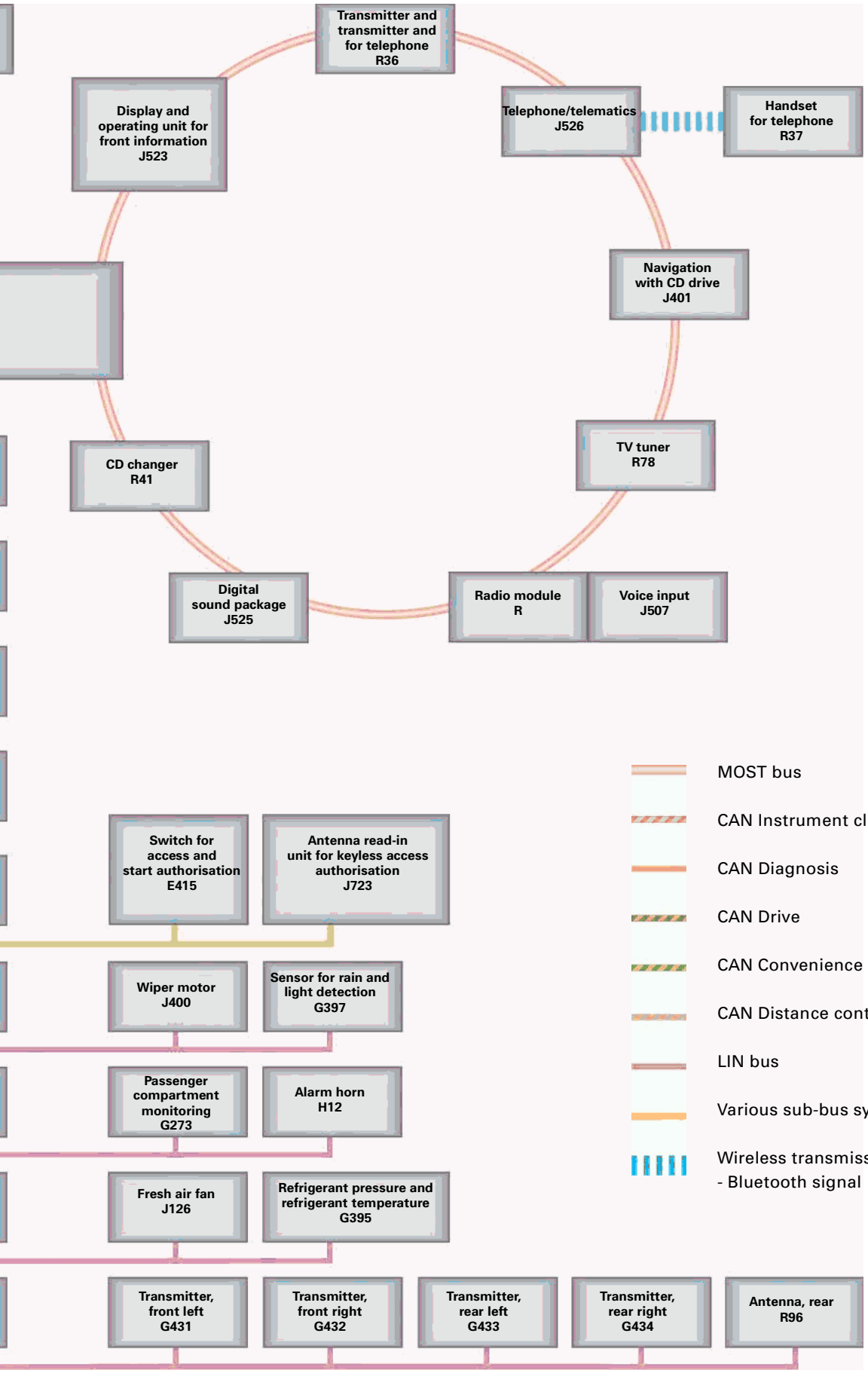
Transmitter and transmitter and for telephone R36
Display and operating unit for front information J523
Telephone/telematics J526
Handset for telephone R37
Navigation with CD drive J401
CD changer R41
TV tuner R78
Digital sound package J525
Radio module R
Voice input J507
Switch for access and start authorisation E415
Antenna read-in unit for keyless access authorisation J723
Wiper motor J400
Sensor for rain and light detection G397
Passenger compartment monitoring G273
Alarm horn H12
Fresh air fan J126
Refrigerant pressure and refrigerant temperature G395
Transmitter, front left G431
Transmitter, front right G432
Transmitter, rear left G433
Transmitter, rear right G434
Antenna, rear R96
MOST bus
CAN Instrument cluster
CAN Diagnosis
CAN Drive
CAN Convenience
CAN Distance control
LIN bus
Various sub-bus systems
Wireless transmission - Bluetooth signal

326_027

In/outputs on control units J393, J519 and J520

This overview shows all load modules in the convenience system with their in/outputs.
You thus have all 3 control units and their basic functions at a glance. For further details, please refer to the function plans in self-study programme 326 A6´05, Electrics.
This overview only contains discretionary wired components. Components which communicate with the control units via various bus systems are shown in the vehicle topology.

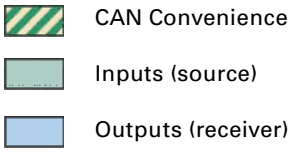

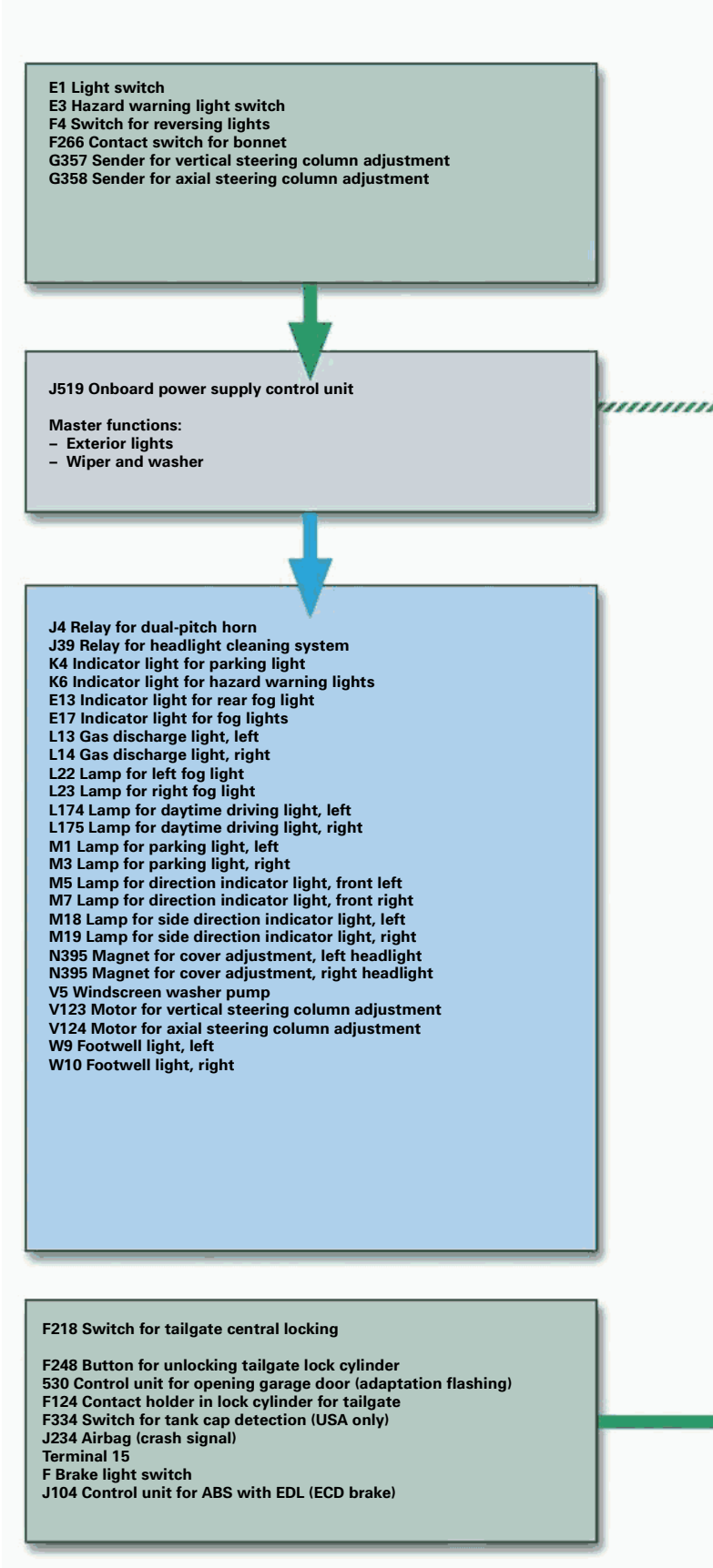

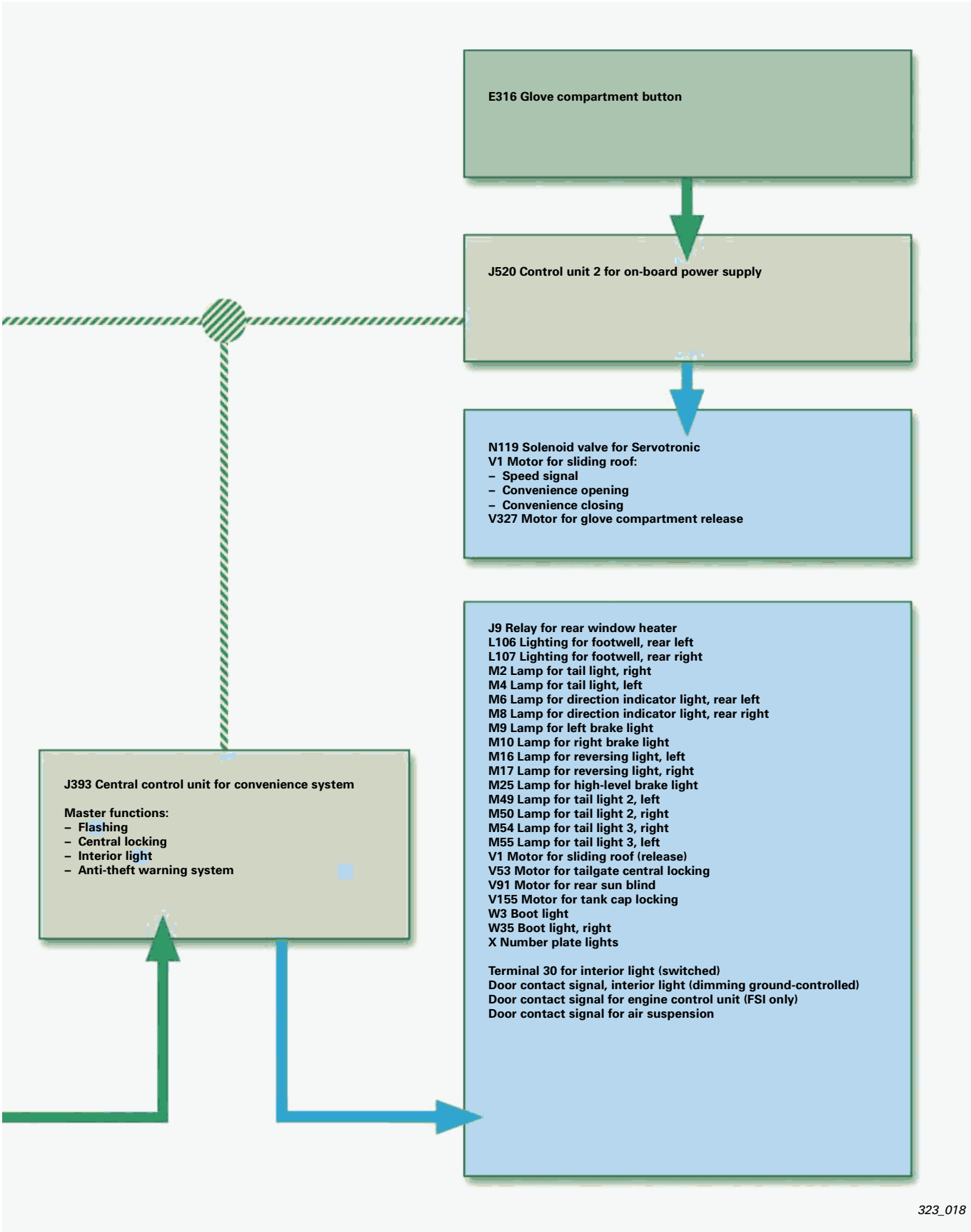
E316 Glove compartment button
J520 Control unit 2 for on-board power supply
N119 Solenoid valve for Servotronic
V1 Motor for sliding roof:
– Speed signal
– Convenience opening
– Convenience closing
V327 Motor for glove compartment release
J393 Central control unit for convenience system
Master functions:
– Flashing
– Central locking
– Interior light
– Anti-theft warning system
J9 Relay for rear window heater
L106 Lighting for footwell, rear left
L107 Lighting for footwell, rear right
M2 Lamp for tail light, right
M4 Lamp for tail light, left
M6 Lamp for direction indicator light, rear left
M8 Lamp for direction indicator light, rear right
M9 Lamp for left brake light
M10 Lamp for right brake light
M16 Lamp for reversing light, left
M17 Lamp for reversing light, right
M25 Lamp for high-level brake light
M49 Lamp for tail light 2, left
M50 Lamp for tail light 2, right
M54 Lamp for tail light 3, right
M55 Lamp for tail light 3, left
V1 Motor for sliding roof (release)
V53 Motor for tailgate central locking
V91 Motor for rear sun blind
V155 Motor for tank cap locking
W3 Boot light
W35 Boot light, right
X Number plate lights
Terminal 30 for interior light (switched)
Door contact signal, interior light (dimming ground-controlled)
Door contact signal for engine control unit (FSI only)
Door contact signal for air suspension
323_018

Overview

The new Audi A6´05 is equipped with an air conditioning system as standard. A differentiation is made between automatic air conditioning and convenience automatic air conditioning plus. The main characteristics of the air conditioning system in the new A6´05 are the low interior noise level, no-draught ventilation and even temperature distribution.

During the development process, particular attention was paid to weight and space-saving but output-optimized) components.

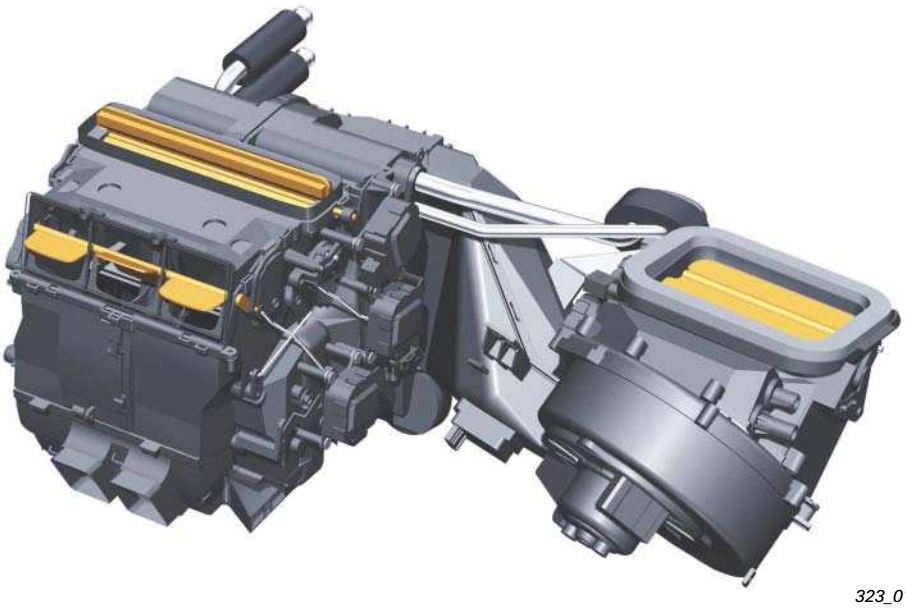

323_012

Air conditioning unit for Audi A6´98

The familiar air conditioning concept used in the AUDI A6 predecessor has been replaced by a symmetric concept, in which the fresh air blower is located outside the passenger compartment. The previous air-based air conditioning control system has been converted to a water-based control system with valves for heating control left and right (N175/ 176) and a pump for coolant circulation (V50) like in the current Audi A8.

The new concept is more or less the same for both the left-hand and right-hand drive variants. This reduces the number of variants.

Reference
For information on the 6-piston swash-plate compressor, please refer to SSP 240, Audi A2 – Technology.

Audi A6´05 air conditioning unit

The new Audi A6´05 – like the Audi A2 and Audi A3´04 – will be equipped with the familiar 6-piston swash-plate compressor with control valve N280 and out-flow temperature sender for evaporator G263. The compressor has the same working volume of 140 cm^3 for all country variants.

In the case of the 4 and 6-cylinder engines, it is driven via a plastic belt pulley and in the case of the 8-cylinder engine, via a shaft.

323_011

323_013

Convenience automatic air conditioning and convenience automatic air conditioning plus

The new Audi A6´05 will still use an automatic air conditioning system with two-zone temperature control as standard equipment. Both the basic and convenience versions now have a circulating air filtering system (extended function) in which the filter element has been integrated within the distributor housing. Both versions have a central nozzle with adjustable temperature in the dash panel insert.

The control for the optional seat heating and ventilation is integrated within both variants of Climatronic control unit J255.
Both versions of the automatic air conditioning system use the respective display on the multi-media interface as the display unit. They are still operated at the separate Climatronic control unit J255).

323_014

The automatic air conditioning plus system also has two additional displays in Climatronic control unit J255. Furthermore, it also has an indirect ventilation in the dashboard.

In addition, an air quality sensor for automatic fresh air / circulating air changeover is installed. The residual heat function makes it possible to use the engine heat when the vehicle is stationary.

323_015

	Convenience automatic air conditioning	Convenience automatic air conditioning Plus	A6 Predecessor
Separate temperature distibution	X	X	X
Sun position sensor	X	X	X
Air quality sensor	-	X	X
Residual heat	-	X	-
Pollen filter / combination filter	X/-	-/X	-/X
Circulating air filter	X	X	-
Indirect ventilation	-	X	-
Rear compart. ventilation (middle)	X	X	X
Rear compartment ventilation (B-pillar)	-	X	-
Central air vent with adjustable temperature	-	X	-
Control concept	water-based	water-based	air-based

CAN networking

The air conditioning system in the new Audi A6´05 is integrated within the convenience CAN (see table). In addition to the air conditioning master control, Climatronic control unit J255 is the master control unit for the distributed functions rear window heating, the optional seat heating and the optional, factory-fitted auxiliary heater.
Most of the necessary data messages are transmitted to Climatronic control unit J255 by means of the CAN bus. The unit also transmits messages via this data bus, which are used for the distributed functions at the other control units.
This data bus is also used for the analysis of the air conditioning system in the event of malfunctions, in conjunction with Diagnosis interface for data bus J533, CAN-Diagnosis and the corresponding Diagnosis tester.

The personalization of the air conditioning settings is effected by importing the respective code identification message from the control unit for access and start authorization J518. Fresh air blower control unit V2 is connected to Climatronic control unit J255 via a LIN bus. The control unit for solar operation (J355) of the optional solar sliding roof is connected directly to Fresh air blower control unit V2. Communication with Climatronic control unit J255 is effected via Fresh air blower control unit V2, which sends a LIN message to Climatronic control unit J255 when it receives voltage signals from the control unit for solar operation (J355). This message is then forwarded to the control unit for convenience electronics (J393), which needs this information for the interior monitoring function.

The rear window heating is activated from Climatronic control unit J255. A message is sent to convenience system control unit J393 via CAN-Convenience. This actuates heated rear window Z1 and sends a CAN bus message to Climatronic control unit J255 that it has been switched on. The control unit then activates the respective LED in the button.

The air conditioning system (both variants) in the new Audi A6´05 uses the MMI display to display relevant information. The current MMI display switches over to the air conditioning menu on pressing the function switch on Climatronic control unit J255.

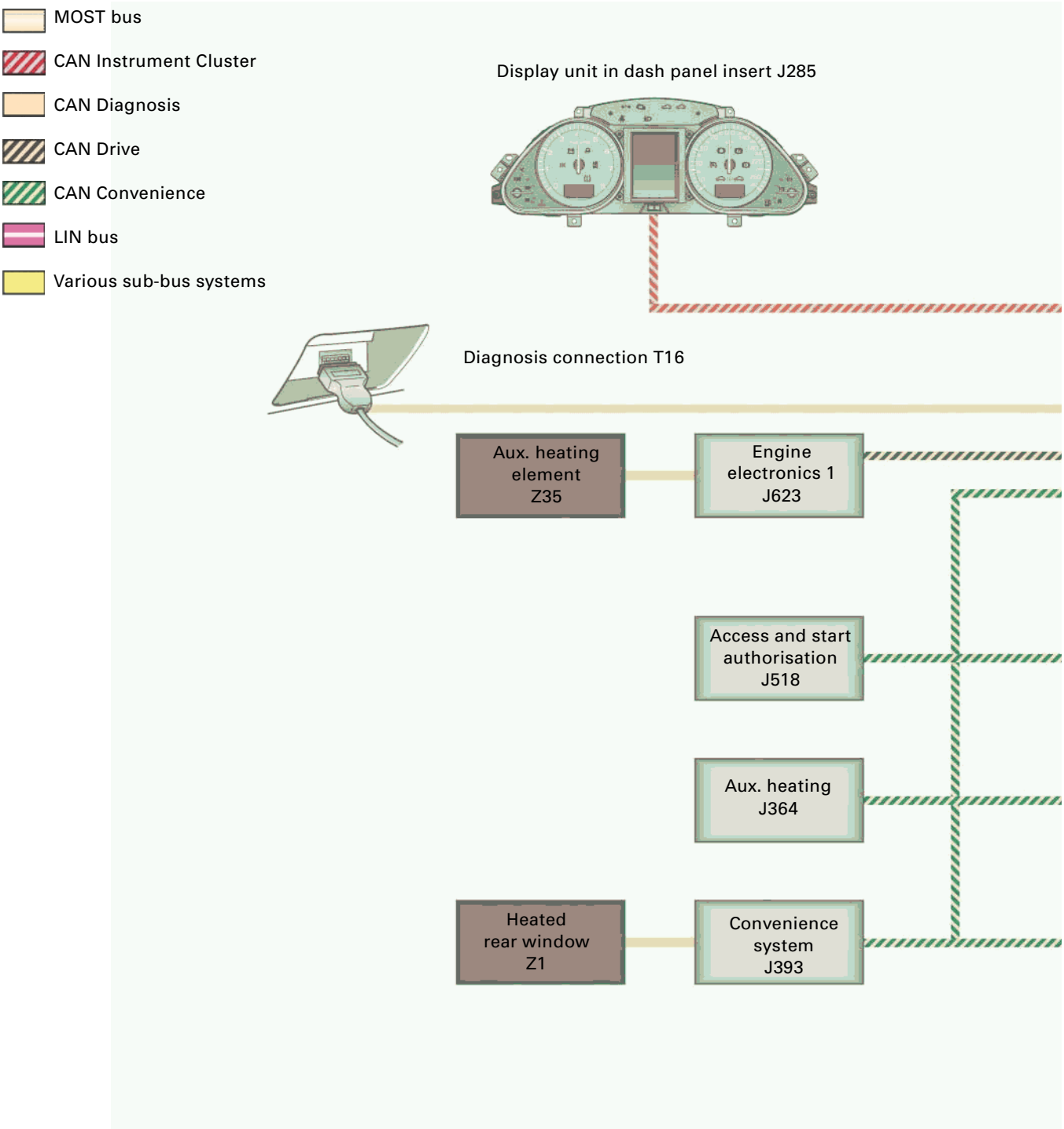

On actuating an air conditioning function, the MMI display switches back to its original menu after a certain waiting time.
The information required for this is sent from Climatronic control unit J255 to the CAN-Convenience, converted into messages for the MOST bus by Diagnosis interface for data bus J533 and fowarded as optical signals to front display and operating unit control unit J523.

This in turn converts the incoming signals into data to be displayed on the respective display (J685) which is connected.

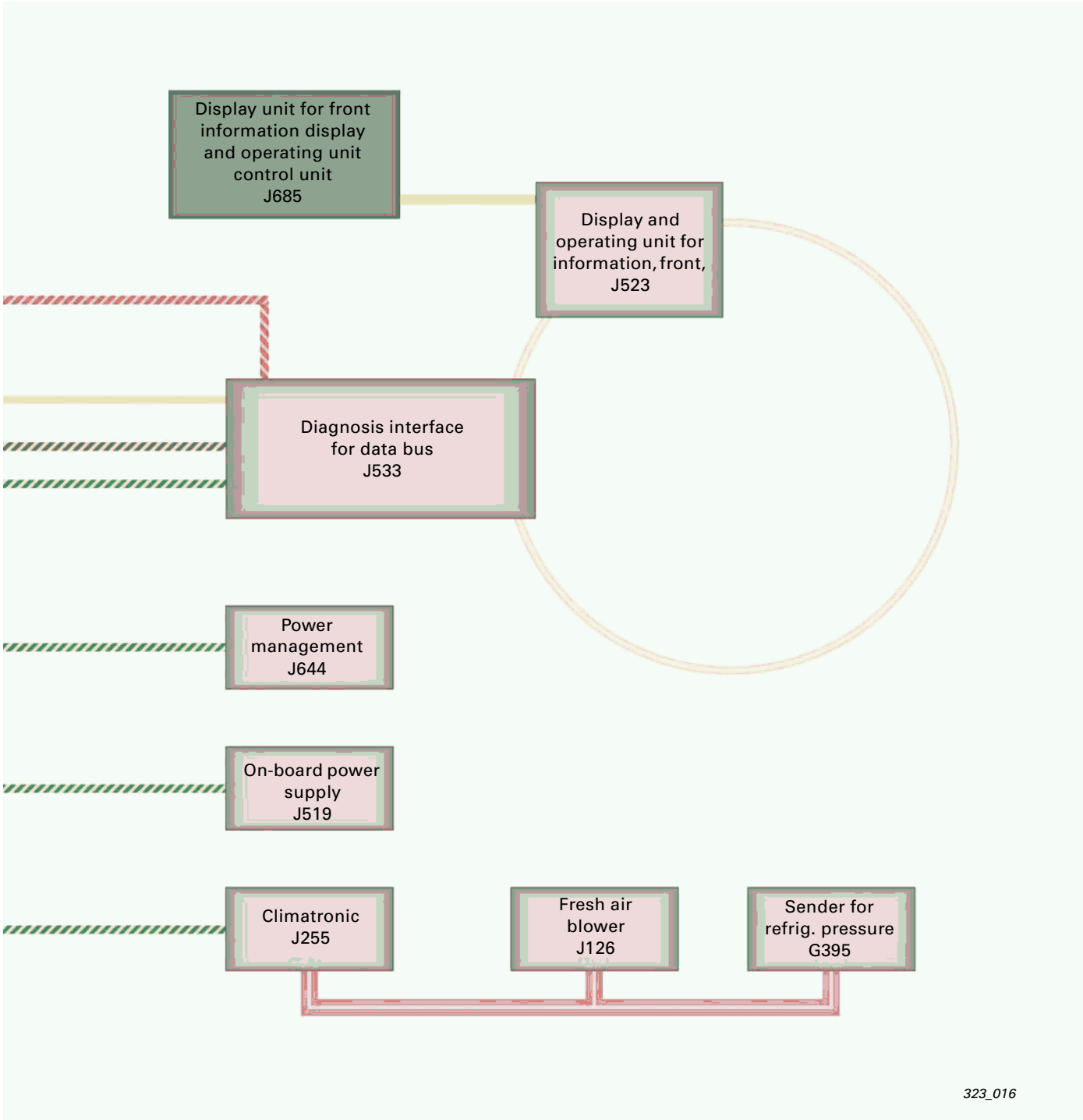

Components in the Audi A6´05 air conditioning unit

Control motors

Driver's side

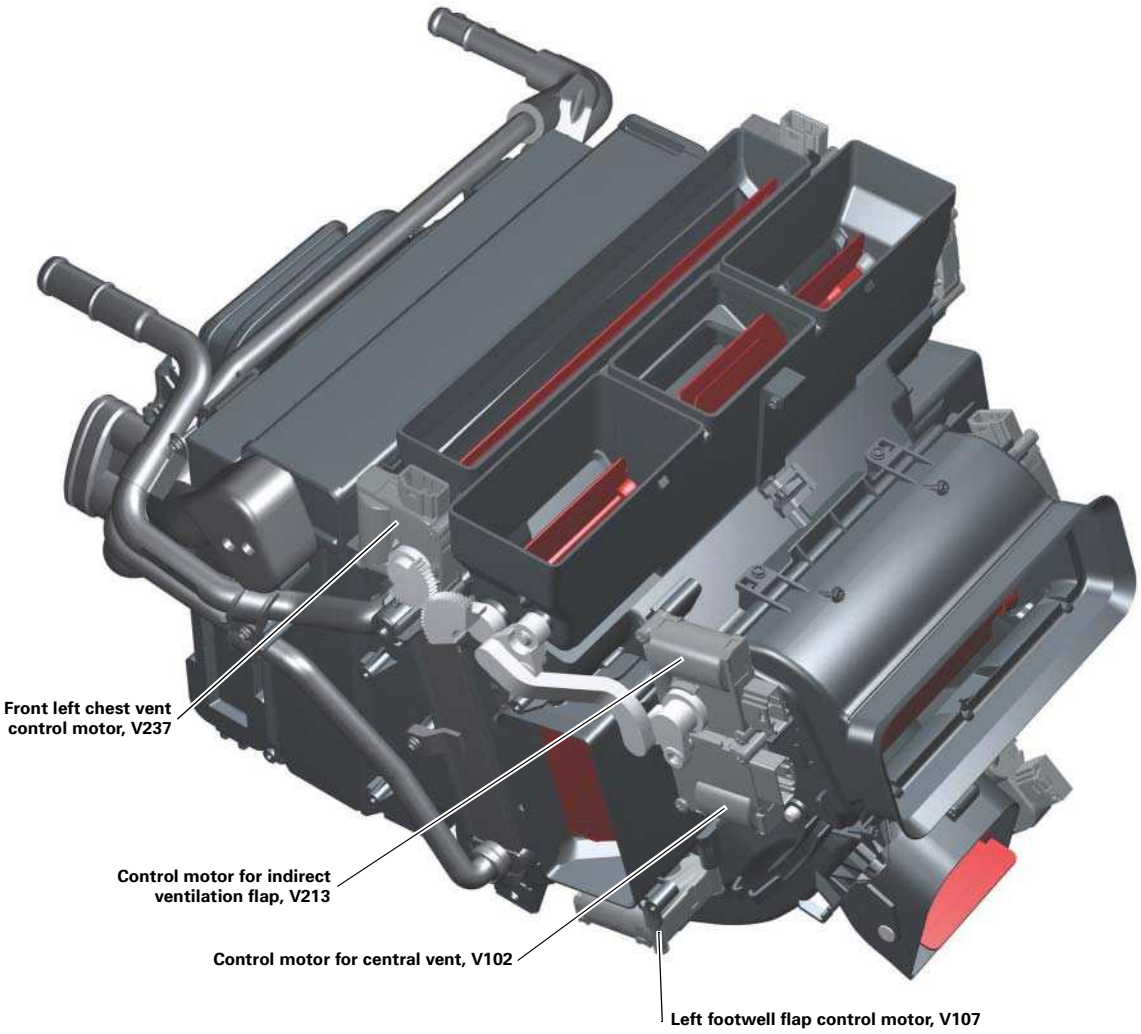

323_020

Passenger's side

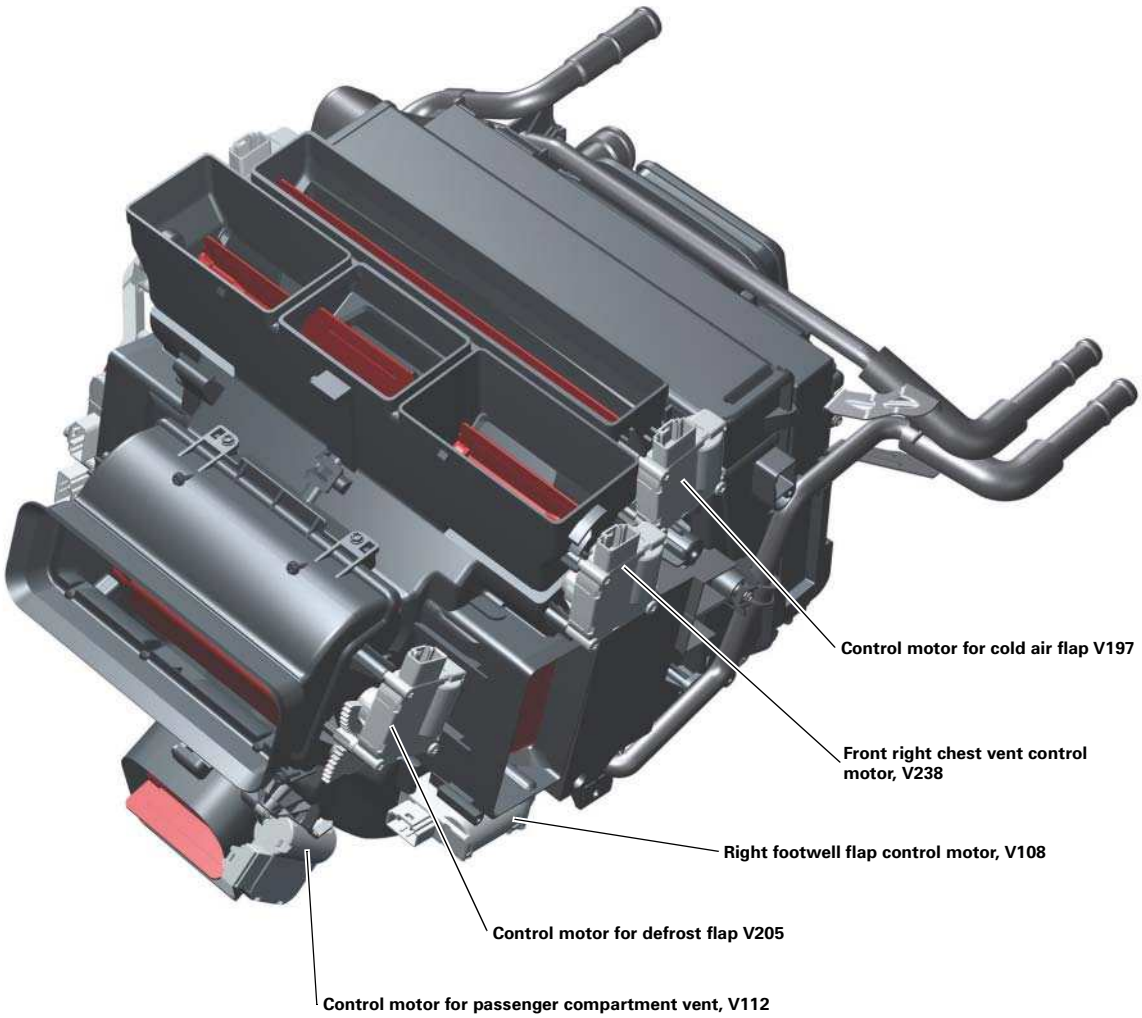

323_019

Replacing components

The air conditioning unit in the new Audi A6´05 does not have to be completely removed from the vehicle to replace components. Functional units such as the evaporator or control motors, for example, are replaced in the vehicle. The evaporator, for example, will be available as a separate spare part in the scope of the Customer Service process.
The evaporator is replaced by splitting the air conditioning unit housing at the groove and pulling the evaporator out sideways.

After fitting the new evaporator, the air conditioning unit housing is closed by means of a service flap prepared for Customer Service procedures. This must be ordered as a separate spare part and is fixed to the air conditioning unit housing by means screws.

Service flap for replacing the evaporator

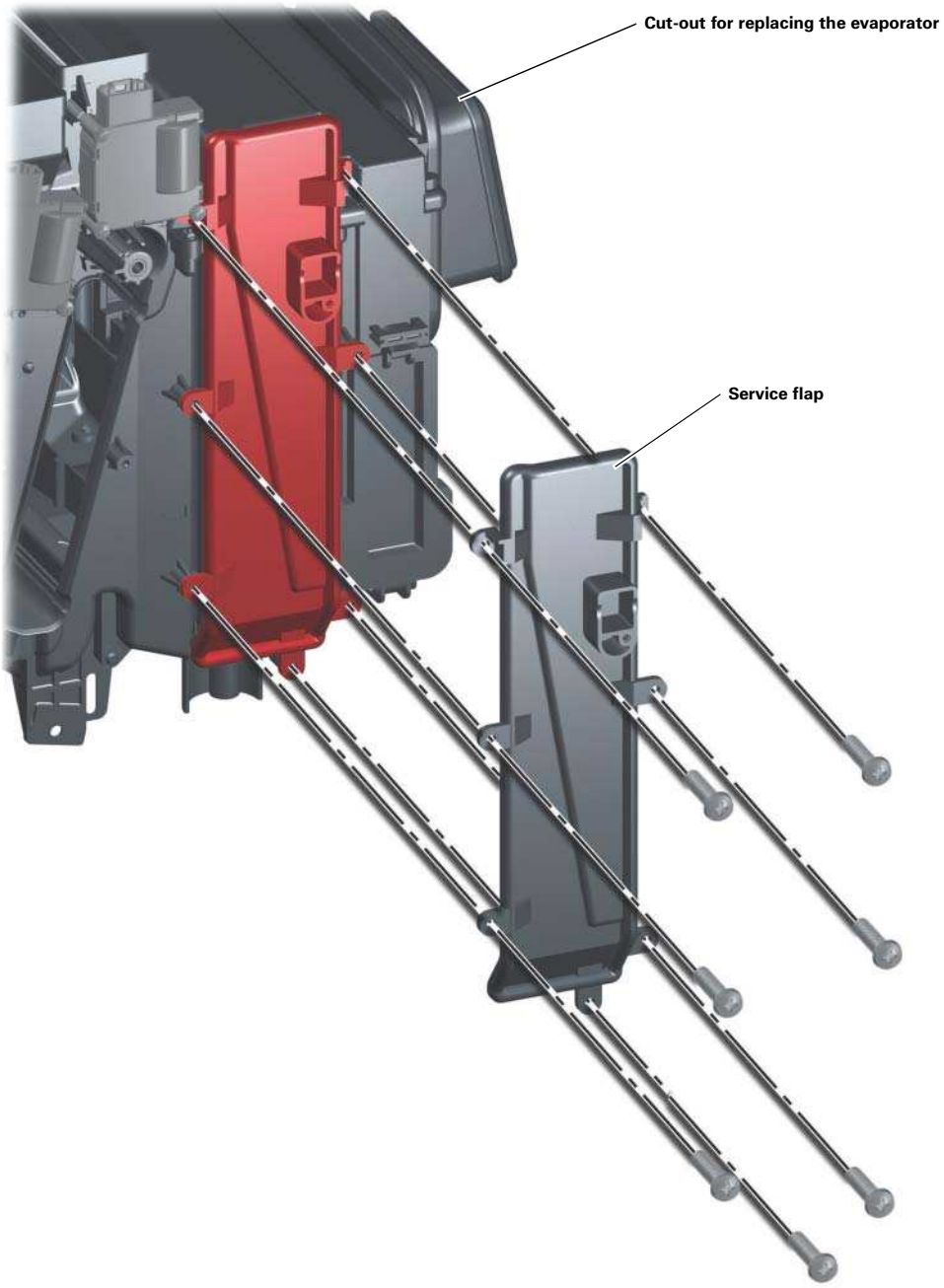

323_021

Changing the pollen filter

The pollen filter, which has to be changed regularly in accordance with the service specifications, is accessible from the passenger footwell. It is divided into two parts horizontally. After the bottom half has been pulled out sideways from the air conditioning units housing, the top half must first be pulled downwards and then also be pulled out sideways.

In order to ensure a thorough cleaning of the installation position of the pollen filter during the filter change, a suction nozzle was developed with which the installation shaft in the air conditioning unit can be cleaned before the new filter is fitted.

323_022

Using the special tool "Suction nozzle T40073" to change the pollen filter in the vehicle

323_029

Two-part pollen filter in the new Audi A6´05

Control motor versions

The redesigned air conditioning unit in the Audi A6´05 uses modified kinematics for the individual control motors.
Always note the exact part numbers when changing control motors. Otherwise, control motors which have the same housing, but different functions might be placed in the wrong position. As a result, the basic setting of the air conditioning system would not be possible. Attention must also be paid to the difference between the convenience automatic air conditioning and convenience automatic air conditioning plus versions when changing control motors.

In the basic version, the control motors for the left chest vent, V237, are installed in the position of the right chest control motor, V238, which is then no longer used. The same is true of the left footwell flap control motor, V108, which is then in the V109's position on the right. The reason for this is the steering rod shaft positioning of flaps in the basic version, where the respective left flap is controlled by the one on the right.

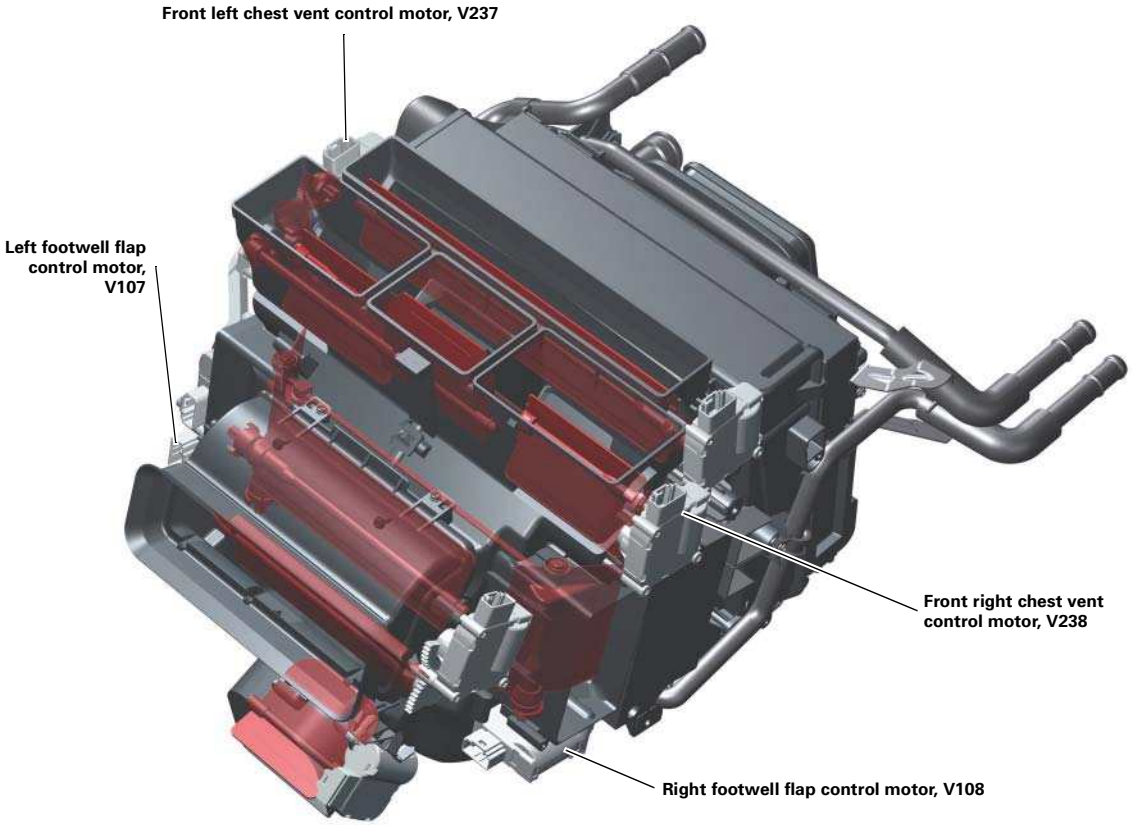

323_023

Control motors for left and right chest vents, V237 and V238, as well as control motors for left and right footwell flaps V107 / V108 for flap positioning in the convenience version.

In/output signals at Climatronic control unit J255

CAN-Convenience output signals

Information on the status of the compressor	... displays whether the compressor is switched on or off. Switched on means that the compressor is within the control range, in other words, a current of 300 – 800 mA is flowing through the compressor.
Speed increase	... is transmitted from the air conditioning system to the motor if the air conditioning system needs an increased heating or cooling capacity. This message is not related to the compressor status.
Refrigerant pressure	The air conditioning system reads the pressure sensor and sets the signal to CAN-Convenience. The determination of the refrigerant pressure occurs every 100 ms.
Radiator fan control	Subject to the required condensor cooling, the air conditioning system issues a "radiator fan control". This value can lie between 0 and 100 %. This value depends on the refrigerant pressure and the information on petrol / diesel engine from the diagnosis interface for data bus J533.
Power reduction of air conditioner compressor	A reduction of the compressor power is possible by means of the externally controlled compressor. The aim here is that the engine electronics control unit J623 uses this infomation and only completely shuts down the compressor in critical situations.
Compressor torque transmission	The air conditioning system informs engine electronics control unit J623 of the torque the compressor takes from the engine. Climatronic control unit J255 considers the engine and compressor speed transmission ratio of the various engines. The necessary information on the number of cylinders is provided by the message from diagnosis interface for data bus J533.
Rear window heating	This message signals to the control unit for on-board power supply J519 that the rear window heating is to be switched on and this unit then takes over the power control of the rear window heating.
Left/right sun sensor	The amount of sunlight penetration measured by the sun sensor in W/m² is supplied by the CAN-Convenience.
Seat heating	This message transmits the different levels of seat heating left or right. In the versions without seat heating level 0 is always transmitted.
Auxiliary heating	The auxiliary heating can be switched on directly from Climatronic control unit J255 via the auxiliary heating BIT. Climatronic control unit J255 transfers the decision on the activation of auxiliary heating or auxiliary ventilation via the "Auxiliary ventilation indicator light" bit.

CAN-Convenience input siganls

Vehicle speed	The vehicle speed is used for the calculation "Setting the air congestion flap".
Engine speed	Start recognition: the program defines "Engine off", if n < 200 rpm (below starter speed) "Engine on", if n > 500 rpm is read.
Terminal 58d	Dimming value for the display and function lighting in %.
Terminal 58s	Dimming value for the button lighting in %.
Outside temperature	Climatronic control unit J255 reads the temperature sensor for fresh air intake duct G89 and puts this unfiltered on the CAN-Convenience. The display unit in dash panel insert J285 reads temperature sensor G17 installed in the front of the car and puts the lowest of the two outside temperatures read on the CAN bus.
Engine temperature	The engine electronics control unit J623 provides this value on the CAN bus.
Key information	The display unit in dash panel insert J285 transmits a key number between "1" and "4" to Tm. 15. In Climatronic control unit J255, the respective driver-specific settings for each key number are saved and recalled. The last settings called up either in auxiliary heating mode or for incorrectly received key numbers are saved in key number "0".
Compressor off	Switches off the compressor from the engine control unit.
Compressor power reduction	Feedback message from engine electronics control unit J623.
Auxiliary heating / auxiliary ventilation	If a CAN-compatible auxiliary heating is installed, Climatronic control unit J255 is switched to auxiliary heating or auxiliary ventilation mode. The decision whether to activate the auxiliary heating or the auxiliary ventilation is made from Climatronic control unit J255.
Radiator fan control	Actual value of the radiator fan control from engine electronics control unit J623.
Engine overheating advance warning	If this message is transmitted on the CAN, the compressor with control valve N280 must be switched off, regardless of the engine temperature.
Consumer switch-off	Message from control unit for power management J644
Feedback Rear window heating	Message on the successful activation of the rear window heating from control unit for convenience system J393.

Analogue input and output signals

The temperature sensor for fresh air intake duct G89 in the plenum chamber, the middle vent temperature sensor and the two vent temperature senders, left G150 and right G151 are read as an analogue voltage signal at Climatronic control unit J255.

Furthermore, Climatronic control unit J255 receives a total of ten feedback reports from the individual flap positioning motors, the signals from sunlight penetration photosensor G107, the signal from the vent temperature sender for evaporator G263, as well as the signal from the air quality sensor G238. The compressor with control valve N280 is controlled via a pulse width-modulated signal.

Additional air heater unit

Depending on the equipment installed, an electric additional air heater unit is installed in some diesel versions of the new Audi A6´05. The operating principle of the additional air heater is, as with the Audi A6's predecessor, ceramic PTC resistors and commutators which are heated by an electric current and which generate this heat to the air flowing through. The control of the additional air heater is transferred to the respective engine electronics control unit J623.

If additional heating is required, Climatronic control unit J255 sends an appropriate message containing the required output level to CAN-Convenience. This is converted into a message for the CAN-Drive by the diagnosis interface for data bus J533 and is picked up by engine electronics control unit J623. However, additional heating can only be provided if the generator's capacity utilization is not too high.

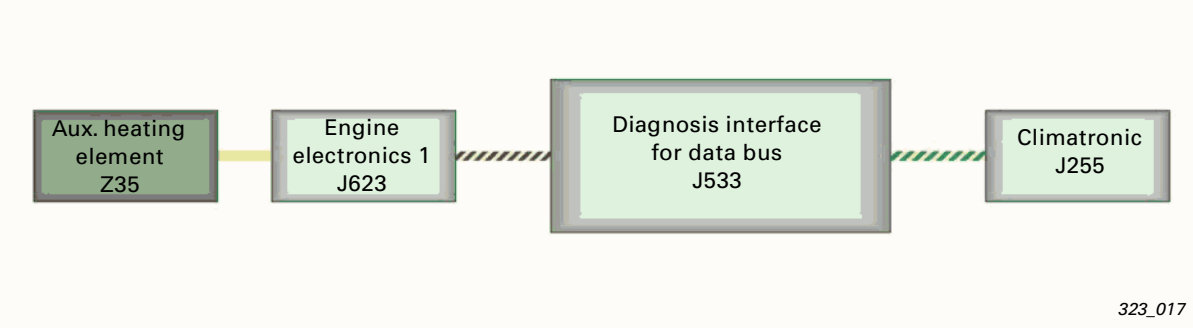

Auxiliary / additional heating

The auxiliary heating which is available ex-works is installed on the longitudinal member, front right under the headlight. It is incorporated into the CAN-Convenience via auxiliary heating control unit J364 (see topology illustration). Climatronic control unit J255 is the master control unit for the auxiliary heating. The interior of the vehicle can be heated up much more quickly as a result of the integration of the auxiliary heating into the small heating circuit. The auxiliary heating can be programmed and activated via the multi-media interface, by means of the preselection function. It can also be activated via the updated remote control.

Climatronic control unit J255 decides on the auxiliary heating or auxiliary ventilation mode, the respective symbol is shown as a function display on the display unit in dash panel insert J285 after the respective message is received. The auxiliary heating basically runs in fresh air mode, whereby the blower is resticted to 40 %.

Positive feedback, auxiliary heating active

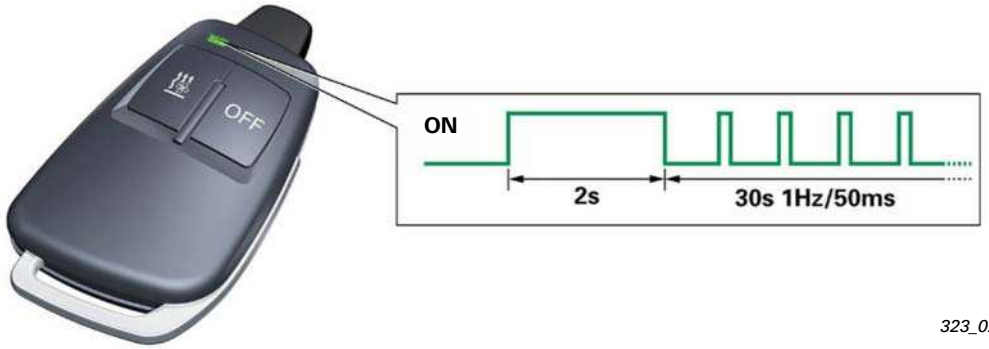

323_024

Negative feedback, auxiliary heating not active

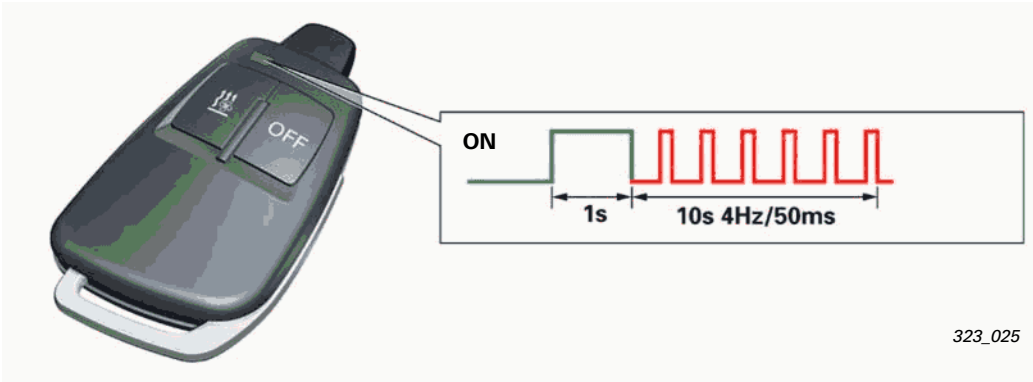

323_025

The new feature here is the bi-directional communication between the remote control for the auxiliary heating and the radio receiver for auxiliary heating R64. The antenna for the radio receiver for auxiliary heating is installed as a module of the antenna system in the rear window; the range of the radio remote control is now up to 600 meters.

The user receives feedback on whether the activation of the auxiliary heating was succesful or not via a LED which is integrated in the radio remote control.

Switch-on conditions:	Switch-off conditions:
no tank warning	Auxiliary heating active longer than 60 min
no crash signal from airbag control unit	VAS diagnosis tester function basic setting
no cut-off level from control unit for power management	Heater units error in operational mode
no message "Transport mode active" from control unit for power management J644	Tank warning during operation
	Crash signal during operation (in auxiliary heating mode)
	Cut-off level of control unit for power management J644

In addition to the auxiliary heating with CAN networking which is offered ex-works, a conventional auxiliary heating without CAN networking can be retrofitted in the customer service process. To do that, wiring terminal 15, as well as Climatronic control unit J255, which has a separate input for this purpose, must be adjusted accordingly. You can find more detailed information on this in the respective installation manual.

Reference
Please refer to the respective operation manual for instructions on operating the optional auxiliary heating.

Note
The telestart antenna is fused separately. Defect fusing results in an appropriate fault memory entry.

Air conditioning diagnosis

The diagnosis options listed in the table are available via the diagnosis tester. For this purpose, the diagnosis on the CAN-Diagnosis and on the diagnosis interface for data bus J533 is performed in Climatronic control unit J255.
All input and output signals of Climatronic control unit J255 can be diagnosed according to the following error types:
- Line interruption
- Short circuit after positive
- Short circuit after ground
- Block (control motors)
- Plausibility of data bus signals

The actuator test of the air conditioning system is now sequentially (complete performance of all actuator tests) and selectively (selection of individual actuator tests) possible. The following conditions must be met before the actuator test can be performed.
- no compressor switch-off condition active
- Vehicle speed < 5 km/h
- 300 / min < engine speed < 3000 / min

Otherwise the message "Function unknown or cannot be performed at the moment" is displayed in the diagnosis tester. During the basic setting of the air conditioning system, all flap positioning motors are simultaneously moved to their limit positions.
These positions are then saved in Climatronic control unit J255. During the basic setting, certain fault memory entries are deleted, with the exception of those identified during the basic setting. In addition, the activation of the compressor is only allowed after the basic setting. Up until then, Climatronic control unit J255 remains in ECON mode, which cannot be deactivated. After the successful basic setting, Climatronic control unit J255 remains in ECON mode, which can now, however, be deactivated at any time by means of the AUTO or ECON button.
Since Climatronic control unit J255 is component protected, the exchange of the component without vehicle-specific adaptions can cause restricted functionality.
In contrast to the current Audi A8 and Audi A3, during a recoding of a Climatronic control unit J255, no information on the networking is taken from the diagnosis interface for data bus or the engine control unit. In the case of the Audi A6´05, the coding is performed completely by the entries at the diagnosis tester.

323_037

Special tools for the Audi A6´05 air conditioning system

Puller T40072

323_026

Ratchet spanner T40083

323_027

Suction nozzle with brush T40073/1 and hose T40073/2

323_028

Vorsprung durch Technik **www.audi.co.uk**

323

All rights reserved.
Subject to technical change.

Copyright
AUDI AG
I/VK-35
Service.training@audi.de
Fax +49-841/89-36367

AUDI AG
D-85045 Ingolstadt
Technical release 01/04

Printed in Germany
A04.5S00.06.20