SPECIFICATIONS

FASTENER TIGHTENING SPECIFICATIONS

Fastener Tightening Specifications

Application	Specification	
	Metric	English
Door Control Module Screws	3 N.m	27 lb in
Door Hinge to Door Bolts	30 N.m	22 lb ft
Door Hinge to Hinge Pillar Bolts	30 N.m	22 lb ft
Door Lock Screws	10 N.m	89 lb in
Door Lock Striker Screws	24 N.m	18 lb ft
Door Speaker Assembly Screws	3 N.m	27lb in
Inside Handle Screw	5 N.m	44 lb in
Mirror Nuts	10 N.m	89 lb in
Outside Door Handle Bolts	8 N.m	70 lb in
Pull Handle Screws	6 N.m	53 lb in
Seat Belt Guide Nut	40 N.m	29 lb ft
Window Outer Sealing Strip Screw	2 N.m	18lb in
Window Regulator Channel Stud Nuts	10 N.m	89 lb in
Window Regulator Motor Nuts	10 N.m	89 lb in
Window Regulator Window Clamp Bolts	10 N.m	89 lb in

SCHEMATIC AND ROUTING DIAGRAMS

DOOR CONTROL MODULE SCHEMATICS

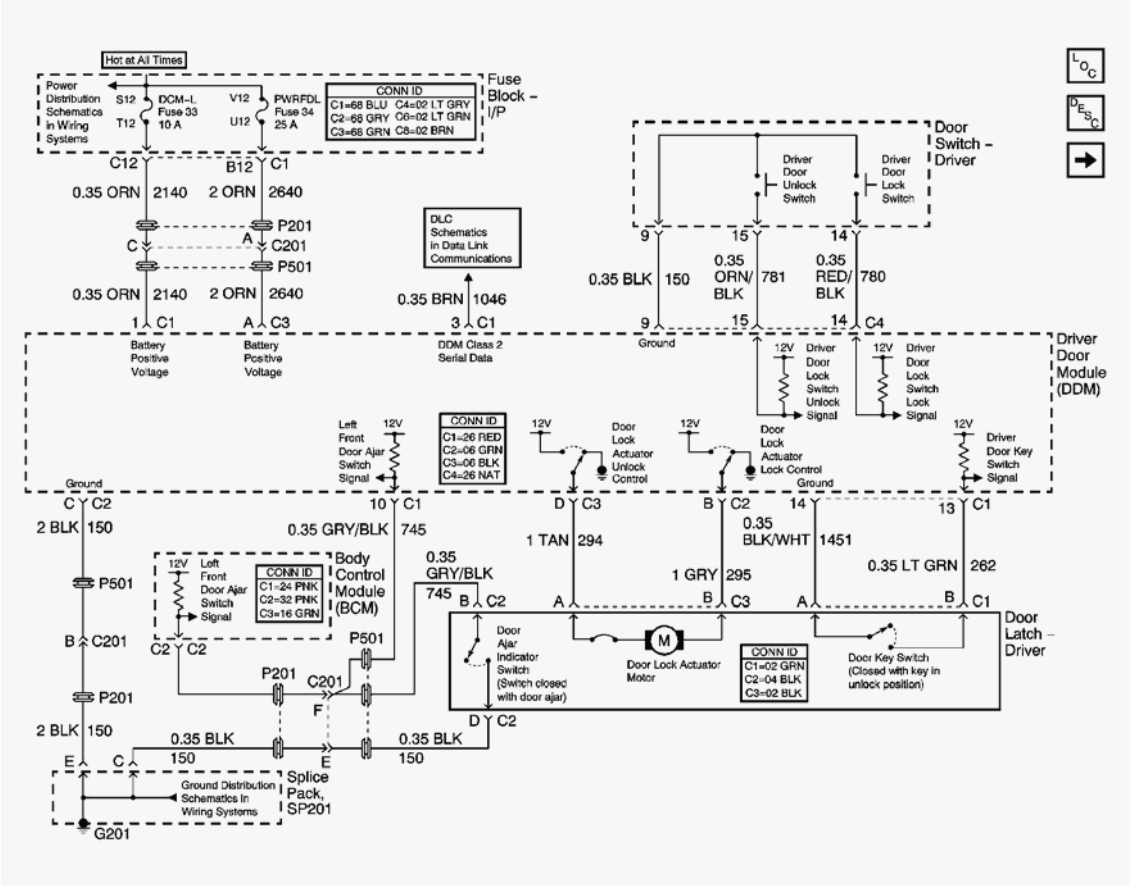

Fig. 1: Driver Door Module Schematics (DDM) Power, Ground And DLC Schematic
Courtesy of GENERAL MOTORS CORP.

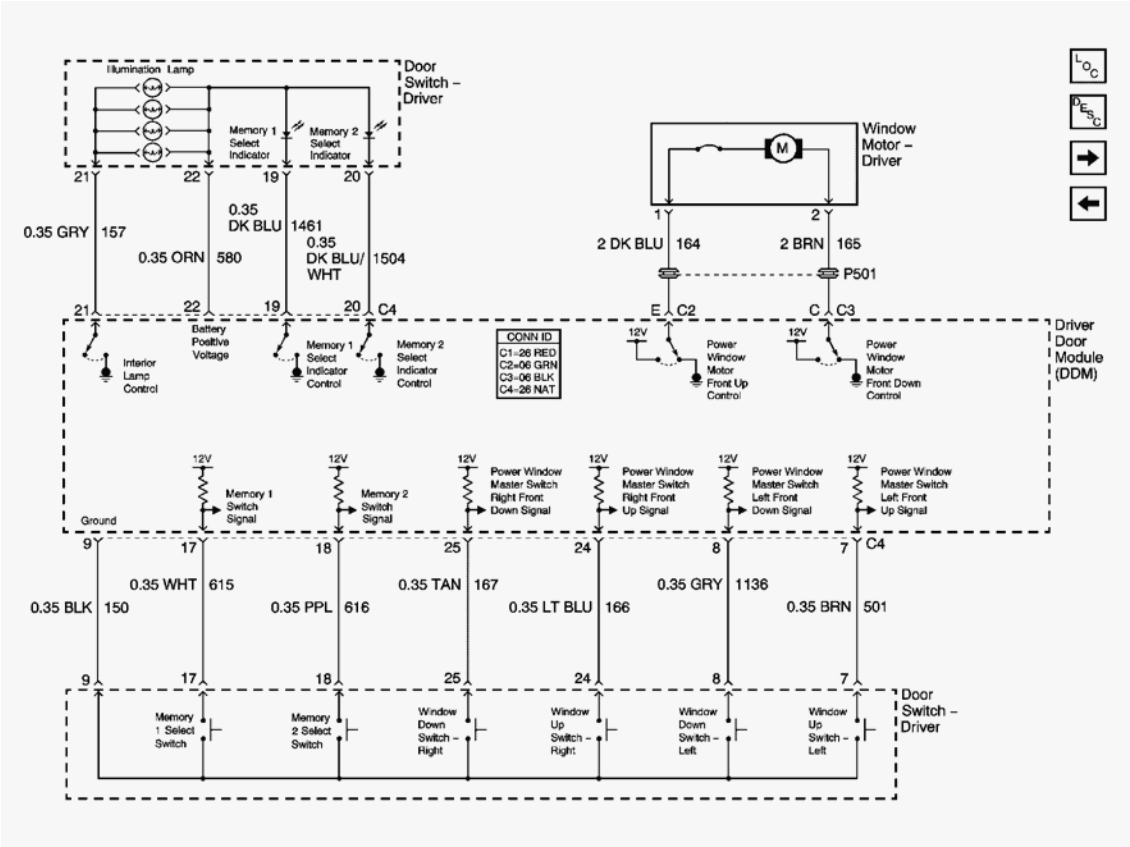

Fig. 2: Driver Door Memory And Window Control Schematic
Courtesy of GENERAL MOTORS CORP.

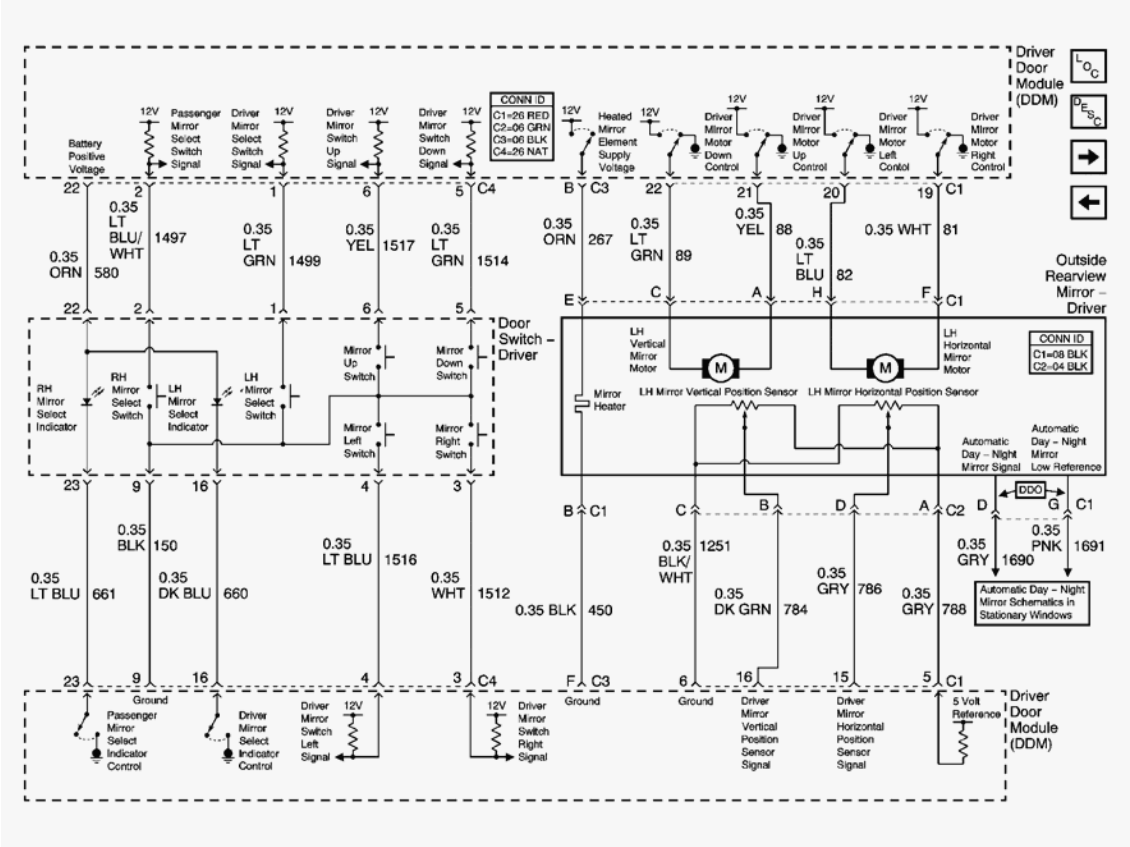

Fig. 3: Driver Door Mirror Control Schematic
Courtesy of GENERAL MOTORS CORP.

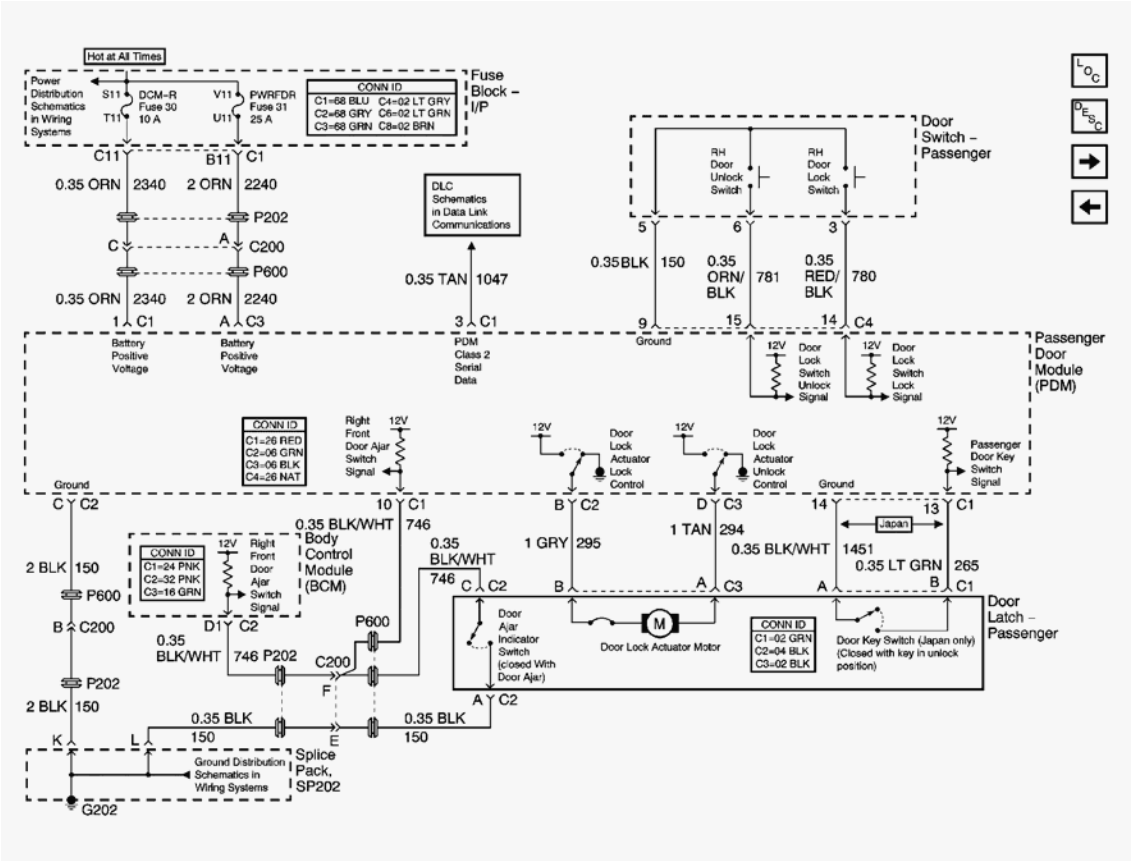

Fig. 4: Passenger Door Module Schematics (PDM) Power, Ground And DLC Schematic
Courtesy of GENERAL MOTORS CORP.

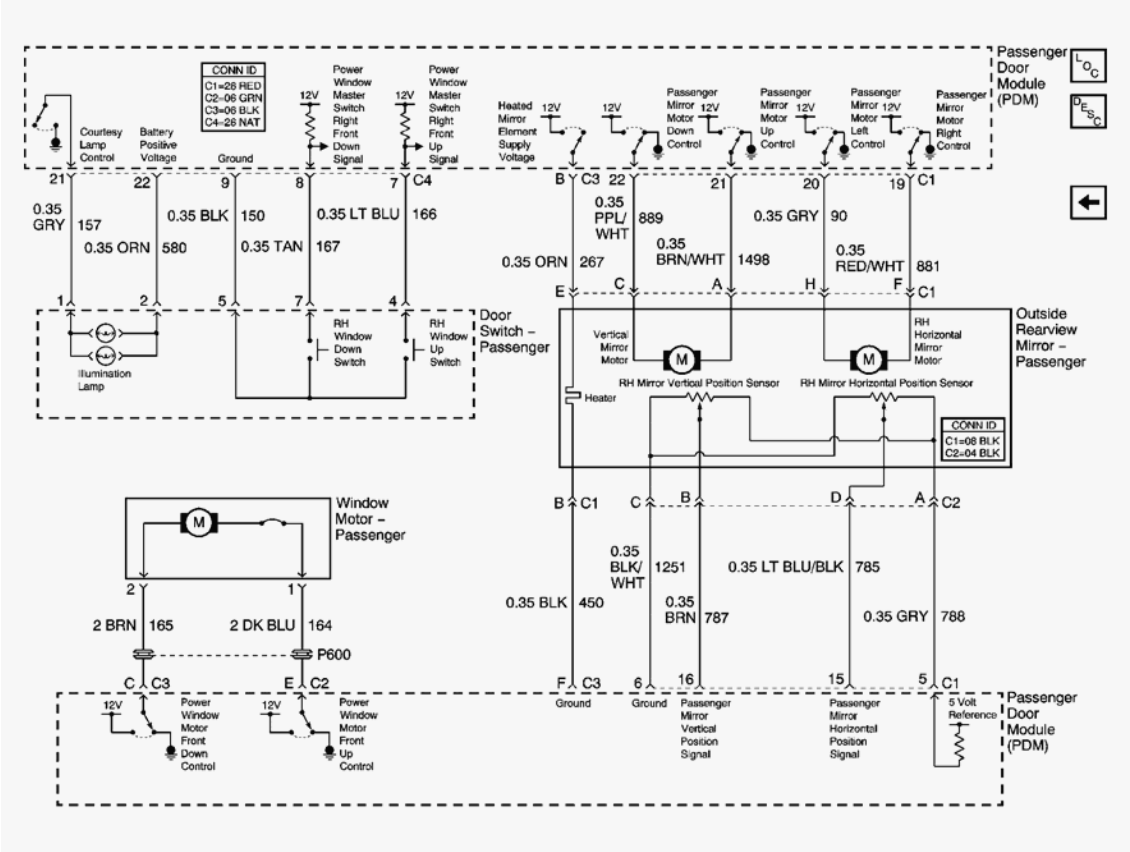

Fig. 5: Passenger Door Mirror And Window Control Schematic
Courtesy of GENERAL MOTORS CORP.

COMPONENT LOCATOR

POWER DOOR SYSTEMS COMPONENT VIEWS

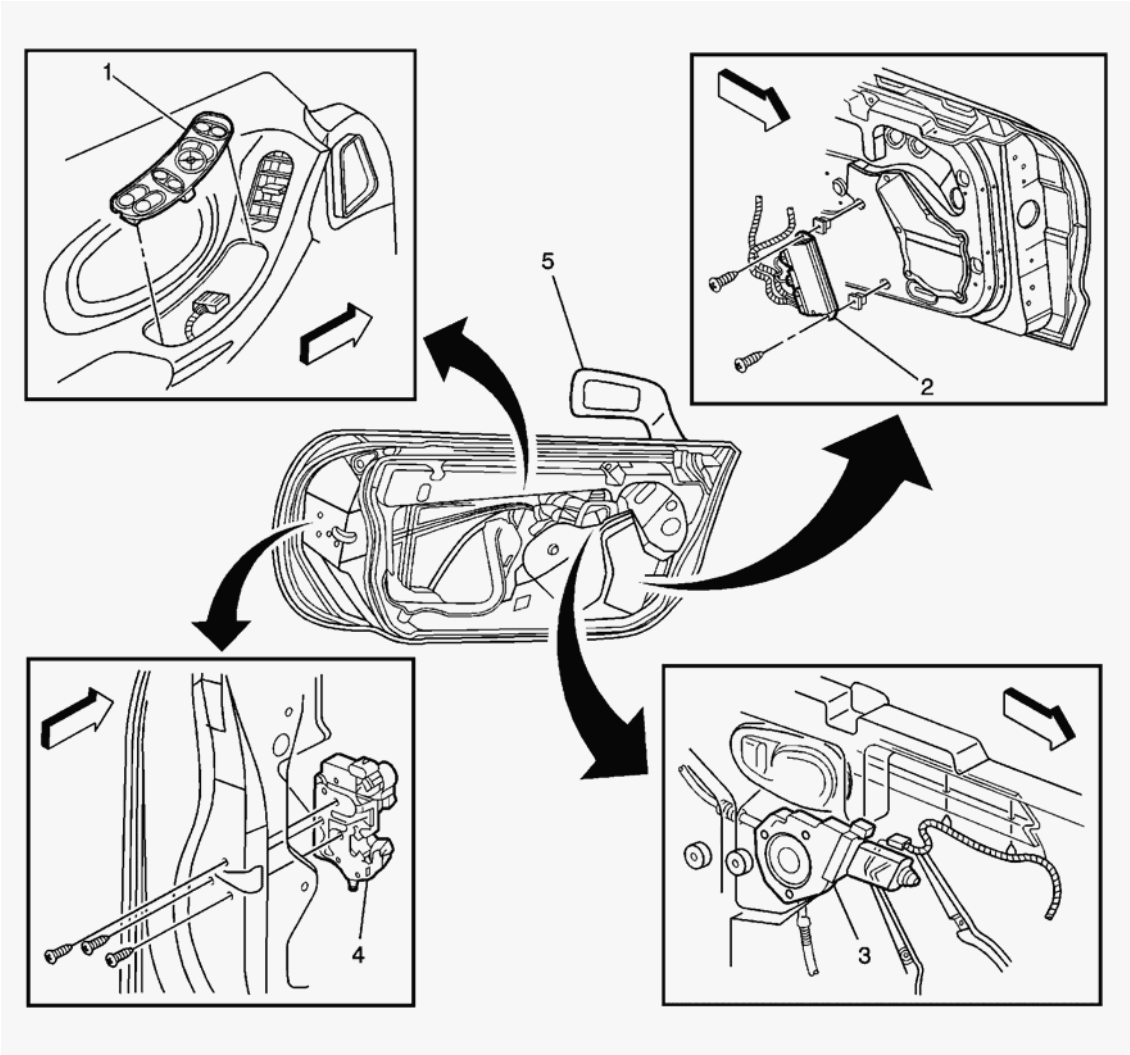

Fig. 6: Driver Door Components Component View (Passenger Door Similar)
Courtesy of GENERAL MOTORS CORP.

Callouts For Fig. 6

Callout	Component Name
1	Door Switch - Driver
2	Driver Door Module (DDM)
3	Window Motor - Driver
4	Door Latch - Driver
5	Outside Rearview Mirror - Driver

POWER DOOR SYSTEMS CONNECTOR END VIEWS

Driver Door Module Terminal Identification (DDM) - C1

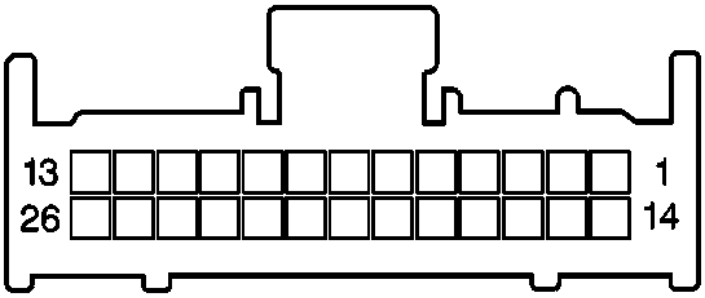

Connector Part Information		• 12160773 • 26-Way F (RED)	
Pin	**Wire Color**	**Circuit No.**	**Function**
1	ORN	2140	Battery Positive Voltage
2	-	-	Not Used
3	BRN	1046	DDM Class 2 Serial Data
4	-	-	Not Used
5	GRY	788	5 Volt Reference
6	BLK/WHT	1251	Ground
7-9	-	-	Not Used
10	GRY/BLK	745	Left Front Door Ajar Switch Signal
11-12	-	-	Not Used
13	LT GRN	262	Driver Door Key Switch Signal
14	BLK/WHT	1451	Ground
15	GRY	786	Driver Mirror Horizontal Position Sensor Signal
16	DK GRN	784	Driver Mirror Vertical Position Sensor Signal
17-18	-	-	Not Used
19	WHT	81	Driver Mirror Motor Right Control
20	LT BLU	82	Driver Mirror Motor Left Control
21	YEL	88	Driver Mirror Motor Up Control
22	LT GRN	89	Driver Mirror Motor Down Control
23-26	-	-	Not Used

Driver Door Module Terminal Identification (DDM) - C2

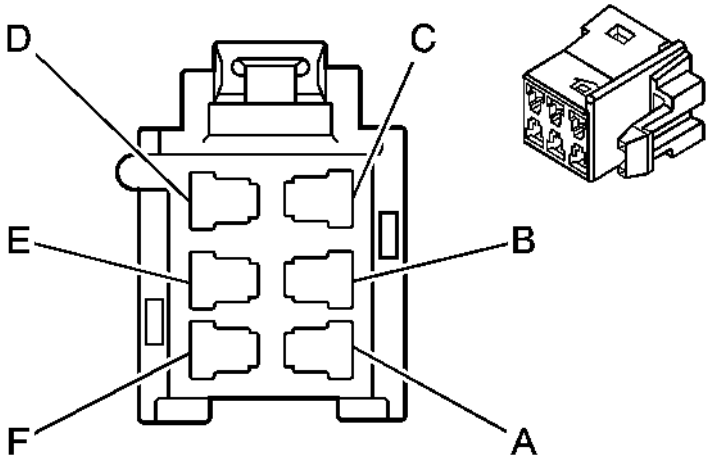

Connector Part Information		• 12089527 • 6-Way F Metri-Pack 280 Series (GRN)	
Pin	**Wire Color**	**Circuit No.**	**Function**
A	-	-	Not Used
B	GRY	295	Door Lock Actuator Lock Control
C	BLK	150	Ground
D	-	-	Not Used
E	DK BLU	164	Power Window Motor Front Up Control
F	-	-	Not Used

Driver Door Module Terminal Identification (DDM) - C3

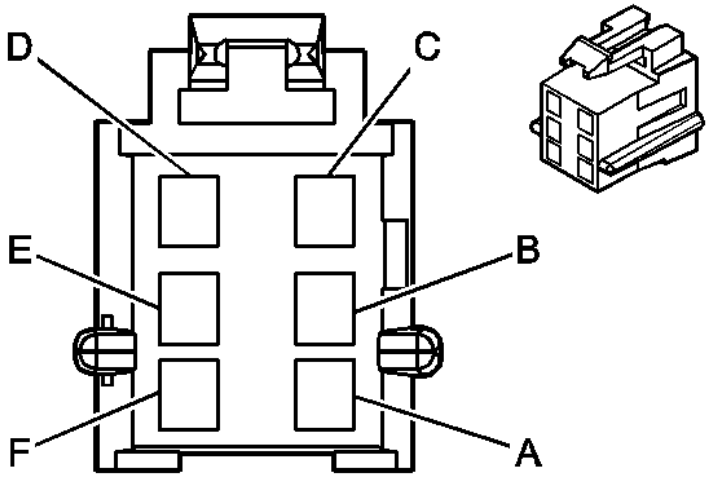

Connector Part Information		• 12064752 • 6-Way F Metri-Pack 280 Series (BLK)	
Pin	**Wire Color**	**Circuit No.**	**Function**
A -	ORN	2640	Battery Positive Voltage
B	ORN	267	Heated Mirror Element Supply Voltage
C	BRN	165	Power Window Motor Front Down Control
D	TAN	294	Door Lock Actuator Unlock Control
E	-	-	Not Used
F	BLK	450	Ground

Driver Door Module Terminal Identification (DDM) - C4

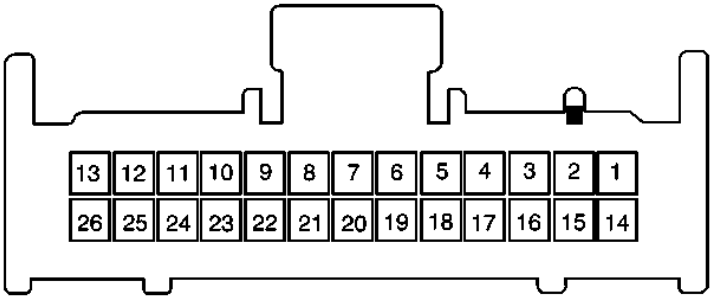

	• 12160773

Connector Part Information		• 26-Way F (NAT)	
Pin	**Wire Color**	**Circuit No.**	**Function**
1	LT GRN	1499	Driver Mirror Select Switch Signal
2	LT BLU/WHT	1497	Passenger Mirror Select Switch Signal
3	WHT	1512	Driver Mirror Switch Right Signal
4	LT BLU	1516	Driver Mirror Switch Left Signal
5	LT GRN	1514	Driver Mirror Switch Down Signal
6	YEL	1517	Driver Mirror Switch Up Signal
7	BRN	501	Power Window Master Switch Left Front Up Signal
8	GRY	1136	Power Window Master Switch Left Front Down Signal
9	BLK	150	Ground
10-13	-	-	Not Used
14	RED/BLK	780	Driver Door Lock Switch Lock Signal
15	ORN/BLK	781	Driver Door Lock Switch Unlock Signal
16	DK BLU	660	Driver Mirror Select Indicator Control
17	WHT	615	Memory 1 Switch Signal
18	PPL	616	Memory 2 Switch Signal
19	DK BLU	1461	Memory 1 Select Indicator Control
20	DK BLU/WHT	1504	Memory 2 Select Indicator Control
21	GRY	157	Interior Lamp Control
22	ORN	580	Battery Positive Voltage
23	LT BLU	661	Passenger Mirror Select Indicator Control
24	LT BLU	166	Power Window Master Switch Right Front Up Signal
25	TAN	167	Power Window Master Switch Right Front Down Signal
26	-	-	Not Used

Door Latch Terminal Identification - Driver C1

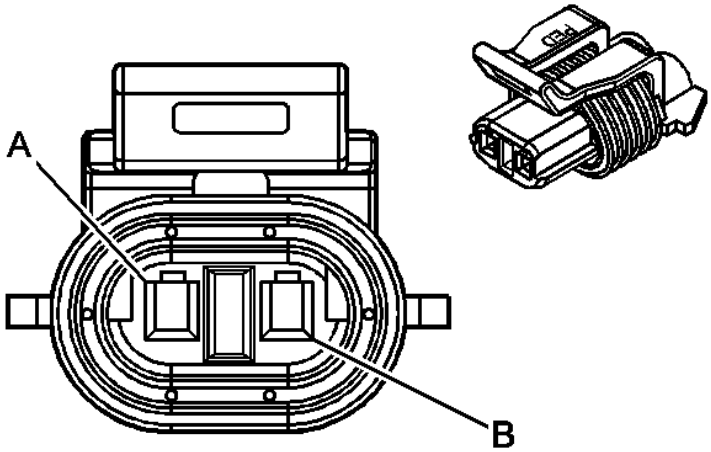

Connector Part Information		• 12052636 • 2-Way F Metri-Pack 150 Series (GRN)	
Pin	**Wire Color**	**Circuit No.**	**Function**
A	BLK/WHT	1451	Ground
B	LT GRN	262	Driver Door Key Switch Signal

Door Latch Terminal Identification - Driver C2

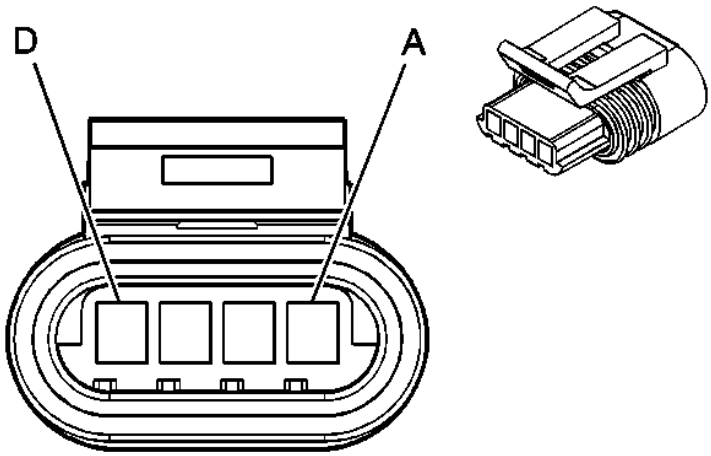

Connector Part Information		• 12162187 • 4-Way F Metri-Pack 150.2 Series (BLK)	

Pin	Wire Color	Circuit No.	Function
A	-	-	Not Used
B	GRY/BLK	745	Left Front Door Ajar Switch Signal
C	-	-	Not Used
D	BLK	150	Ground

Door Latch Terminal Identification - Driver C3

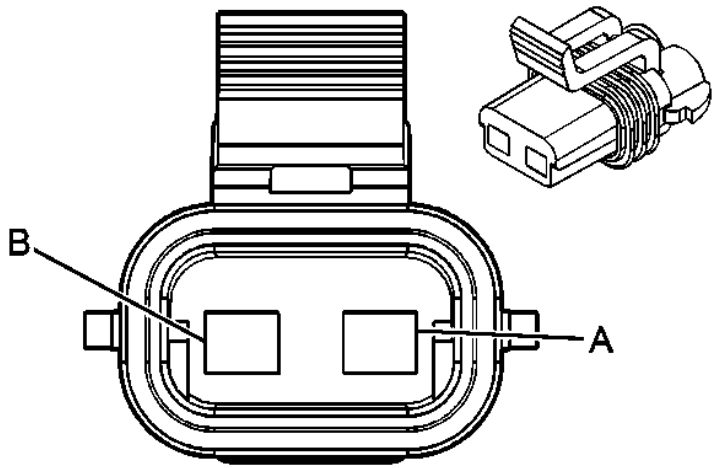

Connector Part Information		• 15300008 • 2-Way F Metri-Pack 280 Series (BLK)	
Pin	**Wire Color**	**Circuit No.**	**Function**
A	TAN	294	Door Lock Actuator Unlock Control
B	GRY	295	Door Lock Actuator Lock Control

Door Latch Terminal Identification - Passenger C1 (Japan)

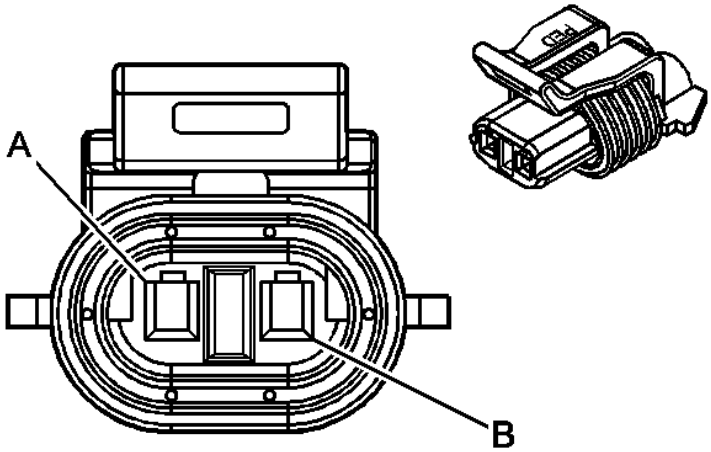

Connector Part Information		• 12052636 • 2-Way F Metri-Pack 150 Series (GRN)	
Pin	**Wire Color**	**Circuit No.**	**Function**
A	BLK/WHT	1451	Ground
B	LT GRN	265	Passenger Door Key Switch Signal

Door Latch Terminal Identification - Passenger C2

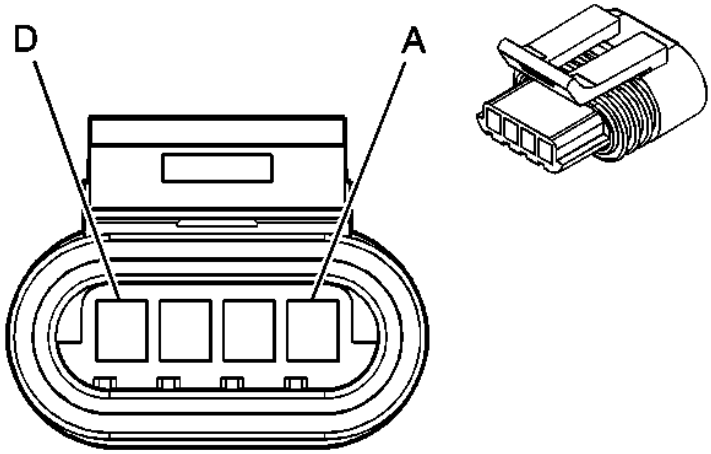

Connector Part Information		• 12162187 • 4-Way F Metri-Pack 150.2 Series (BLK)	

Pin	Wire Color	Circuit No.	Function
A	BLK	150	Ground
B	-	-	Not Used
C	BLK/WHT	746	Right Front Door Ajar Switch Signal
D	-	-	Not Used

Door Latch Terminal Identification - Passenger C3

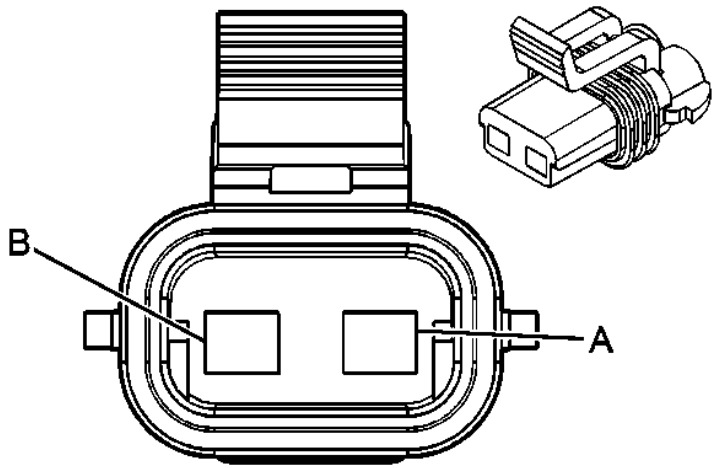

Connector Part Information		• 15300008 • 2-Way F Metri-Pack 280 Series (BLK)	
Pin	**Wire Color**	**Circuit No.**	**Function**
A	TAN	294	Door Lock Actuator Unlock Control
B	GRY	295	Door Lock Actuator Lock Control

Door Switch Terminal Identification - Driver

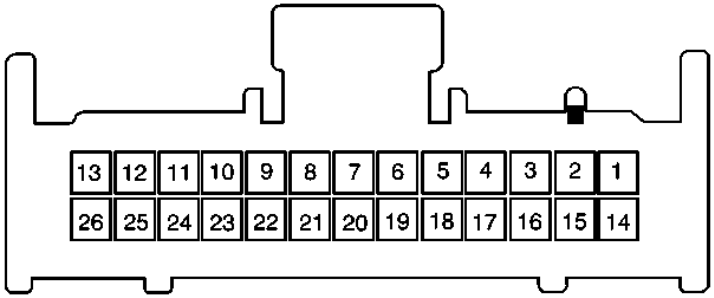

Connector Part Information		• 12160773 • 26-Way F (NAT)	
Pin	**Wire Color**	**Circuit No.**	**Function**
1	LT GRN	1499	Driver Mirror Select Switch Signal
2	LT BLU/WHT	1497	Passenger Mirror Select Switch Signal
3	WHT	1512	Mirror Right Switch Input
4	LT BLU	1516	Driver Mirror Switch Left Signal
5	LT GRN	1514	Driver Mirror Switch Down Signal
6	YEL	1517	Driver Mirror Switch Up Signal
7	BRN	501	Power Window Master Switch Left Front Up Signal
8	GRY	1136	Power Window Master Switch Left Front Down Signal
9	BLK	150	Ground
10-13	-	-	Not Used
14	RED/BLK	780	Driver Door Lock Switch Lock Signal
15	ORN/BLK	781	Driver Door Lock Switch Unlock Signal
16	DK BLU	660	Left Courtesy Lamp Control
17	WHT	615	Memory 1 Switch Signal
18	PPL	616	Memory 2 Switch Signal
19	DK BLU	1461	Memory 1 Select Indicator Control
20	DK BLU/WHT	1504	Memory 2 Select Indicator Control
21	GRY	157	Interior Lamp Control
22	ORN	580	Battery Positive Voltage
23	LT BLU	661	Passenger Mirror Select Indicator Control
24	LT BLU	166	Power Window Master Switch Right Front Up Signal
25	TAN	167	Power Window Master Switch Right Front Down Signal
26	-	-	Not Used

Door Switch Terminal Identification - Front Passenger

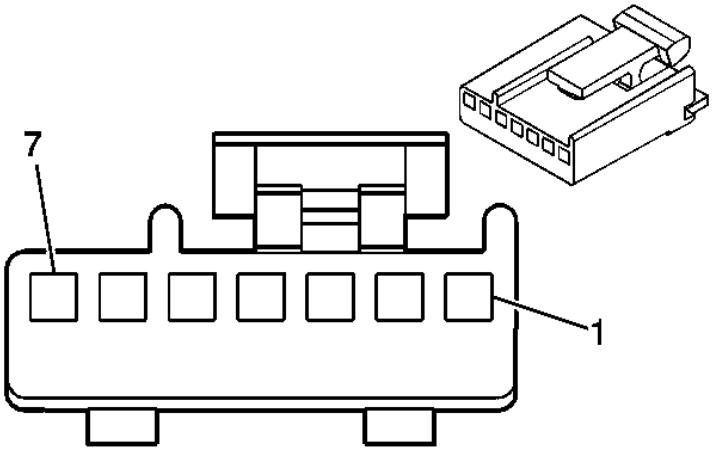

Connector Part Information		• 12065873 • 7-Way F Micro-Pack 100 Series (BLK)	
Pin	**Wire Color**	**Circuit No.**	**Function**
1	GRY	157	Courtesy Lamp Control
2	ORN	580	Battery Positive Voltage
3	RED/BLK	780	Driver Door Lock Switch Lock Signal
4	LT BLU	166	Power Window Master Switch Right Front Up Signal
5	BLK	150	Ground
6	ORN/BLK	781	Driver Door Lock Switch Unlock Signal
7	TAN	167	Power Window Master Switch Right Front Down Signal

Outside Rearview Mirror Terminal Identification - Driver C1

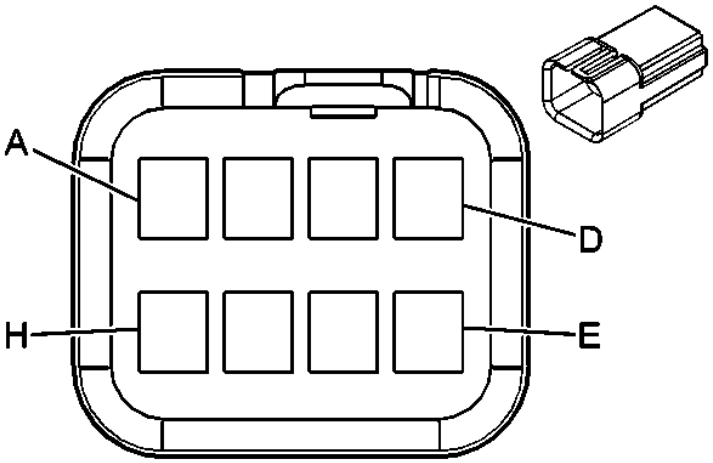

Connector Part Information		• 12045688 • 8-Way M Metri-Pack 150 Series (BLK)	
Pin	**Wire Color**	**Circuit No.**	**Function**
A	YEL	88	Driver Mirror Motor Up Control
B	BLK	450	Ground
C	LT GRN	89	Driver Mirror Motor Down Control
D	GRY	1690	Automatic Day/Night Mirror Signal
E	ORN	267	Heated Mirror Element Supply Voltage
F	WHT	81	Driver Mirror Motor Right Control
G	PNK	1691	Automatic Day/Night Mirror Low Reference
H	LT BLU	82	Driver Mirror Motor Left Control

Outside Rearview Mirror Terminal Identification - Driver C2

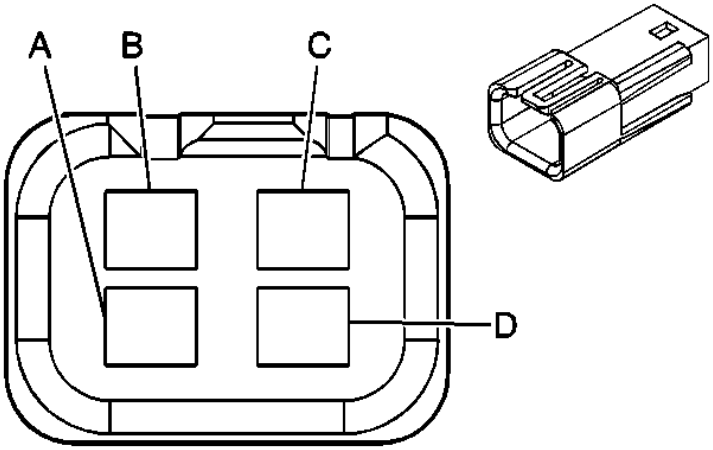

Connector Part Information		• **12047786** • **4-Way M Metri-Pack 150 Series (BLK)**	
Pin	**Wire Color**	**Circuit No.**	**Function**
A	GRY	788	5 Volt Reference
B	DK GRN	784	Driver Mirror Vertical Position Sensor Signal
C	BLK/WHT	1251	Ground
D	GRY	786	Driver Mirror Horizontal Position Sensor Signal

Outside Rearview Mirror Terminal Identification - Passenger C1

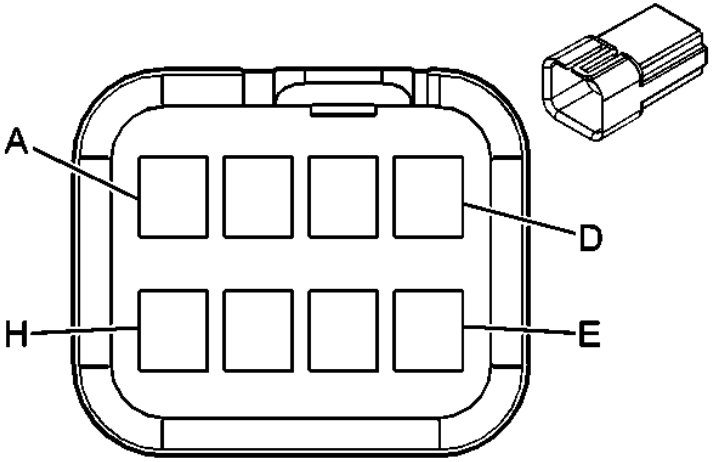

	• **12045688**

Connector Part Information		• 8-Way M Metri-Pack 150 Series (BLK)	
Pin	**Wire Color**	**Circuit No.**	**Function**
A	BRN/WHT	1498	Passenger Mirror Motor Down Control
B	BLK	450	Ground
C	PPL/WHT	889	Passenger Mirror Motor Down Control
D	-	-	Not Used
E	ORN	267	Heated Mirror Element Supply Voltage
F	RED/WHT	881	Passenger Mirror Motor Right Control
G	-	-	Not Used
H	GRY	90	Passenger Mirror Motor Left Control

Outside Rearview Mirror Terminal Identification - Passenger C2

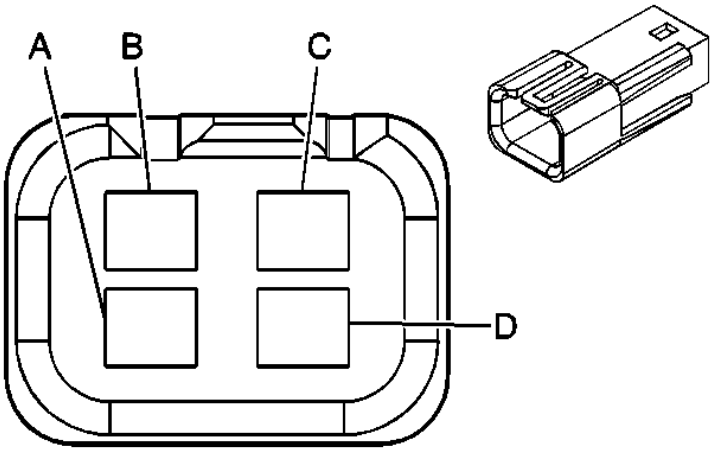

Connector Part Information		• 12047786 • 4-Way M Metri-Pack 150 Series (BLK)	
Pin	**Wire Color**	**Circuit No.**	**Function**
A	GRY	788	5 Volt Reference
B	BRN	787	Passenger Mirror Vertical Position Sensor Signal
C	BLK/WHT	1251	Ground
D	LT BLU/BLK	785	Passenger Mirror Horizontal Position Sensor Signal

Passenger Door Module Terminal Identification (PDM) - C1

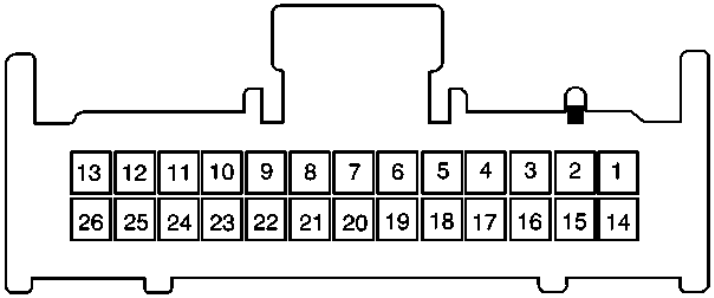

Connector Part Information		• 12160773 • 26-Way F (RED)	
Pin	**Wire Color**	**Circuit No.**	**Function**
1	ORN	2340	Battery Positive Voltage
2	-	-	Not Used
3	TAN	1047	PDM Class 2 Serial Data
4	-	-	Not Used
5	GRY	788	5 Volt Reference
6	BLK/WHT	1251	Ground
7-9	-	-	Not Used
10	BLK/WHT	746	Right Front Door Ajar Switch Signal
11-12	-	-	Not Used
13	LT GRN	265	Passenger Door Key Switch Signal (Japan)
14	BLK/WHT	1451	Ground (Japan)
15	LT BLU/BLK	785	Passenger Mirror Horizontal Position Sensor Signal
16	BRN	787	Passenger Mirror Vertical Position Sensor Signal
17-18	-	-	Not Used
19	RED/WHT	881	Passenger Mirror Motor Right Control
20	GRY	90	Passenger Mirror Motor Left Control
21	BRN/WHT	1498	Passenger Mirror Motor Up Control
22	PPL/WHT	889	Passenger Mirror Motor Down Control
23-26	-	-	Not Used

Passenger Door Module Terminal Identification (PDM) - C2

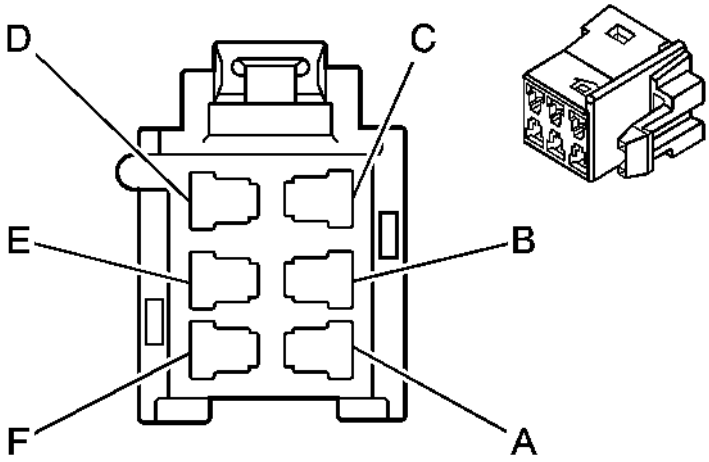

Connector Part Information		• 12089527 • 6-Way F Metri-Pack 280 Series (GRN)	
Pin	**Wire Color**	**Circuit No.**	**Function**
A	-	-	Not Used
B	GRY	295	Door Lock Actuator Lock Control
C	BLK	150	Ground
D	-	-	Not Used
E	DK BLU	164	Power Window Motor Front Up Control
F	-	-	Not Used

Passenger Door Module Terminal Identification (PDM) - C3

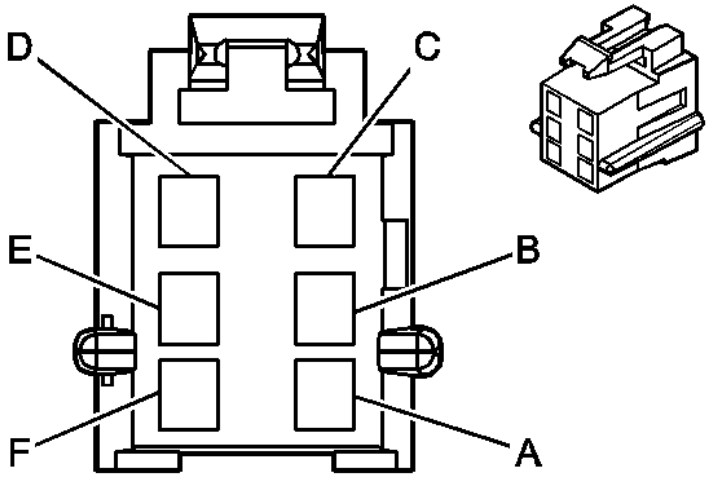

Connector Part Information		• 12064752 • 6-Way F Metri-Pack 280 Series (BLK)	
Pin	**Wire Color**	**Circuit No.**	**Function**
A -	ORN	2240	Battery Positive Voltage
B	ORN	267	Heated Mirror Element Supply Voltage
C	BRN	165	Power Window Motor Front Down Control
D	TAN	294	Door Lock Actuator Unlock Control
E	-	-	Not Used
F	BLK	450	Ground

Passenger Door Module Terminal Identification (PDM) - C4

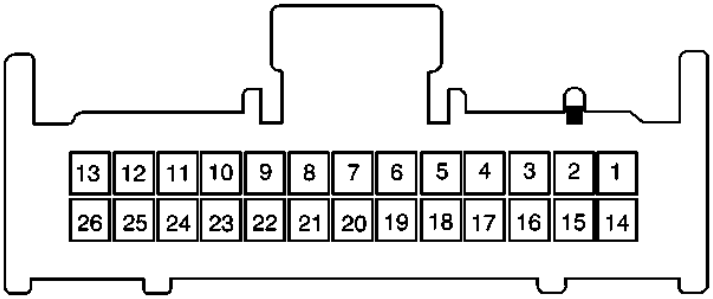

	• 12160773

Connector Part Information		• 26-Way F (NAT)	
Pin	**Wire Color**	**Circuit No.**	**Function**
1-6	-	-	Not Used
7	LT BLU	166	Power Window Master Switch Right Front Up Signal
8	TAN	167	Power Window Master Switch Right Front Down Signal
9	BLK	150	Ground
10-13	-	-	Not Used
14	RED/BLK	780	Driver Door Lock Switch Lock Signal
15	ORN/BLK	781	Driver Door Lock Switch Unlock Signal
16-20	-	-	Not Used
21	GRY	157	Courtesy Lamp Control
22	ORN	580	Battery Positive Voltage
23-26	-	-	Not Used

Window Motor Terminal Identification - Driver

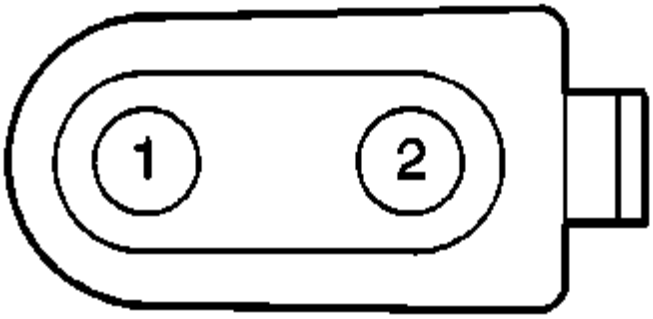

Connector Part Information		• 12186550 • 2-Way F (BLK)	
Pin	**Wire Color**	**Circuit No.**	**Function**
1	DK BLU	164	Power Window Motor Left Front Up Control
2	BRN	165	Power Window Motor Left Front Down Control

Window Motor Terminal Identification - Passenger

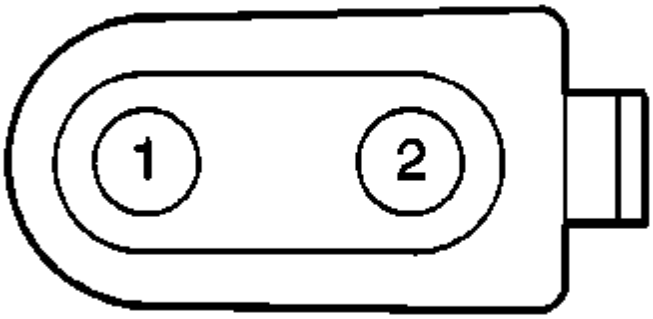

Connector Part Information		• 12186550 • 2-Way F Metri Pack 280 (BLK)	
Pin	**Wire Color**	**Circuit No.**	**Function**
1	DK BLU	164	Power Window Motor Front Up Control
2	BRN	165	Power Window Motor Front Down Control

DIAGNOSTIC INFORMATION AND PROCEDURES

DIAGNOSTIC STARTING POINT - DOORS

For the Outside Automatic Day-Night Mirror system, begin the diagnosis by reviewing the system Description and Operation. Reviewing the Description and Operation information will help you determine the correct symptom diagnostic procedure when a malfunction exists. Reviewing the Description and Operation information will also help you determine if the condition described by the customer is normal operation. Refer to **Symptoms - Doors** in order to identify the correct procedure for diagnosing the system and where the procedure is located.

For the other Door systems, begin the system diagnosis with the **Diagnostic System Check - Door Systems** . The Diagnostic System Check will provide the following information:

- The identification of the control module(s) which command the system
- The ability of the control module(s) to communicate through the serial data circuit
- The identification of any stored diagnostic trouble codes (DTCs) and their status

The use of the Diagnostic System Check will identify the correct procedure for diagnosing the system and where the procedure is located.

DIAGNOSTIC SYSTEM CHECK - DOOR SYSTEMS

Test Description

The number(s) below refer to the step number(s) on the diagnostic table.

2: Lack of communication may be due to a partial malfunction of the class 2 serial data circuit or due to a total malfunction of the class 2 serial data circuit. The specified procedure will determine the particular condition.

4: The presence of DTCs which begin with "U" indicate some other module is not communicating. The specified procedure will compile all the available information before tests are performed.

Diagnostic System Check - Door Systems

Step	Action	Yes	No
1	Install a scan tool. Does the scan tool power up?	Go to **Step 2**	Go to **Scan Tool Does Not Power Up** in Data Link Communications
2	1. Turn ON the ignition, with the engine OFF. 2. Attempt to establish communication with the right and left door control modules. Does the scan tool communicate with the right and left door control modules?	Go to **Step 3**	Go to **Scan Tool Does Not Communicate with Class 2 Device** in Data Link Communications
3	Select the right and left door control module display DTCs functions on the scan tool. Does the scan tool display any DTCs?	Go to **Step 4**	Go to **Symptoms - Doors**
4	Does the scan tool display any DTCs which begin with a "U"?	Go to **Scan Tool Does Not Communicate with Class 2 Device** in Data Link Communications	Go to **Diagnostic Trouble Code (DTC) List**

SCAN TOOL OUTPUT CONTROLS

Driver Door Module Scan Tool Output Controls

Scan Tool Output Control	Additional Menu Selection (s)	Description
Door Switch Pad Illum	Door Backlight Test	The DDM commands the driver door switch backlighting to illuminate for approximately 5 seconds when you select On. The driver door switch backlighting should illuminate.
		The DDM actuates the driver door lock actuator for approximately 5

Driver Lock	Door Lock Test	seconds when you select Lock or Unlock. The driver door lock actuator should Lock or Unlock.
Driver Window	Door Window Test	The DDM commands the driver door window to run to the full up or full down position when Up or Down is selected. The driver door window should run full Up or full Down.
Memory 1 Indicator	Mirror Test	The DDM commands the Memory 1 select LED to illuminate for approximately 5 seconds when you select On. The Memory 2 select LED should illuminate.
Memory 2 Indicator	Mirror Test	The DDM commands the Memory 2 select LED to illuminate for approximately 5 seconds when you select On. The Memory 2 select LED should illuminate.
Mirror Down	Mirror Test	The DDM commands the driver mirror to rotate down for approximately 5 seconds when you select On. The driver mirror should move in the down direction.
Mirror Heater	Mirror Test	The DDM commands the driver mirror to heat for approximately 5 seconds when you select On. The driver mirror should heat.
Mirror Left	Mirror Test	The DDM commands the driver mirror to rotate left for approximately 5 seconds when you select On. The driver mirror should move in the left direction.
Mirror Right	Mirror Test	The DDM commands the driver mirror to rotate right for approximately 5 seconds when you select On. The driver mirror should move in the right direction.
Mirror Up	Mirror Test	The DDM commands the driver mirror to rotate up for approximately 5 seconds when you select On. The driver mirror should move in the up direction.
Passenger Mirror Select LED	Mirror Test	The DDM commands the passenger mirror select LED to illuminate for approximately 5 seconds when you select On. The passenger mirror select LED should illuminate.

Passenger Door Module Scan Tool Output Controls

Scan Tool Output Control	Additional Menu Selection (s)	Description
Door Switch Pad Illum	Door Backlight Test	The PDM commands the passenger door switch backlighting to illuminate for approximately 5 seconds when you select On. The passenger door switch backlighting should illuminate.
Mirror Down	Mirror Test	The PDM commands the passenger mirror to rotate down for approximately 5 seconds when you select On. The passenger mirror should move in the down direction.
Mirror Heater	Mirror Test	The PDM commands the passenger mirror to heat for approximately 5 seconds when you select On. The passenger mirror should heat.
Mirror Left	Mirror Test	The PDM commands the passenger mirror to rotate left for approximately 5 seconds when you select On. The passenger mirror should move in the left direction.
		The PDM commands the passenger mirror to rotate right for

Mirror Right	Mirror Test	approximately 5 seconds when you select On. The passenger mirror should move in the right direction.
Mirror Up	Mirror Test	The PDM commands the passenger mirror to rotate up for approximately 5 seconds when you select On. The passenger mirror should move in the up direction.
Passenger Lock	Door Lock Test	The PDM actuates the passenger door lock actuator for approximately 5 seconds when you select Lock or Unlock. The passenger door lock actuator should Lock or Unlock.
Passenger Window	Door Window Test	The PDM commands the passenger door window to run to the full up or full down position when Up or Down is selected. The passenger door window should run full Up or full Down.

SCAN TOOL DATA LIST

Body Control Module Scan Tool Data List

Scan Tool Parameter	Data List	Units Displayed	Typical Data Value
Turn the Ignition ON/Engine OFF/Doors, Hatch and Hood Closed/No Switches Pressed			
Driver Door Ajar Sw.	Input Data 2	Open/Closed	Closed
Passenger Door Ajar Sw.	Input Data 2	Open/Closed	Closed
Rear Defog Relay	Input Data 2	Active/Inactive	Inactive

Driver Door Module Scan Tool Data List

Scan Tool Parameter	Data List	Units Displayed	Typical Data Value
Turn the Ignition ON/Engine OFF/Doors, Hatch and Hood Closed/No Switches Pressed			
Battery 1	Data	Volts	0-26 Volts
Battery 2	Data	Volts	0-26 Volts
Calibration ID	Module Information	Numeric	XX
Door Ajar	Inputs	Closed/Ajar	Closed
Door Key Unlock	Inputs	Active/Inactive	Inactive
Door Lock Motor	Outputs	Active/Inactive	Inactive
Door Lock Switch	Inputs	Active/Inactive	Inactive
Door Switch Pad Illum	Data	Percentage	0-100%
Door Unlock Motor	Outputs	Active/Inactive	Inactive
Door Unlock Switch	Inputs	Active/Inactive	Inactive
Driver Window Down Switch	Inputs	Active/Inactive	Inactive
Driver Window Up Switch	Inputs	Active/Inactive	Inactive
Drv Mirror Select Led	Inputs	Active/Inactive	Inactive
Drv Mirror Select Sw	Inputs	Active/Inactive	Inactive
Ignition Voltage	Data	Volts	0-26 Volts
Memory 1 Indicator	Outputs	Active/Inactive	Inactive
Memory 1 Select Switch	Inputs	Active/Inactive	Inactive
Memory 2 Indicator	Outputs	Active/Inactive	Inactive

Memory 2 Select Switch	Inputs	Active/Inactive	Inactive
Mirror Down Motor	Outputs	Active/Inactive	Inactive
Mirror Down Switch	Inputs	Active/Inactive	Inactive
Mirror Heater	Outputs	Active/Inactive	Inactive
Mirror Horizontal Pos	Data	Volts	0-5.0 Volts
Mirror Left Motor	Outputs	Active/Inactive	Inactive
Mirror Left Switch	Inputs	Active/Inactive	Inactive
Mirror Motor Load	Data	Amps	0-0.48 Amps
Mirror Right Motor	Outputs	Active/Inactive	Inactive
Mirror Right Switch	Inputs	Active/Inactive	Inactive
Mirror Up Motor	Outputs	Active/Inactive	Inactive
Mirror Up Switch	Inputs	Active/Inactive	Inactive
Mirror Vertical Pos	Data	Volts	0-5.0 Volts
Position Sensor Ref	Data	Volts	0-5.0 Volts
Psgr Mirror Select Led	Inputs	Active/Inactive	Inactive
Psgr. Mirror Select Switch	Inputs	Active/Inactive	Inactive
Psgr. Window Down Switch	Inputs	Active/Inactive	Inactive
Psgr. Window Up Switch	Inputs	Active/Inactive	Inactive
Software Release	Module Information	Numeric	XXXXXX
Software Version	Module Information	Numeric	X
Window Down Motor	Outputs	Active/Inactive	Inactive
Window Motor Load	Data	Amps	0-52.7 Amps
Window Up Motor	Outputs	Active/Inactive	Inactive

Passenger Door Module Scan Tool Data List

Scan Tool Parameter	Data List	Units Displayed	Typical Data Value
Turn the Ignition ON/Engine OFF/Doors, Hatch and Hood Closed/No Switches Pressed			
Battery 1	Data	Volts	0-26 Volts
Battery 2	Data	Volts	0-26 Volts
Calibration ID	Module Information	Numeric	XX
Door Ajar	Inputs	Closed/Ajar	Closed
Door Key Unlock	Inputs	Active/Inactive	Inactive
Door Lock Motor	Outputs	Active/Inactive	Inactive
Door Lock Switch	Inputs	Active/Inactive	Inactive
Door Switch Pad Illum	Data	Percentage	0-100%
Door Unlock Motor	Outputs	Active/Inactive	Inactive
Door Unlock Switch	Inputs	Active/Inactive	Inactive
Ignition Voltage	Data	Volts	0-26 Volts
Mirror Down Motor	Outputs	Active/Inactive	Inactive
Mirror Heater	Outputs	Active/Inactive	Inactive
Mirror Horizontal Pos	Data	Volts	0-5.0 Volts

Mirror Left Motor	Outputs	Active/Inactive	Inactive
Mirror Motor Load	Data	Amps	0-0.48 Amps
Mirror Right Motor	Outputs	Active/Inactive	Inactive
Mirror Up Motor	Outputs	Active/Inactive	Inactive
Mirror Vertical Pos	Data	Volts	0-5.0 Volts
Position Sensor Ref	Data	Volts	0-5.0 Volts
Psgr. Window Down Switch	Inputs	Active/Inactive	Inactive
Psgr. Window Up Switch	Inputs	Active/Inactive	Inactive
Software Release	Module Information	Numeric	XXXXXX
Software Version	Module Information	Numeric	X
Window Down Motor	Outputs	Active/Inactive	Inactive
Window Motor Load	Data	Amps	0-52.7 Amps
Window Up Motor	Outputs	Active/Inactive	Inactive

SCAN TOOL DATA DEFINITIONS

Battery 1

The scan tool displays 0.0-18.0 volts. The state of the battery voltage feed for logic supplied to the door module selected.

Battery 2

The scan tool displays 0.0-18.0 volts. The state of the battery voltage feed for loads supplied to the door module selected.

Calibration ID

The scan tool displays the calibration or program revision level used in the PROM of the door module selected.

Door Ajar

The scan tool displays Closed/Ajar. The door ajar indicator switch input to the door module selected, where an open door is displayed as Ajar.

Door Key Unlock

The scan tool displays Active/Inactive. The door key cylinder input to the door module selected, where the key cylinder transition to the Unlock position is displayed as Active.

Door Lock Motor

The scan tool displays Active/Inactive. The door lock motor output from the door module selected, where

the motor transition to the Lock position is displayed as Active.

Door Lock Switch

The scan tool displays Active/Inactive. The door lock switch input to the door module selected, where the switch transition to the Lock position is displayed as Active.

Door Switch Pad Illum

The scan tool displays 0-100%. The door switch illumination input to the door module selected, where the dimming switch rotated to bright is displayed as a higher percentage.

Door Unlock Motor

The scan tool displays Active/Inactive. The door unlock motor output from the door module selected, where the motor transition to the Unlock position is displayed as Active.

Door Unlock Switch

The scan tool displays Active/Inactive. The door lock switch input to the door module selected, where the switch transition to the Unlock position is displayed as Active.

Driver Door Ajar Sw.

The scan tool displays Open/Closed. The driver door ajar switch input to the BCM, where the door transition to the open position is displayed as Open.

Driver Window Down Switch

The scan tool displays Active/Inactive. The driver door switch window input to the DDM, where the switch transition to the Down position is displayed as Active.

Driver Window Up Switch

The scan tool displays Active/Inactive. The driver door switch window input to the DDM, where the switch transition to the Up position is displayed as Active.

Drv Mirror Select LED

The scan tool displays Active/Inactive. The driver door switch mirror select input to the DDM, where the illumination of the LH mirror LED is displayed as Active.

Drv Mirror Select Sw

The scan tool displays Active/Inactive. The driver door switch mirror select input to the DDM, where the switch transition to the LH mirror position is displayed as Active.

Ignition Voltage

The scan tool displays 0-16.0 volts. The state of the ignition voltage supplied to the door module selected.

Memory 1 Indicator

The scan tool displays Active/Inactive. The driver door switch memory 1 indicator output from the DDM, where the illumination of the Mem 1 indicator is displayed as Active.

Memory 1 Select Switch

The scan tool displays Active/Inactive. The driver door switch memory 1 select input to the DDM, where the switch transition to the Mem 1 position is displayed as Active.

Memory 2 Indicator

The scan tool displays Active/Inactive. The driver door switch memory 2 indicator output from the DDM, where the illumination of the Mem 2 indicator is displayed as Active.

Memory 2 Select Switch

The scan tool displays Active/Inactive. The driver door switch memory 2 select input to the DDM, where the switch transition to the Mem 2 position is displayed as Active.

Mirror Down Motor

The scan tool displays Active/Inactive. The vertical mirror motor output from the door module selected, where the motor transition in the Down direction is displayed as Active.

Mirror Down Switch

The scan tool displays Active/Inactive. The driver door switch mirror position input to the DDM, where the switch transition to the Down position is displayed as Active.

Mirror Heater

The scan tool displays Active/Inactive. The mirror heating element output from the door module selected, where the heating element being activated is displayed as Active.

Mirror Horizontal Pos

The scan tool displays 0-5.0 volts. The mirror horizontal position sensor feedback voltage to the door module selected.

Mirror Left Motor

The scan tool displays Active/Inactive. The horizontal mirror motor output from the door module selected, where the motor transition in the Left direction is displayed as Active.

Mirror Left Switch

The scan tool displays Active/Inactive. The driver door switch mirror position input to the DDM, where the switch transition to the Left position is displayed as Active.

Mirror Motor Load

The scan tool displays 0-0.48 amps. The amperage drawn by the mirror motor when operated.

Mirror Right Motor

The scan tool displays Active/Inactive. The horizontal mirror motor output from the door module selected, where the motor transition in the Right direction is displayed as Active

Mirror Right Switch

The scan tool displays Active/Inactive. The driver door switch mirror position input to the DDM, where the switch transition to the Right position is displayed as Active.

Mirror Up Motor

The scan tool displays Active/Inactive. The vertical mirror motor output from the door module selected, where the motor transition in the Up direction is displayed as Active.

Mirror Up Switch

The scan tool displays Active/Inactive. The driver door switch mirror position input to the DDM, where the switch transition to the Up position is displayed as Active.

Mirror Vertical Pos

The scan tool displays 0-5.0 volts. The mirror vertical position sensor feedback voltage to the door module selected.

Passenger Door Ajar Sw.

The scan tool displays Open/Closed. The passenger door ajar switch input to the BCM, where the door transition to the open position is displayed as Open.

Position Sensor Ref

The scan tool displays 0-5.0 volts. The voltage supplied to the mirror horizontal and vertical position sensors.

Psgr Mirror Select Led

The scan tool displays Active/Inactive. The driver door switch mirror select input to the DDM, where the illumination of the RH mirror LED is displayed as Active.

Psgr. Mirror Select Switch

The scan tool displays Active/Inactive. The driver door switch mirror select input to the DDM, where the switch transition to the RH mirror position is displayed as Active.

Psgr. Window Down Switch

The scan tool displays Active/Inactive. The passenger door switch window input to the PDM, where the switch transition to the Down position is displayed as Active.

Psgr. Window Up Switch

The scan tool displays Active/Inactive. The passenger door switch window input to the PDM, where the switch transition to the Up position is displayed as Active.

Rear Defog Relay

The scan tool displays Active/Inactive. The climate control rear defog relay input to the BCM, where the relay transition to energized is displayed as Active.

Software Release

The scan tool displays the software release number for service identification of the door module selected.

Software Version

The scan tool displays the software version number for service identification of the door module selected.

Window Motor Load

The scan tool displays 0-52.7 amps. The amperage drawn by the window motor when operated.

DIAGNOSTIC TROUBLE CODE (DTC) LIST

Diagnostic Trouble Code (DTC) List

DTC	Diagnostic Procedure	Module(s)
B2202	**DTC B2202-B2208**	Driver Door Module
B2203	**DTC B2202-B2208**	Passenger Door Module
B2204	**DTC B2202-B2208**	Driver Door Module
B2205	**DTC B2202-B2208**	Passenger Door Module

B2206	**DTC B2202-B2208**	Driver Door Module
B2208	**DTC B2202-B2208**	Driver Door Module
B2222	**DTC B2222-B2224**	Driver Door Module
B2224	**DTC B2222-B2224**	Driver Door Module
B2226	**DTC B2226-B2234**	Driver Door Module
B2228	**DTC B2226-B2234**	Driver Door Module
B2232	**DTC B2226-B2234**	Driver Door Module
B2234	**DTC B2226-B2234**	Driver Door Module
B2236	**DTC B2236-B2239**	Driver Door Module
B2237	**DTC B2236-B2239**	Passenger Door Module
B2238	**DTC B2236-B2239**	Driver Door Module
B2239	**DTC B2236-B2239**	Passenger Door Module
B2242	**DTC B2242-B2244**	Driver Door Module
B2244	**DTC B2242-B2244**	Driver Door Module
B2252	**DTC B2252-B2253**	Driver Door Module
B2253	**DTC B2252-B2253**	Passenger Door Module
B2262	**DTC B2262-B2265**	Driver Door Module
B2263	**DTC B2262-B2265**	Passenger Door Module
B2264	**DTC B2262-B2265**	Driver Door Module
B2265	**DTC B2262-B2265**	Passenger Door Module
B2272	**DTC B2272-B2273**	Driver Door Module
B2273	**DTC B2272-B2273**	Passenger Door Module
B2274	**DTC B2274-B2275**	Driver Door Module
B2275	**DTC B2274-B2275**	Passenger Door Module
B2276	**DTC B2276-B2277**	Driver Door Module
B2277	**DTC B2276-B2277**	Passenger Door Module
B2278	**DTC B2278-B2279**	Driver Door Module
B2279	**DTC B2278-B2279**	Passenger Door Module
B2282	**DTC B2282-B2285**	Driver Door Module
B2283	**DTC B2282-B2285**	Passenger Door Module
B2284	**DTC B2282-B2285**	Driver Door Module
B2285	**DTC B2282-B2285**	Passenger Door Module
B2286	**DTC B2286-B2287**	Driver Door Module
B2287	**DTC B2286-B2287**	Passenger Door Module

DTC B2202-B2208

Circuit Description

The driver or passenger door switch signal circuits provide inputs to the driver door module (DDM) or passenger door module (PDM) when a window switch is activated to the UP or DOWN position. These inputs allow the door module to detect a window UP or DOWN request. The door modules provide power and ground

to the window switches. When a window switch is activated to the UP or DOWN position, ground is supplied through the window switch to the signal circuit, which is pulled low. When the door module detects low voltage on the signal circuit, it will command the window in the UP or DOWN direction. When the switch is released, the command ceases. The door modules monitor the signal circuits to determine how long the ground has been applied. If the door module detects that a ground is applied for greater than 20 seconds, a DTC is set.

Conditions for Setting the DTC

- The DDM or PDM detects a short to ground on a window switch signal circuit.
- Condition must be present for greater than 20 seconds.

Action Taken When the DTC Sets

- Stores a history DTC B2202, B2203, B2204, B2205, B2206 or B2208 in DDM or PDM memory.
- A DTC can only be set as a history code even if the malfunction is current.
- No driver warning message will be displayed for any of these DTCs.

Conditions for Clearing the DTC

The DDM or PDM no longer detects a short to ground on a window switch signal circuit for greater than 20 seconds, and :

- The DTC is cleared using the IPC clearing feature, or
- The DTC is cleared using a scan tool.

Diagnostic Aids

- The following conditions may cause an intermittent malfunction:
  - There is an intermittent short to ground in the window switch signal circuit.
  - A window switch is shorted to ground internally or is sticking.
  - A window switch was pressed for longer than 20 seconds.
- If the DTC does not reset after the code is cleared, then the problem may be intermittent. Refer to **Testing for Intermittent Conditions and Poor Connections** in Wiring Systems.

Test Description

The numbers below refer to the step numbers on the diagnostic table.

2: Tests for the normal state of the window switch using a scan tool. The scan tool will display the normal state as Inactive, and Active when the switch is activated.

3: Tests if the DDM or PDM is able to detect a change in window switch state. The scan tool will display the normal state as Inactive, and Active when the switch is activated.

4: Tests for a stuck or shorted window switch. If the window switch is stuck or shorted, the state will change from Active to Inactive when the window switch is disconnected.

5: Tests for a short to ground in the window switch signal circuit.

DTC B2202-B2208

Step	Action	Yes	No
Schematic Reference:Door Control Module Schematics **Connector End View Reference:Power Door Systems Connector End Views**			
1	Did you perform the Door Systems Diagnostic System Check?	Go to **Step 2**	Go to **Diagnostic System Check - Door Systems**
2	1. Install a scan tool. 2. Turn ON the ignition, with the engine OFF. 3. With a scan tool, observe the appropriate window switch parameter in the appropriate door control module Inputs data list. Does the scan tool display Inactive?	Go to **Step 3**	Go to **Step 4**
3	1. Activate the appropriate window switch. 2. With a scan tool, observe the appropriate window switch parameter in the appropriate door control module Inputs data list. Does the window switch parameter change state?	Go to **Testing for Intermittent Conditions and Poor Connections** in Wiring Systems	Go to **Step 4**
4	1. Turn OFF the ignition. 2. Disconnect the appropriate door switch. 3. Turn ON the ignition, with the engine OFF. 4. With a scan tool, observe the appropriate window switch parameter in the appropriate door control module Inputs data list. Does the scan tool display Inactive?	Go to **Step 7**	Go to **Step 5**
5	Test the appropriate signal circuit for a short to ground. Refer to **Circuit Testing** and **Wiring Repairs** in Wiring Systems. Did you find and correct the condition?	Go to **Step 10**	Go to **Step 6**
6	Inspect for poor connections at the harness connector of the appropriate door module. Refer to **Testing for Intermittent Conditions and Poor Connections** and **Connector Repairs** in Wiring Systems. Did you find and correct the condition?	Go to **Step 10**	Go to **Step 8**
	Inspect for poor connections at the harness connector of the appropriate door switch. Refer to **Testing for Intermittent Conditions and Poor**		

7	**Connections** and **Connector Repairs** in Wiring Systems. Did you find and correct the condition?	Go to **Step 10**	Go to **Step 9**
8	Replace the appropriate door module. Refer to **Door Control Module Replacement** . Did you complete the replacement?	Go to **Step 10**	-
9	Replace the appropriate door switch. Refer to **Front Door Switch Replacement** . Did you complete the replacement?	Go to **Step 10**	-
10	1. Use the scan tool in order to clear the DTCs. 2. Operate the vehicle within the Conditions for Running the DTC as specified in the supporting text. Does the DTC reset?	Go to **Step 2**	System OK

DTC B2222-B2224

Circuit Description

The driver door switch signal circuits provide inputs to the driver door module (DDM) when a mirror select switch is activated. These inputs allow the DDM to detect a LH or RH mirror request. The DDM provides power and ground to the mirror select switches. When a mirror select switch is activated, ground is supplied through the mirror select switch to the signal circuit, which is pulled low. When the DDM detects low voltage on the signal circuit, it will command the mirror in the direction selected. The DDM controls RH mirror functions by sending mirror control messages to the passenger door module (PDM) on the serial data line and the PDM then commands the RH mirror. The DDM monitors both the LH and RH mirror select switch signal circuits to determine how long a ground has been applied. If the DDM detects that a ground is applied for greater than 20 seconds, a DTC is set.

Conditions for Setting the DTC

- The DDM detects a short to ground on a mirror select switch signal circuit.
- Condition must be present for greater than 20 seconds.

Action Taken When the DTC Sets

- Stores a history DTC B2222 or B2224 in DDM memory.
- These DTCs can only be set as a history code even if the malfunction is current.
- No driver warning message will be displayed for these DTCs.

Conditions for Clearing the DTC

The DDM no longer detects a short to ground on a mirror select switch signal circuit for longer than 20 seconds, and:

- The DTC is cleared using the IPC clearing feature, or
- The DTC is cleared using a scan tool.

Diagnostic Aids

- The following conditions may cause an intermittent malfunction:
  - There is an intermittent short to ground on a mirror select switch signal circuit.
  - The mirror select switch is shorted to ground internally or is sticking.
  - The mirror select switch was pressed for longer than 20 seconds.
- If the DTC does not reset after the code is cleared, then the problem may be intermittent. Refer to **Testing for Intermittent Conditions and Poor Connections** in Wiring Systems.

Test Description

The numbers below refer to the step numbers on the diagnostic table.

2: Tests for the normal state of the mirror select switch using a scan tool. The scan tool will display the normal state as Inactive, and Active when the switch is activated.

3: Tests if the DDM is able to detect a change in mirror select switch state. The scan tool will display the normal state as Inactive, and Active when the switch is activated.

4: Tests for a stuck or shorted mirror select switch. If the mirror select switch is stuck or shorted, the state will change from Active to Inactive when the mirror select switch is disconnected.

5: Tests for a short to ground in the mirror select switch signal circuit.

DTC B2222-B2224

Step	Action	Yes	No
Schematic Reference:Door Control Module Schematics **Connector End View Reference:Power Door Systems Connector End Views**			
1	Did you perform the Door Systems Diagnostic System Check?	Go to **Step 2**	Go to **Diagnostic System Check - Door Systems**
2	1. Install a scan tool. 2. Turn ON the ignition, with the engine OFF. 3. With a scan tool, observe the appropriate mirror select switch parameter in the Left Door Control Module Inputs data list. Does the scan tool display Inactive?	Go to **Step 3**	Go to **Step 4**
3	1. Activate the appropriate mirror select switch. 2. With a scan tool, observe the appropriate mirror select switch parameter in the Left Door Control Module Inputs data list.	Go to **Testing for**	

	Does the mirror select switch parameter change state?	**Intermittent Conditions and Poor Connections** in Wiring Systems	Go to **Step 4**
4	1. Turn OFF the ignition. 2. Disconnect the driver door switch. 3. Turn ON the ignition, with the engine OFF. 4. With a scan tool, observe the appropriate mirror select switch parameter in the Left Door Control Module Inputs data list. Does the scan tool display Inactive?	Go to **Step 7**	Go to **Step 5**
5	Test the appropriate signal circuit for a short to ground. Refer to **Circuit Testing** and **Wiring Repairs** in Wiring Systems. Did you find and correct the condition?	Go to **Step 10**	Go to **Step 6**
6	Inspect for poor connections at the harness connector of the driver door module. Refer to **Testing for Intermittent Conditions and Poor Connections** and **Connector Repairs** in Wiring Systems. Did you find and correct the condition?	Go to **Step 10**	Go to **Step 8**
7	Inspect for poor connections at the harness connector of the driver door switch. Refer to **Testing for Intermittent Conditions and Poor Connections** and **Connector Repairs** in Wiring Systems. Did you find and correct the condition?	Go to **Step 10**	Go to **Step 9**
8	Replace the driver door module. Refer to **Door Control Module Replacement** . Did you complete the replacement?	Go to **Step 10**	-
9	Replace the driver door switch. Refer to **Front Door Switch Replacement** . Did you complete the replacement?	Go to **Step 10**	-
10	1. Use the scan tool in order to clear the DTCs. 2. Operate the vehicle within the Conditions for Running the DTC as specified in the supporting text. Does the DTC reset?	Go to **Step 2**	System OK

DTC B2226-B2234

Circuit Description

The driver door switch signal circuits provide inputs to the driver door module (DDM) when the mirror switch is activated. These inputs allow the DDM to detect a mirror direction request. The DDM provides both power and ground to the mirror switches. When a mirror switch is activated to the right, left, up or down position, ground is supplied through the mirror switch to the signal circuit, which is pulled low. When the DDM detects low voltage on the signal circuit, it will command the mirror to rotate in the direction selected. The DDM controls passenger mirror functions by sending mirror control messages to the passenger door module (PDM) on the serial data line and the PDM then commands the passenger mirror. The DDM monitors both the driver and passenger mirror switch signal circuits to determine how long a ground has been applied. If the DDM detects that a ground is applied for greater than 20 seconds, a DTC is set.

Conditions for Setting the DTC

- The DDM detects a short to ground on a mirror switch signal circuit.
- Condition must be present for greater than 20 seconds.

Action Taken When the DTC Sets

- Stores a history DTC B2226, B2228, B2232 or B2234 in DDM memory.
- This DTC can only be set as a history code even if the malfunction is current.
- No driver warning message will be displayed for this DTC.

Conditions for Clearing the DTC

The DDM no longer detects a short to ground on a mirror directional switch signal circuit for greater than 20 seconds, and:

- The DTC is cleared using the IPC clearing feature, or
- The DTC is cleared using a scan tool.

Diagnostic Aids

- The following conditions may cause an intermittent malfunction:
  - There is an intermittent short to ground in the mirror right, left, up or down switch signal circuit.
  - The mirror switch is shorted to ground internally or is sticking.
  - The mirror switch was pressed for longer than 20 seconds.
- If the DTC does not reset after the code is cleared, then the problem may be intermittent. Refer to **Testing for Intermittent Conditions and Poor Connections** in Wiring Systems.

Test Description

The numbers below refer to the step numbers on the diagnostic table.

2: Tests for the normal state of the mirror right, left, up or down switch using a scan tool. The scan tool will display the normal state as Inactive, and Active when the switch is activated.

3: Tests if the DDM is able to detect a change in mirror switch state. The scan tool will display the

normal state as Inactive, and Active when the switch is activated.

4: Tests for a stuck or shorted mirror switch. If the mirror switch is stuck or shorted, the state will change from Active to Inactive when the mirror switch is disconnected.

5: Tests for a short to ground in the appropriate mirror switch signal circuit.

DTC B2226-B2234

Step	Action	Yes	No
Schematic Reference:Door Control Module Schematics **Connector End View Reference:Power Door Systems Connector End Views**			
1	Did you perform the Door Systems Diagnostic System Check?	Go to **Step 2**	Go to **Diagnostic System Check - Door Systems**
2	1. Install a scan tool. 2. Turn ON the ignition, with the engine OFF. 3. With a scan tool, observe the appropriate mirror switch parameter in the Left Door Control Module Inputs data list. Does the scan tool display Inactive?	Go to **Step 3**	Go to **Step 4**
3	1. Activate the mirror switch. 2. With a scan tool, observe the appropriate mirror switch parameter in the Left Door Control Module Inputs data list. Does the mirror switch parameter change state?	Go to **Testing for Intermittent Conditions and Poor Connections** in Wiring Systems	Go to **Step 4**
4	1. Turn OFF the ignition. 2. Disconnect the driver door switch. 3. Turn ON the ignition, with the engine OFF. 4. With a scan tool, observe the appropriate mirror switch parameter in the Left Door Control Module Inputs data list. Does the scan tool display Inactive?	Go to **Step 7**	Go to **Step 5**
5	Test the appropriate signal circuit of the mirror switch for a short to ground. Refer to **Circuit Testing** and **Wiring Repairs** in Wiring Systems. Did you find and correct the condition?	Go to **Step 10**	Go to **Step 6**
6	Inspect for poor connections at the harness connector of the driver door module. Refer to **Testing for Intermittent Conditions and Poor Connections** and **Connector Repairs** in Wiring Systems. Did you find and correct the condition?	Go to **Step 10**	Go to **Step 8**

7	Inspect for poor connections at the harness connector of the driver door switch. Refer to **Testing for Intermittent Conditions and Poor Connections** and **Connector Repairs** in Wiring Systems. Did you find and correct the condition?	Go to **Step 10**	Go to **Step 9**
8	Replace the driver door module. Refer to **Door Control Module Replacement** . Did you complete the replacement?	Go to **Step 10**	-
9	Replace the driver door switch. Refer to **Front Door Switch Replacement** . Did you complete the replacement?	Go to **Step 10**	-
10	1. Use the scan tool in order to clear the DTCs. 2. Operate the vehicle within the Conditions for Running the DTC as specified in the supporting text. Does the DTC reset?	Go to **Step 2**	System OK

DTC B2236-B2239

Circuit Description

The driver or passenger door switch signal circuits provide inputs to the driver door module (DDM) or passenger door module (PDM) when a door lock switch is activated to the LOCK or UNLOCK position. These inputs allow the door module to detect a door LOCK or UNLOCK request. The door modules provide power and ground to the door lock switches. When a door lock switch is activated to the LOCK or UNLOCK position, ground is supplied through the door lock switch to the signal circuit, which is pulled low. When the door module detects low voltage on the signal circuit, it will command the door latches to LOCK or UNLOCK. If the driver door switch is activated, the DDM will LOCK or UNLOCK the driver door latch and also send a message on the serial data line to the PDM to LOCK or UNLOCK the passenger door latch. If the passenger door switch is activated, the PDM will LOCK or UNLOCK the passenger door latch and also send a message on the serial data line to the DDM to LOCK or UNLOCK the driver door latch. The door modules monitor the signal circuits to determine how long the ground has been applied. If the door module detects that a ground is applied for greater than 20 seconds, a DTC is set.

Conditions for Setting the DTC

- The DDM or PDM detects a short to ground on a door lock switch signal circuit.
- Condition must be present for greater than 20 seconds.

Action Taken When the DTC Sets

- Stores a history DTC B2236, B2237, B2238 or B2239 in DDM or PDM memory.
- This DTC can only be set as a history code even if the malfunction is current.

- No driver warning message will be displayed for this DTC.

Conditions for Clearing the DTC

The DDM or PDM no longer detects a short to ground on a door lock switch signal circuit for greater than 20 seconds, and:

- The DTC is cleared using the IPC clearing feature, or
- The DTC is cleared using a scan tool.

Diagnostic Aids

- The following conditions may cause an intermittent malfunction:
  - There is an intermittent short to ground in a door lock switch signal circuit.
  - A door lock switch is shorted to ground internally or is sticking.
  - A door lock switch was pressed for longer than 20 seconds.
- If the DTC does not reset after the code is cleared, then the problem may be intermittent. Refer to **Testing for Intermittent Conditions and Poor Connections** in Wiring Systems.

Test Description

The numbers below refer to the step numbers on the diagnostic table.

2: Tests for the normal state of the door lock/unlock switch using a scan tool. The scan tool will display the normal state as Inactive, and Active when the switch is activated.

3: Tests if the DDM or PDM is able to detect a change in a door lock/unlock switch state. The scan tool will display the normal state as Inactive, and Active when the switch is activated.

4: Tests for a stuck or shorted door lock/unlock switch. If a door lock/unlock switch is stuck or shorted, the state will change from Active to Inactive when a door lock/unlock switch is disconnected.

5: Tests for a short to ground in a door lock/unlock switch signal circuit.

DTC B2236-B2239

Step	Action	Yes	No
Schematic Reference:Door Control Module Schematics **Connector End View Reference:Power Door Systems Connector End Views**			
1	Did you perform the Door Systems Diagnostic System Check?	Go to **Step 2**	Go to **Diagnostic System Check - Door Systems**
2	1. Install a scan tool. 2. Turn ON the ignition, with the engine OFF. 3. With a scan tool, observe the appropriate door lock/unlock switch parameter in the appropriate door control module Inputs data		

	list. Does the scan tool display Inactive?	Go to **Step 3**	Go to **Step 4**
3	1. Activate the appropriate door lock/unlock switch. 2. With a scan tool, observe the appropriate door lock/unlock switch parameter in the appropriate door control module Inputs data list. Does the door lock/unlock switch parameter change state?	Go to **Testing for Intermittent Conditions and Poor Connections** in Wiring Systems	Go to **Step 4**
4	1. Turn OFF the ignition. 2. Disconnect the appropriate door switch. 3. Turn ON the ignition, with the engine OFF. 4. With a scan tool, observe the appropriate door lock/unlock switch parameter in the appropriate door control module Inputs data list. Does the scan tool display Inactive?	Go to **Step 7**	Go to **Step 5**
5	Test the appropriate signal circuit for a short to ground. Refer to **Circuit Testing** and **Wiring Repairs** in Wiring Systems. Did you find and correct the condition?	Go to **Step 10**	Go to **Step 6**
6	Inspect for poor connections at the harness connector of the appropriate door module. Refer to **Testing for Intermittent Conditions and Poor Connections** and **Connector Repairs** in Wiring Systems. Did you find and correct the condition?	Go to **Step 10**	Go to **Step 8**
7	Inspect for poor connections at the harness connector of the appropriate door switch. Refer to **Testing for Intermittent Conditions and Poor Connections** and **Connector Repairs** in Wiring Systems. Did you find and correct the condition?	Go to **Step 10**	Go to **Step 9**
8	Replace the appropriate door module. Refer to **Door Control Module Replacement** . Did you complete the replacement?	Go to **Step 10**	-
9	Replace the appropriate door switch. Refer to **Front Door Switch Replacement** . Did you complete the replacement?	Go to **Step 10**	-
	1. Use the scan tool in order to clear the DTCs.		

10	2. Operate the vehicle within the Conditions for Running the DTC as specified in the supporting text. Does the DTC reset?	Go to **Step 2**	System OK

DTC B2242-B2244

Circuit Description

The driver door switch signal circuits provide input to the driver door module (DDM) when the memory 1 or memory 2 select switch is activated. These inputs allow the DDM to detect a memory function recall request. The DDM provides power and ground to the memory switches. When a memory select switch is activated, ground is supplied through the memory select switch to the signal circuit, which is pulled low. When the DDM detects low voltage on the signal circuit, it will activate the memory functions and also send a message on the serial data line to other modules responsible for memory recall functions. The DDM monitors the signal circuits to determine how long the ground has been applied. If the DDM detects that a ground is applied for greater than 20 seconds, a DTC is set.

Conditions for Setting the DTC

- The DDM detects a short to ground on a memory 1 or memory 2 select switch signal circuit.
- Condition must be present for greater than 20 seconds.

Action Taken When the DTC Sets

- Stores a history DTC B2242 or B2244 in the DDM memory.
- These DTCs can only be set as a history code even if the malfunction is current.
- No driver warning message will be displayed for this DTC.

Conditions for Clearing the DTC

The DDM no longer detects a short to ground on a memory 1 or memory 2 select switch signal circuit for greater than 20 seconds, and:

- The DTC is cleared using the IPC clearing feature, or
- The DTC is cleared using a scan tool.

Diagnostic Aids

- The following conditions may cause an intermittent malfunction:
  - There is an intermittent short to ground in the memory 1 or the memory 2 select switch signal circuit.
  - The memory 1 or the memory 2 select switch is shorted to ground internally or is sticking.
  - The memory 1 or the memory 2 select switch was pressed for longer than 20 seconds.

- If the DTC does not reset after the code is cleared, then the problem may be intermittent. Refer to **Testing for Intermittent Conditions and Poor Connections** in Wiring Systems.

Test Description

The numbers below refer to the step numbers on the diagnostic table.

2: Tests for the normal state of the memory 1 or the memory 2 select switch using a scan tool. The scan tool will display the normal state as Inactive, and Active when the switch is activated.

3: Tests if the DDM is able to detect a change in memory 1 or memory 2 select switch state. The scan tool will display the normal state as Inactive, and Active when the switch is activated.

4: Tests for a stuck or shorted memory 1 or memory 2 select switch. If the memory 1 or memory 2 select switch is stuck or shorted, the state will change from Active to Inactive when the memory 1 or memory 2 select switch is disconnected.

5: Tests for a short to ground in the memory 1 or the memory 2 select switch signal circuit.

DTC B2242-B2244

Step	Action	Yes	No
Schematic Reference:Door Control Module Schematics **Connector End View Reference:Power Door Systems Connector End Views**			
1	Did you perform the Door Systems Diagnostic System Check?	Go to **Step 2**	Go to **Diagnostic System Check - Door Systems**
2	1. Install a scan tool. 2. Turn ON the ignition, with the engine OFF. 3. With a scan tool, observe the appropriate memory select switch parameter in the Left Door Control Module Inputs data list. Does the scan tool display Inactive?	Go to **Step 3**	Go to **Step 4**
3	1. Activate the appropriate memory select switch. 2. With a scan tool, observe the appropriate memory select switch parameter in the Left Door Control Module Inputs data list. Does memory select switch parameter change state?	Go to **Testing for Intermittent Conditions and Poor Connections** in Wiring Systems	Go to **Step 4**
4	1. Turn OFF the ignition. 2. Disconnect the driver door switch. 3. Turn ON the ignition, with the engine OFF. 4. With a scan tool, observe the appropriate memory select switch parameter in the Left		

	Door Control Module Inputs data list. Does the scan tool display Inactive?	Go to **Step 7**	Go to **Step 5**
5	Test the appropriate signal circuit for a short to ground. Refer to **Circuit Testing** and **Wiring Repairs** in Wiring Systems. Did you find and correct the condition?	Go to **Step 10**	Go to **Step 6**
6	Inspect for poor connections at the harness connector of the driver door module. Refer to **Testing for Intermittent Conditions and Poor Connections** and **Connector Repairs** in Wiring Systems. Did you find and correct the condition?	Go to **Step 10**	Go to **Step 8**
7	Inspect for poor connections at the harness connector of the driver door switch. Refer to **Testing for Intermittent Conditions and Poor Connections** and **Connector Repairs** in Wiring Systems. Did you find and correct the condition?	Go to **Step 10**	Go to **Step 9**
8	Replace the driver door module. Refer to **Door Control Module Replacement** . Did you complete the replacement?	Go to **Step 10**	-
9	Replace the driver door switch. Refer to **Front Door Switch Replacement** . Did you complete the replacement?	Go to **Step 10**	-
10	1. Use the scan tool in order to clear the DTCs. 2. Operate the vehicle within the Conditions for Running the DTC as specified in the supporting text. Does the DTC reset?	Go to **Step 2**	System OK

DTC B2252-B2253

Circuit Description

IMPORTANT: The driver door lock cylinder is connected to the driver door key switch and driver door latch using mechanical linkages. When the driver door lock cylinder is rotated to the UNLOCK position, the driver door is unlocked mechanically. The passenger door lock cylinder is connected to the passenger door key switch and passenger door latch using mechanical linkages. When the passenger door lock cylinder is rotated to the UNLOCK position, the passenger door is unlocked mechanically.

The driver or passenger door key switch signal circuits provide input to the driver door module (DDM) or

passenger door module (PDM) when the driver or passenger door lock cylinder is rotated to the UNLOCK position. This input allows the door module to detect a door UNLOCK request. The door module provides power and ground to the door key switch. When the door lock cylinder is rotated to the UNLOCK position, a ground is supplied through the door key switch to the signal circuit, which is pulled low. When the DDM detects low voltage on the driver door key switch signal circuit, it sends a message on the serial data line to the PDM to UNLOCK the passenger door. When the PDM detects low voltage on the passenger door key switch signal circuit, it sends a message on the serial data line to the DDM to UNLOCK the driver door. The messages sent on the serial data line are also used by other systems to execute certain functions. The DDM and PDM monitor the signal circuits to determine how long the ground has been applied. If the DDM or PDM detects that the ground is applied for greater than 20 seconds, a DTC is set.

Conditions for Setting the DTC

- The DDM or PDM detects a short to ground on the driver or passenger door key switch signal circuits.
- Condition must be present for greater than 20 seconds.

Action Taken When the DTC Sets

- Stores a history DTC B2252 in DDM memory, or a history DTC B2253 in PDM memory.
- This DTC can only be set as a history code even if the malfunction is current.
- No driver warning message will be displayed for this DTC.

Conditions for Clearing the DTC

The DDM or PDM no longer detects a short to ground on the driver or passenger door key switch signal circuits for greater than 20 seconds, and:

- The DTC is cleared using the IPC clearing feature, or
- The DTC is cleared using a scan tool.

Diagnostic Aids

IMPORTANT: The driver door lock cylinder is connected to the driver door key switch in the driver door latch using a mechanical linkage. The passenger door lock cylinder is connected to the passenger door key switch in the passenger door latch using a mechanical linkage. Check to make sure that the mechanical linkages are not disconnected.

- The following conditions may cause an intermittent malfunction:
  - There is an intermittent short to ground in a door key switch signal circuit.
  - A door key switch is shorted to ground internally or is sticking.
  - A door key switch was activated for longer than 20 seconds.
- If the DTC does not reset after the code is cleared, then the problem may be intermittent. Refer to **Testing for Intermittent Conditions and Poor Connections** in Wiring Systems.

Test Description

The numbers below refer to the step numbers on the diagnostic table.

2: Tests for the normal state of the door key switch using a scan tool. The scan tool will display the normal state as Inactive, and Active when the switch is activated.

3: Tests if the DDM or PDM is able to detect a change in the door key switch state. The scan tool will display the normal state as Inactive, and Active when the switch is activated.

4: Tests for a stuck or shorted door key switch. If a door key switch is stuck or shorted, the state will change from Active to Inactive when the driver or passenger door key switch is disconnected.

5: Tests for a short to ground in the door key switch signal circuit.

DTC B2252-B2253

Step	Action	Yes	No
Schematic Reference:Door Control Module Schematics **Connector End View Reference:Power Door Systems Connector End Views**			
1	Did you perform the Door Systems Diagnostic System Check?	Go to **Step 2**	Go to **Diagnostic System Check - Door Systems**
2	1. Install a scan tool. 2. Turn ON the ignition, with the engine OFF. 3. With a scan tool, observe the Door Key Unlock parameter in the appropriate door control module Inputs data list. Does the scan tool display Inactive?	Go to **Step 3**	Go to **Step 4**
3	1. Activate the appropriate door key switch. 2. With a scan tool, observe the Door Key Unlock parameter in the appropriate door control module Inputs data list. Does the Door Key Unlock parameter change state?	Go to **Testing for Intermittent Conditions and Poor Connections** in Wiring Systems	Go to **Step 4**
4	1. Turn OFF the ignition. 2. Disconnect the appropriate door latch C1 harness connector. 3. Turn ON the ignition, with the engine OFF. 4. With a scan tool, observe the Door Key Unlock parameter in the appropriate door control module Inputs data list. Does the scan tool display Inactive?	Go to **Step 7**	Go to **Step 5**
	Test the appropriate door key switch signal circuit for a short to ground. Refer to **Circuit Testing** and		

5	**Wiring Repairs** in Wiring Systems. Did you find and correct the condition?	Go to **Step 10**	Go to **Step 6**
6	Inspect for poor connections at the harness connector of the appropriate door module. Refer to **Testing for Intermittent Conditions and Poor Connections** and **Connector Repairs** in Wiring Systems. Did you find and correct the condition?	Go to **Step 10**	Go to **Step 8**
7	Inspect for poor connections at the C1 harness connector of the appropriate door latch. Refer to **Testing for Intermittent Conditions and Poor Connections** and **Connector Repairs** in Wiring Systems. Did you find and correct the condition?	Go to **Step 10**	Go to **Step 9**
8	- Replace the appropriate door module. Refer to **Door Control Module Replacement** . Did you complete the replacement?	Go to **Step 10**	-
9	Replace the appropriate door latch. Refer to **Lock Replacement - Door** . Did you complete the replacement?	Go to **Step 10**	-
10	1. Use the scan tool in order to clear the DTCs. 2. Operate the vehicle within the Conditions for Running the DTC as specified in the supporting text. Does the DTC reset?	Go to **Step 2**	System OK

DTC B2262-B2265

Circuit Description

The driver door module (DDM) and the passenger door module (PDM) receive mirror position signals from the mirror horizontal and vertical position sensors. These signals are used by the door modules for memory recall functions of the driver and passenger mirrors. The door modules command the mirror memory settings based upon the voltage level received back from the position sensors. Each door module provides a 5 volt supply, a signal and a ground circuit for each of the position sensors. The horizontal and vertical position sensors are variable resistors that the door modules monitor voltage levels across. When a memory setting is recalled, the door modules command the mirror motors in the appropriate directions until the stored position sensor voltage levels are achieved. The DDM and PDM monitor the signal circuits to determine if the voltage level is out of range. If the DDM or PDM detects a voltage level out of range for greater than 2 seconds, a DTC is set.

Conditions for Setting the DTC

- The DDM or PDM detects a mirror position sensor signal voltage range under 0.1 volts or over 4.78 volts.

- Condition must be present for greater than 2 seconds.

Action Taken When the DTC Sets

- Stores a history DTC B2262, B2263, B2264 or B2265 in the DDM or PDM memory.
- These DTCs can only be set as a history code even if the malfunction is current.
- No driver warning message will be displayed for this DTC.

Conditions for Clearing the DTC

- The DDM or PDM detects the correct mirror horizontal and vertical position sensor signal voltage range (0.1-4.78 volts) for longer than 2 seconds, and:
- The DTC is cleared using the IPC clearing feature, or
- The DTC is cleared using a scan tool.

Diagnostic Aids

- An intermittent malfunction may be caused by an intermittent open or short to ground in a mirror signal circuit.
- If the DTC does not reset after the code is cleared, then the problem may be intermittent. Refer to **Testing for Intermittent Conditions and Poor Connections** in Wiring Systems.

Test Description

The numbers below refer to the step numbers on the diagnostic table.

2: This tests the mirror position sensor signal voltage using a scan tool. Normal signal voltage range is between 0.1-4.78 volts.

3: This tests the mirror position sensor signal voltage using a scan tool with the mirror disconnected. Normal signal voltage range with the mirror disconnected is greater than 4.78 volts.

4: This tests the mirror position sensor signal voltage using a scan tool with the signal circuit jumpered to the sensor ground circuit. Normal signal voltage range with the sensor jumpered to ground is less than 0.1 volt.

DTC B2262-B2265

Step	Action	Value (s)	Yes	No
Schematic Reference:Door Control Module Schematics **Connector End View Reference:Power Door Systems Connector End Views**				
1	Did you perform the Door Systems Diagnostic System Check?	-	Go to **Step 2**	Go to **Diagnostic System Check - Door Systems**
	1. Install a scan tool. 2. Turn ON the ignition, with the engine			

2	OFF. 3. With a scan tool, observe the appropriate mirror position parameter in the appropriate door control module data list. Does the scan tool indicate that the mirror position parameter is within the specified range?	0.1-4.78 V	Go to **Testing for Intermittent Conditions and Poor Connections** in Wiring Systems	Go to **Step 3**
3	1. Turn OFF the ignition. 2. Disconnect the appropriate mirror. 3. Turn ON the ignition, with the engine OFF. 4. With a scan tool, observe the appropriate mirror position parameter in the appropriate door control module data list. Does the scan tool indicate that the mirror position parameter is greater than the specified value?	4.78 V	Go to **Step 4**	Go to **Step 5**
4	1. Turn OFF the ignition 2. Connect a 3-amp fused jumper wire between the signal circuit of the appropriate mirror position sensor and the ground circuit of the appropriate mirror position sensor. 3. Turn ON the ignition, with the engine OFF. 4. With a scan tool, observe the appropriate mirror position parameter in the appropriate door control module data list. Does the scan tool indicate that the mirror position parameter is less than the specified value?	0.1 V	Go to **Step 7**	Go to **Step 6**
5	Test the appropriate mirror position signal circuit for a short to ground. Refer to **Circuit Testing** and **Wiring Repairs** in Wiring Systems. Did you find and correct the condition?	-	Go to **Step 11**	Go to **Step 8**
	Test the appropriate mirror position signal circuit for a high resistance or an open. Refer			

6	to **Circuit Testing** and **Wiring Repairs** in Wiring Systems. Did you find and correct the condition?	-	Go to **Step 11**	Go to **Step 8**
7	Inspect for poor connections at the harness connector of the appropriate mirror. Refer to **Testing for Intermittent Conditions and Poor Connections** and **Connector Repairs** in Wiring Systems. Did you find and correct the condition?	-	Go to **Step 11**	Go to **Step** 9
8	Inspect for poor connections at the harness connector of the appropriate door module. Refer to **Testing for Intermittent Conditions and Poor Connections** and **Connector Repairs** in Wiring Systems. Did you find and correct the condition?	-	Go to **Step 11**	Go to **Step 10**
9	Replace the appropriate mirror. Refer to **Mirror Replacement** . Did you complete the replacement?	-	Go to **Step 11**	-
10	Replace the appropriate door module. Refer to **Door Control Module Replacement** . Did you complete the replacement?	-	Go to **Step 11**	-
11	1. Use the scan tool in order to clear the DTCs. 2. Operate the vehicle within the Conditions for Running the DTC as specified in the supporting text. Does the DTC reset?	-	Go to **Step 2**	System OK

DTC B2272-B2273

Circuit Description

The driver door module (DDM) and the passenger door module (PDM) each provide motor control output functions for their respective mirrors. These output controls allow the DDM and the PDM to command their respective power mirrors in horizontal and vertical positions. The mirror switch circuits in the driver door switch provide inputs to the DDM when the mirror switch is pressed UP, DOWN, LEFT or RIGHT. When the DDM detects an active mirror command from the mirror switch, the DDM will command the respective mirror motor in the appropriate direction. The DDM controls passenger mirror functions by sending mirror control messages to the PDM on the serial data line, and the PDM then commands the passenger mirror. Each door module commands their respective mirror motors by applying a ground or voltage to the control circuit, depending on the desired mirror position. If the DDM or PDM detects a short to ground or voltage condition in a mirror motor control circuit for greater than 2 seconds, a DTC is set.

Conditions for Setting the DTC

- The DDM or PDM detects a short to ground or voltage condition in a mirror motor control circuit.
- Condition must be present for 2 seconds.

Action Taken When the DTC Sets

- Stores a history DTC B2272 or B2273 in DDM or PDM memory.
- These DTCs can only be set as a history code even if the malfunction is current.
- No driver warning message will be displayed for this DTC.

Conditions for Clearing the DTC

- The DDM or PDM no longer detects a short to ground or voltage condition in a mirror motor control circuit for longer than 2 seconds, and:
- The DTC is cleared using the IPC clearing feature, or
- The DTC is cleared using a scan tool.

Diagnostic Aids

- The following conditions may cause an intermittent malfunction:
  - There is an intermittent short to ground or voltage in a mirror motor control circuit.
  - A mirror motor is shorted internally.
- If the DTC does not reset after the code is cleared, then the problem may be intermittent. Refer to **Testing for Intermittent Conditions and Poor Connections** in Wiring Systems.

Test Description

The numbers below refer to the step numbers on the diagnostic table.

2: Tests for proper operation of the outside rearview mirror.
3: Tests for a shorted outside rearview mirror.
5: Tests for a short to ground or voltage in the vertical mirror motor control circuits.
6: Tests for a short to ground or voltage in the horizontal mirror motor control circuits.

DTC B2272-B2273

Step	Action	Yes	No
Schematic Reference:Door Control Module Schematics **Connector End View Reference:Power Door Systems Connector End Views**			
1	Did you perform the Door Systems Diagnostic System Check?	Go to **Step 2**	Go to **Diagnostic System Check - Door Systems**
2	Operate the appropriate outside rearview mirror in the UP, DOWN, LEFT and RIGHT directions. Does the outside rearview mirror operate in all	Go to **Testing for Intermittent Conditions and Poor Connections** in	

	directions?	Wiring Systems	Go to **Step 3**
3	1. Disconnect the appropriate outside rearview mirror. 2. Install a scan tool. 3. Turn ON the ignition, with the engine OFF. 4. Observe the mirror motor output parameters in the appropriate door control module data list. 5. Operate the appropriate mirror switch in the UP, DOWN, LEFT and RIGHT directions. Do all of the mirror motor output parameters change state?	Go to **Step 7**	Go to **Step 4**
4	Did the outside rearview mirror operate in the horizontal direction?	Go to **Step 5**	Go to **Step 6**
5	Test the appropriate vertical mirror motor control circuit(s) for a short to ground or voltage. Refer to **Circuit Testing** and **Wiring Repairs** in Wiring Systems. Did you find and correct the condition?	Go to **Step 11**	Go to **Step 8**
6	Test the appropriate horizontal mirror motor control circuit(s) for a short to ground or voltage. Refer to **Circuit Testing** and **Wiring Repairs** in Wiring Systems. Did you find and correct the condition?	Go to **Step 11**	Go to **Step 8**
7	Inspect for poor connections at the harness connector of the appropriate outside rearview mirror. Refer to **Testing for Intermittent Conditions and Poor Connections** and **Connector Repairs** in Wiring Systems. Did you find and correct the condition?	Go to **Step 11**	Go to **Step 9**
8	Inspect for poor connections at the harness connector of the appropriate door module. Refer to **Testing for Intermittent Conditions and Poor Connections** and **Connector Repairs** in Wiring Systems. Did you find and correct the condition?	Go to **Step 11**	Go to **Step 10**
9	Replace the appropriate outside rearview mirror. Refer to **Mirror Replacement** . Did you complete the replacement?	Go to **Step 11**	-
10	Replace the appropriate door module. Refer to **Door Control Module Replacement** . Did you complete the replacement?	Go to **Step 11**	-
11	1. Use the scan tool in order to clear the DTCs. 2. Operate the vehicle within the Conditions for Running the DTC as specified in the		

	supporting text. Does the DTC reset?	Go to **Step 2**	System OK

DTC B2274-B2275

Circuit Description

The driver door module (DDM) and passenger door module (PDM) provide the window motor control output functions. These output controls allow the DDM and PDM to command the power windows UP or DOWN. The driver and passenger door switch circuits provide inputs to the DDM or PDM when a window switch is activated UP or DOWN. When the DDM or PDM detects an active up or down input from a window switch, the DDM or PDM will command the window motor in the appropriate direction. Each door module accomplishes this by applying voltage to the window motor control circuit depending on the desired window direction. Each door module monitors the amount of current draw on the window motor circuit. If the DDM or PDM detects a short to voltage condition in a window motor control circuit greater than 45 amperes for longer than 1 second, a DTC is set.

Conditions for Setting the DTC

- The DDM or PDM detects current draw in a window motor control circuit greater than 45 amperes.
- Condition must be present for longer than 1 second.

Action Taken When the DTC Sets

- Stores a history DTC B2274 or B2275 in DDM or PDM memory.
- These DTCs can only be set as a history code even if the malfunction is current.
- No driver warning message will be displayed for this DTC.

Conditions for Clearing the DTC

- The DDM or PDM no longer detects current draw in a window motor control circuit greater than 45 amperes for longer than 1 second, and:
- The DTC is cleared using the IPC clearing feature, or
- The DTC is cleared using a scan tool.

Diagnostic Aids

- The following conditions may cause an intermittent malfunction:
  - There is an intermittent sticking or binding condition on a window causing excessive current draw.
  - A window motor is shorted internally.
- If the DTC does not reset after the code is cleared, then the problem may be intermittent. Refer to **Testing for Intermittent Conditions and Poor Connections** in Wiring Systems.

Test Description

The numbers below refer to the step numbers on the diagnostic table.

2: Tests the window motor current draw.

3: Tests a window for proper operation. If a window sticks or binds, this condition must be repaired first.

DTC B2274-B2275

Step	Action	Yes	No
Schematic Reference:Door Control Module Schematics **Connector End View Reference:Power Door Systems Connector End Views**			
1	Did you perform the Door Systems Diagnostic System Check?	Go to **Step 2**	Go to **Diagnostic System Check - Door Systems**
2	1. Install a scan tool. 2. Turn the ignition on, with the engine off. 3. With a scan tool, observe the window motor load parameter in the appropriate Door Control Module data list. 4. Activate the appropriate window switch to the UP and DOWN positions. Does the scan tool display greater than 45 amps?	Go to **Step 3**	Go to **Step 4**
3	Inspect the appropriate window for a sticking or binding condition. Did you find and correct the condition?	Go to **Step 8**	Go to **Step 5**
4	Inspect for poor connections at the harness connector of the appropriate door module. Refer to **Testing for Intermittent Conditions and Poor Connections** and **Connector Repairs** in Wiring Systems. Did you find and correct the condition?	Go to **Step 8**	Go to **Step 6**
5	Inspect for poor connections at the harness connector of the appropriate window motor. Refer to **Testing for Intermittent Conditions and Poor Connections** and **Connector Repairs** in Wiring Systems. Did you find and correct the condition?	Go to **Step 8**	Go to **Step 7**
6	Replace the appropriate door module. Refer to **Door Control Module Replacement** . Did you complete the replacement?	Go to **Step 8**	-
7	Replace the appropriate window motor. Refer to **Window Regulator Replacement** . Did you complete the replacement?	Go to **Step 8**	-
8	1. Use the scan tool in order to clear the DTCs. 2. Operate the vehicle within the Conditions for Running the DTC as specified in the supporting text. Does the DTC reset?	Go to **Step 2**	System OK

DTC B2276-B2277

Circuit Description

The driver door module (DDM) and passenger door module (PDM) provide the door lock motor control output functions. These output controls allow the DDM and PDM to command the door lock motors to Lock and Unlock. When the DDM or PDM detects an active lock or unlock input from a door lock switch, the DDM or PDM will command the door lock motor to Lock or Unlock. Each door module accomplishes this by applying voltage to the door lock or unlock control circuit depending on the desired action. Each door module monitors the control circuits voltage. If the voltage level drops below 7 volts for longer than 200 milliseconds, a DTC is set.

The DDM and PDM also provide the mirror heater control output functions. These output controls allow the DDM and PDM to command the mirror heaters to switch on. When the DDM and PDM receive a message on the serial data line indicating the rear defogger was turned ON, they will activate their respective mirror heater by applying voltage to the mirror heater control circuit. Each door module monitors the control circuits voltage. If the voltage level drops below 7 volts for longer than 200 milliseconds, a DTC is set.

Conditions for Setting the DTC

- The DDM and PDM detects a voltage level drop below 7 volts in a door lock control circuit when a door lock is activated.
- The DDM and PDM detects a voltage level drop below 7 volts in a mirror heater control circuit when a mirror heater is activated.
- Condition must be present for longer than 200 milliseconds.

Action Taken When the DTC Sets

- Stores a history DTC B2276 or B2277 in DDM or PDM memory.
- These DTCs can only be set as a history code even if the malfunction is current.
- No driver warning message will be displayed for this DTC.

Conditions for Clearing the DTC

- The DDM or PDM no longer detects a voltage level drop below 7 volts in a door lock control circuit when a door lock is activated or a voltage level drop below 7 volts in a mirror heater control circuit when a mirror heater is activated, and:
- The DTC is cleared using the IPC clearing feature, or
- The DTC is cleared using a scan tool.

Diagnostic Aids

- The following conditions may cause an intermittent malfunction:
  - There is an intermittent short to ground in a door lock control circuit.
  - There is an intermittent short to ground in a mirror heater control circuit.

- A door lock motor or mirror heater is shorted internally.

- If the DTC does not reset after the code is cleared, then the problem may be intermittent. Refer to **Testing for Intermittent Conditions and Poor Connections** in Wiring Systems.

Test Description

The numbers below refer to the step numbers on the diagnostic table.

2: Tests the mirror heater control circuit for a short to ground.
3: Tests the door lock actuator lock control circuit for a short to ground.
4: Tests the door lock actuator unlock control circuit for a short to ground.

DTC B2276-B2277

Step	Action	Yes	No
Schematic Reference:Door Control Module Schematics **Connector End View Reference:Power Door Systems Connector End Views**			
1	Did you perform the Power Door Systems Diagnostic System Check?	Go to **Step 2**	Go to **Diagnostic System Check - Door Systems**
2	1. Install a scan tool. 2. Turn the ignition on, with the engine off. 3. With a scan tool, observe the mirror heater parameter in the appropriate Door Control Module data list. Does the scan tool display Active?	Go to **Step 5**	Go to **Step 3**
3	With a scan tool, observe the door lock motor parameter in the appropriate Door Control Module data list. Does the scan tool display Active?	Go to **Step 6**	Go to **Step 4**
4	With a scan tool, observe the door unlock motor parameter in the appropriate Door Control Module data list. Does the scan tool display Active?	Go to **Step 7**	Go to **Step 8**
5	Test the appropriate mirror heater control circuit for a short to ground. Refer to **Circuit Testing** and **Wiring Repairs** in Wiring Systems. Did you find and correct the condition?	Go to **Step 12**	Go to **Step 8**
6	Test the appropriate door lock actuator lock control circuit for a short to ground. Refer to **Circuit Testing** and **Wiring Repairs** in Wiring Systems. Did you find and correct the condition?	Go to **Step 12**	Go to **Step 9**
7	Test the appropriate door lock actuator unlock control circuit for a short to ground. Refer to **Circuit Testing** and **Wiring Repairs** in Wiring Systems. Did you find and correct the condition?	Go to **Step 12**	Go to **Step 9**
	Inspect for poor connections at the harness connector of the		

8	appropriate door module. Refer to **Testing for Intermittent Conditions and Poor Connections** and **Connector Repairs** in Wiring Systems. Did you find and correct the condition?	Go to **Step 12**	Go to **Step 10**
9	Inspect for poor connections at the harness connector of the appropriate door lock motor. Refer to **Testing for Intermittent Conditions and Poor Connections** and **Connector Repairs** in Wiring Systems. Did you find and correct the condition?	Go to **Step 12**	Go to **Step 11**
10	Replace the appropriate door module. Refer to **Door Control Module Replacement** . Did you complete the replacement?	Go to **Step 12**	-
11	Replace the appropriate door lock motor. Refer to **Lock Replacement - Door** . Did you complete the replacement?	Go to **Step 12**	-
12	1. Use the scan tool in order to clear the DTCs. 2. Operate the vehicle within the Conditions for Running the DTC as specified in the supporting text. Does the DTC reset?	Go to **Step 2**	System OK

DTC B2278-B2279

Circuit Description

The driver door module (DDM) provides output controls for the driver door switch illumination, memory 1 indicator, memory 2 indicator, LH mirror select indicator and the RH mirror select indicator. These output controls allow the DDM to illuminate the driver door switch back lighting, memory indicators and mirror select indicators. The DDM provides a single power supply for all illuminated light functions. The DDM uses a pulse-width modulated ground output to control the dimming level to the driver door switch back lighting lamp. The DDM also provides a ground output for the memory 1, memory 2, LH and RH mirror select switch indicators. The DDM provides a ground output to each of these indicators to illuminate the applicable indicator based upon the driver door switch signal information. The DDM monitors the amount of current draw on all of the illumination lamp control circuits. If the DDM detects an overcurrent condition for longer than 10 milliseconds, a DTC is set.

The passenger door module (PDM) provides an illuminated LED output control for the passenger door switch assembly. This output control allows the PDM to illuminate the switch assembly when the park lamps and/or headlamps are ON. The PDM provides power and a Pulse-Width Modulation (PWM) ground output to the passenger door switch. The PDM monitors the amount of current draw on the illumination lamp control circuit. If the PDM detects an overcurrent condition for longer than 10 milliseconds, a DTC is set.

Conditions for Setting the DTC

- The DDM or PDM detects an overcurrent condition in any one of the following door switch control circuits:

- LH or RH mirror indicator
- Memory 1 indicator
- Memory 2 indicator
- Driver or passenger door switch Illumination lamp

- Condition must be present for longer than 10 milliseconds.

Action Taken When the DTC Sets

- Stores a history DTC B2278 or B2279 in DDM or PDM memory.
- The appropriate door module will disable the malfunctioning indicator.
- These DTCs can only be set as a history code even if the malfunction is current.
- No driver warning message will be displayed for this DTC.

Conditions for Clearing the DTC

- The DDM or PDM no longer detects an overcurrent condition in any of the applicable indicator/lamp control circuits for longer than 10 milliseconds, and:
- The DTC is cleared using the IPC clearing feature, or
- The DTC is cleared using a scan tool.

Diagnostic Aids

- The following conditions may cause an intermittent malfunction:
  - There is an intermittent short to voltage or ground in the following door switch illumination or indicator control circuits:
    - Driver or passenger door switch illumination lamp
    - Memory 1 select indicator
    - Memory 2 select indicator
    - LH mirror select indicator
    - RH mirror select indicator
  - The driver or passenger door switch indicator/lamp is shorted.
- If the DTC does not reset after the code is cleared, then the problem may be intermittent. Refer to **Testing for Intermittent Conditions and Poor Connections** in Wiring Systems.

Test Description

The numbers below refer to the step numbers on the diagnostic table.

2: This tests if a door switch for an internal short to voltage or ground.

3: This tests a door switch illumination circuits for a short to voltage or ground.

DTC B2278-B2279

Step	Action	Value (s)	Yes	No
Schematic Reference:Door Control Module Schematics **Connector End View Reference:Power Door Systems Connector End Views**				
1	Did you perform the Power Door Systems Diagnostic System Check?	-	Go to **Step 2**	Go to **Diagnostic System Check - Door Systems**
2	1. Turn OFF the ignition. 2. Disconnect the door switch connector of which the DTC was set for. 3. Turn ON the ignition, with the engine OFF. 4. Turn ON the headlamp switch. 5. With a scan tool, clear all RH and LH DCM DTCs. Does the DTC reset?	-	Go to **Step 3**	Go to **Step 5**
3	Test the following appropriate door switch illumination control circuits, if they apply, for a short to ground or voltage. Refer to **Circuit Testing** and **Wiring Repairs** in Wiring Systems. • Door switch illumination lamps • Memory 1 select indicator • Memory 2 select indicator • LH mirror select indicator • RH mirror select indicator Did you find and correct the condition?	-	Go to **Step 6**	Go to **Step 4**
4	Replace the appropriate door module. Refer to **Door Control Module Replacement** . Did you complete the replacement?	-	Go to **Step 6**	-
5	Replace the appropriate door switch. Refer to **Front Door Switch Replacement** . Did you complete the replacement?	-	Go to **Step 6**	-
6	1. Use the scan tool in order to clear the DTCs. 2. Operate the vehicle within the Conditions for Running the DTC as specified in the supporting text. Does the DTC reset?	-	Go to **Step 2**	System OK

DTC B2282-B2285

Circuit Description

The driver door module (DDM) and passenger door module (PDM) each have a high and low power feed. The low power feed, battery 1, is used to provide power for the door module logic and internal driver operation. The high power feed, battery 2, is used to provide power for systems that draw higher amounts of current. The door modules monitor the voltage level at battery 1 and battery 2 to determine if the voltage level is out of range. If the voltage level is out of range, a DTC is set.

Conditions for Setting the DTC

- The door module detects battery 1 or battery 2 voltage range under 8.5 volts or over 16.3 volts.
- Condition must be present for greater than 2 seconds.

Action Taken When the DTC Sets

- Stores a history DTC B2282, B2283, B2284 or B2285 in the door module memory.
- These DTCs can only be set as a history code even if the malfunction is current.
- No driver warning message will be displayed for this DTC.

Conditions for Clearing the DTC

- The door module no longer detects battery 1 or battery 2 voltage below 8.5 volts or higher than 16.3 volts for greater than 2 seconds.
- The DTC is cleared using the IPC clearing feature, or
- The DTC is cleared using a scan tool.

Diagnostic Aids

- The following conditions may cause an intermittent malfunction:
  - There is an intermittent open or short to ground in a battery 1 or battery 2 circuit.
  - The battery voltage is out of range.
  - A charging system malfunction.
- Using a scan tool, select DCM Data display and monitor battery 1 and battery 2 voltage while operating the door locks and heated mirrors. This can determine if battery 1 or battery 2 voltage is affected by these devises and can help duplicate the malfunction.
- If the DTC does not reset after the code is cleared, then the problem may be intermittent. Refer to **Testing for Intermittent Conditions and Poor Connections** in Wiring Systems.

Test Description

The number(s) below refer to the step number(s) on the diagnostic table.

2: This test verifies if the vehicle's Starting/Charging system is functioning properly.

3: This test verifies if the door module is functioning properly.

6: This tests for a short to ground in the door lock actuator control circuits.

7: This tests for a short to ground in the heated mirror element supply voltage circuit.

8: This tests for a short to ground in the door lock actuator motor.

9: This tests for a short to ground in the mirror heater.

DTC B2282-B2285

Step	Action	Value (s)	Yes	No
Schematic Reference:Door Control Module Schematics **Connector End View Reference:Power Door Systems Connector End Views**				
1	Did you perform the Door Systems Diagnostic System Check?	-	Go to **Step 2**	Go to **Diagnostic System Check - Door Systems**
2	Verify that the vehicle's Starting/Charging system is operating properly. Is the Starting/Charging system operating properly?	-	Go to **Step 3**	Go to **Symptoms - Engine Electrical**
3	1. Install a scan tool. 2. Turn ON the ignition, with the engine OFF. 3. With a scan tool, observe the Battery 1 and Battery 2 parameters in the Left Door Control Module or Right Door Control Module data lists. Does the scan tool indicate that the Battery 1 and the Battery 2 parameters are within the specified range?	8.5-16.3 V	Go to **Step 10**	Go to **Step 4**
4	Inspect the PWRFDL fuse. Is the PWRFDL fuse open?	-	Go to **Step 5**	Go to **Testing for Intermittent Conditions and Poor Connections** in Wiring Systems
5	Test the battery positive voltage of the appropriate door module for a short to ground or an open. Refer to **Circuit Testing** and **Wiring Repairs** in Wiring Systems. Did you find and correct the condition?	-	Go to **Step 18**	Go to **Step 6**
6	1. Turn OFF the ignition. 2. Disconnect the appropriate door latch connector C3 of the door module which set the DTC. 3. Replace the PWRFDL fuse. 4. Turn ON the ignition, with the engine OFF. 5. Activate a door lock switch to LOCK and UNLOCK. Does the PWRFDL fuse open?	-	Go to **Step 13**	Go to **Step 7**
	1. Turn OFF the ignition. 2. Leave the appropriate door latch connector C3			

7	disconnected. 3. Disconnect the appropriate outside rearview mirror connector C1 of the door module which set the DTC. 4. Replace the PWRFDL fuse. 5. Start the engine. 6. Activate the heated mirrors. Does the PWRFDL fuse open?	-	Go to **Step 14**	Go to **Step 8**
8	1. Turn OFF the ignition. 2. Connect the door latch connector C3. 3. Leave the outside rearview mirror connector C1 disconnected. 4. Replace the PWRFDL fuse. 5. Turn ON the ignition, with the engine OFF. 6. Activate a door lock switch to LOCK and UNLOCK. Does the PWRFDL fuse open?	-	Go to **Step 11**	Go to **Step 9**
9	1. Turn OFF the ignition. 2. Connect the outside rearview mirror connector C1. 3. Replace the PWRFDL fuse. 4. Start the engine. 5. Activate the heated mirrors. Does the PWRFDL fuse open?	-	Go to **Step 12**	Go to **Step 10**
10	Inspect for poor connections at the harness connectors of the appropriate door module. Refer to **Testing for Intermittent Conditions and Poor Connections** and **Connector Repairs** in Wiring Systems. Did you find and correct the condition?	-	Go to **Step 18**	Go to **Step 15**
11	Inspect for poor connections at the harness connectors of the appropriate door latch. Refer to **Testing for Intermittent Conditions and Poor Connections** and **Connector Repairs** in Wiring Systems. Did you find and correct the condition?	-	Go to **Step 18**	Go to **Step 16**
12	Inspect for poor connections at the harness connectors of the appropriate outside rearview mirror. Refer to **Testing for Intermittent Conditions and Poor Connections** and **Connector Repairs** in Wiring Systems.	-	Go to **Step**	

	Did you find and correct the condition?		**18**	Go to **Step 17**
13	Repair the short to ground in the appropriate door lock actuator control circuit. Refer to **Wiring Repairs** and **Connector Repairs** in Wiring Systems. Did you complete the repair?	-	Go to **Step 18**	-
14	Repair the short to ground in the appropriate heated mirror element supply voltage circuit. Refer to **Wiring Repairs** and **Connector Repairs** in Wiring Systems. Did you complete the repair?	-	Go to **Step 18**	-
15	Replace the appropriate door module. Refer to **Door Control Module Replacement** . Did you complete the replacement?	-	Go to **Step 18**	-
16	Replace the appropriate door latch. Refer to **Lock Replacement - Door** . Did you complete the replacement?	-	Go to **Step 18**	-
17	Replace the appropriate door module. Refer to **Mirror Replacement** . Did you complete the replacement?	-	Go to **Step 18**	-
18	1. Use the scan tool in order to clear the DTCs. 2. Operate the vehicle within the Conditions for Running the DTC as specified in the supporting text. Does the DTC reset?	-	Go to **Step 2**	System OK

DTC B2286-B2287

Circuit Description

The driver door module (DDM) and the passenger door module (PDM) receive vertical and horizontal position signals from the mirrors. These signals are used by the DDM and PDM for memory recall functions to determine the vertical and horizontal positions of the mirrors. The DDM and PDM command the mirror memory settings based on the voltage level they receive back from the position sensors. Each door module provides a 5 volt supply, a signal, and a ground circuit to the sensors. The sensors are variable resistors that the DDM and PDM monitor the voltage level across. When a memory setting is recalled, the DDM and PDM command the mirror motors in the appropriate direction until the position sensors are within the voltage range stored in memory. The DDM and PDM monitor the mirror position sensors 5 volt supply circuits to determine if the voltage level received is out of range. If the DDM or PDM detects a voltage level out of range for greater than 2 seconds, a DTC is set.

Conditions for Setting the DTC

- The DDM or PDM detects a mirror vertical or horizontal position sensor supply voltage range under 4.0 volts or over 5.2 volts.
- Condition must be present for 2 seconds.

Action Taken When the DTC Sets

- Stores a history DTC B2286 or B2287 in DDM or PDM memory.
- These DTCs can only be set as a history code even if the malfunction is current.
- No driver warning message will be displayed for this DTC.

Conditions for Clearing the DTC

- The DDM or PDM detects the mirror vertical and horizontal position sensor supply voltage range between 4.0-5.2 volts for greater than 2 seconds, and:
- The DTC is cleared using the IPC clearing feature, or
- The DTC is cleared using a scan tool.

Diagnostic Aids

- The following conditions may cause an intermittent malfunction:
  - There is an intermittent short to ground or voltage in a mirror position sensor reference circuit.
  - There is an intermittent short to voltage in a mirror position sensor signal circuit.
  - A mirror vertical or horizontal sensor is shorted internally.
- If the DTC does not reset after the code is cleared, then the problem may be intermittent. Refer to **Testing for Intermittent Conditions and Poor Connections** in Wiring Systems.

Test Description

The numbers below refer to the step numbers on the diagnostic table.

2: This tests the mirror position sensor reference voltage using a scan tool. Normal reference voltage range is between 4.0-5.2 volts.

3: This test determines whether the mirror position sensor is shorted internally using a scan tool with the mirror disconnected. Reference voltage with the mirror disconnected is approximately 5.0 volts.

4: This tests for a short to ground in the mirror position sensor reference circuit.

5: This test determines whether the mirror position sensor reference circuit or the mirror position sensor signal circuit is short to voltage. Reference voltage with the mirror position sensor reference circuit short to voltage is B+.

DTC B2286-B2287

Step	Action	Value (s)	Yes	No
Schematic Reference:Door Control Module Schematics **Connector End View Reference:Power Door Systems Connector End Views**				
1	Did you perform the Door Systems Diagnostic System Check?	-	Go to **Step 2**	Go to **Diagnostic System Check - Door Systems**

2	1. Install a scan tool. 2. Turn ON the ignition, with the engine OFF. 3. With a scan tool, observe the Position Sensor Ref parameter in the appropriate door control module Input data list. Does the scan tool indicate that the Position Sensor Ref parameter is within the specified range?	4.0-5.2 V	Go to **Testing for Intermittent Conditions and Poor Connections** in Wiring Systems	Go to **Step 3**
3	1. Turn OFF the ignition. 2. Disconnect the appropriate mirror. 3. Turn ON the ignition, with the engine OFF. 4. With a scan tool, observe the Position Sensor Ref parameter in the appropriate door control module Input data list. Does the scan tool indicate that the Position Sensor Ref parameter is within the specified range?	4.0-5.2 V	Go to **Step 9**	Go to **Step 4**
4	1. Turn OFF the ignition. 2. Connect the appropriate mirror. 3. Turn ON the ignition, with the engine OFF. 4. With a scan tool, observe the Position Sensor Ref parameter in the appropriate door control module Input data list. Does the scan tool indicate that the Position Sensor Ref parameter is less than the specified value?	4.0-5.2 V	Go to **Step 6**	Go to **Step 5**
5	Does the scan tool indicate that the Position Sensor Ref parameter is equal to battery positive voltage?	-	Go to **Step 7**	Go to **Step 8**
6	Test the appropriate 5V reference circuit for a short to ground. Refer to **Circuit Testing** and **Wiring Repairs** in Wiring Systems. Did you find and correct the condition?	-	Go to **Step 13**	Go to **Step 10**
7	Test the appropriate 5V reference circuit for a short to voltage. Refer to **Circuit Testing** and **Wiring Repairs** in Wiring Systems. Did you find and correct the condition?	-	Go to **Step 13**	Go to **Step 10**

8	Test the appropriate signal circuit(s) for a short to voltage. Refer to **Circuit Testing** and **Wiring Repairs** in Wiring Systems. Did you find and correct the condition?	-	Go to **Step 13**	Go to **Step 10**
9	Inspect for poor connections at the harness connector of the appropriate mirror. Refer to **Testing for Intermittent Conditions and Poor Connections** and **Connector Repairs** in Wiring Systems. Did you find and correct the condition?	-	Go to **Step 13**	Go to **Step 11**
10	Inspect for poor connections at the harness connector of the appropriate door module. Refer to **Testing for Intermittent Conditions and Poor Connections** and **Connector Repairs** in Wiring Systems. Did you find and correct the condition?	-	Go to **Step 13**	Go to **Step 12**
11	Replace the appropriate mirror. Refer to **Mirror Replacement** . Did you complete the replacement?	-	Go to **Step 13**	-
12	Replace the appropriate door module. Refer to **Door Control Module Replacement** . Did you complete the replacement?	-	Go to **Step 13**	-
13	1. Use the scan tool in order to clear the DTCs. 2. Operate the vehicle within the Conditions for Running the DTC as specified in the supporting text. Does the DTC reset?	-	Go to **Step 2**	System OK

SYMPTOMS - DOORS

IMPORTANT: For the Outside Automatic Day-Night Mirror system, review the system operation in order to familiarize yourself with the system functions. Refer to Outside Mirror Description and Operation .

For the other Door systems, the following steps must be performed before using the symptom tables.

1. Perform the **Diagnostic System Check - Door Systems** before using the symptom tables in order to verify that all of the following are true:
   - There are no DTCs set.
   - The control modules can communicate via the serial data link.
2. Review the system description and operation in order to familiarize yourself with the system functions.

Refer to the following:

- **Power Windows Description and Operation**
- **Power Door Locks Description and Operation**
- **Door Ajar Indicator Description and Operation**
- **Outside Mirror Description and Operation**

Visual/Physical Inspection

- Inspect for aftermarket devices which could affect the operation of the power windows, power door locks, or power mirrors. Refer to **Checking Aftermarket Accessories** in Wiring Systems.
- Inspect the easily accessible or visible system components for obvious damage or conditions which could cause the symptom.

Intermittent

Faulty electrical connections or wiring may be the cause of intermittent conditions. Refer to **Testing for Intermittent Conditions and Poor Connections** in Wiring Systems.

Symptom List

Refer to a symptom diagnostic procedure from the following list in order to diagnose the symptom:

- **Power Window Inoperative - Driver Door**
- **Power Window Inoperative - Passenger Door**
- **Door Ajar Indicator Inoperative**
- **Power Door Locks Inoperative - Key Cylinder Switches**
- **Power Door Lock Inoperative - Driver Door**
- **Power Door Locks Inoperative - Passenger Door**
- **Power Mirrors Inoperative**
- **Power Mirror Select Switch Indicator Malfunction**
- **Mirrors - Outside Automatic Day-Night Feature Inoperative**
- **Heated Mirrors Inoperative**

POWER WINDOW INOPERATIVE - DRIVER DOOR

Power Window Inoperative - Driver Door

Step	Action	Yes	No
Schematic Reference:Door Control Module Schematics **Connector End View Reference:Power Door Systems Connector End Views**			
1	Did you perform the Door Systems Diagnostic System Check?	Go to **Step 2**	Go to **Diagnostic System Check - Door Systems**
	Verify that the driver door power window	Go to **Testing for**	

2	inoperative fault is present. Does the driver door power window operate normallly?	**Intermittent Conditions and Poor Connections** in Wiring Systems	Go to **Step 3**
3	Are the power mirrors and driver door lock inoperative also?	Go to **Step 6**	Go to **Step 4**
4	1. Install a scan tool. 2. Turn ON the ignition, with the engine OFF. 3. Observe the Driver Window Down Switch and Driver Window Up Switch parameters in the Left Door Control Module data list. 4. Operate the driver window switch UP and DOWN. Does the scan tool display Active for the Driver Window Down Switch and Driver Window Up Switch parameters?	Go to **Step 5**	Go to **Step 7**
5	1. Turn OFF the ignition. 2. Disconnect the driver window motor. 3. Turn ON the ignition, with the engine OFF. 4. Connect a test lamp between the power window left front up control circuit of the driver window motor and the power window left front down control circuit of the driver window motor. 5. Operate the driver window switch UP and DOWN. Does the test lamp illuminate in both directions?	Go to **Step 9**	Go to **Step 8**
6	Test the driver door switch ground circuit for an open. Refer to **Circuit Testing** and **Wiring Repairs** in Wiring Systems. Did you find and correct the condition?	Go to **Step 15**	Go to **Step 10**
7	Test the power window master switch left front signal circuits for a short to voltage or an open. Refer to **Circuit Testing** and **Wiring Repairs** in Wiring Systems. Did you find and correct the condition?	Go to **Step 15**	Go to **Step 10**
8	Test the power window motor left front control circuits for an open. Refer to **Circuit Testing** and **Wiring Repairs** in Wiring Systems. Did you find and correct the condition?	Go to **Step 15**	Go to **Step 11**
	Inspect for poor connections at the harness connector of the driver window motor. Refer to		

9	**Testing for Intermittent Conditions and Poor Connections** and **Connector Repairs** in Wiring Systems. Did you find and correct the condition?	Go to **Step 15**	Go to **Step 12**
10	Inspect for poor connections at the harness connector of the driver door switch. Refer to **Testing for Intermittent Conditions and Poor Connections** and **Connector Repairs** in Wiring Systems. Did you find and correct the condition?	Go to **Step 15**	Go to **Step 13**
11	Inspect for poor connections at the harness connector of the driver door module (DDM). Refer to **Testing for Intermittent Conditions and Poor Connections** and **Connector Repairs** in Wiring Systems. Did you find and correct the condition?	Go to **Step 15**	Go to **Step 14**
12	Replace the driver window motor. Refer to **Window Regulator Replacement** . Did you complete the replacement?	Go to **Step 15**	-
13	Replace the driver door switch. Refer to **Front Door Switch Replacement** . Did you complete the replacement?	Go to **Step 15**	-
14	Replace the driver door module. Refer to **Door Control Module Replacement** . Did you complete the replacement?	Go to **Step 15**	-
15	Operate the system in order to verify the repair. Did you correct the condition?	System OK	Go to **Step 2**

POWER WINDOW INOPERATIVE - PASSENGER DOOR

Power Window Inoperative - Passenger Door

Step	Action	Yes	No
Schematic Reference:Door Control Module Schematics **Connector End View Reference:Power Door Systems Connector End Views**			
1	Did you perform the Door Systems Diagnostic System Check?	Go to **Step 2**	Go to **Diagnostic System Check - Door Systems**
2	Verify that the passenger door power window inoperative fault is present. Does the passenger door power window operate normallly?	Go to **Testing for Intermittent Conditions and Poor Connections** in Wiring Systems	Go to **Step 3**
3	Is the driver window, driver door lock and power mirrors inoperative also?	Go to **Step 8**	Go to **Step 4**
4	Is the passenger door lock inoperative also?	Go to **Step 9**	Go to **Step 5**
	1. Install a scan tool.		

5	2. Turn ON the ignition, with the engine OFF. 3. Observe the Psgr. Window Down Switch and Psgr. Window Up Switch parameters in the Left Door Control Module data list. 4. Operate the driver door switch passenger window switch UP and DOWN. Does the scan tool display Active for the Psgr. Window Down Switch and Psgr. Window Up Switch parameters?	Go to **Step 6**	Go to **Step 10**
6	1. Observe the Psgr. Window Down Switch and Psgr. Window Up Switch parameters in the Right Door Control Module data list. 2. Operate the passenger door window switch UP and DOWN. Does the scan tool display Active for the Psgr. Window Down Switch and Psgr. Window Up Switch parameters?	Go to **Step 7**	Go to **Step 11**
7	1. Turn OFF the ignition. 2. Disconnect the passenger window motor. 3. Turn ON the ignition, with the engine OFF. 4. Connect a test lamp between the power window right front up control circuit of the passenger window motor and the power window right front down control circuit of the passenger window motor. 5. Operate the passenger door window switch UP and DOWN. Does the test lamp illuminate in both directions?	Go to **Step 13**	Go to **Step 12**
8	Test the driver door switch ground circuit for an open. Refer to **Circuit Testing** and **Wiring Repairs** in Wiring Systems. Did you find and correct the condition?	Go to **Step 21**	Go to **Step 14**
9	Test the passenger door switch ground circuit for an open. Refer to **Circuit Testing** and **Wiring Repairs** in Wiring Systems. Did you find and correct the condition?	Go to **Step 21**	Go to **Step 15**
10	Test the driver door switch power window master switch right front signal circuits for a short to voltage or an open. Refer to **Circuit Testing** and **Wiring Repairs** in Wiring Systems.		

	Did you find and correct the condition?	Go to **Step 21**	Go to **Step 14**
11	Test the passenger door switch power window master switch right front signal circuits for a short to voltage or an open. Refer to **Circuit Testing** and **Wiring Repairs** in Wiring Systems. Did you find and correct the condition?	Go to **Step 21**	Go to **Step 15**
12	Test the passenger window motor power window motor left front control circuits for an open. Refer to **Circuit Testing** and **Wiring Repairs** in Wiring Systems. Did you find and correct the condition?	Go to **Step 21**	Go to **Step 16**
13	Inspect for poor connections at the harness connector of the passenger window motor. Refer to **Testing for Intermittent Conditions and Poor Connections** and **Connector Repairs** in Wiring Systems. Did you find and correct the condition?	Go to **Step 21**	Go to **Step 17**
14	Inspect for poor connections at the harness connector of the driver door switch. Refer to **Testing for Intermittent Conditions and Poor Connections** and **Connector Repairs** in Wiring Systems. Did you find and correct the condition?	Go to **Step 21**	Go to **Step 18**
15	Inspect for poor connections at the harness connector of the passenger door switch. Refer to **Testing for Intermittent Conditions and Poor Connections** and **Connector Repairs** in Wiring Systems. Did you find and correct the condition?	Go to **Step 21**	Go to **Step 19**
16	Inspect for poor connections at the harness connector of the passenger door module (PDM). Refer to **Testing for Intermittent Conditions and Poor Connections** and **Connector Repairs** in Wiring Systems. Did you find and correct the condition?	Go to **Step 21**	Go to **Step 20**
17	Replace the passenger window motor. Refer to **Window Regulator Replacement** . Did you complete the replacement?	Go to **Step 21**	-
18	Replace the driver door switch. Refer to **Front Door Switch Replacement** . Did you complete the replacement?	Go to **Step 21**	-
19	Replace the passenger door switch. Refer to **Front Door Switch Replacement** . Did you complete the replacement?	Go to **Step 21**	-
20	Replace the passenger door module. Refer to **Door Control Module Replacement** .		

	Did you complete the replacement?	Go to **Step 21**	-
21	Operate the system in order to verify the repair. Did you correct the condition?	System OK	Go to **Step 2**

DOOR AJAR INDICATOR ALWAYS ON

Door Ajar Indicator Always On

Step	Action	Yes	No
Schematic Reference:Door Control Module Schematics **Connector End View Reference:Power Door Systems Connector End Views**			
1	Did you perform the Door Systems Diagnostic System Check?	Go to **Step 2**	Go to **Diagnostic System Check - Door Systems**
2	Verify that the door ajar indicator always on fault is present Does the door ajar indicator operate normally?	Go to **Testing for Intermittent Conditions and Poor Connections** in Wiring Systems	Go to **Step 3**
3	1. Close both vehicle doors. 2. Install a scan tool. 3. Turn ON the ignition, with the engine OFF. 4. With a scan tool, observe the driver door ajar sw. and passenger door ajar sw. parameters in the Body Control Module data list. Does the scan tool display Closed?	Go to **Step 6**	Go to **Step 4**
4	1. Turn OFF the ignition. 2. Disconnect the appropriate door latch C3 harness connector. 3. Turn ON the ignition, with the engine OFF. 4. With a scan tool, observe the driver door ajar sw. and passenger door ajar sw. parameters in the Body Control Module data list. Does the scan tool display Closed?	Go to **Step 7**	Go to **Step 5**
5	Test the appropriate front door ajar switch signal circuit for a short to ground. Refer to **Circuit Testing** and **Wiring Repairs** in Wiring Systems. Did you find and correct the condition?	Go to **Step 12**	Go to **Step 8**
6	Inspect for poor connections at the harness connectors of the instrument panel cluster (IPC). Refer to **Testing for Intermittent Conditions and Poor Connections**		

	and **Connector Repairs** in Wiring Systems. Did you find and correct the condition?	Go to **Step 12**	Go to **Step 9**
7	Inspect for poor connections at the harness connectors of the appropriate door latch. Refer to **Testing for Intermittent Conditions and Poor Connections** and **Connector Repairs** in Wiring Systems. Did you find and correct the condition?	Go to **Step 12**	Go to **Step 10**
8	Inspect for poor connections at the harness connectors of the body control module (BCM). Refer to **Testing for Intermittent Conditions and Poor Connections** and **Connector Repairs** in Wiring Systems. Did you find and correct the condition?	Go to **Step 12**	Go to **Step 11**
9	Replace the instrument panel cluster. Refer to **Instrument Panel Cluster (IPC) Replacement** in Instrument, Panel, Gages and Console. Did you complete the replacement?	Go to **Step 12**	-
10	Replace the appropriate door latch. Refer to **Lock Replacement - Door** . Did you complete the replacement?	Go to **Step 12**	-
11	1. Perform the set up procedure for the body control module. Refer to **Body Control Module (BCM) Programming/RPO Configuration** . 2. Replace the body control module. Refer to **Body Control Module Replacement** . Did you complete the replacement?	Go to **Step 12**	-
12	Operate the system in order to verify the repair. Did you correct the condition?	System OK	Go to **Step 2**

DOOR AJAR INDICATOR INOPERATIVE

Door Ajar Indicator Inoperative

Step	Action	Yes	No
Schematic Reference:Door Control Module Schematics **Connector End View Reference:Power Door Systems Connector End Views**			
1	Did you perform the Door Systems Diagnostic System Check?	Go to **Step 2**	Go to **Diagnostic System Check - Door Systems**
2	Verify that the door ajar indicator inoperative fault is present Does the door ajar indicator operate normally?	Go to **Testing for Intermittent Conditions and Poor Connections** in Wiring Systems	Go to **Step 3**

3	1. Turn OFF the ignition. 2. Disconnect the appropriate door latch C3 harness connector. 3. Connect a 3 amp fused jumper wire between the front door ajar switch signal circuit and a good ground. 4. Turn ON the ignition, with the engine OFF. Does the DOOR AJAR indicator illuminate?	Go to **Step 4**	Go to **Step 5**
4	1. Turn OFF the ignition. 2. Connect a 3 amp fused jumper wire between the front door ajar switch signal circuit and the ground circuit of the appropriate door latch C3 harness connector. 3. Turn ON the ignition, with the engine OFF. Does the DOOR AJAR indicator illuminate?	Go to **Step 7**	Go to **Step 10**
5	Test the appropriate front door ajar switch signal circuit for an open. Refer to **Circuit Testing** and **Wiring Repairs** in Wiring Systems. Did you find and correct the condition?	Go to **Step 14**	Go to **Step 6**
6	1. Connect the appropriate door latch C3 harness connector. 2. Install a scan tool. 3. Turn ON the ignition, with the engine OFF. 4. Observe the appropriate door ajar switch parameter in the Body Control Module Input Data 2 data list. 5. Open the appropriate door. Does the scan tool display Closed?	Go to **Step 8**	Go to **Step 9**
7	Inspect for poor connections at the harness connectors of the appropriate door latch. Refer to **Testing for Intermittent Conditions and Poor Connections** and **Connector Repairs** in Wiring Systems. Did you find and correct the condition?	Go to **Step 14**	Go to **Step 11**
8	Inspect for poor connections at the harness connectors of the body control module (BCM). Refer to **Testing for Intermittent Conditions and Poor Connections** and **Connector Repairs** in Wiring Systems. Did you find and correct the condition?	Go to **Step 14**	Go to **Step 12**
	Inspect for poor connections at the harness connectors of the instrument panel cluster (IPC). Refer to **Testing**		

9	**for Intermittent Conditions and Poor Connections** and **Connector Repairs** in Wiring Systems. Did you find and correct the condition?	Go to **Step 14**	Go to **Step 13**
10	Repair the open in the appropriate door latch ground circuit. Refer to **Wiring Repairs** in Wiring Systems. Did you complete the repair?	Go to **Step 14**	-
11	Replace the appropriate door latch. Refer to **Lock Replacement - Door** . Did you complete the replacement?	Go to **Step 14**	-
12	1. Perform the set up procedure for the body control module. Refer to **Body Control Module (BCM) Programming/RPO Configuration** . 2. Replace the body control module. Refer to **Body Control Module Replacement** . Did you complete the replacement?	Go to **Step 14**	-
13	Replace the instrument panel cluster. Refer to **Instrument Panel Cluster (IPC) Replacement** in Instrument, Panel, Gages and Console. Did you complete the replacement?	Go to **Step 14**	-
14	Operate the system in order to verify the repair. Did you correct the condition?	System OK	Go to **Step 2**

POWER DOOR LOCKS INOPERATIVE - KEY CYLINDER SWITCHES

Power Door Locks Inoperative - Key Cylinder Switches

Step	Action	Yes	No
Schematic Reference:Door Control Module Schematics **Connector End View Reference:Power Door Systems Connector End Views**			
1	Did you perform the Door Systems Diagnostic System Check?	Go to **Step 2**	Go to **Diagnostic System Check - Door Systems**
2	**IMPORTANT:** **Verify that the linkage between the door lock cylinder and the door lock is not loose or disconnected.** Verify that the power door locks key cylinder switches inoperative fault is present.Does the power door locks key cylinder switches system operate normally?	Go to **Testing for Intermittent Conditions and Poor Connections** in Wiring Systems	Go to **Step 3**
3	Does the power door locks system operate normally?	Go to **Step 4**	Go to **Symptoms - Doors**
	1. Install a scan tool.		

4	2. With a scan tool, observe the Door Key Unlock parameter in the appropriate door control module Inputs data list. 3. Insert the door lock key in the door lock cylinder. 4. Turn the door lock key to the Unlock position. Does the scan tool display Active?	Go to **Step 8**	Go to **Step 5**
5	1. Install a scan tool. 2. Disconnect the appropriate door latch C1 harness connector. 3. Connect a 3 amp fused jumper wire between the door key switch signal circuit and the ground circuit of the appropriate door latch C1 harness connector. 4. With a scan tool, observe the Door Key Unlock parameter in the appropriate door control module Inputs data list. Does the scan tool display Active?	Go to **Step 9**	Go to **Step 6**
6	1. Disconnect the 3 amp fused jumper wire. 2. Probe the door key switch signal circuit of the appropriate door latch C1 harness connector with a test lamp that is connected to a good ground. Does the test lamp illuminate?	Go to **Step 7**	Go to **Step 10**
7	Probe the ground circuit of the appropriate door latch C1 harness connector with a test lamp that is connected to B+. Does the test lamp illuminate?	Go to **Step**	Go to **Step 11**
8	Inspect for poor connections at the harness connectors of the appropriate door module. Refer to **Testing for Intermittent Conditions and Poor Connections** and **Connector Repairs** in Wiring Systems. Did you find and correct the condition?	Go to **Step 14**	Go to **Step 12**
9	Inspect for poor connections at the harness connectors of the appropriate door latch. Refer to **Testing for Intermittent Conditions and Poor Connections** and **Connector Repairs** in Wiring Systems. Did you find and correct the condition?	Go to **Step 14**	Go to **Step 13**

10	Repair the open in the appropriate door key switch signal circuit. Refer to **Wiring Repairs** in Wiring Systems. Did you complete the repair?	Go to **Step 14**	-
11	Repair the open in the appropriate ground circuit. Refer to **Wiring Repairs** in Wiring Systems. Did you complete the repair?	Go to **Step 14**	-
12	Replace the appropriate door module. Refer to **Door Control Module Replacement** . Did you complete the replacement?	Go to **Step 14**	-
13	Replace the appropriate door latch. Refer to **Lock Replacement - Door** . Did you complete the replacement?	Go to **Step 14**	-
14	Operate the system in order to verify the repair. Did you correct the condition?	System OK	Go to **Step 2**

POWER DOOR LOCK INOPERATIVE - DRIVER DOOR

Power Door Lock Inoperative - Driver Door

Step	Action	Yes	No
Schematic Reference:Door Control Module Schematics **Connector End View Reference:Power Door Systems Connector End Views**			
1	Did you perform the Door Systems Diagnostic System Check?	Go to **Step 2**	Go to **Diagnostic System Check - Door Systems**
2	Verify that the driver door power door lock inoperative fault is present. Does the driver door power door lock operate normallly?	Go to **Testing for Intermittent Conditions and Poor Connections** in Wiring Systems	Go to **Step 3**
3	Are the power mirrors and driver window inoperative also?	Go to **Step 6**	Go to **Step 4**
4	1. Install a scan tool. 2. Turn ON the ignition, with the engine OFF. 3. Observe the Door Lock Switch and Door Unlock Switch parameters in the Left Door Control Module data list. 4. Actuate the driver door lock switch to LOCK and UNLOCK. Does the scan tool display Active for the Door Lock Switch and Door Unlock Switch parameters?	Go to **Step 5**	Go to **Step 7**
	1. Turn OFF the ignition. 2. Disconnect the driver door latch C3		

5	connector. 3. Turn ON the ignition, with the engine OFF. 4. Connect a test lamp between the door lock actuator lock control circuit of the driver door latch C3 connector and the door lock actuator unlock control circuit of the driver door latch C3 connector. 5. Actuate the driver door lock switch to LOCK and UNLOCK. Does the test lamp illuminate in both directions?	Go to **Step 9**	Go to **Step 8**
6	Test the driver door switch ground circuit for an open. Refer to **Circuit Testing** and **Wiring Repairs** in Wiring Systems. Did you find and correct the condition?	Go to **Step 15**	Go to **Step 10**
7	Test the driver door lock switch signal circuits for a short to voltage or an open. Refer to **Circuit Testing** and **Wiring Repairs** in Wiring Systems. Did you find and correct the condition?	Go to **Step 15**	Go to **Step 10**
8	Test the driver door lock actuator control circuits for an open. Refer to **Circuit Testing** and **Wiring Repairs** in Wiring Systems. Did you find and correct the condition?	Go to **Step 15**	Go to **Step 11**
9	Inspect for poor connections at the harness connectors of the driver door latch. Refer to **Testing for Intermittent Conditions and Poor Connections** and **Connector Repairs** in Wiring Systems. Did you find and correct the condition?	Go to **Step 15**	Go to **Step 12**
10	Inspect for poor connections at the harness connector of the driver door switch. Refer to **Testing for Intermittent Conditions and Poor Connections** and **Connector Repairs** in Wiring Systems. Did you find and correct the condition?	Go to **Step 15**	Go to **Step 13**
11	Inspect for poor connections at the harness connector of the driver door module (DDM). Refer to **Testing for Intermittent Conditions and Poor Connections** and **Connector Repairs** in Wiring Systems. Did you find and correct the condition?	Go to **Step 15**	Go to **Step 14**
12	Replace the driver door latch. Refer to **Lock Replacement - Door** . Did you complete the replacement?	Go to **Step 15**	-
	Replace the driver door switch. Refer to **Front**		

13	**Door Switch Replacement** . Did you complete the replacement?	Go to **Step 15**	-
14	Replace the driver door module. Refer to **Door Control Module Replacement** . Did you complete the replacement?	Go to **Step 15**	-
15	Operate the system in order to verify the repair. Did you correct the condition?	System OK	Go to **Step 2**

POWER DOOR LOCKS INOPERATIVE - PASSENGER DOOR

Power Door Locks Inoperative - Passenger Door

Step	Action	Yes	No
Schematic Reference:Door Control Module Schematics **Connector End View Reference:Power Door Systems Connector End Views**			
1	Did you perform the Door Systems Diagnostic System Check?	Go to **Step 2**	Go to **Diagnostic System Check - Door Systems**
2	Verify that the passenger door power door lock inoperative fault is present. Does the passenger door power door lock operate normallly?	Go to **Testing for Intermittent Conditions and Poor Connections** in Wiring Systems	Go to **Step 3**
3	Is the driver window, driver door lock and power mirrors inoperative also?	Go to **Step 8**	Go to **Step 4**
4	Is the passenger window inoperative also?	Go to **Step 9**	Go to **Step 5**
5	1. Install a scan tool. 2. Turn ON the ignition, with the engine OFF. 3. Observe the Door Lock Switch and Door Unlock Switch parameters in the Left Door Control Module data list. 4. Actuate the driver door lock switch to LOCK and UNLOCK. Does the scan tool display Active for the Door Lock Switch and Door Unlock Switch parameters?	Go to **Step 6**	Go to **Step 10**
6	1. Observe the Door Lock Switch and Door Unlock Switch parameters in the Right Door Control Module data list. 2. Actuate the passenger door lock switch to LOCK and UNLOCK. Does the scan tool display Active for the Door Lock Switch and Door Unlock Switch parameters?	Go to **Step 7**	Go to **Step 11**
	1. Turn OFF the ignition.		

7	2. Disconnect the passenger door latch C3 connector. 3. Turn ON the ignition, with the engine OFF. 4. Connect a test lamp between the door lock actuator lock control circuit of the passenger door latch C3 connector and the door lock actuator unlock control circuit of the passenger door latch C3 connector. 5. Actuate the driver door lock switch to LOCK and UNLOCK. Does the test lamp illuminate in both directions?	Go to **Step 13**	Go to **Step 12**
8	Test the driver door switch ground circuit for an open. Refer to **Circuit Testing** and **Wiring Repairs** in Wiring Systems. Did you find and correct the condition?	Go to **Step 21**	Go to **Step 14**
9	Test the passenger door switch ground circuit for an open. Refer to **Circuit Testing** and **Wiring Repairs** in Wiring Systems. Did you find and correct the condition?	Go to **Step 21**	Go to **Step 15**
10	Test the driver door lock switch signal circuits for a short to voltage or an open. Refer to **Circuit Testing** and **Wiring Repairs** in Wiring Systems. Did you find and correct the condition?	Go to **Step 21**	Go to **Step 14**
11	Test the passenger door lock switch signal circuits for a short to voltage or an open. Refer to **Circuit Testing** and **Wiring Repairs** in Wiring Systems. Did you find and correct the condition?	Go to **Step 21**	Go to **Step 15**
12	Test the passenger door lock actuator control circuits for an open. Refer to **Circuit Testing** and **Wiring Repairs** in Wiring Systems. Did you find and correct the condition?	Go to **Step 21**	Go to **Step 16**
13	Inspect for poor connections at the harness connectors of the passenger door latch. Refer to **Testing for Intermittent Conditions and Poor Connections** and **Connector Repairs** in Wiring Systems. Did you find and correct the condition?	Go to **Step 21**	Go to **Step 17**
14	Inspect for poor connections at the harness connector of the driver door switch. Refer to **Testing for Intermittent Conditions and Poor Connections** and **Connector Repairs** in Wiring Systems. Did you find and correct the condition?	Go to **Step 21**	Go to **Step 18**
	Inspect for poor connections at the harness		

15	connector of the passenger door switch. Refer to **Testing for Intermittent Conditions and Poor Connections** and **Connector Repairs** in Wiring Systems. Did you find and correct the condition?	Go to **Step 21**	Go to **Step 19**
16	Inspect for poor connections at the harness connector of the passenger door module (PDM). Refer to **Testing for Intermittent Conditions and Poor Connections** and **Connector Repairs** in Wiring Systems. Did you find and correct the condition?	Go to **Step 21**	Go to **Step 20**
17	Replace the passenger door latch. Refer to **Lock Replacement - Door** . Did you complete the replacement?	Go to **Step 21**	-
18	Replace the driver door switch. Refer to **Front Door Switch Replacement** . Did you complete the replacement?	Go to **Step 21**	-
19	Replace the passenger door switch. Refer to **Front Door Switch Replacement** . Did you complete the replacement?	Go to **Step 21**	-
20	Replace the passenger door module. Refer to **Door Control Module Replacement** . Did you complete the replacement?	Go to **Step 21**	-
21	Operate the system in order to verify the repair. Did you correct the condition?	System OK	Go to **Step 2**

POWER MIRRORS INOPERATIVE

Power Mirrors Inoperative

Step	Action	Yes	No
Schematic Reference:Door Control Module Schematics **Connector End View Reference:Power Door Systems Connector End Views**			
1	Did you perform the Door Systems Diagnostic System Check?	Go to **Step 2**	Go to **Diagnostic System Check - Door Systems**
2	Verify that the power mirrors inoperative fault is present. Does the power mirrors system operate normally?	Go to **Testing for Intermittent Conditions and Poor Connections** in Wiring Systems	Go to **Step 3**
3	Are both mirrors inoperative, or do both mirrors have an inoperative direction?	Go to **Step 4**	Go to **Step 5**
	1. Install a scan tool. 2. Turn ON the ignition, with the engine OFF. 3. Observe the Mirror Right Switch, Mirror Left		

4	Switch, Mirror Down Switch and Mirror Up Switch parameters in the Left Door Control Module data list. 4. Actuate the mirror switch in the RIGHT, LEFT, DOWN and UP directions. Does the scan tool display Inactive for any of the parameters?	Go to **Step 8**	Go to **Step 13**
5	Is the driver mirror inoperative?	Go to **Step 6**	Go to **Step 7**
6	1. Install a scan tool. 2. Turn ON the ignition, with the engine OFF. 3. Observe the Drv Mirror Switch parameter in the Left Door Control Module data list. 4. Press the LH Mirror select switch on the driver door switch. Does the scan tool display Inactive?	Go to **Step 9**	Go to **Step 10**
7	1. Install a scan tool. 2. Turn ON the ignition, with the engine OFF. 3. Observe the Psgr. Mirror Switch parameter in the Left Door Control Module data list. 4. Press the RH Mirror select switch on the driver door switch. Does the scan tool display Inactive?	Go to **Step 11**	Go to **Step 12**
8	Test the appropriate mirror switch signal circuit for a short to voltage or an open. Refer to **Circuit Testing** and **Wiring Repairs** in Wiring Systems. Did you find and correct the condition?	Go to **Step 21**	Go to **Step 14**
9	Test the LH mirror select switch signal circuit for a short to voltage or an open. Refer to **Circuit Testing** and **Wiring Repairs** in Wiring Systems. Did you find and correct the condition?	Go to **Step 21**	Go to **Step 14**
10	Test the appropriate left mirror motor control circuit (s) for an open. Refer to **Circuit Testing** and **Wiring Repairs** in Wiring Systems. Did you find and correct the condition?	Go to **Step 21**	Go to **Step 15**
11	Test the RH mirror select switch signal circuit for a short to voltage or an open. Refer to **Circuit Testing** and **Wiring Repairs** in Wiring Systems. Did you find and correct the condition?	Go to **Step 21**	Go to **Step 14**
12	Test the appropriate right mirror motor control circuit (s) for an open. Refer to **Circuit Testing** and **Wiring**		

	Repairs in Wiring Systems. Did you find and correct the condition?	Go to **Step 21**	Go to **Step 16**
13	Inspect for poor connections at the harness connector of the driver door module. Refer to **Testing for Intermittent Conditions and Poor Connections** and **Connector Repairs** in Wiring Systems. Did you find and correct the condition?	Go to **Step 21**	Go to **Step 17**
14	Inspect for poor connections at the harness connector of the driver door switch. Refer to **Testing for Intermittent Conditions and Poor Connections** and **Connector Repairs** in Wiring Systems. Did you find and correct the condition?	Go to **Step 21**	Go to **Step 18**
15	Inspect for poor connections at the harness connector of the appropriate driver outside rearview mirror. Refer to **Testing for Intermittent Conditions and Poor Connections** and **Connector Repairs** in Wiring Systems. Did you find and correct the condition?	Go to **Step 21**	Go to **Step 19**
16	Inspect for poor connections at the harness connector of the appropriate passenger outside rearview mirror. Refer to **Testing for Intermittent Conditions and Poor Connections** and **Connector Repairs** in Wiring Systems. Did you find and correct the condition?	Go to **Step 21**	Go to **Step 20**
17	Replace the appropriate door module. Refer to **Door Control Module Replacement** . Did you complete the replacement?	Go to **Step 21**	-
18	Replace the driver door switch. Refer to **Front Door Switch Replacement** . Did you complete the replacement?	Go to **Step 21**	-
19	Replace the driver outside rearview mirror. Refer to **Mirror Replacement** . Did you complete the replacement?	Go to **Step 21**	-
20	Replace the passenger outside rearview mirror. Refer to **Mirror Replacement** . Did you complete the replacement?	Go to **Step 21**	-
21	Operate the system in order to verify the repair. Did you correct the condition?	System OK	Go to **Step 2**

POWER MIRROR SELECT SWITCH INDICATOR MALFUNCTION

Power Mirror Select Switch Indicator Malfunction

Step	Action	Yes	No
Schematic Reference:Door Control Module Schematics **Connector End View Reference:Power Door Systems Connector End Views**			

1	Did you perform the Door Systems Diagnostic System Check?	Go to **Step 2**	Go to **Diagnostic System Check - Door Systems**
2	Verify that the power mirror select switch indicator malfunction fault is present. Does the power mirror select switch indicator operate normally?	Go to **Testing for Intermittent Conditions and Poor Connections** in Wiring Systems	Go to **Step 3**
3	Is the power mirror select switch indicator always ON?	Go to **Step 4**	Go to **Step 5**
4	1. Turn OFF the ignition. 2. Disconnect the driver door module (DDM) C4 harness connector. 3. Install a scan tool. 4. Turn ON the ignition, with the engine OFF. 5. Observe the Drv Mirror Select Led and Psgr Mirror Select Led parameters in the Left Door Control Module Inputs data list. Does the scan tool display Inactive for both parameters?	Go to **Step 7**	Go to **Step 11**
5	1. Install a scan tool. 2. Turn ON the ignition, with the engine OFF. 3. Observe the Drv Mirror Select Led and Psgr Mirror Select Led parameters in the Left Door Control Module Inputs data list. Does the scan tool display Inactive for both parameters?	Go to **Step 11**	Go to **Step 6**
6	Are both of the power mirror select switch indicators inoperative?	Go to **Step 8**	Go to **Step 9**
7	Test the appropriate mirror select indicator control circuit for a short to ground. Refer to **Circuit Testing** and **Wiring Repairs** in Wiring Systems. Did you find and correct the condition?	Go to **Step 15**	Go to **Step 12**
8	Test the battery positive voltage circuit for an open. Refer to **Circuit Testing** and **Wiring Repairs** in Wiring Systems. Did you find and correct the condition?	Go to **Step 15**	Go to **Step 12**
9	Test the appropriate mirror select indicator control circuit for an open. Refer to **Circuit Testing** and **Wiring Repairs** in Wiring Systems. Did you find and correct the condition?	Go to **Step 15**	Go to **Step 10**
	Test the appropriate mirror select switch signal		

10	circuit for an open. Refer to **Circuit Testing** and **Wiring Repairs** in Wiring Systems. Did you find and correct the condition?	Go to **Step 15**	Go to **Step 12**
11	Inspect for poor connections at the harness connector of the driver door module (DDM). Refer to **Testing for Intermittent Conditions and Poor Connections** and **Connector Repairs** in Wiring Systems. Did you find and correct the condition?	Go to **Step 15**	Go to **Step 13**
12	Inspect for poor connections at the harness connector of the driver door switch. Refer to **Testing for Intermittent Conditions and Poor Connections** and **Connector Repairs** in Wiring Systems. Did you find and correct the condition?	Go to **Step 15**	Go to **Step 14**
13	Replace the driver door module. Refer to **Door Control Module Replacement** . Did you complete the replacement?	Go to **Step 15**	-
14	Replace the driver door switch. Refer to **Front Door Switch Replacement** . Did you complete the replacement?	Go to **Step 15**	-
15	Operate the system in order to verify the repair. Did you correct the condition?	System OK	Go to **Step 3**

POWER MIRRORS - MEMORY FUNCTIONS INOPERATIVE

Power Mirrors - Memory Functions Inoperative

Step	Action	Yes	No
Schematic Reference:Door Control Module Schematics **Connector End View Reference:Power Door Systems Connector End Views**			
1	Did you perform the Door Systems Diagnostic System Check?	Go to **Step 2**	Go to **Diagnostic System Check - Door Systems**
2	Verify that the power mirrors memory functions inoperative fault is present. Does the power mirrors memory system operate normally?	Go to **Testing for Intermittent Conditions and Poor Connections** in Wiring Systems	Go to **Step 3**
3	Are both memory mirrors inoperative?	Go to **Step 4**	Go to **Step 5**
4	1. Install a scan tool. 2. Turn ON the ignition, with the engine OFF. 3. Observe the Memory 1 Select Switch and Memory 2 Select Switch parameters in the Left Door Control Module data list. 4. Actuate the Memory 1 and Memory 2		

	switches. Does the scan tool display Inactive?	Go to **Step 6**	Go to **Step 9**
5	1. Install a scan tool. 2. Turn ON the ignition, with the engine OFF. 3. Observe the appropriate Position Sensor Ref parameter in the appropriate Door Control Module data list. Is the position sensor ref parameter value less than 4.0 volts?	Go to **Step 9**	Go to **Step 7**
6	Test the appropriate memory select switch signal circuit for a short to voltage or an open. Refer to **Circuit Testing** and **Wiring Repairs** in Wiring Systems. Did you find and correct the condition?	Go to **Step 15**	Go to **Step 10**
7	Test the appropriate mirror 5 volt reference circuit for an open. Refer to **Circuit Testing** and **Wiring Repairs** in Wiring Systems. Did you find and correct the condition?	Go to **Step 15**	Go to **Step 8**
8	Test the appropriate mirror low reference circuit for an open. Refer to **Circuit Testing** and **Wiring Repairs** in Wiring Systems. Did you find and correct the condition?	Go to **Step 15**	Go to **Step 11**
9	Inspect for poor connections at the harness connector of the appropriate door module. Refer to **Testing for Intermittent Conditions and Poor Connections** and **Connector Repairs** in Wiring Systems. Did you find and correct the condition?	Go to **Step 15**	Go to **Step 12**
10	Inspect for poor connections at the harness connector of the driver door switch. Refer to **Testing for Intermittent Conditions and Poor Connections** and **Connector Repairs** in Wiring Systems. Did you find and correct the condition?	Go to **Step 15**	Go to **Step 13**
11	Inspect for poor connections at the harness connector of the appropriate outside rearview mirror. Refer to **Testing for Intermittent Conditions and Poor Connections** and **Connector Repairs** in Wiring Systems. Did you find and correct the condition?	Go to **Step 15**	Go to **Step 14**
12	Replace the appropriate door module. Refer to **Door Control Module Replacement** . Did you complete the replacement?	Go to **Step 15**	-
13	Replace the driver door switch. Refer to **Front Door Switch Replacement** .		

	Did you complete the replacement?	Go to **Step 15**	-
14	Replace the appropriate outside rearview mirror. Refer to **Mirror Replacement** . Did you complete the replacement?	Go to **Step 15**	-
15	Operate the system in order to verify the repair. Did you correct the condition?	System OK	Go to **Step 2**

MIRRORS - OUTSIDE AUTOMATIC DAY-NIGHT FEATURE INOPERATIVE

Mirrors - Outside Automatic Day-Night Feature Inoperative

Step	Action	Value (s)	Yes	No
Schematic Reference:Door Control Module Schematics **Connector End View Reference:Stationary Windows Connector End Views**				
1	Did you review the operation of the automatic day/night feature of the driver outside rearview mirror and perform the necessary inspections?	-	Go to **Step 2**	Go to **Symptoms - Doors**
2	1. Turn ON the ignition, with the engine OFF. 2. Turn ON the automatic day-night feature of the inside rearview mirror. 3. Cover the sensor on the mirror back, facing the front window. 4. Shine a bright light into the sensor on the mirror face, facing the rear window. Does the inside rearview mirror darken?	-	Go to **Step 3**	Go to **Mirrors - Automatic Day-Night Inoperative** in Stationary Windows
3	While shining a bright light into the sensor on the mirror face, facing the rear window, observe the driver outside rearview mirror. Does the driver outside rearview mirror darken?	-	Go to **Testing for Intermittent Conditions and Poor Connections** in Wiring Systems	Go to **Step 4**
4	1. Turn OFF the ignition. 2. Carefully disconnect the driver outside rearview mirror face. Refer to **Mirror Face Replacement** . 3. Turn ON the ignition, with the engine OFF. 4. Turn ON the automatic day-night feature of the inside rearview mirror. 5. Cover the sensor on the mirror back, facing the front window.	0.75-1.5 V		

	6. Shine a bright light into the sensor on the mirror face, facing the rear window. 7. Measure the voltage between the signal circuit of the driver outside rearview mirror element and the low reference circuit of the driver outside rearview mirror element. Is the voltage within the specified range?		Go to **Step 9**	Go to **Step 5**
5	Is the voltage greater than the specified value?	1.5 V	Go to **Step 11**	Go to **Step 6**
6	Measure the voltage between the signal circuit of the driver outside mirror element and a good ground. Is the voltage within the specified range?	0.75-1.5 V	Go to **Step 8**	Go to **Step 7**
7	Test the signal circuit of the driver outside mirror element for a short to ground or an open. Refer to **Circuit Testing** and **Wiring Repairs** in Wiring Systems. Did you find and correct the condition?	-	Go to **Step 14**	Go to **Step 10**
8	Test the low reference circuit of the driver outside rearview mirror element for an open or high resistance. Refer to **Circuit Testing** and **Wiring Repairs** in Wiring Systems. Did you find and correct the condition?	-	Go to **Step 14**	Go to **Step 10**
9	Inspect for poor connections at the harness connector of the driver outside rearview mirror face. Refer to **Testing for Intermittent Conditions and Poor Connections** and **Connector Repairs** in Wiring Systems. Did you find and correct the condition?	-	Go to **Step 14**	Go to **Step 12**
10	Inspect for poor connections at the harness connector of the inside rearview mirror. Refer to **Testing for Intermittent Conditions and Poor Connections** and **Connector Repairs** in Wiring Systems. Did you find and correct the condition?	-	Go to **Step 14**	Go to **Step 13**
11	**IMPORTANT:** **A short to voltage on the signal circuit of the driver outside rearview mirror element will cause damage to the driver outside rearview mirror face and the inside rearview mirror.** Repair the short to voltage in the signal circuit of the driver outside rearview mirror element.	-		

	Refer to **Wiring Repairs** in Wiring Systems.Did you complete the repair?		Go to **Step 14**	-
12	Replace the driver outside rearview mirror face. Refer to **Mirror Face Replacement** . Did you complete the replacement?	-	Go to **Step 14**	-
13	Replace the inside rearview mirror. Refer to **Rearview Mirror Replacement (Base)** or **Rearview Mirror Replacement (DD8)** in Stationary Windows. Did you complete the replacement?	-	Go to **Step 14**	-
14	Operate the system in order to verify the repair. Did you correct the condition?	-	System OK	Go to **Step 2**

HEATED MIRRORS INOPERATIVE

Heated Mirrors Inoperative

Step	Action	Yes	No
Schematic Reference:Door Control Module Schematics **Connector End View Reference:Power Door Systems Connector End Views**			
1	Did you perform the Door Systems Diagnostic System Check?	Go to **Step 2**	Go to **Diagnostic System Check - Door Systems**
2	Verify that the heated mirrors inoperative fault is present. Do the heated mirrors operate normally?	Go to **Testing for Intermittent Conditions and Poor Connections** in Wiring Systems	Go to **Step 3**
3	1. Turn ON the ignition, with the engine ON. 2. Activate the rear defogger. Does the rear defogger operate correctly?	Go to **Step 4**	Go to **Diagnostic System Check - Defogger**
4	1. Turn OFF the ignition. 2. Disconnect the inoperative mirror connector. 3. Turn ON the ignition, with the engine ON. 4. Probe the mirror heater battery positive voltage circuit with a test lamp that is connected to a good ground. 5. Activate the rear defogger. Does the test lamp illuminate?	Go to **Step 5**	Go to **Step 6**
	1. Connect a test lamp between the mirror heater battery positive voltage circuit and the mirror heater ground circuit.		

5	2. Activate the rear defogger. Does the test lamp illuminate?	Go to **Step 8**	Go to **Step 7**
6	Test the mirror heater battery positive voltage circuit for an open. Refer to **Circuit Testing** and **Wiring Repairs** in Wiring Systems. Did you find and correct the condition?	Go to **Step 12**	Go to **Step 9**
7	Test the mirror heater ground circuit for an open. Refer to **Circuit Testing** and **Wiring Repairs** in Wiring Systems. Did you find and correct the condition?	Go to **Step 12**	Go to **Step 9**
8	Inspect for poor connections at the harness connector of the appropriate outside rearview mirror. Refer to **Testing for Intermittent Conditions and Poor Connections** and **Connector Repairs** in Wiring Systems. Did you find and correct the condition?	Go to **Step 12**	Go to **Step 10**
9	Inspect for poor connections at the harness connector of the driver door module (DDM). Refer to **Testing for Intermittent Conditions and Poor Connections** and **Connector Repairs** in Wiring Systems. Did you find and correct the condition?	Go to **Step 12**	Go to **Step 11**
10	Replace the appropriate outside rearview mirror. Refer to **Mirror Replacement** . Did you complete the replacement?	Go to **Step 12**	-
11	Replace the driver door module. Refer to **Door Control Module Replacement** . Did you complete the replacement?	Go to **Step 12**	-
12	Operate the system in order to verify the repair. Did you correct the condition?	System OK	Go to **Step 2**

REPAIR INSTRUCTIONS

FRONT DOOR SWITCH REPLACEMENT

Removal Procedure

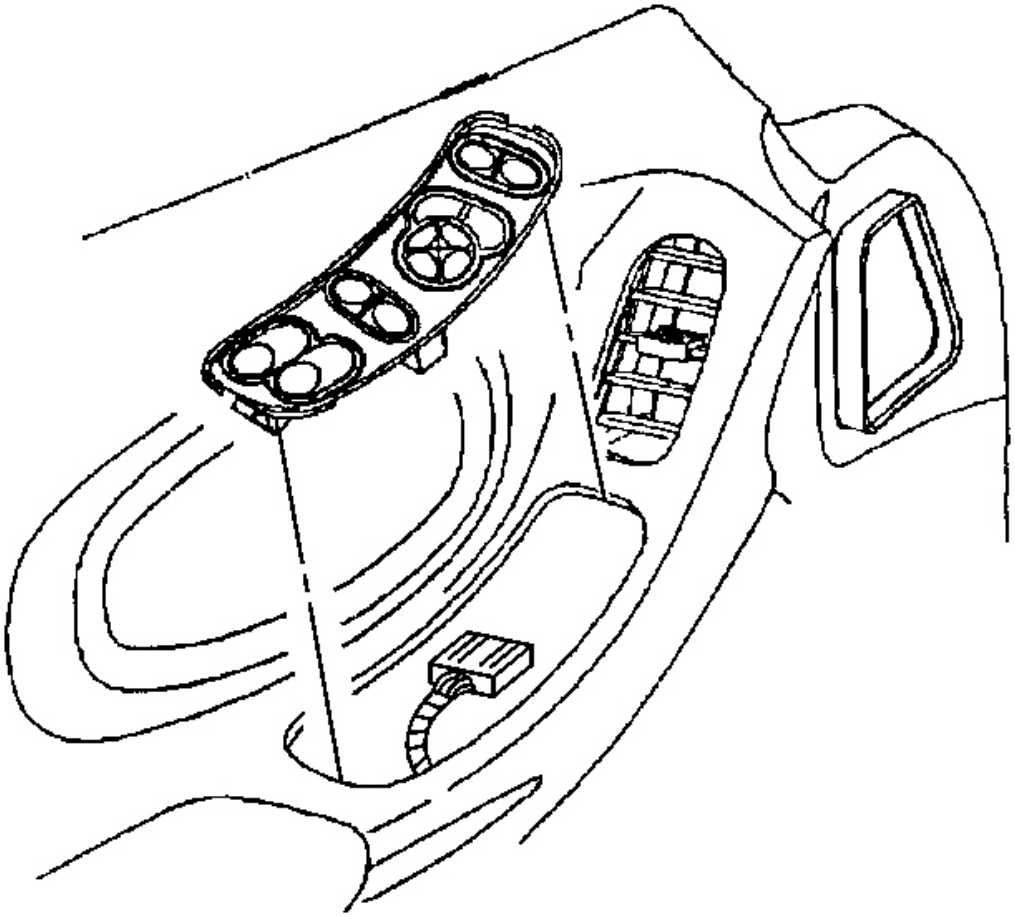

Fig. 7: Electrical Connector At Driver Side Switch
Courtesy of GENERAL MOTORS CORP.

NOTE: Apply protective coating/tape at the insertion point of the small flat-bladed tool in order to prevent damage to the inner door trim panel.

1. Pry up the rear edge of the driver side switch assembly, the front edge of the passenger side switch assembly.
2. Slide the driver side switch assembly rearward, the passenger side switch assembly forward, out of the door trim panel.
3. Disconnect the electrical connector.
4. If replacing a bulb, insert a small screwdriver into the slot in the base of the bulb and turn counterclockwise to remove the bulb.

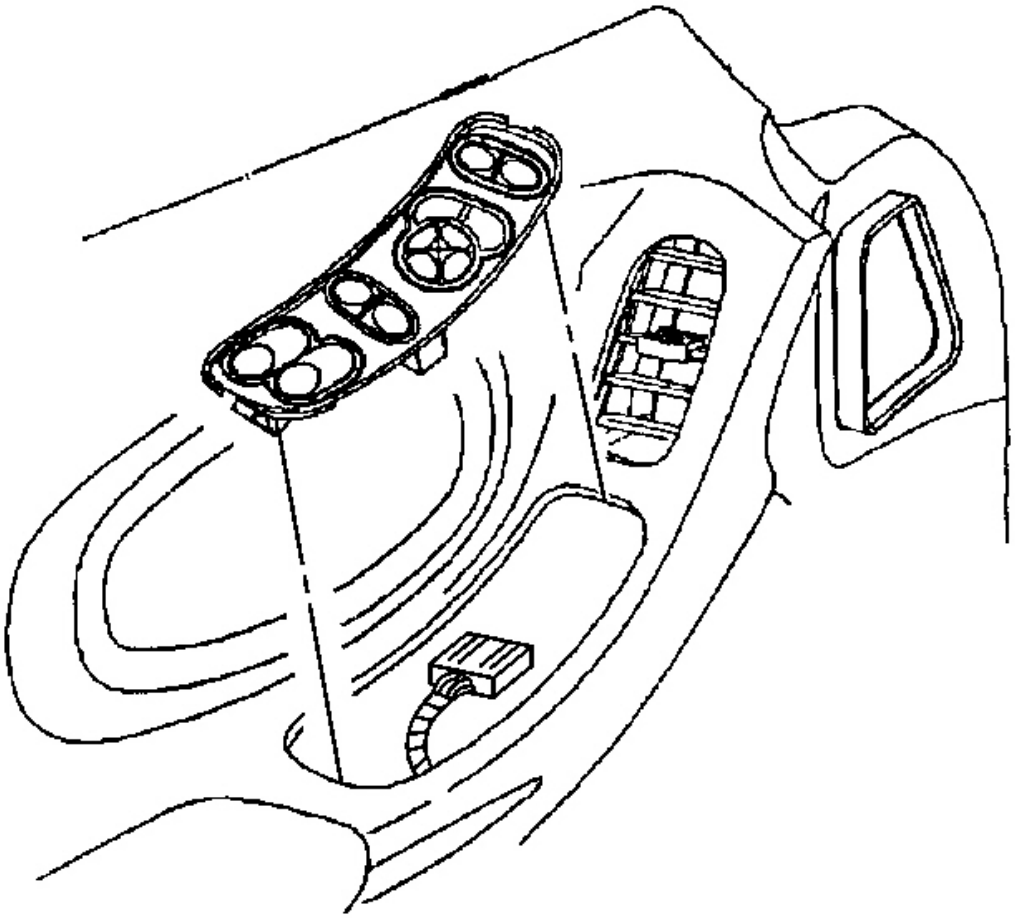

Fig. 8: Electrical Connector At Driver Side Switch
Courtesy of GENERAL MOTORS CORP.

1. If replacing a bulb, insert a bulb into the back of the switch and turn the bulb clockwise to secure.
2. Connect the electrical connector to the switch.
3. Insert the front edge of the driver side switch, the rear edge of the passenger side switch, into the door trim panel.
4. Press the rear edge of the driver side switch, the front edge of the passenger side switch, into the trim panel to secure.

HANDLE BEZEL REPLACEMENT - INSIDE

Removal Procedure

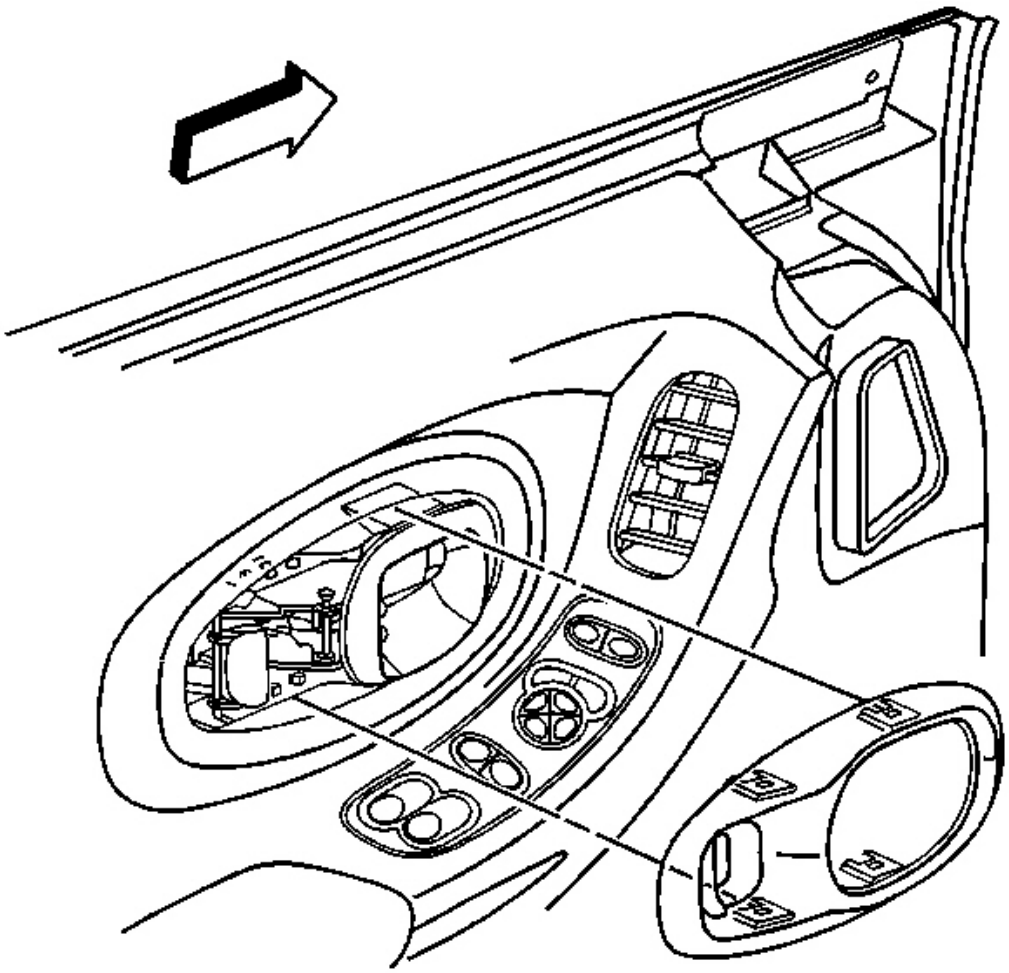

Fig. 9: Door Inside Handle Open At Bezel Locking Tabs
Courtesy of GENERAL MOTORS CORP.

1. Pull the door inside handle open to access the openings to the bezel locking tabs.
2. Insert a screwdriver in the lower opening. Tip the screwdriver up while pulling on the bezel releasing the lower locking tab.
3. Insert the screwdriver in the upper opening. Tip the screwdriver down while pulling on the bezel releasing the upper and the forward locking tabs.
4. Grasp the bezel firmly, pull the bezel releasing the rear locking tabs.
5. Remove the bezel.

Installation Procedure

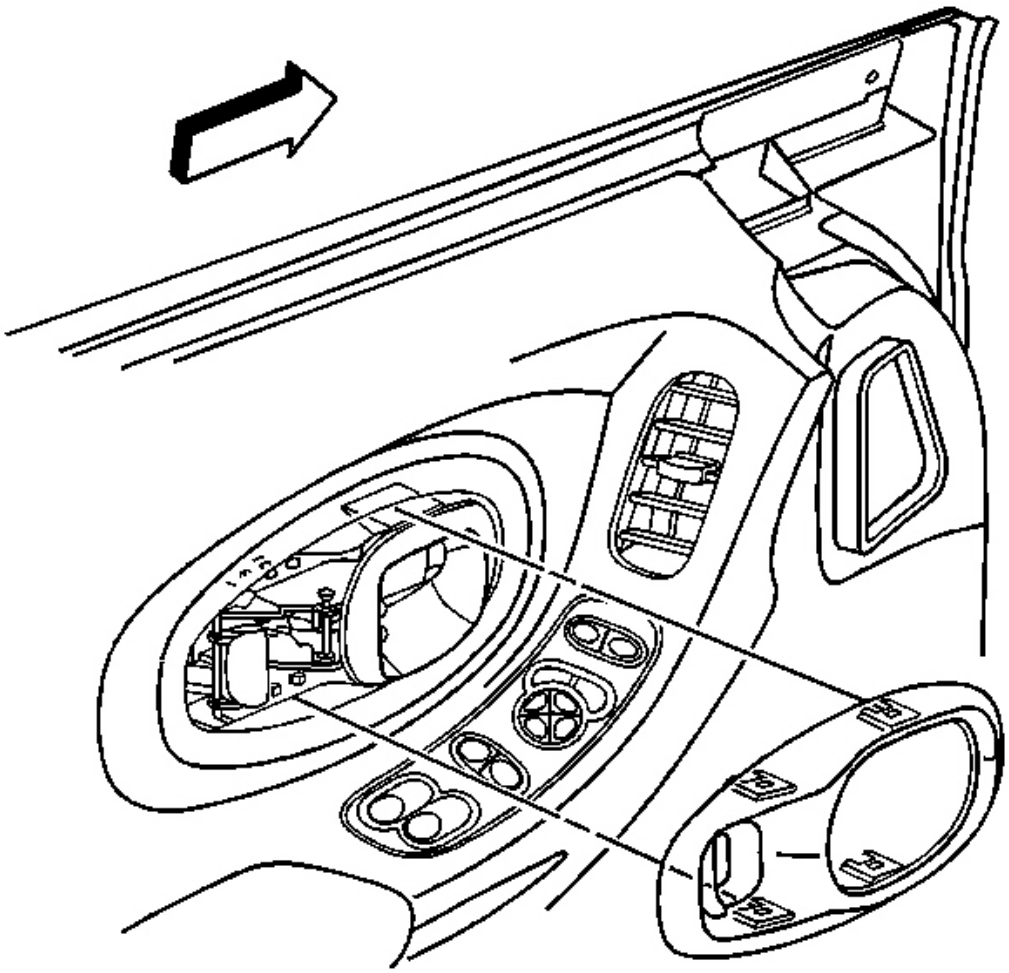

Fig. 10: Door Inside Handle Open At Bezel Locking Tabs
Courtesy of GENERAL MOTORS CORP.

1. Position the bezel around the inside door handle.
2. Push firmly on the bezel engaging the bezel locking tabs to the door.

PULL HANDLE REPLACEMENT

Removal Procedure

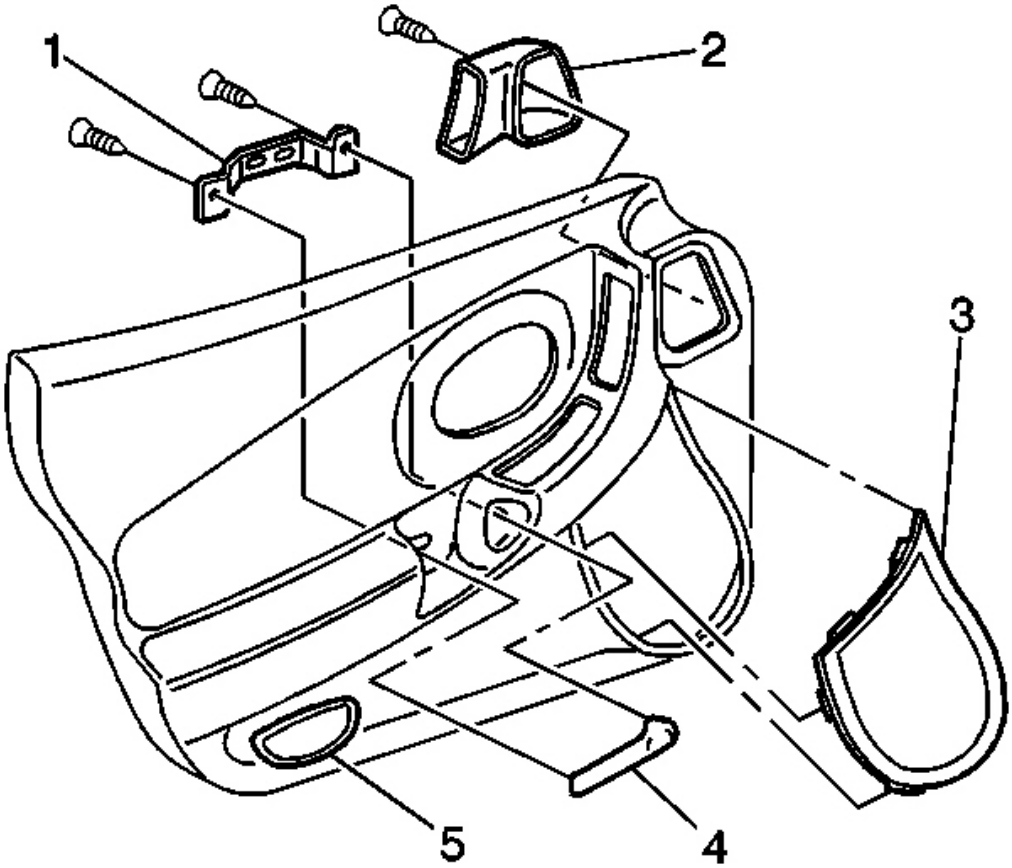

Fig. 11: Door Trim Panel & Handle Bracket
Courtesy of GENERAL MOTORS CORP.

1. Remove the door trim panel. Refer to **Trim Panel Replacement - Door** .
2. Remove the screws attaching the pull handle bracket (1) to the pull handle.
3. Remove the pull handle.

Installation Procedure

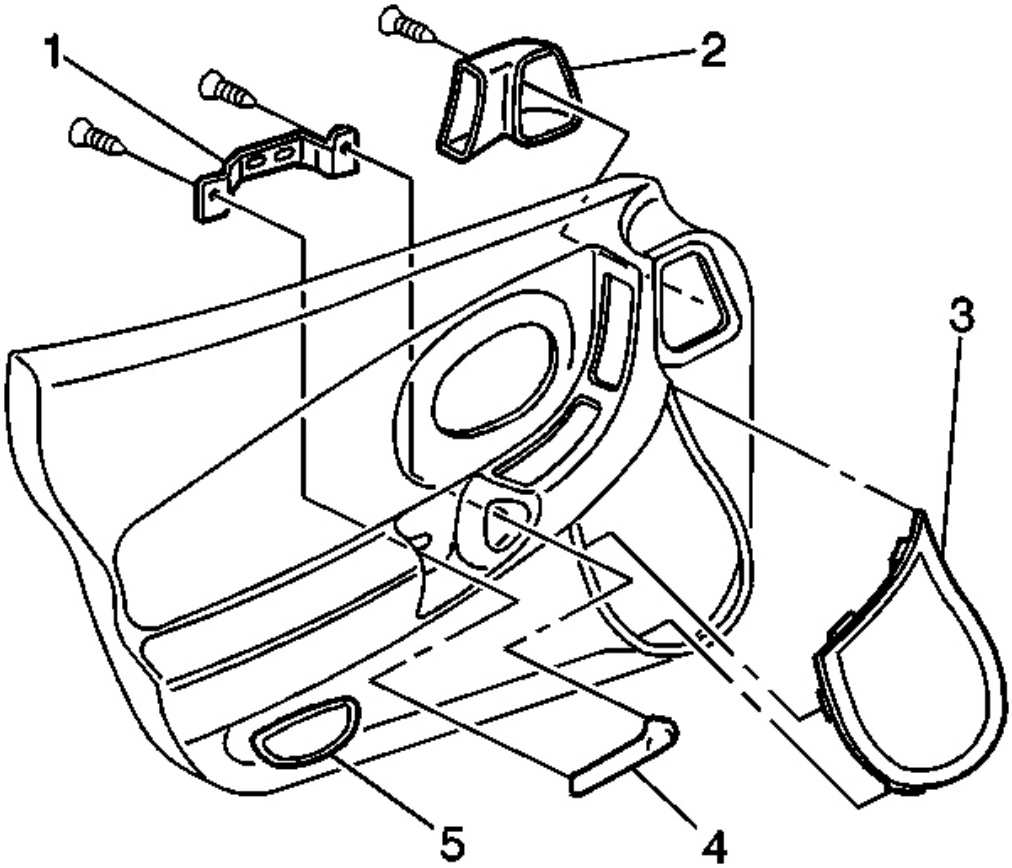

Fig. 12: Door Trim Panel & Handle Bracket
Courtesy of GENERAL MOTORS CORP.

1. Position the pull handle to the door trim panel.
2. Install the screws through the bracket (1) to the pull handle.
3. Install the door trim panel. Refer to **Trim Panel Replacement - Door** .

DOOR TRIM PANEL AIR DUCT AND DEFLECTOR REPLACEMENT

Removal Procedure

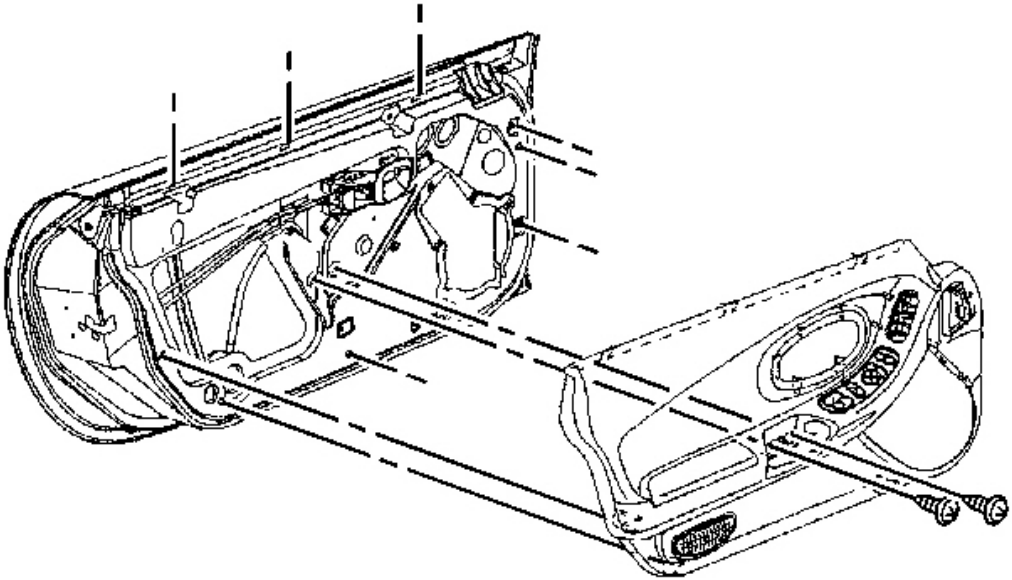

Fig. 13: View Of Door Trim Panel To Door
Courtesy of GENERAL MOTORS CORP.

1. Remove the left door trim panel. Refer to **Trim Panel Replacement - Door** .

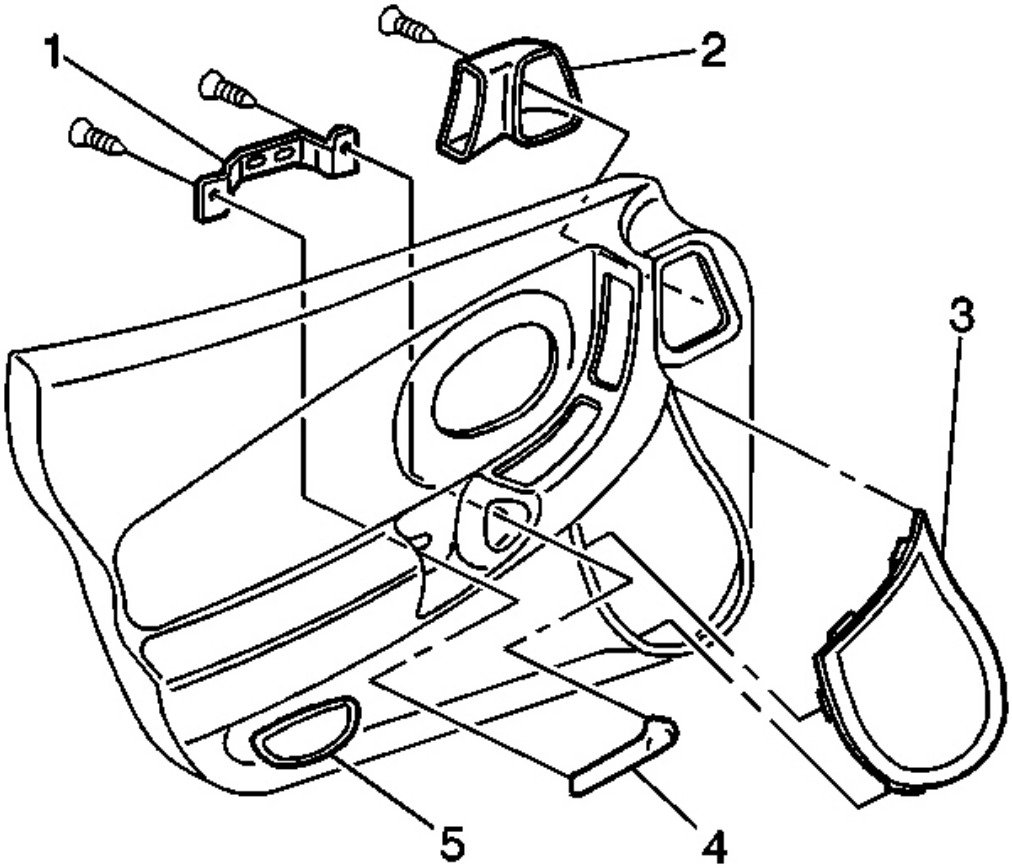

Fig. 14: Door Trim Panel & Handle Bracket
Courtesy of GENERAL MOTORS CORP.

2. Remove the screws attaching the duct (2).
3. Remove the duct with boot and the deflector.
4. Remove the deflector from the duct.

Installation Procedure

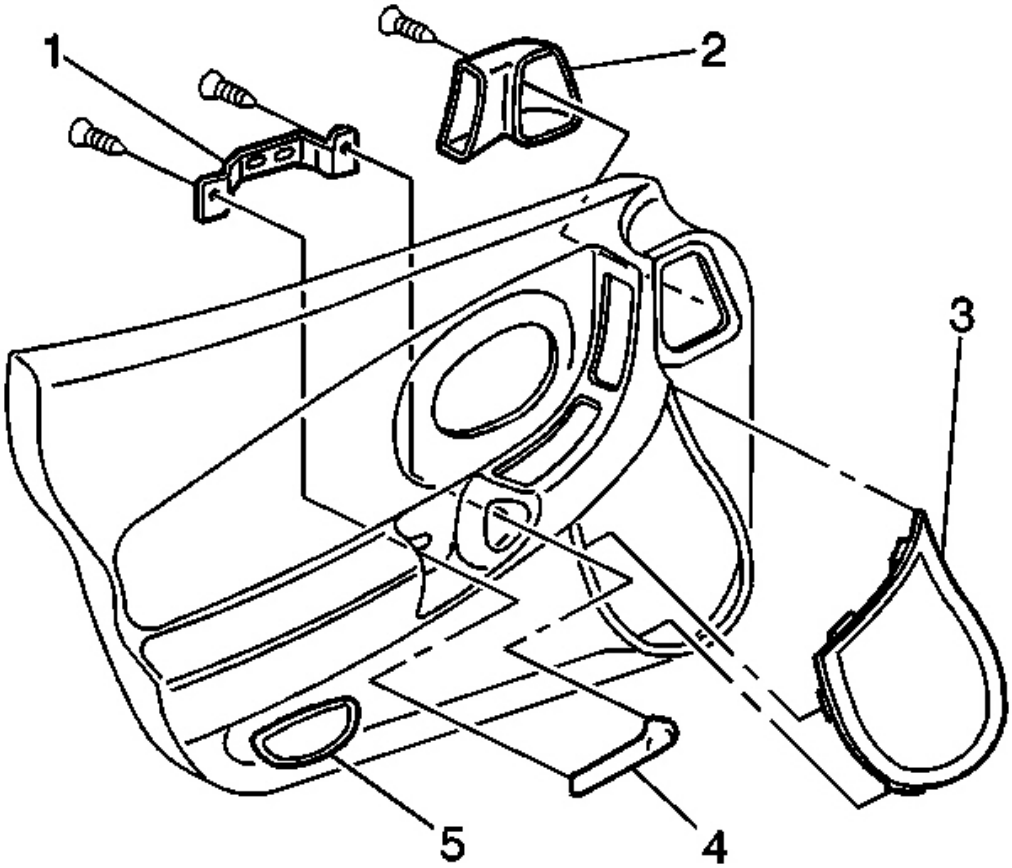

Fig. 15: Door Trim Panel & Handle Bracket
Courtesy of GENERAL MOTORS CORP.

1. Install the deflector to the duct.
2. Install the duct (2) with the boot to the trim panel.
3. Secure the duct with screws to the door trim panel.

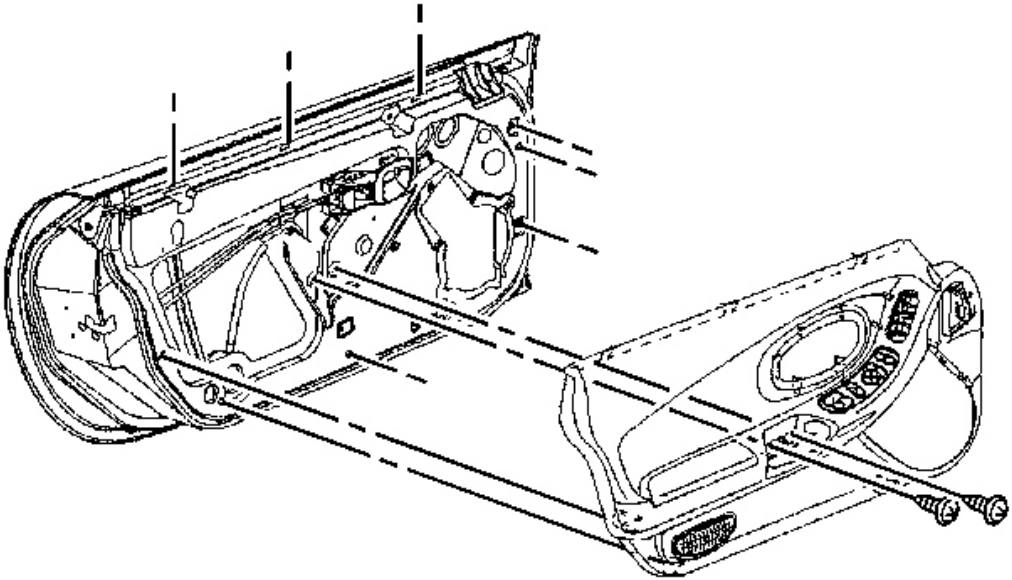

Fig. 16: View Of Door Trim Panel To Door
Courtesy of GENERAL MOTORS CORP.

4. Install the door trim panel. Refer to **Trim Panel Replacement - Door** .

TRIM PANEL REPLACEMENT - DOOR

Removal Procedure

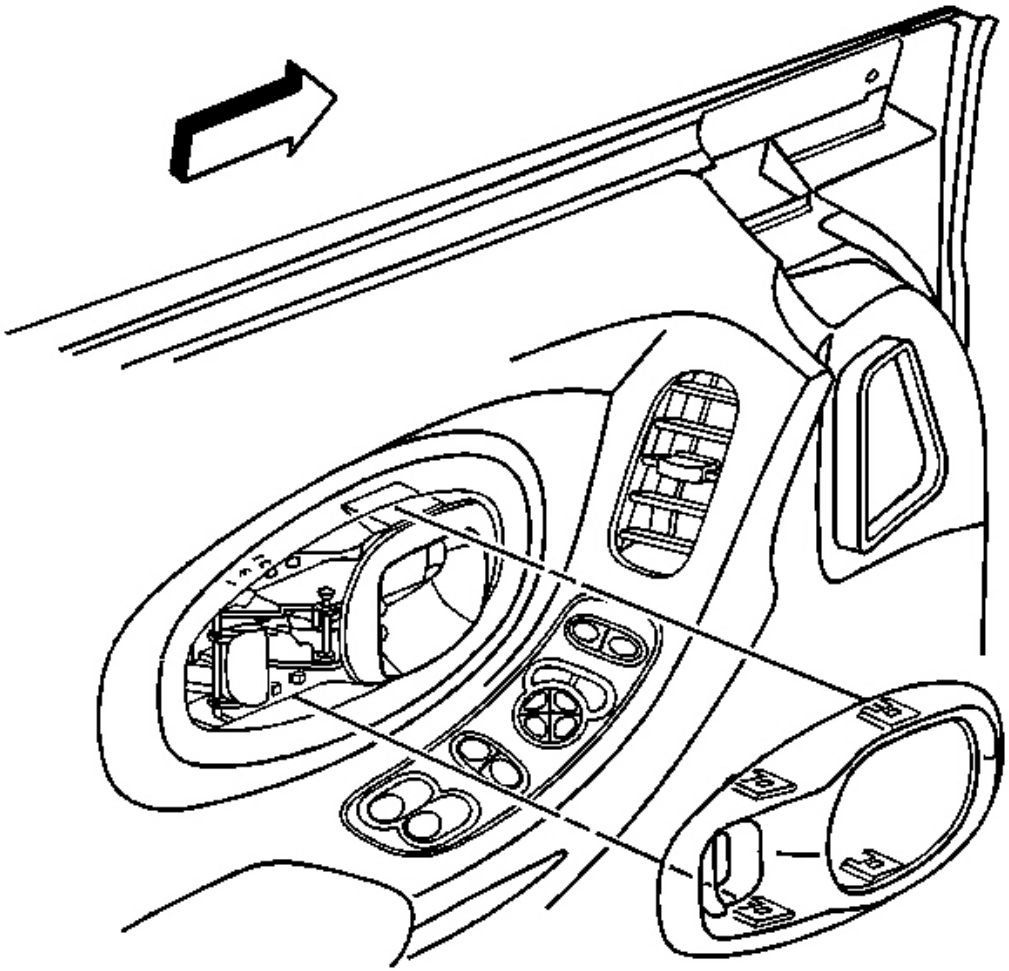

Fig. 17: Door Inside Handle Open At Bezel Locking Tabs
Courtesy of GENERAL MOTORS CORP.

IMPORTANT: To reduce the chance of damage to the trim panel leave the switch in the panel until after the panel is removed from the door.

1. Lower the door window.
2. Remove the inside handle bezel. Refer to **Handle Bezel Replacement - Inside** .

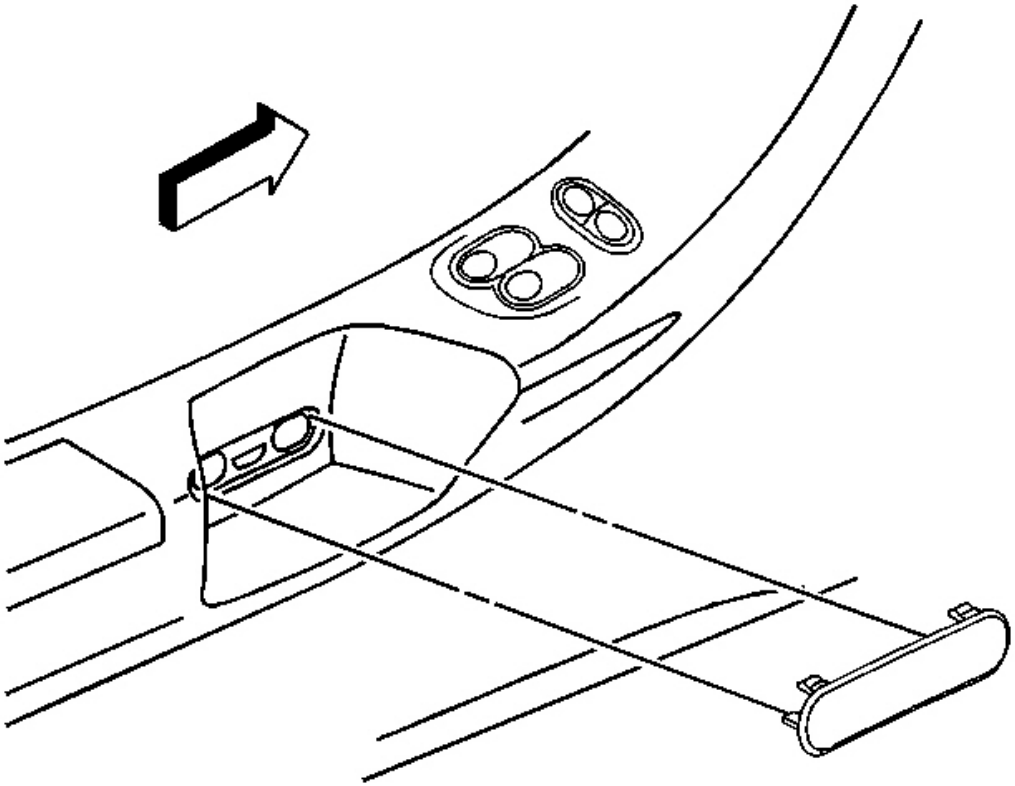

Fig. 18: Pull Handle Plug
Courtesy of GENERAL MOTORS CORP.

3. Remove the pull handle plug.

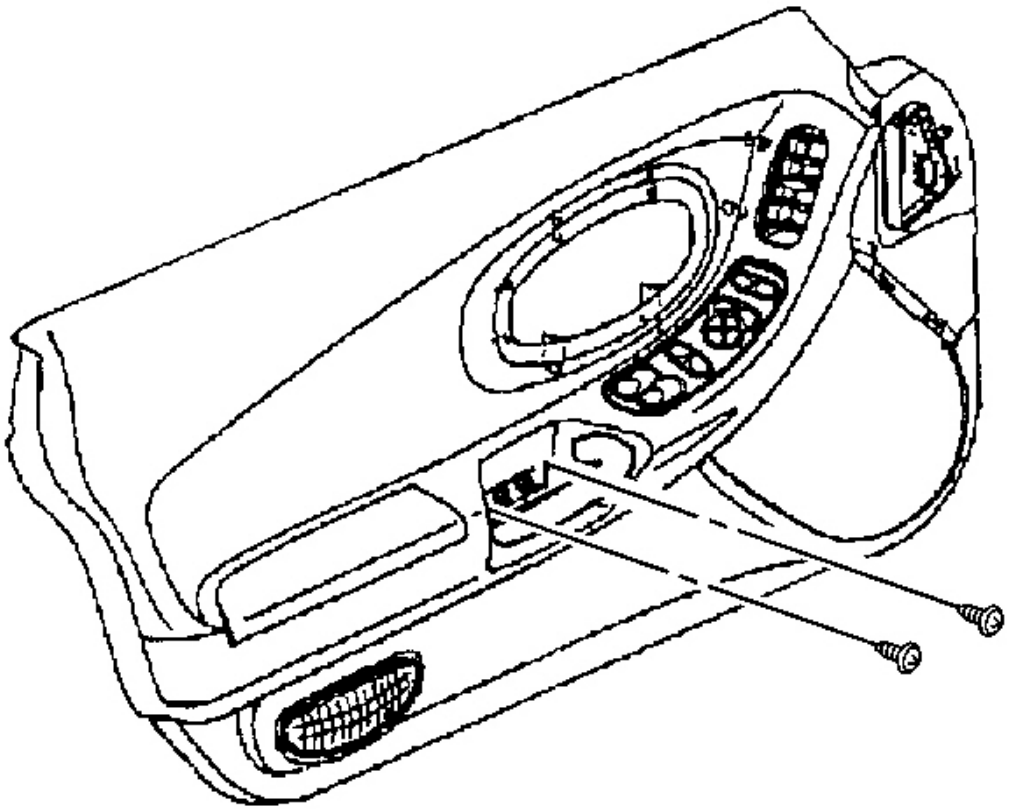

Fig. 19: Pull Handle Plug & Screws
Courtesy of GENERAL MOTORS CORP.

4. Remove the screws behind the pull handle plug.

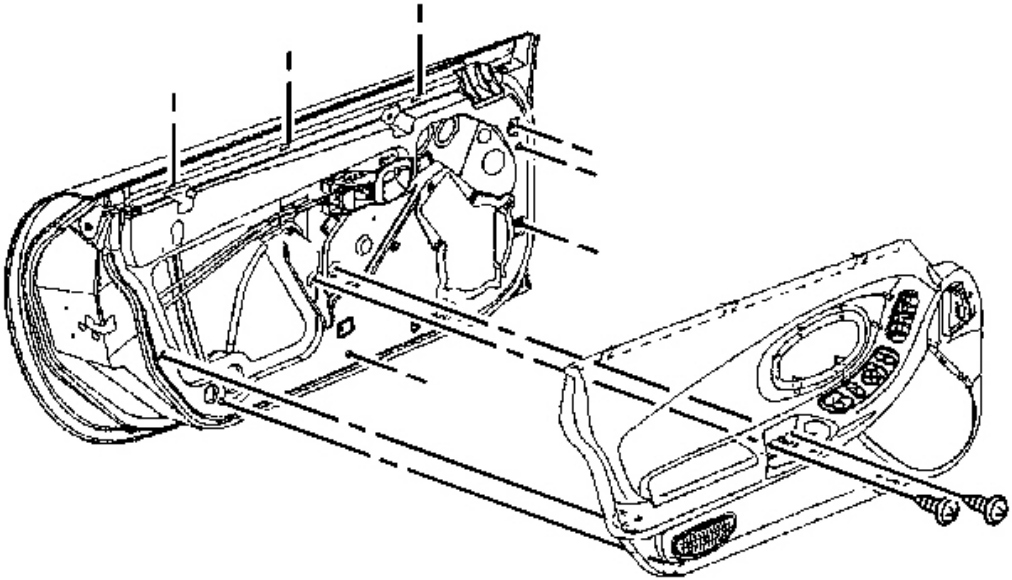

Fig. 20: View Of Door Trim Panel To Door
Courtesy of GENERAL MOTORS CORP.

NOTE: **Insert the fastener removal tool between the male fastener, which is attached to the trim panel, and the female retainer, which is in the door. Incorrectly inserting the tool between the head of the female retainer and the door will break the fasteners.**

5. For better sight access to the fasteners start by first prying out the fastener at the rear of the trim panel that is approximately 50 mm (2 in) up from the trim panel seam.

   Pry out the remaining trim panel fasteners working your way forward.

6. Lift the trim panel up off the upper retainers and reposition the panel by the door.

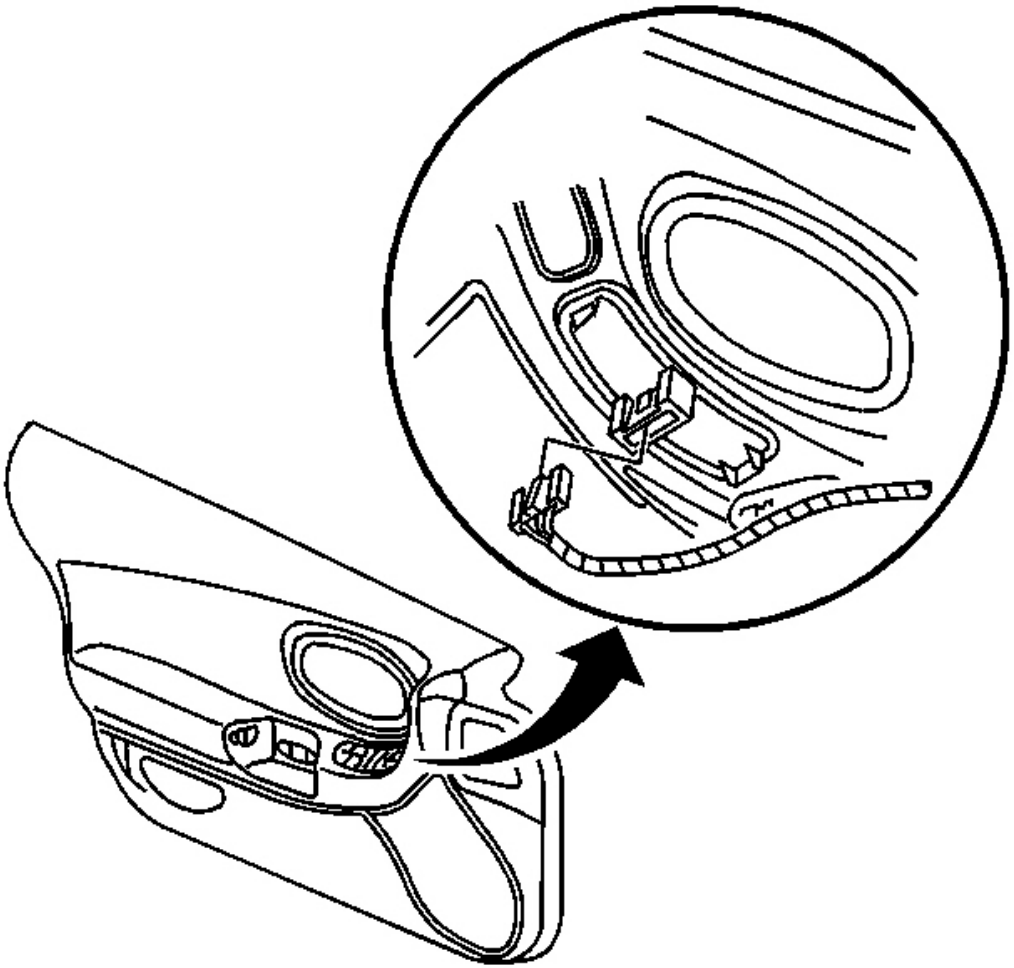

Fig. 21: Trim Panel Upper Retainers & Harness Connector At Switch
Courtesy of GENERAL MOTORS CORP.

7. Remove the harness connector from the switch.
8. Remove the trim panel with absorber, switch, and speaker grill.
9. Remove any trim panel upper retainers that remained on the door.
10. Transfer parts as necessary.

Installation Procedure

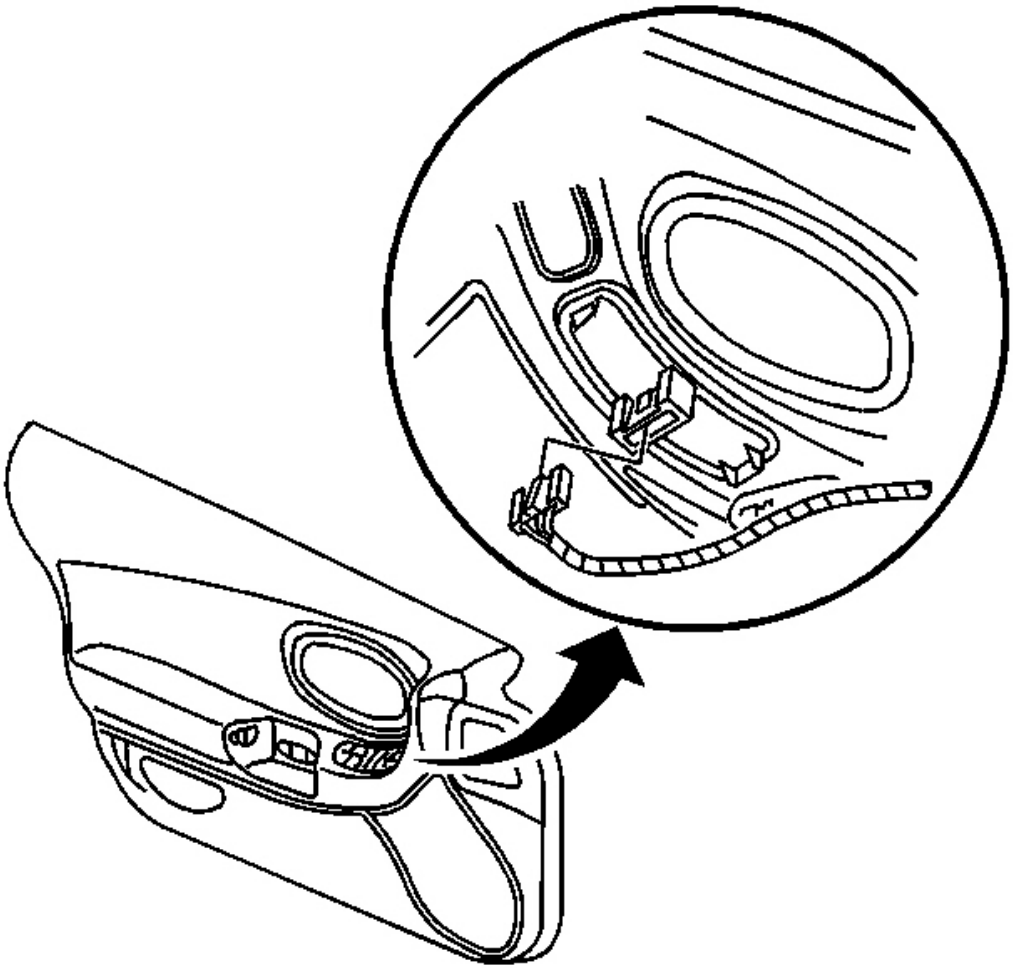

Fig. 22: Trim Panel Upper Retainers & Harness Connector At Switch
Courtesy of GENERAL MOTORS CORP.

1. Reinstall any loose upper retainers to the door trim panel.
2. Position the trim panel near the door and install the switch harness to the switch.

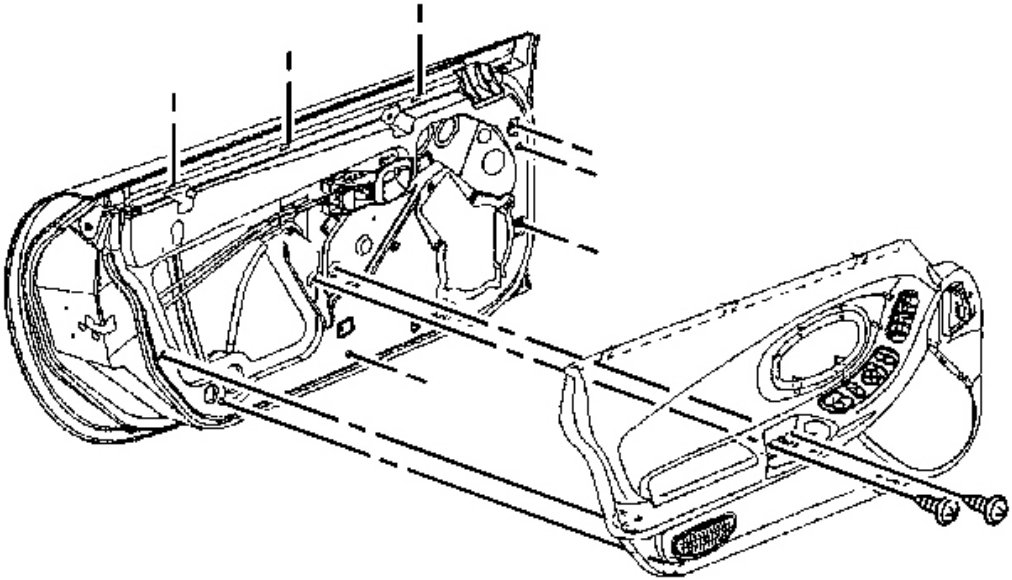

Fig. 23: View Of Door Trim Panel To Door
Courtesy of GENERAL MOTORS CORP.

3. Install the trim panel to the top of the door engaging the upper retainers.
4. Align all the trim panel side and lower fasteners with the retainers in the door.

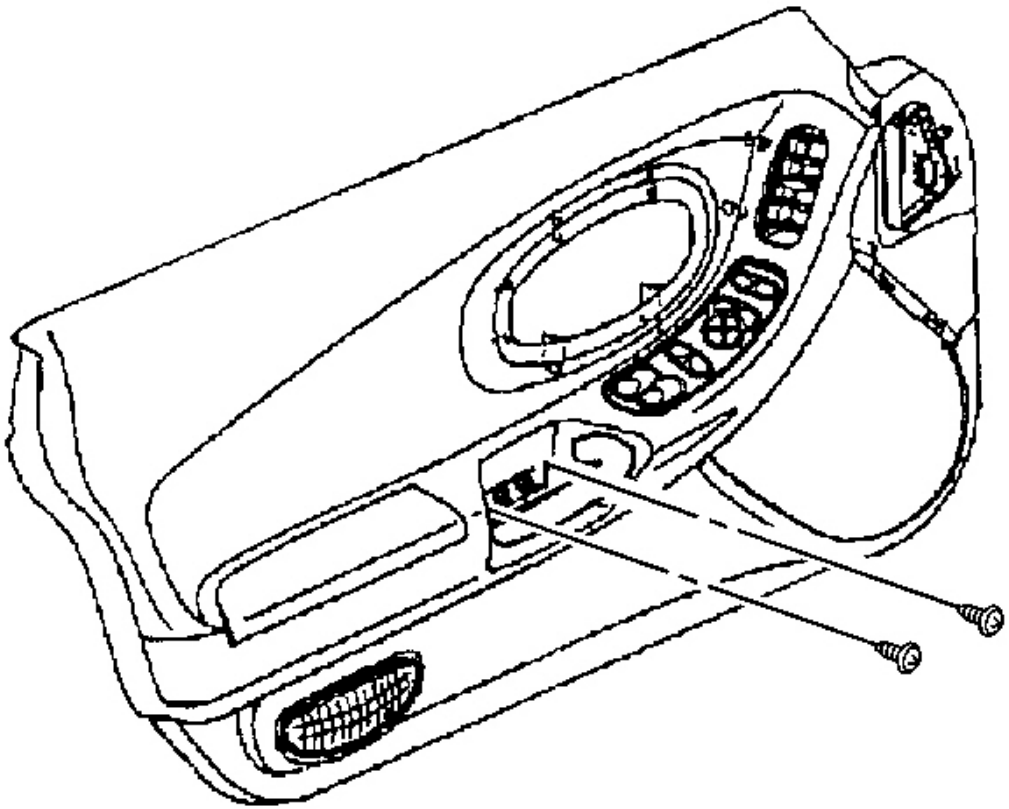

Fig. 24: Pull Handle Plug & Screws
Courtesy of GENERAL MOTORS CORP.

5. Press the trim panel firmly to the door at each fastener location.

NOTE: Refer to Fastener Notice in Cautions and Notices.

6. Install the screws behind the pull handle.

Tighten: Tighten the pull handle screws to 6 N.m (53 lb in).

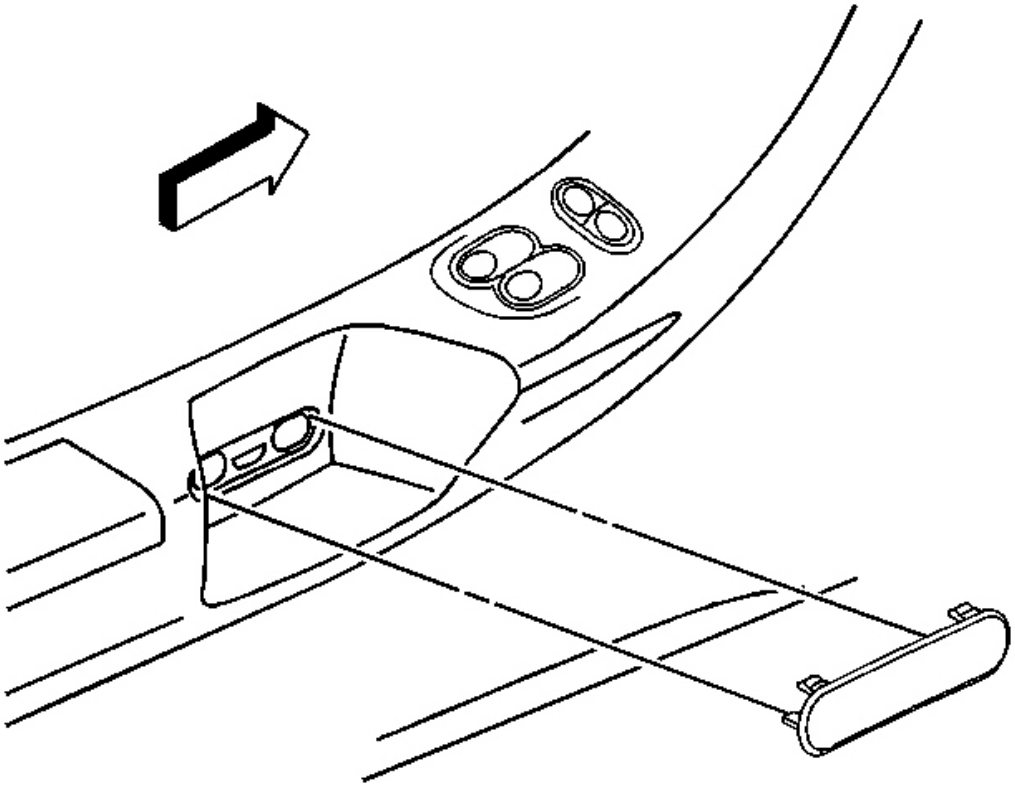

Fig. 25: Pull Handle Plug
Courtesy of GENERAL MOTORS CORP.

7. Install the pull handle plug.

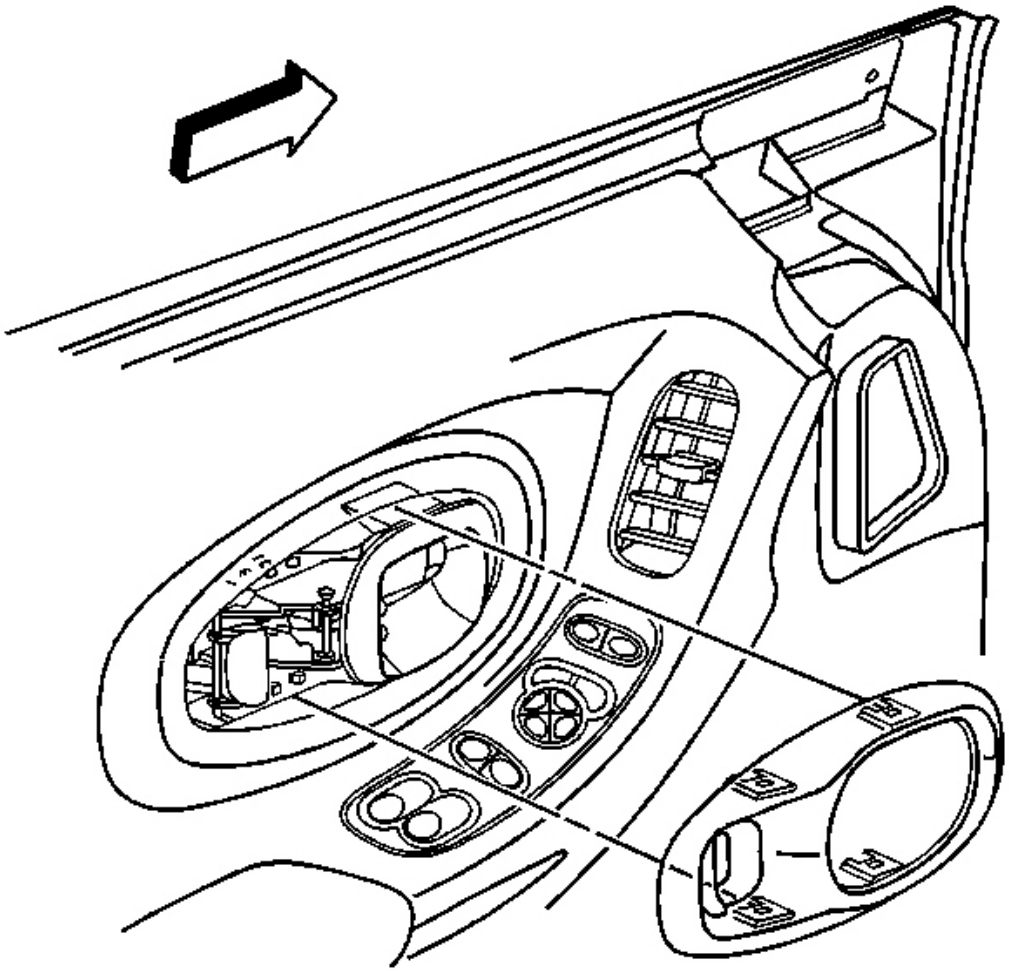

Fig. 26: Door Inside Handle Open At Bezel Locking Tabs
Courtesy of GENERAL MOTORS CORP.

8. Install the bezel to the handle.
    1. Position the bezel around the inside door handle.
    2. Push firmly on the bezel to engage the locking tabs to the door.

DOOR CONTROL MODULE REPLACEMENT

Removal Procedure

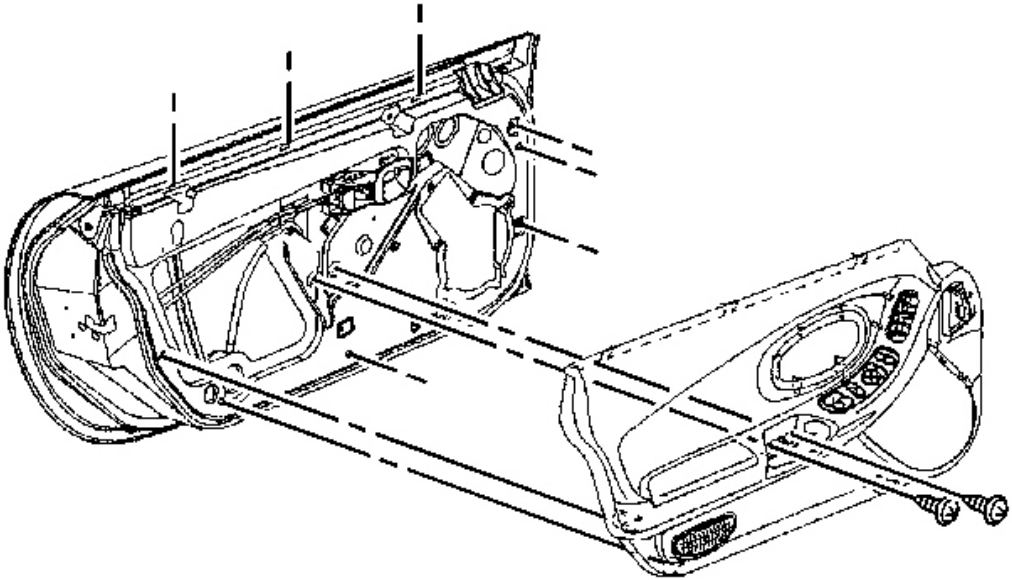

Fig. 27: View Of Door Trim Panel To Door
Courtesy of GENERAL MOTORS CORP.

1. Remove the door trim panel. Refer to **Trim Panel Replacement - Door** .

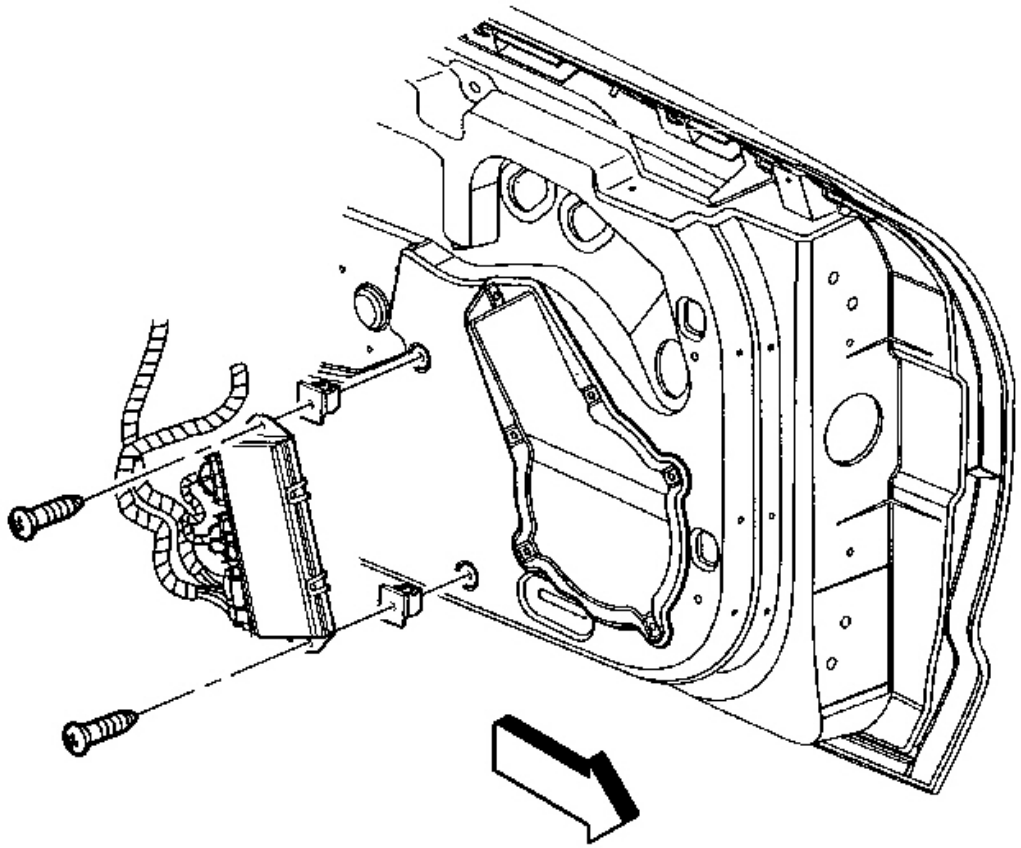

Fig. 28: Door Control Module & Screws
Courtesy of GENERAL MOTORS CORP.

2. Remove the screws attaching the door control module.
3. Disconnect the electrical connectors.

Installation Procedure

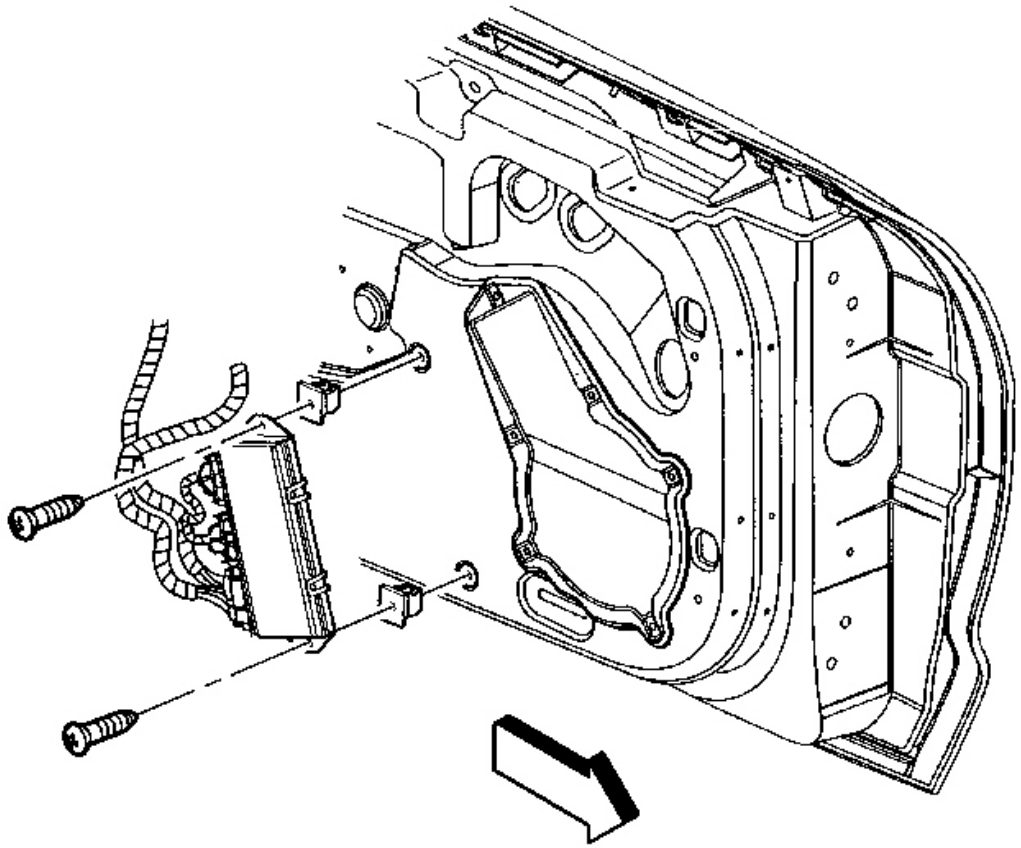

Fig. 29: Door Control Module & Screws
Courtesy of GENERAL MOTORS CORP.

1. Position the door control module to the door.
2. Connect the electrical connectors.

NOTE: Refer to Fastener Notice in Cautions and Notices.

3. Install the screws attaching the module.

   Tighten: Tighten the screws to 3 N.m (27 lb in).

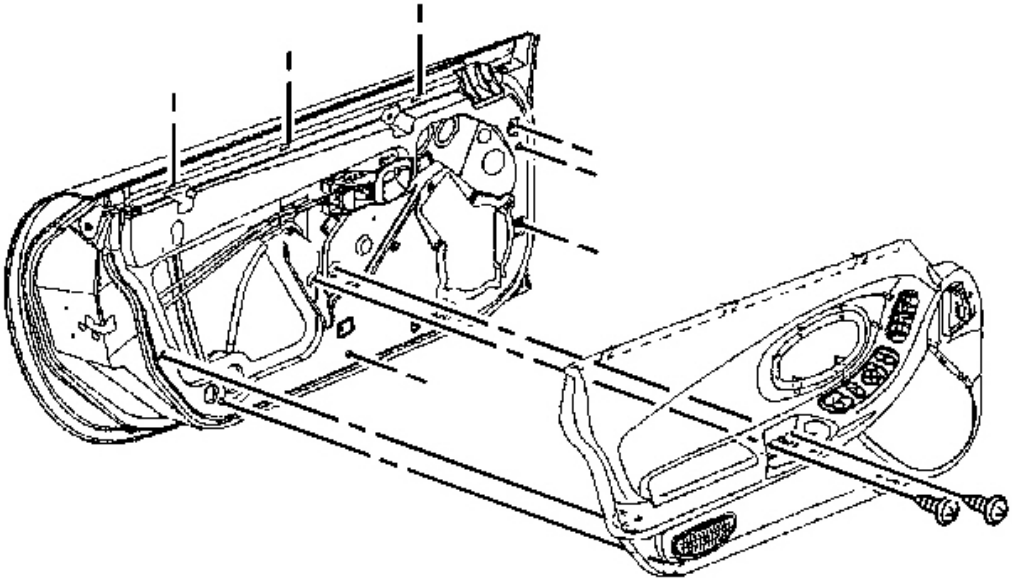

Fig. 30: View Of Door Trim Panel To Door
Courtesy of GENERAL MOTORS CORP.

4. Install the door trim panel. Refer to **Trim Panel Replacement - Door** .

ENERGY ABSORBER PAD REPLACEMENT

Removal Procedure

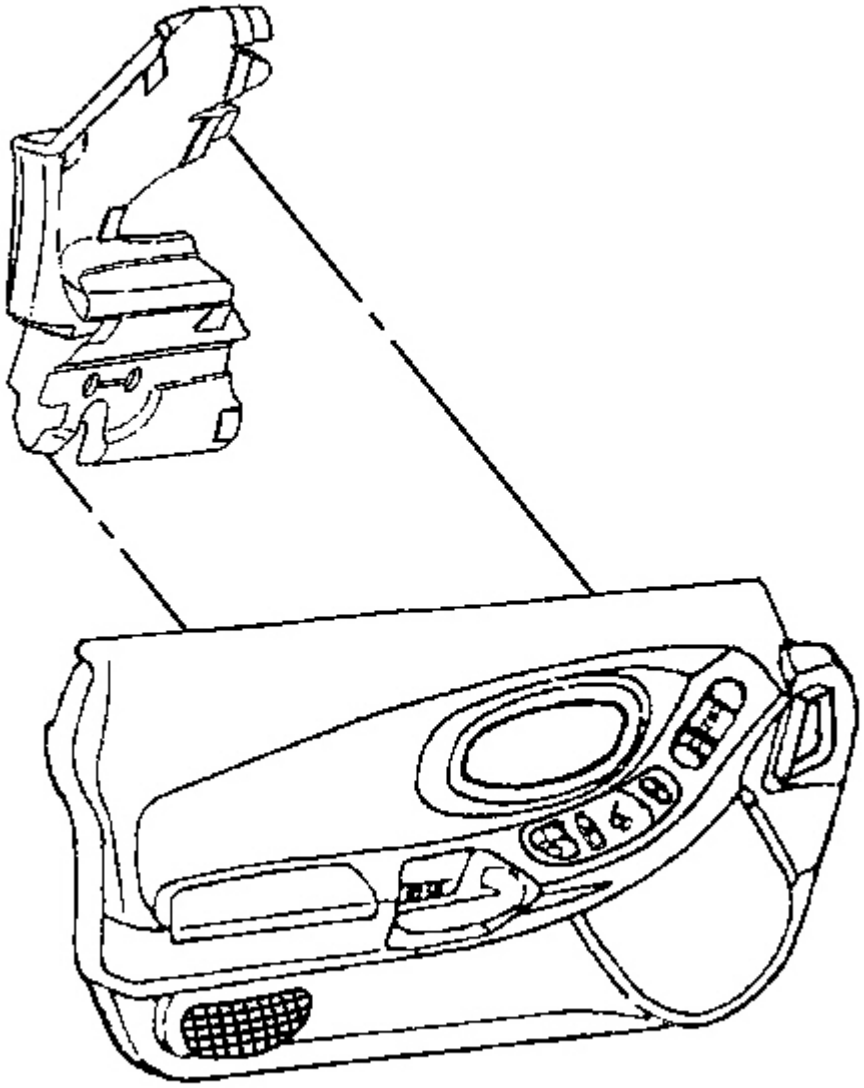

Fig. 31: Door Trim Panel & Door Energy Absorber
Courtesy of GENERAL MOTORS CORP.

1. Remove the door trim panel. Refer to **Trim Panel Replacement - Door** .
2. Remove the door energy absorber. Heat will aid in removal.

Installation Procedure

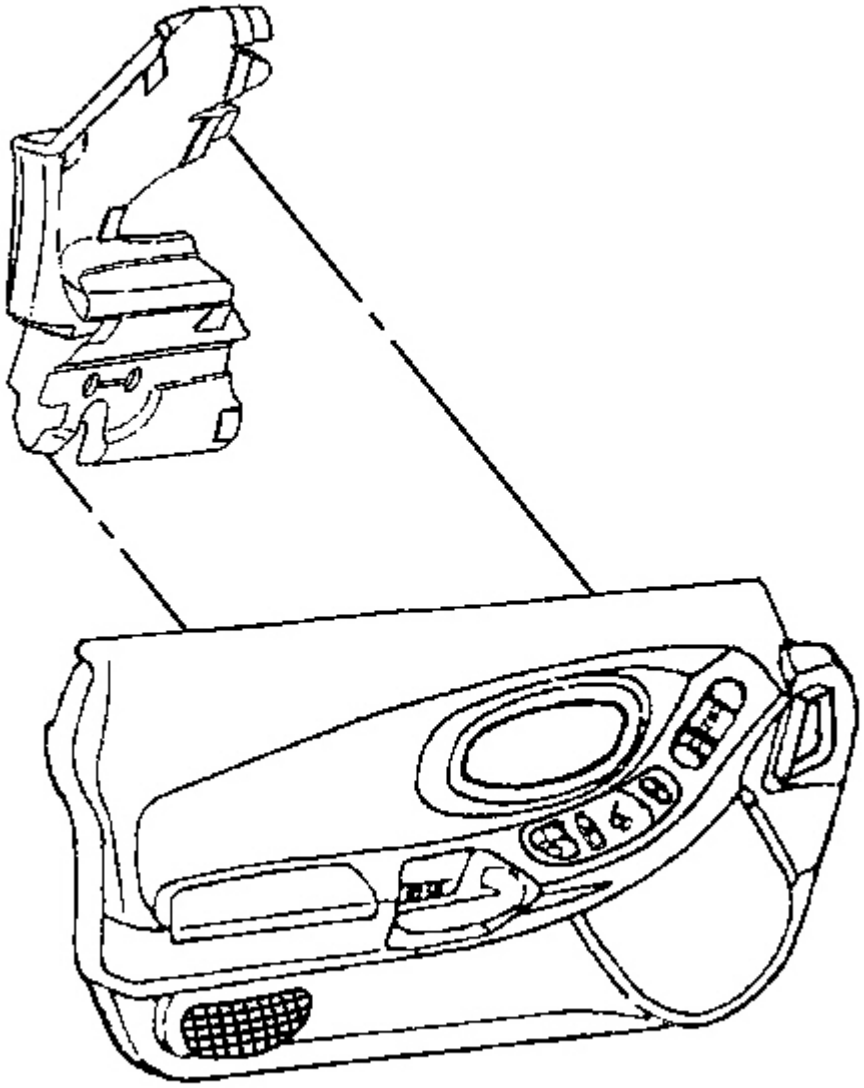

Fig. 32: Door Trim Panel & Door Energy Absorber
Courtesy of GENERAL MOTORS CORP.

1. Glue the door energy absorber to the door trim panel.
    - Use hot melt glue.
    - Glue the complete surface of the absorber.
2. Install the door trim panel. Refer to **Trim Panel Replacement - Door** .

WATER DEFLECTOR REPLACEMENT - DOOR

Removal Procedure

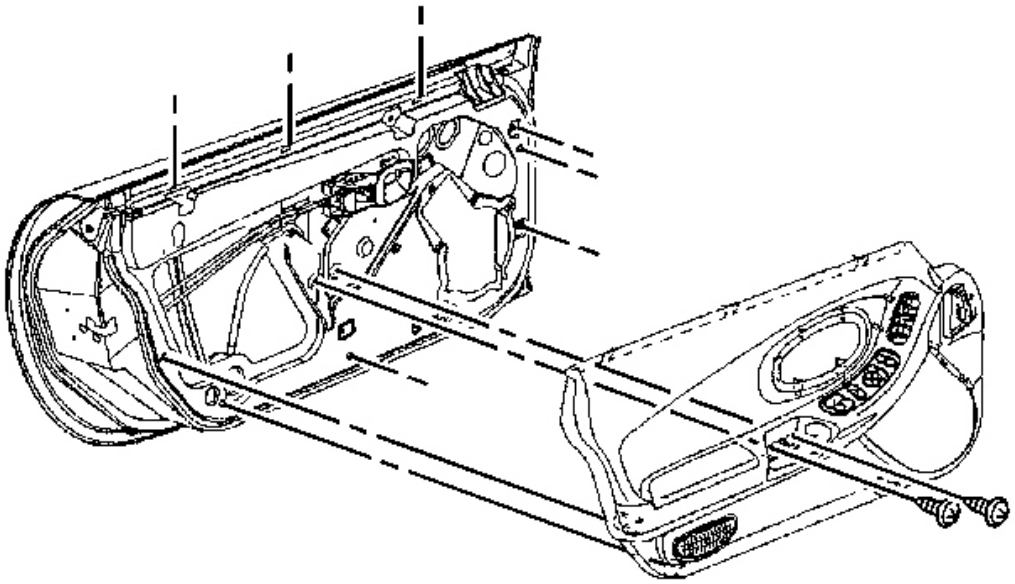

Fig. 33: View Of Door Trim Panel To Door
Courtesy of GENERAL MOTORS CORP.

1. Remove the door trim panel. Refer to **Trim Panel Replacement - Door** .

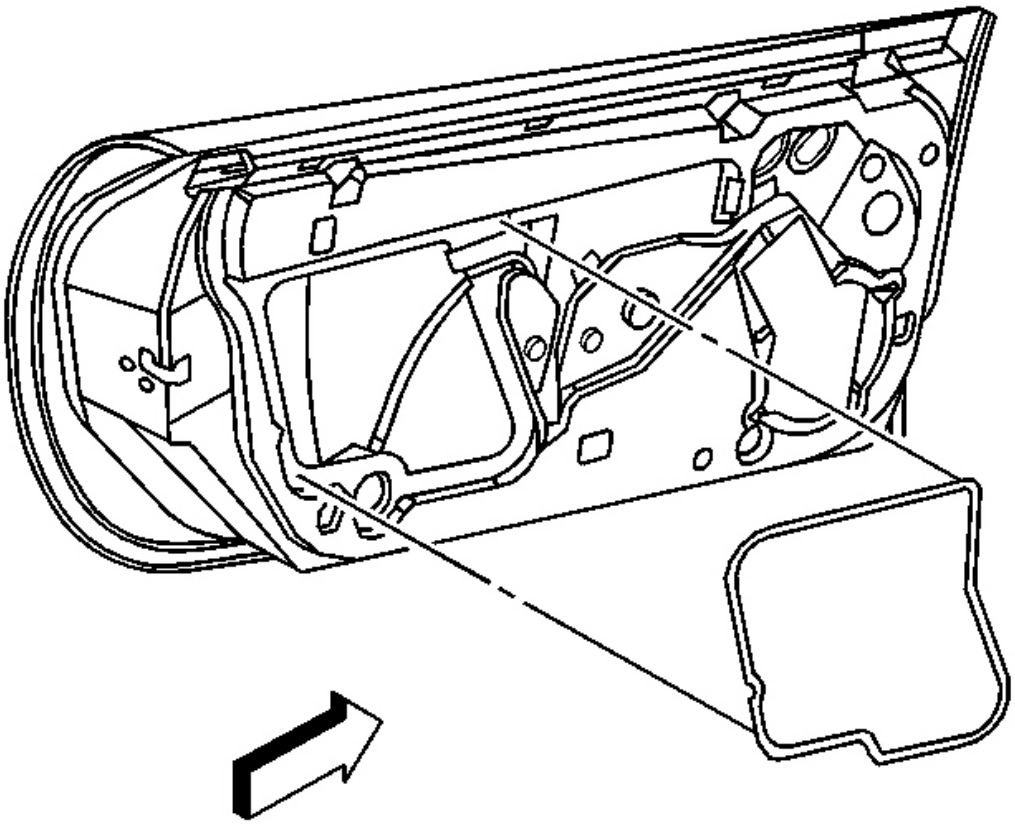

Fig. 34: Water Deflector At Door Inner Panel
Courtesy of GENERAL MOTORS CORP.

2. Peel the water deflector from the door inner panel.

Installation Procedure

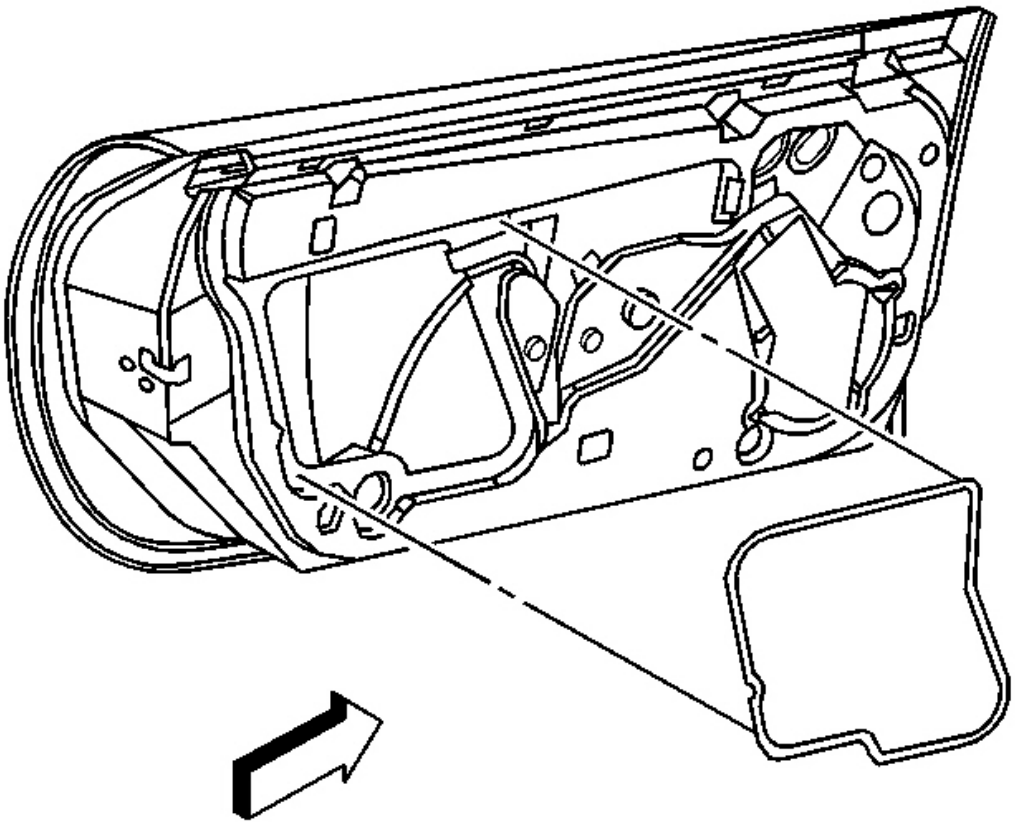

Fig. 35: Water Deflector At Door Inner Panel
Courtesy of GENERAL MOTORS CORP.

1. Peel the backing paper from the adhesive on the new deflector.
2. Position the deflector over the large opening in the door.
3. Beginning at the bottom of the water deflector press firmly to secure the adhesive.

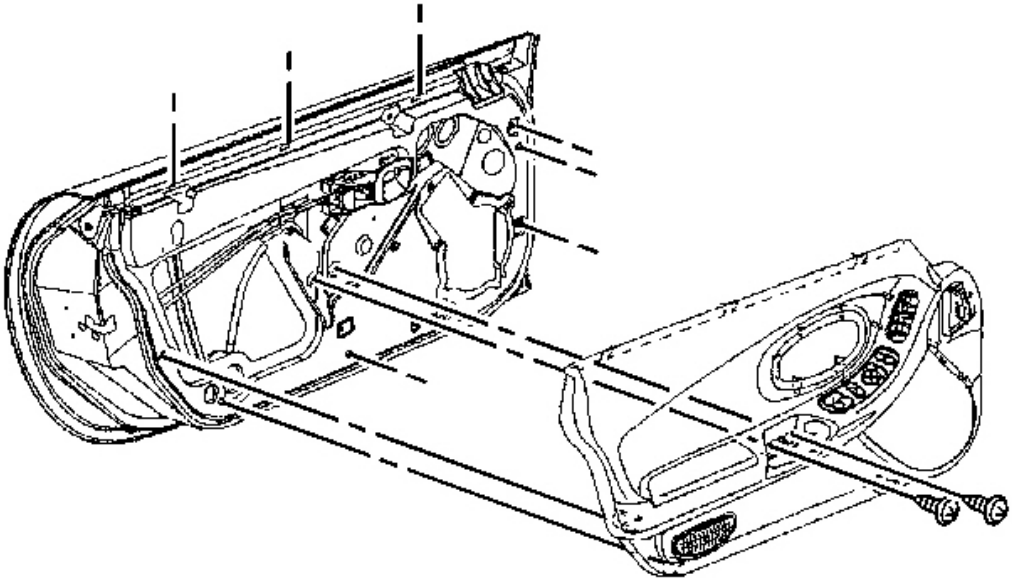

Fig. 36: View Of Door Trim Panel To Door
Courtesy of GENERAL MOTORS CORP.

4. Install the door trim panel. Refer to **Trim Panel Replacement - Door** .

DOOR ADJUSTMENT - FRONT

Up/Down Adjustment Procedure

IMPORTANT: Loosen one set of hinge bolts at a time and move the hinge not the door. Be sure to re-tighten the hinge bolts before loosing and adjusting the other hinge.

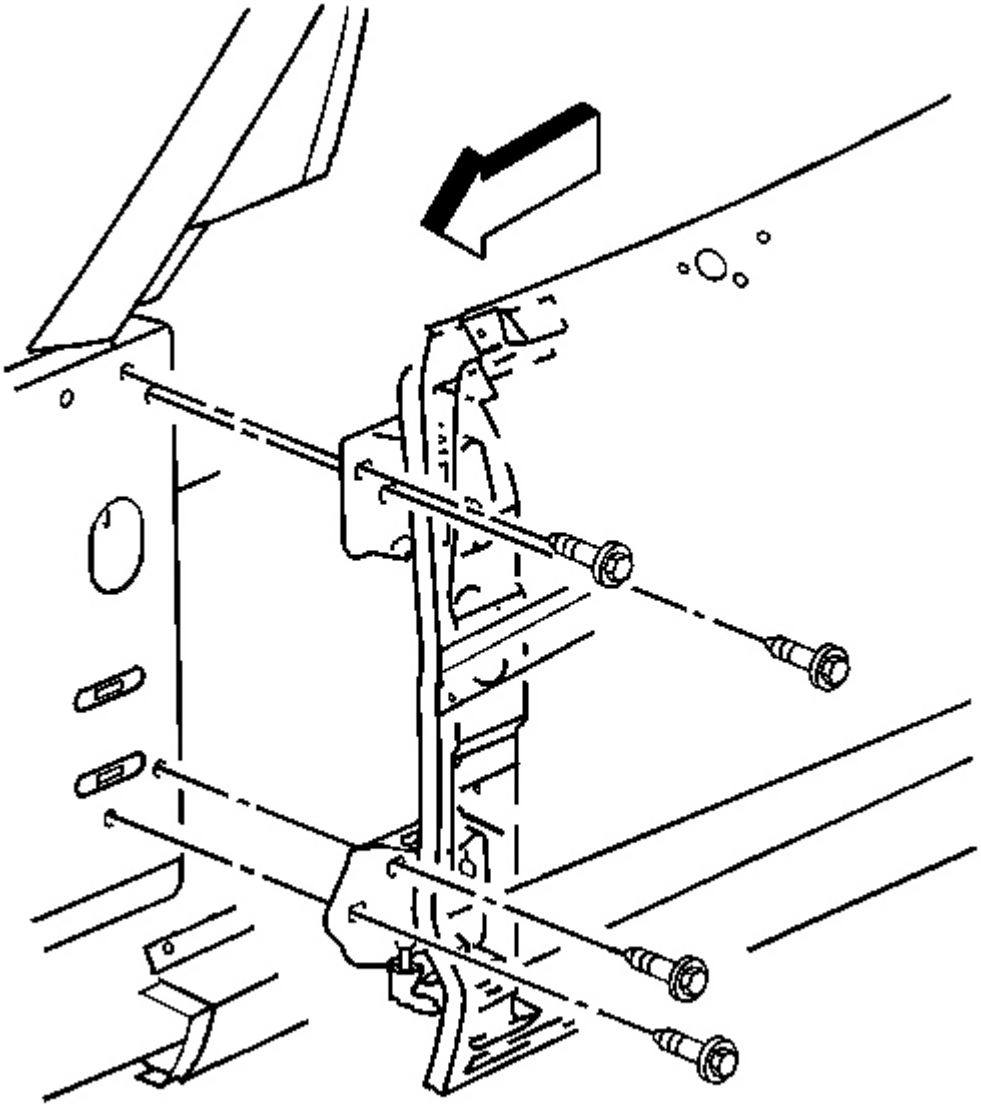

Fig. 37: Front Door Upper Hinge To Hinge Pillar Bolts
Courtesy of GENERAL MOTORS CORP.

1. Loosen the upper hinge to hinge pillar bolts.
2. Reposition the hinge up to raise or down to lower the door.

NOTE: Refer to Fastener Notice in Cautions and Notices.

3. Tighten the upper hinge bolts.

   Tighten: Tighten the door hinge to hinge pillar bolts to 30 N.m (22 lb in).

4. Loosen the lower hinge to hinge pillar bolts.
5. Reposition the hinge.
6. Tighten the lower hinge bolts.

   Tighten: Tighten the door hinge to hinge pillar bolts to 30 N.m (22 lb in).

7. Repeat the procedure for additional adjustment if necessary.

In/Out Adjustment Procedure

IMPORTANT: Loosen one set of hinge bolts at a time and move the hinge not the door be sure to retighten the hinge bolts before loosing and adjusting the other hinge.

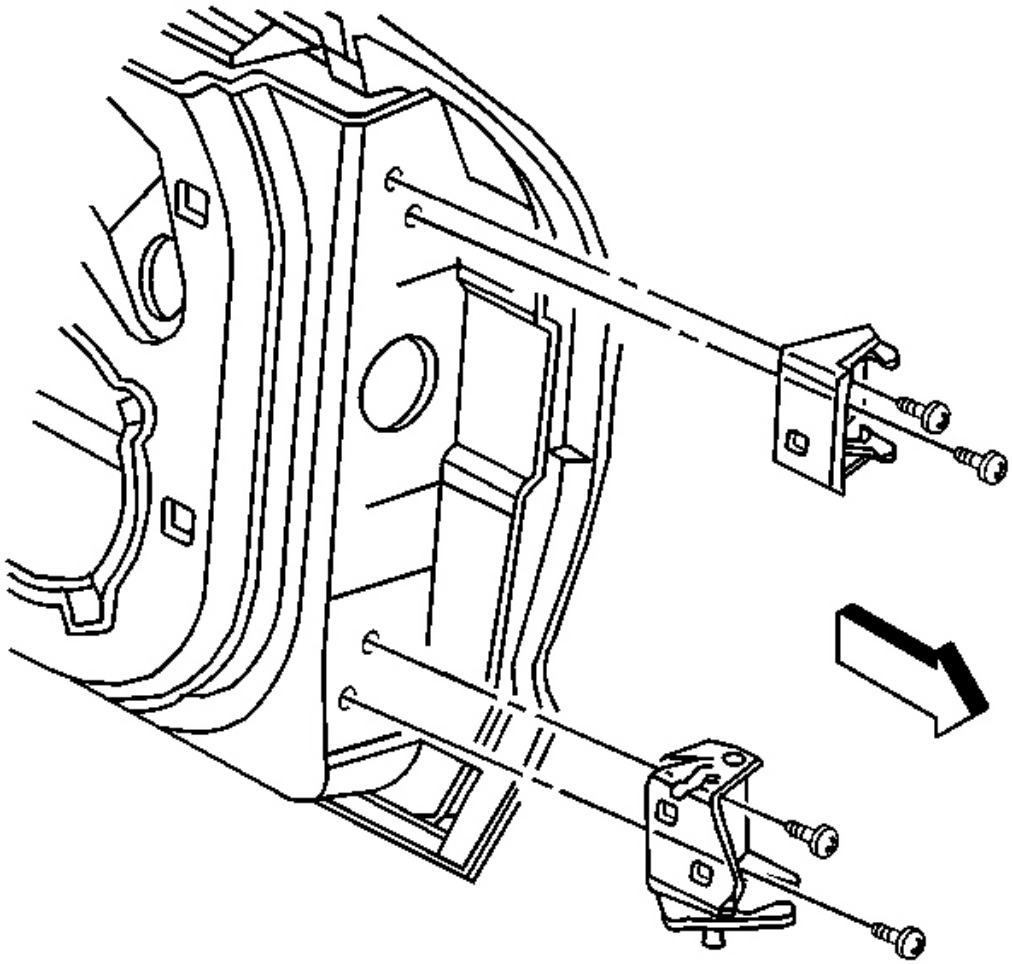

Fig. 38: Upper Hinge At Door Bolts
Courtesy of GENERAL MOTORS CORP.

1. Loosen the upper hinge to door bolts.
2. Reposition the hinge outward to adjust the door inward or inward to adjust the door outward.

NOTE: Refer to Fastener Notice in Cautions and Notices.

3. Tighten the upper hinge to door bolts.

Tighten: Tighten the door hinge to door bolts to 30 N.m (22 lb in).

4. Loosen the lower hinge to door bolts.
5. Reposition the hinge.
6. Tighten the lower hinge to door bolts.

   Tighten: Tighten the door hinge to door bolts to 30 N.m (22 lb in).

7. Repeat procedure for additional adjustment if necessary.

DOOR REPLACEMENT

Removal Procedure

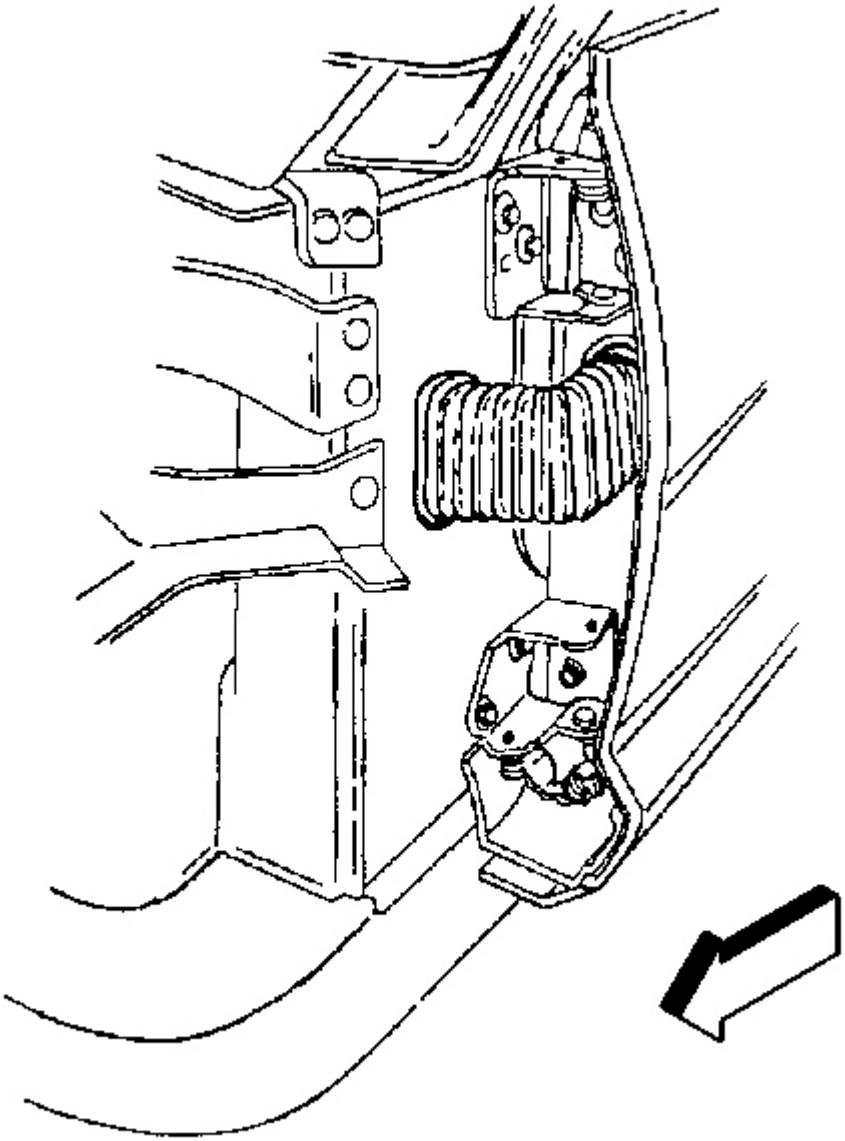

Fig. 39: Harness Grommet At Hinge Pillar
Courtesy of GENERAL MOTORS CORP.

1. Mark the harness grommet at the edge of the opening in the hinge pillar to aid in determining the depth to reinstall the grommet on reassembly.

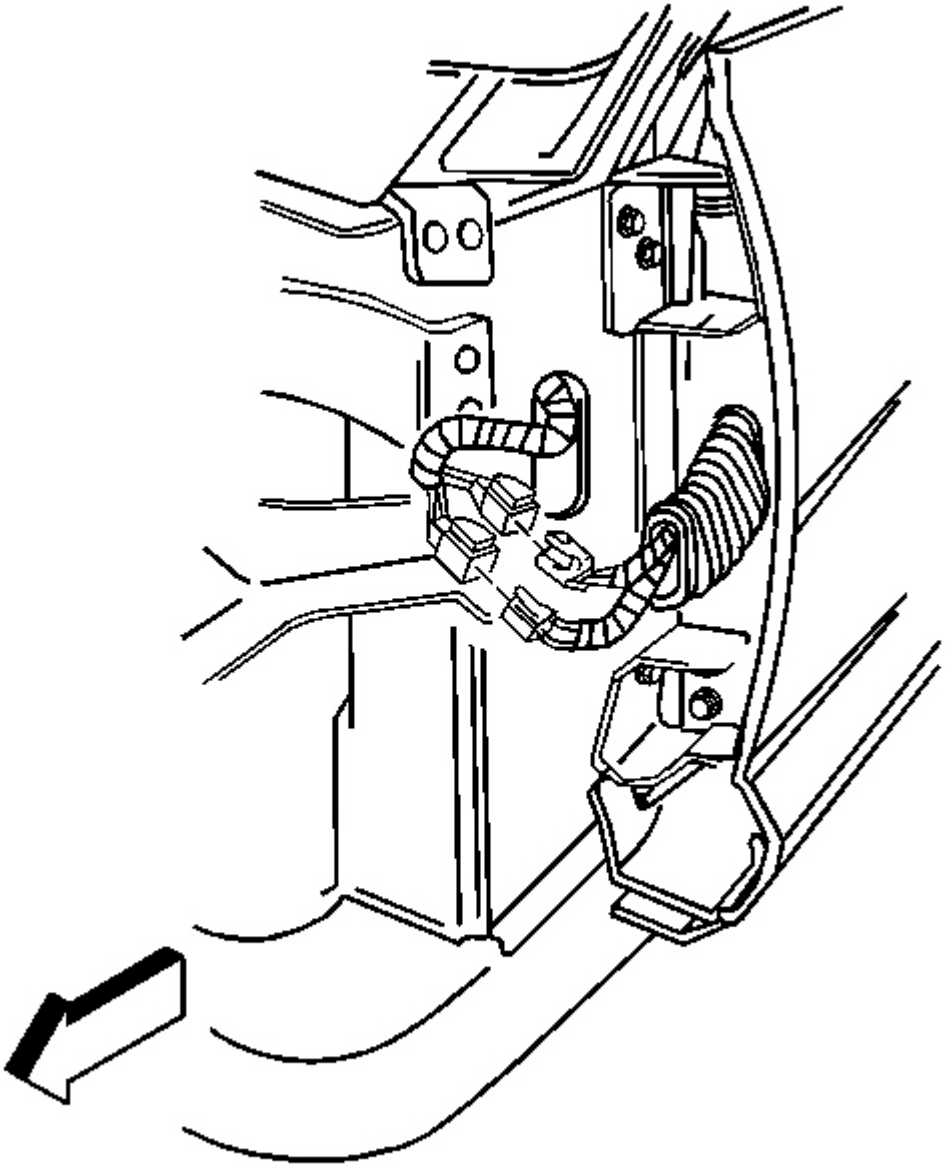

Fig. 40: Harness Grommet At Hinge Pillar & Electrical Connectors
Courtesy of GENERAL MOTORS CORP.

2. Disconnect the harness grommet from the hinge pillar.
3. Disconnect the electrical connectors.

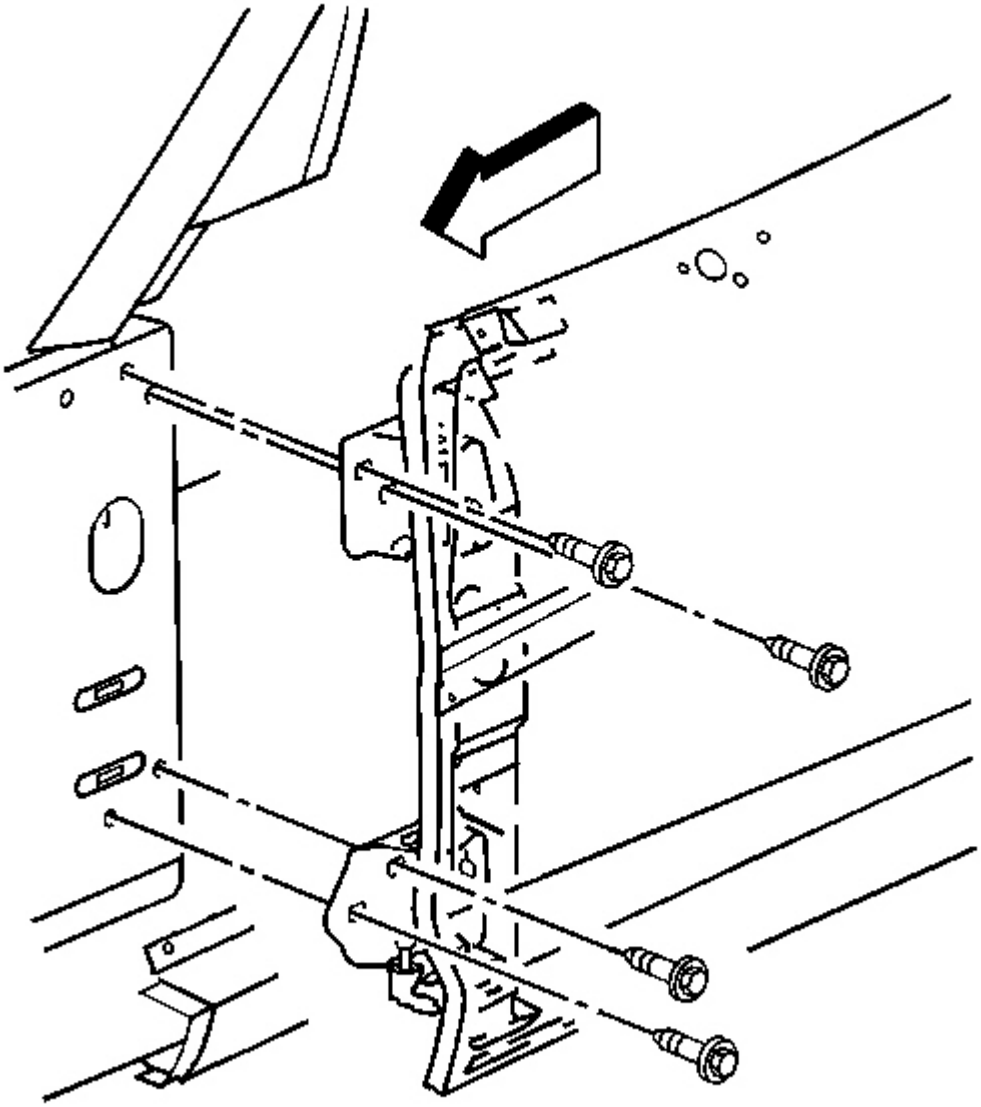

Fig. 41: Front Door Upper Hinge To Hinge Pillar Bolts
Courtesy of GENERAL MOTORS CORP.

4. Mark the location of the hinges on the pillar.
5. Support the door.
6. Remove the bolts attaching the hinges to the hinge pillar.
7. Remove the door.

8. Transfer parts as necessary.

Installation Procedure

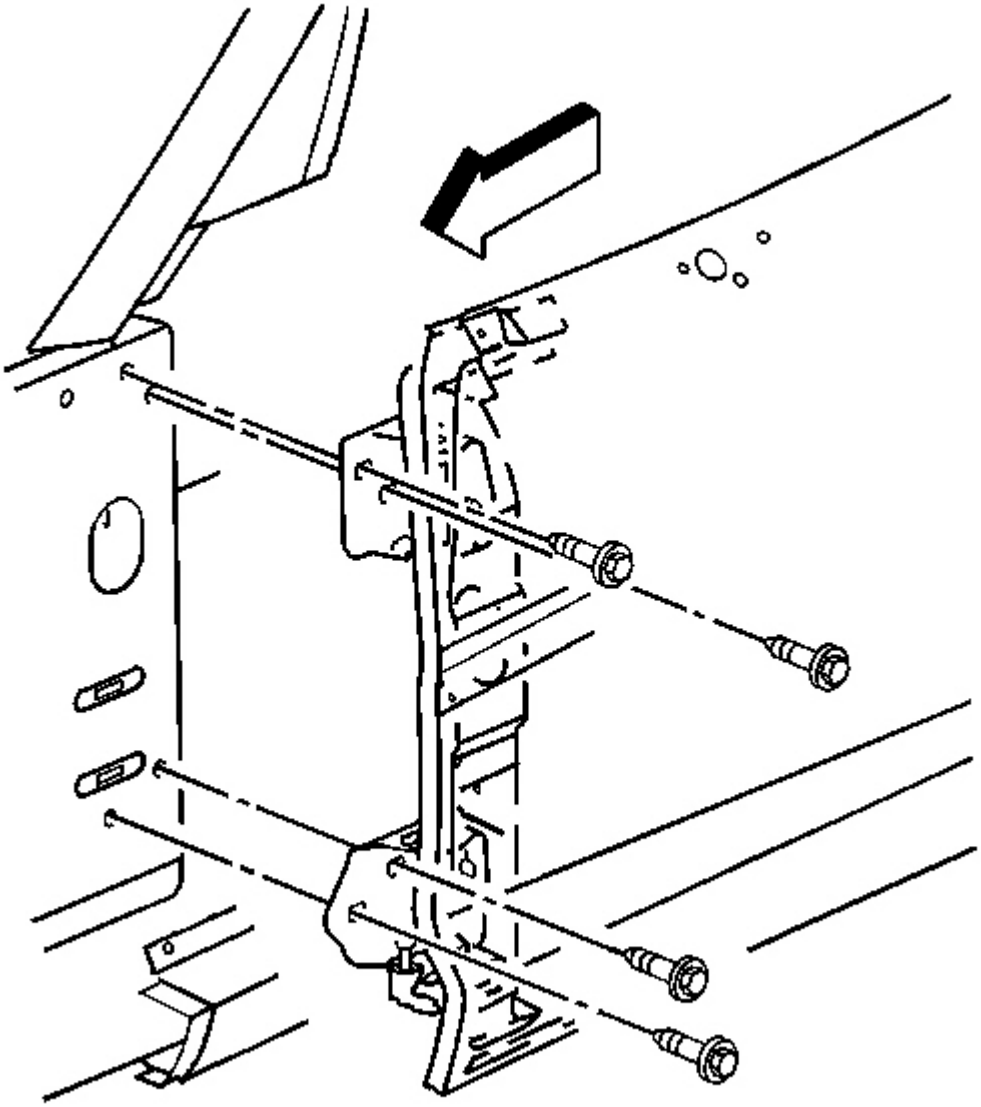

Fig. 42: Front Door Upper Hinge To Hinge Pillar Bolts
Courtesy of GENERAL MOTORS CORP.

1. Position the door to the opening aligning the hinges to the marks.

NOTE: **Refer to Fastener Notice in Cautions and Notices.**

2. Install the bolts attaching the hinges to the hinge pillar.

   Tighten: Tighten the door hinge to hinge pillar bolts to 30 N.m (22 lb ft).

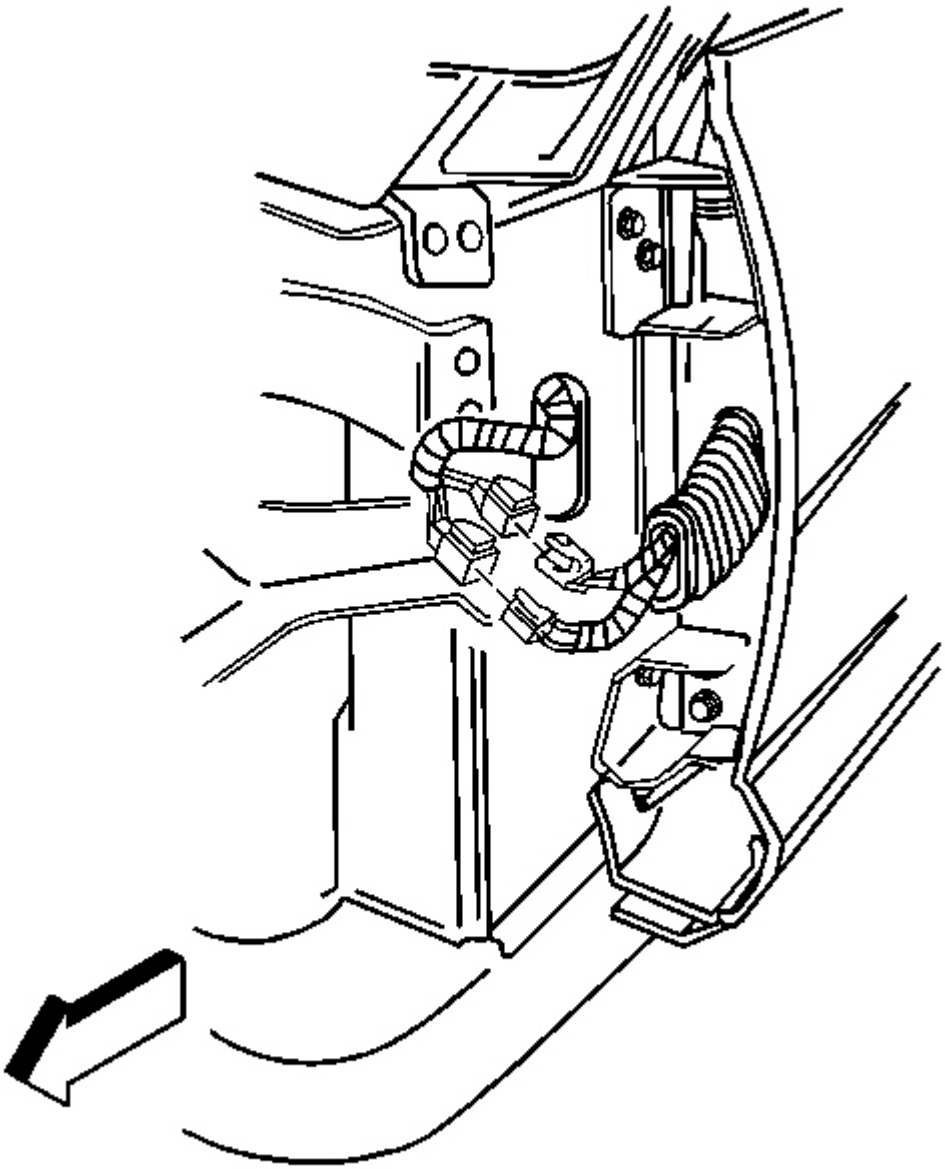

Fig. 43: Harness Grommet At Hinge Pillar & Electrical Connectors
Courtesy of GENERAL MOTORS CORP.

3. Connect the harness electrical connectors.

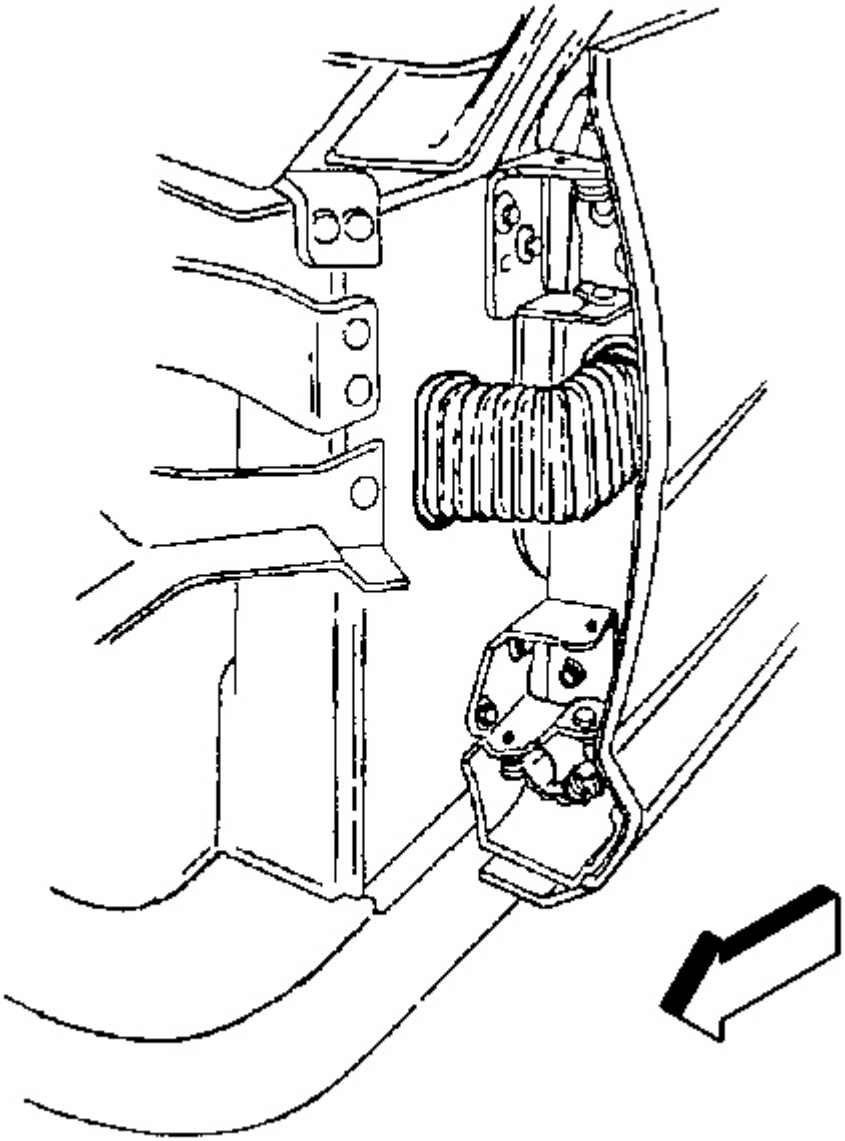

Fig. 44: Harness Grommet At Hinge Pillar
Courtesy of GENERAL MOTORS CORP.

4. Install the harness grommet into the hinge pillar aligning the depth mark with the edge of the opening in the hinge pillar.
5. Adjust the door as necessary by loosing the hinge bolts and repositioning the hinge and/or the door.
6. Adjust the door window as necessary.

HINGE REPLACEMENT - FRONT DOOR

Removal Procedure

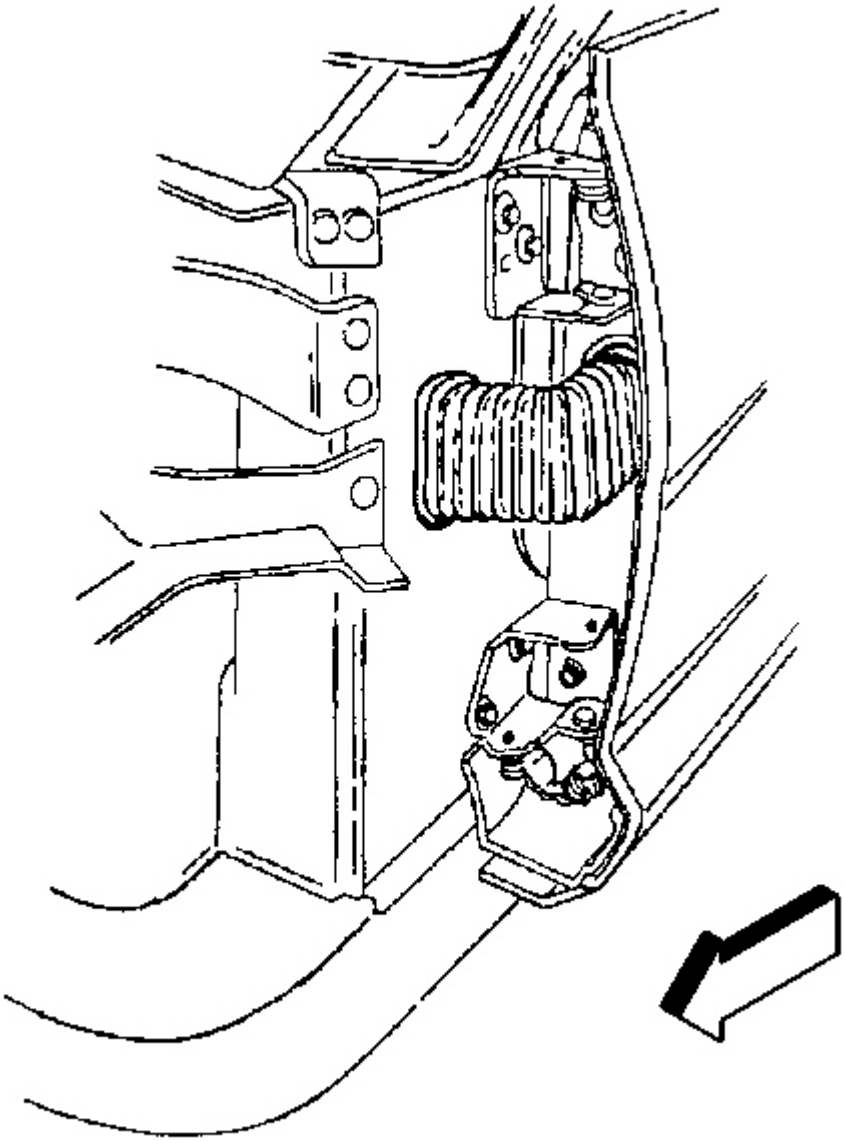

Fig. 45: Harness Grommet At Hinge Pillar
Courtesy of GENERAL MOTORS CORP.

1. Mark the location of the hinge on the door and on the hinge pillar.
2. Support the door.

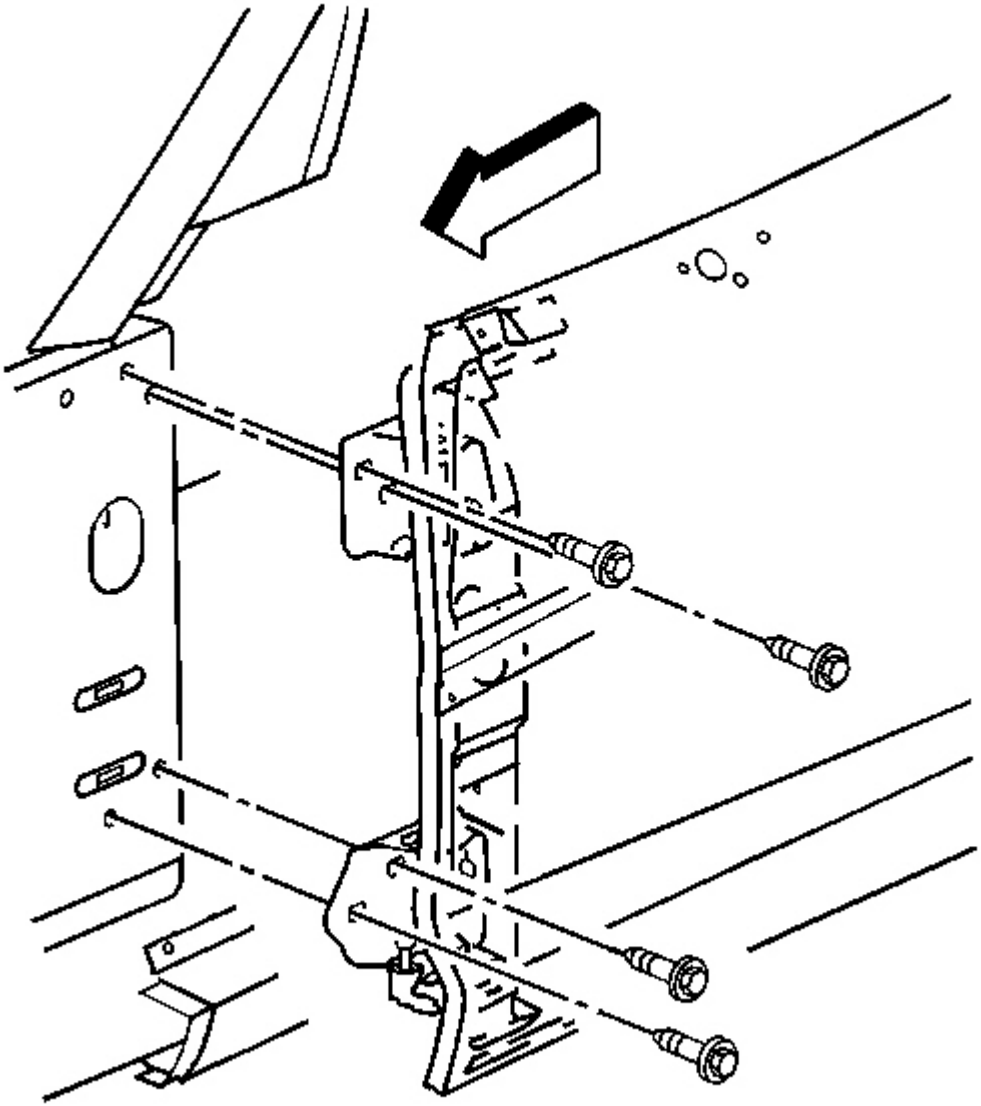

Fig. 46: Front Door Upper Hinge To Hinge Pillar Bolts
Courtesy of GENERAL MOTORS CORP.

3. Remove the bolts securing the hinge to the hinge pillar.

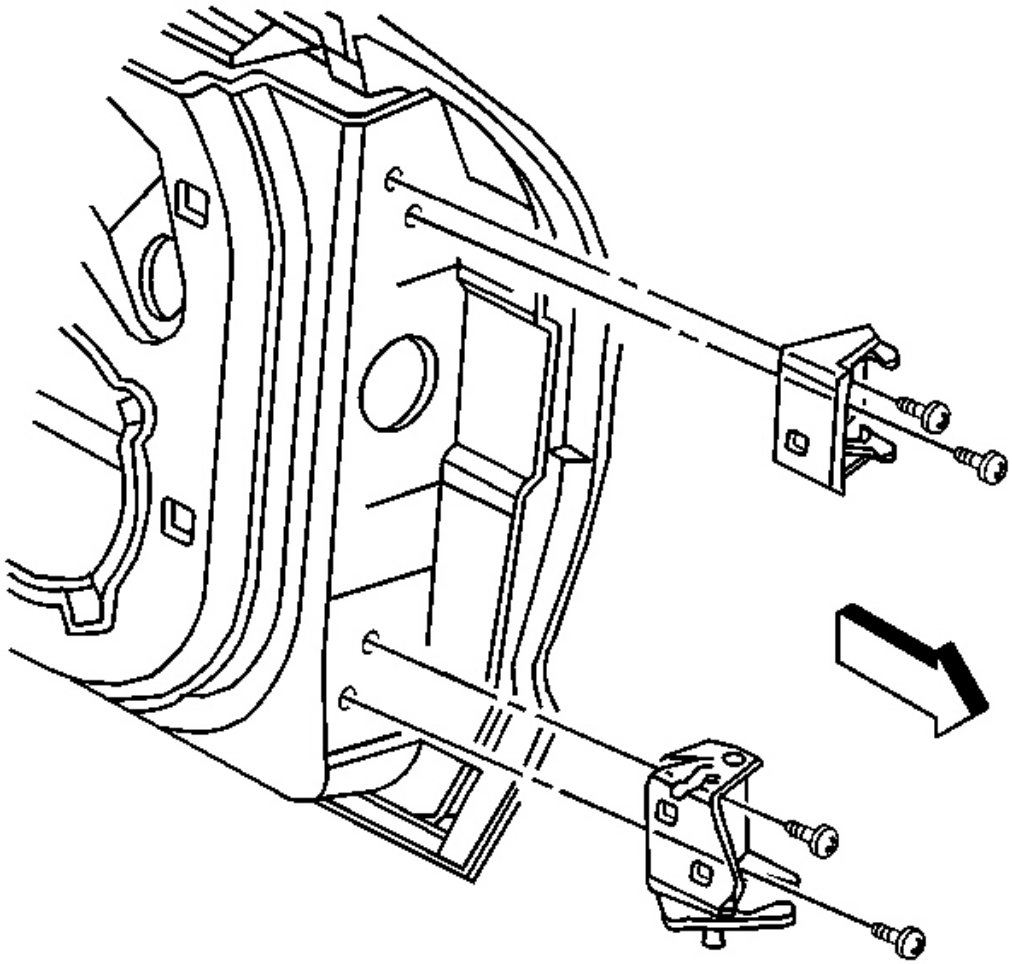

Fig. 47: Upper Hinge At Door Bolts
Courtesy of GENERAL MOTORS CORP.

4. Remove the bolts securing the hinge to the door.
5. Remove the door hinge.

Installation Procedure

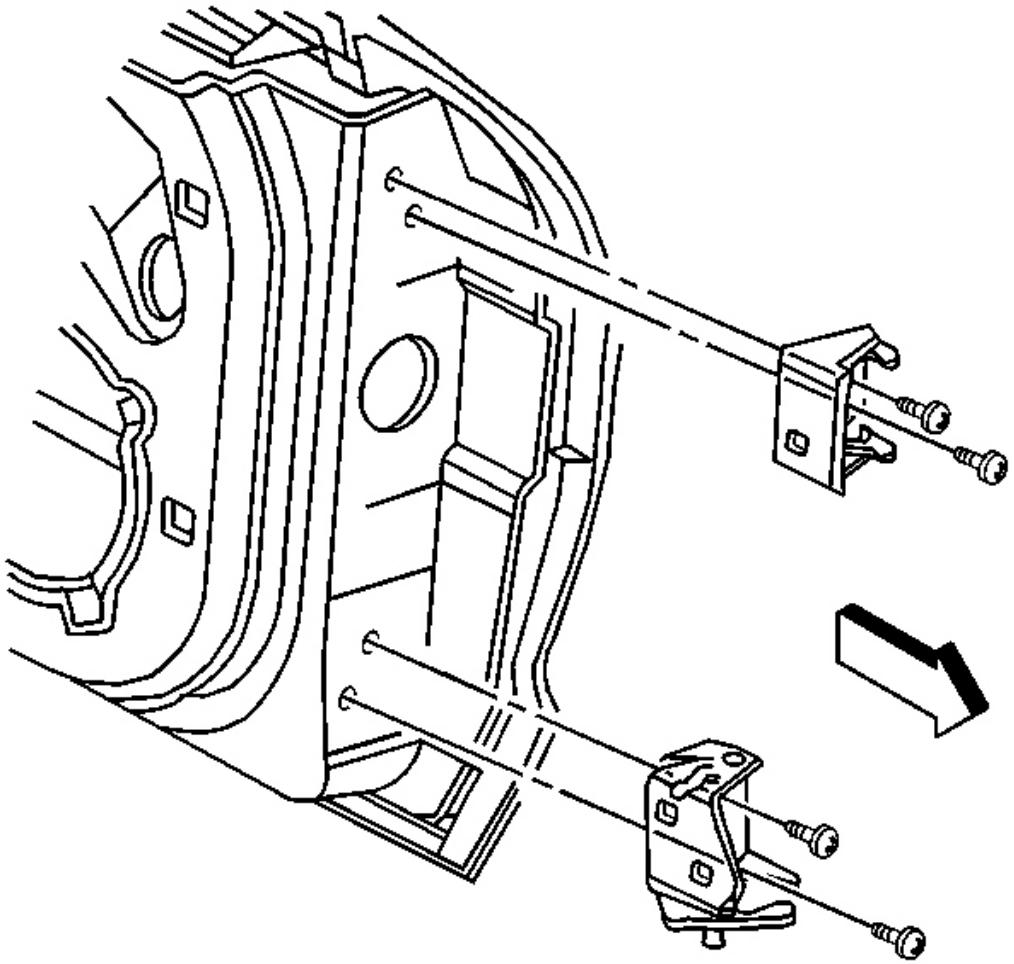

Fig. 48: Upper Hinge At Door Bolts
Courtesy of GENERAL MOTORS CORP.

1. Position the hinge to the marks on the door.

NOTE: **Refer to Fastener Notice in Cautions and Notices.**

2. Install the bolts attaching the hinge to the door.

Tighten: Tighten the door hinge to door bolts to 30 N.m (22 lb ft).

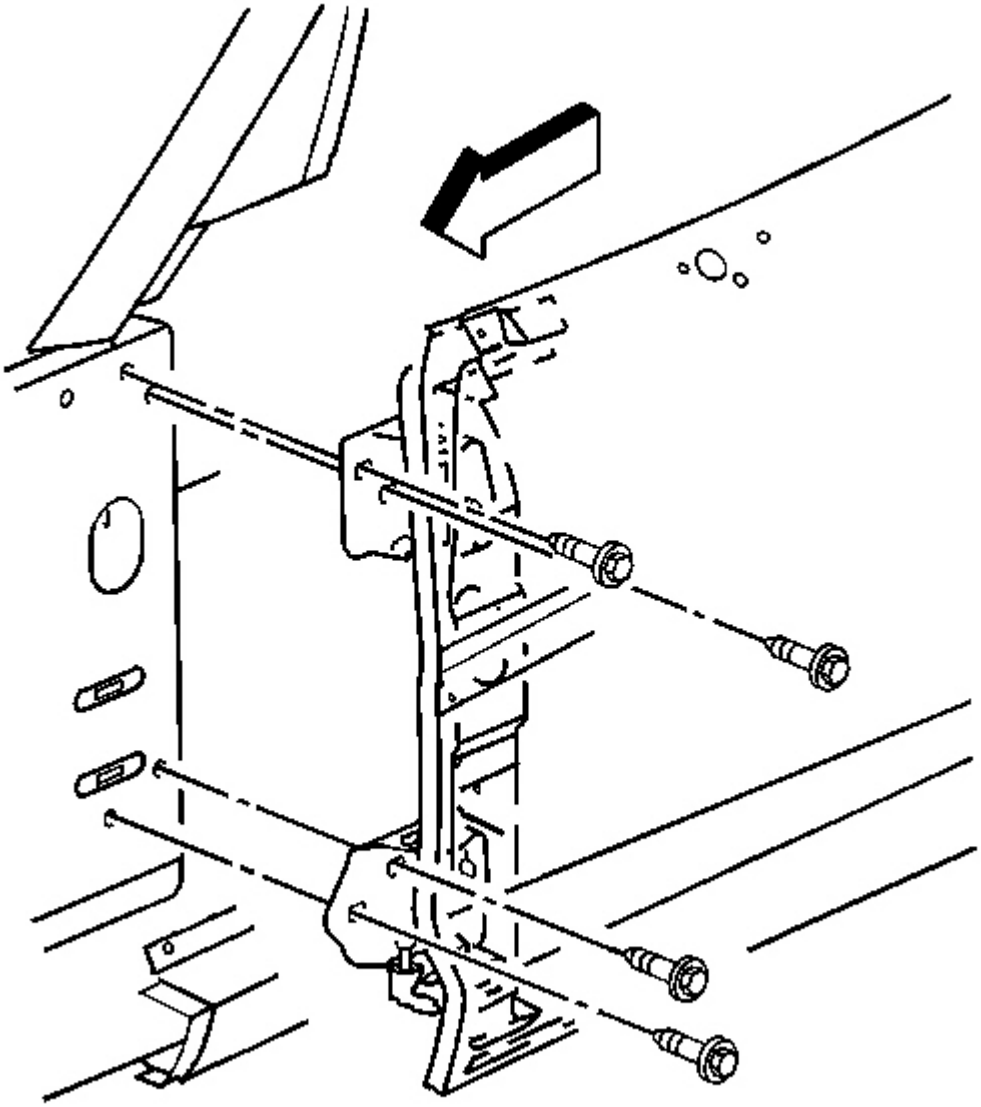

Fig. 49: Front Door Upper Hinge To Hinge Pillar Bolts
Courtesy of GENERAL MOTORS CORP.

3. Position the hinge to the marks on the hinge pillar.
4. Install the bolts attaching the hinge to the hinge pillar.

Tighten: Tighten the door hinge to hinge pillar bolts to 30 N.m (22 lb ft).

5. Remove the door support and check the alignment of the door.

DOOR HANDLE REPLACEMENT - OUTSIDE

Removal Procedure

CAUTION: Refer to Express Down Feature Caution in Cautions and Notices.

IMPORTANT: The clip retaining the outside door handle opening rod to the door lock should not be reused. To ensure the proper retention of the rod, the clip must be replaced after being opened to release the rod.

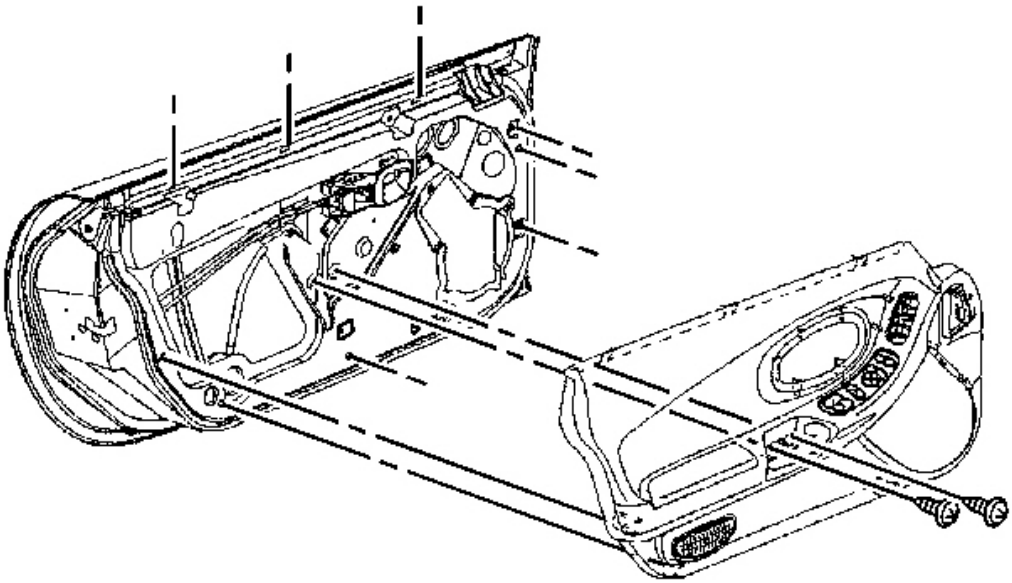

Fig. 50: View Of Door Trim Panel To Door
Courtesy of GENERAL MOTORS CORP.

1. Remove the door trim panel. Refer to **Trim Panel Replacement - Door** .

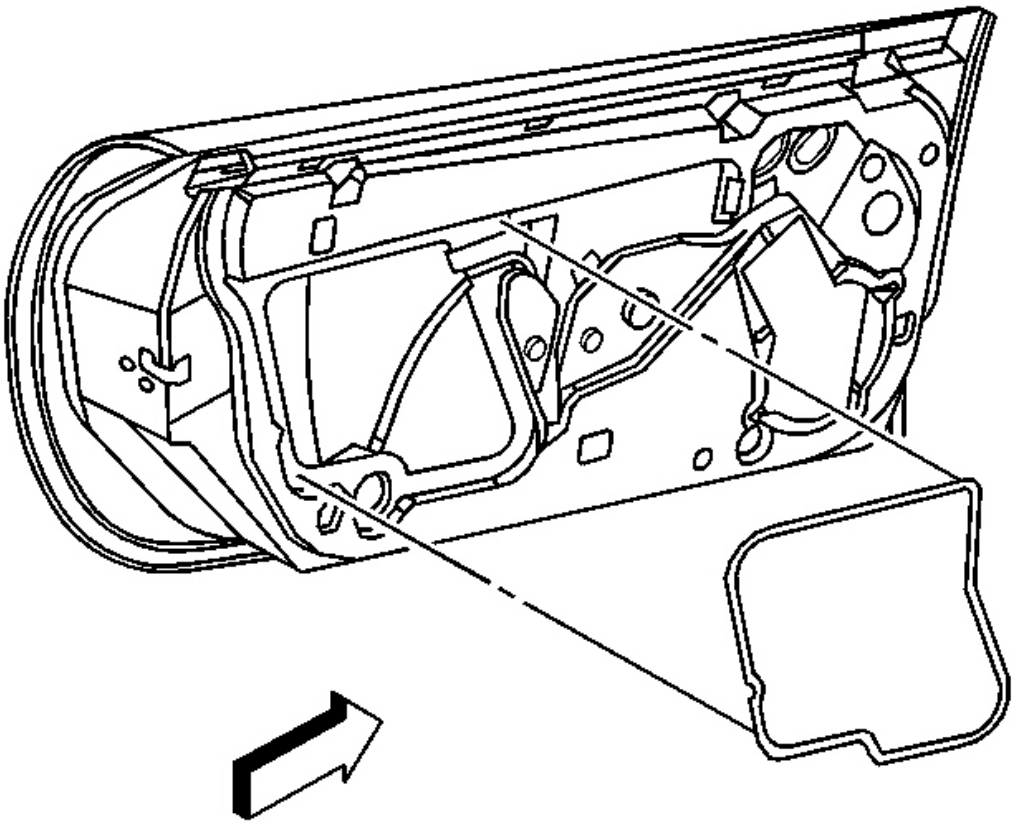

Fig. 51: Water Deflector At Door Inner Panel
Courtesy of GENERAL MOTORS CORP.

2. Remove the water deflector.

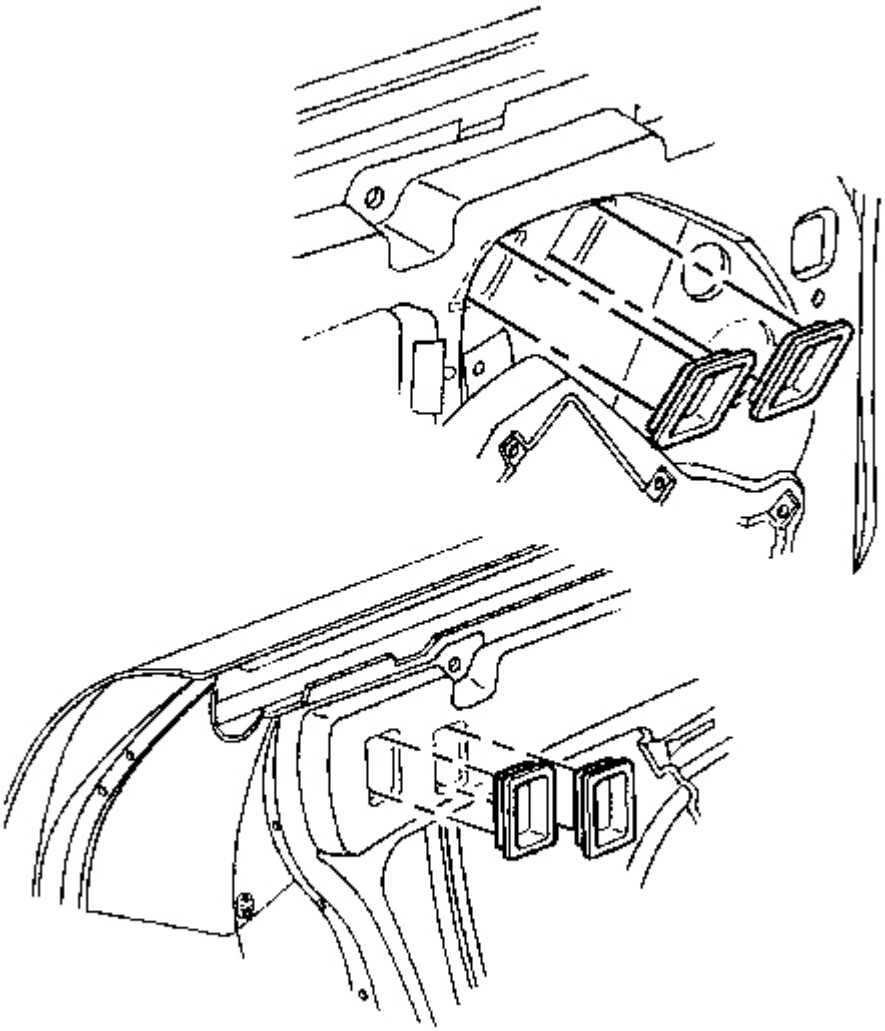

Fig. 52: Window Clamp Sight Access Plugs
Courtesy of GENERAL MOTORS CORP.

3. Remove the rear sight/access plugs.

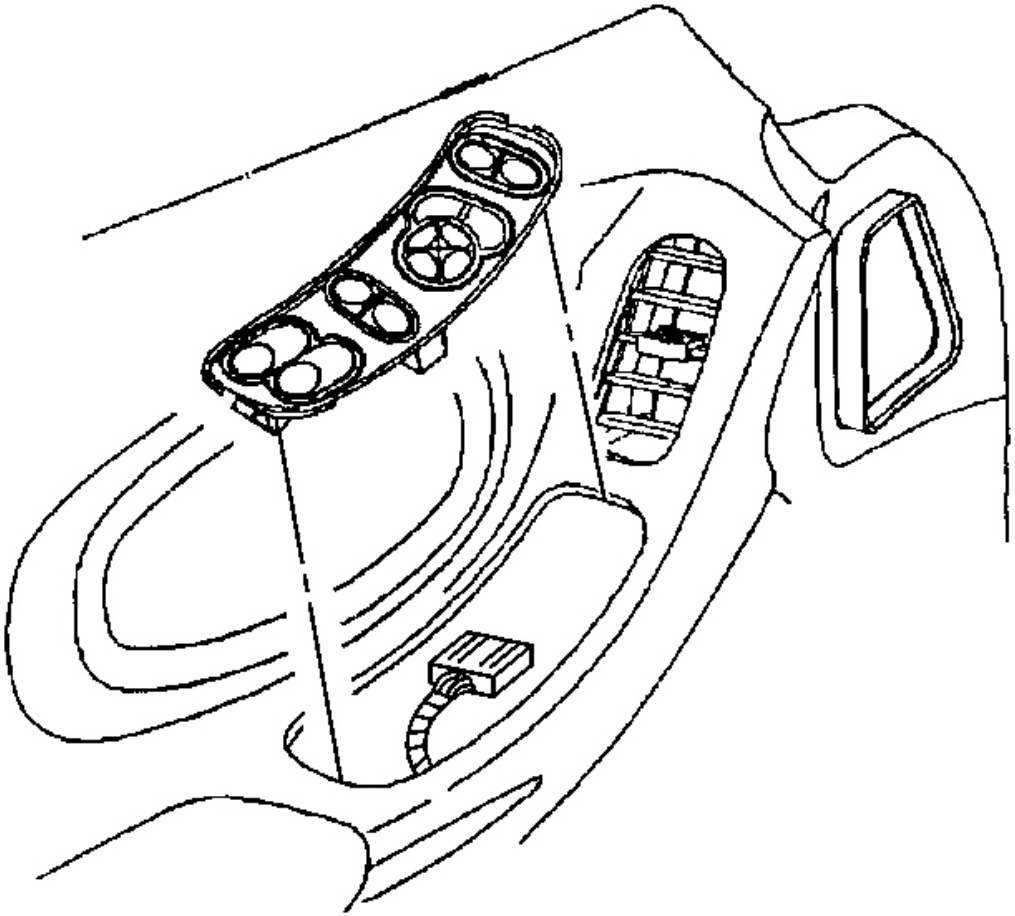

Fig. 53: Electrical Connector At Driver Side Switch
Courtesy of GENERAL MOTORS CORP.

4. Reconnect the power window switch and raise the door window.
5. Disconnect the switch.

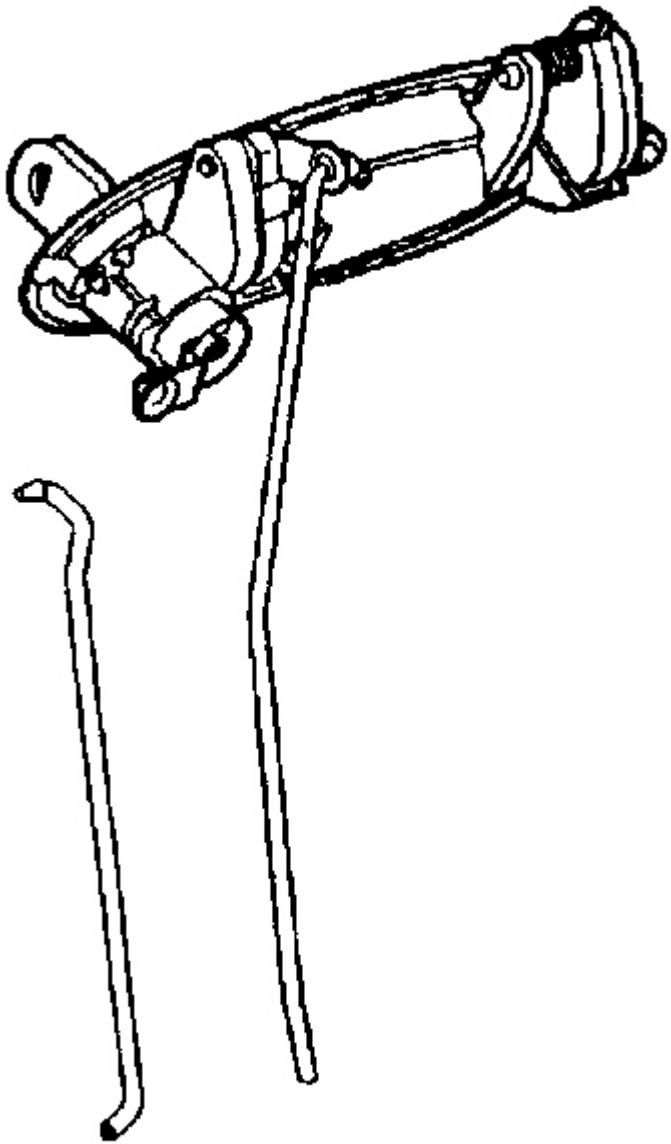

Fig. 54: Lock Rod At Outside Handle Lock Cylinder Lever
Courtesy of GENERAL MOTORS CORP.

6. Remove the lock rod from the outside handle lock cylinder lever (key lockable outside handle).

IMPORTANT: To ensure the proper retention of the door opening rod to the door lock, the lock clip must be replaced after being opened to release the rod.

7. Remove the clip attaching the outside handle door opening rod to the door lock.
    1. Remove the clip from the door opening rod by prying open the clip using a coolant hose removal tool.
    2. Remove the clip from the door lock by cutting the base of the clip off with a pair of side cutters.

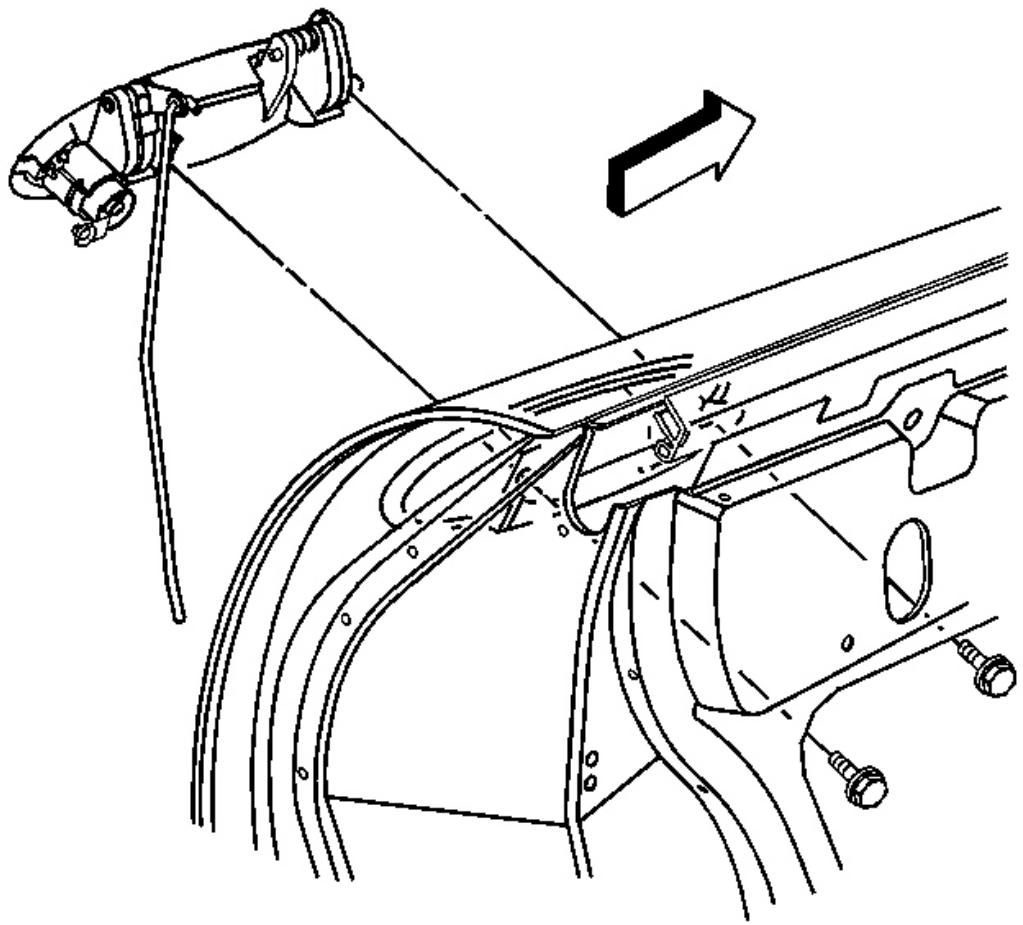

Fig. 55: Bolts At Outside Handle & Gasket
Courtesy of GENERAL MOTORS CORP.

8. Remove the bolts attaching the outside handle.
9. Remove the handle and the gasket.
10. Transfer parts as necessary.

Installation Procedure

CAUTION: Refer to Express Down Feature Caution in Cautions and Notices.

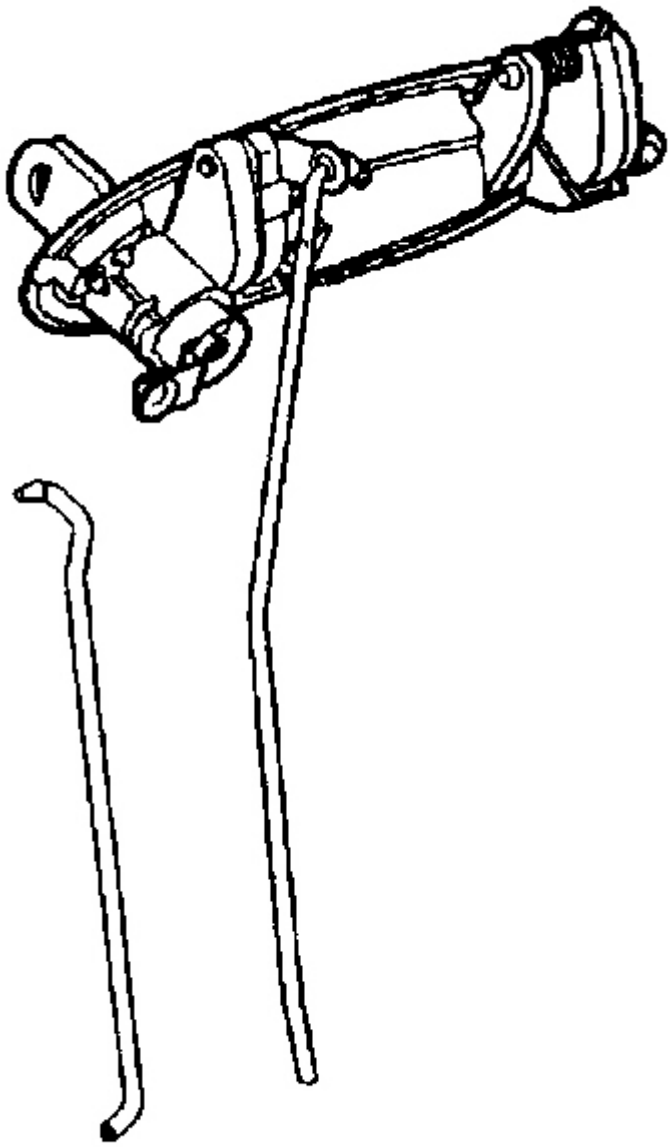

Fig. 56: Lock Rod At Outside Handle Lock Cylinder Lever
Courtesy of GENERAL MOTORS CORP.

1. Install the lock cylinder to the handle if necessary.
2. Install the door opening rod to the handle.
3. Install the gasket to the handle.
4. Install the handle to the door, turning the key in the lock to aid in installation.

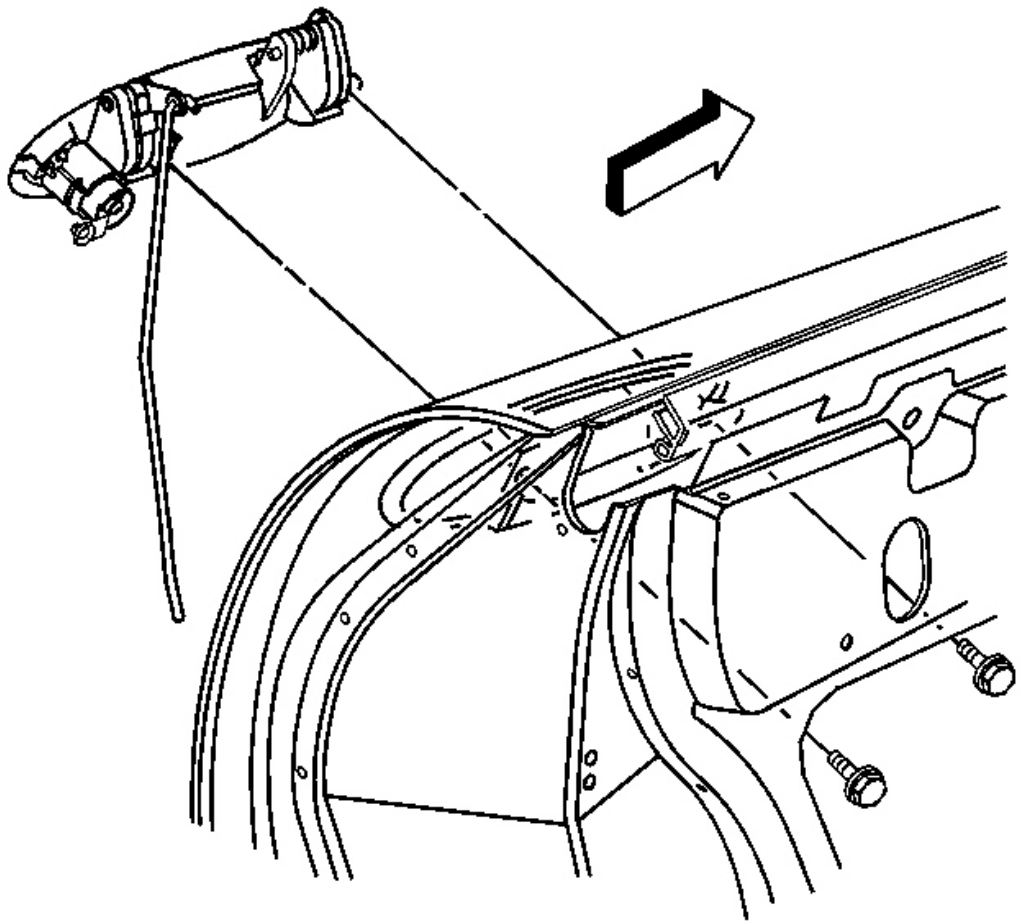

Fig. 57: Bolts At Outside Handle & Gasket
Courtesy of GENERAL MOTORS CORP.

NOTE: Refer to Fastener Notice in Cautions and Notices.

5. Using the sight holes for access hand start the outside handle mounting bolts.

   Tighten: Tighten the outside door handle mounting bolts to 8 N.m (70 lb in).

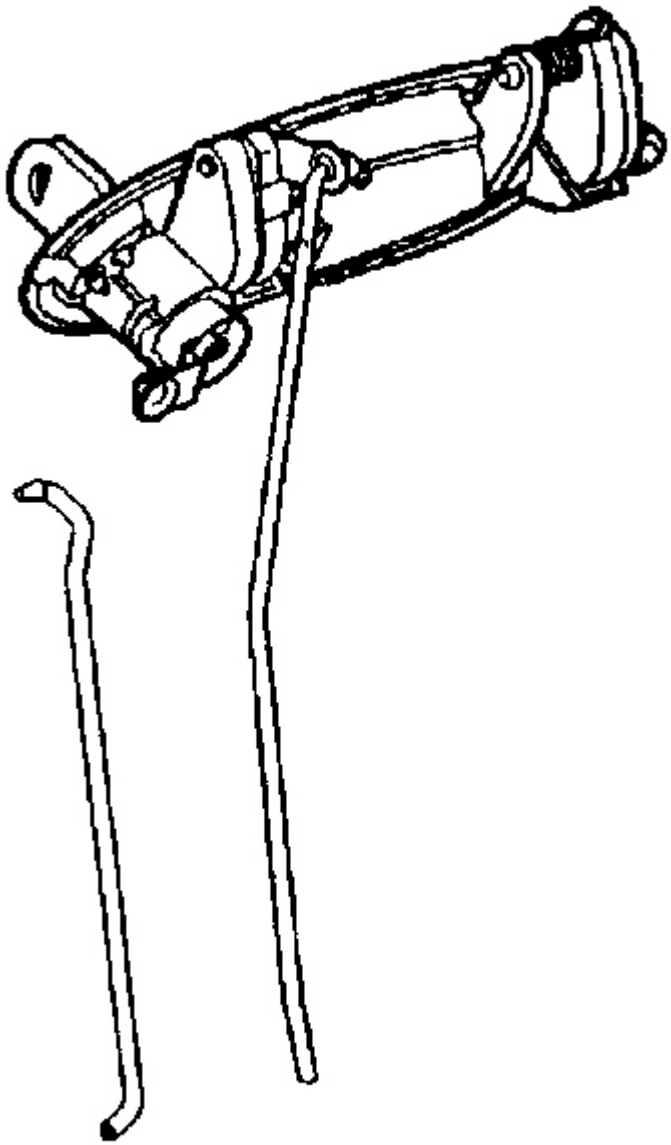

Fig. 58: Lock Rod At Outside Handle Lock Cylinder Lever
Courtesy of GENERAL MOTORS CORP.

6. Install a new door opening rod retaining clip to the door lock.
7. Install the lock rod to the lock cylinder lever (key lockable outside handle).
8. Install the door opening rod to the door lock.

1. Position the rod to the clip eliminating any free play to the handle.
2. Snap the clip closed around the threaded part of the rod.

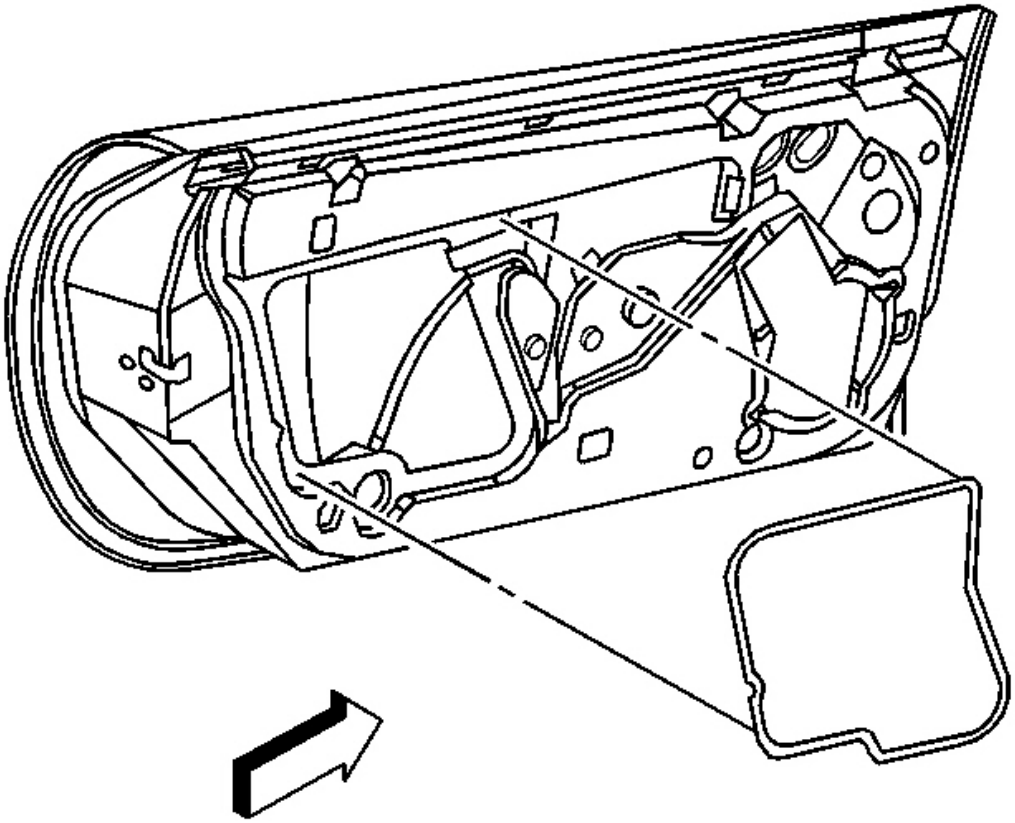

Fig. 59: Water Deflector At Door Inner Panel
Courtesy of GENERAL MOTORS CORP.

9. Install the water deflector.

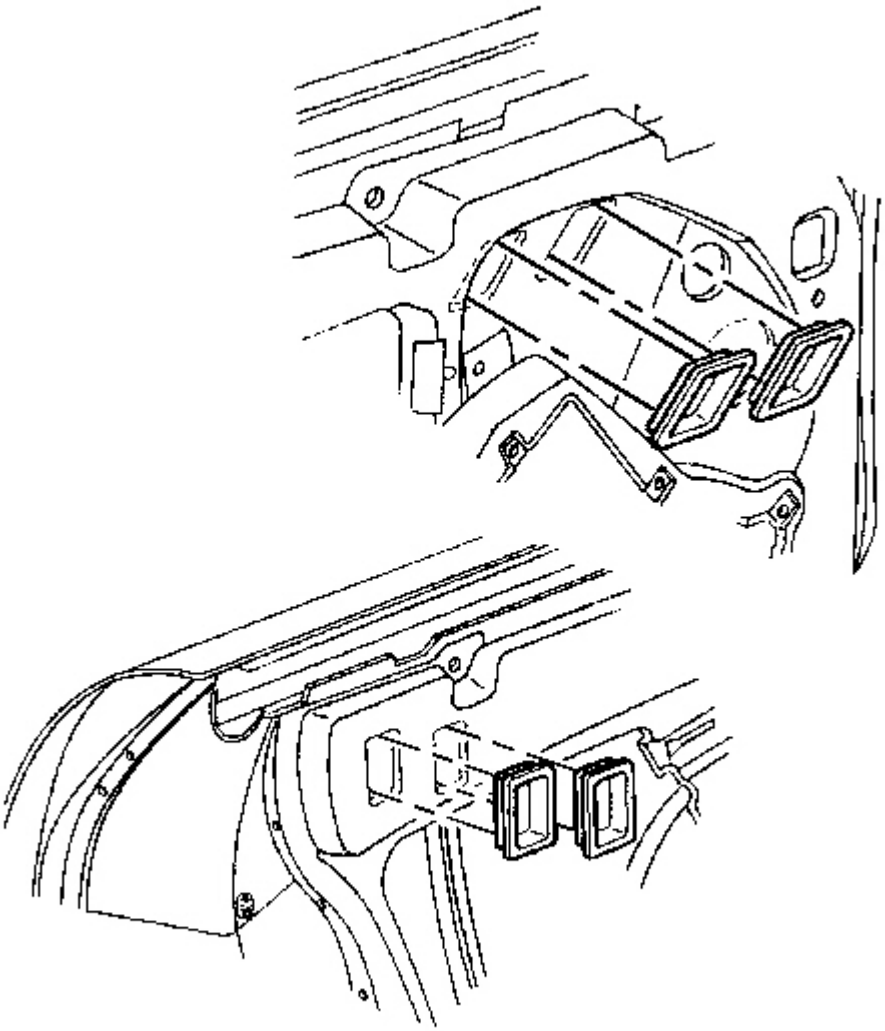

Fig. 60: Window Clamp Sight Access Plugs
Courtesy of GENERAL MOTORS CORP.

10. Install the sight access plugs.

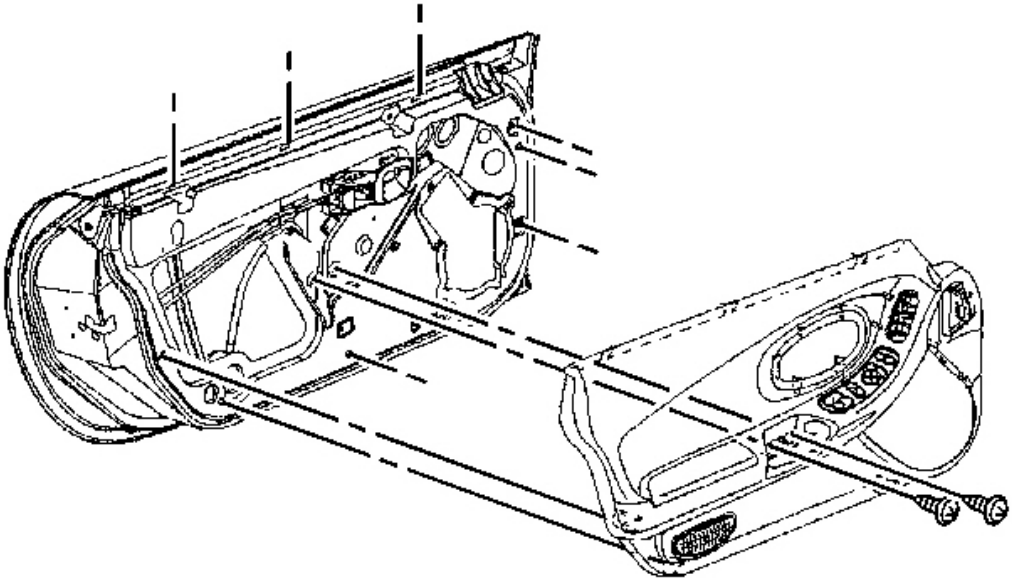

Fig. 61: View Of Door Trim Panel To Door
Courtesy of GENERAL MOTORS CORP.

11. Install the door trim panel. Refer to **Trim Panel Replacement - Door** .

DOOR HANDLE REPLACEMENT - INSIDE

Removal Procedure

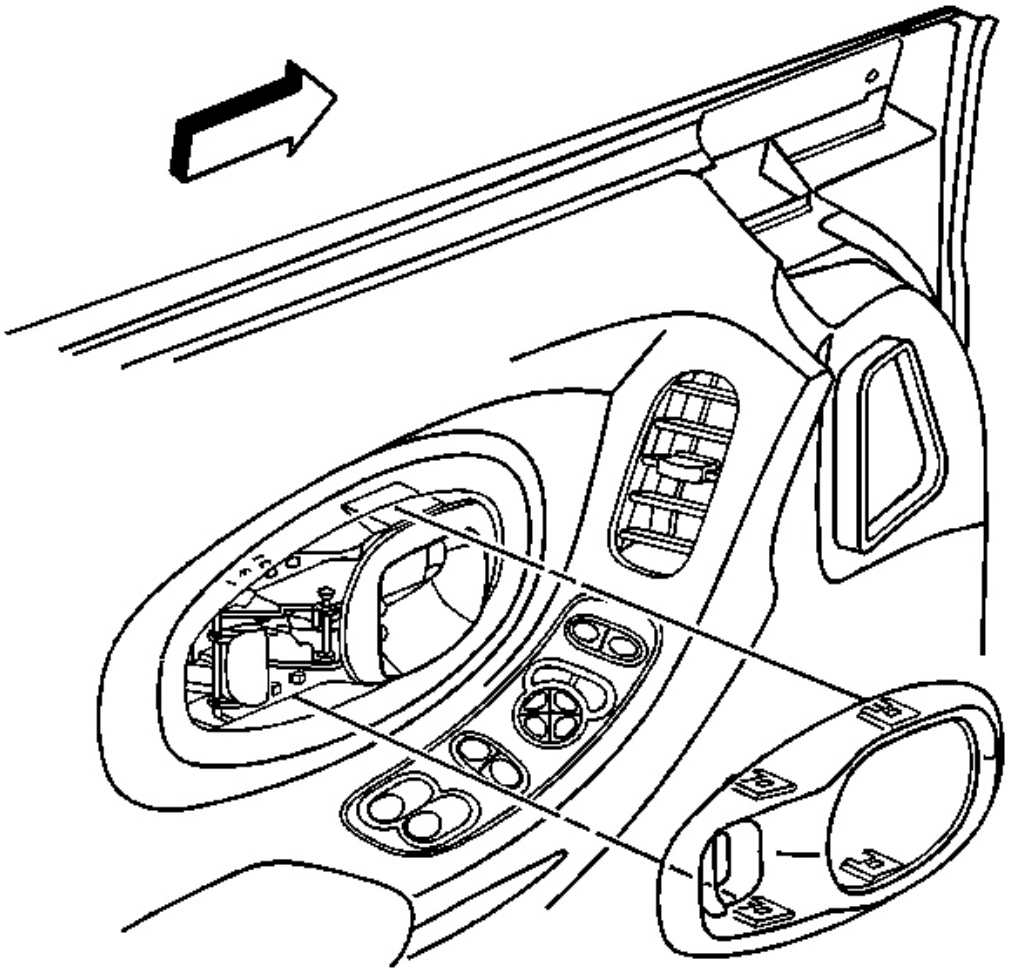

Fig. 62: Door Inside Handle Open At Bezel Locking Tabs
Courtesy of GENERAL MOTORS CORP.

1. Remove the bezel from the door handle. Refer to **Handle Bezel Replacement - Inside** .

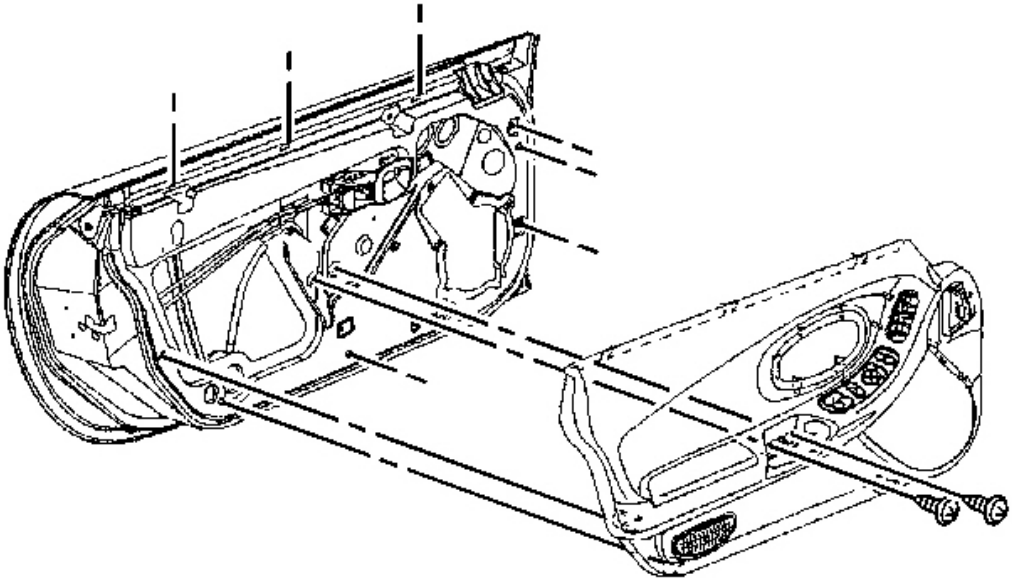

Fig. 63: View Of Door Trim Panel To Door
Courtesy of GENERAL MOTORS CORP.

2. Remove the door trim panel. Refer to **Trim Panel Replacement - Door** .

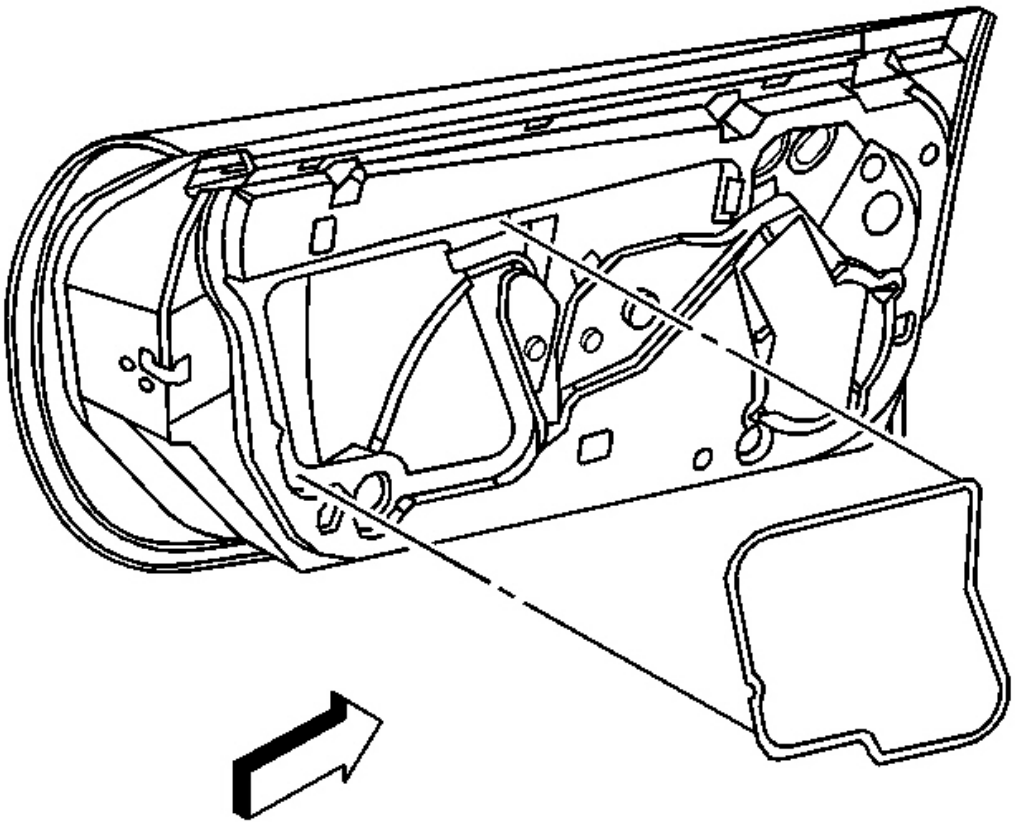

Fig. 64: Water Deflector At Door Inner Panel
Courtesy of GENERAL MOTORS CORP.

3. Remove the water deflector.

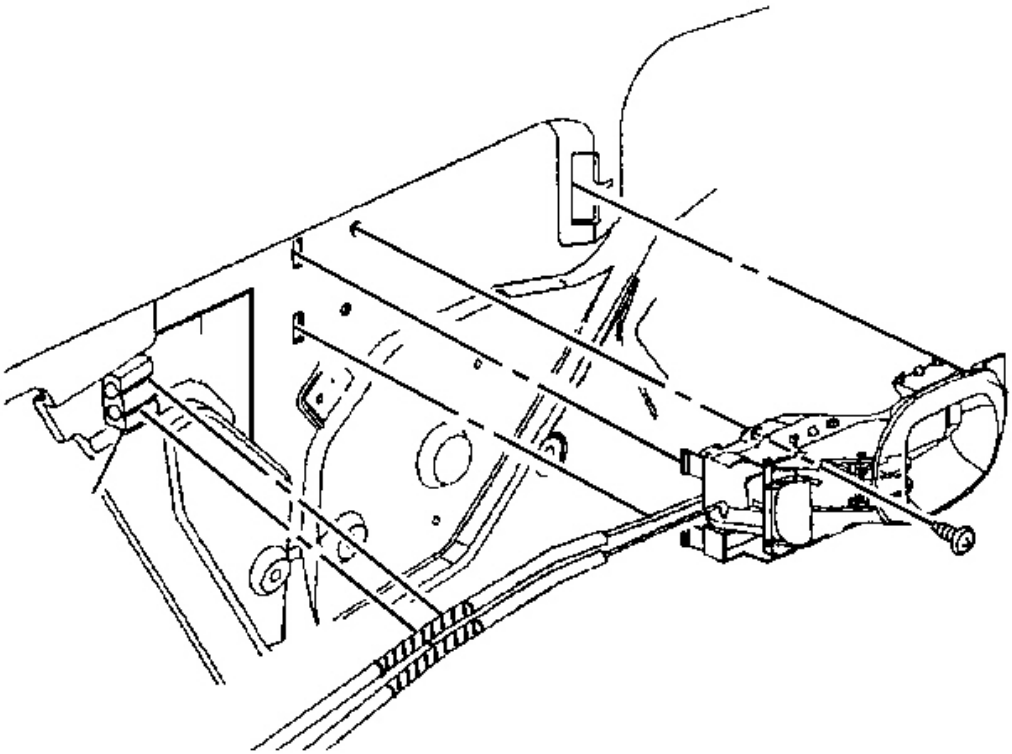

Fig. 65: Inside Handle's Manual Locking Lever
Courtesy of GENERAL MOTORS CORP.

4. Remove the screw, located behind the inside handle's manual locking lever, attaching the handle to the door.
5. Squeeze the handle's rear mounting tabs and unsnap the rear of the handle from the door.
6. Slide the handle rearward out of the forward door slot.

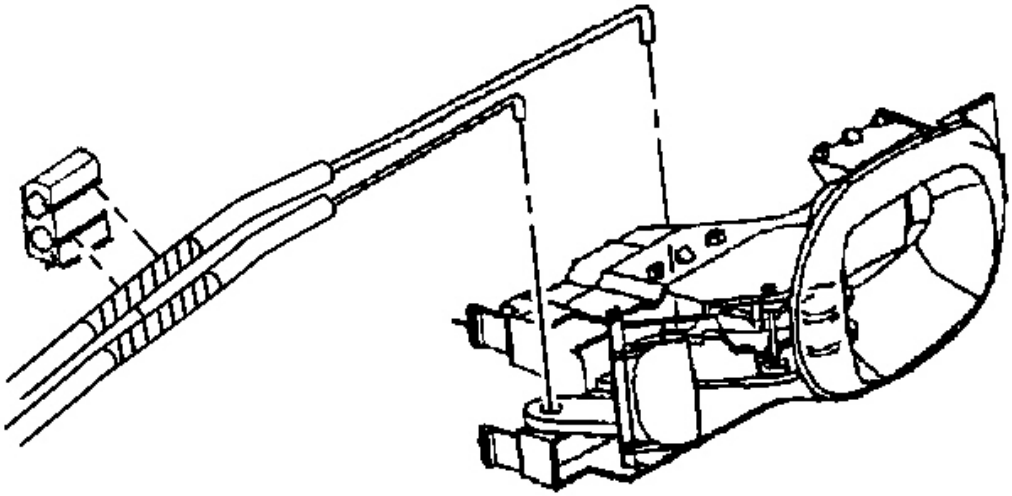

Fig. 66: Lock Rods At Anti-Rattle Retainer
Courtesy of GENERAL MOTORS CORP.

7. Remove the lock rods from the anti-rattle retainer.
8. Open the handle fully.
9. Remove the lock rods from the handle.

Installation Procedure

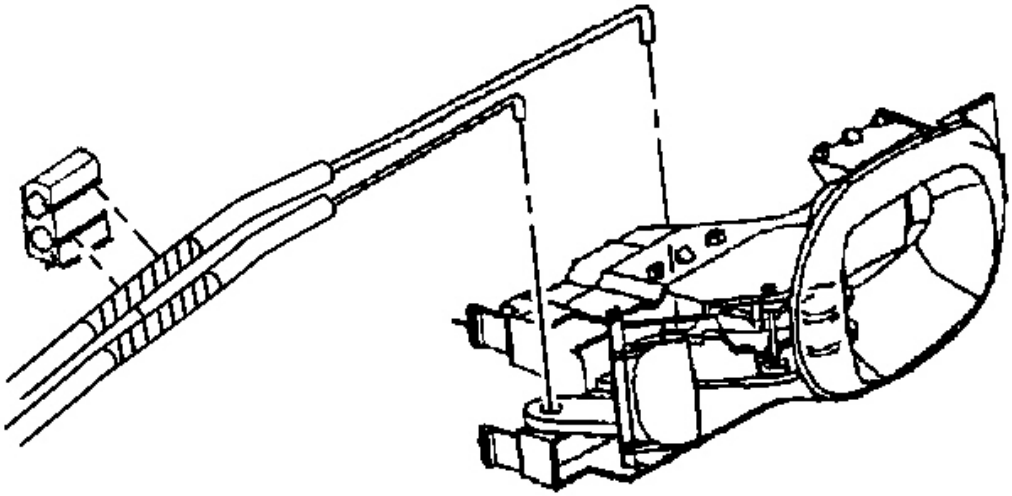

Fig. 67: Lock Rods At Anti-Rattle Retainer
Courtesy of GENERAL MOTORS CORP.

1. Open the handle to full open position.
2. Install the upper lock rod to the handle.
3. Install the lower lock rod to the handle.

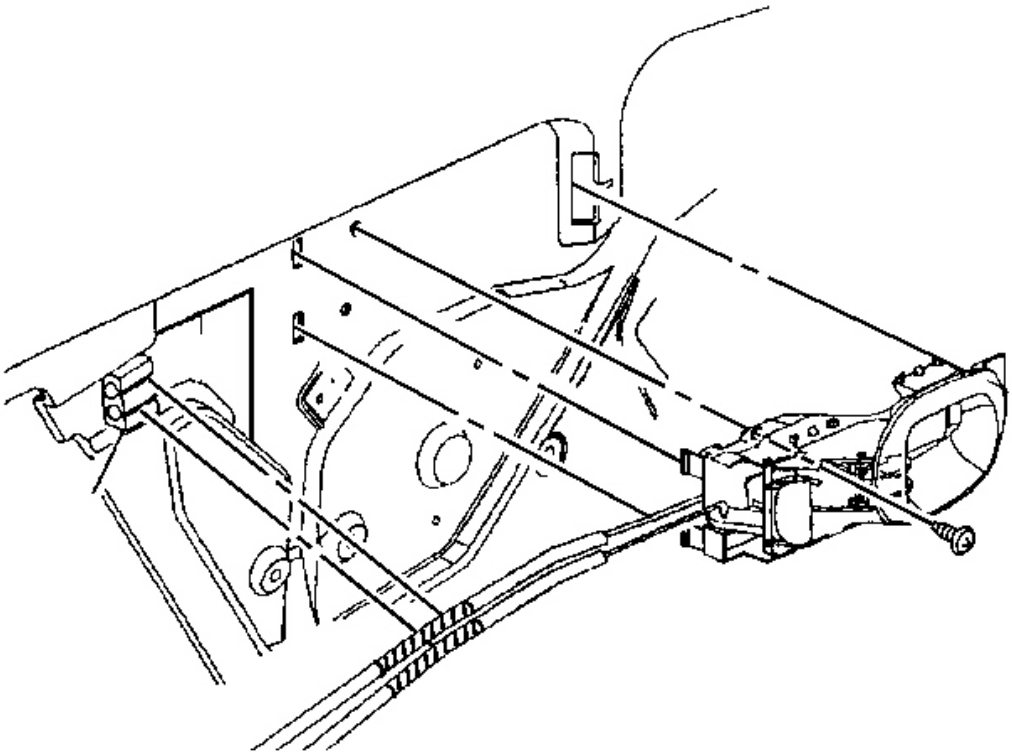

Fig. 68: Inside Handle's Manual Locking Lever
Courtesy of GENERAL MOTORS CORP.

4. Slide the forward end of the handle into the mounting slots in the door.
5. Snap the rear of the handle to the door.

NOTE: Refer to Fastener Notice in Cautions and Notices.

6. Install the screw attaching the handle.

   Tighten: Tighten the inside handle screw to 5 N.m (44 lb in).

7. Snap the lock rods into the anti-rattle retainer at the black mark on the rod anti rattle sleeve.

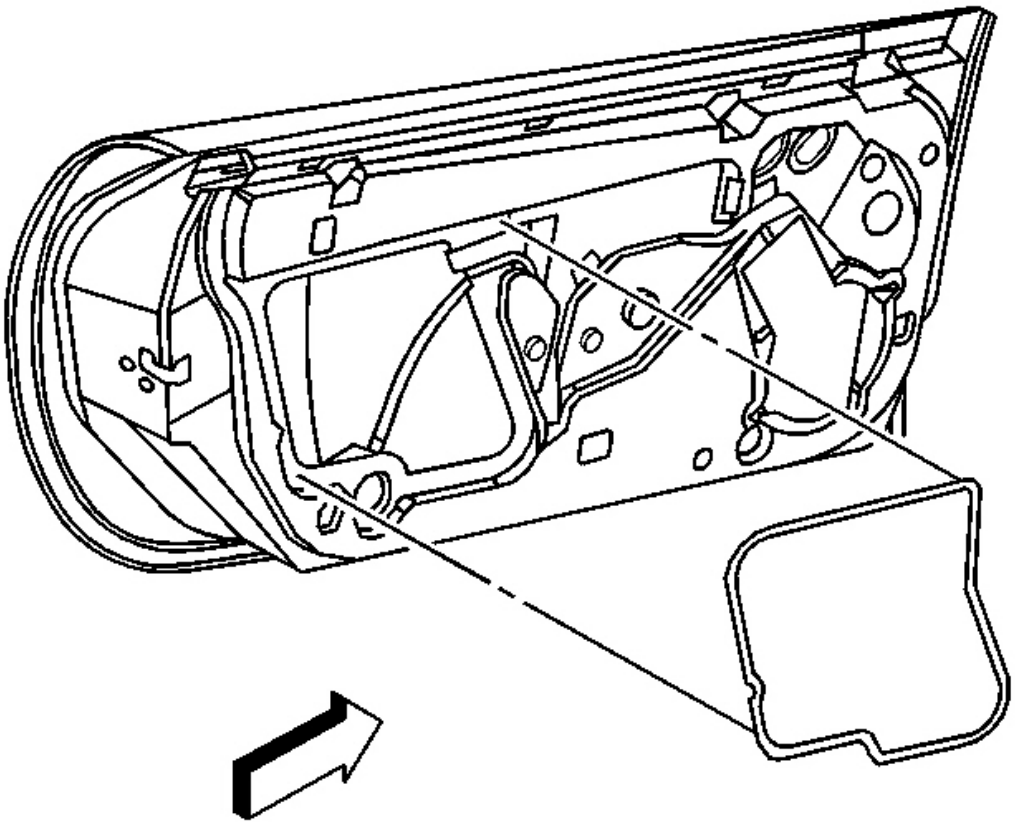

Fig. 69: Water Deflector At Door Inner Panel
Courtesy of GENERAL MOTORS CORP.

8. Install the water deflector.

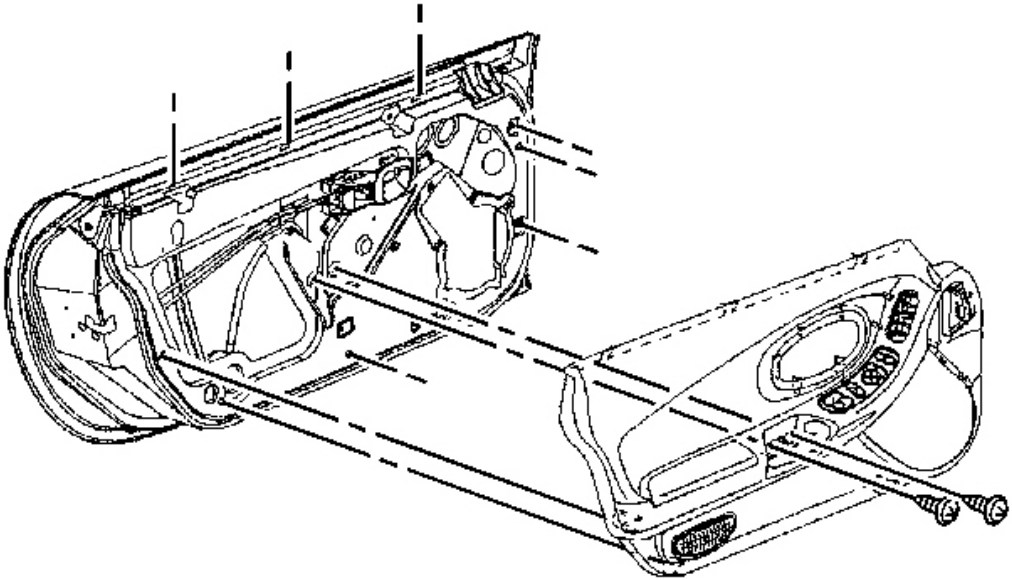

Fig. 70: View Of Door Trim Panel To Door
Courtesy of GENERAL MOTORS CORP.

9. Install the door trim panel. Refer to **Trim Panel Replacement - Door** .

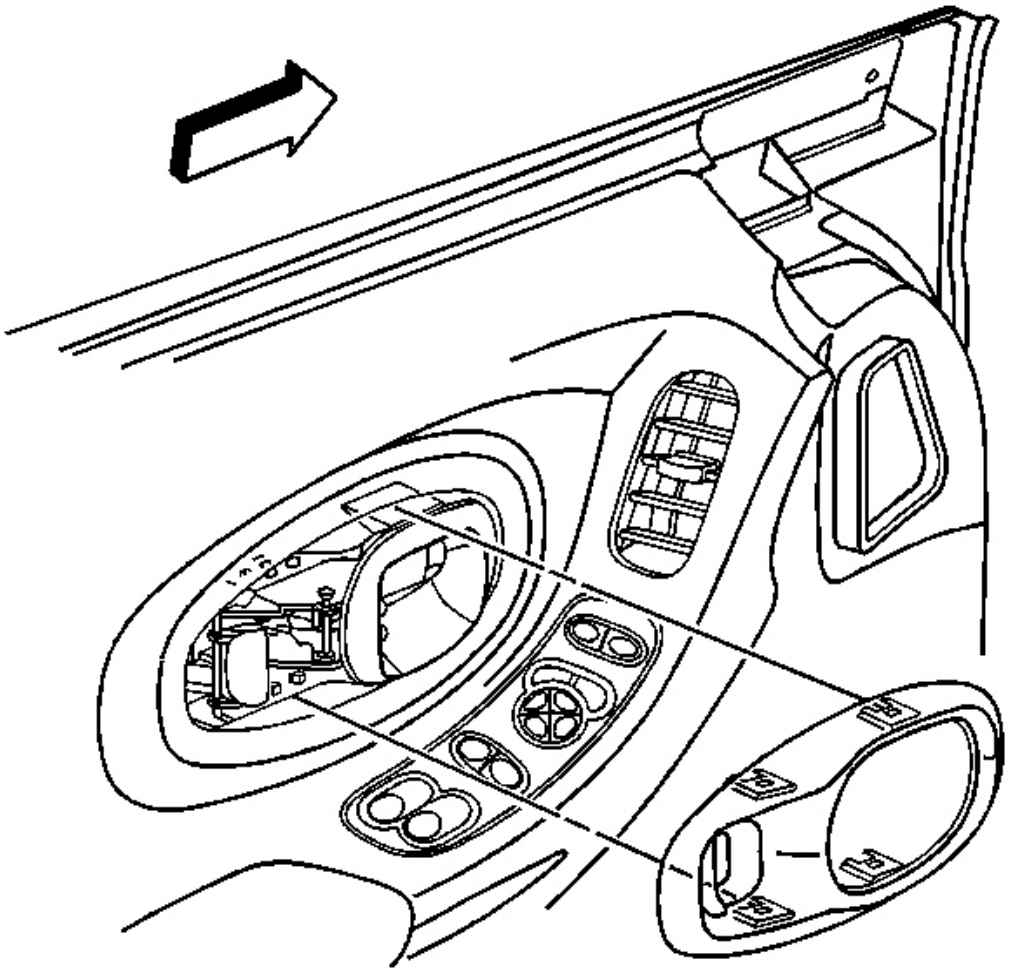

Fig. 71: Door Inside Handle Open At Bezel Locking Tabs
Courtesy of GENERAL MOTORS CORP.

10. Install the inside handle bezel.
    1. Position the bezel around the inside door handle.
    2. Push firmly of the bezel engaging the bezel locking tabs to the door.

LOCK REPLACEMENT - DOOR

Removal Procedure

CAUTION: Refer to Express Down Feature Caution in Cautions and Notices.

IMPORTANT: The clip retaining the outside door handle opening rod to the door lock should not be reused. To ensure the proper retention of the rod the clip must be replaced after being opened to release the rod.

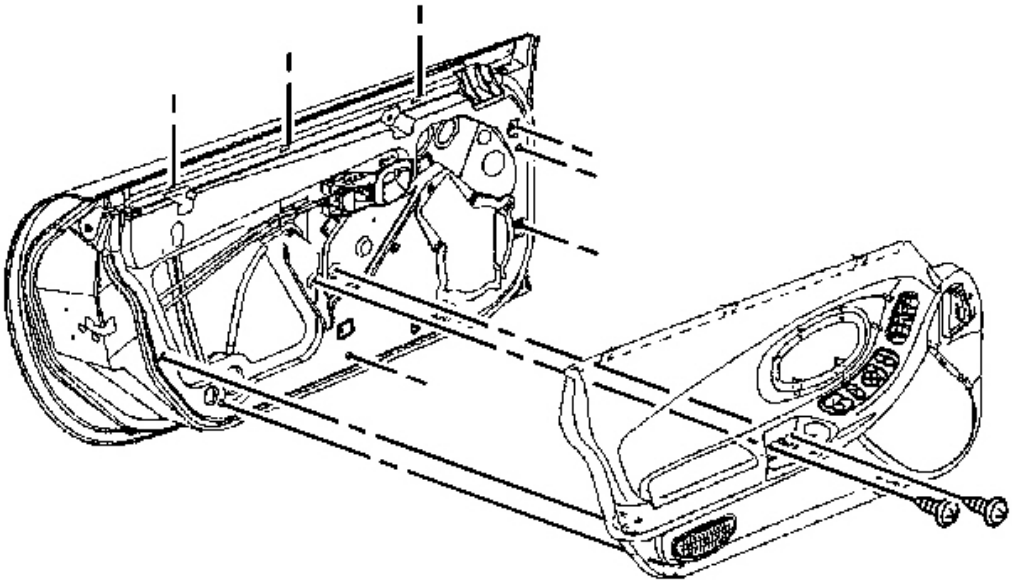

Fig. 72: View Of Door Trim Panel To Door
Courtesy of GENERAL MOTORS CORP.

1. Remove the door trim panel. Refer to **Trim Panel Replacement - Door** .

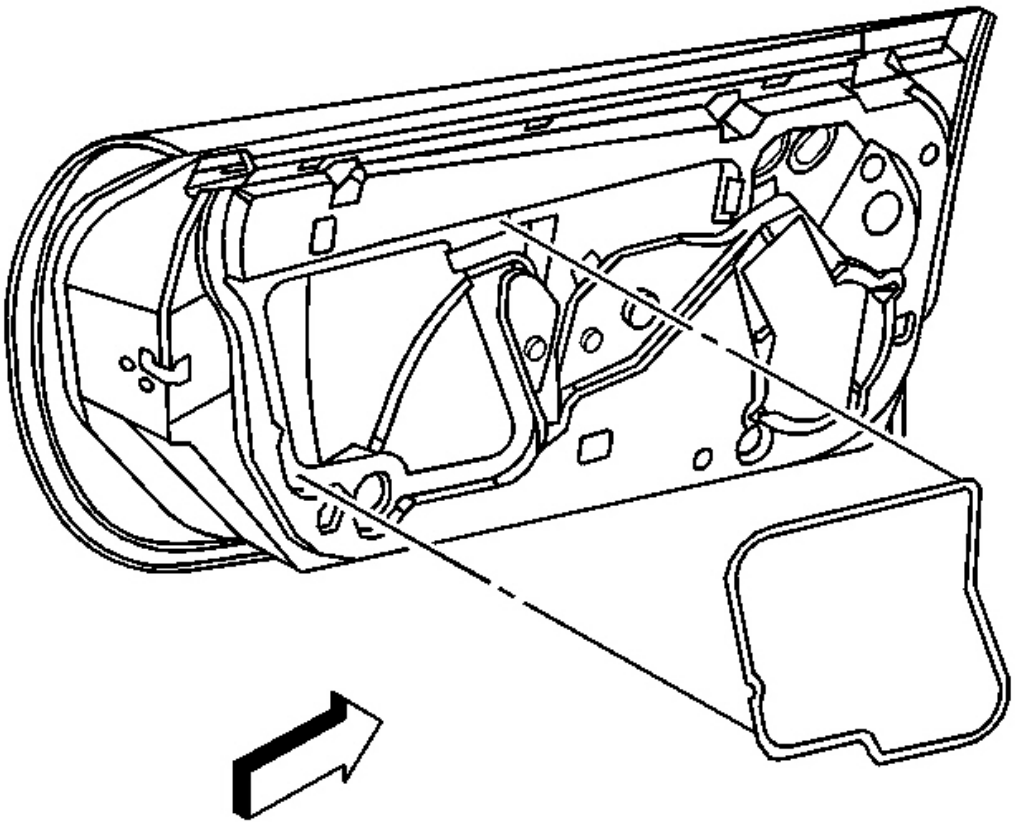

Fig. 73: Water Deflector At Door Inner Panel
Courtesy of GENERAL MOTORS CORP.

2. Remove the water deflector.

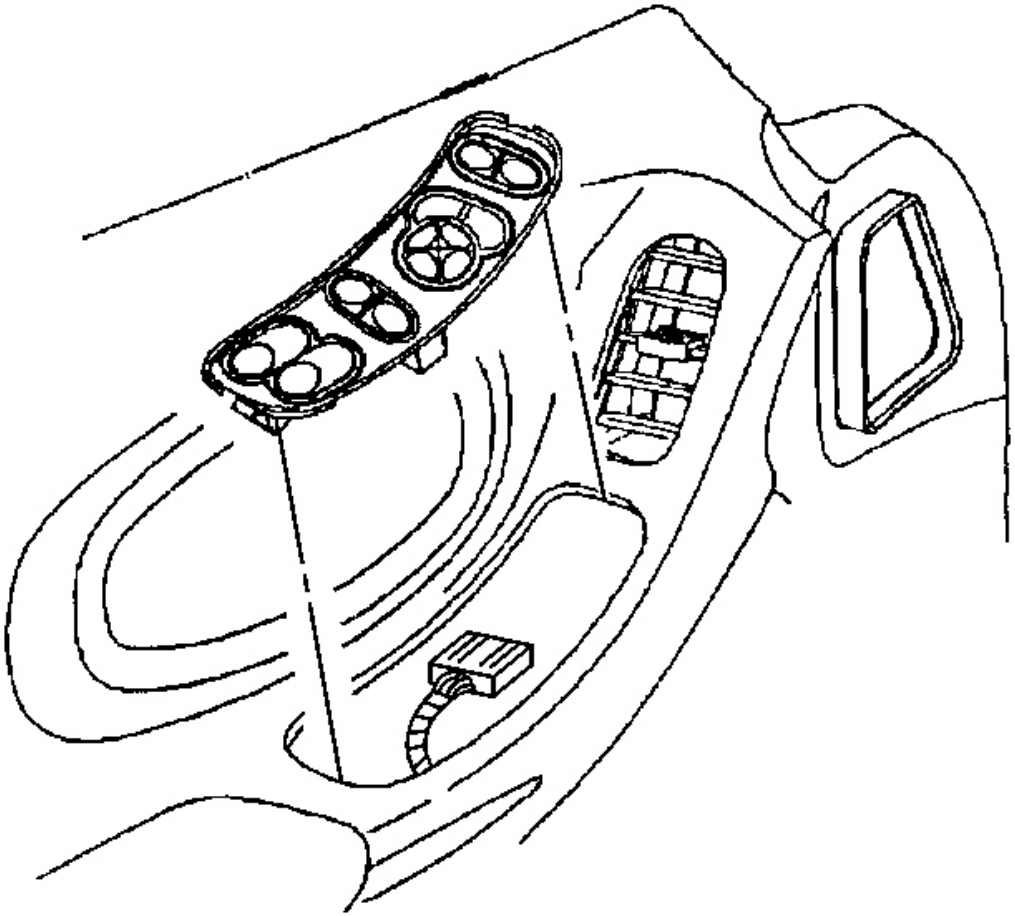

Fig. 74: Electrical Connector At Driver Side Switch
Courtesy of GENERAL MOTORS CORP.

3. Remove the switch from the door trim panel.
    1. Pry up the rear edge of the driver side switch, or the front edge of the passenger side switch.
    2. Slide the driver side switch rearward, or the passenger side switch forward, out of the door trim panel.
4. Reconnect the power window switch to the wire harness and raise the door window.
5. Disconnect the switch.

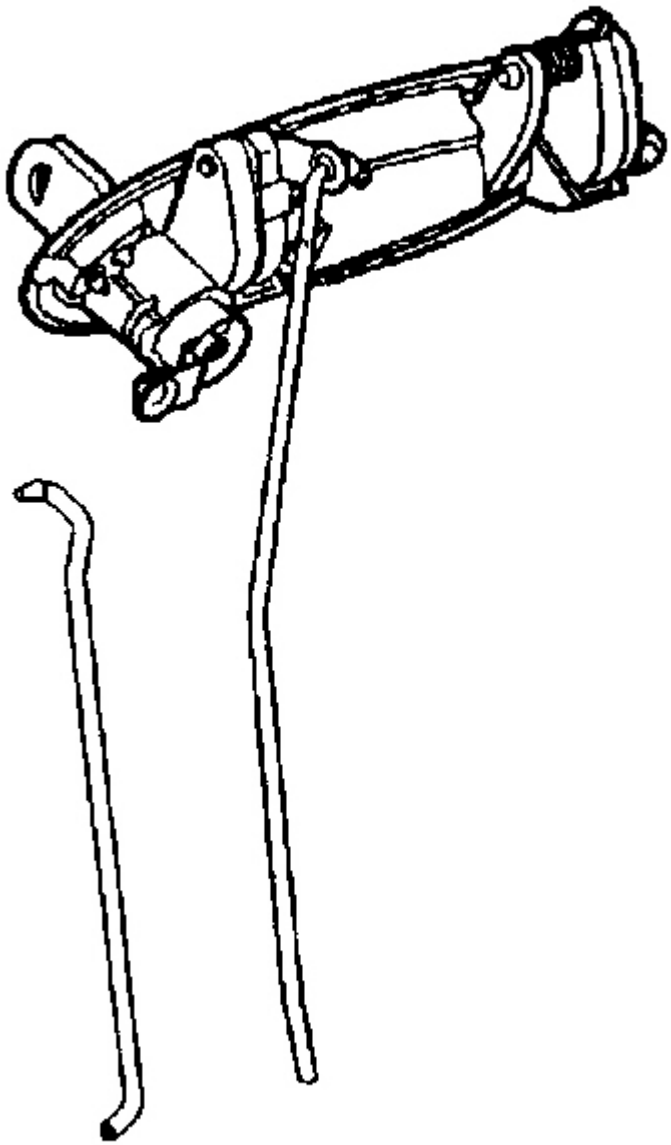

Fig. 75: Lock Rod At Outside Handle Lock Cylinder Lever
Courtesy of GENERAL MOTORS CORP.

6. Disconnect the outside handle lock cylinder rod from the lock cylinder lever (key lockable outside handle).

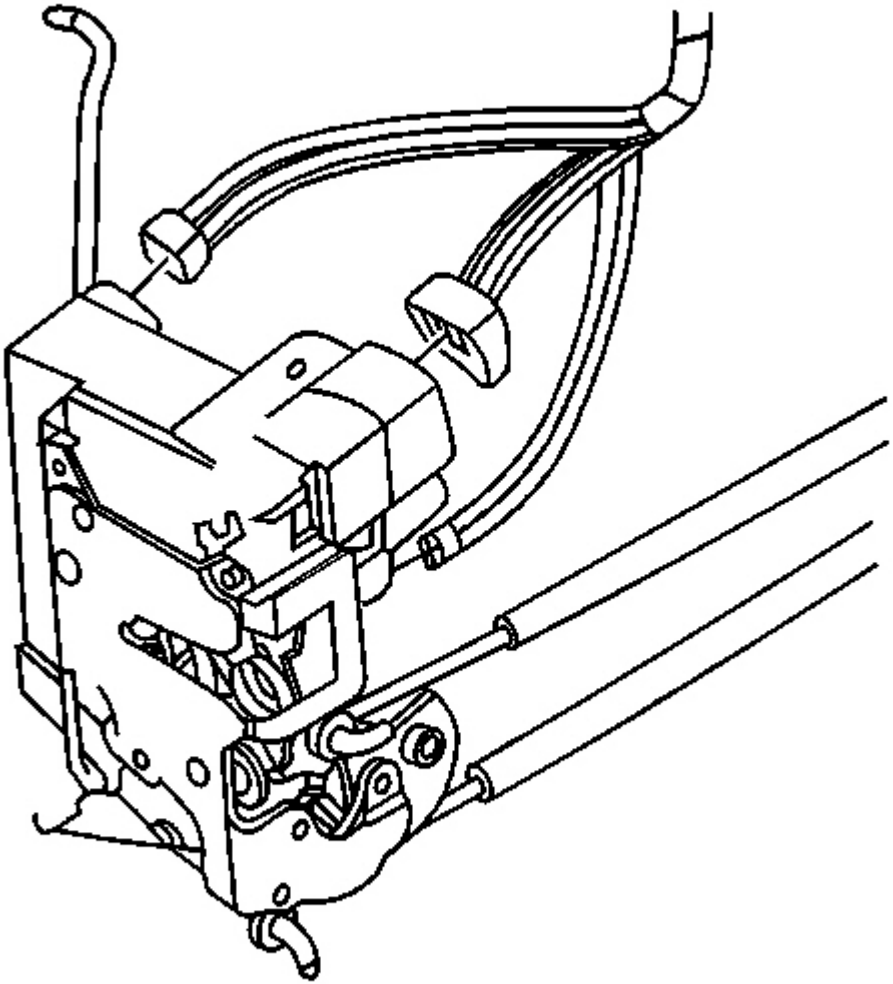

Fig. 76: Electrical Connectors At Door Lock
Courtesy of GENERAL MOTORS CORP.

7. Disconnect the electrical connectors from the lock.
8. Disconnect the outside handle opening rod from the door lock by opening the clip using a coolant hose removal tool or by cutting the base of the clip off with a pair of side cutters and unscrewing the clip from the rod.
9. Remove the screws from the door lock.

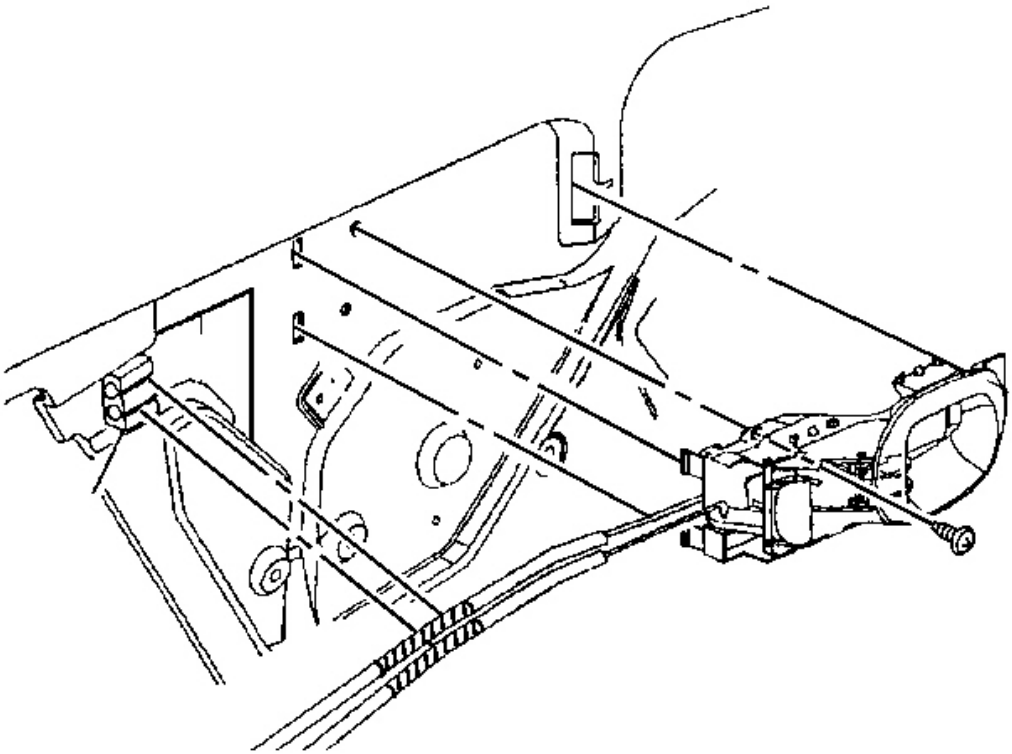

Fig. 77: Inside Handle's Manual Locking Lever
Courtesy of GENERAL MOTORS CORP.

10. Remove the Inside door handle. Refer to **Door Handle Replacement - Inside** .

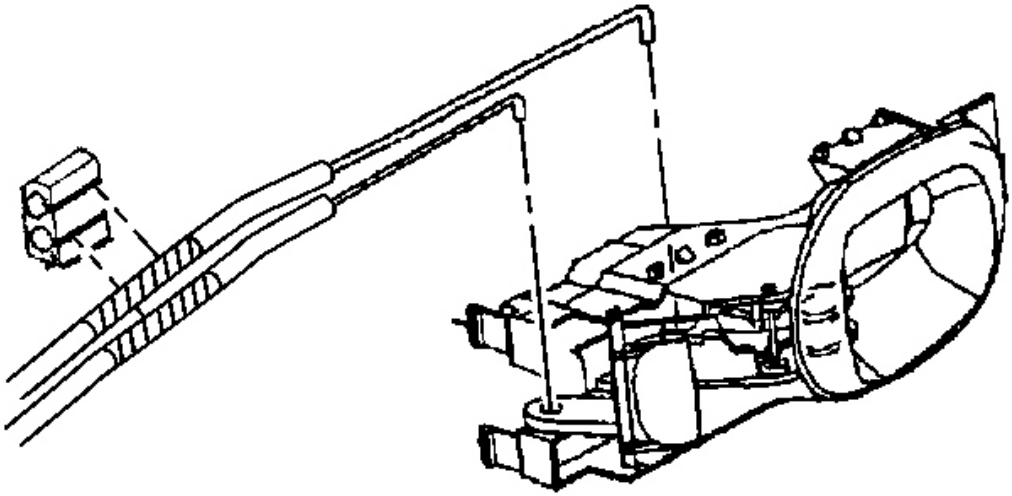

Fig. 78: Lock Rods At Anti-Rattle Retainer
Courtesy of GENERAL MOTORS CORP.

11. Disconnect the rods from the inside handle.
12. Disconnect the rods from the anti rattle retainer.

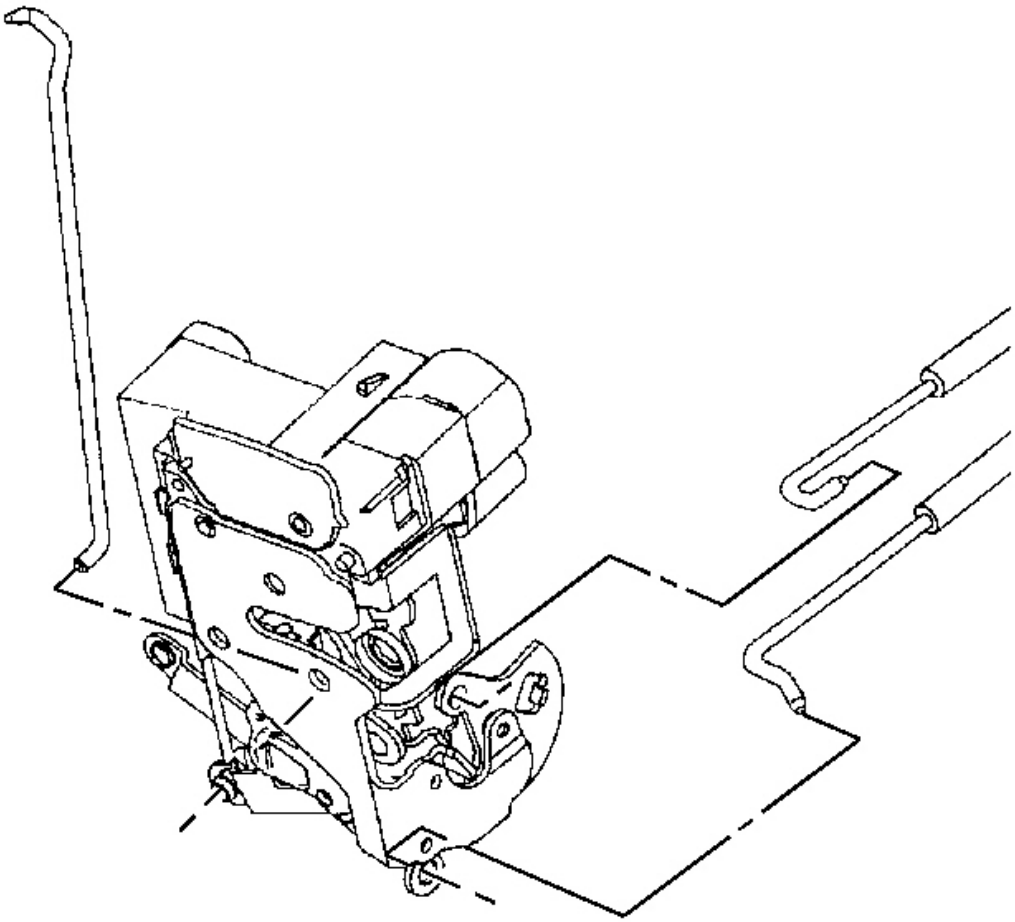

Fig. 79: Door Lock With Inside Handle & Outside Handle
Courtesy of GENERAL MOTORS CORP.

13. Remove the door lock with the inside handle and the outside handle opening rods attached.
14. Remove the rods if not reusing the lock. Note the position of each rod.

Installation Procedure

CAUTION: Refer to Express Down Feature Caution in Cautions and Notices.

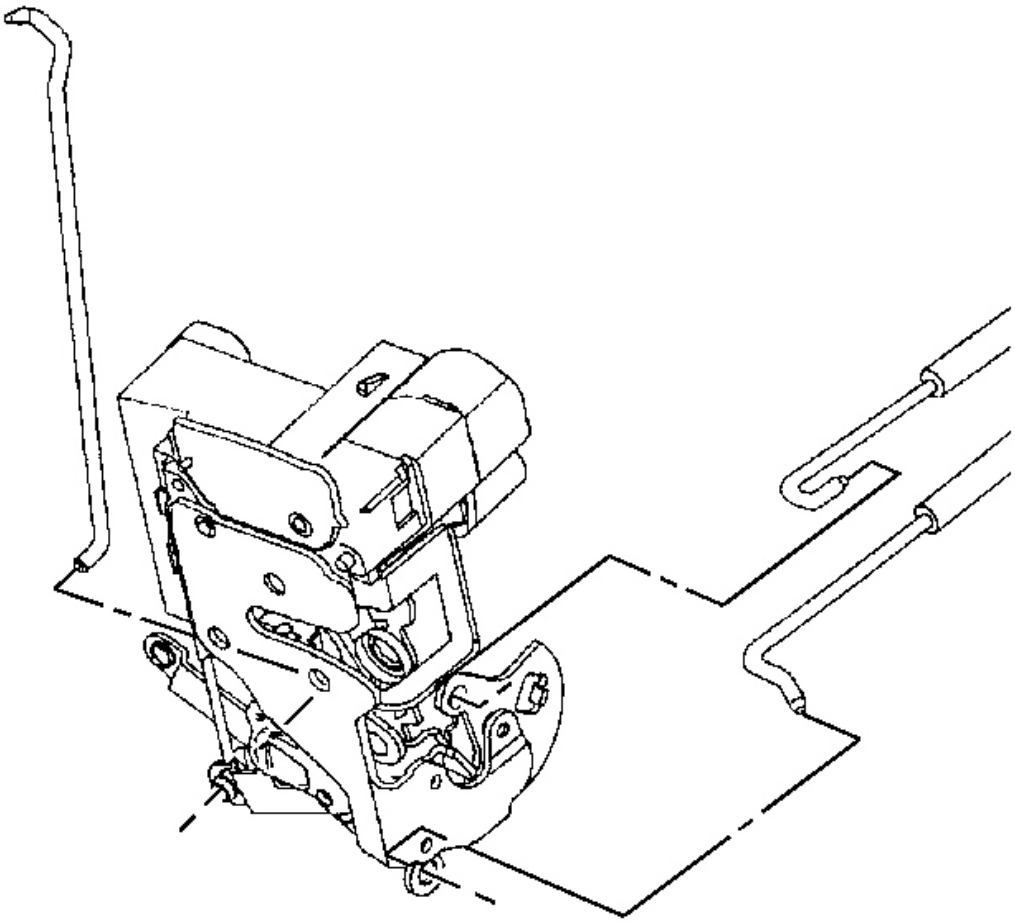

Fig. 80: Door Lock With Inside Handle & Outside Handle
Courtesy of GENERAL MOTORS CORP.

1. Install the inside door handle rods to the door lock.
2. Install the lock cylinder rod to the door lock (left door and right door Japan).

IMPORTANT: To ensure the proper retention of the door opening rod to the door lock, the lock clip must be replaced after being opened to release the rod.

3. If reusing the lock, install a new outside handle door opening rod clip to the lock, (a new clip is supplied with a new lock).

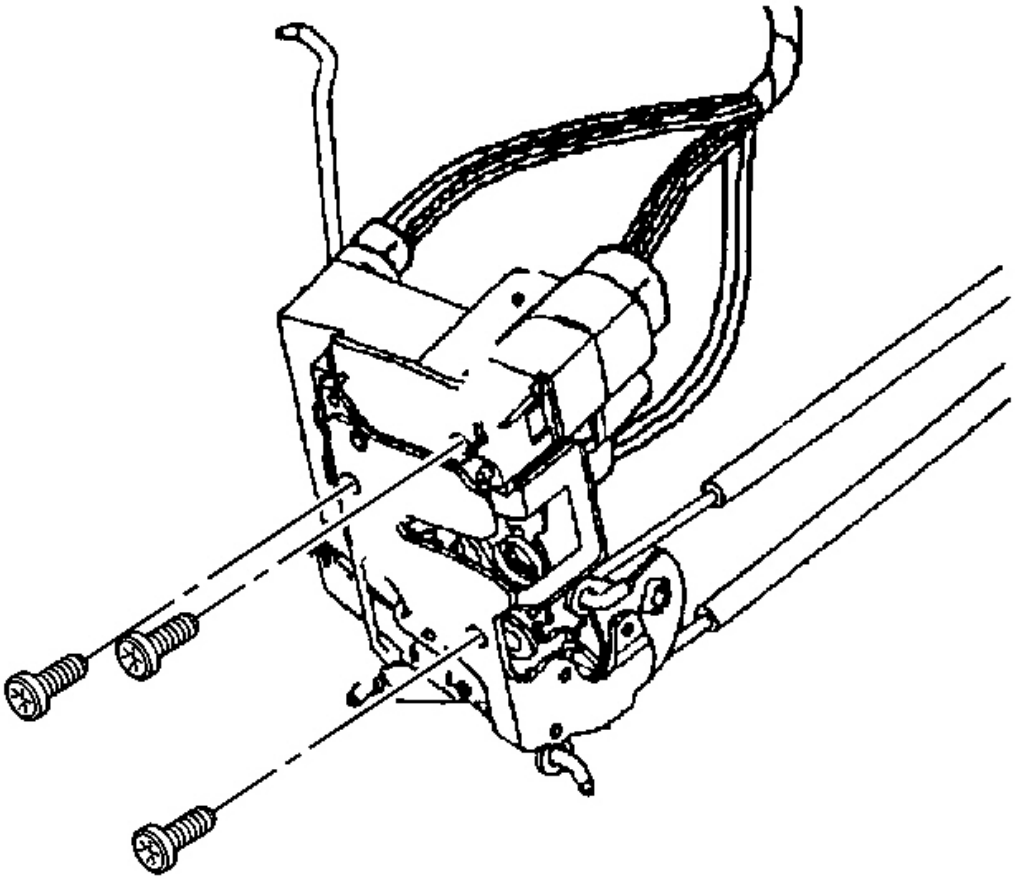

Fig. 81: Door Lock Upper Screw & Lower Screws
Courtesy of GENERAL MOTORS CORP.

4. Position the door lock to the inside of the door.

NOTE: Refer to Fastener Notice in Cautions and Notices.

5. Install the door lock upper screw first, then install the lower screws.

Tighten: Tighten the door lock screws to 10 N.m (89 lb in).

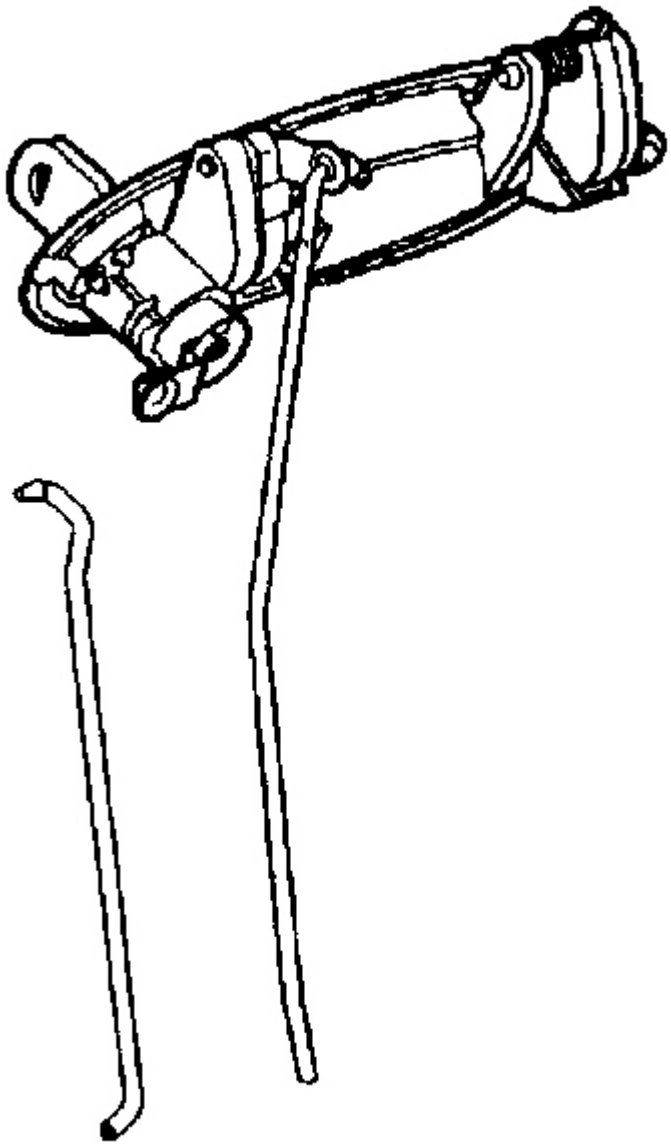

Fig. 82: Lock Rod At Outside Handle Lock Cylinder Lever
Courtesy of GENERAL MOTORS CORP.

6. Connect the lock rod to the outside handle lock cylinder lever (key lockable outside handle).
7. Connect the outside handle opening rod to the door lock.

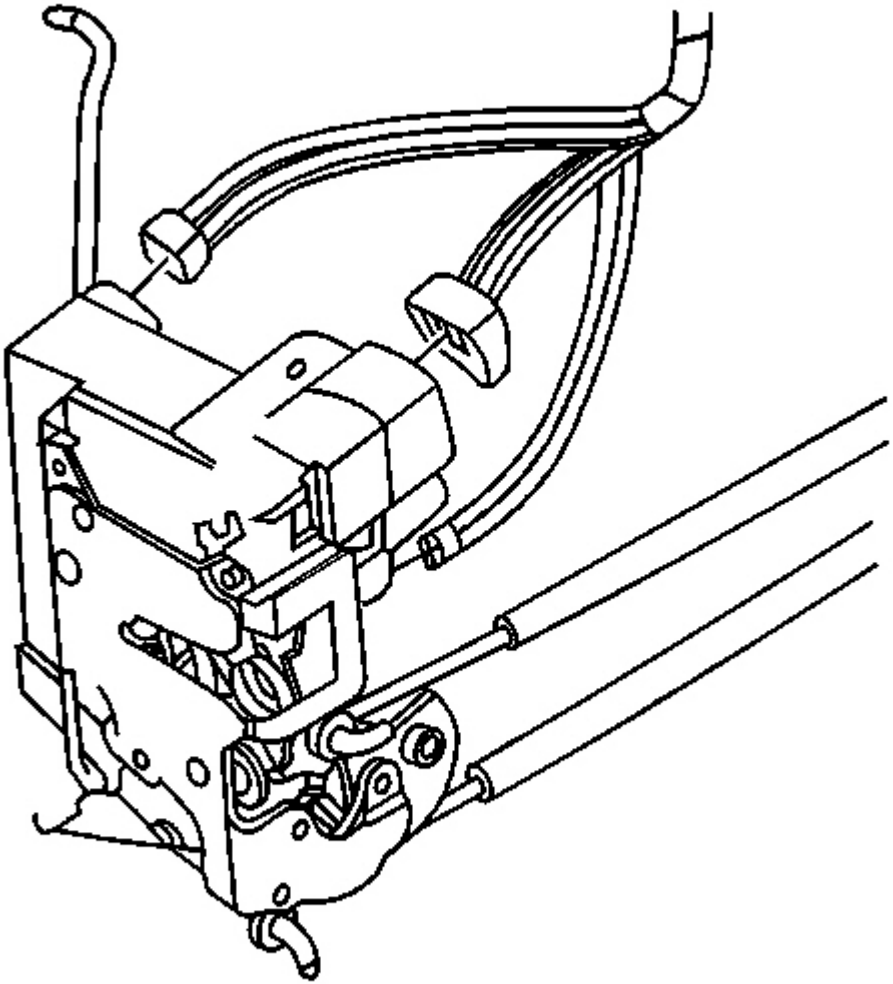

Fig. 83: Electrical Connectors At Door Lock
Courtesy of GENERAL MOTORS CORP.

8. Connect the electrical connectors.

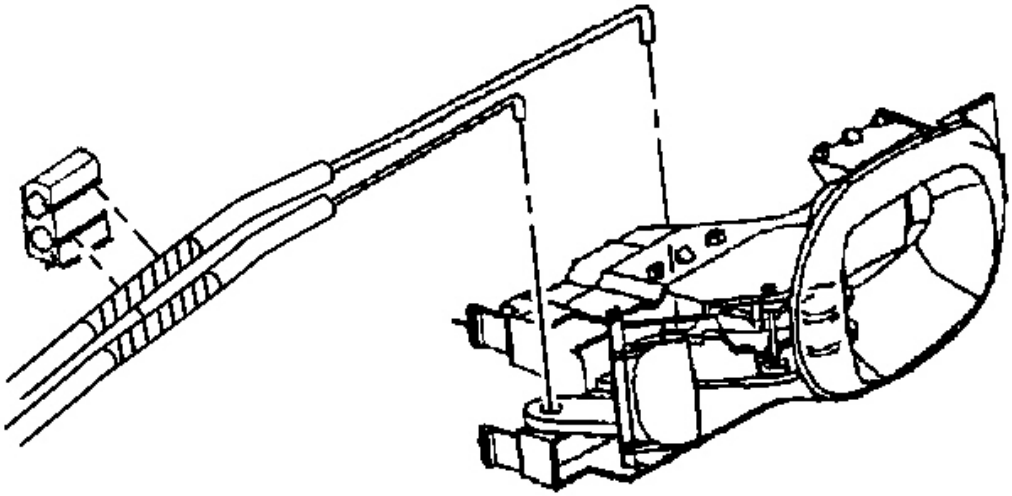

Fig. 84: Lock Rods At Anti-Rattle Retainer
Courtesy of GENERAL MOTORS CORP.

9. Connect the rods to the inside handle.

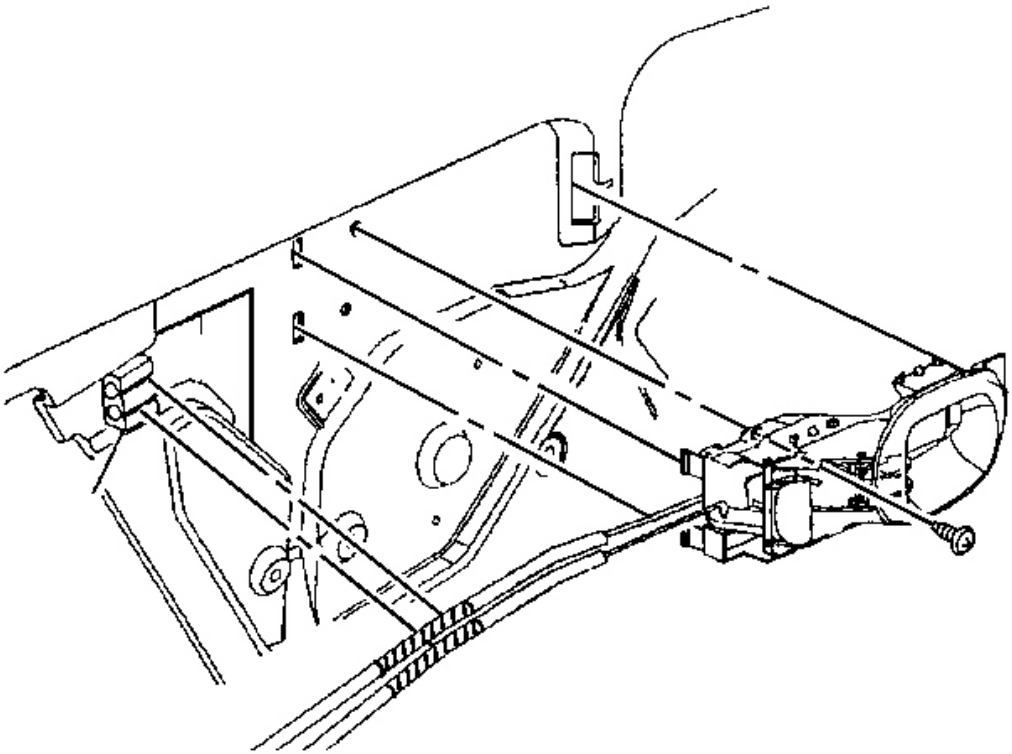

Fig. 85: Inside Handle's Manual Locking Lever
Courtesy of GENERAL MOTORS CORP.

10. Install the inside door handle.
11. Snap the inside handle rods, at the black line on the rod sleeve, into the door anti-rattle clip.

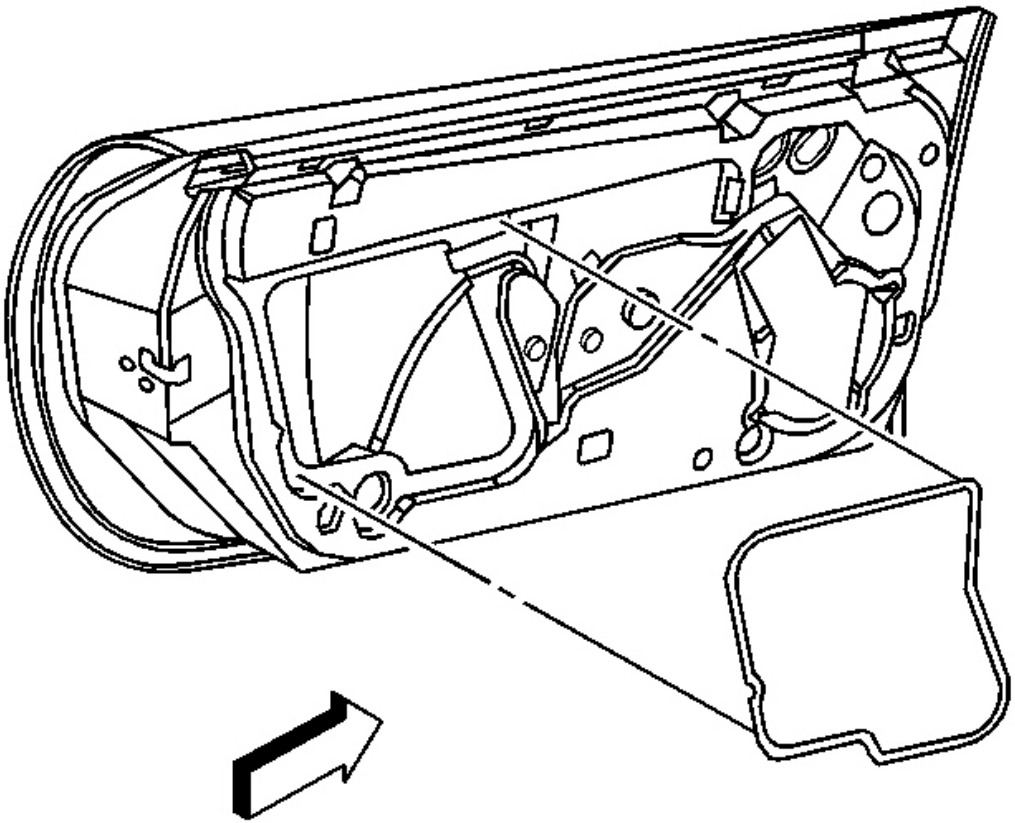

Fig. 86: Water Deflector At Door Inner Panel
Courtesy of GENERAL MOTORS CORP.

12. Install the water deflector.
13. Connect the power window switch and lower the door window.
14. Disconnect the power window switch.

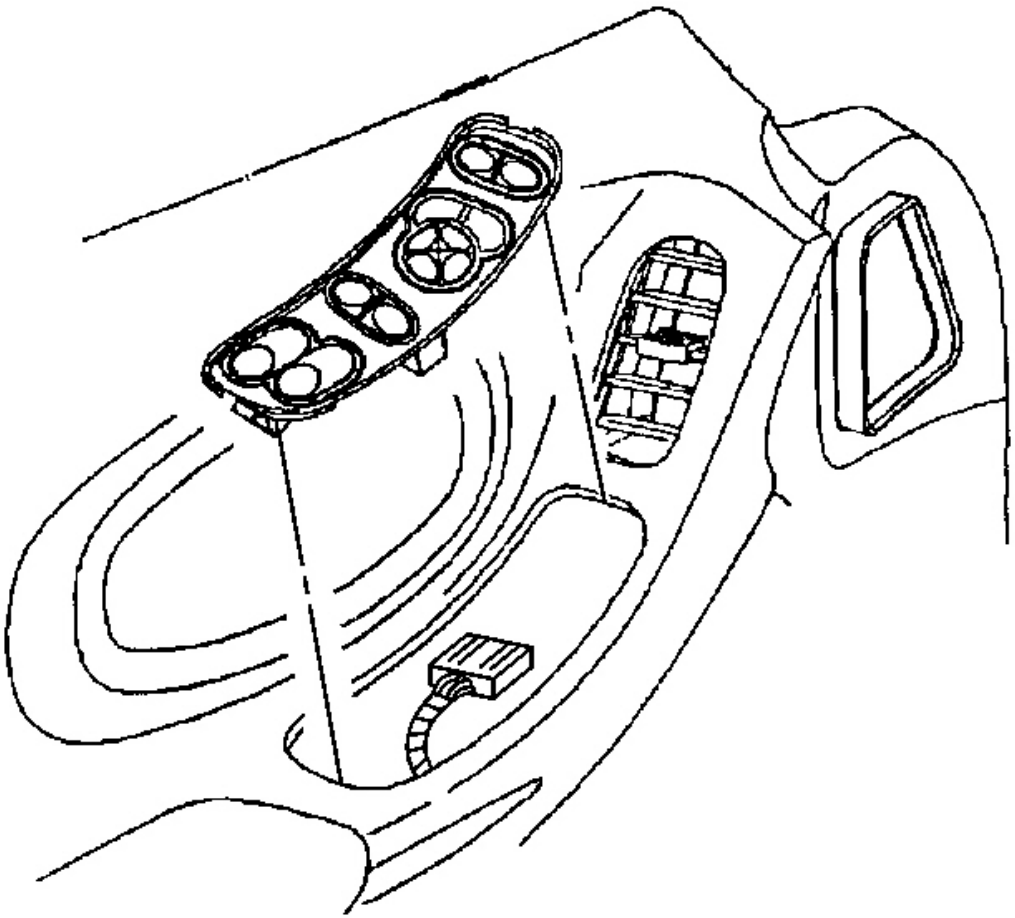

Fig. 87: Electrical Connector At Driver Side Switch
Courtesy of GENERAL MOTORS CORP.

15. Install the door trim panel. Refer to **Trim Panel Replacement - Door** .
16. Install the door switch
    1. Connect the electrical connector.
    2. Insert the front edge of the driver side switch, the rear edge of the passenger side switch, into the door trim panel.
    3. Press the rear edge of the driver side switch, the front edge of the passenger side switch, into the door trim panel to secure.

LOCK CYLINDER REPLACEMENT - DOOR

Removal Procedure

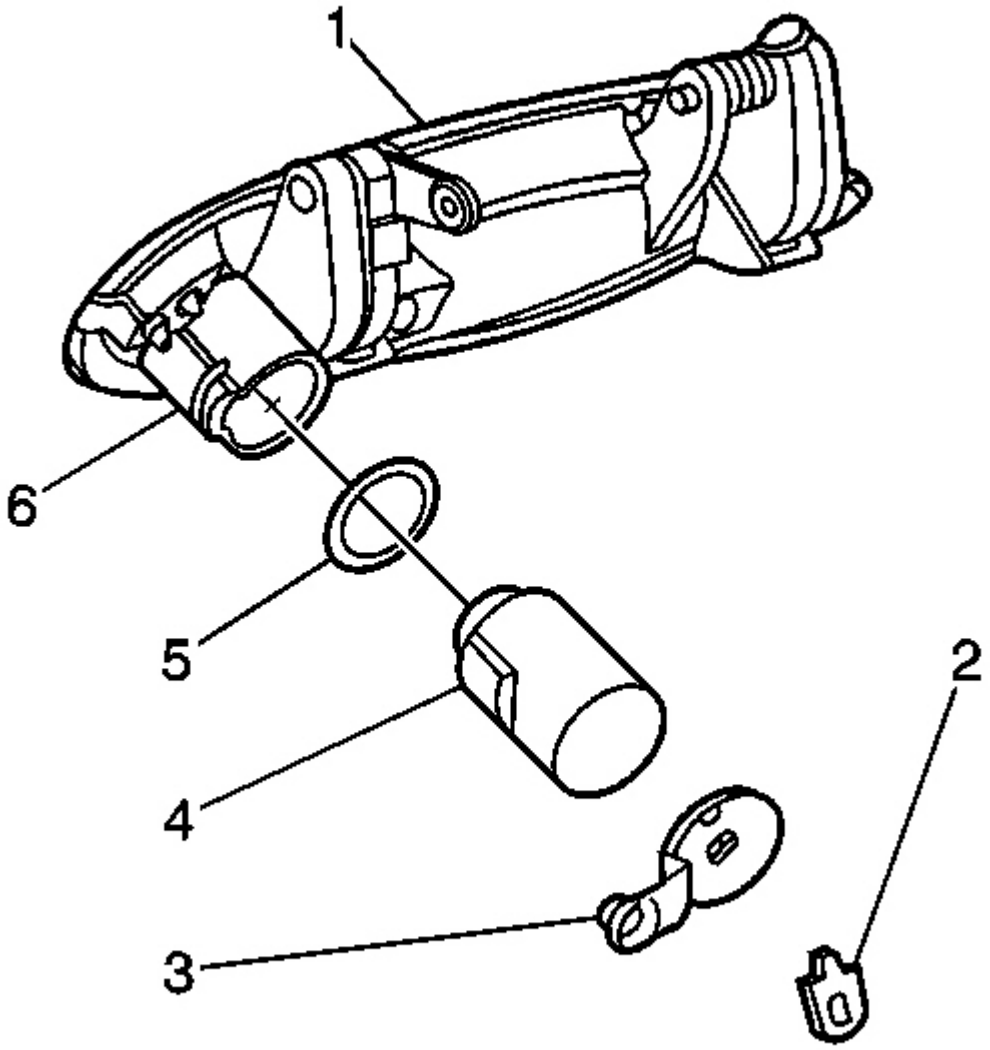

Fig. 88: Outside Door Handle At Lock Cylinder Lever
Courtesy of GENERAL MOTORS CORP.

1. Remove the outside door handle (1). Refer to **Door Handle Replacement - Outside** .
2. Remove the clip (2) retaining the lock cylinder lever.
3. Remove the lever (3) from the rear of the lock cylinder.
4. Pry up on the lock cylinder retaining clip (6).
5. Remove the lock cylinder.

Installation Procedure

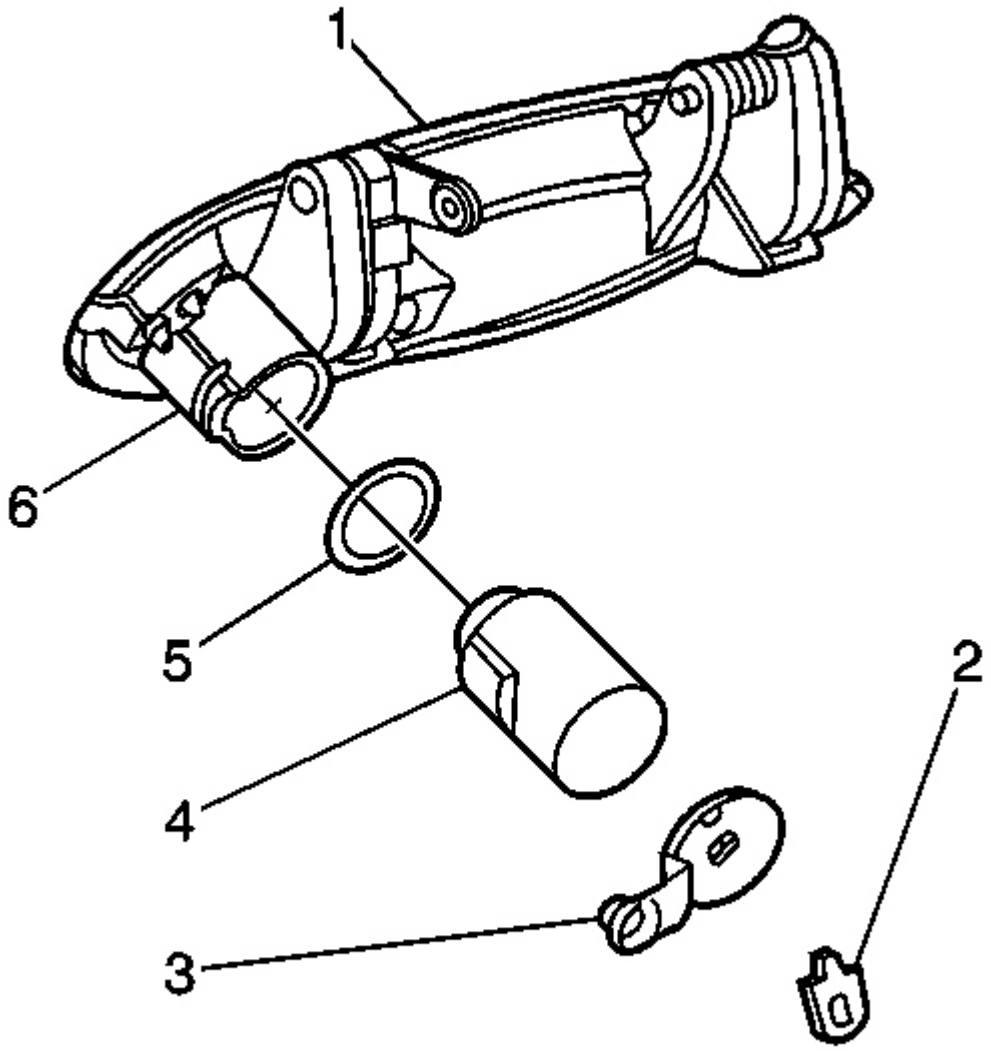

Fig. 89: Outside Door Handle At Lock Cylinder Lever
Courtesy of GENERAL MOTORS CORP.

1. Install the lock cylinder with gasket (5) to the door handle securing the cylinder with the retaining clip (6).
2. Install the lever (3) to the lock cylinder with the lever pointed rearward.
3. Install the clip (2) securing the lock cylinder lever.

4. Install the door handle. Refer to **Door Handle Replacement - Outside** .

STRIKER REPLACEMENT - DOOR

Removal Procedure

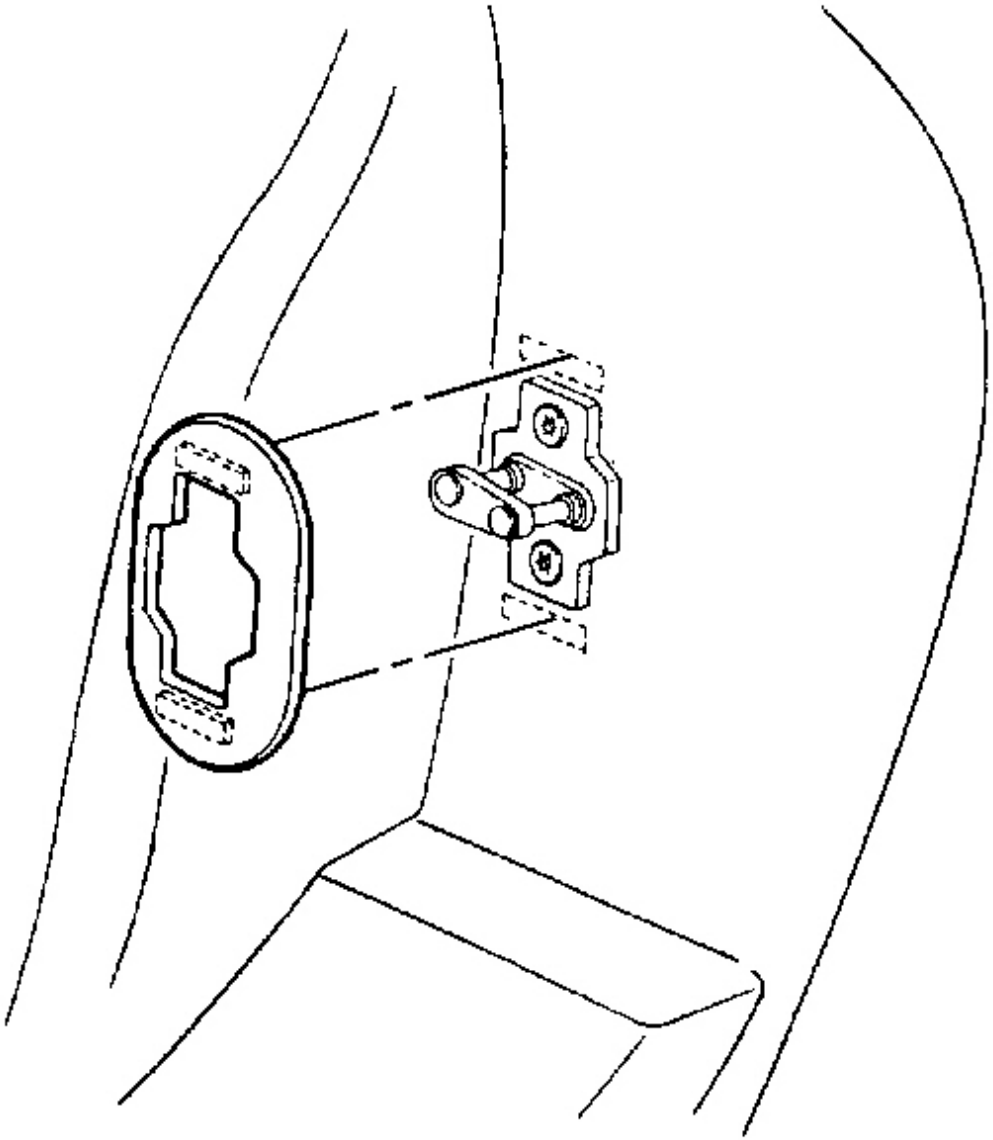

Fig. 90: Striker Cover At Fastener Patches

Courtesy of GENERAL MOTORS CORP.

1. Remove the striker cover. Pull the cover loose from hook and loop fastener patches.

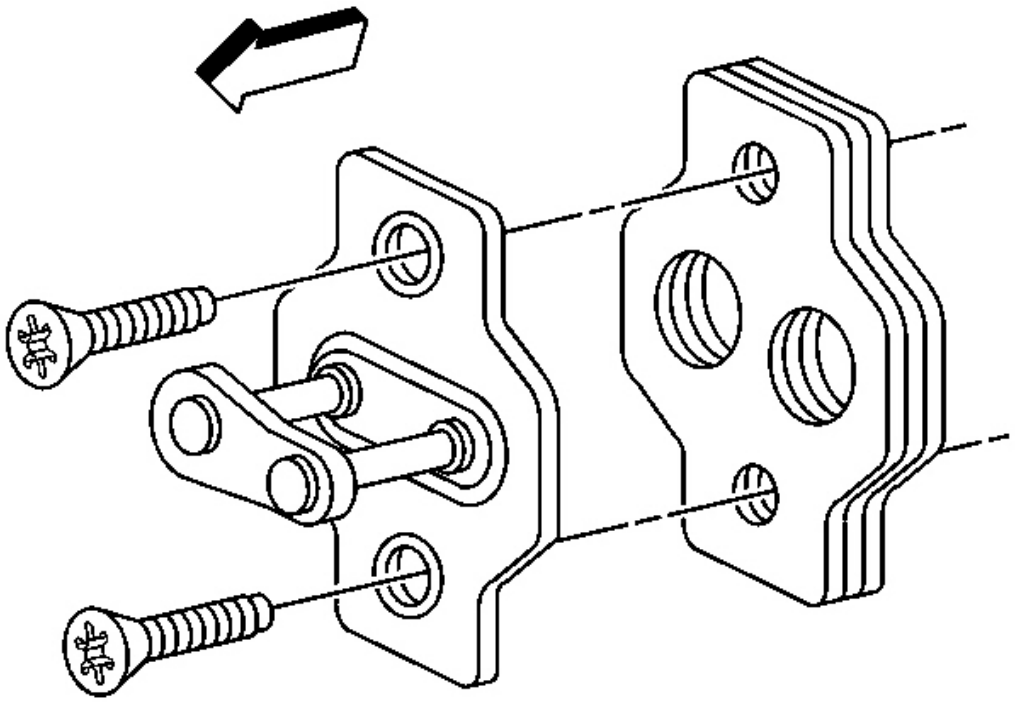

Fig. 91: Shims & Striker
Courtesy of GENERAL MOTORS CORP.

2. Remove the screws attaching the striker.
3. Remove the shims and the striker.

Installation Procedure

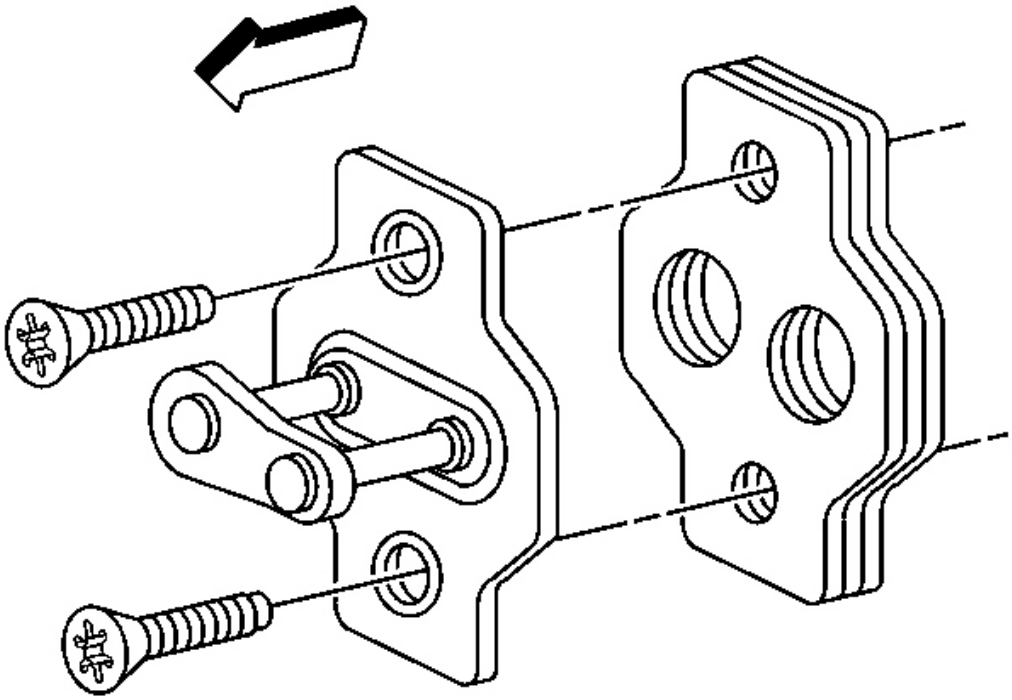

Fig. 92: Shims & Striker
Courtesy of GENERAL MOTORS CORP.

1. Position the striker and shims to the lock pillar.
2. Loosely install the attaching screws.
3. Close the door to align the striker.

NOTE: Refer to Fastener Notice in Cautions and Notices.

4. Open the door and tighten the screws.

Tighten: Tighten the door lock striker screws to 24 N.m (18 lb ft).

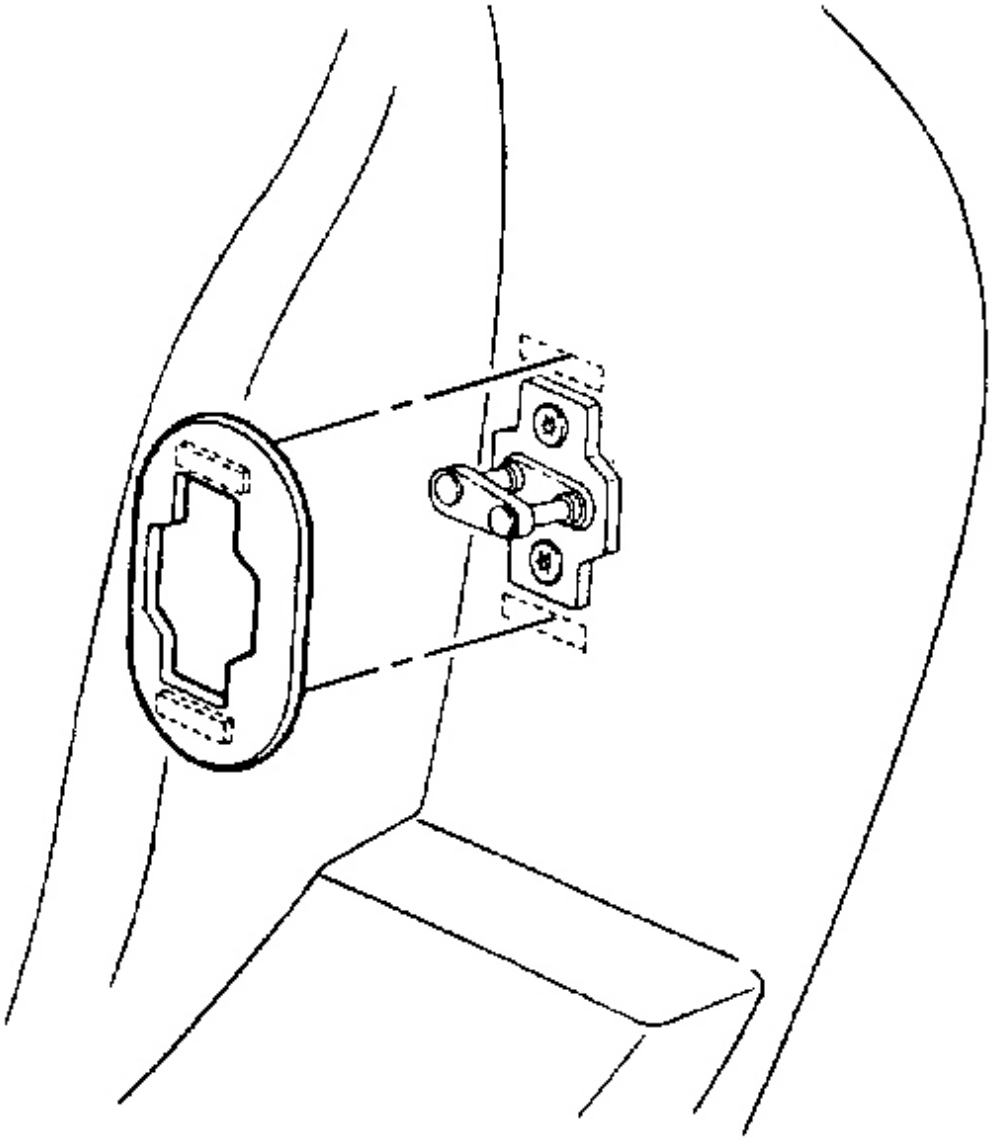

Fig. 93: Striker Cover At Fastener Patches
Courtesy of GENERAL MOTORS CORP.

5. Install the striker cover.

STRIKER ANCHOR PLATE REPLACEMENT - DOOR (CONVERTIBLE)

Removal Procedure

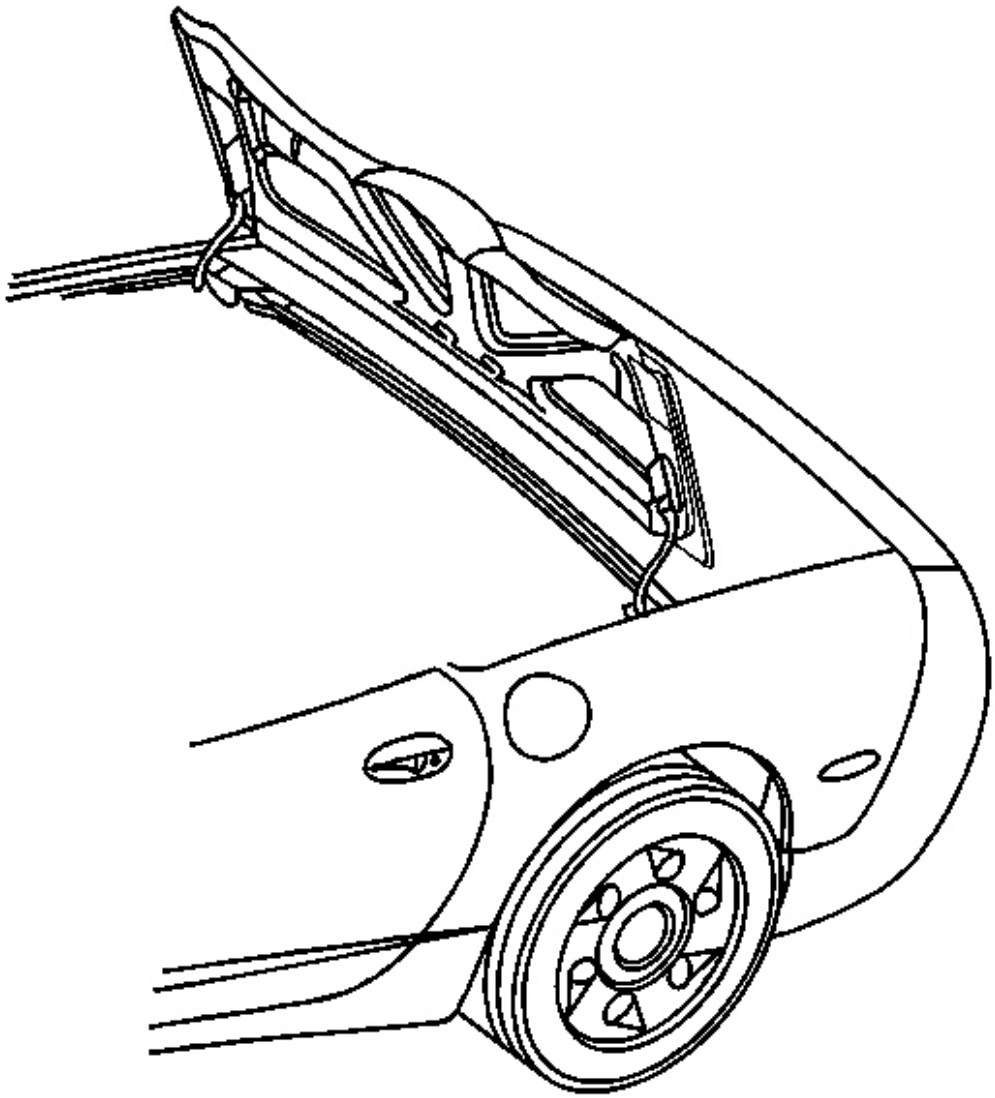

Fig. 94: Stowage Lid (Convertible)
Courtesy of GENERAL MOTORS CORP.

1. Open and position the folding top with the number one and five bows up.
2. Leave the stowage lid open.

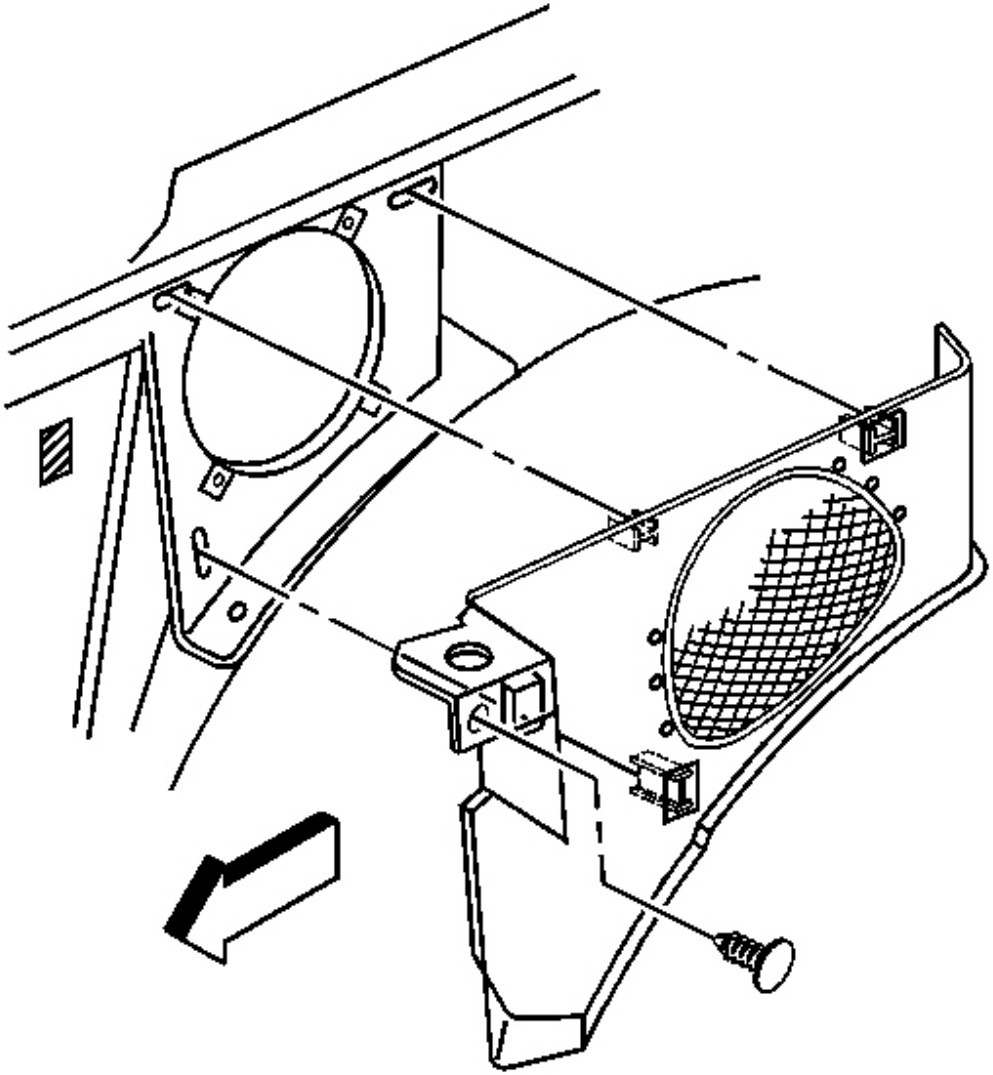

Fig. 95: Rear Compartment Side Trim Panel
Courtesy of GENERAL MOTORS CORP.

3. Remove the rear compartment side trim panel.
    1. Remove the push-pin from the front of the panel.
    2. Pull the panel from the housing.

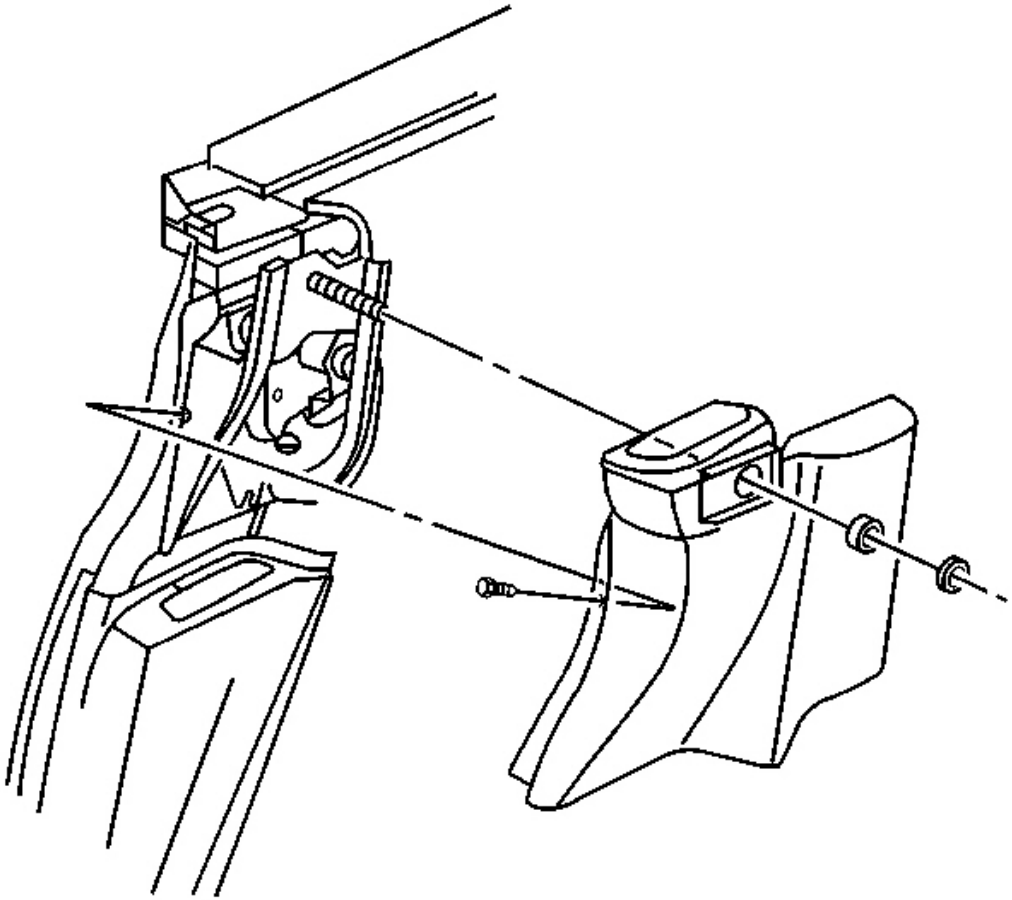

Fig. 96: Upper Lock Pillar Trim At Seat Belt Guide (Convertible)
Courtesy of GENERAL MOTORS CORP.

4. Remove the upper lock pillar trim.

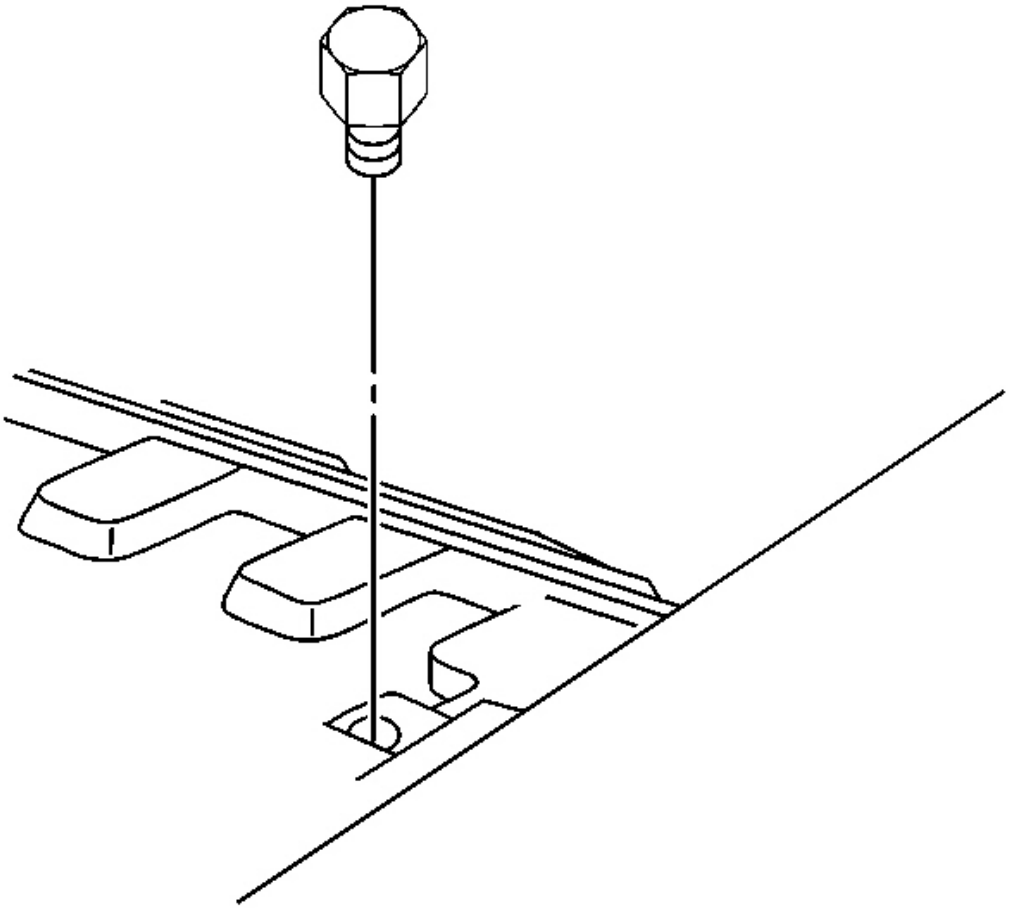

Fig. 97: Folding Top Stowage Lid Bumper (Convertible)
Courtesy of GENERAL MOTORS CORP.

5. Remove the folding top stowage lid bumper.

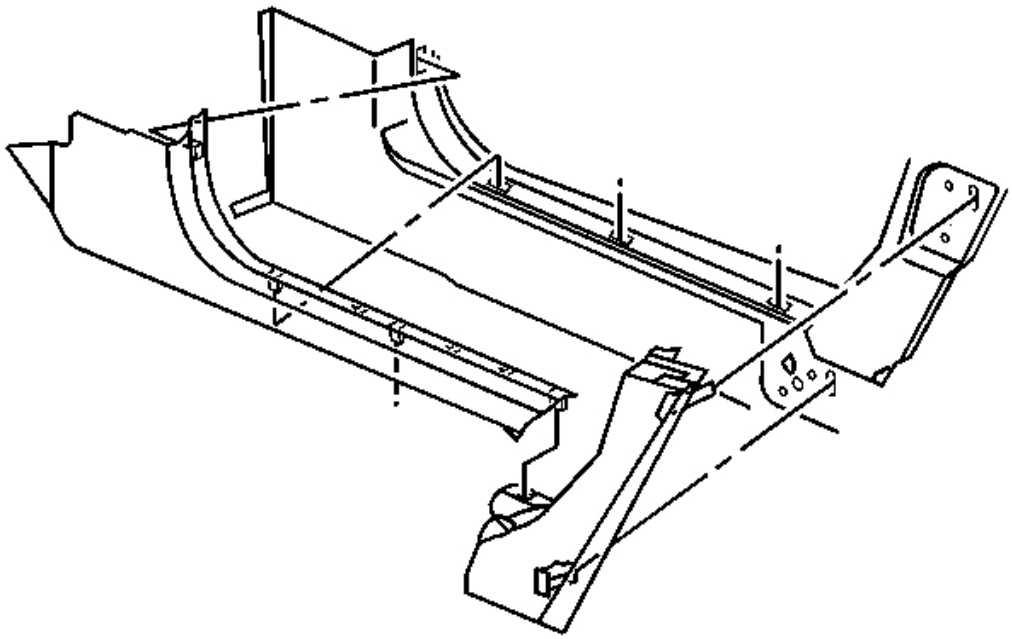

Fig. 98: Lower Lock Pillar Panel At Lock Pillar & Side Rail (Convertible)
Courtesy of GENERAL MOTORS CORP.

6. Remove the door sill plate. Refer to **Door Sill Plate Replacement** in Interior trim.
7. Remove the lower lock pillar trim.
    1. Pull the lower lock pillar panel with retainers from the lock pillar and side rail.
    2. Separate the trim panel from the seat belt.

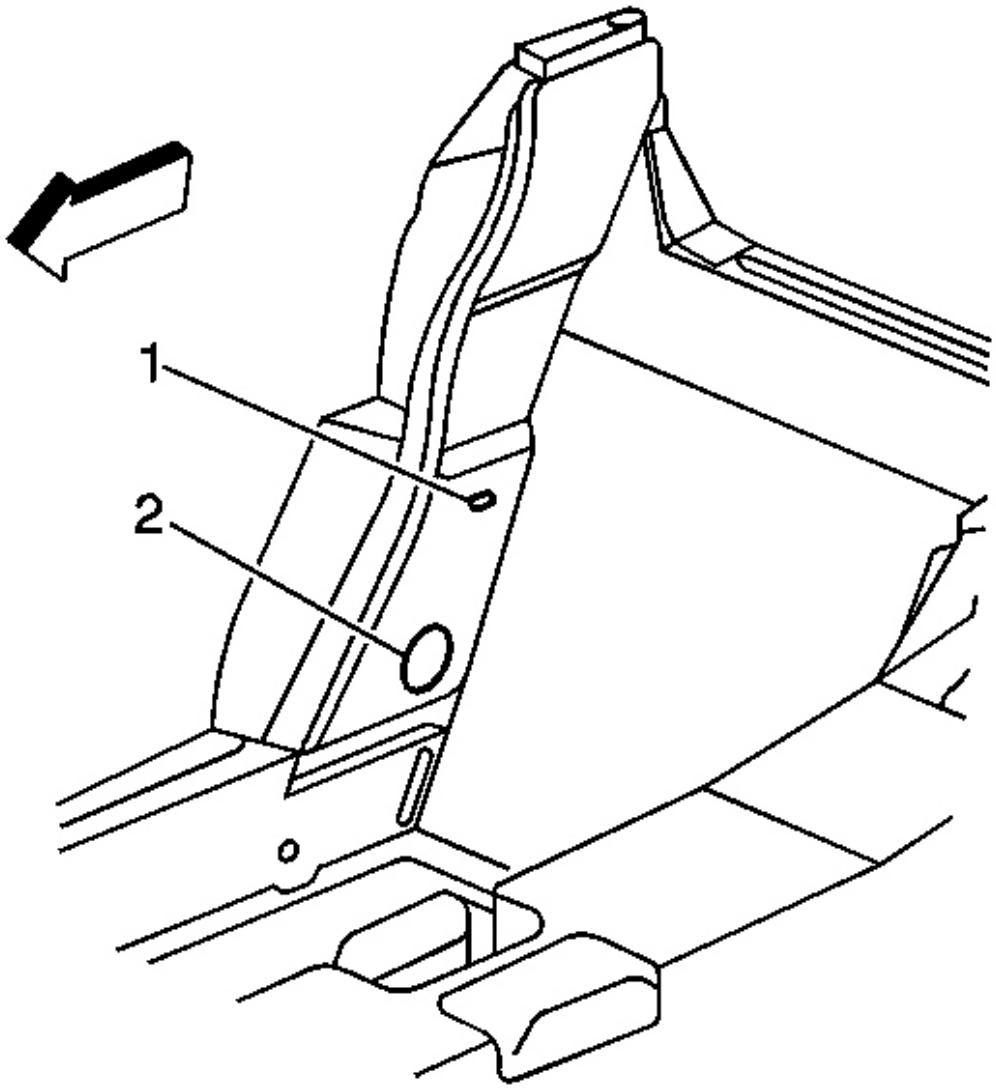

Fig. 99: Lower Gage Slot At Seat Back (Convertible)
Courtesy of GENERAL MOTORS CORP.

8. Drill a 38.1 mm (1.5 in) access hole (2) 150 mm (5.9 in) below the lower gage slot (1) on a line parallel to the seat back.

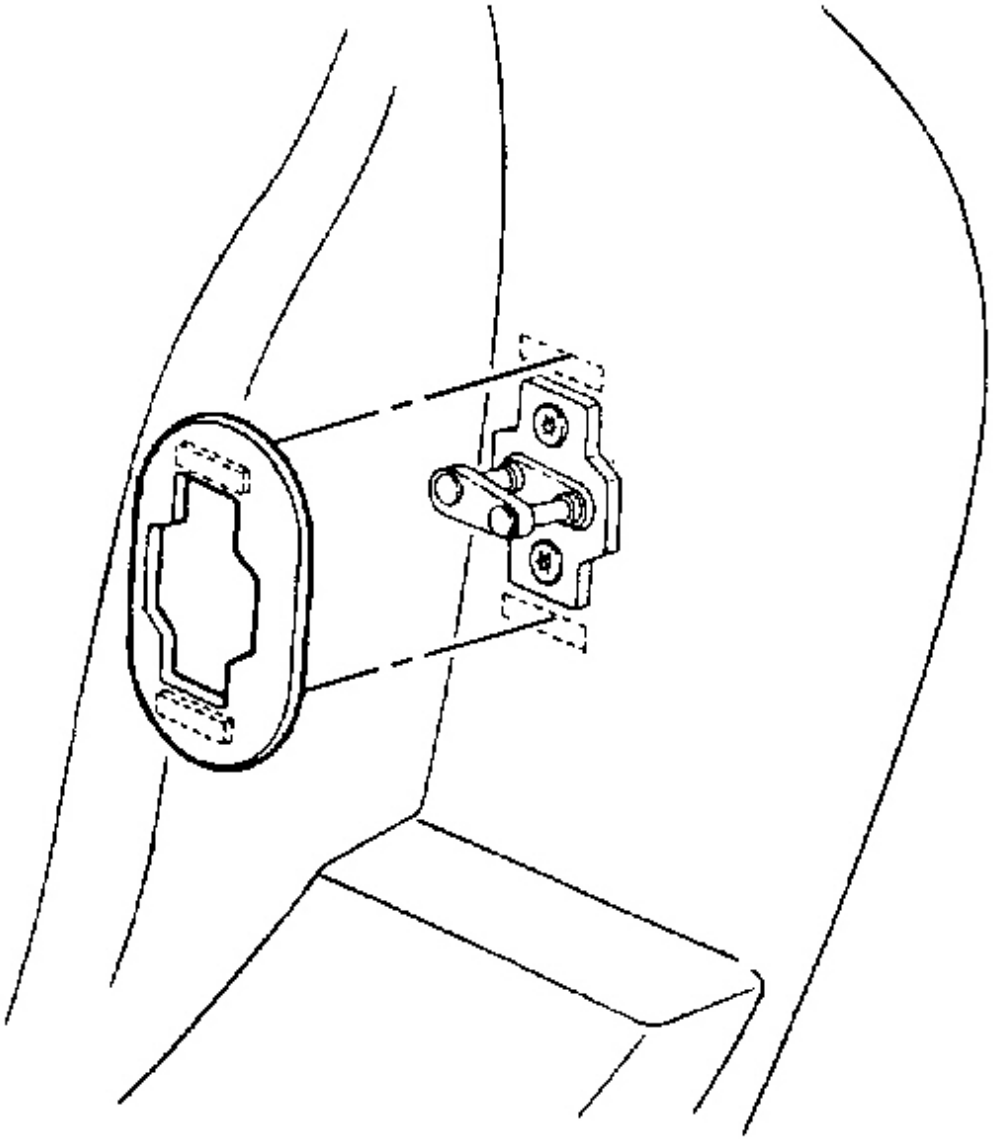

Fig. 100: Striker Cover At Fastener Patches (Convertible)
Courtesy of GENERAL MOTORS CORP.

9. Remove the door lock striker trim.
10. Mark the location of the door lock striker.
11. Remove the door lock striker.

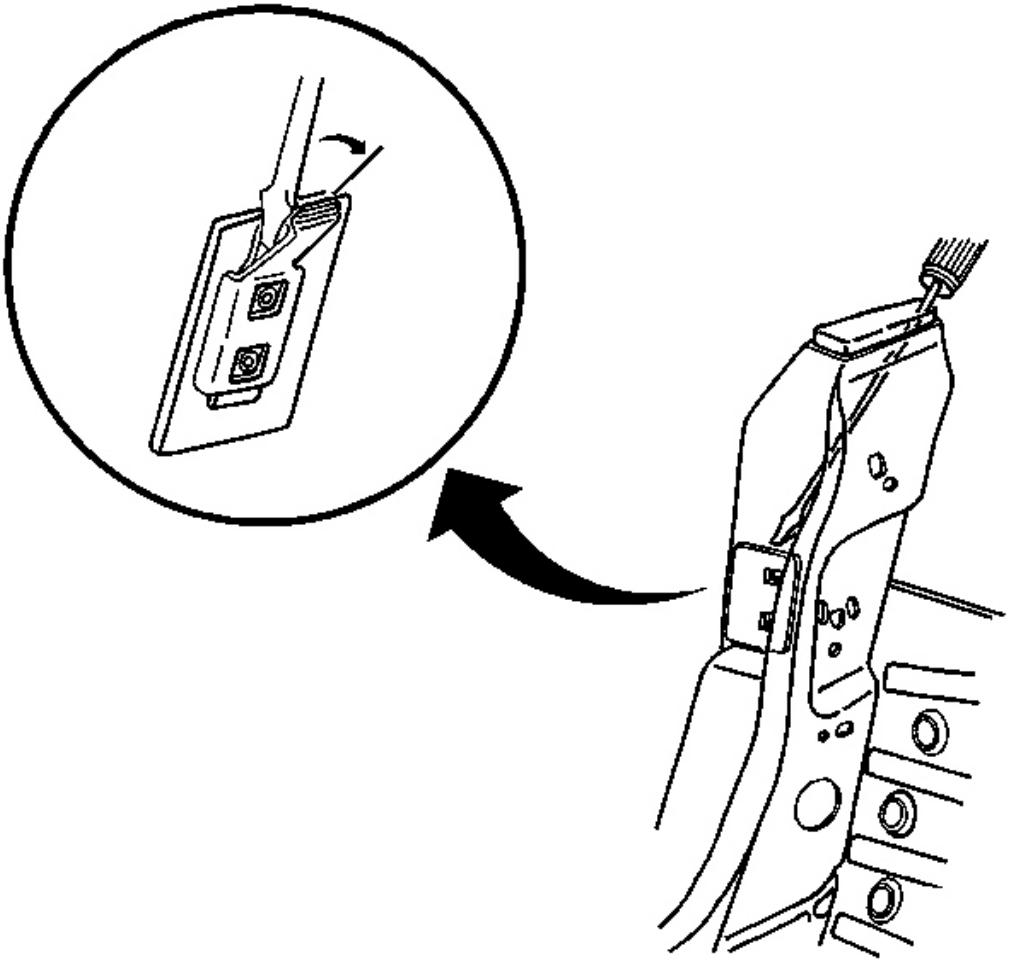

Fig. 101: Folding Top Stowage Lid Bumper At Upper Tab Of Anchor Plate Retaining Bracket (Convertible)
Courtesy of GENERAL MOTORS CORP.

12. Insert a long flat bladed screwdriver through the folding top stowage lid bumper opening and bend rearward the upper tab on the anchor plate retaining bracket.

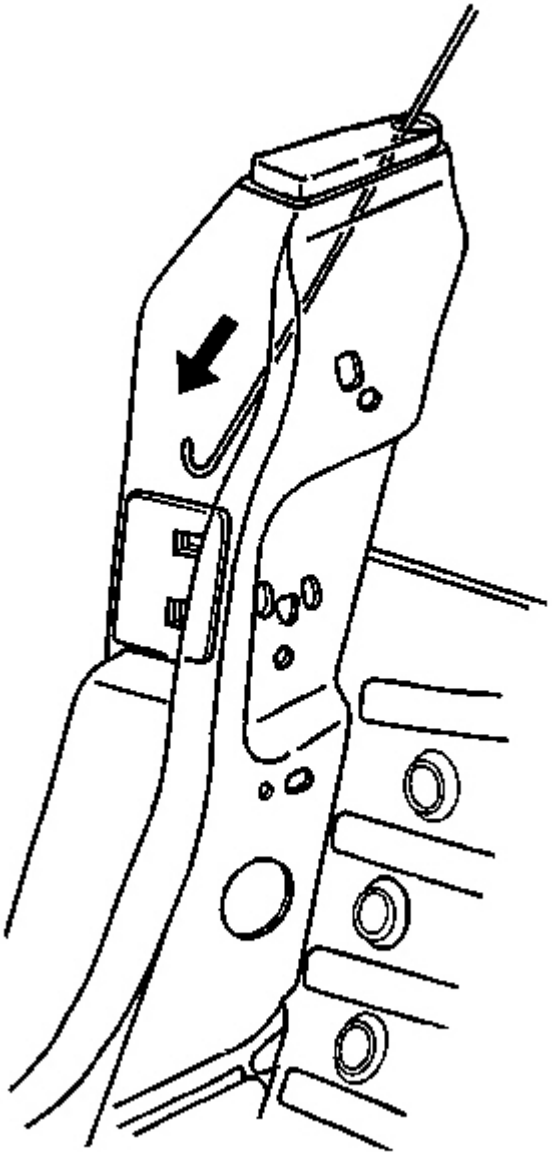

Fig. 102: Bumper Hole & Anchor Plate (Convertible)
Courtesy of GENERAL MOTORS CORP.

13. Insert a stiff wire, such as a 1.6 mm (1/16 in) diameter MIG welding rod, with a hook on one end down through the bumper hole and hook the anchor plate.

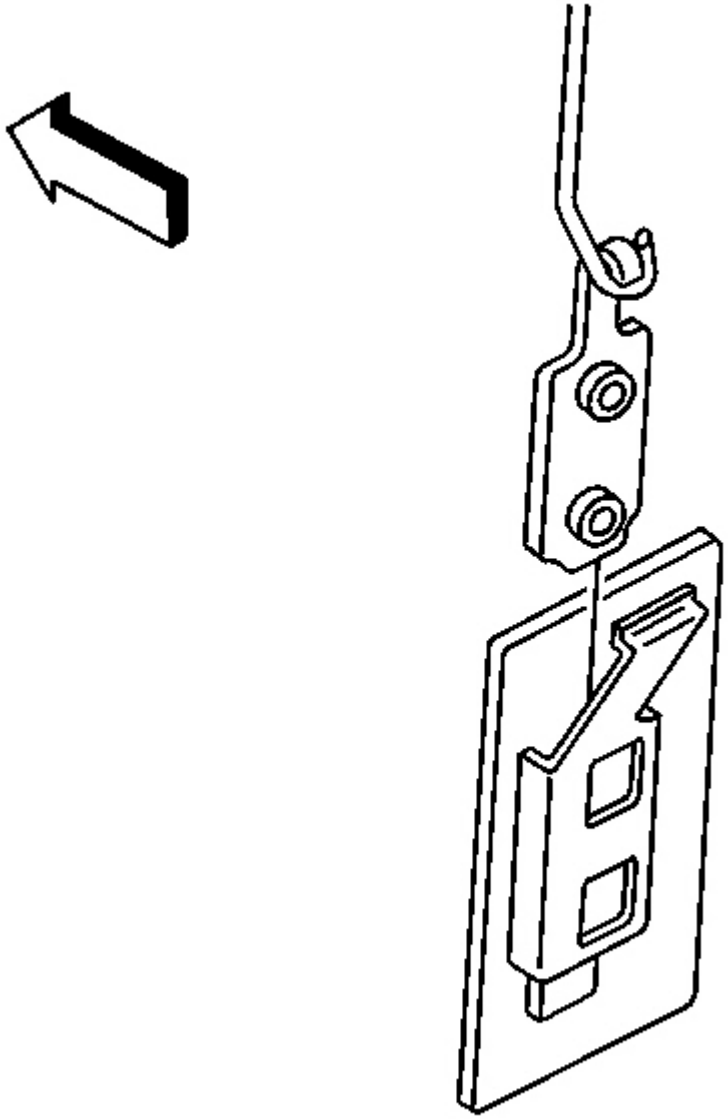

Fig. 103: Anchor Plate At Retainer
Courtesy of GENERAL MOTORS CORP.

14. Lift the anchor plate up out of the retainer, lower the anchor plate to the frame rail, and remove the anchor plate thorough the access hole.
15. Remove the anchor plate from the stiff wire.
16. Remove the stiff wire.

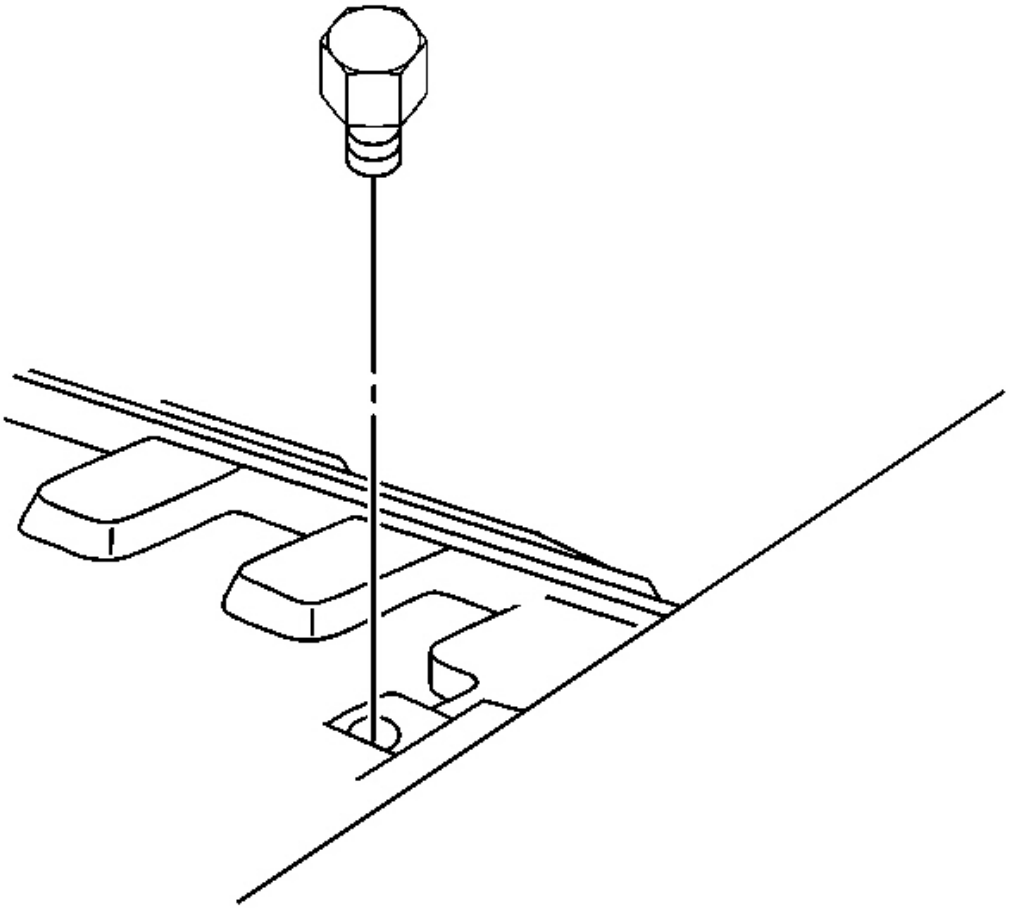

Fig. 104: Folding Top Stowage Lid Bumper (Convertible)
Courtesy of GENERAL MOTORS CORP.

1. Tape a four foot long flexible wire to the stiff wire used in removing the old anchor plate.
2. Insert the joined end of the wires down through the stowage lid bumper opening and out the access hole.

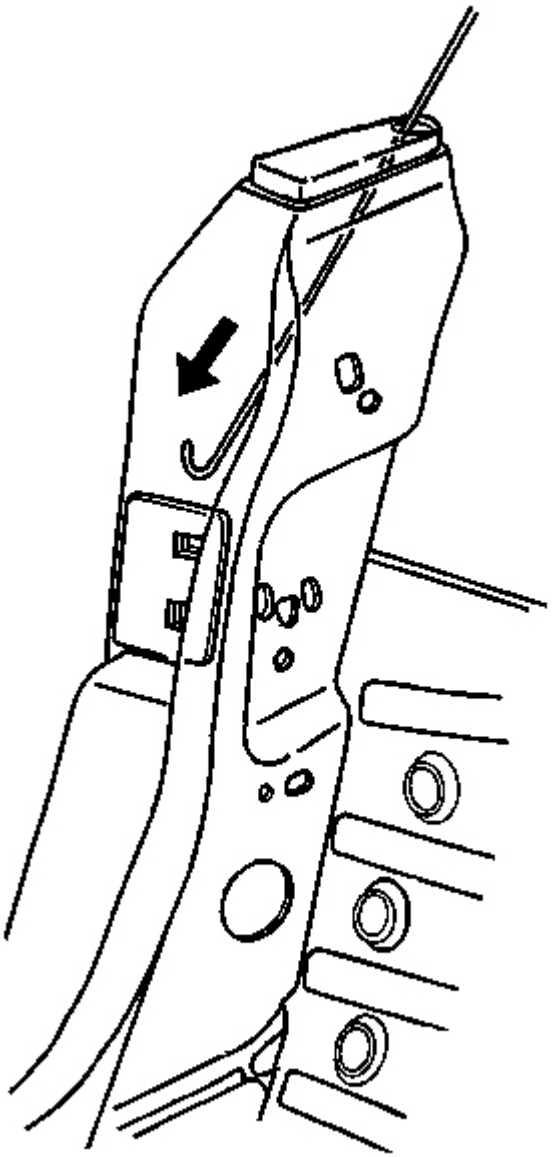

Fig. 105: Bumper Hole & Anchor Plate (Convertible)
Courtesy of GENERAL MOTORS CORP.

3. Remove the flexible wire from the stiff wire.
4. Attach the flexible wire to the lower hole in a new anchor plate.
5. Remove the stiff wire back up through the bumper hole.

6. Attach the other end of the flexible wire to the stiff wire.
7. Using the bumper hole, fish the wires down into the anchor plate retaining bracket and out through the lower striker screw opening.
8. Remove the flexible wire from the stiff wire and secure a length of the flexible wire out through the lower striker screw opening.
9. Fish the stiff wire down to the access hole.

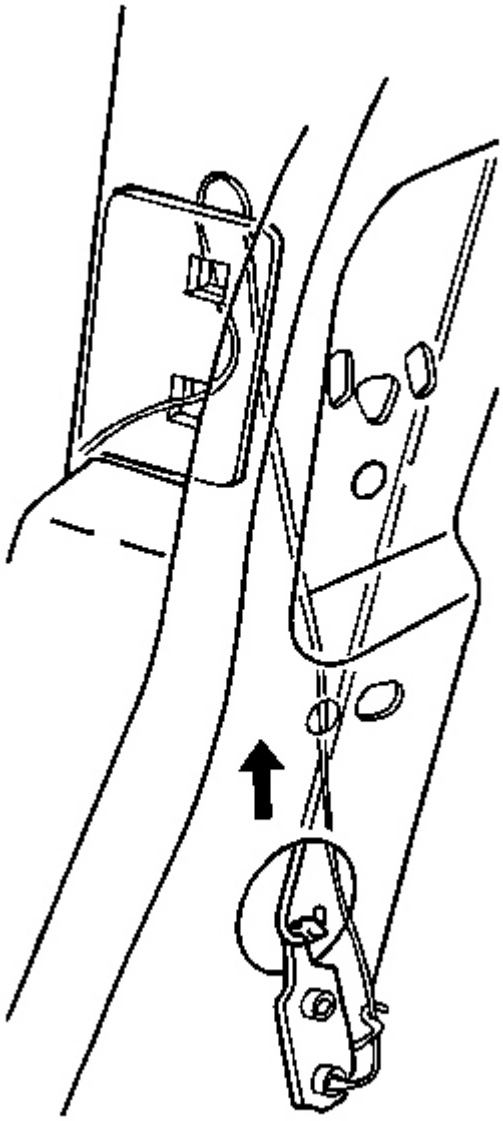

Fig. 106: Stiff Wire At Loop On Top Of New Anchor Plate (Convertible)
Courtesy of GENERAL MOTORS CORP.

10. Position the anchor plate with the loop facing the rear of the vehicle.
11. Attach the stiff wire to the loop on the top of the new anchor plate.

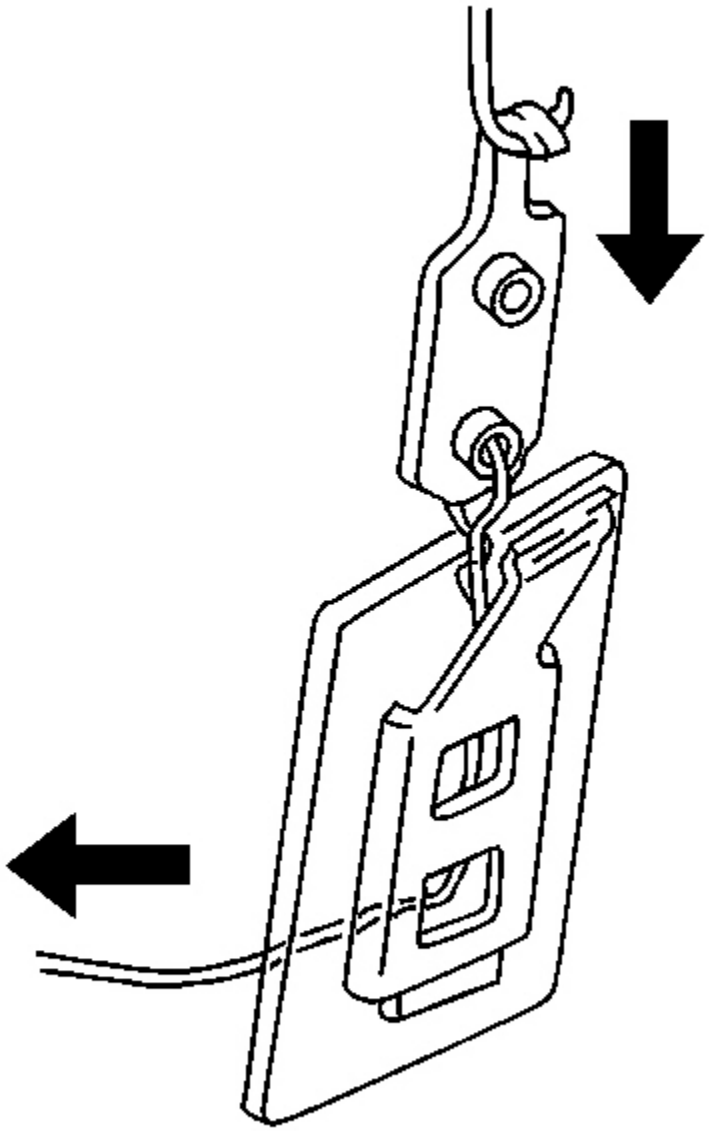

Fig. 107: Anchor Plate At Bracket & Flexible Wire (Convertible)

Courtesy of GENERAL MOTORS CORP.

12. Pull the anchor plate up past the bracket and then lower the plate into the bracket using the attached flexible wire to guide the plate.
13. Remove the flexible wire.

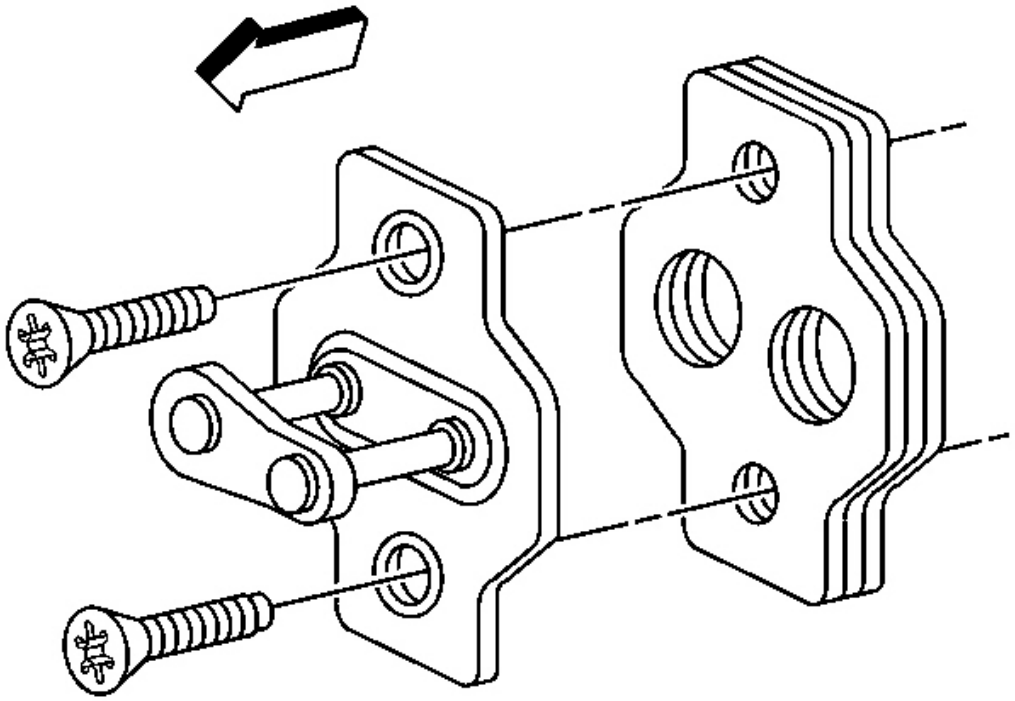

Fig. 108: Shims & Striker
Courtesy of GENERAL MOTORS CORP.

14. Loosely install the striker.
15. Remove the stiff wire.

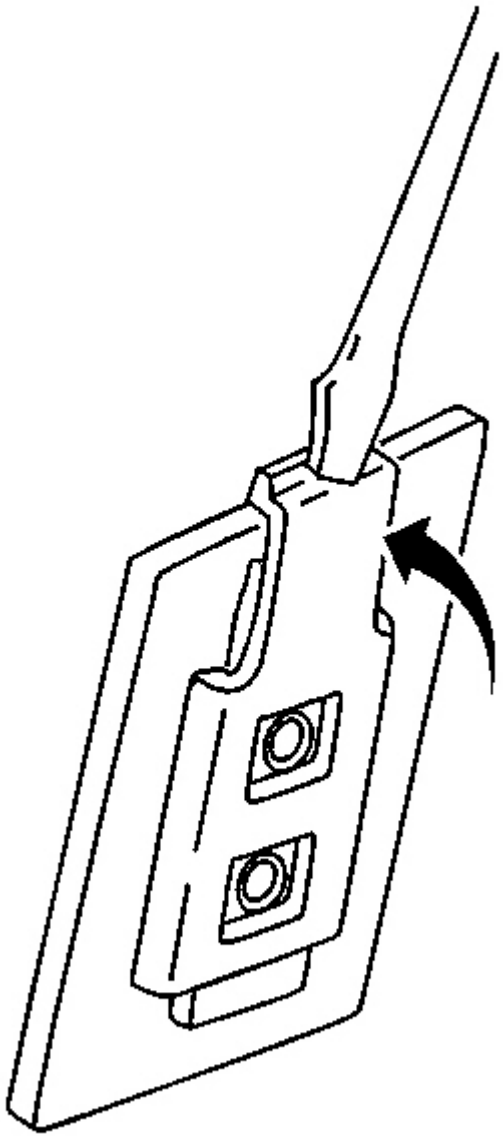

Fig. 109: Locking Anchor Plate At Bracket
Courtesy of GENERAL MOTORS CORP.

16. Bend the tab down locking the anchor plate in the bracket.

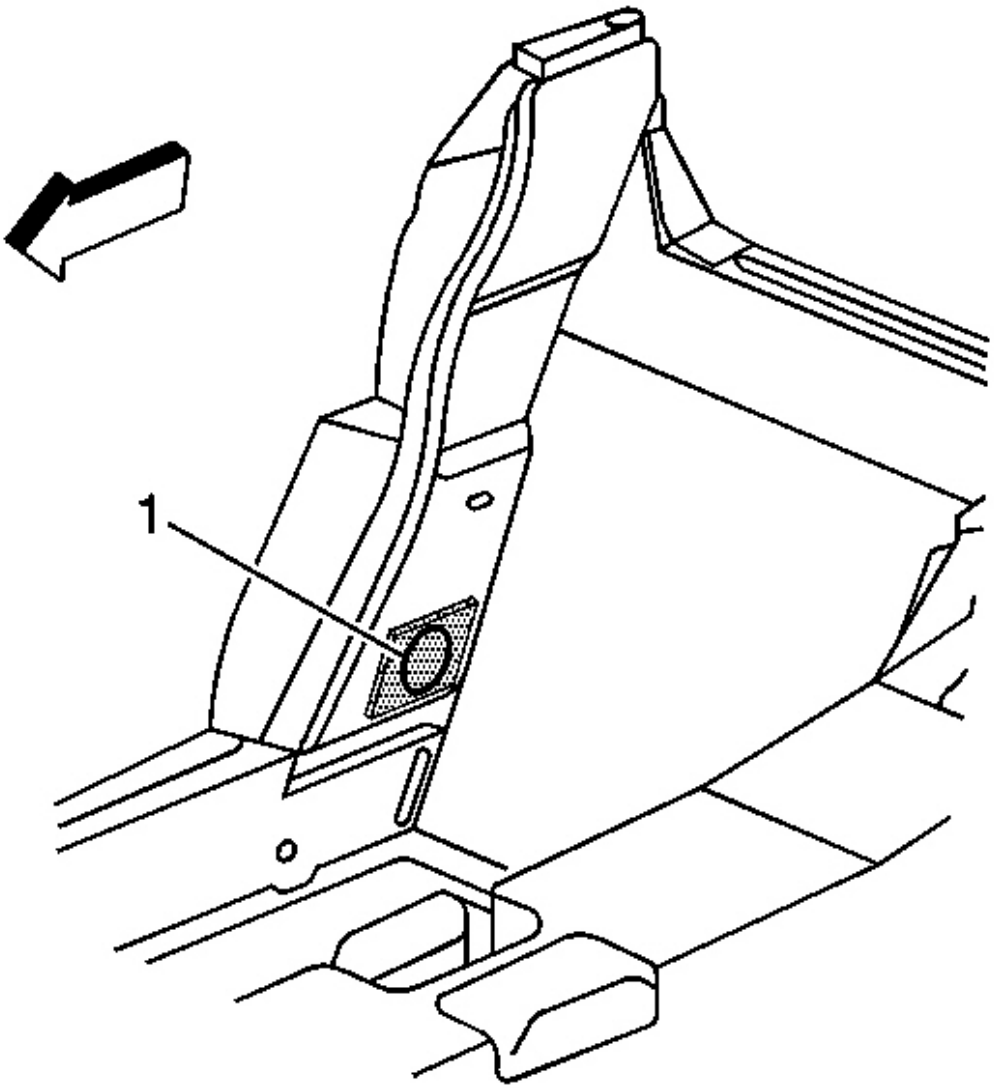

Fig. 110: Access Hole
Courtesy of GENERAL MOTORS CORP.

17. Cover the access hole (1).

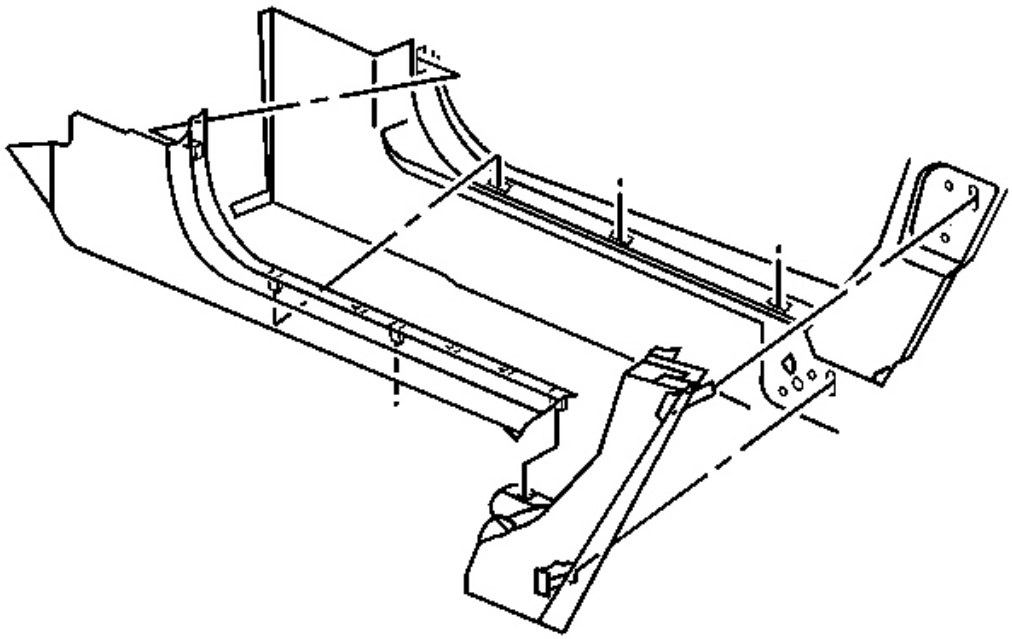

Fig. 111: Lower Lock Pillar Panel At Lock Pillar & Side Rail (Convertible)
Courtesy of GENERAL MOTORS CORP.

18. Install the lower lock pillar trim.

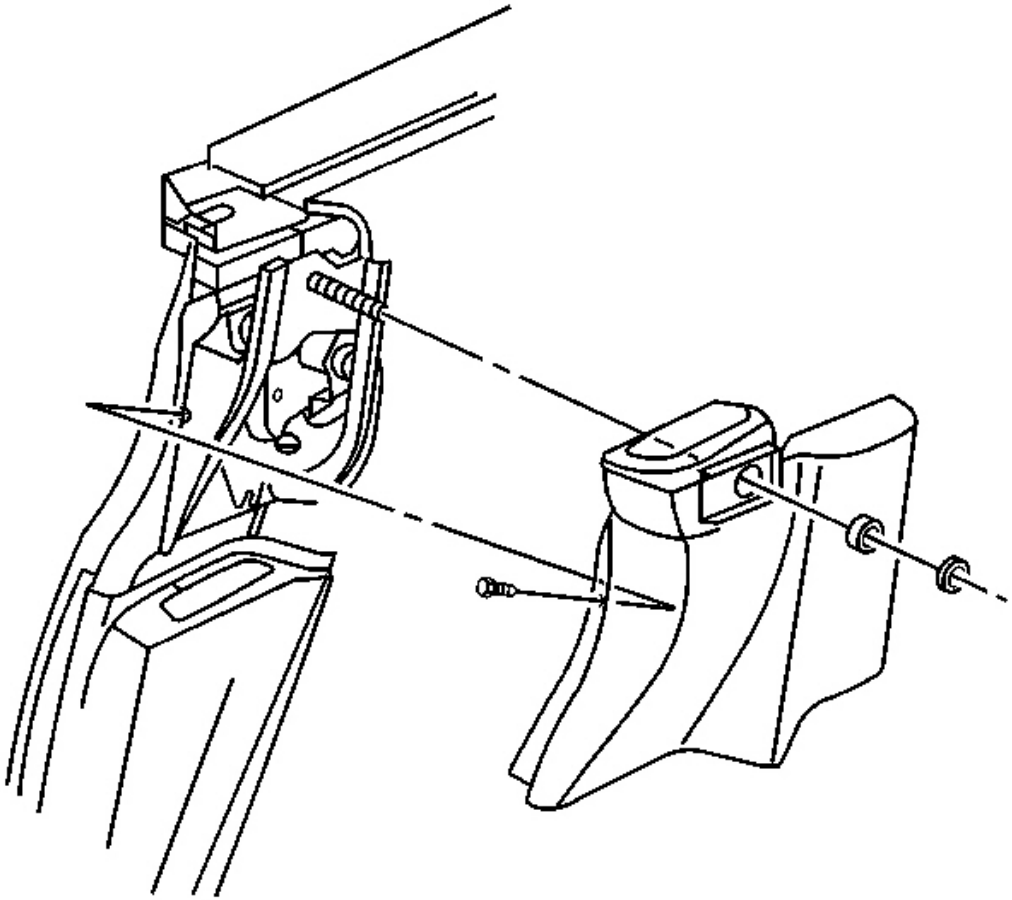

Fig. 112: Upper Lock Pillar Trim At Seat Belt Guide (Convertible)
Courtesy of GENERAL MOTORS CORP.

NOTE: Refer to Fastener Notice in Cautions and Notices.

19. Install the upper lock pillar trim and the seat belt guide.

    Tighten: Tighten the seat belt guide nut to 40 N.m (29 lb ft).

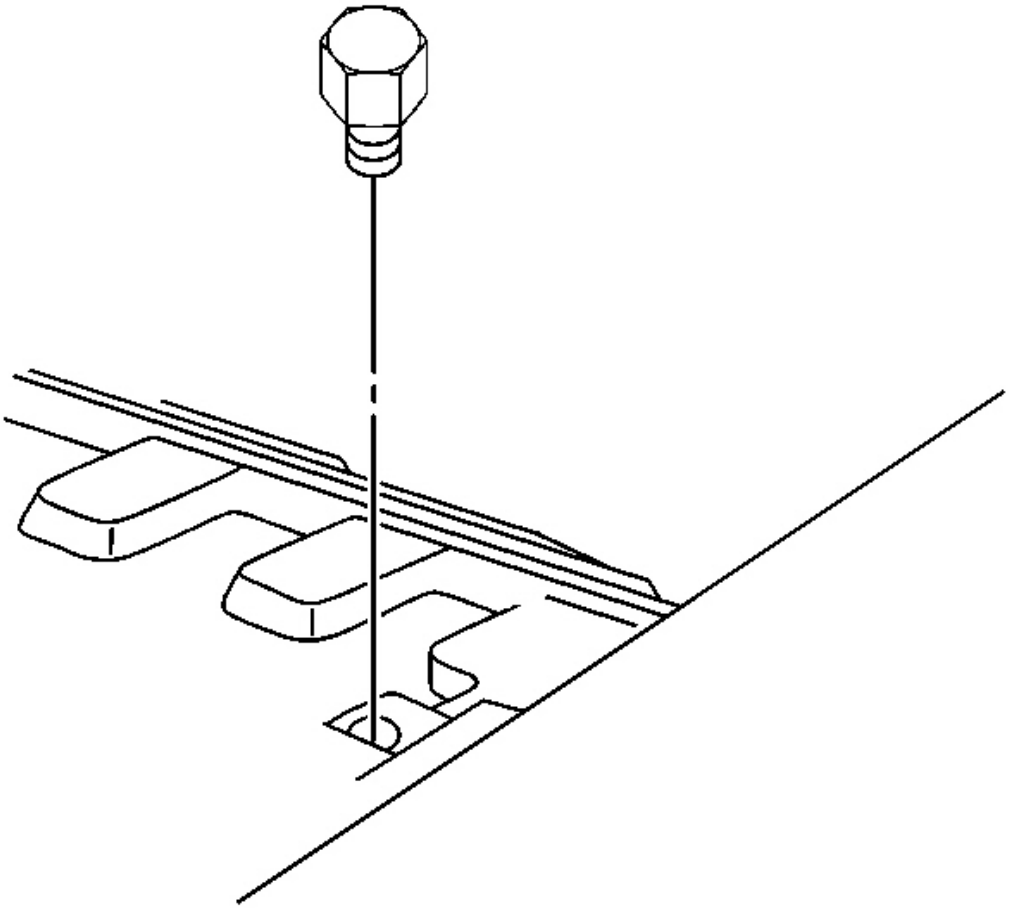

Fig. 113: Folding Top Stowage Lid Bumper (Convertible)
Courtesy of GENERAL MOTORS CORP.

20. Install the stowage lid bumper.

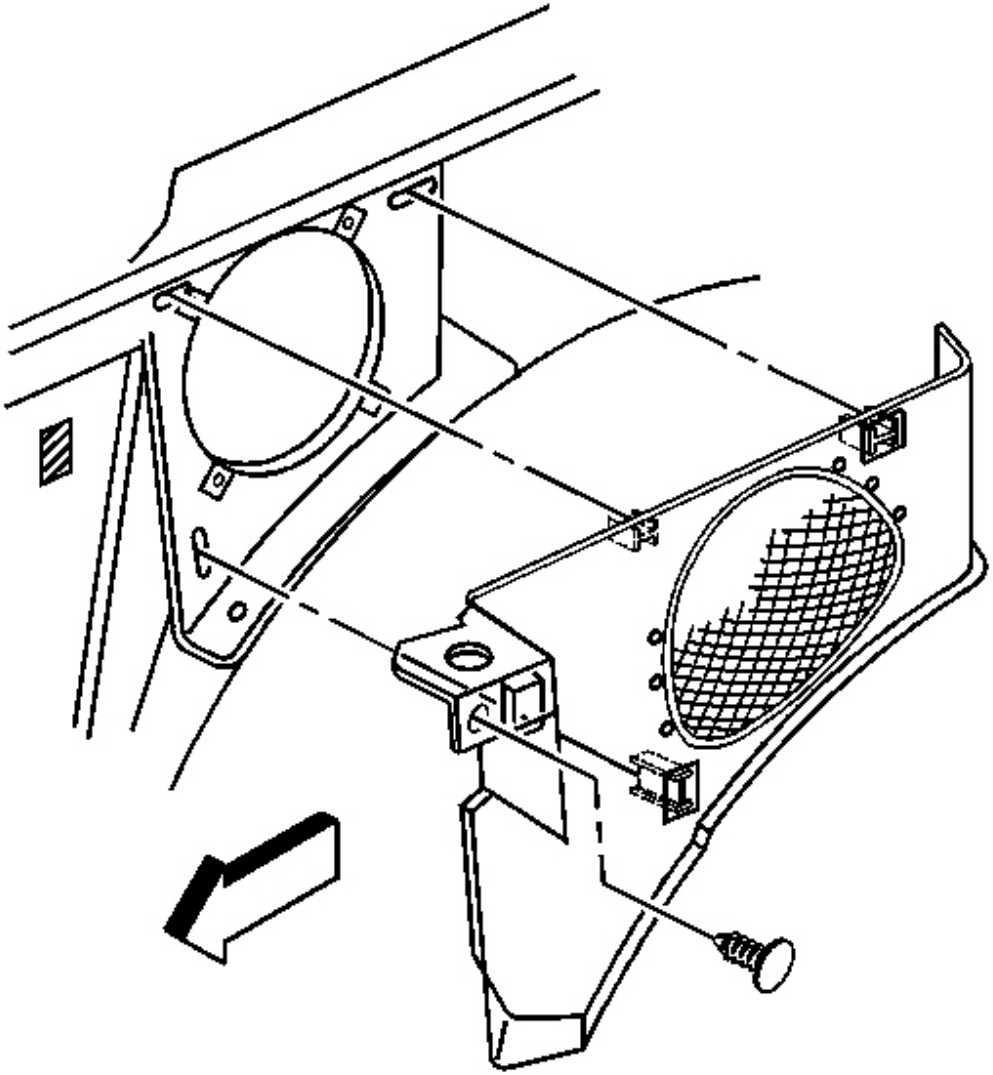

Fig. 114: Rear Compartment Side Trim Panel (Convertible)
Courtesy of GENERAL MOTORS CORP.

21. Install the rear compartment side trim panel.
    1. Attach the panel with the push-pin to the lock pillar.
    2. Align and press the panel to the clips in the housing.

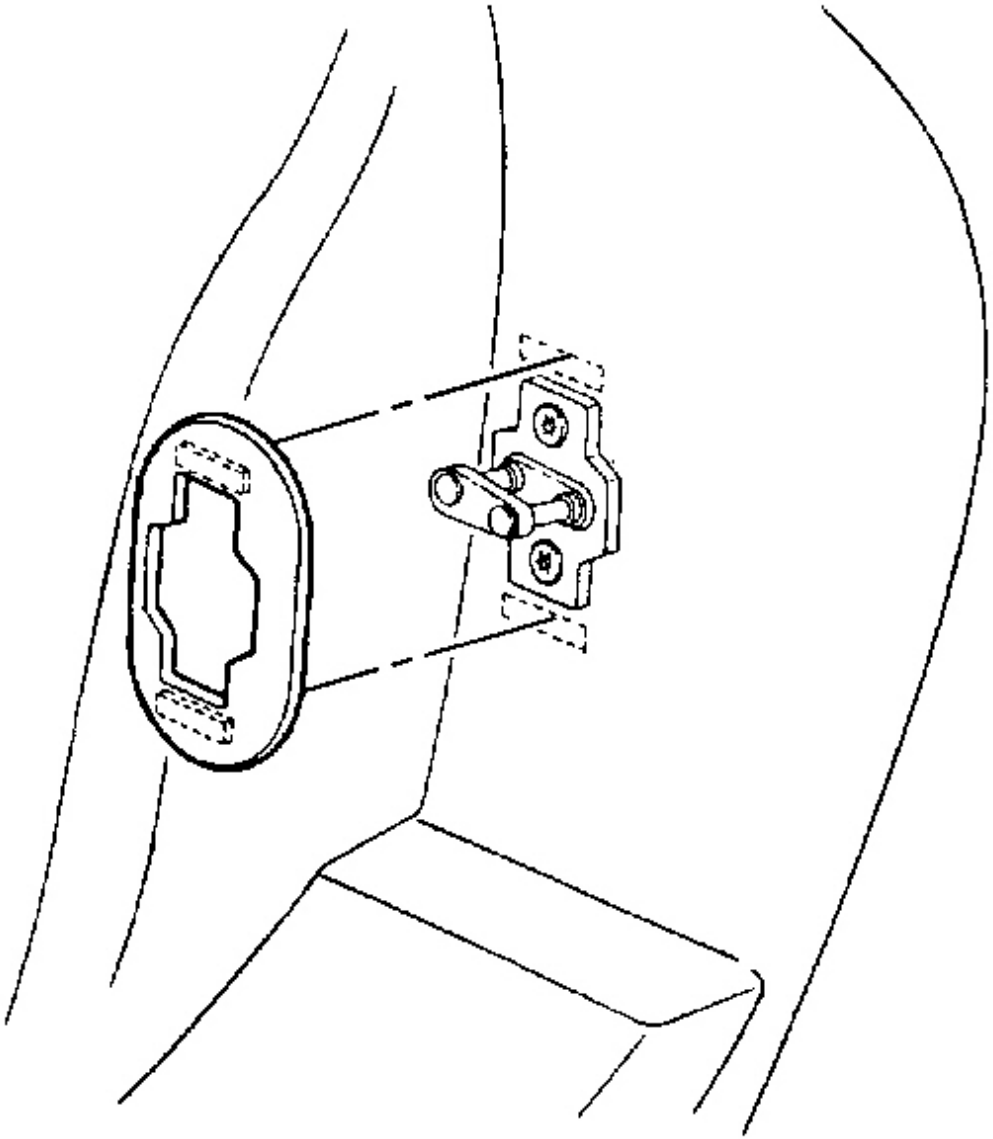

Fig. 115: Striker Cover At Fastener Patches
Courtesy of GENERAL MOTORS CORP.

22. Close the folding top.
23. Adjust the door striker.
24. Tighten the striker screws.

Tighten: Tighten the door striker screws to 24 N.m (18 lb ft).

25. Install the striker trim plate.

STRIKER ANCHOR PLATE REPLACEMENT - DOOR (COUPE, HARDTOP)

Removal Procedure

1. Remove the door lock striker cover. Pull the cover loose from the hook and loop fastener patches.

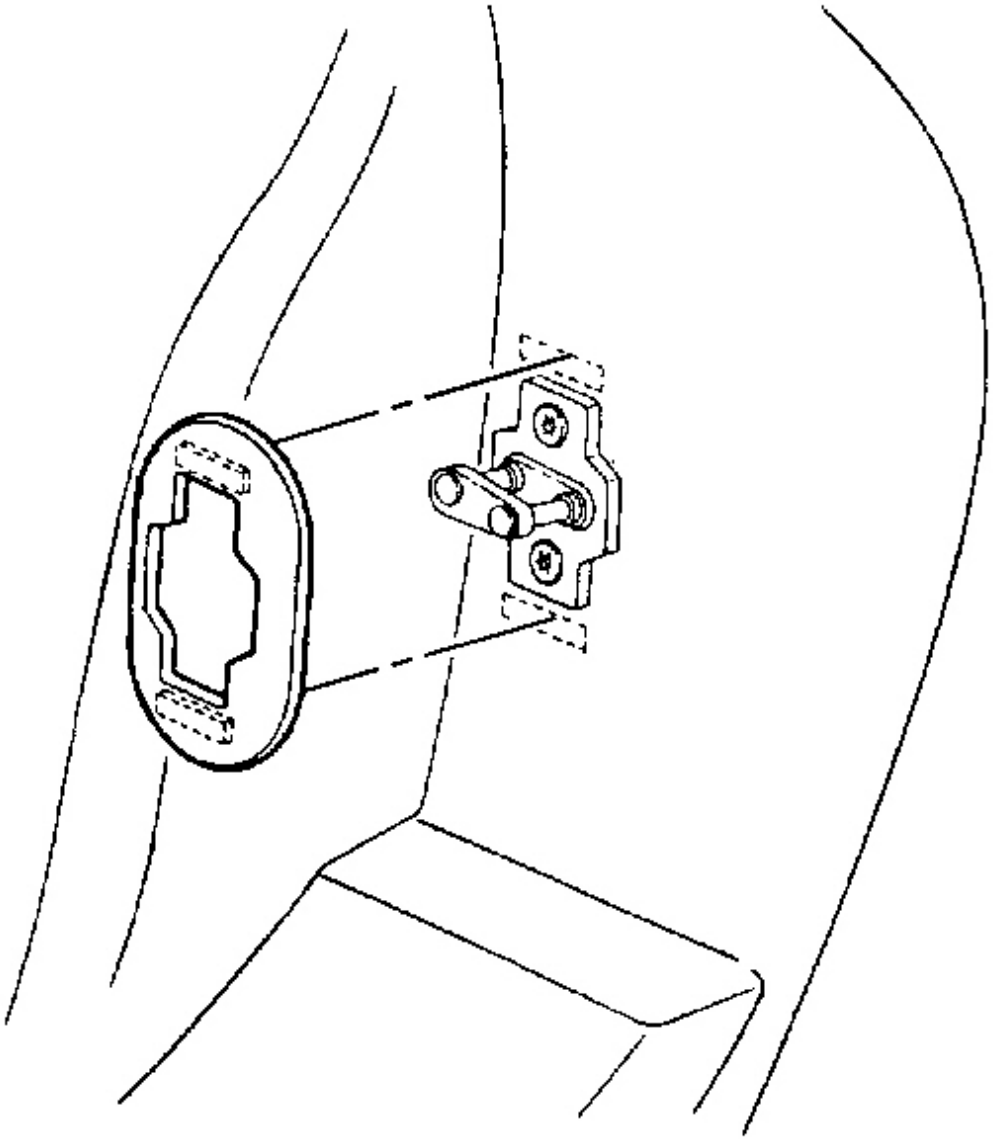

Fig. 116: Striker Cover At Fastener Patches
Courtesy of GENERAL MOTORS CORP.

2. Mark the location of the door lock striker.
3. Remove the door lock striker and shims.

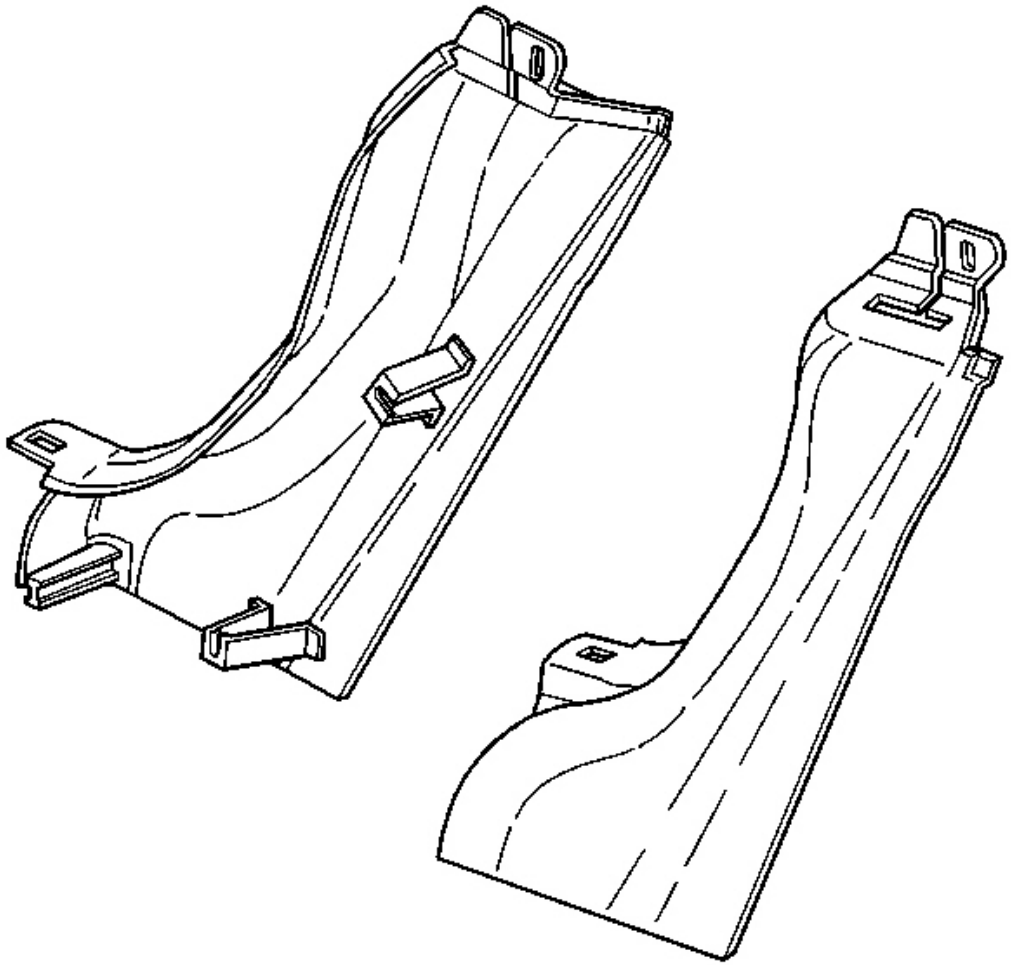

Fig. 117: Lock Pillar Trim Panel (Coupe, Hardtop)
Courtesy of GENERAL MOTORS CORP.

4. Remove the lock pillar trim panel. Refer to **Trim Replacement - Lock Pillar (Upper Convertible)** or **Trim Replacement - Lock Pillar (Coupe)** or **Trim Replacement - Lock Pillar (Lower Convertible and Hard Top)** in Interior Trim.

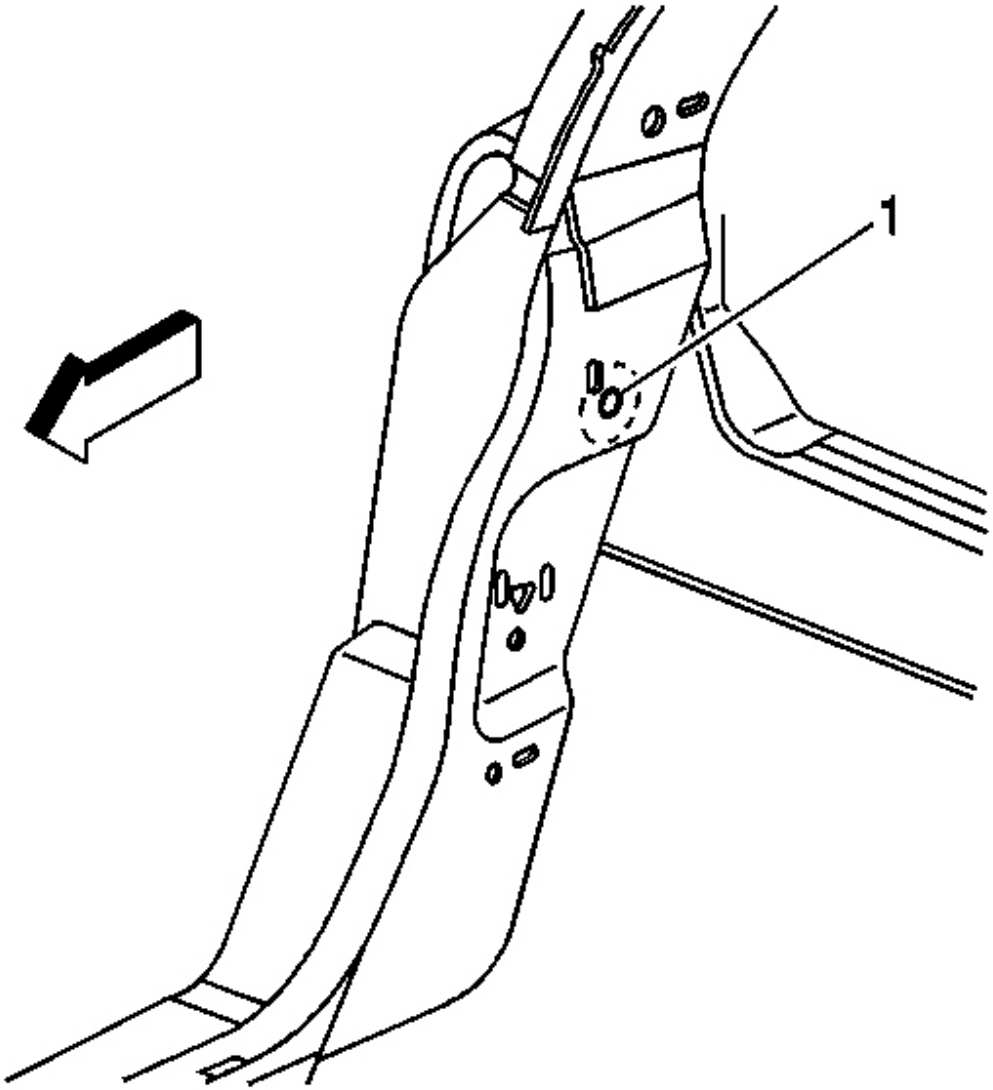

Fig. 118: Lock Pillar Inner Trim Panel Upper Clip Slot At Lock Pillar (Coupe, Hardtop)
Courtesy of GENERAL MOTORS CORP.

5. Cut a 51 mm (2 in) access hole with a hole saw using the 3.6 mm (1/8 in) hole (1) located 24 mm (1 in) below the lock pillar inner trim panel upper clip slot on the lock pillar as a locator. The 3.6 mm (1/8 in) hole is located about 127 mm (5 in) higher than the striker on the inner upper surface of the lock pillar.

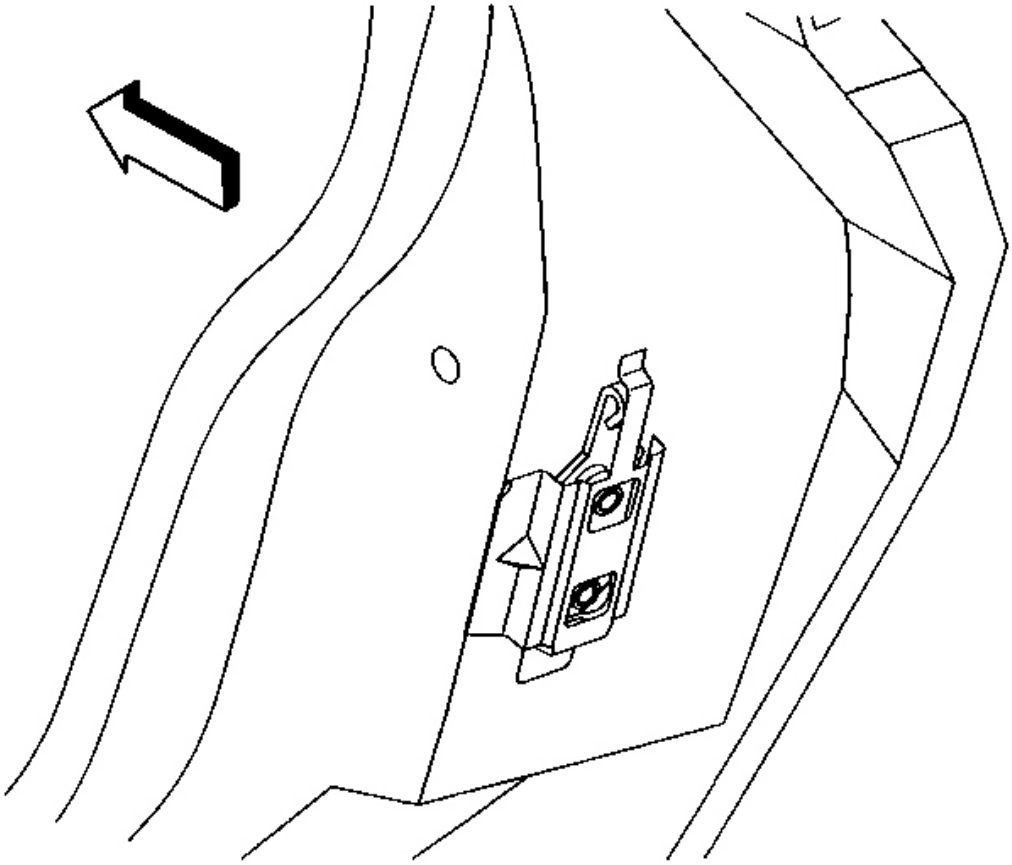

Fig. 119: Upper Tab At Nut Plate Retaining Bracket (Coupe, Hardtop)
Courtesy of GENERAL MOTORS CORP.

6. Bend out the upper tab on the nut plate retaining bracket.

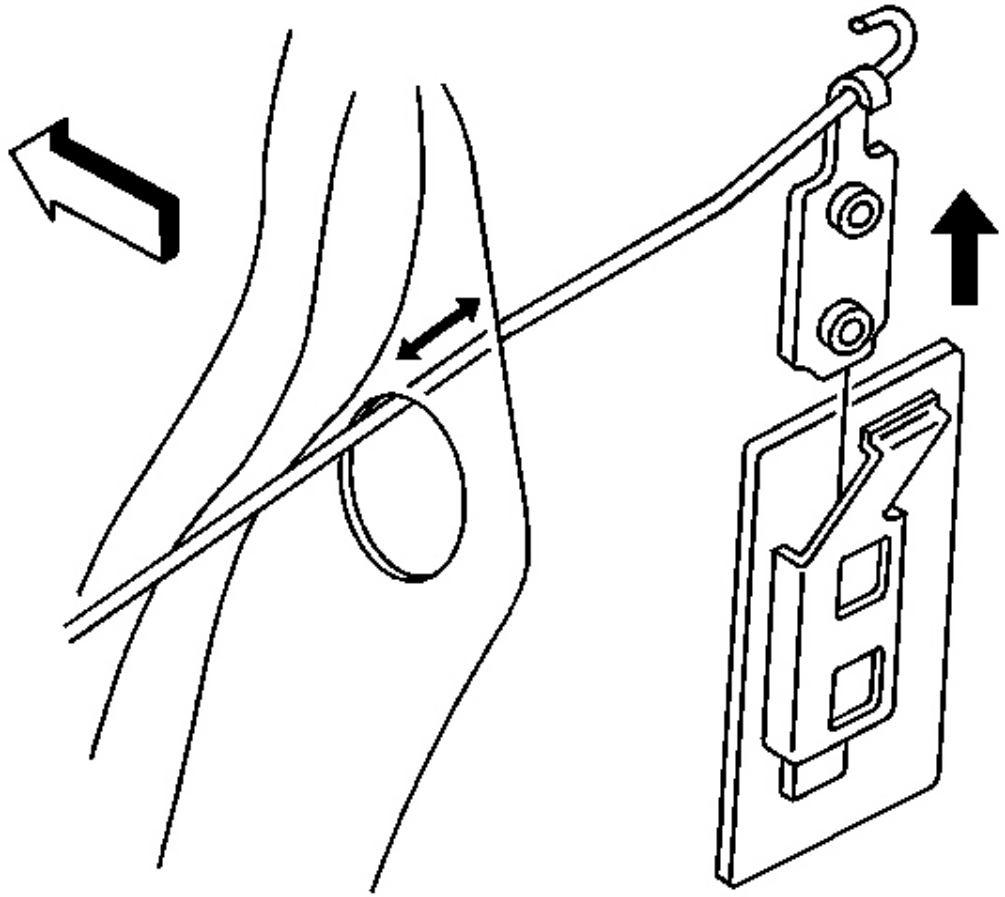

Fig. 120: Nut Plate At Retaining Bracket (Coupe, Hardtop)
Courtesy of GENERAL MOTORS CORP.

IMPORTANT: When removing and installing the nut plate be extremely careful to securely hook the nut plate to prevent dropping the plate into the pillar resulting in a vehicle rattle.

7. Hook the nut plate with a stiff wire and carefully pull the nut plate up and out of the retaining bracket and out through the access hole.

Installation Procedure

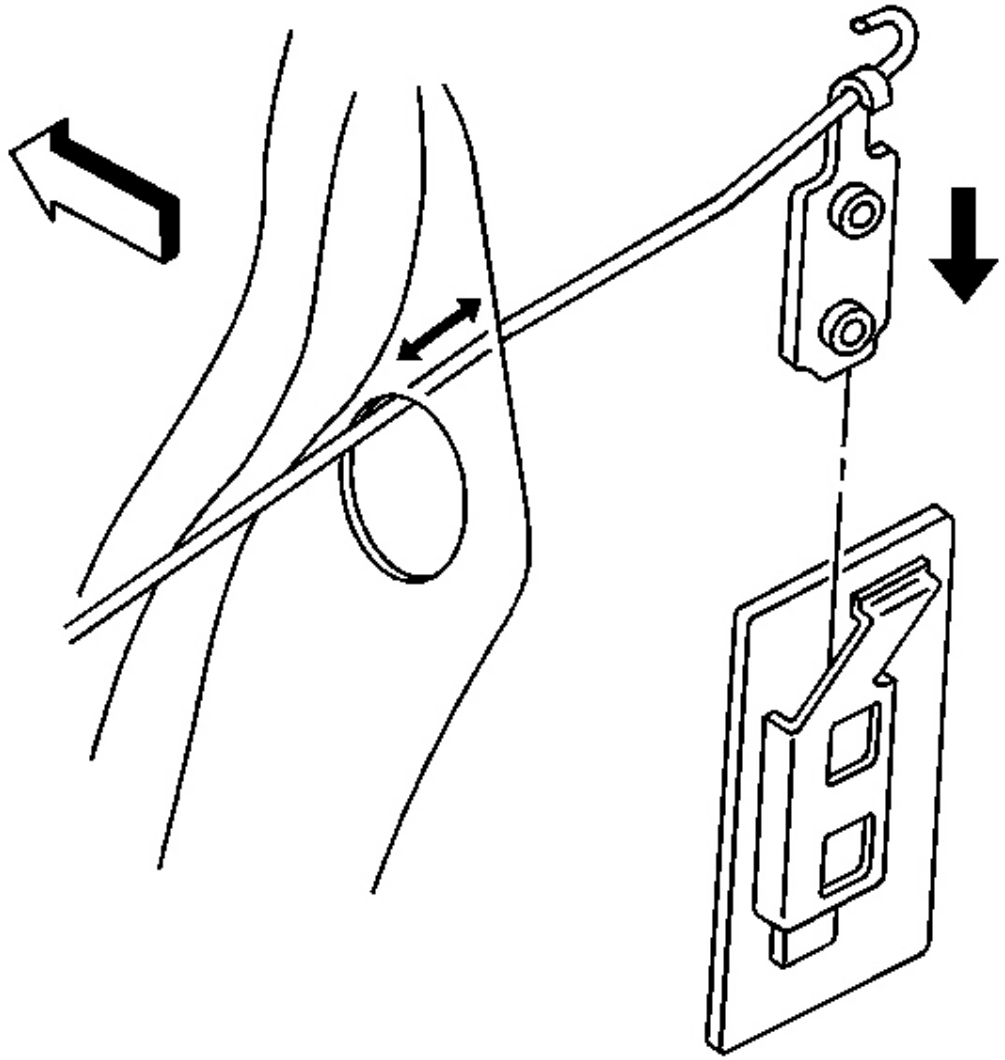

Fig. 121: Nut Plate At Access Hole & Bracket (Coupe, Hardtop)
Courtesy of GENERAL MOTORS CORP.

1. Attach a wire to the nut plate.

IMPORTANT: When removing and installing the nut plate be extremely careful to securely hook the nut plate to prevent dropping the plate into the pillar resulting in a vehicle rattle.

2. Insert the nut plate through the access hole and into the retaining bracket.
3. Remove the wire.

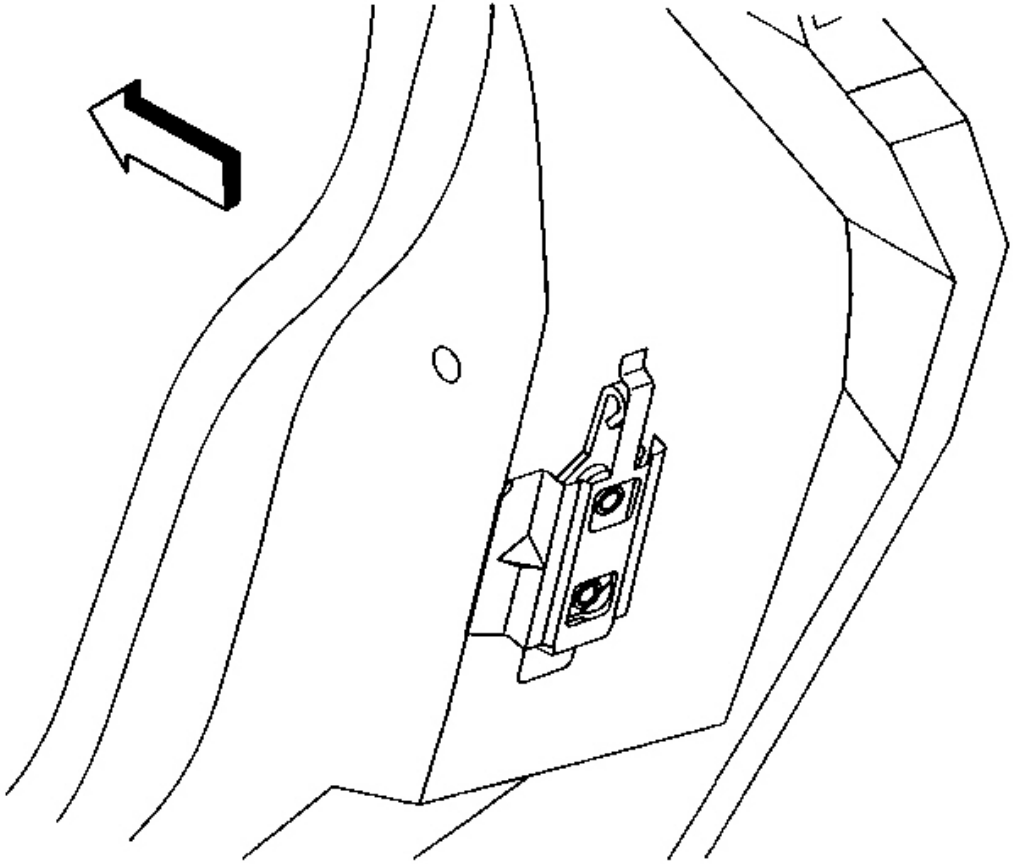

Fig. 122: Upper Tab At Nut Plate Retaining Bracket (Coupe, Hardtop)
Courtesy of GENERAL MOTORS CORP.

4. Bend the bracket upper tab down to secure the nut plate in the bracket.

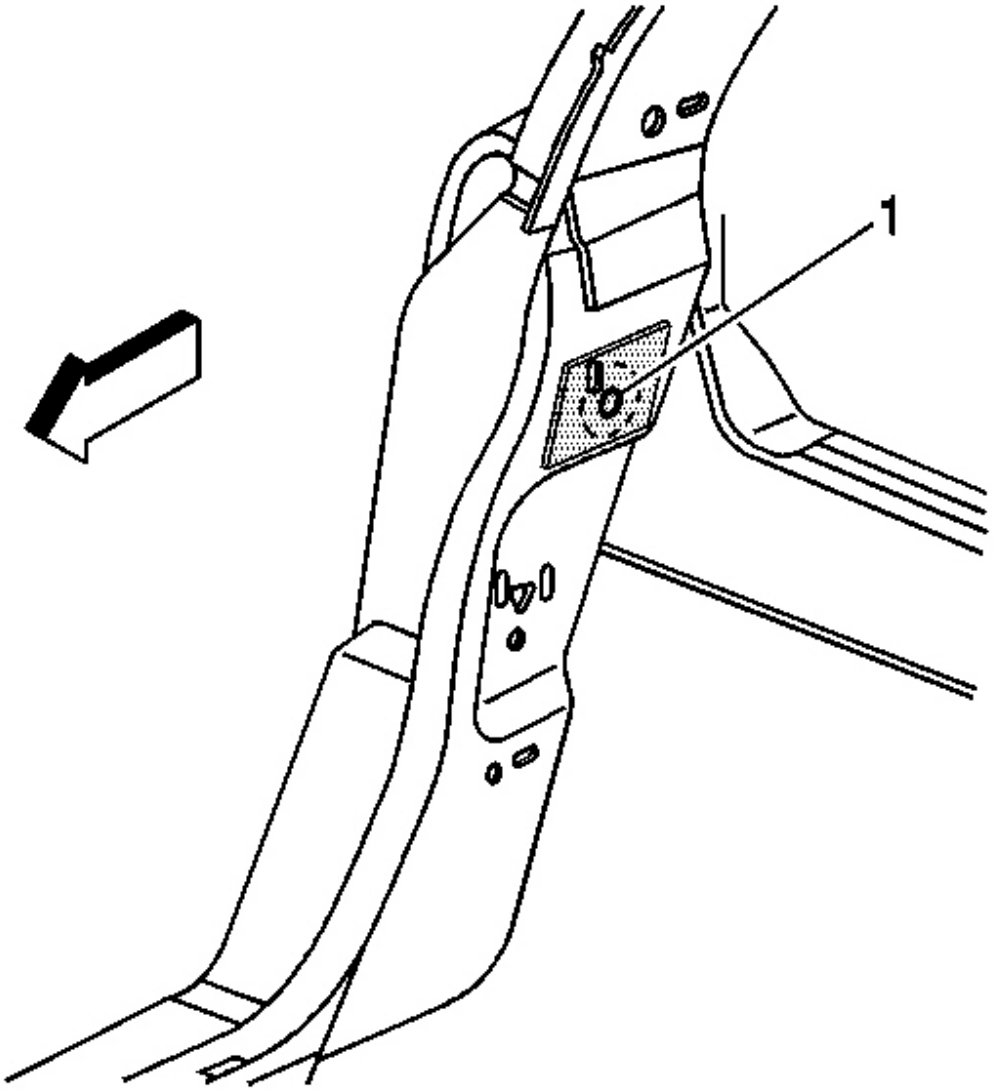

Fig. 123: Access Hole Plug
Courtesy of GENERAL MOTORS CORP.

5. Plug the access hole (1).

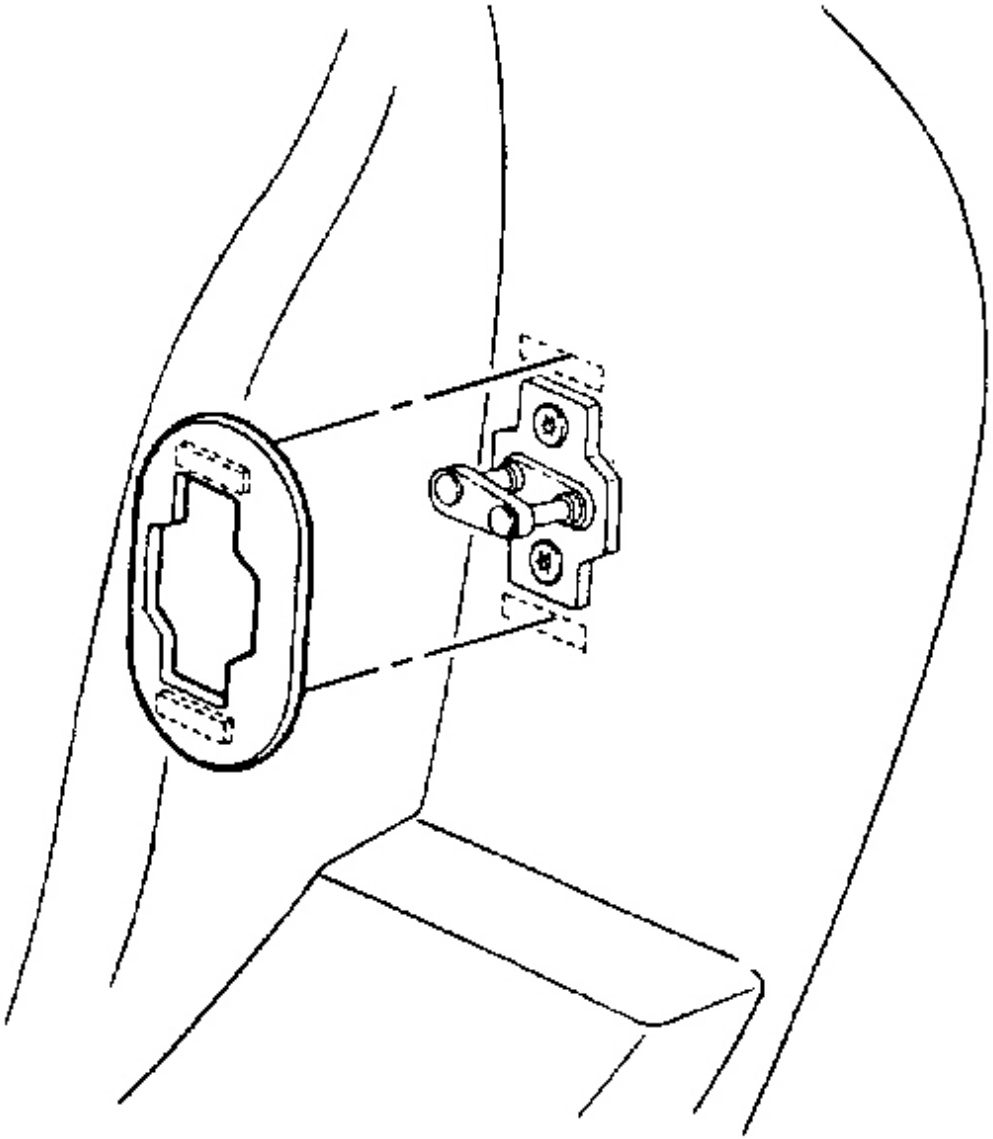

Fig. 124: Striker Cover At Fastener Patches (Coupe, Hardtop)
Courtesy of GENERAL MOTORS CORP.

6. Install the door lock striker. Refer to **Striker Replacement - Door** .

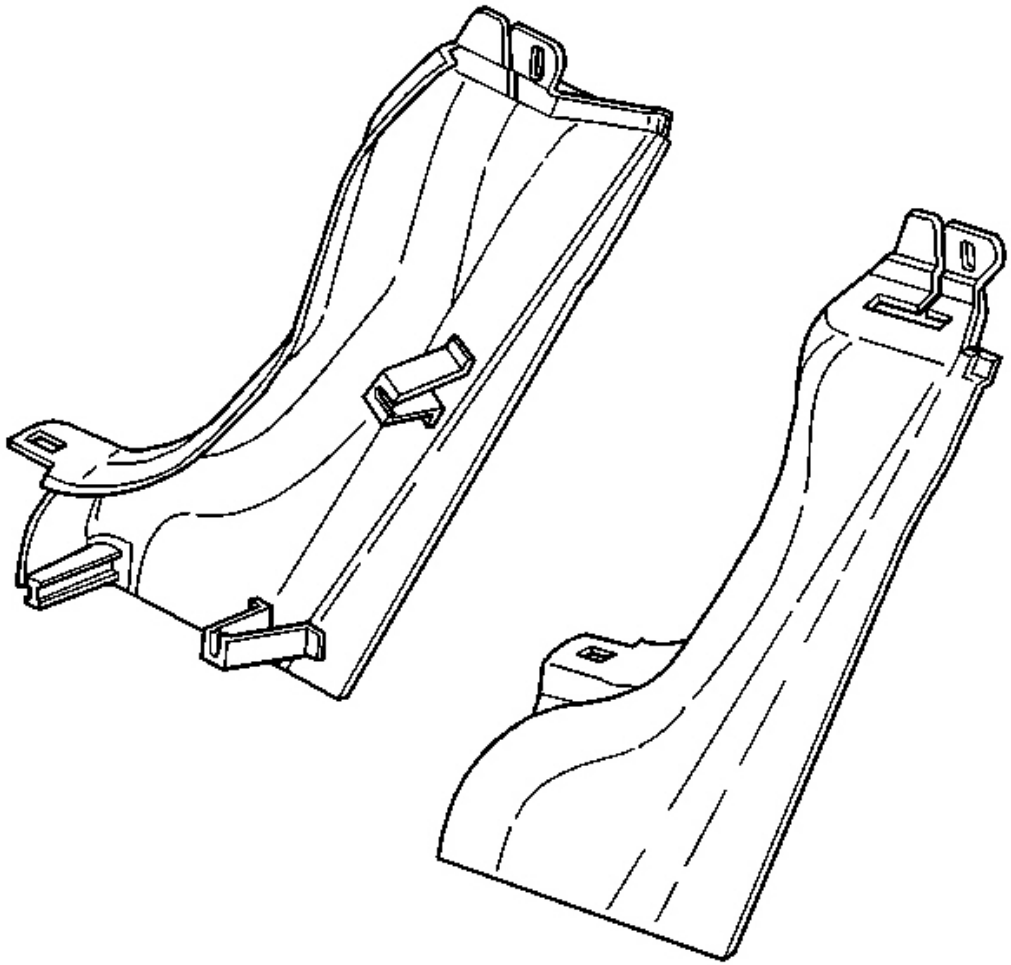

Fig. 125: Lock Pillar Trim Panel (Coupe, Hardtop)
Courtesy of GENERAL MOTORS CORP.

7. Install the lock pillar trim panel. Refer to **Trim Replacement - Lock Pillar (Upper Convertible)** or **Trim Replacement - Lock Pillar (Coupe)** or **Trim Replacement - Lock Pillar (Lower Convertible and Hard Top)** in Interior Trim.

DOOR HARDWARE LUBRICATION

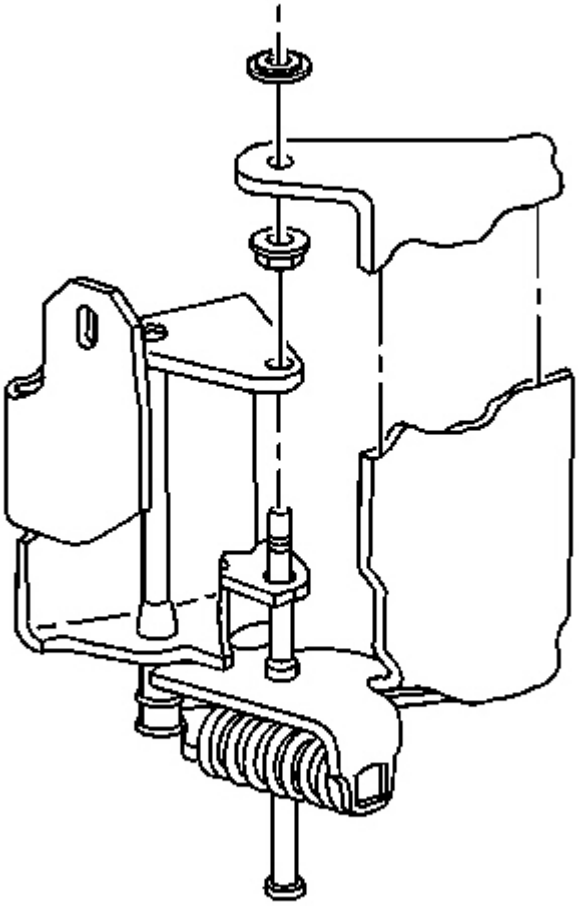

Fig. 126: View Of Door Hardware
Courtesy of GENERAL MOTORS CORP.

The mechanical components of the door are lubricated during assembly. If additional lubrication is required to any door hardware mechanism, lubricate with Lubriplate Spray-Lube GM P/N 1052349 or Canadian P/N 992723, Lubriplate Auto-Lube GM P/N 1052196 or Canadian P/N 5264008, or equivalent. Lubrication of the door hinge roller is not recommended, lubricating the door hinge roller may allow the door hinge roller to slide against the door check link contacting surfaces causing uneven wear to the door hinge roller.

WINDOW ADJUSTMENT - DOOR

1. Remove the door trim panel. Refer to **Trim Panel Replacement - Door** .
2. Reconnect the window switch to the door harness.

3. Raise the window.
4. Disconnect the window switch from the harness.
5. Remove the window clamp sight access plugs.

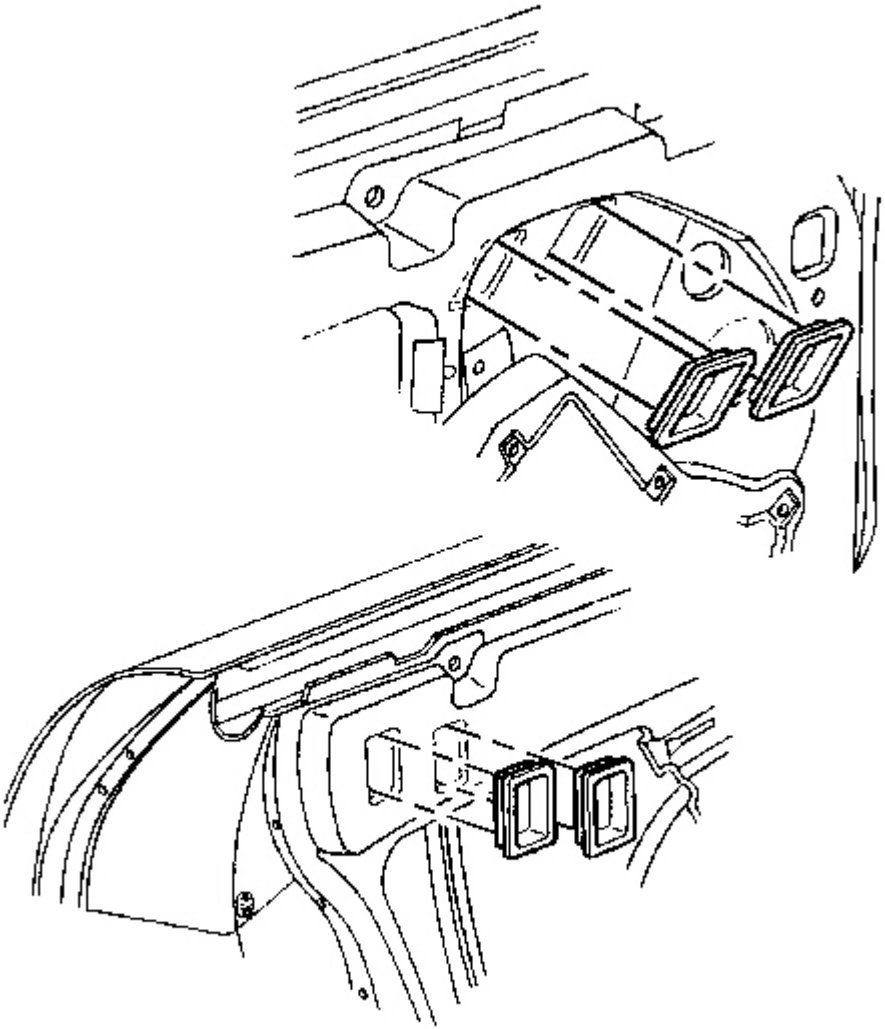

Fig. 127: Window Clamp Sight Access Plugs
Courtesy of GENERAL MOTORS CORP.

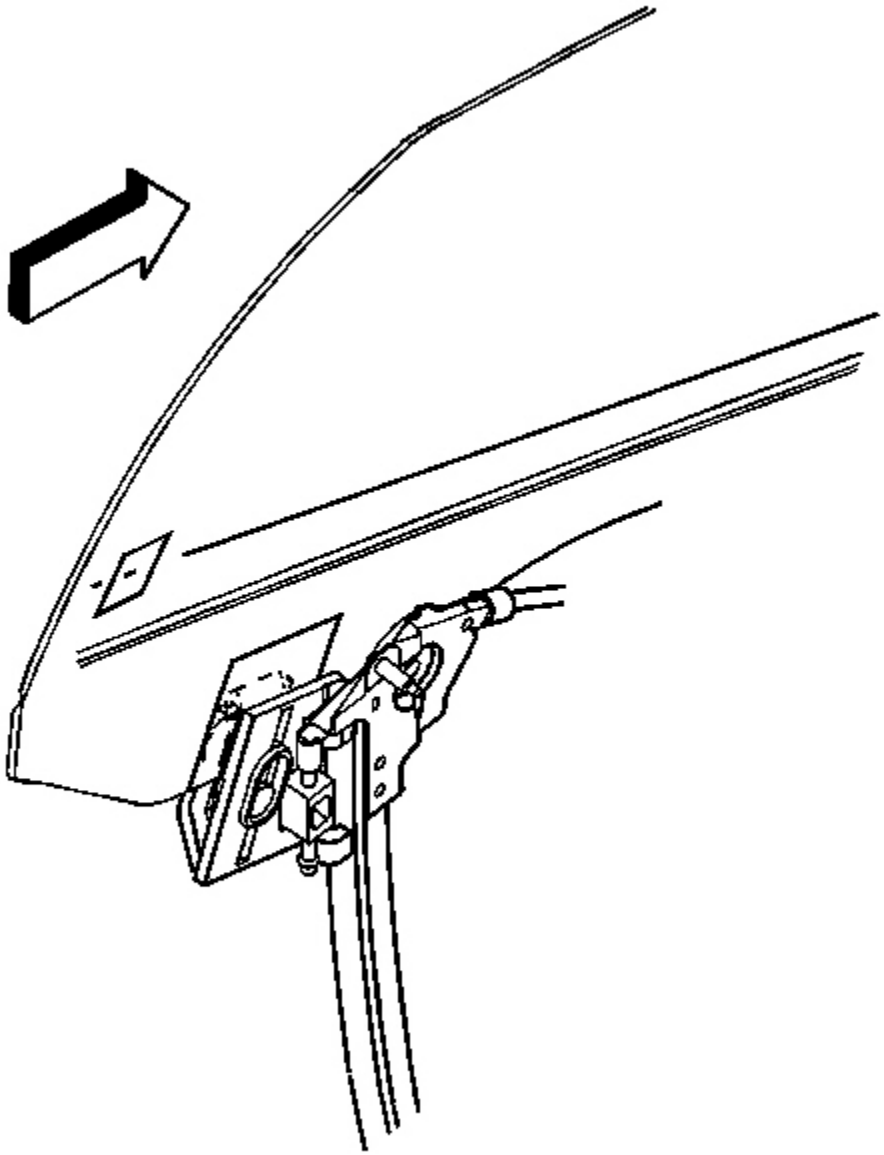

Fig. 128: Window Clamp Bolts
Courtesy of GENERAL MOTORS CORP.

6. Mark the location of the clamps on the window.
7. Loosen the window clamp bolts.
8. Jiggle the window to break the window loose from the clamps rubber seals.

9. Adjust the window using one of the following methods:
    - Put a socket on the clamp bolt and use the socket to move the window.
        1. Adjust the window forward or reward first.
        2. Adjust the front height second.
        3. Adjust the rear height last.
    - Sit in the vehicle with the door closed and with the aid of an assistant standing outside of the vehicle, position the window in the door opening.
        1. Adjust the window forward or reward first.
        2. Adjust the front height second.
        3. Adjust the rear height last.

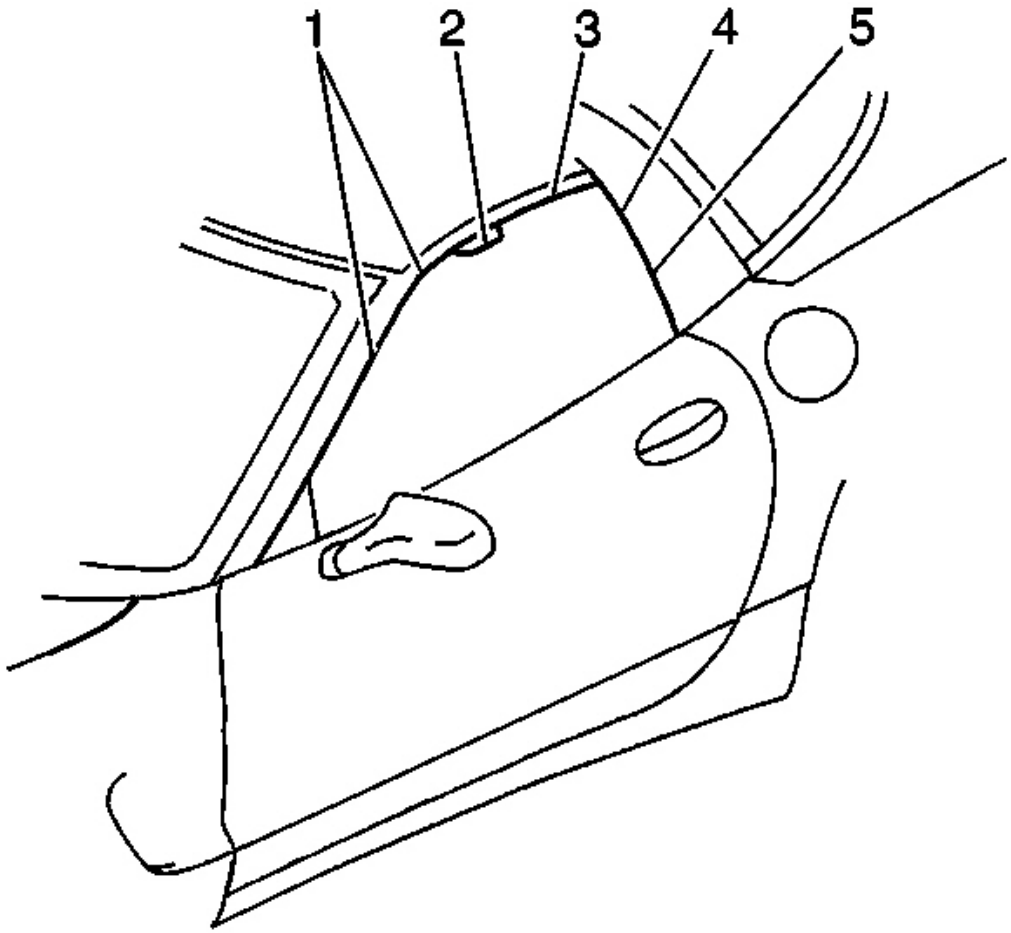

Fig. 129: Window Clamps, Molding & Retainer

Courtesy of GENERAL MOTORS CORP.

10. Slide the window in the window clamps as necessary.
    - The gap to the reveal molding (1) should be 5 to 8 mm (0.2 to 0.3 in).
    - The gap to the retainer (3) should be 5 to 8 mm (0.2 to 0.3 in).

NOTE: Refer to Fastener Notice in Cautions and Notices.

11. Tighten the window clamps.

    Tighten: Tighten the window regulator window clamp bolts to 10 N.m (89 lb in).

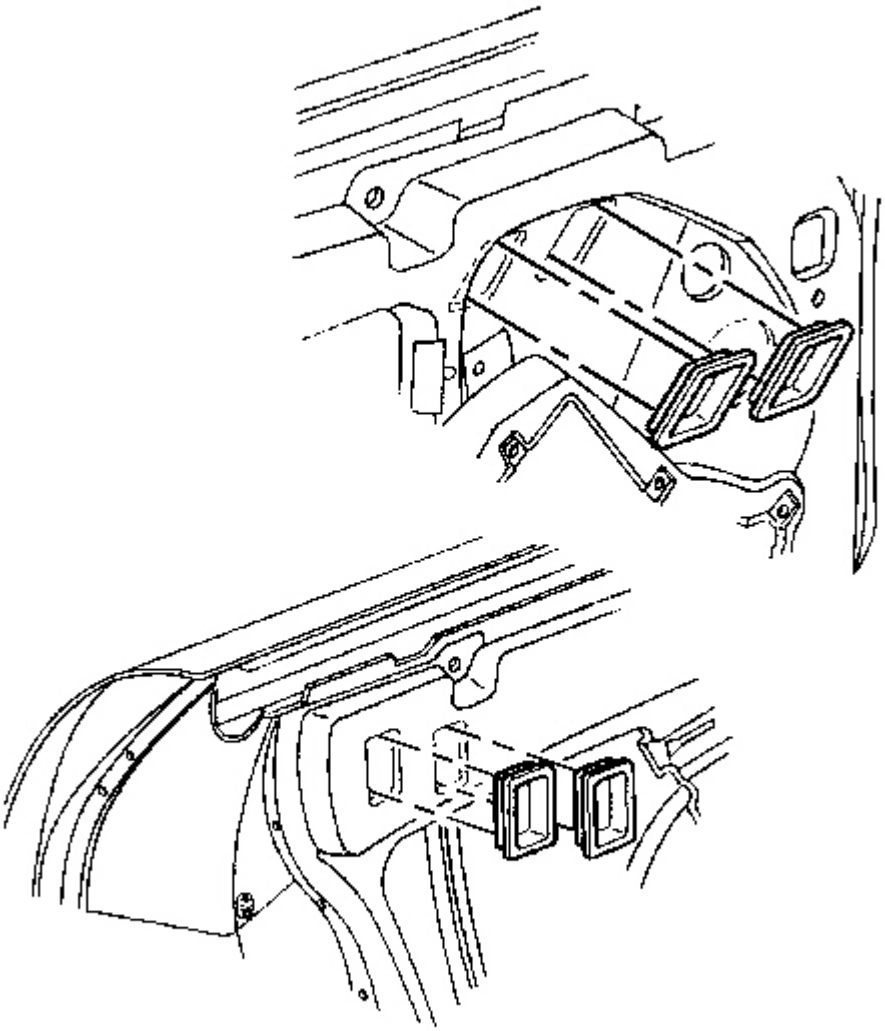

Fig. 130: Window Clamp Sight Access Plugs
Courtesy of GENERAL MOTORS CORP.

12. Open the door and install the window clamp sight access plugs.
13. Install the door trim panel. Refer to **Trim Panel Replacement - Door** .
14. Perform minor height and minor tip-in adjustments as necessary. Refer to **Window Tip-In Adjustment - Door** and **Window Height Adjustment - Door Minor** .

WINDOW TIP-IN ADJUSTMENT - DOOR

Tools Required

#6 Inverted TORX(R) Socket

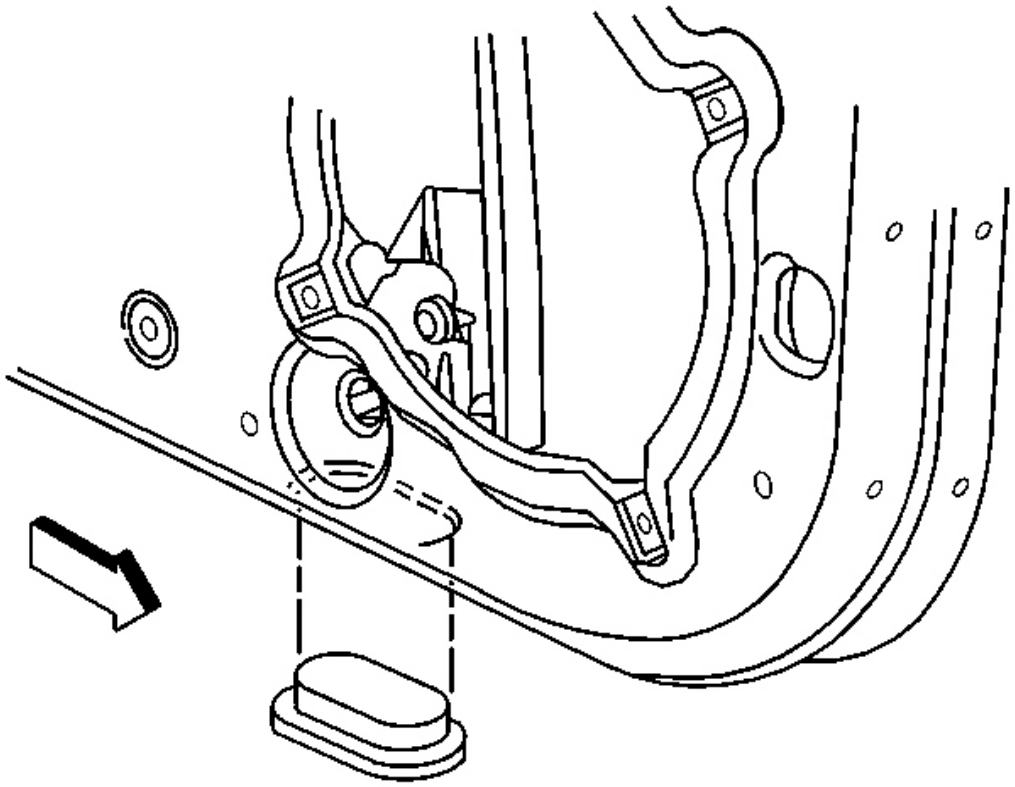

Fig. 131: Large Access Plug At Under Front Of The Door
Courtesy of GENERAL MOTORS CORP.

1. Position the window fully up.
2. Remove the large access plug from under the front of the door.
3. Loosen the window regulator front channel mounting nut.

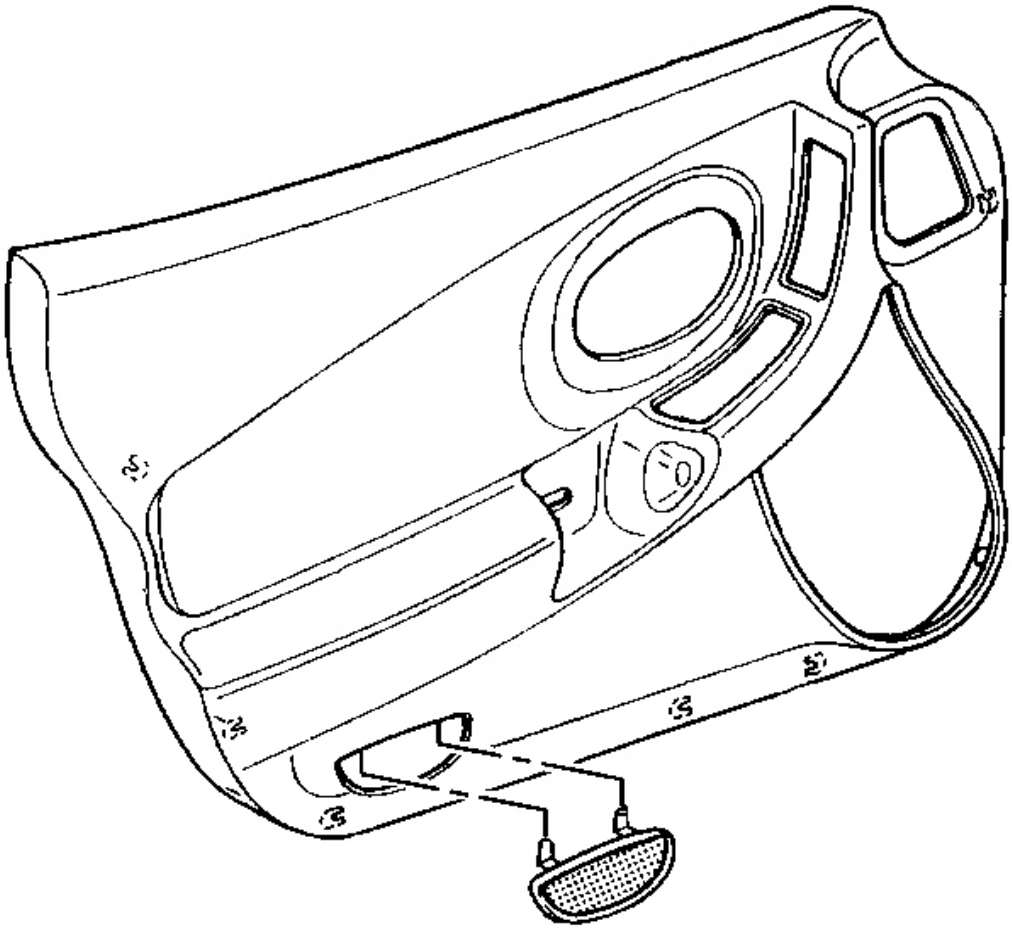

Fig. 132: Reflector At Door Trim Panel
Courtesy of GENERAL MOTORS CORP.

4. Remove the reflector from the trim panel
5. Loosen the jack screw jam nut.
6. Adjust tip in with the jack screw.
    - Turn the jack screw clockwise to tip the window outward.
    - Turn the jack screw counterclockwise to tip the window inward.
    - One turn of the screw equals approximately 1 N.m (0.04 in) change at the top of the window.
7. Tighten the jack screw jam nut.

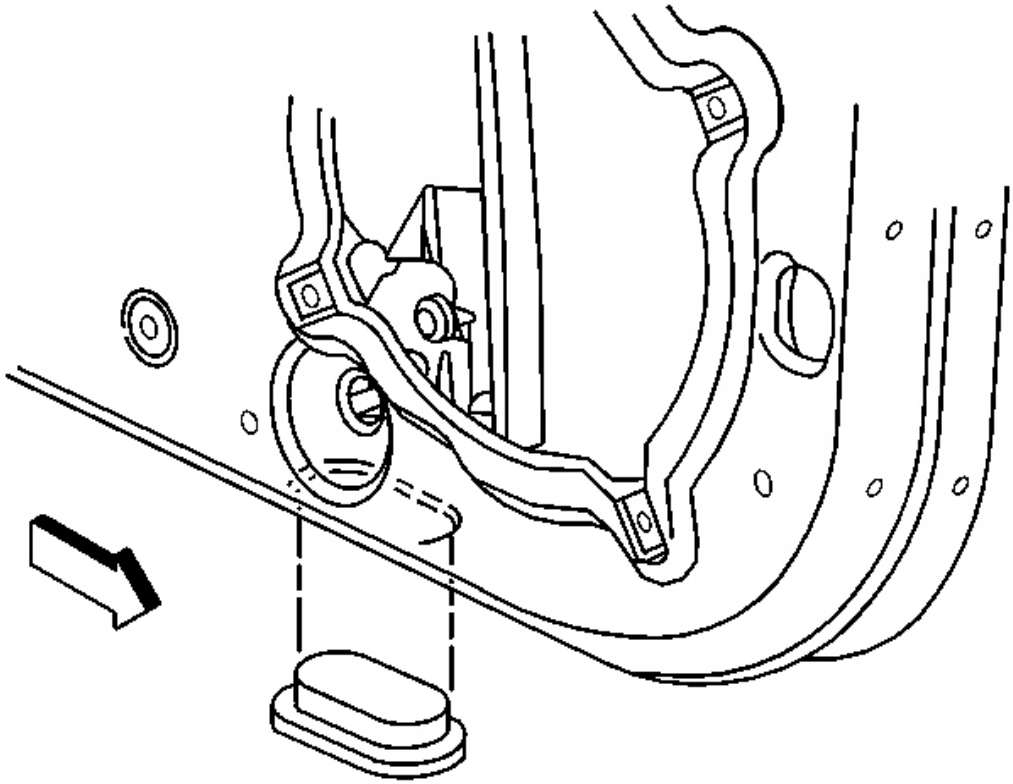

Fig. 133: Large Access Plug At Under Front Of The Door
Courtesy of GENERAL MOTORS CORP.

8. Lower the window.
9. Tighten the window regulator channel front mounting nut.
10. Raise the window and check the alignment.
11. Install the access plug under the front of the door.
12. Install the reflector in the door trim panel.

WINDOW HEIGHT ADJUSTMENT - DOOR MINOR

Use this procedure when window height is off less than 3 mm (0.12 in).

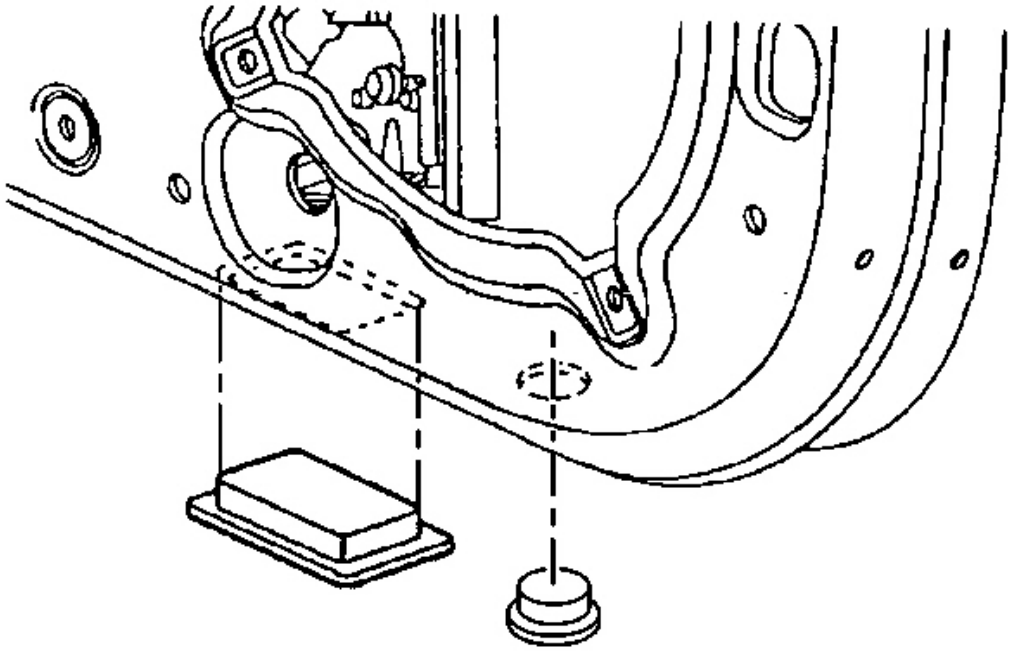

Fig. 134: Front & Rear Access Plug At Underside Of Door
Courtesy of GENERAL MOTORS CORP.

1. Open the door and remove the small front access plug and the rear access plug from the underside of the door.
2. Adjust the front and the rear window regulator jack screws equally.
3. Close the door and check the window alignment.
4. Open the door and install the access plugs.

WINDOW HEIGHT ADJUSTMENT - DOOR MAJOR

CAUTION: Refer to Express Down Feature Caution in Cautions and Notices.

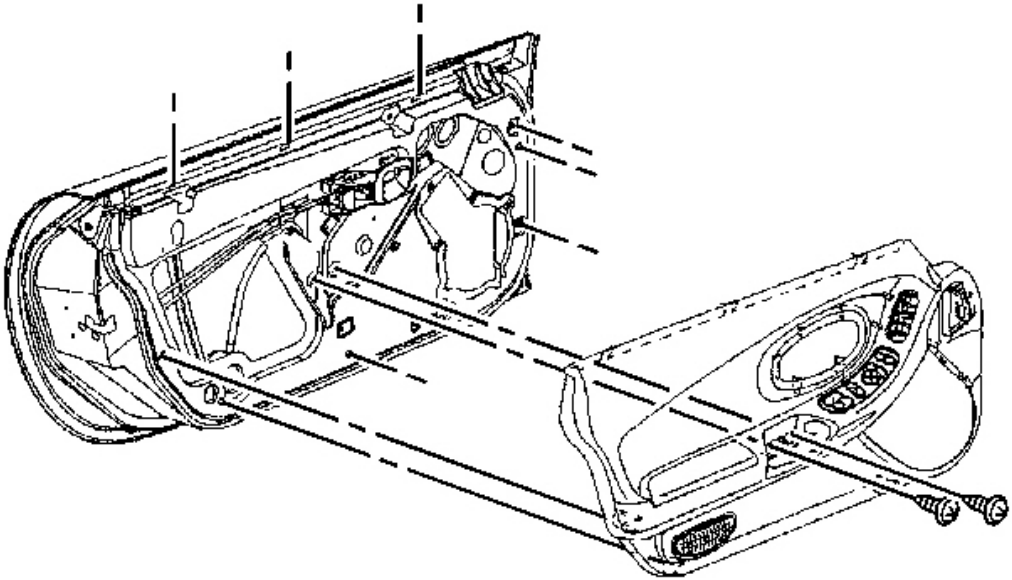

Fig. 135: View Of Door Trim Panel
Courtesy of GENERAL MOTORS CORP.

1. Remove the door trim panel. Refer to **Trim Panel Replacement - Door** .

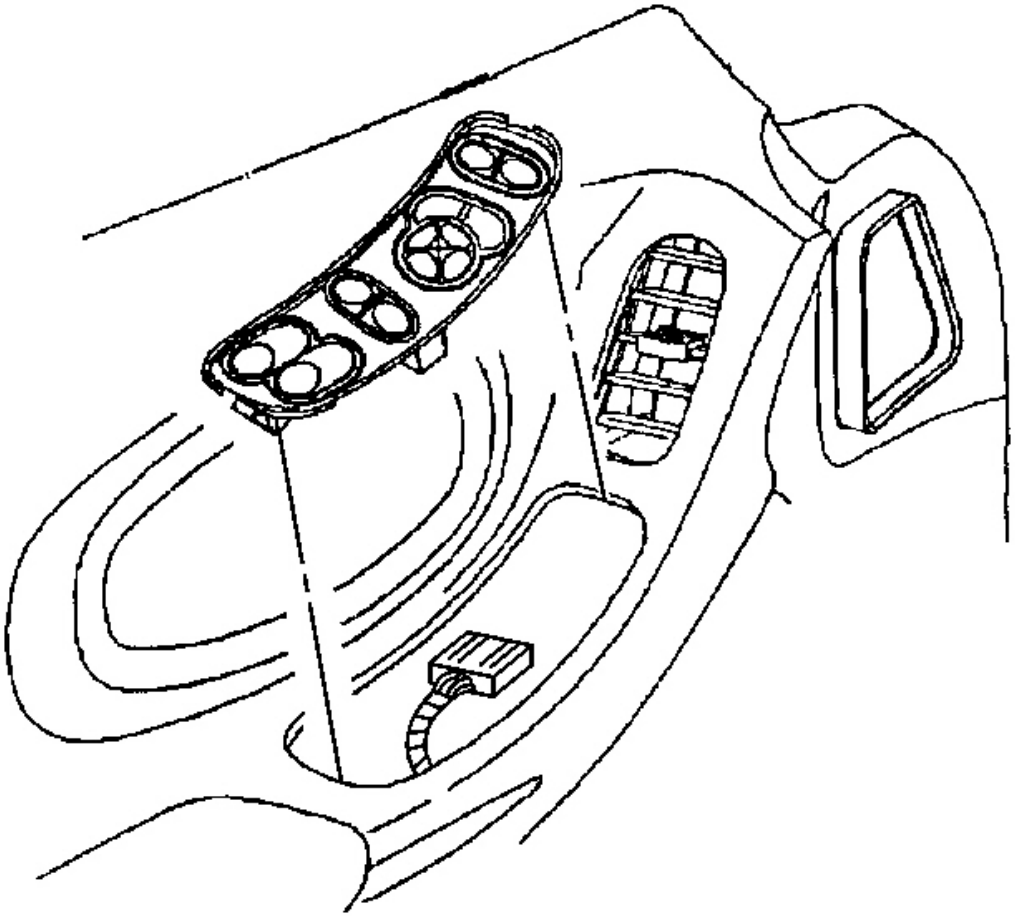

Fig. 136: Electrical Connector At Driver Side Switch
Courtesy of GENERAL MOTORS CORP.

2. Reconnect the window switch to the harness.
3. Raise the door window.
4. Disconnect the window switch from the harness.

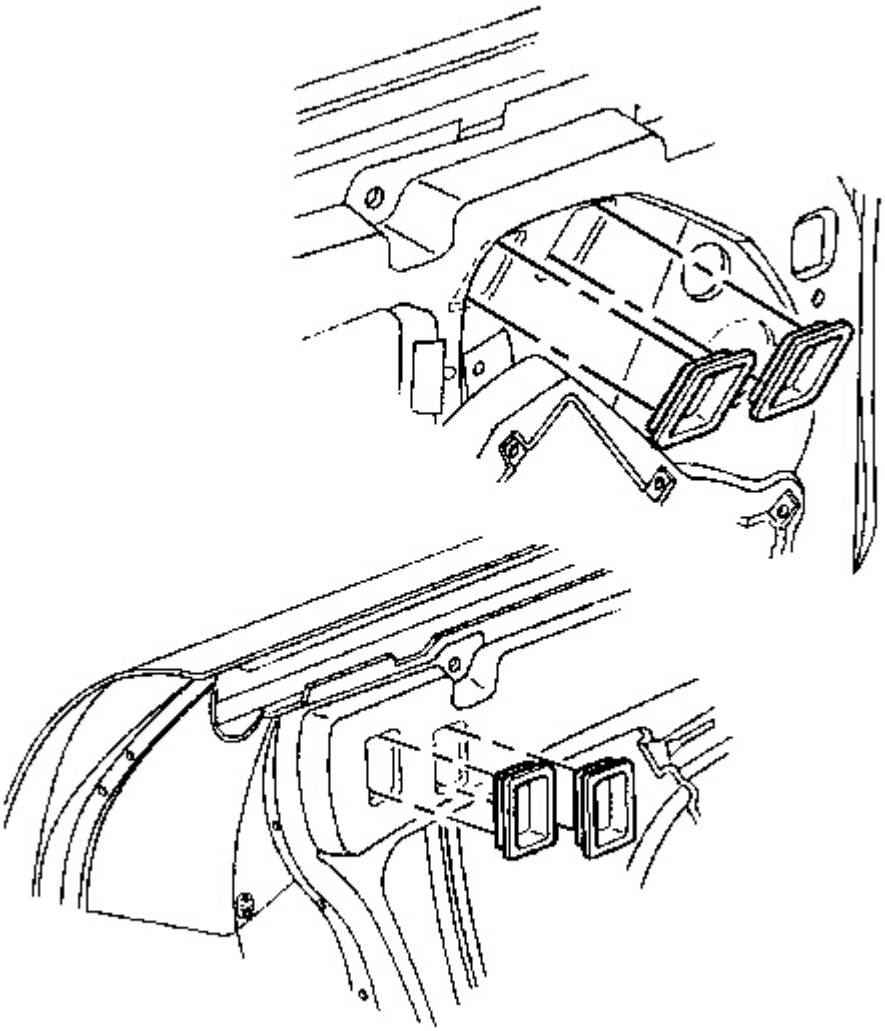

Fig. 137: Window Clamp Sight Access Plugs
Courtesy of GENERAL MOTORS CORP.

5. Remove the window clamp sight access plugs.

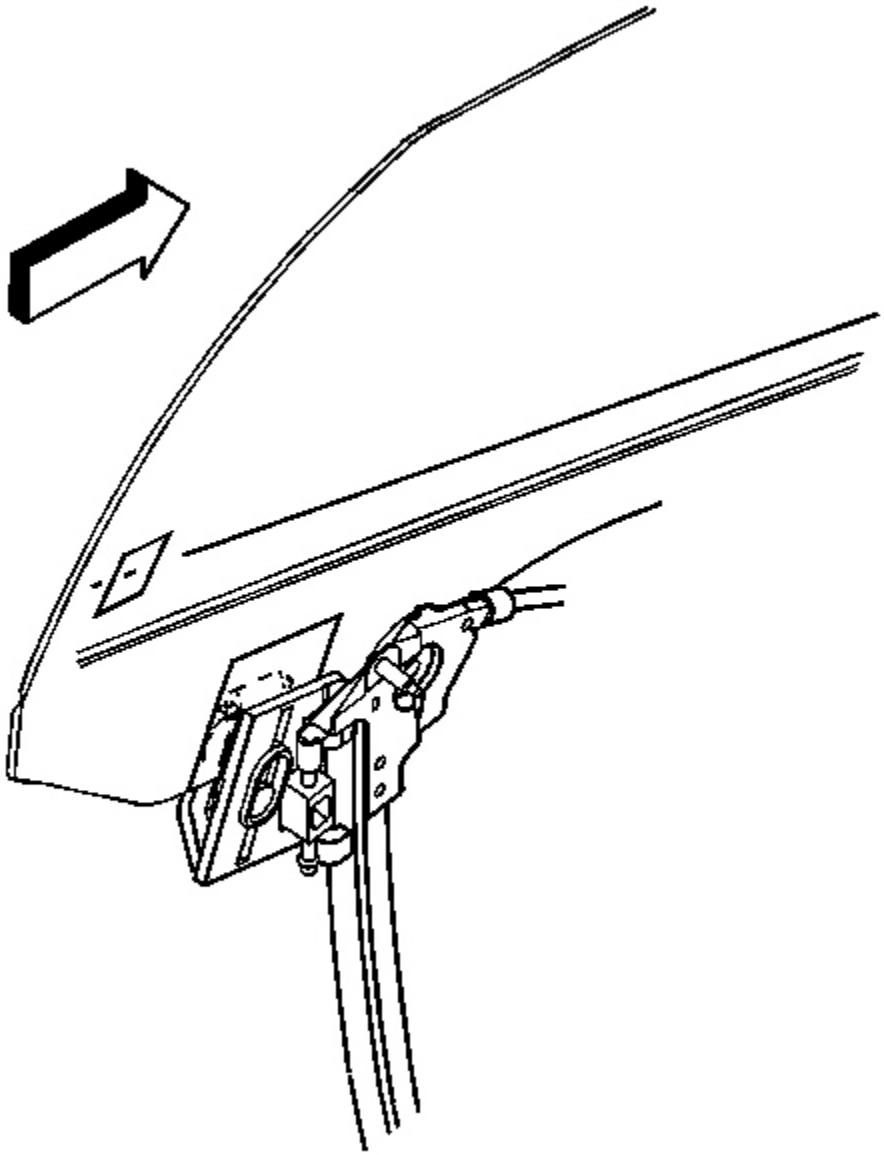

Fig. 138: Window Clamp Bolts
Courtesy of GENERAL MOTORS CORP.

6. Loosen the window clamps.
7. Close the door.
8. With the aid of an assistant standing outside of the vehicle, position the window to the door opening.

9. From the inside of the vehicle tighten the window clamps.

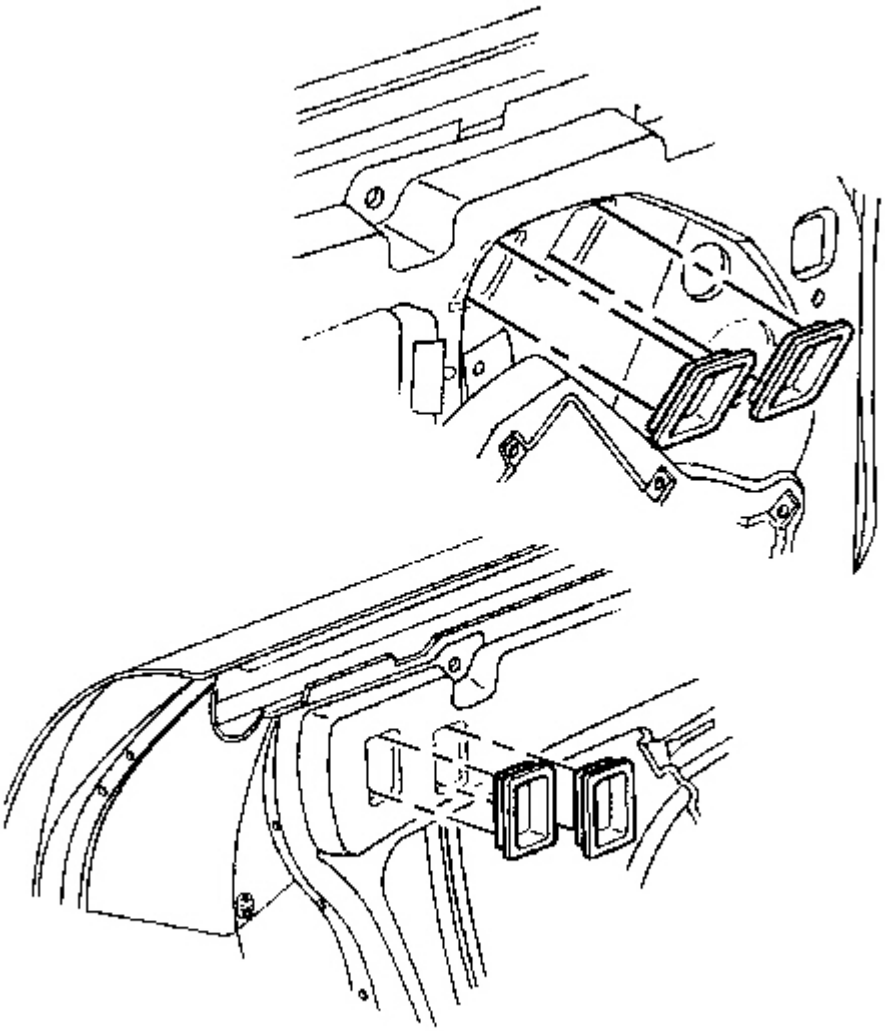

Fig. 139: Window Clamp Sight Access Plugs
Courtesy of GENERAL MOTORS CORP.

10. Open the door and install the window clamp sight access plugs.

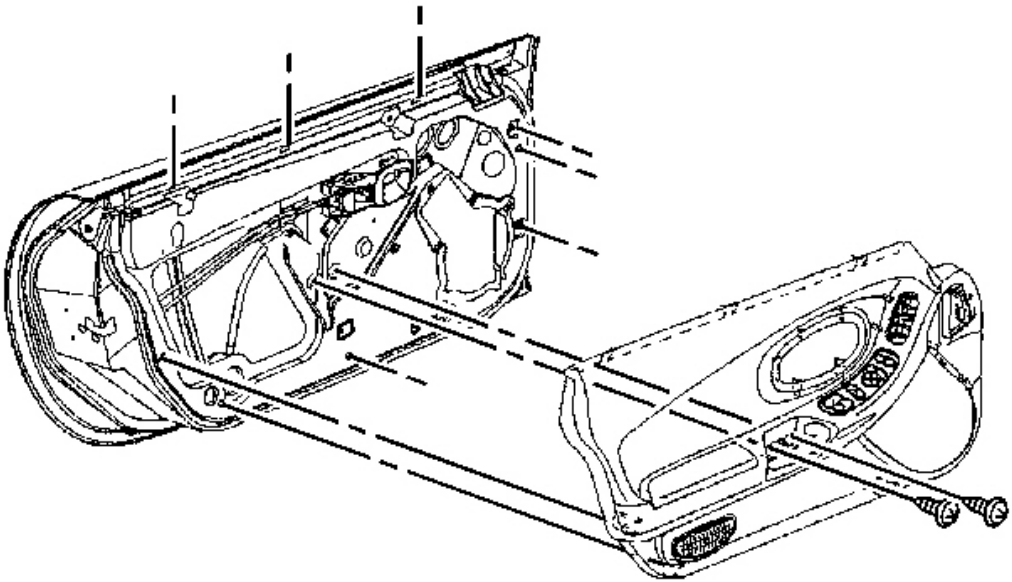

Fig. 140: View Of Door Trim Panel
Courtesy of GENERAL MOTORS CORP.

11. Install the door trim panel. Refer to **Trim Panel Replacement - Door** .
12. Perform minor height and minor tip-in adjustments as necessary. Refer to **Window Tip-In Adjustment - Door** and **Window Height Adjustment - Door Minor** .

WINDOW REGULATOR REPLACEMENT

Removal Procedure

CAUTION: Refer to Express Down Feature Caution in Cautions and Notices.

IMPORTANT: The regulator and the motor are serviced as an assembly.

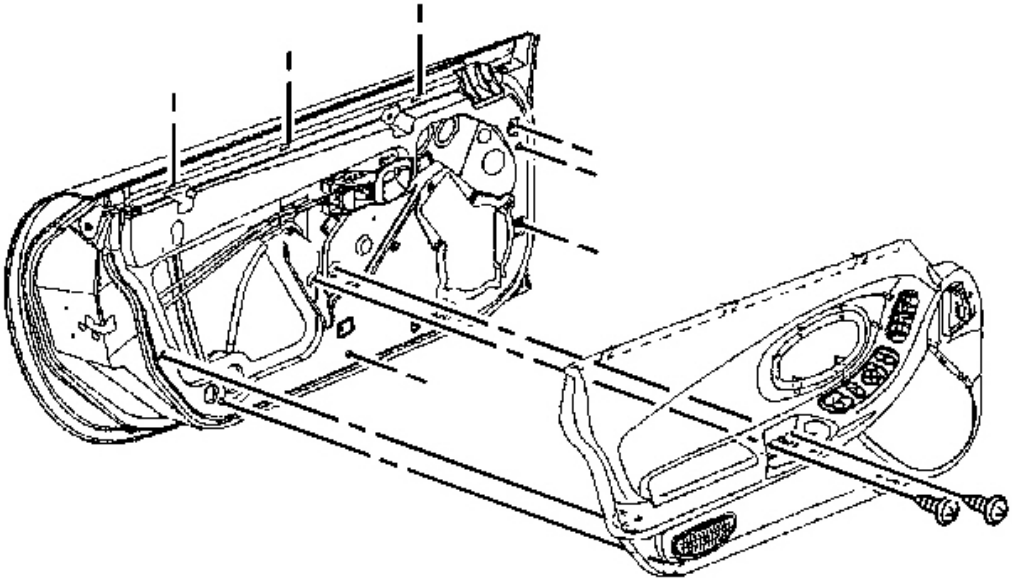

Fig. 141: View Of Door Trim Panel
Courtesy of GENERAL MOTORS CORP.

1. Remove the door trim panel. Refer to **Trim Panel Replacement - Door** .

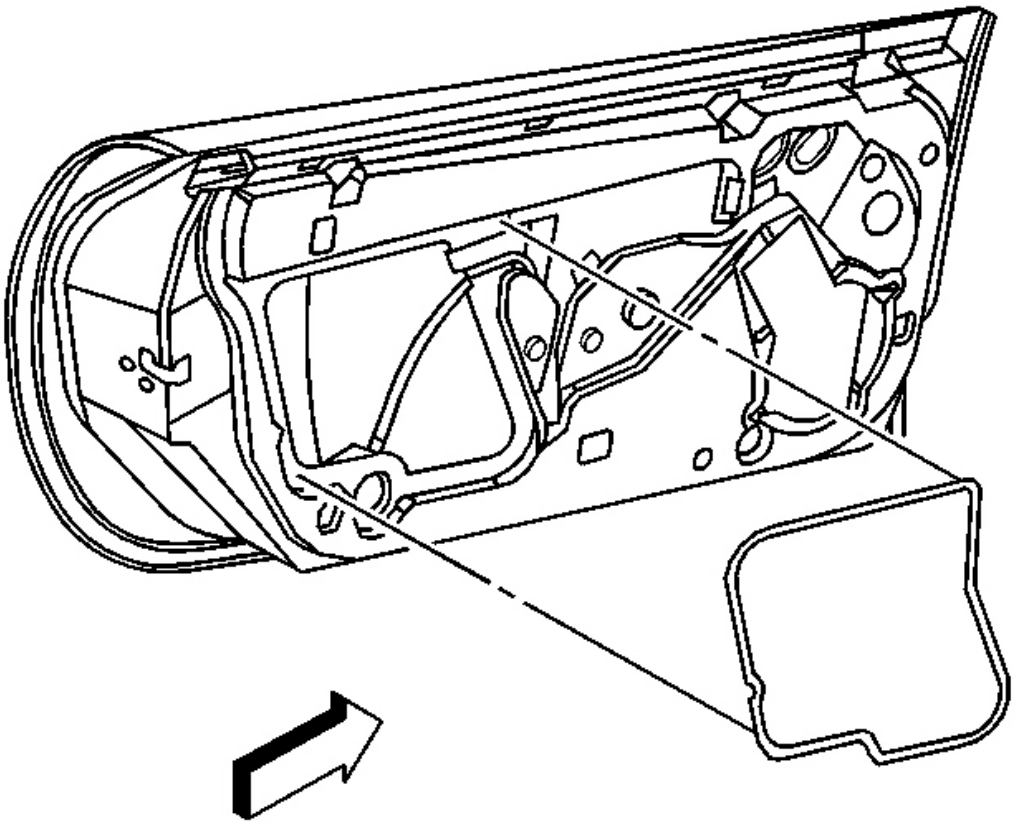

Fig. 142: Water Deflector At Door Inner Panel
Courtesy of GENERAL MOTORS CORP.

2. Remove the water deflector.

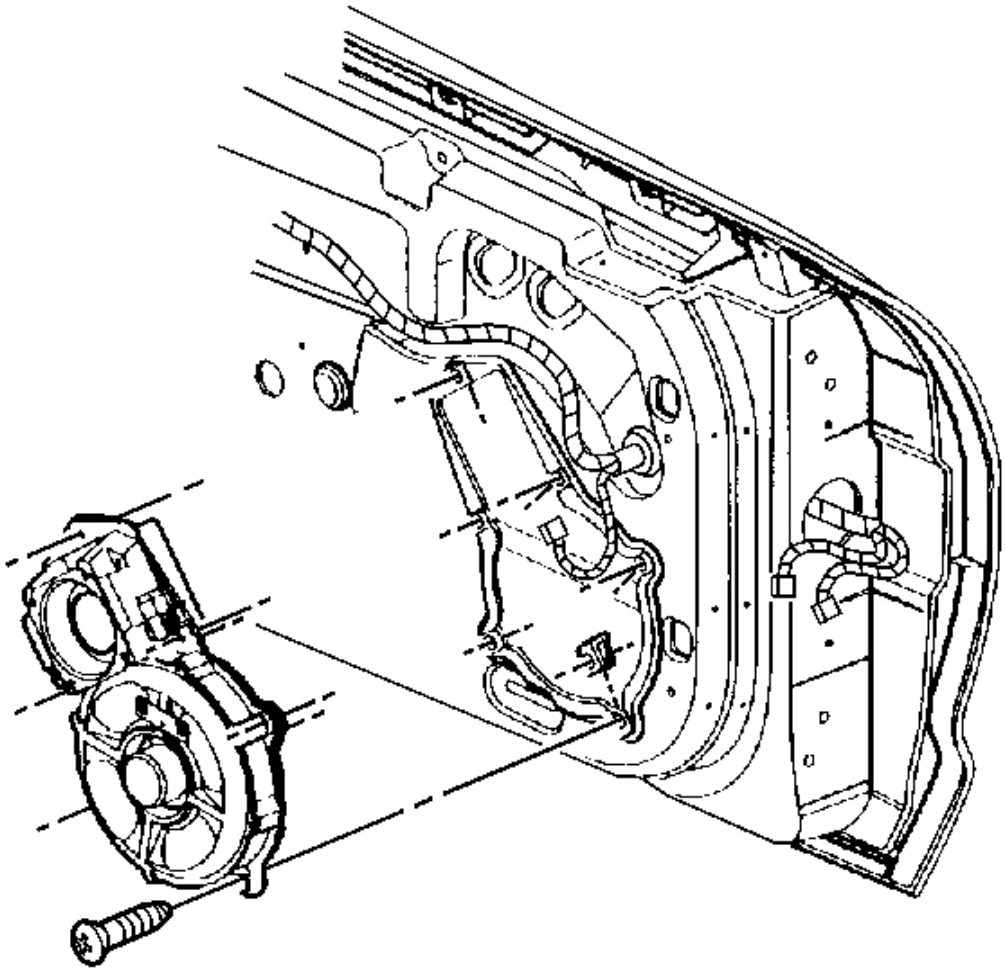

Fig. 143: Radio Speaker Assembly At Door
Courtesy of GENERAL MOTORS CORP.

3. Remove the radio speaker assembly from the door.
    1. Disconnect the electrical/audio connector.
    2. Remove the speaker retaining screws.

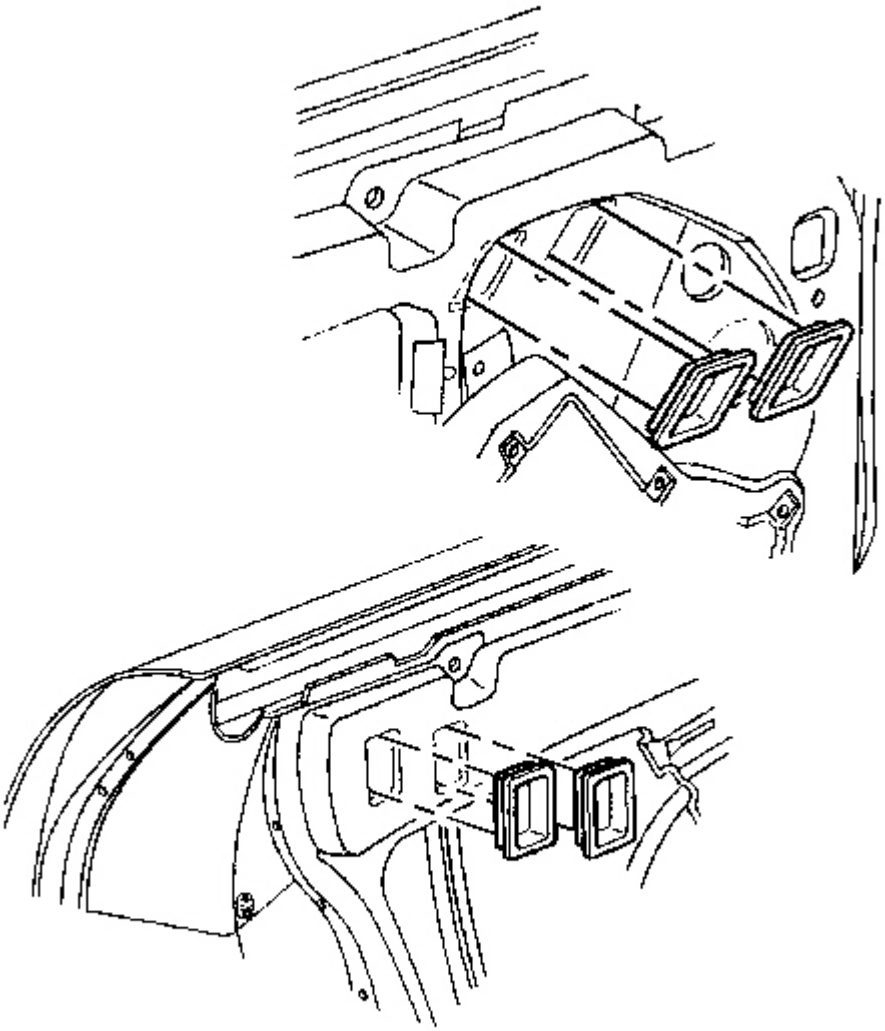

Fig. 144: Window Clamp Sight Access Plugs
Courtesy of GENERAL MOTORS CORP.

4. Remove the plugs from the window clamp sight access holes.

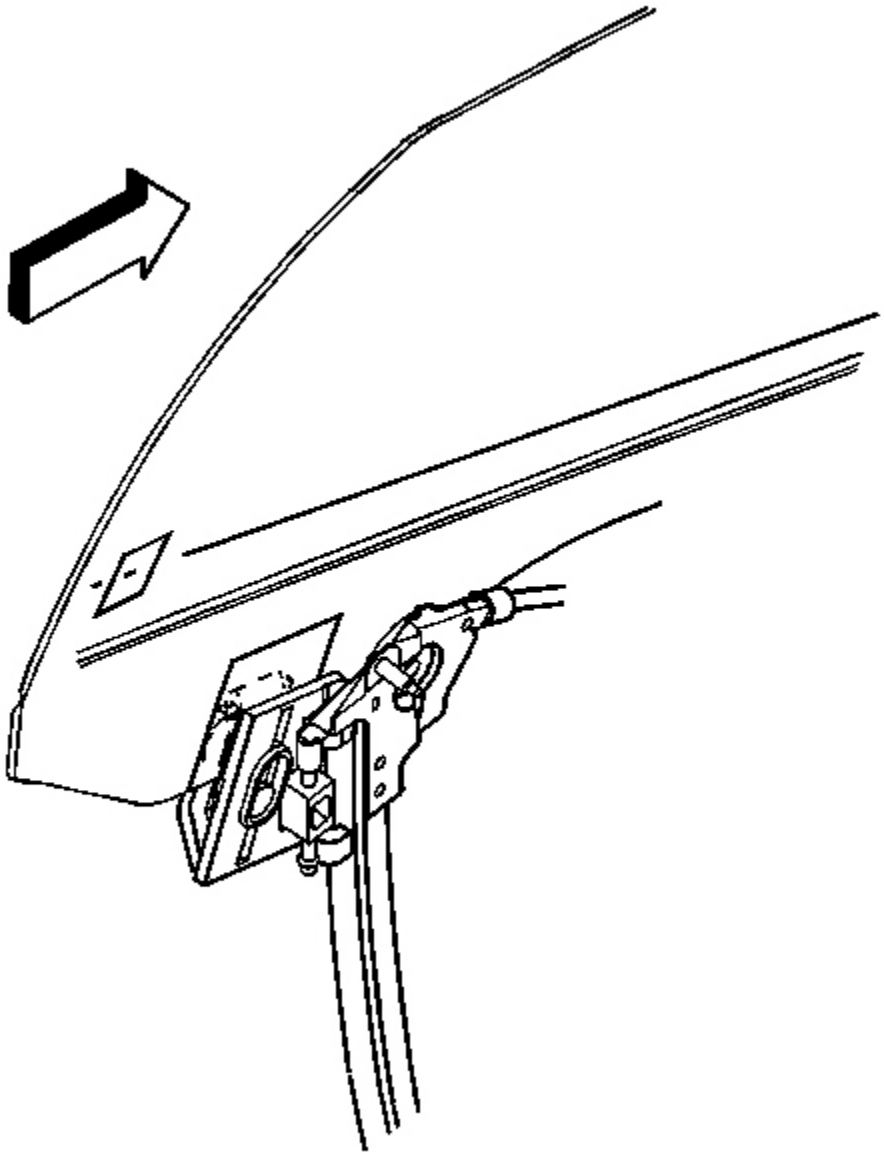

Fig. 145: Window Clamp Bolts
Courtesy of GENERAL MOTORS CORP.

5. Remove the door window. Refer to **Window Replacement - Door** .

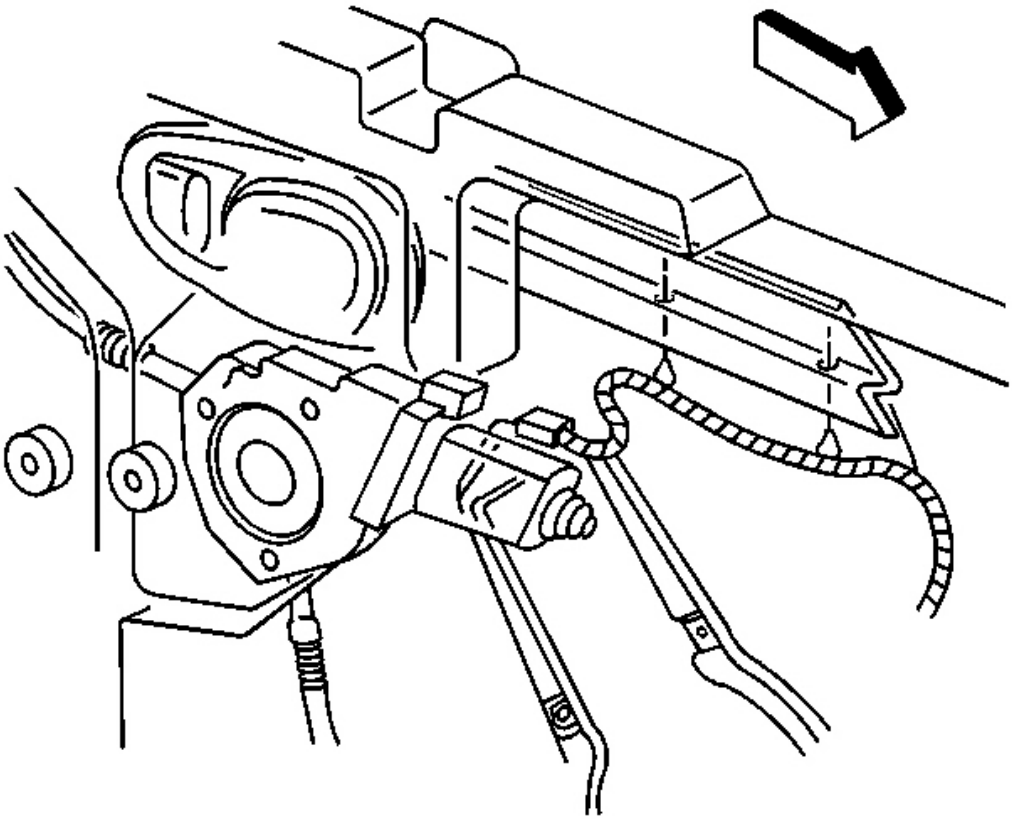

Fig. 146: Regulator Motor Electrical Connector
Courtesy of GENERAL MOTORS CORP.

6. Disconnect the regulator motor electrical connector.

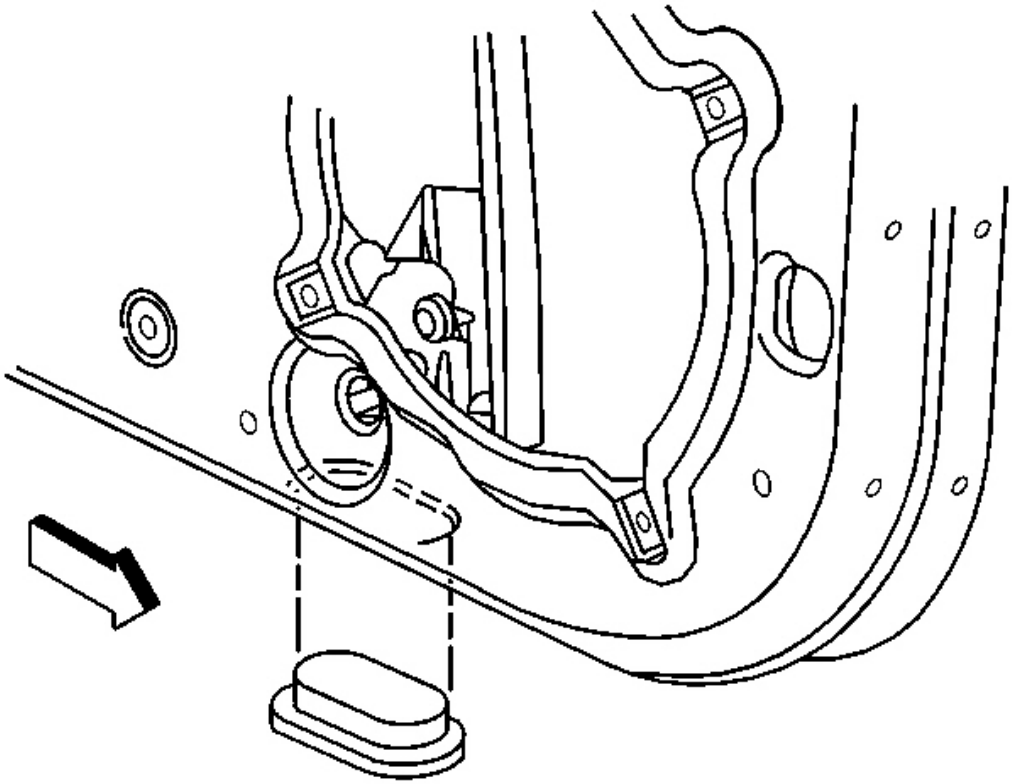

Fig. 147: Large Access Plug At Under Front Of The Door
Courtesy of GENERAL MOTORS CORP.

7. Remove the front plug from under the bottom of the door.

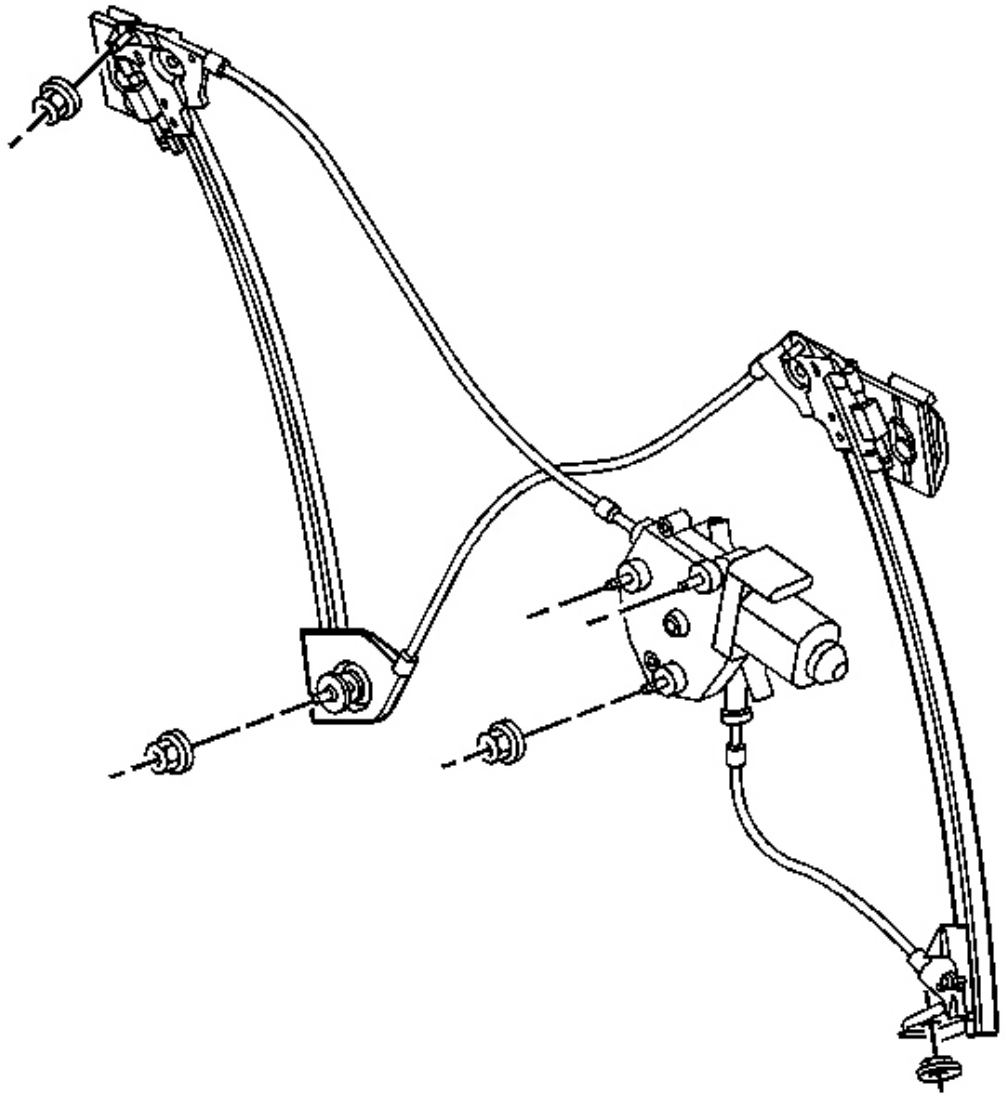

Fig. 148: Regulator At Door Inner Opening
Courtesy of GENERAL MOTORS CORP.

8. Mark the location of the regulator to aid in reassembly.
9. Remove the nuts from the regulator lower channel studs.
10. Remove the nuts from the regulator motor studs.
11. Remove the regulator rose bud clip from the door.
12. Remove the nuts from the upper regulator channel studs.

13. Fold the regulator and remove the regulator through the door inner opening.

Installation Procedure

CAUTION: Refer to Express Down Feature Caution in Cautions and Notices.

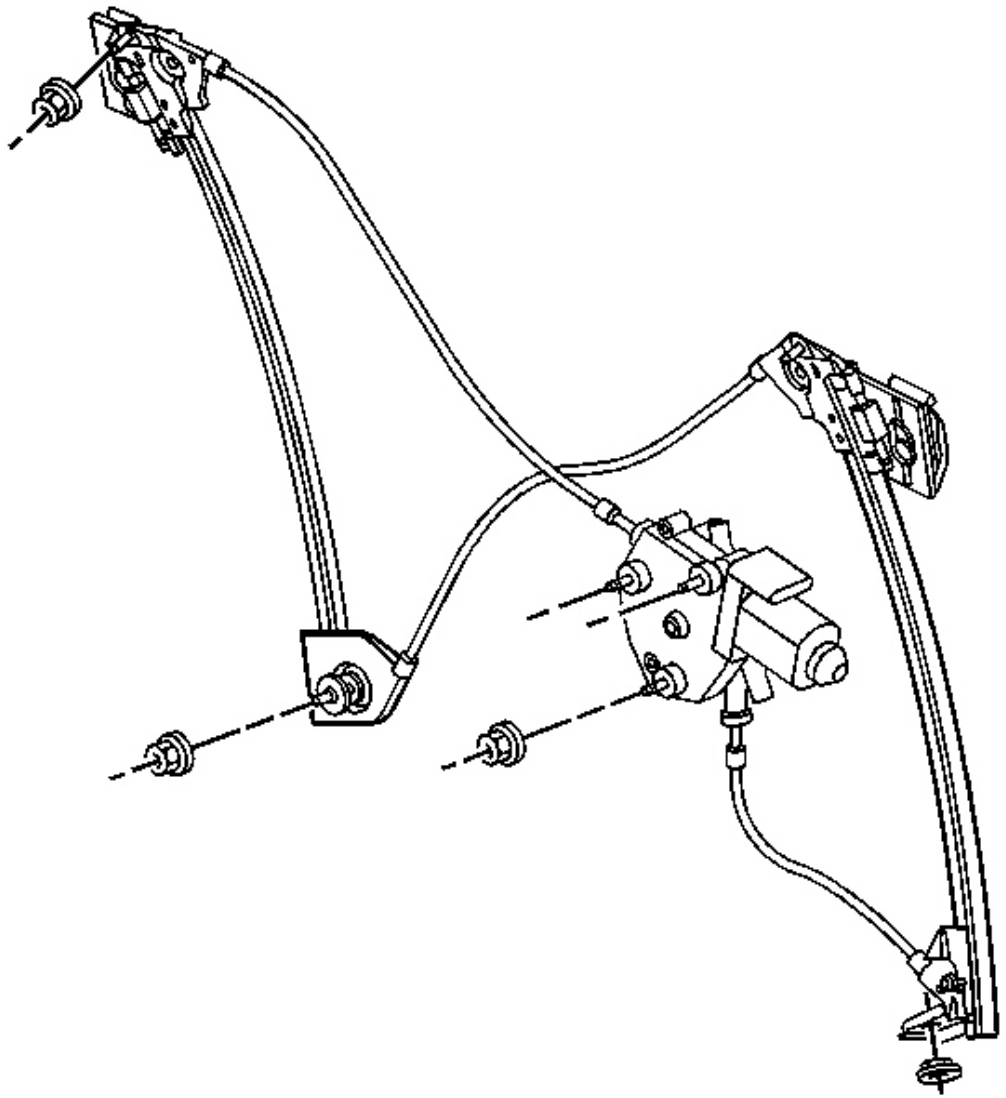

Fig. 149: Regulator At Door Inner Opening

Courtesy of GENERAL MOTORS CORP.

1. Adjust the regulator jack screws to match the old regulator if replacing the regulator.
2. Fold the regulator and insert the folded regulator into the door with the motor forward.

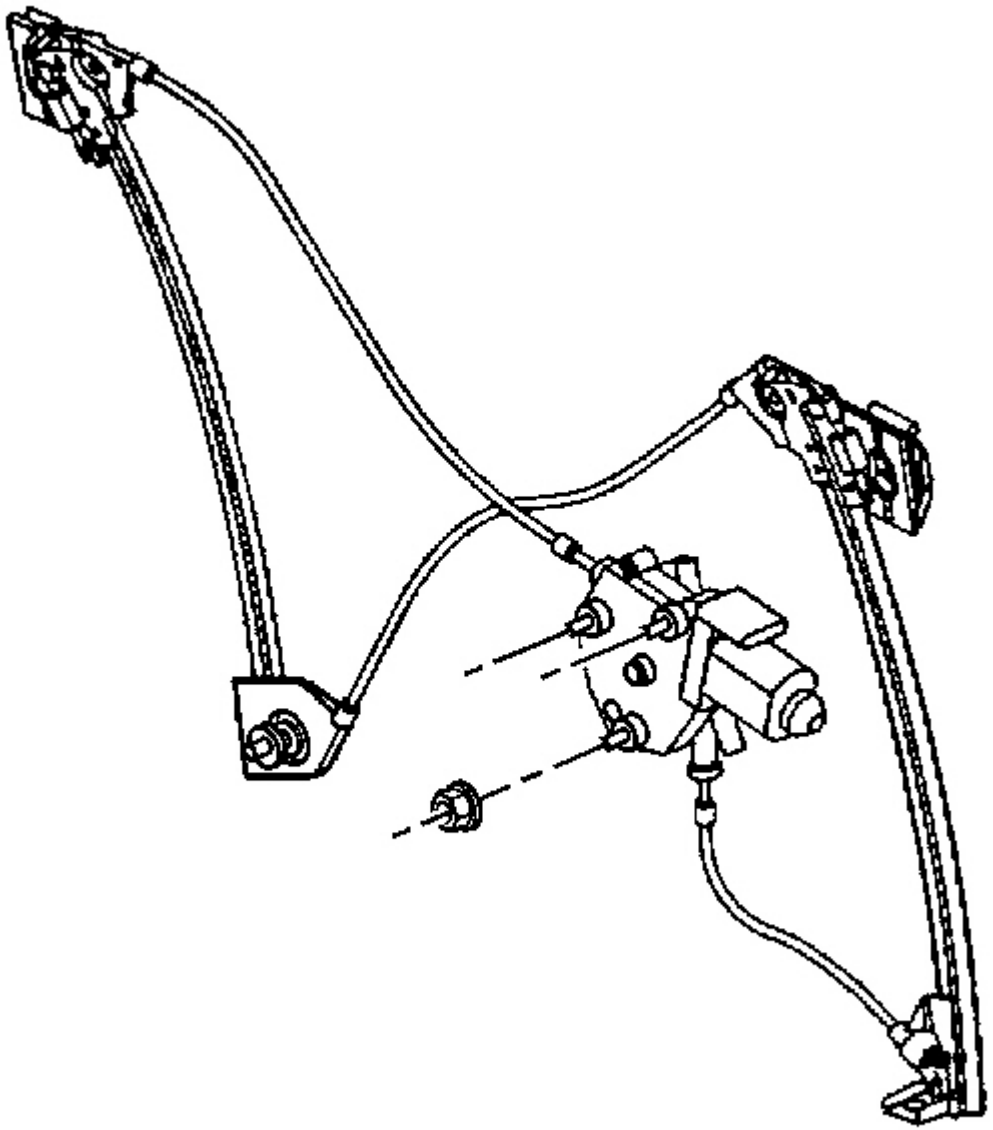

Fig. 150: Motor Studs At Door Inner Panel
Courtesy of GENERAL MOTORS CORP.

3. Position the motor studs through the door inner panel.

NOTE: Refer to Fastener Notice in Cautions and Notices.

4. Install the nuts to the motor studs.

Tighten: Tighten the window regulator motor nuts to 10 N.m (89 lb in).

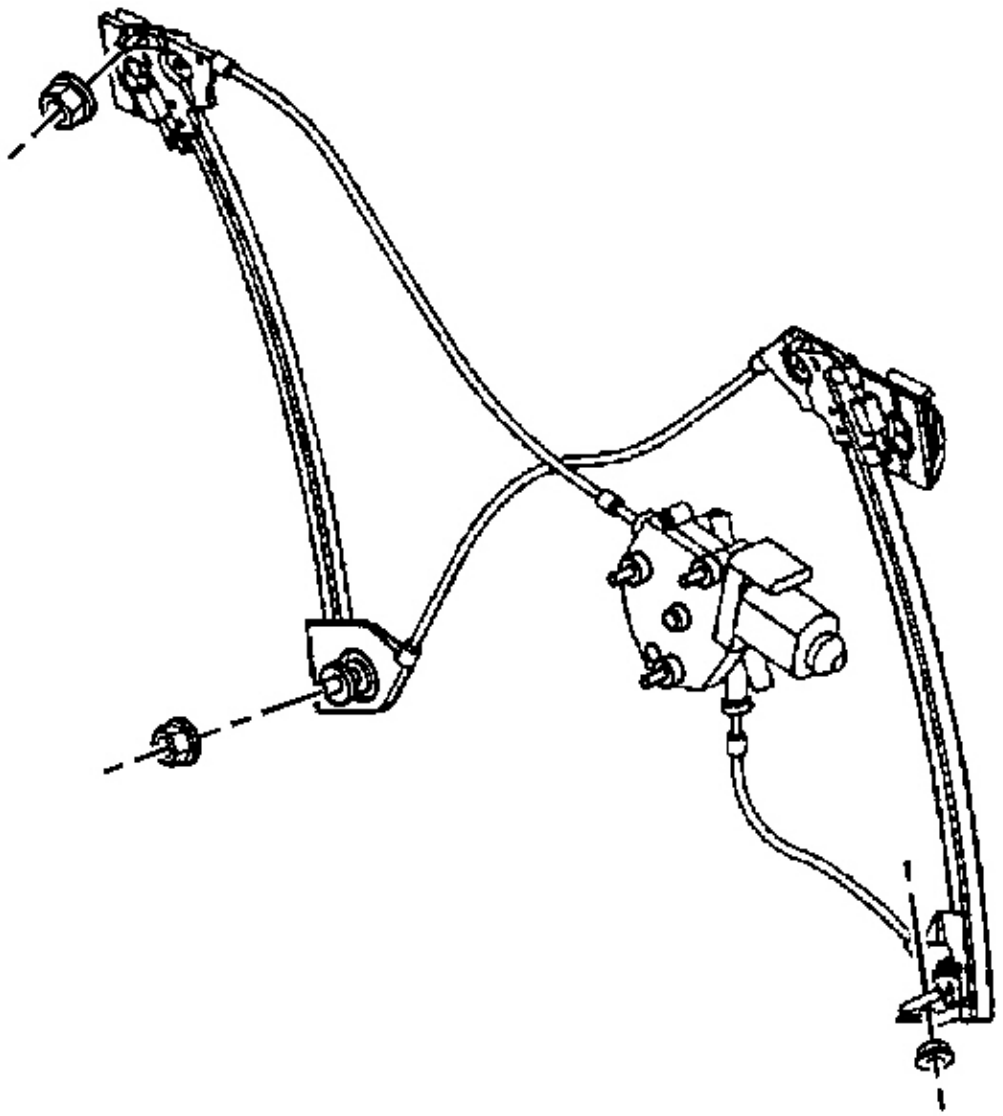

Fig. 151: Regulator Channel Studs At Holes In Door
Courtesy of GENERAL MOTORS CORP.

5. Install the regulator channel studs through the holes in the door.
6. Install the nuts to the regulator channel studs in the following order:
    1. Upper forward
    2. Lower forward
    3. Upper rearward
    4. Lower rearward
7. Install the regulator rose bud clip to the door.
8. Tighten the window regulator channel stud nuts.

Tighten: Tighten the regulator channel stud nuts to 10 N.m (89 lb in).

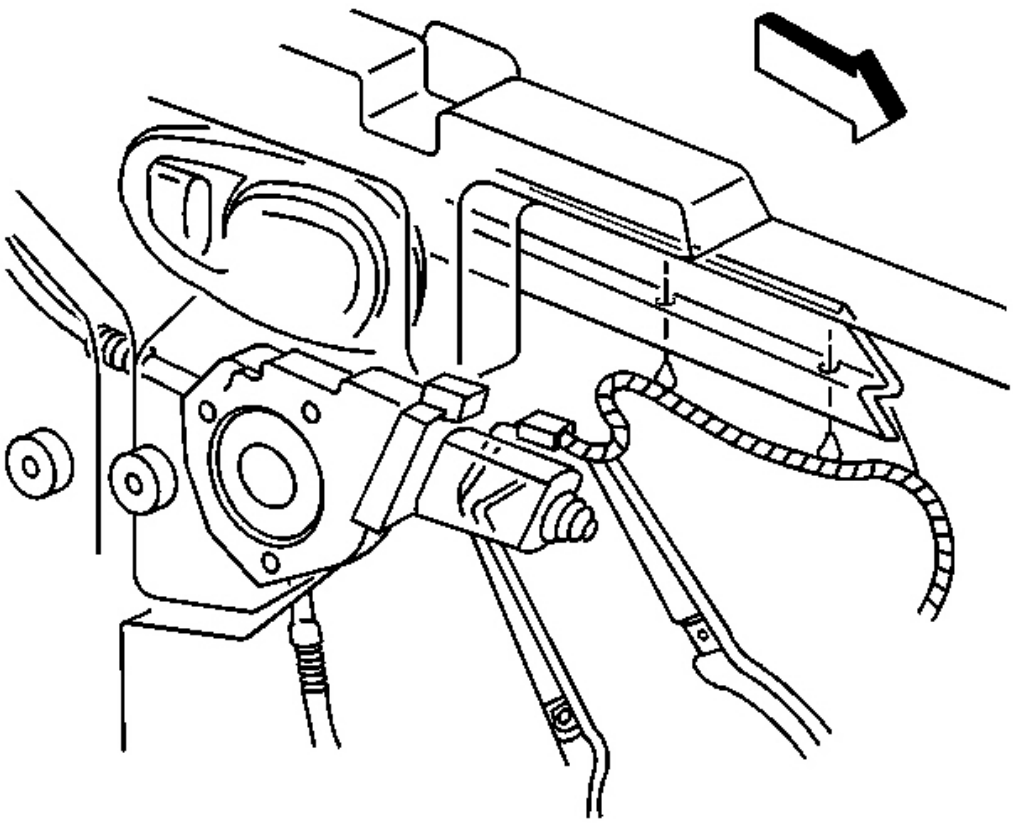

Fig. 152: Regulator Motor Electrical Connector

Courtesy of GENERAL MOTORS CORP.

9. Connect the electrical connector to the motor.

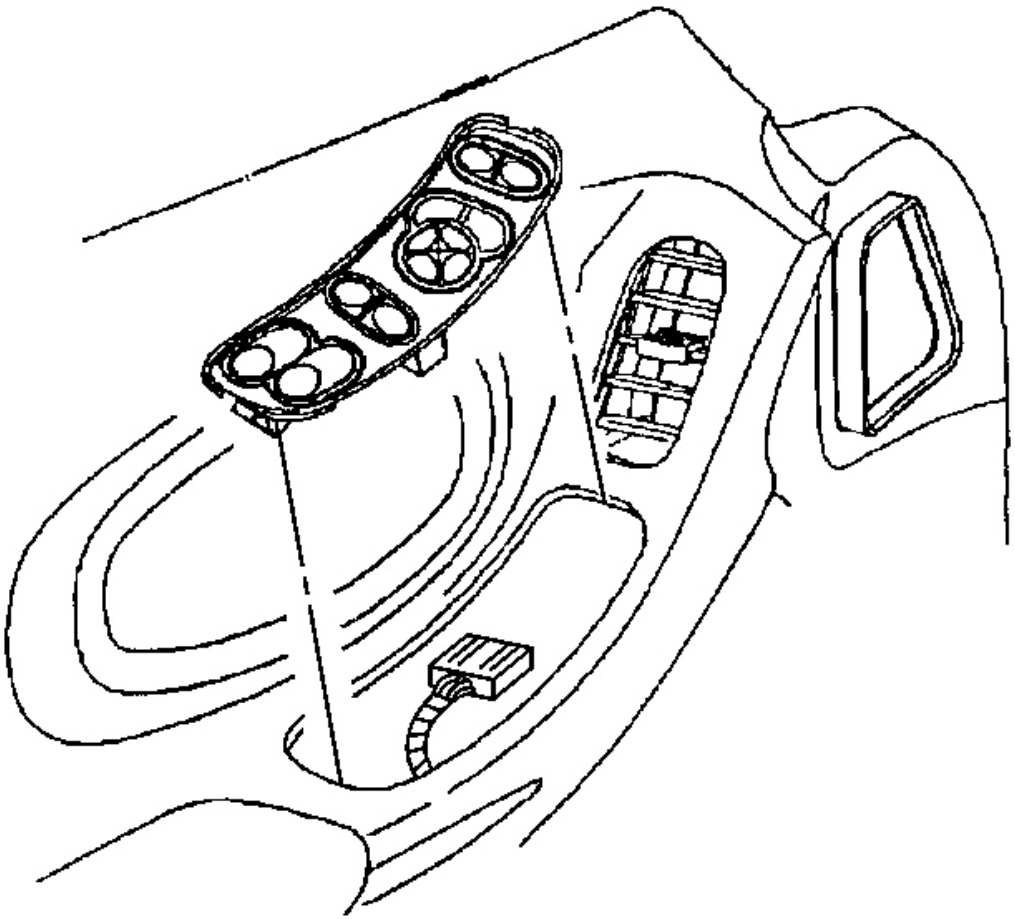

Fig. 153: Electrical Connector At Driver Side Switch
Courtesy of GENERAL MOTORS CORP.

10. Reconnect the window switch and raise the regulator to the full up position.

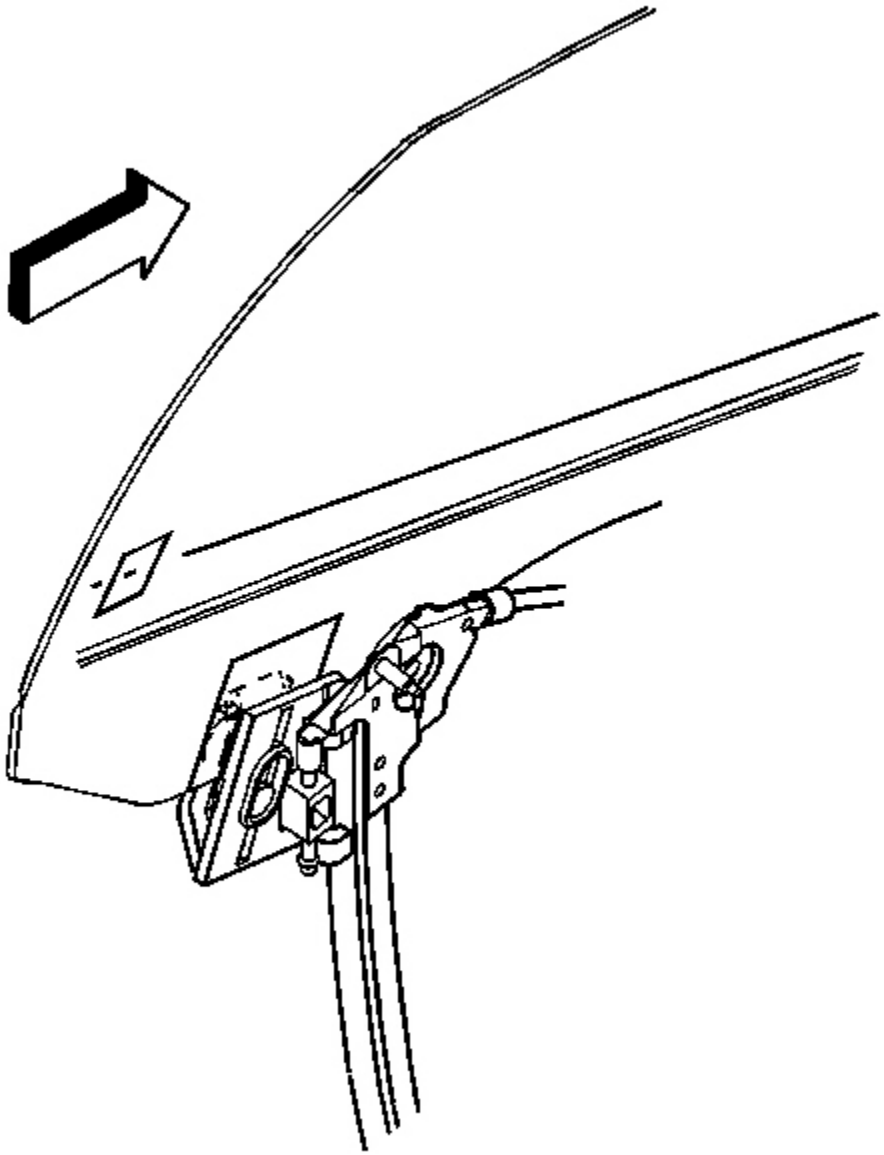

Fig. 154: Window Clamp Bolts
Courtesy of GENERAL MOTORS CORP.

11. Install the window. Refer to **Window Replacement - Door** .
12. Adjust the window to align with door opening.

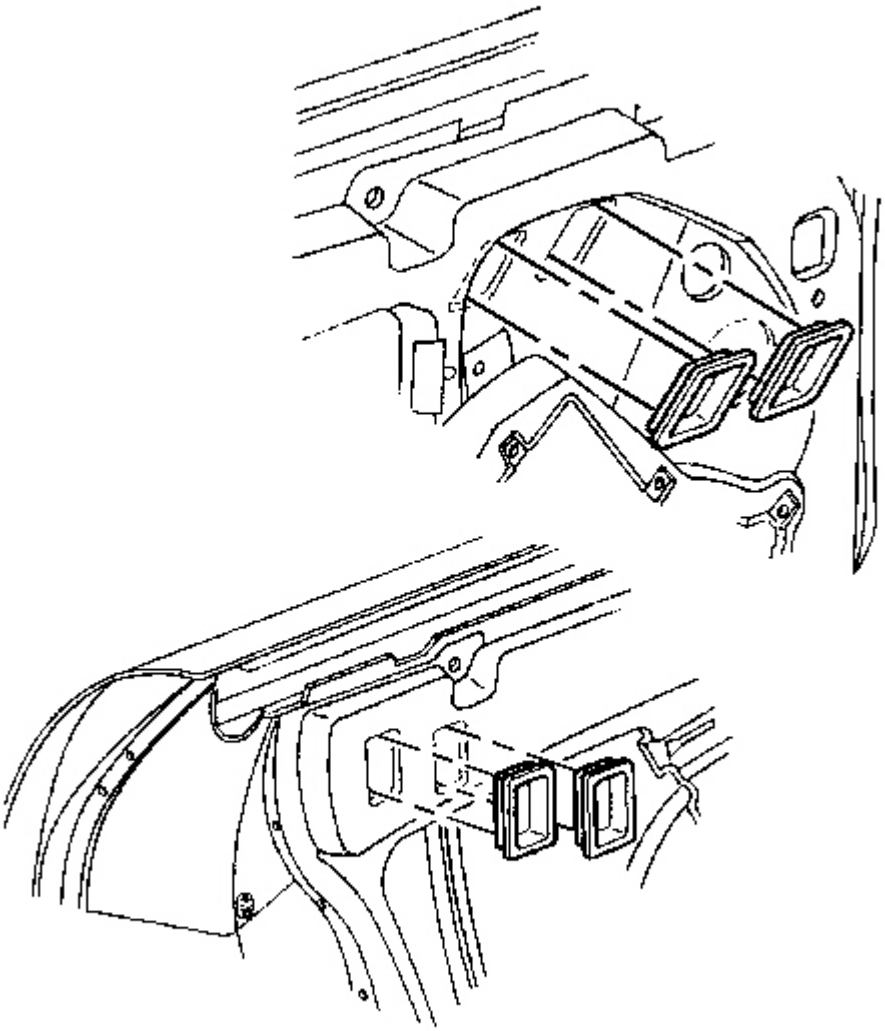

Fig. 155: Window Clamp Sight Access Plugs
Courtesy of GENERAL MOTORS CORP.

13. Install the plugs in the window clamp sight access holes.

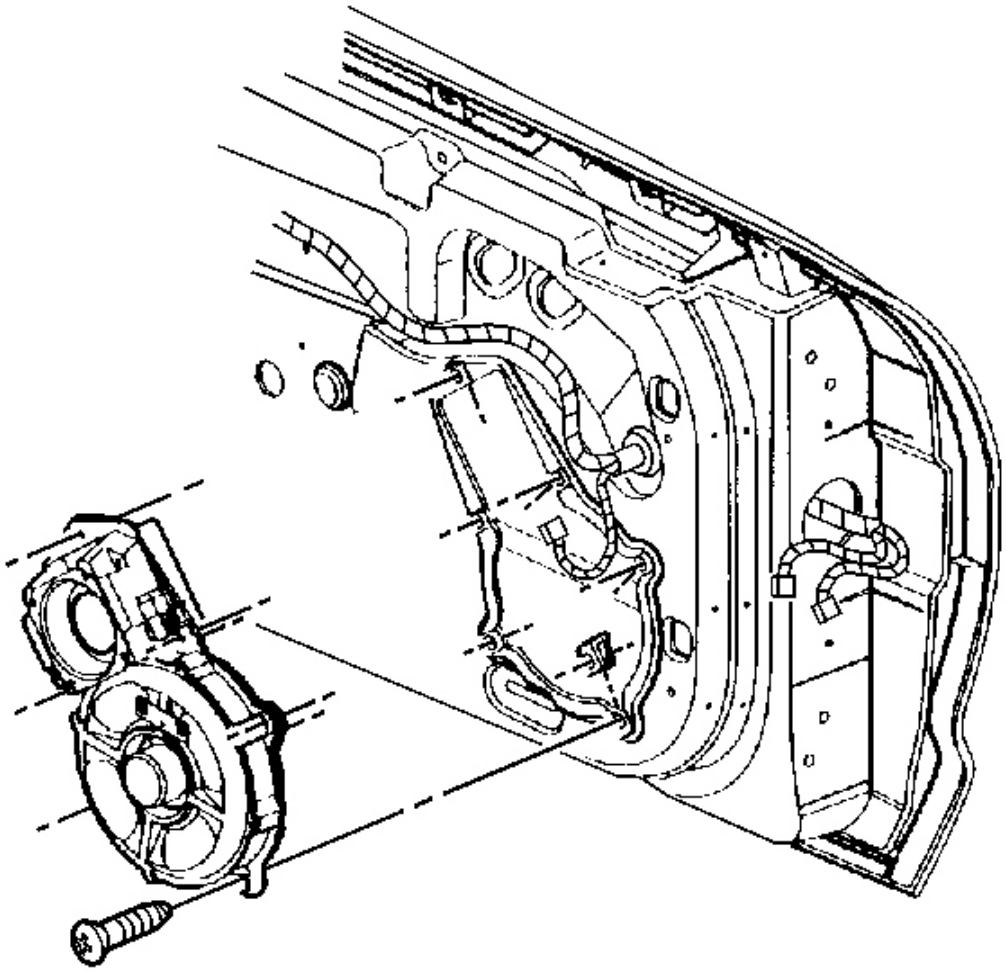

Fig. 156: Radio Speaker Assembly At Door
Courtesy of GENERAL MOTORS CORP.

14. Install the uppermost screw mounting the speaker assembly to the door.
15. Install the remaining screws in a criss-cross pattern.

    Tighten: Tighten the door speaker assembly screws to 3 N.m (27 lb in).

16. Connect the electrical/audio connector.

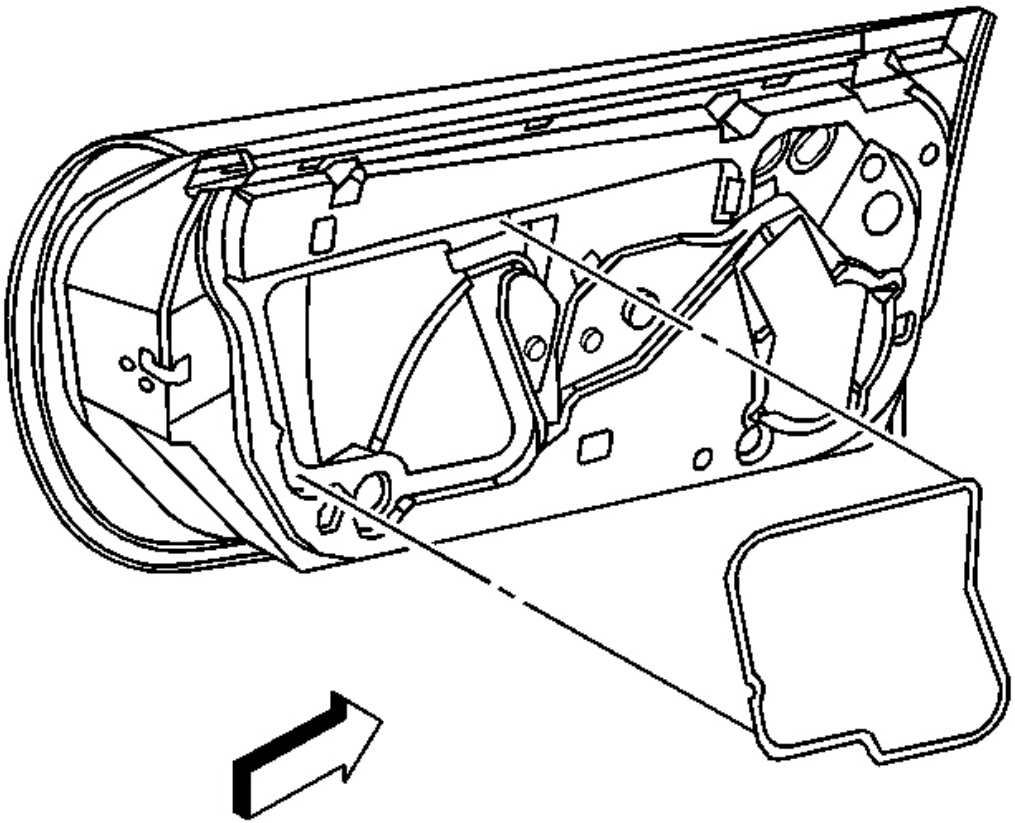

Fig. 157: Water Deflector At Door Inner Panel
Courtesy of GENERAL MOTORS CORP.

17. Install the water deflector.

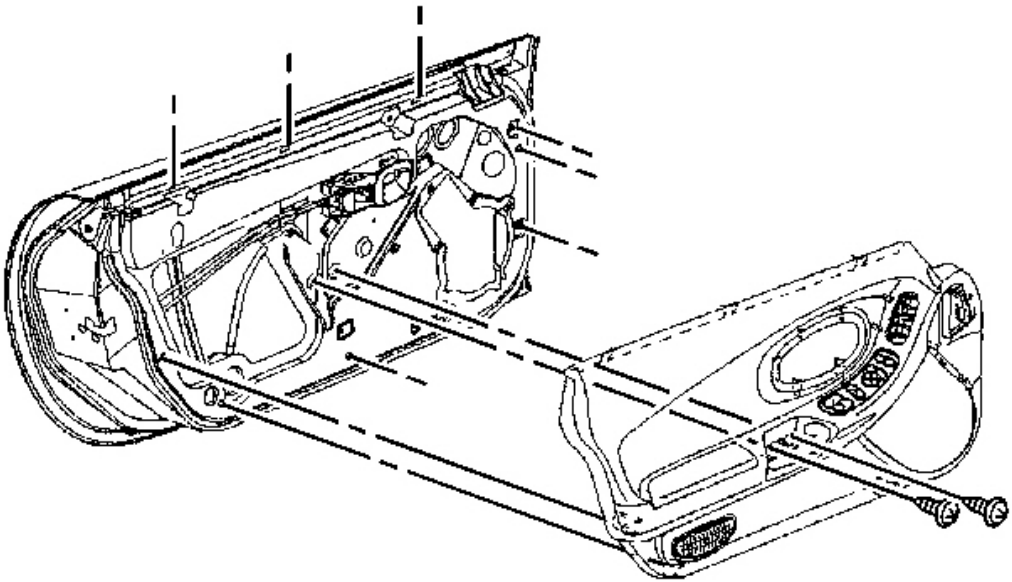

Fig. 158: View Of Door Trim Panel To Door
Courtesy of GENERAL MOTORS CORP.

18. Install the door trim panel. Refer to **Trim Panel Replacement - Door** .
19. Check the window fit, adjust as necessary. Refer to **Window Height Adjustment - Door Major** or**Window Tip-In Adjustment - Door** or**Window Height Adjustment - Door Minor** .
20. Install the access plugs into the bottom of the door.

WINDOW REPLACEMENT - DOOR

Removal Procedure

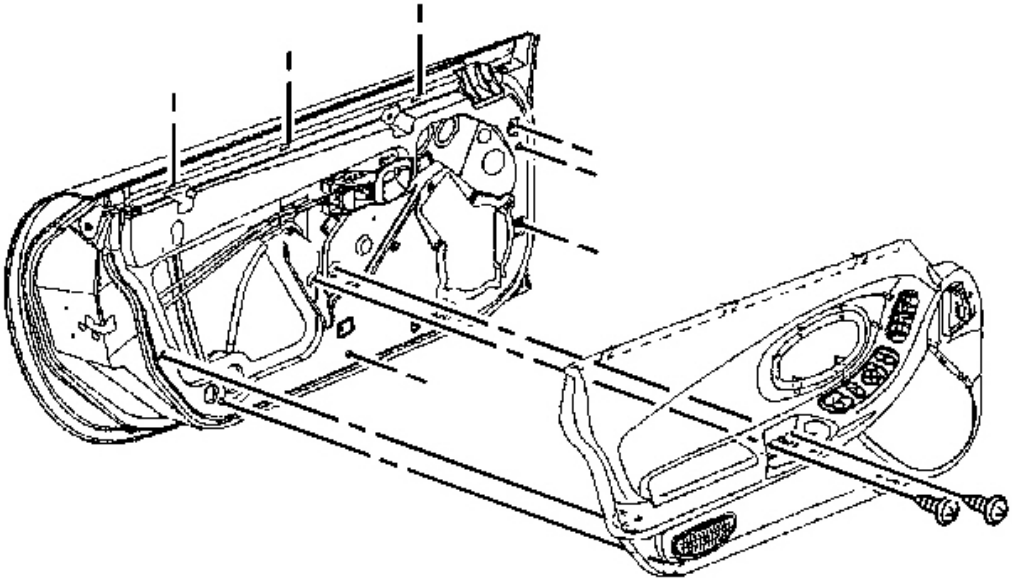

Fig. 159: View Of Door Trim Panel To Door
Courtesy of GENERAL MOTORS CORP.

1. Remove the door trim panel. Refer to **Trim Panel Replacement - Door** .

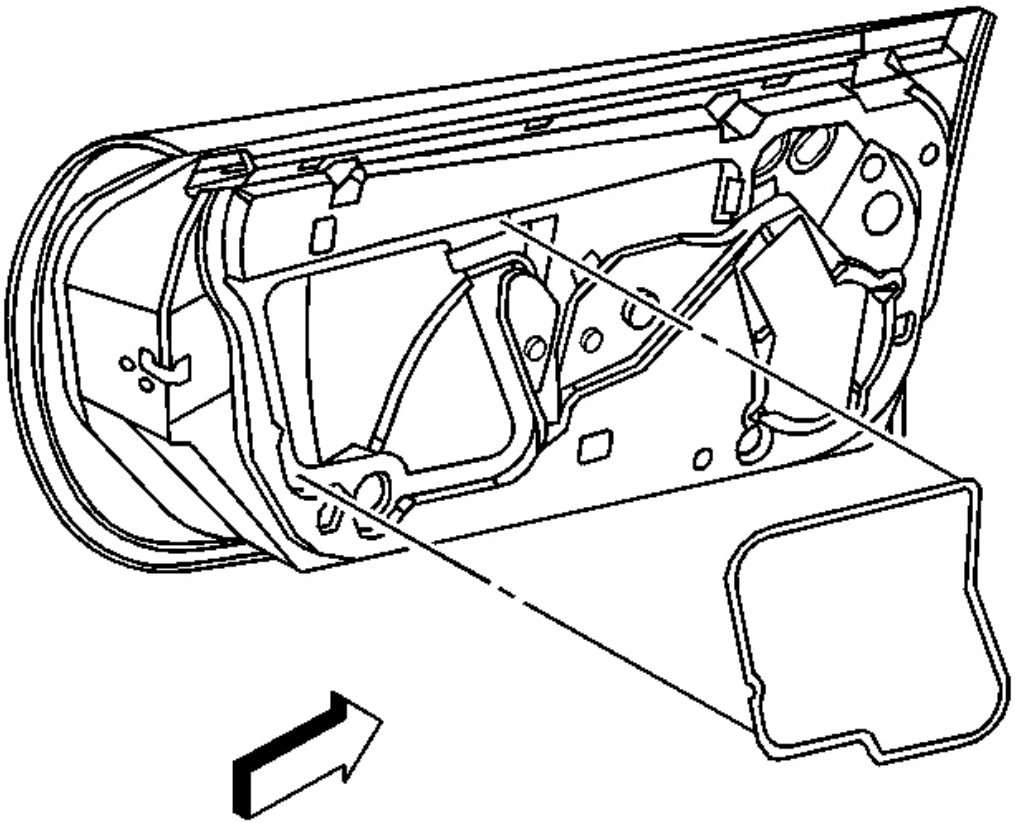

Fig. 160: Water Deflector At Door Inner Panel
Courtesy of GENERAL MOTORS CORP.

2. Remove the water deflector.

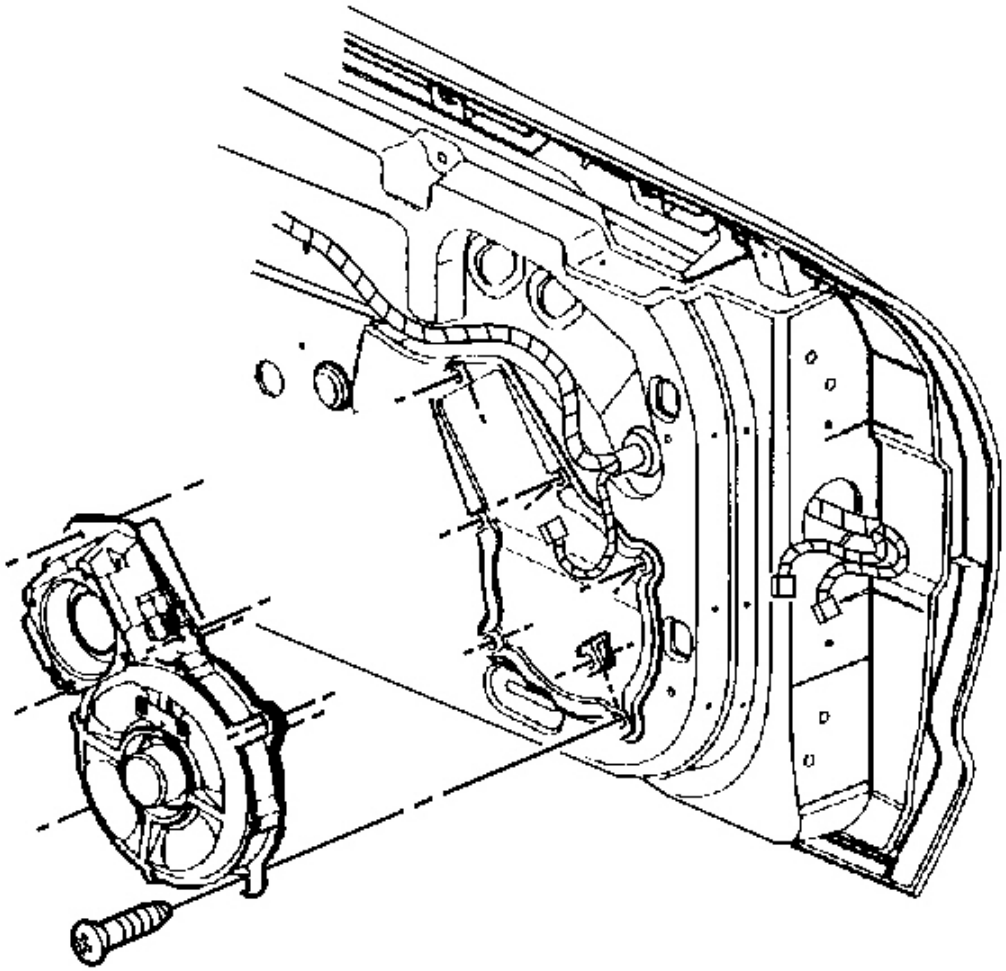

Fig. 161: Radio Speaker Assembly At Door
Courtesy of GENERAL MOTORS CORP.

3. Remove the door radio speaker assembly.
    - Remove the screws mounting the speaker assembly.
    - Disconnect the electrical/audio connector.

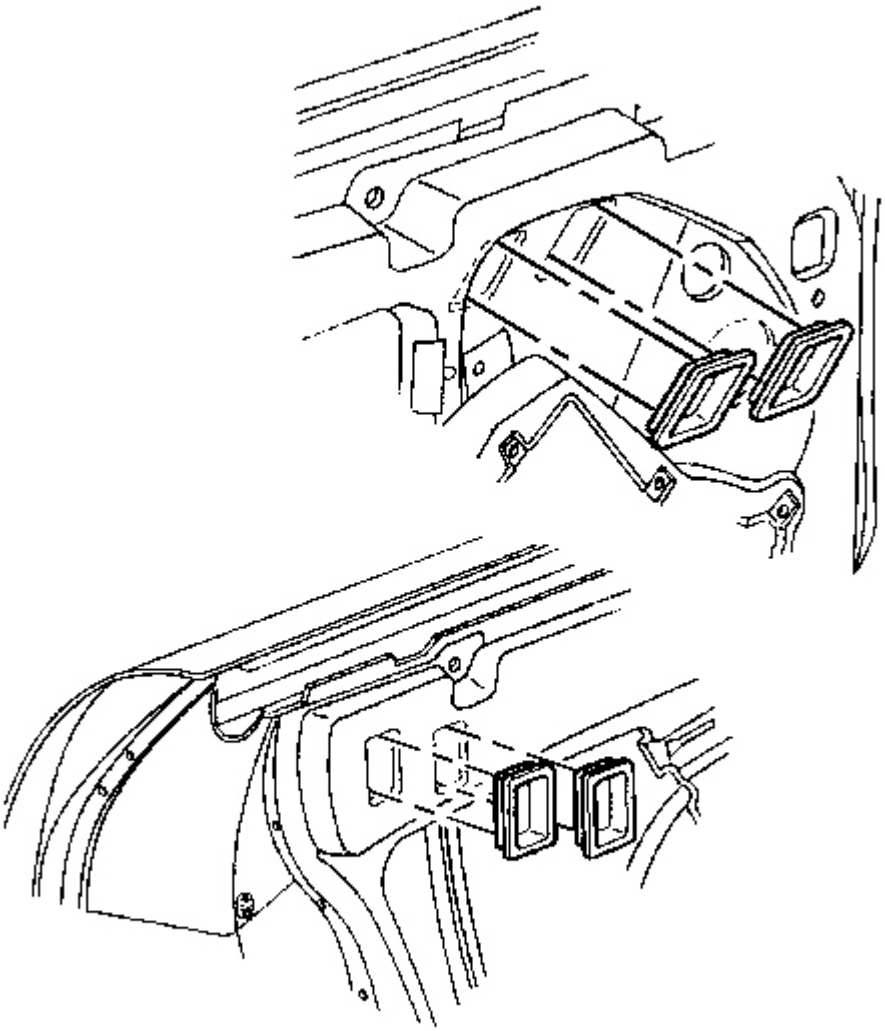

Fig. 162: Window Clamp Sight Access Plugs
Courtesy of GENERAL MOTORS CORP.

4. Remove the window clamp sight access plugs.

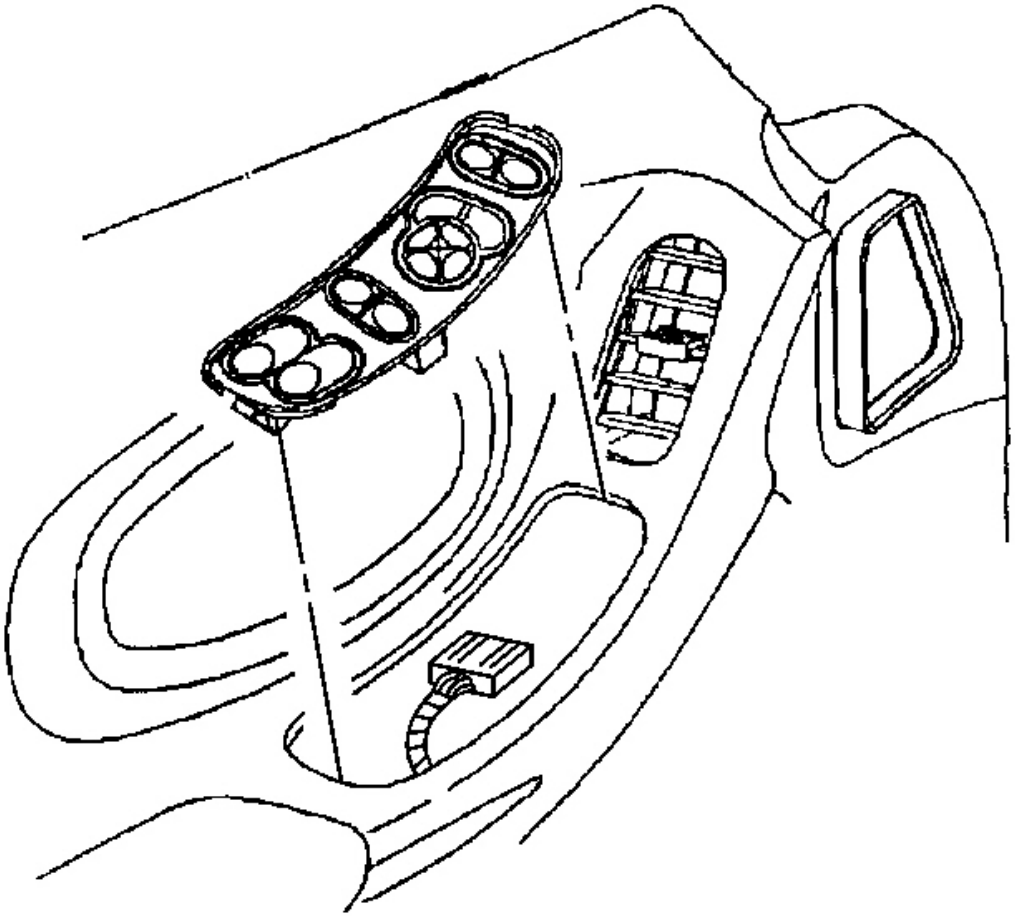

Fig. 163: Electrical Connector At Driver Side Switch
Courtesy of GENERAL MOTORS CORP.

5. Reconnect the window switch.
6. Reposition the window full up to access the window clamp nuts.
7. Disconnect the window switch.

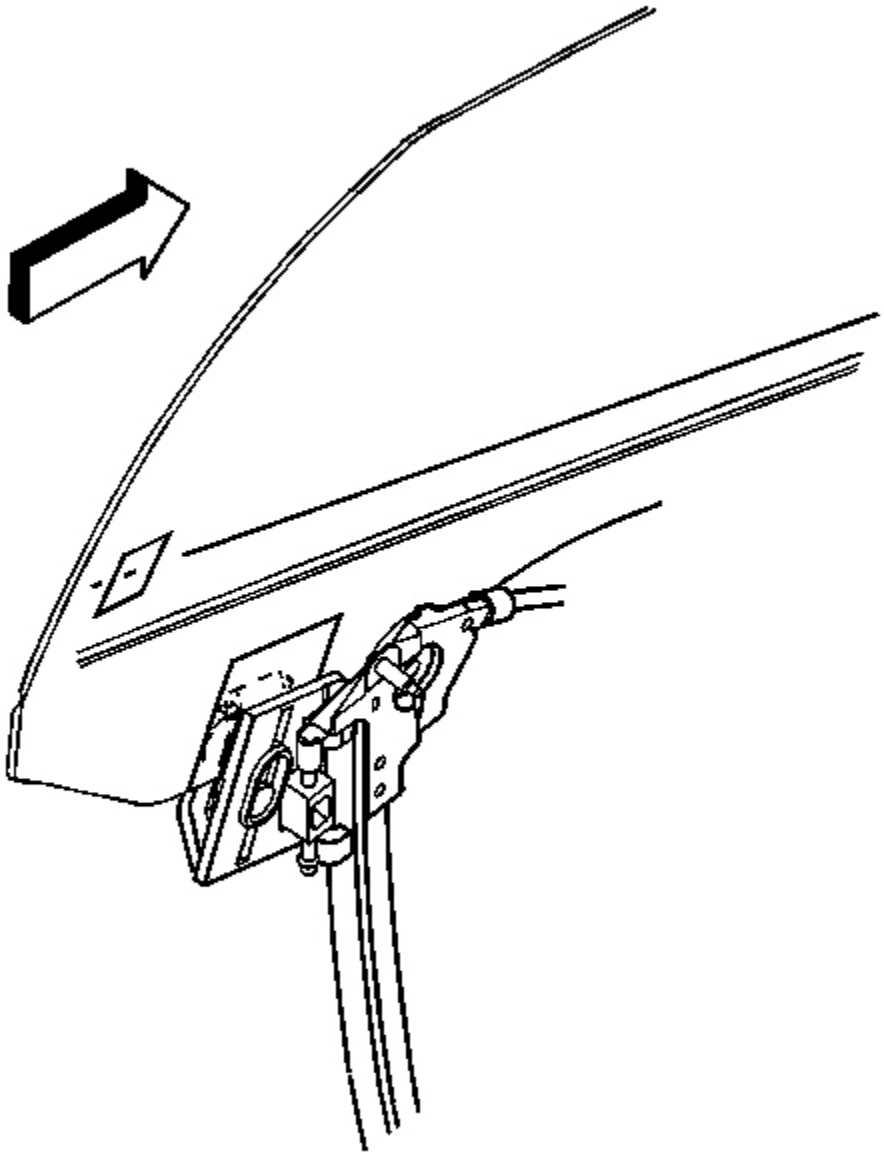

Fig. 164: Window Clamp Bolts
Courtesy of GENERAL MOTORS CORP.

8. Mark the location of the window.
9. Loosen the window clamp nuts.
10. Remove the window through the top opening of the door.

Installation Procedure

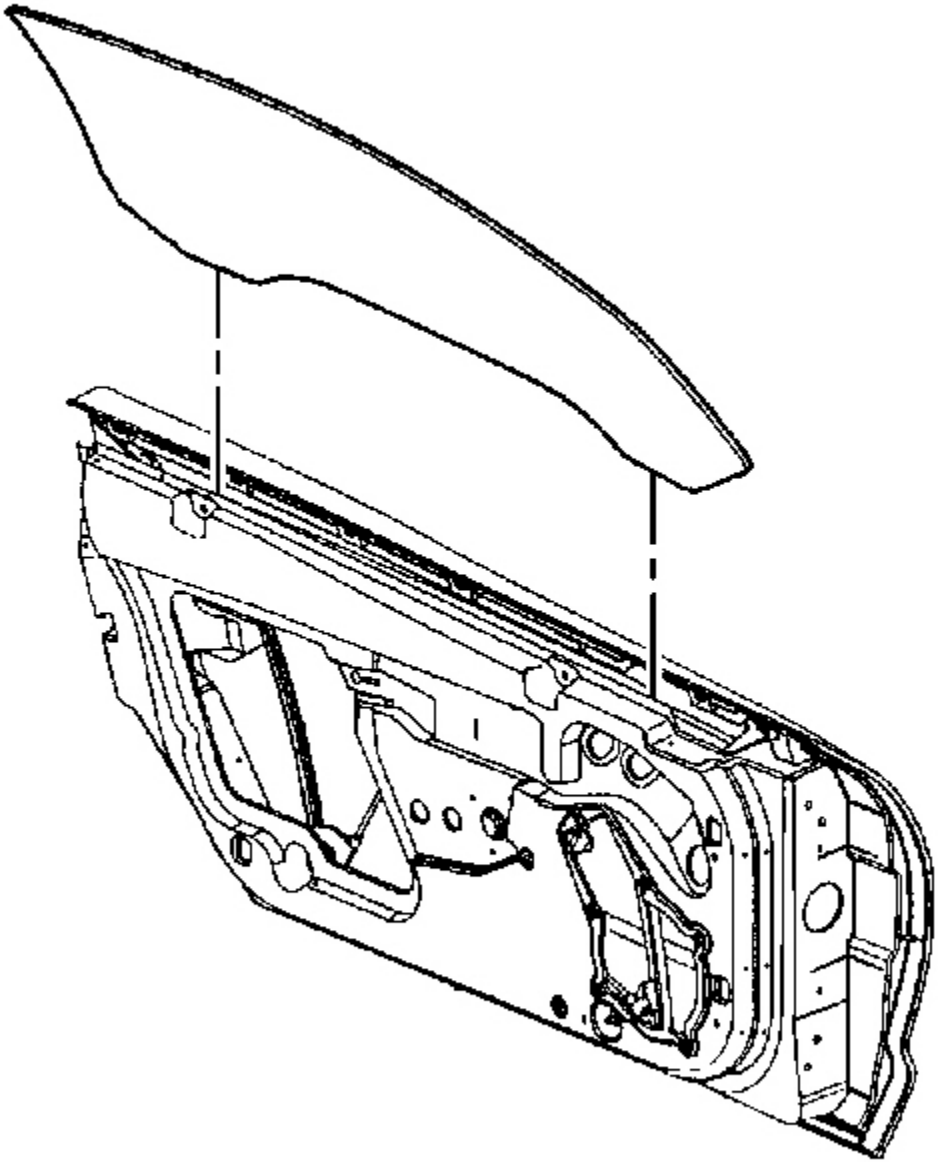

Fig. 165: Window At Top Of Door
Courtesy of GENERAL MOTORS CORP.

1. Install the window, through the top of the door, to a regulator that is in the full up position.

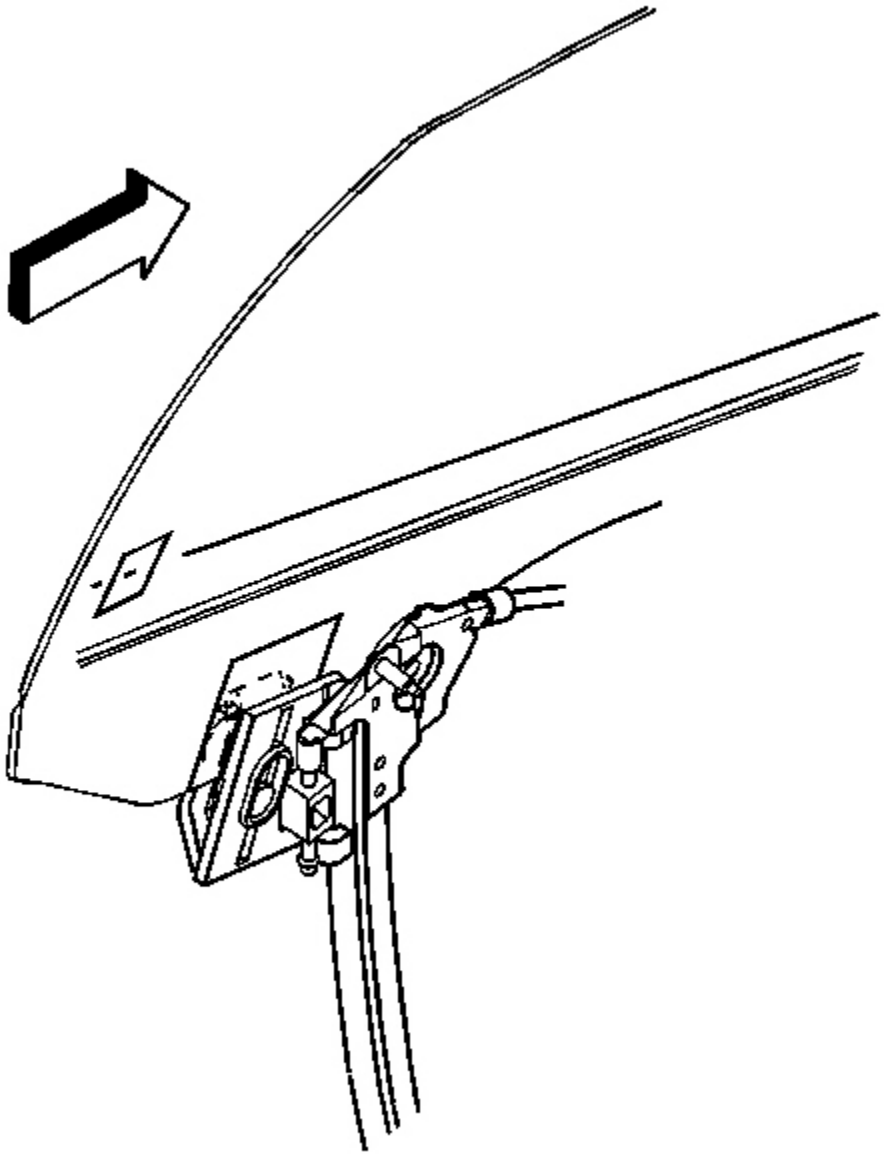

Fig. 166: Window Clamp Bolts
Courtesy of GENERAL MOTORS CORP.

2. Align the rearward glass clamp within the alignment marks on the window.
3. Loosely tighten the rear window clamp nut.
4. With the aid of an assistant standing outside the vehicle position the window to the door opening.

NOTE: **Refer to Fastener Notice in Cautions and Notices.**

5. From inside the vehicle tighten the window clamps.

   Tighten: Tighten the window regulator window clamp nuts to 10 N.m (89 lb in).

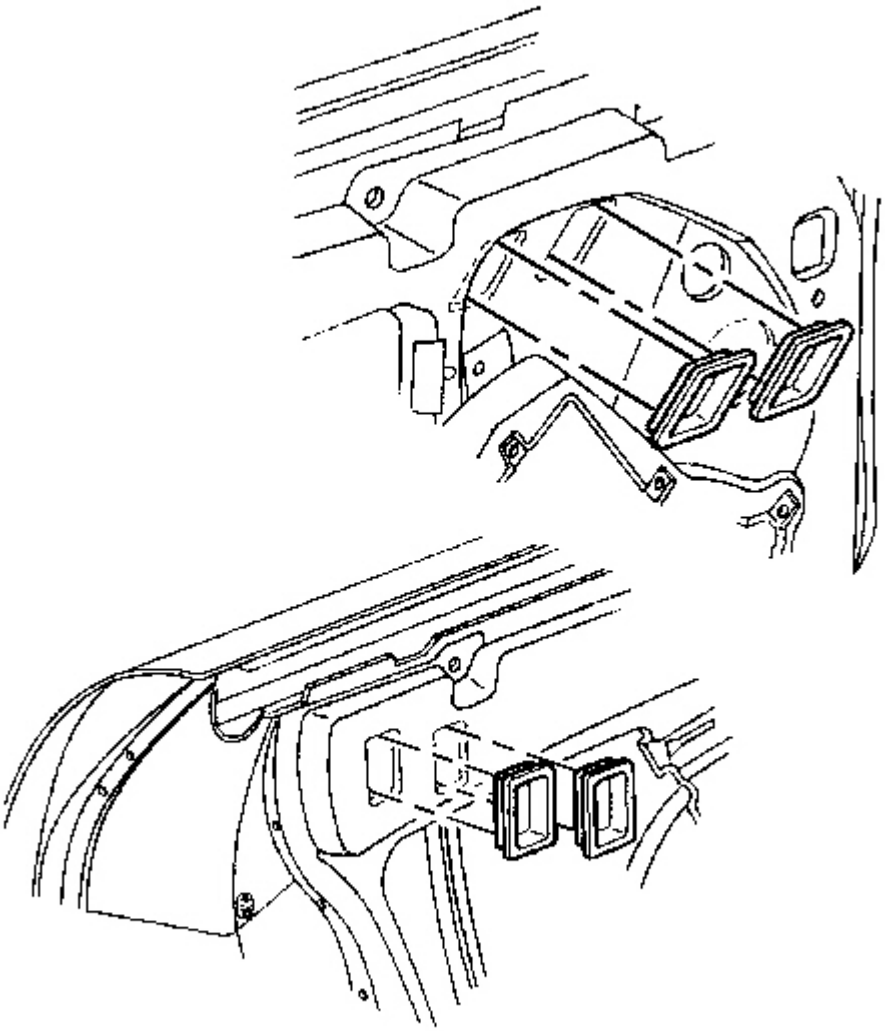

Fig. 167: Window Clamp Sight Access Plugs
Courtesy of GENERAL MOTORS CORP.

6. Open the door and install the window clamp access plugs.

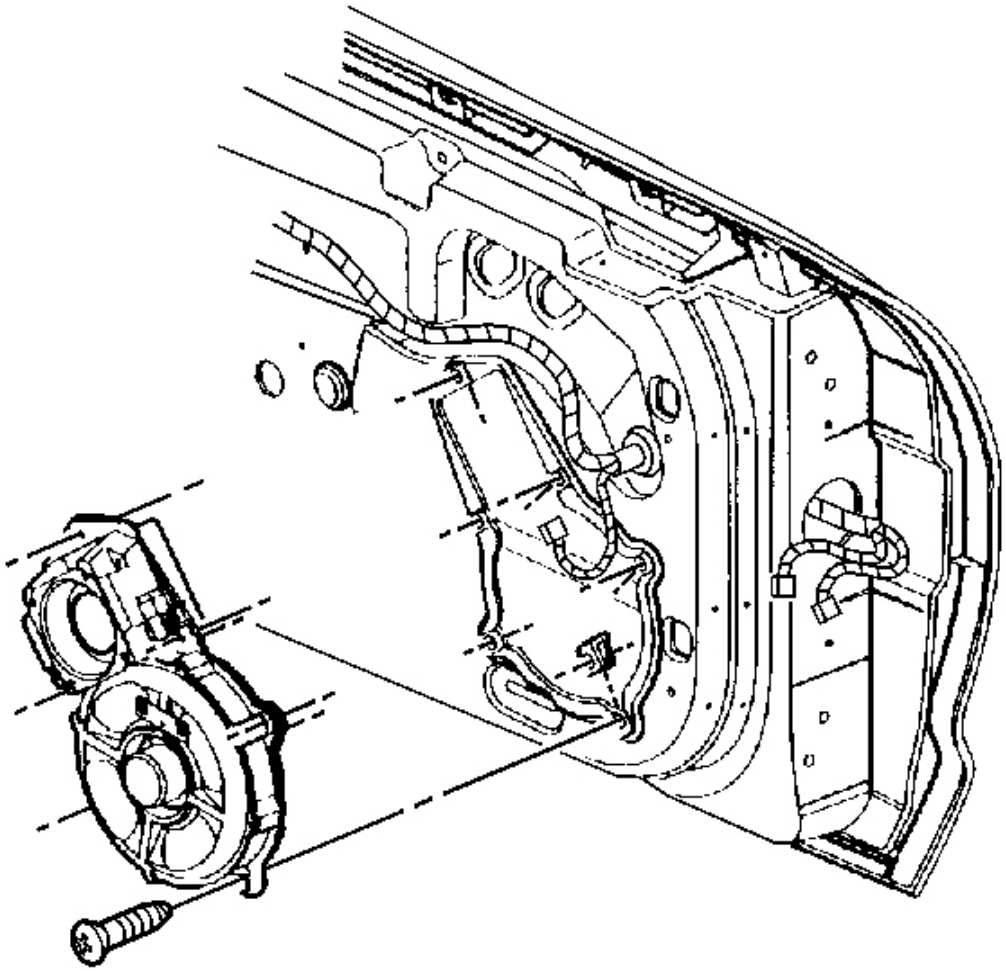

Fig. 168: Radio Speaker Assembly At Door
Courtesy of GENERAL MOTORS CORP.

7. Install the uppermost screw mounting the radio speaker assembly to the door.
8. Install the remaining screws in a criss-cross pattern.

   Tighten: Tighten the door speaker assembly screws to 2.5 N.m (22 lb in).

9. Connect the electrical/audio connector.

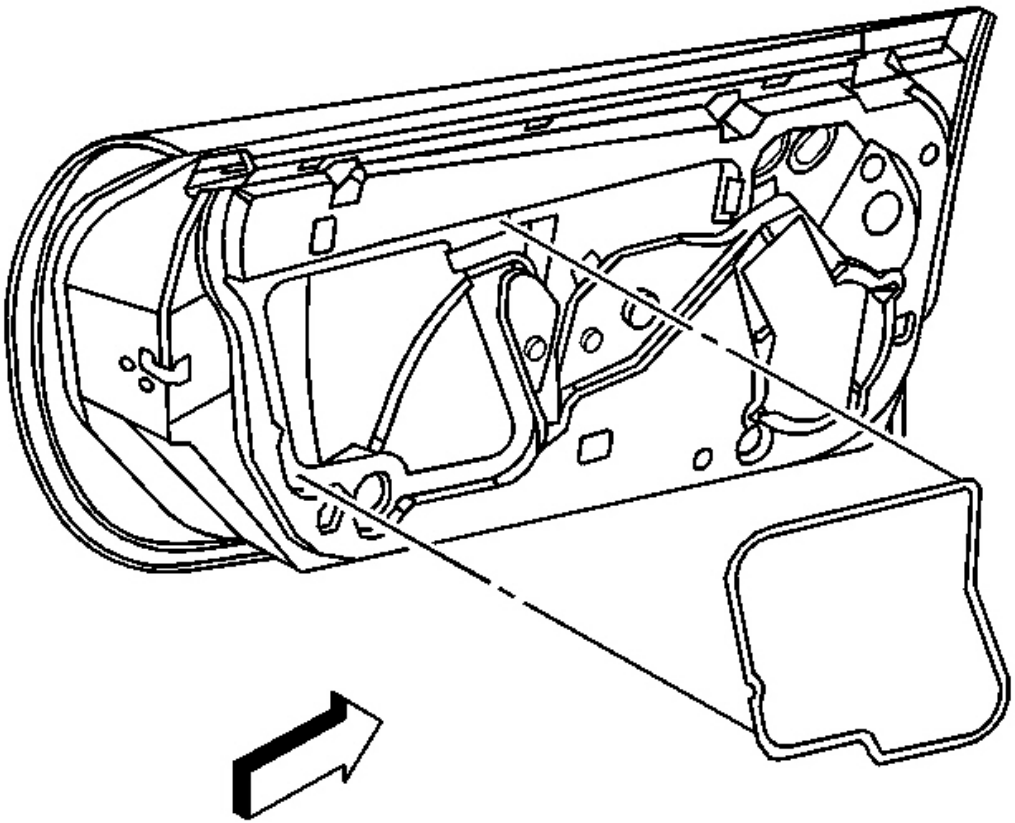

Fig. 169: Water Deflector At Door Inner Panel
Courtesy of GENERAL MOTORS CORP.

10. Install the water deflector.

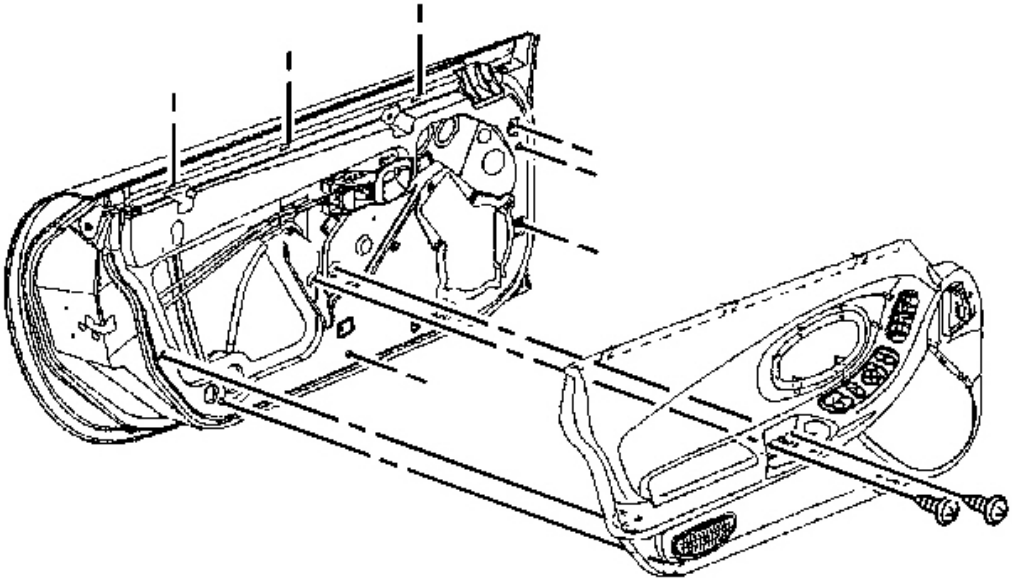

Fig. 170: View Of Door Trim Panel To Door
Courtesy of GENERAL MOTORS CORP.

11. Install the door trim panel. Refer to **Trim Panel Replacement - Door** .
12. Perform minor height and tip-in adjustments as necessary. Refer to **Window Height Adjustment - Door Minor** or **Window Tip-In Adjustment - Door** .

SEALING STRIP REPLACEMENT - FRONT DOOR WINDOW BELT OUTER

Removal Procedure

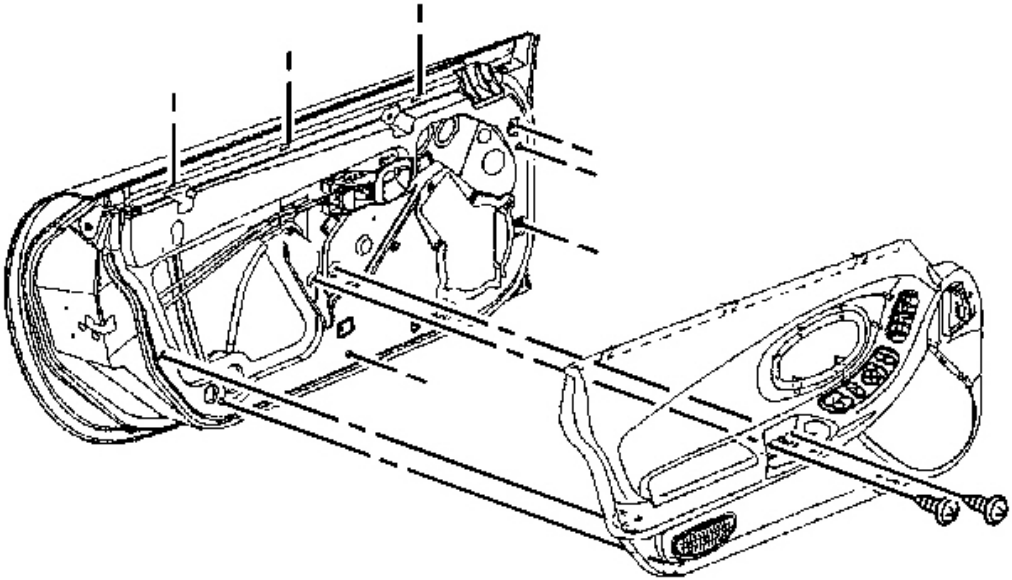

Fig. 171: View Of Door Trim Panel
Courtesy of GENERAL MOTORS CORP.

1. Remove the door trim panel. Refer to **Trim Panel Replacement - Door** .

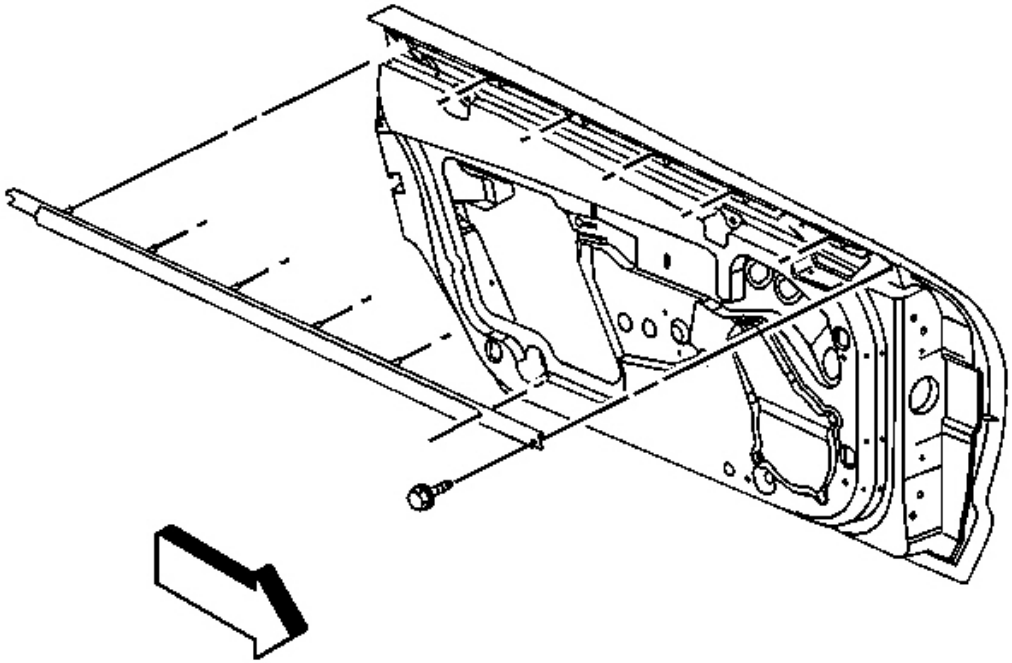

Fig. 172: Sealing Strip Retainers At Holes In Door
Courtesy of GENERAL MOTORS CORP.

2. Remove the screw from the front of the sealing strip.
3. Slide the strip rearward.
4. Pull the sealing strip retainers from the holes in the door.

Installation Procedure

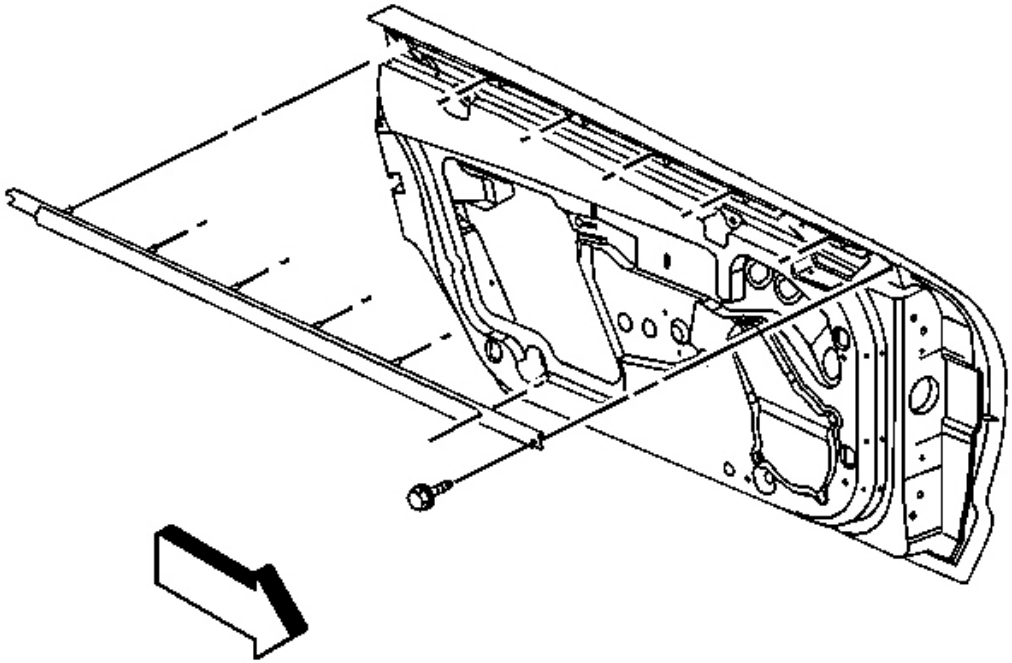

Fig. 173: Sealing Strip Retainers At Holes In Door
Courtesy of GENERAL MOTORS CORP.

1. Align the sealing strip retainers to the slots in the door.
2. Push the retainers into the slots and slide the sealing strip forward seating the retainers.

NOTE: Refer to Fastener Notice in Cautions and Notices.

3. Install the screw in the forward hole.

Tighten: Tighten the window outer sealing strip screw to 2 N.m (18 lb in).

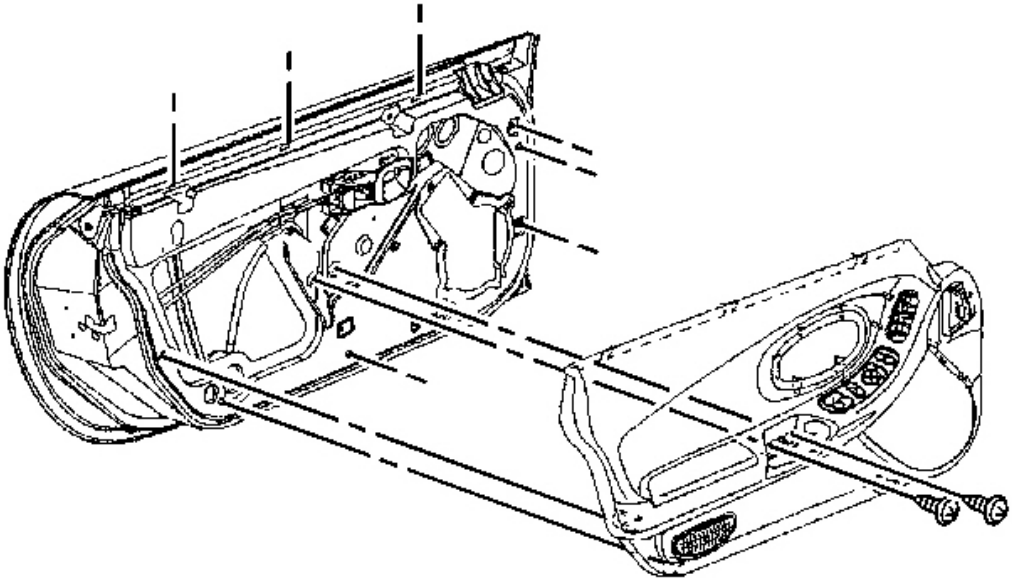

Fig. 174: View Of Door Trim Panel
Courtesy of GENERAL MOTORS CORP.

4. Install the door trim panel. Refer to **Trim Panel Replacement - Door** .

WEATHERSTRIP REPLACEMENT - DOOR

Removal Procedure

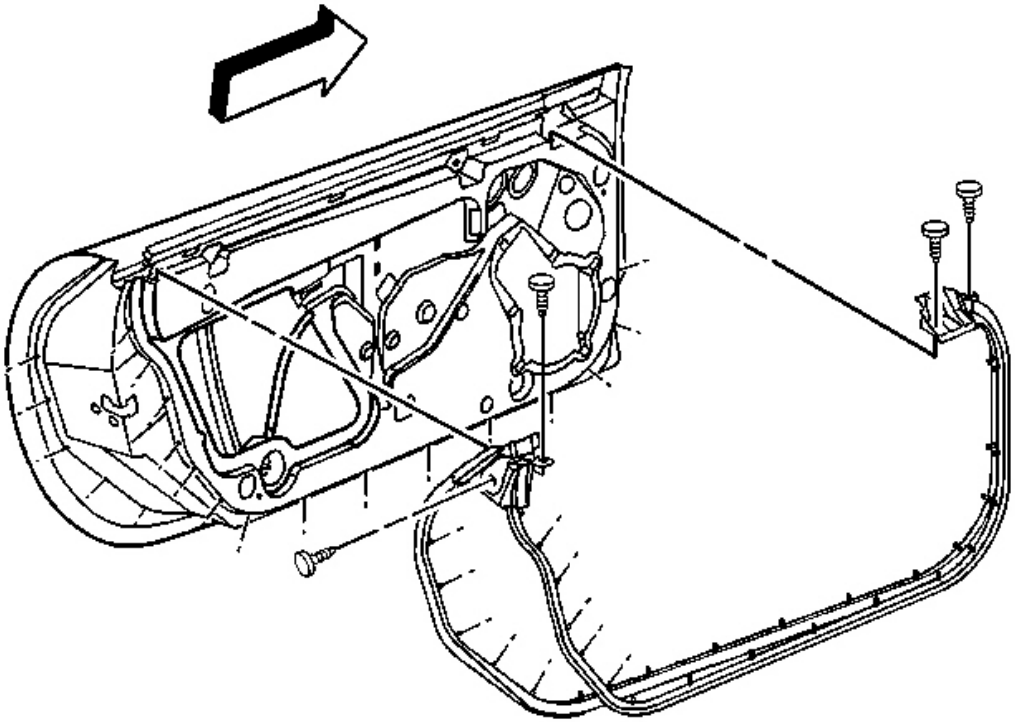

Fig. 175: Weatherstrip Retainers At Door
Courtesy of GENERAL MOTORS CORP.

1. Remove the push-pin retainers from the ends of the weatherstrip.
2. Pull the weatherstrip from the full length of the door.
3. Remove any weatherstrip retainers that remain in the door. The new weatherstrip comes with retainers.

Installation Procedure

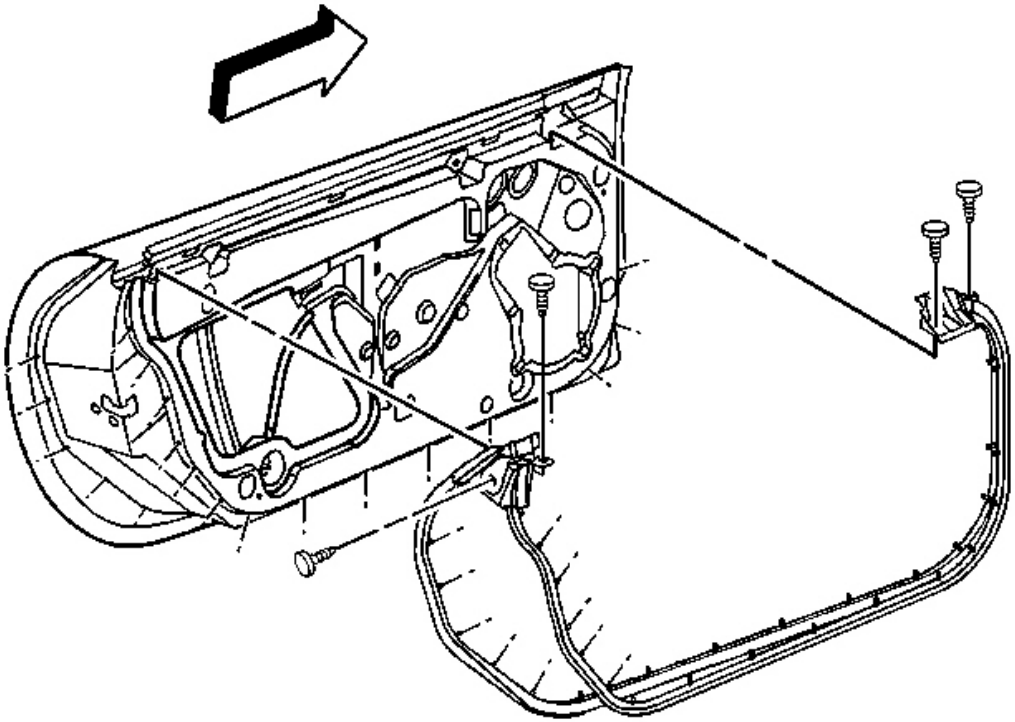

Fig. 176: Weatherstrip Retainers At Door
Courtesy of GENERAL MOTORS CORP.

1. Starting at one end of the weatherstrip align the retainers on the weatherstrip with the holes in the door.
2. Press the retainers firmly into the holes in the door.
3. Insert and press the push-pin retainers through the weatherstrip molded ends into the door.

MIRROR REPLACEMENT

Removal Procedure

CAUTION: Refer to Express Down Feature Caution in Cautions and Notices.

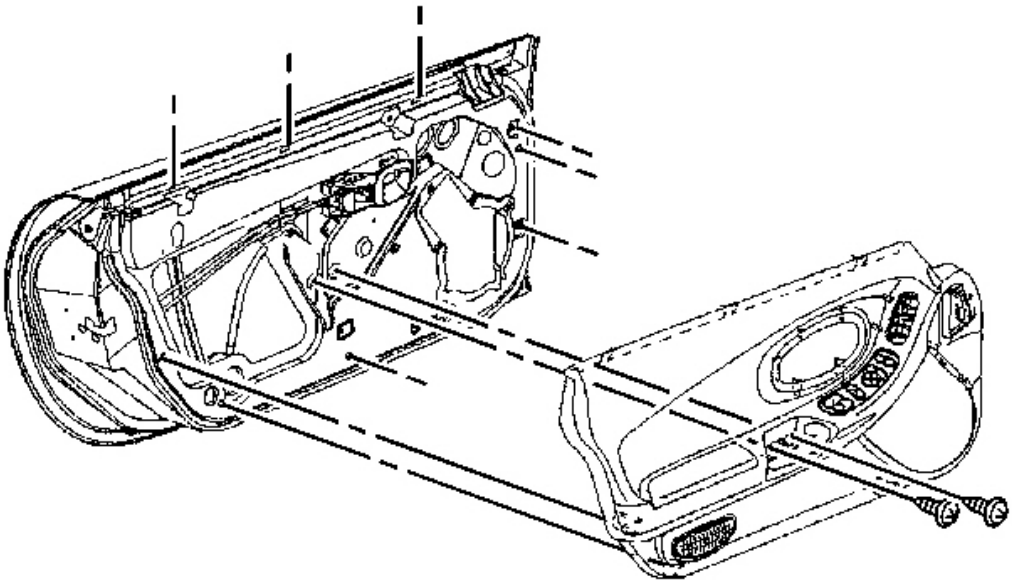

Fig. 177: View Of Door Trim Panel
Courtesy of GENERAL MOTORS CORP.

1. Lower the door window.
2. Remove the door trim panel. Refer to **Trim Panel Replacement - Door** .

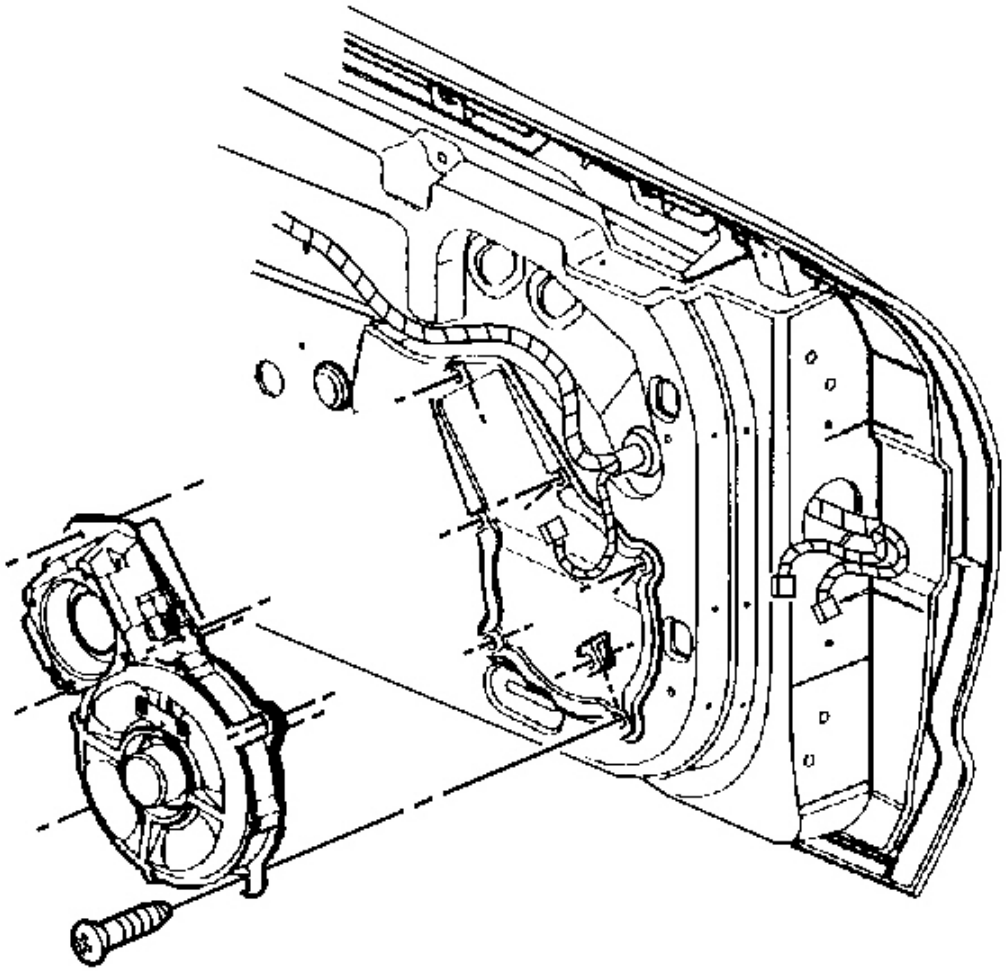

Fig. 178: Radio Speaker Assembly At Door
Courtesy of GENERAL MOTORS CORP.

3. Remove the door radio speaker assembly.
    - Remove the screws mounting the speaker assembly.
    - Disconnect the electrical/audio connector.

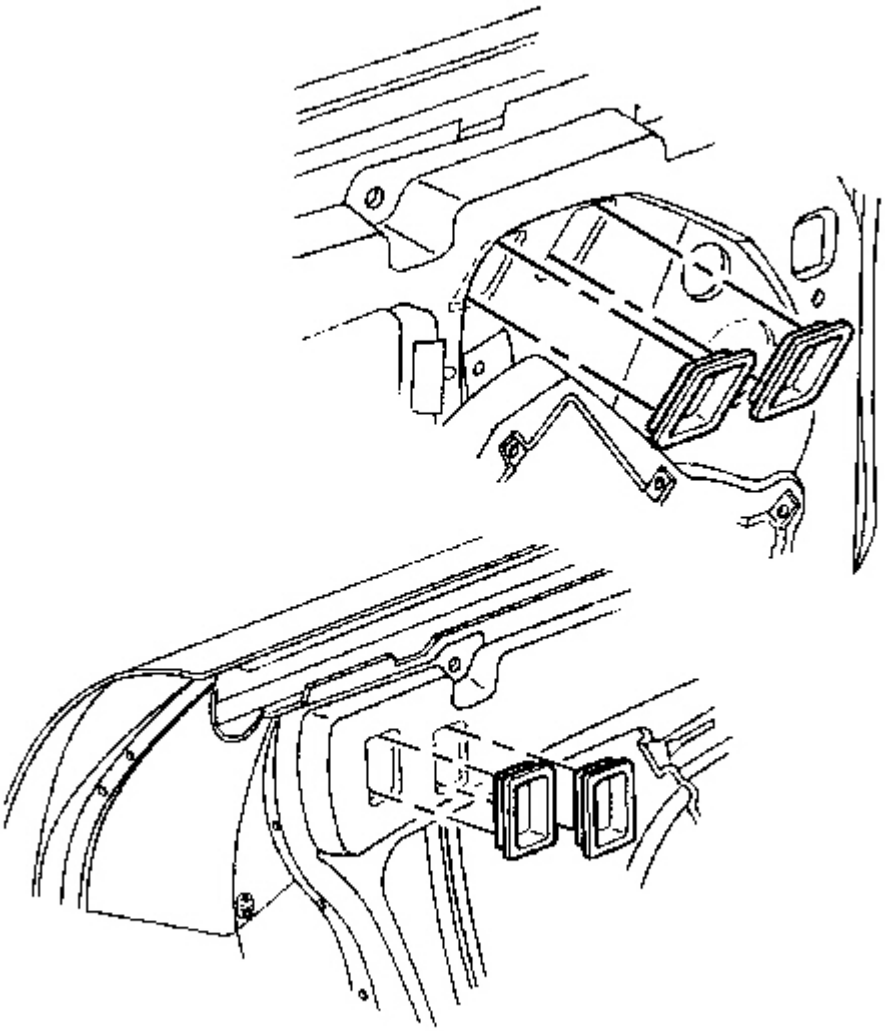

Fig. 179: Window Clamp Sight Access Plugs
Courtesy of GENERAL MOTORS CORP.

4. Remove the mirror nut access plugs.

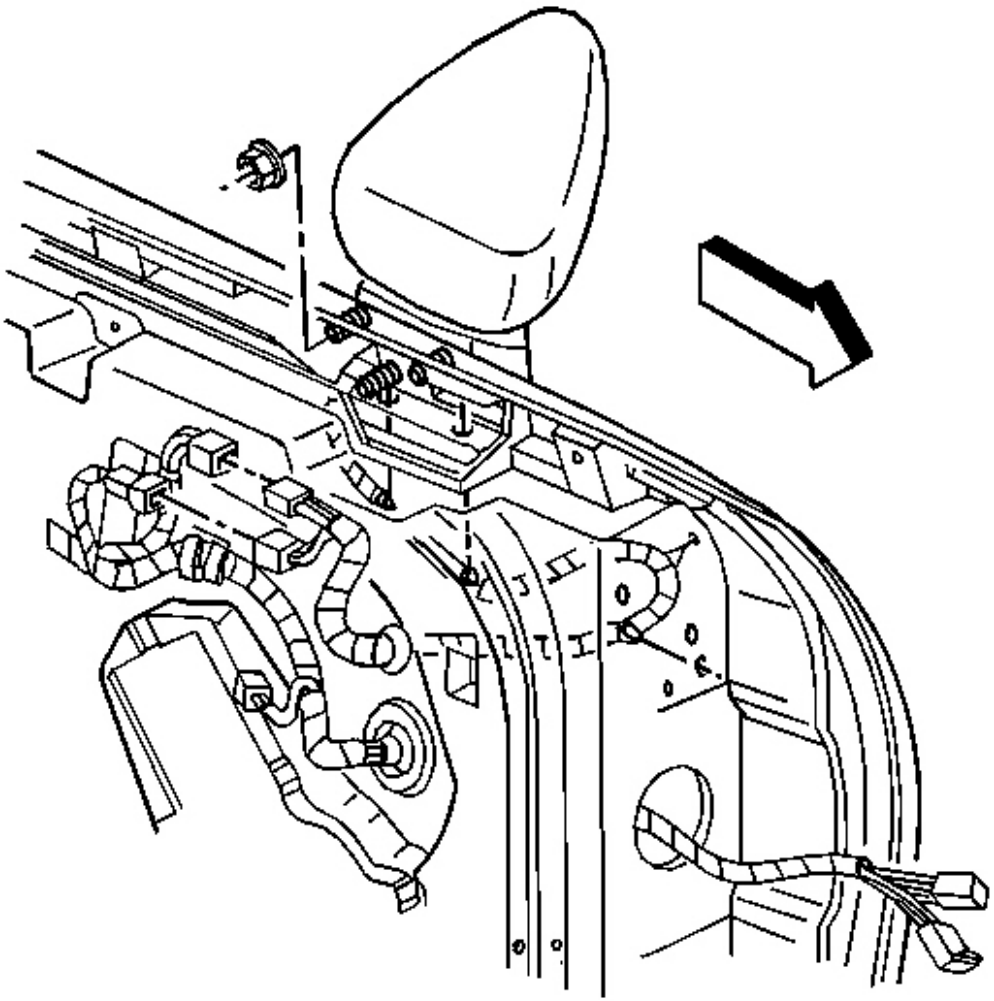

Fig. 180: Mirror Harness At Retainers & Gasket
Courtesy of GENERAL MOTORS CORP.

5. Disconnect the electrical connector(s).
6. Disconnect the mirror harness from the retainers.
7. Remove the nuts from the mirror studs.
8. Remove the mirror with the harness and gasket.

Installation Procedure

CAUTION: Refer to Express Down Feature Caution in Cautions and Notices.

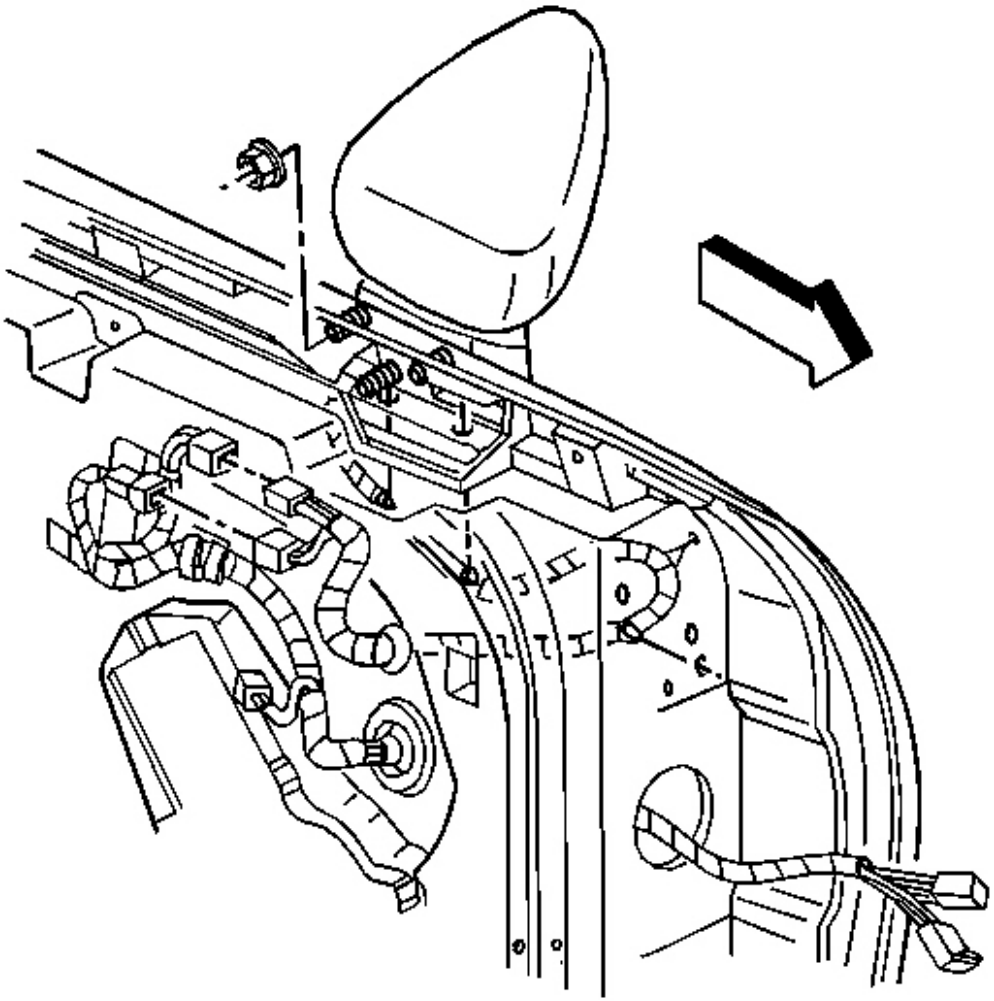

Fig. 181: Mirror Harness At Retainers & Gasket
Courtesy of GENERAL MOTORS CORP.

1. Position the mirror with the gasket and harness to the door.

NOTE: Refer to Fastener Notice in Cautions and Notices.

2. Install the nuts to the mirror.

Tighten: Tighten the mirror nuts to 10 N.m (89 lb in).

3. Route the harness and secure the harness with the harness retainers.
4. Connect the electrical connector(s).

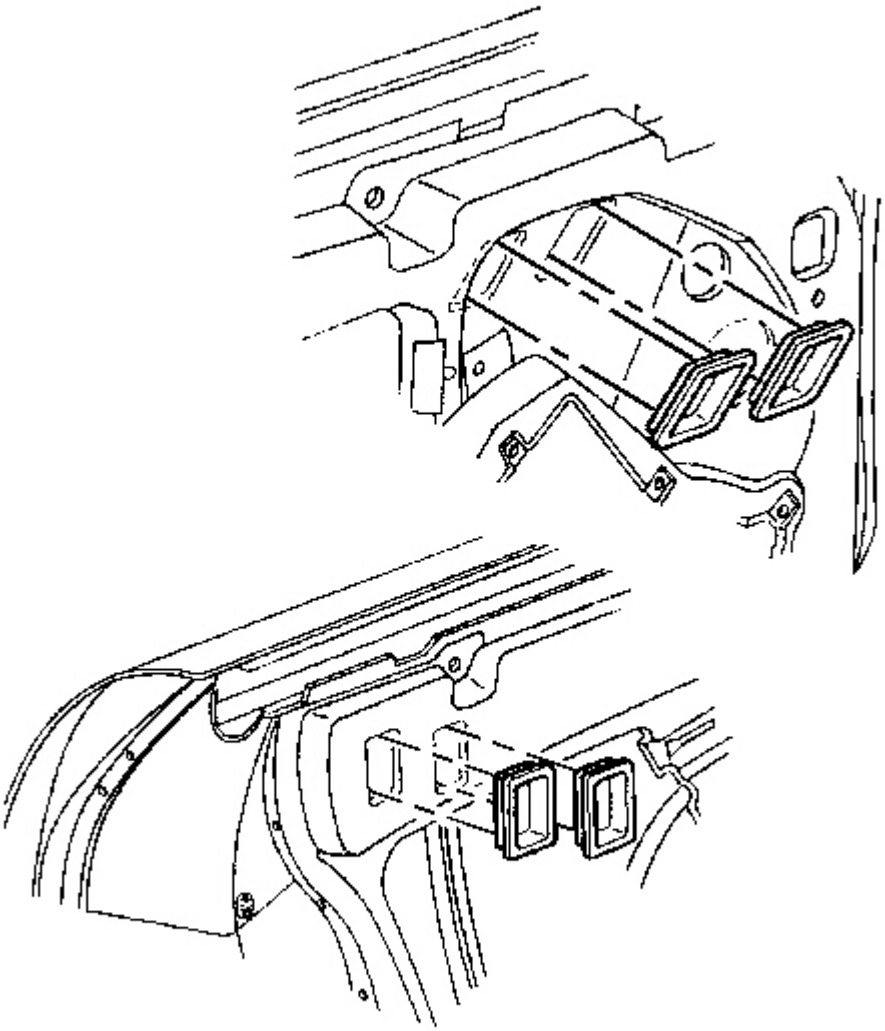

Fig. 182: Window Clamp Sight Access Plugs
Courtesy of GENERAL MOTORS CORP.

5. Install the mirror nut access plugs.

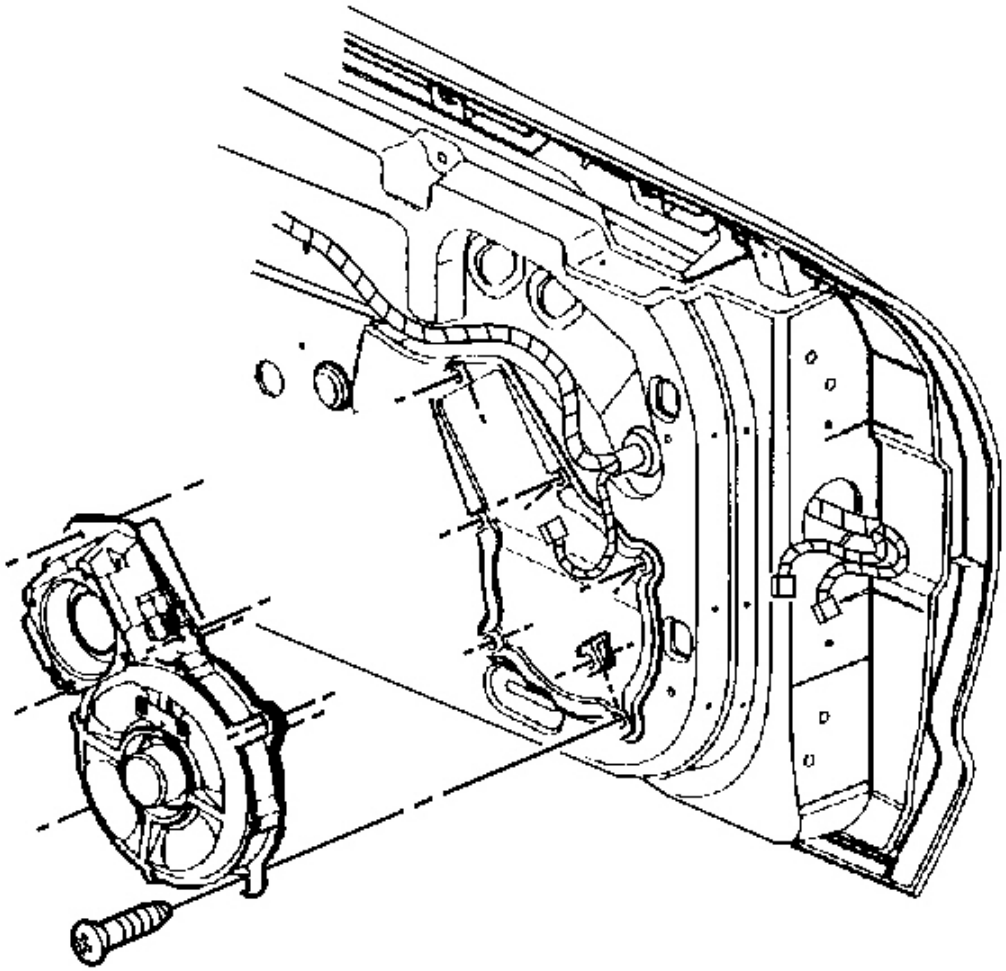

Fig. 183: Radio Speaker Assembly At Door
Courtesy of GENERAL MOTORS CORP.

6. Install the uppermost screw mounting the radio speaker assembly to the door.
7. Install the remaining screws in a criss-cross pattern.

   Tighten: Tighten the door speaker assembly screws to 2.5 N.m (22 lb in).

8. Connect the electrical/audio connector.
9. Connect the speaker connectors.

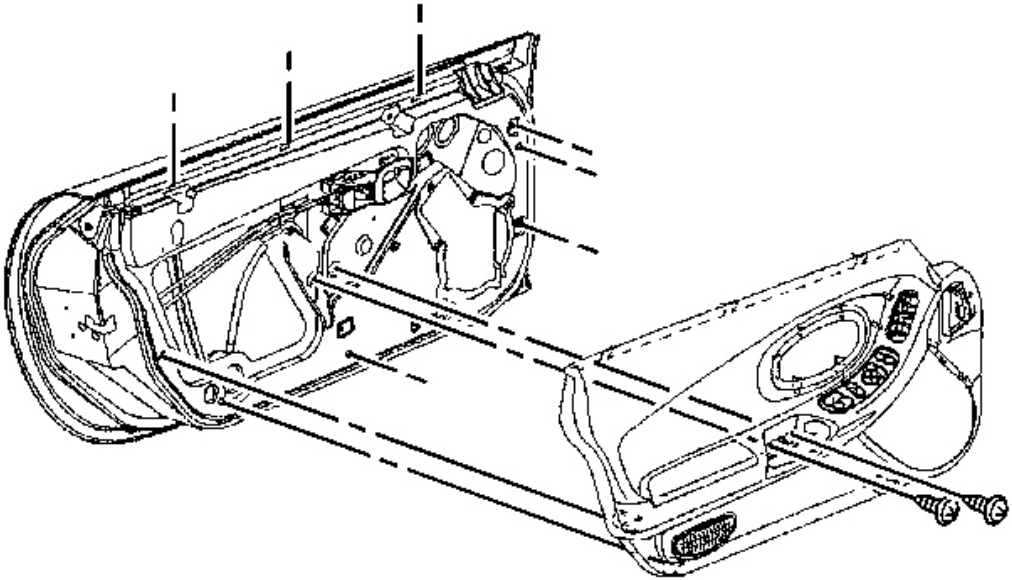

Fig. 184: View Of Door Trim Panel
Courtesy of GENERAL MOTORS CORP.

10. Install the door trim panel. Refer to **Trim Panel Replacement - Door** .

MOTOR REPLACEMENT - POWER MIRROR

Removal Procedure

1. Remove the door trim panel. Refer to **Trim Panel Replacement - Door** .

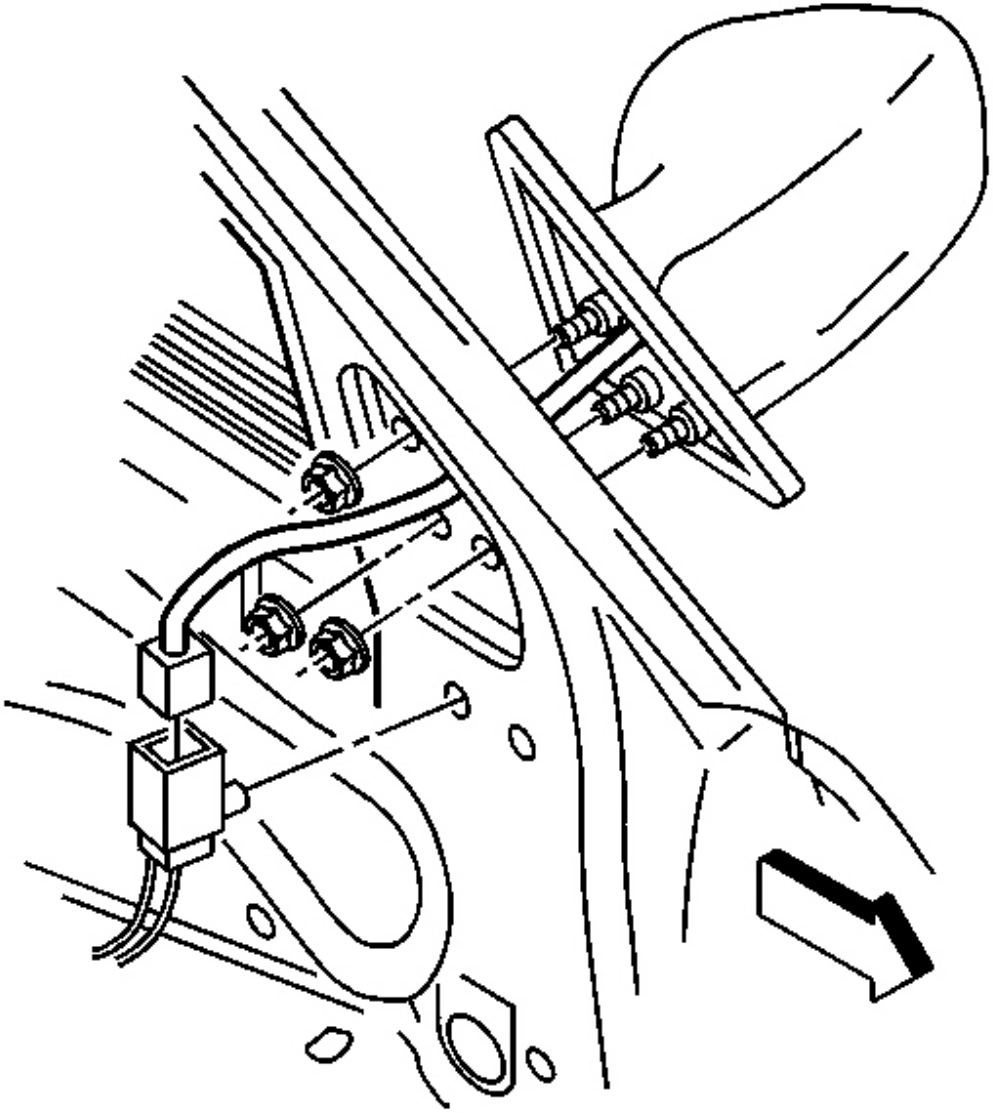

Fig. 185: Electrical Connector At Mirror Wire Harness
Courtesy of GENERAL MOTORS CORP.

2. Disconnect the electrical connector to the mirror wire harness.

CAUTION: Refer to Eye Protection Caution in Cautions and Notices.

3. Remove the mirror face. Refer to **Mirror Face Replacement** .
4. Remove the screws from the mirror motor.
5. Pull the motor electrical harness through the mirror housing.

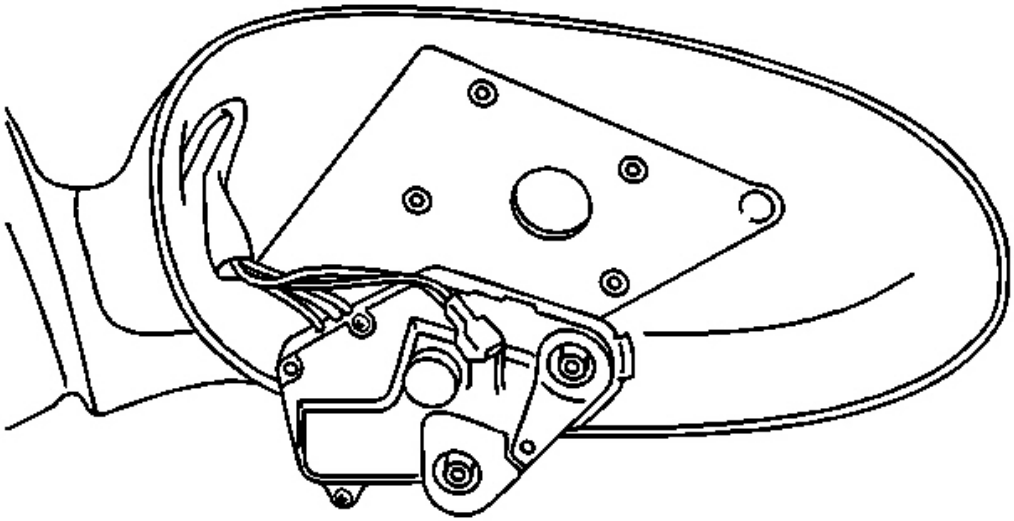

Fig. 186: View Of Outside Rearview Mirror Motor
Courtesy of GENERAL MOTORS CORP.

6. Remove the motor from the mirror housing.

Installation Procedure

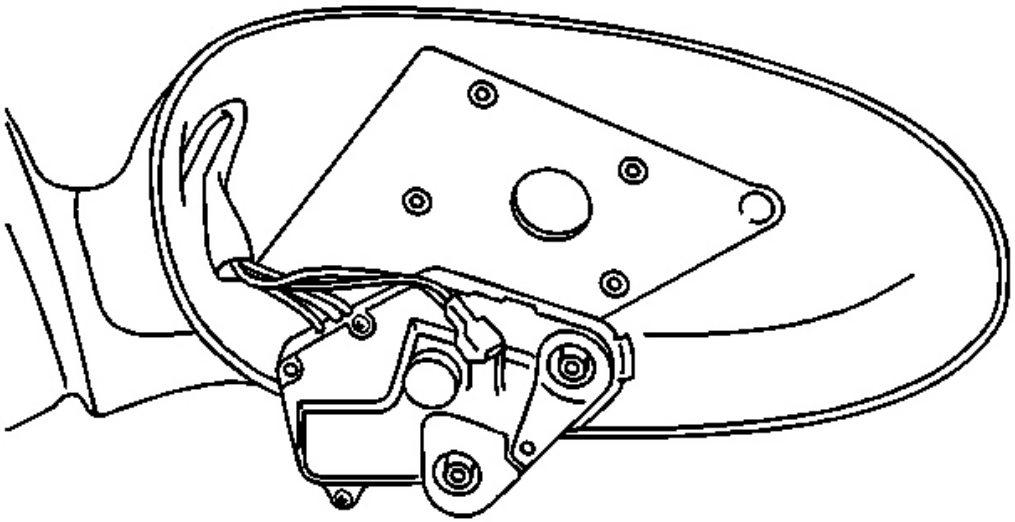

Fig. 187: View Of Outside Rearview Mirror Motor
Courtesy of GENERAL MOTORS CORP.

1. Position the motor to the mirror housing.
2. Pull the motor electrical harness through the mirror housing to the inside door panel.

NOTE: Refer to Fastener Notice in Cautions and Notices.

3. Install the screws to the mirror motor.

   Tighten: Tighten the mirror motor screws to 10 N.m (89 lb in).

4. Install the mirror face to the mirror housing. Refer to **Mirror Face Replacement** .

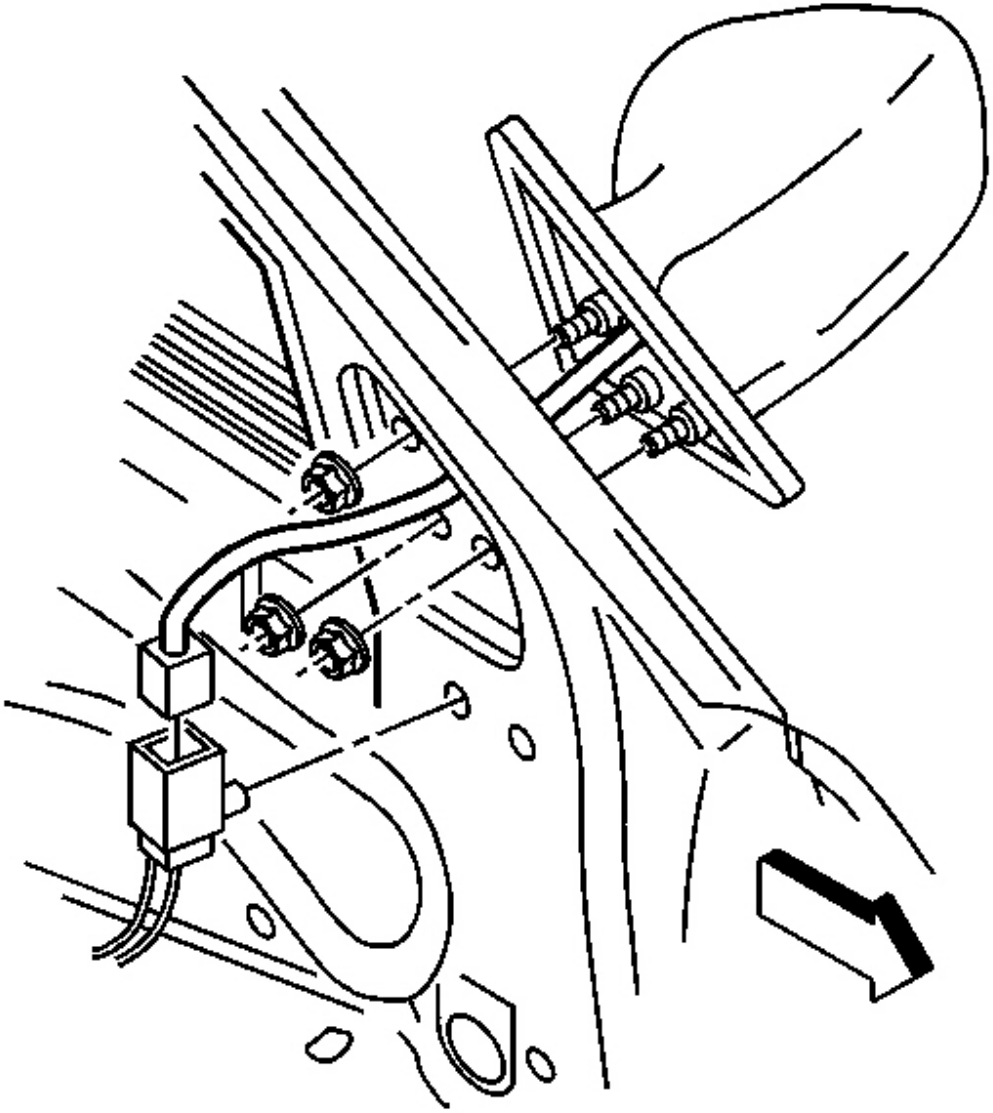

Fig. 188: Electrical Connector At Mirror Wire Harness
Courtesy of GENERAL MOTORS CORP.

5. Connect the electrical connector to the mirror wire harness.
6. Check the operation of the mirror.
7. Install the door trim panel. Refer to **Trim Panel Replacement - Door** .

MIRROR FACE REPLACEMENT

Removal Procedure

CAUTION: When working with any type of glass or sheet metal with exposed or rough edges, wear approved safety glasses and gloves in order to reduce the chance of personal injury.

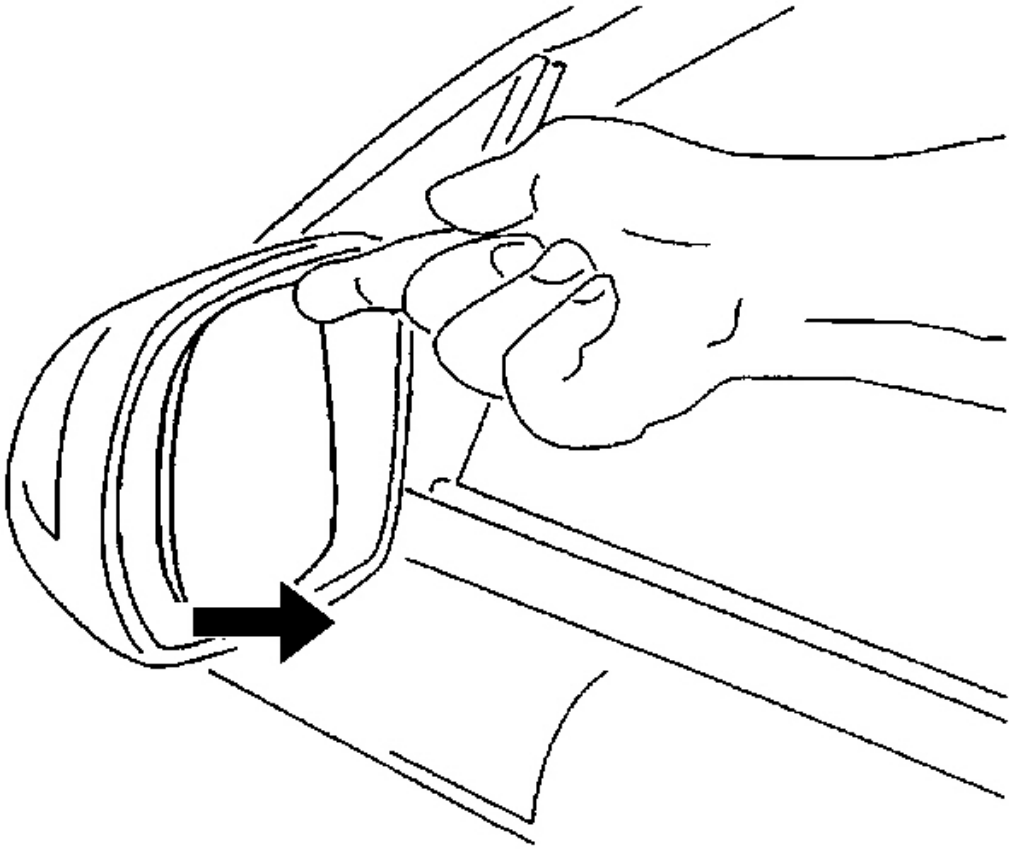

Fig. 189: Mirror Face Glass
Courtesy of GENERAL MOTORS CORP.

1. Push in on 1 edge of the mirror face glass tilting the mirror case to allow finger access.
2. Grasp the glass case firmly and pull the case from the mirror body.
3. Disconnect the wire connectors from the case (heated mirror).
4. Remove the 2 jackscrews from the mirror glass case.

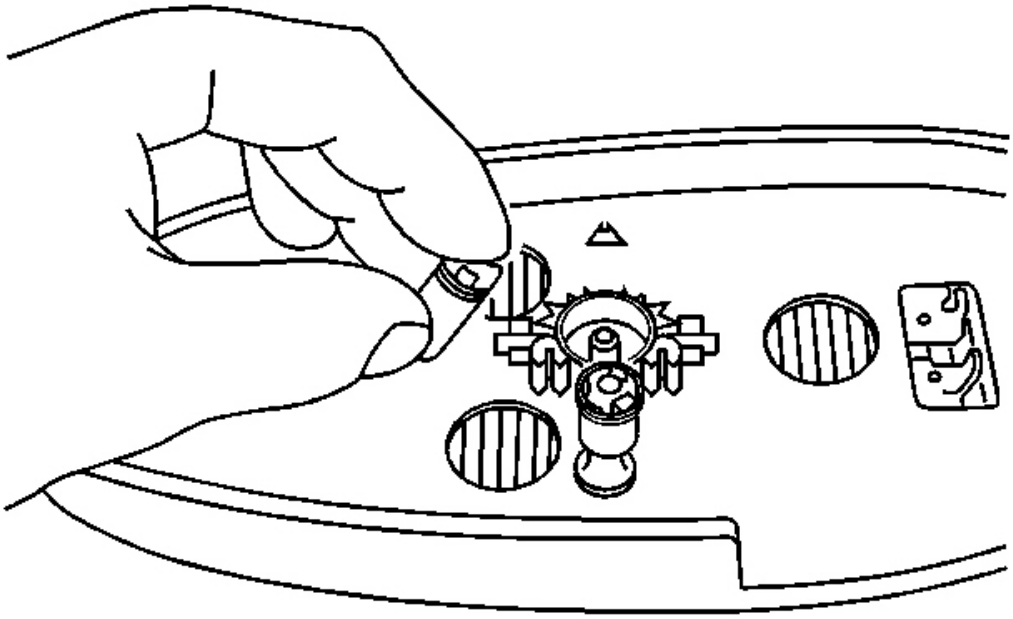

Fig. 190: Jackscrew At Mirror Glass Case
Courtesy of GENERAL MOTORS CORP.

1. Bend the jackscrew over.
2. Press down on the side of the jackscrew popping the jackscrew from the mirror glass case.
3. Save the jackscrews for reinstallation to the mirror motor.

Installation Procedure

CAUTION: When working with any type of glass or sheet metal with exposed or rough edges, wear approved safety glasses and gloves in order to reduce the chance of personal injury.

IMPORTANT: The mirror glass case is not the same for the right and left mirror. For ease of assembly of the mirror glass case place a little white lithium grease on the motor pivot and on the tip of the installed jackscrews.

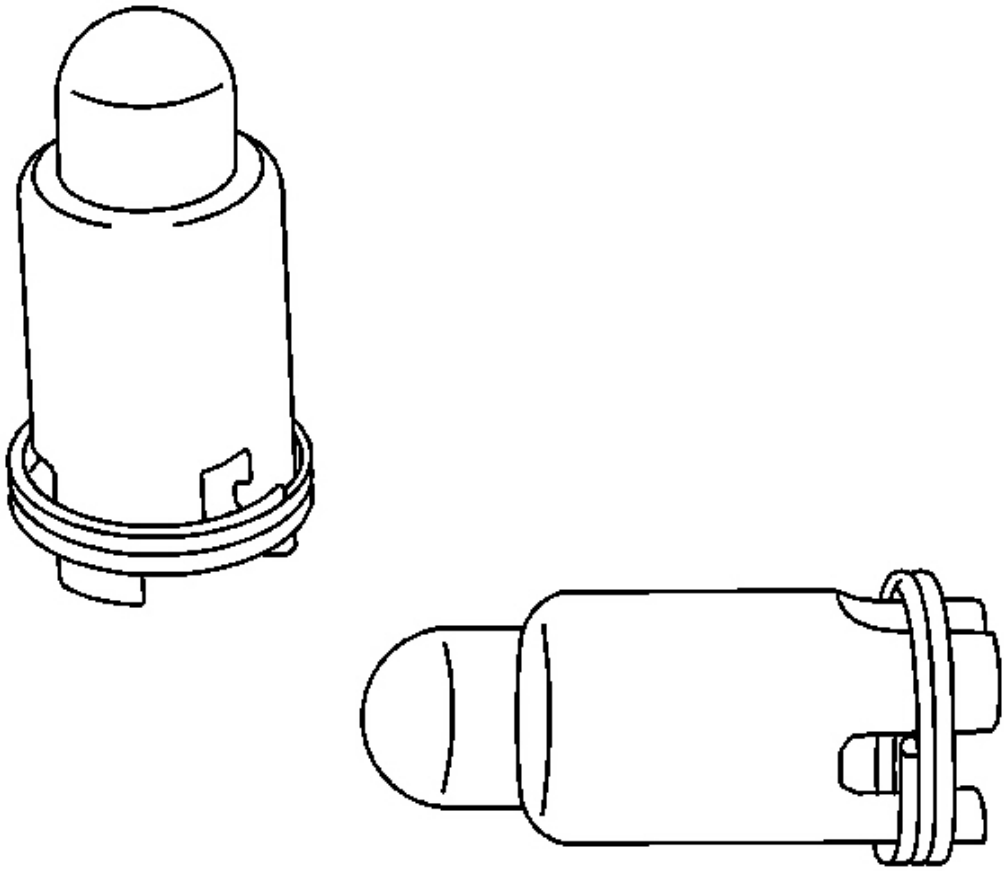

Fig. 191: Jackscrews At Mirror Motor
Courtesy of GENERAL MOTORS CORP.

1. The jackscrew springs must be positioned down compressing the fingers at the bottom of the jackscrews.

   Push to install the jackscrews into the mirror motor.

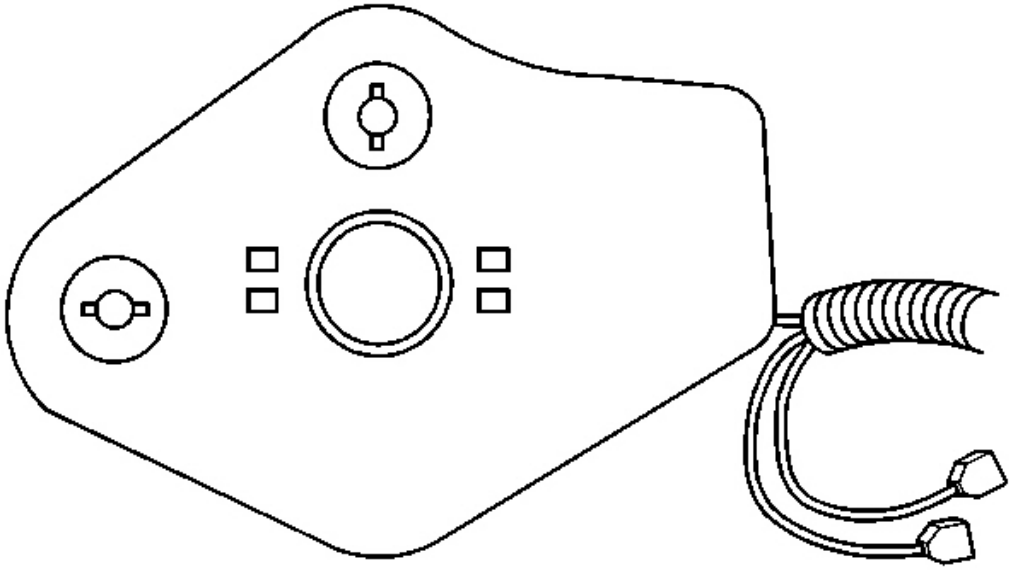

Fig. 192: Electrical Connectors At Mirror Glass Case
Courtesy of GENERAL MOTORS CORP.

2. Rotate both jackscrews to position the ball flanges to be inline with the attaching hub. They will then be correctly positioned to the mirror glass case. (This is shown in the above graphic).
3. Connect the electrical connectors to the mirror glass case (heated mirror).

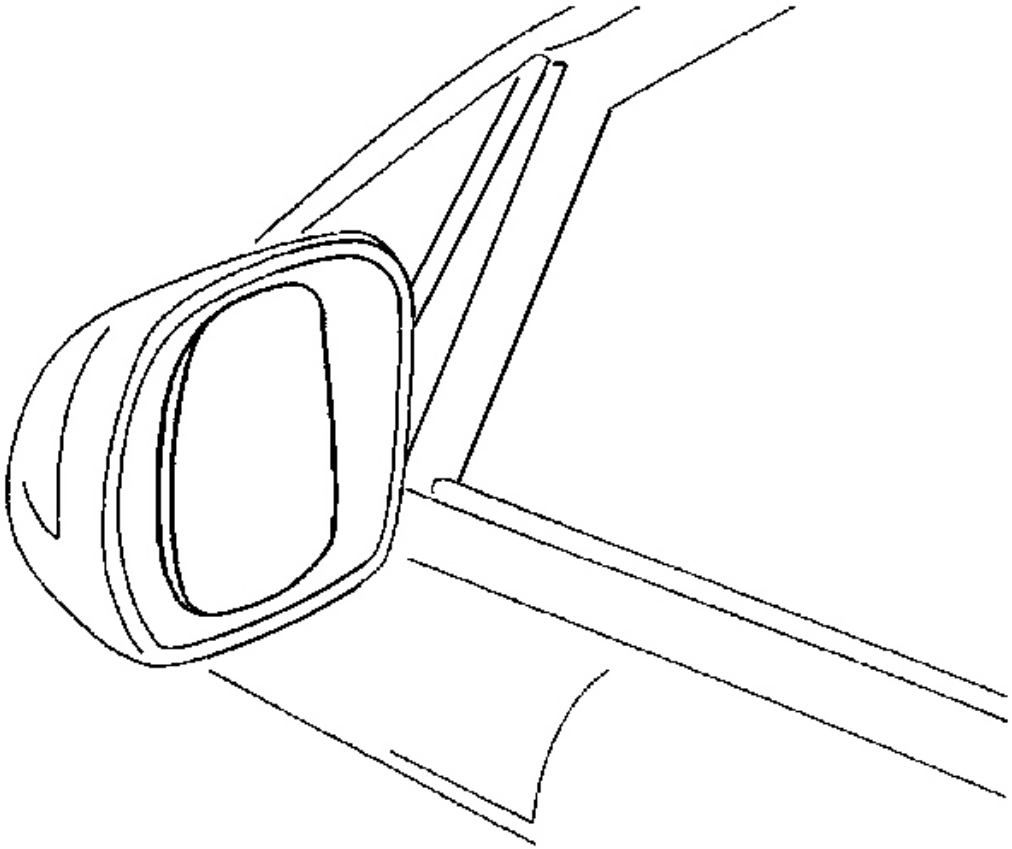

Fig. 193: Mirror Glass Case & Jackscrews
Courtesy of GENERAL MOTORS CORP.

4. Align the case to the mirror motor.
5. With the palm of your gloved hand press firmly on the center of the mirror glass case until the case engages onto the motor.
6. Push the mirror glass case to the jackscrews.
   - Right mirror. Rotate the mirror glass case down and press firmly on the lower side engaging the mirror glass case to the lower jackscrew.
   - Left mirror. Rotate the mirror glass case up and press firmly on the upper side engaging the mirror glass case to the upper jackscrew.
   - Rotate the mirror glass case and press firmly on the outer side engaging the mirror glass case to the outer jackscrew. The jackscrews will give a clicking noise when properly seated.

DESCRIPTION AND OPERATION

POWER WINDOWS DESCRIPTION AND OPERATION

Window Up/Down

The power window master switch left front up or down signal circuits provide inputs to the driver door module (DDM) when the driver window switch is activated. These inputs allow the DDM to detect a window UP or DOWN request from the driver door switch. The DDM provides power and ground to both of the left window switches. When the left window up switch is activated, a ground is supplied through the left window up switch to the window up input which is pulled low. When the DDM detects low voltage on the window up input, the DDM will command the driver window up. If the DDM detects low voltage on the driver window down input, the DDM will command the driver window down.

If the passenger window is operated from the driver window switch, the DDM will send a message on the serial data line to the passenger door module (PDM) to operate the passenger window up or down. The passenger window operates the same as the driver window except the PDM is receiving the passenger window switch input and controlling passenger window output functions. The door modules provide both power and ground through the power window motor left front up control and power window motor left front down control circuits to the window motors. The up and down output operation is similar to one another except that the polarity of the voltage applied to the window motors is reversed.

Express Down

The driver and passenger windows have an express down feature. This feature allows the door modules to activate the driver or passenger window down without holding the window down switch for the entire duration. To activate this feature, momentarily press either window switch for one-third of a second and release. The door modules will lower the selected window completely down. The express down feature can be discontinued at any time by pressing the window switch again.

POWER DOOR LOCKS DESCRIPTION AND OPERATION

Lock/Unlock

The driver door lock switch lock and unlock signal circuits provide input to the driver door module (DDM) when the driver door switch is activated to the LOCK or UNLOCK position. These inputs allow the DDM to detect a door lock or unlock request. The DDM provides both power and ground to the driver door lock and unlock switches. When the driver door lock switch is activated, a ground is supplied through the driver door switch to the driver door lock input which is pulled low. When the DDM detects low voltage on the driver door lock input, the DDM will lock the driver door. The DDM will also send a message on the serial data line to the passenger door module (PDM) to lock the passenger door. When the driver door unlock switch is activated, the DDM will unlock the driver door and also send a message on the serial data line to the PDM to unlock the passenger door. The passenger door lock and unlock function operates the same as the driver door except when the PDM detects low voltage on the passenger door lock input, the lock or unlock message is sent to the DDM. Both door modules provide output control to their respective door lock motors based upon a lock or unlock switch input, or from a message received on the serial data line from the other door module. The door modules provide both power and ground through the door lock actuator unlock control, driver door lock actuator unlock control and the door lock actuator lock control circuits to the door lock motors. The lock and unlock output operation is similar to each other except that the polarity of the voltage applied to the door lock motors is

reversed.

Automatic Lock

If the AUTO LOCK-ON feature is selected, the vehicle will automatically lock both doors when the transmission is shifted out of PARK. In manual transmission vehicles, both doors will lock when the vehicle exceeds 16 km/h (10 mph).

The AUTO LOCK-OFF feature will disable the automatic lock function.

For information on enabling or disabling the automatic door locks refer to **Vehicle Personalization** in Personalization.

Automatic Unlock

If the AUTO UNLOCK-DRIVER feature is selected, the vehicle will automatically unlock the driver door when the ignition is turned OFF and the key is removed from the ignition.

If the AUTO UNLOCK-BOTH feature is selected, the vehicle will automatically unlock both doors when the ignition is turned OFF and the key is removed from the ignition.

The AUTO UNLOCK-OFF feature will disable all automatic unlock functions.

For information on enabling or disabling the automatic door unlock feature refer to **Vehicle Personalization** in Personalization.

DOOR AJAR INDICATOR DESCRIPTION AND OPERATION

Door Ajar Indicator

The IPC illuminates the DOOR AJAR indicator in the message center when the BCM detects that one of the doors is open. The IPC receives a class 2 message from the BCM indicating the door ajar status. If this message is displayed and the vehicle speed is greater than 0 MPH a chime will sound.

OUTSIDE MIRROR DESCRIPTION AND OPERATION

Power Mirrors

The driver mirror motor left/down control circuit provides an input to the driver door module (DDM) when the LH mirror select switch is activated. This input allows the DDM to detect a mirror up switch, mirror down switch, mirror left switch or mirror right switch request from the driver door switch. The DDM provides both power and ground to the mirror switches. When the mirror up or down switch is activated, a ground is supplied through the mirror up or down switch to the DDM mirror up or down input which is pulled low. When the DDM detects low voltage on the left mirror switch up or down signal input, the DDM will command the mirror verticality. If the DDM detects low voltage on the left mirror switch left or right input, the DDM will command the mirror horizontally. If the RH mirror is selected, the DDM will send a message on the serial data line to the passenger door module (PDM) to operate the RH mirror in the direction selected by the RH mirror switch. The

DCMs provide both power and ground for mirror output control through the vertical and horizontal mirror motor control circuits. The direction of the mirror motor is determined by the polarity of the voltage applied to the mirror motor.

Heated Mirrors

The driver door module (DDM) and passenger door module (PDM) control the heated mirror functions. The DDM supplies power and ground to the driver heated mirror and the PDM supplies it to the passenger heated mirror. When the door modules receive a message on the serial data line indicating the rear defogger was turned ON, both door modules will activate the heated mirror by applying voltage to the heated mirror element feed circuit.

Memory Mirrors

The driver door module (DDM) and passenger door module (PDM) can recall mirror positions. The door modules receive mirror position signals from the mirror horizontal and vertical position sensors. These signals are used by the door modules during memory recall to determine the horizontal and vertical positions of the driver and passenger mirrors. The door modules command the memory mirror settings based on the voltage level received from the horizontal and vertical position sensors. The door modules provides a 5 volt supply and ground to the sensors. The vertical and horizontal position sensors are variable resistors which monitor the voltage level across a signal circuit. When either of the memory switches is pressed, a ground is supplied through the DDM, pulling the memory switch low. When the DDM detects low voltage on a memory input, it will activate the appropriate memory function, which also sends messages on the serial data line to other systems responsible for memory recall functions. When the DDM sends a memory recall message on the serial data line, the PDM will command the passenger mirror to the appropriate position.

For information on programming the memory mirrors refer to **Driver Personalization** in Personalization.

Mirrors - Outside Automatic Day/Night Feature

The automatic day/night feature of the driver outside rearview mirror is controlled by the inside rearview mirror. The inside rearview mirror supplies a signal and a low reference to the driver outside rearview mirror. The voltage on the signal circuit of the driver outside rearview mirror varies between 0.5 to 1.5 volts depending on light conditions present at the inside rearview mirror. At night, with the automatic day-night feature enabled, the driver outside rearview mirror will automatically darken with the inside rearview mirror to reduce the glare from the headlamps from behind. The voltage on the signal circuit of the driver outside rearview mirror will be near 1.5 volts. In the daytime, the mirrors are in a normal state. The voltage on the signal circuit of the driver outside rearview mirror may be less than or near 0.5 volts. Refer to **Automatic Day-Night Mirror Description and Operation** in Stationary Windows for further description and operation of the inside rearview mirror.

SPECIAL TOOLS AND EQUIPMENT

SPECIAL TOOLS

Special Tools

Illustration	Tool Number/ Description

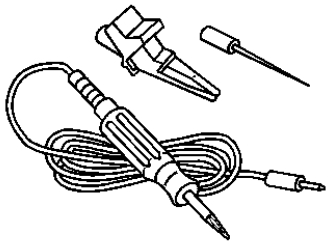	J 34142-B Test Light
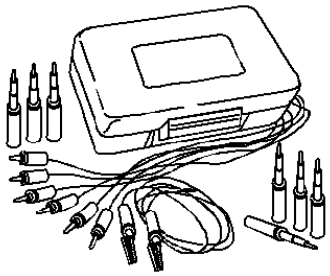	J 35616-A Connector Test Adapter Kit
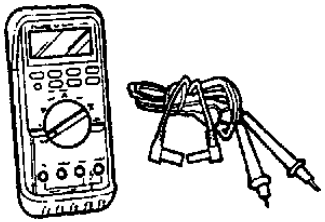	J 39200 Digital Multimeter

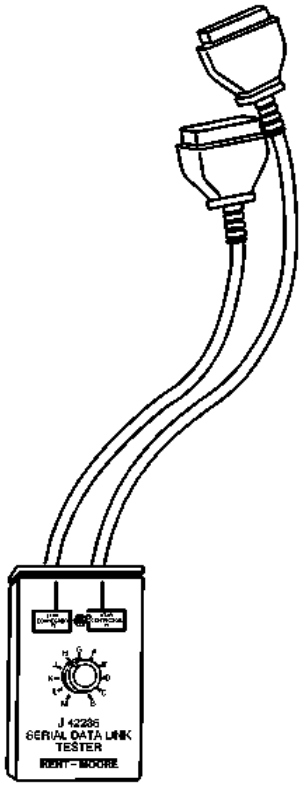	J 42236-A Serial Data Link Tester
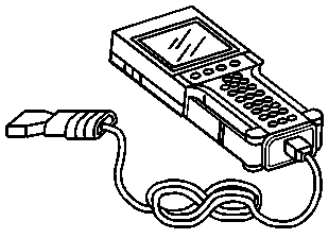	7000081 Tech 2 Kit