Fastener Tightening Specifications

Application	Specification	
	Metric	English
Rear Window Washer Nozzle Screw	2 N·m	18 lb in
Rear Window Wiper Arm Nut to Pivot Shaft	11 N·m	97 lb in
Washer Solvent Container Nut	10 N·m	89 lb in
Washer Solvent Container Screw	9.5 N·m	84 lb in
Windshield Washer Container Filler Tube Bolt	10 N·m	89 lb in
Wiper Arm Retaining Nut - Front	25 N·m	18 lb ft
Wiper Motor Pivot Shaft Retaining Nut - Rear	25 N·m	18 lb ft
Wiper Motor Bolts to Liftgate Panel	10 N·m	89 lb in
Wiper Motor to Wiper Transmission Frame Bolts	8 N·m	71 lb in

cardiagn.com

Front Wiper Washer

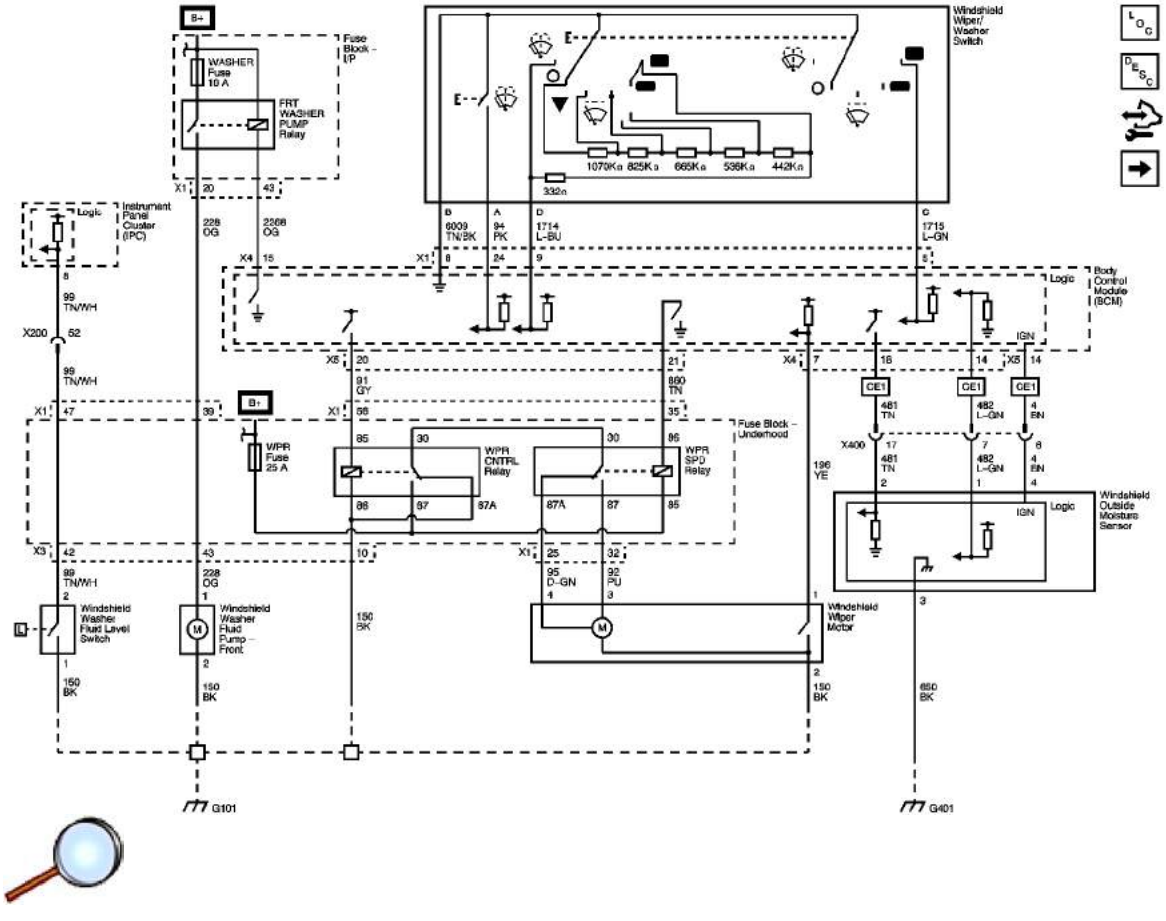

cardiagn.com

[redacted]

Heated Washer Nozzle

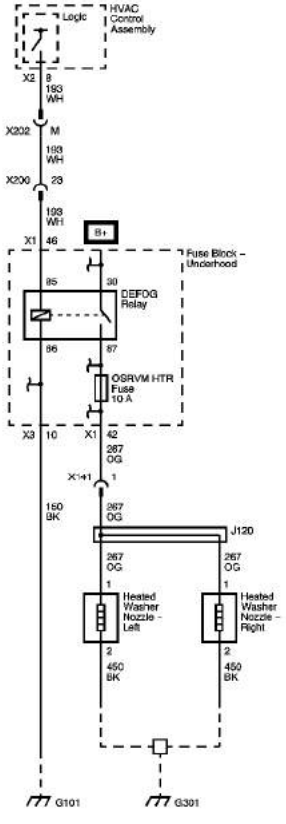

cardiagn.com

Rear Wiper Washer

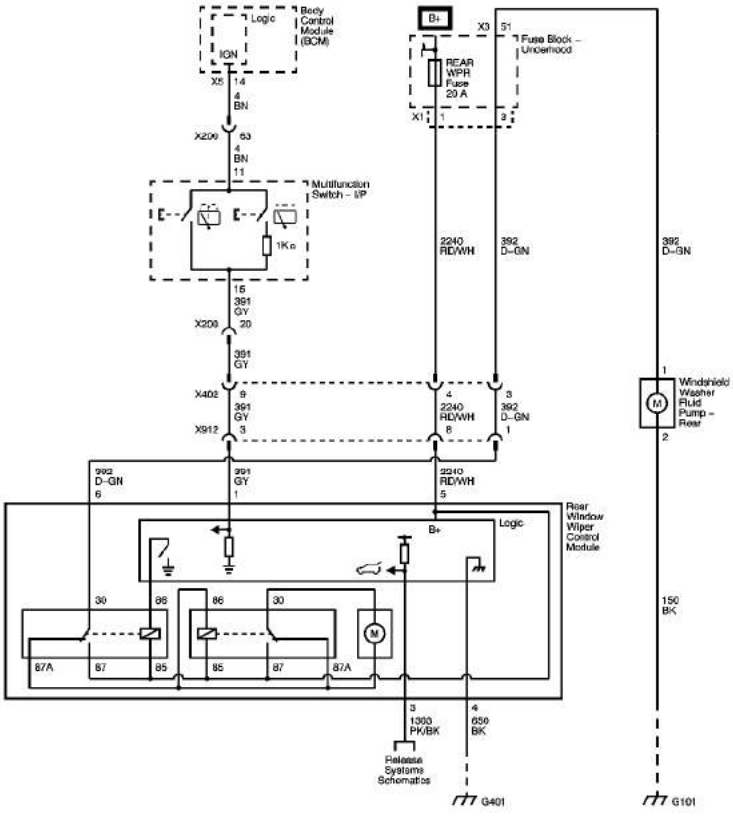

cardiagn.com

Windshield Wiper and Washer Switch Replacement

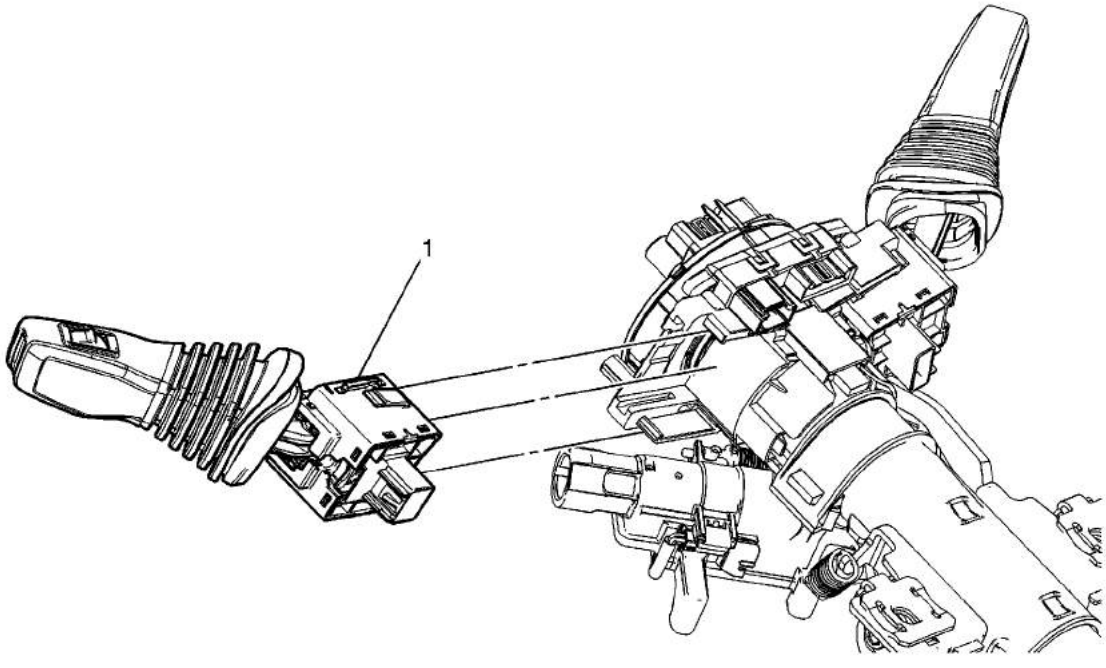

Callout	Component Name
Preliminary Procedure Remove the steering column upper trim cover. Refer to Steering Column Upper Trim Cover Replacement.	
1	Windshield Wiper and Washer Switch **Procedure** 1. Disconnect any electrical connectors as needed. 2. Depress the locking tabs and pull on the windshield wiper and washer switch to remove it.

cardiagn.com

Windshield Washer Nozzle Replacement (VUE)

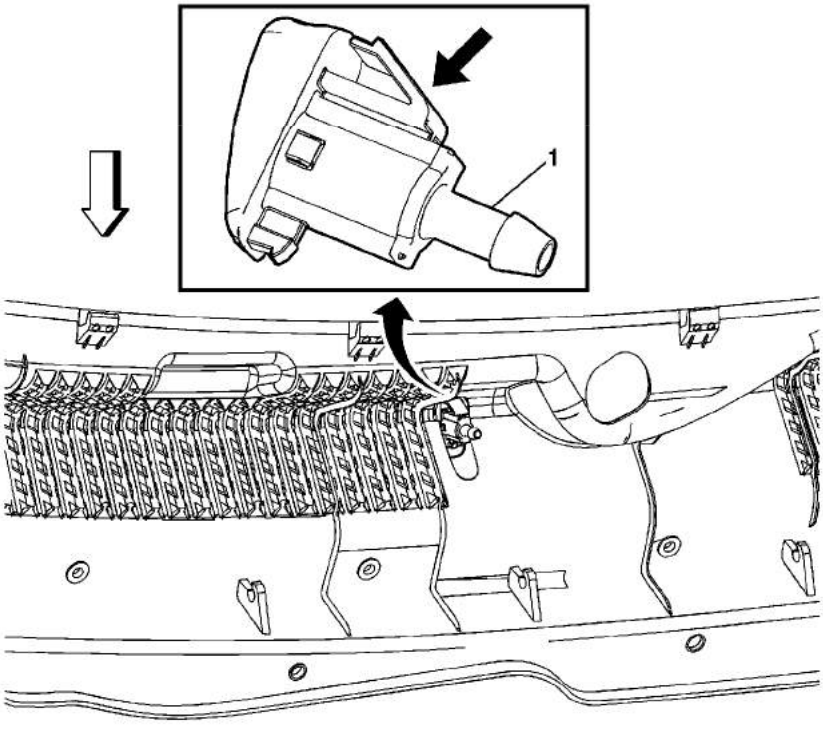

Callout	Component Name
Preliminary Procedure Remove the air inlet grille panels. Refer to Air Inlet Grille Panel Replacement. **Tip** If only the passenger side washer nozzle needs to be replaced, only remove the passenger side air inlet grille.	
1	Windshield Washer Nozzle Assembly **Procedure** 1. Depress the tab on the nozzle and roll the nozzle forward from the air inlet grille panel. 2. If equipped with heated washer nozzles, disconnect the electrical connector for both washer nozzles.

cardiagn.com

Windshield Washer Nozzle Replacement (XA7)

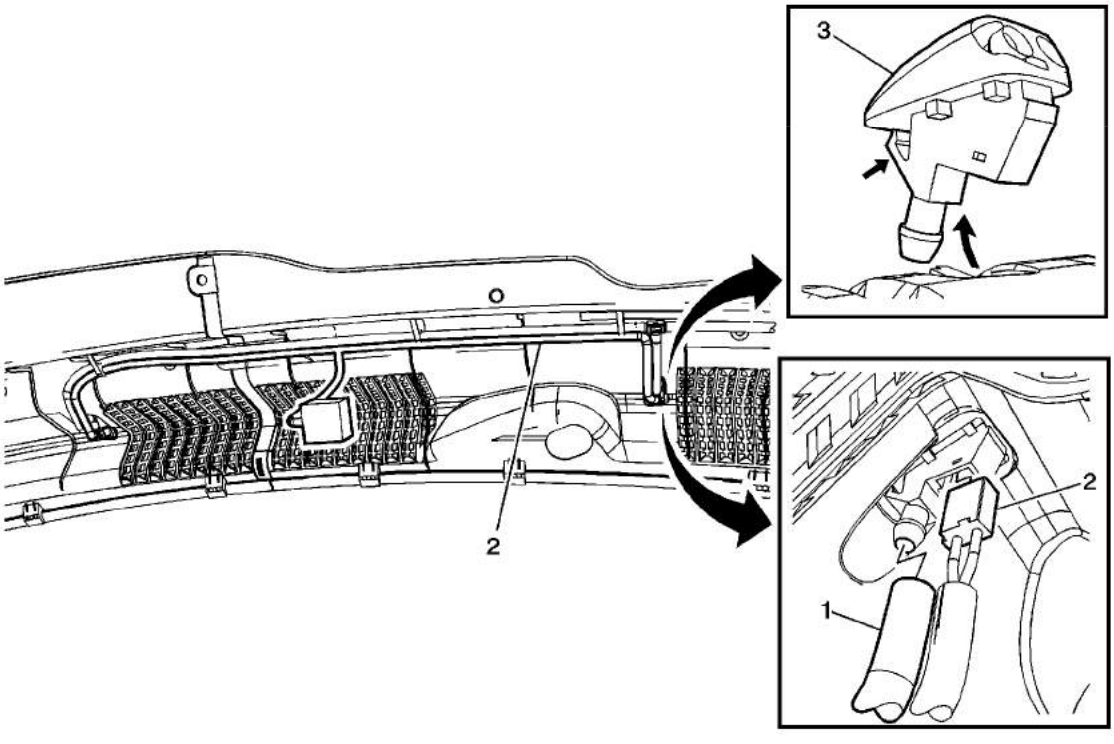

Callout	Component Name
Preliminary Procedure Remove the air inlet grille panels. Refer to Air Inlet Grille Panel Replacement. **Tip** If only the passenger side heated washer nozzle needs to be replaced, only remove the passenger side air inlet grille.	
1	Windshield Washer Nozzle Hose Assembly **Tip** Disconnect the washer hose from the heated washer nozzle.
2	Heated Washer Nozzle Electrical Harness **Tip** Disconnect the electrical connection from the heated washer nozzle.
3	Heated Washer Nozzle **Tip** Depress the tab on the heated nozzle and roll the nozzle forward out from the air

© 2010 General Motors Corporation. All rights reserved.

cardiagn.com

cardiagn.com

Rear Window Washer Nozzle Replacement

Removal Procedure

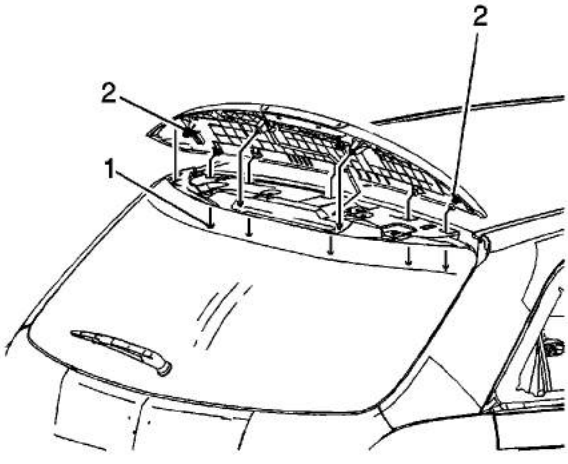

1. Remove the rear spoiler. Refer to Rear Spoiler Replacement.
2. Invert the spoiler and place on a clean dry, protected surface.

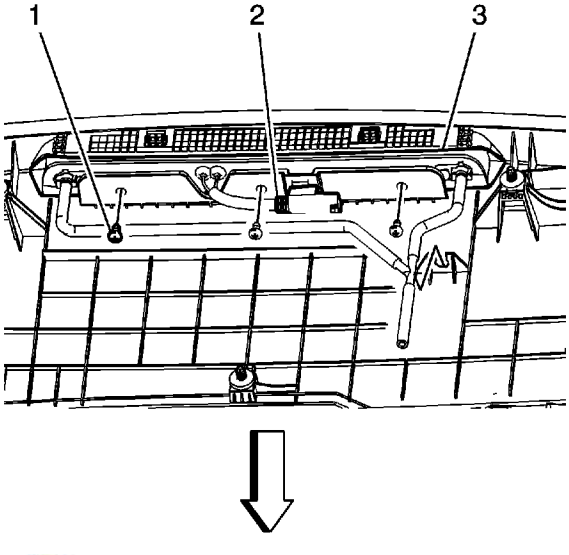

3. Remove the spoiler to high mounted stop lamp screws (1).
4. Disengage the washer hose from the spoiler.
5. Disengage the electrical connector (2) from the spoiler bracket.

© 2010 General Motors Corporation. All rights reserved.

cardiagn.com

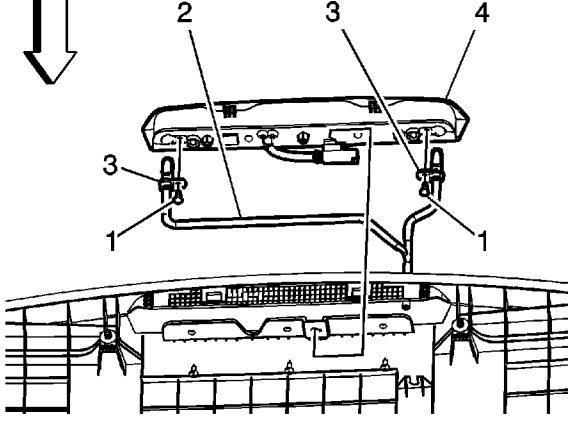

7. Remove the washer nozzle screws (1).
8. Remove the rear washer nozzles (3) from the high mounted stop lamp (4) assembly.
9. Disconnect the rear washer hose from the nozzles.

Installation Procedure

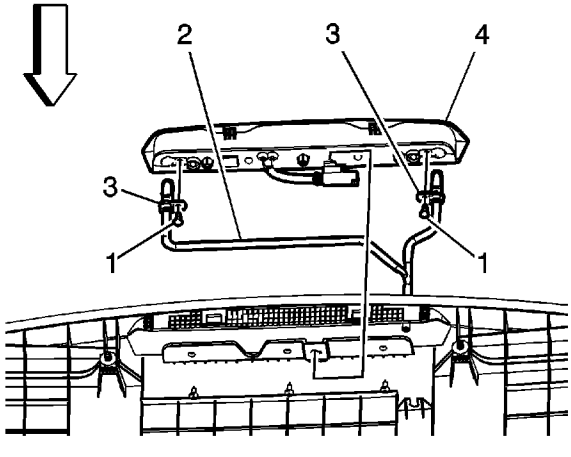

1. Secure the rear washer hose (2) to the washer nozzles (3).
2. Install the washer nozzles (3) into the rear high mounted stop lamp assembly (4).

Caution: Refer to Fastener Caution in the Preface section.

cardiagn.com

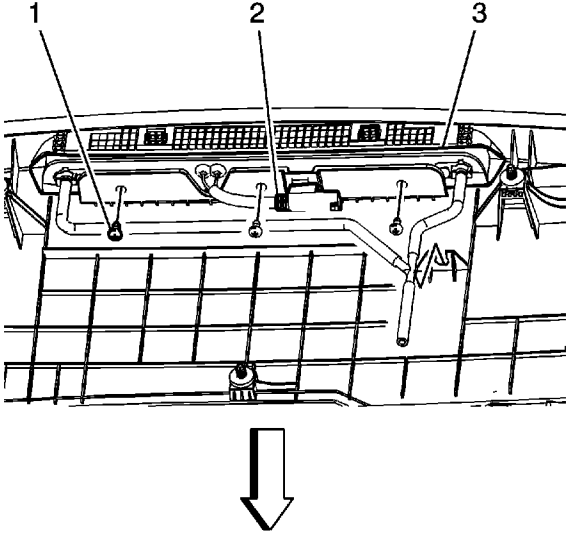

4. Position the high mounted stop lamp (3) to the rear spoiler bracket.
5. Install the screws (1) to secure the high mounted stop lamp to the rear spoiler bracket. Tighten screws at **2 N·m (18 lb in).**
6. Position and secure the high mounted stop lamp electrical connector (2) to the spoiler bracket.
7. Secure the washer hose to the spoiler.

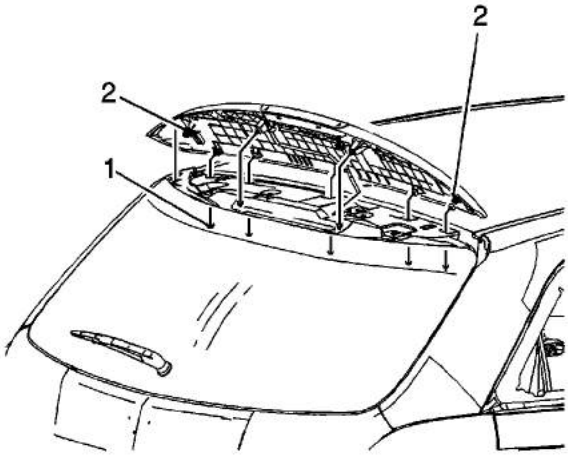

8. Install the rear spoiler to the vehicle. Refer to Rear Spoiler Replacement.

cardiagn.com

Washer Hose Repair

Washer Hose Repair and Routing

The washer hose can be a component within the main body wire harness conduit. The washer hose is a hard plastic convoluted tube that could be wrapped with electrical tape along the main body electrical wiring harness. It starts underhood where it connects to the washer solvent container jumper hose. The washer hose usually routes into the main body wire harness underhood and passes through the front of the dash panel grommet. The washer hose is routed either inside the vehicle interior behind the left front side window garnish molding, along the floor pan area and continues to the rear of the vehicle, as equipped. The washer hose could be routed back to the center of the vehicle where it could possibly connect to the high mounted stop lamp or the rear window washer pump where it connects by rubber flexible tubing, at the lift gate opening, if equipped.

Removal Procedure

1. Locate the damaged section of the washer hose, this will be hard plastic convoluted tubing.
2. If the leak is located inside the main body wire harness, carefully cut the electrical tape, securing the harness within the electrical conduit to expose the damaged section of washer hose.
3. Cut and remove the damaged section of the washer hose.

Installation Procedure

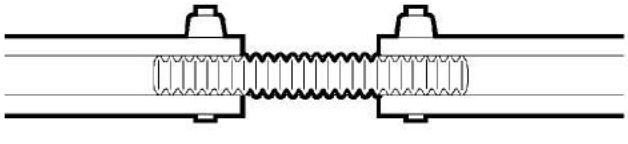

1. In order to repair the damaged section of washer hose, use the following steps:
   - Use a 9.5 mm (3/8 in) vacuum hose to replace damaged section.

[redacted]

cardiagn.com

Secure each end of the vacuum hose with a 100 mm (4 in) cable tie.

2. Verify the repair by activating the front and rear (if equipped) washer system and check the system for leaks.
3. If the leak was located inside the main body wire harness or conduit, use electrical tape to retain the repaired section to the electrical wire harness conduit.
4. If the leak was located external from the conduit, secure the hose with cable ties to prevent unnecessary movement and noise.

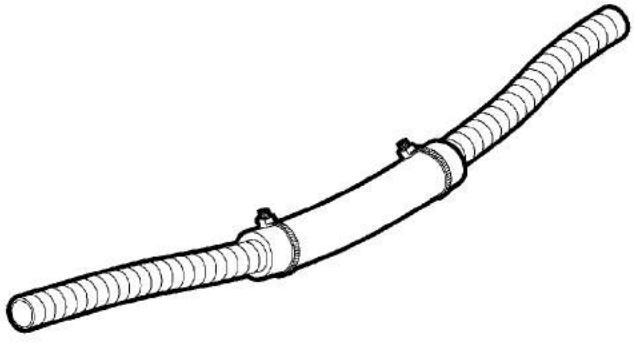

5. If the leak requires the washer hose to be removed in the front of dash panel grommet complete the following:
   - Carefully slit the grommet next to the original washer hose.
   - Pass the new section of the washer hose through, next to the existing grommet tubing.
   - Repair the hose on either side of the grommet.
   - Use small tie straps to secure the hose onto the washer tubing.
   - Verify the repair by operating the washer system.
   - Seal any openings in the grommet, larger than the hose that was passed through.

cardiagn.com

Windshield Washer Solvent Container Hose Replacement

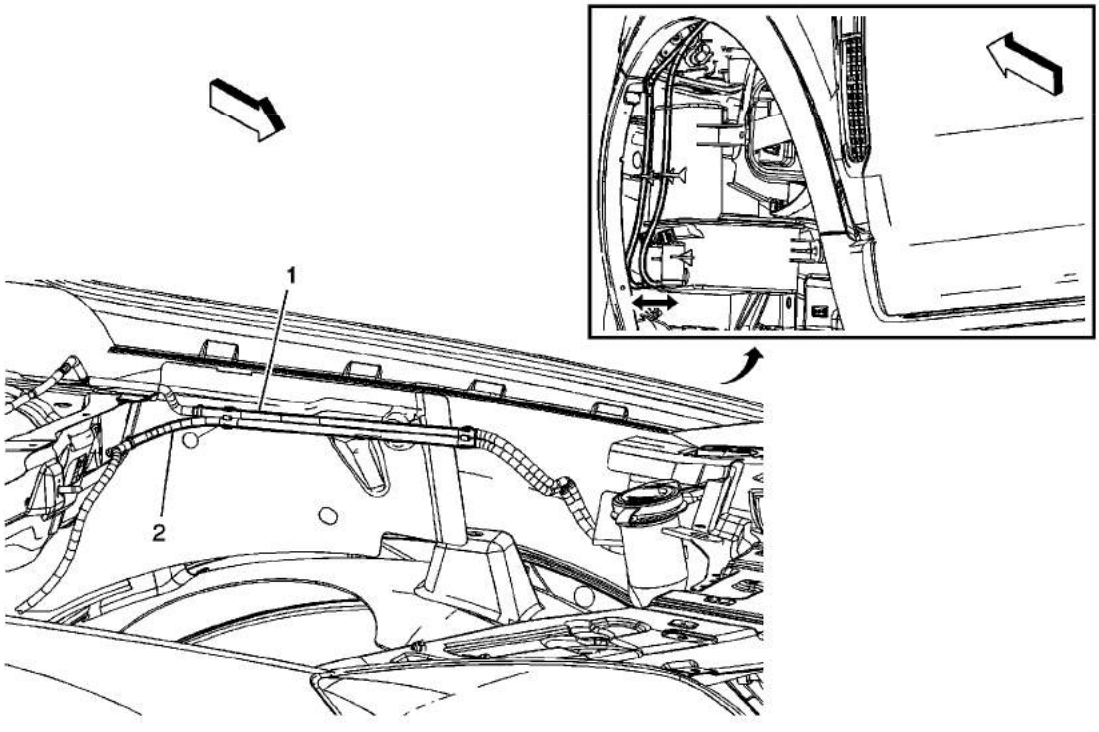

Callout	Component Name
Preliminary Procedure 1. Remove the front left side wheelhouse liner. Refer to Front Wheelhouse Liner Replacement. 2. Drain the windshield washer solvent into a clean suitable container. 3. Disconnect both front and rear windshield washer solvent container hoses from the washer pump spouts. 4. Disengage both hoses from the windshield washer container brackets.	
1	Windshield Washer Solvent Container Hose Front **Procedure** 1. Disengage the forward portion of the hoses from the clips securing the hoses to the front wheelhouse panel upper outer LH rail. 2. Disconnect the front washer pump hose from the windshield washer nozzle hose assembly. **Tip** [redacted]

cardiagn.com

2	Windshield Washer Solvent Container Hose Rear **Procedure** 1. Disengage the rearward portion of the hoses from the clips securing the hoses to the front wheelhouse upper outer rear LH side rail reinforcement. 2. Disconnect the rear washer pump hose from the rear window washer nozzle hose assembly. **Tip** Use clean windshield washer solvent at the connections when securing the washer hoses to the appropriate connections.

cardiagn.com

Windshield Washer Hose Replacement

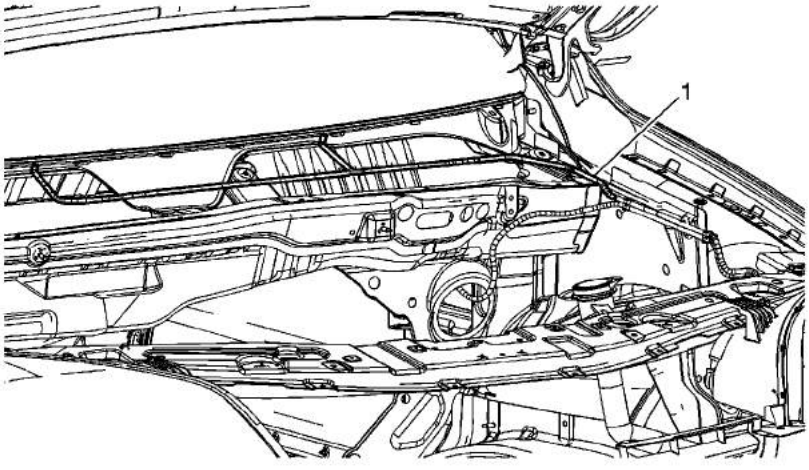

Callout	Component Name
Preliminary Procedure Remove the air inlet grille panel. Refer to Air Inlet Grille Panel Replacement .	
1	Windshield Washer Nozzle Hose Assembly **Procedure** 1. Disconnect the hose from both washer nozzles. 2. Remove the hose from the retention locations on the underside of the air inlet panel. 3. Ensure when re-installing the washer hose, the hose is properly routed and retained to the air inlet panel.

cardiagn.com

Windshield Washer Solvent Container Filler Tube Replacement

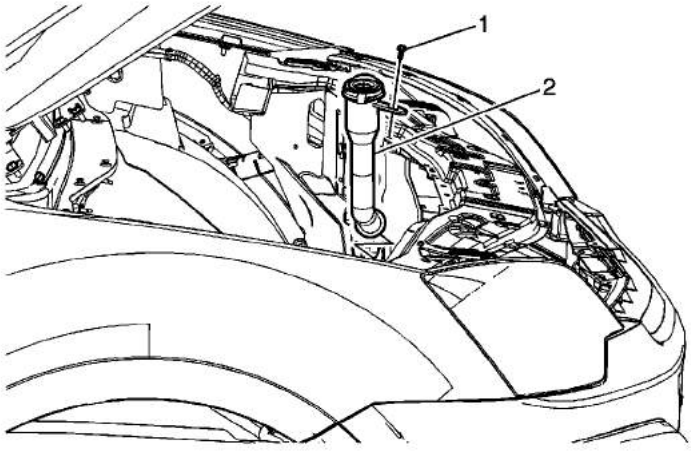

Callout	Component Name
Preliminary Procedure Remove the left front headlamp assembly in order to access the filler neck at the washer container opening. Refer to Headlamp Replacement.	
1	Windshield Washer Solvent Container Filler Tube Assembly Bolt **Caution:** Refer to Fastener Caution in the Preface section. **Tighten** 10 N·m (89 lb in)
2	Windshield Washer Solvent Container Filler Tube Assembly **Procedure** 1. Reach into the driver side of the engine compartment at the position where the filler neck enters the windshield washer container. 2. Grasp the filler neck at the side of the front compartment front left hand panel where the filler tube enters the windshield washer container. 3. Twist the fill tube slightly back and forth while pulling outward from the container. 4. Remove the filler tube. 5. Inspect and replace any damaged O-ring. 6. Use full strength windshield washer fluid at the filler neck seal upon re-assembly. 7. Aim the front headlamp assembly. Refer to Headlamp Aiming.

cardiagn.com

Windshield Washer Solvent Container Replacement

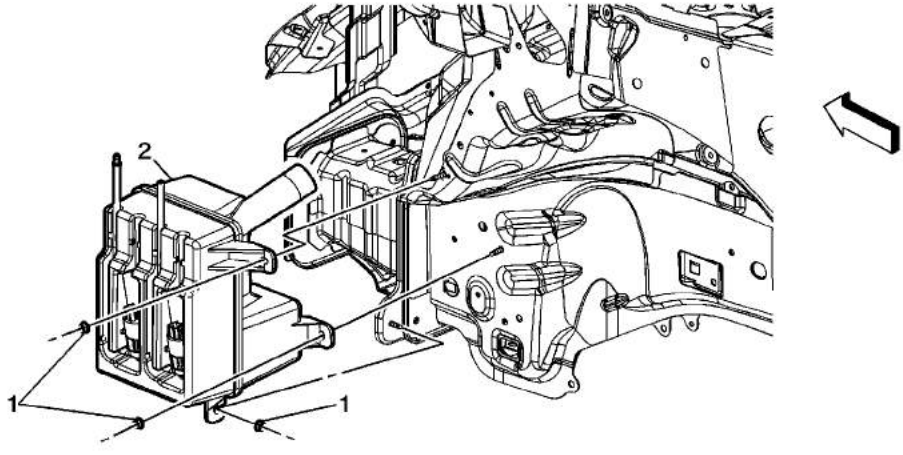

Callout	Component Name
Preliminary Procedure 1. Remove the front bumper fascia. Refer to Front Bumper Fascia Replacement. 2. Remove the washer container filler neck. Refer to Windshield Washer Solvent Container Filler Tube Replacement 3. Drain the windshield washer solvent into a suitable clean container. 4. Disengage the washer pump hoses from the washer container. 5. Remove the washer pump hoses from both washer pumps. 6. Disconnect the level sensor electrical connector. 7. Disconnect both front and rear washer pump electrical connectors.	
1	Windshield Washer Container Nut (Qty: 3) **Caution:** Refer to Fastener Caution in the Preface section. **Tighten** 10 N·m(89 lb in)
2	Windshield Washer Solvent Container **Procedure** 1. Remove the washer container from the supporting studs. 2. Remove and transfer the windshield washer solvent container level sensor. Refer to Windshield Washer Solvent Level Switch Replacement. 3. Remove the windshield washer pump. Refer to Windshield Washer Pump Replacement. 4. Remove the rear window washer pump. Refer to Rear Window Washer Pump Replacement.

cardiagn.com

Windshield Washer Pump Replacement

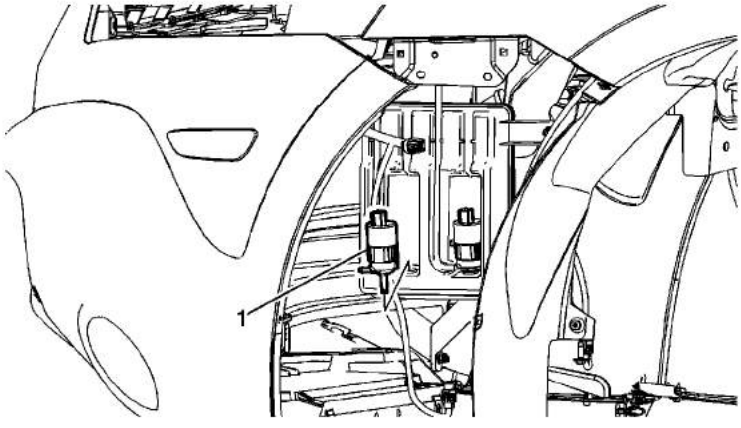

Callout	Component Name
Preliminary Procedure Remove the left front wheelhouse liner. Refer to Front Wheelhouse Liner Replacement.	
1	Windshield Washer Pump Front **Procedure** 1. Drain the windshield washer solvent into a suitable clean container. 2. Disconnect the electrical connector to the front washer pump. 3. Disconnect the washer pump hose at the pump. 4. Using 2 flat-bladed tools under the base of the washer pump, pry upward in order to release the pump from the washer pump grommet. 5. Discard the washer pump and grommet. **Tip** Use full strength washer solvent on the new grommet in order to aid in the installation of the new front windshield washer container pump.

cardiagn.com

Rear Window Washer Pump Replacement

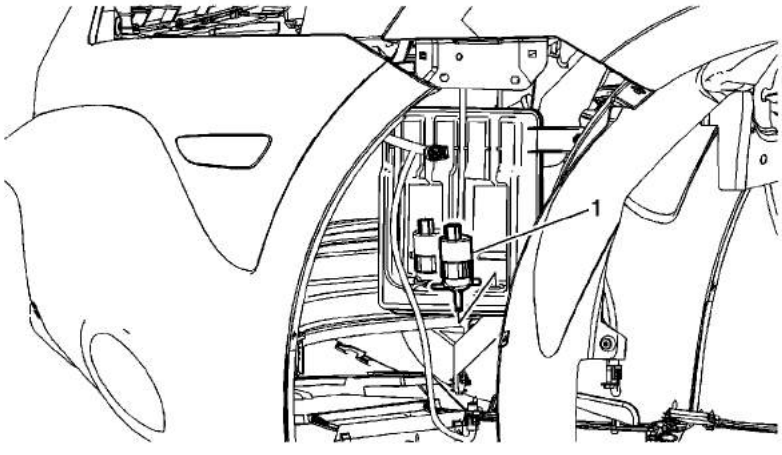

Callout	Component Name
Preliminary Procedure Remove the left front wheelhouse liner. Refer to Front Wheelhouse Liner Replacement.	
1	Rear Window Washer Pump **Procedure** 1. Drain the windshield washer solvent into a suitable clean container. 2. Disconnect the electrical connector to the rear washer pump. 3. Disconnect the washer pump hose at the pump. 4. Using 2 flat-bladed tools under the base of the washer pump, pry upward in order to release the pump from the washer pump grommet. 5. Discard the washer pump and grommet. **Tip** Use full strength washer solvent on the new grommet in order to aid in the installation of the new rear washer container pump.

cardiagn.com

Windshield Washer Solvent Level Switch Replacement

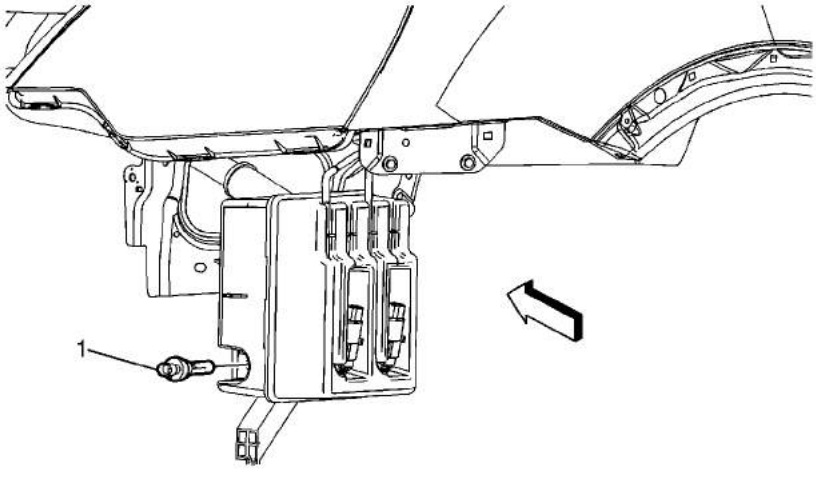

Callout	Component Name
Preliminary Procedure Remove the left front wheelhouse liner. Refer to Front Wheelhouse Liner Replacement.	
1	Windshield Washer Level Sensor Switch **Procedure** 1. Drain the windshield washer solvent into a suitable clean container. 2. Disconnect the electrical connector to the level sensor switch. 3. Using 2 flat-bladed tools, remove the level sensor switch from the windshield washer container. 4. Discard the level sensor and grommet.

cardiagn.com

Air Inlet Grille Panel Replacement

Removal Procedure

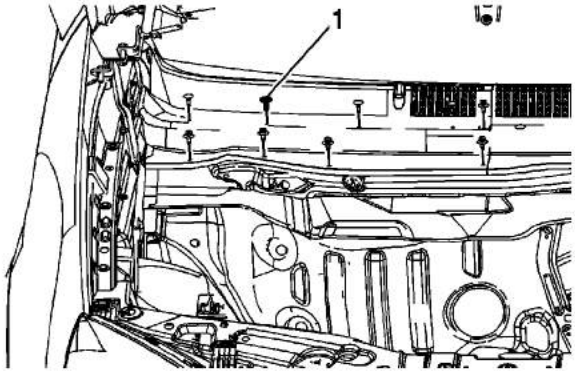

1. Open and support the hood.
2. Remove both wiper arm assemblies. Refer to Windshield Wiper Arm Replacement .
3. Disengage the hood rear corner seal assembly from the fender flange.

   Important: The passenger side air inlet grille panel must be removed first then the driver side can be removed.

4. Release and remove the 5 retainers (1) securing the air inlet grille panel to the upper plenum.

cardiagn.com

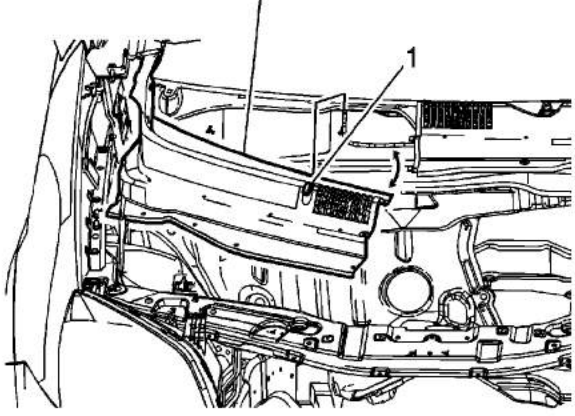

5. Lift the inside edge of the air inlet grille panel (2) and swing the panel inward, releasing the tabs from the lower windshield edge.
6. Disconnect the windshield washer hose from the washer nozzle (1).
7. Disconnect the washer hose from the bottom side of the air inlet grille panel.
8. Remove the passenger side air inlet grille panel from the vehicle.

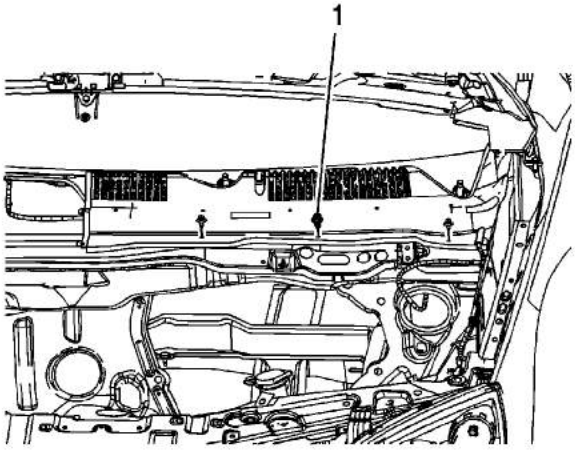

9. Release the 3 retainers (1) from the driver side of the vehicle.

cardiagn.com

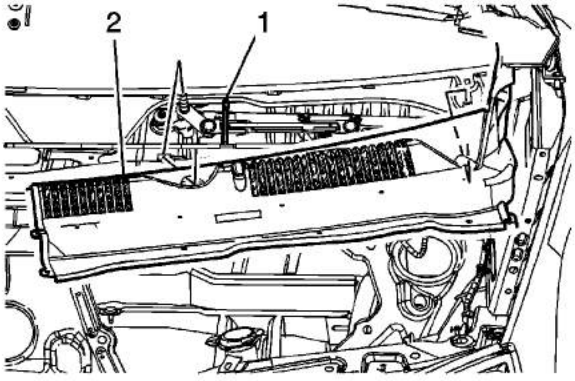

10. Lift the inside edge of the air inlet grille panel over the 2 wiper transmission pivot shafts and disconnect the washer hose from the washer nozzle.
11. Disconnect the windshield washer hose (1) from the bottom side of the air inlet grille panel.
12. Remove the driver side air inlet grille panel (2) from the vehicle.
13. Ensure the air inlet grille panel side seals are secure to the grille panel.

Installation Procedure

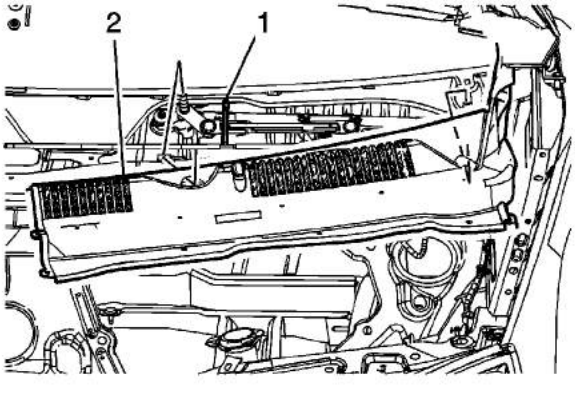

1. Position the driver side air inlet grille panel (2) to the plenum area.
2. Secure the windshield washer hose to the bottom side of the air inlet grille panel.
3. Install the driver side air inlet grille panel (2) to the vehicle.
4. Position the panel behind the hood hinge and over the wiper transmission pivot shafts.

cardiagn.com

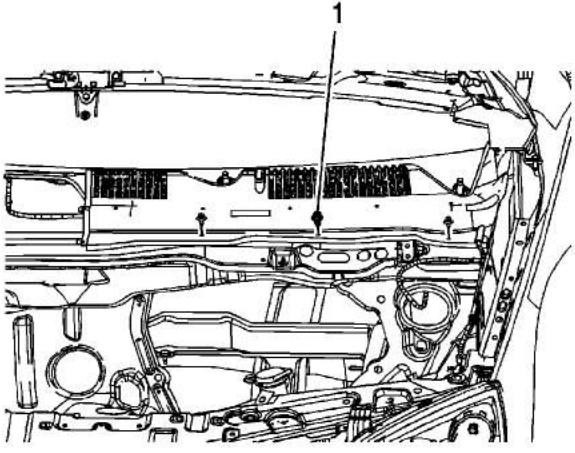

6. Align the holes in the air inlet grille to the holes in the plenum.
7. Install the retainers (1), push the centers of the retainers inward to secure.

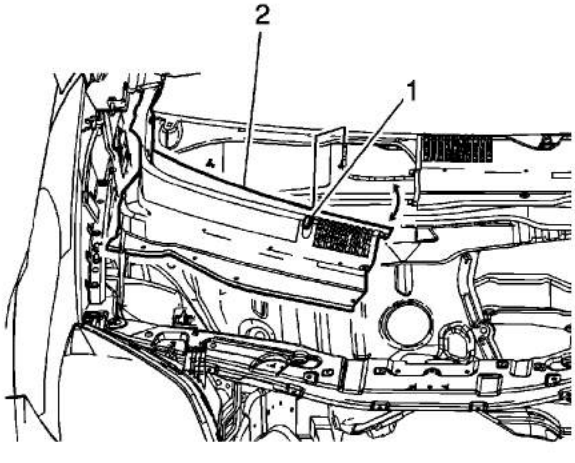

8. Position the passenger side air inlet grille panel (2) to the plenum area.
9. Secure the windshield washer hose to the plenum and to the washer nozzle (1).
10. Position the panel around the hood hinge and ensure the tabs on the backside of the panel are located under the bottom edge of the windshield.

cardiagn.com

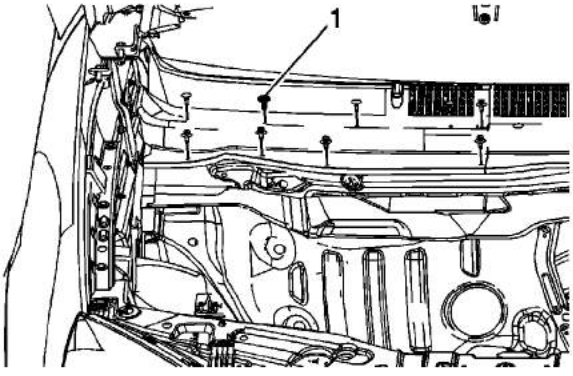

11. Align the holes in the air inlet grille panel to the holes in the upper plenum.
12. Install the 5 retainers.
13. Push the center of the retainers inward to secure.
14. Apply the hood rear corner seal assembly to the air inlet panel, apply adhesive if needed to secure.
15. Secure the 9 retaining clips inside the sealing strip to the air inlet grille panel.

cardiagn.com

Air Inlet Grille Panel Side Seal Replacement

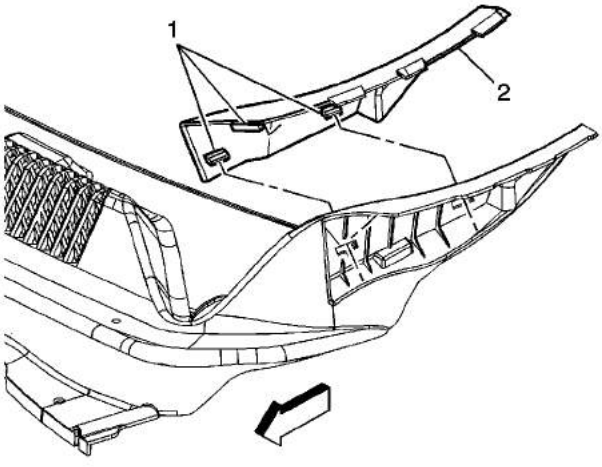

Callout	Component Name
Preliminary Procedure Open the hood in order to access the air inlet grille panel side seal.	
1	Air Inlet Grille Panel Side Seal Tabs **Procedure** 1. Release the tabs securing the air inlet grille panel side seal to the air inlet grille panel assembly. 2. Remove the upper edge of the seal from under the top of the fender flange.
2	Air Inlet Grille Panel Side Seal

cardiagn.com

Windshield Wiper Arm Replacement

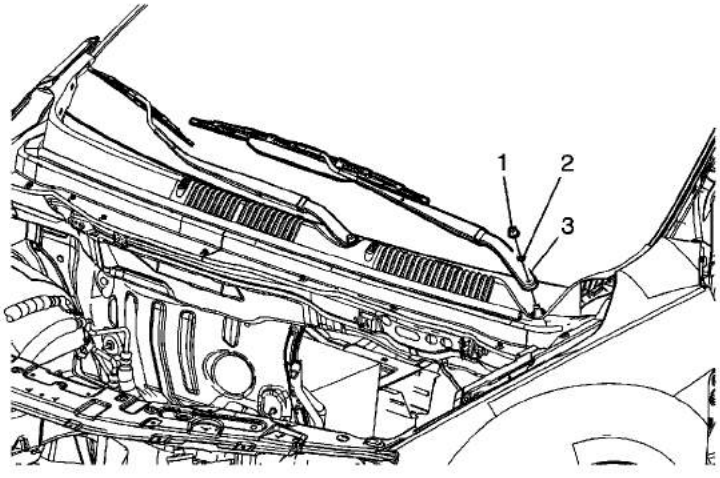

Callout	Component Name
Preliminary Procedure Open and support the hood in order to access and remove the wiper blade assembly. **Special Tools** J 39637 Wiper Arm Puller	
1	Windshield Wiper Arm Nut Cover **Tip** Gently pry the cap from the wiper arm nut.
2	Windshield Wiper Arm Nut **Caution:** Refer to Fastener Caution in the Preface section. **Procedure** 1. Gently rock the wiper arm side to side and remove. 2. If the wiper arm fails to release, use the J 39637 to release the arm from the pivot shaft. 3. Hold the driver side wiper arm blade tip to the center dot located in the windshield blackout below the dot matrix while securing the nut. 4. Hold the passenger side wiper arm blade tip to the passenger side outer dot located in the windshield blackout below the dot matrix while securing the nut. [redacted]

cardiagn.com

3	Windshield Wiper Arm **Procedure** 1. Remove the wiper blade assembly from the wiper arm. Refer to Windshield Wiper Blade Replacement. 2. Clean the transmission pivot shaft with a soft wire brush prior to installing the wiper arm back onto the pivot shaft.

cardiagn.com

Rear Window Wiper Arm Replacement

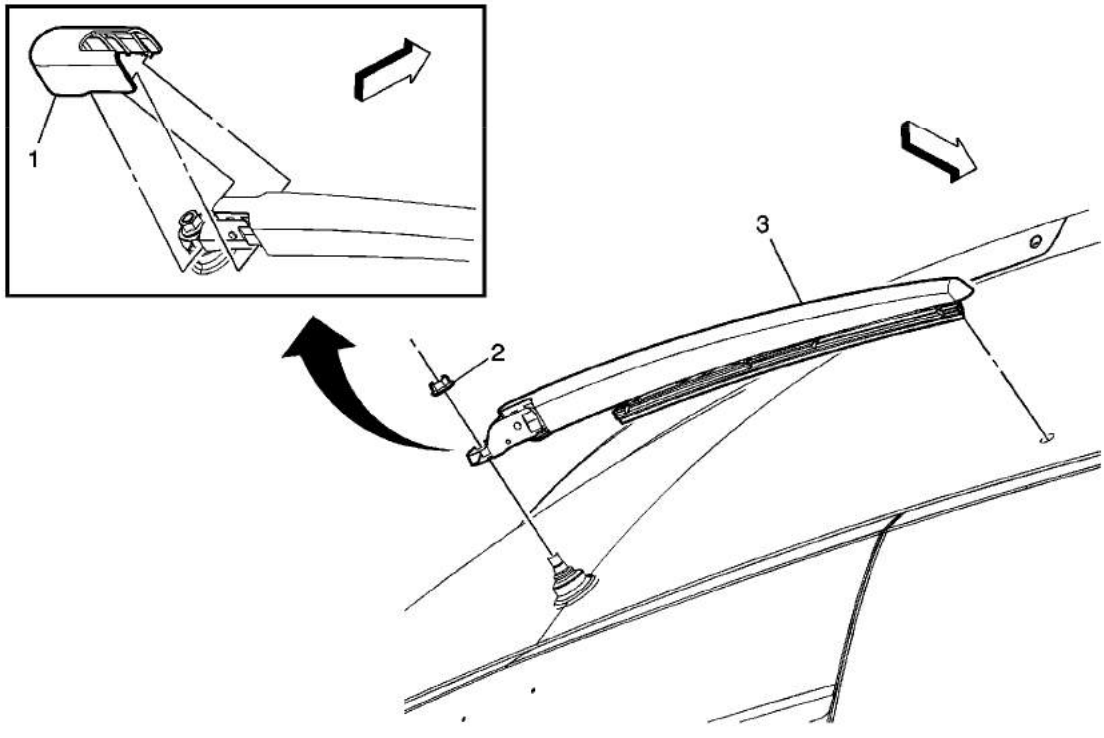

Callout	Component Name
1	Rear Window Wiper Arm Finish Cover **Tip** Carefully release the four finish cover locking tabs securing the cover to the wiper arm.
2	Rear Wiper Arm Pivot Shaft Nut **Caution:** Refer to Fastener Caution in the Preface section. **Tighten** 11 N·m (97 lb in)
3	Rear Window Wiper Arm Assembly **Procedure** 1. Remove the rear window wiper blade assembly from the rear wiper arm. Refer to Rear Window Wiper Blade Replacement. 2. Cycle the rear wiper motor completely back to the park position prior to installing the rear wiper arm.

© 2010 General Motors Corporation. All rights reserved.

cardiagn.com

	4. Wet cycle the rear wiper arm and re-check the blade tip alignment to the 2 mm black dot. If above or below the dot, repeat above steps.

cardiagn.com

Windshield Wiper Blade Replacement

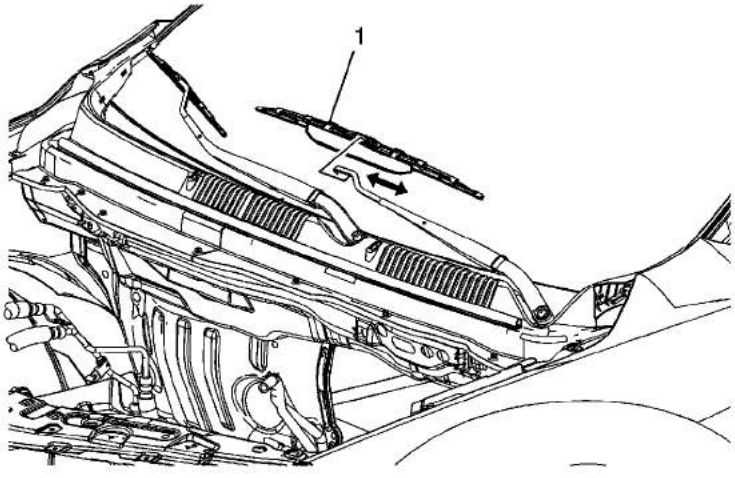

Callout	Component Name
1	Windshield Wiper Blade Assembly **Procedure** 1. Lift the wiper arm from the windshield. 2. Release the retention spring securing the blade to the arm assembly. 3. Pull the blade assembly from the sheep hook on the wiper arm. 4. Remove the wiper blade assembly.

cardiagn.com

Rear Window Wiper Blade Replacement

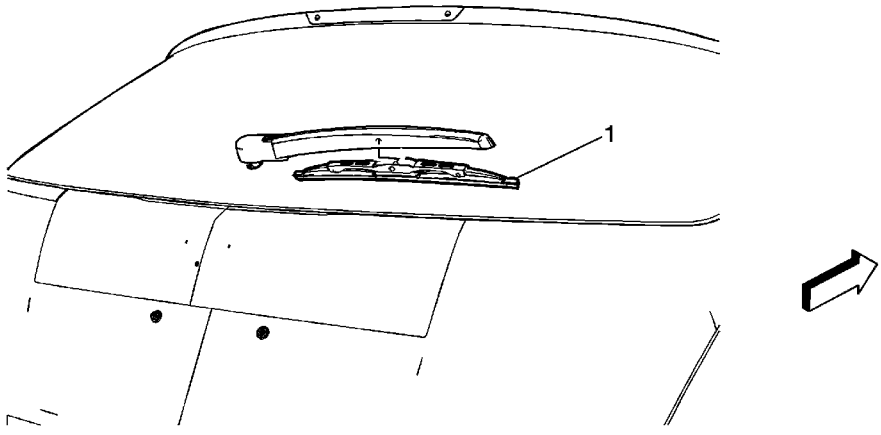

Callout	Component Name
1	Rear Window Wiper Arm Blade Assembly **Procedure** 1. Lift the wiper arm away from the rear liftgate window. 2. Rotate slightly the bottom edge of the blade away from the underside of the arm. 3. Apply downward pressure to the blade assembly, remove the wiper blade from the rear wiper arm.

cardiagn.com

Windshield Wiper Motor Replacement

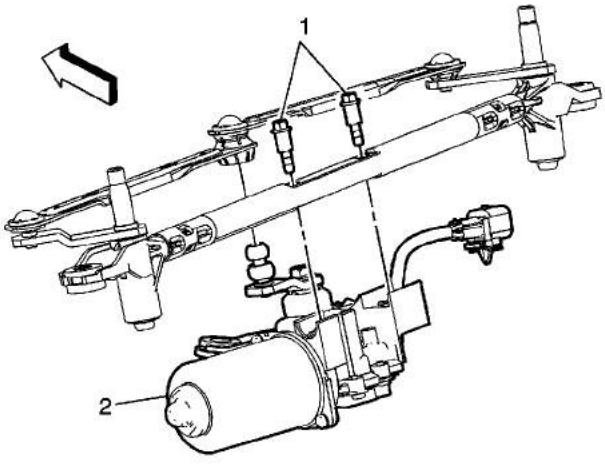

Callout	Component Name
Preliminary Procedure Remove the windshield wiper transmission frame assembly. Refer to Windshield Wiper Transmission Replacement.	
1	Windshield Wiper Motor Bolt (Qty: 2) **Caution:** Refer to Fastener Caution in the Preface section. **Tighten** 8 N·m (71 lb in)
2	Windshield Wiper Motor **Procedure** 1. Using a J 39232 Wiper Linkage Separator or similar tool remove the transmission drive links from the wiper motor crank arm ball stud. 2. Using a J 39529 Wiper Linkage Installer or similar tool install the wiper transmission drive links onto the wiper motor crank arm ball stud. **Tip** Apply a small amount of grease to the inner cup on the transmission links to aid in installation.

cardiagn.com

Liftgate Wiper Motor Replacement

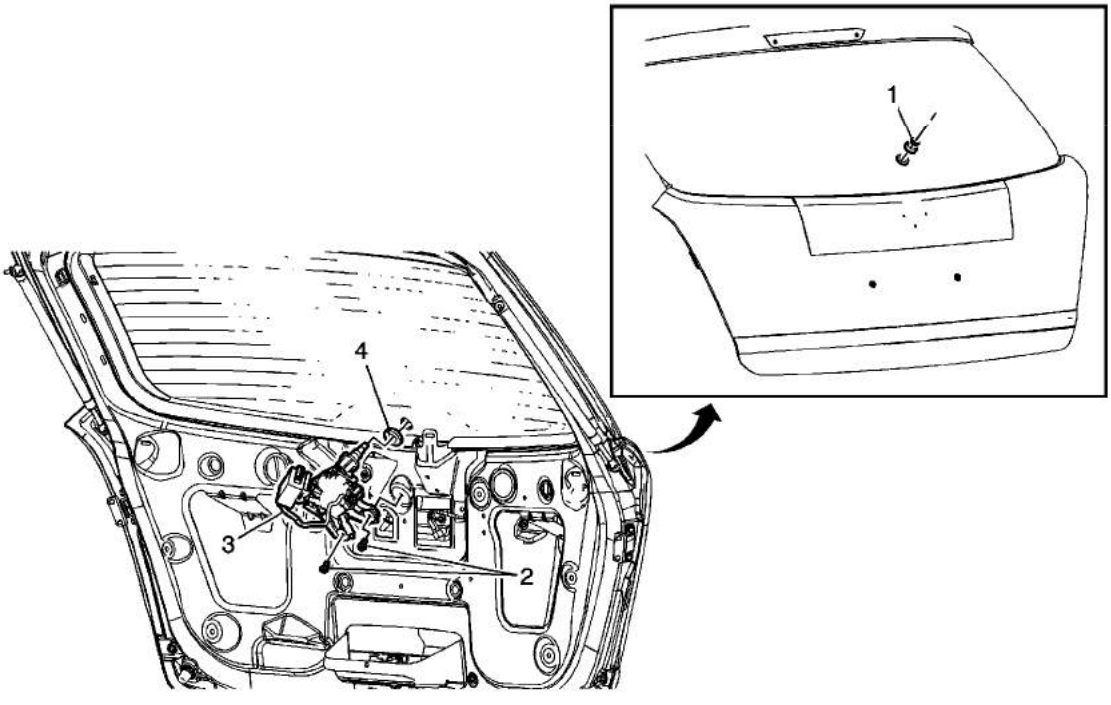

Callout	Component Name
Preliminary Procedure 1. Remove the rear liftgate wiper arm assembly. Refer to Rear Window Wiper Arm Replacement. 2. Remove the liftgate interior trim panel. Refer to Liftgate Trim Panel Replacement.	
1	Rear Window Wiper Motor Pivot Shaft Nut **Caution:** Refer to Fastener Caution in the Preface section. **Tighten** 25 N·m (18 lb ft)
2	Rear Window Wiper Motor Bolts **Tighten** 10 N·m (89 lb in)
3	Rear Window Wiper Motor **Tip** Disconnect the wiper motor electrical connectors.
[redacted]	

cardiagn.com

4	**Tip** Ensure the gasket is indexed properly to the rear liftgate window.

cardiagn.com

Windshield Wiper Transmission Replacement

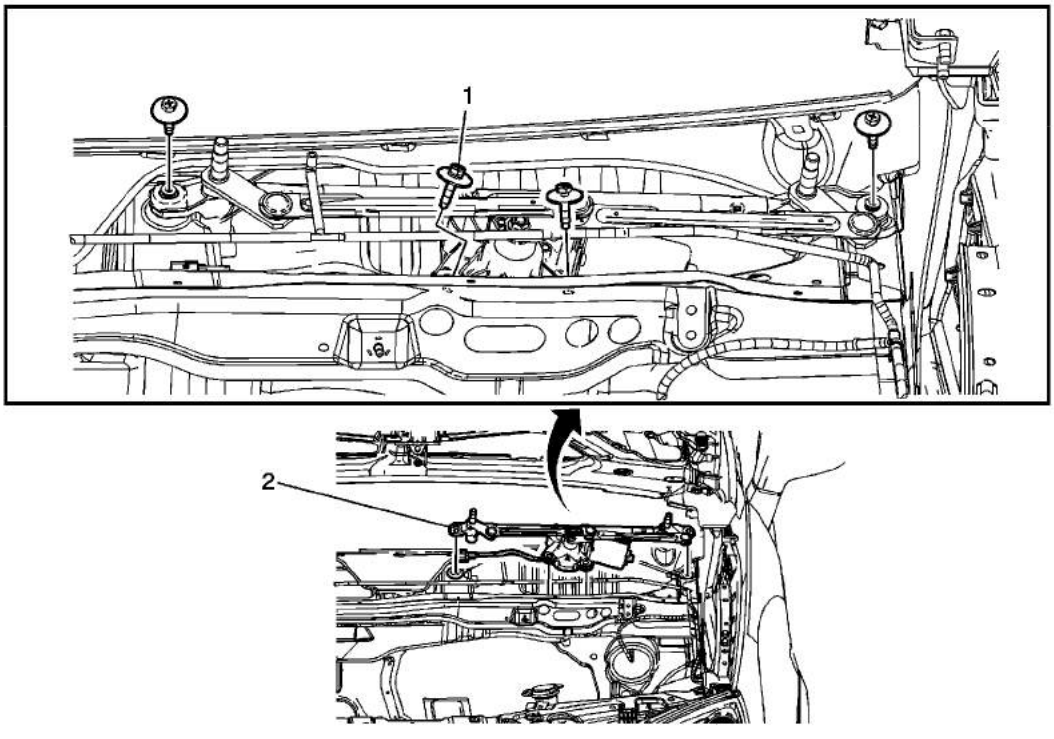

Callout	Component Name
Preliminary Procedure Remove the air inlet grille panels. Refer to Air Inlet Grille Panel Replacement	
1	Windshield Wiper Transmission Frame Bolt (Qty: 4) **Caution:** Refer to Fastener Caution in the Preface section. **Tighten** 8 N·m (71 lb in)
2	Windshield Wiper Transmission Frame Assembly **Procedure** 1. Disconnect the windshield wiper motor electrical connector. 2. Roll the frame assembly forward in order to release the transmission frame assembly from the upper plenum supports. 3. Remove the windshield wiper motor from the wiper transmission frame assembly. Refer to Windshield Wiper Motor Replacement.

cardiagn.com

Windshield Glass Cleaning

Clean the windshield with windshield cleaner, GM P/N 1050011 (Canadian P/N 992727) or equivalent. The cleaner should not harm the paint finish or scratch the glass. The glass is clean when the water no longer beads, but sheets across the entire glass surface.

cardiagn.com

Wiper Blade Element Cleaning

Lift each blade assembly off of the windshield and clean the element with a cloth saturated with full strength washer solvent. Then rinse the blade assemblies with clear water.

cardiagn.com

Wiper Chatter Repair

Some vehicles may exhibit a condition where the windshield wipers chatter and/or wipe unevenly. Several items may contribute to this condition. To completely repair this condition, ALL of the items listed should be tested and repaired as necessary.

- Clean the windshield glass.
- Clean the wiper blade elements.
- Perform the wiper arm pressure test.
- Inspect the wiper blade element set.

cardiagn.com