Fastener Tightening Specifications

Application	Specification	
	Metric	English
Electronic Power Steering Motor Control Module Bolt (non-two mode hybrid)	11.5 N·m	102 lb in
Front Engine Lift Bracket Bolt	50 N·m	37 lb ft
Power Steering Assist Motor Bolt (non-two mode hybrid)	18 N·m	13 lb ft
Power Steering Cooler Pipe Fitting	25 N·m	18 lb ft
Power Steering Fluid Reservoir Bracket Bolt	9 N·m	80 lb in
Power Steering Fluid Reservoir Stud	9 N·m	80 lb in
Power Steering Gear Inlet Hose Bracket Bolt	9 N·m	80 lb in
Power Steering Gear Inlet Hose Clip Bolt	9 N·m	80 lb in
Power Steering Gear Inlet Hose Bracket Nut	9 N·m	80 lb in
Power Steering Gear Inlet Hose Fitting	25 N·m	18 lb ft
Power Steering Gear Pipe Bracket Bolt	9 N·m	80 lb in
Power Steering Pump Bolt (LE5)	22 N·m	16 lb ft
Power Steering Pump Bolt (LY7)	50 N·m	37 lb ft
Power Steering Pump Bolt (LZ4)	25 N·m	18 lb ft
Remote Power Steering Fluid Reservoir Bolt	9 N·m	80 lb in
Stabilizer Shaft Link Nut	75 N·m	55 lb ft
Steering Gear Bolt	110 N·m	81 lb ft
Steering Linkage Inner Tie Rod Housing	78 N·m	58 lb ft
Steering Linkage Inner Tie Rod Nut	60 N·m	44 lb ft
Steering Linkage Outer Tie Rod Nut	25 N·m plus 90 degrees	18 lb ft plus 90 degrees
Steering Shaft Coupling Bolt (at the steering gear)		
With Electronic Power Steering	34 N·m	25 lb ft
With Hydraulic Power Steering	33 N·m	24 lb ft
With Two Mode Hybrid Steering	33 N·m	24 lb ft

cardiagn.com

Power Steering Pump Specifications

Vehicle	Engine Code	Engine Size	High Flow		Pressure Relief	
			LPM	GPM	kPa	PSI
VUE	LZ4	3.5L	9.1/10.6	2.4/2.8	9653/10342	1400/1500
	LY7	3.6L	10.25/11.75	2.71/3.10	9307/10342	1350/1500
Captiva Sport	LE5	2.4L	8.0	2.1	9350	1356

cardiagn.com

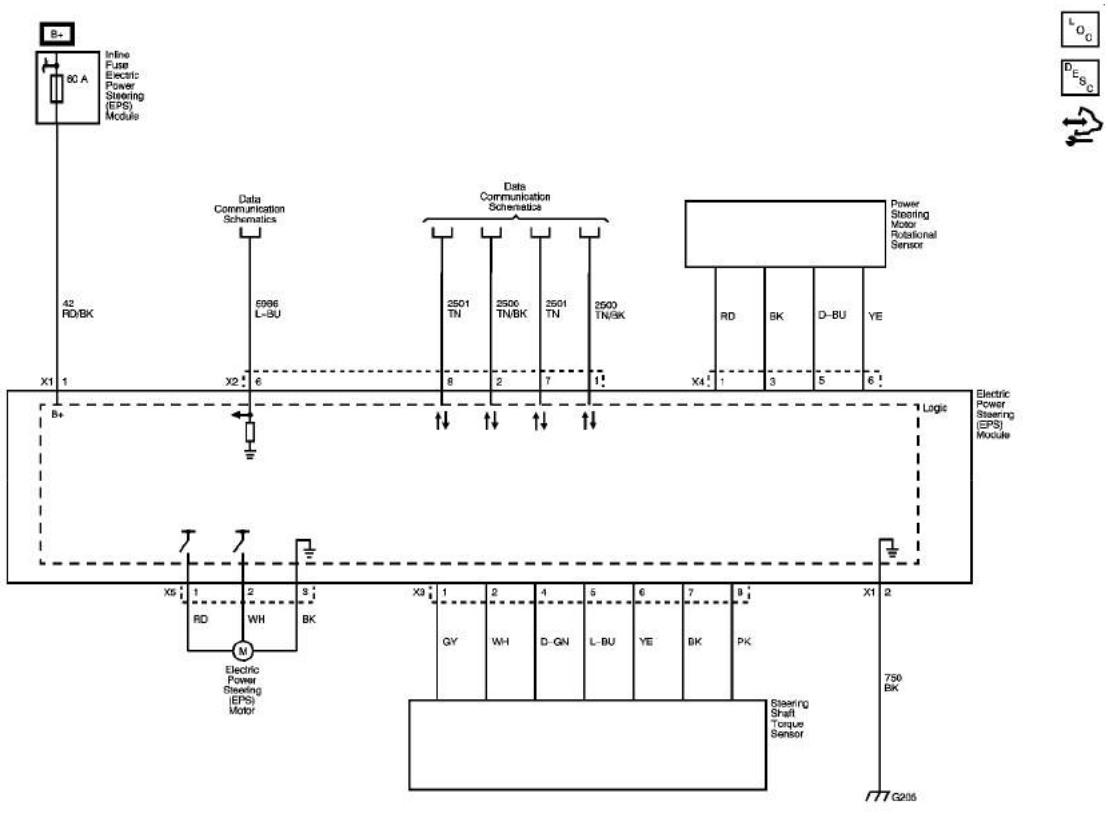

cardiagn.com

Power Steering (HP5)

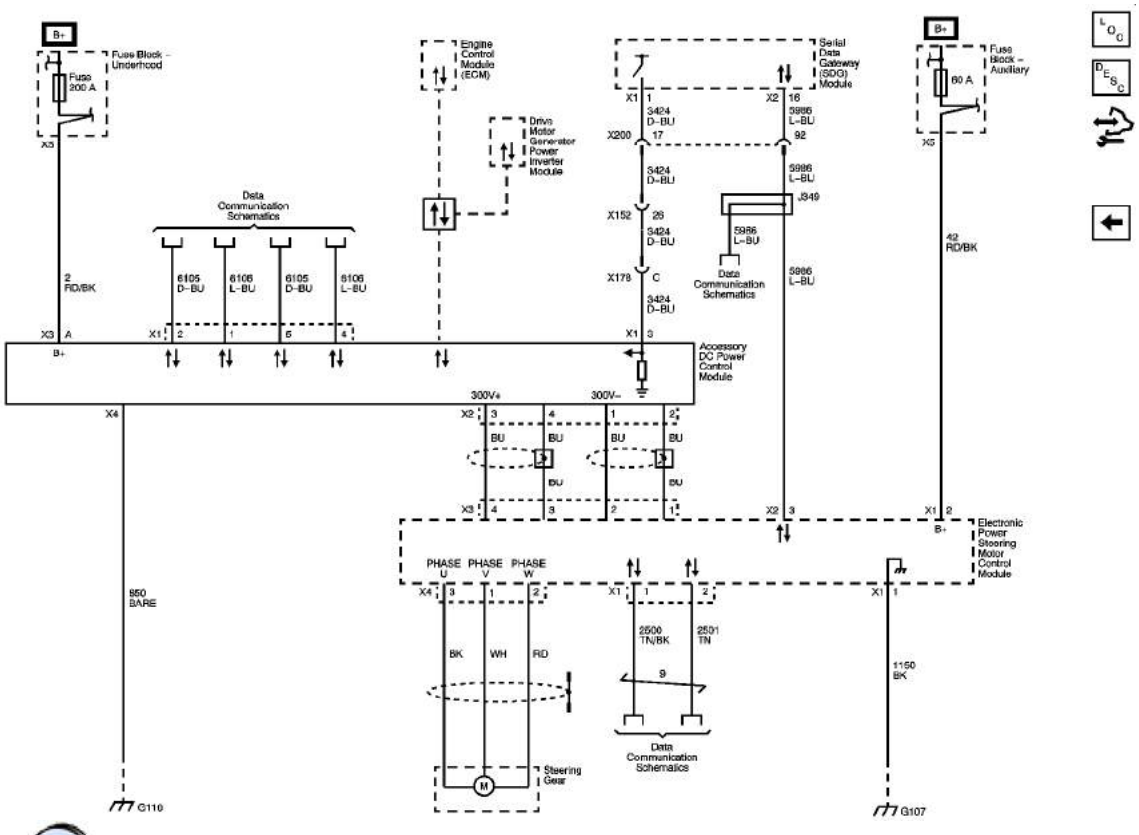

cardiagn.com

Steering Linkage Inner Tie Rod Inspection

Special Tools

J 8001 Dial Indicator Set

Note: This inspection procedure does not supersede local government required inspections that have more stringent requirements.

1. Turn the ignition key to the on position with the engine off.
2. With the aid of an assistant, turn the steering wheel to the full stop position and hold it in that position until the test is complete. The tie rod being tested should be inside the steering gear housing seated against the steering stop.
3. Raise and support the vehicle. Refer to Lifting and Jacking the Vehicle.

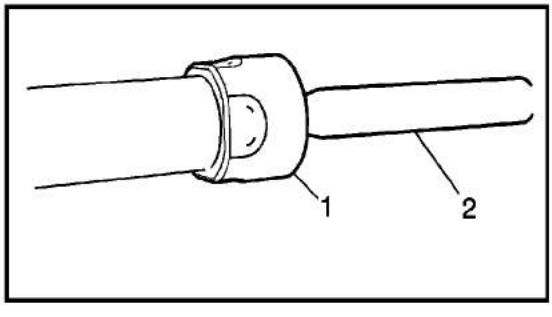

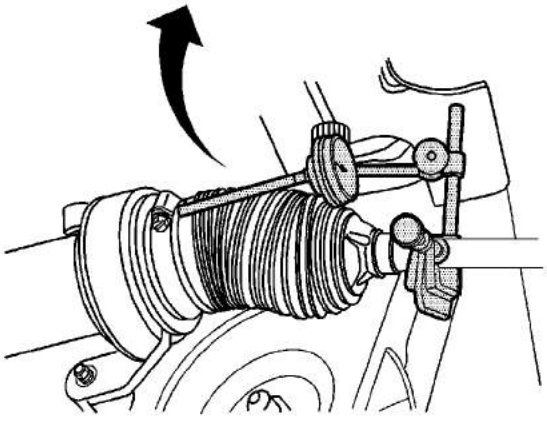

4. If there is not a good location for the dial indicator pointer at the steering gear housing, install a large worm gear hose clamp to the steering gear housing over the larger steering gear boot clamp and align the clamp so that the screw can be a location for the dial indicator pointer.
5. Install a dial indicator between the inner tie rod (2) and the steering gear housing or the worm gear clamp in such a way as to measure the lash between the inner tie rod and the steering gear housing

© 2010 General Motors Corporation. All rights reserved.

cardiagn.com

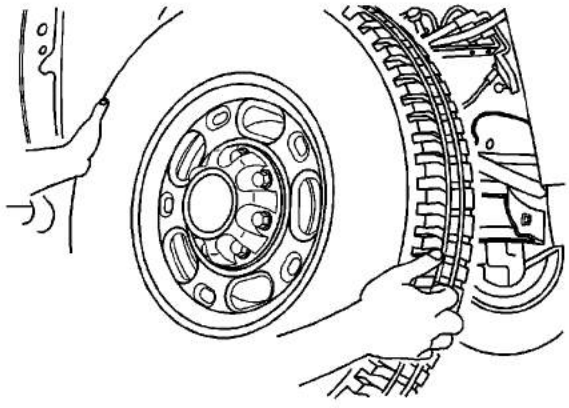

Note: Only move the tire enough to feel any lash between the inner tie rod and the inner tie rod housing without moving the steering gear rack.

6. Grasping the tire at the 3 o'clock and 9 o'clock positions, gently push in on one side of the tire to remove any lash.
7. Zero the dial indicator.
8. On the same side of the tire previously pushed inwards, gently pull outwards and measure the lash.
9. Record the measurement seen on the dial indicator.
10. If the measured value exceeds 0.5 mm (0.02 in) then replace the inner tie rod. Refer to Steering Linkage Inner Tie Rod Replacement.
11. Repeat the procedure for the other side.

cardiagn.com

Steering Linkage Outer Tie Rod Inspection

Special Tools

J 8001 Dial Indicator Set

Note: This inspection procedure does not supersede local government required inspections that have more stringent requirements.

1. Inspect the outer tie rod end seal. If the outer tie rod end seal is torn, replace the outer tie rod end. Refer to Steering Linkage Outer Tie Rod Replacement.
2. Raise the side of the vehicle being inspected with a floor jack while maintaining contact between the opposite wheel and the shop floor. Support the lower control arm with a floor jack stand as far outboard as possible and remove the floor jack. Refer to Lifting and Jacking the Vehicle.

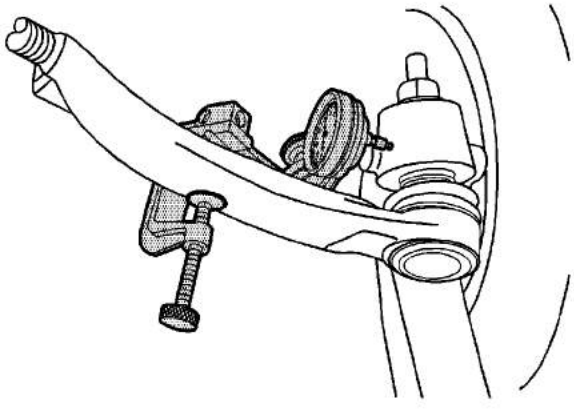

3. Install dial indicator J 8001 or equivalent between the outer tie rod end and the steering knuckle as shown in the graphic. Note that the tire and wheel assembly is shown removed only for clarification of the dial indicator position.
4. Grasping the tire at the 3 o'clock and 9 o'clock positions, gently push in on one side of the tire to remove any lash.
5. Zero the dial indicator.
6. On the same side of the tire previously pushed inwards, gently pull outwards and measure the lash.
7. Record the measurement seen on the dial indicator.
8. Movement should not exceed 0.5 mm (0.02 in). If the movement exceeds 0.5 mm (0.02 in) then replace the outer tie rod. Refer to Steering Linkage Outer Tie Rod Replacement.
9. Repeat this procedure for the other side of the vehicle.

cardiagn.com

Power Steering System Bleeding

Important:

- Use clean, new power steering fluid type only. See the Maintenance and Lubrication subsection for fluid specifications. Refer to Fluid and Lubricant Recommendations.
- Hoses touching the frame, body or engine may cause system noise. Verify that the hoses do not touch any other part of the vehicle.
- Loose connections may not leak, but could allow air into the steering system. Verify that all hose connections are tight.

Important: Power steering fluid level must be maintained throughout bleed procedure.

1. Fill pump reservoir with fluid to minimum system level, FULL COLD level, or middle of hash mark on cap stick fluid level indicator.

   Important: With hydro-boost only, the oil level will appear falsely high if the hydro-boost accumulator is not fully charged. Do not apply the brake pedal with the engine OFF. This will discharge the hydro-boost accumulator.

2. If equipped with hydro-boost, fully charge the hydro-boost accumulator using the following procedure:
   2.1. Start the engine.
   2.2. Firmly apply the brake pedal 10-15 times.
   2.3. Turn the engine OFF.
3. Raise the vehicle until the front wheels are off the ground. Refer to Lifting and Jacking the Vehicle.
4. Key on engine OFF, turn the steering wheel from stop to stop 12 times.

   Vehicles equipped with hydro-boost systems or longer length power steering hoses may require turns up to 15 to 20 stop to stops.

5. Verify power steering fluid level per operating specification. Refer to Checking and Adding Power Steering Fluid.
6. Start the engine. Rotate steering wheel from left to right. Check for sign of cavitation or fluid aeration (pump noise/whining).
7. Verify the fluid level. Repeat the bleed procedure, if necessary.

cardiagn.com

Checking and Adding Power Steering Fluid

Caution: When adding fluid or making a complete fluid change, always use the proper power steering fluid. Failure to use the proper fluid will cause hose and seal damage and fluid leaks.

1. Clean the area surrounding the reservoir cap.
2. Remove the reservoir cap.
3. Inspect the power steering pump fluid level at regular intervals. Use the appropriate procedure below.

   Add fluid when required. Refer to Fluid and Lubricant Recommendations.

   ## Fluid Is Hot

   3.1. Run the engine until the fluid reaches about 80°C (170°F).

   3.2. Turn the engine OFF.

   3.3. Remove the reservoir cap.

   3.4. Inspect the fluid level on the capstick.

   3.5. Ensure that the fluid level is at the HOT/FULL/MAX mark on the capstick.
4. If the fluid level is low, add power steering fluid to the proper level.
5. Install the reservoir cap.
6. When checking the fluid level after servicing the steering system, bleed the air from the system. Refer to Power Steering System Bleeding.

cardiagn.com

Power Steering System Flushing

Important: Do not reuse any drained power steering fluid regardless of appearance or condition.

1. Turn OFF the engine.
2. Raise the front end of the vehicle off the ground until the tires and wheels turn freely. Refer to Lifting and Jacking the Vehicle.
3. Place a large container under the fluid return hose in order to collect the draining fluid.
4. Remove the fluid return hose at the power steering pump reservoir inlet connection.
5. Plug the reservoir return hose inlet connection on the power steering pump.

   Important: This step may require 4 L (4 qt) of power steering fluid until the draining fluid appears clear.

6. With the key on engine off, turn the steering wheel fully to the left and to the right while an assistant maintains the minimum fluid level in the reservoir using new approved power steering fluid. Continue until the fluid from the return hose runs clear.
7. Remove the plug from the pump reservoir inlet connection and install the fluid return hose to the pump reservoir.

   Important: Do NOT run the engine without the power steering fluid at a minimum system level.

8. Bleed the power steering system. Refer to Power Steering System Bleeding.
9. Inspect the power steering fluid for the following indications of contamination:
   - Milky fluid - water
   - Brown fluid - burnt
   - Plastic debris or dirt chunks
10. If the fluid is contaminated, repeat steps 2-9.
11. Lower the vehicle and check the Power Steering system for leaks.

cardiagn.com

Power Steering Fluid Reservoir Replacement (LZ4)

Disassembly Procedure

1. Remove the power steering pump. Refer to Power Steering Pump Replacement.

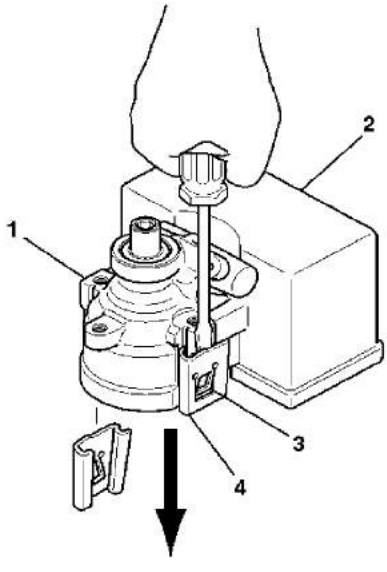

2. Place the power steering pump assembly (1) on a fixed, flat surface, with the power steering pump shaft facing upward.
3. Insert a screwdriver into the power steering fluid reservoir retaining clip tab (3) and bend it outwards.
4. Slide the power steering fluid reservoir clip (4) away from the power steering fluid pump assembly (1).
5. Repeat the above steps to remove the other power steering fluid reservoir clip (4).
6. Remove the power steering fluid reservoir (2) from the power steering pump (1).
7. Remove the O-ring seal from the neck of the power steering fluid reservoir (2) or inside the power steering pump housing (1). Discard the O-ring seal.

Assembly Procedure

cardiagn.com

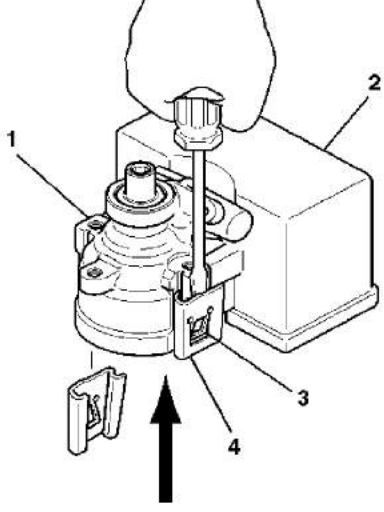

1. Lubricate the new O-ring seal with power steering fluid.
2. Install the new O-ring seal onto the neck of the power steering fluid reservoir (2).
3. Install the power steering fluid reservoir (2) onto the power steering pump (1). Make sure it is engaged fully.
4. Align the feet of the power steering fluid reservoir with the sides of the power steering pump (1).
5. Install the new power steering fluid reservoir retaining clips (4) (supplied with the pump) and make sure the power steering fluid reservoir retaining clip tabs (3) fully engage with the power steering pump (1).
6. Install the power steering pump. Refer to Power Steering Pump Replacement.

cardiagn.com

Power Steering Fluid Reservoir Replacement (LY7)

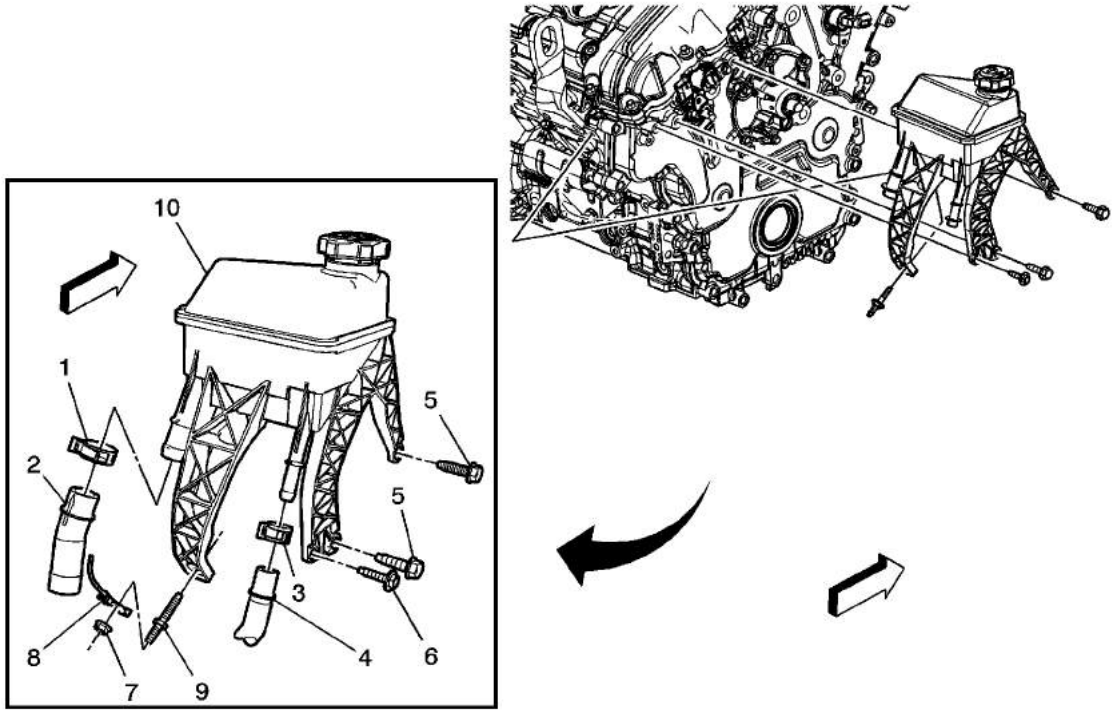

Callout	Component Name
Preliminary Procedures 1. Remove the air cleaner outlet duct. Refer to Air Cleaner Outlet Duct Replacement. 2. Remove the right front wheelhouse liner. Refer to Front Wheelhouse Liner Replacement.	
1	Power Steering Reservoir Outlet Hose Clamp **Procedure** 1. Remove as much power steering fluid from the remote power steering fluid reservoir as possible. 2. Place drain pans under the vehicle as needed.
2	Power Steering Fluid Reservoir Outlet Hose
3	Power Steering Cooler Pipe Clamp
4	Power Steering Cooler Pipe
5	Remote Power Steering Fluid Reservoir Bolt (Qty: 2) **Caution:** Refer to Fastener Caution in the Preface section.

© 2010 General Motors Corporation. All rights reserved.

cardiagn.com

6	Remote Power Steering Fluid Reservoir Bolt **Tighten** 9 N·m (80 lb in)
7	Ground Terminal Nut **Tighten** 9 N·m (80 lb in)
8	Ground Terminal
9	Power Steering Fluid Reservoir Stud **Tighten** 9 N·m (80 lb in)
10	Remote Power Steering Fluid Reservoir **Procedure** Fill and bleed the power steering system. Refer to Power Steering System Bleeding.

cardiagn.com

Power Steering Fluid Reservoir Replacement (LE5)

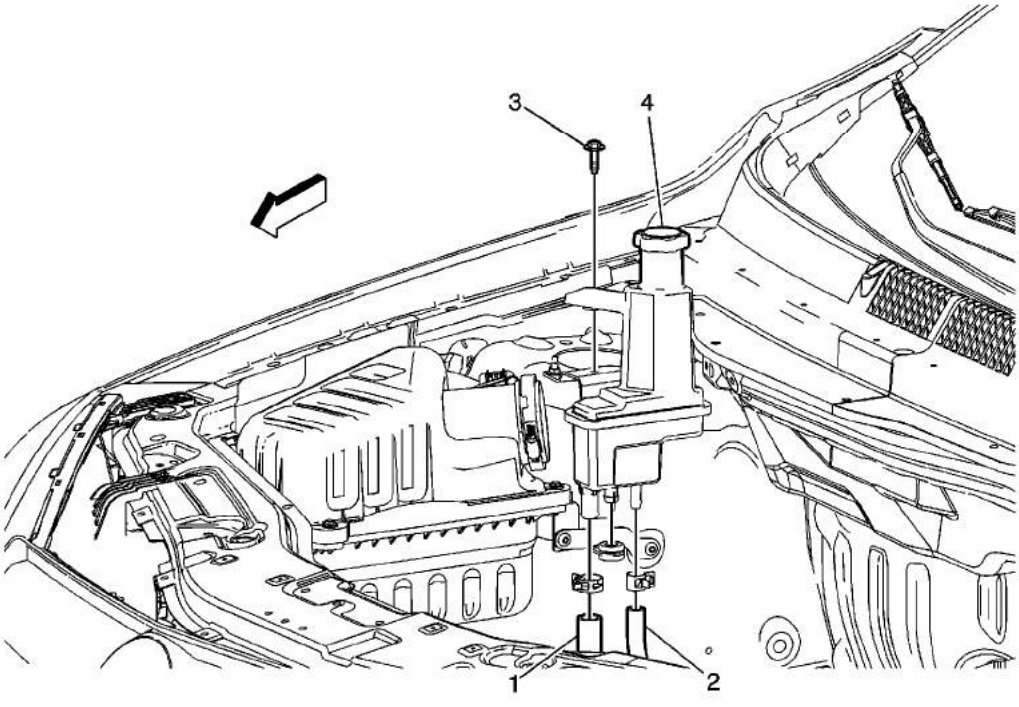

Callout	Component Name
Preliminary Procedure Remove the air cleaner outlet duct. Refer to Air Cleaner Outlet Duct Replacement.	
1	Power Steering Fluid Reservoir Outlet Hose **Procedure** Compress the power steering reservoir outlet hose clamp and disconnect the power steering reservoir outlet hose. **Tip** • Remove as much power steering fluid from the remote power steering fluid reservoir as possible. • Place drain pans under the vehicle as needed.
2	Power Steering Cooler Pipe **Procedure** [redacted]

cardiagn.com

3	Power Steering Fluid Reservoir Bracket Bolt **Caution:** Refer to Fastener Caution in the Preface section. **Tighten** 9 N·m (80 lb in)
4	Remote Power Steering Fluid Reservoir **Procedure** After repairs, fill and bleed the power steering fluid system. Refer to Power Steering System Bleeding. **Tip** Clean any excess power steering fluid from the vehicle.

cardiagn.com

Power Steering Pump Pulley Replacement (LY7)

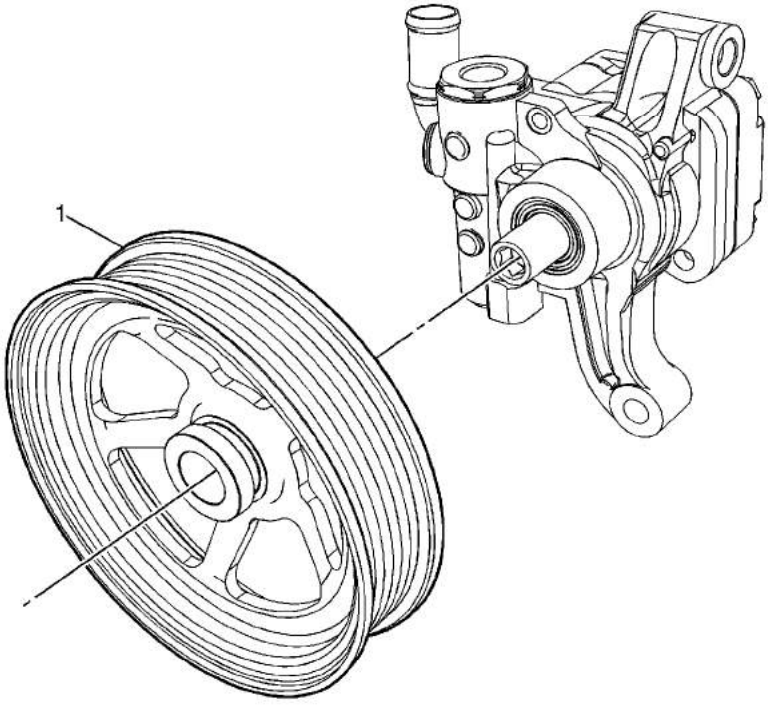

Callout	Component Name
Preliminary Procedure Remove the power steering pump. Refer to Power Steering Pump Replacement.	
1	Power Steering Pump Pulley **Procedure** 1. Use the *SA9162C* remover to remove the power steering pump pulley. 2. Use the *SA9162C* installer to install the power steering pump pulley. **Special Tools** *SA9162C* Power Steering Pump Pulley Remover/Installer For equivalent regional tools, refer to Special Tools.

cardiagn.com

Power Steering Pump Pulley Replacement (LZ4)

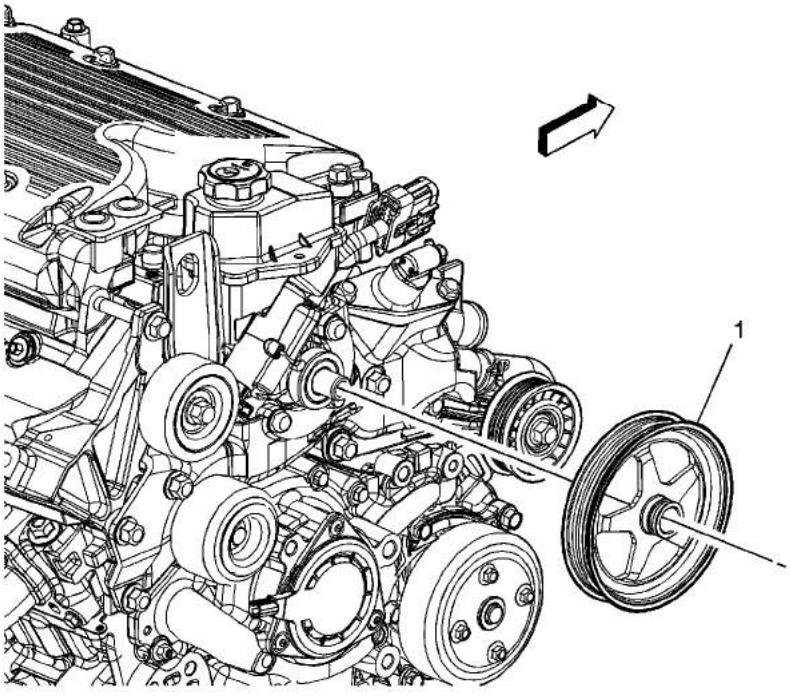

Callout	Component Name
Preliminary Procedure Remove the drive belt. Refer to Drive Belt Replacement.	
1	Power Steering Pump Pulley **Procedure** 1. Use the *SA9162C* remover to remove the power steering pump pulley. 2. Use the *SA9162C* installer to install the power steering pump pulley. **Special Tools** *SA9162C* Power Steering Pump Pulley Remover/Installer For equivalent regional tools, refer to Special Tools.

cardiagn.com

Power Steering Pump Pulley Replacement (LE5)

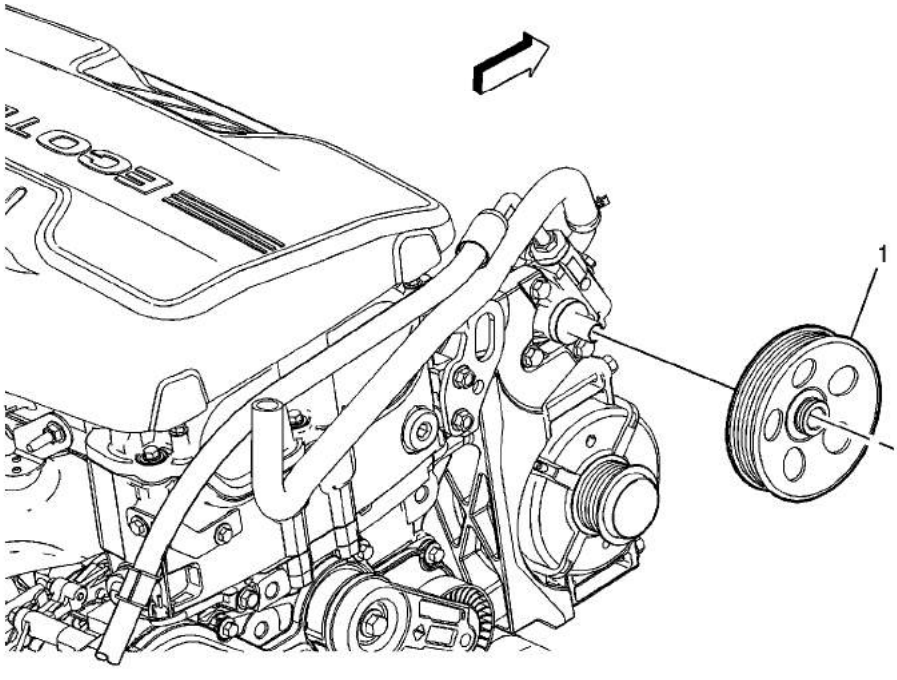

Callout	Component Name
Preliminary Procedures 1. Remove the drive belt. Refer to Drive Belt Replacement. 2. Remove the air cleaner assembly. Refer to Air Cleaner Assembly Replacement. 3. Remove the power steering pump bolts but do not disconnect the power steering hoses. Refer to Power Steering Pump Replacement.	
1	Power Steering Pump Pulley **Procedure** 1. Reposition the power steering pump in order to gain full accessibility to the power steering pump pulley. 2. Use the *J 25034-C* remover to remove the power steering pump pulley. 3. Use the *J 25033-C* installer to install the power steering pump pulley. 4. Ensure the axial tolerance of the pulley on the pump shaft is within 0.25 mm (0.010 in). **Special Tools** [redacted]

cardiagn.com

	• J 25034-C Pulley Remover For equivalent regional tools, refer to Special Tools.

cardiagn.com

Power Steering Pump Replacement (LY7)

Removal Procedure

Note: Do not remove the drive belt from the vehicle entirely. Only slip it off the power steering pump pulley and set it aside in the engine compartment.

1. Remove the drive belt from the power steering pump pulley. Refer to Drive Belt Replacement.
2. Remove as much power steering fluid from the remote power steering fluid reservoir as possible.
3. Remove the right front wheelhouse liner. Refer to Front Wheelhouse Liner Replacement.
4. Place drain pans under the vehicle as needed.

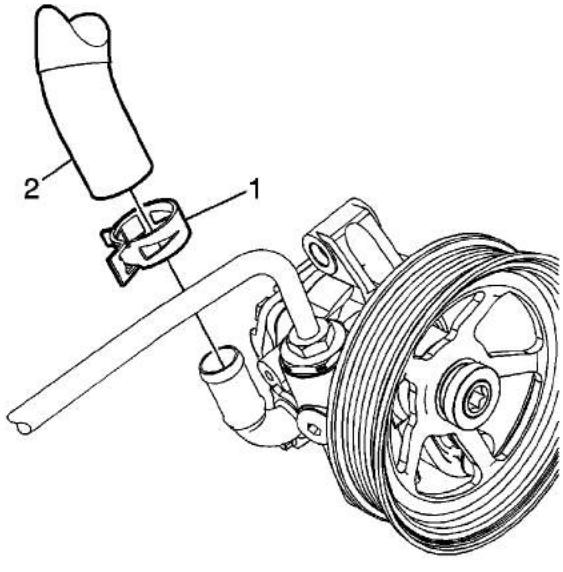

5. Compress the power steering reservoir outlet hose clamp (1) and disconnect the power steering reservoir outlet hose (2) from the power steering pump.

cardiagn.com

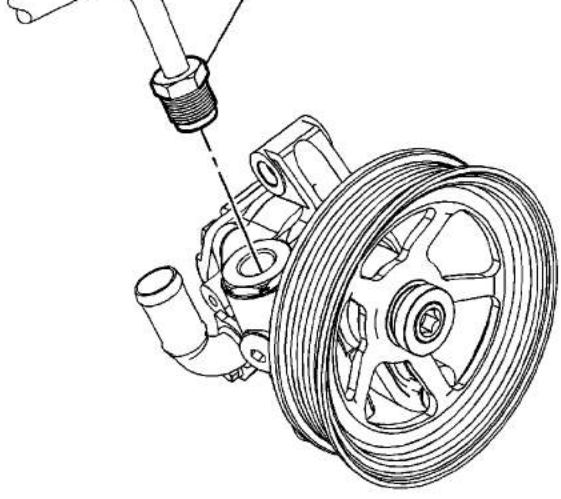

6. Disconnect the power steering gear inlet hose (1) from the power steering pump.

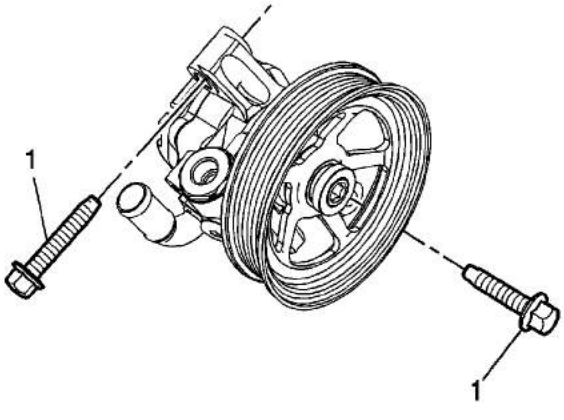

7. Remove the power steering pump bolts (1).
8. Remove the power steering pump through the right wheelhouse area.
9. Transfer the power steering pulley if needed. Refer to Power Steering Pump Pulley Replacement.

Installation Procedure

1. Position the power steering pump to the vehicle through the right wheelhouse area.

   Caution: Refer to Fastener Caution in the Preface section.

cardiagn.com

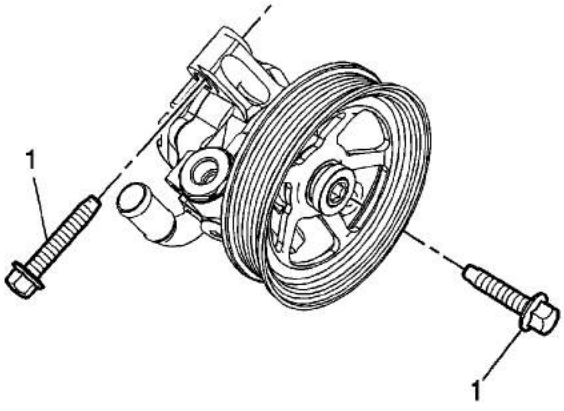

Note: Hand start both bolts before finalizing any torques.

2. Install the power steering pump bolts (1) and tighten to **50 N·m (37 lb ft)**.

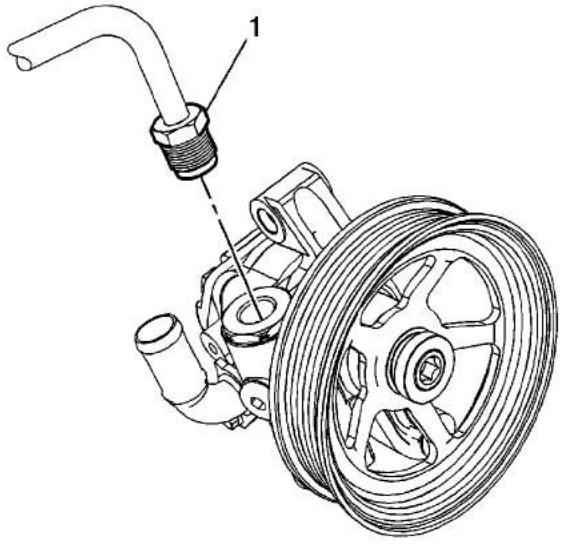

3. Connect the power steering gear inlet hose (1) to the power steering pump.

   Tighten the fitting to **25 N·m (18 lb ft)**.

cardiagn.com

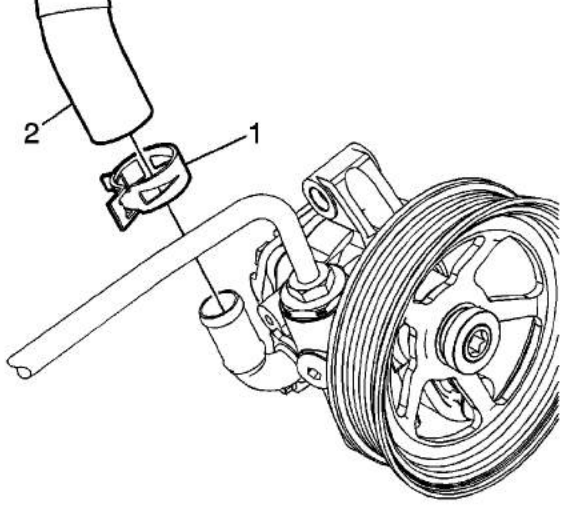

4. Compress the power steering reservoir outlet hose clamp (1) and connect the power steering reservoir outlet hose (2) to the power steering pump.
5. Clean any excess fluid from the vehicle and remove the drain pans.
6. Install the right front wheelhouse liner. Refer to Front Wheelhouse Liner Replacement.
7. Install the drive belt. Refer to Drive Belt Replacement.
8. Fill and bleed the power steering system. Refer to Power Steering System Bleeding.

cardiagn.com

Power Steering Pump Replacement (LZ4)

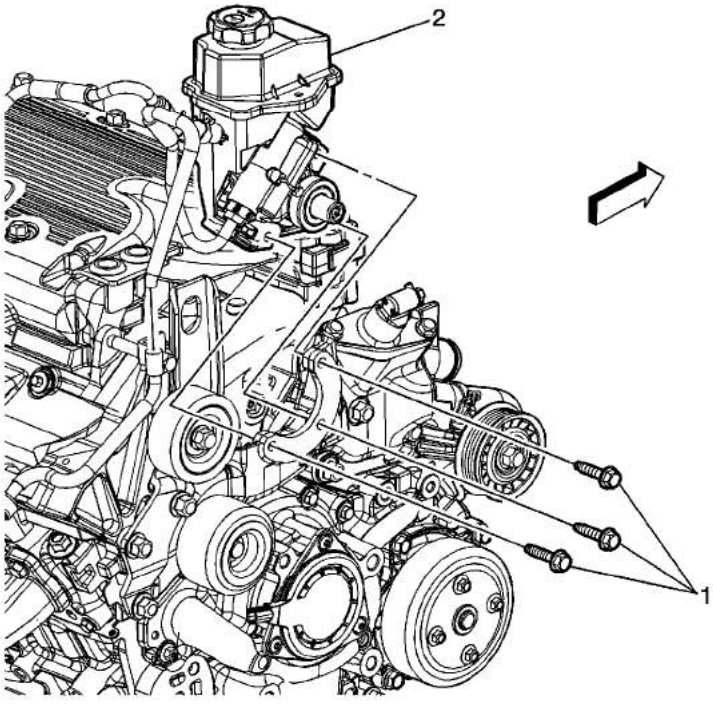

Callout	Component Name
Preliminary Procedure Remove the power steering pump pulley. Refer to Power Steering Pump Pulley Replacement.	
1	Power Steering Pump Bolt (Qty: 3) **Caution:** Refer to Fastener Caution in the Preface section. **Tighten** 25 N·m (18 lb ft)
4	Power Steering Pump **Procedure** 1. Remove as much power steering fluid from the power steering fluid reservoir as possible. 2. Place drain pans under the vehicle as needed. 3. Disconnect the power steering gear inlet hose from the power steering pump. 4. After all repairs clean any excess fluid from the vehicle and remove the drain pans. [redacted]

cardiagn.com

cardiagn.com

Power Steering Pump Replacement (LE5)

Special Tools

- J 25033-C Pulley Installer
- J 25034-C Pulley Remover

Removal Procedure

1. Place drain pans under the vehicle as needed.
2. Remove as much fluid from the remote power steering fluid reservoir as possible.

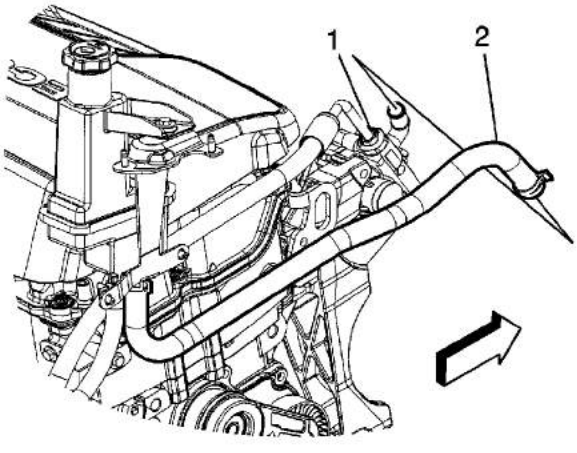

3. Compress the power steering reservoir outlet hose clamp and disconnect the power steering reservoir outlet hose (2) from the power steering pump.
4. Disconnect the power steering gear inlet hose fitting (1) from the power steering pump.

cardiagn.com

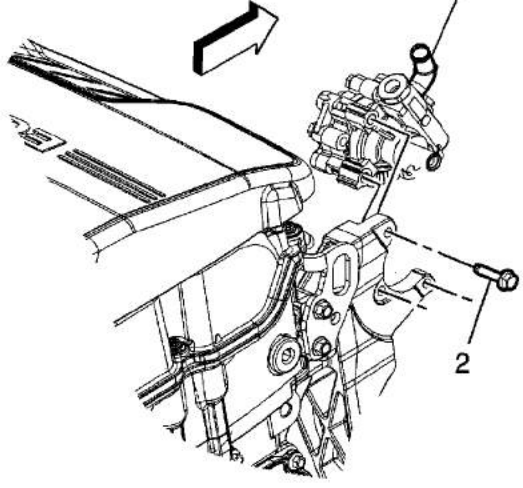

5. Remove the power steering pump bolts (2).
6. Remove the power steering pump (1) from the vehicle.
7. Remove the power steering pump pulley using puller J 25034-C .

Installation Procedure

1. Install the power steering pump pulley using installer J 25033-C .

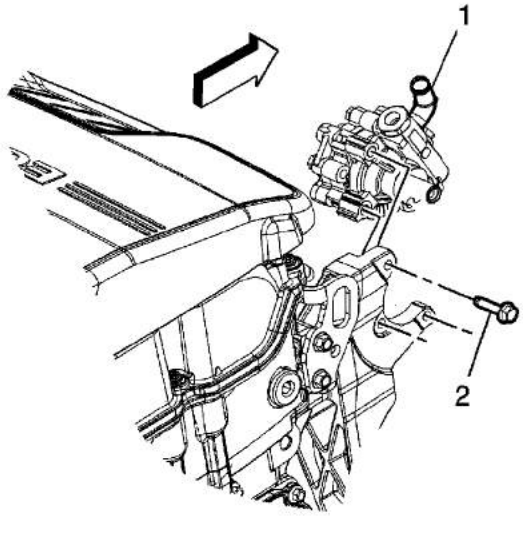

2. Position the power steering pump (1) to the vehicle.

   Caution: Refer to Fastener Caution in the Preface section.

3. Install the power steering pump bolts (2) and tighten to **22 N·m (16 lb ft)**.

cardiagn.com

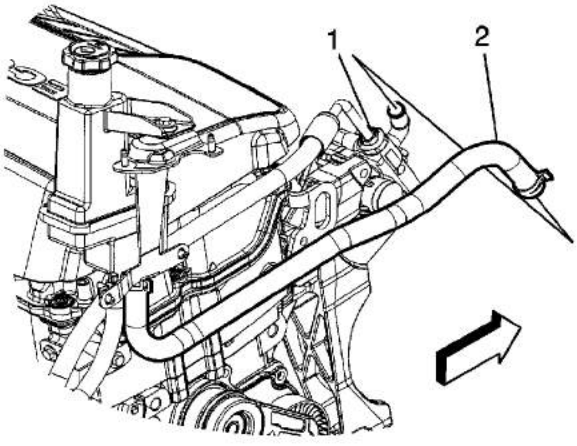

4. Connect the power steering gear inlet hose fitting (1) to the power steering pump. Tighten the fitting to **25 N·m (18 lb ft)**.
5. Compress the power steering reservoir outlet hose clamp and connect the power steering reservoir outlet hose (2) to the power steering pump.
6. Clean any excess fluid from the vehicle and remove the drain pans.
7. Fill and bleed the power steering system. Refer to Power Steering System Bleeding.

cardiagn.com

Steering Linkage Outer Tie Rod Replacement

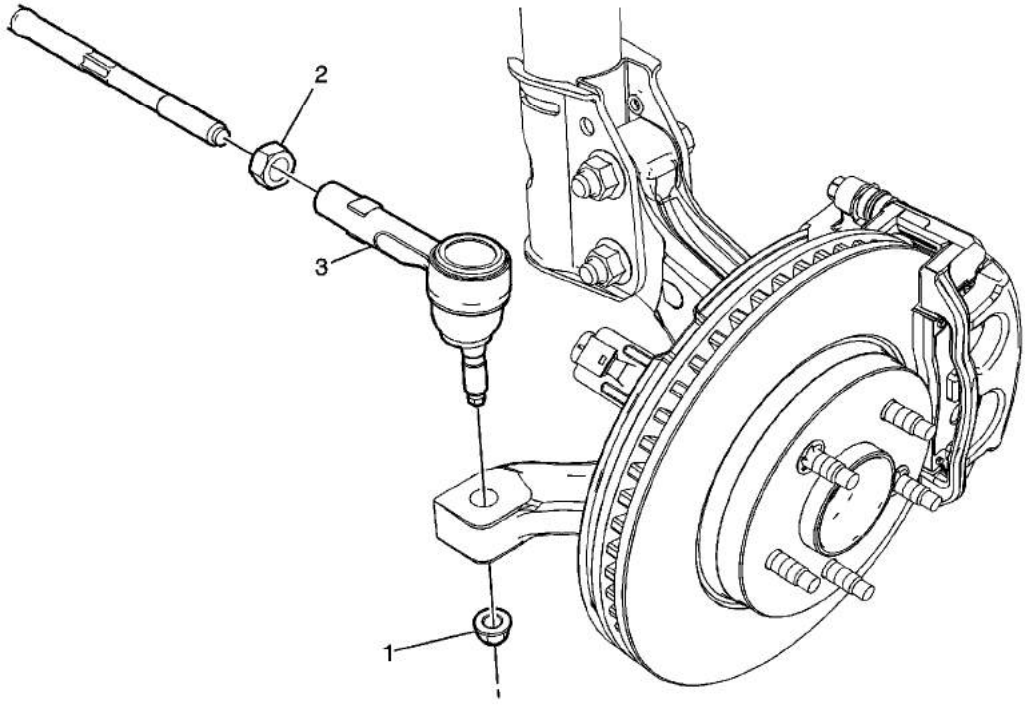

Callout	Component Name
Preliminary Procedure Remove the front tire/wheel assembly. Refer to Tire and Wheel Removal and Installation.	
1	Steering Linkage Outer Tie Rod Nut **Caution:** Refer to Fastener Caution in the Preface section. **Procedure** 1. Prior to re-installing the steering linkage outer tie rod nut use installer J 44015 to seat the steering linkage outer tie rod in the steering knuckle. 2. Tighten installer J 44015 to 40 N·m (30 lb ft) and then remove. **Torque** 25 N·m (18 lb ft) + 90 degrees.
	Steering Linkage Inner Tie Rod Nut **Procedure** [redacted]

cardiagn.com

2	**Tighten** 60 N·m (44 lb ft).
3	Steering Linkage Outer Tie Rod **Procedure** 1. Use the separator SA91100C to separate the steering linkage outer tie rod from the steering knuckle. 2. Inspect the steering linkage inner tie rod for bent or damaged threads. 3. Clean the tapered surface of the steering knuckle. 4. Lubricate the tie rod threads with chassis lubricant. Refer to Fluid and Lubricant Recommendations. 5. Adjust the front toe. Refer to Wheel Alignment - Steering Wheel Angle and/or Front Toe Adjustment. **Tip** Do not free the steering linkage outer tie rod from the steering knuckle by use of a pickle fork or a wedge type tool. Damage to the steering linkage outer tie rod seal may result. **Special Tools** • SA91100C Tie Rod Separator • J 44015 Steering Linkage Installer

cardiagn.com

Power Steering Cooler Pipe / Hose Replacement (LY7)

Removal Procedure

1. Remove the air cleaner outlet duct. Refer to Air Cleaner Outlet Duct Replacement.
2. Remove the left front wheelhouse liner. Refer to Front Wheelhouse Liner Replacement.
3. Place drain pans under the vehicle as needed.

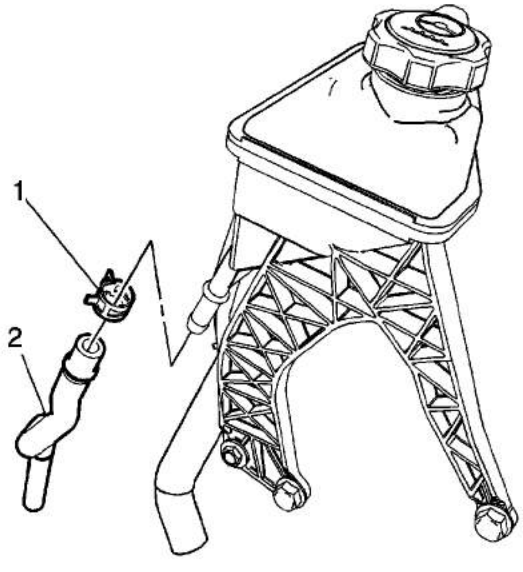

4. Compress the power steering cooler pipe clamp (1) and disconnect the power steering cooler pipe (2) from the remote power steering fluid reservoir.

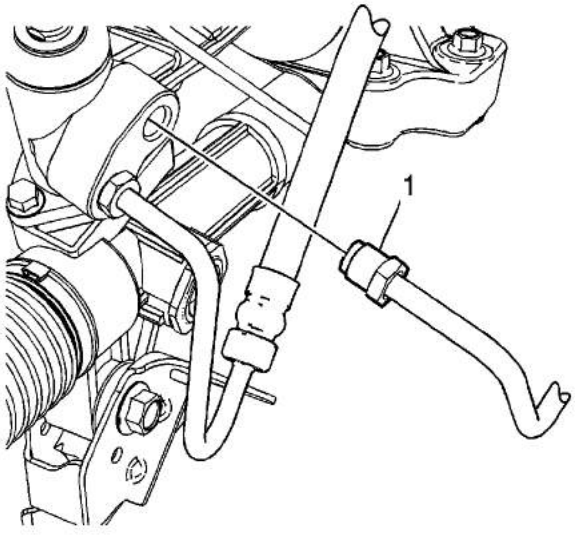

5. Disconnect the power steering cooler pipe fitting (1) from the power steering gear.

© 2010 General Motors Corporation. All rights reserved.

cardiagn.com

Installation Procedure

1. Position the power steering cooler pipe to the vehicle.
2. Reconnect all power steering cooler pipe routing brackets to the vehicle.

   Caution: Refer to Fastener Caution in the Preface section.

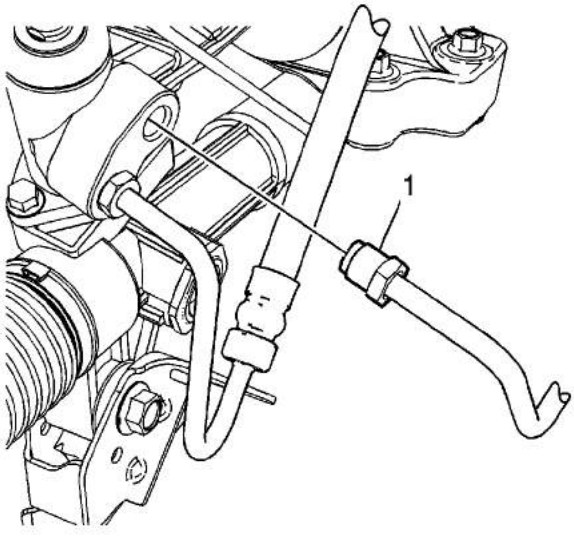

3. Connect the power steering cooler pipe fitting (1) to the power steering gear and tighten the fittings to **25 N·m(18 lb ft)**.

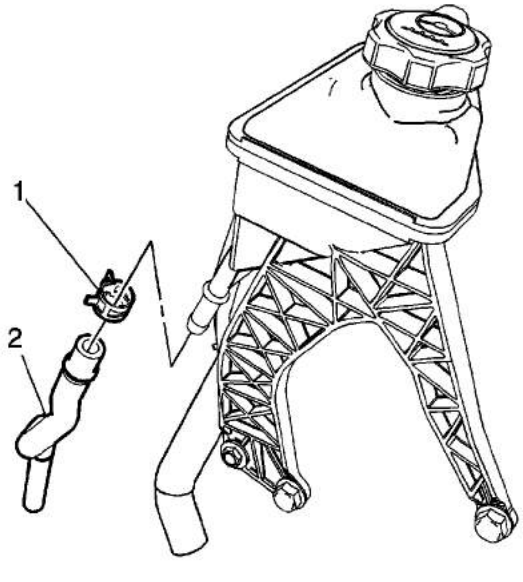

cardiagn.com

4. Compress the power steering cooler pipe clamp (1) and connect the power steering cooler pipe (2) to the remote power steering fluid reservoir.
5. Clean any excess fluid from the vehicle and remove the drain pans.
6. Install the left front wheelhouse liner. Refer to Front Wheelhouse Liner Replacement.
7. Install the air cleaner outlet duct. Refer to Air Cleaner Outlet Duct Replacement.
8. Fill and bleed the power steering system. Refer to Power Steering System Bleeding.

cardiagn.com

Power Steering Cooler Pipe / Hose Replacement (LZ4)

Removal Procedure

1. Remove the air cleaner outlet duct. Refer to Air Cleaner Outlet Duct Replacement.
2. Remove the left front wheelhouse liner. Refer to Front Wheelhouse Liner Replacement.
3. Place drain pans under the vehicle as needed.
4. Remove as much power steering fluid from the power steering fluid reservoir as possible.

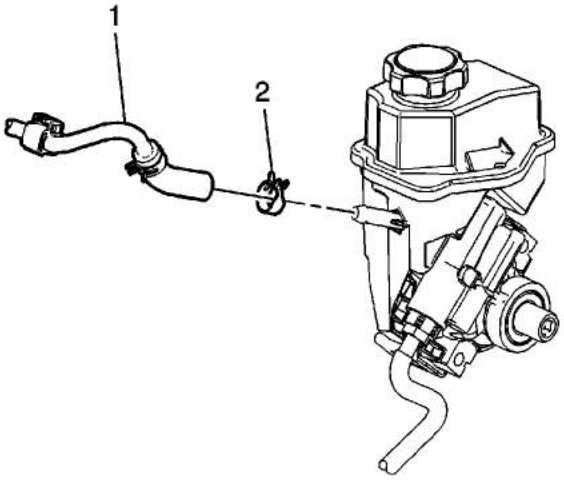

5. Compress the power steering cooler pipe clamp (2) and disconnect the power steering cooler pipe (1) from the remote power steering fluid reservoir.

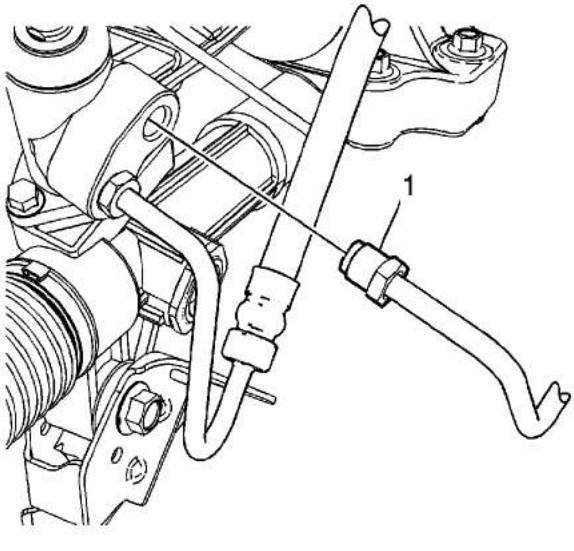

[redacted]

cardiagn.com

8. Remove the power steering cooler pipe from the vehicle.

Installation Procedure

1. Position the power steering cooler pipe to the vehicle.
2. Reconnect all power steering cooler pipe routing brackets to the vehicle.

Caution: Refer to Fastener Caution in the Preface section.

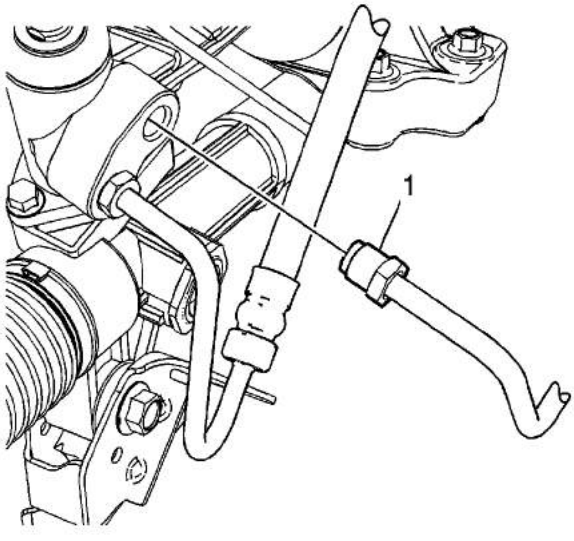

3. Connect the power steering cooler pipe fitting (1) to the steering gear and tighten the fittings to **25 N·m (18 lb ft)**.

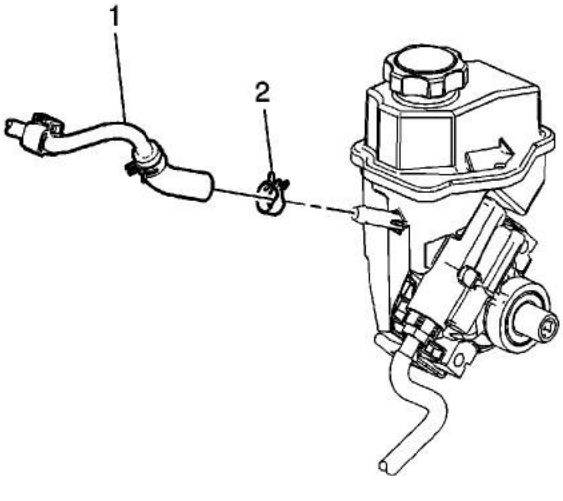

cardiagn.com

4. Compress the power steering cooler pipe clamp (2) and connect the power steering cooler pipe (1) to the remote power steering fluid reservoir.
5. Clean any excess fluid from the vehicle and remove the drain pans.
6. Install the left front wheelhouse liner. Refer to Front Wheelhouse Liner Replacement.
7. Install the air cleaner outlet duct. Refer to Air Cleaner Outlet Duct Replacement.
8. Fill and bleed the power steering system. Refer to Power Steering System Bleeding.

cardiagn.com

Power Steering Cooler Pipe / Hose Replacement (LE5)

Removal Procedure

1. Remove the air cleaner outlet duct. Refer to Air Cleaner Outlet Duct Replacement.
2. Remove the right front wheelhouse liner. Refer to Front Wheelhouse Liner Replacement.
3. Place drain pans under the vehicle as needed.
4. Remove as much power steering fluid from the power steering fluid reservoir as possible.

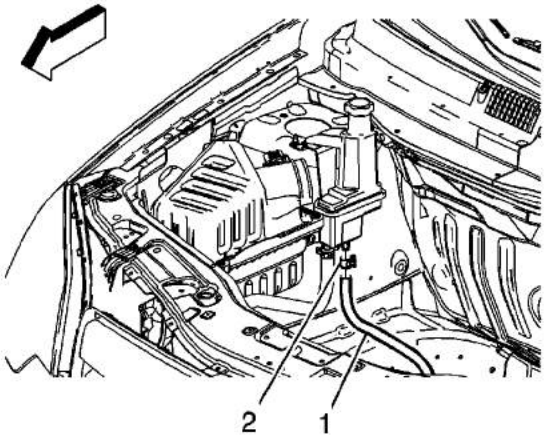

5. Compress the power steering cooler pipe clamp (2) and disconnect the power steering cooler pipe (1) from the remote power steering fluid reservoir.

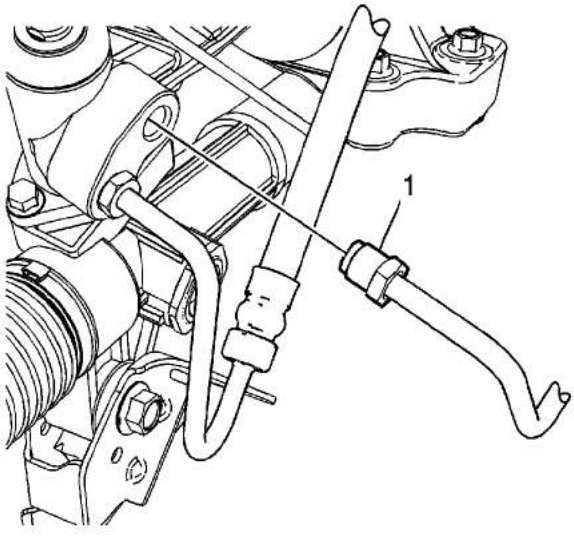

[redacted]

cardiagn.com

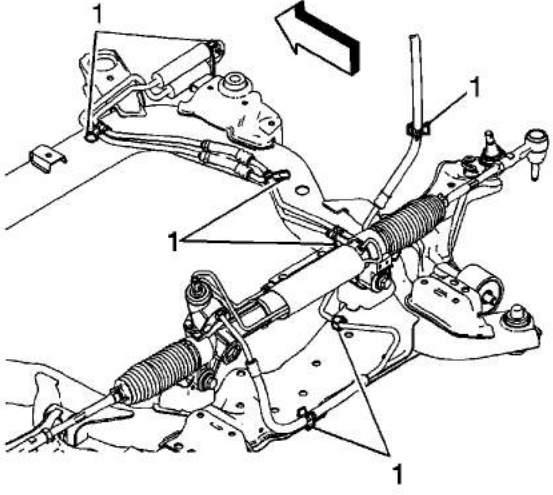

7. Unclip all the power steering cooler pipe bracket fasteners (1).
8. Remove the power steering cooler pipe from the vehicle.

Installation Procedure

1. Position the power steering cooler pipe to the vehicle.

   Caution: Refer to Fastener Caution in the Preface section.

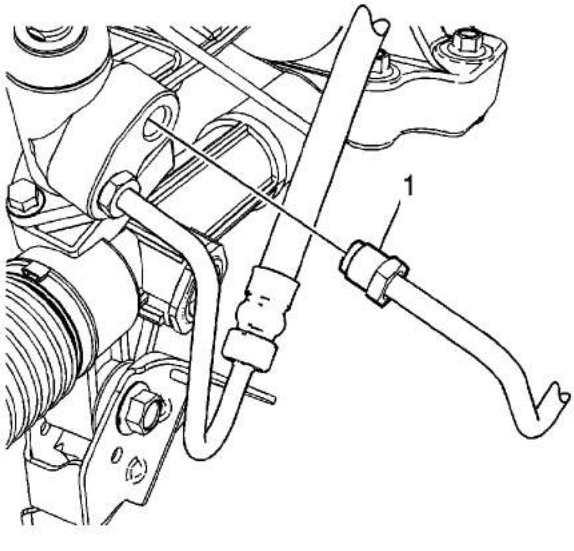

2. Connect the power steering cooler pipe fitting (1) to the steering gear and tighten the fitting

cardiagn.com

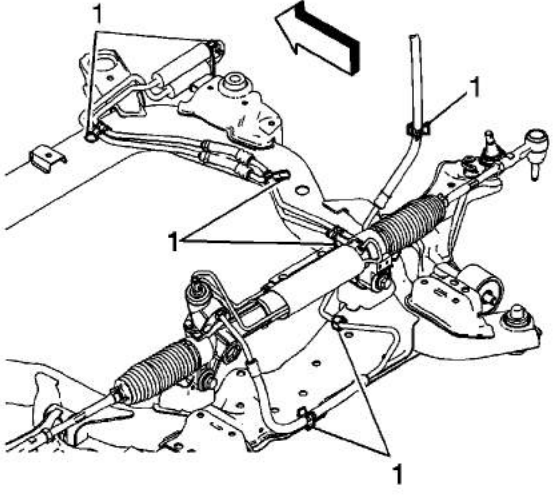

3. Clip in place all the power steering cooler pipe bracket fasteners (1).

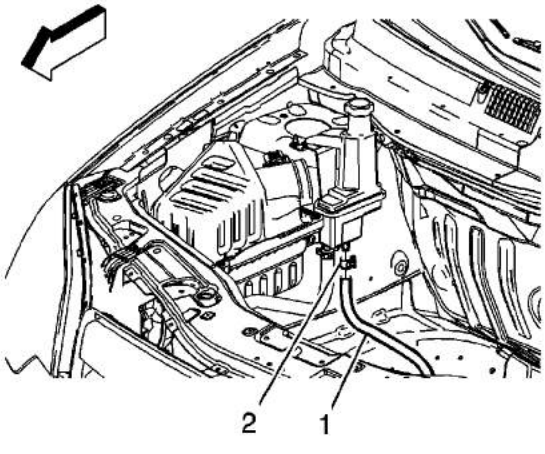

4. Compress the power steering cooler pipe clamp (2) and connect the power steering cooler pipe (1) to the remote power steering fluid reservoir.
5. Clean any excess fluid from the vehicle and remove the drain pans.
6. Install the right front wheelhouse liner. Refer to Front Wheelhouse Liner Replacement.
7. Install the air cleaner outlet duct. Refer to Air Cleaner Outlet Duct Replacement.
8. Fill and bleed the power steering system. Refer to Power Steering System Bleeding.

cardiagn.com

Power Steering Fluid Reservoir Outlet Hose Replacement (LY7)

Removal Procedure

1. Remove the intake manifold cover. Refer to Intake Manifold Cover Replacement.
2. Remove as much power steering fluid from the remote power steering fluid reservoir as possible.
3. Place drain pans under the vehicle as needed.
4. Remove the right front wheelhouse liner. Refer to Front Wheelhouse Liner Replacement.

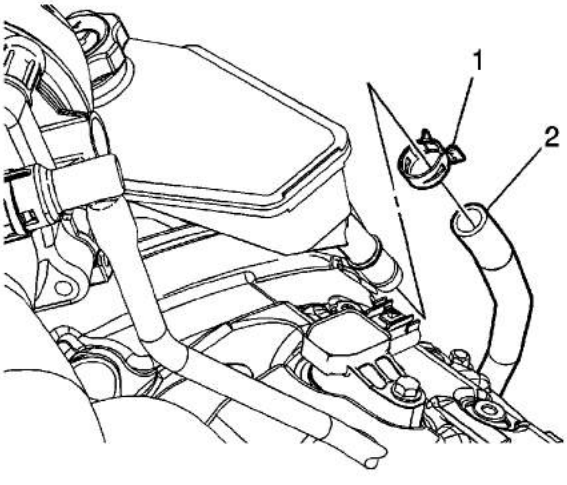

5. Compress the power steering reservoir outlet hose clamp (1) and disconnect the power steering reservoir outlet hose (2) from the remote power steering fluid reservoir.

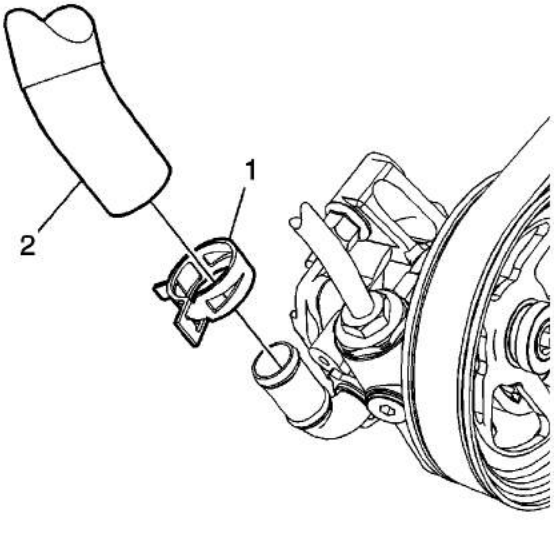

[redacted]

cardiagn.com

6. Compress the power steering reservoir outlet hose clamp (1) and disconnect the power steering reservoir outlet hose (2) from the power steering pump.
7. Remove the power steering reservoir outlet hose.

Installation Procedure

1. Position the power steering reservoir outlet hose to the vehicle.

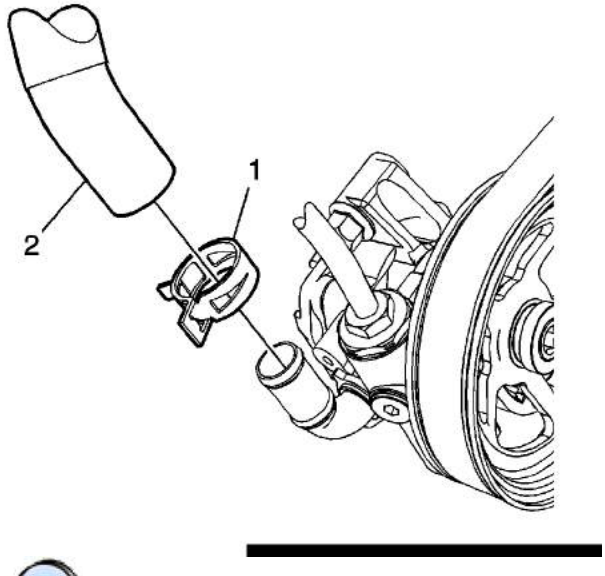

2. Compress the power steering reservoir outlet hose clamp (1) and connect the power steering reservoir outlet hose (2) to the power steering pump.

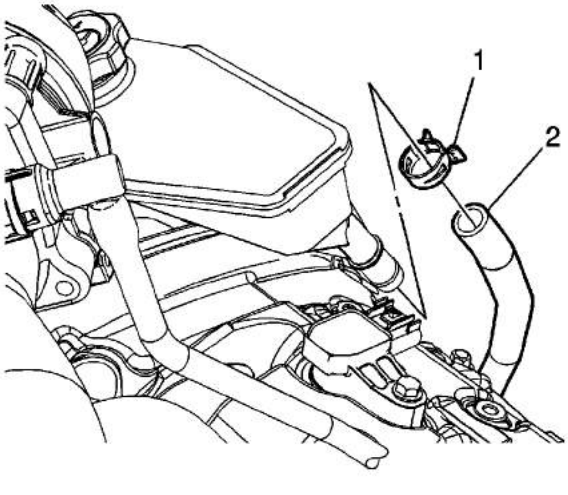

3. Compress the power steering reservoir outlet hose clamp (1) and connect the power steering

cardiagn.com

5. Install the right front wheelhouse liner. Refer to Front Wheelhouse Liner Replacement.
6. Fill and bleed the power steering system. Refer to Power Steering System Bleeding.
7. Install the intake manifold cover. Refer to Intake Manifold Cover Replacement.

cardiagn.com

Power Steering Fluid Reservoir Outlet Hose Replacement (LE5)

Removal Procedure

1. Remove the air cleaner outlet duct. Refer to Air Cleaner Outlet Duct Replacement.
2. Remove as much power steering fluid from the remote power steering fluid reservoir as possible.
3. Place drain pans under the vehicle as needed.

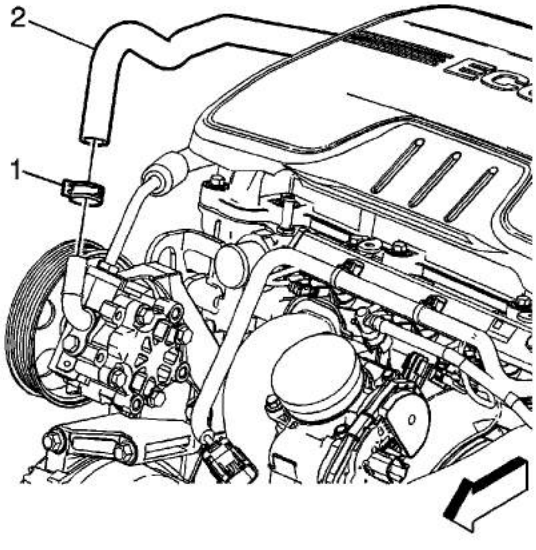

4. Compress the power steering reservoir outlet hose clamp (1) and disconnect the power steering reservoir outlet hose (2) from the power steering pump.

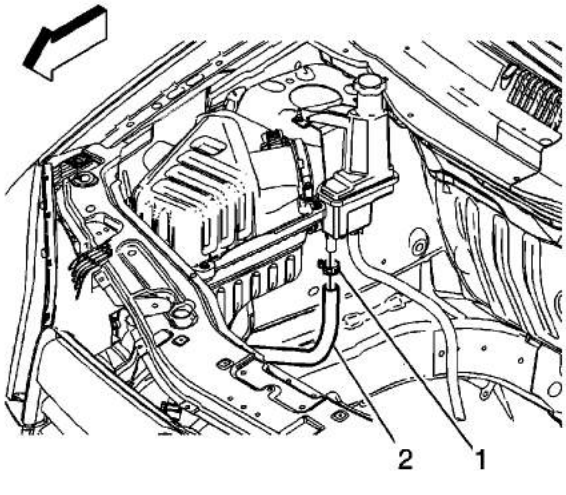

cardiagn.com

5. Compress the power steering reservoir outlet hose clamp (1) and disconnect the power steering reservoir outlet hose (2) from the remote power steering fluid reservoir (2).
6. Remove the power steering fluid reservoir outlet hose from the vehicle.

Installation Procedure

1. Position the power steering fluid reservoir outlet hose to the vehicle.

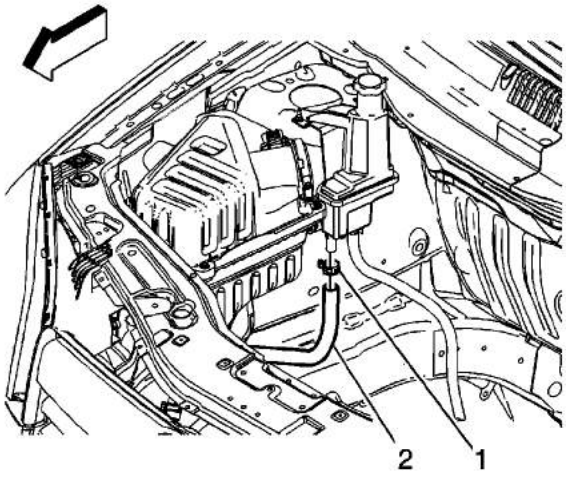

2. Compress the power steering reservoir outlet hose clamp (1) and connect the power steering reservoir outlet hose (2) to the remote power steering fluid reservoir (2).

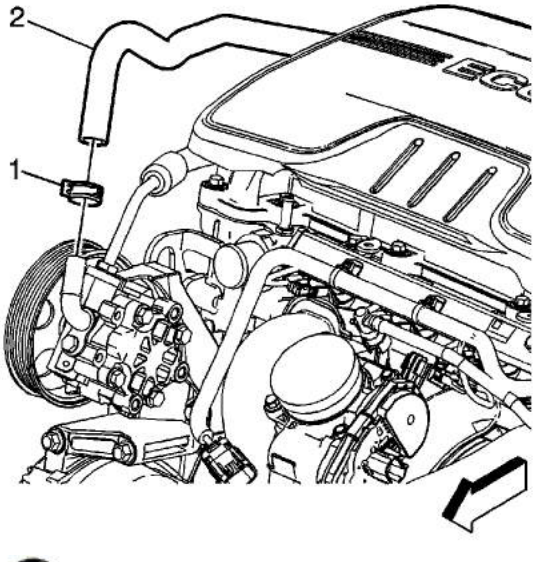

3. Compress the power steering reservoir outlet hose clamp (1) and connect the power steering

cardiagn.com

5. Install the air cleaner outlet duct. Refer to Air Cleaner Outlet Duct Replacement.
6. Fill and bleed the power steering system. Refer to Power Steering System Bleeding.

cardiagn.com

Power Steering Gear Inlet Pipe/Hose Replacement (LY7)

Removal Procedure

1. Remove the front tire/wheel assemblies. Refer to Tire and Wheel Removal and Installation.
2. Place drain pans under the vehicle as needed.
3. Remove as much fluid from the remote power steering fluid reservoir as possible.

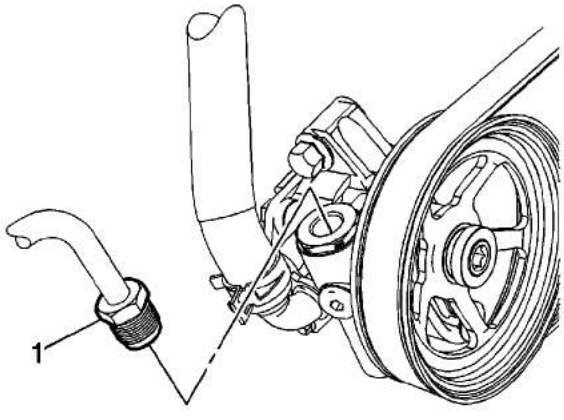

4. Disconnect the power steering gear inlet hose fitting (1) from the power steering pump.

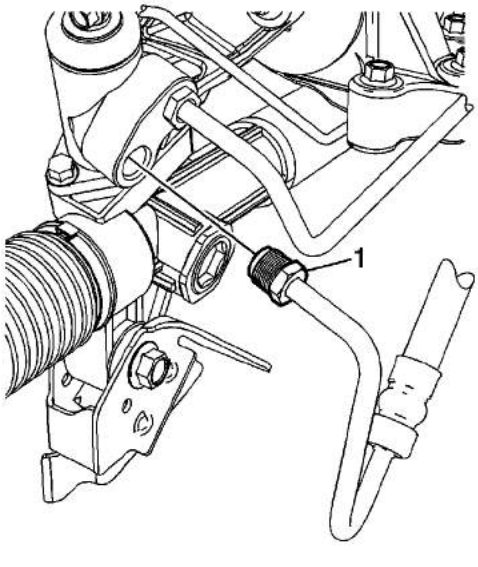

[redacted]

cardiagn.com

Installation Procedure

1. Position the steering gear inlet hose to the vehicle.

   Caution: Refer to Fastener Caution in the Preface section.

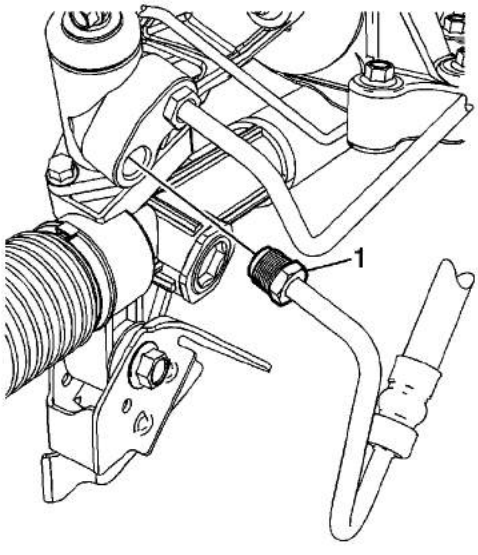

   Note: Hand tighten the power steering gear inlet hose fittings before finalizing the torques.

2. Connect the power steering gear inlet hose fitting (1) to the steering gear and tighten the fitting to **25 N·m (18 lb ft)**.

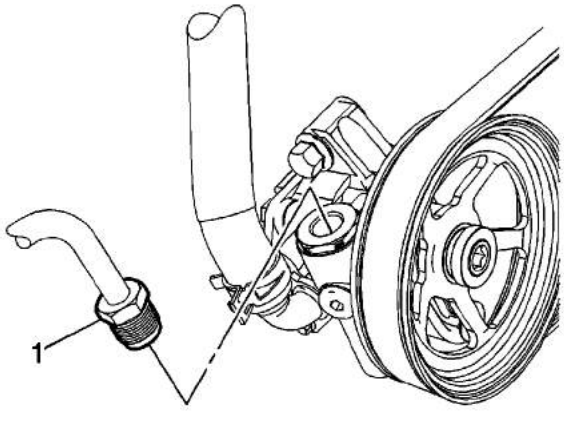

cardiagn.com

3. Connect the power steering gear inlet hose fitting (1) to the power steering pump and tighten the fitting to **25 N·m (18 lb ft)**.
4. Clean any excess fluid from the vehicle and remove the drain pans.
5. Install the front tire/wheel assemblies. Refer to Tire and Wheel Removal and Installation.
6. Fill and bleed the power steering system. Refer to Power Steering System Bleeding.

cardiagn.com

Power Steering Gear Inlet Pipe/Hose Replacement (LZ4)

Special Tools

J 44586 Power Steering Gear Oil Seal Remover/Installer

Removal Procedure

1. Remove as much power steering fluid from the power steering fluid reservoir as possible.
2. Place drain pans under the vehicle as needed.
3. Remove the power steering pump pulley. Refer to Power Steering Pump Pulley Replacement.
4. Remove the drive belt idler pulley. Refer to Drive Belt Idler Pulley Replacement.

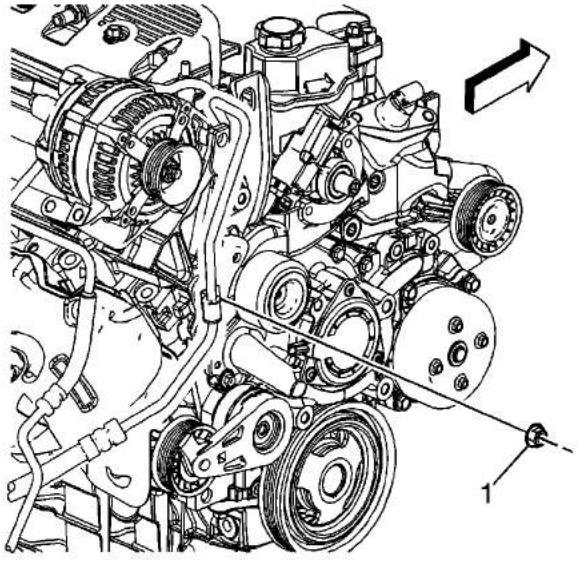

5. Remove the power steering gear inlet hose bracket nut (1).

cardiagn.com

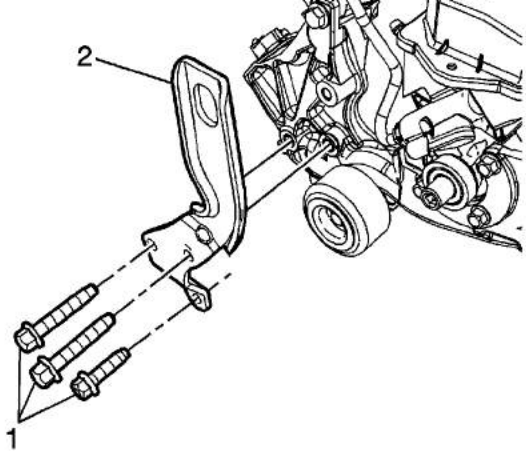

6. Remove the 3 front engine lift bracket bolts (1) and the front engine lift bracket (2).

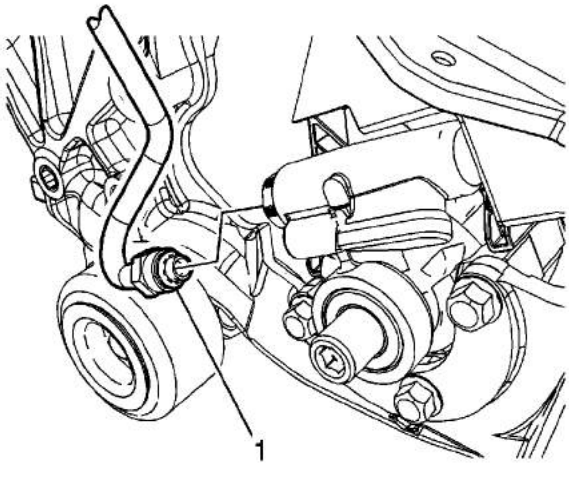

7. Disconnect the power steering gear inlet hose fitting (1) from the power steering pump and position it aside.

cardiagn.com

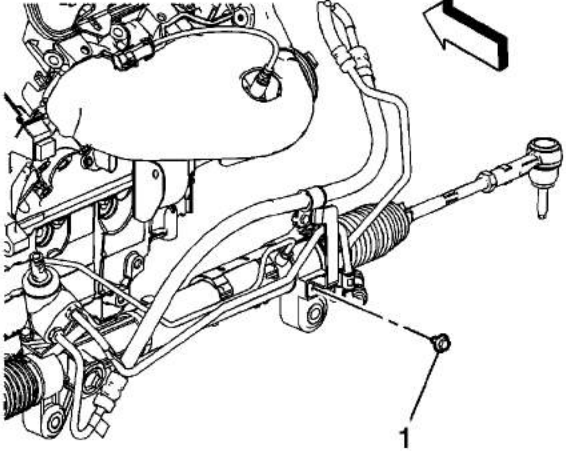

8. Remove the power steering gear inlet hose bracket bolt (1).

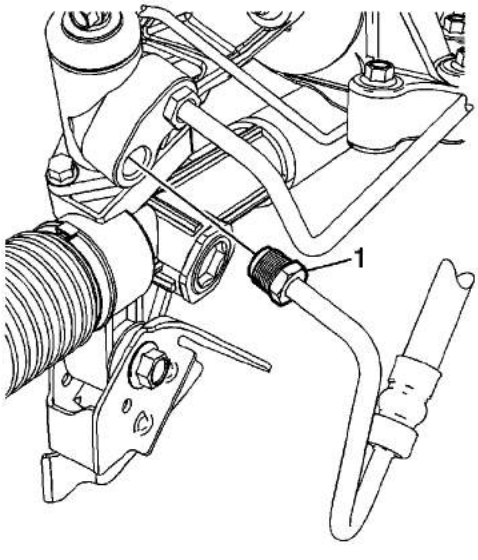

9. Disconnect the power steering gear inlet hose fitting (1) from the steering gear.
10. Remove the power steering gear inlet hose from the vehicle.

cardiagn.com

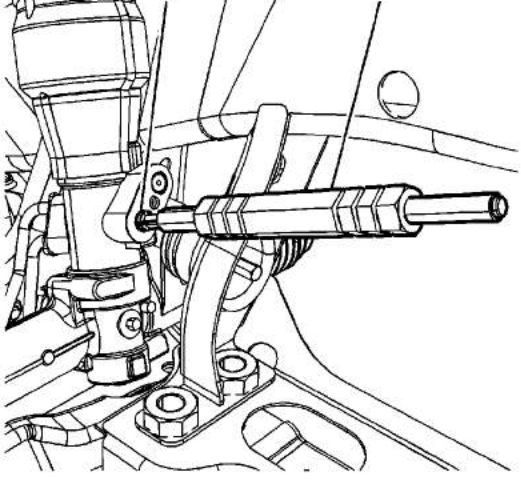

Caution: Clean the power steering gear inlet and outlet ports thoroughly of any debris. Failure to do so could result in contamination and damage to the power steering system components.

11. Install the seal extraction end of remover/installer J 44586 (2) to the steering gear oil seal (1).

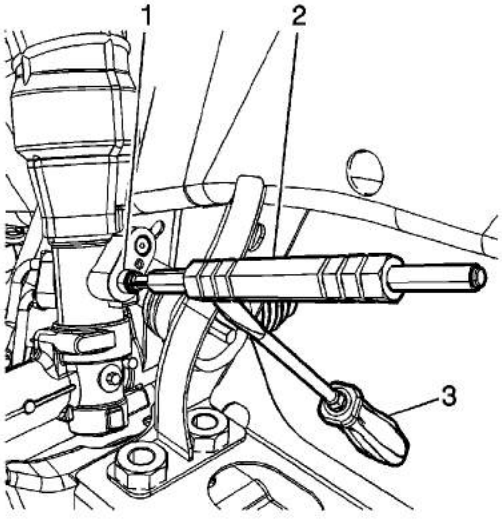

12. Remove the steering gear oil seal (1) from the steering gear using remover/installer J 44586 (2) with the aid of a flat-bladed tool (3) for additional leverage if needed.

Installation Procedure

cardiagn.com

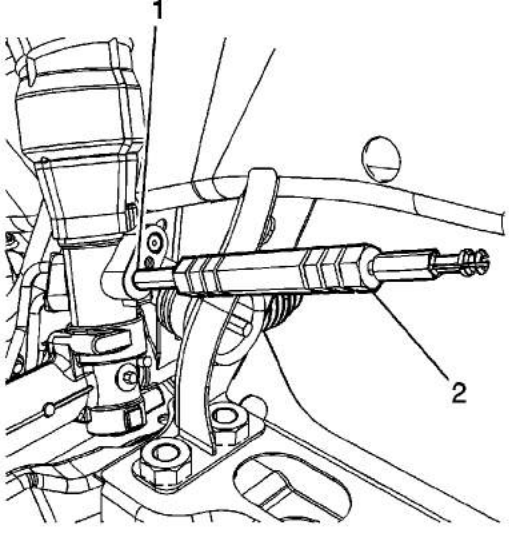

1. Install the NEW steering gear oil seal (1) using the seal installation end of remover/installer J 44586 (2) and make sure it is correctly seated in the steering gear.
2. Position the power steering gear inlet hose to the vehicle.

Caution: Refer to Fastener Caution in the Preface section.

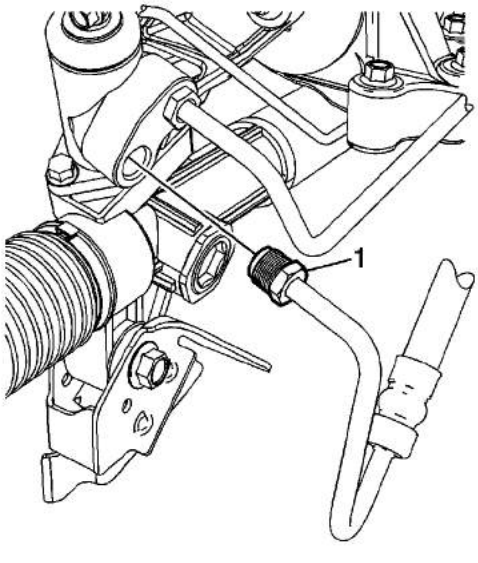

Caution: The inlet and outlet hoses must not be twisted during installation. Do not bend or distort the inlet or outlet hoses to make installation easier. Failure to follow these procedures could result in component damage.

cardiagn.com

3. Connect the power steering gear inlet hose fitting (1) to the steering gear and tighten the fitting to **25 N·m (18 lb ft)**.

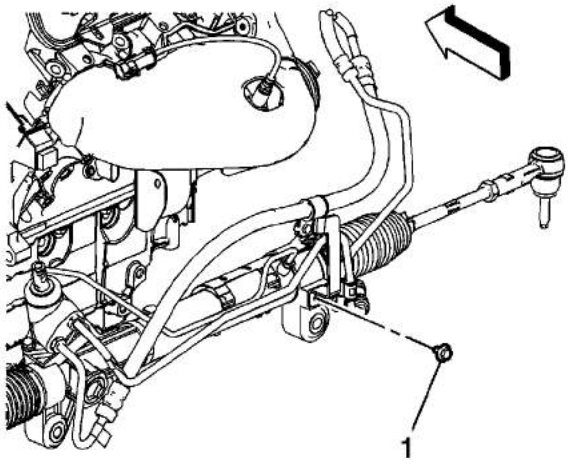

4. Install the power steering gear inlet hose bracket bolt (1) and tighten to **9 N·m (80 lb in)**.

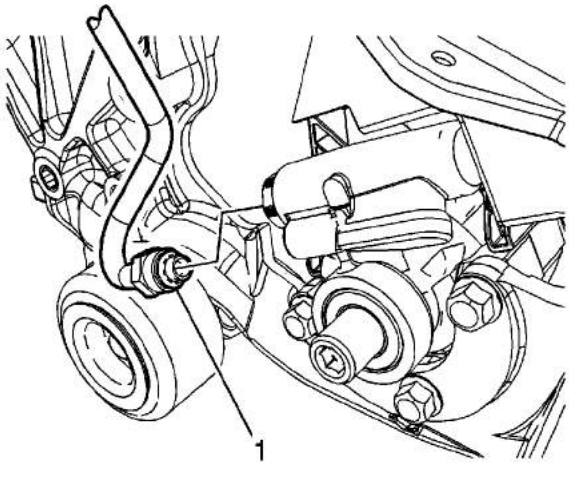

5. Connect the power steering gear inlet hose fitting (1) to the power steering pump and tighten the fitting to **25 N·m (18 lb ft)**.

cardiagn.com

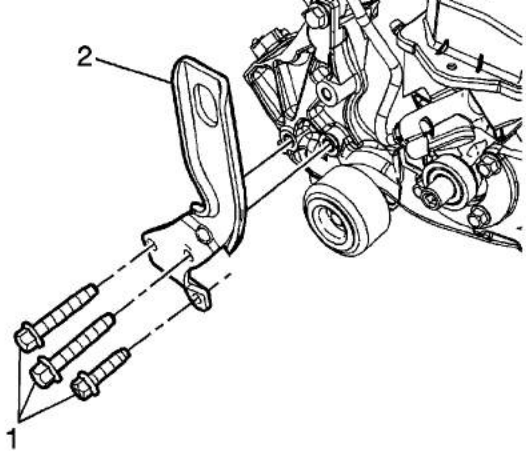

6. Install the front engine lift bracket (2) and bolts (1) and tighten to **50 N·m (37 lb ft)**.

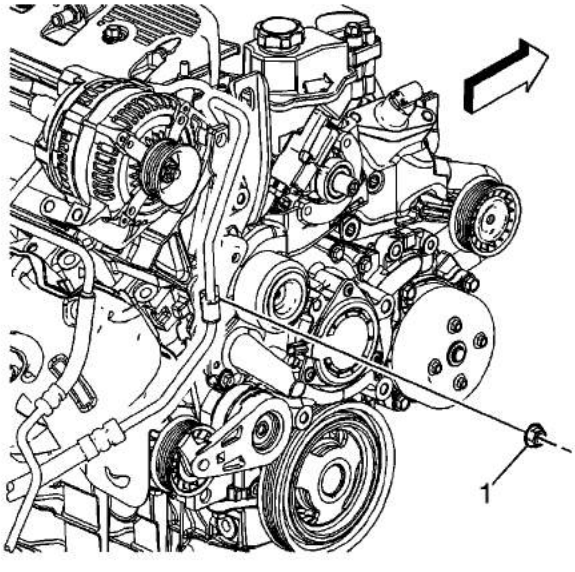

7. Install the power steering gear inlet hose bracket nut (1) and tighten to **9 N·m (80 lb in)**.
8. Clean any excess fluid from the vehicle and remove the drain pans.
9. Install the drive belt idler pulley. Refer to Drive Belt Idler Pulley Replacement.
10. Install the power steering pump pulley. Refer to Power Steering Pump Pulley Replacement
11. Fill and bleed the power steering system. Refer to Power Steering System Bleeding.

cardiagn.com

Power Steering Gear Inlet Pipe/Hose Replacement (LE5)

Removal Procedure

1. Place drain pans under the vehicle as needed.

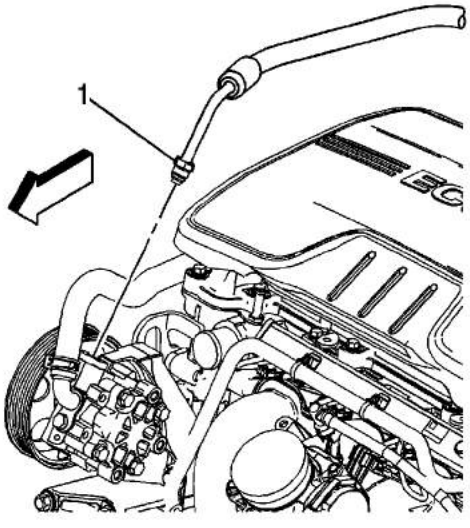

2. Disconnect the power steering gear inlet hose fitting (1) from the power steering pump.

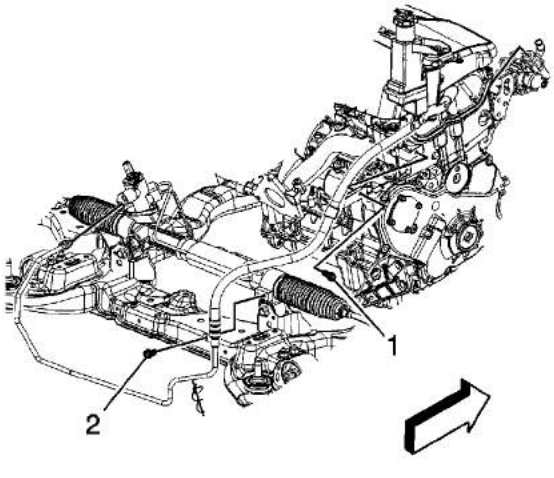

3. Remove the power steering gear pipe bracket bolt (1).
4. Remove the power steering gear inlet hose clip bolt (2).

cardiagn.com

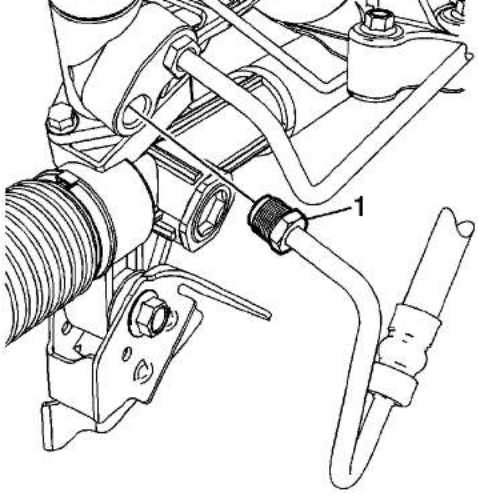

5. Disconnect the power steering gear inlet hose fitting (1) from the steering gear.
6. Remove the power steering gear inlet hose from the vehicle.

Installation Procedure

1. Position the power steering gear inlet hose to the vehicle.

   Caution: Refer to Fastener Caution in the Preface section.

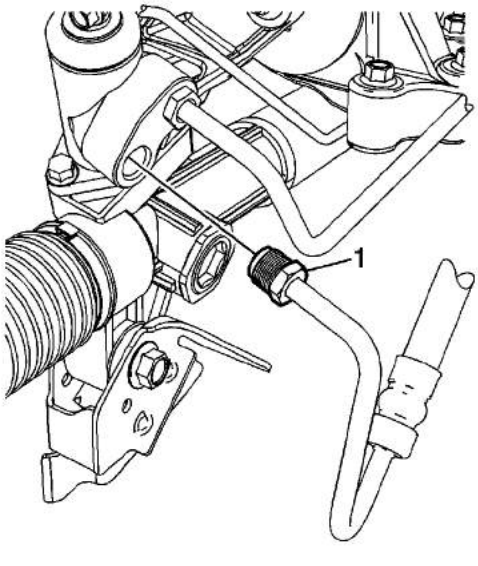

Note: Start all fittings and bolts by hand before finalizing any torques.

cardiagn.com

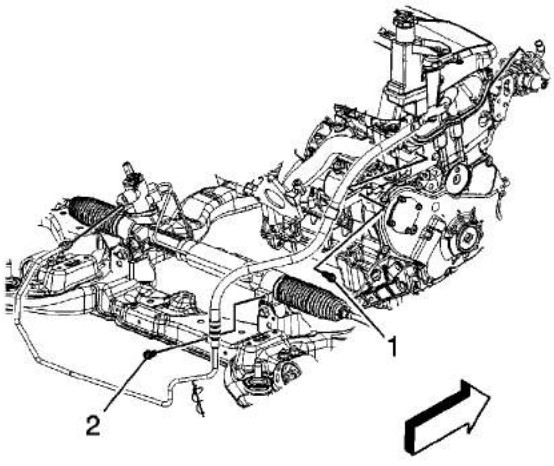

3. Install the power steering gear inlet hose clip bolt (2) and tighten to **9 N·m (80 lb in)**.
4. Install the power steering gear pipe bracket bolt (1) and tighten to **9 N·m (80 lb in)**.

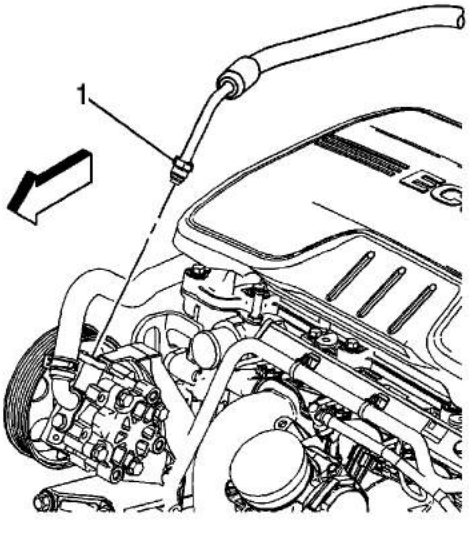

5. Connect the power steering gear inlet hose fitting (1) to the power steering pump and tighten the fitting to **25 N·m (18 lb ft)**.
6. Clean any excess fluid from the vehicle and remove the drain pans.
7. Fill and bleed the power steering system. Refer to Power Steering System Bleeding.

cardiagn.com

Electronic Power Steering Motor Control Module Replacement (Non-Two Mode Hybrid)

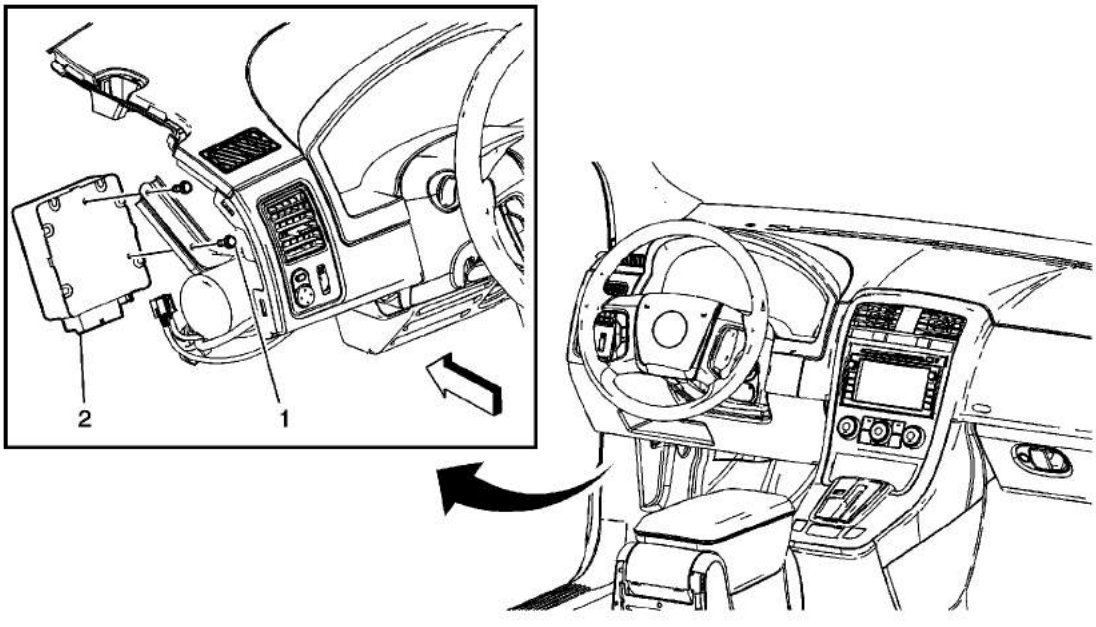

Callout	Component Name
Preliminary Procedures 1. Remove the left instrument panel side trim panel. Refer to Instrument Panel Side Trim Panel Replacement. 2. Remove the driver knee bolster reinforcement. Refer to Driver Knee Bolster Reinforcement Replacement.	
1	Electronic Power Steering Motor Control Module Bolt (Qty: 2) **Caution:** Refer to Fastener Caution in the Preface section. **Tighten** 11.5 N·m (102 lb in)
2	Electronic Power Steering Motor Control Module **Procedure** Disconnect any electrical connectors as needed.

cardiagn.com

Steering Gear Replacement (Non-Two Mode Hybrid)

Special Tools

- *J 44015* Steering Linkage Installer
- *SA91100C* Tie Rod Separator

For equivalent regional tools, refer to Special Tools.

Removal Procedure

Caution: Secure the steering wheel utilizing a strap to prevent rotation. Locking of the steering column will prevent damage and a possible malfunction of the SIR system. The steering wheel must be secured in position before disconnecting the following components:

- The steering column
- The intermediate shaft
- The steering gear

After disconnecting these components, do not move the front tires and wheels. Failure to follow these procedures may cause improper alignment of some components during installation and result in possible damage to the SIR coil.

1. Remove as much power steering fluid from the power steering fluid reservoir as possible if equipped with hydraulic power steering.
2. Place drain pans under the vehicle as needed if equipped with hydraulic power steering.
3. Remove the front tire and wheel assemblies. Refer to Tire and Wheel Removal and Installation.

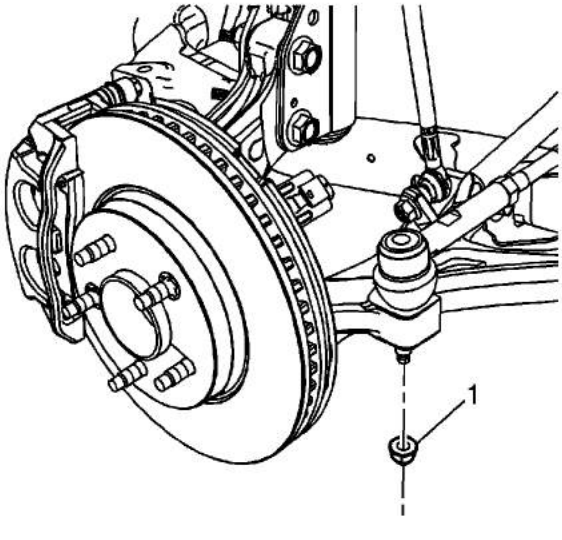

4. Remove both steering linkage outer tie rod nuts (1) and discard them.
5. Use the *SA91100C* se[redacted] tie rods from the steering

cardiagn.com

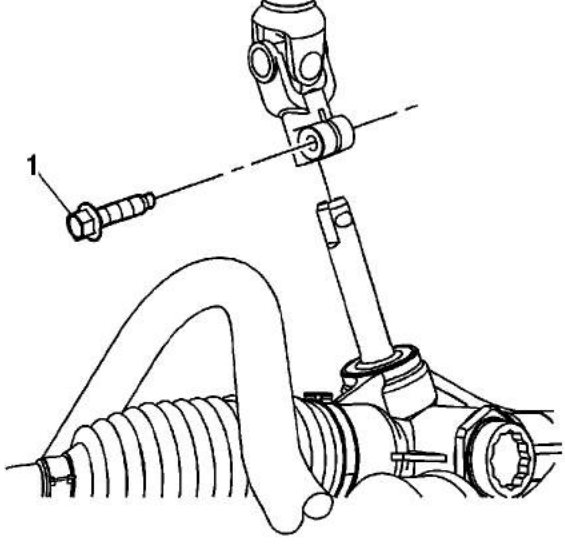

6. Remove the steering shaft coupling bolt (1) and disconnect the steering shaft coupling from the steering gear.

   The connection shown is for an electronic power steering gear. The connection at a hydraulic power steering gear is serviced the same way.

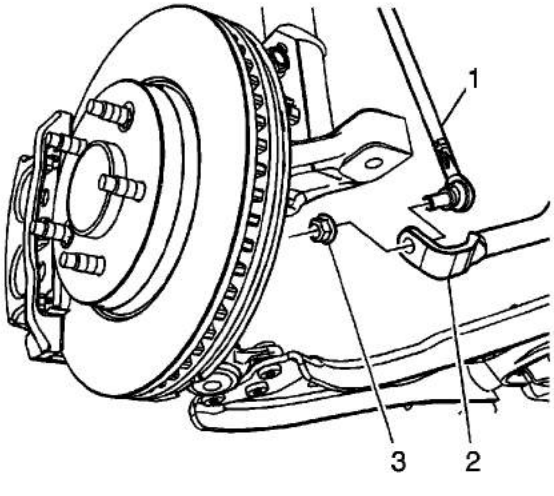

7. Remove the stabilizer shaft link nuts (3) and disconnect the stabilizer shaft links (1) from the stabilizer shaft (2).
8. Remove the steering gear bolts and nuts.
9. Rotate the stabilizer shaft to provide clearance for the steering gear.

cardiagn.com

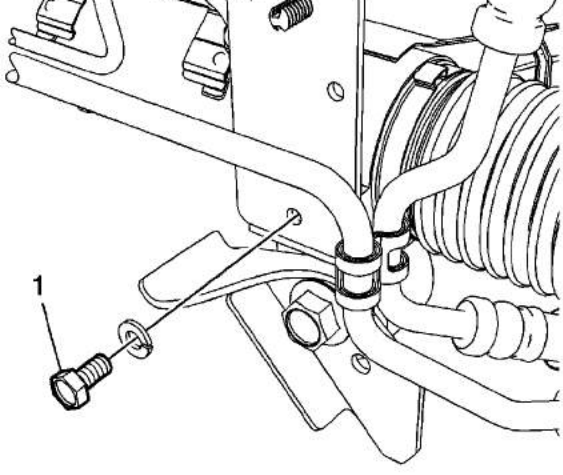

10. Remove the power steering gear inlet hose bracket bolt (1) if equipped with hydraulic power steering.

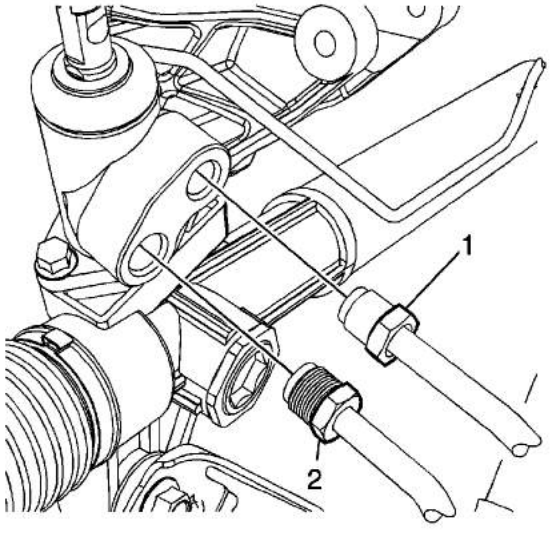

Note: Do not reuse the old O-ring seals.

11. Disconnect the power steering gear inlet hose (2) and the power steering cooler hose (1) from the steering gear if equipped with hydraulic power steering.
12. Remove the steering gear through the left wheelhouse opening.

Installation Procedure

1. Maneuver the steering gear into the vehicle through the left wheelhouse opening. Make sure

cardiagn.com

Caution: Refer to Fastener Caution in the Preface section.

Note: Hand start all steering gear bolts and nuts before finalizing any torques.

2. Install the steering gear bolts and nuts and tighten to **110 N·m (81 lb ft)**.

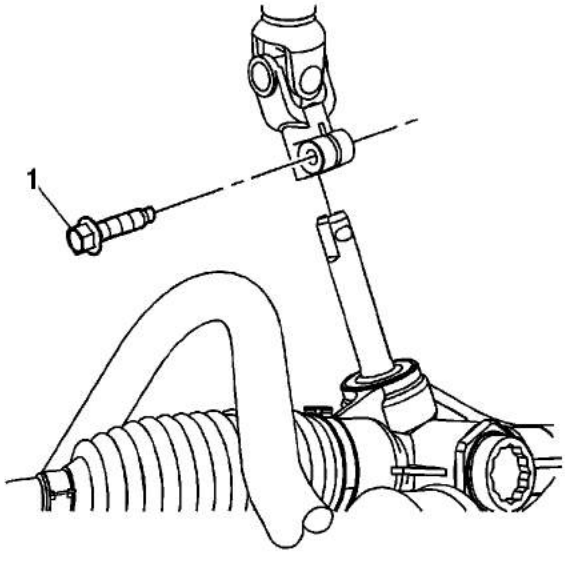

3. Connect the steering shaft coupling to the steering gear and install a new steering shaft coupling bolt (1) to **33 N·m (24 lb ft)**.

   The connection shown is for an electronic power steering gear. The connection at a hydraulic power steering gear is serviced the same way.

4. If equipped with electronic power steering (non-two mode hybrid), install the steering shaft coupling bolt and tighten to **34 N·m (25 lb ft)**.

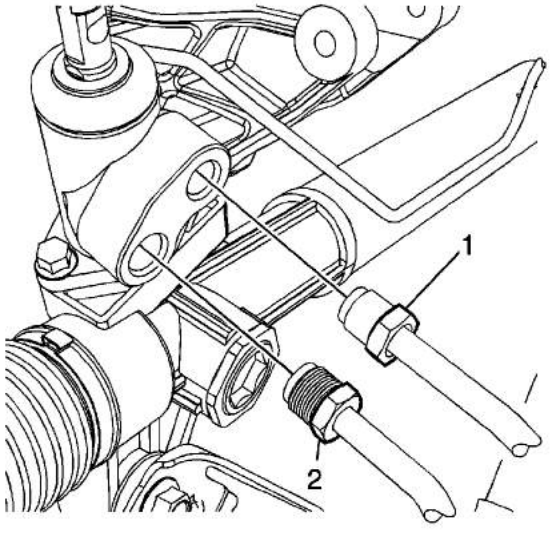

cardiagn.com

Note: Use new O-Ring seals.

5. Connect the power steering gear inlet hose (2) and the power steering cooler hose (1) to the steering gear if equipped with hydraulic power steering.

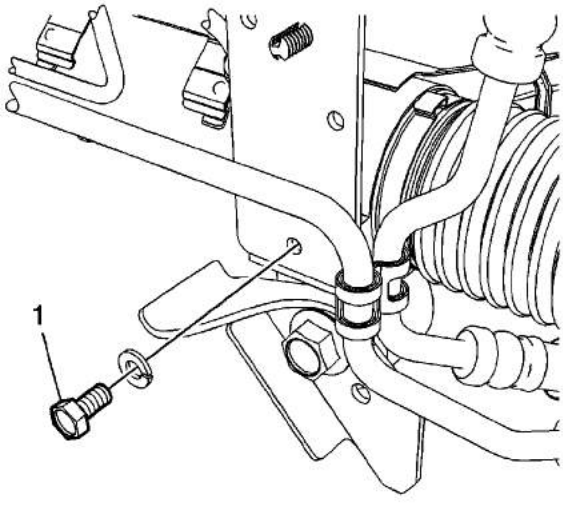

6. Install the power steering gear inlet hose bracket bolt (1) if equipped with hydraulic power steering and tighten to **9 N·m (80 lb in)**.

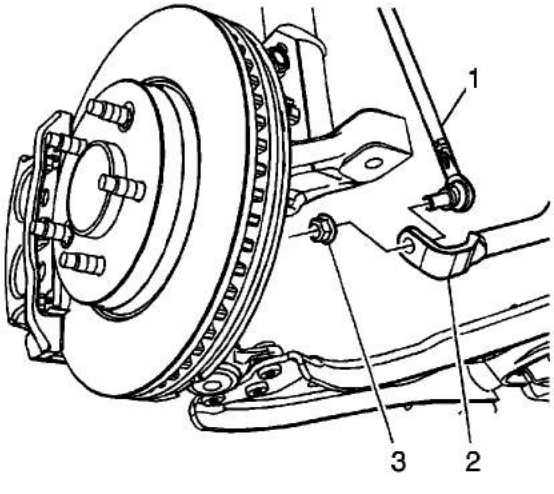

7. Connect the stabilizer shaft links (1) to the stabilizer shaft (2) and install the stabilizer shaft link nuts (3) and tighten to **65 N·m (48 lb ft)**.

cardiagn.com

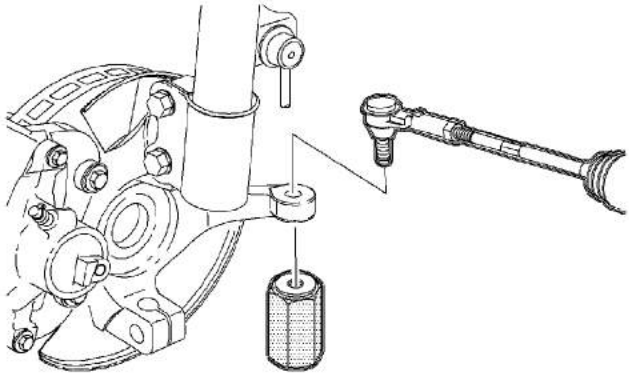

8. Use the *J 44015* installer to seat the steering linkage outer tie rods and tighten the installer to **40 N·m (30 lb ft)**.

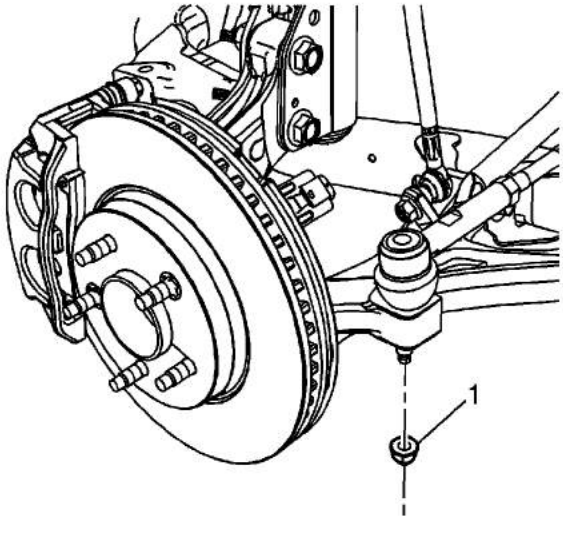

9. Install new steering linkage outer tie rod nuts (1) and tighten to **25 N·m (18 lb ft) plus 90 degrees**.
10. Clean any excess power steering fluid from the vehicle and remove the drain pans if equipped with hydraulic power steering.
11. Fill and bleed the power steering system if equipped with hydraulic power steering. Refer to Power Steering System Bleeding
12. Install the front tire and wheel assemblies. Refer to Tire and Wheel Removal and Installation.
13. Adjust the front toe. Refer to Wheel Alignment - Steering Wheel Angle and/or Front Toe Adjustment.

cardiagn.com

Steering Gear Boot Replacement - Off Vehicle

Special Tools

SA9164C Clamp Pliers

Removal Procedure

1. Remove the steering gear. Refer to Steering Gear Replacement.

   Note: Count the total number of complete rotations needed to remove the steering linkage outer tie rod from the steering linkage inner tie rod.

2. Remove the steering linkage outer tie rod. Refer to Steering Linkage Outer Tie Rod Replacement.
3. Remove the steering linkage inner tie rod nut.
4. Remove the steering gear boot clamps and discard them.

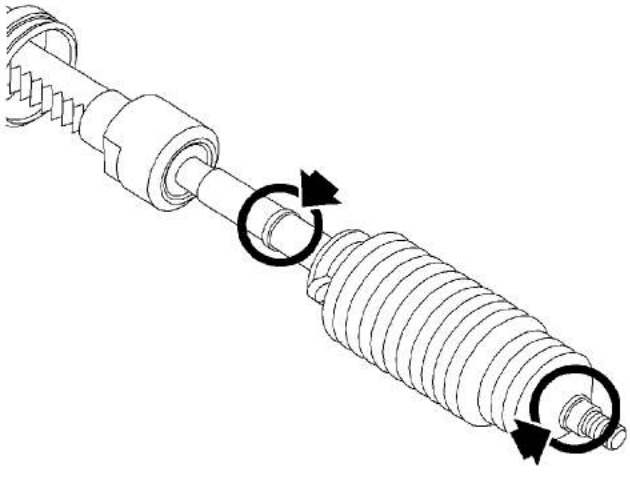

5. Remove the steering gear boot.
6. Clean the steering linkage inner tie rod and steering gear boot contact area of any grease and debris.

Installation Procedure

cardiagn.com

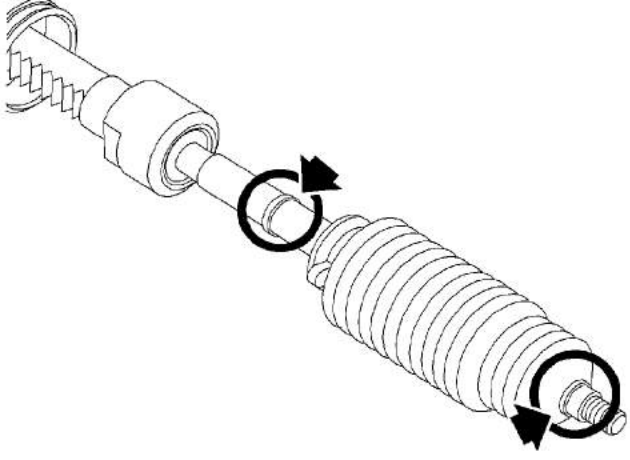

Note: The steering linkage inner tie rod and steering gear boot must be free of moisture and debris.

1. Apply approximately 3/4 of the supplied grease packet into the small end of the steering gear boot cavity. Apply the remainder of the grease on the steering linkage inner tie rod where the small end of the steering gear boot meets it.

   Note: Make sure the larger end of the steering gear boot is firmly seated in the correct location on the steering gear.

2. Install the steering gear boot with the larger steering gear boot clamp loosely attached.

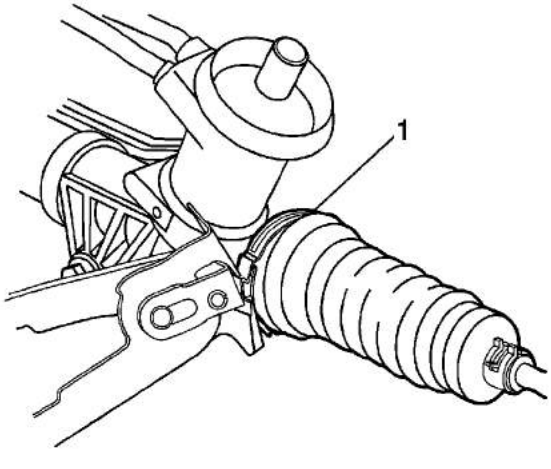

3. Use pliers SA9164C to install the larger steering gear boot clamp (1).

cardiagn.com

4. Install the smaller steering gear boot clamp.

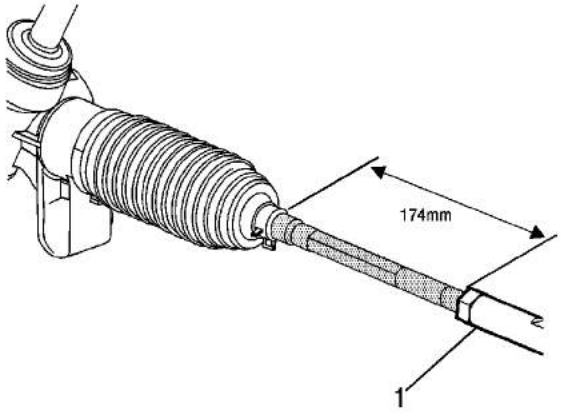

5. Install the steering linkage inner tie rod nut (1) approximately 174 mm (6.85 in) from the smaller steering gear boot clamp.
6. Install the steering linkage outer tie rod. Refer to Steering Linkage Outer Tie Rod Replacement.

   Caution: Refer to Fastener Caution in the Preface section.

7. Tighten the steering linkage inner tie rod nut and tighten to **60 N·m (44 lb ft)**.
8. Install the steering gear. Refer to Steering Gear Replacement.
9. Adjust the front toe. Refer to Wheel Alignment - Steering Wheel Angle and/or Front Toe Adjustment.

cardiagn.com

Steering Linkage Inner Tie Rod Replacement

Disassembly Procedure

1. Remove the steering gear and place it in a vise. Refer to Steering Gear Replacement.
2. Remove the steering gear boot. Refer to Steering Gear Boot Replacement - Off Vehicle.

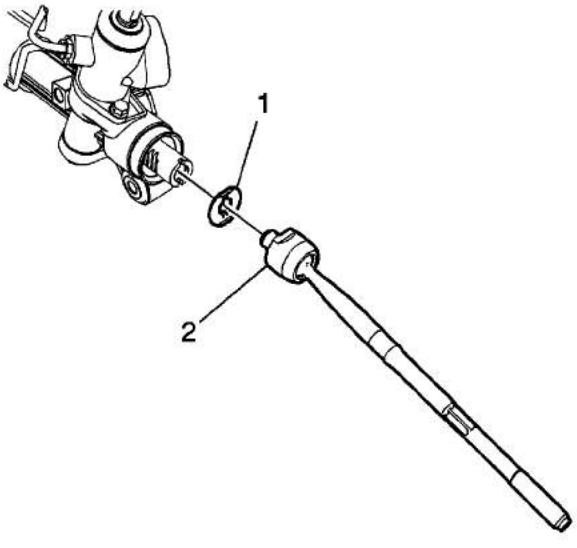

Caution: Do not change the steering gear preload adjustment before moving the inner tie rod from the steering gear. Changing the steering gear preload adjustment before moving the inner tie rod could result in damage to the pinion and the steering gear.

3. Bend the tabs to release the steering linkage inner tie rod retaining washer (1).

Caution: Refer to Pipe Wrench Positioning Caution in the Preface section.

4. Place a pipe wrench on the steering gear rack next to the steering linkage inner tie rod housing.
5. Place a wrench on the flats of the steering linkage inner tie rod housing (2).
6. Rotate the steering linkage inner tie rod housing counterclockwise while holding the steering gear rack stationary until the steering linkage inner tie rod separates from the steering gear rack.
7. Remove and discard the steering linkage inner tie rod retaining washer (1).

Assembly Procedure

cardiagn.com

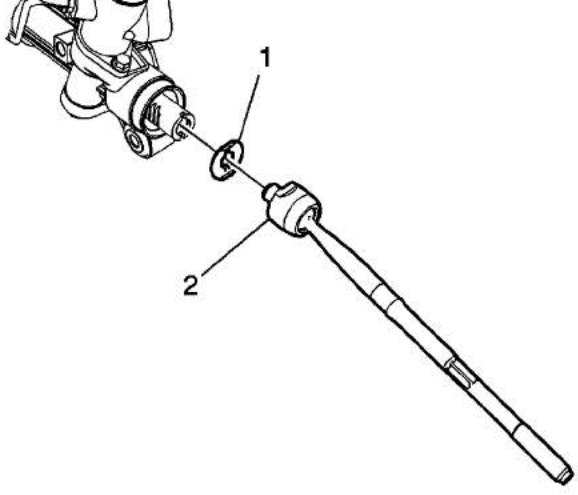

1. Position the NEW steering linkage inner tie rod retaining washer (1).
2. Attach the steering linkage inner tie rod onto the steering gear rack.

   Caution: Refer to Pipe Wrench Positioning Caution in the Preface section.

3. Place a pipe wrench on the steering gear rack next to the steering linkage inner tie rod housing (2).

   Caution: Refer to Fastener Caution in the Preface section.

4. Place a torque wrench and OTC 09922-10010-01 Inner Tie Rod Wrench on the flats of the steering linkage inner tie rod housing (2) and tighten to **78 N·m (58 lb ft)**.
5. Bend the tabs over on the steering linkage inner tie rod retaining washer (1) to secure it.
6. Install the steering gear boot. Refer to Steering Gear Boot Replacement - Off Vehicle.
7. Install the steering gear. Refer to Steering Gear Replacement.

cardiagn.com

Power Steering Assist Motor Replacement (Non-Two Mode Hybrid)

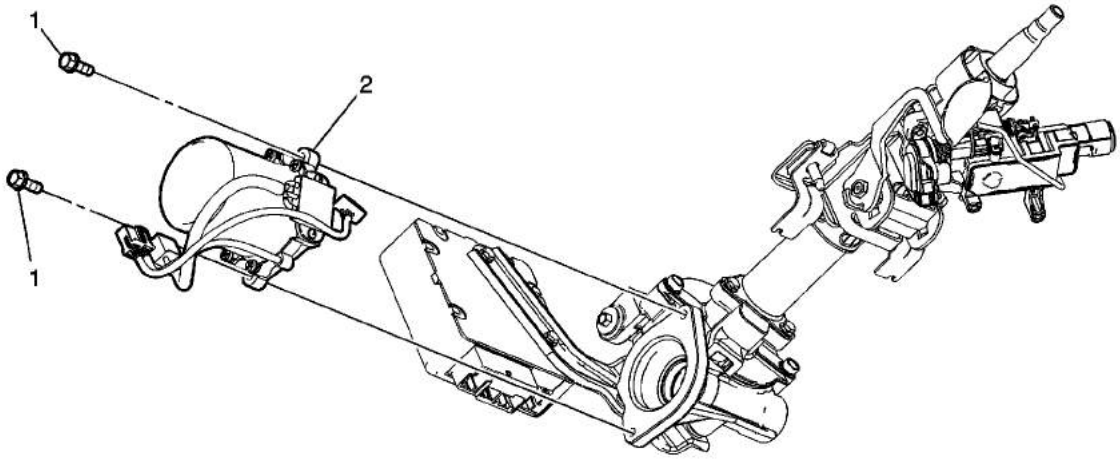

Callout	Component Name
Preliminary Procedures 1. Remove the left instrument panel side trim panel. Refer to Instrument Panel Side Trim Panel Replacement. 2. Remove the driver knee bolster reinforcement. Refer to Driver Knee Bolster Reinforcement Replacement.	
1	Power Steering Assist Motor Bolt (Qty: 2) **Caution:** Refer to Fastener Caution in the Preface section. **Tighten** 18 N·m (13 lb ft)
2	Power Steering Assist Motor **Procedure** Disconnect any electrical connectors as needed.

cardiagn.com