GROUP 23C

AUTOMATIC TRANSAXLE OVERHAUL <F5A5A>

CONTENTS

GENERAL DESCRIPTION 23C-2

SPECIAL TOOLS 23C-4

TRANSAXLE 23C-8
- DISASSEMBLY AND ASSEMBLY 23C-8

OIL PUMP 23C-53
- DISASSEMBLY AND ASSEMBLY 23C-53

UNDERDRIVE CLUTCH AND INPUT SHAFT 23C-54
- DISASSEMBLY AND ASSEMBLY 23C-54

REVERSE AND OVERDRIVE CLUTCH 23C-57
- DISASSEMBLY AND ASSEMBLY 23C-57

DIRECT CLUTCH 23C-61
- DISASSEMBLY AND ASSEMBLY 23C-61

PLANETARY GEAR 23C-64
- DISASSEMBLY AND ASSEMBLY 23C-64

LOW-REVERSE BRAKE 23C-66
- DISASSEMBLY AND ASSEMBLY 23C-66

SECOND BRAKE 23C-67
- DISASSEMBLY AND ASSEMBLY 23C-67

DIRECT PLANETARY CAREER 23C-68
- DISASSEMBLY AND ASSEMBLY 23C-68

DIFFERENTIAL 23C-72
- DISASSEMBLY AND ASSEMBLY 23C-72

VALVE BODY 23C-75
- DISASSEMBLY AND ASSEMBLY 23C-75

REDUCTION BRAKE PISTON 23C-79
- DISASSEMBLY AND ASSEMBLY 23C-79

DRIVE SHAFT OIL SEAL 23C-80
- DISASSEMBLY AND ASSEMBLY 23C-80

SPECIFICATIONS 23C-82
- FASTENER TIGHTENING SPECIFICATIONS 23C-82
- GENERAL SPECIFICATIONS 23C-82
- SERVICE SPECIFICATIONS 23C-83
- VALVE BODY SPRING IDENTIFICATION TABLE 23C-83
- ADJUSTING PLATE, SNAP RING AND SPACERS 23C-84
- SEALANTS 23C-86

cardiagn.com

GENERAL DESCRIPTION

M1233000100588

This automatic transaxle is made up of the following main parts.

The torque converter employs a 3 element, 1 step, 2 phase lock-up clutch.

The gear train is made up of 4 multi-plate clutches, 2 multi-plate brakes, 2 planetary gears, band type brake and 2 one-way clutch made up of a sun gear, carrier, pinion gear and annulus gear.

The cases consist of a converter housing, transaxle case, rear cover and a valve body cover.

Parts related to oil pressure regulation are the oil pump, which pressurizes the oil; the regulator, which controls the pressure setting; the solenoid valves, which change the oil pressure with electrical signals; the pressure control valve, which controls the oil pressure coming from the solenoid valve that affects each clutch and brake; each kind OD valve, which carry out the retention of the oil pressure through the lines; and finally the valve body, which houses all the valves.

SECTIONAL VIEW

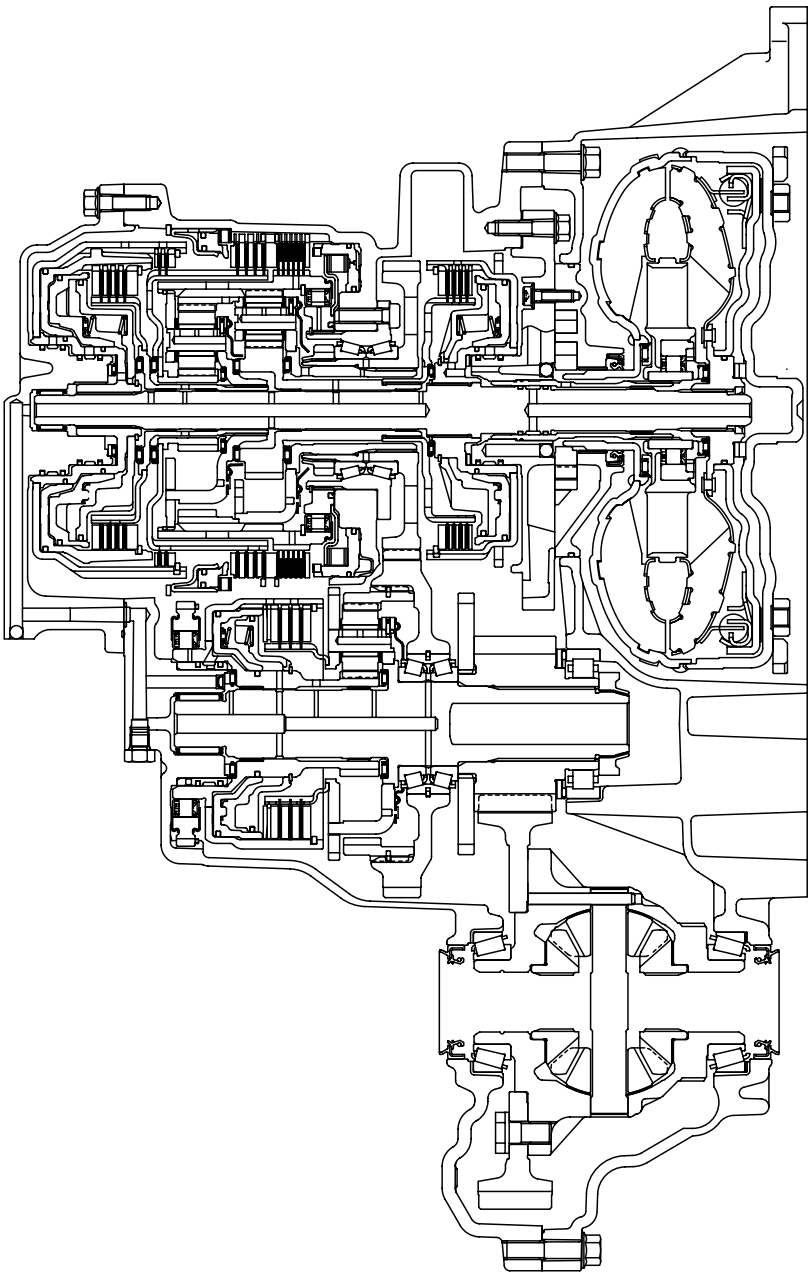

AK403256

cardiagn.com

HYDRAULIC CIRCUIT

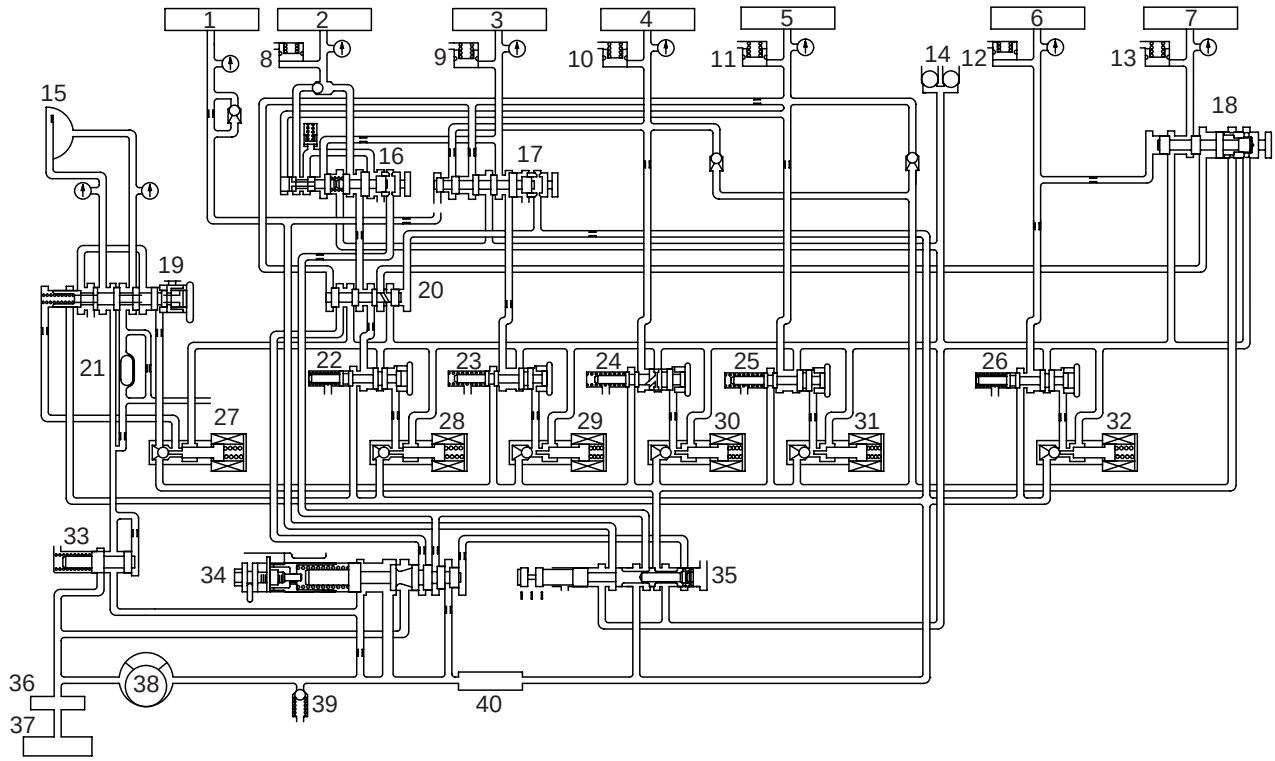

AK403608AB

1. REVERSE CLUTCH
2. LOW-REVERSE BRAKE
3. SECOND BRAKE
4. UNDERDRIVE CLUTCH
5. OVERDRIVE CLUTCH
6. REDUCTION CLUTCH
7. DIRECT CLUTCH
8. LOW-REVERSE ACCUMULATOR
9. SECOND ACCUMULATOR
10. UNDERDRIVE ACCUMULATOR
11. OVERDRIVE ACCUMULATOR
12. REDUCTION ACCUMULATOR
13. DIRECT CLUTCH
14. CHECK BALL
15. TORQUE CONVERTER CLUTCH
16. FAIL-SAFE VALVE A
17. FAIL-SAFE VALVE B
18. FAIL-SAFE VALVE C
19. TORQUE CONVERTER CLUTCH CONTROL VALVE
20. SWITCHING VALVE
21. COOLER
22. LOW-REVERSE PRESSURE CONTROL VALVE
23. SECOND PRESSURE CONTROL VALVE
24. UNDERDRIVE PRESSURE CONTROL VALVE
25. OVERDRIVE PRESSURE CONTROL VALVE
26. REDUCTION PRESSURE CONTROL VALVE
27. TORQUE CONVERTER CLUTCH CONTROL SOLENOID VALVE
28. LOW-REVERSE SOLENOID VALVE
29. SECOND SOLENOID VALVE
30. UNDERDRIVE SOLENOID VALVE
31. OVERDRIVE SOLENOID VALVE
32. REDUCTION SOLENOID VALVE
33. TORQUE CONVERTER PRESSURE CONTROL VALVE
34. REGULATOR VALVE
35. MANUAL VALVE
36. OIL FILTER
37. OIL PAN
38. OIL PUMP
39. RELIEF VALVE
40. OIL STRAINER

cardiagn.com

SPECIAL TOOLS

M1233000600505

TOOL	TOOL NUMBER AND NAME	SUPERSESSION	APPLICATION
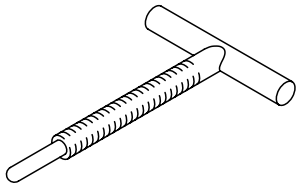	MD998333 Oil pump remover	MD998333-01	Removal of oil pump
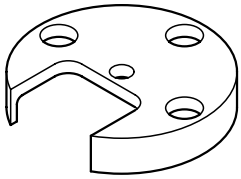	MD999577 Spring compressor	MD999577	Removal and installation of one-way clutch inner race snap ring
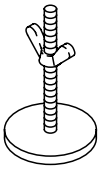	MD998924 Spring compressor retainer	MD998924-01	Use with spring compressor
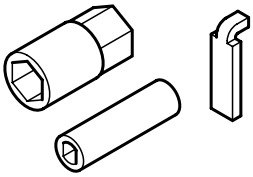	MB991633 Reduction brake set	MB991633-01	Adjustment of reduction brake piston
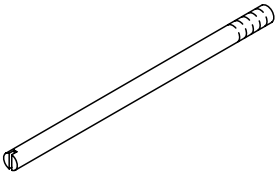	MD998412 Guide	MD998412	Installation of transfer drive gear and oil pump
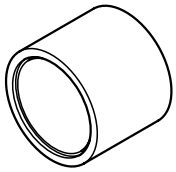	MB991445 Bushing remover and installer base	–	Installation of differential taper roller bearing outer race
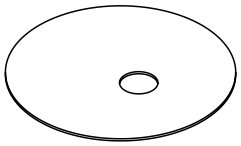	MB991632 Clearance dummy plate	MB991632-01	Measurement of reaction plate low-reverse brake and second brake end play

cardiagn.com

TOOL	TOOL NUMBER AND NAME	SUPERSESSION	APPLICATION
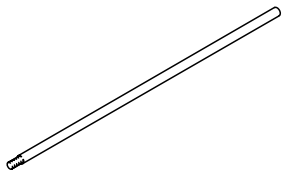	MD998913 Dial gauge extension	MD998913-01	Measurement of low-reverse brake end play
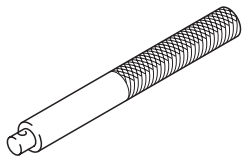	MB990938 Handle	MB990938-01	• Installation of input shaft rear bearing • Use with installer adapter
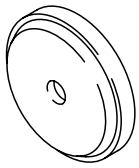	MB990936 Installer adapter	MB990936-01 or General service tool	Installation of differential taper roller bearing outer race
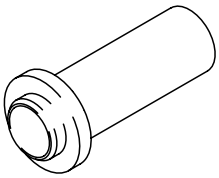	MD998334 Oil seal installer	MD998334-01	Installation of oil pump oil seal
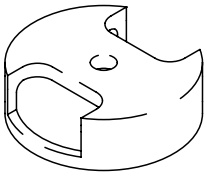	MD998907 Spring compressor	MD998907-01	Removal and installation of underdrive clutch snap ring
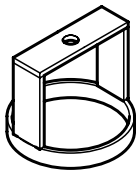	MB991630 Spring compressor	MB991630-01	Measurement of underdrive clutch and overdrive clutch end play
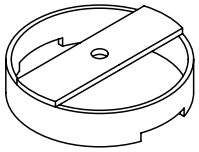	MB991629 Spring compressor	MB991629-01	Measurement of underdrive clutch and overdrive clutch end play
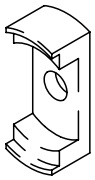	MD999590 Spring compressor	MIT305039	Removal and installation of overdrive clutch snap ring

cardiagn.com

TOOL	TOOL NUMBER AND NAME	SUPERSESSION	APPLICATION
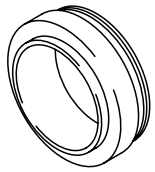	MD998824 Installer adapter (50)	MD998824-01	Installation of direct clutch snap ring and transfer driven gear
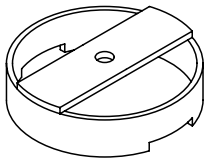	MB991789 Spring compressor	MB991789-01	Measurement of reverse clutch end play
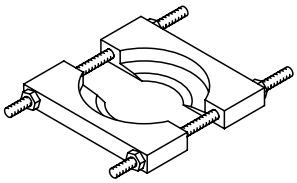	MD998917 Bearing remover	General service tool or MD998348-01	Removal of transfer driven gear, output gear and parking gear
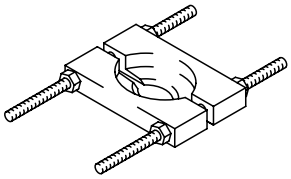	MD998801 Bearing remover	General service tool or MD998348-01	Removal of each bearing
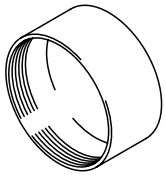	MD998812 Installer cap	General service tool	Use with installer and installer adapter
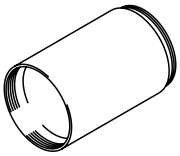	MD998813 Installer 100	General service tool	Use with installer cap and installer adapter

cardiagn.com

TOOL	TOOL NUMBER AND NAME	SUPERSESSION	APPLICATION
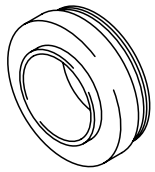	MD998820 Installer adapter (42)	MD998820-01	Installation of differential taper roller bearing
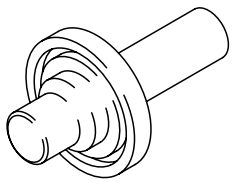	MD998800 Oil seal installer	General service tool	Installation of drive shaft oil seal
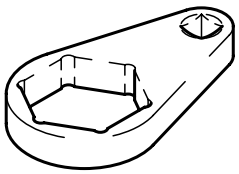	MD998834 Special spanner	–	Removal and installation of direct planetary carrier lock nut

cardiagn.com

TRANSAXLE

DISASSEMBLY AND ASSEMBLY

M1233001000603

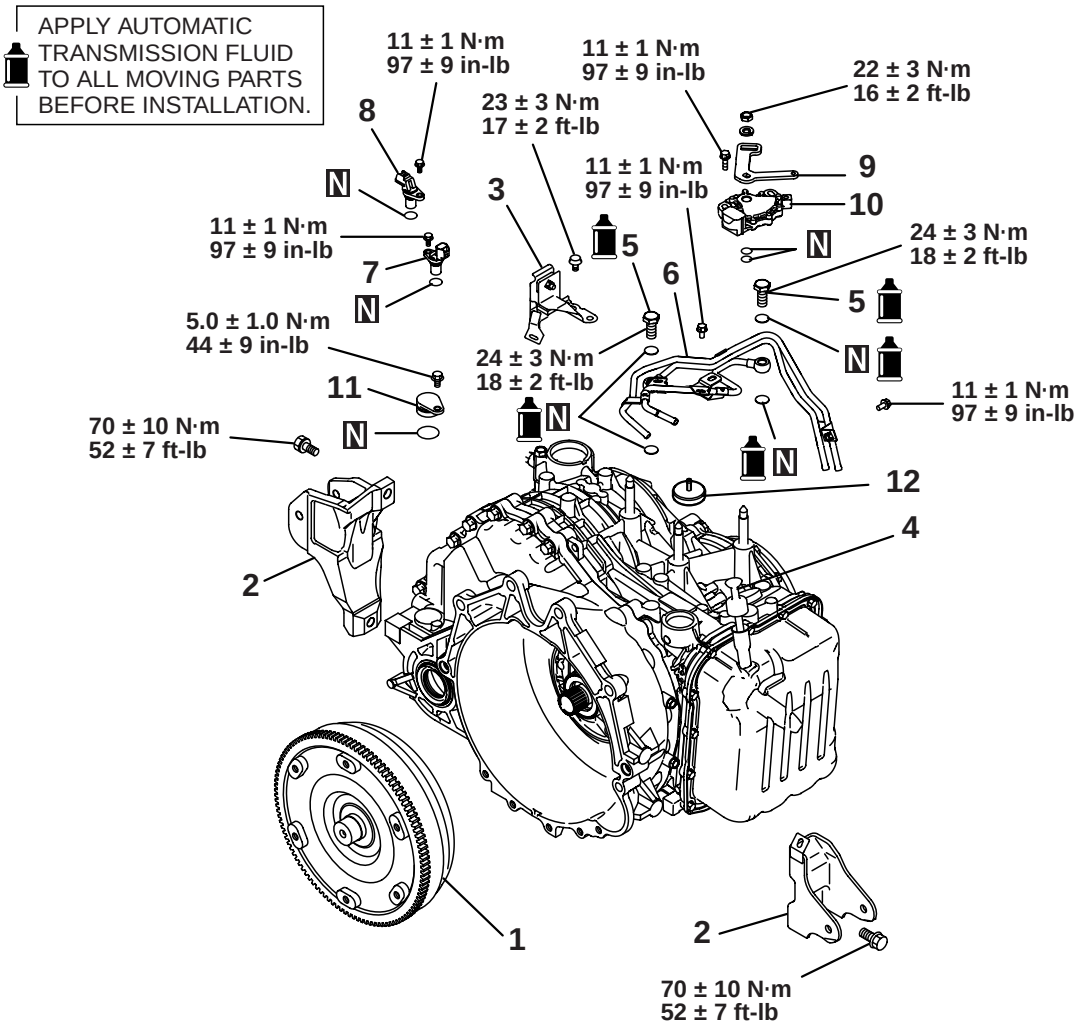

AK403263AB

1. TORQUE CONVERTER
2. ROLL STOPPER BRACKET
3. CONTROL CABLE SUPPORT BRACKET
4. OIL DIPSTICK
5. EYE BOLT
6. OIL COOLER FEED TUBE
7. INPUT SHAFT SPEED SENSOR
8. OUTPUT SHAFT SPEED SENSOR
9. MANUAL CONTROL LEVER
10. PARK/NEUTRAL POSITION SWITCH
11. SEALING CAP
12. AIR BREATHER

cardiagn.com

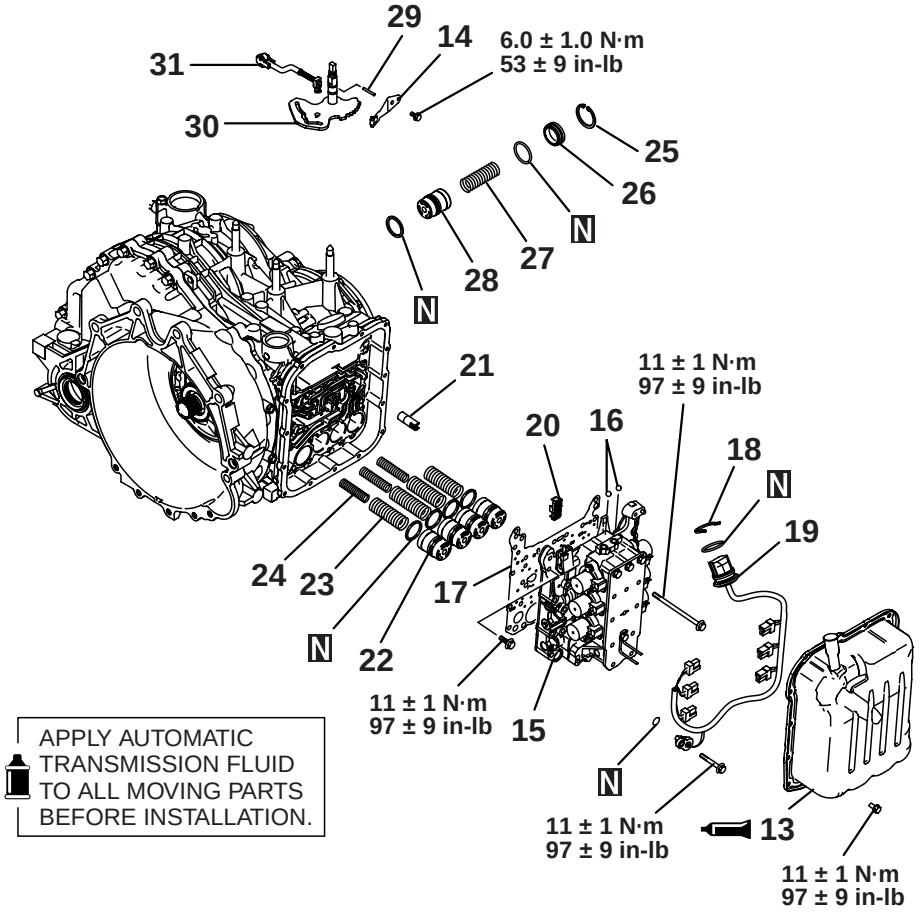

AK403264AB

13. VALVE BODY COVER
14. MANUAL CONTROL SHAFT DETENT
15. VALVE BODY
16. STEEL BALL
17. GASKET
18. SNAP RING
19. SOLENOID VALVE HARNESS
20. STRAINER
21. SOLENOID BRAKE RETAINER OIL SEAL
22. ACCUMULATOR PISTON
23. ACCUMULATOR SPRING
24. ACCUMULATOR SPRING
25. SNAP RING
26. ACCUMULATOR COVER
27. ACCUMULATOR SPRING
28. ACCUMULATOR PISTON
29. MANUAL CONTROL LEVER SHAFT ROLLER
30. MANUAL CONTROL LEVER SHAFT
31. PARKING PAWL ROD

cardiagn.com

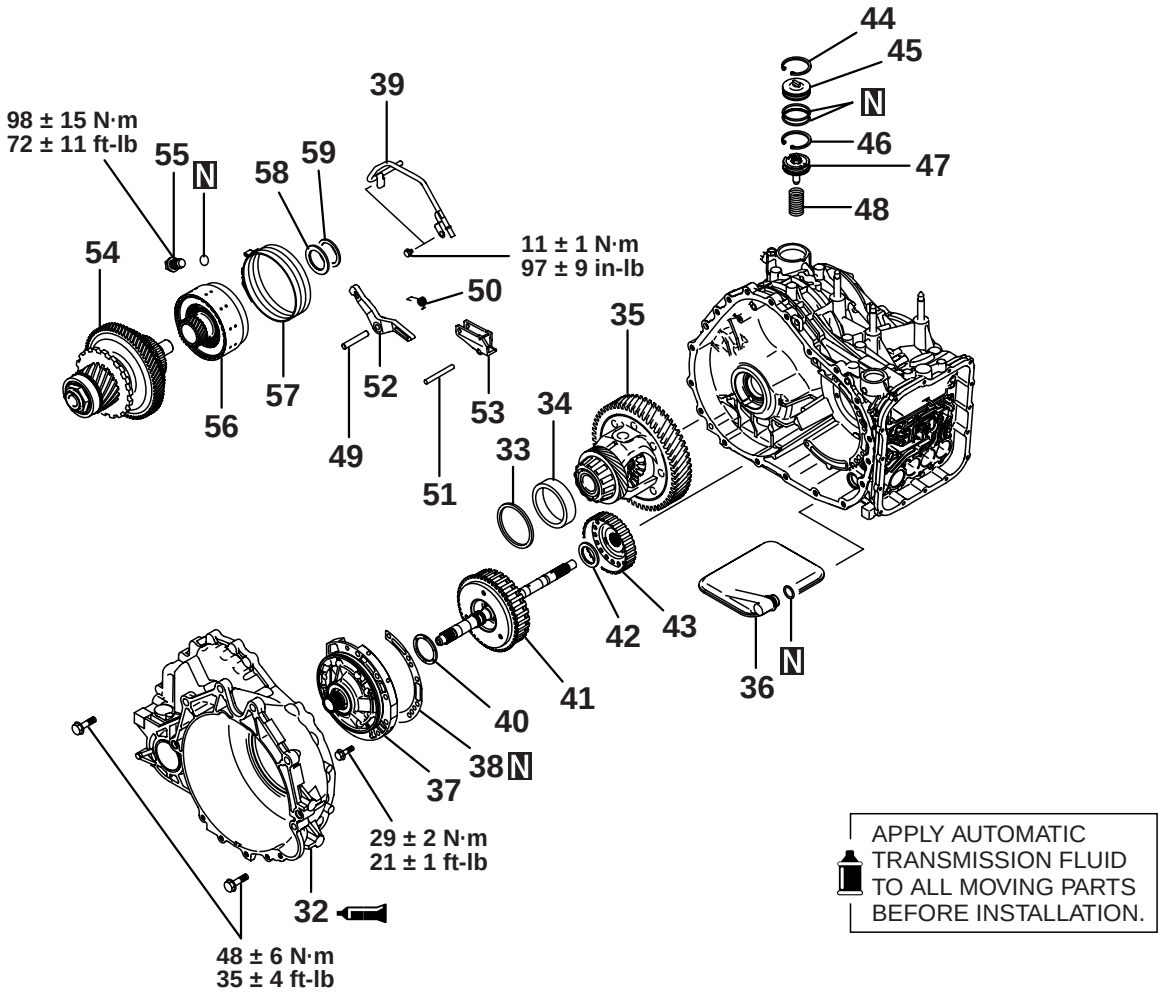

AK403288AB

32. TORQUE CONVERTER HOUSING
33. SPACER
34. OUTER RACE
35. DIFFERENTIAL
36. OIL FILTER
37. OIL PUMP
38. GASKET
39. PIPE
40. THRUST WASHER NO. 1
41. UNERDRIVE CLUTCH AND INPUT SHAFT
42. THRUST BEARING NO.2
43. UNDERDRIVE CLUTCH HUB
44. SNAP RING
45. REDUCTION BRAKE PISTON COVER
46. SNAP RING
47. REDUCTION BRAKE PISTON
48. REDUCTION BRAKE SPRING
49. PARKING PAWL SHAFT
50. PARKING PAWL SPRING
51. PARKING ROLLER SUPPORT SHAFT
52. PARKING PAWL
53. PARKING ROLLER SUPPORT
54. DIRECT PLANETARY CARRIER ASSEMBLY
55. ANCHOR PLUG
56. DIRECT CLUTCH
57. REDUCTION BRAKE BAND
58. THRUST BEARING NO.11
59. THRUST RACE NO.12

cardiagn.com

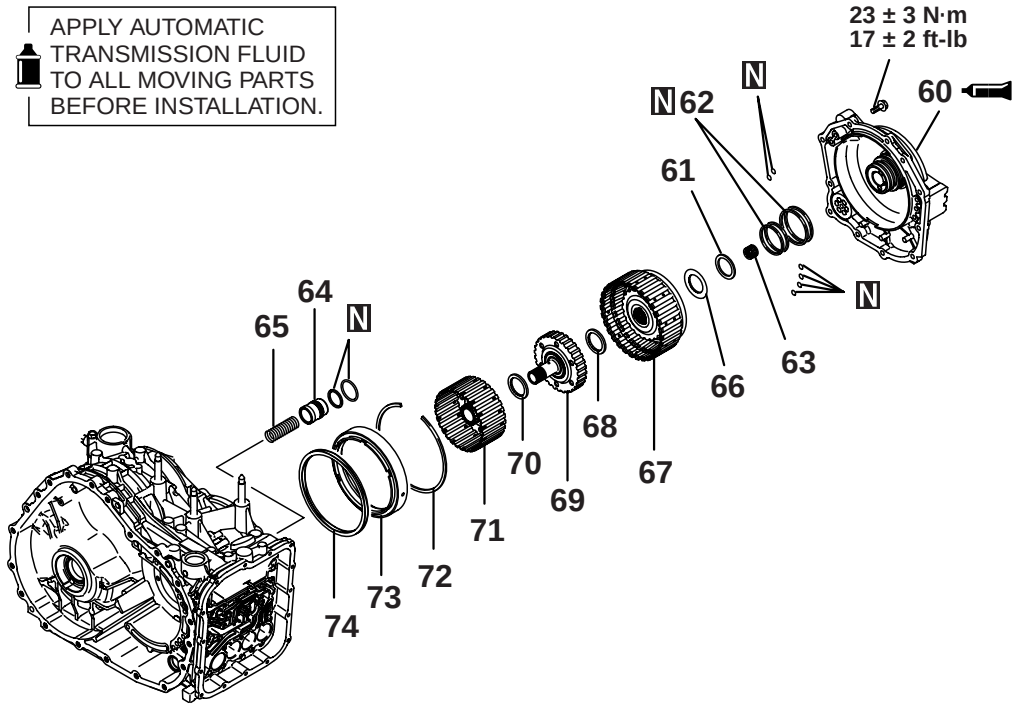

AK403289AB

60. REAR COVER
61. THRUST RACE NO.8
62. SEAL RING
63. INPUT SHAFT REAR BEARING
64. ACCUMULATOR PISTON
65. ACCUMULATOR SPRING
66. THRUST BEARING NO.7
67. REVERSE AND OVERDRIVE CLUTCH
68. THRUST BEARING NO.6
69. OVERDRIVE CLUTCH HUB
70. THRUST BEARING NO.5
71. PLANETARY REVERSE SUN GEAR
72. SNAP RING
73. SECOND BRAKE PISTON
74. RETURN SPRING

cardiagn.com

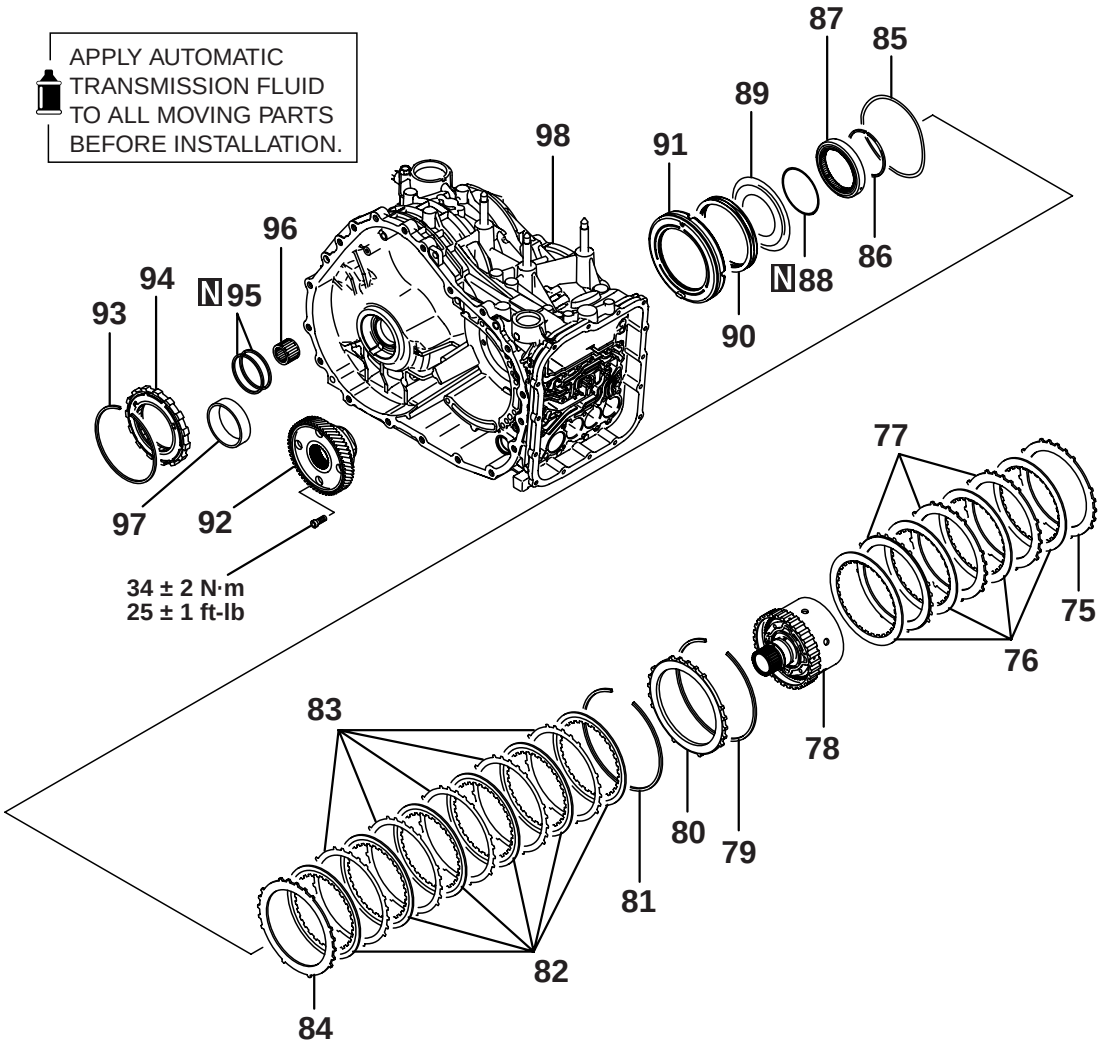

AK403290AB

75. PRESSURE PLATE
76. SECOND BRAKE DISC
77. SECOND BRAKE PLATE
78. PLANETARY CARRIER ASSEMBLY
79. SNAP RING
80. REACTION PLATE
81. SNAP RING
82. LOW-REVERSE BRAKE DISK
83. LOW-REVERSE BRAKE PLATE
84. PRESSURE PLATE
85. WAVE SPRING
86. SNAP RING
87. ONE-WAY CLUTCH INNER RACE
88. O-RING
89. SPRING RETURN
90. RETURN SPRING
91. LOW-REVERSE BRAKE PISTON
92. TRANSFER DRIVE GEAR
93. SNAP RING
94. ONE-WAY CLUTCH
95. SEAL RING
96. NEEDLE BEARING
97. OUTER RACE
98. TRANSAXLE CASE

Required Special Tools:

- MB990936: Installer Adapter
- MB990938: Handle
- MB991445: Bushing remover and installer base
- MB991632: Clearance Dummy Plate
- MB991633: Reduction brake wrench set
- MD998333: Oil Pump Remover
- MD998412: Guide
- MD999577: Spring Compressor
- MD998913: Dial Gauge Extension
- MD998924: Spring Compressor Retainer

TSB Revision

cardiagn.com

DISASSEMBLY

⚠ CAUTION

- **Because the automatic transaxle is manufactured from high-precision parts, care must be taken not to scratch or damage these parts during disassembly and assembly.**
- **The working area should be covered with a rubber mat to keep it clean at all times.**
- **Do not wear any cloth gloves and do not use any shop towels during disassembly. Use only nylon cloth, paper towels or any other lint-free material.**
- **Parts which have been disassembled should all be cleaned. Metal parts can be cleaned with normal detergent, but they should be dried completely using compressed air.**
- **Clutch discs, plastic thrust plates and rubber parts should be cleaned with automatic transmission fluid (ATF).**
- **If the transaxle body has been damaged, disassemble and clean the cooler system.**

1. Remove the torque converter.
2. Use a dial gauge to measure the input shaft end play.
3. Remove control cable support bracket.
4. Remove the dipstick.
5. Remove the eye bolt, gaskets and the oil cooler feed tube.

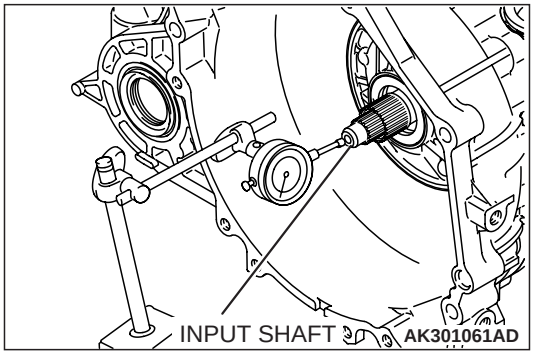

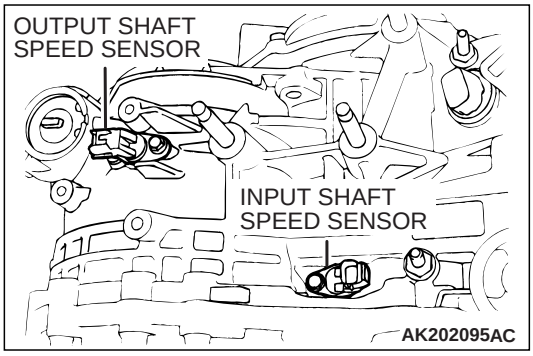

6. Remove the input shaft speed sensor and output shaft speed sensor.

cardiagn.com

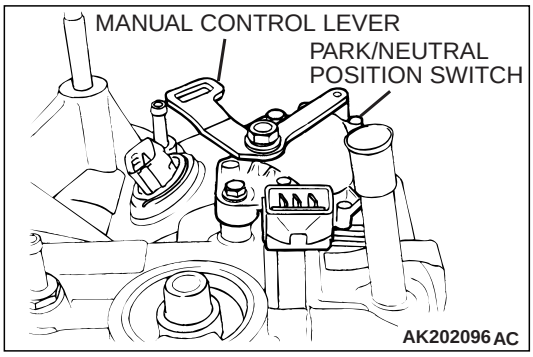

⚠ CAUTION

The manual control lever tightening nut must be removed before removing the valve body. If the valve body is removed before the nut, the park/neutral position switch will be damaged.

7. Loosen the manual control lever tightening nut, and then remove the manual control lever and the park/neutral position switch.

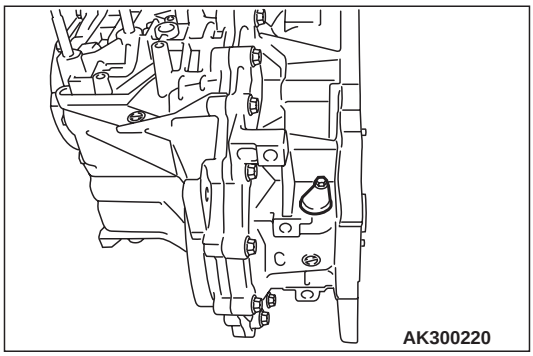

8. Remove the sealing cap and O-ring.

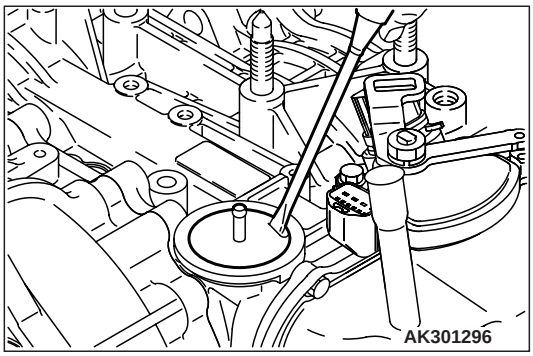

9. Remove the air breather by inserting a screwdriver into the air breather and prying it up.

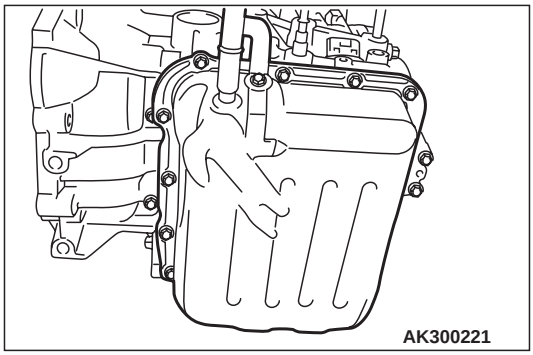

10. Remove the valve body cover.

cardiagn.com

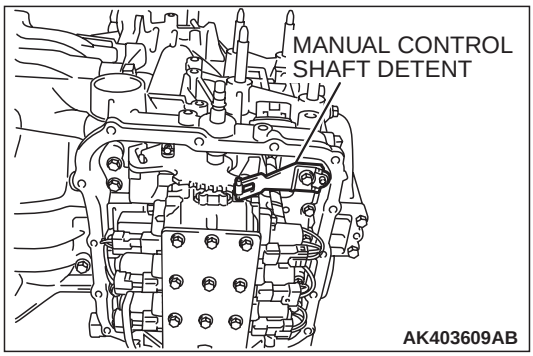

11.Remove the manual control shaft detent.

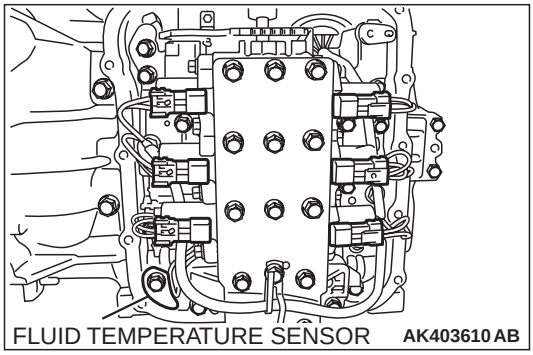

12.Disconnect the solenoid valve harness from the valve body by disconnecting the fluid temperature sensor and all the connectors.

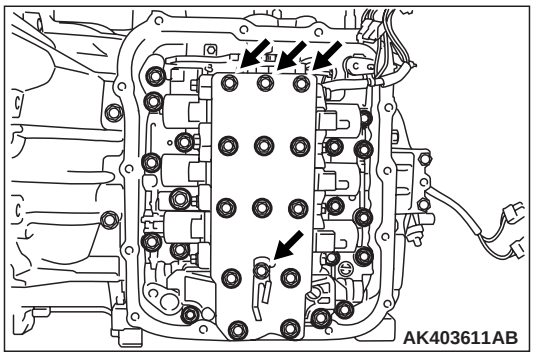

⚠ CAUTION

- **Make sure that the manual control lever and the park/neutral position switch are removed. See step 7.**
- **Do not remove the bolts (four pieces) shown in the illustration.**

13.Remove the valve body mounting bolts (twenty seven pieces).

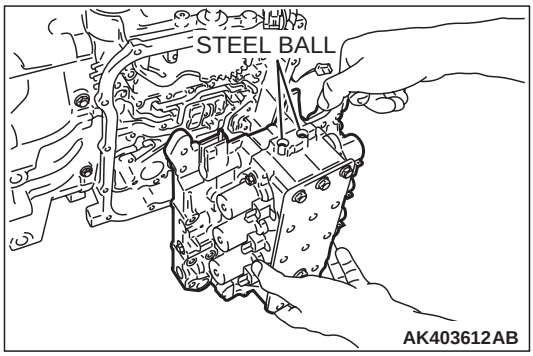

⚠ CAUTION

Do not lose the two steel balls.

14.Remove the valve body, gasket and the steel balls (two pieces).

cardiagn.com

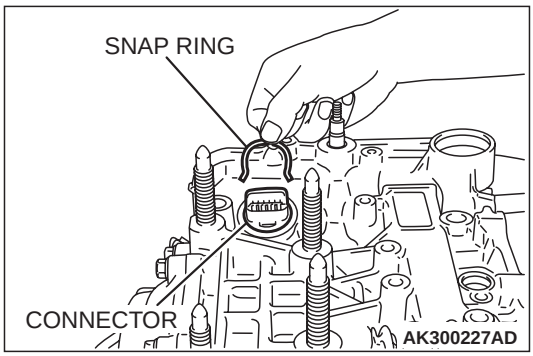

15.Remove the snap ring from the connector. Push the connector into the transaxle case and remove the solenoid valve harness.

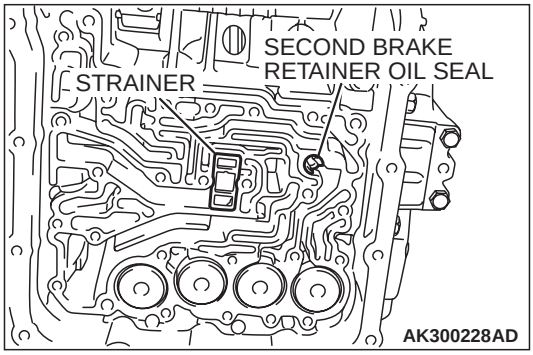

16.Remove the strainer and the second brake retainer oil seal.

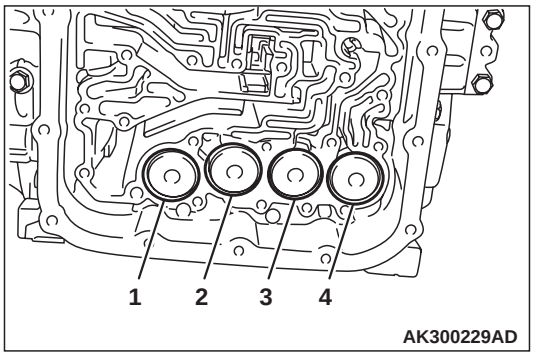

17.Remove each accumulator piston and spring.

NUMBER	NAME
1	For low-reverse brake
2	For underdrive clutch
3	For second brake
4	For overdrive clutch

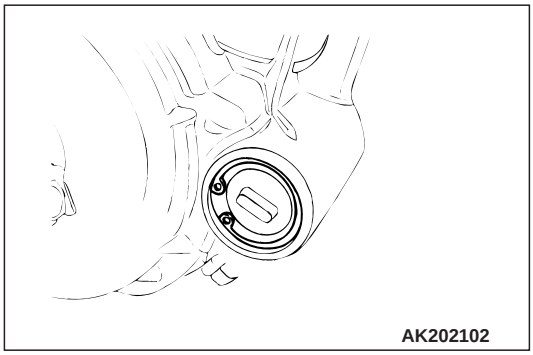

18.Remove the reduction brake accumulator cover after removing the snap ring, then remove the spring and piston.

cardiagn.com

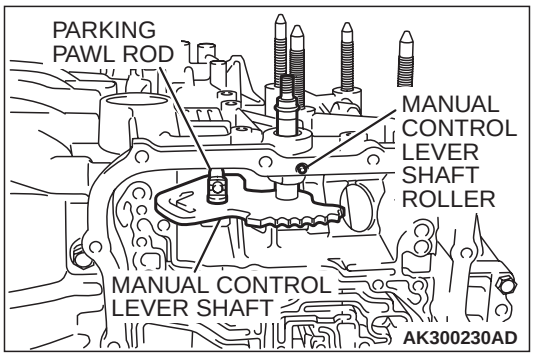

19. Remove the manual control lever shaft roller.
20. Remove the manual control lever shaft and the parking pawl rod.

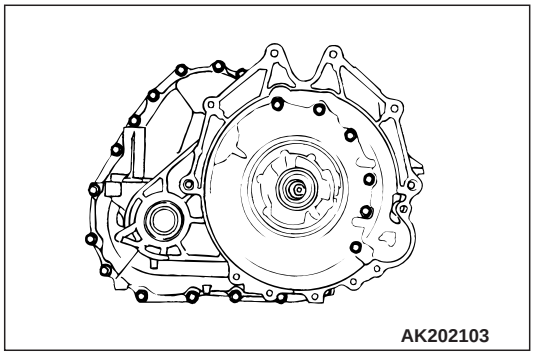

21. Remove the torque converter housing mounting bolts (twenty pieces), and then remove the torque converter housing.

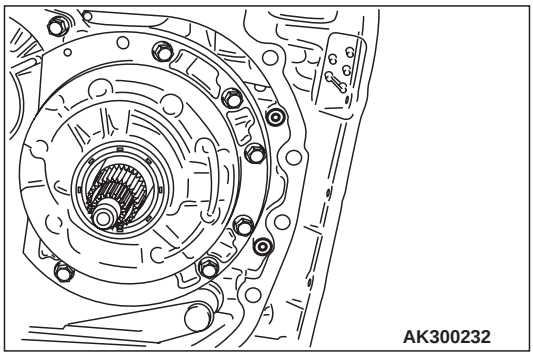

22. Remove the O-rings (two pieces).
23. Remove the differential bearing outer race and spacer from the converter housing.

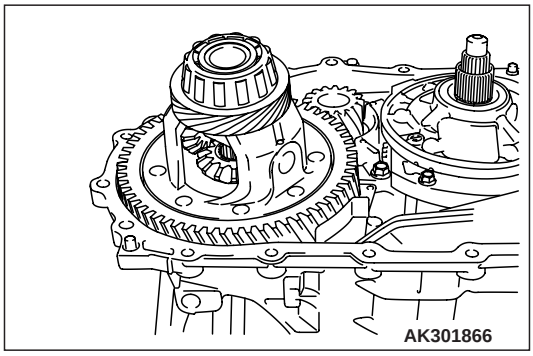

24. Remove the differential.

cardiagn.com

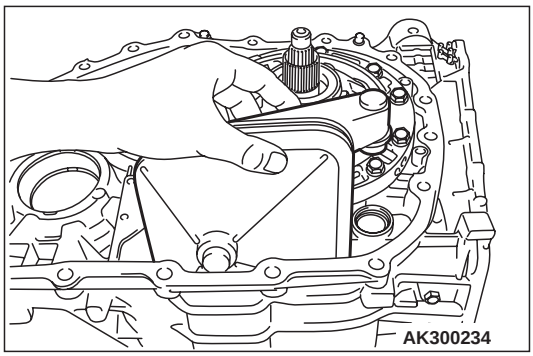

25.Remove the oil filter.

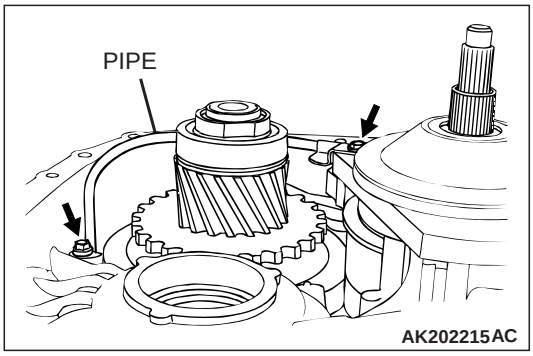

26.Remove the pipe clamp bolts (two places).

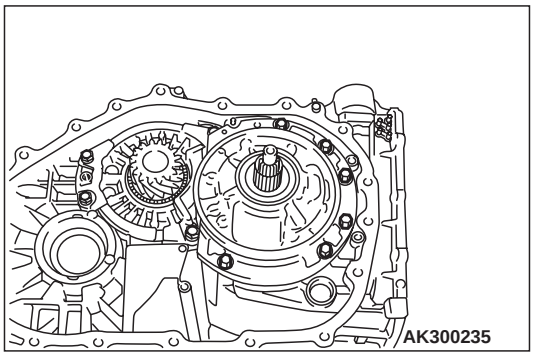

27.Remove the oil pump mounting bolts (six pieces).

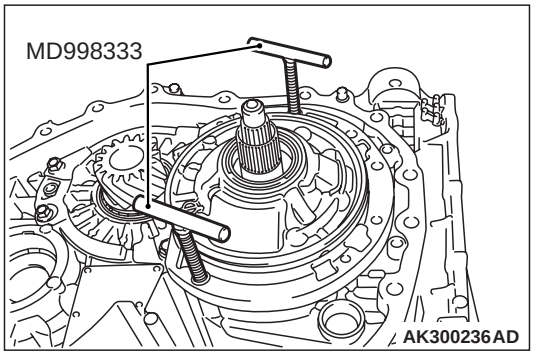

28.Place special tool MD998333 as shown in the drawing.
29.Turn special tool MD998333 to remove the oil pump.
30.Remove the oil pump gasket.

cardiagn.com

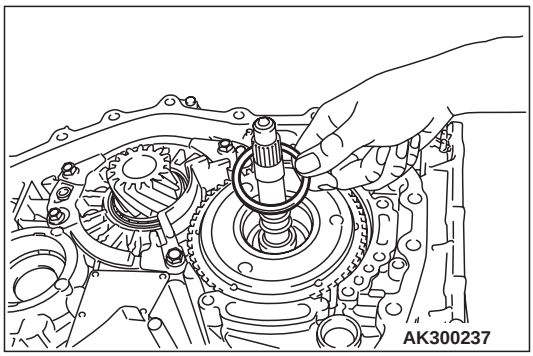

31.Remove thrust washer number 1.

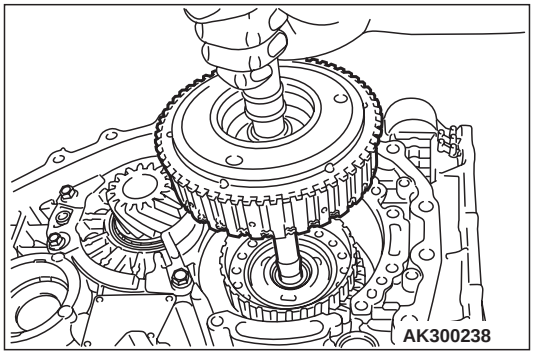

32.Holding the input shaft, remove the underdrive clutch and input shaft.

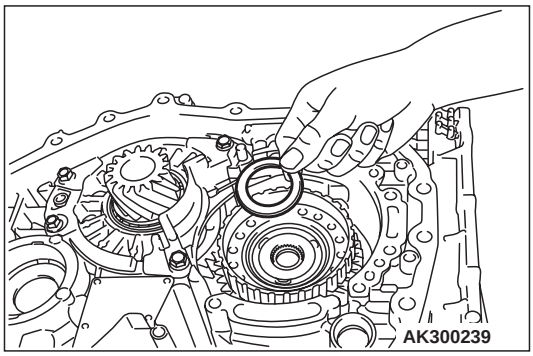

33.Remove thrust bearing number 2.

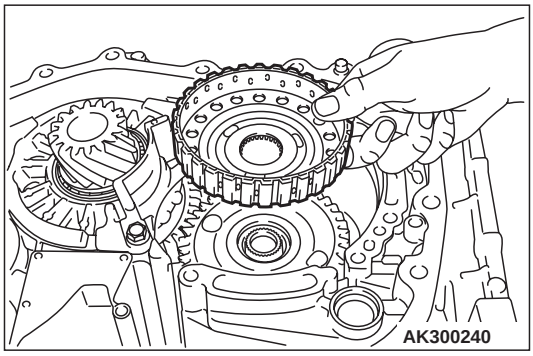

34.Remove the underdrive clutch hub.

cardiagn.com

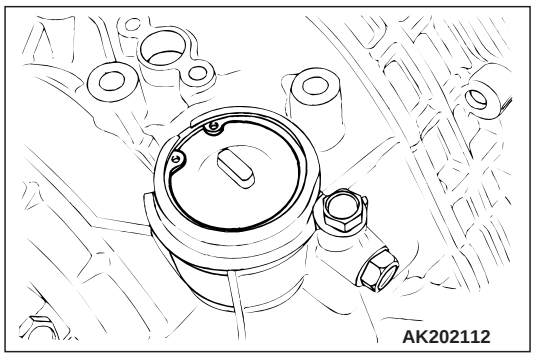

35. Remove the reduction brake piston cover after removing the snap ring.
36. Remove the reduction brake piston and spring after removing the snap ring.

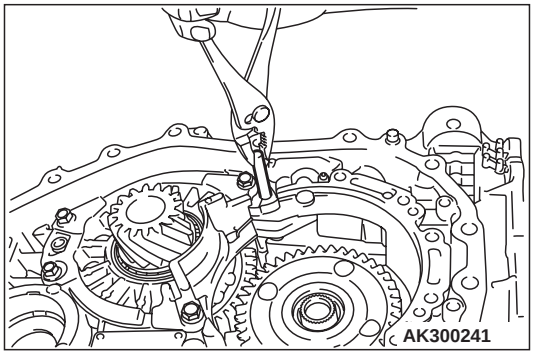

37. Remove the parking pawl shaft, and then remove the spacer and spring.

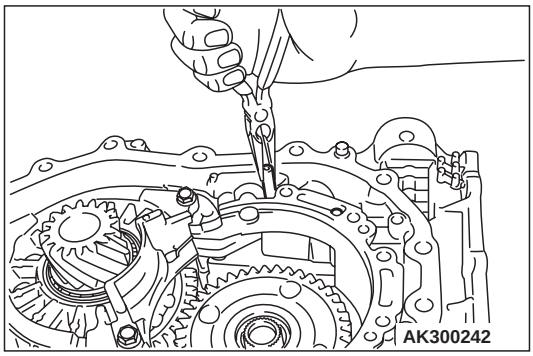

38. Remove the parking roller support shafts (two pieces), and then remove the parking pawl and parking roller support.

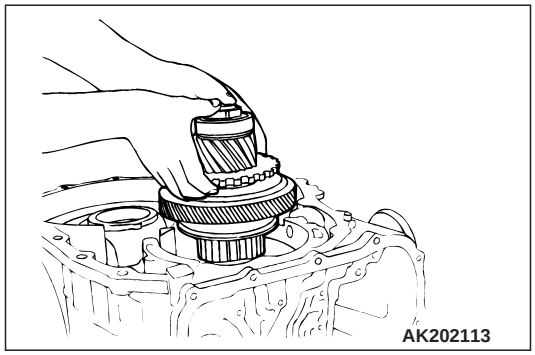

39. Remove the direct planetary carrier assembly.

cardiagn.com

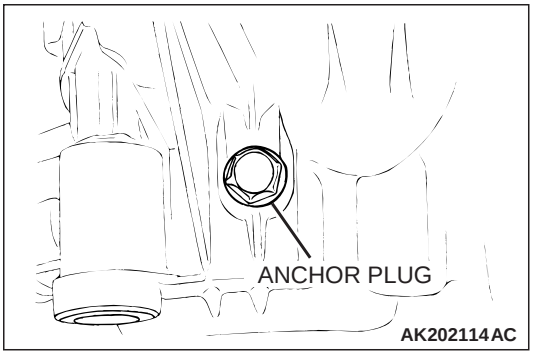

40.Remove the anchor plug and O-ring.

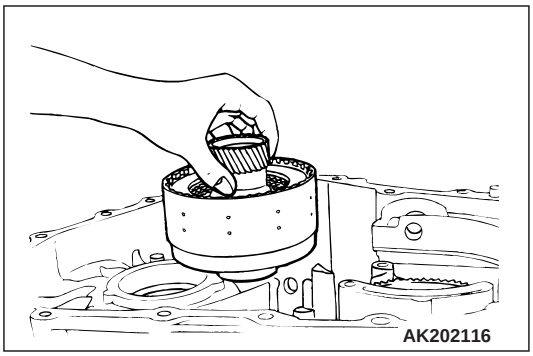

41.Remove the direct clutch.

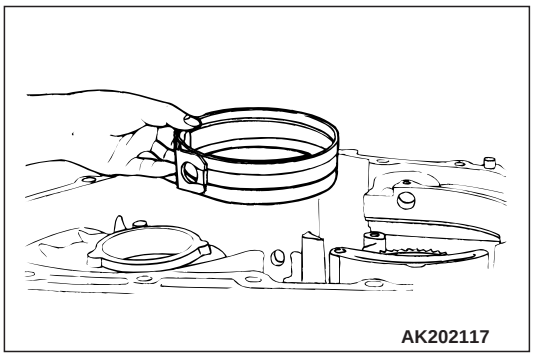

42.Remove the reduction brake band.

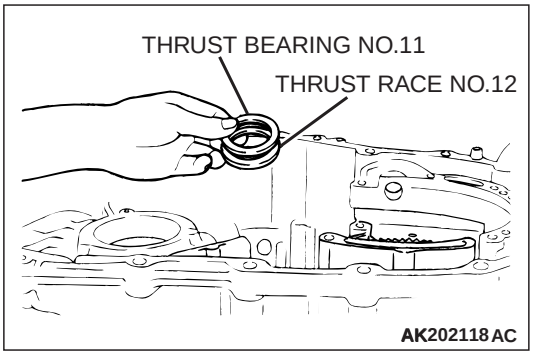

43.Remove the thrust bearing number 11 and thrust race number12.

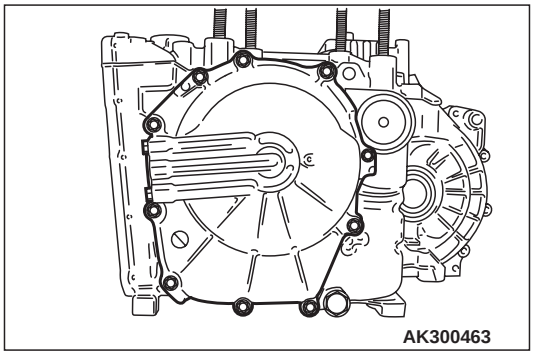

44.Remove the rear cover.
45.Remove the thrust race number 8.
46.Remove the seal rings (four pieces).
47.Remove the input shaft rear bearing.

cardiagn.com

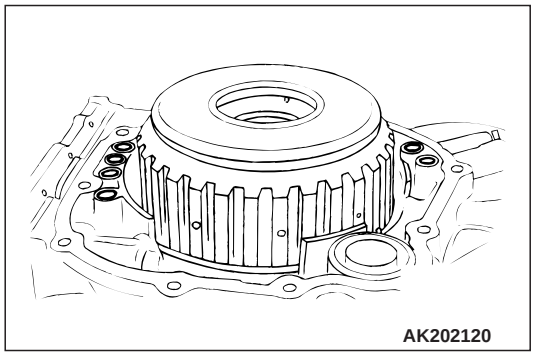

48.Remove the O-rings (six pieces).

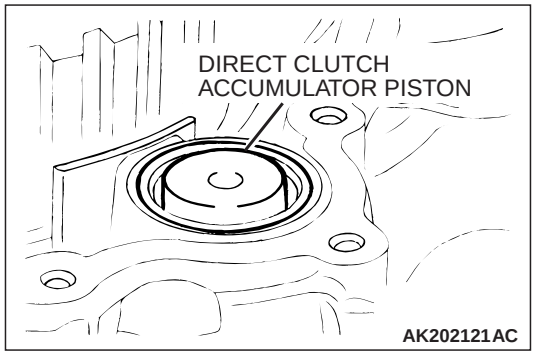

49.Remove the direct clutch accumulator piston and spring after removing the O-ring.

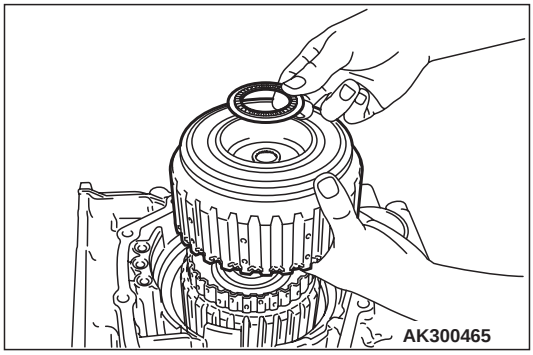

50.Remove the reverse and overdrive clutch and thrust bearing number 7.

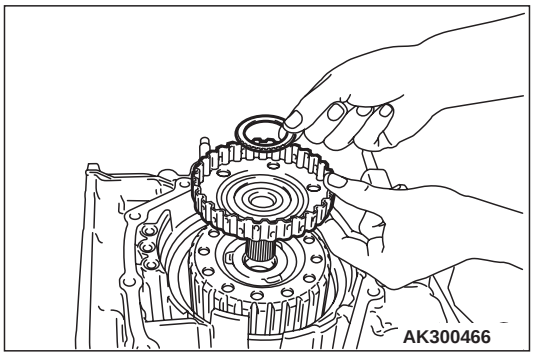

51.Remove overdrive clutch hub and thrust bearing number 6.

cardiagn.com

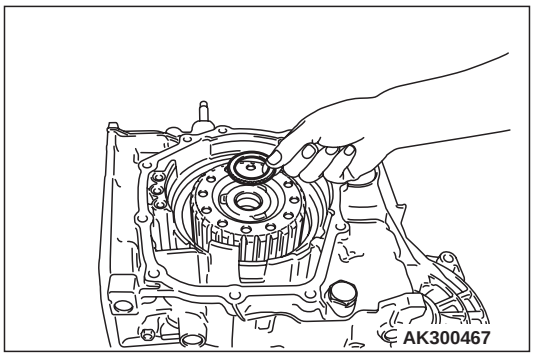

52.Remove thrust bearing number 5.

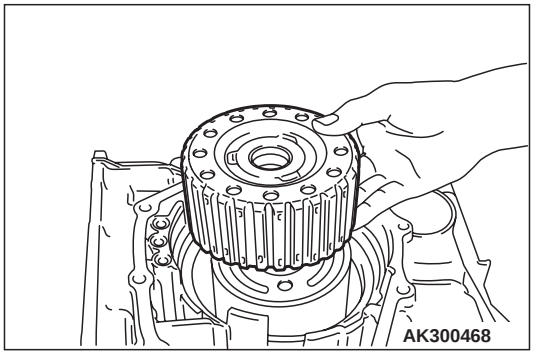

53.Remove the planetary reverse sun gear.

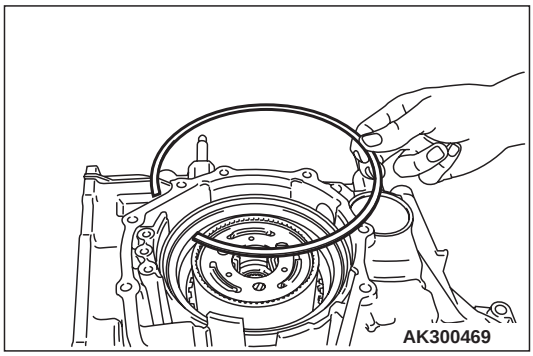

54.Remove the snap ring.

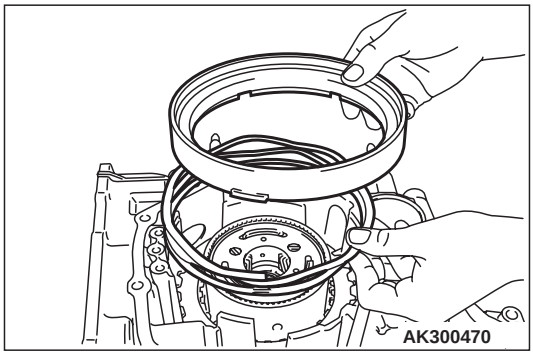

55.Remove the second brake piston and the return spring.

cardiagn.com

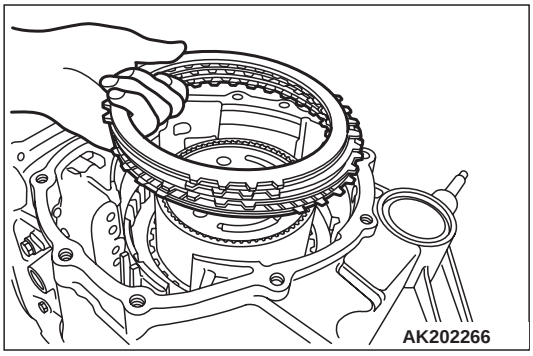

56.Remove the pressure plate, second brake discs (four pieces) and second brake plates (three pieces).

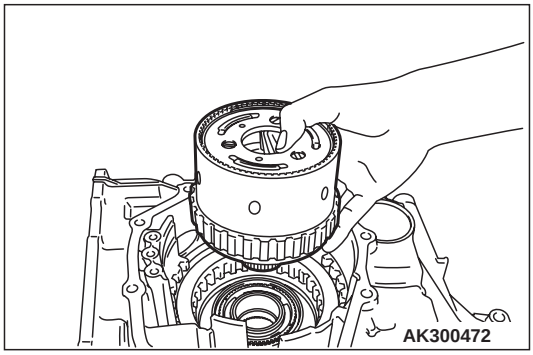

57.Remove the planetary carrier assembly.

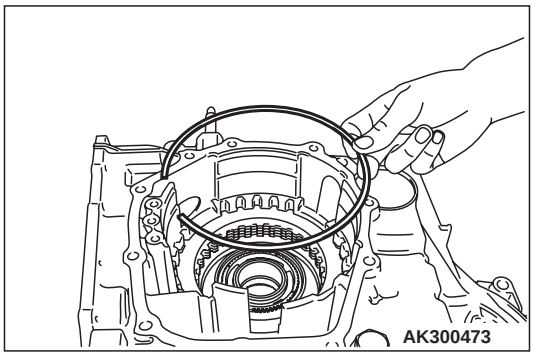

58.Remove the snap ring.

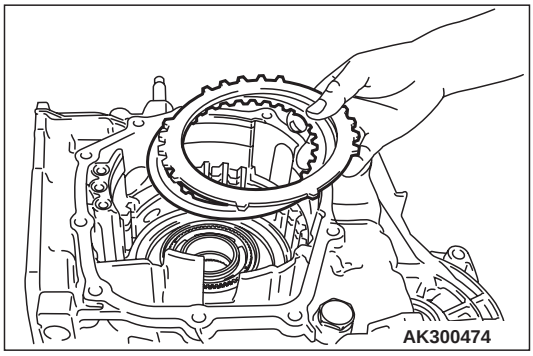

59.Remove the reaction plate and the brake disc.

cardiagn.com

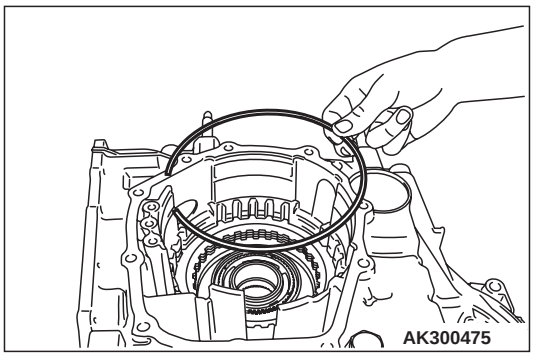

60.Remove the snap ring.

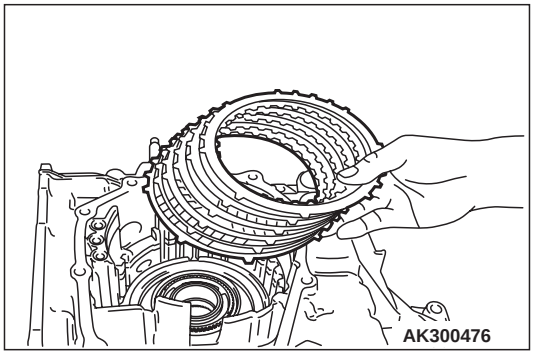

61.Remove the brake plates (five pieces), brake discs (six pieces) and pressure plate.

*NOTE: *Includes the brake discs removed in step 57.*

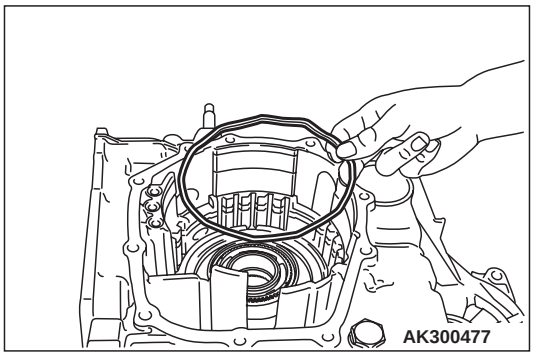

62.Remove the wave spring.

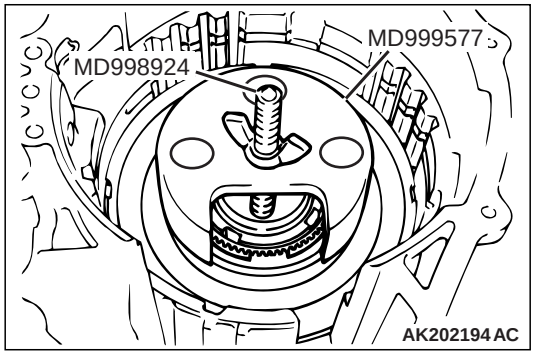

63.Remove the one-way clutch inner race and low-reverse brake piston as follows:

(1) Using special tools MD999577 and MD998924, compress the one-way clutch inner race.
(2) Remove the snap ring.
(3) Remove the special tools.
(4) Remove the one-way clutch inner race, O-ring, spring retainer, return spring and low-reverse brake piston.

cardiagn.com

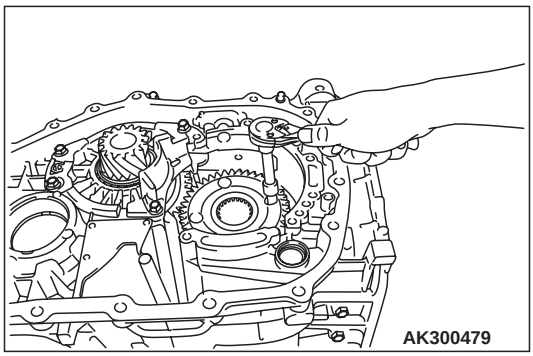

64. Remove the transfer drive gear bearing mounting bolts (four pieces).
    Then, turn the gear 1/8 turn (45 degrees) and remove the remaining bolts (four pieces).

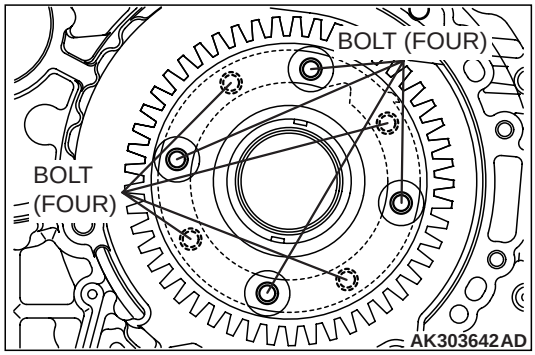

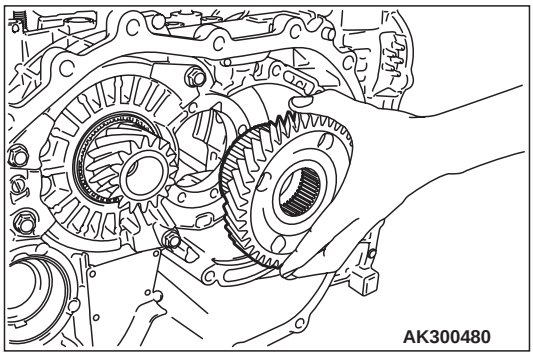

65. Remove the transfer drive gear.

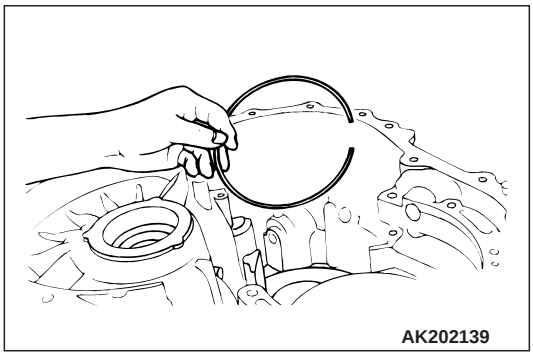

66. Remove the snap ring.

cardiagn.com

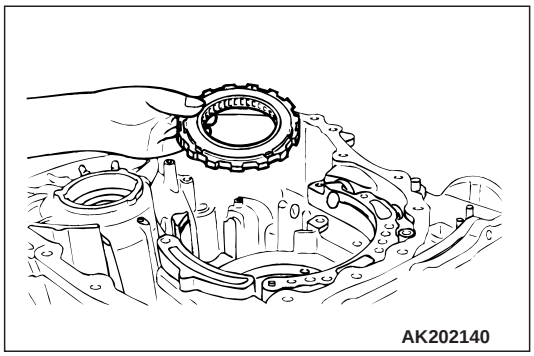

67. Remove the one-way clutch.
68. Remove the seal rings (two pieces).
69. Remove the needle bearing.
70. Remove the differential bearing outer race from the transaxle case.

ASSEMBLY

⚠ CAUTION

- **Do not reuse the gasket, O-ring, oil seal. Always replace with a new one when assembling.**
- **Do not use grease. Use petroleum jelly (i.e. Vaseline).**
- **Apply ATF to friction components, rotating parts, and sliding parts before installation. Immerse new clutch discs or brake discs in ATF for at least two hours before assembling them.**
- **When replacing a bushing, replace the assembly which it belongs to.**
- **Do not use cloth gloves or shop towels during assembly. Use nylon cloth or other lint-free material.**

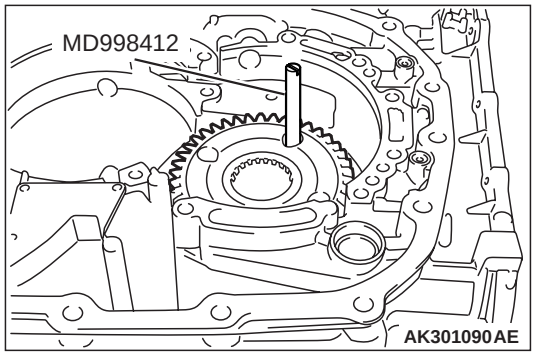

1. Install special tool MD998412 in the installation screw hole of the transfer drive gear bearing located in the transaxle case. Using this as a guide, install the transfer drive gear bearing and gear in the transaxle case.

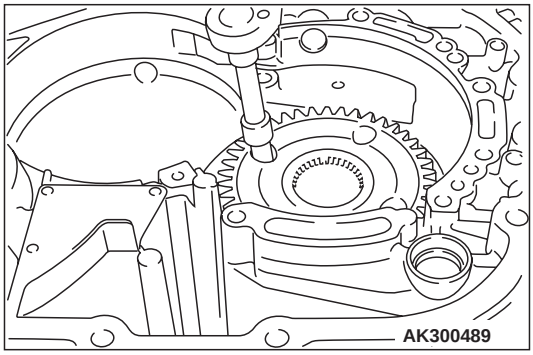

2. Tighten the mounting bolts (eight pieces) of the transfer drive gear bearing to the specified torque.

   Tightening torque:
   34 ±2 N· m (25 ±1 ft-lb)

cardiagn.com

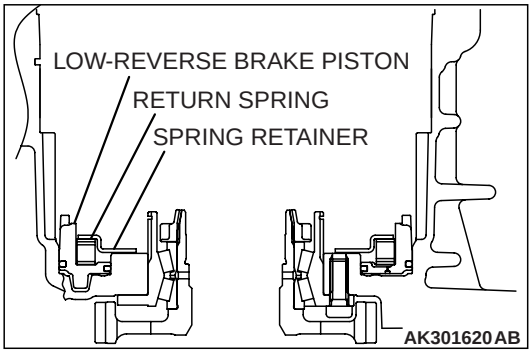

3. Install the low-reverse brake piston, return spring, and spring retainer into the transaxle case.

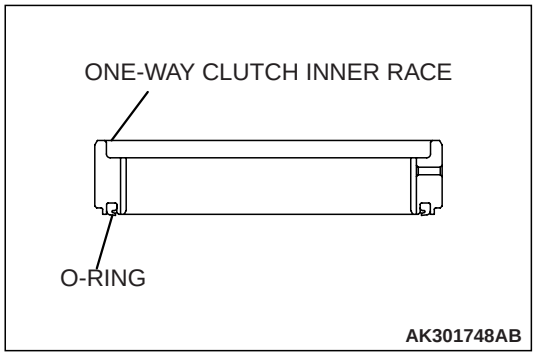

4. Fit a new O-ring into the groove of one-way clutch inner race.

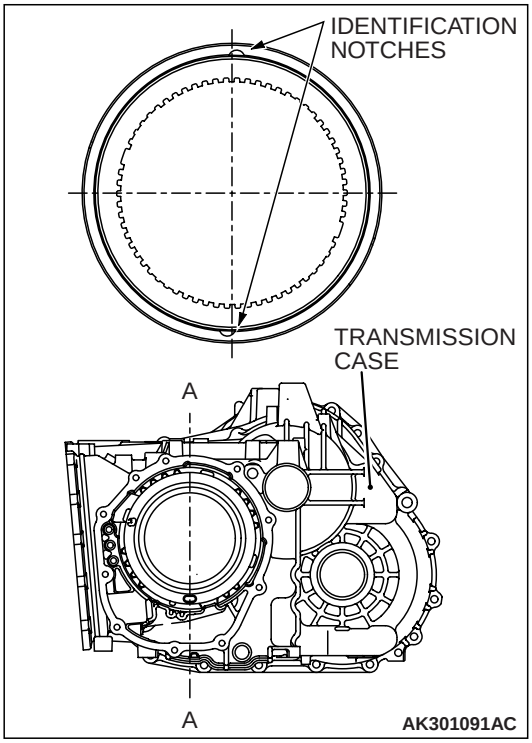

5. Check the placement of the identification notches in the one-way clutch inner race. Install the one-way clutch inner race to the transfer drive gear bearing so that the notches fall along the A –A line.

cardiagn.com

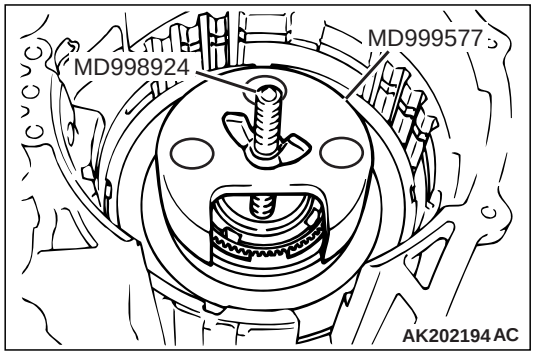

6. Put the snap ring on the inner race.
7. Set special tools MD999577 and MD998924 as shown, and then compress the one-way clutch inner race and install the snap ring.

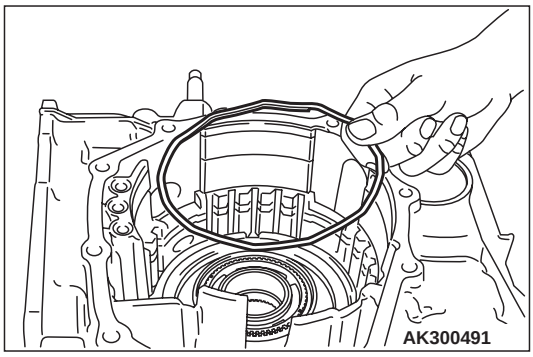

8. Install the wave spring onto the low-reverse brake piston.

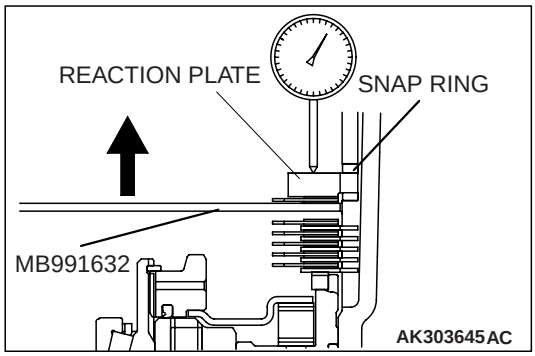

9. Install the brake discs (six pieces), brake plates (five pieces) and snap ring as shown in the figure.

   NOTE: Do not install the pressure plate at this time.
10. Install special tool MB991632 on the brake disc.
11. Install the reaction plate and the used snap ring.
12. Move special tool MB991632 to measure the end play of reaction plate. Then replace the snap ring installed in step 11 to adjust the end play to standard value.

    Standard value: 0 – 0.16 mm (0 – 0.0063 inch)

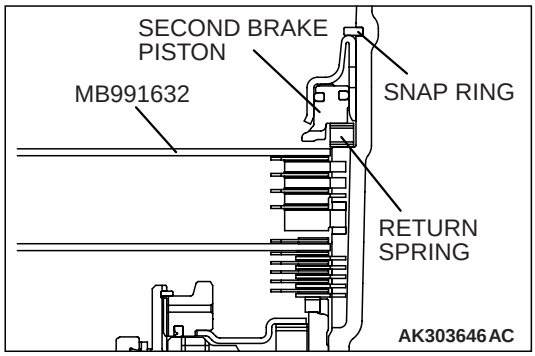

13. Install the brake discs (four pieces) and brake plates (three pieces) as shown in the figure.

    NOTE: Do not install the pressure plate at this time.
14. Place special tool MB991632 on top of the brake disc in place of the pressure plate.
15. Install the return spring, second brake piston and snap ring.

cardiagn.com

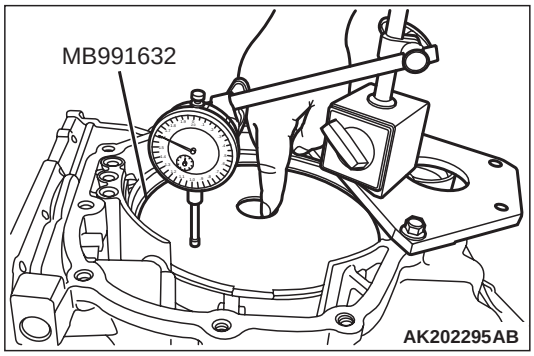

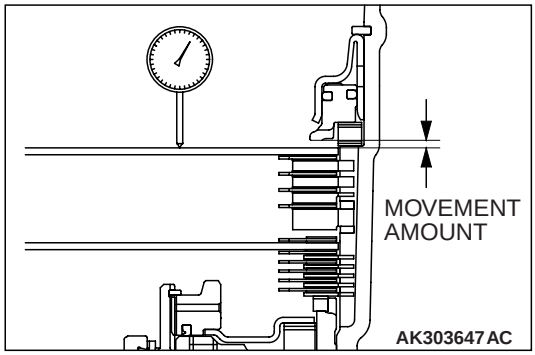

16. Move special tool MB991632 and measure its movement.

Standard value of end play (Reference):
1.09 – 1.55 mm (0.0429 – 0.0610 inch)

17. Select a pressure plate whose thickness corresponds to the measured amount of movement from the following table.

PRESSURE PLATE FOR SECOND BRAKE

MOVEMENT AMOUNT mm (in)	THICKNESS mm (in)	ID SYMBOL
1.1 – 1.3 (0.043 – 0.051)	1.8 (0.071)	E
1.3 – 1.5 (0.051 –0.059)	2.0 (0.079)	D
1.5 – 1.7 (0.059 – 0.067)	2.2 (0.087)	C
1.7 – 1.9 (0.067 – 0.075)	2.4 (0.094)	B
1.9 – 2.1 (0.075 – 0.083)	2.6 (0.102)	A
2.1 – 2.3 (0.083 – 0.091)	2.8 (0.110)	0

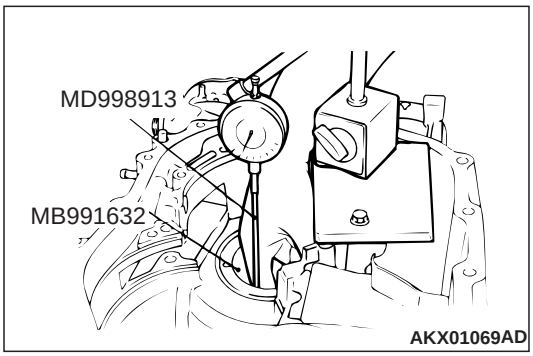

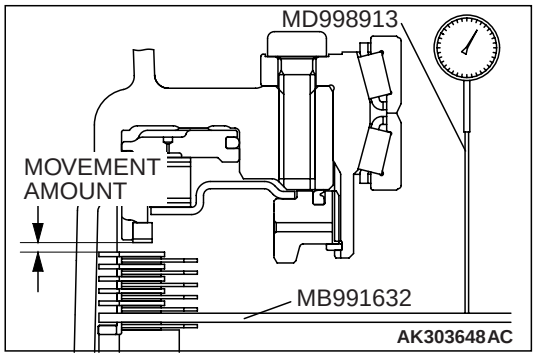

18. Turn the transaxle over so that the installation surface of the torque converter housing is facing up.
Install special tool MD998913 in a dial gauge, and then move special tool MB991632 and measure its movement.

Standard value of end play (Reference):
1.65 –2.11 mm (0.0649 –0.0831 inch)

19. Select a pressure plate whose thickness corresponds to the measured amount of movement from the table below.

PRESSURE PLATE FOR LOW-REVERSE BRAKE

MOVEMENT AMOUNT mm (in)	THICKNESS mm (in)	ID SYMBOL
1.0 – 1.2 (0.039 – 0.047)	1.6 (0.063)	F
1.2 – 1.4 (0.047 – 0.055)	1.8 (0.071)	E
1.4 – 1.6 (0.055 – 0.063)	2.0 (0.079)	D
1.6 – 1.8 (0.063 – 0.071)	2.2 (0.087)	C
1.8 – 2.0 (0.071 – 0.079)	2.4 (0.094)	B

cardiagn.com

MOVEMENT AMOUNT mm (in)	THICKNESS mm (in)	ID SYMBOL
2.0 –2.2 (0.079 –0.087)	2.6 (0.102)	A
2.2 –2.4 (0.087 –0.094)	2.8 (0.110)	0
2.4 –2.6 (0.094 –0.102)	3.0 (0.118)	1

⚠ CAUTION

If necessary, take the measurements in steps 9 to 18 after replacing the pressure plate, brake plate and brake disc.

20. Remove all parts and special tools that were installed to take the measurements in steps 9 to 18. Remove and separate the pressure plate and snap ring chosen in steps 12, 16 and 18.
21. Install the needle bearing as shown in the illustration.
22. Install the two seal rings.

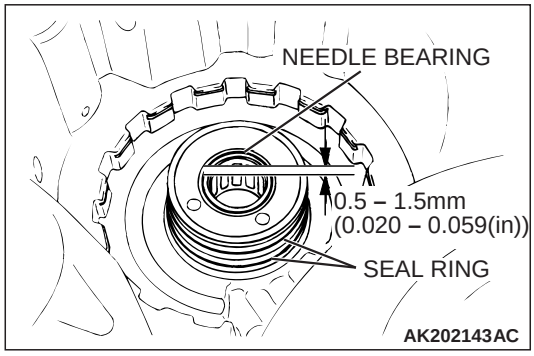

23. Install the snap ring into the groove of transaxle case output shaft bore.

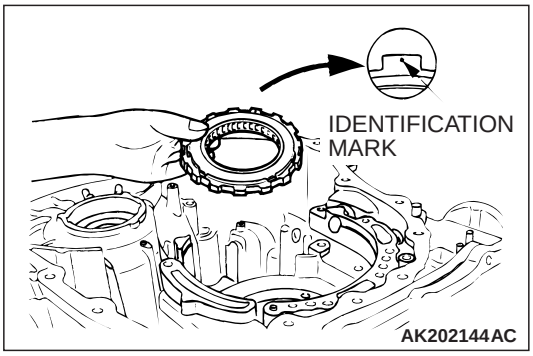

24. Install the snap ring.

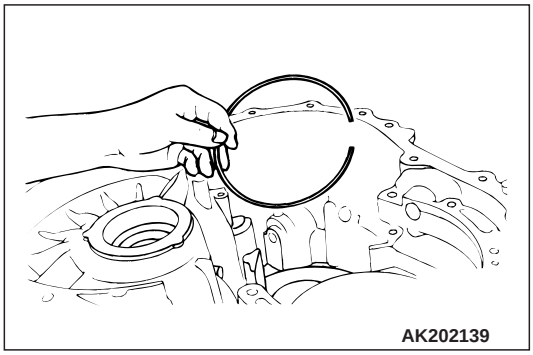

cardiagn.com

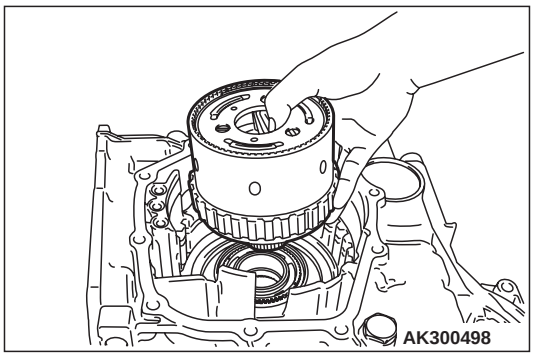

25.Install the planetary carrier assembly.

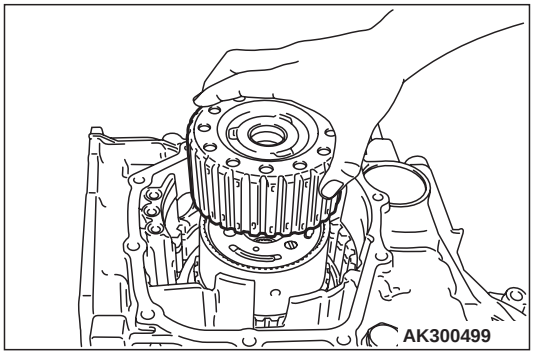

26.Install the planetary reverse sun gear.

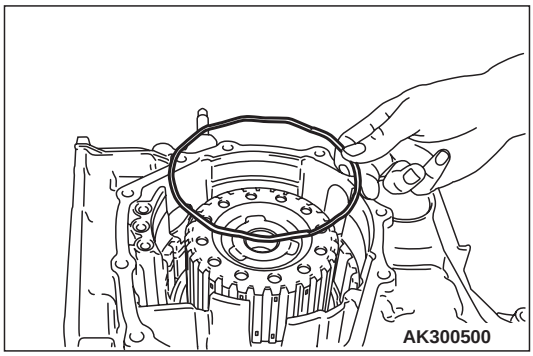

27.Install the wave spring on the low-reverse brake piston.

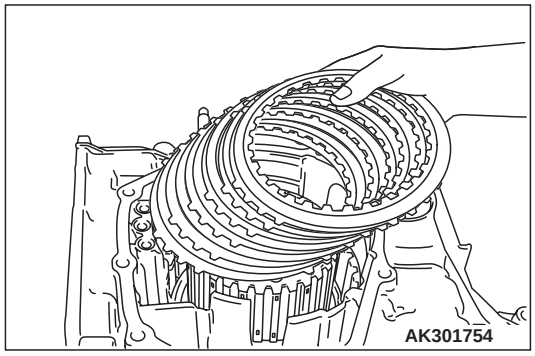

28.Install the pressure plate that was selected in step 19. Next, install brake discs (six pieces) and brake plates (five pieces), one on top of the other.

cardiagn.com

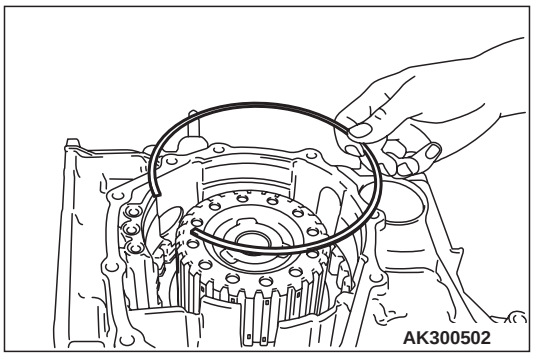

29.Install the snap ring.

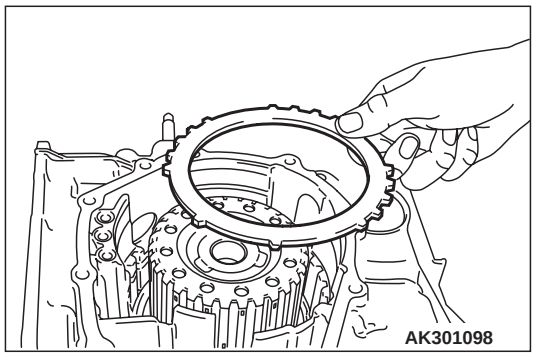

30.Install the reaction plate.

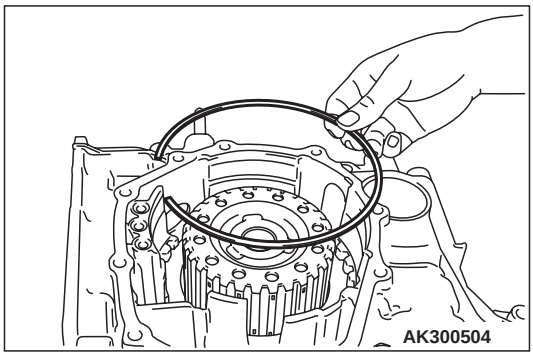

31.Install the snap ring that was selected in step 12.

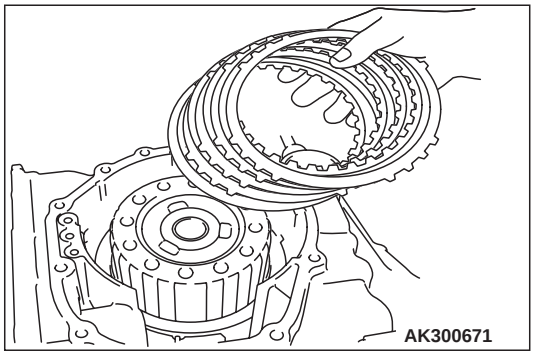

32.Install second brake discs (four pieces) and second brake plates (three pieces), one on top of the other. Next, install the pressure plate that was selected in step 17.

cardiagn.com

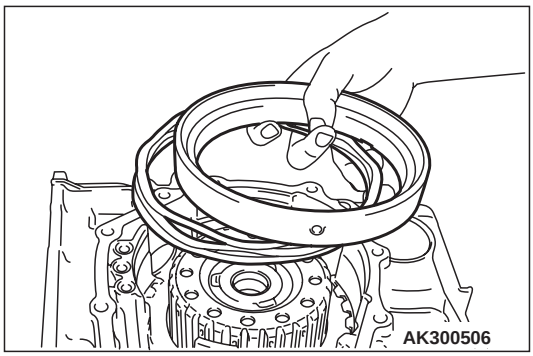

33.Install the return spring and second brake piston.

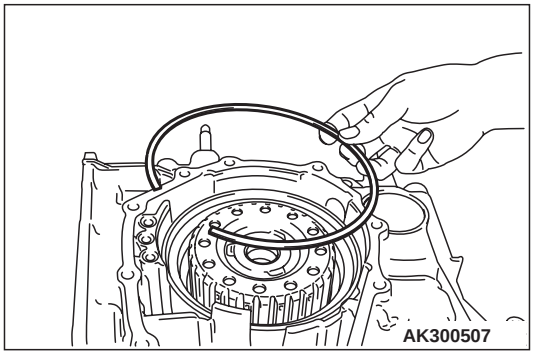

34.Install the snap ring.

cardiagn.com

IDENTIFICATION OF THRUST BEARING, THRUST RACES, AND THRUST WASHERS

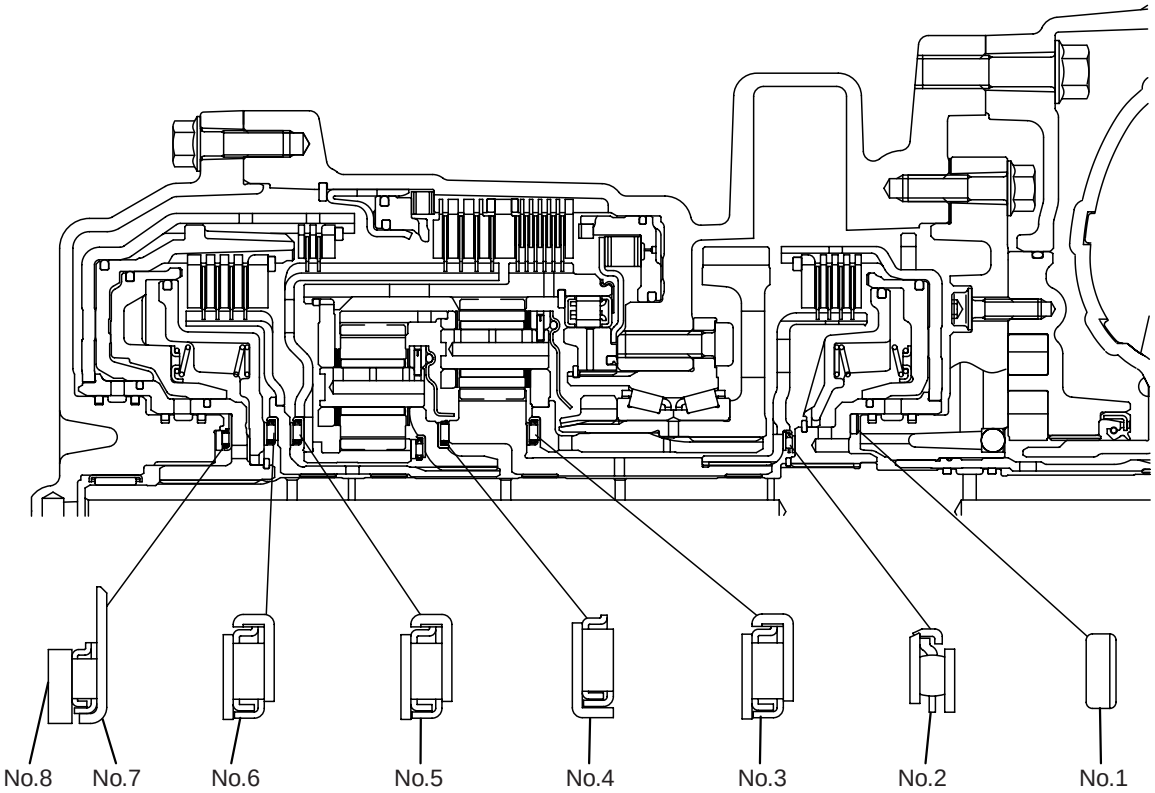

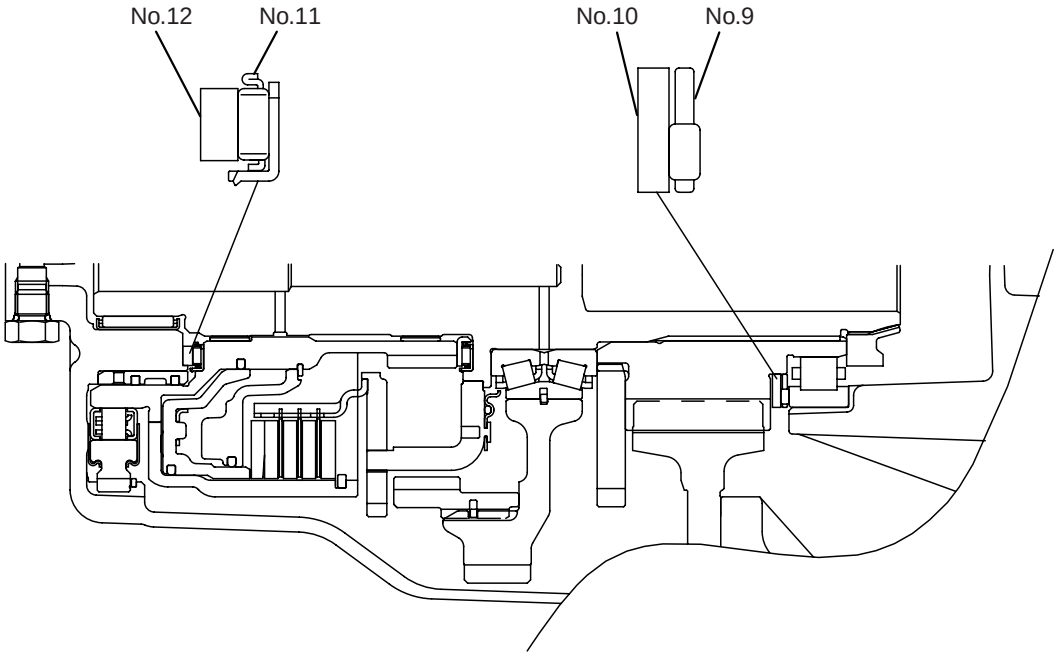

AK403273AB

cardiagn.com

SYMBOL	OD mm (in)	ID mm (in)	THICKNESS mm (in)	SYMBOL	OD mm (in)	ID mm (in)	THICKNESS mm (in)
No. 1	59 (2.32)	47 (1.85)	1.8 (0.071)	No. 8	48.9 (1.925)	37 (1.46)	1.8 (0.071)
	59 (2.32)	47 (1.85)	2.0 (0.079)		48.9 (1.925)	37 (1.46)	1.9 (0.075)
	59 (2.32)	47 (1.85)	2.2 (0.087)		48.9 (1.925)	37 (1.46)	2.0 (0.079)
	59 (2.32)	47 (1.85)	2.4 (0.094)		48.9 (1.925)	37 (1.46)	2.1 (0.083)
	59 (2.32)	47 (1.85)	2.6 (0.102)		48.9 (1.925)	37 (1.46)	2.2 (0.087)
	59 (2.32)	47 (1.85)	2.8 (0.110)		48.9 (1.925)	37 (1.46)	2.3 (0.091)
No. 2	49 (1.93)	34 (1.34)	3.6 (0.142)		48.9 (1.925)	37 (1.46)	2.4 (0.094)
No. 3	57 (2.24)	38.5 (1.52)	4.1 (0.161)		48.9 (1.925)	37 (1.46)	2.5 (0.098)
No. 4	55.4 (2.18)	38.5 (1.52)	3.3 (0.130)		48.9 (1.925)	37 (1.46)	2.6 (0.102)
No. 5	57 (2.24)	38.5 (1.52)	4.1 (0.161)	No. 9	80 (3.15)	60 (2.36)	2.5 (0.098)
No. 6	57 (2.24)	38.5 (1.52)	4.1 (0.161)	No. 10	80 (3.15)	60 (2.36)	2.5 (0.098)
No. 7	59 (2.32)	37 (1.46)	2.8 (0.110)	No. 11	55.4 (2.18)	38.5 (1.52)	3.3 (0.123)
No. 8	48.9 (1.925)	37 (1.46)	1.6 (0.063)	No. 12	54.6 (2.15)	43(1.69)	3.0 (0.118)
	48.9 (1.925)	37 (1.46)	1.7 (0.067)				

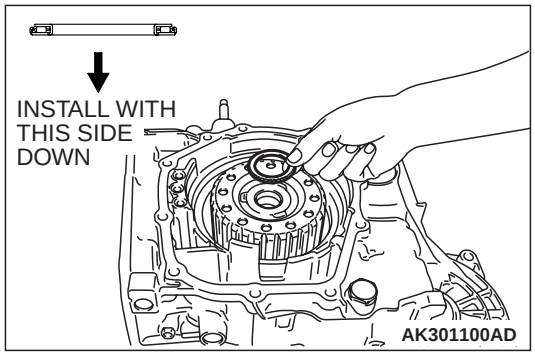

⚠ CAUTION

Be sure to install the thrust bearing in the correct direction as shown.

35. Check the installation direction of the thrust bearing number 5, and install it on the hub of the planetary reverse sun gear.

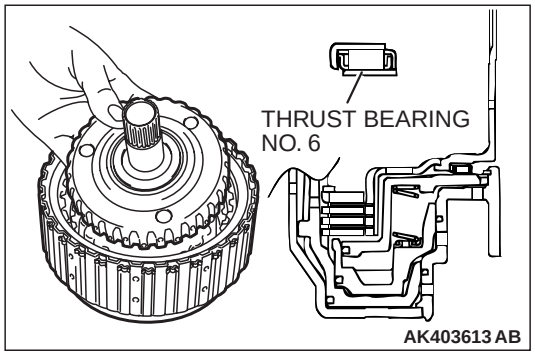

⚠ CAUTION

Use care to install the thrust bearing in the proper direction.

36. Attach thrust bearing number 6 to the inside of the overdrive clutch hub using petroleum jelly (Vaseline). Then install the assembly in the reverse and overdrive clutch.

cardiagn.com

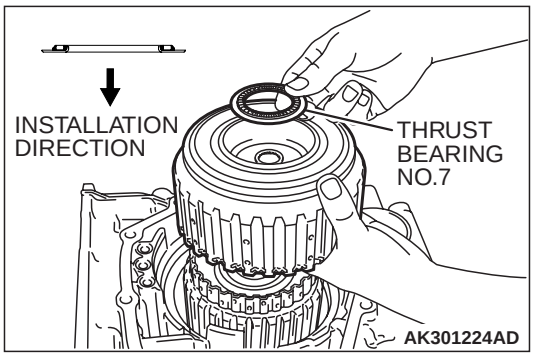

37. Install the reverse and overdrive clutch.

⚠ CAUTION

Be sure to install the thrust bearing in the correct direction as shown.

38. Check the installation direction of thrust bearing number 7, and install it on the reverse clutch retainer.

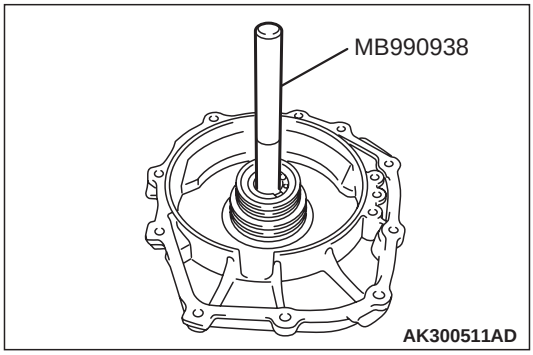

39. Use special tool MB990938 to tap the input shaft rear bearing in the rear cover.
40. Install the seal rings (four pieces) in the grooves of the rear cover.

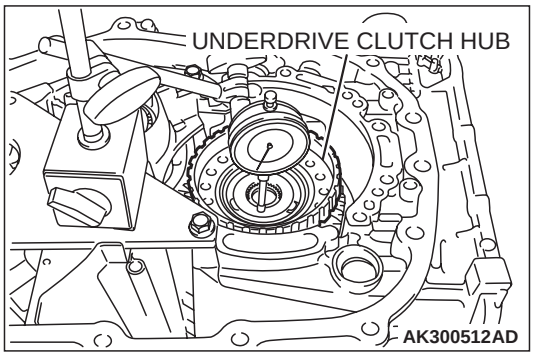

41. Measure the end play of the under drive sun gear by the following procedures:
    (1) Install the thinnest thrust race number 8 [thickness 1.6 mm (0.063 inch); part number MD707267] on thrust bearing number 7.
    (2) Install the rear cover on the transaxle case and tighten the bolts to the specified torque.

    Tightening torque: 23 ±3 N· m (17 ±2 ft-lb)

    (3) Turn over the transaxle case so that the installation surface of the torque converter housing is facing up.
    (4) Install the under drive clutch hub on the under drive sun gear.
    (5) Measure end play of the underdrive sun gear and record the measurement value.

    Standard value (Reference):
    0.25 –0.45 mm (0.0098 –0.0177 inch)

    (6) After taking the measurement in steps (5), take out the installed parts in steps (1) through (4).

cardiagn.com

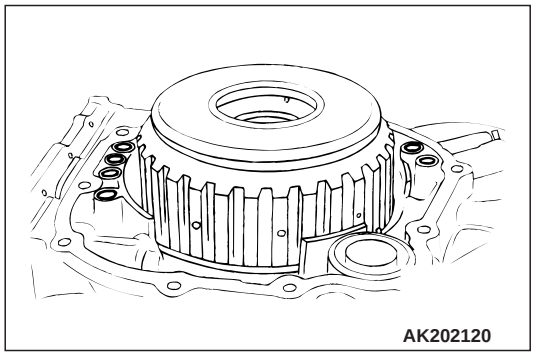

42. Install the O-rings (six pieces).
43. Select a thrust race number 8 whose thickness corresponds to the measured values taken in step 40 from the table below. Install it on thrust bearing number 7.

MEASUREMENT VALUE mm (in)	THICKNESS mm (in)
0.3 – 0.4 (0.012 – 0.016)	1.6 (0.063)
0.4 – 0.5 (0.016 – 0.020)	1.7 (0.067)
0.5 – 0.6 (0.020 – 0.024)	1.8 (0.071)
0.6 – 0.7 (0.024 – 0.028)	1.9 (0.075)
0.7 – 0.8 (0.028 – 0.031)	2.0 (0.079)
0.8 – 0.9 (0.031 – 0.035)	2.1 (0.083)
0.9 – 1.0 (0.035 – 0.039)	2.2 (0.087)
1.0 – 1.1 (0.039 – 0.043)	2.3 (0.091)
1.1 – 1.2 (0.043 – 0.047)	2.4 (0.094)
1.2 – 1.3 (0.047 – 0.051)	2.5 (0.098)
1.3 – 1.4 (0.051 – 0.055)	2.6 (0.102)

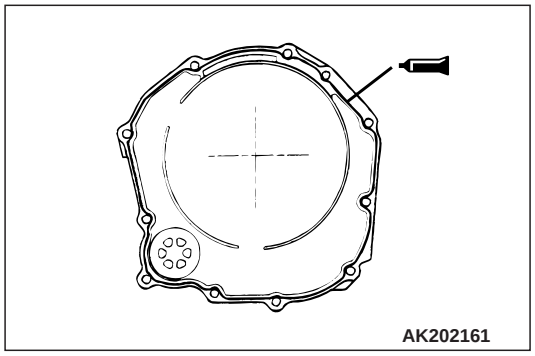

44. Apply a 2 mm (0.08 inch) diameter bead of sealant (MITSUBISHI Genuine Part number MD974421 or equivalent) to the illustrated position of the rear cover.

NOTE: Be sure to install the case quickly while the sealant is wet (within 15 minutes). Leaks will occur if the rear cover is installed after the sealant dries.

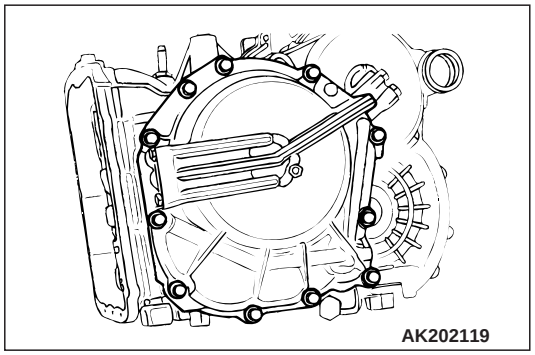

45. Install the rear cover, and tighten its mounting bolts to the specified torque.

Tightening torque: 23 ±3 N· m (17 ±2 ft-lb)

NOTE: After installation, keep the sealed area away from ATF for approximately one hour.

cardiagn.com

⚠ CAUTION

Install the thrust bearing with the indicated side facing down.

46. Install the thrust race number12 and thrust bearing number11.

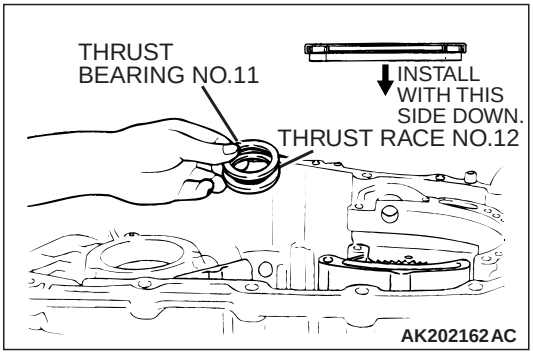

47. Finger-tighten the anchor plug and a new O-ring, then install the reduction brake band and direct clutch simultaneously.

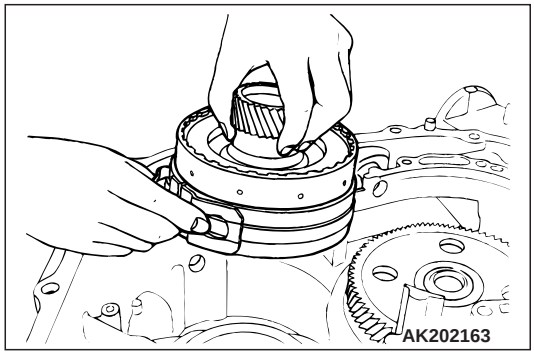

48. Make sure that the direct clutch can be rotated only in the direction indicated in the illustration.

NOTE: If the clutch can be rotated in the other direction, remove and reinstall it correctly.

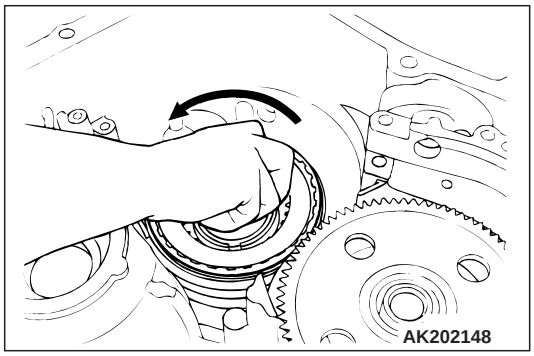

49. Tighten the anchor plug to the specified torque.

Tightening torque: 98 ±15 N· m (72 ±11 ft-lb)

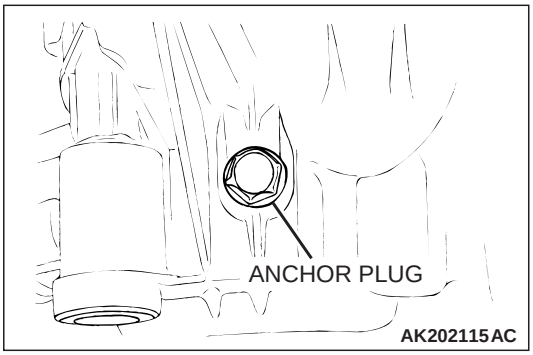

cardiagn.com

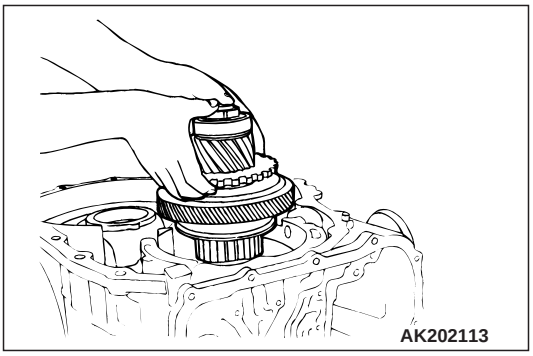

50.Install the direct planetary carrier assembly.

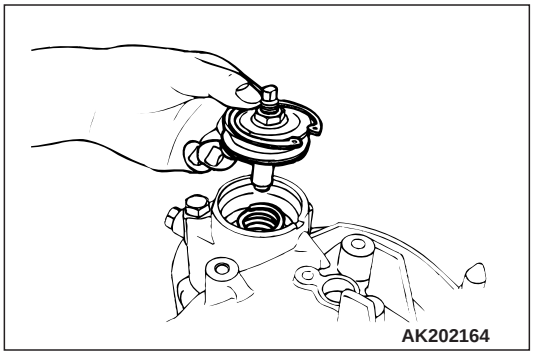

51.Install the reduction brake spring and piston in position in the transmission case, then install the snap ring.

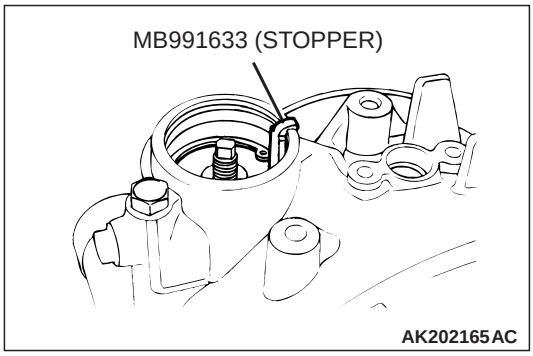

52.Adjust the reduction brake piston using the following procedure:
(1) Remove the nut from the reduction brake piston.
(2) Install the stopper of the special tool to hold the reduction brake piston against rotation.

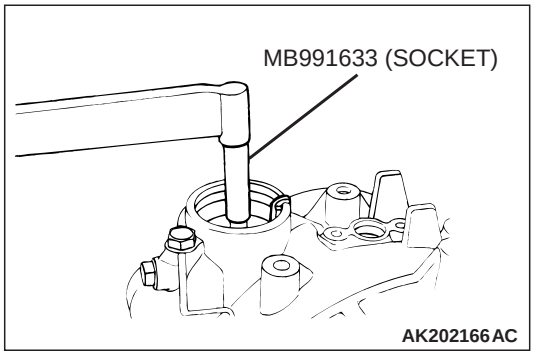

(3) Using a torque wrench fitted with the socket of the special tool, tighten the adjusting rod to 10 N· m (89 in-lb), then loosen it. Repeat this operation twice. Tighten the adjusting rod to 5 N· m (43in-lb), then turn it back 5-1/2 (180 degrees) to 5-3/4 (270 degrees) turns.

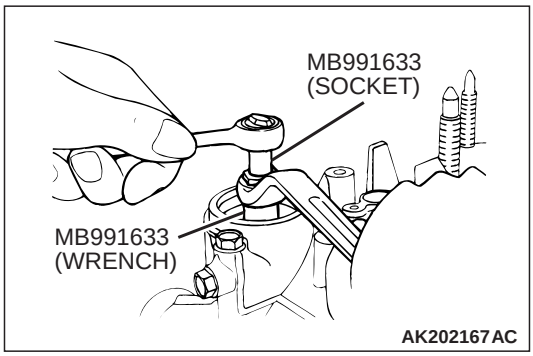

(4) Install the nut on the adjusting rod and tighten the nut to 19 ±3 N· m (14 ±2 ft-lb) using the wrench of the special tool.

cardiagn.com

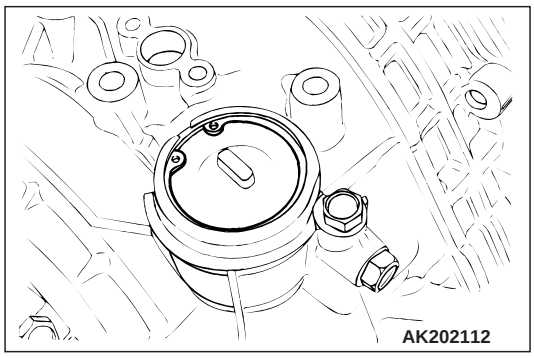

53.Install the reduction brake piston cover and snap ring.

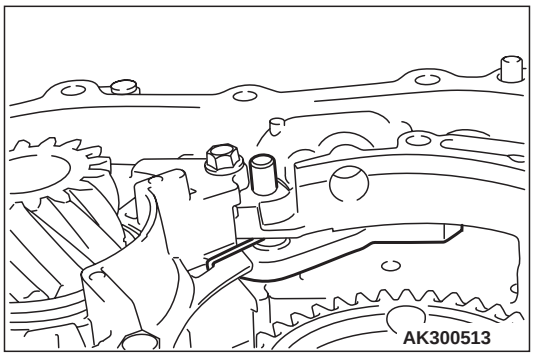

54.Install the parking pawl, spacer, and spring. Then insert the parking pawl shaft.

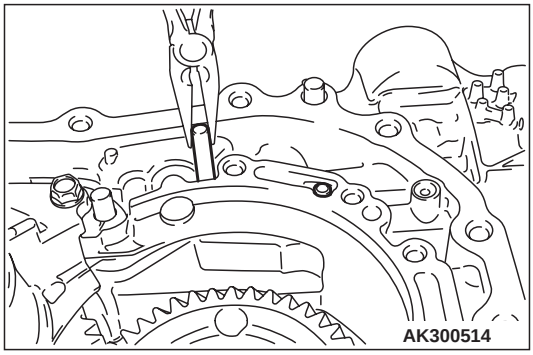

55.Install the parking roller support, and then insert the parking roller support shafts (two pieces).

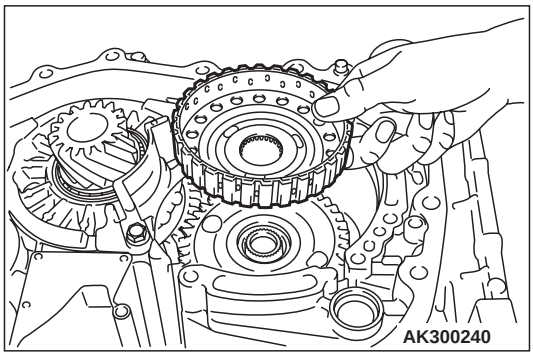

56.Install the underdrive clutch hub to the underdrive sun gear.

cardiagn.com

⚠ CAUTION

Be sure to install the thrust bearing in the correct direction as shown.

57. Check the installation direction of thrust bearing number 2, and install it on the underdrive clutch hub.

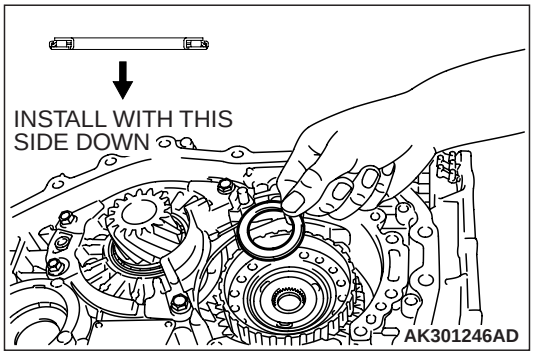

58. Hold the input shaft, and install the underdrive clutch.

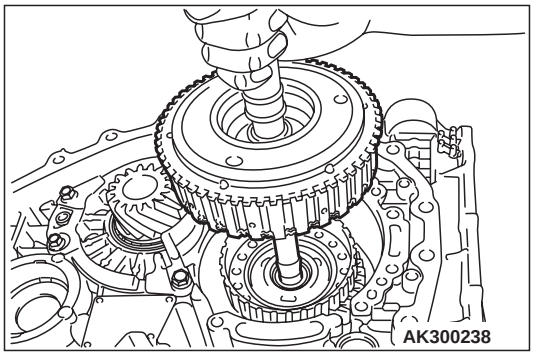

59. Place two beads of solder [each 10 mm (0.39 inch) in length, 3.5 mm (0.14 inch) in diameter] on the underdrive clutch retainer as shown in the illustration.

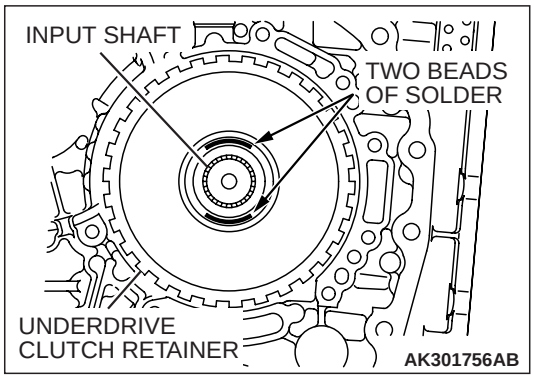

60. Install special tool MD998412 as shown.
61. Install the oil pump to the transaxle case.

    NOTE: Do not install the oil pump gasket at this time.
62. Tighten the six oil pump mounting bolts to the specified torque.

    Tightening torque: 29 ±2 N·m (21 ±1 ft-lb)
63. Remove the oil pump mounting bolts.

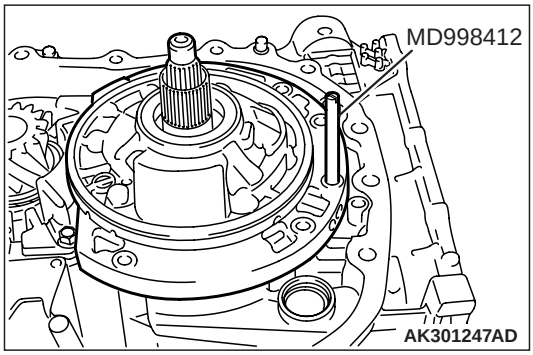

cardiagn.com

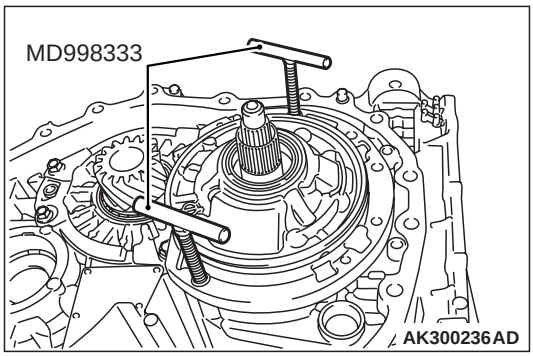

64. Using special tools MD998333, remove the oil pump and the crushed solders.

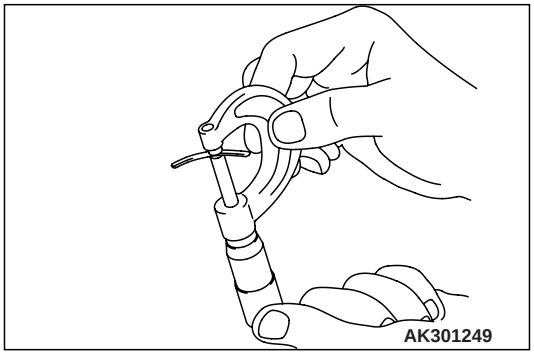

65. Use a micrometer to measure the thickness of the crushed solder beads and record the measured value.
66. Select a thrust washer number 1 whose thickness corresponds to the measured value from table below.

MEASUREMENT VALUE mm (in)	THICKNESS mm (in)	ID SYMBOL
2.25 – 2.45 (0.089 – 0.096)	1.8 (0.071)	18
2.45 – 2.65 (0.096 – 0.104)	2.0 (0.079)	20
2.65 – 2.85 (0.104 – 0.112)	2.2 (0.087)	22
2.85 – 3.05 (0.112 – 0.120)	2.4 (0.094)	24
3.05 – 3.25 (0.120 – 0.128)	2.6 (0.102)	26
3.25 – 3.45 (0.128 – 0.136)	2.8 (0.110)	28

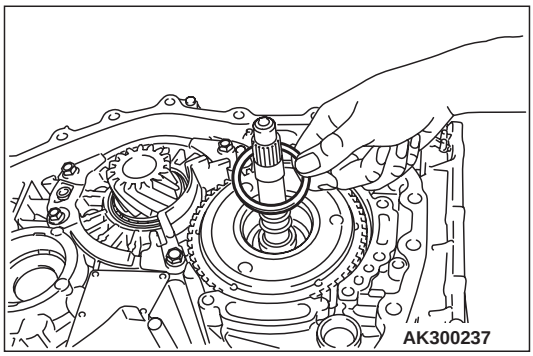

67. Install thrust washer number 1 that was selected in step 65 on the underdrive clutch retainer.

cardiagn.com

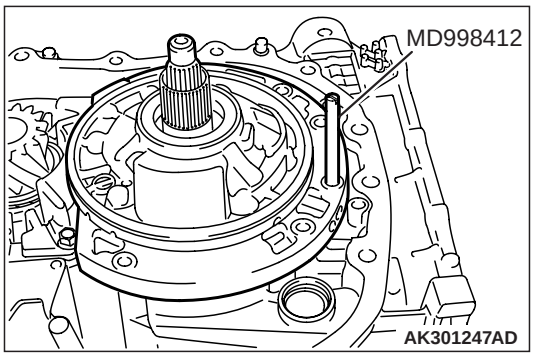

68. Install special tool MD998412 as shown.
69. Install the new oil pump gasket on the transaxle case.
70. Install the oil pump and tighten the six mounting bolts to the specified torque.

    Tightening torque: 29 ±2 N· m (21 ±1 ft-lb)

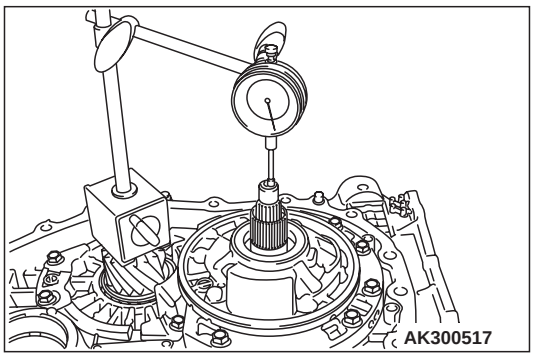

71. Make sure that the input shaft end play meets the standard value.

    Standard value: 0.70 – 1.45 mm (0.028 – 0.057 inch)

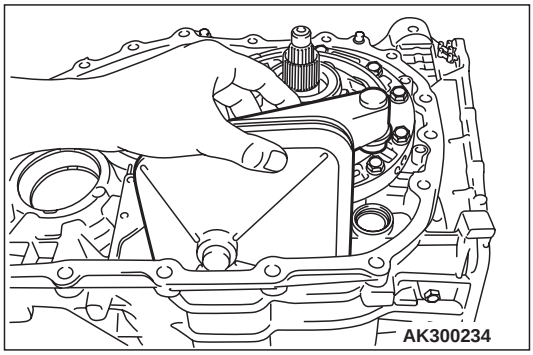

72. Install the oil filter.

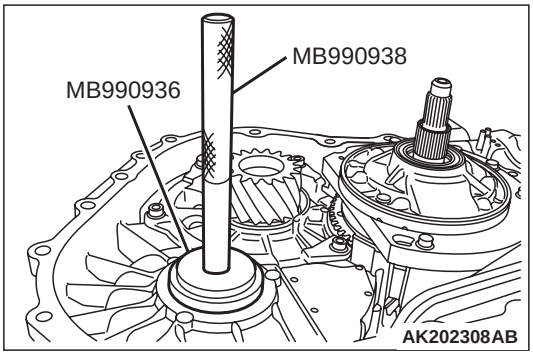

73. Use special tools MB990936 and MB990938 to tap the differential bearing outer race in the transaxle case.

cardiagn.com

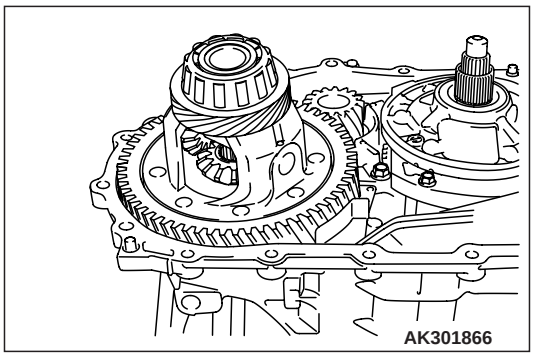

74.Install the differential.

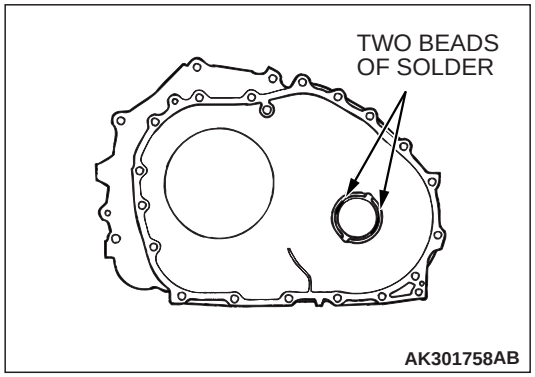

75.Place two beads of solder [each 10 mm (0.39 inch) in length, 3 mm (0.12 inch) in diameter] on the torque converter housing as shown in the illustration.

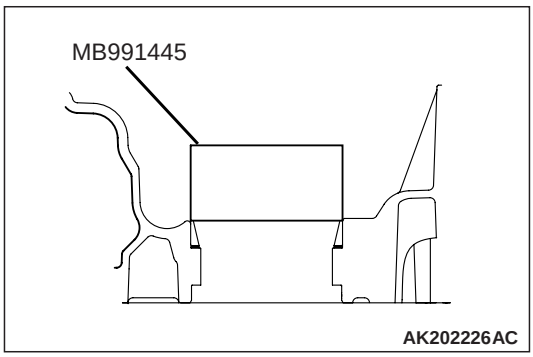

76.Use special tools MB991445 to press the differential bearing outer race into the torque converter housing.

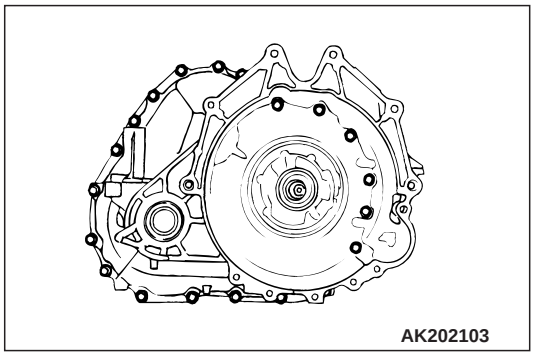

77.Install the torque converter housing to the transaxle case without applying sealant. Tighten its mounting bolts to the specified torque.

Tightening torque: 48 ±6 N· m (35 ±4 ft-lb)

78.Loosen all the bolts, and remove the torque converter housing. Then remove the outer race and the crushed solders.

cardiagn.com

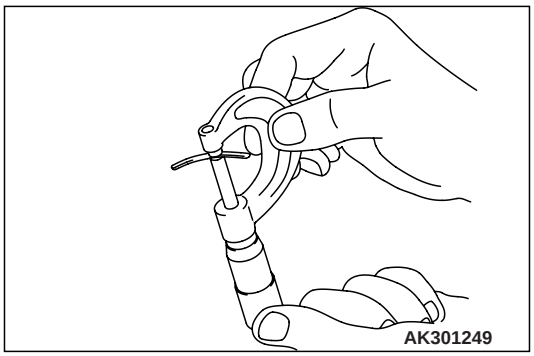

79. Use a micrometer to measure the thickness of the crushed solder beads and record the measured value. Add 0.045 to 0.105 mm (0.0018 to 0.0041 inch)* to the measured value and select a spacer with the corresponding thickness. Adjustment spacer sizes are all listed on P.23C-84. Select the most suitable one from among those listed.

*NOTE: * is the thickness for the differential case preload.*

80. Install the spacer selected in step 66 to the torque converter housing.

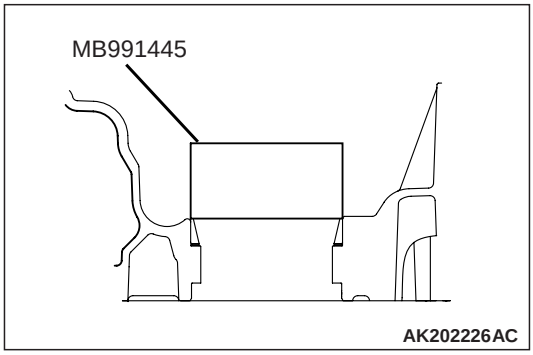

81. Use special tools MB991445 to press the outer race into housing.

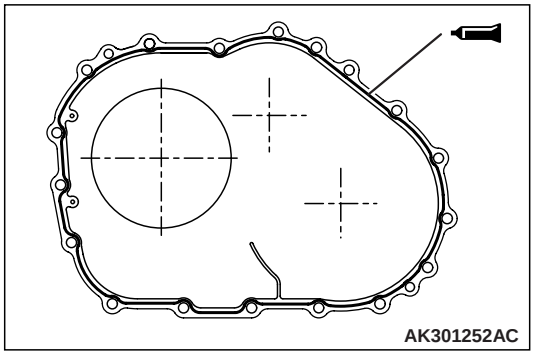

82. Apply a 2 mm (0.08 inch) diameter bead of sealant (MITSUBISHI Genuine Part number MD974421 or equivalent) to the torque converter housing in the area shown.

NOTE: Be sure to install the case quickly while the sealant is wet (with 15 minutes). Leaks will occur if the rear cover is installed after the sealant dries.

NOTE: After installation, keep the sealed area away from ATF for approximately one hour.

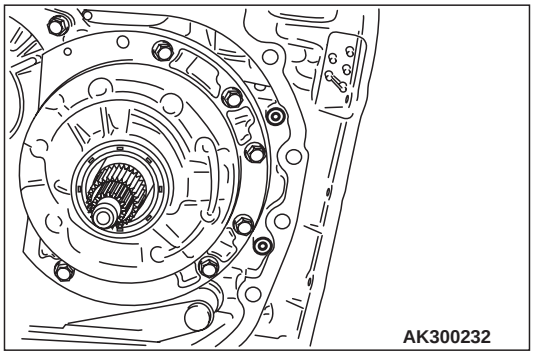

83. Install the O-rings (two pieces).

cardiagn.com

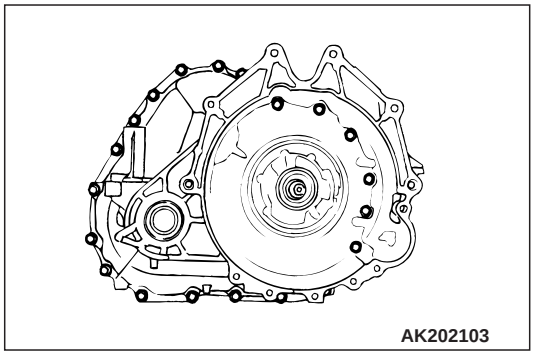

84. Install the torque converter housing and then tighten its mounting bolts (twenty pieces) to the specified torque.

Tightening torque: 48 ±6 N· m (35 ±4 ft-lb)

85. Insert the O-rings (two pieces) into the grooves of the manual control lever shaft.

86. Install the manual control lever shaft and parking pawl rod.

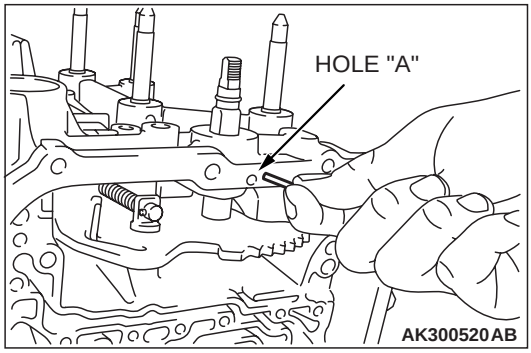

87. Align hole "A" with the groove in the manual control lever shaft. Insert the manual control lever shaft roller into hole "A."

88. Insert the new seal rings in the grooves of the accumulator pistons.

NOTE: The piston and seal ring are common parts.

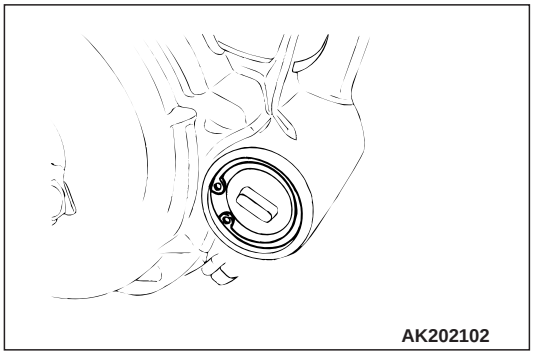

89. Install the piston and spring of the reduction brake accumulator, then install the accumulator cover.

cardiagn.com

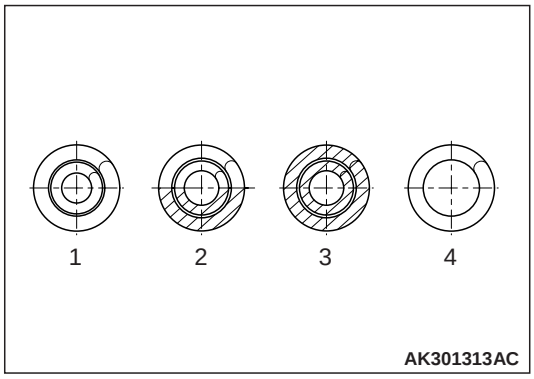

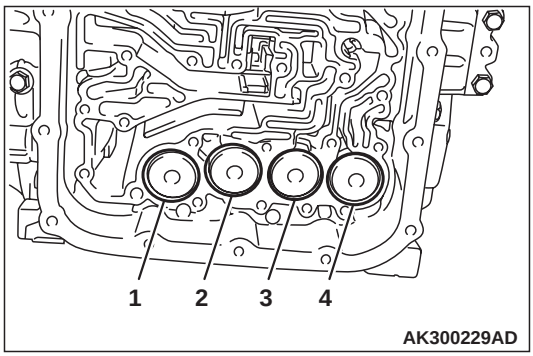

90. Identify the accumulator spring and insert it and the accumulator piston into each hole of the transaxle case.

NOTE: Accumulator springs are identified as shown in the illustration.

NO.	NAME	IDENTIFICATION "BLUEING"
1	For low-reverse brake	None
2	For underdrive clutch	Half
3	For second brake	Whole surface
4	For overdrive clutch	None

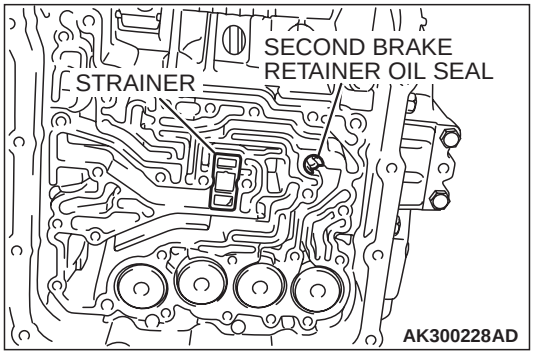

91. Install the strainer and second brake retainer oil seal.

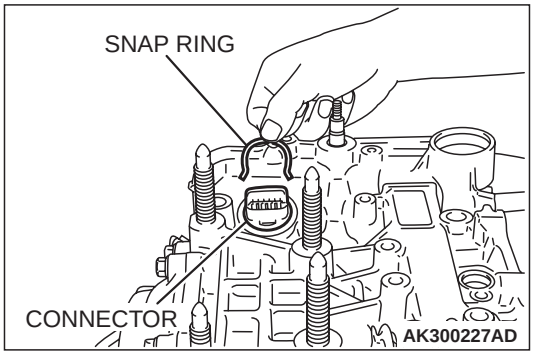

92. Insert a new O-ring to the groove of the solenoid valve harness connector.
93. Insert the solenoid valve harness connector into the hole from the inside of the transaxle case so it is oriented as shown in the illustration. Then secure the snap ring to the connector groove.

cardiagn.com

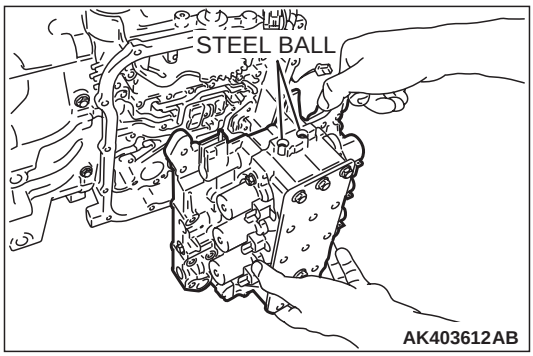

94. Install the steel balls into each of the two holes in the top face of the valve body (outside valve body).
95. Install the valve body and gasket to the transaxle case. Make sure that the manual valve's pin is in the groove in the detent plate of the manual control lever.

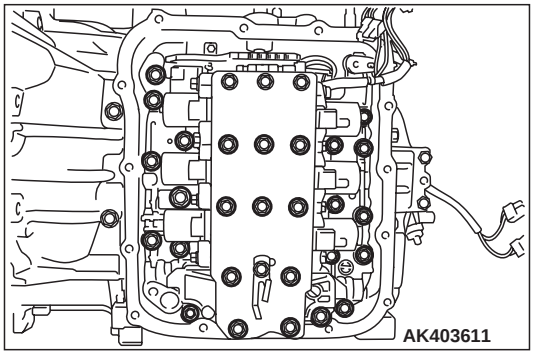

96. Install the valve body mounting bolts (twenty seven pieces), and tighten to the specified torque.
    Tightening torque: 11 ±1 N· m (97 ±9 in-lb)

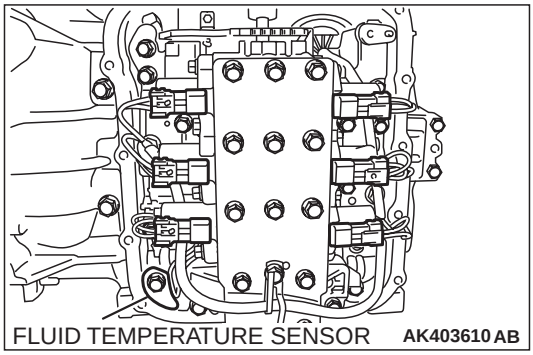

97. Attach the solenoid valve harness to the valve body by connecting all the connectors.
98. Install the fluid temperature sensor to the specified torque.
    Tightening torque: 11 ±1 N· m (97 ±9 in-lb)

NO.	PARTS TO BE CONNECTED	SOLENOID VALVE HARNESS	
		CABLE COLOR	CONNECTOR HOUSING COLOR
1	Underdrive solenoid valve	White, red, red	Black
2	Overdrive solenoid valve	Orange, red	Black
3	Low-reverse solenoid valve	Brown, yellow	Milky white
4	Second solenoid valve	Blue, red, red	Milky white
5	Torque converter clutch control solenoid valve	Blue, yellow, yellow	Black
6	Reduction solenoid valve	Green, yellow, yellow	Black

cardiagn.com

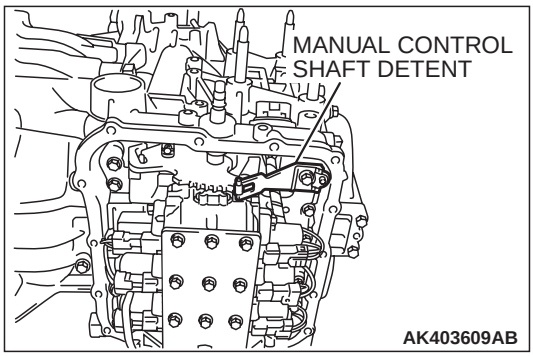

99. Install the manual control shaft detent and tighten the bolt to the specified torque.

Tightening torque: 6.0 ±1.0 N· m (53 ±9 in-lb)

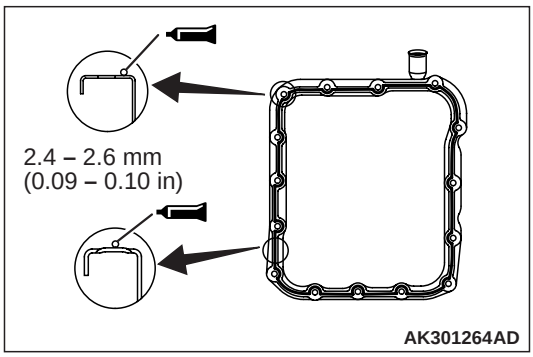

100. Apply a 2.4 –2.6 mm (0.09 –0.10 inch) diameter bead of sealant (MITSUBISHI Genuine Part number MD974421 or equivalent) to the valve body cover in the area shown.

NOTE: Be sure to install the case quickly while the sealant is wet (with 15 minutes) or leaks will occur if the rear cover is installed after the sealant dries.

NOTE: After installation, keep the sealed area away from ATF for approximately one hour.

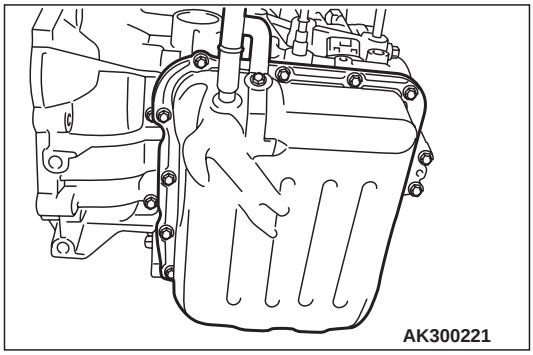

101. Install the valve body cover, and then tighten its mounting bolts to the specified torque.

Tightening torque: 11 ±1 N· m (97 ±9 in-lb)

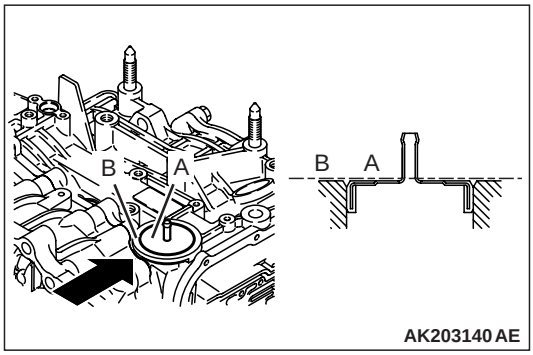

102. Press Face "A" of the air breather to be on the same plane as the Face "B" of the transaxle case as shown in the illustration.

cardiagn.com

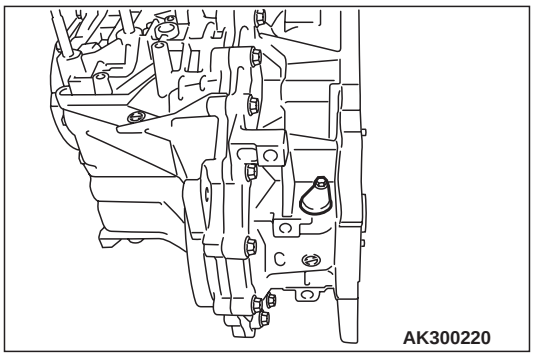

103.Install the sealing cap and tighten the bolt to the specified torque.

Tightening torque: 5.0 ±1.0 N· m (44 ±9 in-lb)

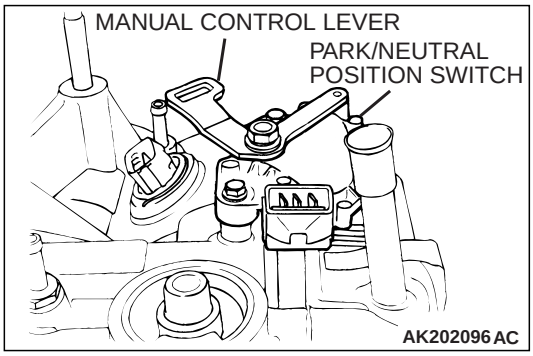

104.Install the park/neutral position switch and tighten the bolt to the specified torque.

Tightening torque: 11 ±1 N· m (97 ±9 in-lb)

105.Install the manual control lever and tighten the nut to the specified torque.

Tightening torque: 22 ±3 N· m (16 ±2 ft-lb)

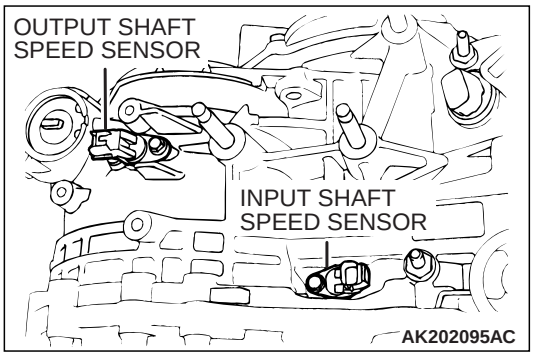

106.Install the input shaft speed sensor and output shaft speed sensor and tighten the bolt to the specified torque.

Tightening torque: 11 ±1 N· m (97 ±9 in-lb)

107.Apply ATF on the both sides of the new gasket and threads of the eyebolts, and then tighten to the specified torque.

Tightening torque: 24 ±3 N· m (18 ±2 ft-lb)

108.Tighten the oil cooler feed pipe clamp bolt to the specified torque.

Tightening torque: 11 ±1 N· m (97 ±9 in-lb)

109.Install the oil dipstick.

110.Install the control cable support brackets to the specified torque.

Tightening torque: 23 ±3 N· m (17 ±2 ft-lb)

111.Install the harness bracket to the specified torque.

Tightening torque: 11 ±1 N· m (97 ±9 in-lb)

112.Install the roll stopper brackets.

Tightening torque: 70 ±10 N· m (52 ±7 ft-lb)

cardiagn.com

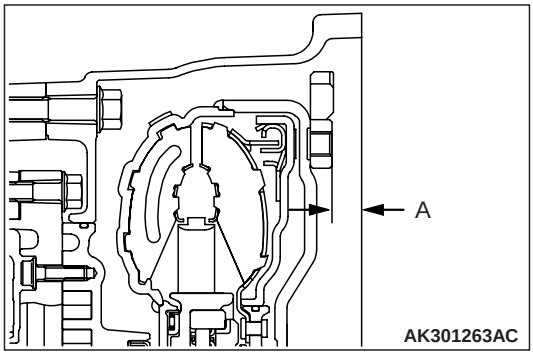

⚠ CAUTION

Apply ATF to the oil pump drive hub before installing the torque converter. Be careful not to damage the oil seal lip when installing the torque converter.

113. Install the torque converter, and align it with the oil pump so that the shown dimension "A" meets the reference value.

Reference value: Approximately 9.4 mm (0.37 inch)

cardiagn.com

OIL PUMP

DISASSEMBLY AND ASSEMBLY

M1233001300206

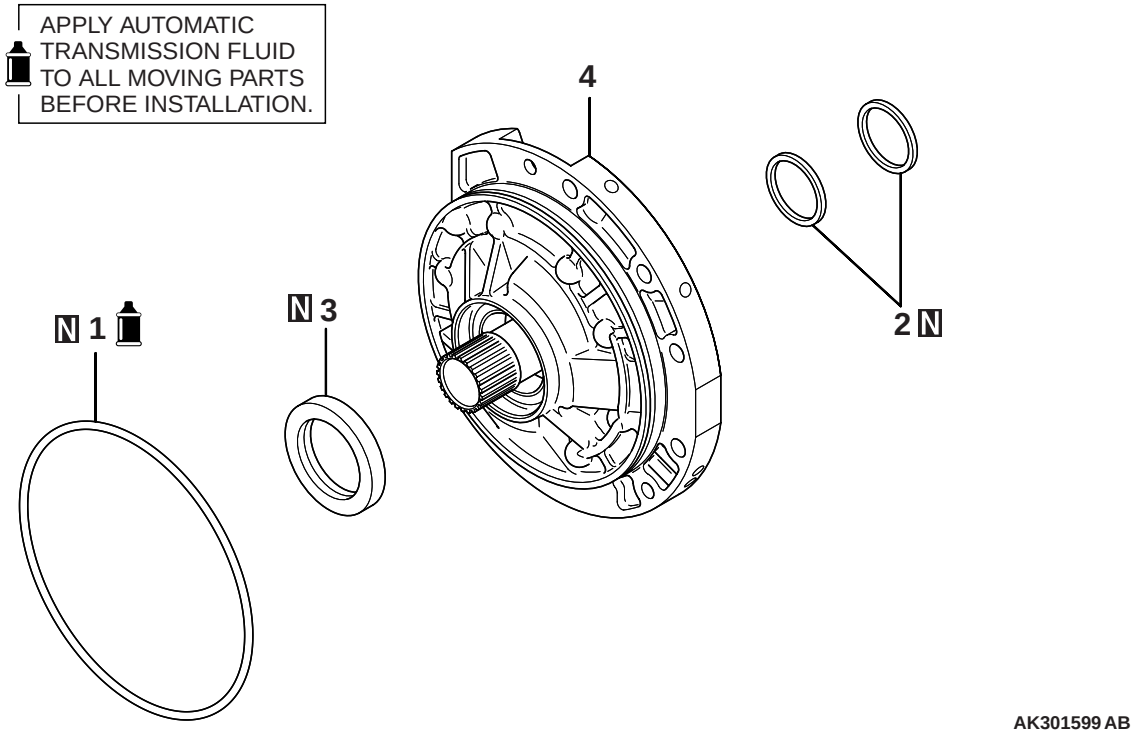

DISASSEMBLY STEPS

>>**B**<< 1. O-RING
2. SEAL RING

DISASSEMBLY STEPS

>>**A**<< 3. OIL SEAL
4. OIL PUMP ASSEMBLY

Required Special Tool:

- MD998334: Oil Seal Installer

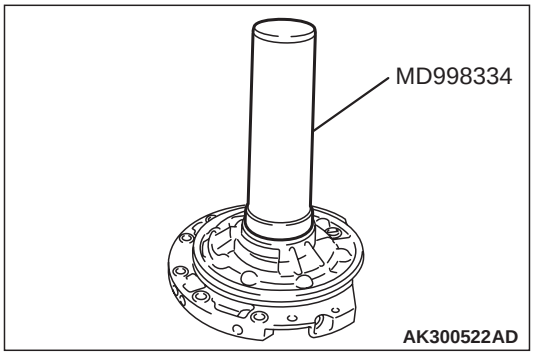

ASSEMBLY SERVICE POINTS

>>A<< OIL SEAL INSTALLATION

1. Apply a small amount of ATF to the oil seal lip.
2. Use special tool MD998334 to tap the oil seal in the oil pump body.

>>B<< O-RING INSTALLATION

Install a new O-ring to the outer groove of the oil pump, and apply ATF or petroleum jelly (Vaseline) to the O-ring.

cardiagn.com

UNDERDRIVE CLUTCH AND INPUT SHAFT

DISASSEMBLY AND ASSEMBLY

M1233024500171

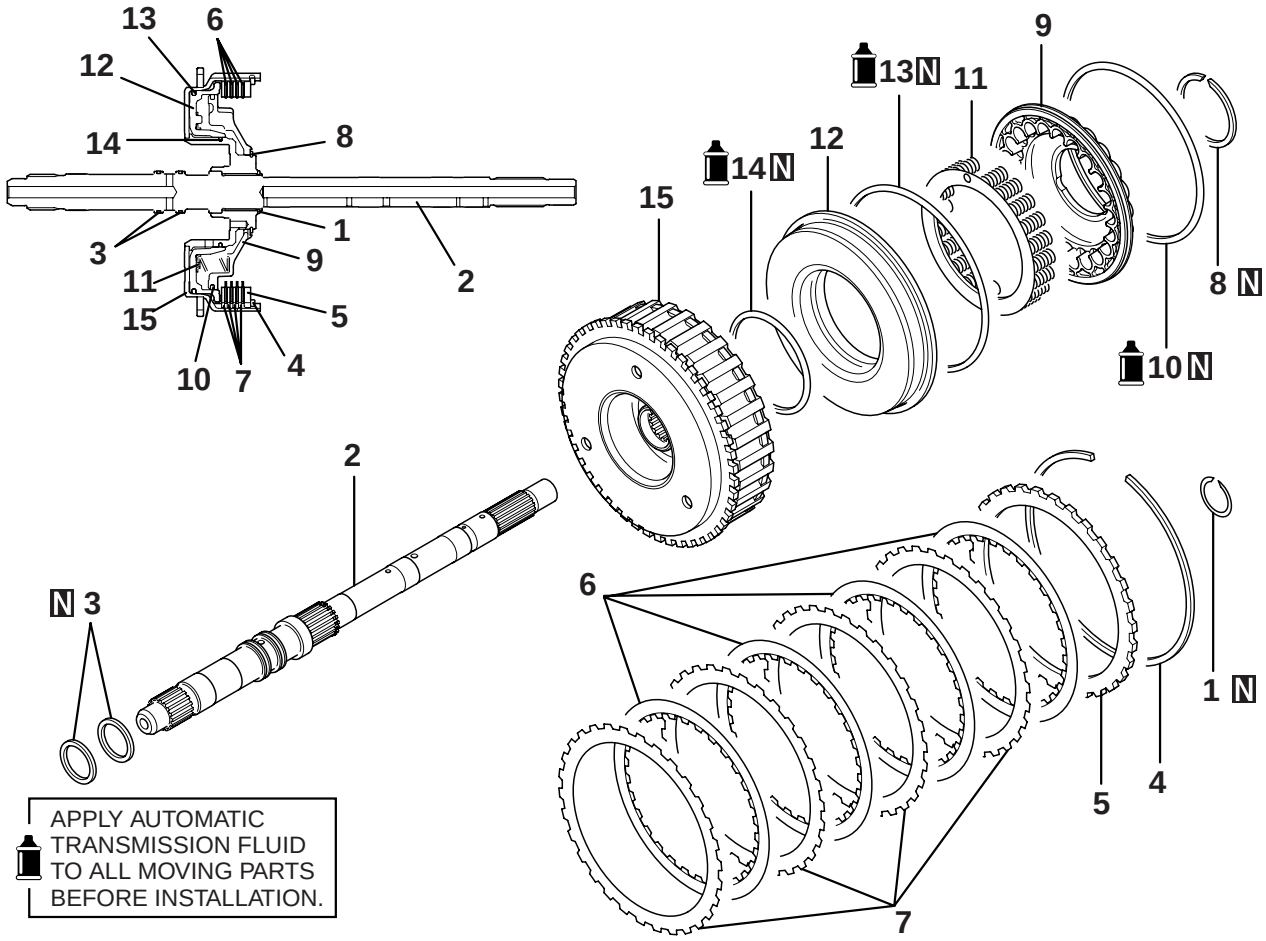

AK301600 AB

DISASSEMBLY STEPS

1. SNAP RING
2. INPUT SHAFT
3. SEAL RING
>>**D**<< 4. SNAP RING
>>**C**<< 5. CLUTCH REACTION PLATE
>>**C**<< 6. CLUTCH DISC
<<**A**>> >>**C**<< 7. CLUTCH PLATE
>>**B**<< 8. SNAP RING

DISASSEMBLY STEPS

9. SPRING RETAINER
>>**A**<< 10. D-RING
11. RETURN SPRING
12. UNDERDRIVE CLUTCH PISTON
>>**A**<< 13. D-RING
>>**A**<< 14. D-RING
15. UNDERDRIVE CLUTCH RETAINER

Required Special Tools:

- MB991629: Spring Compressor
- MD998907: Spring Compressor
- MD998924: Spring Compressor Retainer

cardiagn.com

DISASSEMBLY SERVICE POINT

<<A>> SNAP RING REMOVAL

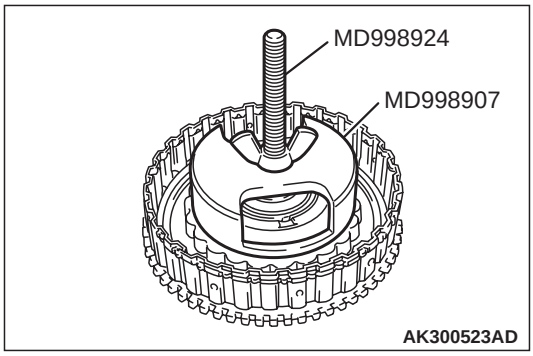

1. Set special tools MD998907 and MD998924 as shown in the illustration.
2. Compress the return spring and remove the snap ring.

ASSEMBLY SERVICE POINTS

>>A<< D-RING INSTALLATION

1. Install a D-ring in the groove in the underdrive clutch retainer and piston, and in the groove in the outside of the spring retainer. Be careful not to twist or damage the D-rings.
2. Apply ATF or petroleum jelly (Vaseline) to the D-rings.

>>B<< SNAP RING INSTALLATION

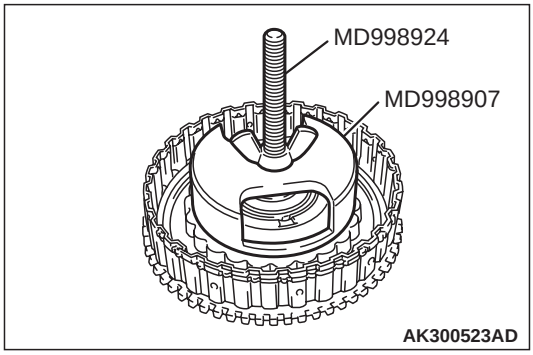

1. Place the snap ring on top of the spring retainer, and then set special tool MD998907 and MD998924 as shown in the illustration.
2. Compress the return spring and install the snap ring.

>>C<< CLUTCH PLATE/CLUTCH DISC/CLUTCH REACTION PLATE INSTALLATION

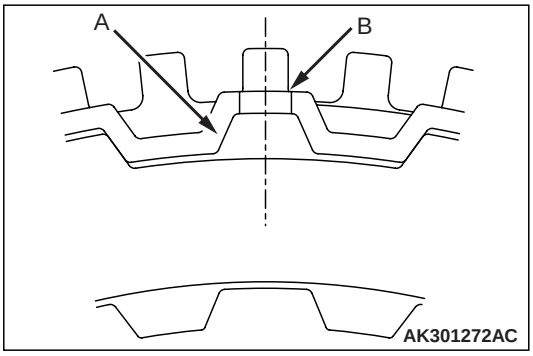

⚠ CAUTION

Immerse the clutch disc in ATF before assembling it. If the clutch disc is new, soak it in ATF for at least two hours.

1. Assemble the four clutch plates and four clutch discs one on top of the other inside the underdrive clutch retainer. All four clutch plates should be assembled so that the places with no teeth (marked "A") are aligned with the holes in the retainer (marked "B").

cardiagn.com

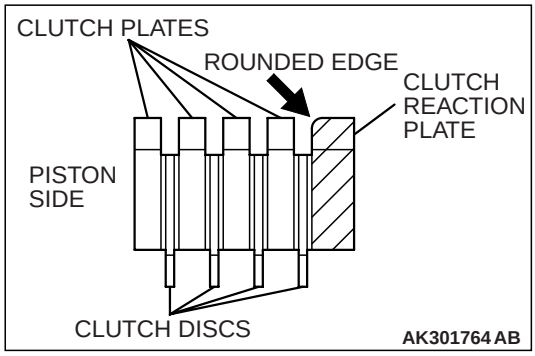

2. Install the clutch reaction plate in the direction shown. Install it the same as the clutch plates, so that the areas with no teeth (marked "A") are aligned with the retainer (marked "B").

>>D<< SNAP RING INSTALLATION

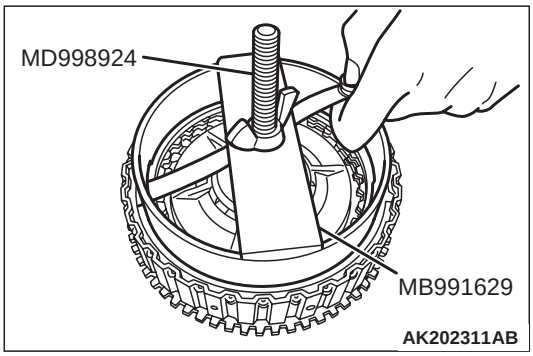

1. Install the snap ring into the groove of clutch retainer.
2. Set special tools MB991629 and MD998924 as shown in the illustration, and then compress the clutch element.
3. Check that the clearance between the snap ring and the clutch reaction plate is within the standard value. If not within the standard value, select a snap ring to achieve the standard value clearance.

   Standard value: 1.60 – 1.80 mm (0.0630 – 0.0709 inch)

cardiagn.com

REVERSE AND OVERDRIVE CLUTCH

DISASSEMBLY AND ASSEMBLY

M1233024800194

NUMBER OF CLUTCH DISCS AND PLATES

	PRESSURE PLATE	CLUTCH DISC	CLUTCH PLATE	CLUTCH REACTION PLATE
Over drive clutch	1	4	3	1
Reverse clutch	–	2	2	1

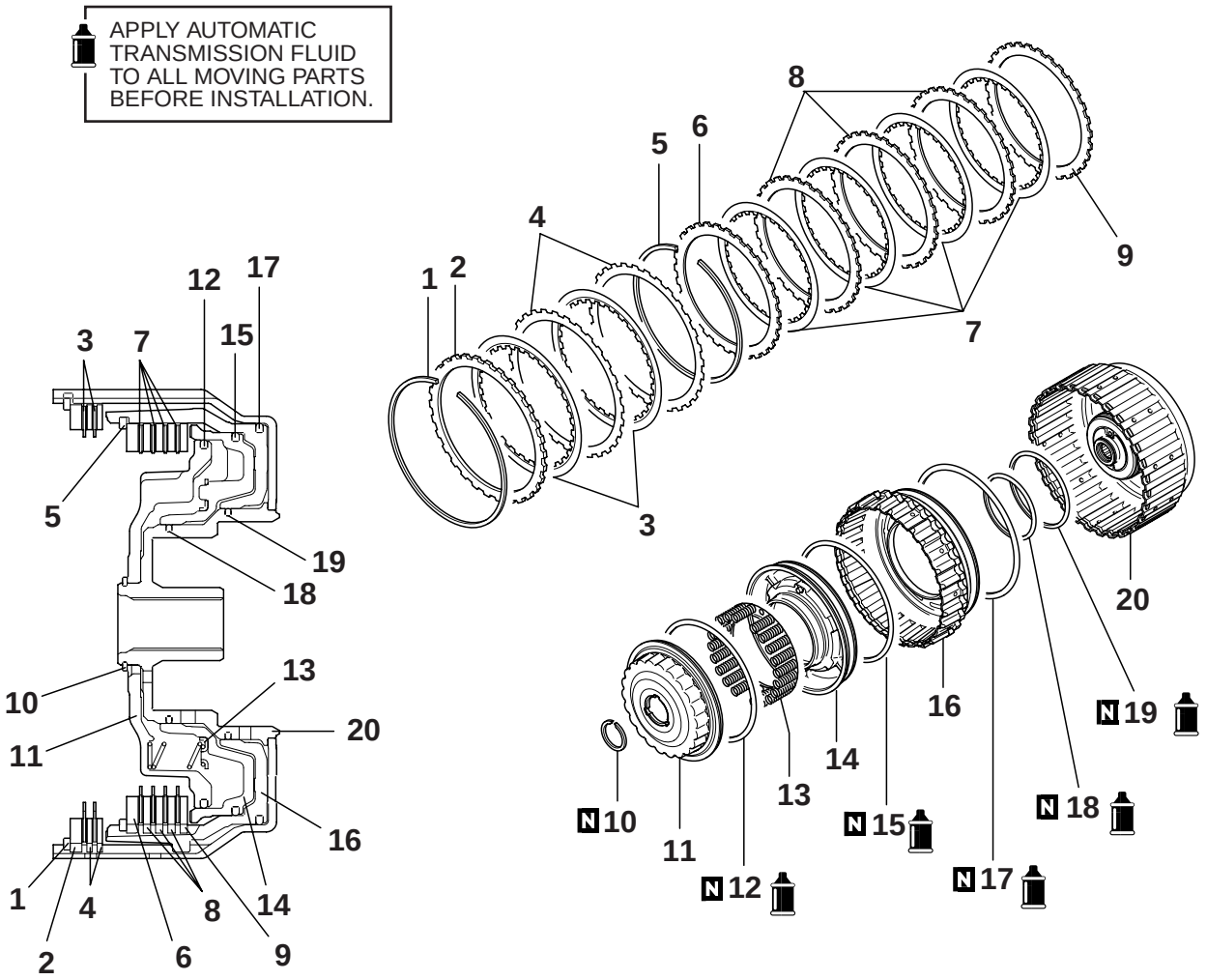

DISASSEMBLY STEPS

>>G<<	1.	SNAP RING
>>F<<	2.	CLUTCH REACTION PLATE
>>F<<	3.	CLUTCH DISC
>>F<<	4.	CLUTCH PLATE
>>E<<	5.	SNAP RING
>>D<<	6.	CLUTCH REACTION PLATE
>>D<<	7.	CLUTCH DISC
>>D<<	8.	CLUTCH PLATE
>>D<<	9.	PRESSURE PLATE
<<A>> >>C<<	10.	SNAP RING

DISASSEMBLY STEPS

	11.	SPRING RETAINER
>>A<<	12.	D-RING
	13.	RETURN SPRING
	14.	OVERDRIVE CLUTCH PISTON
>>A<<	15.	D-RING
>>B<<	16.	REVERSE CLUTCH PISTON
>>A<<	17.	D-RING
>>A<<	18.	D-RING
>>A<<	19.	D-RING
	20.	REVERSE CLUTCH RETAINER

TSB Revision

cardiagn.com

Required Special Tools:

- MB991629: Spring Compressor
- MB991789: Spring Compressor
- MD998924: Spring Compressor Retainer
- MD999590: Spring Compressor

DISASSEMBLY SERVICE POINT

<<A>> SNAP RING REMOVAL

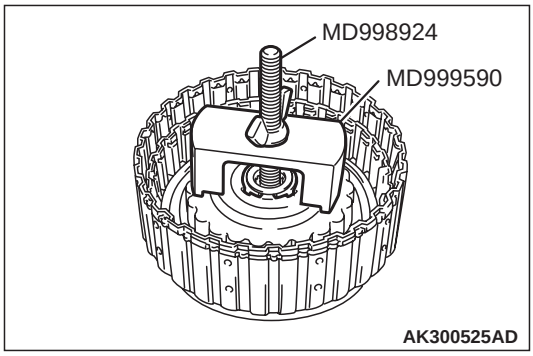

1. Set special tools MD999590 and MD998924 as shown in the illustration.
2. Compress the return spring and remove the snap ring.

ASSEMBLY SERVICE POINTS

>>A<< D-RING INSTALLATION

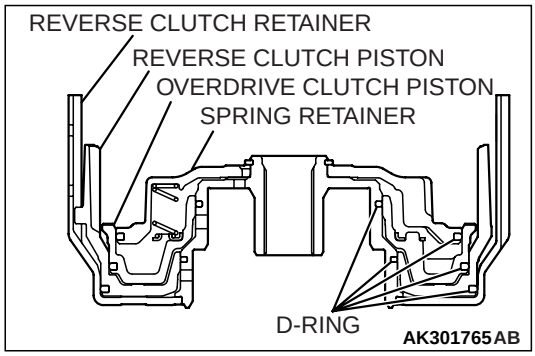

1. Install D-rings in the grooves on the reverse clutch retainer, piston, overdrive clutch piston and spring retainer. Be careful not to twist or damage the D-rings.
2. Apply ATF or petroleum jelly (Vaseline) to D-rings.

>>B<< REVERSE CLUTCH PISTON INSTALLATION

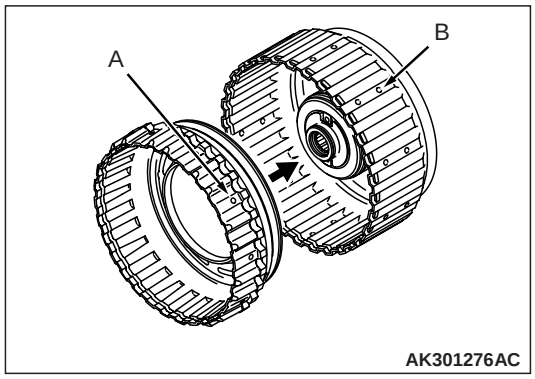

Align the outer circumference holes ("A" and "B") of the reverse clutch piston and the reverse clutch retainer to assemble them.

cardiagn.com

>>C<< SNAP RING INSTALLATION

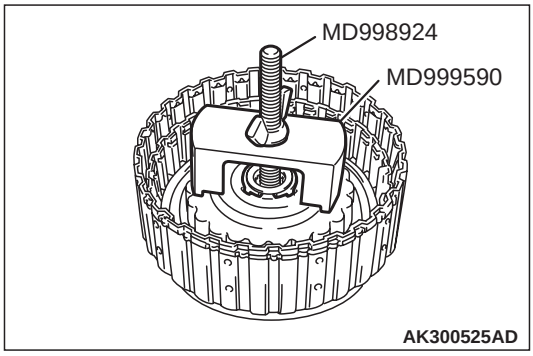

1. Set special tools MD999590 and MD998924 as shown in the illustration.
2. Tighten the nut on the special tool to press down on the spring retainer and reverse clutch retainer, and then install the snap ring.

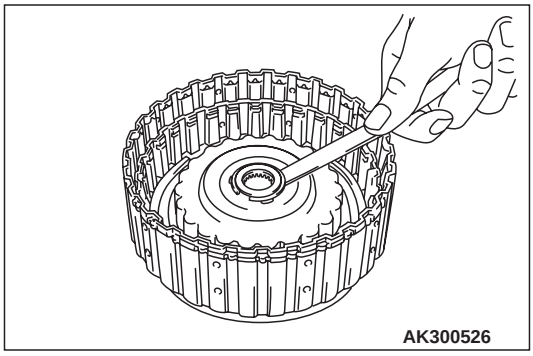

3. Check that the clearance between the snap ring and the return spring retainer is within the standard value. If not within the standard value, select a snap ring to achieve the standard value clearance.

   Standard value: 0 – 0.09 mm (0 – 0.0035 inch)

>>D<< PRESSURE PLATE/CLUTCH PLATE/CLUTCH DISC/CLUTCH REACTION PLATE INSTALLATION

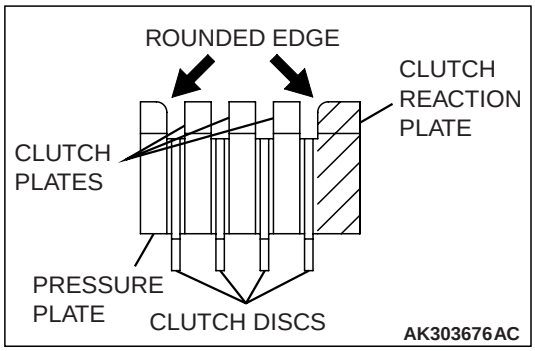

1. Install the pressure plate in the direction shown

⚠ CAUTION

Immerse the clutch disc in ATF before assembling it. If the clutch disc is new, soak it in ATF for more than two hours.

2. Assemble the clutch discs and clutch plates, one on top of the other, inside the reverse clutch piston. Assemble both clutch plates so that the places with no teeth (marked "A") are aligned with the holes in the retainer (marked "B").
3. Install the clutch reaction plate in the direction shown.

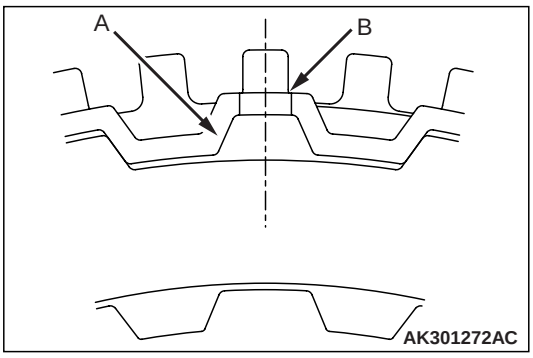

cardiagn.com

>>E<< SNAP RING INSTALLATION

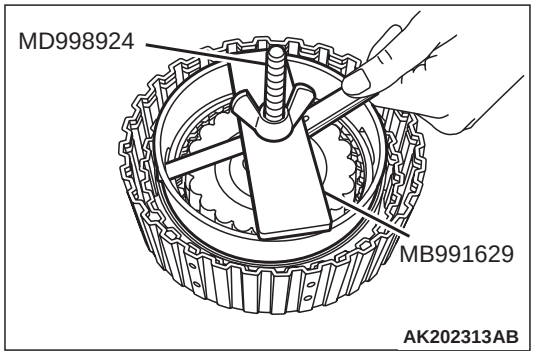

1. Install the snap ring into the groove in the reverse clutch piston.
2. Set special tools MB991629 and MD998924 as shown in the illustration, and compress the clutch element.
3. Check that the clearance between the snap ring and the clutch reaction plate is within the standard value. If not within the standard value, select a snap ring to achieve the standard value clearance.

   Standard value: 1.6 – 1.8 mm (0.0630 – 0.0709 inch)

>>F<< CLUTCH PLATE/CLUTCH DISC/CLUTCH REACTION PLATE INSTALLATION

⚠ CAUTION

Immerse the clutch disc in ATF before assembling it. If the clutch disc is new, soak it in ATF for at least two hours.

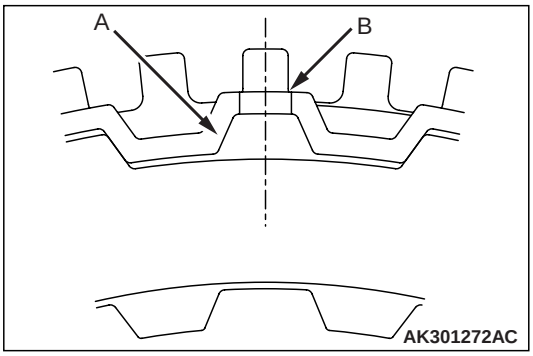

1. Assemble two clutch discs and two clutch plates, one on top of the other, inside the reverse clutch retainer. Assemble both clutch plates so that the places with no teeth (marked "A") are aligned with the holes in the retainer (marked "B").

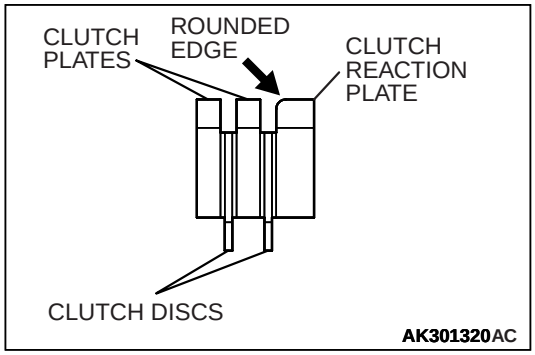

2. Install the clutch reaction plate in the direction shown. Install it the same as the clutch plate, so that the places with no teeth (marked "A") are aligned with the holes in the retainer (marked "B").

>>G<< SNAP RING INSTALLATION

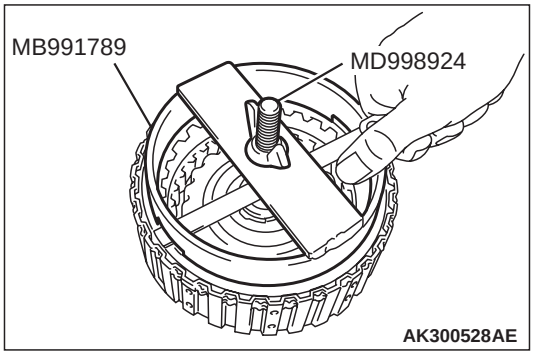

1. Install the snap ring into the groove of reverse clutch retainer.
2. Set special tools MB991789 and MD998924 as shown in the illustration, and compress the clutch element.
3. Check that the clearance between the snap ring and the clutch reaction plate is within the standard value. If not within the standard value, select a snap ring to achieve the standard value clearance.

   Standard value: 1.5 – 1.7 mm (0.0591 – 0.0669 inch)

cardiagn.com

DIRECT CLUTCH

DISASSEMBLY AND ASSEMBLY

M1233019400060

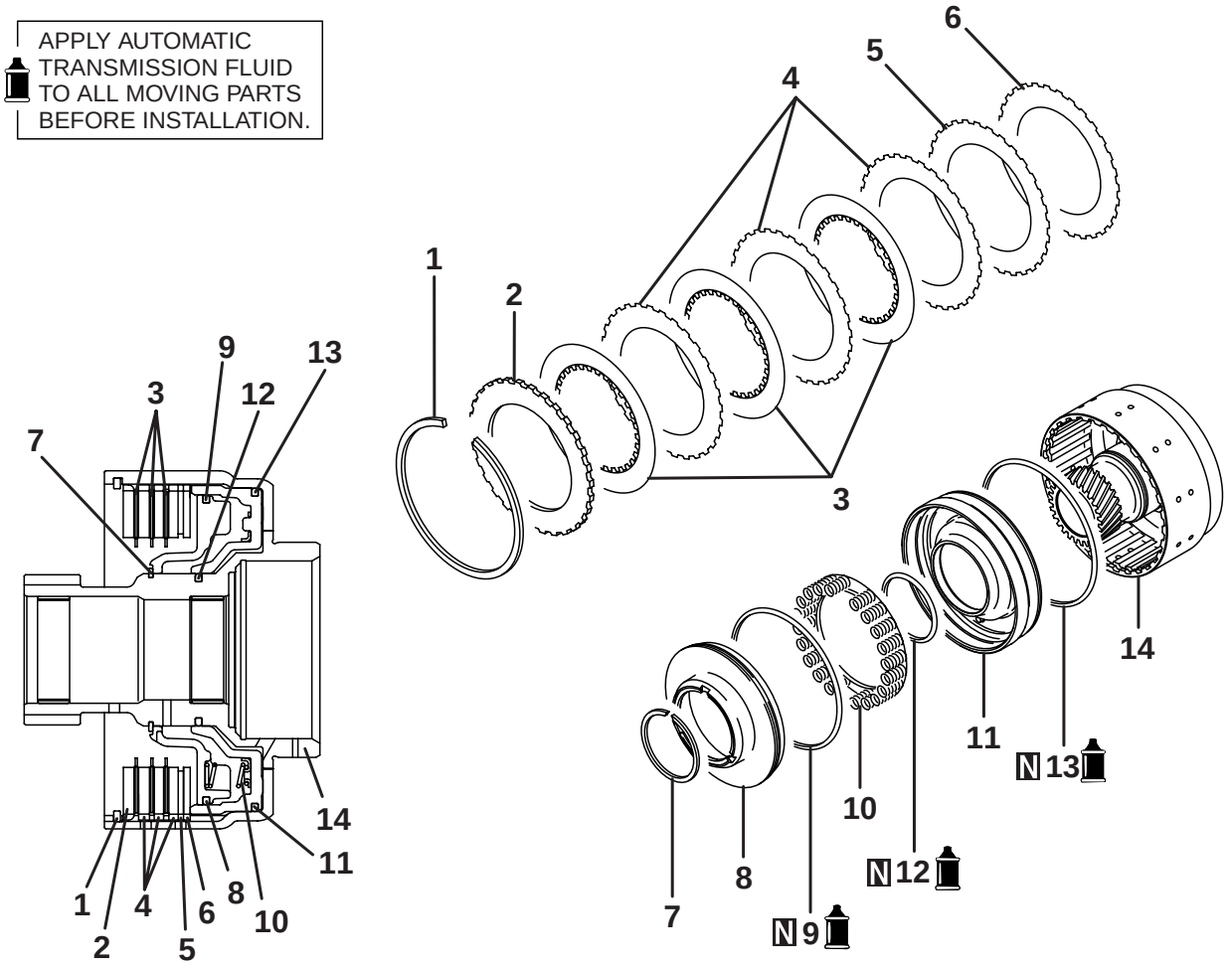

AK403291AB

DISASSEMBLY STEPS

	>>D<<	1.	SNAP RING
	>>C<<	2.	CLUTCH REACTION PLATE
	>>C<<	3.	CLUTCH DISC
	>>C<<	4.	CLUTCH PLATE
	>>C<<	5.	CUSHION PLATE
	>>C<<	6.	INTERMEDIATE PLATE
<<A>>	>>B<<	7.	SNAP RING

DISASSEMBLY STEPS

	8.	SPRING RETAINER
>>A<<	9.	D-RING
	10.	RETURN SPRING
	11.	UNDERDRIVE CLUTCH PISTON
>>A<<	12.	D-RING
>>A<<	13.	D-RING
	14.	DIRECT CLUTCH RETAINER

Required Special Tools:

- MB991630: Spring Compressor
- MD998924: Spring compressor retainer

cardiagn.com

DISASSEMBLY SERVICE POINT

<<A>> SNAP RING REMOVAL

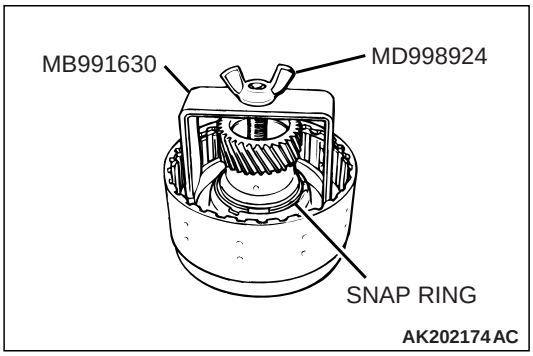

1. Set special tools MD991630 and MD998924 as shown in the illustration.
2. Compress the return spring and remove the snap ring.

ASSEMBLY SERVICE POINTS

>>A<< D-RING INSTALLATION

Apply ATF, blue petrolatum jelly or white Vaseline to the D-rings and handle them carefully not to damage them during installation.

>>B<< SNAP RING INSTALLATION

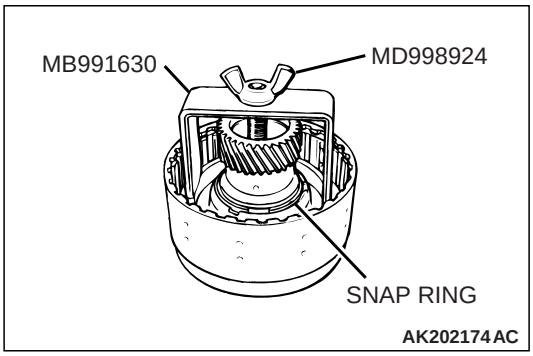

1. Set special tools MB991630 and MD998924 as shown in the illustration.
2. Using special tool to press down on the spring retainer, and then install the snap ring.

>>C<< INTERMEDIATE PLATE/CUSHION PLATE/CLUTCH PLATE/CLUTCH DISC/CLUTCH REACTION PLATE INSTALLATION

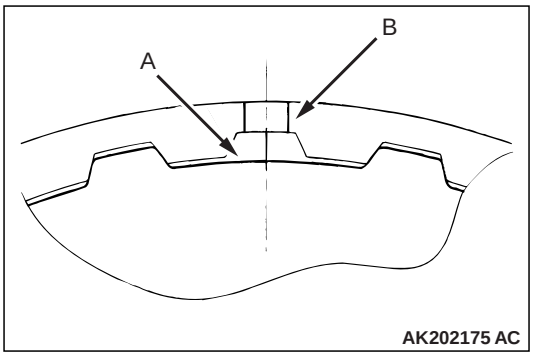

⚠ **CAUTION**

Immerse the clutch disc in ATF before assembling it. If the clutch disc is new, soak it in ATF for at least two hours.

1. Assemble the intermediate plate, cushion plate, clutch plates, clutch discs, and clutch reaction plates with their non-toothed portions (A in the illustration) aligned with the hole (B in the illustration) formed in a crest of the direct clutch retainer.

cardiagn.com

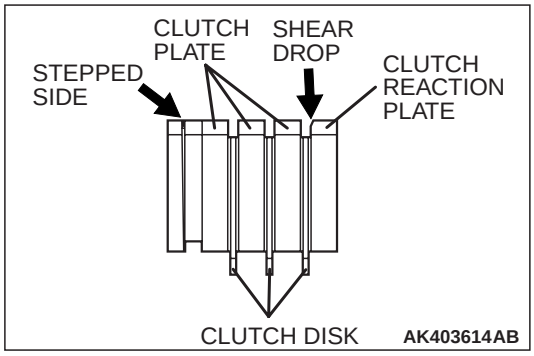

2. Orient the clutch reaction plate and intermediate plate as shown in the illustration when it is installed.

>>D<< SNAP RING INSTALLATION

1. Install the snap ring.
2. Press down the clutch reaction plate with a force of 49 N (11 lb) on its entire circumference.
3. Check the clearance between the snap ring and clutch reaction plate. If the clearance is not within the standard value range, make adjustment by selecting a snap ring of an appropriate thickness.

   Standard value:
   0.6 – 0.8 mm (0.02362 – 0.03149 inch)

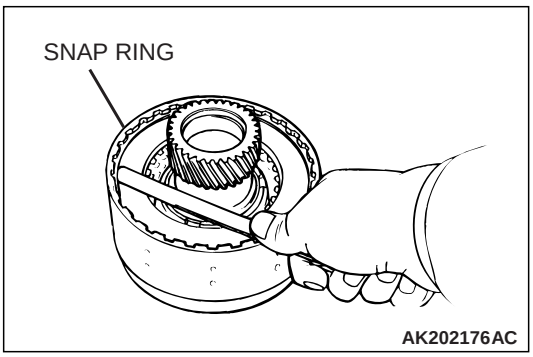

cardiagn.com

PLANETARY GEAR

DISASSEMBLY AND ASSEMBLY

M1233002500173

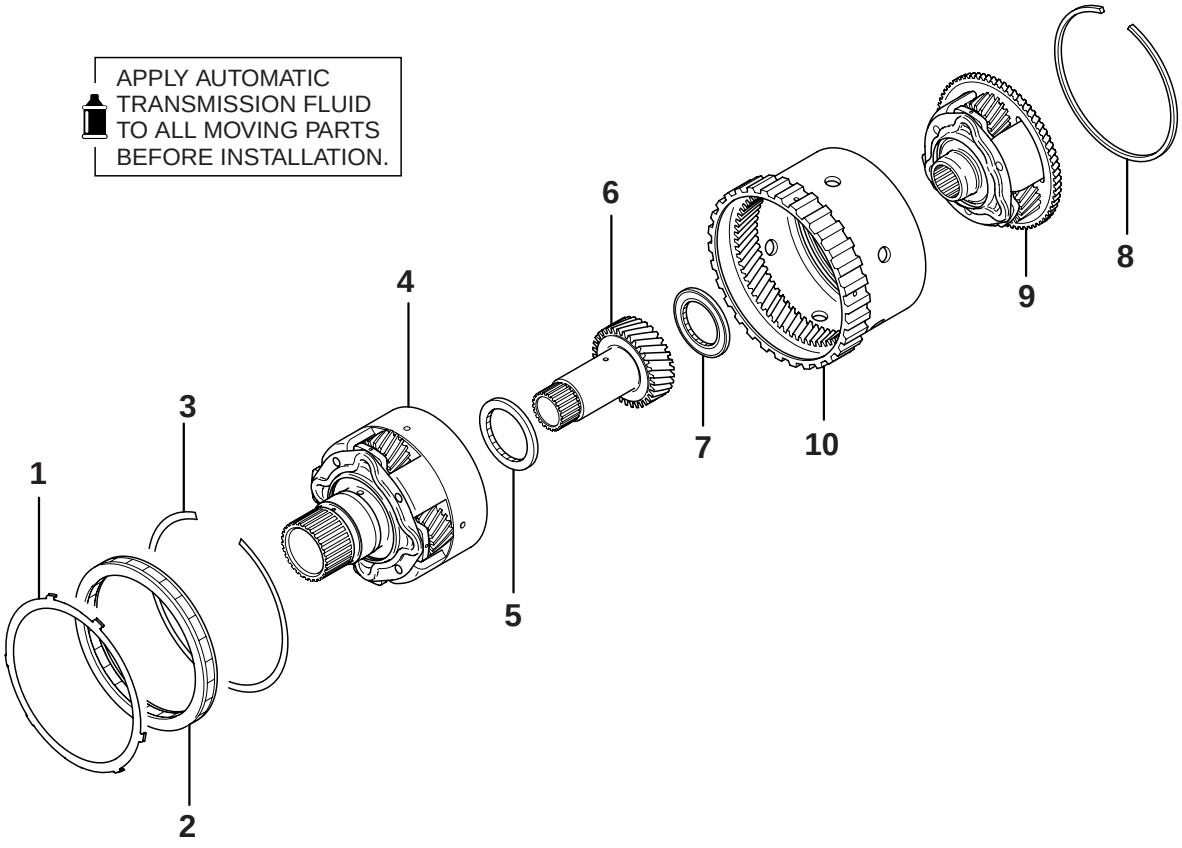

AK301602 AB

DISASSEMBLY STEPS

1. STOPPER PLATE
>>**B**<< 2. ONE-WAY CLUTCH
3. SNAP RING
4. OUTPUT PLANETARY CARRIER
>>**A**<< 5. THRUST BEARING NUMBER 3
6. UNDERDRIVE SUN GEAR

DISASSEMBLY STEPS

>>**A**<< 7. THRUST BEARING NUMBER 4
8. SNAP RING
9. OVERDRIVE PLANETARY CARRIER
10. OVERDRIVE ANNULUS GEAR

cardiagn.com

ASSEMBLY SERVICE POINTS

>>A<< THRUST BEARING NUMBER 3 AND THRUST BEARING NUMBER 4 INSTALLATION

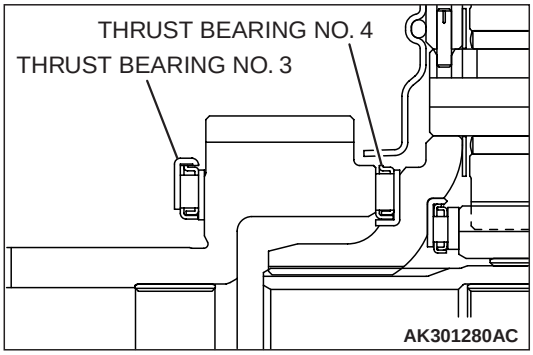

⚠ **CAUTION**

Use care to install the thrust bearings in the correct direction.

Check the installation direction of thrust bearings number 3 and 4, and install them as shown.

>>B<< ONE-WAY CLUTCH INSTALLATION

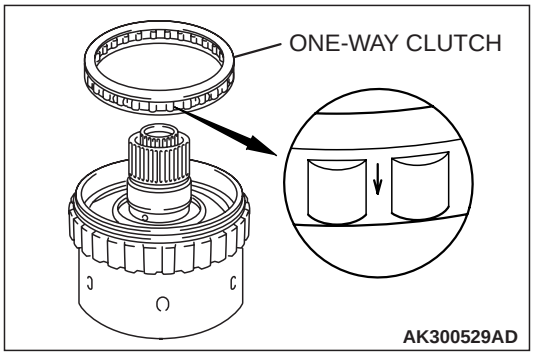

Insert the one-way clutch into the overdrive annulus gear so that the arrow points towards the output planetary carrier.

cardiagn.com

LOW-REVERSE BRAKE

DISASSEMBLY AND ASSEMBLY

M1233003700211

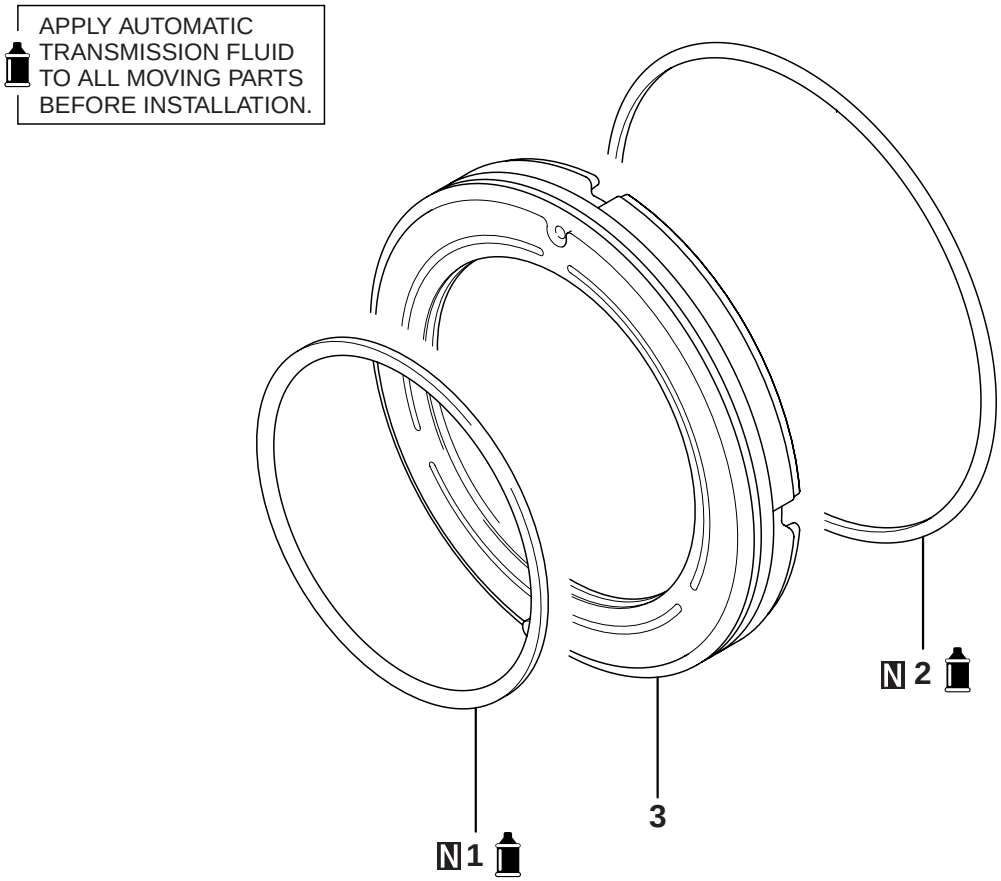

AK301603AB

DISASSEMBLY STEPS

>>**A**<< 1. D-RING

DISASSEMBLY STEPS

>>**A**<< 2. D-RING
3. LOW-REVERSE BRAKE PISTON

ASSEMBLY SERVICE POINT

>>A<< D-RING INSTALLATION

Apply ATF or petroleum jelly (Vaseline) to the D-ring, and install carefully.

cardiagn.com

SECOND BRAKE

DISASSEMBLY AND ASSEMBLY

M1233025400122

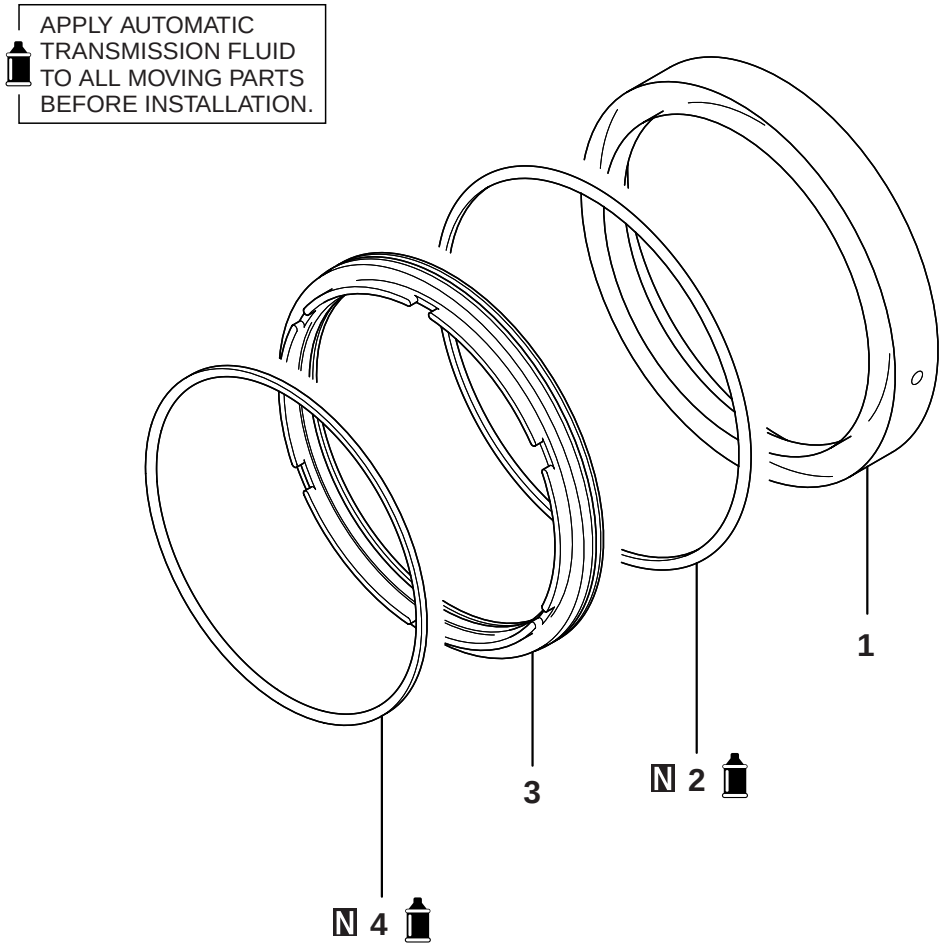

AK301604 AB

DISASSEMBLY STEPS

1. SECOND BRAKE RETAINER
>>**A**<< 2. D-RING
3. SECOND BRAKE PISTON
>>**A**<< 4. D-RING

ASSEMBLY SERVICE POINT

>>A<< D-RING INSTALLATION

Apply ATF or petroleum jelly (Vaseline) to the D-ring, and install carefully.

cardiagn.com

DIRECT PLANETARY CAREER

DISASSEMBLY AND ASSEMBLY

M1233026300065

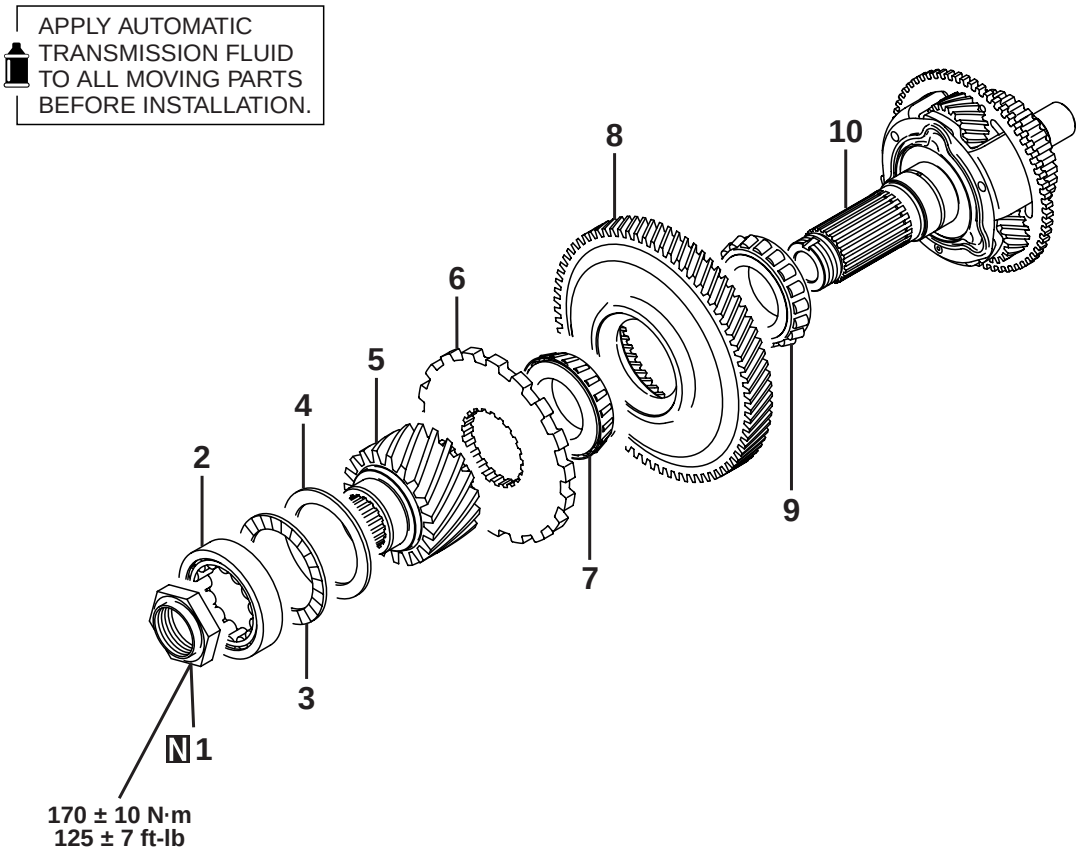

AK403295AB

Disassembly steps

<<**A**>>	>>**D**<<	1.	LOCK NUT
		2.	ROLLER BEARING
		3.	THRUST BEARING NO.9
		4.	THRUST RACE NO.10
<<**B**>>	>>**C**<<	5.	OUTPUT GEAR
<<**B**>>	>>**C**<<	6.	PARKING GEAR

Disassembly steps (Continued)

<<**C**>>	>>**B**<<	7.	TAPER ROLLER BEARING
		8.	TRANSFER DRIVEN GEAR AND DIRECT ANNULUS GEAR
<<**D**>>	>>**A**<<	9.	TAPER ROLLER BEARING
		10.	DIRECT PLANETARY CARRIER

Required Special Tools:

- MD998812: Installer Cap
- MD998813: Installer 100
- MD998824: Installer Adapter (50)
- MD998834: Special Spanner
- MD998917: Bearing remover

cardiagn.com

DISASSEMBLY SERVICE POINTS

<<A>> LOCK NUT REMOVAL

1. Un stake staking of the lock nut.

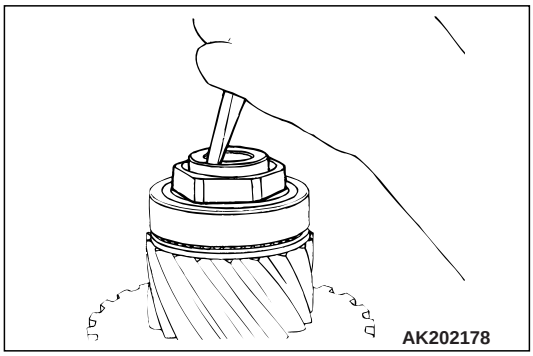

2. Using special tool MD998834 to remove the lock nut.

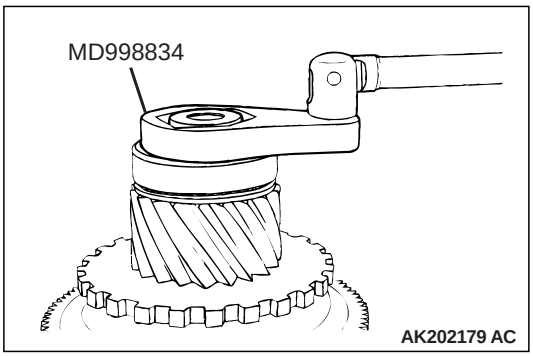

<<B>> OUTPUT GEAR/PARKING GEAR REMOVAL

Using special tool MD998917 to remove the output gear and parking gear.

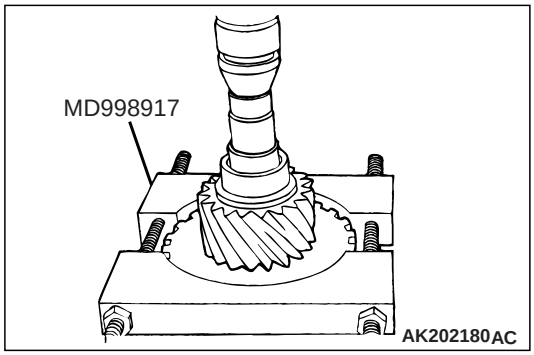

<<C>> TAPER ROLLER BEARING REMOVAL

1. Support the transfer driven gear as shown in the illustration.
2. Push the shaft of the direct planetary carrier to remove the taper roller bearing and gear.

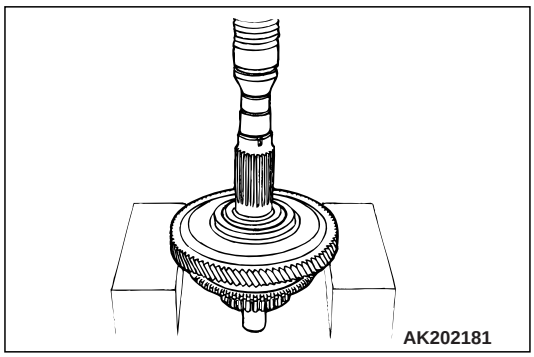

cardiagn.com

<<D>> TAPER ROLLER BEARING REMOVAL

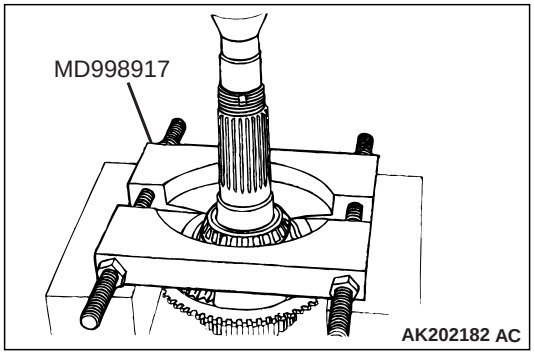

1. Support the transfer driven gear as shown in the illustration.
2. Using special tool MD998917 to remove the taper roller bearing.

ASSEMBLY SERVICE POINTS

>>A<< TAPER ROLLER BEARING INSTALLATION

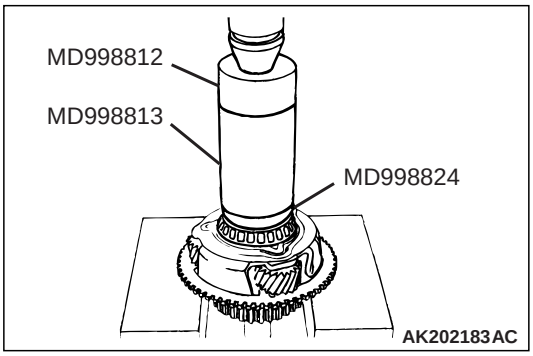

1. Set the transfer driven gear as shown in the illustration.
2. Using special tools MD998812, MD998813 and MD998824, press in the taper roller bearing.

>>B<< TAPER ROLLER BEARING INSTALLATION

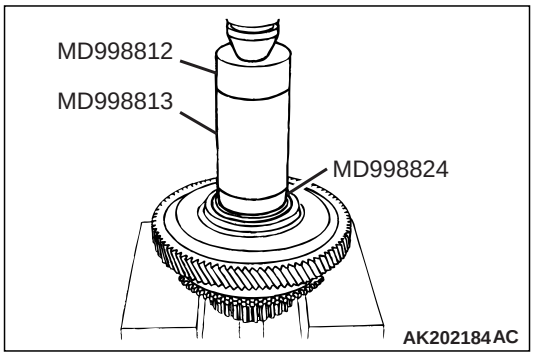

1. Set the transfer driven gear as shown in the illustration.
2. Using special tools MD998812, MD998813 and MD998824, press in the taper roller bearing.

>>C<< OUTPUT GEAR/PARKING GEAR INSTALLATION

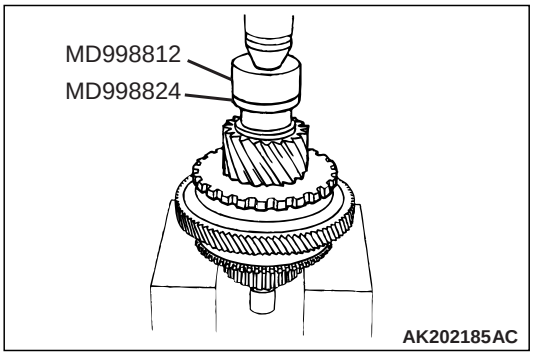

1. Using special tools MD998812 and MD998824, press in the parking gear.

cardiagn.com

>>D<< LOCK NUT INSTALLATION

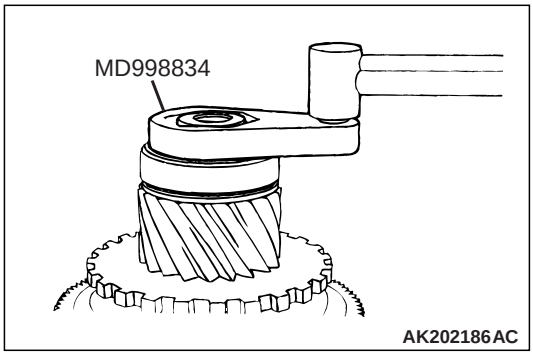

1. Apply ATF on a new locknut, and use special tool MD998834 to tighten the specified torque. Then turn back on turn, and tighten to the specified torque.

   Tightening torque: 170 ±10 N· m (125 ±7 ft-lb)

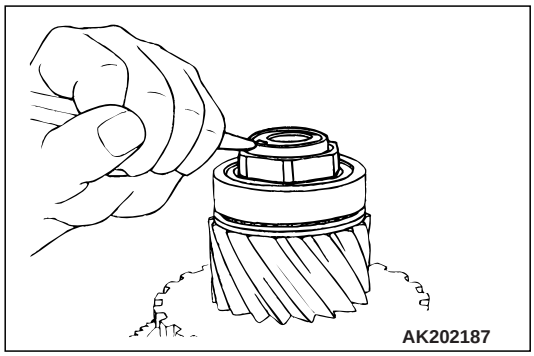

2. Use a punch to stake the lock nut at two places.

cardiagn.com

DIFFERENTIAL

DISASSEMBLY AND ASSEMBLY

M1233003100361

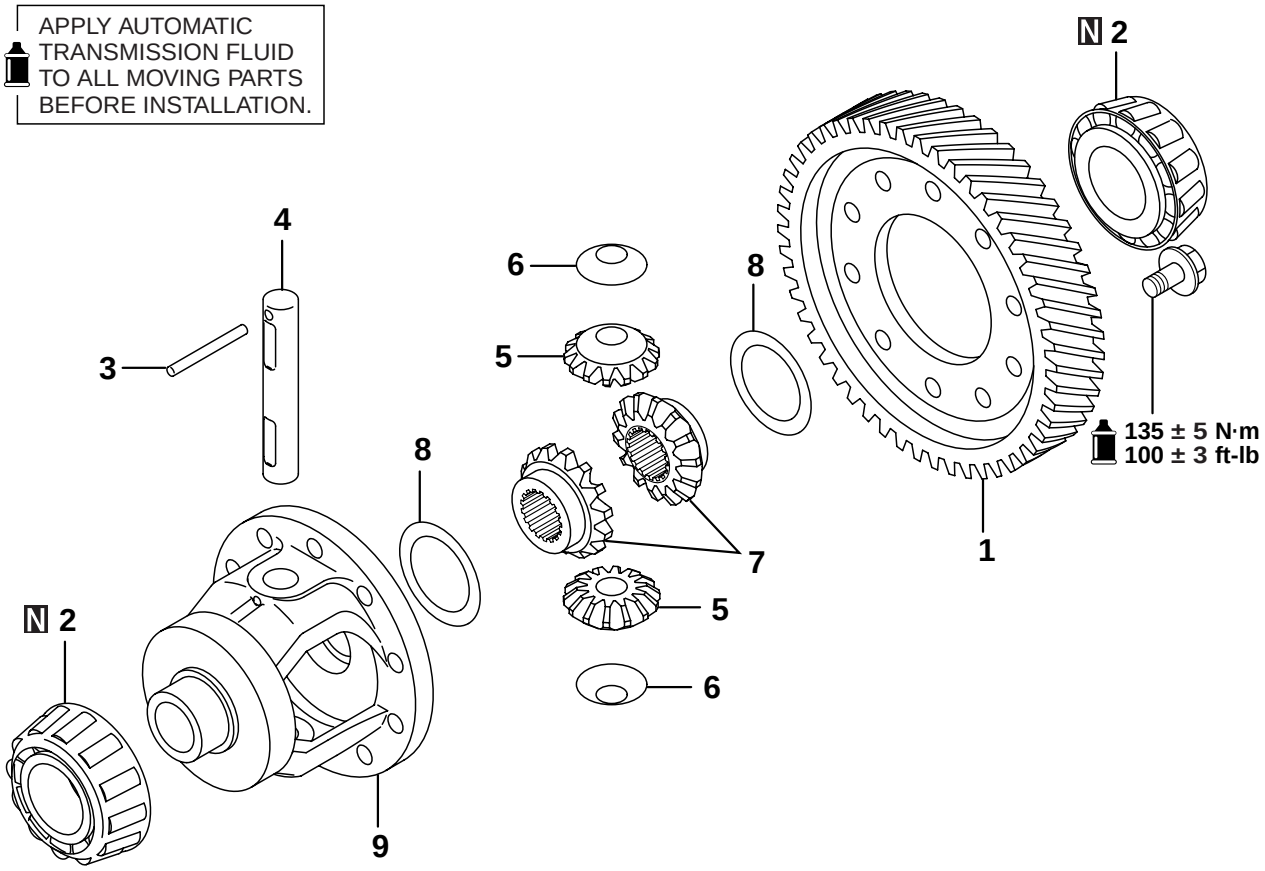

AK301606AB

DISASSEMBLY STEPS

	>>**D**<<	1.	DIFFERENTIAL DRIVE GEAR
<<**A**>>	>>**C**<<	2.	TAPER ROLLER BEARINGS
	>>**B**<<	3.	LOCK PIN
	>>**A**<<	4.	PINION SHAFT
	>>**A**<<	5.	PINIONS

DISASSEMBLY STEPS

>>**A**<<	6.	WASHERS
>>**A**<<	7.	SIDE GEARS
>>**A**<<	8.	SPACERS
	9.	DIFFERENTIAL CASE

Required Special Tools:

- MD998801: Bearing Remover
- MD998812: Installer Cap
- MD998820: Installer Adapter (42)

cardiagn.com

DISASSEMBLY SERVICE POINT

<<A>> TAPER ROLLER BEARING REMOVAL

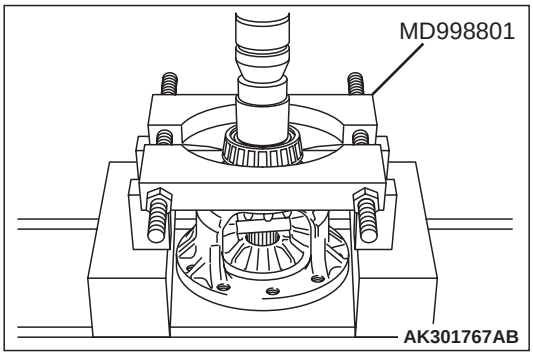

1. Support the taper roller bearing with special tool MD998801, and then set them on the press.
2. Push down on the differential case with the press to remove the bearing.

ASSEMBLY SERVICE POINTS

>>A<< SPACER, SIDE GEAR, WASHER, PINION AND PINION SHAFT INSTALLATION

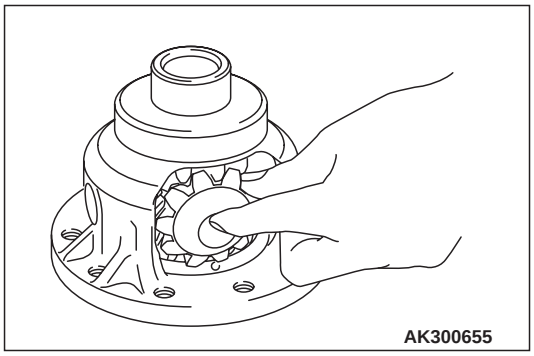

1. Mount a spacer on the back surface of the side gear, and then install the side gear in the differential case.

   NOTE: When a new side gear is to be installed, use a medium thickness spacer [0.93 to 1.00 mm (0.0366 to 0.0395 inch)].
2. Set the washer on the back of each pinion, and put both pinions simultaneously in mesh with the side gears. While rotating them, install them into position.

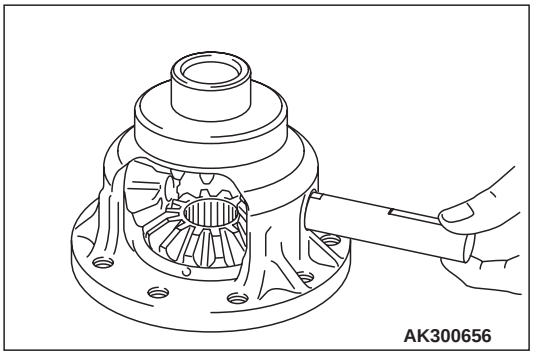

3. Insert the pinion shaft.

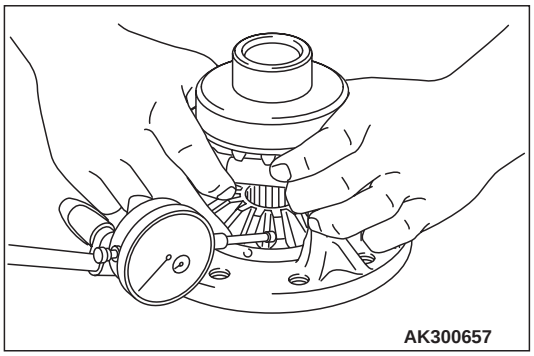

4. Measure the backlash between the side gear and pinion.

   Standard value:
   0.025 – 0.150 mm (0.0010 – 0.0059 inch)
5. If the backlash is out of the standard value, select a spacer and re-measure the backlash.

   NOTE: Adjust until the backlash on both sides are equal.

cardiagn.com

>>B<<LOCK PIN INSTALLATION

Install the lock pin so that it will be oriented in the direction shown.

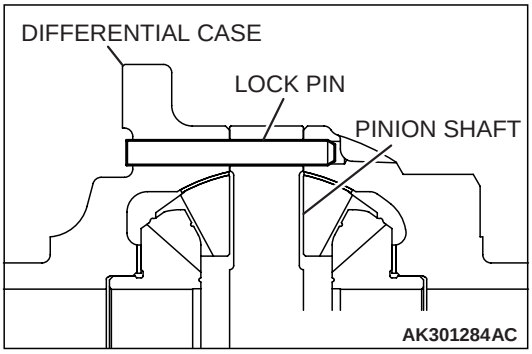

>>C<< TAPER ROLLER BEARING INSTALLATION

Using special tools MD998812 and MD998820, press in the taper roller bearing.

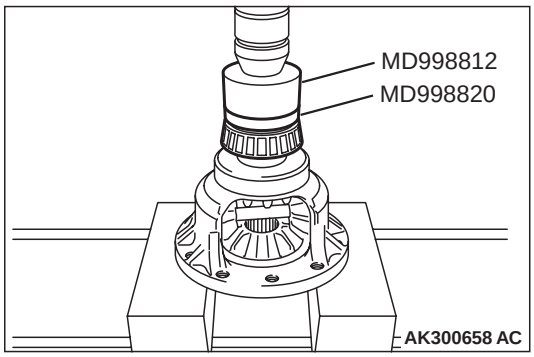

>>D<< DIFFERENTIAL DRIVE GEAR INSTALLATION

Apply ATF to the bolt, and then tighten the bolts to the specified torque in the sequence shown.

Tightening torque: 135 ±5 N· m (100 ±3 ft-lb)

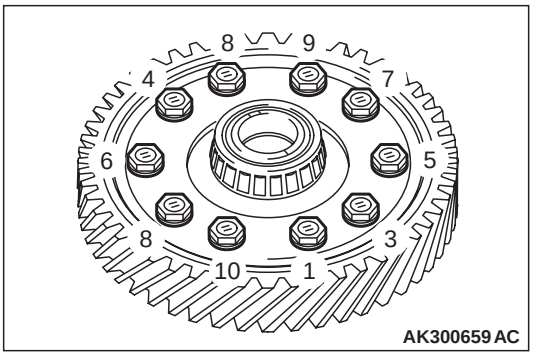

cardiagn.com

VALVE BODY

DISASSEMBLY AND ASSEMBLY

M1233005500309

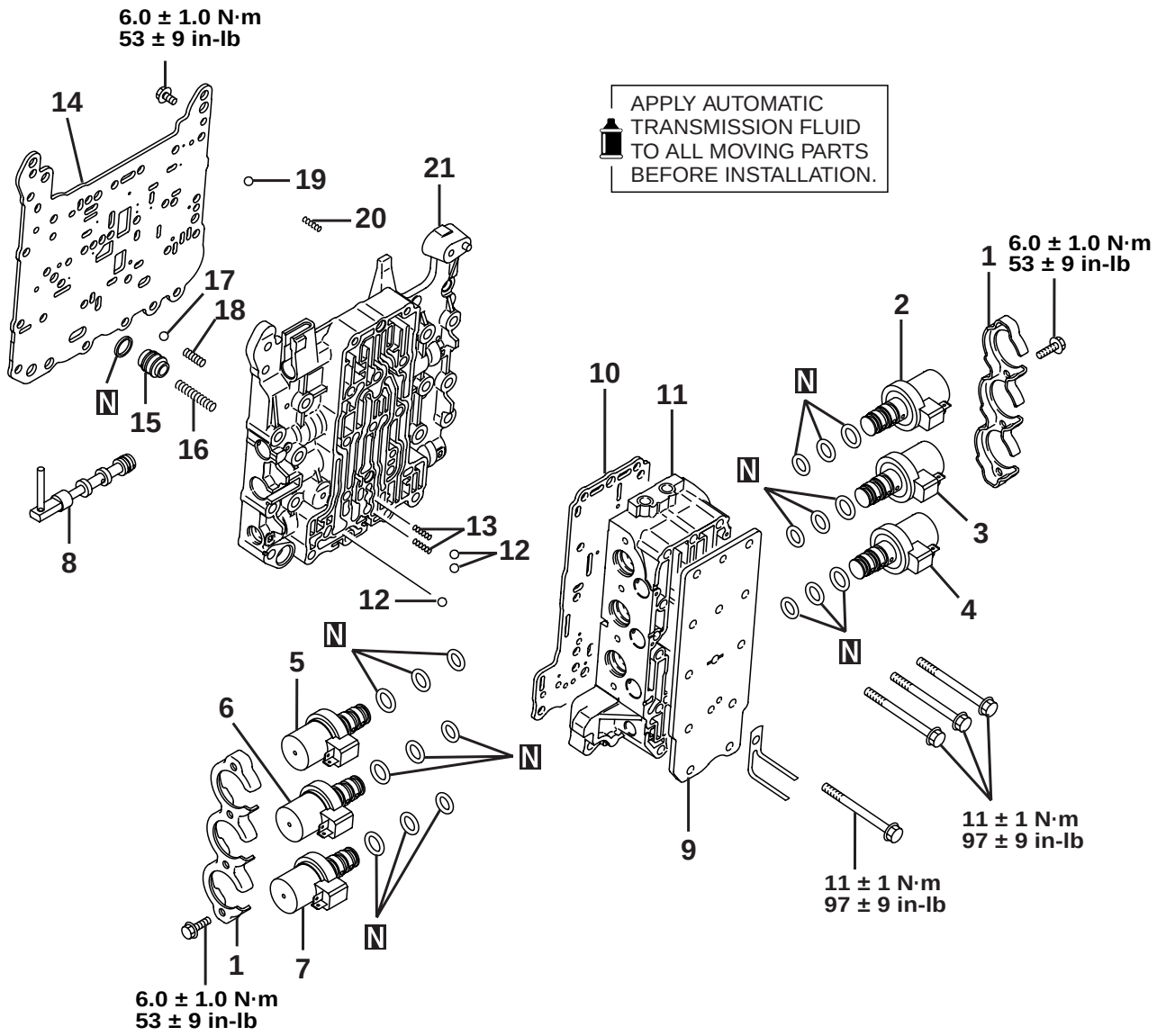

		DISASSEMBLY STEPS
	1.	SOLENOID VALVE SUPPORT
<<A>> >>C<<	2.	UNDERDRIVE SOLENOID VALVE
<<A>> >>C<<	3.	SECOND SOLENOID VALVE
<<A>> >>C<<	4.	TORQUE CONVERTER CLUTCH CONTROL SOLENOID VALVE
<<A>> >>C<<	5.	OVERDRIVE SOLENOID VALVE
<<A>> >>C<<	6.	LOW-REVERSE SOLENOID VALVE
<<A>> >>C<<	7.	REDUCTION SOLENOID VALVE
	8.	MANUAL VALVE
	9.	COVER
	10.	PLATE
	11.	OUTSIDE VALVE BODY ASSEMBLY

		DISASSEMBLY STEPS
>>B<<	12.	STEEL BALL (ORIFICE CHECK BALL)
>>B<<	13.	SPRING
	14.	PLATE
>>A<<	15.	DAMPING VALVE
>>A<<	16.	DAMPING VALVE SPRING
>>A<<	17.	STEEL BALL (LINE RELIEF)
>>A<<	18.	SPRING
>>A<<	19.	STEEL BALL (ORIFICE CHECK BALL)
>>A<<	20.	SPRING
	21.	INSIDE VALVE BODY ASSEMBLY

TSB Revision

cardiagn.com

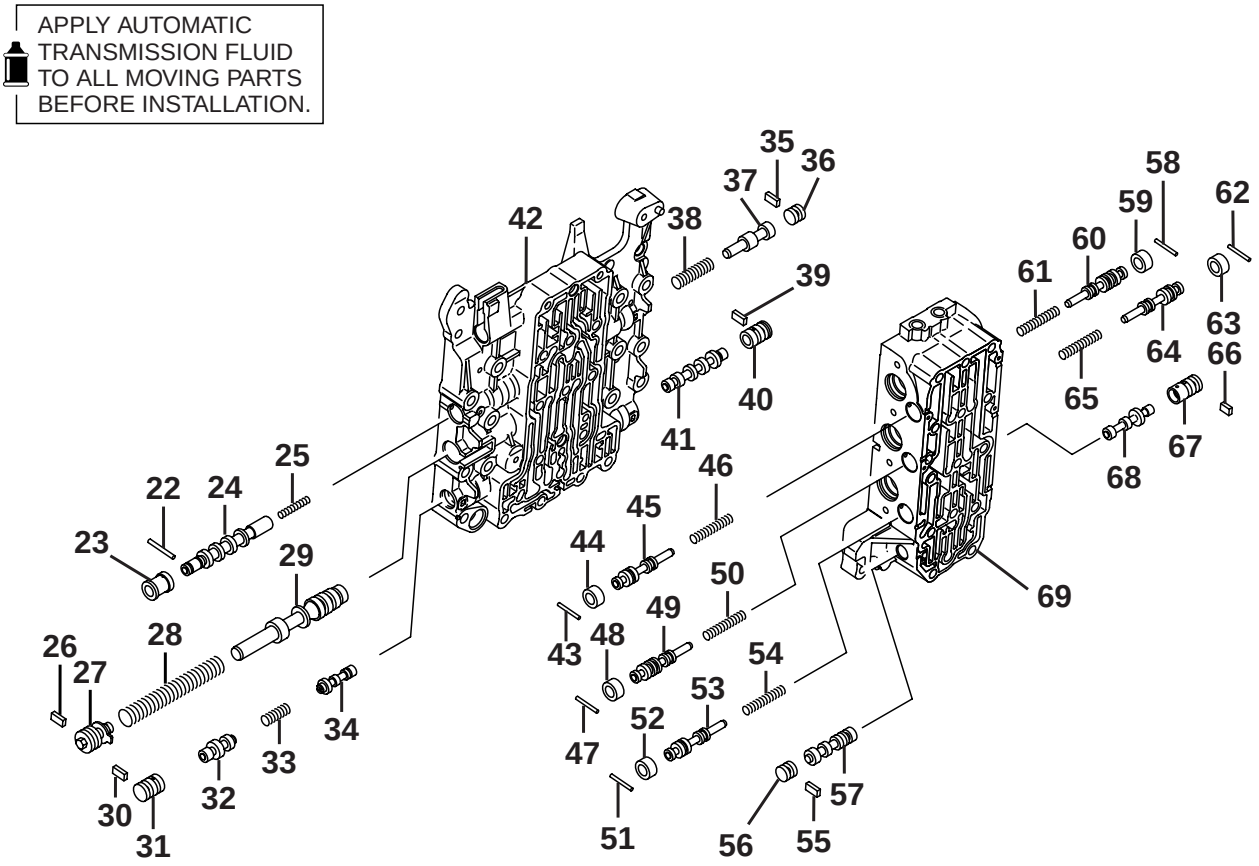

AK403293AB

DISASSEMBLY STEPS

22. ROLLER
23. TORQUE CONVERTER CLUTCH CONTROL VALVE SLEEVE
24. TORQUE CONVERTER CLUTCH CONTROL VALVE
25. TORQUE CONVERTER CLUTCH CONTROL VALVE SPRING
26. PLATE
27. SCREW
28. REGULATOR VALVE SPRING
29. REGULATOR VALVE
30. PLATE
31. FAIL-SAFE VALVE A SLEEVE
32. FAIL-SAFE VALVE A2
33. FAIL-SAFE VALVE A SPRING
34. FAIL-SAFE VALVE A1
35. PLATE
36. PLUG
37. TORQUE CONVERTER VALVE
38. TORQUE CONVERTER VALVE SPRING
39. PLATE

DISASSEMBLY STEPS

40. FAIL-SAFE VALVE B SLEEVE
41. FAIL-SAFE VALVE B
42. INSIDE VALVE BODY
43. ROLLER
44. OVERDRIVE PRESSURE CONTROL VALVE SLEEVE
45. OVERDRIVE PRESSURE CONTROL VALVE
46. OVERDRIVE PRESSURE CONTROL VALVE SPRING
47. ROLLER
48. LOW-REVERSE PRESSURE CONTROL VALVE SLEEVE
49. LOW-REVERSE PRESSURE CONTROL VALVE
50. LOW-REVERSE PRESSURE CONTROL VALVE SPRING
51. ROLLER
52. REDUCTION PRESSURE CONTROL VALVE SLEEVE
53. REDUCTION PRESSURE CONTROL VALVE

TSB Revision

cardiagn.com

DISASSEMBLY STEPS

54. REDUCTION PRESSURE CONTROL VALVE SPRING
55. PLATE
56. PLUG
57. SWITCHING VALVE
58. ROLLER
59. UNDERDRIVE PRESSURE CONTROL VALVE SLEEVE
60. UNDERDRIVE PRESSURE CONTROL VALVE
61. UNDERDRIVE PRESSURE CONTROL VALVE SPRING
62. ROLLER
63. SECOND PRESSURE CONTROL VALVE SLEEVE
64. SECOND PRESSURE CONTROL VALVE
65. SECOND PRESSURE CONTROL VALVE SPRING
66. PLATE
67. FAIL-SAFE VALVE C SLEEVE
68. FAIL-SAFE VALVE C
69. FAIL-SAFE VALVE BODY

DISASSEMBLY SERVICE POINT

<<A>> SOLENOID VALVES REMOVAL

Mark the solenoid valves with white paint to make assembly easier.

ASSEMBLY SERVICE POINTS

>>A<< SPRING, STEEL BALL, DAMPING VALVE AND DAMPING VALVE SPRING INSTALLATION

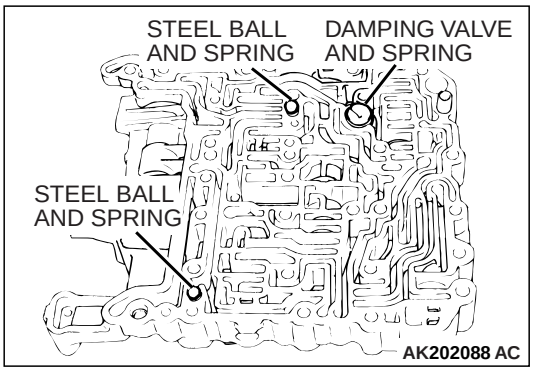

1. Install the steel balls (two pieces) and springs (two pieces) to the inside valve body as shown.
2. Install the damping valve and spring to the inside valve body as shown.

cardiagn.com

>>B<< SPRING AND STEEL BALL INSTALLATION

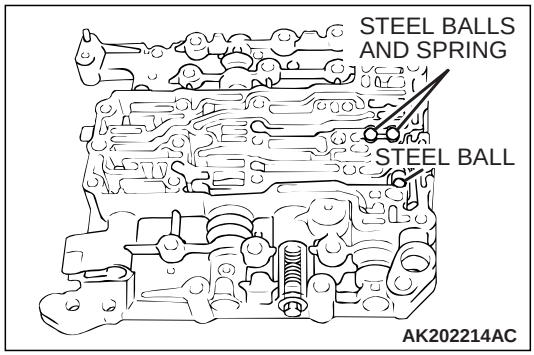

Install the steel balls (three pieces) and springs (two pieces) to the inside valve body as shown.

>>C<< SOLENOID VALVES INSTALLATION

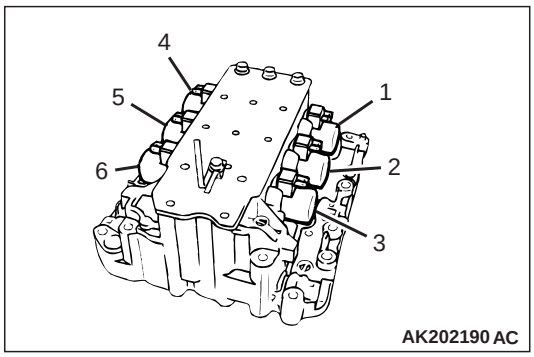

1. Apply ATF or petroleum jelly (Vaseline) to the O-ring and install carefully.
2. Install the solenoid valves by referring to the marks applied during disassembly.

NO.	NAME
1	Underdrive solenoid valve
2	Second solenoid valve
3	Torque converter clutch control solenoid valve
4	Overdrive solenoid valve
5	Low-reverse solenoid valve
6	Reduction solenoid valve

cardiagn.com

REDUCTION BRAKE PISTON

DISASSEMBLY AND ASSEMBLY

M1233026600055

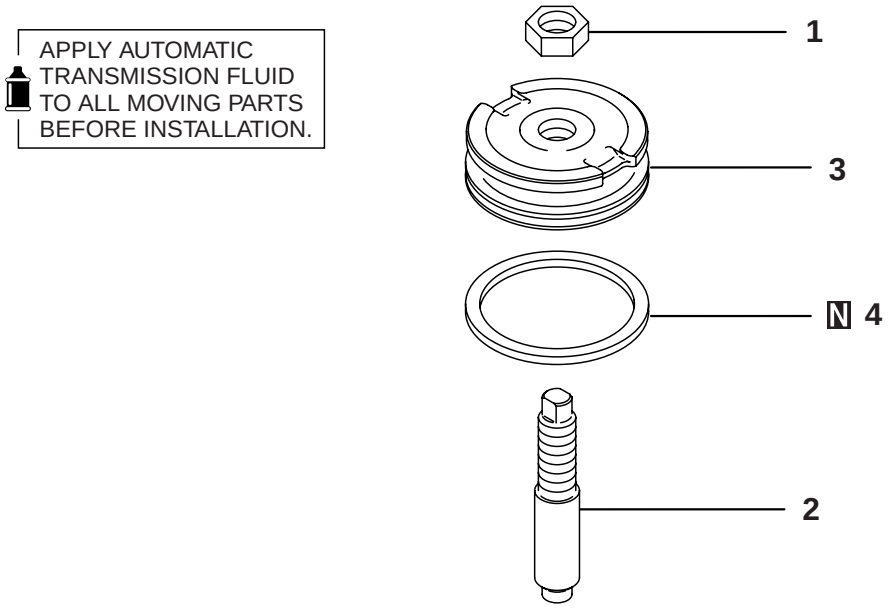

AK403296AB

DISASSEMBLY STEPS

1. NUT
2. ADJUSTING ROD

DISASSEMBLY STEPS

3. REDUCTION BRAKE PISTON
4. SEAL RING

cardiagn.com

DRIVE SHAFT OIL SEAL

DISASSEMBLY AND ASSEMBLY

M1233004300250

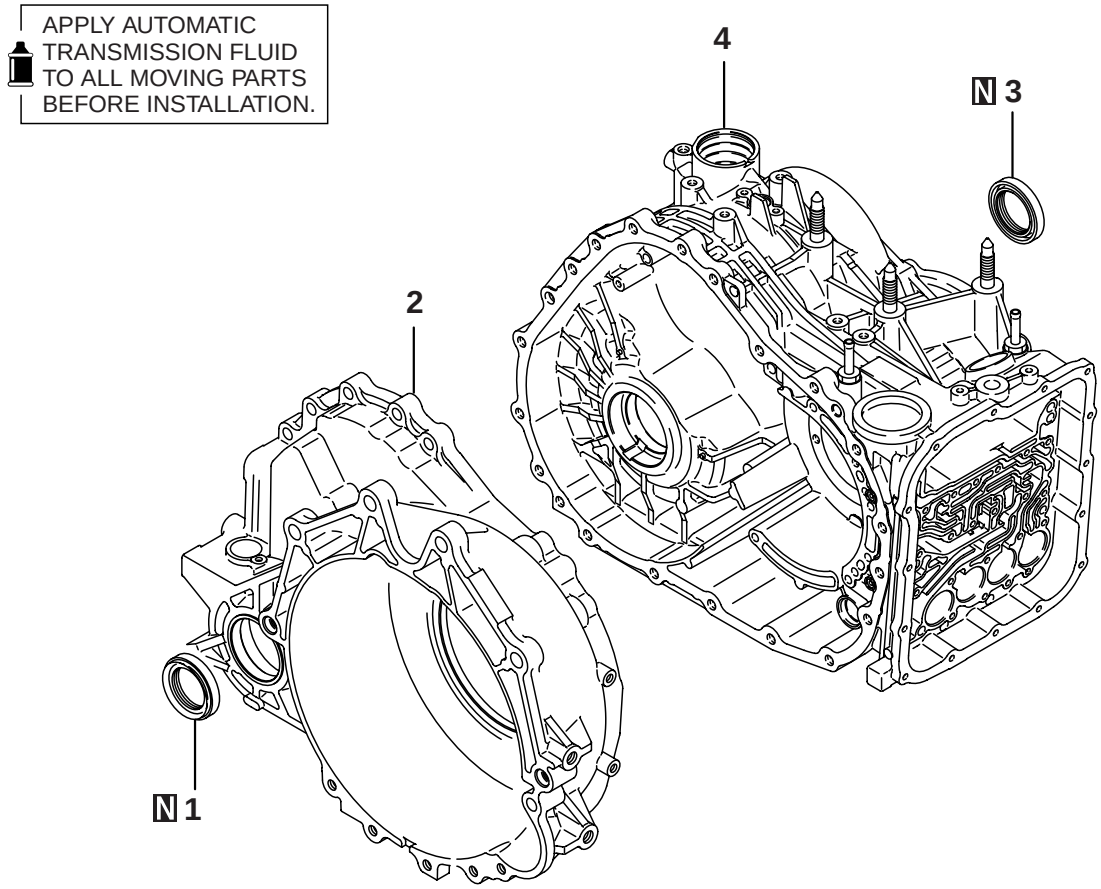

AK403292AB

DISASSEMBLY STEPS

>>**A**<< 1. OIL SEAL
2. TORQUE CONVERTER HOUSING

DISASSEMBLY STEPS

>>**B**<< 3. OIL SEAL
4. TRANSAXLE CASE

Required Special Tool:

- MD998800: Oil Seal Installer

cardiagn.com

ASSEMBLY SERVICE POINTS

>>A<< OIL SEAL INSTALLATION

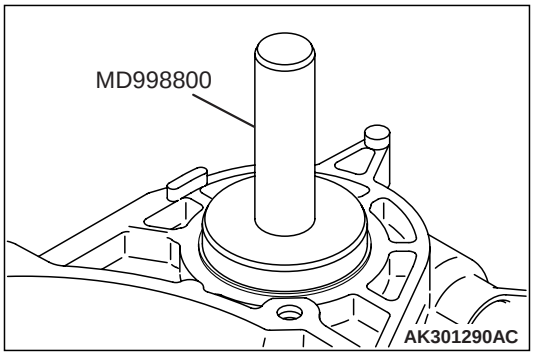

Use special tool MD998800 to tap the oil seal into the torque converter housing.

>>B<< OIL SEAL INSTALLATION

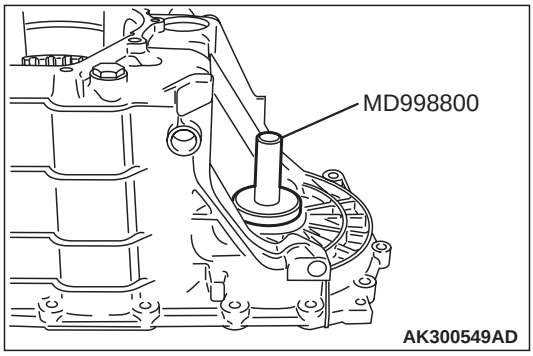

Use special tool MD998800 to tap the oil seal in the transaxle case.

cardiagn.com

SPECIFICATIONS

FASTENER TIGHTENING SPECIFICATIONS

M1233023100578

ITEM		SPECIFICATIONS
Transaxle	Roll stopper bracket	70 ±10 N· m (52 ±7 ft-lb)
	Control cable support bracket	23 ±3 N· m (17 ±2 ft-lb)
	Eye bolt	24 ±3 N· m (18 ±2 ft-lb)
	Oil cooler feed tube	11 ±1 N· m (97 ±9 in-lb)
	Input shaft speed sensor	11 ±1 N· m (97 ±9 in-lb)
	Output shaft speed sensor	11 ±1 N· m (97 ±9 in-lb)
	Manual control lever	22 ±3 N· m (16 ±2 ft-lb)
	Park/neutral position switch (PNP switch)	11 ±1 N· m (97 ±9 in-lb)
	Sealing cap	5.0 ±1.0 N· m (44 ±9 in-lb)
	Valve body cover	11 ±1 N· m (97 ±9 in-lb)
	Manual control shaft detente	6.0 ±1.0 N· m (53 ±9 in-lb)
	Valve body mounting bolt	11 ±1 N· m (97 ±9 in-lb)
	Fluid temperature sensor	11 ±1 N· m (97 ±9 in-lb)
	Torque converter housing	48 ±6 N· m (35 ±4 ft-lb)
	Oil pump	29 ±2 N· m (21 ±1 ft-lb)
	Rear cover	23 ±3 N· m (17 ±2 ft-lb)
	Transfer drive gear	34 ±2 N· m (25 ±1 ft-lb)
	Anchor plug	98 ±15 N· m (72 ±11 ft-lb)
Components	Direct planetary carrier lock nut	170 ±10 N· m (125 ±7 ft-lb)
	Differential drive gear	135 ±5 N· m (100 ±3 ft-lb)
	Solenoid valve support	6.0 ±1.0 N· m (53 ±9 in-lb)
	Valve body	11 ±1 N· m (97 ±9 in-lb)
	Plate	6.0 ±1.0 N· m (53 ±9 in-lb)

GENERAL SPECIFICATIONS

M1233000200596

ITEM		SPECIFICATIONS
Transaxle model		F5A5A
Type		Electronically controlled 5-speed full-automatic
Torque converter	Type	3-element with torque converter clutch
	Stall torque ratio	1.7
Gear ratio	1st	3.789
	2nd	2.162
	3rd	1.421
	4th	1.000
	5th	0.686
	Reverse	3.117
Final gear ratio		3.325

TSB Revision

cardiagn.com

SERVICE SPECIFICATIONS

M1233000300441

ITEM	STANDARD VALUE
Brake reaction plate end play mm (in)	0 – 0.16 (0 – 0.0063)
Second brake end play mm (in)	1.09 – 1.55 (0.0429 – 0.0610)
Low-reverse brake end play mm (in)	1.65 – 2.11 (0.0649 – 0.0831)
Underdrive sun gear end play mm (in)	0.25 – 0.45 (0.0098 – 0.0177)
Input shaft end play mm (in)	0.70 – 1.45 (0.028 – 0.057)
Differential case preload mm (in)	0.045 – 0.105 (0.0018 – 0.0041)
Underdrive clutch end play mm (in)	1.60 – 1.80 (0.0630 – 0.0709)
Reverse and overdrive clutch return spring retainer end play mm (in)	0 – 0.09 (0 – 0.0035)
Reverse clutch end play mm (in)	1.6 – 1.8 (0.0630 – 0.0709)
Overdrive clutch end play mm (in)	1.5 – 1.7 (0.0590 – 0.0669)
Direct clutch end play (in)	0.6 – 0.8 (0.02362 – 0.03149)
Backlash between differential side gear and pinion mm (in)	0.025 – 0.150 (0.0010 – 0.0059)

VALVE BODY SPRING IDENTIFICATION TABLE

M1233022900195

SPRING	WIRE DIAMETER mm (in)	OUTSIDE DIAMETER mm (in)	FREE LENGTH mm (in)	NUMBER OF LOOPS
Regulator valve spring	1.8 (0.071)	15.7 (0.618)	86.7 (3.413)	24
Underdrive pressure control valve spring	0.7 (0.028)	7.6 (0.299)	37.7 (1.484)	25
Overdrive pressure control valve spring	0.7 (0.028)	7.6 (0.299)	37.7 (1.484)	25
Low-reverse pressure control valve spring	0.7 (0.028)	7.6 (0.299)	37.7 (1.484)	25
Second pressure control valve spring	0.7 (0.028)	7.6 (0.299)	37.7 (1.484)	25
Torque converter spring	1.6 (0.063)	11.2 (0.441)	34.4 (1.354)	12.5
Torque converter clutch control valve spring	0.7 (0.028)	5.9 (0.232)	28.1 (1.106)	19
Fail-safe valve spring	0.7 (0.028)	8.9 (0.350)	21.9 (0.862)	9.5
Damping valve spring	1.0 (0.039)	7.7 (0.303)	35.8 (1.409)	17
Line relief valve spring	1.0 (0.039)	7.0 (0.276)	17.3 (0.681)	10
Orifice check ball spring	0.5 (0.020)	4.5 (0.177)	17.2 (0.677)	15

cardiagn.com

ADJUSTING PLATE, SNAP RING AND SPACERS

M1233023000430

Thrust washer (For adjustment of input shaft end play)

THICKNESS mm (in)	IDENTIFICATION SYMBOL	THICKNESS mm (in)	IDENTIFICATION SYMBOL
1.8 (0.071)	18	2.4 (0.094)	24
2.0 (0.079)	20	2.6 (0.102)	26
2.2 (0.087)	22	2.8 (0.110)	28

Snap ring (For adjustment of underdrive clutch and overdrive clutch end play)

THICKNESS mm (in)	IDENTIFICATION SYMBOL	THICKNESS mm (in)	IDENTIFICATION SYMBOL
1.6 (0.063)	Brown	2.4 (0.094)	Blue
1.7 (0.067)	None	2.5 (0.098)	Brown
1.8 (0.071)	Blue	2.6 (0.102)	None
1.9 (0.075)	Brown	2.7 (0.106)	Blue
2.0 (0.079)	None	2.8 (0.110)	Brown
2.1 (0.083)	Blue	2.9 (0.114)	None
2.2 (0.087)	Brown	3.0 (0.118)	Blue
2.3 (0.091)	None		

Snap ring (For adjustment of low-reverse brake and second brake reaction plates end play)

THICKNESS mm (in)	IDENTIFICATION SYMBOL	THICKNESS mm (in)	IDENTIFICATION SYMBOL
2.2 (0.087)	None	2.4 (0.094)	Brown
2.3 (0.091)	Blue	2.5 (0.098)	None

Pressure plate (For adjustment of low-reverse brake and second brake end play)

THICKNESS mm (in)	IDENTIFICATION SYMBOL	THICKNESS mm (in)	IDENTIFICATION SYMBOL
1.6 (0.063)	F	2.4 (0.094)	B
1.8 (0.071)	E	2.6 (0.102)	A
2.0 (0.079)	D	2.8 (0.110)	0
2.2 (0.087)	C	3.0 (0.118)	1

Snap ring (For adjustment of reverse clutch end play)

THICKNESS mm (in)	IDENTIFICATION SYMBOL	THICKNESS mm (in)	IDENTIFICATION SYMBOL
1.6 (0.063)	None	2.3 (0.091)	Blue
1.7 (0.067)	Blue	2.4 (0.094)	Brown
1.8 (0.071)	Brown	2.5 (0.098)	None
1.9 (0.075)	None	2.6 (0.102)	Blue
2.0 (0.079)	Blue	2.7 (0.106)	Brown
2.1 (0.083)	Brown	2.8 (0.110)	None
2.2 (0.087)	None		

Snap ring (For adjustment of reverse clutch and overdrive clutch spring retainer end plays)

THICKNESS mm (in)	IDENTIFICATION SYMBOL	THICKNESS mm (in)	IDENTIFICATION SYMBOL
1.48 (0.0583)	Brown	1.58 (0.0622)	Blue
1.53 (0.0602)	None	1.63 (0.0642)	Brown

cardiagn.com

Thrust race (For adjustment of underdrive sun gear end play)

THICKNESS mm (in)	IDENTIFICATION SYMBOL	THICKNESS mm (in)	IDENTIFICATION SYMBOL
1.6 (0.063)	–	2.2 (0.087)	–
1.7 (0.067)	–	2.3 (0.091)	–
1.8 (0.071)	–	2.4 (0.094)	–
1.9 (0.075)	–	2.5 (0.098)	–
2.0 (0.079)	–	2.6 (0.102)	–
2.1 (0.083)	–		

Spacer (For adjustment of direct clutch end play)

THICKNESS mm (in)	IDENTIFICATION SYMBOL	THICKNESS mm (in)	IDENTIFICATION SYMBOL
1.9 (0.075)	Brown	2.5 (0.098)	Brown
2.0 (0.079)	None	2.6 (0.102)	None
2.1 (0.083)	Blue	2.7 (0.106)	Blue
2.2 (0.087)	Brown	2.8 (0.110)	Brown
2.3 (0.091)	None	2.9 (0.114)	None
2.4 (0.094)	Blue	3.0 (0.118)	Blue

Spacer (For adjustment of differential case preload)

THICKNESS mm (in)	IDENTIFICATION SYMBOL	THICKNESS mm (in)	IDENTIFICATION SYMBOL
0.65 (0.0256)	65	1.01 (0.0398)	01
0.68 (0.0268)	68	1.04 (0.0409)	04
0.71 (0.0280)	71	1.07 (0.0421)	07
0.74 (0.0291)	74	1.10 (0.0433)	10
0.77 (0.0303)	77	1.13 (0.0445)	13
0.80 (0.0315)	80	1.16 (0.0457)	16
0.83 (0.0327)	83	1.19 (0.0469)	19
0.86 (0.0339)	86	1.22 (0.0480)	22
0.89 (0.0350)	89	1.25 (0.0492)	25
0.92 (0.0362)	92	1.28 (0.0504)	28
0.95 (0.0374)	95	1.31 (0.0516)	31
0.98 (0.0386)	98	1.34 (0.0528)	34

Spacer (For adjustment of backlash between differential side gear and pinion)

THICKNESS mm (in)	IDENTIFICATION SYMBOL	THICKNESS mm (in)	IDENTIFICATION SYMBOL
0.56 – 0.64 (0.0220 – 0.0252)	–	0.86 – 0.94 (0.0339 – 0.0370)	–
0.66 – 0.74 (0.0260 – 0.0291)	–	0.96 – 1.04 (0.0378 – 0.0409)	–
0.76 – 0.84 (0.0299 – 0.0331)	–	0.97 – 1.15 (0.0382 – 0.0453)	–

cardiagn.com

SEALANTS

M1233000500241

ITEMS	SPECIFIED SEALANT
Rear cover	MITSUBISHI genuine sealant Part No. MD974421 or equivalent
Torque converter housing	MITSUBISHI genuine sealant Part No. MD974421 or equivalent
Valve body cover	MITSUBISHI genuine sealant Part No. MD974421 or equivalent

cardiagn.com