ENGINE ELECTRICAL

CONTENTS

16109000233

CHARGING SYSTEM 3

GENERAL INFORMATION 3

SERVICE SPECIFICATIONS 5

SPECIAL TOOLS 5

ON-VEHICLE SERVICE 6

Alternator Output Line Voltage Drop Test 6

Output Current Test 8

Regulated Voltage Test 10

Waveform Check Using An Analyzer 12

Alternator Relay Continuity Check 13

ALTERNATOR 14

STARTING SYSTEM 23

GENERAL INFORMATION 23

SERVICE SPECIFICATIONS 24

STARTER MOTOR 24

IGNITION SYSTEM 34

GENERAL INFORMATION 34

SERVICE SPECIFICATIONS 36

SPECIAL TOOLS 37

ON-VEHICLE SERVICE 37

Ignition Coil Check <MPI> 37

Power Transistor Continuity Check <MPI> . . 38

Ignition Coil (with built-in power transistor) Check <GDI> 38

Resistive Cord Check <MPI> 39

Spark Plug Check and Cleaning 39

Crank Angle Sensor Check <MPI> 40

Crank Angle Sensor, Camshaft Position Sensor Check <GDI> 40

Detonation Sensor Check 40

Waveform Check Using An Analyzer <MPI> 41

CONTINUED ON NEXT PAGE

IGNITION COIL <GDI> 48

CAMSHAFT POSITION SENSOR <GDI> 48

CRANK ANGLE SENSOR <GDI> 49

DISTRIBUTOR <MPI> 50

DETONATION SENSOR 52

CHARGING SYSTEM

16100010341

GENERAL INFORMATION

The charging system uses the alternator output to keep the battery charged at a constant level under various electrical loads.

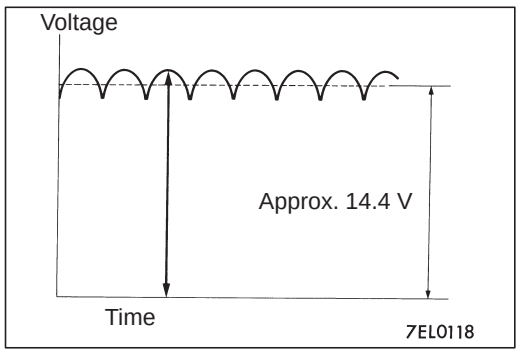

OPERATION

Rotation of the excited field coil generates AC voltage in the stator.
This alternating current is rectified through diodes to DC voltage having a waveform shown in the illustration at left. The average output voltage fluctuates slightly with the alternator load condition.

When the ignition switch is turned on, current flows in the field coil and initial excitation of the field coil occurs.
When the stator coil begins to generate power after the engine is started, the field coil is excited by the output current of the stator coil.
The alternator output voltage rises as the field current increases and it falls as the field current decreases. When the battery voltage (alternator S terminal voltage) reaches a regulated voltage of approx. 14.4 V, the field current is cut off. When the battery voltage drops below the regulated voltage, the voltage regulator regulates the output voltage to a constant level by controlling the field current.
In addition, when the field current is constant, the alternator output voltage rises as the engine speed increases.

SYSTEM DIAGRAM

<GDI>

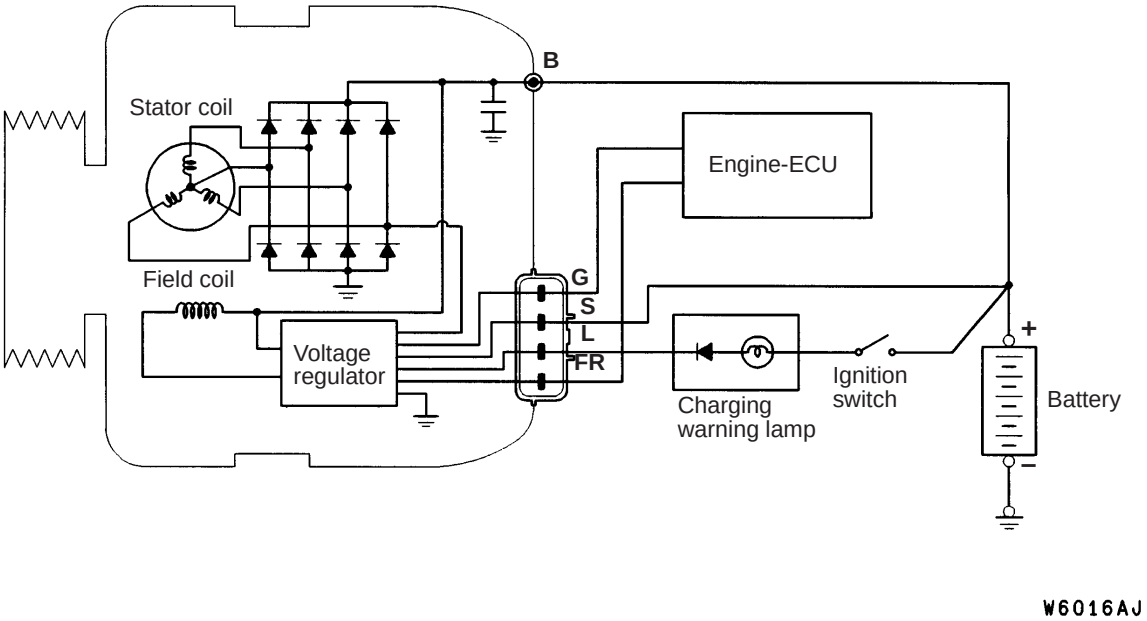

<MPI>

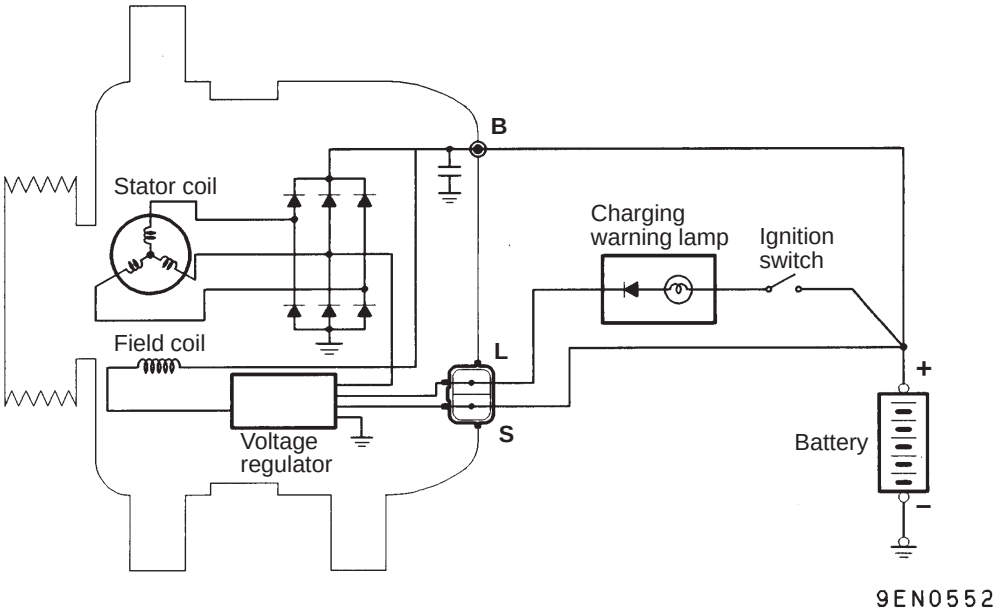

ALTERNATOR SPECIFICATIONS

Items	GDI	MPI
Type	Reduction drive with planetary gear	Battery voltage sensing
Rated output V/A	12/85, 12/100*	12/90
Voltage regulator	Electronic built-in type	Electronic built-in type

NOTE
*: Vehicles for cold climate zone

SERVICE SPECIFICATIONS

16100030231

Items		Standard value	Limit
Alternator output line voltage drop (at 30 A) V		–	Max. 0.3
Regulated voltage ambient temperature at voltage regulator V	–20°C	14.2 – 15.4	–
	20°C	13.9 – 14.9	–
	60°C	13.4 – 14.6	–
	80°C	13.1 – 14.5	–
Output current		–	70% of normal output current
Rotor coil resistance Ω	GDI	Approx. 2 – 5	–
	MPI	Approx. 2.6	–

SPECIAL TOOLS

16100060117

Tool	Number	Name	Use
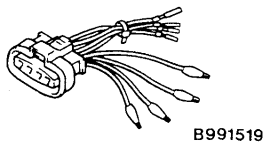	MB991519	Alternator test harness	Checking the alternator (S terminal voltage) <GDI>
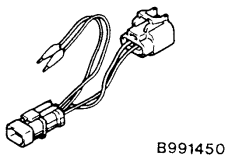	MB991450	Alternator test harness	Checking the alternator (S terminal voltage) <MPI>

ON-VEHICLE SERVICE

16100090314

ALTERNATOR OUTPUT LINE VOLTAGE DROP TEST

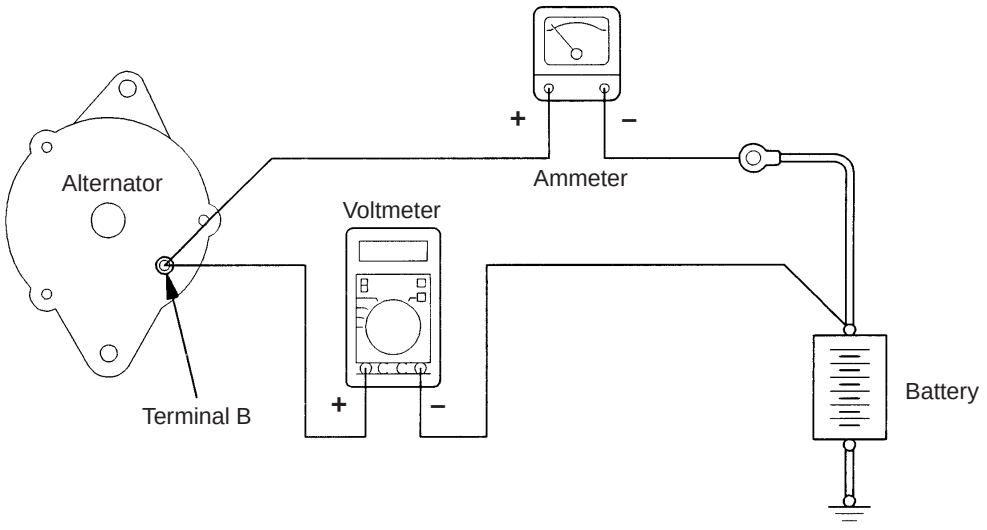

9EN0468

This test determines whether the wiring from the alternator “B” terminal to the battery (+) terminal (including the fusible line) is in a good condition or not.

1. Always be sure to check the following before the test.
   - Alternator installation
   - Alternator drive belt tension
   - Fusible link
   - Abnormal noise from the alternator while the engine is running
2. Turn the ignition switch off.
3. Disconnect the negative battery cable.
4. Disconnect the alternator output wire from the alternator “B” terminal and connect a DC test ammeter with a range of 0–100 A in series between the “B” terminal and the disconnected output wire. (Connect the (+) lead of the ammeter to the “B” terminal, and then connect the (–) lead of the ammeter to the disconnected output wire.)

   NOTE
   An inductive-type ammeter which enables measurements to be taken without disconnecting the alternator output wire should be recommended. Using this equipment will lessen the possibility of a voltage drop caused by a loose “B” terminal connection.
5. Connect a digital-type voltmeter between the alternator “B” terminal and the battery (+) terminal. (Connect the (+) lead of the voltmeter to the “B” terminal and the connect the (–) lead of the voltmeter to the battery (+) cable.)

6. Reconnect the negative battery cable.
7. Connect a tachometer or the MUT-II.
8. Leave the hood open.
9. Start the engine.
10. With the engine running at 2,500 r/min, turn the headlamps and other lamps on and off to adjust the alternator load so that the value displayed on the ammeter is slightly above 30 A.
    Adjust the engine speed by gradually decreasing it until the value displayed on the ammeter is 30 A. Take a reading of the value displayed on the voltmeter at this time.

    Limit: max. 0.3 V

    NOTE
    When the alternator output is high and the value displayed on the ammeter does not decrease until 30 A, set the value to 40 A. Read the value displayed on the voltmeter at this time. When the value range is 40 A, the limit is max. 0.4 V.
11. If the value displayed on the voltmeter is above the limit value, there is probably a malfunction in the alternator output wire, so check the wiring between the alternator “B” terminal and the battery (+) terminal (including fusible link).
    If a terminal is not sufficiently tight or if the harness has become discolored due to overheating, repair and then test again.
12. After the test, run the engine at idle.
13. Turn off all lamps and the ignition switch.
14. Remove the tachometer or the MUT-II.
15. Disconnect the negative battery cable.
16. Disconnect the ammeter and voltmeter.
17. Connect the alternator output wire to the alternator “B” terminal.
18. Connect the negative battery cable.

OUTPUT CURRENT TEST

16100100314

<GDI>

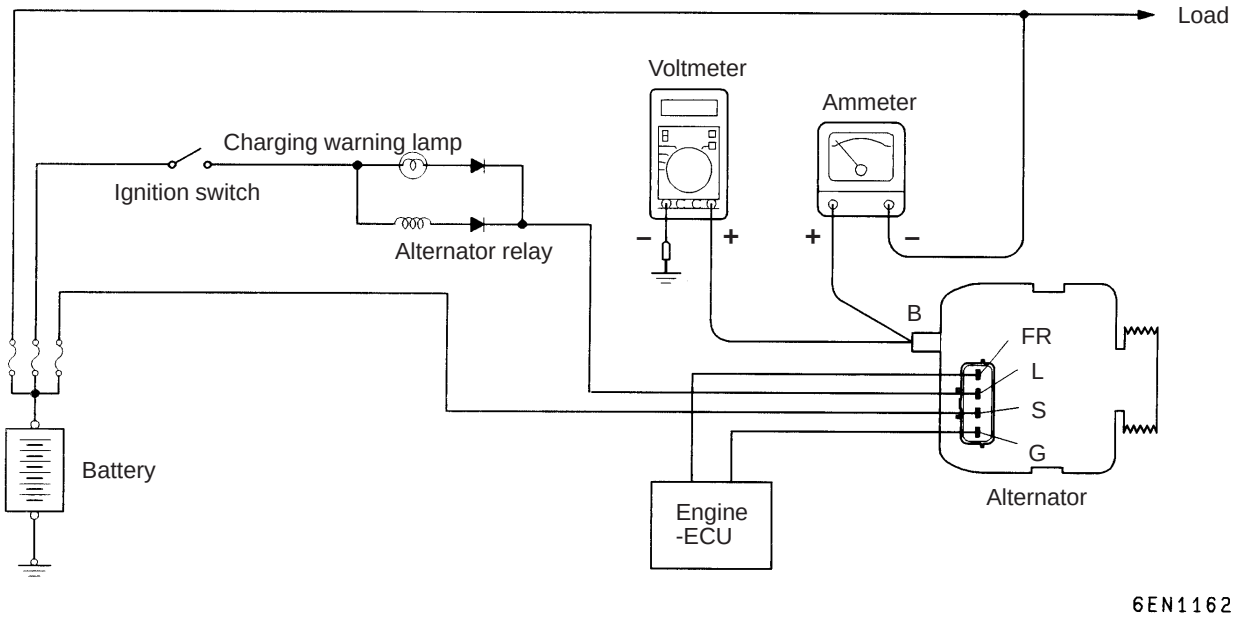

<MPI>

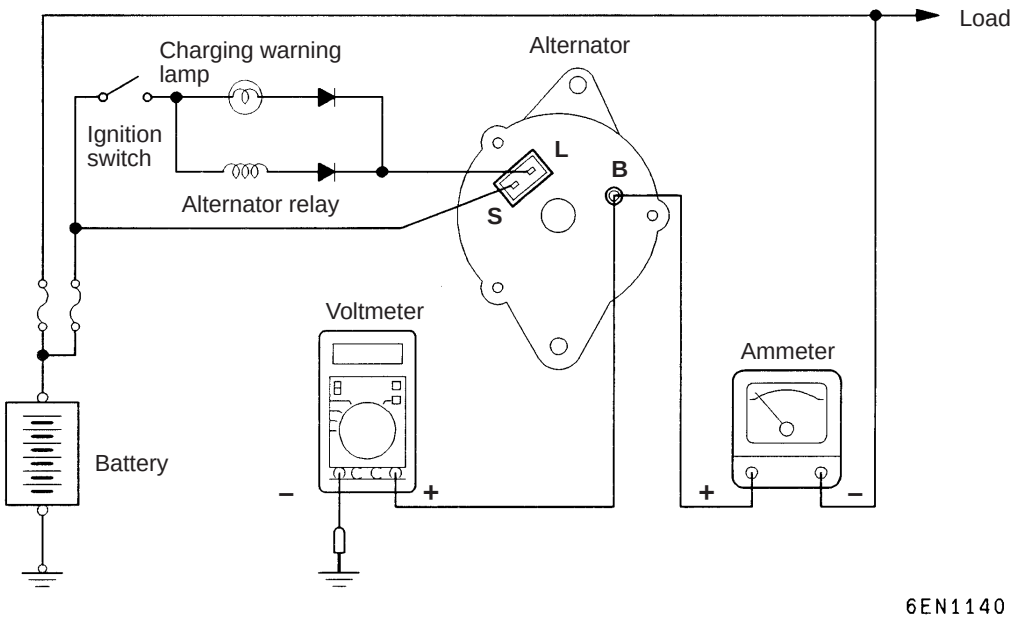

This test determines whether the alternator output current is normal.

1. Before the test, always be sure to check the following.
   - Alternator installation
   - Battery

     NOTE
     The battery should be slightly discharged. The load needed by a fully-charged battery is insufficient for an accurate test.
   - Alternator drive belt tension
   - Fusible link
   - Abnormal noise from the alternator while the engine is running.
2. Turn the ignition switch off.
3. Disconnect the negative battery cable.
4. Disconnect the alternator output wire from the alternator "B" terminal. Connect a DC test ammeter with a range of 0–100 A in series between the "B" terminal and the disconnected output wire. (Connect the (+) lead of the ammeter to the "B" terminal. Connect the (–) lead of the ammeter to the disconnected output wire.)

   Caution
   Never use clips but tighten bolts and nuts to connect the line. Otherwise loose connections (e.g. using clips) will lead to a serious accident because of high current.

   NOTE
   An inductive-type ammeter which enables measurements to be taken without disconnecting the alternator output wire should be recommended.
5. Connect a voltmeter with a range of 0–20 V between the alternator "B" terminal and the earth. (Connect the (+) lead of the voltmeter to the "B" terminal, and then connect the (–) lead of the voltmeter to the earth.)
6. Connect the negative battery cable.
7. Connect a tachometer or the MUT-II.
8. Leave the hood open.
9. Check that the reading on the voltmeter is equal to the battery voltage.

   NOTE
   If the voltage is 0 V, the cause is probably an open circuit in the wire or fusible link between the alternator "B" terminal and the battery (+) terminal.
10. Turn the light switch on to turn on headlamps and then start the engine.
11. Immediately after setting the headlamps to high beam and turning the heater blower switch to the high revolution position, increase the engine speed to 2,500 r/min and read the maximum current output value displayed on the ammeter.

    Limit: 70% of normal current output

    NOTE
    - For the nominal current output, refer to the Alternator Specifications.
    - Because the current from the battery will soon drop after the engine is started, the above step should be carried out as quickly as possible in order to obtain the maximum current output value.
    - The current output value will depend on the electrical load and the temperature of the alternator body.
    - If the electrical load is small while testing, the specified level of current may not be output even though the alternator is normal. In such cases, increase the electrical load by leaving the headlamps turned on for some time to discharge the battery or by using the lighting system in another vehicle, and then test again.
    - The specified level of current also may not be output if the temperature of the alternator body or the ambient temperature is too high. In such cases, cool the alternator and then test again.
12. The reading on the ammeter should be above the limit value. If the reading is below the limit value and the alternator output wire is normal, remove the alternator from the engine and check the alternator.
13. Run the engine at idle after the test.
14. Turn the ignition switch off.
15. Remove the tachometer or the MUT-II.
16. Disconnect the negative battery cable.
17. Disconnect the ammeter and voltmeter.
18. Connect the alternator output wire to the alternator "B" terminal.
19. Connect the negative battery cable.

REGULATED VOLTAGE TEST

16100110317

<GDI>

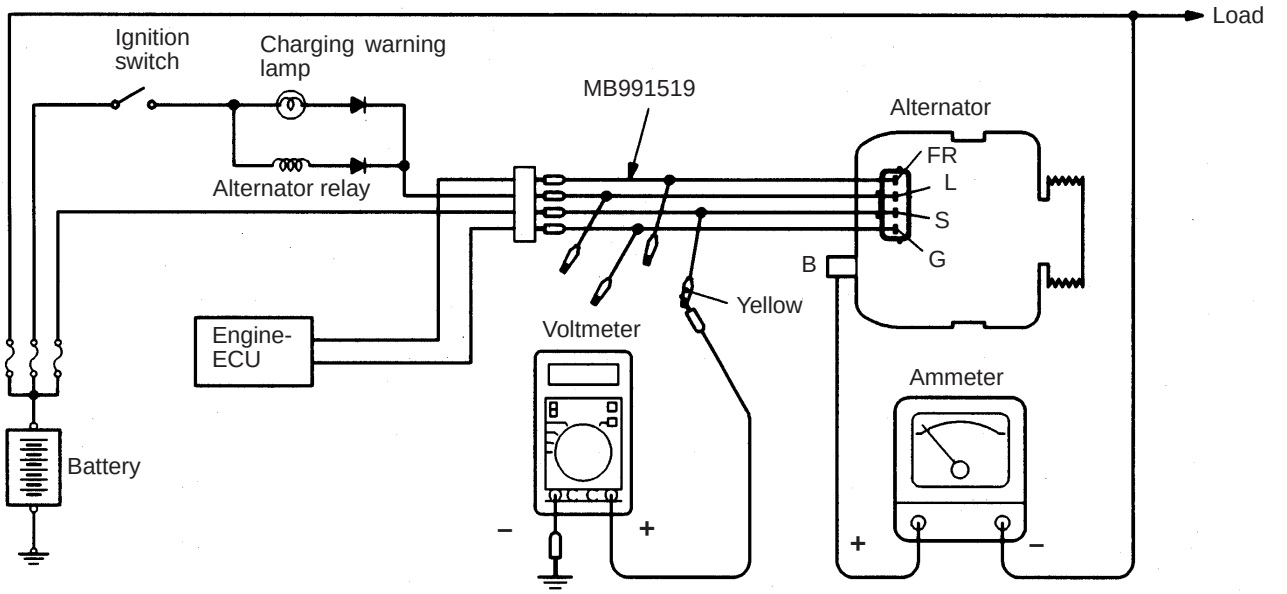

6EN1163

<MPI>

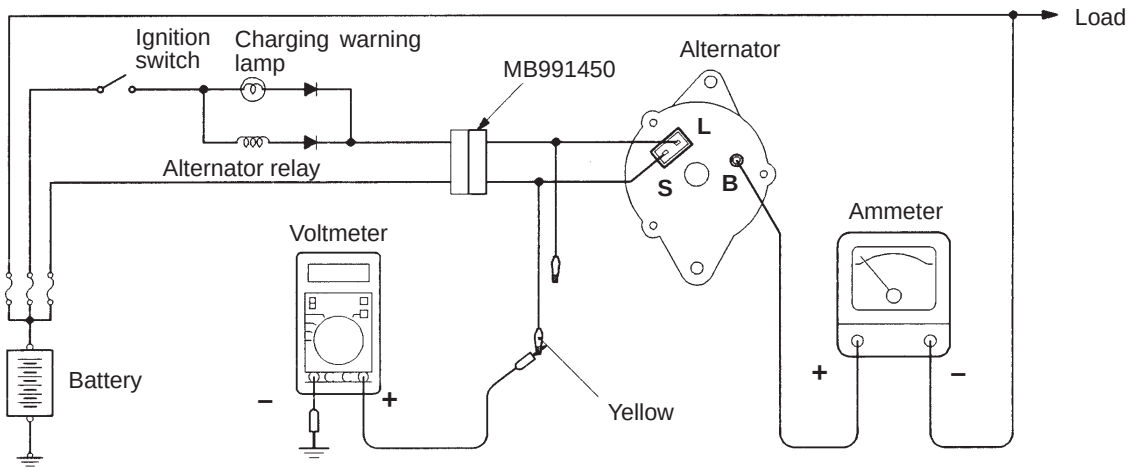

6EN1141

This test determines whether the voltage regulator is correctly controlling the alternator output voltage.

1. Always be sure to check the following before the test.
   - Alternator installation
   - Check that the battery installed in the vehicle is fully charged.
   - Alternator drive belt tension
   - Fusible link
   - Abnormal noise from the alternator while the engine is running
2. Turn the ignition switch to the OFF position.
3. Disconnect the negative battery cable.
4. Use the special tool (Alternator test harness: MB991519, MB991450) to connect a digital voltmeter between the alternator S terminal and earth. (Connect the (+) lead of the voltmeter to the ”S” terminal, and then connect the (–) lead of the voltmeter to a secure earth or to the battery (–) terminal.)
5. Disconnect the alternator output wire from the alternator “B” terminal.
6. Connect a DC test ammeter with a range of 0–100 A in series between the “B” terminal and the disconnected output wire. (Connect the (+) lead of the ammeter to the “B” terminal. Connect the (–) lead of the ammeter to the disconnected output wire.)
7. Reconnect the negative battery cable.
8. Connect a tachometer or the MUT-II.
9. Turn the ignition switch to the ON position and check that the reading on the voltmeter is equal to the battery voltage.

   NOTE
   If the voltage is 0 V, the cause is probably an open circuit in the wire or fusible link between the alternator “S” terminal and the battery (+) terminal.
10. Turn all lamps and accessories off.
11. Start the engine.
12. Increase the engine speed to 2,500 r/min.
13. Read the value displayed on the voltmeter when the alternator output current alternator becomes 10 A or less.
14. If the voltage reading conforms to the value in the voltage regulation, then the voltage regulator is operating normally.
    If the voltage is not within the standard value, there is a malfunction of the voltage regulator or of the alternator.
15. After the test, lower the engine speed to the idle speed.
16. Turn the ignition switch off.
17. Remove the tachometer or the MUT-II.
18. Disconnect the negative battery cable.
19. Disconnect the ammeter and voltmeter.
20. Connect the alternator output wire to the alternator “B” terminal.
21. Remove the special tool, and return the connector to the original condition.
22. Connect the negative battery cable.

Voltage Regulation Table

Standard value:

Inspection terminal	Voltage regulator ambient temperature °C	Voltage V
Terminal “S”	–20	14.2–15.4
	20	13.9–14.9
	60	13.4–14.6
	80	13.1–14.5

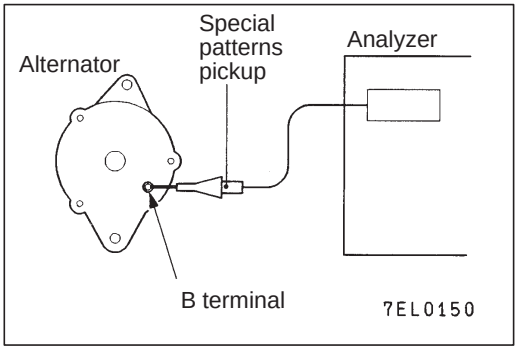

WAVEFORM CHECK USING AN ANALYZER

16100120211

MEASUREMENT METHOD

Connect the analyzer special patterns pick-up to the alternator B terminal.

STANDARD WAVEFORM

Observation Conditions

FUNCTION	SPECIAL PATTERNS
PATTERN HEIGHT	VARIABLE
VARIABLE knob	Adjust while viewing the waveform.
PATTERN SELECTOR	RASTER
Engine speed	Curb idle speed

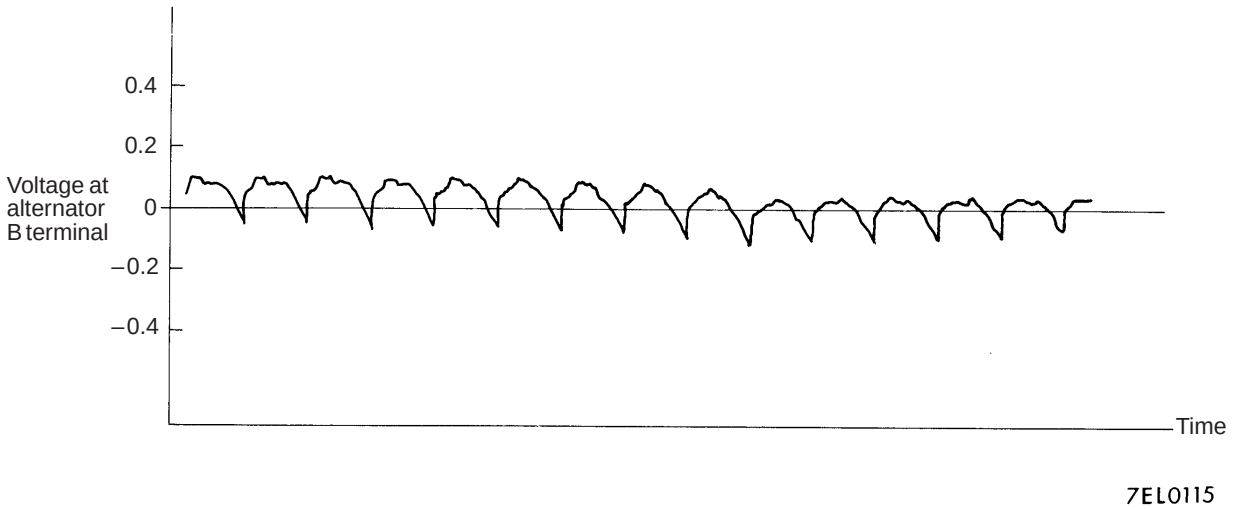

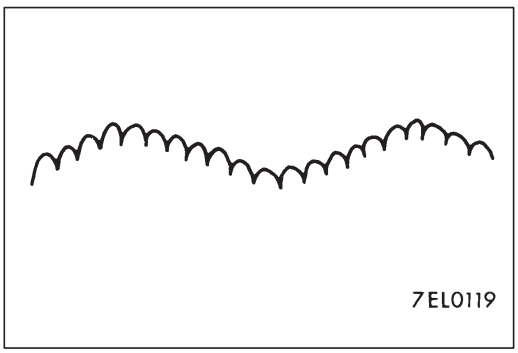

NOTE
The voltage waveform of the alternator B terminal can undulate as shown at left. This waveform is produced when the regulator operates according to fluctuations in the alternator load (current), and is normal for the alternator.
In addition, when the voltage waveform reaches an excessively high value (approx. 2 V or higher at idle), it often indicates an open circuit due to a brown fuse between alternator B terminal and battery, but not a defective alternator.

EXAMPLES OF ABNORMAL WAVEFORMS

NOTE
1. The size of the waveform patterns differs largely, depending on the adjustment of the variable knob on the analyzer.
2. Identification of abnormal waveforms is easier when there is a large output current (regulator is not operating). (Waveforms can be observed when the headlamps are illuminated.)
3. Check the conditions of the charging warning lamp (illuminated/not illuminated). Also, check the charging system totally.

Abnormal waveforms	Problem cause	Abnormal waveforms	Problem cause
Example 1 A7EL0120	• Open diode	Example 4 A7EL0123	• Short in stator coil
Example 2 A7EL0121	• Short in diode	Example 5 A7EL0124 At this time, the charging warning lamp is illuminated.	• Open supple-mentary diode
Example 3 A7EL0122	• Broken wire in stator coil		

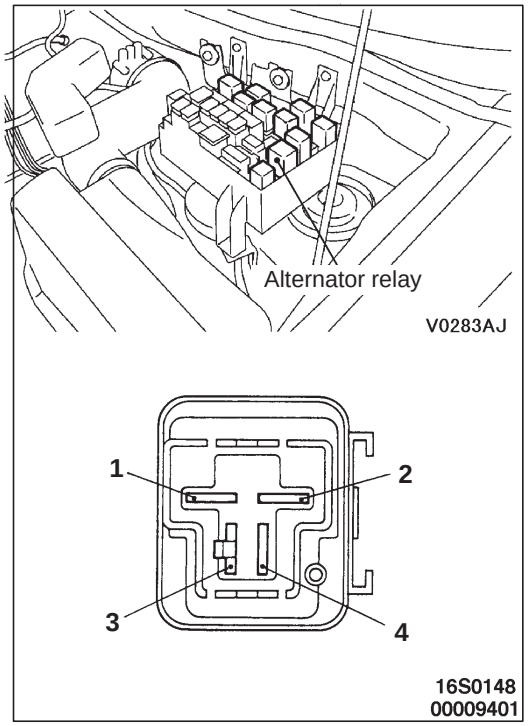

ALTERNATOR RELAY CONTINUITY CHECK

16100190045

1. Remove the alternator relay from the relay box inside the engine compartment.
2. Set the analogue-type circuit tester to the Ω range and check that there is continuity when the (+) terminal of the tester is connected to terminal 2 of the alternator relay and the (–) terminal is connected to terminal 4.
3. Next, check that there is no continuity when the (+) terminal is connected to terminal 4 and the (–) terminal is connected to terminal 2.
4. If the continuity checks in steps 2 and 3 show a defect, replace the alternator relay.

ALTERNATOR

16100140439

REMOVAL AND INSTALLATION

Pre-removal and Post-installation Operation
- Engine Cover Removal and Installation <GDI>
- Under Cover Removal and Installation
- Drive Belt Tension Adjustment <after installation only> (Refer to GROUP 11 – On-vehicle Service.)

<GDI>

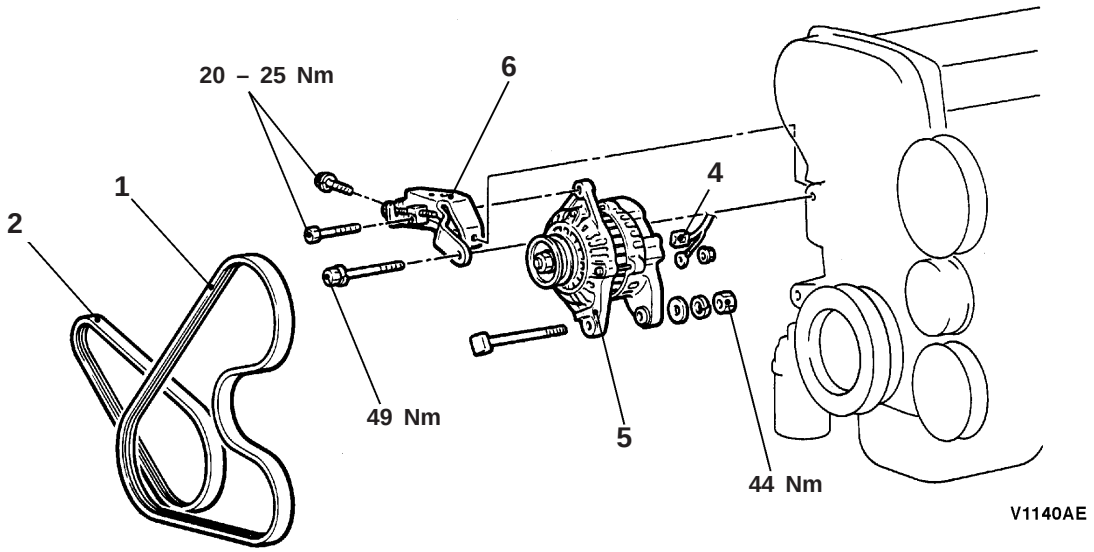

<MPI>

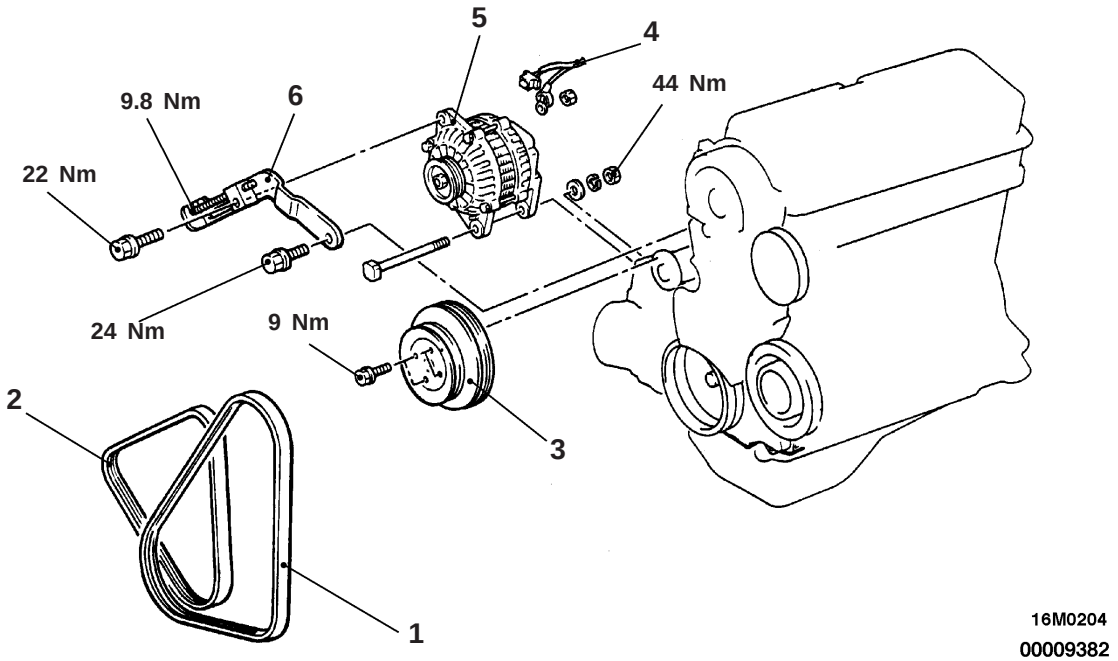

Removal steps

1. Drive belt (Power steering and A/C)
2. Drive belt (Alternator)
3. Water pump pulley <MPI>
4. Alternator connector
5. Alternator
6. Alternator brace

DISASSEMBLY AND REASSEMBLY <GDI>

16100160213

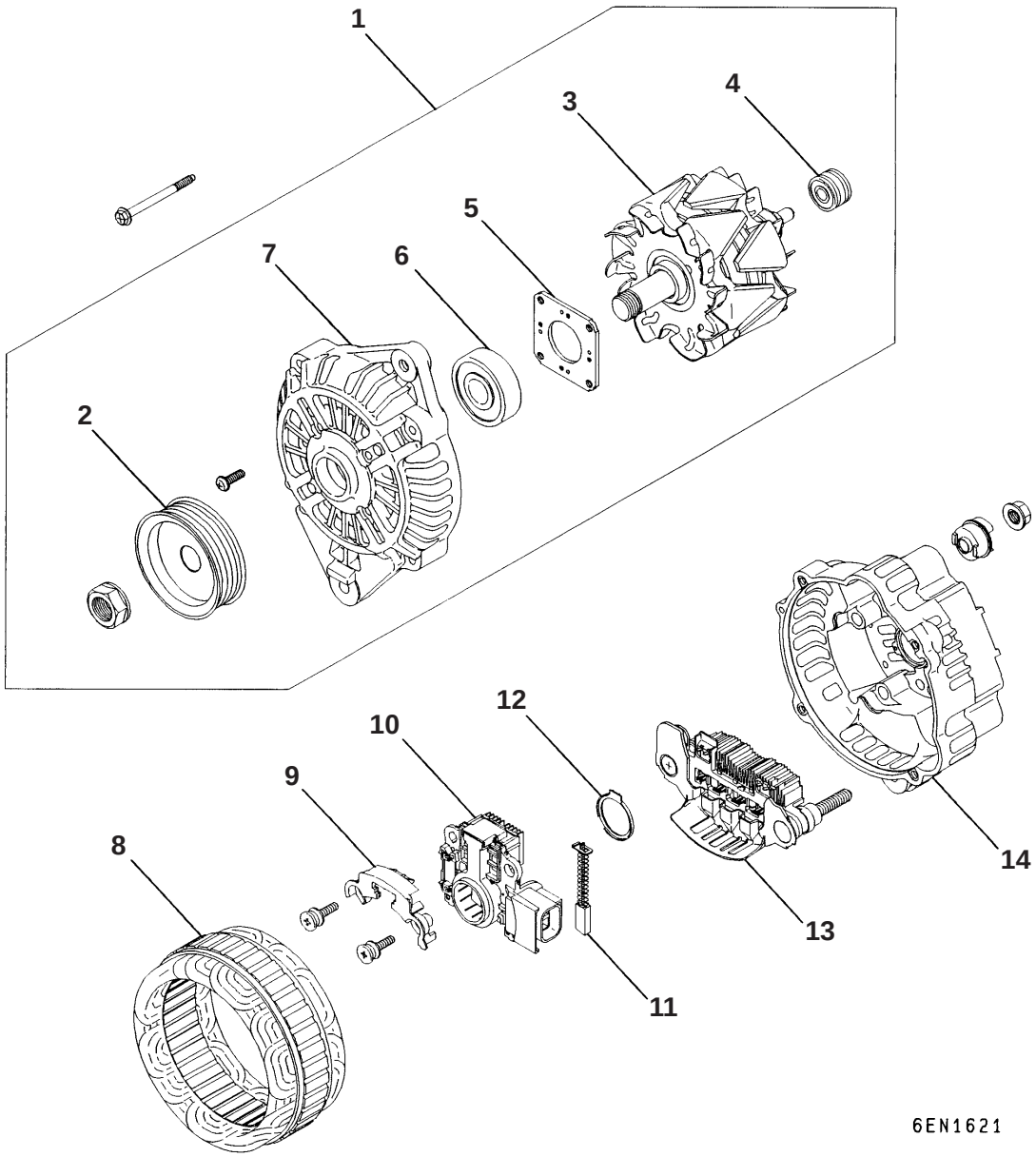

Disassembly steps

◀A▶ 1. Front bracket assembly
◀B▶ 2. Alternator pulley
▶B◀ 3. Rotor
4. Rear bearing
5. Bearing retainer
6. Front bearing
7. Front bracket
◀C▶ 8. Stator
9. Plate
◀C▶ ▶A◀ 10. Regulator assembly
11. Brush
12. Slinger
13. Rectifier
14. Rear bracket

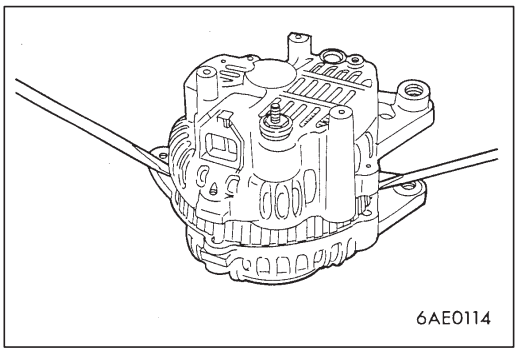

DISASSEMBLY SERVICE POINTS

◀A▶ FRONT BRACKET ASSEMBLY REMOVAL

Insert a flat tip screwdriver, etc., in the clearance between the front bracket assembly and stator core, to pry open and separate the stator and front bracket.

Caution
The stator coil could be damaged so do not insert the screwdriver too far.

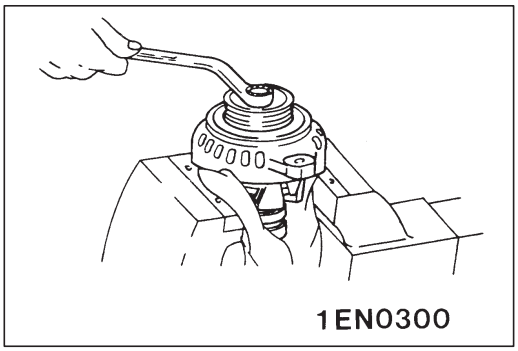

◀B▶ ALTERNATOR PULLEY REMOVAL

Face the pulley side upward, fix the rotor with a work bench and remove the pulley.

Caution
Use care so that the rotor is not damaged.

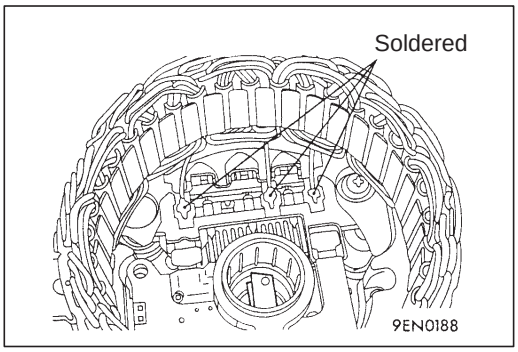

◀C▶ STATOR/REGULATOR ASSEMBLY REMOVAL

1. Use a soldering iron (180 to 250 W) to unsolder the stator. This work should complete within approximately four seconds to prevent heat from transferring to the diode.
2. When removing the rectifier from the regulator assembly, remove the soldered sections of the rectifier.

   Caution
   (1) Use care to make sure that the heat of the soldering iron is not transmitted to the diodes for a long period.
   (2) Use care that no undue force is exerted to the lead wires of the diodes.

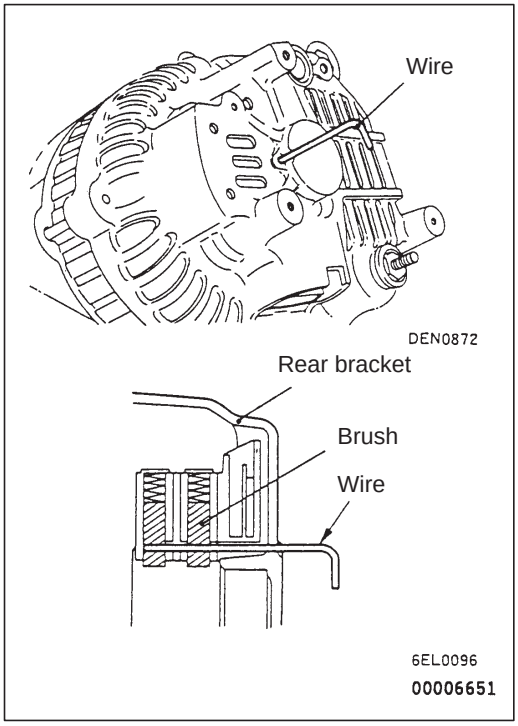

REASSEMBLY SERVICE POINTS

▶A◀ REGULATOR ASSEMBLY INSTALLATION

After installing the regulator assembly, insert a wire into the hole provided on the rear bracket while pressing in the brush to fix the brush.

NOTE
The brush is fixed when a wire is inserted, making rotor installation easier.

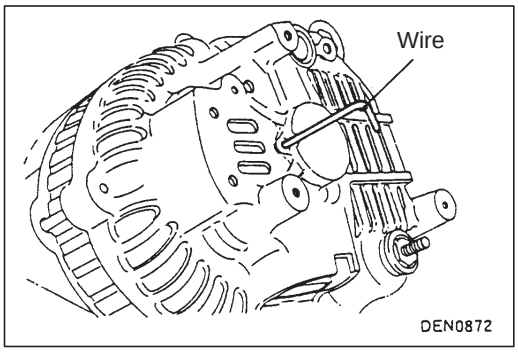

▶B◀ ROTOR INSTALLATION

After installing the rotor, remove the wire used to fix the brush.

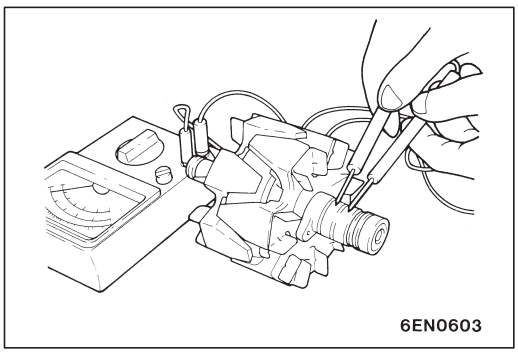

INSPECTION

16100170216

ROTOR CHECK

1. Check the continuity between the rotor coil slip rings, and replace the rotor if the resistance value is not at the standard value.

   Standard value: 2 – 5 Ω

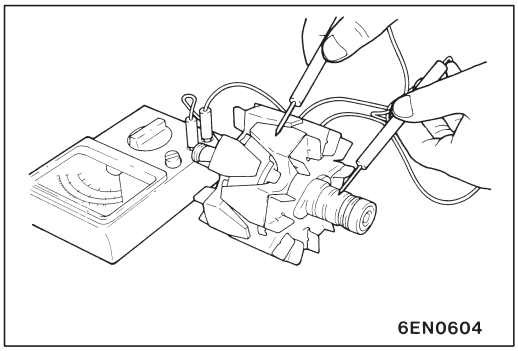

2. Check the continuity between the slip ring and core, and if there is continuity, replace the rotor.

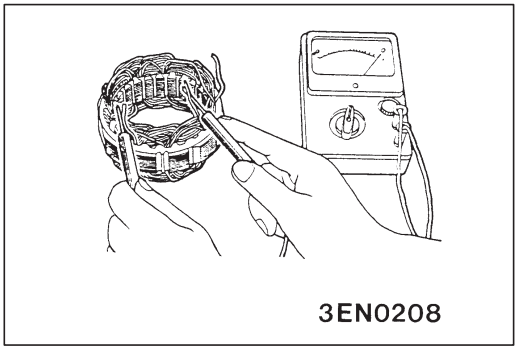

STATOR CHECK

1. Check the continuity between the coil leads, and if there is continuity, replace the stator.

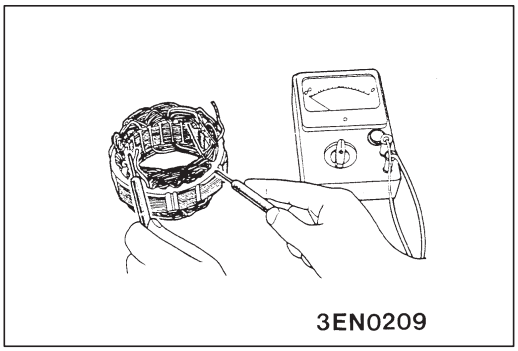

2. Check the continuity between the coil and core, and if there is continuity, replace the stator.

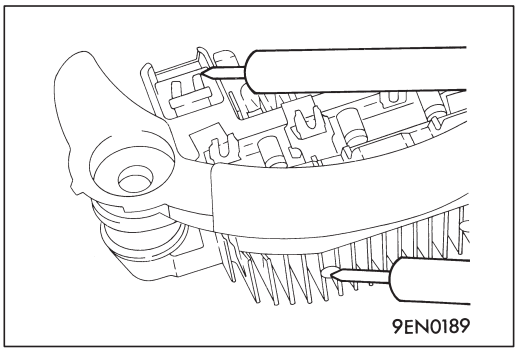

RECTIFIER CHECK

1. Inspect the (+) heat sink by checking the continuity between the (+) heat sink and stator coil lead wire connection terminal using a tester probe.
   If there is a continuity at both, the diode is short circuited, so replace the rectifier.

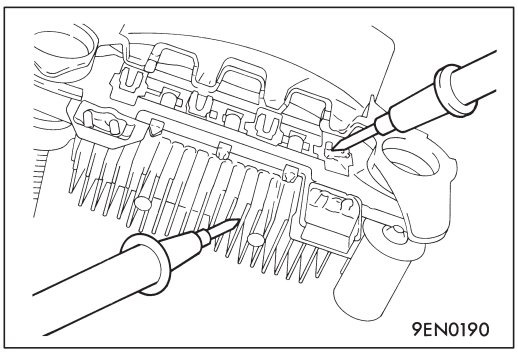

2. Inspect the (–) heat sink by checking the continuity between the (–) heat sink and stator coil lead wire connection terminal using a tester probe.
   If there is a continuity at both, the diode is short circuited, so replace the rectifier.

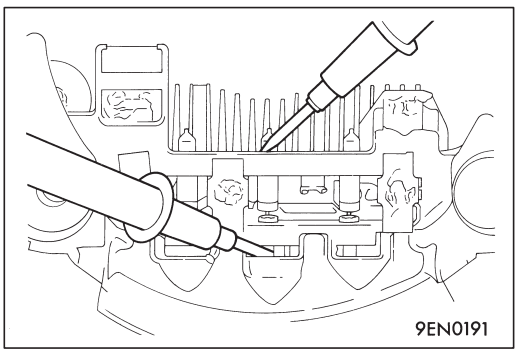

3. Check the diode trio by connecting an ohmmeter to both ends of each diode and check the continuity of the three diodes.
   If there is a continuity at both ends, or if there is no continuity, the diode is damaged so replace the rectifier.

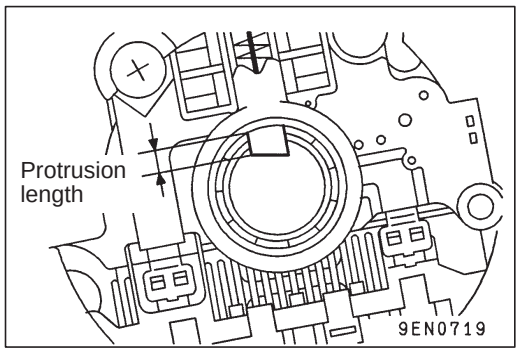

BRUSH CHECK

1. Measure the length of the brush protrusion shown in the illustration, and replace the brush if the measured value is below the limit value.

   Limit: 2 mm or less

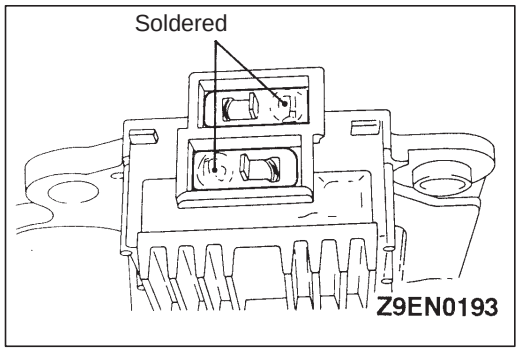

2. The brush can be removed if the solder of the brush lead wire is removed.
3. When installing a new brush, insert the brush into the holder as shown in the illustration, and then solder the lead wires.

DISASSEMBLY AND REASSEMBLY <MPI>

16100160084

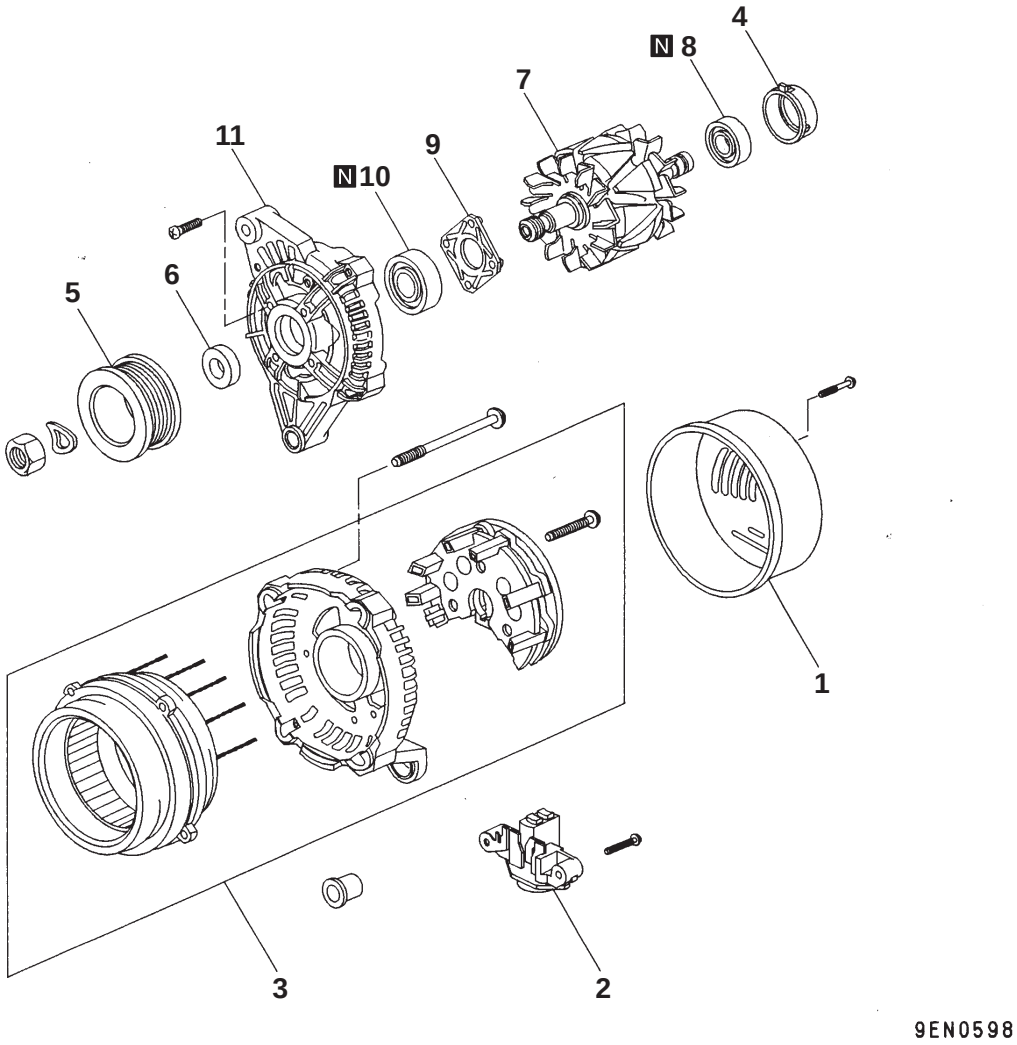

Disassembly steps

1. Rear end cover
2. Brush holder assembly
3. Stator and rectifier assembly
4. Bearing cover
◀A▶ ▶A◀ 5. Alternator pulley
6. Space collar
7. Rotor assembly
8. Rear bearing
9. Bearing retainer
10. Front bearing
11. Front bearing bracket

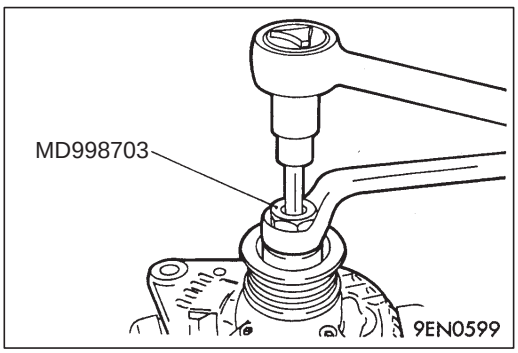

DISASSEMBLY SERVICE POINT

◀A▶ ALTERNATOR PULLEY REMOVAL

1. Clamp the front bracket in a vise with soft jaws.
2. Use the special tool and a box wrench to hold the nut. Then attach a double hexagonal wrench to the rotor shaft and loosen the nut.

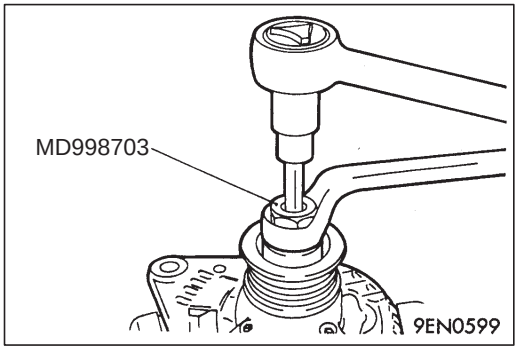

REASSEMBLY SERVICE POINT

▶A◀ ALTERNATOR PULLEY INSTALLATION

1. Clamp the front bracket in a vise with soft jaws.
2. Use the special tool and a box wrench to hold the nut. Then attach a double hexagonal wrench to the rotor shaft and tighten the nut.

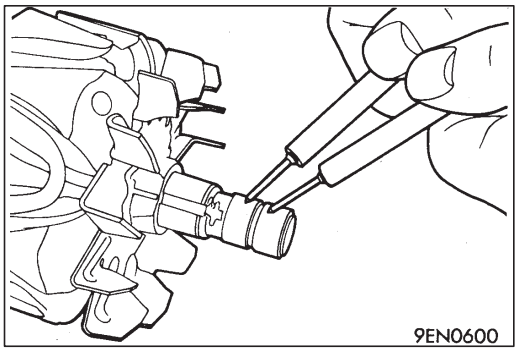

INSPECTION

16100170087

ROTOR

1. Check field coil for continuity. Check to ensure that there is continuity between slip rings.
   If resistance is extremely small, it means that there is a short. If there is no continuity or if there is short circuit, replace rotor assembly.

   Resistance value: Approx. 2.6 Ω

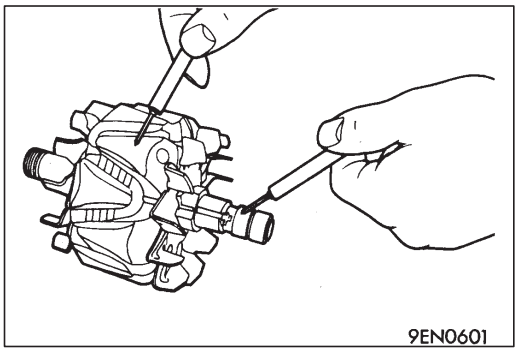

2. Check field coil for grounding. Check to ensure that there is no continuity between slip ring and core. If there is continuity, replace rotor assembly.

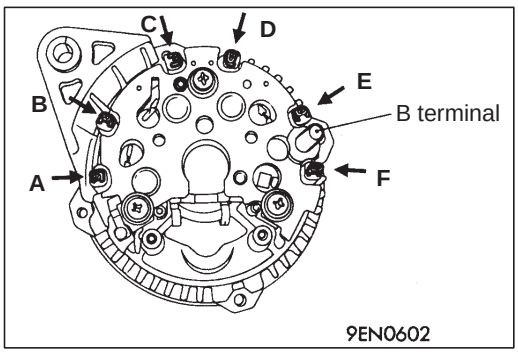

STATOR

1. Carry out a continuity test for the stator coil. Check that there is continuity between coil leads (A)–(B), (C)–(D) and (E)–(F).
   If there is no continuity, replace the stator and rectifier assembly.
2. Check the earth connection of the stator coil. Check that there is no continuity between each coil lead and the core. If there is continuity, replace the stator and rectifier assembly.

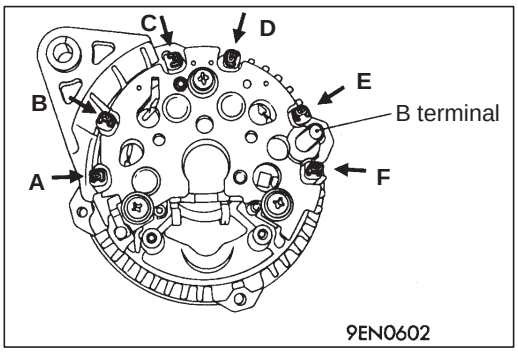

RECTIFIERS

1. Check the continuity between terminal (B) and coil leads (A), (C) and (E). If there is continuity in both directions, there is a short-circuit in the diode, so replace the stator and rectifier assembly.
2. Check the continuity between coil leads (B), (D) and (F) and the earth. If there is continuity in both directions, there is a short-circuit in the diode, so replace the stator and rectifier assembly.

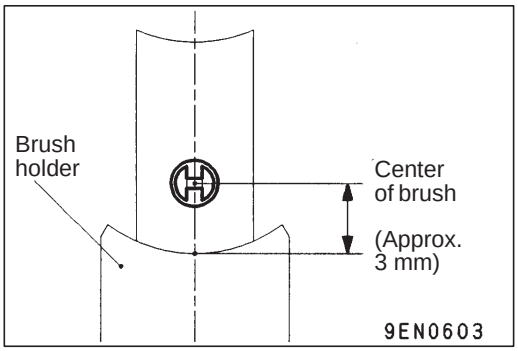

BRUSH

If the brush has been worn down to the centre of the mark (3 mm from the centre of the brush holder), replace the brush holder assembly.

STARTING SYSTEM

16200010290

GENERAL INFORMATION

If the ignition switch is turned to the ”START” position, current flows in the pull-in and holding coils provided inside magnetic switch, attracting the plunger. When the plunger is attracted, the lever connected to the plunger is actuated to engage the starter clutch.
On the other hand, attracting the plunger will turn on the magnetic switch, allowing the B terminal and M terminal to conduct. Thus, current flows to engage the starter motor.
When the ignition switch is returned to the “ON” position after starting the engine, the starter clutch is disengaged from the ring gear.
An overrunning clutch is provided between the pinion and the armature shaft, to prevent damage to the starter.

SYSTEM DIAGRAM

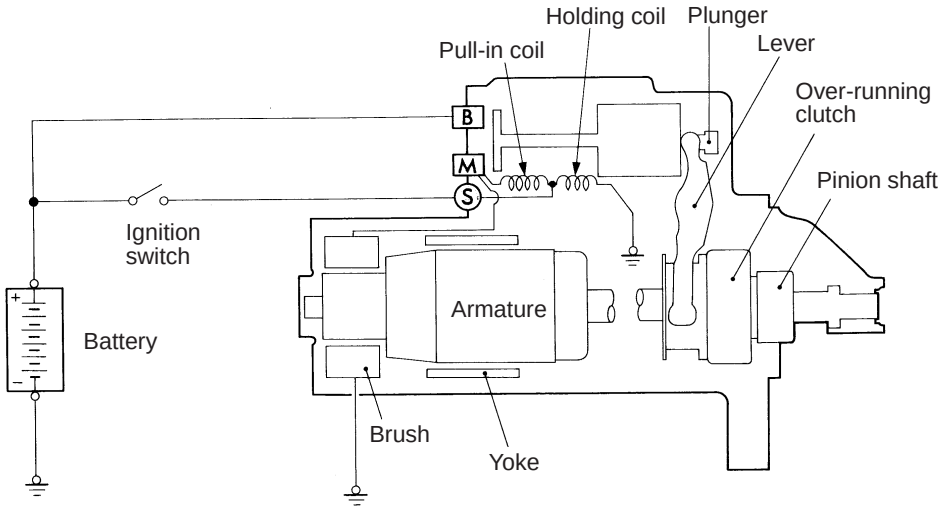

STARTER MOTOR SPECIFICATIONS

Items	GDI	MPI
Type	Reduction drive with planetary gear	Reduction drive with planetary gear
Rated output kW/V	1.2/12	0.9/12
No. of pinion teeth	8	8

SERVICE SPECIFICATIONS

16200030173

GDI

Items	Standard value	Limit
Pinion gap mm	0.5 – 2.0	–
Commutator outer diameter mm	29.4	28.4
Commutator runout mm	0.05	0.1
Commutator undercut mm	0.5	0.2

MPI

Items	Standard value	Limit
Brush length mm	–	11

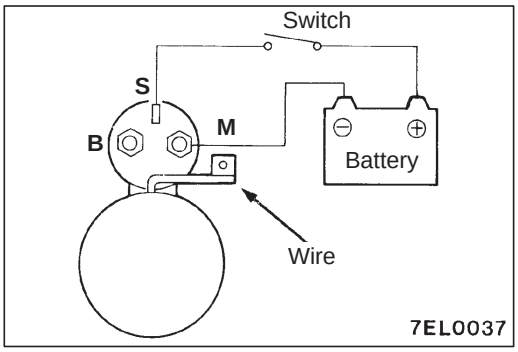

STARTER MOTOR

16200110242

INSPECTION

PINION GAP ADJUSTMENT <GDI>

1. Disconnect field coil wire from M-terminal of magnetic switch.
2. Connect a 12V battery between S-terminal and M-terminal.
3. Set switch to “ON”, and pinion will move out.

   Caution
   This test must be performed quickly (in less than 10 seconds) to prevent coil from burning.

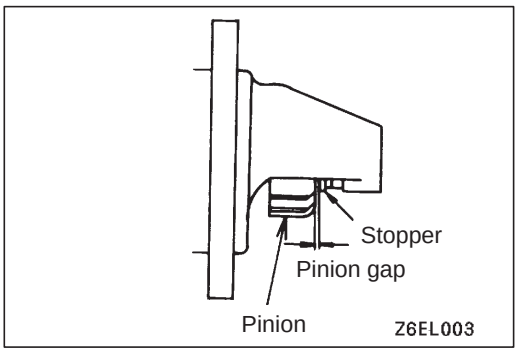

4. Check pinion to stopper clearance (pinion gap) with a thickness gauge.

   Pinion gap: 0.5 – 2.0 mm

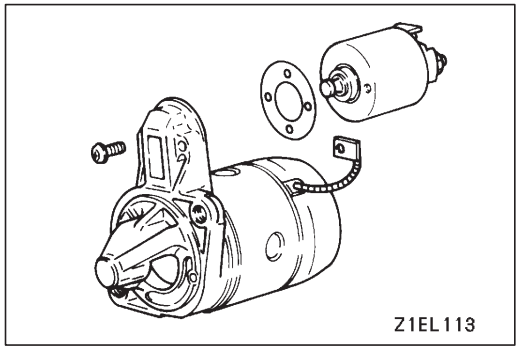

5. If pinion gap is out of specification, adjust by adding or removing gaskets between magnetic switch and front bracket.

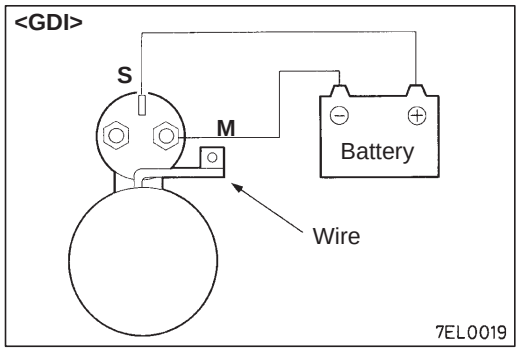

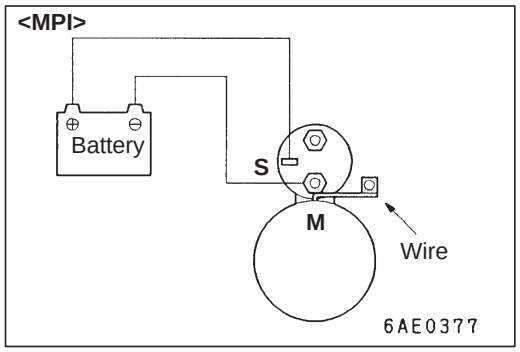

MAGNETIC SWITCH PULL-IN TEST

1. Disconnect field coil wire from M-terminal of magnetic switch.
2. Connect a 12V battery between S-terminal and M-terminal.

   Caution
   This test must be performed quickly (in less than 10 seconds) to prevent coil from burning.

3. If pinion moves out, then pull-in coil is good. If it doesn't, replace magnetic switch.

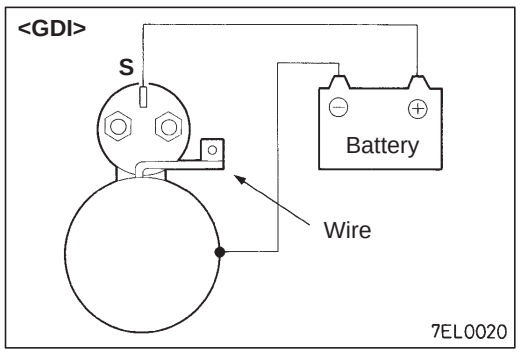

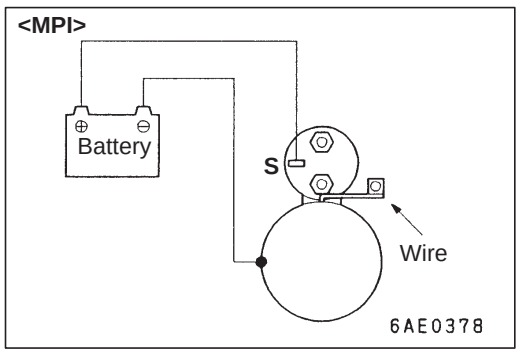

MAGNETIC SWITCH HOLD-IN TEST

1. Disconnect field coil wire from M-terminal of magnetic switch.
2. Connect a 12V battery between S-terminal and body.

   Caution
   This test must be performed quickly (in less than 10 seconds) to prevent coil from burning.

3. Manually pull out the pinion as far as the pinion stopper position.
4. If pinion remains out, everything is in order. If pinion moves in, hold-in circuit is open. Replace magnetic switch.

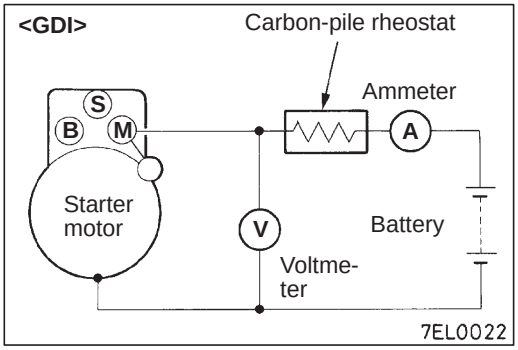

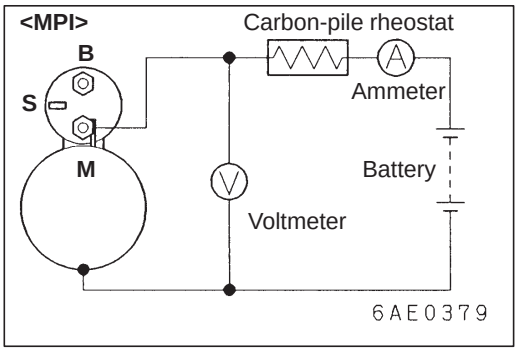

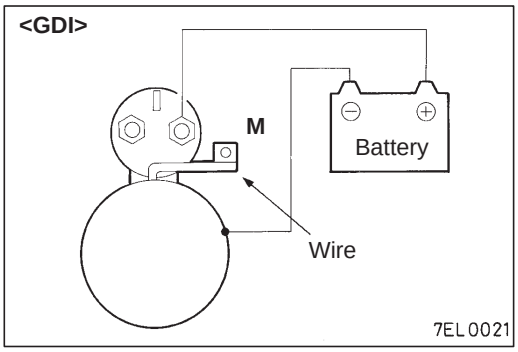

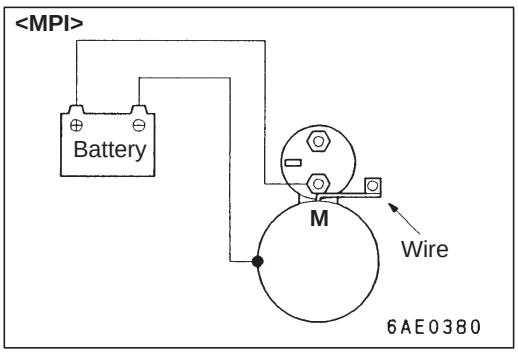

FREE RUNNING TEST

1. Place starter motor in a vise equipped with soft jaws and connect a fully-charged 12-volt battery to starter motor as follows:
2. Connect a test ammeter (100-ampere scale) and carbon pile rheostat in series with battery positive post and starter motor terminal.
3. Connect a voltmeter (15-volt scale) across starter motor.
4. Rotate carbon pile to full-resistance position.
5. Connect battery cable from battery negative post to starter motor body.
6. Adjust the rheostat until the battery voltage shown by the voltmeter is 11 V.
7. Confirm that the maximum amperage is within the specifications and that the starter motor turns smoothly and freely.

   Current:
   max. 50 Amps <GDI>
   max. 40 Amps <MPI>

MAGNETIC SWITCH RETURN TEST

1. Disconnect field coil wire from M-terminal of magnetic switch.
2. Connect a 12V battery between M-terminal and body.

   Caution
   This test must be performed quickly (in less than 10 seconds) to prevent coil from burning.

3. Pull pinion out and release. If pinion quickly returns to its original position, everything is in order. If it doesn't, replace magnetic switch.

   Caution
   Be careful not to get your fingers caught when pulling out the pinion.

DISASSEMBLY AND REASSEMBLY <GDI>

16200120269

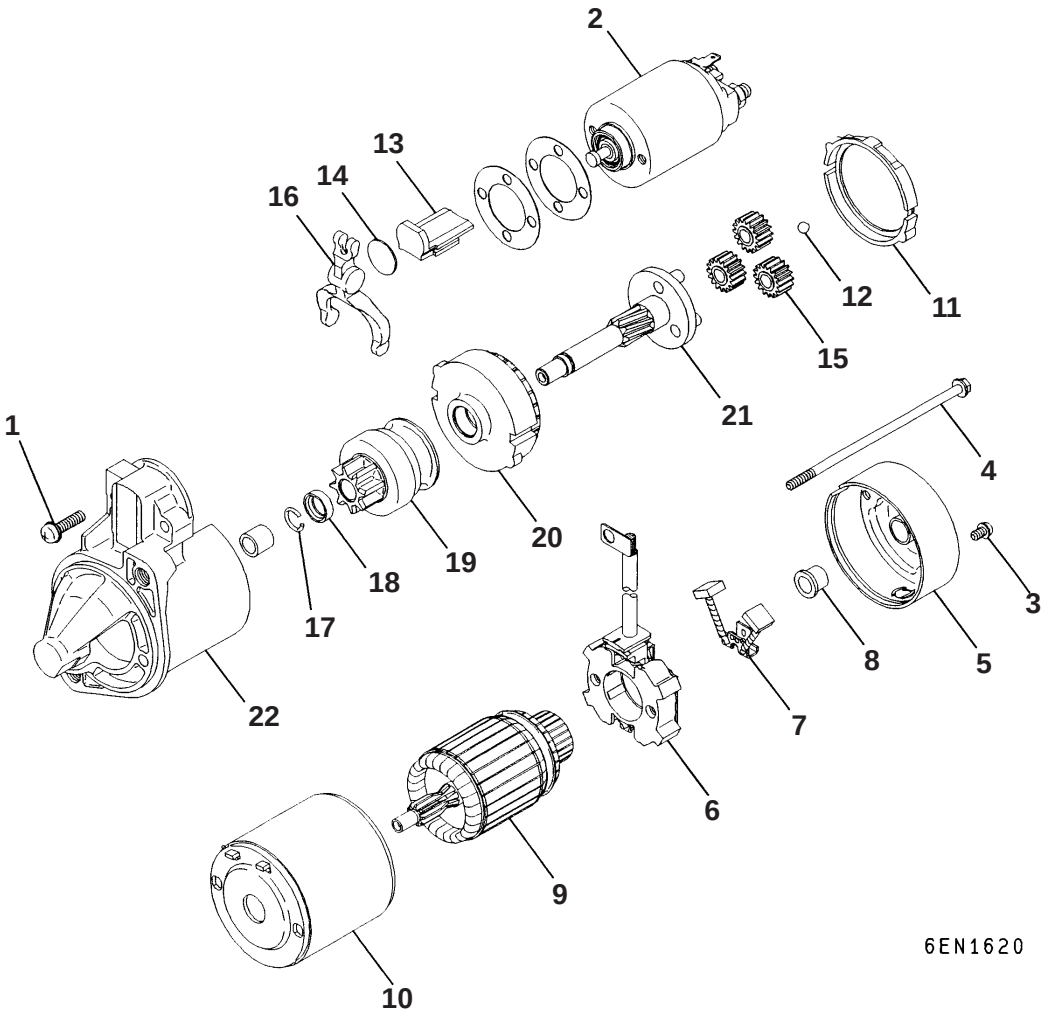

Disassembly steps

1. Screw
◀A▶ 2. Magnetic switch
3. Screw
4. Through bolt
5. Rear bracket
6. Brush holder
7. Brush
8. Rear bearing
◀B▶ 9. Armature
10. Yoke assembly
◀B▶ 11. Ball
12. Packing A
13. Packing B
14. Plate
15. Planetary gear
16. Lever
◀C▶ ▶A◀ 17. Snap ring
◀C▶ ▶A◀ 18. Stop ring
19. Overrunning clutch
20. Internal gear
22. Planetary gear holder
22. Front bracket

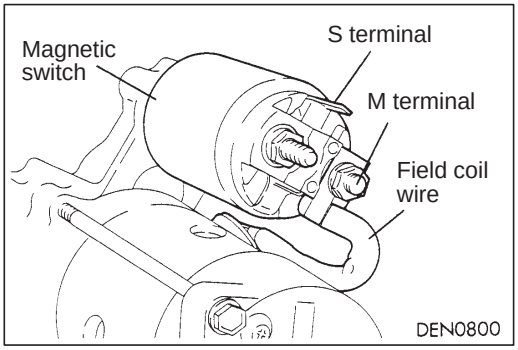

DISASSEMBLY SERVICE POINTS

◀A▶ MAGNETIC SWITCH REMOVAL

Disconnect the field coil wire from terminal M of the magnetic switch.

◀B▶ ARMATURE AND BALL REMOVAL

When removing the armature, do not lose the ball placed at the end as a bearing.

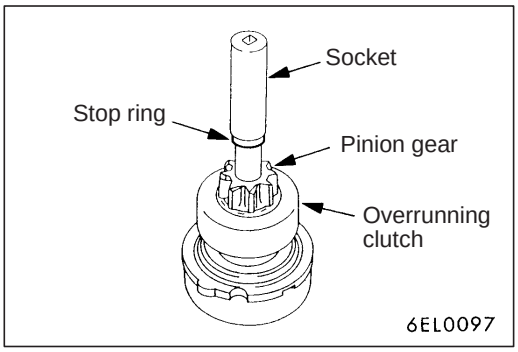

◀C▶ SNAP RING/STOP RING REMOVAL

1. Using an appropriate wrench socket, push the stop ring toward the overrunning clutch.

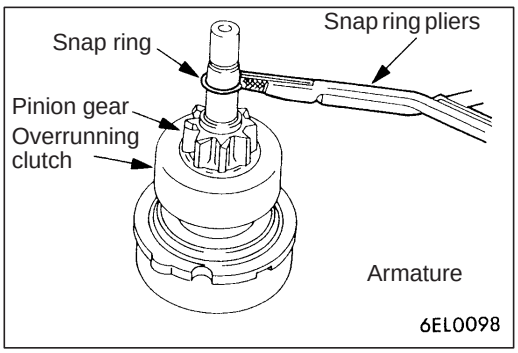

2. Remove the snap ring with snap ring pliers and then remove the stop ring and overrunning clutch.

STARTER MOTOR PARTS CLEANING

1. Do not immerse the parts in cleaning solvent. Immersing the yoke and field coil assembly and/or armature will damage insulation. Wipe these parts with a cloth only.
2. Do not immerse the drive unit in cleaning solvent. The overrunning clutch is pre-lubricated at the factory and solvent will wash lubrication from clutch.
3. The drive unit may be cleaned with a brush moistened with cleaning solvent and wiped dry with a cloth.

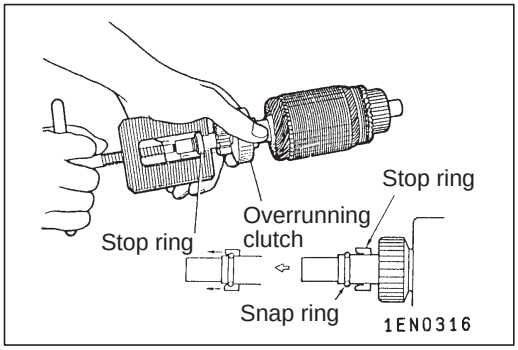

REASSEMBLY SERVICE POINTS

▶A◀ STOP RING/SNAP RING INSTALLATION

Using an appropriate tool, pull the stop ring over the snap ring.

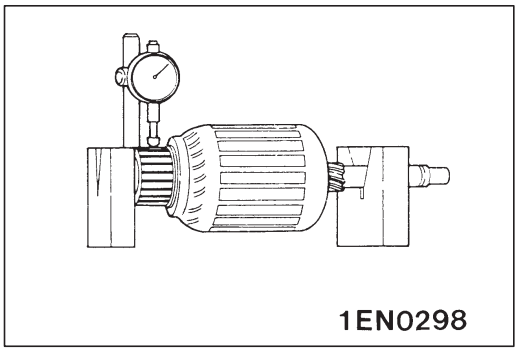

INSPECTION

16200130255

COMMUTATOR

1. Place the armature in a pair of “V” blocks and check the runout with a dial indicator.

   Standard value: 0.05 mm

   Limit: 0.1 mm

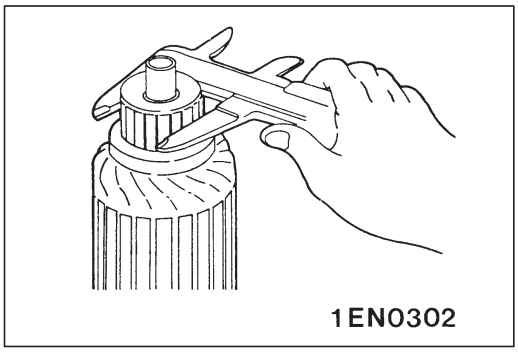

2. Measure the commutator outer diameter.

   Direct drive type and planetary gear reduction drive type (for diesel engine)

   Standard value: 32.0 mm
   Limit: 31.0 mm

   Planetary gear reduction drive type (for petrol engine)
   Standard value: 29.4 mm
   Limit: 28.4 mm

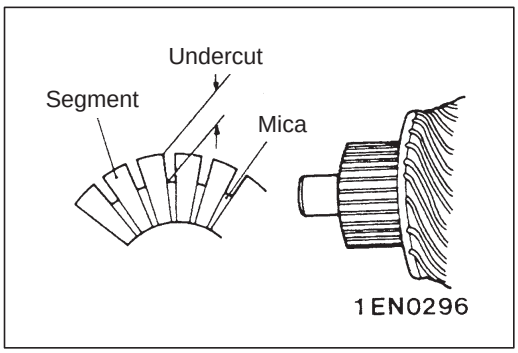

3. Check the undercut depth between segments.

   Standard value: 0.5 mm

   Limit: 0.2 mm

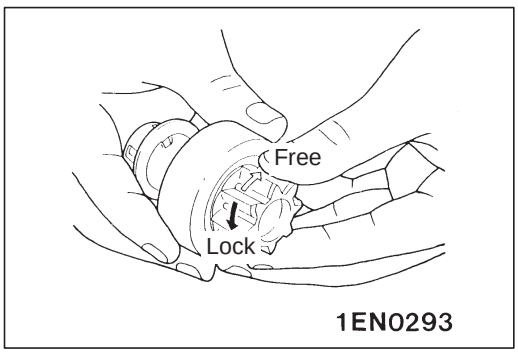

OVERRUNING CLUTCH

1. Check that the pinion locks when it is turned counterclockwise and moves smoothly when it is turned clockwise.
2. Check the pinion for wear or damage.

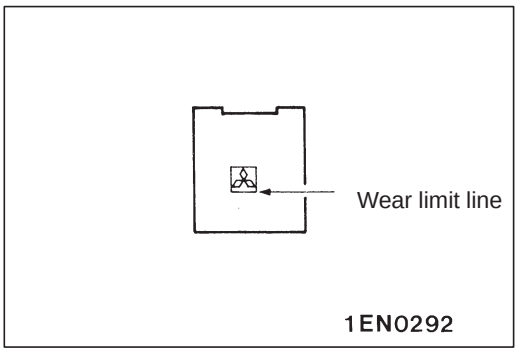

BRUSH

1. Check the brush for roughness of the surface that contacts the commutator and check the brush length.

   Limit: Wear limit line
2. In case the contacting surface has been corrected or the brush has been replaced, correct the contacting surface by winding sandpaper around the commutator.

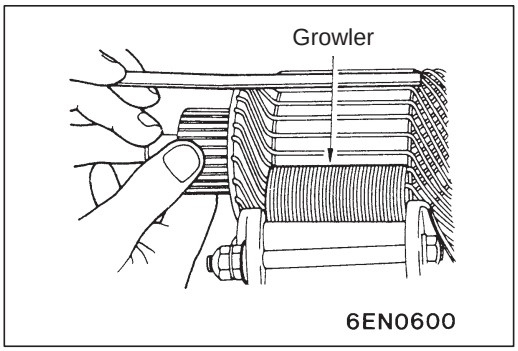

ARMATURE COIL SHORT-CIRCUIT TEST

1. Place armature in a growler.
2. Hold a thin steel blade parallel and just above while rotating armature slowly in growler. A shorted armature will cause blade to vibrate and be attracted to the core. Replace shorted armature.

   Caution
   Clean the armature surface thoroughly before checking.

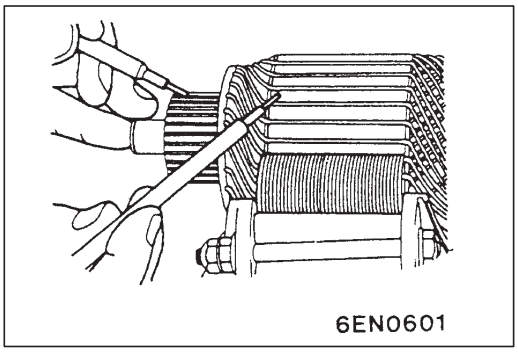

3. Check the insulation between each commutator segment and armature coil core.
   If there is no continuity, the insulation is in order.

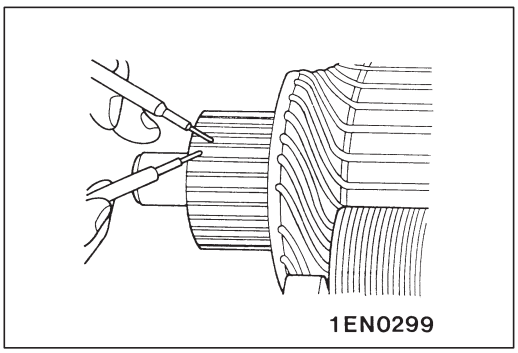

ARMATURE COIL OPEN-CIRCUIT INSPECTION

Check the continuity between segments. If there is continuity, the coil is in order.

DISASSEMBLY AND REASSEMBLY <MPI>

16200120115

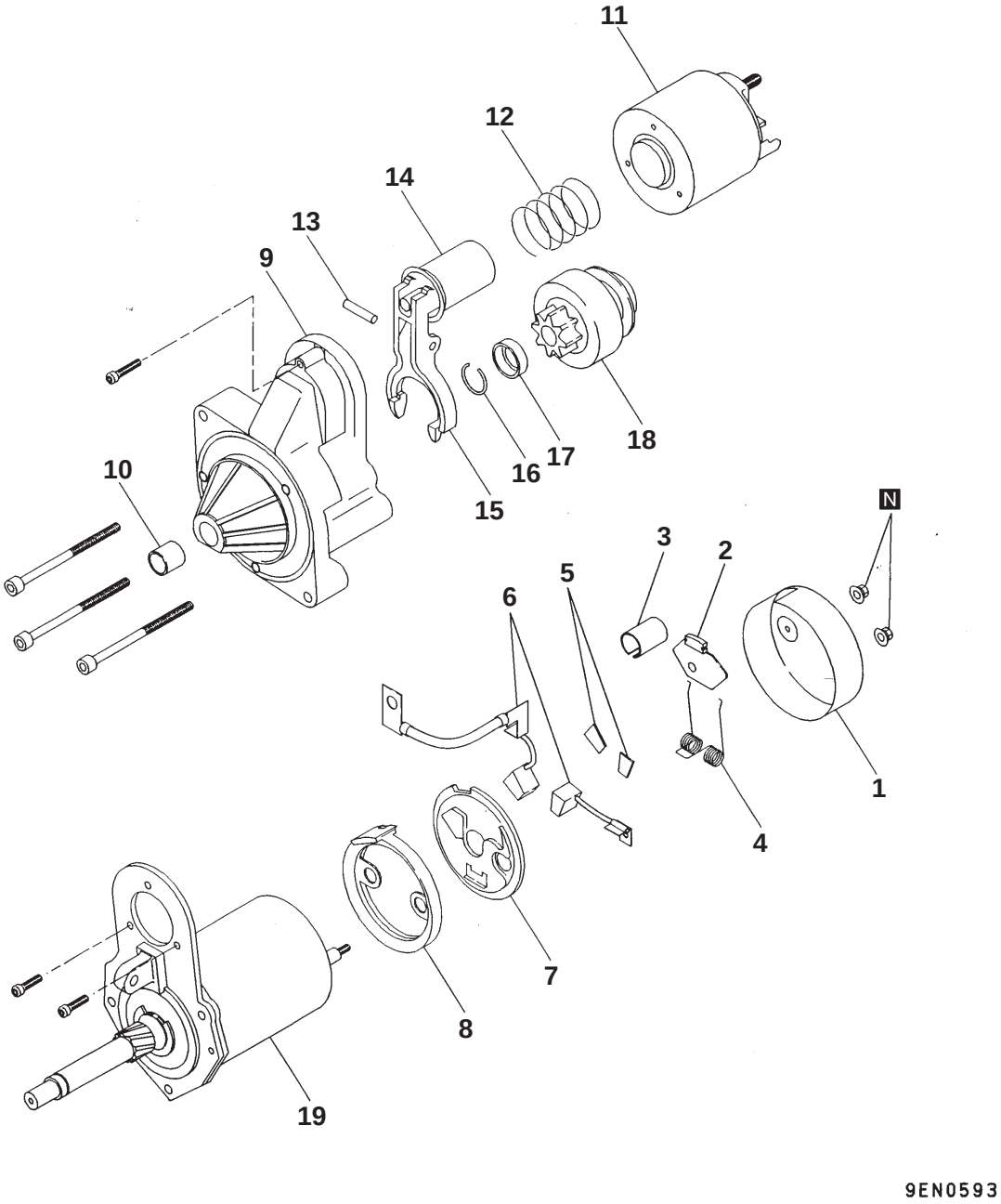

Disassembly steps

1. Rear cover
2. Rubber
3. Cover
4. Brush spring
5. Plate
6. Brush
7. Brush holder
8. Packing
9. Front bracket
10. Bushing
11. Magnetic switch
12. Spring
13. Pin
14. Plunger
15. Lever
16. ◀A▶ ▶A◀ Snap ring
17. ◀A▶ ▶A◀ Stop ring
18. Overrunning clutch
19. Motor assembly

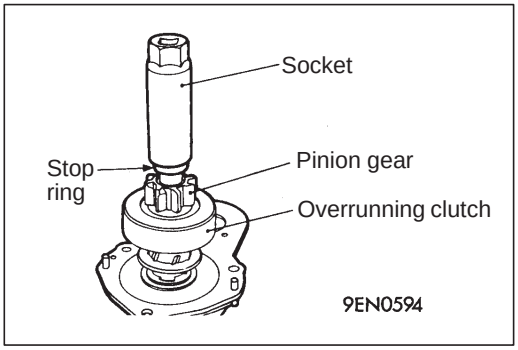

DISASSEMBLY SERVICE POINTS

◀A▶ SNAP RING/STOP RING REMOVAL

1. Press stop ring off snap ring with a suitable socket.

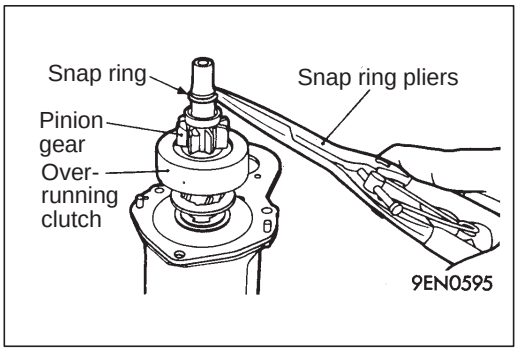

2. Remove snap ring with snap ring pliers and then remove stop ring and overrunning clutch.

STARTER MOTOR PARTS CLEANING

1. Do not immerse parts in cleaning solvent. Immersing the motor assembly will damage insulation. Wipe motor assembly with a cloth only.
2. Do not immerse drive unit in cleaning solvent. Overrunning clutch is pre-lubricated at the factory and solvent will wash lubrication from clutch.
3. The drive unit may be cleaned with a brush moistened with cleaning solvent and wiped dry with a cloth.

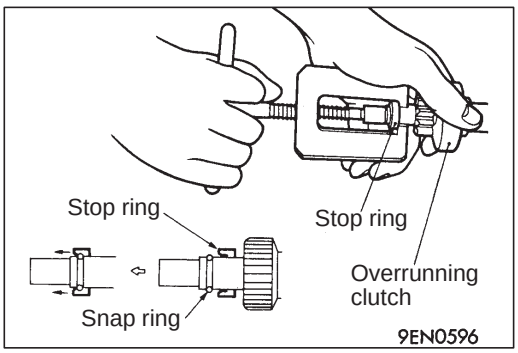

REASSEMBLY SERVICE POINTS

▶A◀ STOP RING/SNAP RING INSTALLATION

Using a suitable pulling tool, pull overrunning clutch stop ring over snap ring.

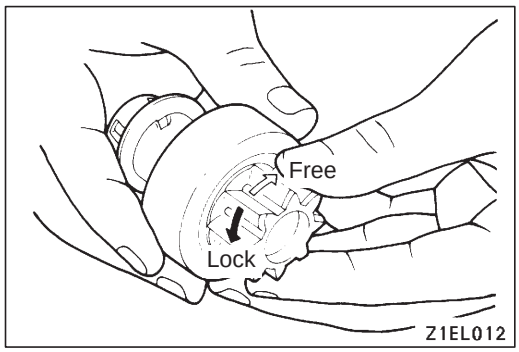

INSPECTION

16200130118

OVERRUNNING CLUTCH

1. While holding clutch housing, rotate the pinion. Drive pinion should rotate smoothly in one direction, but should not rotate in opposite direction. If clutch does not function properly, replace overrunning clutch assembly.
2. Inspect pinion for wear or burrs. If pinion is worn or burred, replace overrunning clutch assembly. If pinion is damaged, also inspect ring gear for wear or burrs.

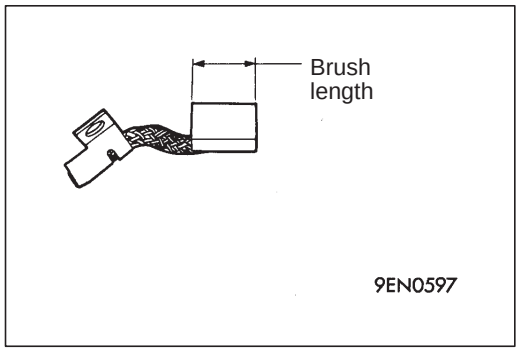

BRUSH

1. Check the brush length.

   Limit: 11 mm

IGNITION SYSTEM

16300010118

GENERAL INFORMATION

<GDI>

This system is equipped with four ignition coils with built-in power transistors for each of the cylinders. Interruption of the primary current flowing in the primary side of an ignition coil generates a high voltage in the secondary side of the ignition coil. The high voltage thus generated is applied to the spark plugs to generate sparks.
The engine-ECU turns the power transistors inside the ignition coils alternately on and off. This causes the primary currents in the ignition coils to be alternately interrupted and allowed to flow to fire the cylinders in the order 1 – 3 – 4 – 2.

The engine-ECU determines which ignition coil should be controlled by means of the signals from the camshaft position sensor and the crank angle sensor. It also detects the crankshaft position, in order to provide ignition at the most appropriate timing in response to the engine operation conditions.
When the engine is cold or running at high altitudes, the ignition timing is slightly advanced to provide optimum performance. Furthermore, if knocking occurs, the ignition timing is gradually retarded until knocking ceases.

SYSTEM DIAGRAM

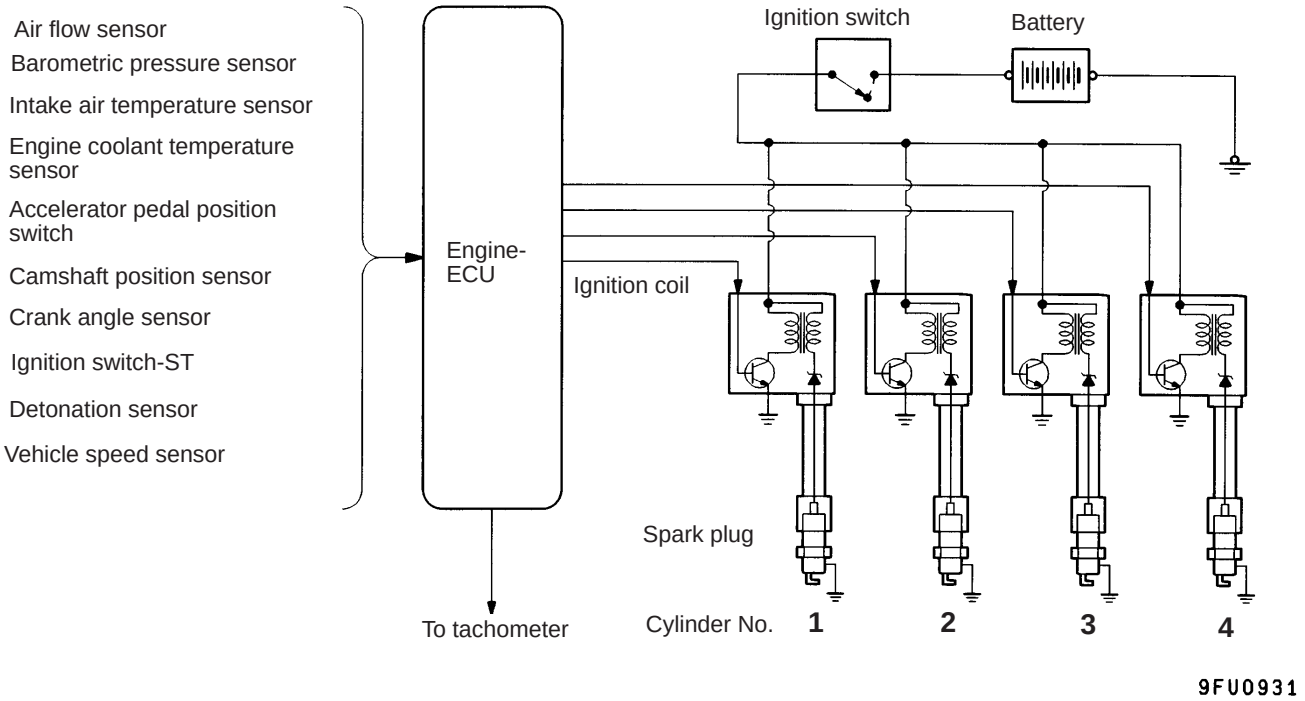

<MPI>

Interruption of the primary current flowing in the primary side of the ignition coil generates high voltage in the secondary side of the ignition coil. The high voltage thus generated is directed by the distributor to the applicable spark plug. The engine firing order is 1–3–4–2 cylinders.
On application of high voltage, the spark plug generates a spark to ignite the compressed air fuel mixture in the combustion chamber.
The engine-ECU makes and breaks the primary current of the ignition coil to regulate the ignition timing.
The engine-ECU detects the crankshaft position by the crank angle sensor incorporated in the distributor to provide ignition at the most appropriate timing for the engine operating condition.
When the engine is cold or operated at a high altitude, the ignition timing is slightly advanced to provide optimum performance to the operating condition.
Furthermore, if knocking occurs, the ignition timing is gradually retarded until knocking ceases.

SYSTEM DIAGRAM

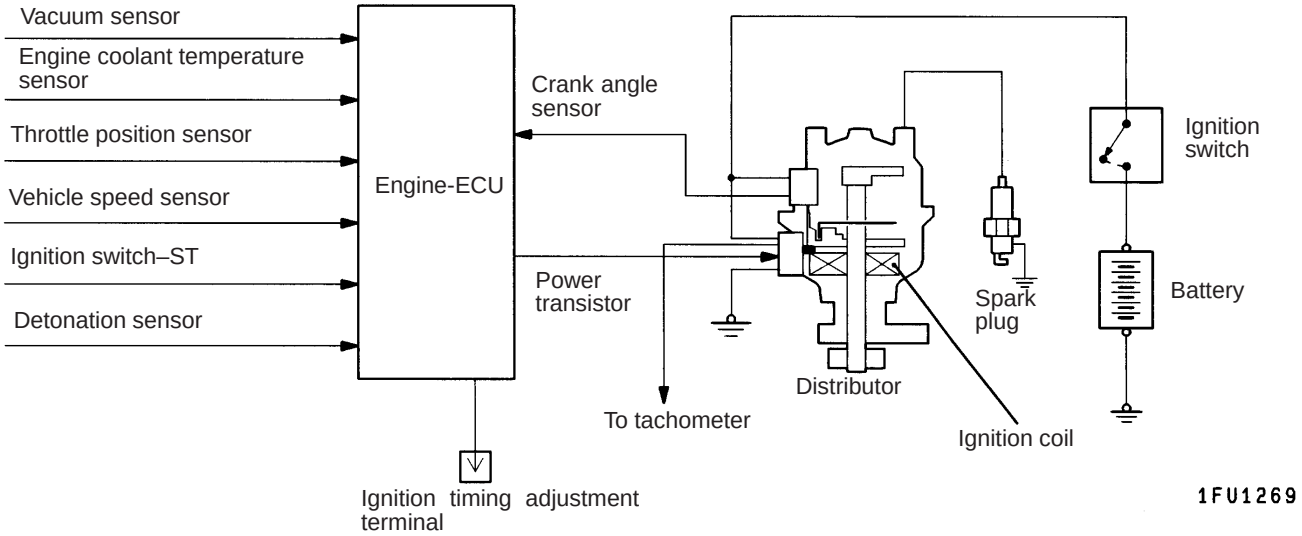

DISTRIBUTOR SPECIFICATIONS <MPI>

Items	Specifications
Type	Contact pointless with built-in ignition coil
Advance mechanism	Electronic
Firing order	1–3–4–2

IGNITION COIL SPECIFICATIONS

Items	GDI	MPI
Type	Molded 4-coil	Molded single-coil with a built-in distributor

SPARK PLUG SPECIFICATIONS

Items	GDI	MPI
NGK	IZFR6B	BKR5E-11
DENSO	–	K16PR-U11
CHAMPION	–	–

SERVICE SPECIFICATIONS

16300030121

IGNITION COIL <MPI>

Items	Standard value	Limit
Primary coil resistance Ω	0.5 – 0.7	–
Secondary coil resistance kΩ	15 – 22	–

SPARK PLUG

Items		Standard value	Limit
Spark plug gap mm	GDI	0.5 – 0.6	0.75
	MPI	1.0 – 1.1	–
Spark plug gap insulation resistance MΩ <GDI>		–	1

RESISTIVE CORD <MPI>

Items	Standard value	Limit
Resistance kΩ	–	max. 22

SPECIAL TOOLS

16300060070

Tool	Number	Name	Use
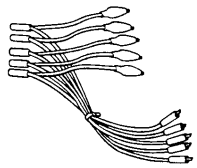	MB991348	Test harness set	Inspection of ignition primary voltage (power transistor connection)
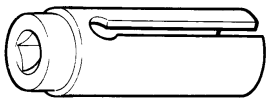	MD998770	Oxygen sensor wrench	Detonation sensor removal and installation

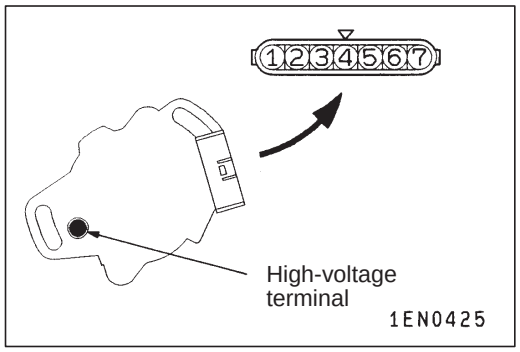

ON-VEHICLE SERVICE

16300120149

IGNITION COIL CHECK <MPI>

1. Measurement of the primary coil resistance
   Measure the resistance between connector terminal 1 and 2 of the distributor.

   Standard value: 0.5 – 0.7 Ω

2. Measurement of secondary coil resistance
   Measure the resistance between the high-voltage terminals and connector terminals 1.

   Standard value: 15 – 22 kΩ

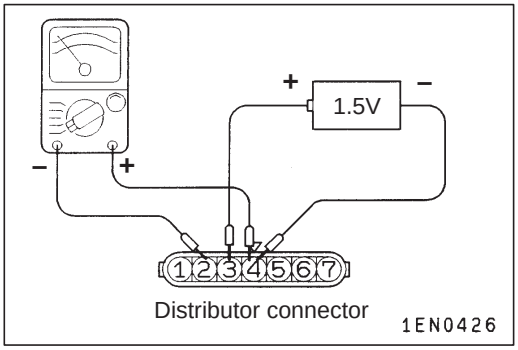

POWER TRANSISTOR CONTINUITY CHECK <MPI>

16300130104

1. An analogue-type circuit tester should be used.
2. Connect the negative (–) prove of the circuit tester to terminal 2.

Caution
This test must be performed quickly (in less than 10 seconds) to prevent coil from burning and power transistor from breakage.

Voltage: 1.5V	Terminal No.		
	2	3	4
When current is flowing	○	⊕	⊖ ○
When current is not flowing			

Replace the power transistor if there is a malfunction.

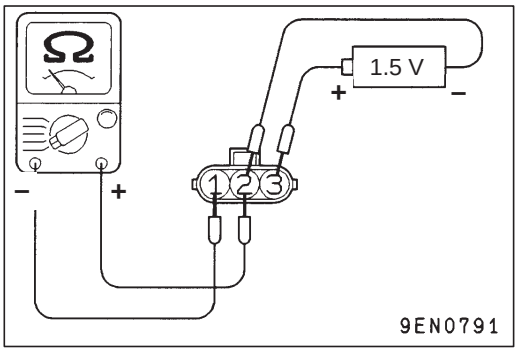

IGNITION COIL (WITH BUILT-IN POWER TRANSISTOR) CHECK <GDI>

16300120156

PRIMARY COIL AND POWER TRANSISTOR CONTINUITY CHECK

1. An analogue-type circuit tester should be used.
2. Connect the negative (–) prove of the circuit tester to terminal 1.

Caution
This test must be performed quickly (in less than 10 seconds) to prevent coil from burning and power transistor from breakage.

Voltage: 1.5V	Terminal No.		
	1	2	3
When current is flowing	○	⊖ ○	⊕
When current is not flowing			

SECONDARY COIL CHECK

Resistance check, etc. can not be used to check the secondary coil of this ignition coil because a diode is built-in in the secondary coil circuit. Because of this, check the secondary coil by the following procedure.

1. Disconnect the ignition coil connector.
2. Remove the ignition coil, and then install a new spark plug to the ignition coil.
3. Connect the ignition coil connector.

4. Connect the spark plug outer electrode to earth, and then crank the engine.
5. Check if the spark plug sparks.
6. If the spark plug does not spark, replace the ignition coil with a new one and recheck.
7. If the spark plug sparks when the new ignition coil is used, the ignition coil to be checked is defective. Replace the ignition coil.
   If the spark plug does not spark when the new ignition coil is used, the ignition circuit may be defective. Check the ignition circuit.

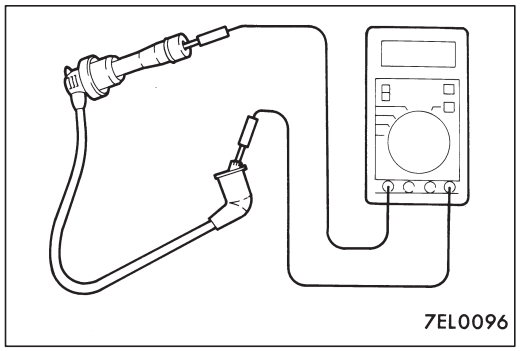

RESISTIVE CORD CHECK <MPI> 16300140039

Measure the resistance of the all spark plug cables.
1. Check cap and coating for cracks.
2. Measure resistance.

   Limit: Max. 22 kΩ

SPARK PLUG CHECK AND CLEANING 16300150056 <GDI>

Caution
1. **The spark plug gap for iridium plugs should not be adjusted.**
2. **Cleaning iridium plugs may result in damage to the iridium tip. Therefore, if cleaning is necessary because the plug is sooty, use a plug cleaner, and do not clean the plug for more than 20 seconds in order to preserve the electrodes. A wire brush should never be used.**
3. **The spark plugs in GDI engines are special iridium plugs in which the electrodes can become black even when the plugs are working normally. Carbon which may become deposited on these plugs burns off more readily than with conventional plugs, and so should not cause any problems with spark plug performance. Judgement of whether a spark plug is operating normally or not should be made by checking the insulation resistance.**

1. Remove the ignition coils.
2. Remove the spark plugs.
3. Check the spark plug gap. Replace the spark plug if the gap exceeds the limit.

   Limit: 0.75 mm

   Standard value: 0.5 – 0.6 mm

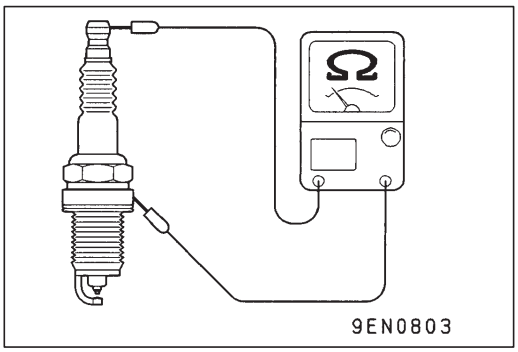

4. Measure the spark plug insulation resistance. Replace the spark plug if the measured value is lower than the limit value.

   Limit: 1 MΩ

5. Clean the spark plug holes.
6. Install the spark plugs.
7. Install the ignition coils.

<MPI>

1. Remove the spark plug cables.

   Caution
   When pulling off the spark plug cable from the plug always hold the cable cap, not the cable.

2. Remove the spark plugs.
3. Check for burned out electrode or damaged insulator. Check for even burning.
4. Remove carbon deposits with wire brush or plug cleaner. Remove sand from plug screw with compressed air.

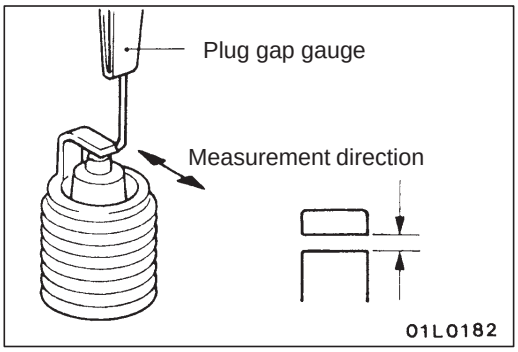

5. Use a plug gap gauge to check that the plug gap is within the standard value range.

   Standard value: 1.0 – 1.1 mm

   If the plug gap is not within the standard value range, adjust by bending the earth electrode.

6. Clean the engine plug holes.

   Caution
   Be careful not to allow foreign matter in cylinders.

7. Install the spark plugs.

CRANK ANGLE SENSOR CHECK <MPI> 16300260223

Refer to GROUP 13B – Troubleshooting.

CRANK ANGLE SENSOR, CAMSHAFT POSITION SENSOR CHECK <GDI> 16300260223

Refer to GROUP 13A – Troubleshooting.

DETONATION SENSOR CHECK 16300180062

Check the detonation sensor circuit if self-diagnosis code, No. 31 is shown.

NOTE
For information concerning the self-diagnosis codes, after to GROUP 13A – Troubleshooting <GDI> or GROUP 13B – Troubleshooting <MPI>.

WAVEFORM CHECK USING AN ANALYZER <MPI>

16300170199

Ignition Secondary Voltage Check

MEASUREMENT METHOD

1. Clamp the spark plug cable of the No. 1 cylinder with the secondary pickup and check the waveform.
2. Connect the secondary pickup to the other cylinders in turn and check the waveforms for each cylinder.

STANDARD WAVEFORM

Observation Conditions

FUNCTION	SECONDARY
PATTERN HEIGHT	HIGH (or LOW)
PATTERN SELECTOR	RASTER
Engine Speed	Curb idle speed

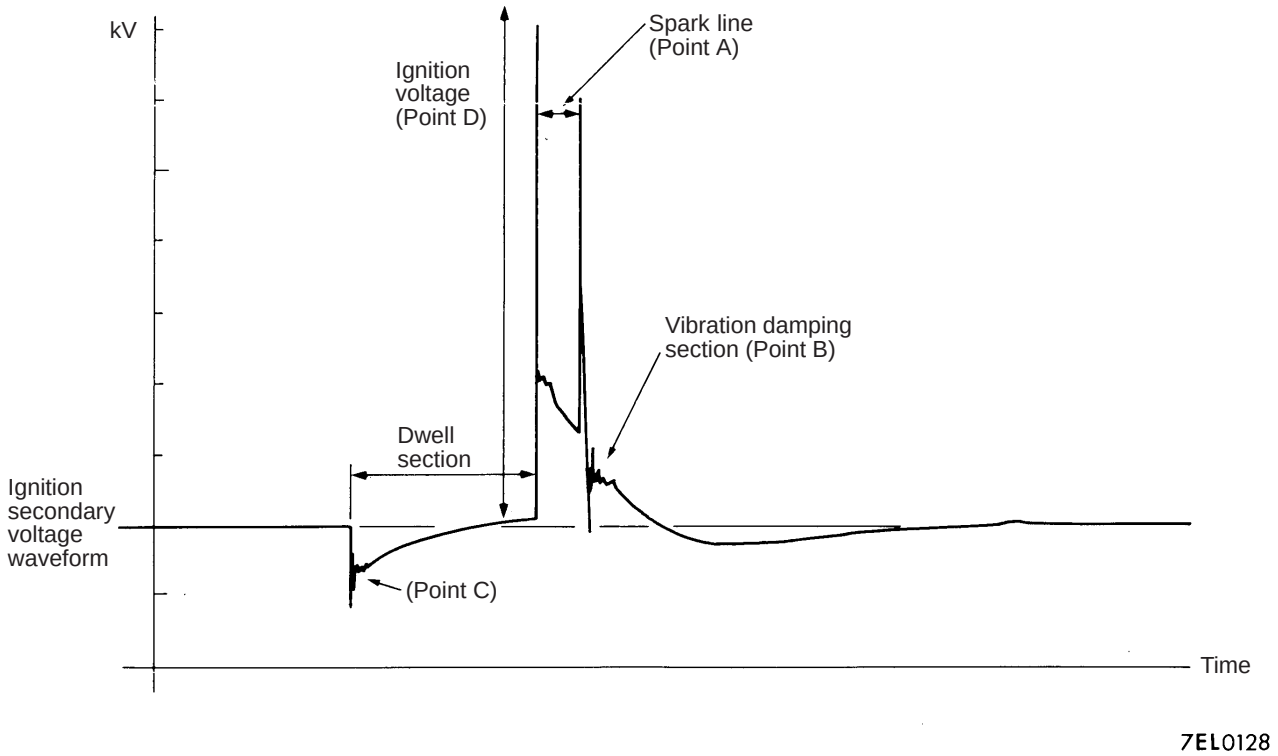

WAVEFORM OBSERVATION POINTS

Point A: The height, length and slope of the spark line show the following trends (Refer to abnormal waveform examples, 1, 2, 3 and 4).

Spark line		Plug gap	Condition of electrode	Compression force	Concentration of air mixture	Ignition timing	Spark plug cable
Length	Long	Small	Normal	Low	Rich	Advanced	Leak
	Short	Large	Large wear	High	Lean	Retarded	High resistance
Height	High	Large	Large wear	High	Lean	Retarded	High resistance
	Low	Small	Normal	Low	Rich	Advanced	Leak
Slope		Large	Plug is fouled	–	–	–	–

Point B: Number of vibration in reduction vibration section (Refer to abnormal waveform example 5)

Number of vibrations	Coil and condenser
Three or more	Normal
Except above	Abnormal

Point C: Number of vibrations at beginning of dwell section (Refer to abnormal waveform example 5)

Number of vibrations	Coil
5–6 or higher	Normal
Except above	Abnormal

Point D: Ignition voltage height (distribution per each cylinder) shows the following trends.

Ignition voltage	Plug gap	Condition of electrode	Compression force	Concentration of air mixture	Ignition timing	Spark plug cable
High	Large	Large wear	High	Lean	Retarded	High resistance
Low	Small	Normal	Low	Rich	Advanced	Leak

EXAMPLES OF ABNORMAL WAVEFORMS

Abnormal waveform	Wave characteristics	Cause of problem
Example 1 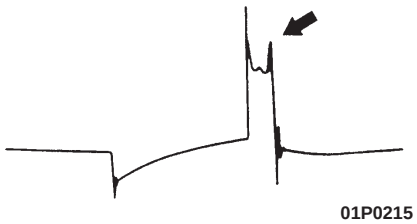 01P0215	Spark line is high and short.	Spark plug gap is too large.
Example 2 01P0216	Spark line is low and long, and is sloping. Also, the second half of the spark line is distorted. This could be a result of misfiring.	Spark plug gap is too small.
Example 3 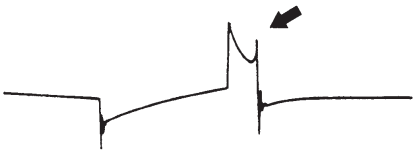 01P0217	Spark line is low and long, and is sloping. However, there is almost no spark line distortion.	Spark plug gap is fouled.
Example 4 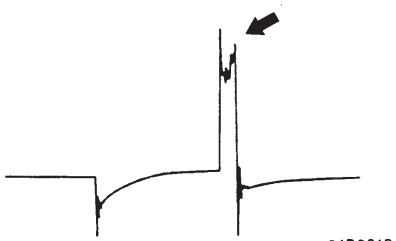 01P0218	Spark line is high and short. Difficult to distinguish between this and abnormal waveform example 1.	Spark plug cable is nearly falling off. (Causing a dual ignition)
Example 5 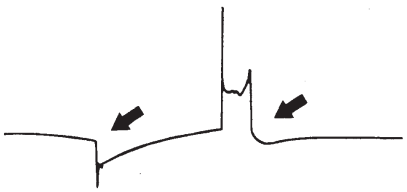 01P0219	No waves in wave damping section.	Layer short in ignition coil

Ignition Primary Voltage Waveform Check

MEASUREMENT METHOD

1. Disconnect the distributor connector and connect the special tool (test harness: MB991348) in between. (All of the terminals should be connected.)

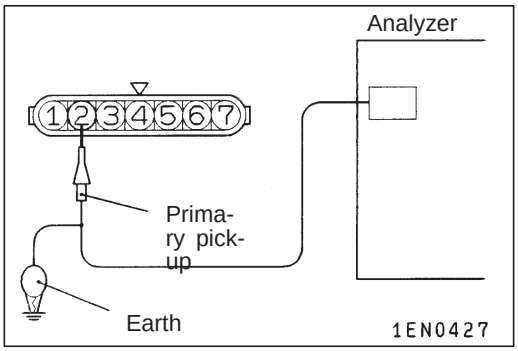

2. Connect the analyzer primary pickup to the distributor connector terminal 2.
3. Connect the primary pickup earth terminal.
4. Clamp the spark plug cable with the trigger pickup.

   NOTE
   The waveform of the cylinder clamped to the trigger pickup will appear at the left edge of the screen.

STANDARD WAVEFORM

Observation conditions

FUNCTION	SECONDARY
PATTERN HEIGHT	HIGH (or LOW)
PATTERN SELECTOR	RASTER
Engine Speed	Curb idle speed

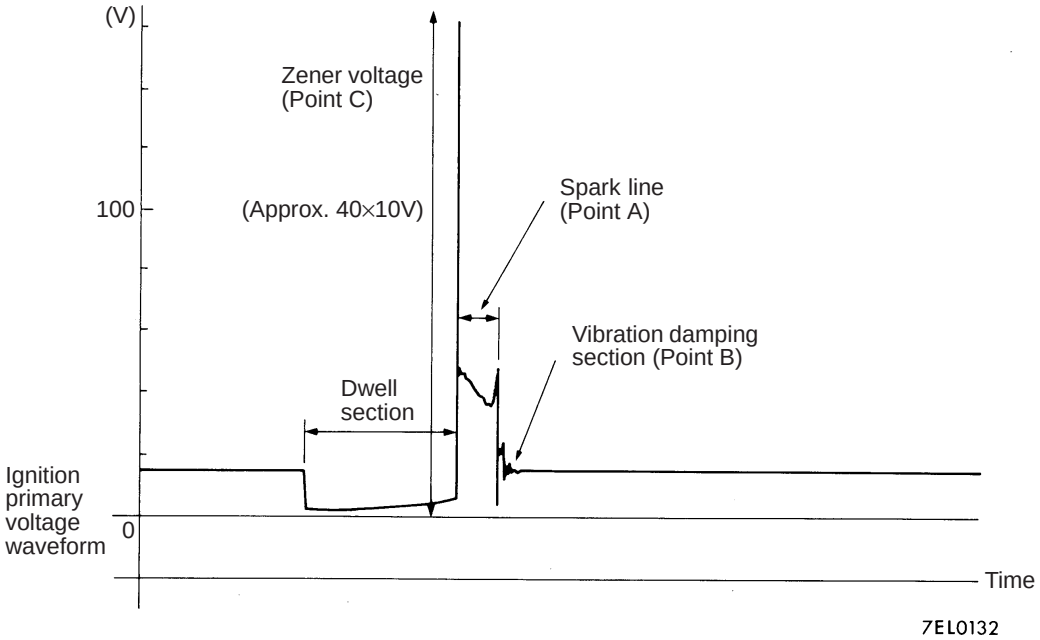

Observation conditions

(Only the pattern selector shown below changes from the previous conditions)

PATTERN SELECTOR	DISPLAY

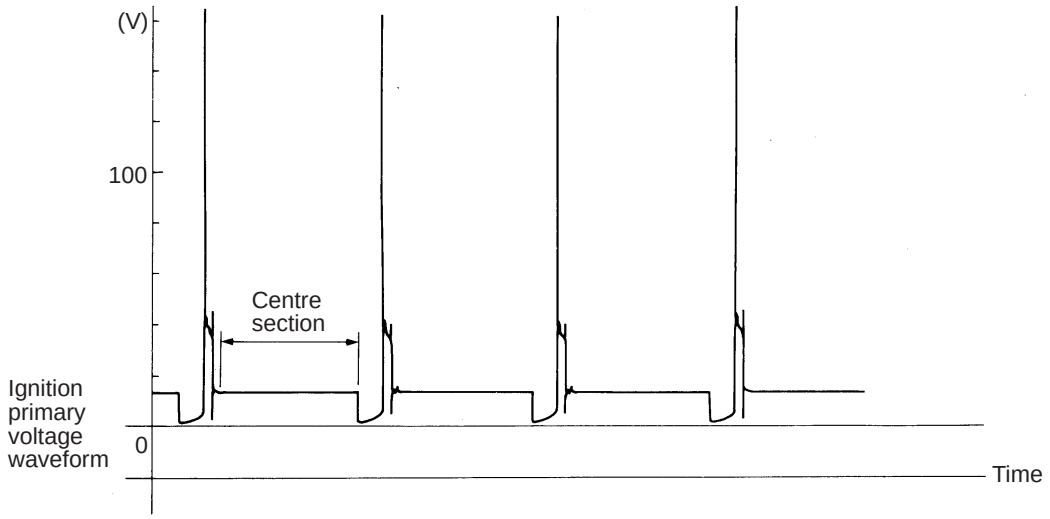

WAVEFORM OBSERVATION POINTS

Point A: The height, length and slope of the spark line (refer to abnormal waveform examples 1, 2, 3 and 4) show the following trends.

Spark line		Plug gap	Condition of electrode	Compression force	Concentration of air mixture	Ignition timing	High tension cable
Length	Long	Small	Normal	Low	Rich	Advanced	Leak
	Short	Large	Large wear	High	Lean	Retarded	High resistance
Height	High	Large	Large wear	High	Lean	Retarded	High resistance
	Low	Small	Normal	Low	Rich	Advanced	Leak
Slope		Large	Plug is fouled	–	–	–	–

Point B: Number of vibration in reduction vibration section (Refer to abnormal waveform example 5)

Number of vibrations	Coil, condenser
3 or higher	Normal
Except above	Abnormal

Point C: Height of Zener voltage

Height of Zener voltage	Probable cause
High	Problem in Zener diode
Low	Abnormal resistance in primary coil circuit

EXAMPLES OF ABNORMAL WAVEFORMS

Abnormal waveform	Wave characteristics	Cause of problem
Example 1 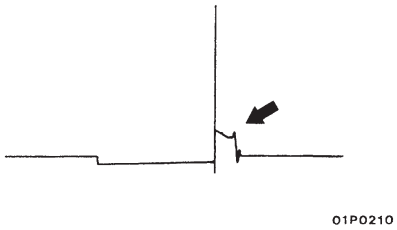 01P0210	Spark line is high and short.	Spark plug gap is too large.
Example 2 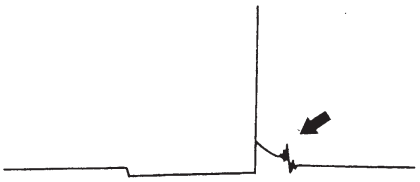 01P0211	Spark line is low and long, and is sloping. Also, the second half of the spark line is distorted. This could be a result of misfiring.	Spark plug gap is too small.
Example 3 01P0212	Spark line is low and long, and is sloping. However, there is almost no spark line distortion.	Spark plug gap is fouled.
Example 4 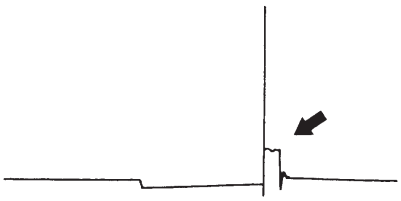 01P0213	Spark line is high and short.	Spark plug cable is nearly falling off. (Causing a dual ignition)
Example 5 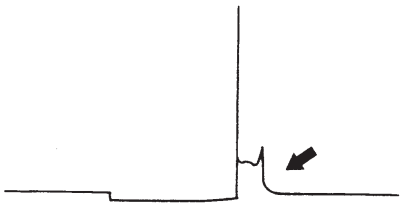 01P0214	No waves in wave damping section	Layer short in ignition coil

IGNITION COIL <GDI>

REMOVAL AND INSTALLATION

Pre-removal and Post-installation Operation
Engine Cover Removal and Installation

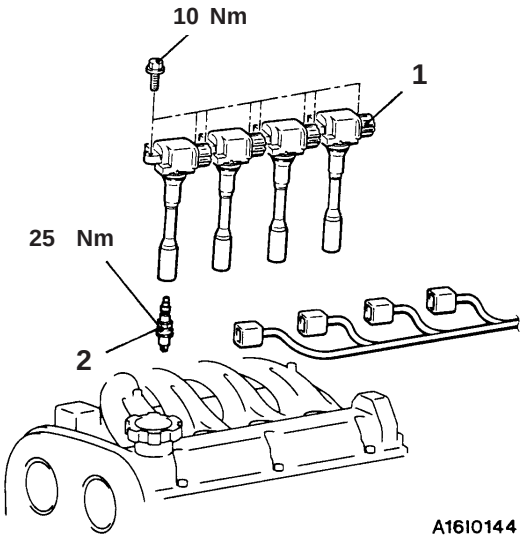

Removal steps

1. Ignition coil assembly
2. Spark plug

CAMSHAFT POSITION SENSOR <GDI>

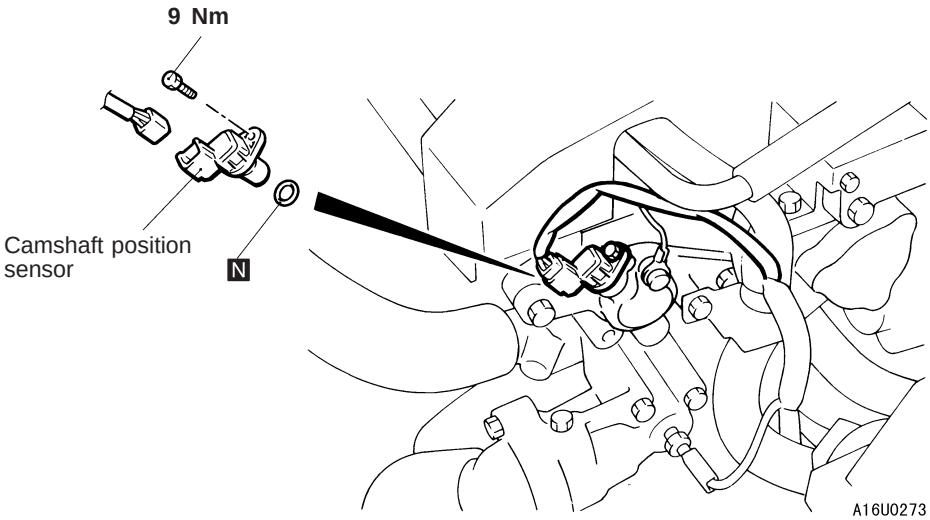

CRANK ANGLE SENSOR <GDI>

16300250121

REMOVAL AND INSTALLATION

Pre-removal and Post-installation Operation
- Timing Belt Front Lower Cover Removal and Installation (Refer to GROUP 11A – Timing Belt.)

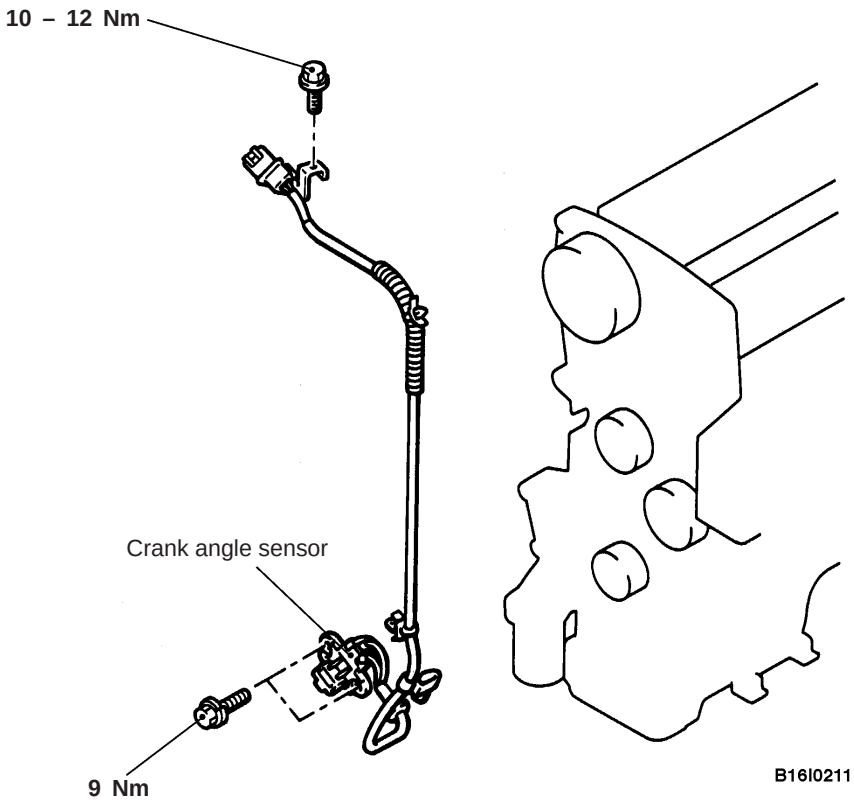

DISTRIBUTOR <MPI>

16300200256

REMOVAL AND INSTALLATION

Pre-removal Operation
- Air Cleaner Removal

Post-installation Operation
- Air Cleaner Installation
- Ignition Timing Check and Adjustment (Refer to GROUP 11B – On-vehicle Service.)

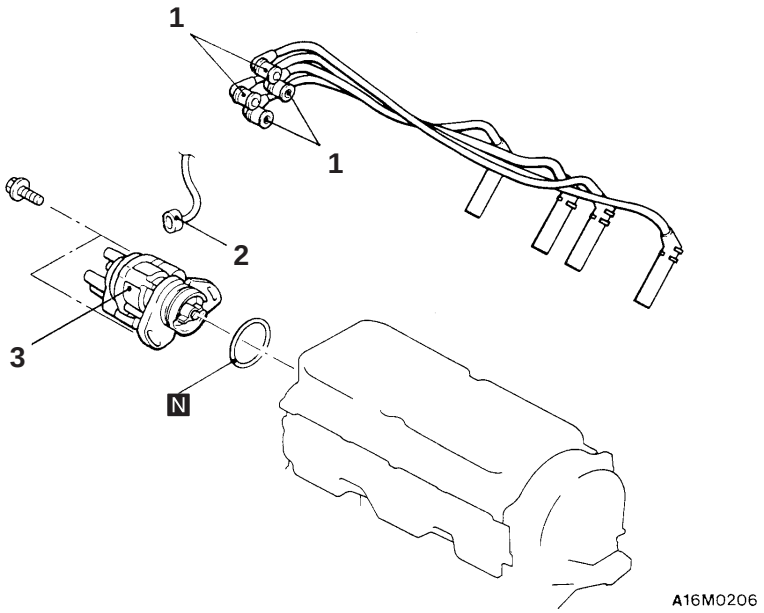

Removal steps

1. Spark plug cable connection
2. Distributor connector
3. ▶A◀ Distributor

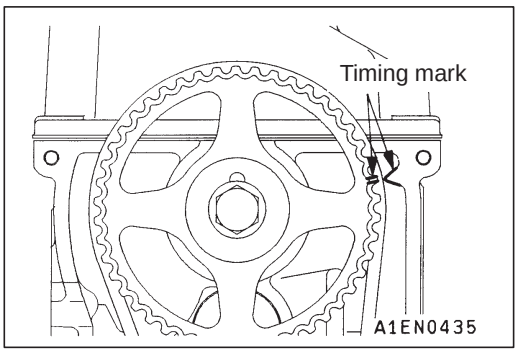

INSTALLATION SERVICE POINT

▶A◀ DISTRIBUTOR INSTALLATION

1. Remove the timing belt upper cover.
2. Turn the crankshaft clockwise to align the timing marks.

   NOTE
   The No.1 cylinder will be at compression top dead centre if the timing mark on the camshaft sprocket is aligned with the timing mark on the cylinder head.

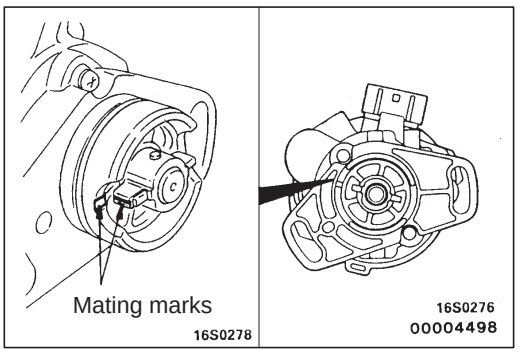

3. Align the mating mark on the distributor housing side with the mating mark on the coupling side.
4. Install the distributor to the engine.

DISASSEMBLY AND REASSEMBLY

16300220078

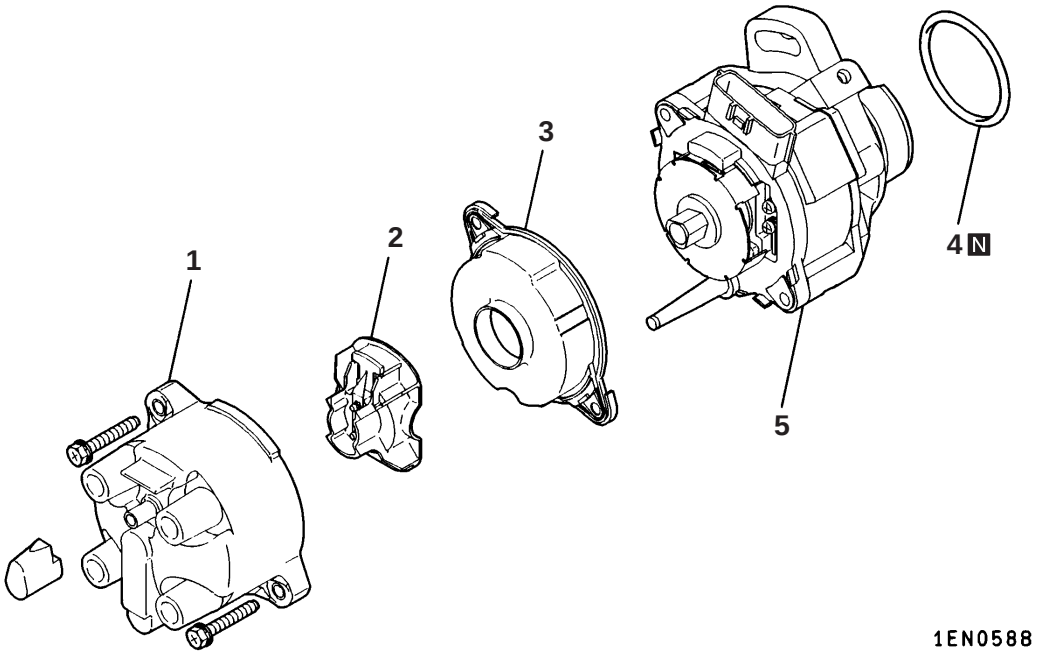

1. Distributor cap
2. Rotor
3. Cover
4. O-ring
5. Distributor housing

INSPECTION

16300230040

Check the following points; repair or replace if a problem is found.

CAP, ROTOR

1. There must be no cracking in the cap.
2. There must be no damage to the cap's electrode or the rotor's electrode.
3. Clean away any dirt from the cap and rotor.

DETONATION SENSOR

16300280229

REMOVAL AND INSTALLATION

Pre-removal and Post-installation Operation
- Engine Cover Removal and Installation <GDI>
- Air Cleaner Removal and Installation <GDI>

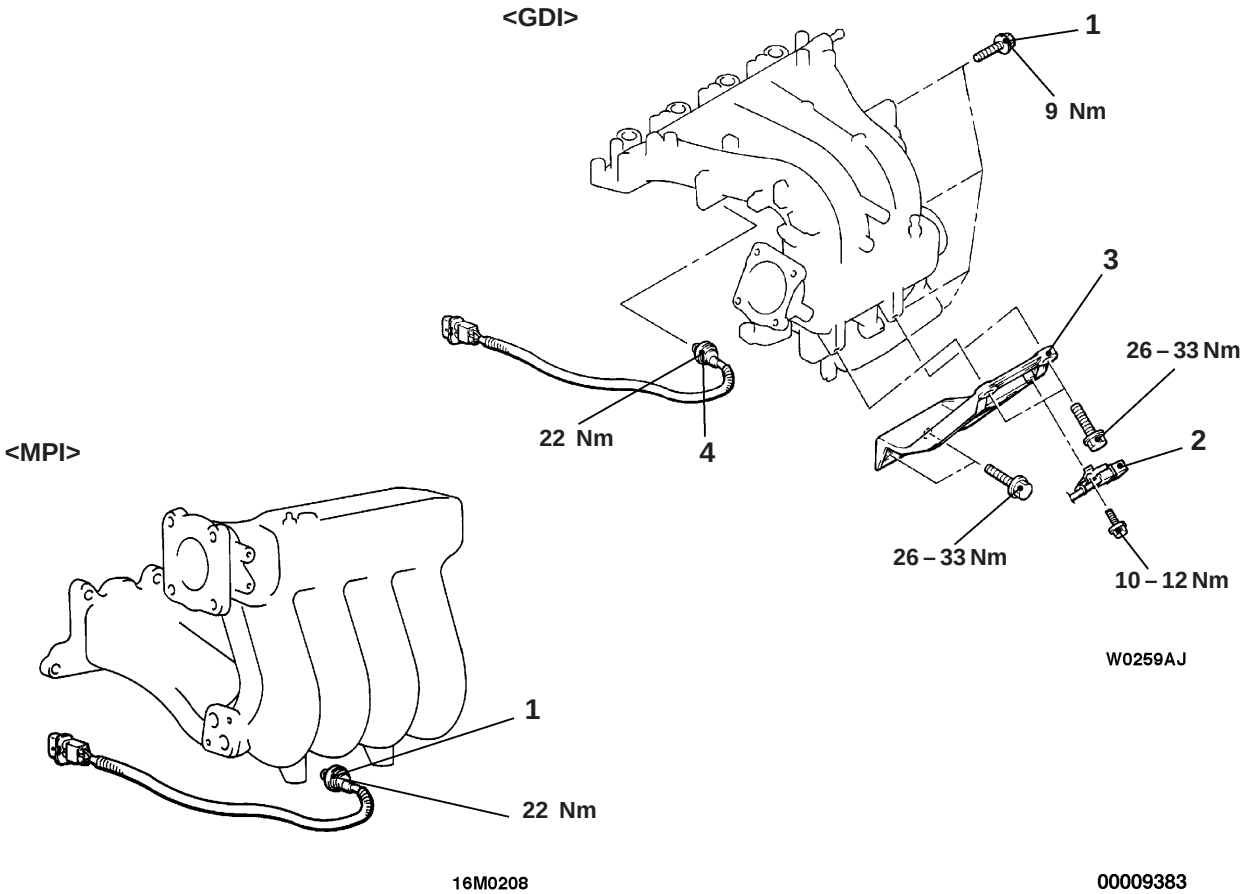

Removal steps

1. Surging resonator mounting bolt
2. Harness connector clamp (for oxygen sensor)
3. Intake manifold stay

◀A▶ 4. Detonation sensor

Caution
Do not subject the detonation sensor to any shocks.

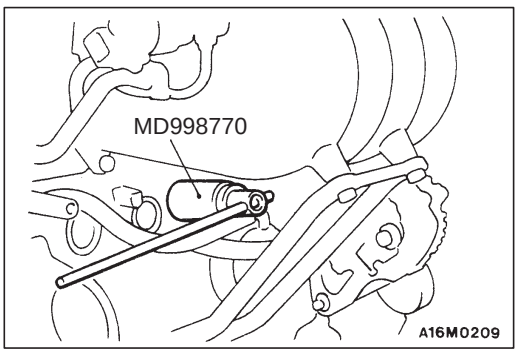

REMOVAL SERVICE POINT

◀A▶ DETONATION SENSOR REMOVAL