Fig. 17: Courtesy Lamps Circuit

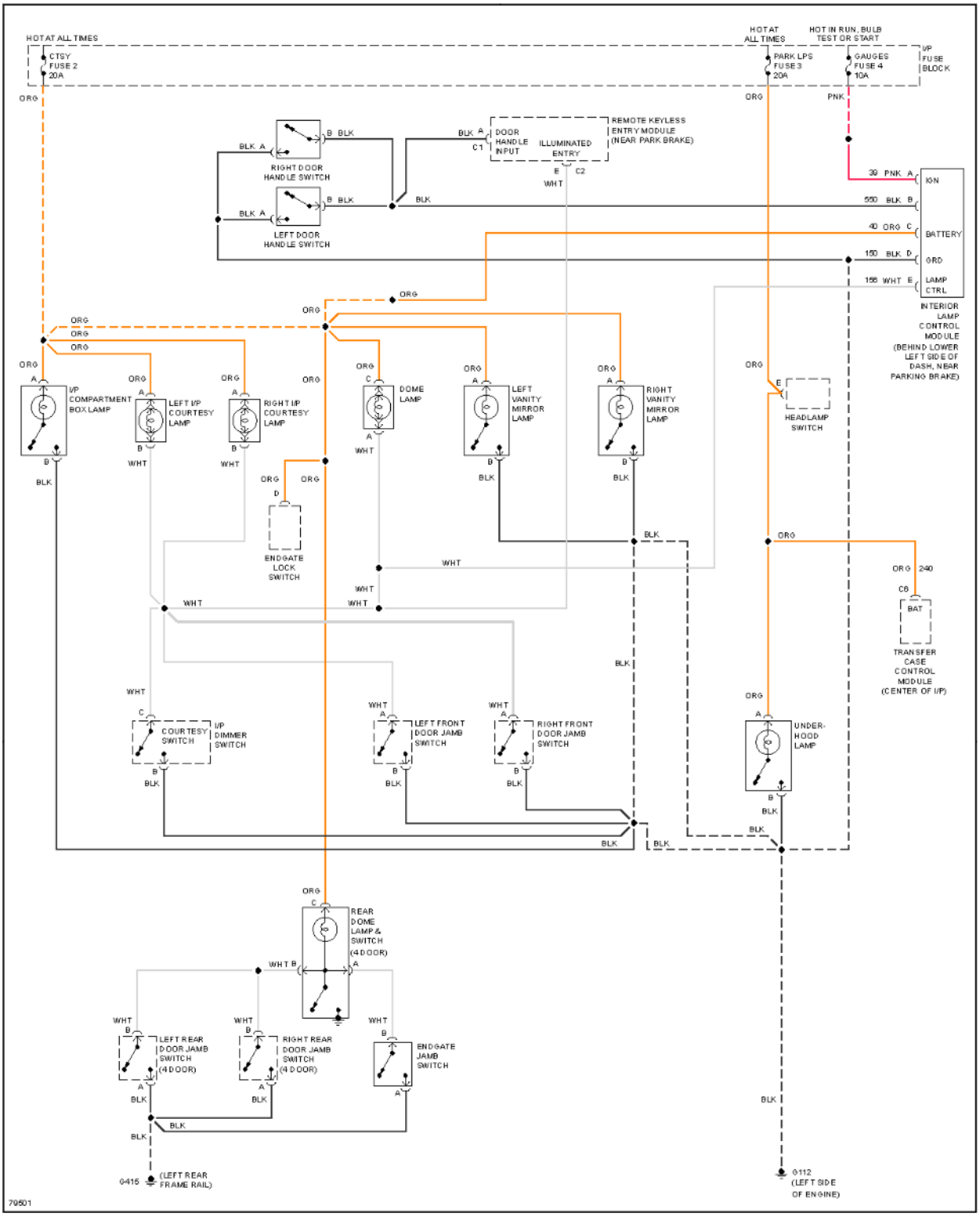

cardiagn.com

 © 2011 Mitchell Repair Information Company, LLC.