SPECIFICATIONS

FASTENER TIGHTENING SPECIFICATIONS

Fastener Tightening Specifications

Application	Specifications	
	Metric	English
Door Window Front Weatherstrip Retainer to Applique Screws	1.5 N.m	13 lb in
Door Window Front Weatherstrip Retainer to Windshield Frame Screws	3.4 N.m	30 lb in
Fender Upper Flange Screws	1.9 N.m	17 lb in
Filler Panel Screws	2.5 N.m	22 lb in
Rearview Mirror Mount Tension Screw	1.5 N.m	13 lb in
Side Retainer to Applique Screws	2.5 N.m	22 lb in
Side Retainer to Roof	1.4 N.m	12 lb in
Side Retainer to Window Frame Screws	3.4 N.m	30 lb in
Side Retainer to Windshield Pillar	2.5 N.m	22 lb in
Side Reveal Molding Screws	2.5 N.m	22 lb in
Windshield Side Reveal Molding Screws	1.8 N.m	16 lb in
Windshield Upper Weatherstrip Retainer Screws	3.4 N.m	30 lb in
Windshield Weatherstrip Top Corner Screws	3.4 N.m	30 lb in

SCHEMATIC AND ROUTING DIAGRAMS

DEFOGGER SCHEMATICS

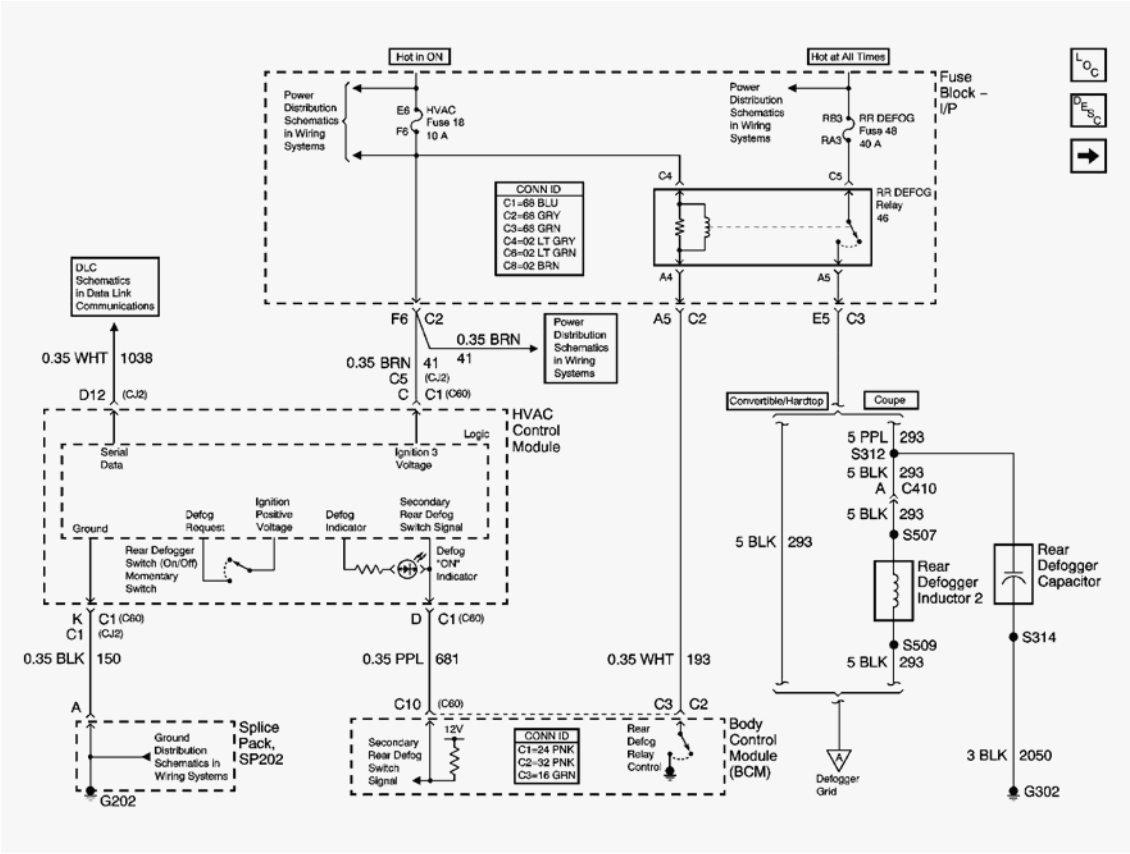

Fig. 1: Power, Switch And Relay Schematics
Courtesy of GENERAL MOTORS CORP.

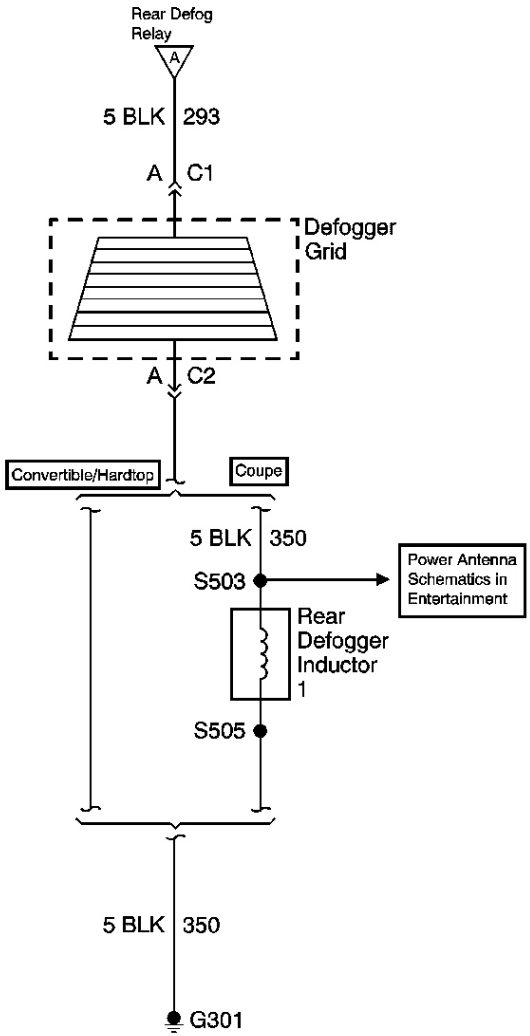

Fig. 2: Ground And Defogger Grid Schematics
Courtesy of GENERAL MOTORS CORP.

INSIDE REARVIEW MIRROR SCHEMATICS

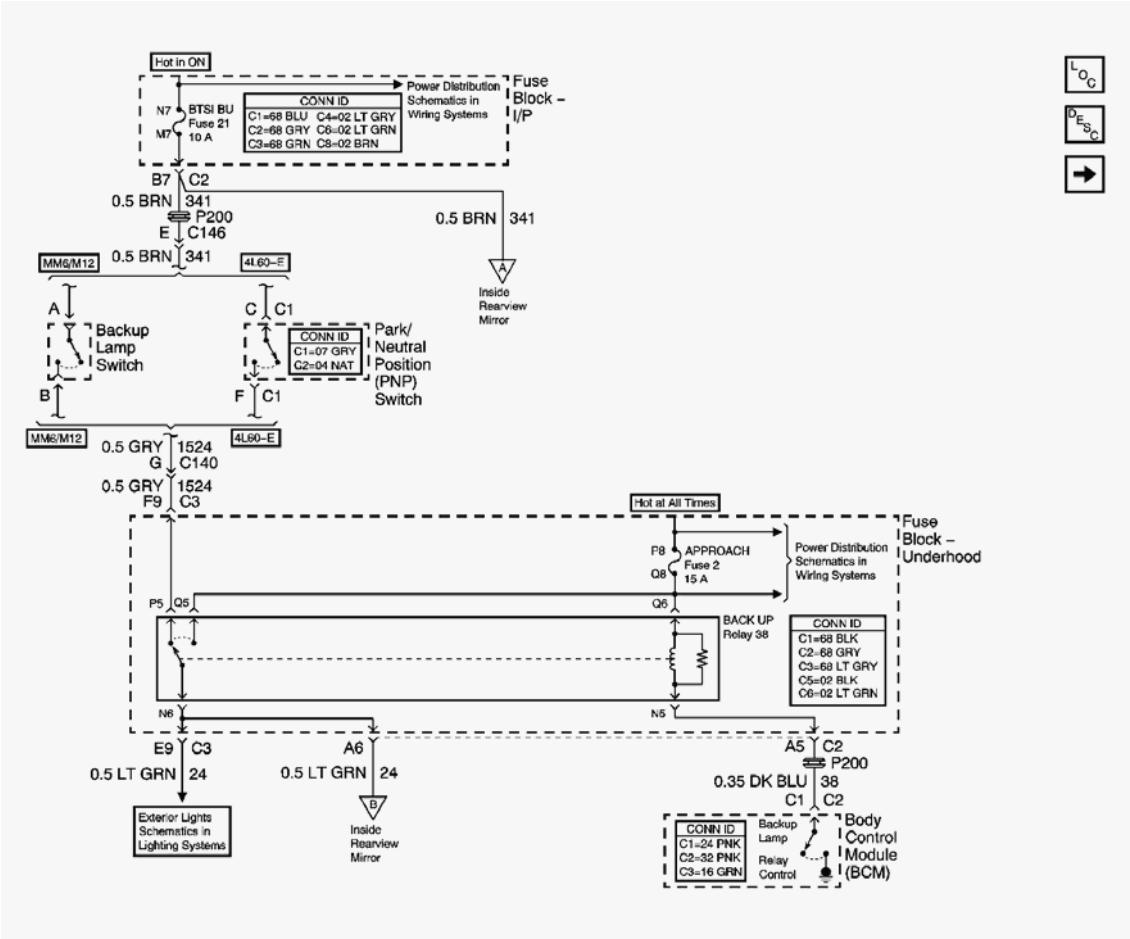

Fig. 3: Backup Lamp Signal Schematics
Courtesy of GENERAL MOTORS CORP.

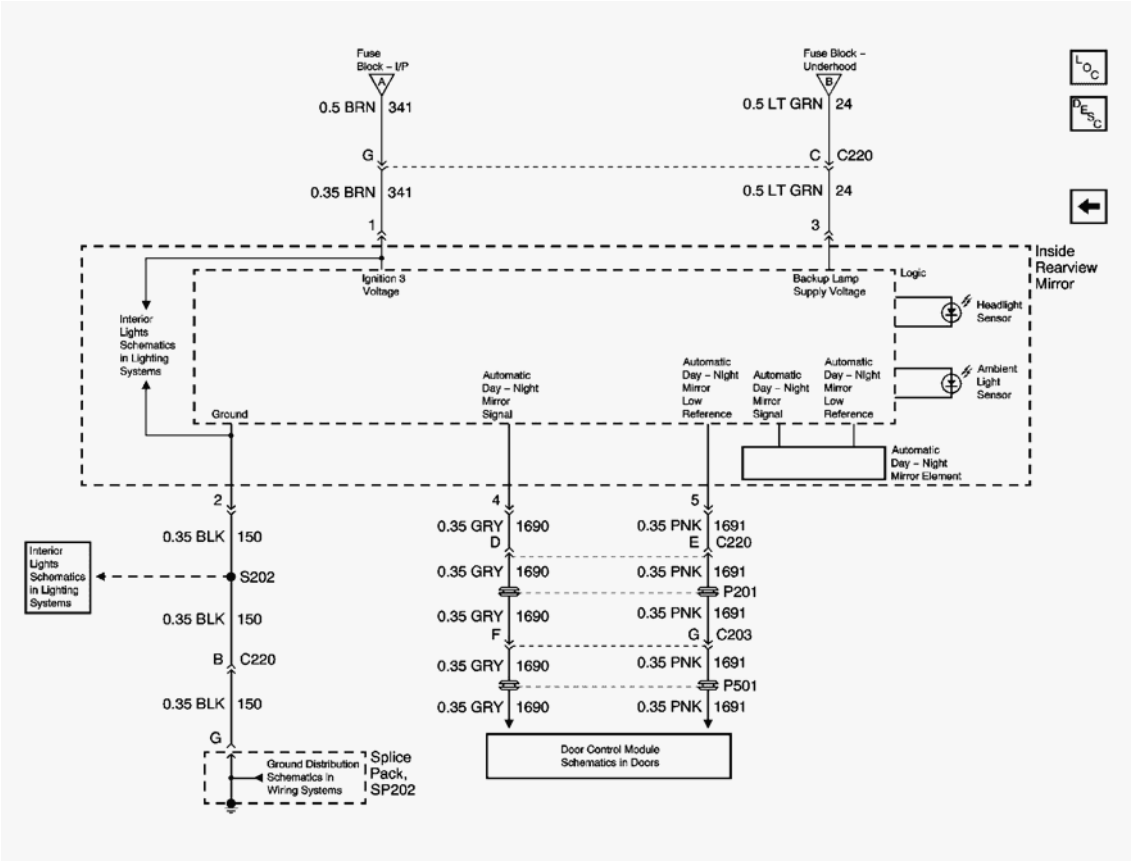

Fig. 4: Headlight And Photo Sensors Schematics
Courtesy of GENERAL MOTORS CORP.

COMPONENT LOCATOR

STATIONARY WINDOWS COMPONENT VIEWS

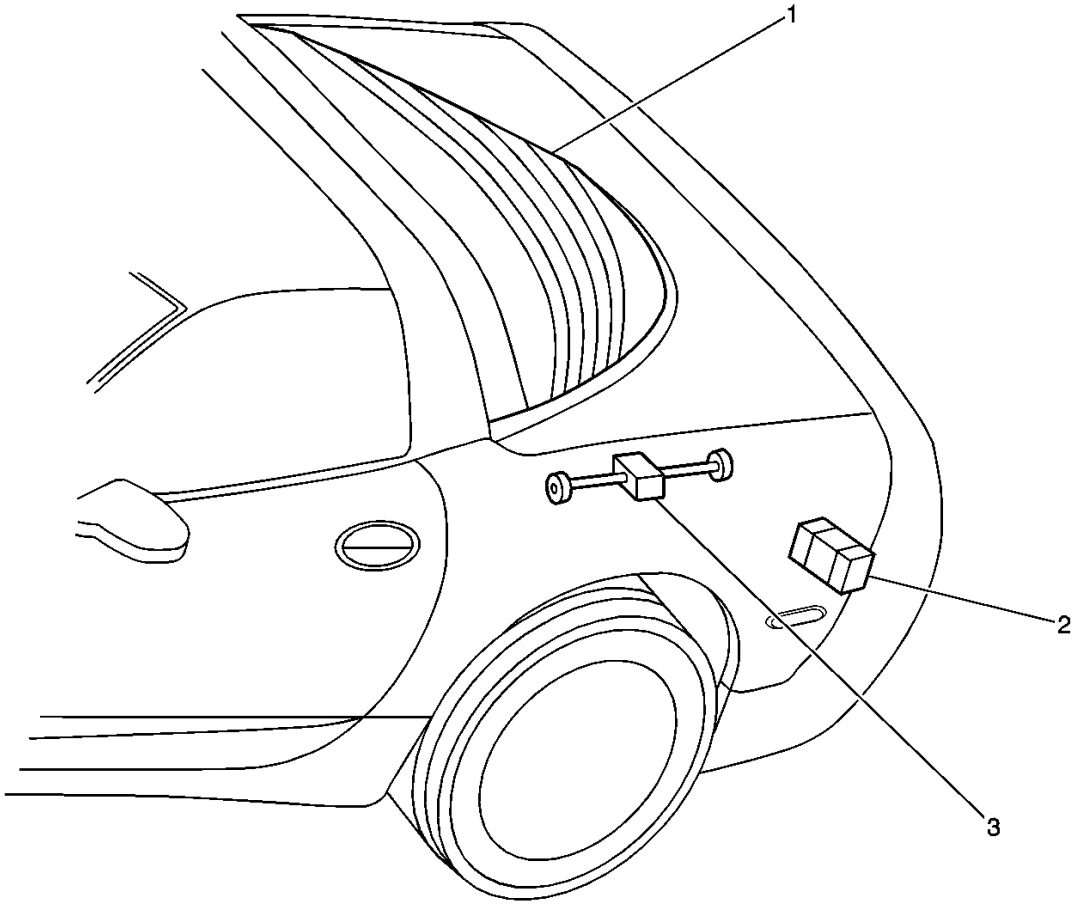

Fig. 5: Rear of Vehicle Component View - Left
Courtesy of GENERAL MOTORS CORP.

Callouts For Fig. 5

Callout	Component Name
1	Defogger Grid
2	Electronic Suspension Control (ESC) Module
3	Remote Control Door Lock Receiver (RCDLR)

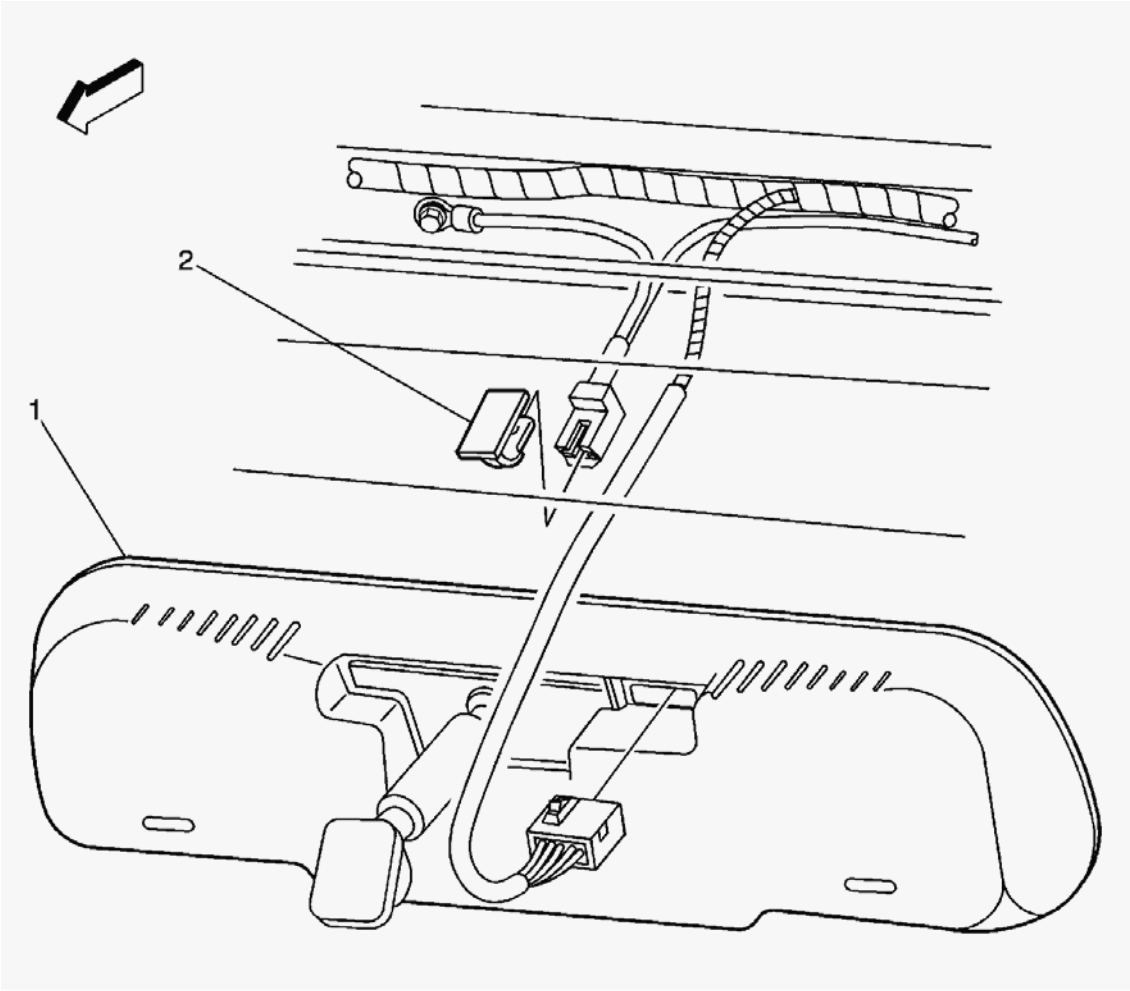

Fig. 6: Inside Rear View Mirror Component View
Courtesy of GENERAL MOTORS CORP.

Callouts For Fig. 6

Callout	Component Name
1	Inside Rearview Mirror
2	Front Window Antenna (Coupe/Hardtop)

STATIONARY WINDOWS CONNECTOR END VIEWS

Inside Rearview Mirror Terminal Identification - DDO

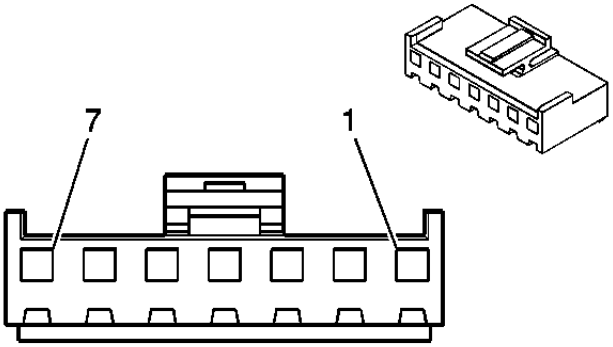

Connector Part Information		• **15393256** • **7-Way F Metri-Pack 150 Series (BLK)**	
Pin	**Wire Color**	**Circuit No.**	**Function**
1	BRN	341	Ignition 3 Voltage
2	BLK	150	Ground
3	LT GRN	24	Backup Lamp Supply Voltage
4	GRY	1690	Automatic Day/Night Mirror Signal
5	PNK	1691	Automatic Day/Night Mirror Low Reference
6	ORN	740	Battery Positive Voltage
7	ORN	640	Battery Positive Voltage

Inside Rearview Mirror Terminal Identification - W/O DDO

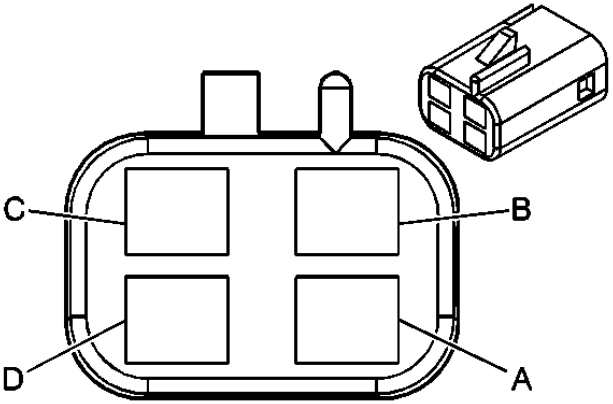

Connector Part Information		• **12047785** • **4-Way F Metri-Pack 150 Series (BLK)**	

Pin	Wire Color	Circuit No.	Function
A	ORN	740	Battery Positive Voltage
B	ORN	640	Battery Positive Voltage
C	BLK	150	Ground
D	BRN	341	Ignition 3 Voltage

Rear Defogger Grid Connector Terminal Identification (C1)

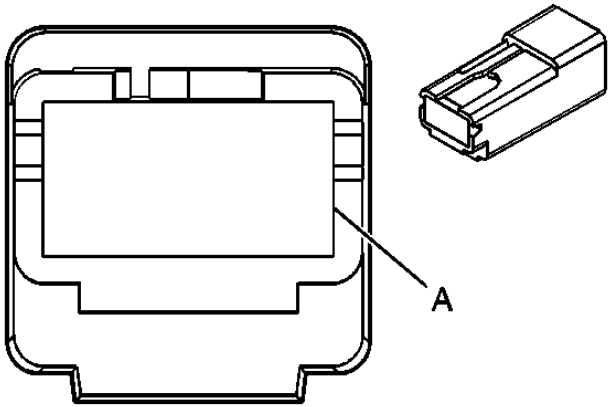

Connector Part Information		• **12092133** • **1-Way F Metri-Pack 630 Series Self Lock (BLK)**	
Pin	**Wire Color**	**Circuit No.**	**Function**
A	BLK	293	Rear Defog Element Supply Voltage

Rear Defogger Grid Connector Terminal Identification (C2)

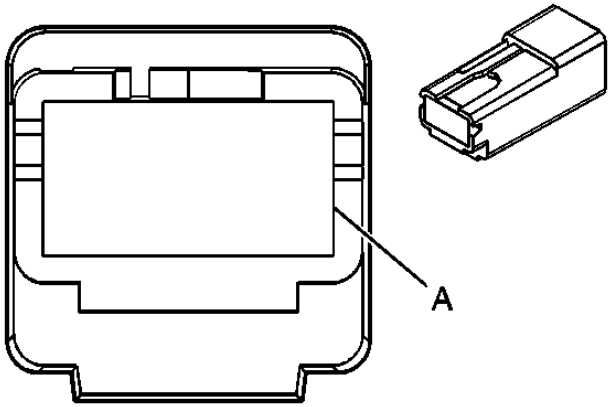

Connector Part Information		• 12092133 • 1-Way F Metri-Pack 630 Series Self Lock (BLK)	
Pin	**Wire Color**	**Circuit No.**	**Function**
A	BLK	350	Ground

DIAGNOSTIC INFORMATION AND PROCEDURES

DIAGNOSTIC STARTING POINT - STATIONARY WINDOWS

For the inside rearview mirror with the automatic day-night feature, begin the diagnosis by reviewing the system Description and Operation. Reviewing the Description and Operation information will help you determine the correct symptom diagnostic procedure when a malfunction exists. Reviewing the Description and Operation information will also help you determine if the condition described by the customer is normal operation. Refer to **Symptoms - Stationary Windows** in order to identify the correct procedure for diagnosing the system and where the procedure is located.

For the rear window defogger, begin the diagnosis with the **Diagnostic System Check - Defogger** . The Diagnostic System Check will provide the following information:

- The identification of the control modules which command the system
- The ability of the control modules to communicate through the serial data circuit
- The identification of any stored diagnostic trouble codes (DTCs) and their status

The use of the Diagnostic System Check will identify the correct procedure for diagnosing the system and where the procedure is located.

DIAGNOSTIC SYSTEM CHECK - DEFOGGER

Test Description

The number(s) below refer to the step number(s) on the diagnostic table.

2: Lack of communication may be due to a partial malfunction of the class 2 serial data circuit or due to a total malfunction of the class 2 serial data circuit. The specified procedure will determine the particular condition.

5: The presence of DTCs which begin with "U" indicate some other module is not communicating. The specified procedure will compile all the available information before tests are performed.

Diagnostic System Check - Defogger

Step	Action	Yes	No
1	Install a scan tool. Does the scan tool power up?	Go to **Step 2**	Go to **Scan Tool Does Not Power Up** in Data Link Communications
	1. Turn ON the ignition, with the engine OFF.		

2	2. Attempt to establish communication with the following modules: • Body control module (BCM) • Powertrain control module (PCM) Does the scan tool communicate with these systems?	Go to **Step 3**	Go to **Scan Tool Does Not Communicate with Class 2 Device** in Data Link Communications
3	**IMPORTANT:** **The engine may start during the following step. Turn OFF the engine as soon as you have observed the Crank power mode.** 1. Access the Class 2 Power Mode in the Diagnostic Circuit Check on the scan tool. 2. Rotate the ignition switch through all positions while observing the Class 2 Power Mode on the Scan Tool. Refer to the Serial Data Power Mode table within the **Body Control System Description and Operation** in Body Control Systems, for a list of the power mode states that correspond to each ignition switch position. Does the Class 2 Power Mode parameter reading match the ignition switch position for all the selected positions?	Go to **Step 4**	Go to **Power Mode Mismatch** in Body Control System
4	Select the display DTCs function on the scan tool for the following modules: • Body control module (BCM) • Powertrain control module (PCM) Does the scan tool display any DTCs?	Go to **Step 5**	Go to **Symptoms - Stationary Windows**
5	Does the scan tool display any DTCs which begin with a "U"?	Go to **Scan Tool Does Not Communicate with Class 2 Device** in Data Link Communications	Go to **Step 6**
6	Does the scan tool display DTC B0605 or B1000?	Go to **Diagnostic Trouble Code (DTC) List** in Body Control System	Go to **Step 7**
	Does the scan tool display DTC P0562, P0563, P1637, or P1638?	Go to **Diagnostic Trouble Code (DTC)**	Go to **Diagnostic**

7		**List** in Engine Electrical	**Trouble Code (DTC) List**

SCAN TOOL OUTPUT CONTROLS

Body Control Module (BCM)

Scan Tool Output Control	Additional Menu Selection(s)	Description
Rear Defogger	Miscellaneous Test	The Body Control Module (BCM) actuates the RR DEFOG relay when you select ON. The rear window defogger grid should be slightly warm.

SCAN TOOL DATA LIST

Body Control Module (BCM)

Scan Tool Parameter	Data List	Units Displayed	Typical Data Value
Ignition On/Engine Off			
HVAC Rear Defog Switch	Input Data 2	Active/Inactive	Inactive
Rear Defog Relay	Input Data 2	Active/Inactive	Inactive

SCAN TOOL DATA DEFINITIONS

Body Control Module (BCM)

HVAC Rear Defog Switch

The scan tool displays Active or Inactive. This data parameter is used for the HVAC system with C60. When the rear defogger switch is depressed, the scan tool will display Active. When the switch is depressed again, the scan tool will display Inactive.

Rear Defog Relay

The scan tool displays Active or Inactive. When the BCM energizes the RR DEFOG relay, the scan tool will display Active. When the BCM de-energizes the RR DEFOG relay, the scan tool will display Inactive.

DIAGNOSTIC TROUBLE CODE (DTC) LIST

Diagnostic Trouble Code (DTC) List

DTC	Diagnostic Procedure	Module(s)
B0432	**DTC B0432**	BCM
B0433	**DTC B0433**	BCM

DTC B0432

Circuit Description

The Body Control Module (BCM) monitors the voltage level on the control circuit of the RR DEFOG relay. The voltage level should be near system voltage while the RR DEFOG relay is de-energized. The voltage will be pulled low when the BCM energizes the RR DEFOG relay. The BCM test the control circuit of the RR DEFOG relay while the relay is de-energized.

Conditions for Running the DTC

The ignition is ON.

Conditions for Setting the DTC

The BCM detects a low voltage level on the control circuit of the RR DEFOG relay for 2 seconds.

Action Taken When the DTC Sets

The rear window defogger will be disabled until the condition is no longer present.

Conditions for Clearing the DTC

- This DTC requires an ignition cycle in order to change from current to history.
- The BCM no longer detects a low voltage level on the control circuit of the RR DEFOG relay.
- A history DTC will clear after 50 consecutive ignition cycles if the condition for the malfunction is no longer present.

Test Description

The number(s) below refer to the step number(s) on the diagnostic table.

2: Listen for an audible click when the RR DEFOG relay operates. Command both the ON and OFF states. Repeat the commands as necessary.

3: Tests for voltage at the coil side of the RR DEFOG relay. The HVAC fuse supplies power to the coil side of the RR DEFOG relay.

4: Verifies that the BCM is providing ground to the RR DEFOG relay.

5: Tests if ground is constantly being applied to the RR DEFOG relay.

6: Tests for an open on the control circuit of the RR DEFOG relay.

DTC B0432

Step	Action	Yes	No
Schematic Reference:Defogger Schematics **Connector End View Reference:Stationary Windows Connector End Views**			
1	Did you perform the Defogger Diagnostic System Check?	Go to **Step 2**	Go to **Diagnostic System Check - Defogger**

2	1. Turn ON the ignition, with the engine OFF. 2. Select from miscellaneous test, the Rear Defogger from the BCM output controls. 3. With a scan tool, command the RR DEFOG relay ON and OFF. Do you hear a click when you command the RR DEFOG relay ON and OFF?	Go to **Testing for Intermittent Conditions and Poor Connections** in Wiring Systems	Go to **Step 3**
3	1. Turn OFF the ignition. 2. Disconnect the RR DEFOG relay. 3. Turn ON the ignition, with the engine OFF. 4. Connect a test between the Ignition 3 voltage circuit of the RR DEFOG relay coil and a good ground. Does the test lamp illuminate?	Go to **Step 4**	Go to **Step 10**
4	1. Connect a test lamp between the control circuit of the RR DEFOG relay and the Ignition 3 voltage circuit of the RR DEFOG relay coil. 2. With a scan tool, command the RR DEFOG relay ON and OFF. Does the test lamp turn ON and OFF with each command?	Go to **Step 8**	Go to **Step 5**
5	Does the test lamp remain illuminated with each command?	Go to **Step 7**	Go to **Step 6**
6	Test the control circuit of the RR DEFOG relay for an open or high resistance. Refer to **Circuit Testing** and **Wiring Repairs** in Wiring Systems. Did you find and correct the condition?	Go to **Step 13**	Go to **Step 9**
7	Test the control circuit of the RR DEFOG relay for a short to ground. Refer to **Circuit Testing** and **Wiring Repairs** in Wiring Systems. Did you find and correct the condition?	Go to **Step 13**	Go to **Step 9**
8	Inspect for poor connections at the RR DEFOG relay. Refer to **Testing for Intermittent Conditions and Poor Connections** and **Connector Repairs** in Wiring Systems. Did you find and correct the condition?	Go to **Step 13**	Go to **Step 11**
9	Inspect for poor connections at the harness connector of the BCM. Refer to **Testing for Intermittent Conditions and Poor Connections**		

	and **Connector Repairs** in Wiring Systems. Did you find and correct the condition?	Go to **Step 13**	Go to **Step 12**
10	Repair an open or high resistance in Ignition 3 voltage circuit of the RR DEFOG relay coil. Refer to **Wiring Repairs** in Wiring Systems. Did you complete the repair?	Go to **Step 13**	-
11	Replace the RR DEFOG relay. Did you complete the replacement?	Go to **Step 13**	-
12	**IMPORTANT:** **Perform the set up procedure for the Body Control Module (BCM).** Replace the BCM. Refer to **Body Control Module Replacement** in Body Control System.Did you complete the replacement?	Go to **Step 13**	-
13	1. Use the scan tool in order to clear the DTCs. 2. Operate the vehicle within the Conditions for Setting the DTC as specified in the supporting text. Does the DTC reset?	Go to **Step 2**	System OK

DTC B0433

Circuit Description

The Body Control Module (BCM) monitors the voltage level on the control circuit of the RR DEFOG relay. The voltage level should be near system voltage while the RR DEFOG relay is de-energized. The voltage will be pulled low when the BCM energizes the RR DEFOG relay. The BCM test the control circuit of the RR DEFOG relay while the relay is energized.

Conditions for Running the DTC

The engine is running.

Conditions for Setting the DTC

The BCM detects a high voltage level on the control circuit of the RR DEFOG relay for 2 seconds.

Action Taken When the DTC Sets

The rear window defogger will be disabled until the condition is no longer present.

Conditions for Clearing the DTC

- This DTC requires an ignition cycle in order to change from current to history.

- The BCM no longer detects a high voltage level on the control circuit of the RR DEFOG relay only with the relay energized.
- A history DTC will clear after 50 consecutive ignition cycles if the condition for the malfunction is no longer present.

Test Description

The number(s) below refer to the step number(s) on the diagnostic table.

2: Listen for an audible click when the RR DEFOG relay operates. Command both the ON and OFF states. Repeat the commands as necessary.

3: Tests for voltage at the coil side of the RR DEFOG relay. The HVAC fuse supplies power to the coil side of the RR DEFOG relay.

4: Verifies that the BCM is providing ground to the RR DEFOG relay.

5: Tests if ground is constantly being applied to the RR DEFOG relay.

6: Tests for short to voltage on the control circuit of the RR DEFOG relay.

DTC B0433

Step	Action	Yes	No
Schematic Reference:Defogger Schematics **Connector End View Reference:Stationary Windows Connector End Views**			
1	Did you perform the Defogger Diagnostic System Check?	Go to **Step 2**	Go to **Diagnostic System Check - Defogger**
2	1. Turn ON the ignition, with the engine OFF. 2. Select from miscellaneous test, the Rear Defogger from the BCM output controls. 3. With a scan tool, command the RR DEFOG relay ON and OFF. Do you hear a click when you command the RR DEFOG relay ON and OFF?	Go to **Testing for Intermittent Conditions and Poor Connections** in Wiring Systems	Go to **Step 3**
3	1. Turn OFF the ignition. 2. Disconnect the RR DEFOG relay. 3. Turn ON the ignition, with the engine OFF. 4. Connect a test lamp between the Ignition 3 voltage circuit of the RR DEFOG relay coil and a good ground. Does the test lamp illuminate?	Go to **Step 4**	Go to **Step 10**
	1. Connect a test lamp between the control circuit of the RR DEFOG relay and the		

4	Ignition 3 voltage circuit of the RR DEFOG relay coil. 2. With a scan tool, command the RR DEFOG relay ON and OFF. Does the test lamp turn ON and OFF with each command?	Go to **Step 8**	Go to **Step 5**
5	Does the test lamp remain illuminated with each command?	Go to **Step 7**	Go to **Step 6**
6	Test the control circuit of the RR DEFOG relay for short to battery positive voltage. Refer to **Circuit Testing** and **Wiring Repairs** in Wiring Systems. Did you find and correct the condition?	Go to **Step 13**	Go to **Step 9**
7	Test the control circuit of the RR DEFOG relay for a short to ground. Refer to **Circuit Testing** and **Wiring Repairs** in Wiring Systems. Did you find and correct the condition?	Go to **Step 13**	Go to **Step 9**
8	Inspect for poor connections at the RR DEFOG relay. Refer to **Testing for Intermittent Conditions and Poor Connections** and **Connector Repairs** in Wiring Systems. Did you find and correct the condition?	Go to **Step 13**	Go to **Step 11**
9	Inspect for poor connections at the harness connector of the BCM. Refer to **Testing for Intermittent Conditions and Poor Connections** and **Connector Repairs** in Wiring Systems. Did you find and correct the condition?	Go to **Step 13**	Go to **Step 12**
10	Repair an open or high resistance in the Ignition 3 voltage circuit of the RR DEFOG relay. Refer to **Wiring Repairs** in Wiring Systems. Did you complete the repair?	Go to **Step 13**	-
11	Replace the RR DEFOG relay. Did you complete the replacement?	Go to **Step 13**	-
12	**IMPORTANT:** **Perform the set up procedure for the body control module (BCM).** Replace the BCM. Refer to **Body Control Module Replacement** in Body Control System.Did you complete the replacement?	Go to **Step 13**	-
13	1. Use the scan tool in order to clear the DTCs. 2. Operate the vehicle within the Conditions for Setting the DTC as specified in the supporting text.		

	Does the DTC reset?	Go to **Step 2**	System OK

SYMPTOMS - STATIONARY WINDOWS

IMPORTANT: For the inside rearview mirror with the automatic day-night feature, review the system operation in order to familiarize yourself with the system functions. Refer to Automatic Day-Night Mirror Description and Operation .

For the rear window defogger system, the following steps must be performed before using the symptom tables.

1. Perform the **Diagnostic System Check - Defogger** before using the symptom tables in order to verify that all of the following are true:
   - There are no DTCs set.
   - The control modules can communicate via the serial data link.
2. Review the rear window defogger system operation in order to familiarize yourself with the system functions. Refer to **Rear Window Defogger Description and Operation** .

Visual/Physical Inspection

- Inspect for aftermarket devices which could affect the operation of the rear window defogger or the automatic day-night feature of the inside rearview mirror. Refer to **Checking Aftermarket Accessories** in Wiring Systems.
- Inspect the easily accessible or visible system components for obvious damage or conditions which could cause the symptom.

Intermittent

Faulty electrical connections or wiring may be the cause of intermittent conditions. Refer to **Testing for Intermittent Conditions and Poor Connections** in Wiring Systems.

Symptom List

Refer to a symptom diagnostic procedure from the following list in order to diagnose the symptom:

- **Defogger Inoperative - Rear Window (w/CJ2)**
- **Defogger Indicator Always On**
- **Defogger Grid Lines Diagnosis**
- **Mirrors - Automatic Day-Night Inoperative**

DEFOGGER INOPERATIVE - REAR WINDOW (W/CJ2)

Defogger Inoperative - Rear Window (w/CJ2)

Step	Action	Yes	No

Schematic Reference:Defogger Schematics
Connector End View Reference:Stationary Windows Connector End Views

1	Did you perform the Defogger Diagnostic System Check?	Go to **Step 2**	Go to **Diagnostic System Check - Defogger**
2	1. Start the engine. 2. Depress the rear window defogger switch. 3. Observe the rear window defogger indicator on the HVAC Control Module. Does the rear window defogger indicator illuminate?	Go to **Step 3**	Go to **Step 8**
3	Connect a test lamp between the rear window defogger grid and a good ground. Does the test lamp illuminate?	Go to **Step 4**	Go to **Step 5**
4	Connect a test lamp between the left side of the rear window defogger grid and the right side of the rear window defogger grid. Does the test lamp illuminate?	Go to **Testing for Intermittent Conditions and Poor Connections** in Wiring Systems	Go to **Step 10**
5	1. Turn OFF the ignition. 2. Disconnect the RR DEFOG relay. 3. Turn ON the ignition, with the engine OFF. 4. Connect a test lamp between the battery positive voltage circuit of the RR DEFOG relay switched input and a good ground. Does the test lamp illuminate?	Go to **Step 6**	Go to **Step 7**
6	1. Connect a 40 amp fused jumper between the battery positive voltage circuit of the RR DEFOG relay switched input and the relay switched output to the supply voltage circuit of the rear defogger. 2. Connect a test lamp between the rear window defogger grid and a good ground. Does the test lamp illuminate?	Go to **Step 9**	Go to **Step 12**
7	Test the battery positive voltage circuit of the RR DEFOG relay switched input for an open or high resistance. Refer to **Circuit Testing** and **Wiring Repairs** in Wiring Systems. Did you find and correct the condition?	Go to **Step 15**	Go to **Step 11**
8	Inspect for poor connection at the harness connector of the HVAC Control Module. Refer to **Testing for Intermittent Conditions and Poor Connections**		

	and **Connector Repairs** in Wiring Systems. Did you find and correct the condition?	Go to **Step 15**	Go to **Step 13**
9	Inspect for poor connection at the RR DEFOG relay. Refer to **Testing for Intermittent Conditions and Poor Connections** and **Connector Repairs** in Wiring Systems. Did you find and correct the condition?	Go to **Step 15**	Go to **Step 14**
10	Repair an open or high resistance in the ground circuit of the rear window defogger. Refer to **Wiring Repairs** in Wiring Systems. Did you complete the repair?	Go to **Step 15**	-
11	Repair a short to ground in the supply voltage circuit of the rear window defogger. Refer to **Wiring Repairs** in Wiring Systems. Did you complete the repair?	Go to **Step 15**	-
12	Repair an open or high resistance in the supply circuit of the rear window defogger. Refer to **Wiring Repairs** in Wiring Systems. Did you complete the repair?	Go to **Step 15**	-
13	Replace the HVAC Control Module. Refer to **HVAC Control Module Replacement** in HVAC Systems - Automatic. Did you complete the replacement?	Go to **Step 15**	-
14	Replace the RR DEFOG relay. Did you complete the replacement?	Go to **Step 15**	-
15	Operate the system in order to verify the repair. Did you correct the condition?	System OK	Go to **Step 2**

DEFOGGER INDICATOR ALWAYS ON

Defogger Indicator Always On

Step	Action	Yes	No
Schematic Reference:Defogger Schematics **Connector End View Reference:Stationary Windows Connector End Views**			
1	Did you perform the Defogger Diagnostic System Check?	Go to **Step 2**	Go to **Diagnostic System Check - Defogger**
2	1. Start the engine. 2. Command the rear window defogger indicator ON and OFF, by depressing the rear window defogger switch. 3. Observe the rear window defogger indicator on the HVAC Control Module.	Go to **Testing for Intermittent Conditions**	

	Does the rear window defogger indicator turn ON and OFF with each command?	**and Poor Connections** in Wiring Systems	Go to **Step 3**
3	1. Turn OFF the ignition. 2. Disconnect the harness connector C2 of the Body Control Module (BCM). 3. Turn ON the ignition, with the engine OFF. 4. Connect a test lamp between battery positive voltage and the secondary rear defogger switch signal circuit of the HVAC Control Module. Does the test lamp illuminate?	Go to **Step 4**	Go to **Step 5**
4	Test the secondary rear defogger switch signal circuit of the HVAC Control Module for short to ground. Refer to **Circuit Testing** and **Wiring Repairs** in Wiring Systems. Did you find and correct the condition?	Go to **Step 9**	Go to **Step 6**
5	Inspect for poor connections at the harness connector of the BCM. Refer to **Testing for Intermittent Conditions and Poor Connections** and **Connector Repairs** in Wiring Systems. Did you find and correct the condition?	Go to **Step 9**	Go to **Step 7**
6	Inspect for poor connections at the harness connector of the HVAC Control Module. Refer to **Testing for Intermittent Conditions and Poor Connections** and **Connector Repairs** in Wiring Systems. Did you find and correct the condition?	Go to **Step 9**	Go to **Step 8**
7	**IMPORTANT:** **Perform the set up procedure for the BCM.** Replace the BCM. Refer to **Body Control Module Replacement** in Body Control System.Did you complete the replacement?	Go to **Step 9**	-
8	Replace the HVAC Control Module. Refer to **HVAC Control Module Replacement** in HVAC Systems - Manual. Did you complete the replacement?	Go to **Step 9**	-
9	Operate the system in order to verify the repair. Did you correct the condition?	System OK	Go to **Step 2**

DEFOGGER GRID LINES DIAGNOSIS

1. Start the engine.

2. Activate the rear window defogger system.
3. Connect a test lamp to ground.

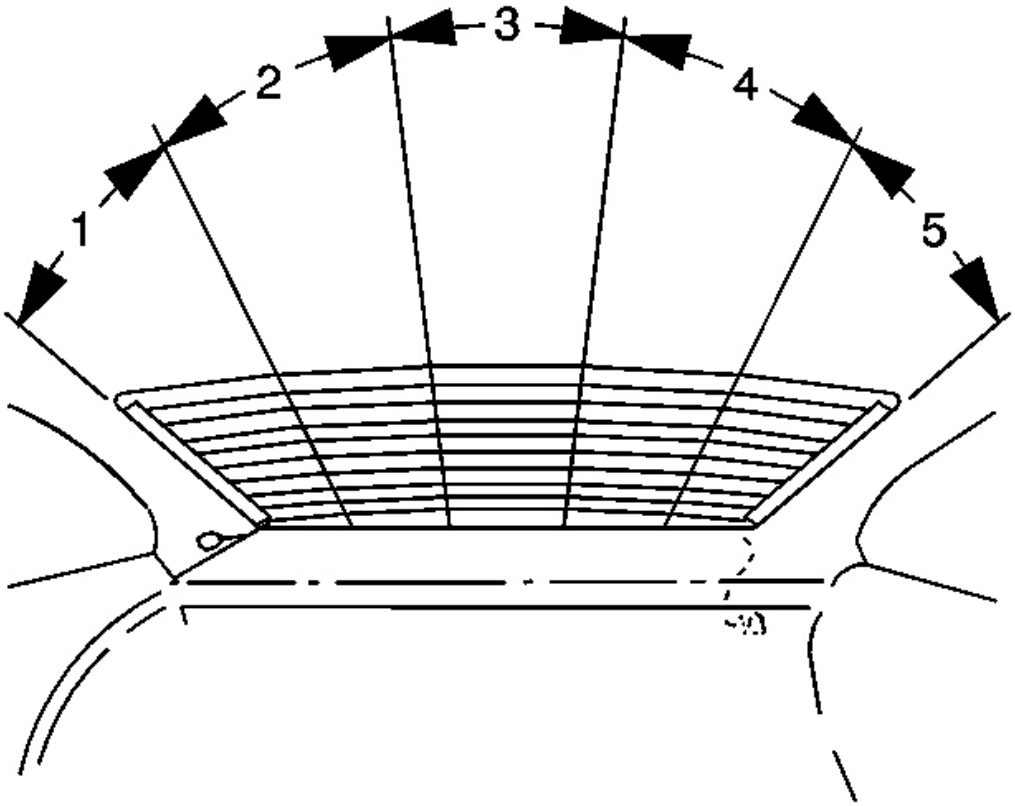

Fig. 7: Defogger Grid Line Zones
Courtesy of GENERAL MOTORS CORP.

IMPORTANT: The test lamp brilliance will decrease proportionately to the increased resistance in the grid line as the probe is moved from the battery positive bus wire to the ground bus wire. The test lamp brilliance may vary from one window to another.

4. Move the test lamp probe from zone 5 to zone 1 along each grid line.
   - If the test lamp shows full brilliance at both ends of the grid lines, inspect for an open or poor connection in the ground circuit of the rear window defogger grid. Refer to **Testing for Intermittent Conditions and Poor Connections** and **Connector Repairs** in Wiring Systems.

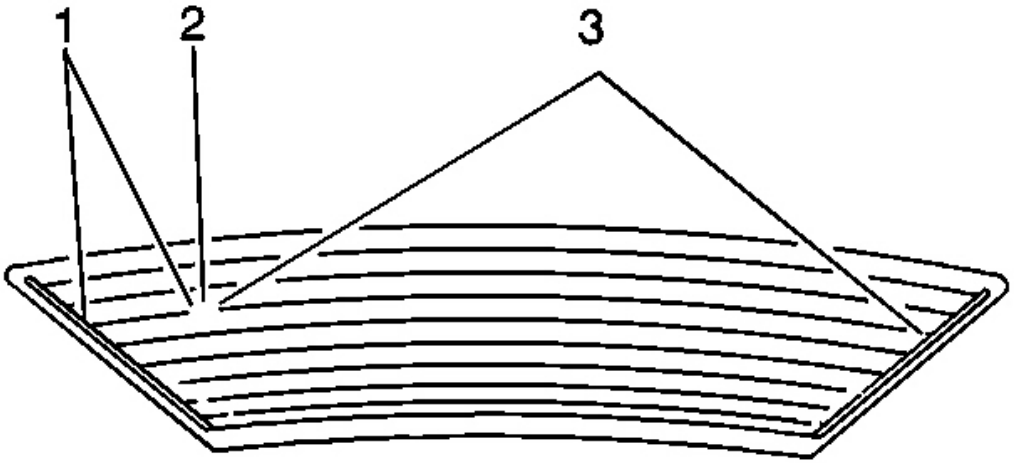

Fig. 8: Testing Locations On Grid Lines
Courtesy of GENERAL MOTORS CORP.

- If the test lamp goes out, test the grid line in at least 2 places (1, 3) to eliminate the possibility of bridging the open (2) in the grid line.

5. If an open is discovered replace the rear window. Refer to **Rear Window Replacement** .

MIRRORS - AUTOMATIC DAY-NIGHT INOPERATIVE

Mirrors - Automatic Day-Night Inoperative

Step	Action	Value (s)	Yes	No
Schematic Reference:Inside Rearview Mirror Schematics **Connector End View Reference:Stationary Windows Connector End Views**				
1	Did you review the operation of the automatic day-night feature of the mirrors and perform the necessary inspections?	-	Go to **Step 2**	Go to **Symptoms - Stationary Windows**
2	1. Turn ON the ignition, with the engine OFF. 2. Turn OFF the automatic day-night feature of the inside rearview mirror. 3. Observe the driver outside rearview mirror. Does the driver outside rearview mirror remain in a darken state?	-	Go to **Step 18**	Go to **Step 3**

3	1. Turn ON the automatic day-night feature of the inside rearview mirror. 2. Cover the sensor on the inside rearview mirror back, facing the front window. 3. Shine a bright light into the sensor on the inside rearview mirror face, facing the rear window. Does the inside rearview mirror darken?	-	Go to **Step 4**	Go to **Step 5**
4	While shining a bright light into the sensor on the mirror face, facing the rear window, observe the driver outside rearview mirror. Does the driver outside rearview mirror darken?	-	Go to **Testing for Intermittent Conditions and Poor Connections** in Wiring Systems	Go to **Step 9**
5	1. Turn OFF the ignition. 2. Disconnect the harness connector of the inside rearview mirror. 3. Measure the resistance between the ground circuit of the inside rearview mirror and a good ground. Is the resistance less than the specified value?	3 ohm	Go to **Step 6**	Go to **Step 16**
6	1. Turn ON the ignition, with the engine OFF. 2. Measure the voltage between the ignition voltage circuit and the ground circuit of the inside rearview mirror. Is the voltage within the specified range?	B+	Go to **Step 7**	Go to **Step 17**
7	1. Place the transmission in PARK. 2. Measure the voltage between the backup lamp supply voltage circuit and the ground circuit of the inside rearview mirror. Is the voltage less than the specified value?	0.5 V	Go to **Step 8**	Go to **Backup Lamps Always On** in Lighting Systems
8	1. Place the transmission in REVERSE. 2. Measure the voltage between the backup lamp supply voltage circuit and the ground circuit of the inside rearview mirror. Is the voltage within the specified range?	B+	Go to **Step 14**	Go to **Step 11**
	1. Turn OFF the ignition. 2. Carefully disconnect the driver outside			

9	rearview mirror face. Refer to **Mirror Face Replacement** in Doors. 3. Turn ON the ignition, with the engine OFF. 4. Turn ON the automatic day-night feature of the inside rearview mirror. 5. Cover the sensor on the mirror back, facing the front window. 6. Shine a bright light into the sensor on the mirror face, facing the rear window. 7. Measure the voltage between the automatic day-night signal circuit and the low reference circuit of the driver outside mirror element. Is the voltage within the specified range?	0.75-1.5 V	Go to **Step 15**	Go to **Step 10**
10	Measure the voltage between the automatic day-night signal circuit of the driver outside mirror element and a good ground. Is the voltage within the specified range?	0.75-1.5 V	Go to **Step 13**	Go to **Step 12**
11	Test the backup lamp supply voltage circuit of the inside rearview mirror for an open or short to ground. Refer to **Circuit Testing** and **Wiring Repairs** in Wiring Systems. Did you find and correct the condition?	-	Go to **Step 21**	Go to **Backup Lamps Inoperative** in Lighting Systems
12	Test the automatic day-night signal circuit of the driver outside rearview mirror element for an open or short to ground. Refer to **Circuit Testing** and **Wiring Repairs** in Wiring Systems. Did you find or correct the condition?	-	Go to **Step 21**	Go to **Step 14**
13	Test the low reference circuit of the driver outside rearview mirror element for an open or high resistance. Refer to **Circuit Testing** and **Wiring Repairs** in Wiring Systems. Did you find or correct the condition?	-	Go to **Step 21**	Go to **Step 14**
14	Inspect for poor connections at the harness connector of the inside rearview mirror. Refer to **Testing for Intermittent Conditions and Poor Connections** and **Connector Repairs** in Wiring Systems. Did you find and correct the condition?	-	Go to **Step 21**	Go to **Step 19**
15	Inspect for poor connections at the harness connector of the driver outside rearview mirror face. Refer to **Testing for Intermittent Conditions and Poor Connections** and **Connector Repairs** in Wiring Systems. Did you find or correct the condition?	-	Go to **Step 21**	Go to **Step 20**
	Repair an open or high resistance in the ground			

16	circuit of the inside rearview mirror. Refer to **Wiring Repairs** in Wiring Systems. Did you complete the repair?	-	Go to **Step 21**	-
17	Repair an open or short to ground in the ignition voltage circuit of the inside rearview mirror. Refer to **Wiring Repairs** in Wiring Systems. Did you complete the repair?	-	Go to **Step 21**	-
18	**IMPORTANT:** **A short to voltage on the automatic day-night signal circuit of the driver outside rearview mirror element will cause permanent damage to the driver outside rearview mirror and the inside rearview mirror. Both mirrors will have to replaced. The following actions will need to be performed:** 1. Repair a short to voltage on the automatic day-night signal circuit of the driver outside rearview mirror element. Refer to **Wiring Repairs** in Wiring Systems. 2. Replace the inside rearview mirror and the driver outside rearview mirror face. Refer to the following: • **Mirror Face Replacement** in Doors • **Rearview Mirror Replacement (Base)** or **Rearview Mirror Replacement (DD8)** Did you complete the repair?	-	Go to **Step 21**	-
19	Replace the inside rearview mirror. Refer to **Rearview Mirror Replacement (Base)** or **Rearview Mirror Replacement (DD8)** . Did you complete the replacement?	-	Go to **Step 21**	-
20	Replace the driver outside rearview mirror face. Refer to **Mirror Face Replacement** in Doors. Did you complete the replacement?	-	Go to **Step 21**	-
21	Operate the system in order to verify the repair. Did you correct the condition?	-	System OK	Go to **Step 2**

REPAIR INSTRUCTIONS

WEATHERSTRIP SIDE RETAINER REPLACEMENT (COUPE AND CONVERTIBLE)

Removal Procedure

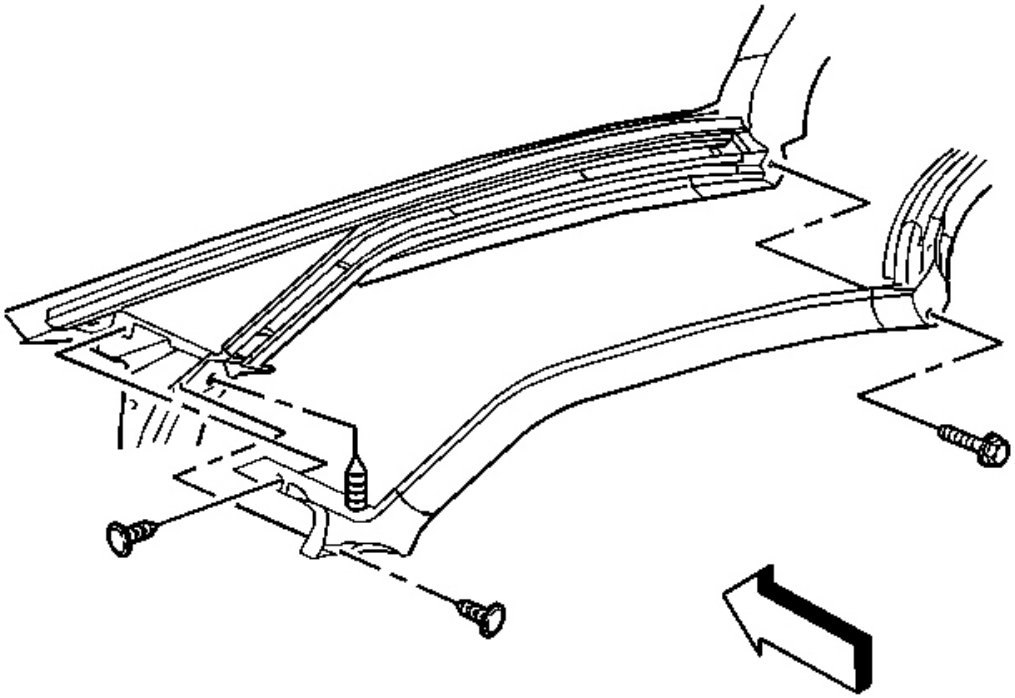

Fig. 9: Windshield Weatherstrip To Windshield Frame
Courtesy of GENERAL MOTORS CORP.

1. Remove the windshield weatherstrip from the weatherstrip side retainer and partially from the windshield frame. Refer to **Weatherstrip Replacement (Coupe and Convertible)** or **Weatherstrip Replacement (Hardtop)** .

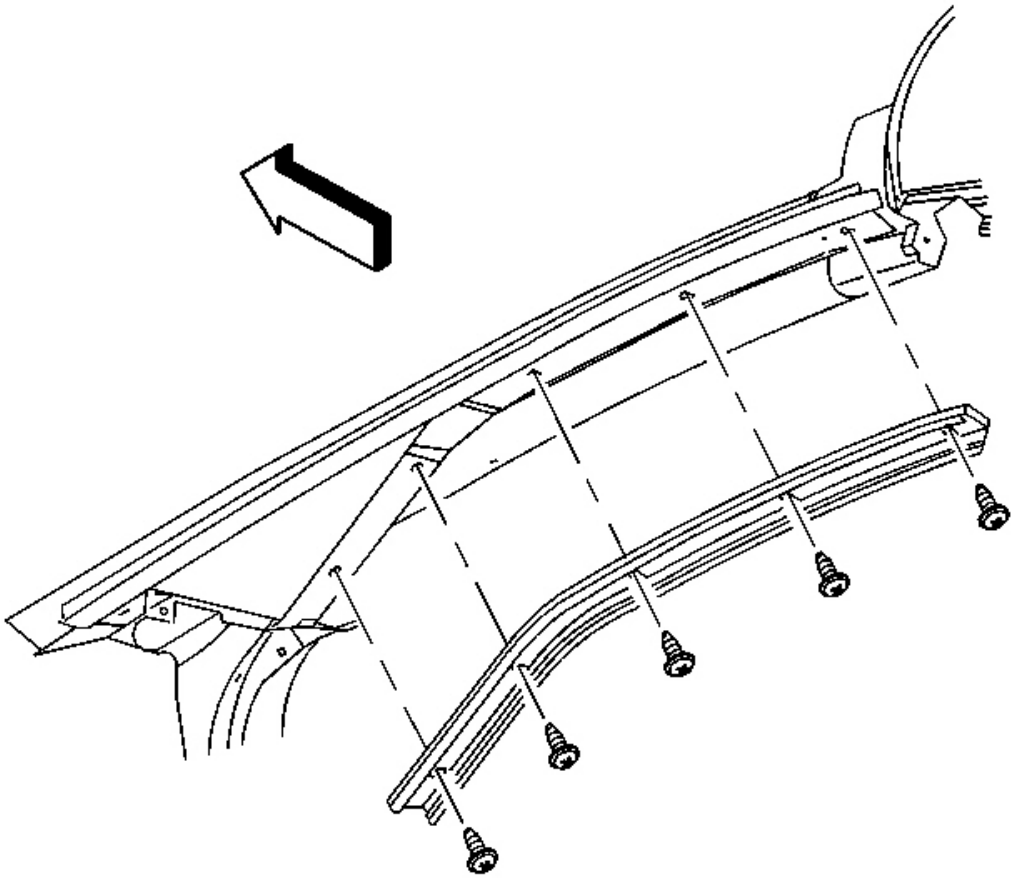

Fig. 10: Weatherstrip Side Retainer Screws To Side Reveal Molding & Applique
Courtesy of GENERAL MOTORS CORP.

2. Remove the weatherstrip side retainer screws from the side reveal molding and the applique.
3. Remove the retainer. If the retainer is to be reused, remove the old foam sealing tape from the retainer.
4. Remove any old foam sealing tape from the retainer mounting surfaces.

Installation Procedure

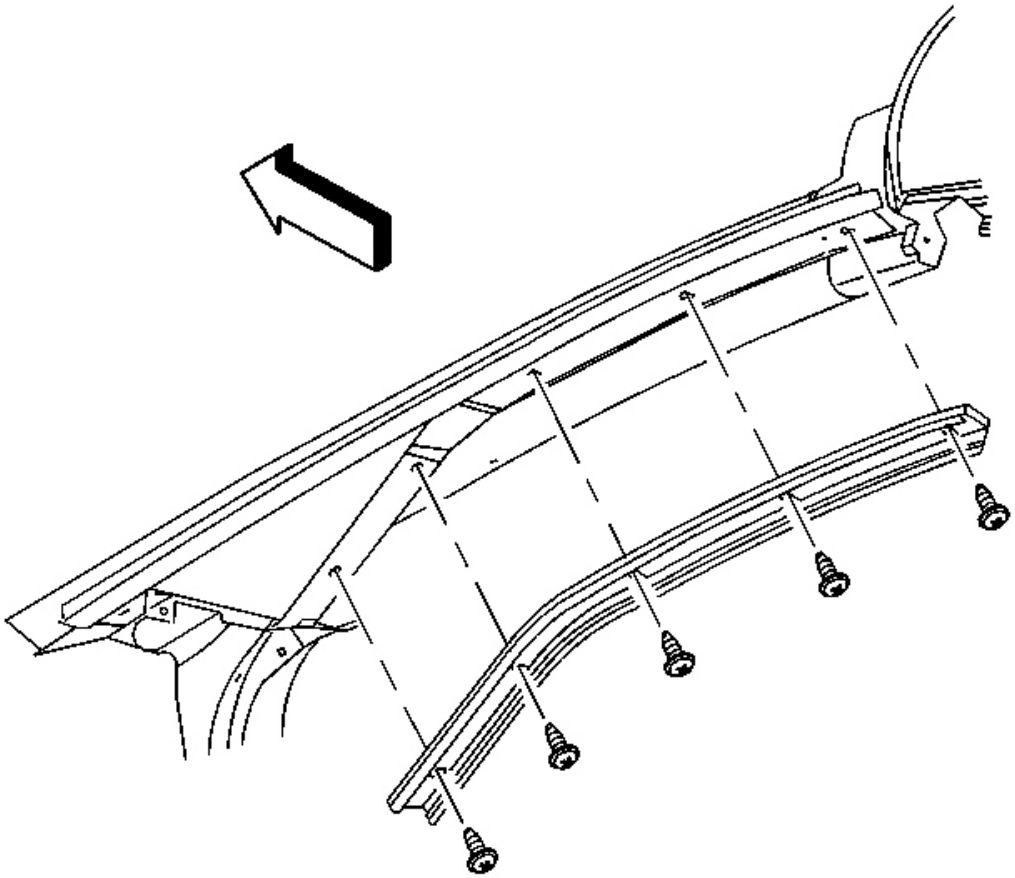

Fig. 11: Weatherstrip Side Retainer Screws To Side Reveal Molding & Applique
Courtesy of GENERAL MOTORS CORP.

1. Replace the foam tape if reusing the retainer:
   - Extend the tape 2.0 mm (0.08 in) beyond the retainer ends.
   - Do not stretch the tape to fit. The tape may shrink back, or creep, after installation, resulting in a gap which may cause a leak.
2. Peel the protective cover from the foam tape.
3. Replace any stripped, broken or improperly seated screws.

NOTE: Refer to Fastener Notice in Cautions and Notices.

4. Install the windshield weatherstrip side retainer with screws at the following locations:
   - The applique

Tighten: Tighten the side retainer to applique screws to 2.5 N.m (22 lb in).

- The window frame

  Tighten: Tighten the side retainer to window frame screws to 3.4 N.m (30 lb in).

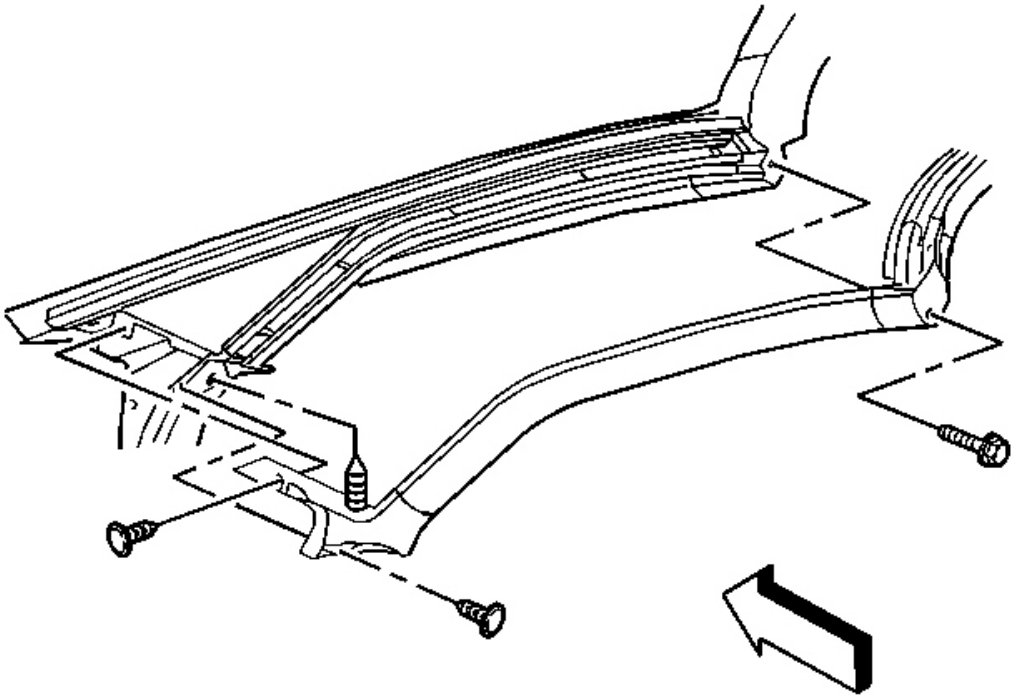

Fig. 12: Windshield Weatherstrip To Windshield Frame
Courtesy of GENERAL MOTORS CORP.

5. Install the weatherstrip.

WEATHERSTRIP SIDE RETAINER REPLACEMENT (HARDTOP)

Removal Procedure

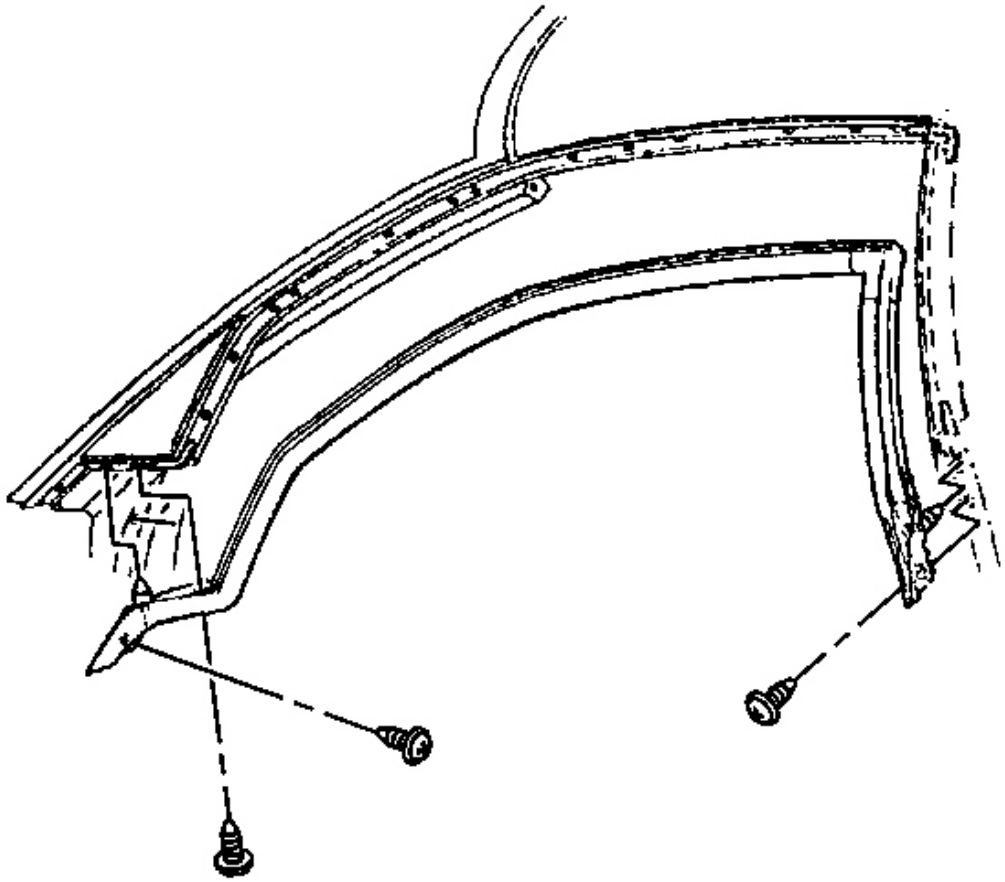

Fig. 13: Weatherstrip Side Retainer
Courtesy of GENERAL MOTORS CORP.

1. Remove the weatherstrip.

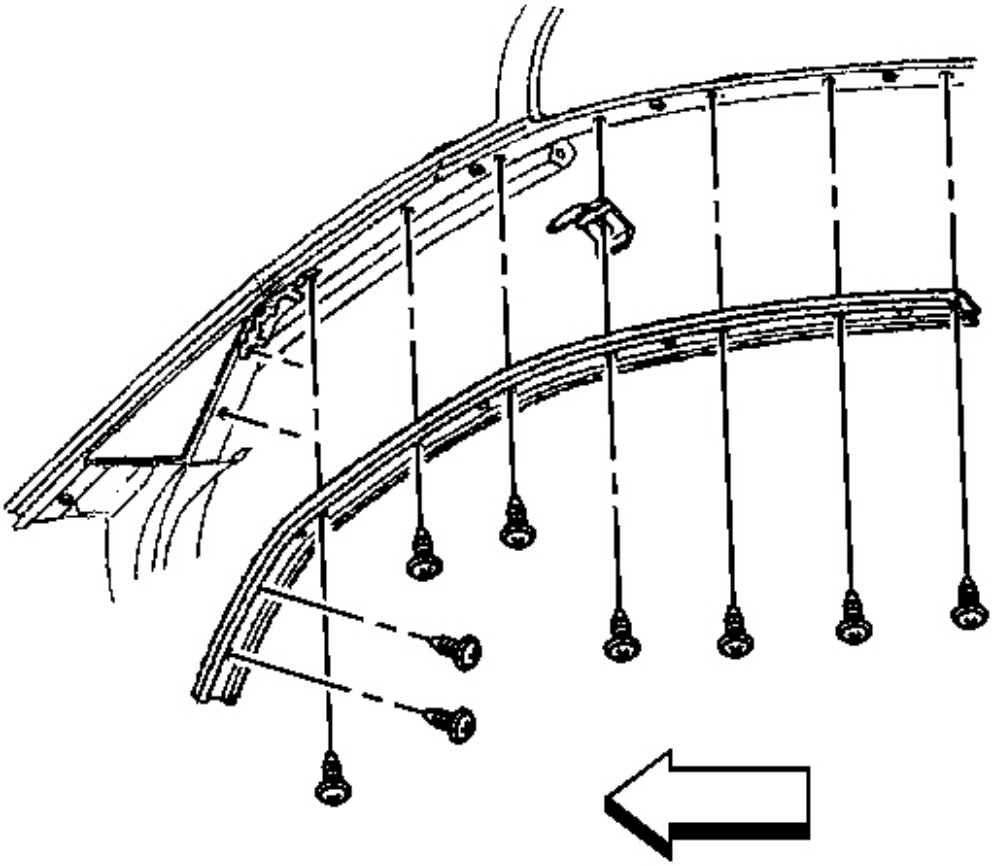

Fig. 14: Weatherstrip Retainer & Blow Out Clip
Courtesy of GENERAL MOTORS CORP.

2. Remove the weatherstrip retainer.
3. Remove the blow out clip, if reusing the clip.
4. Clean the mounting surfaces.

Installation Procedure

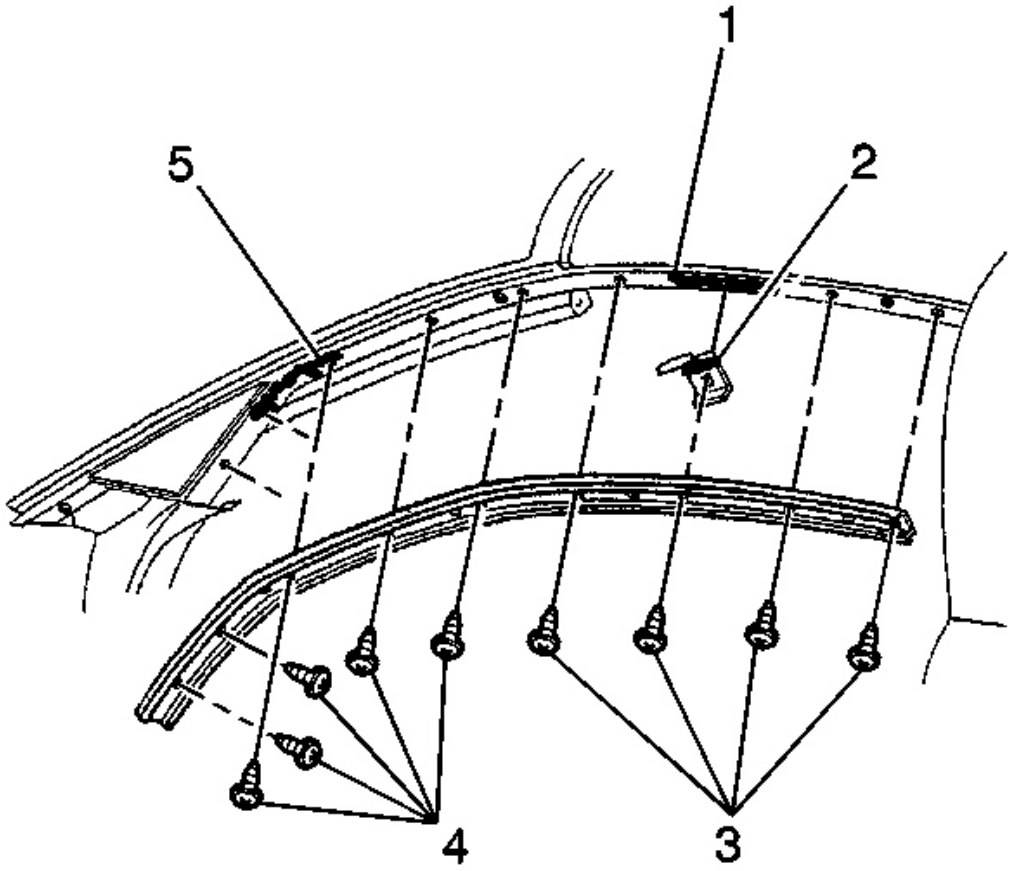

Fig. 15: Foam Tape On Back Of Retainer
Courtesy of GENERAL MOTORS CORP.

1. Apply a bead of sealer to the blow out clip (2).
2. Peel the protective cover from the foam tape on the back of the retainer.
3. Position the clip to the back of the retainer.
4. Apply a bead of sealer (1) to the area where the clip will contact the reveal molding.
5. Apply, outboard of the two screw holes where the retainer bends, a continuous bead of sealer (5) to the applique and the reveal molding.
6. Replace any stripped, broken or improperly seated screws.
7. Install the windshield weatherstrip side retainer.

NOTE: Refer to Fastener Notice in Cautions and Notices.

8. Install the screws mounting the windshield weatherstrip side retainer to the pillar.

   Tighten:
   - Tighten the side retainer to applique screws (4) to 2.5 N.m (22 lb in).
   - Tighten the side retainer to windshield pillar screws (4) to 2.5 N.m (22 lb in).
   - Tighten the side retainer to roof screws (3) to 1.4 N.m (12 lb in).

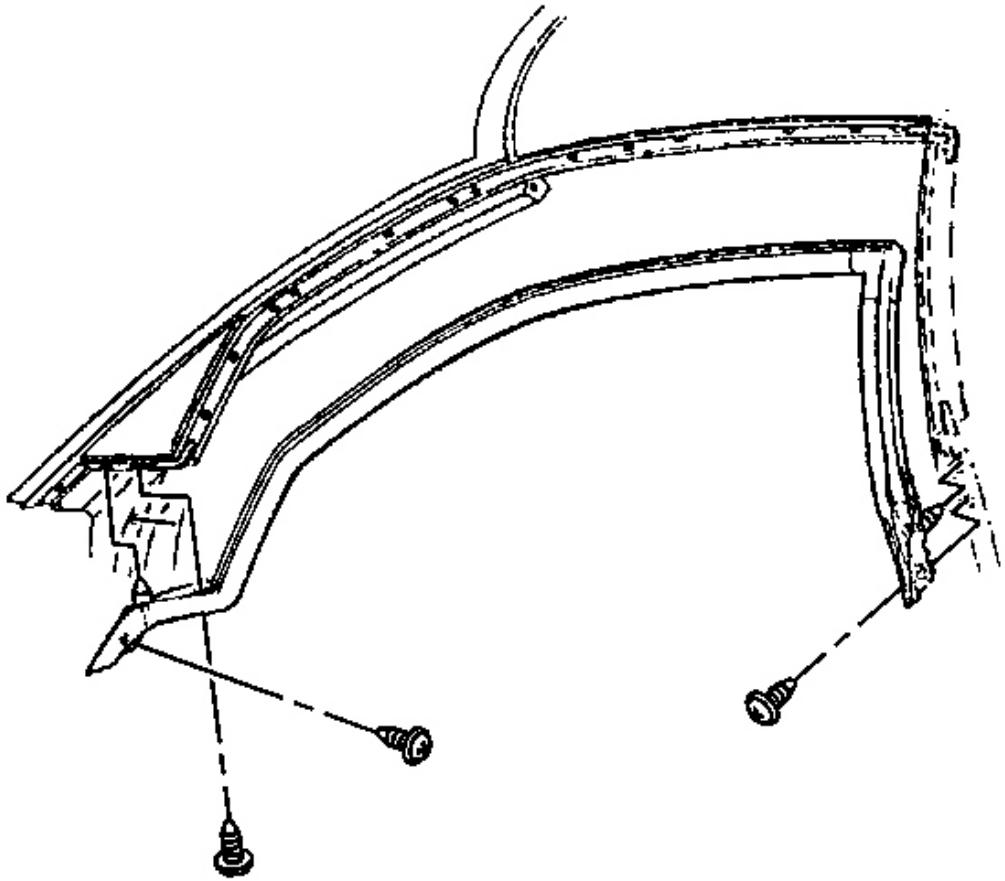

Fig. 16: Weatherstrip Side Retainer
Courtesy of GENERAL MOTORS CORP.

9. Apply sealant and install the weatherstrip. Refer to **Weatherstrip Replacement (Coupe and Convertible)** or **Weatherstrip Replacement (Hardtop)** .

WEATHERSTRIP REPLACEMENT (COUPE AND CONVERTIBLE)

Removal Procedure

1. Open the driver and passenger side doors.
2. Remove the roof lift off panel (coupe) or lower the top (convertible).

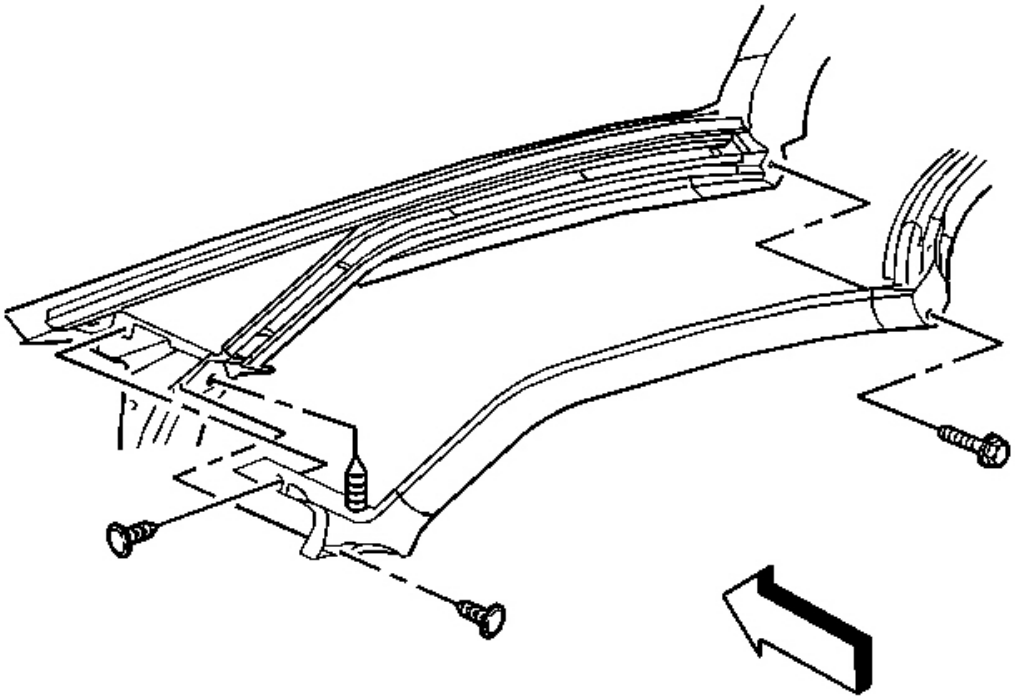

Fig. 17: Windshield Weatherstrip To Windshield Frame
Courtesy of GENERAL MOTORS CORP.

3. Remove the push in retainers from the lower corners of the weatherstrip.
4. Remove the upper LH/RH corner screws from the weatherstrip on the (convertible model).

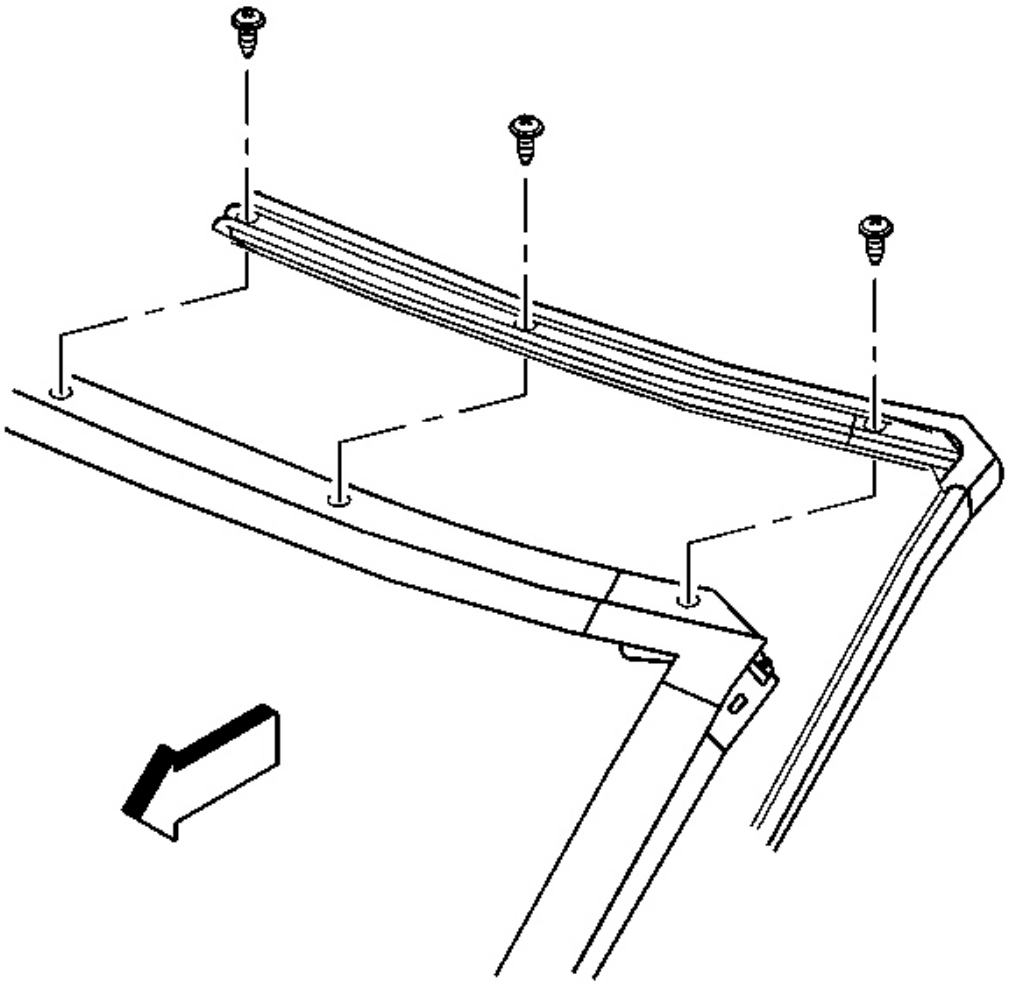

Fig. 18: Rear Edge Of Weatherstrip To Windshield Upper Retainer Screws
Courtesy of GENERAL MOTORS CORP.

5. Peel the rear edge of the weatherstrip forward to expose the windshield upper retainer screws.
6. Remove the upper center retainer screws.
7. Remove the weatherstrip with upper retainer.
8. Clean the surface of old sealant material.

Installation Procedure

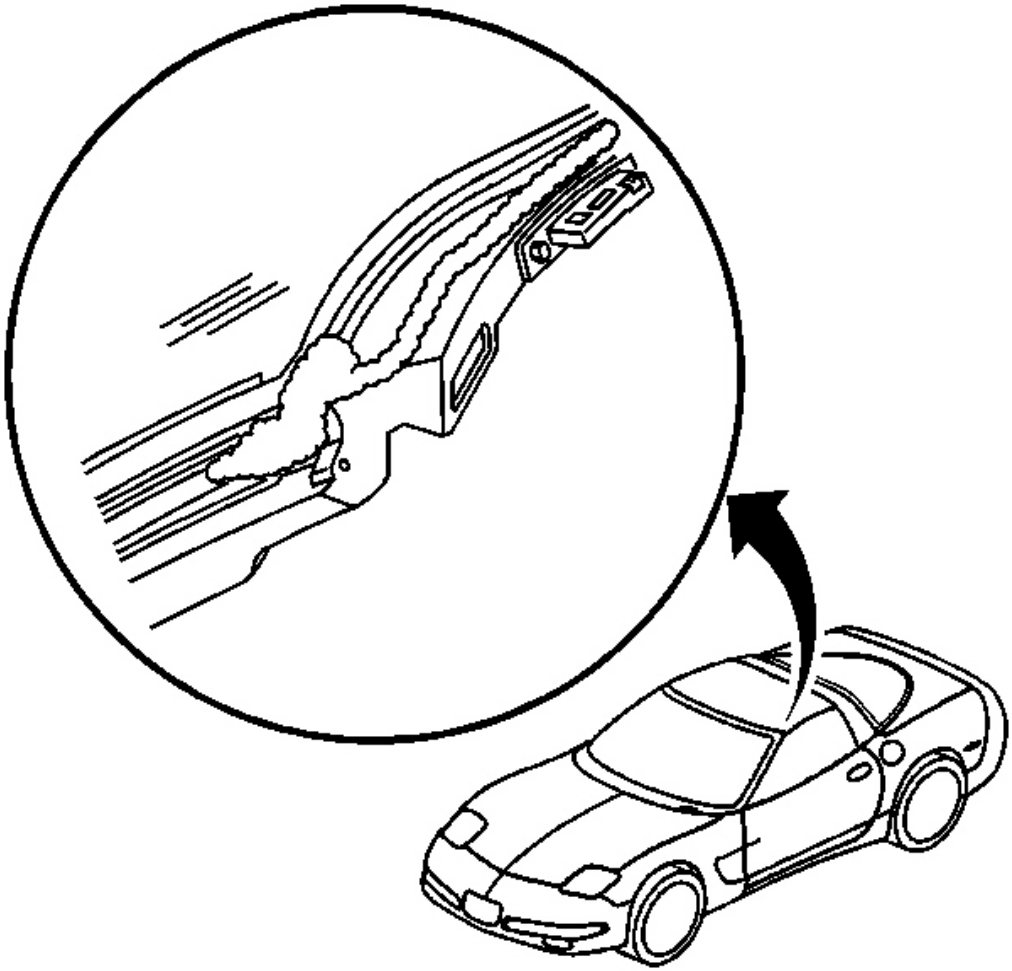

Fig. 19: Windshield Header At Latches To Corner Of Header
Courtesy of GENERAL MOTORS CORP.

1. Apply a bead of sealant GM P/N 12345097, or equivalent, on the windshield header from 75 mm (3 in) beyond the latches to the corner of the header.
2. Install a glob of sealant across the top of the side retainers.

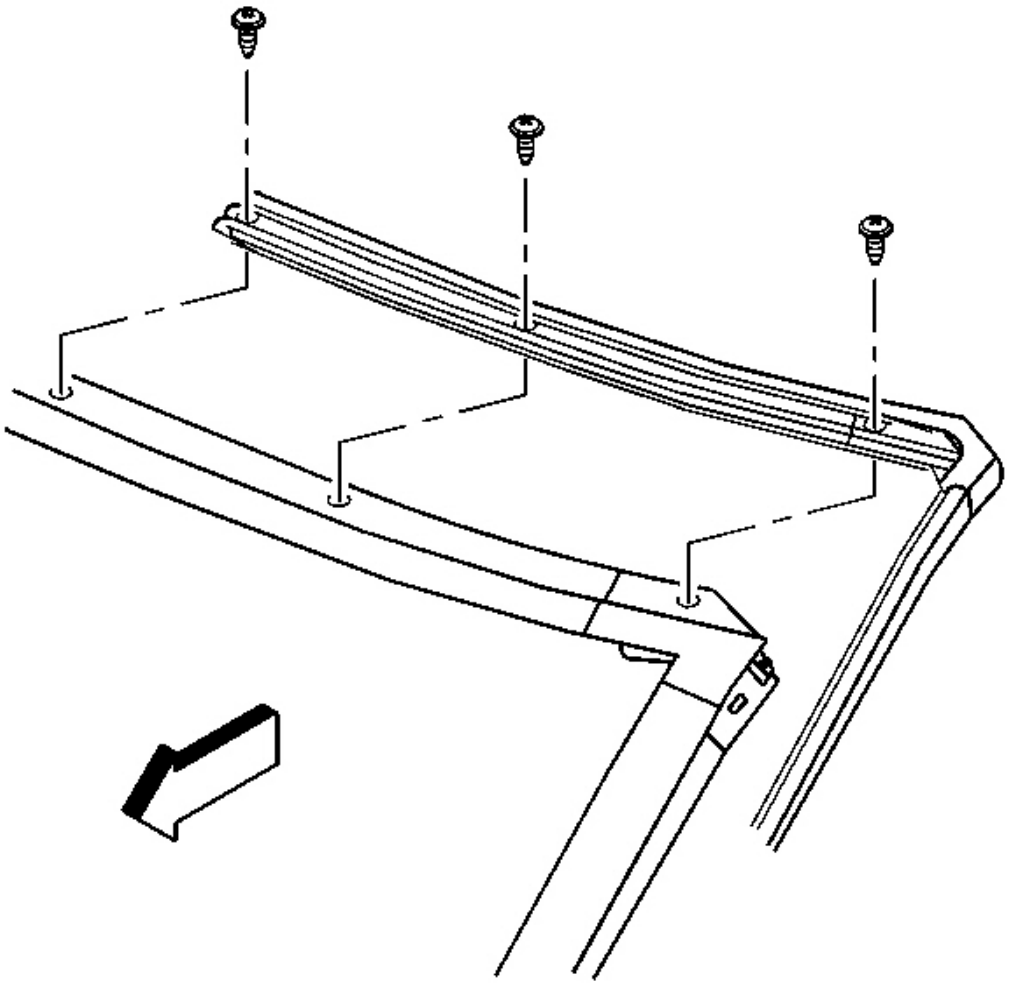

Fig. 20: Rear Edge Of Weatherstrip To Windshield Upper Retainer Screws
Courtesy of GENERAL MOTORS CORP.

3. Position the weatherstrip to the windshield frame.

NOTE: **Refer to Fastener Notice in Cautions and Notices.**

4. Install the windshield weatherstrip upper center retainer screws.

   Tighten: Tighten the weatherstrip upper center retainer screws to 3.4 N.m (30 lb in).

5. Reinstall the weatherstrip to the upper retainer.

Insert the weatherstrip into the upper retainer starting in the center and working outwards.

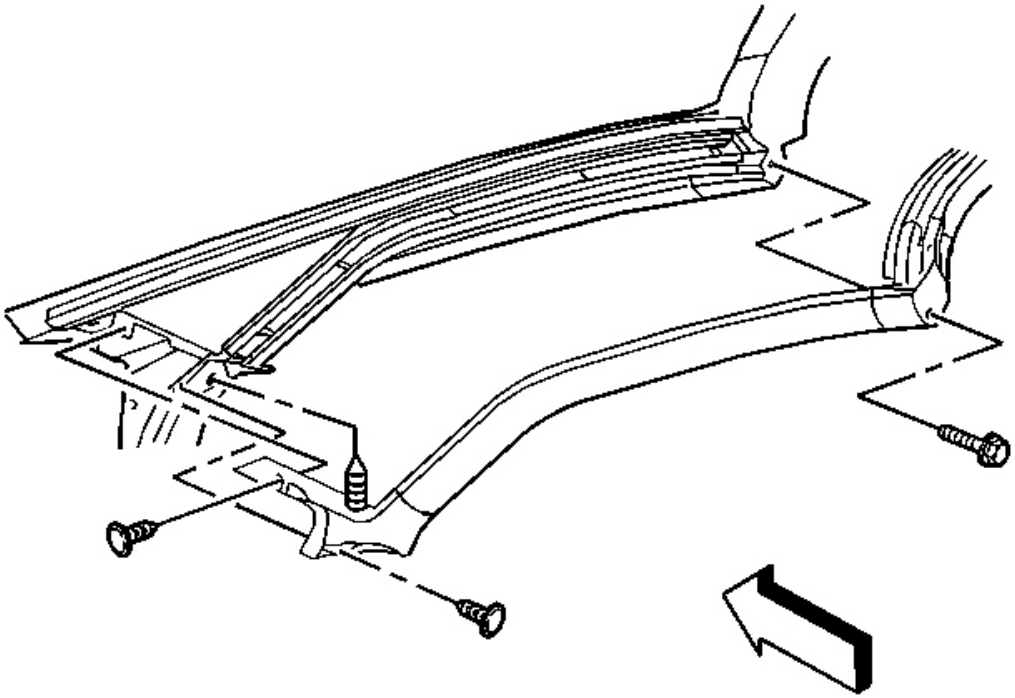

Fig. 21: Windshield Weatherstrip To Windshield Frame
Courtesy of GENERAL MOTORS CORP.

6. Peel the protective film from the foam tape on the sides of the new weatherstrip, or install two sided tape to the sides of a reused weatherstrip.
7. Insert the weatherstrip into the side retainer starting at the top and working downward on the LH and RH sides.
8. Install the LH and RH top corner weatherstrip screws.

   Tighten: Tighten the windshield weatherstrip top corner screws to 3.4 N.m (30 lb in).

9. Install the lower LH and RH corner push in retainers.
10. Install the roof panel (coupe) or raise the top (convertible).

WEATHERSTRIP REPLACEMENT (HARDTOP)

Removal Procedure

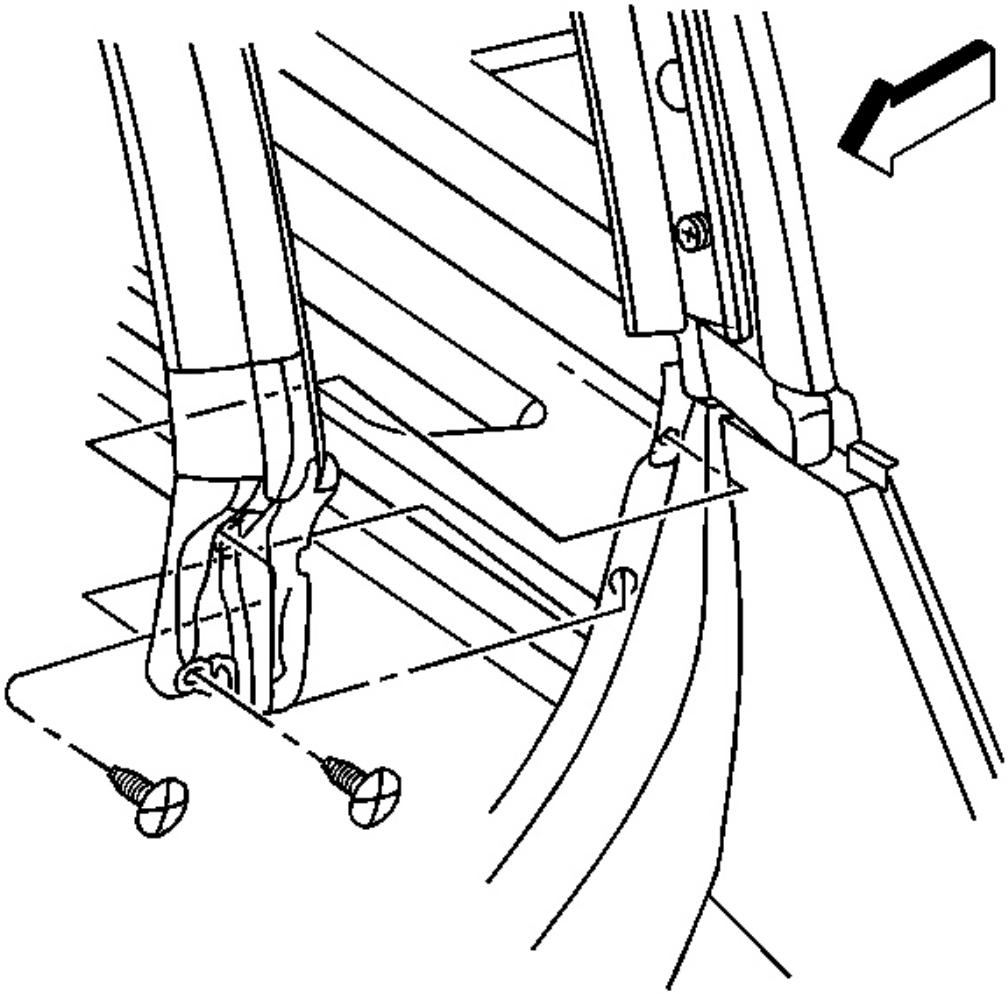

Fig. 22: Push-In Retainers At Weatherstrip To Lock Pillar
Courtesy of GENERAL MOTORS CORP.

1. Remove the push-in retainers securing the weatherstrip to the lock pillar.
2. Pull the weatherstrip with its retainer from the lock pillar weatherstrip retainer.

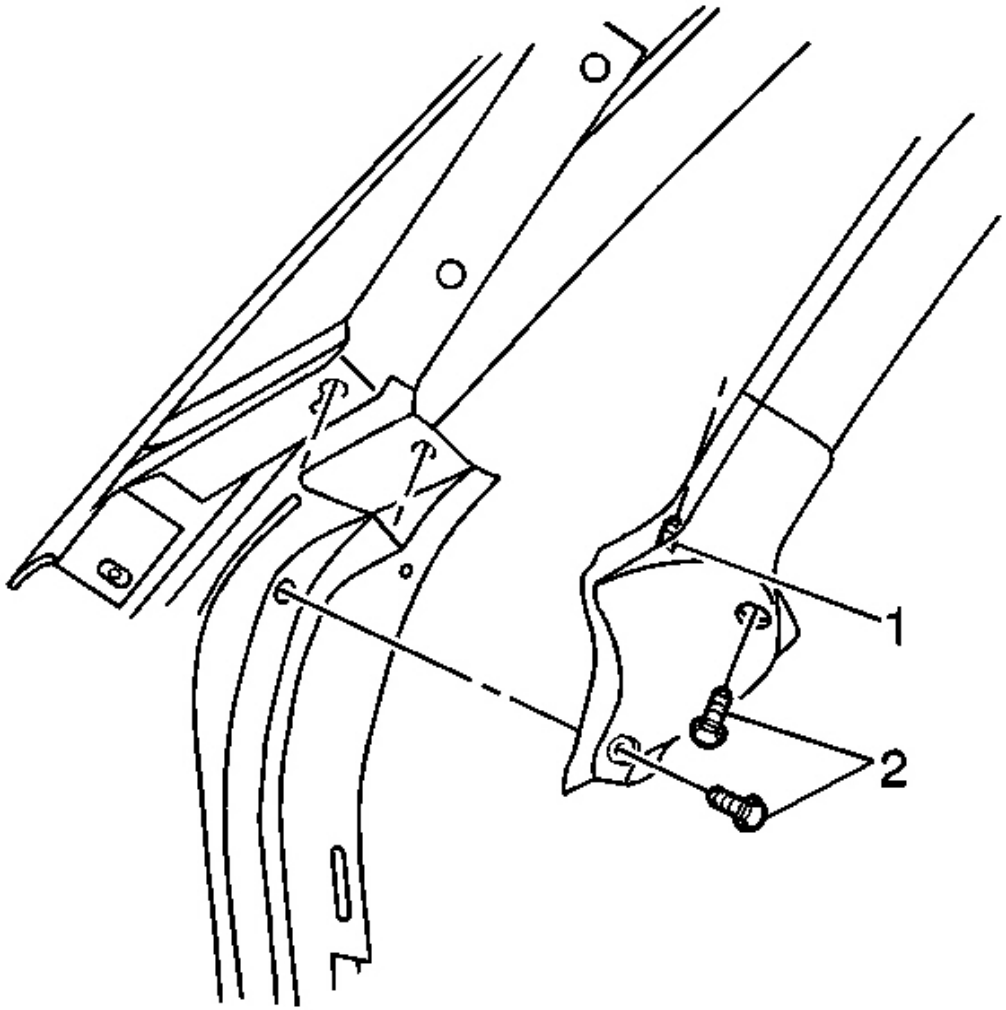

Fig. 23: Weather-Strip Retainers
Courtesy of GENERAL MOTORS CORP.

3. Remove the push-in retainers (1,2) securing the forward end of the weatherstrip to the reveal molding and the hinge pillar.
4. Pull the weatherstrip with it's retainer from the reveal molding.

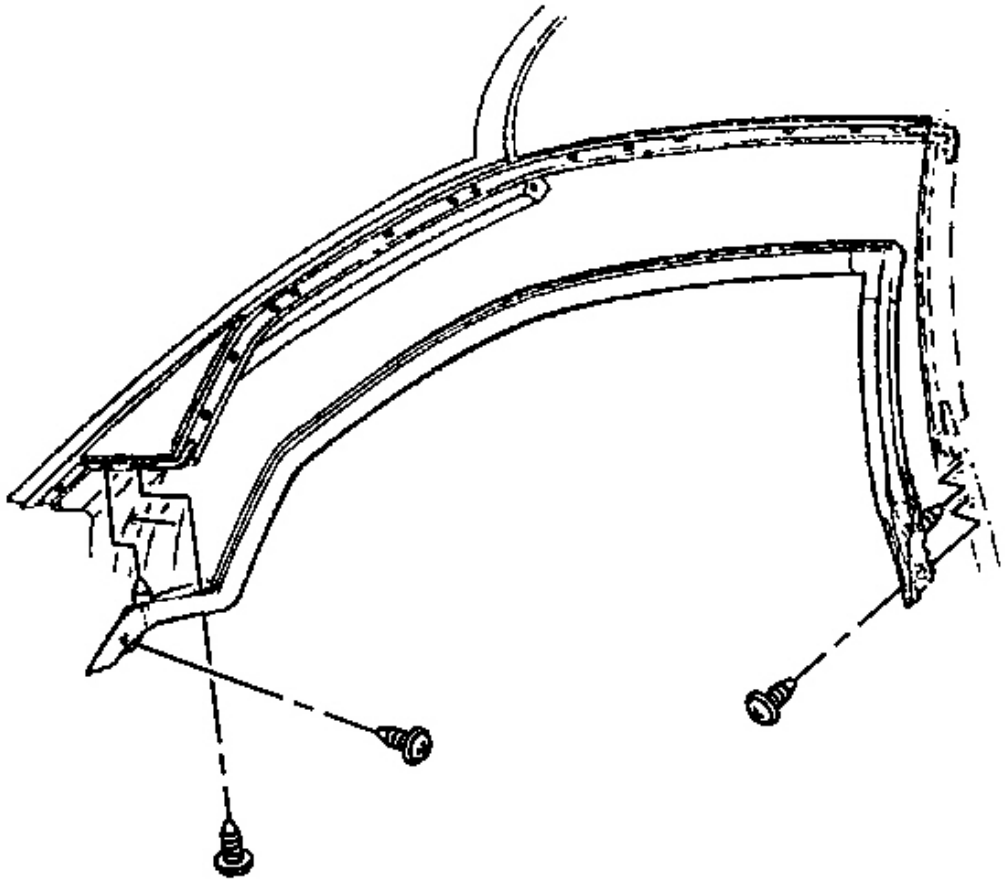

Fig. 24: Weatherstrip Side Retainer
Courtesy of GENERAL MOTORS CORP.

5. Remove the weatherstrip.
6. Clean the surface of old sealant material.

Installation Procedure

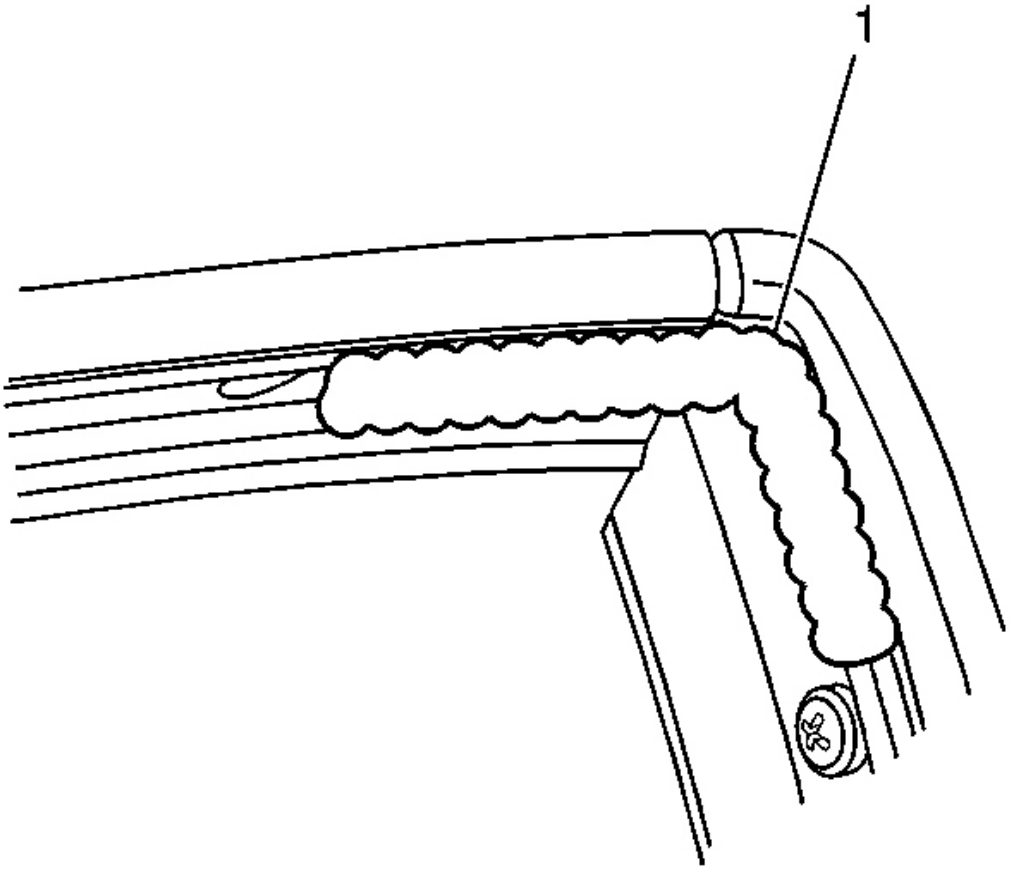

Fig. 25: Weatherstrip Retainers At Upper Rear Corner Of Door Opening
Courtesy of GENERAL MOTORS CORP.

1. Apply a 50 mm (2 in) bead of sealant (1) GM P/N 12345097, or equivalent, down the middle of both the weatherstrip retainers at the upper rear corner of the door opening.

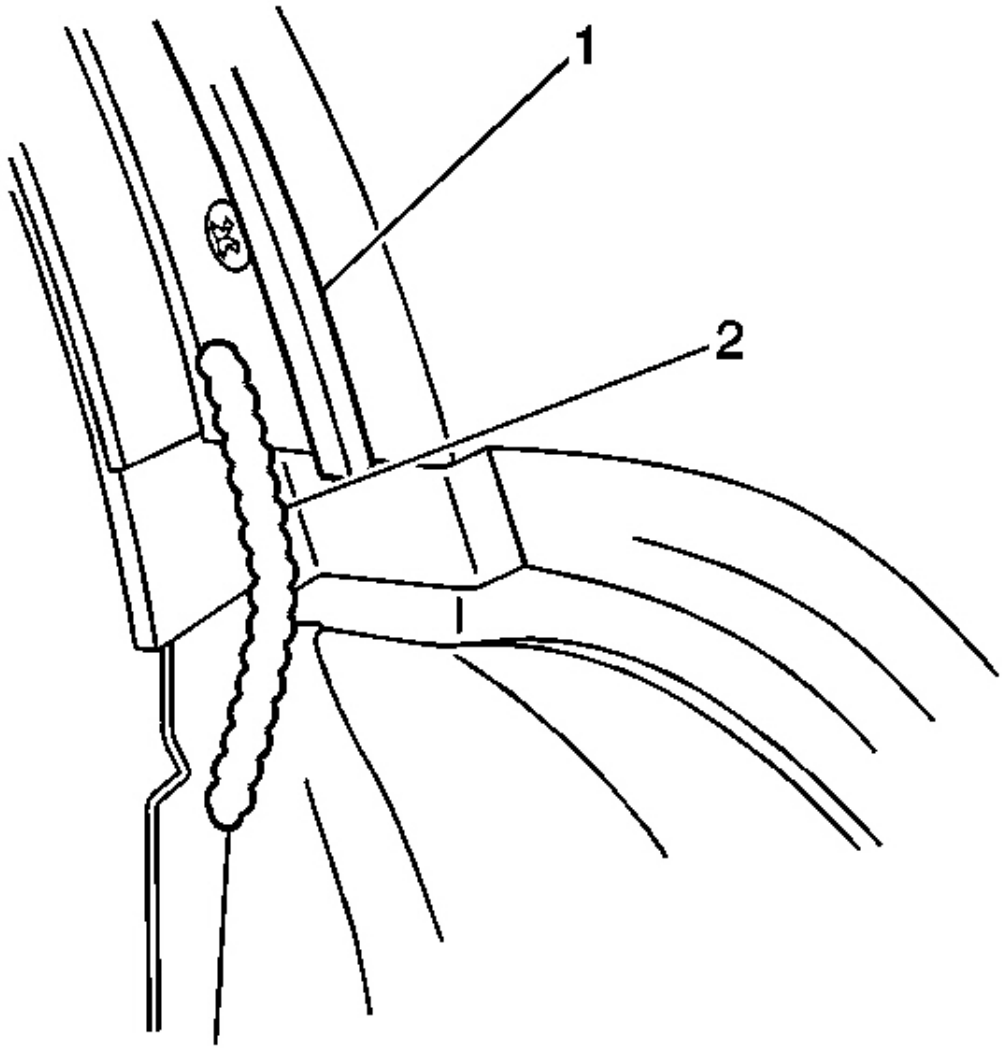

Fig. 26: Lock Pillar Weatherstrip Retainer & Down Lock Pillar
Courtesy of GENERAL MOTORS CORP.

2. Apply a bead of sealant (2) to the lower 50 mm (2 in) of the lock pillar weatherstrip retainer (1) and 50 mm (2 in) down the lock pillar.

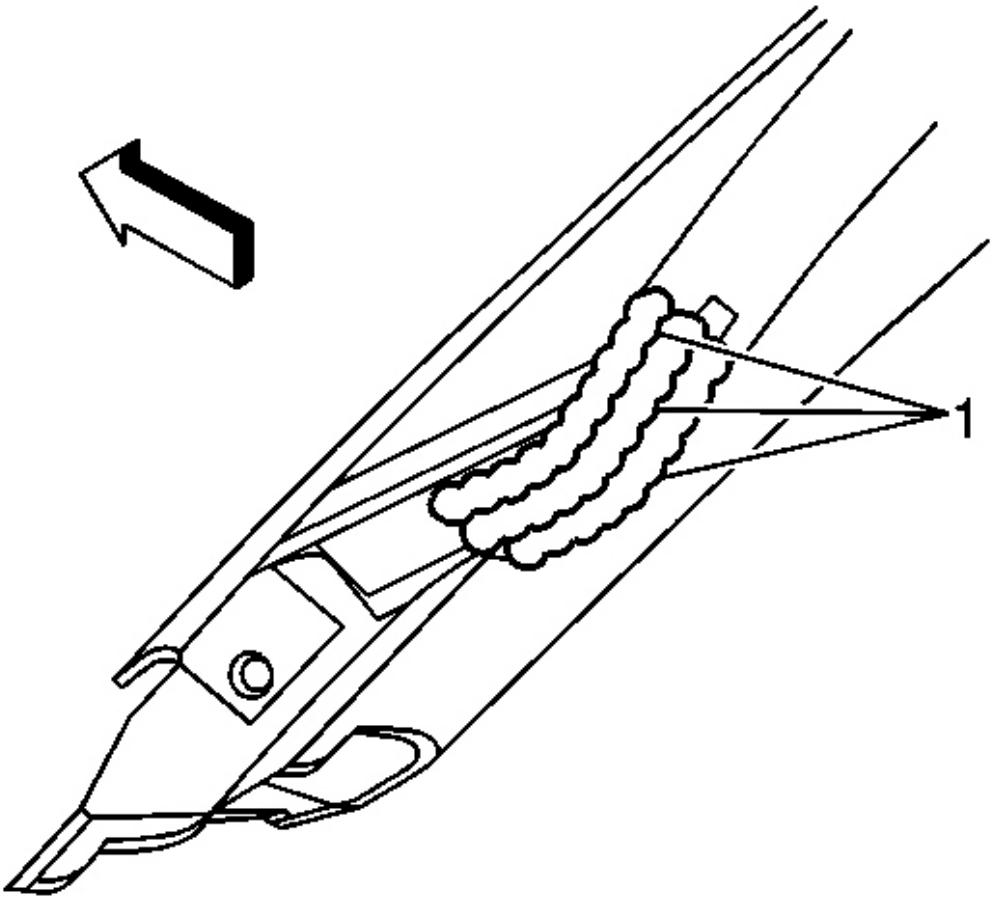

Fig. 27: Door Opening Weatherstrip Retainer To Rear Edge Of Reveal Molding
Courtesy of GENERAL MOTORS CORP.

3. Apply three parallel 50 mm (2 in) long beads of sealant (1) to the forward end of the door opening weatherstrip retainer and to the rear edge of the reveal molding.

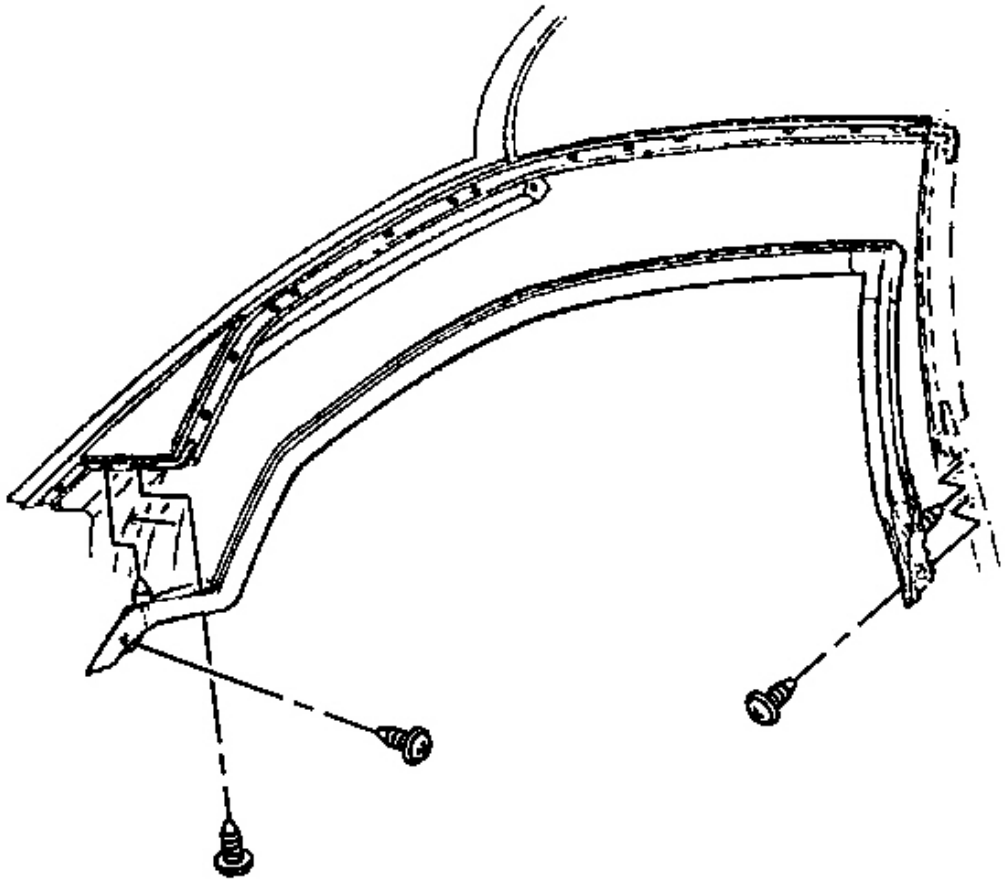

Fig. 28: Weatherstrip Side Retainer
Courtesy of GENERAL MOTORS CORP.

4. Remove the protective tape from the back of the weatherstrip.
5. Insert the weatherstrip into the weatherstrip retainers.
    - Start at the rear upper corner.
    - Insert the upper/outer edge of the weatherstrip first.

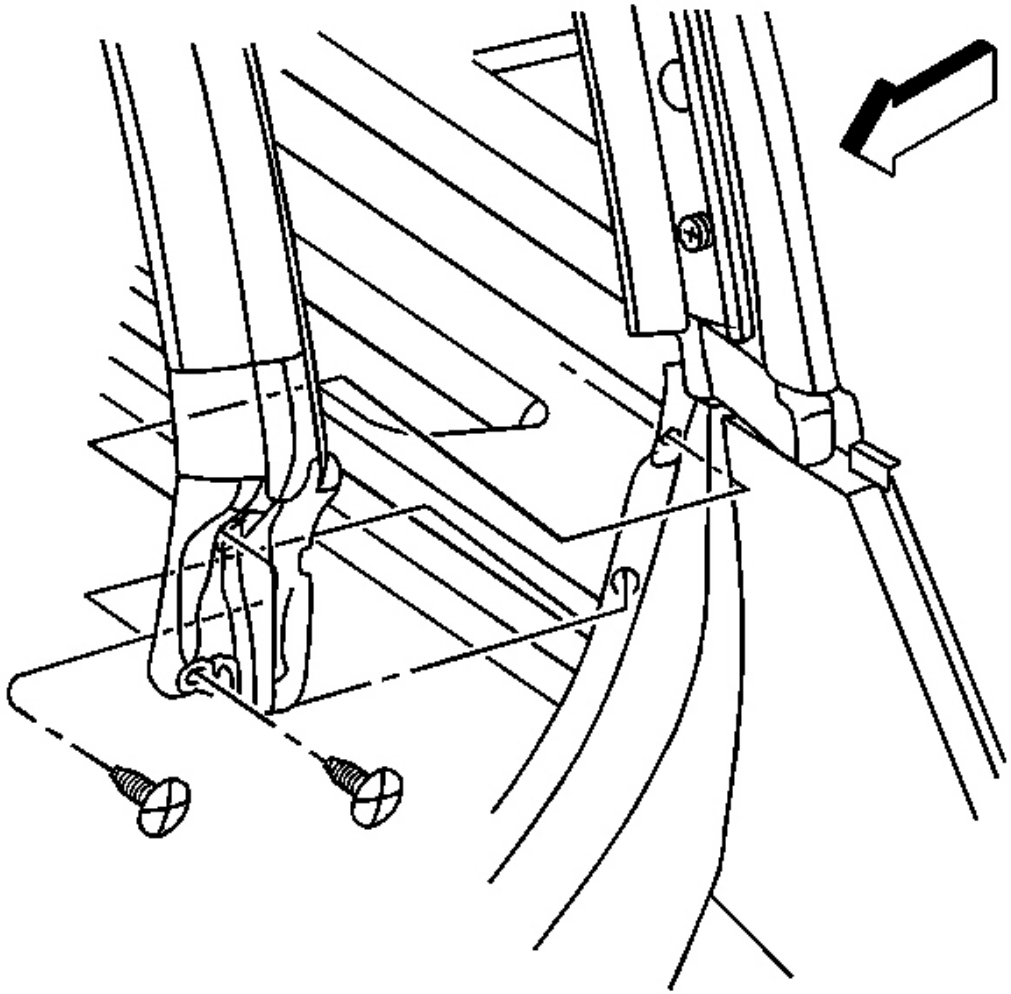

Fig. 29: Push-In Retainers At Weatherstrip To Lock Pillar
Courtesy of GENERAL MOTORS CORP.

6. Install the weatherstrip retainer securing the weatherstrip to the lock pillar.
7. Install the push-in retainers securing the weatherstrip to the lock pillar.

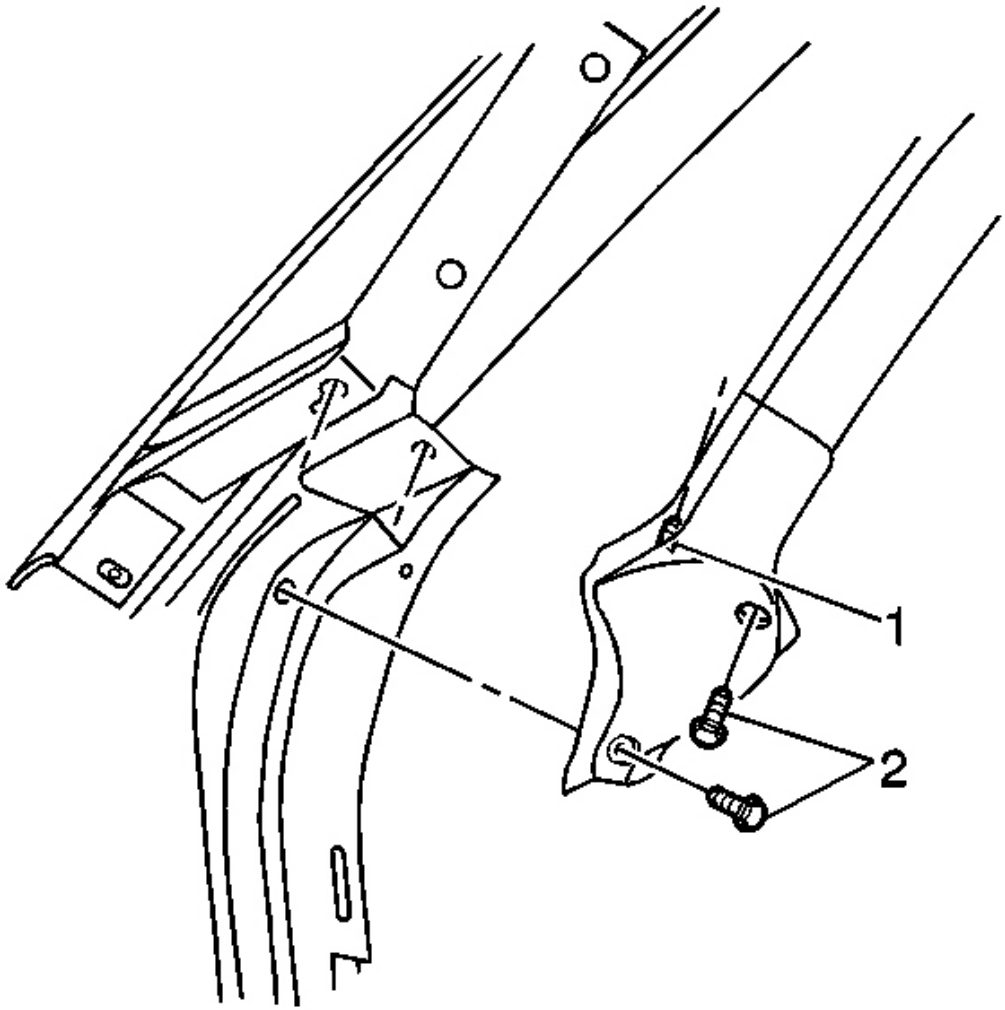

Fig. 30: Weather-Strip Retainers
Courtesy of GENERAL MOTORS CORP.

8. Install the weatherstrip retainer (1) securing the weatherstrip to the hinge pillar reveal molding.
9. Install the push-in retainers (2) securing the weatherstrip to the hinge pillar.

STATIONARY WINDOW REVEAL MOLDING REPAIR

Removal Procedure

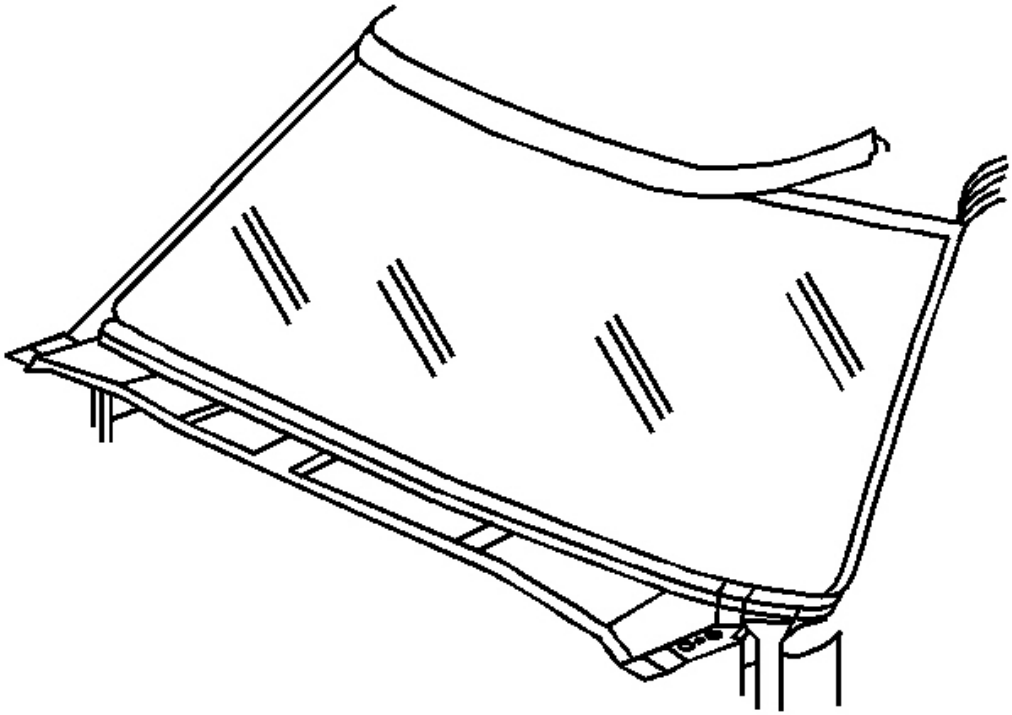

Fig. 31: Identifying Loose Window Molding
Courtesy of GENERAL MOTORS CORP.

CAUTION: Refer to Glass and Sheet Metal Handling Caution in Cautions and Notices.

IMPORTANT: The window reveal molding fills the cavity between the body and window. If the reveal molding is stretched or damaged, it cannot be reused and it must be replaced.

1. Lift up on the loose area of the reveal molding.
2. Clean the top edge of the window surface and the reveal molding with a 50/50 mixture of isopropyl alcohol and water by volume on a dampened lint-free cloth.

Installation Procedure

CAUTION: Refer to Window Retention Caution in Cautions and Notices.

1. Verify all primers and urethane adhesive are within expiration dates.

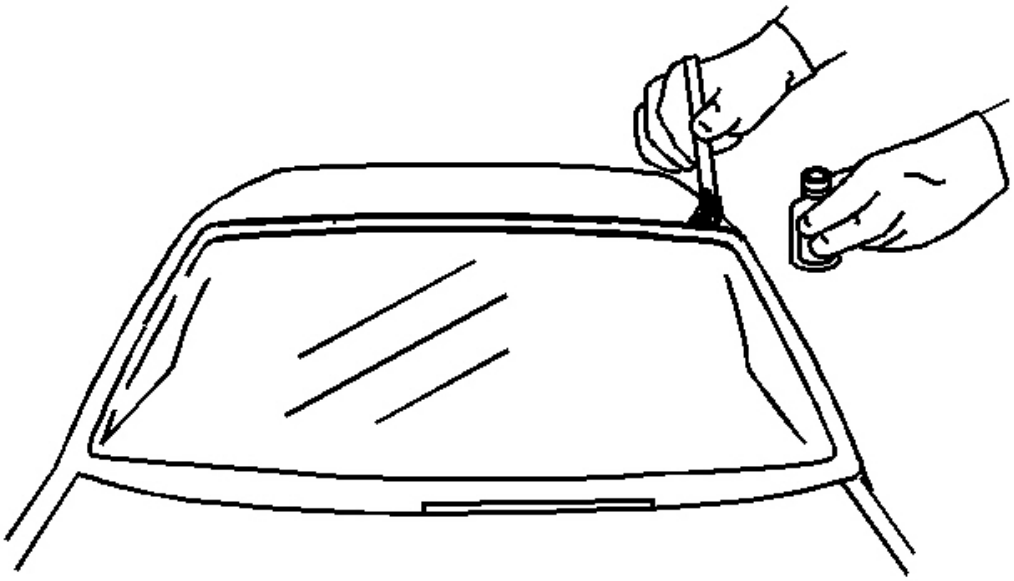

Fig. 32: Applying Glass Primer (Black #2)
Courtesy of GENERAL MOTORS CORP.

IMPORTANT: Use care when applying the prep, clear #1, to the window. This primer dries almost instantly, and may stain the viewing area of the window if not applied evenly.

2. Use a new dauber in order to apply glass prep, clear #1, to the channel area approximately 13 mm (1/2 in) to the upper edge of the window.
3. Wipe the glass primed area immediately with a clean lint-free cloth.
4. Shake the glass primer, black #2, for at least 1 minute.
5. Use a new dauber in order to apply glass primer, black #2, to the top edge of the window.

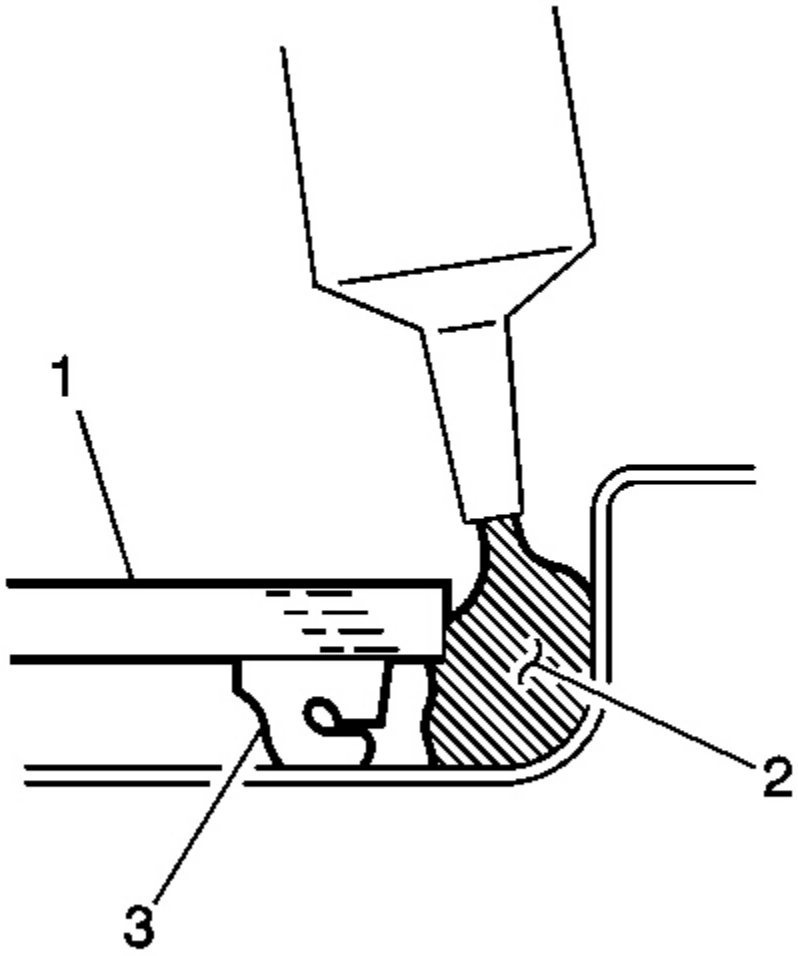

Fig. 33: Applying Urethane Adhesive
Courtesy of GENERAL MOTORS CORP.

6. Apply a small bead of urethane adhesive (2) between the window (1) and the pinch-weld.

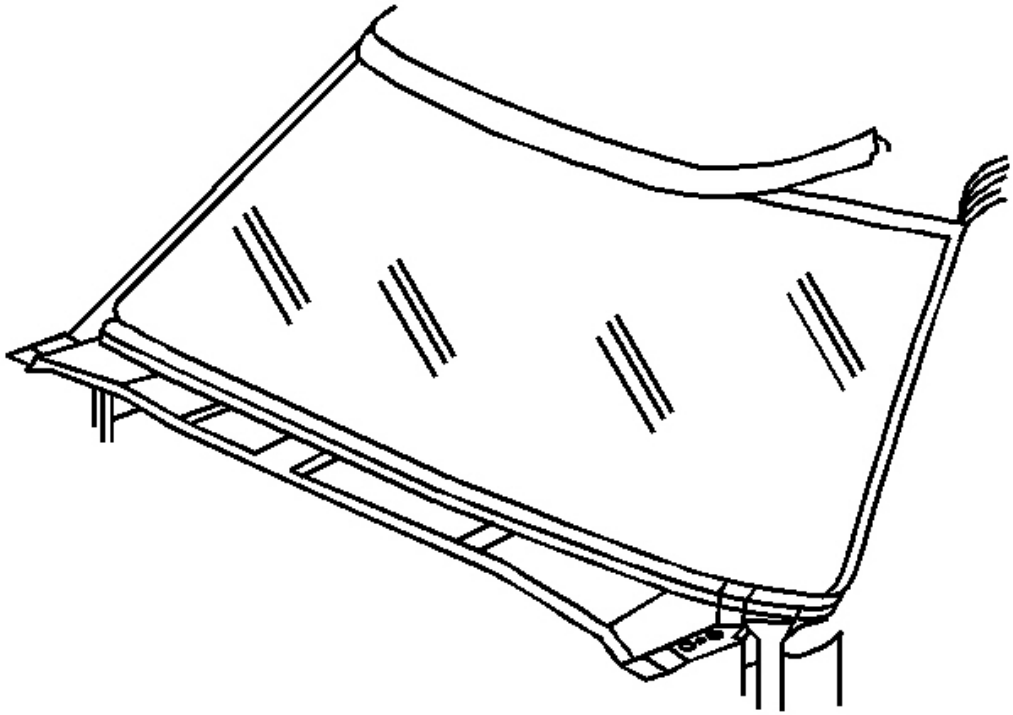

Fig. 34: Identifying Loose Window Molding
Courtesy of GENERAL MOTORS CORP.

7. Reinstall the window reveal molding.
    1. Start from the loose area and hand-press the reveal molding into place over the edge of the window.
    2. Run warm water over the reveal molding in order to speed the setup time of the urethane adhesive.
    3. Tape should be applied in order to retain the reveal molding to the window. This will maintain a flush fit with the body.
    4. The tape is to be removed after 6 hours.

WINDSHIELD REVEAL MOLDING REPLACEMENT

The windshield reveal molding is an applied molding design separate from the window. The reveal molding is bonded to the windshield and may be bonded to the body. The reveal molding may be replaced with the windshield as an assembly, or the reveal molding may be available as a separate service part. Refer to **Urethane Adhesive Installation of Stationary Windows** .

SIDE WINDOW FILLER PANEL REPLACEMENT

Removal Procedure

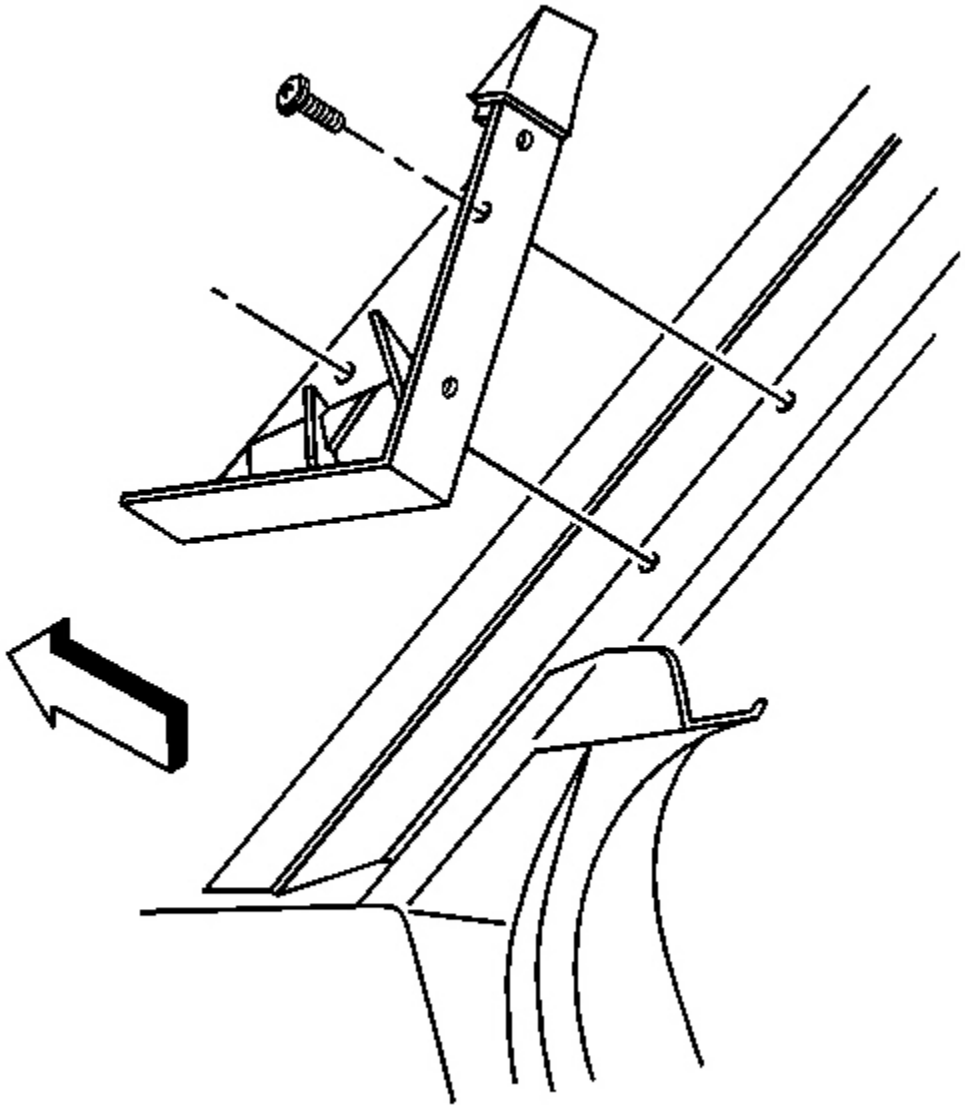

Fig. 35: Filler Panel To Windshield Pillar
Courtesy of GENERAL MOTORS CORP.

1. Remove the windshield weatherstrip, the side retainer, and the windshield side reveal molding. Refer to **Side Reveal Molding Replacement (Coupe and Convertible)** or **Side Reveal Molding Replacement (Hardtop)** .

2. Remove the side window filler panel.

   Remove the screws attaching the filler panel.

   Separate the filler panel from the sealant attaching the panel to the windshield pillar.

3. Remove the old sealant from the windshield pillar.

Installation Procedure

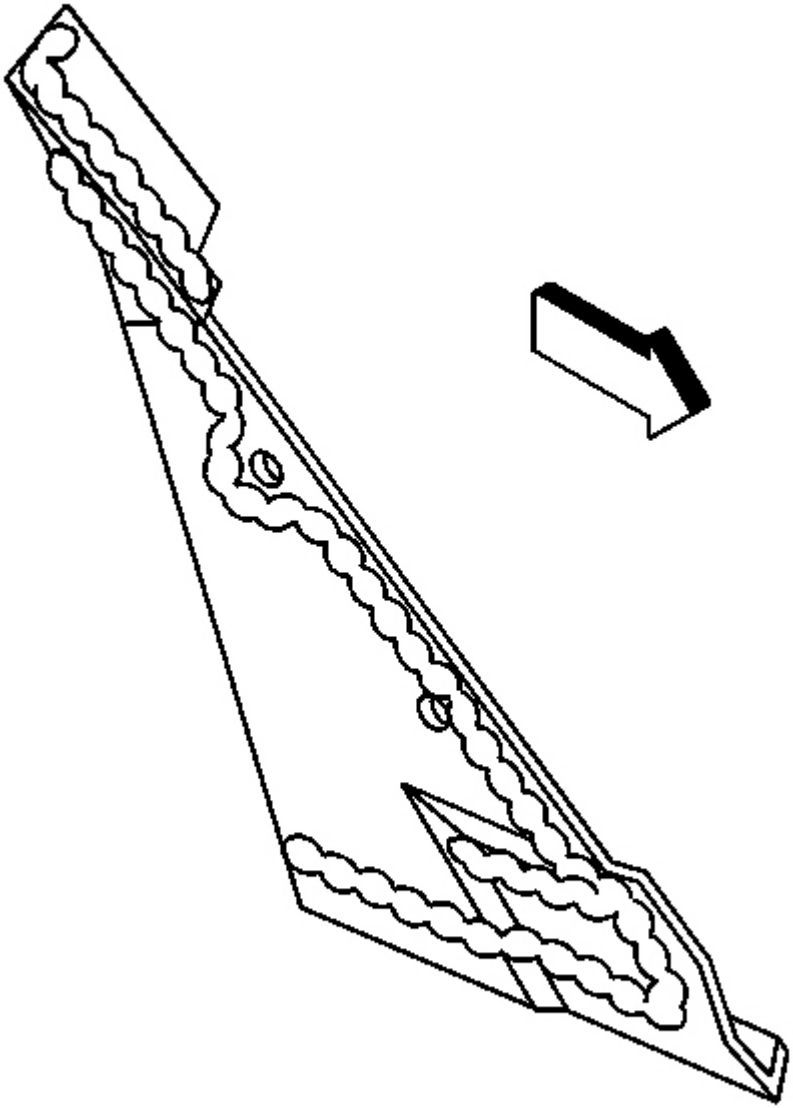

Fig. 36: Side Window Filler Panel To Windshield Pillar
Courtesy of GENERAL MOTORS CORP.

1. Apply a continuous bead of sealant GM P/N 12345097, or equivalent, to the side window filler panel along the surface that will contact the windshield pillar as illustrated.

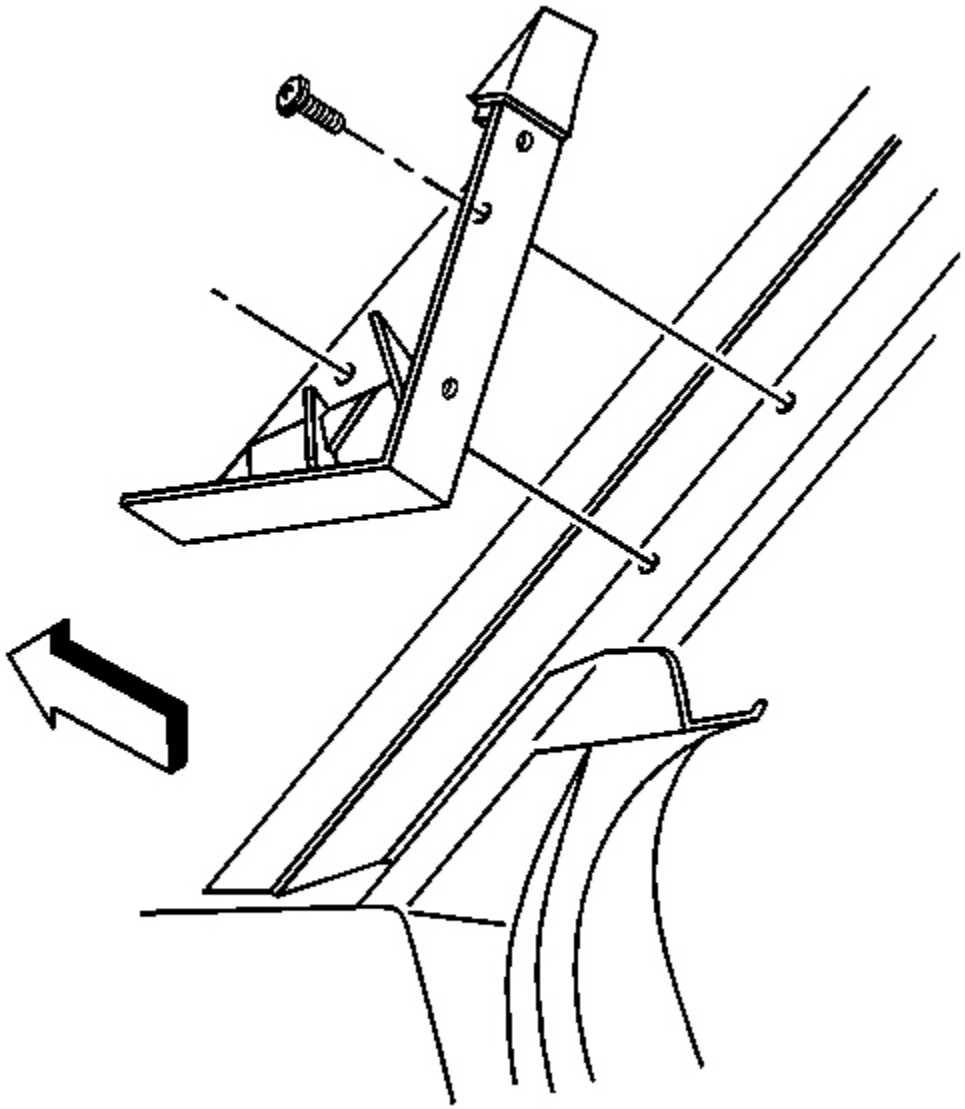

Fig. 37: Filler Panel To Windshield Pillar
Courtesy of GENERAL MOTORS CORP.

2. Position the filler panel to the windshield pillar.

NOTE: Refer to Fastener Notice in Cautions and Notices.

3. Install the screws attaching the side window filler panel.

   Tighten: Tighten the filler panel screws to 2.5 N.m (22 lb in).

4. Wipe off any excessive sealant that squeezed out around the filler panel.
5. Install the windshield side reveal molding, the side weatherstrip retainer, and the weatherstrip. Refer to **Side Reveal Molding Replacement (Coupe and Convertible)** or **Side Reveal Molding Replacement (Hardtop)** .

SIDE REVEAL MOLDING REPLACEMENT (COUPE AND CONVERTIBLE)

Removal Procedure

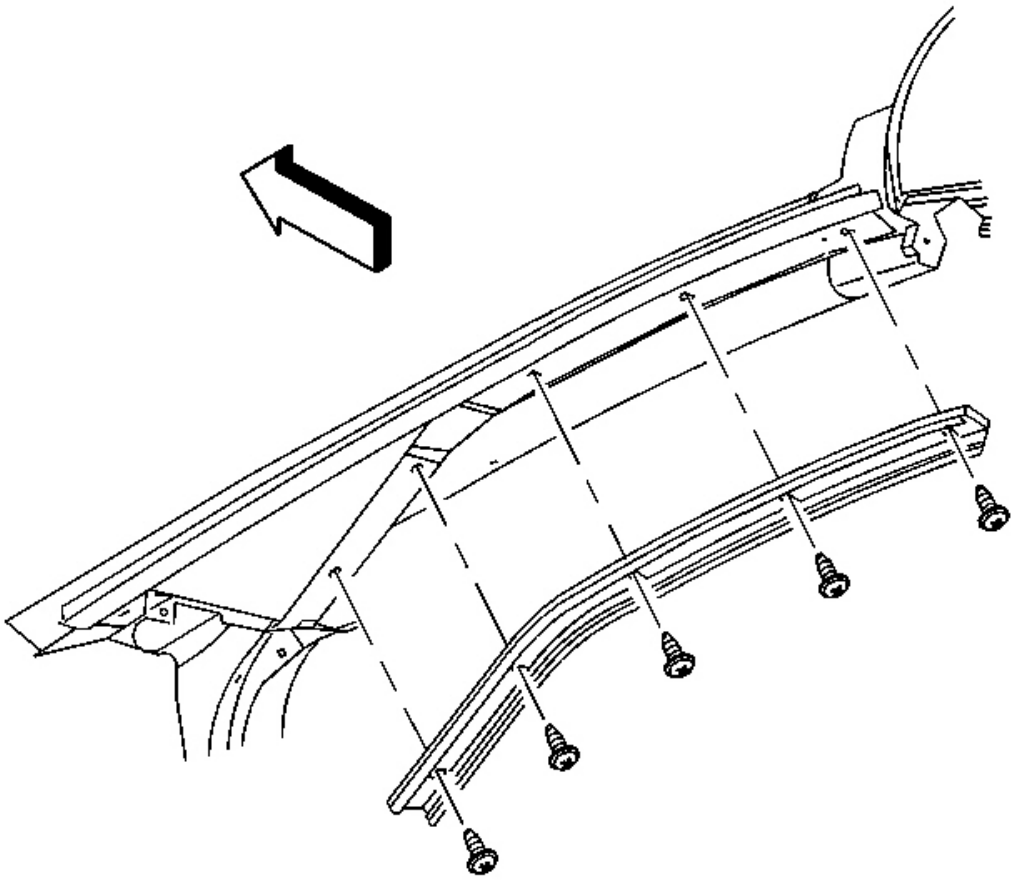

Fig. 38: Weatherstrip Side Retainer Screws To Side Reveal Molding & Applique
Courtesy of GENERAL MOTORS CORP.

1. Remove the windshield weatherstrip side retainer. Refer to **Weatherstrip Side Retainer Replacement (Coupe and Convertible)** or **Weatherstrip Side Retainer Replacement (Hardtop)** .

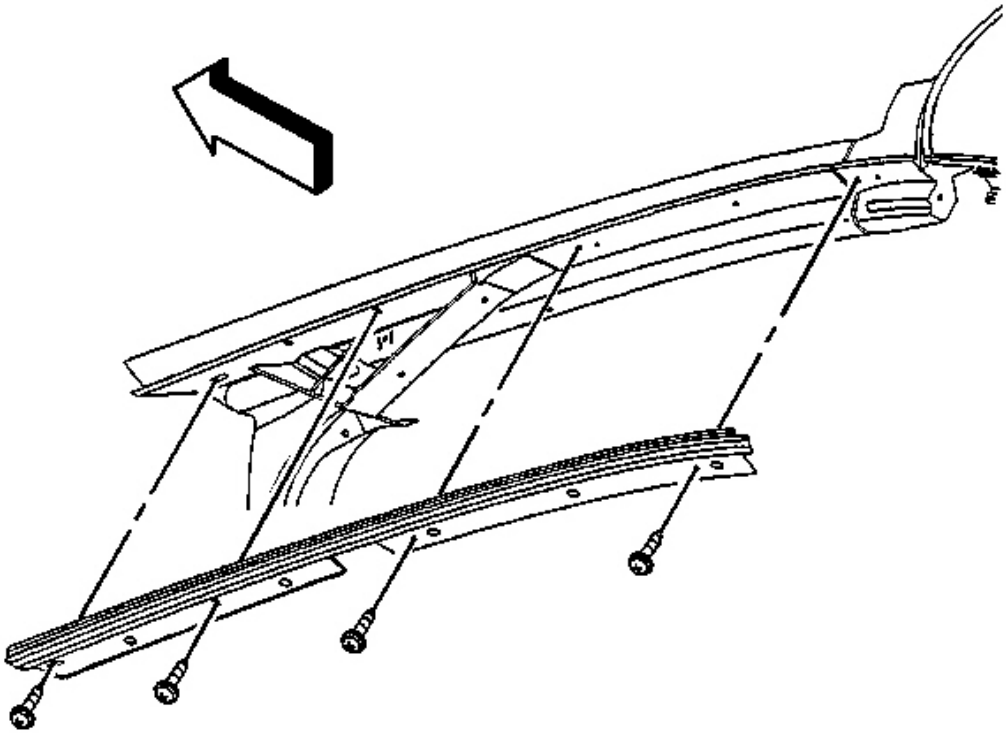

Fig. 39: Applique To Windshield Frame
Courtesy of GENERAL MOTORS CORP.

2. Remove the windshield side reveal molding screws.
3. Peel away the reveal molding with the applique from the windshield frame.
4. Remove the applique from the reveal molding.
5. Clean all surfaces.

Installation Procedure

1. Insert the forward edge of the applique into the side reveal molding.
2. Firmly press the applique and the reveal molding together.
3. Replace the foam sealing tape if reusing the reveal molding.
    - Extend the tape 2.0 mm (0.08 in) beyond the reveal molding ends.

- Do not stretch the tape to fit. The tape may shrink back, or creep, after installation, resulting in a gap which may cause a leak.

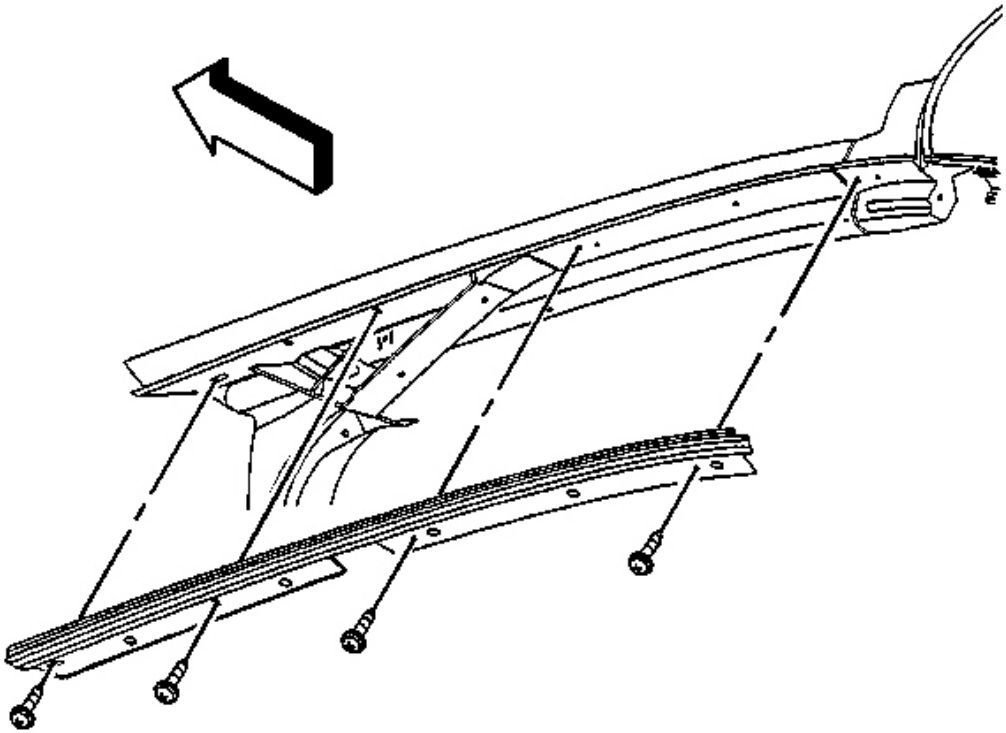

Fig. 40: Applique To Windshield Frame
Courtesy of GENERAL MOTORS CORP.

4. Position the windshield side reveal molding on the windshield frame.

NOTE: **Refer to Fastener Notice in Cautions and Notices.**

5. Install the windshield side reveal molding screws.

Tighten: Tighten the windshield side reveal molding screws to 1.8 N.m (16 lb in).

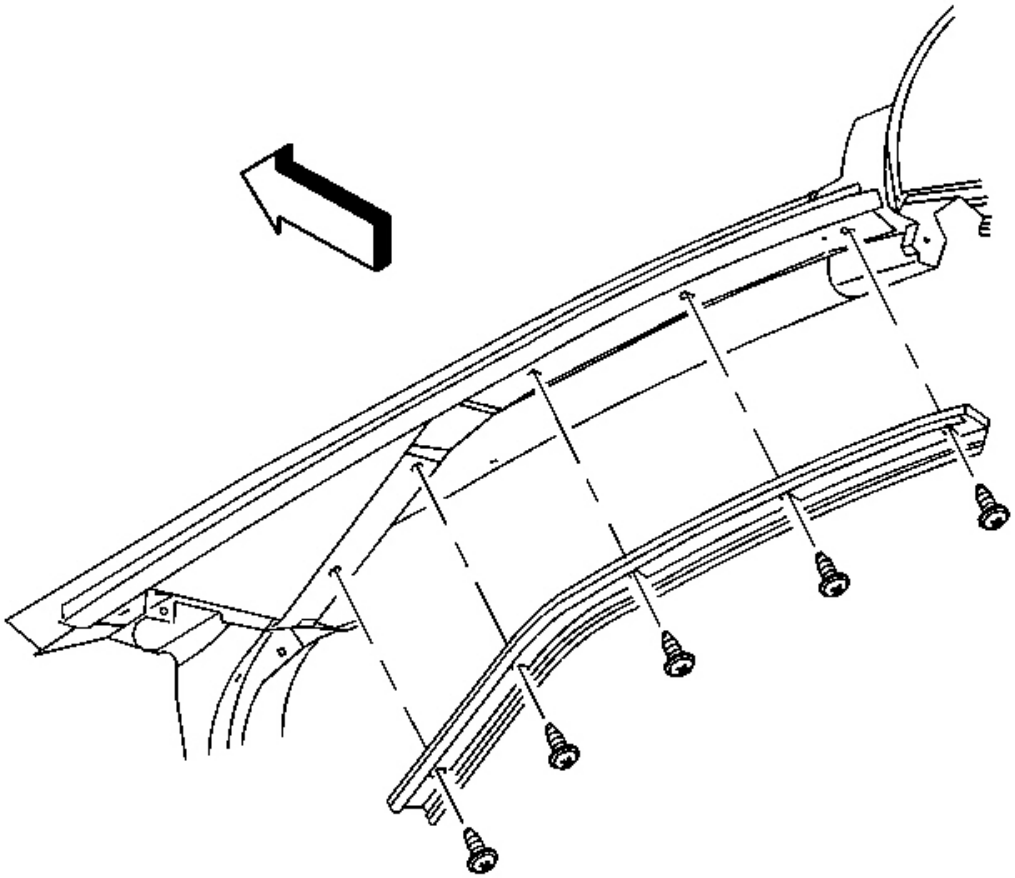

Fig. 41: Weatherstrip Side Retainer Screws To Side Reveal Molding & Applique
Courtesy of GENERAL MOTORS CORP.

6. Install the windshield weatherstrip side retainer and the weatherstrip. Refer to **Weatherstrip Side Retainer Replacement (Coupe and Convertible)** or **Weatherstrip Side Retainer Replacement (Hardtop)** .

SIDE REVEAL MOLDING REPLACEMENT (HARDTOP)

Removal Procedure

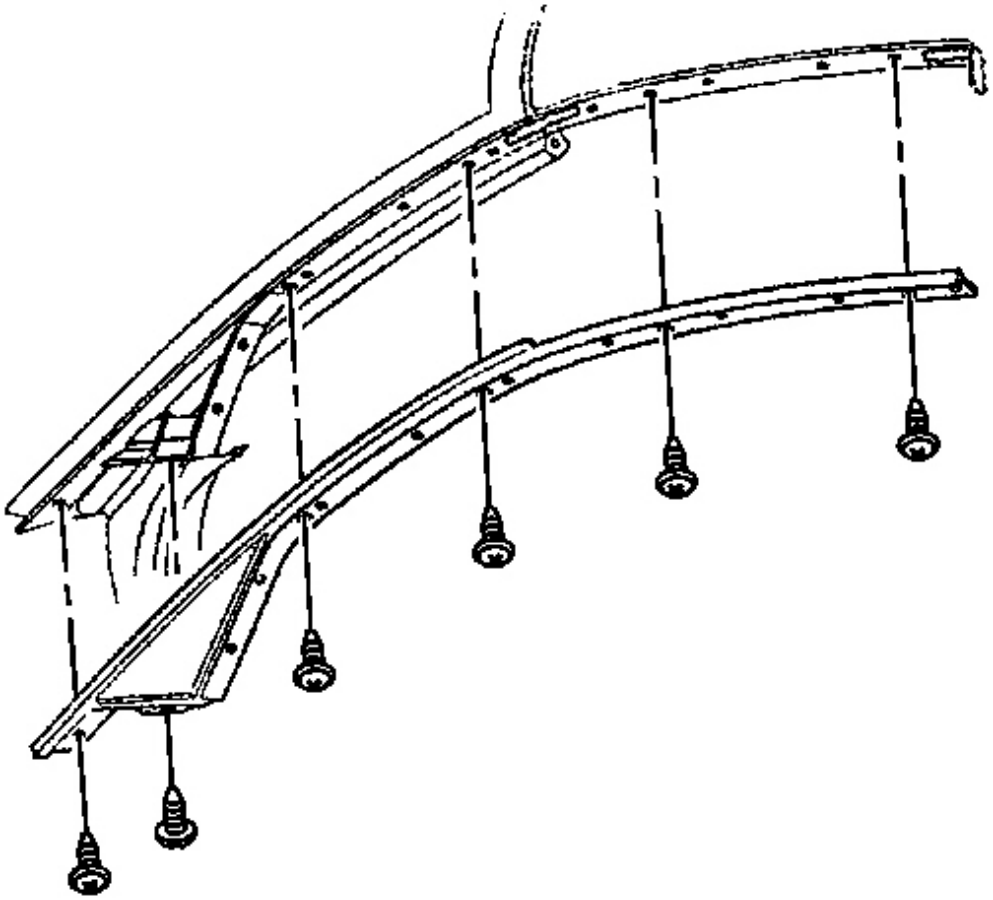

Fig. 42: Weatherstrip Retainer & Blow Out Clip
Courtesy of GENERAL MOTORS CORP.

1. Remove the weatherstrip, the weatherstrip retainer, and the blow out clip. Refer to **Weatherstrip Side Retainer Replacement (Coupe and Convertible)** or **Weatherstrip Side Retainer Replacement (Hardtop)** .
2. Remove the screws attaching the reveal molding.
3. Remove the side reveal molding.
4. Clean the mounting surfaces.

Installation Procedure

-

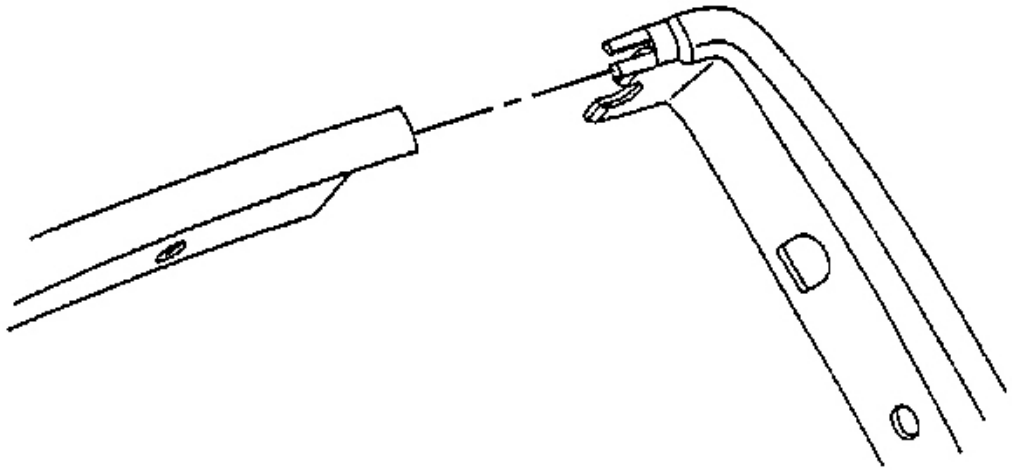

Fig. 43: Roof & Windshield Header
Courtesy of GENERAL MOTORS CORP.

1. Apply a 100 mm (4 in) long bead of sealant GM P/N 12345097, or equivalent, across the seam where the roof and windshield header meet.
2. Install the reward end of the side reveal molding over the lock pillar upper molding.

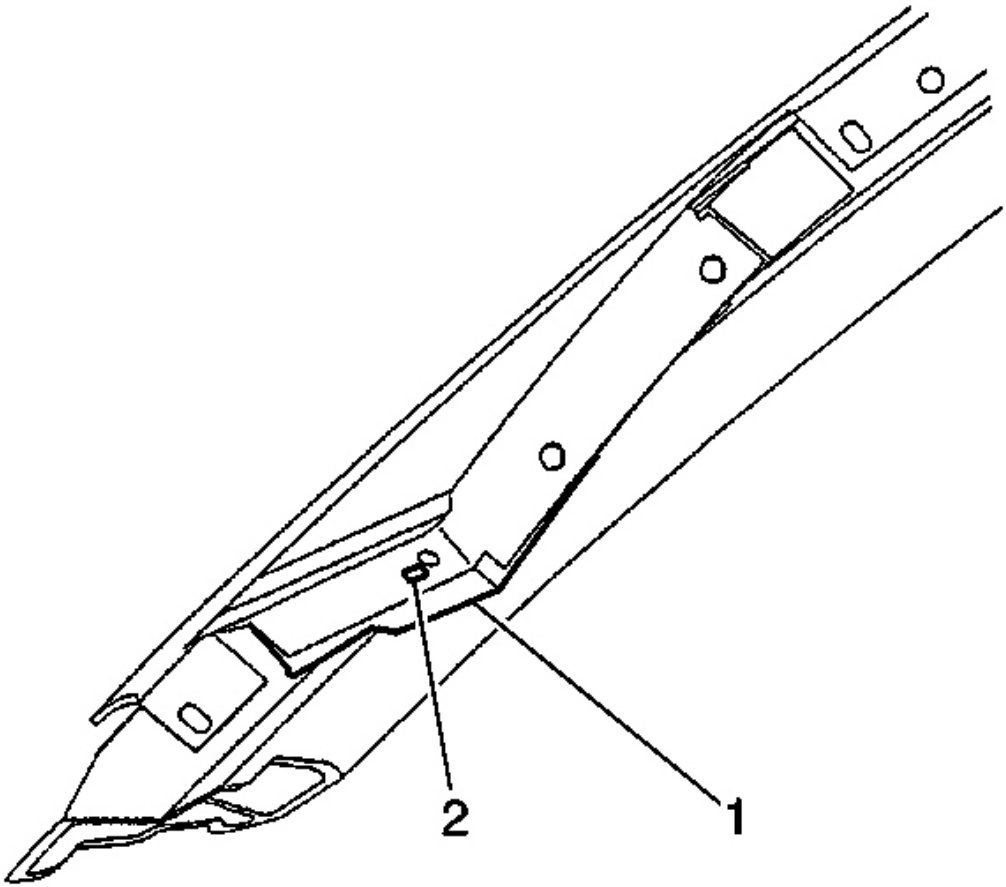

Fig. 44: Applique To Filler Panel
Courtesy of GENERAL MOTORS CORP.

3. Align the applique to the slot (2) in the filler panel (1).

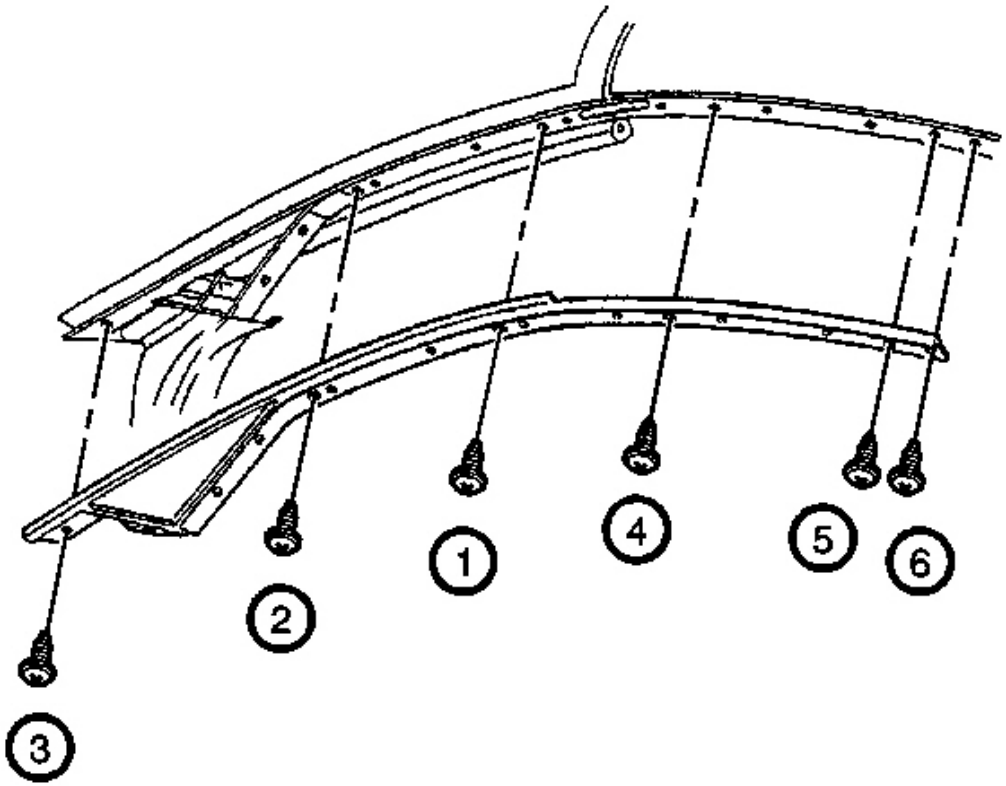

Fig. 45: Side Reveal Molding Screws
Courtesy of GENERAL MOTORS CORP.

NOTE: Refer to Fastener Notice in Cautions and Notices.

4. Loosely install the side reveal molding screws.
5. Tighten the screws in sequence (1-6), starting in the center as illustrated.

   Tighten: Tighten the side reveal molding screws to 2.5 N.m (22 lb in).

6. Apply sealant, install the weatherstrip retainer, the blow out clip, and the weatherstrip. Refer to **Weatherstrip Side Retainer Replacement (Coupe and Convertible)** or **Weatherstrip Side Retainer Replacement (Hardtop)** .

REARVIEW MIRROR REPLACEMENT (BASE)

Removal Procedure

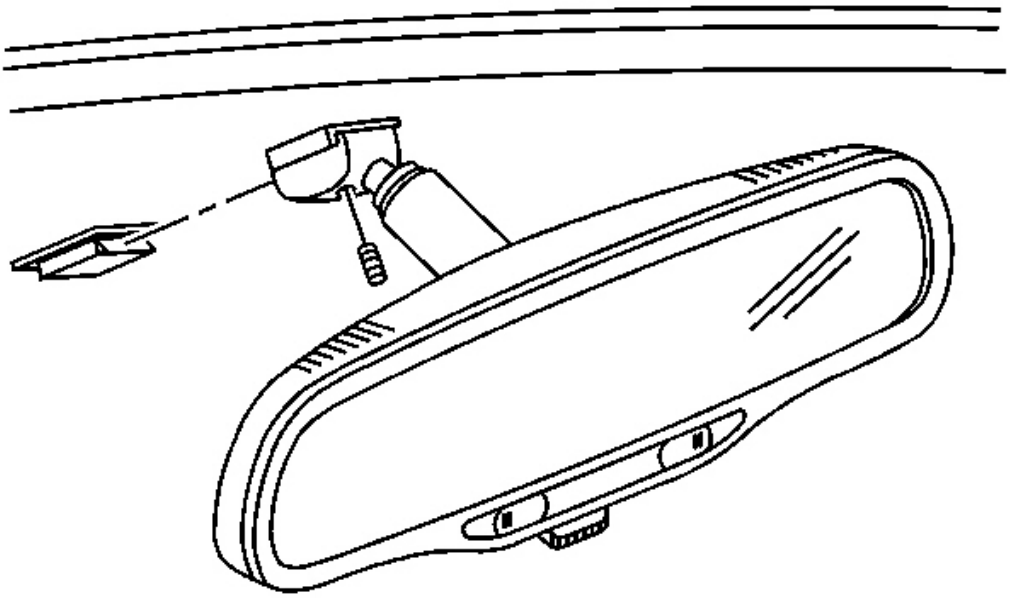

Fig. 46: Inside Rearview Mirror Electrical Connector & Bracket
Courtesy of GENERAL MOTORS CORP.

1. Disconnect the inside rearview mirror electrical connector.
2. Loosen the mirror mount tension screw.
3. Slide the mirror up off the mirror bracket.

Installation Procedure

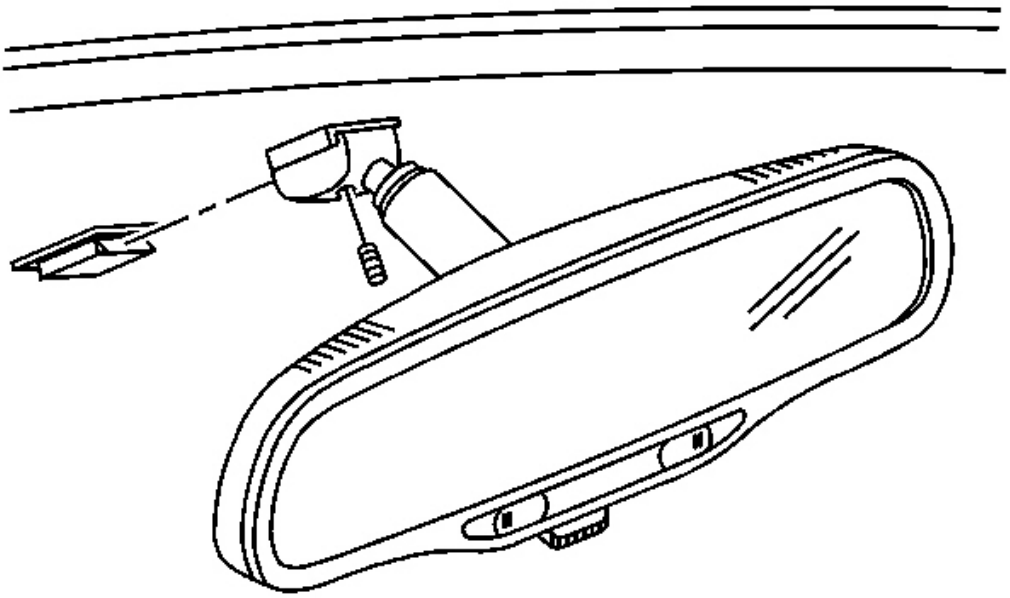

Fig. 47: Inside Rearview Mirror Electrical Connector & Bracket
Courtesy of GENERAL MOTORS CORP.

1. Slide the rearview mirror down onto the bracket.
2. Connect the electrical connector.

NOTE: Refer to Fastener Notice in Cautions and Notices.

Tighten the mirror tension screw.

Tighten: Tighten the rearview mirror mount tension screw to 1.5 N.m (13 lb in).

REARVIEW MIRROR REPLACEMENT (DD8)

Removal Procedure

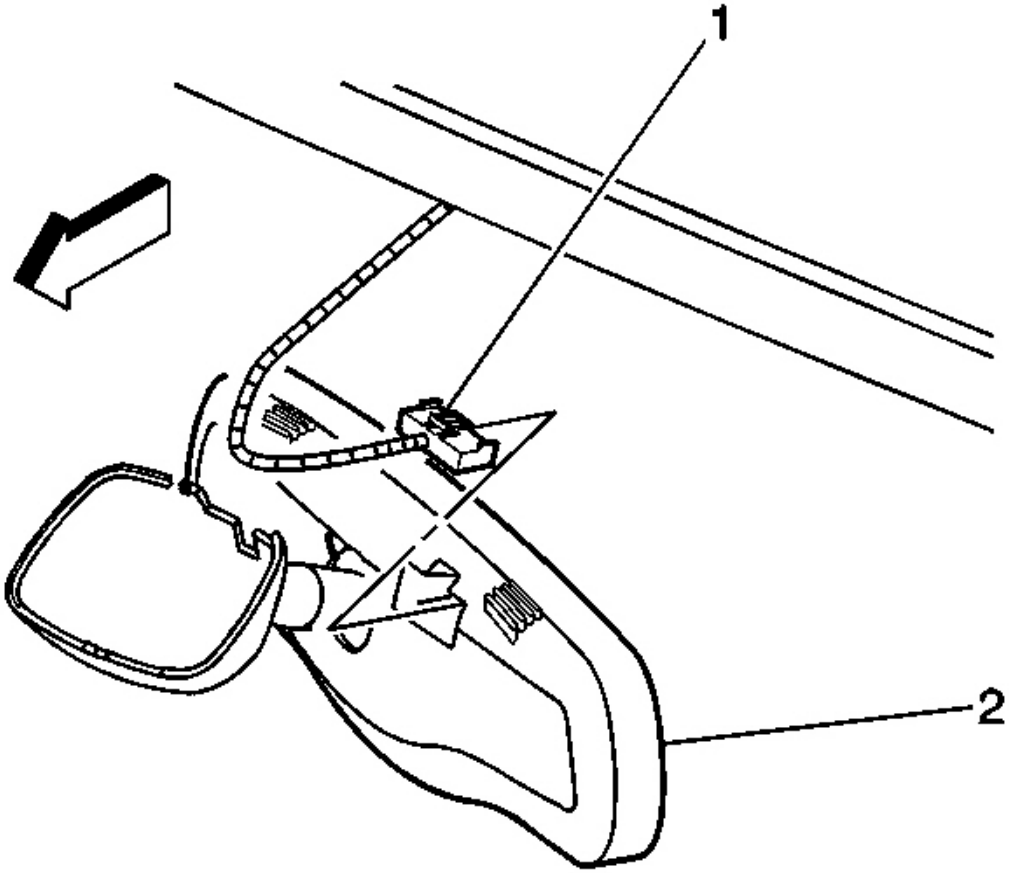

Fig. 48: Electrical Connector To Back Of Inside Rearview Mirror
Courtesy of GENERAL MOTORS CORP.

1. Remove the electrical connector (1) from the back of the inside rearview mirror.

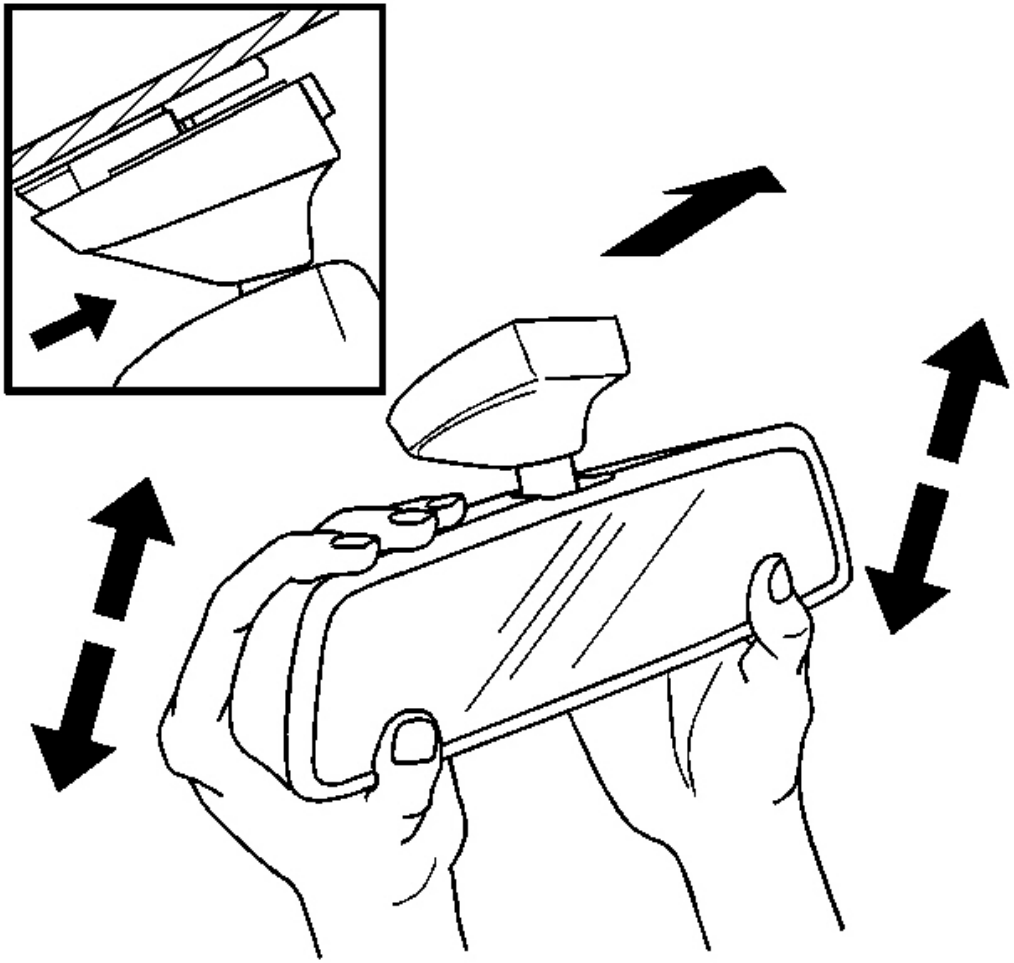

Fig. 49: Inside Rearview Mirror Support
Courtesy of GENERAL MOTORS CORP.

IMPORTANT: Do NOT pull rearward on the mirror while removing the mirror or damage to the support and/or windshield will occur.

2. Rock the mirror from side to side pushing upward firmly.

   An audible click is heard when the inside rearview mirror is releasing from the support.

3. Remove the inside rearview mirror support.

Installation Procedure

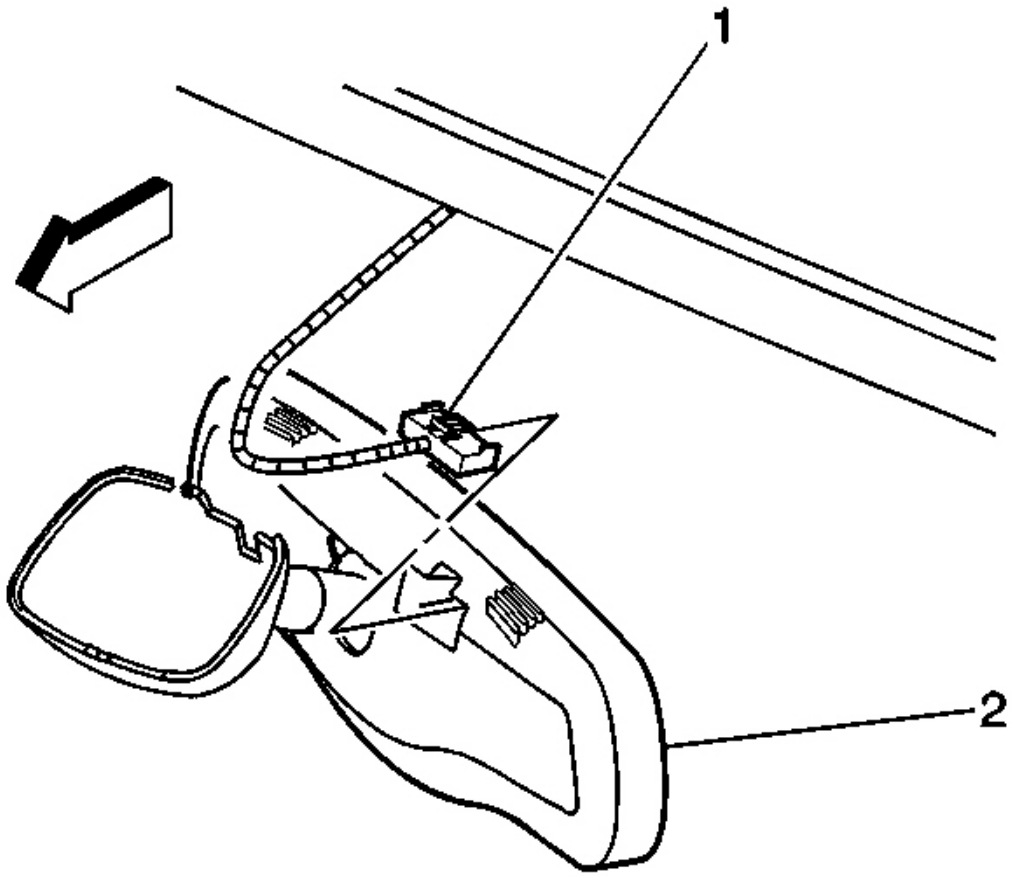

Fig. 50: Electrical Connector To Back Of Inside Rearview Mirror
Courtesy of GENERAL MOTORS CORP.

1. Install the electrical connector (1) to the back of the inside rearview mirror.

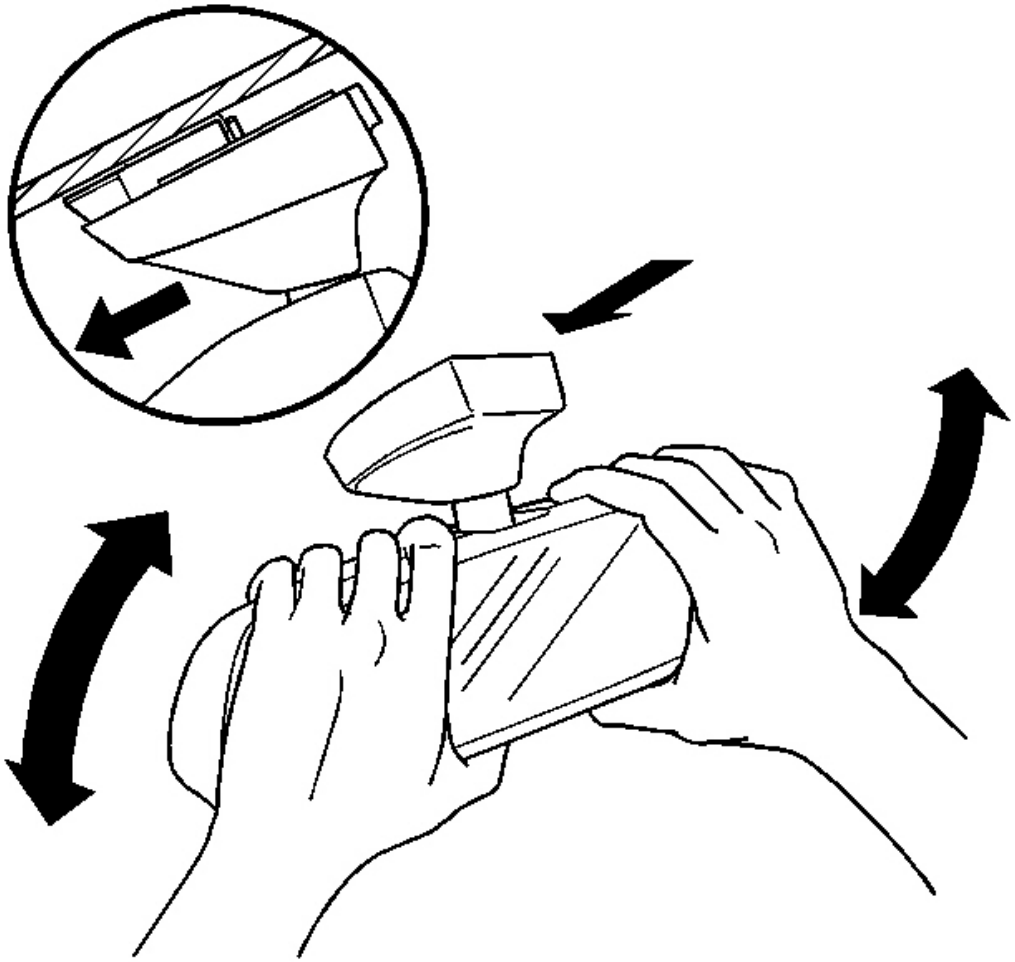

Fig. 51: Inside Rearview Mirror To Windshield
Courtesy of GENERAL MOTORS CORP.

2. Perform the following steps to install the inside rearview mirror:
    1. Center the bottom of the inside rearview mirror on the support.

IMPORTANT: Do NOT pull rearward on the mirror while installing the mirror or damage to the support and/or windshield will occur.

    2. Rock the inside rearview mirror from side to side while pushing downward firmly. Take care not to damage the windshield.
    3. An audible click is heard when the inside rearview mirror is fully seated.

REARVIEW MIRROR SUPPORT INSTALLATION

Tools Required

- Inside Mirror Adhesive Kit GM P/N 1052369 (Canadian P/N 993362) or equivalent
- Safety Razor or Utility Knife

1. Determine the location of the mirror mounting base by marking the outside of the windshield with a marking pencil where the base was previously located. If it is not clear where the base was mounted, use the following steps to determine where the base should be installed:

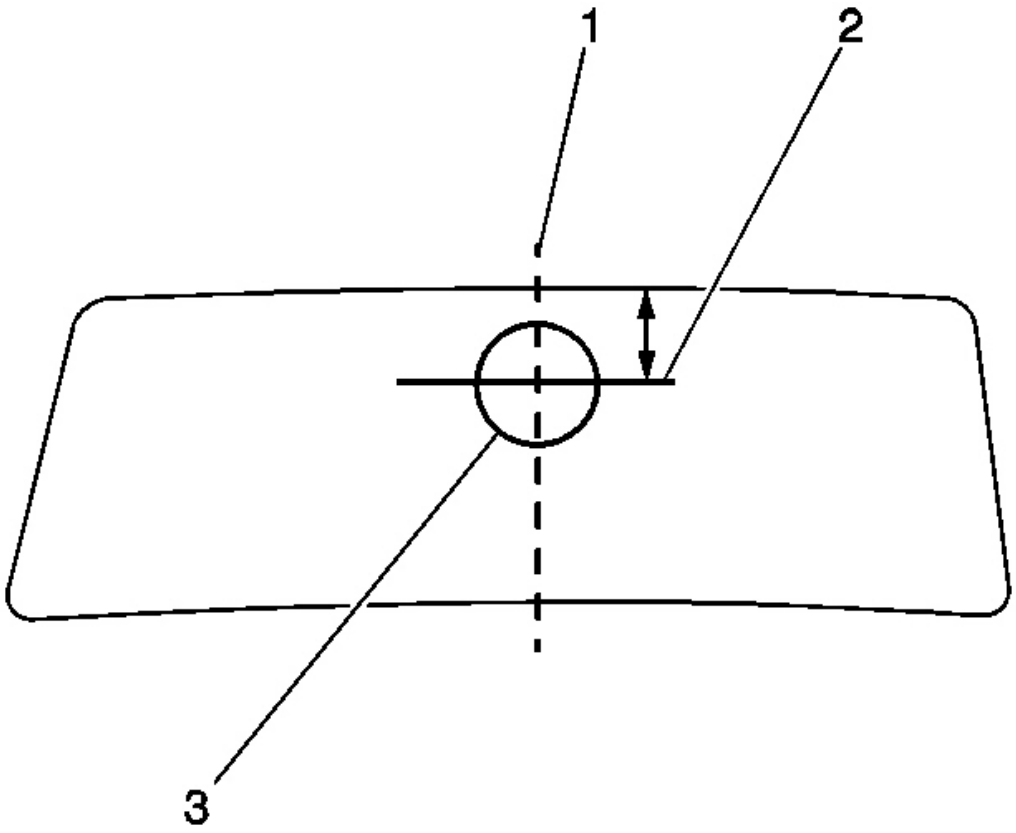

Fig. 52: Identifying Mirror Mounting Base Location
Courtesy of GENERAL MOTORS CORP.

1. Using a measuring tape, measure the distance between the windshield pillars from the base of the shade line.

2. Using a marking pencil, halfway between the windshield pillars, draw a centerline (1) on the windshield from the roof panel to the windshield base.
3. Draw a perpendicular line intersecting the centerline (2) at that location.

   The top center of the mirror mounting base will be at the intersection of these lines.

2. Scrape the inside windshield glass thoroughly with a safety razor or utility knife in order to remove all old adhesive.
3. If reinstalling the original mounting base, place the mirror mounting base in a suitable holding device, such as a vice.
4. Scrape the mirror mounting base thoroughly with a safety razor or utility knife in order to remove all old adhesive.
5. Clean the inside windshield glass and the mounting surface of the mirror mounting base thoroughly with a clean cloth saturated with naphtha or a 50/50 mixture (by volume) of clean water and isopropyl alcohol.

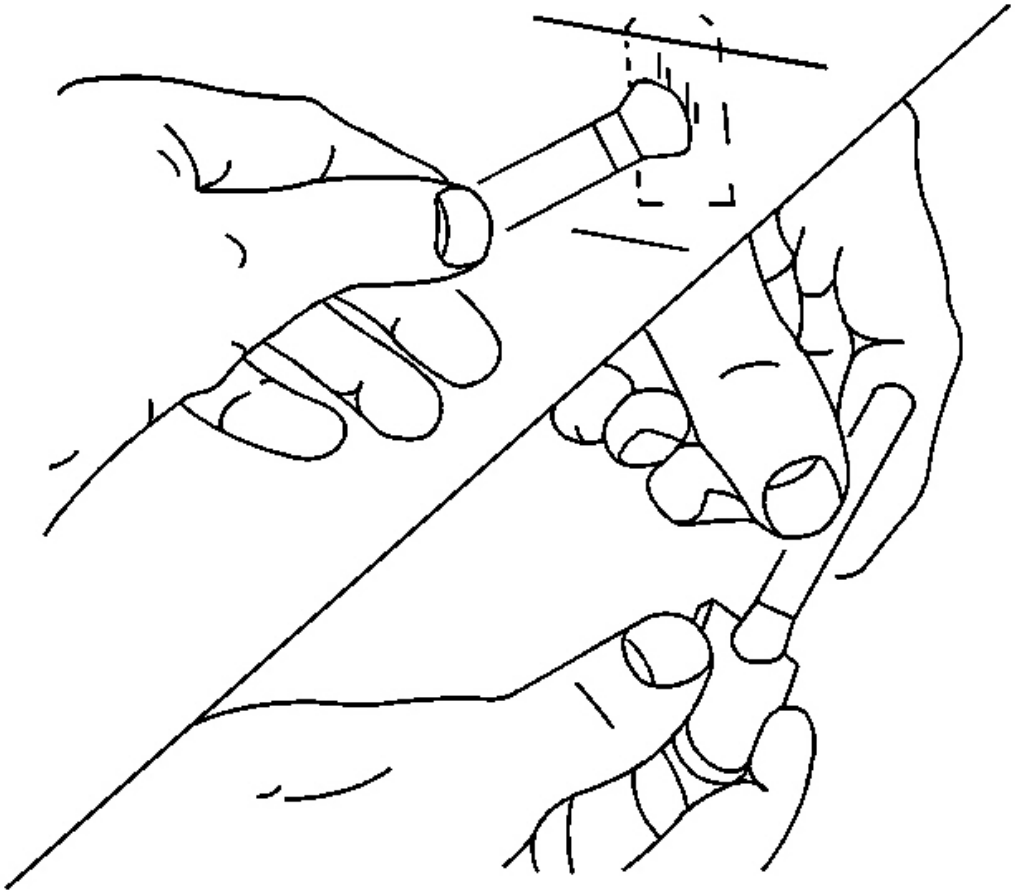

Fig. 53: Preparing Mirror Mounting Base
Courtesy of GENERAL MOTORS CORP.

6. Use Inside Mirror Adhesive Kit GM P/N 1052369, (Canadian P/N 993362) or equivalent to apply a small amount of activator to the mounting surface of the mirror mounting base.
7. Apply a small amount of activator to the windshield where the mounting base is to be installed.
8. Allow the activator to dry 5 minutes.

IMPORTANT: Do not touch the mounting surface of the mirror mounting base or the glass.

9. Apply 1 drop of adhesive to the center of the mirror mounting base.

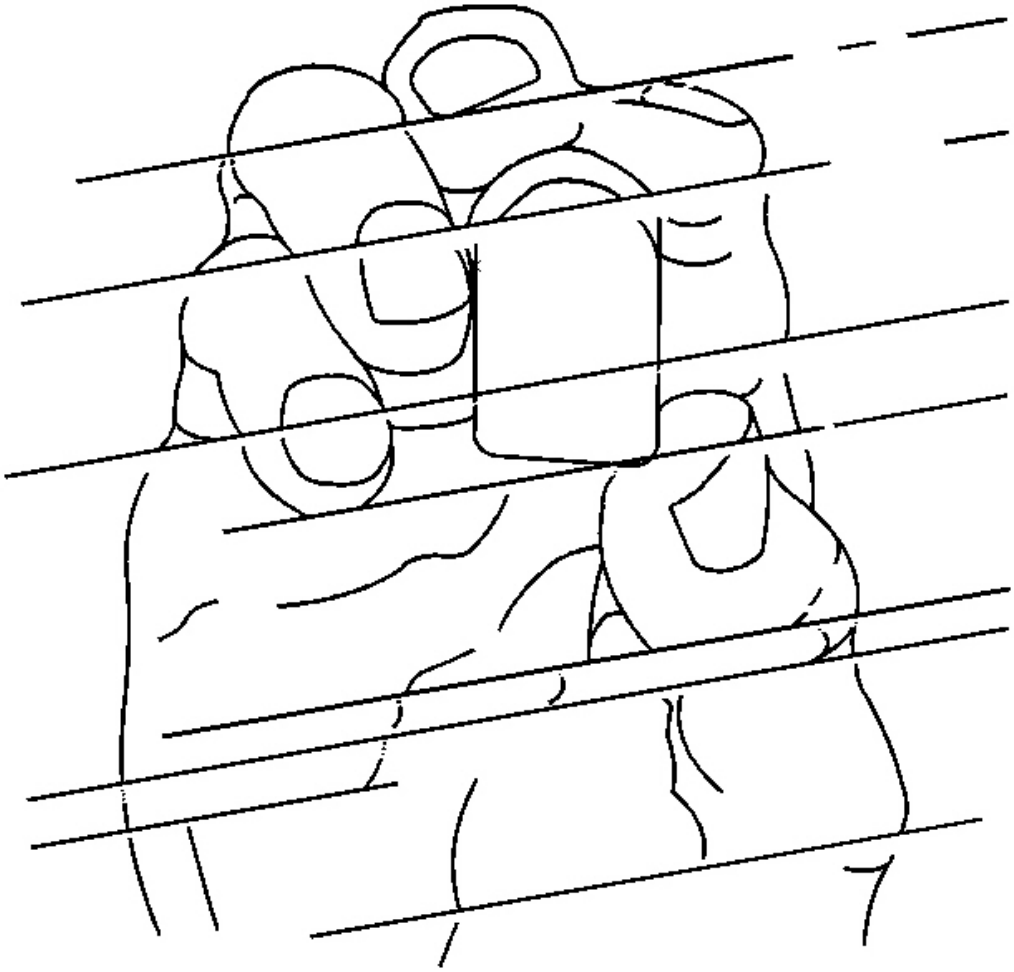

Fig. 54: Installing Mirror Base
Courtesy of GENERAL MOTORS CORP.

10. Immediately apply the mounting base to the windshield, ensuring that the mounting base aligns correctly to the marks made on the outside of the windshield.
11. Hold the mounting base firmly in place for 1 minute.
12. Allow the adhesive to set for 15 minutes.
13. Install the mirror to the mirror mounting base and fasten, if necessary.
14. Connect the electrical connector and install the wire cover, if equipped.

WINDSHIELD REPLACEMENT

Tools Required

- **J 24402-A** Glass Sealant Cold Knife Remover. See **Special Tools and Equipment** .
- **J 39032** Stationary Glass Removal Tool. See **Special Tools and Equipment** .
- Urethane Adhesive Kit or Equivalent
- Isopropyl Alcohol or Equivalent
- Cartridge-type Caulking Gun
- Commercial-type Utility Knife
- Razor Blade Scraper
- Suction Cups
- Plastic Paddle

Removal Procedure

1. Open the hood.
2. Lower the door windows.

IMPORTANT: Before cutting out a stationary window, apply a double layer of masking tape around the perimeter of the painted surfaces and inner trim.

3. Remove the windshield wiper arms. Refer to **Wiper Arm Replacement** in Wipers/Washer Systems.
4. Remove the roof lift off panel (coupe) or lower the folding top (convertible).

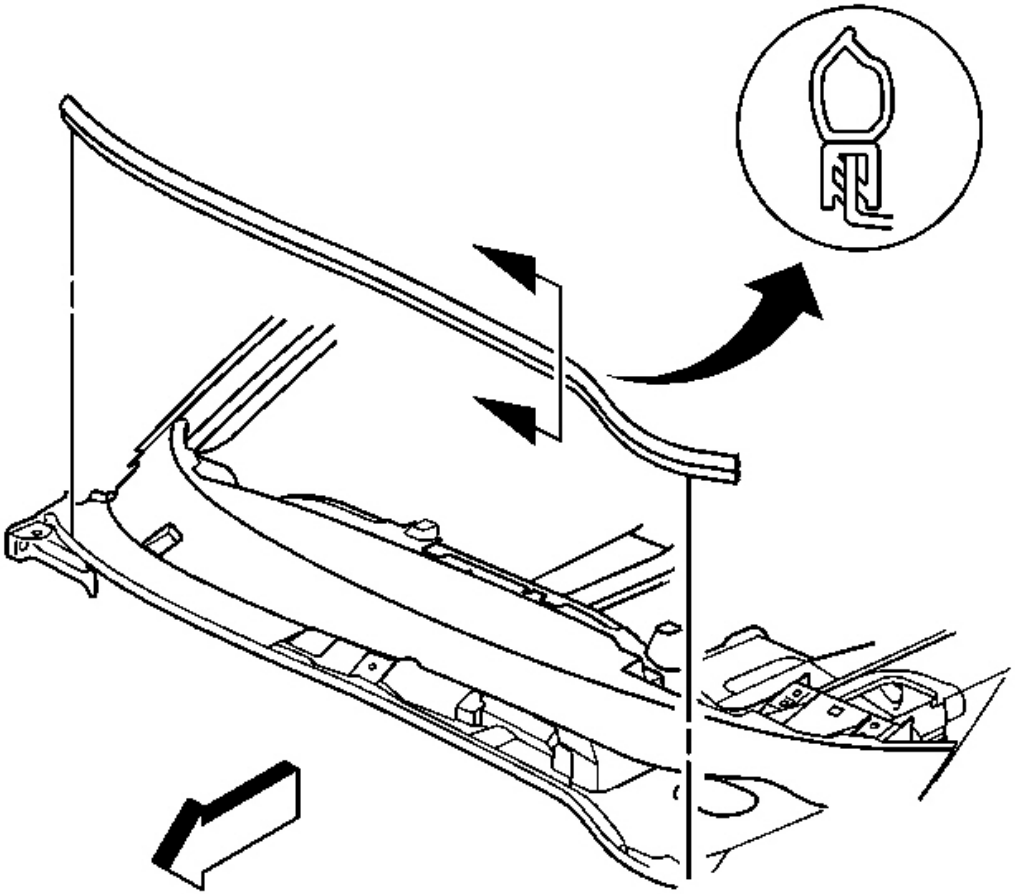

Fig. 55: Hood Air Inlet Screen Seal
Courtesy of GENERAL MOTORS CORP.

5. Remove the hood air inlet screen seal. Refer to **Seal Replacement - Hood Rear** in Body Front End.

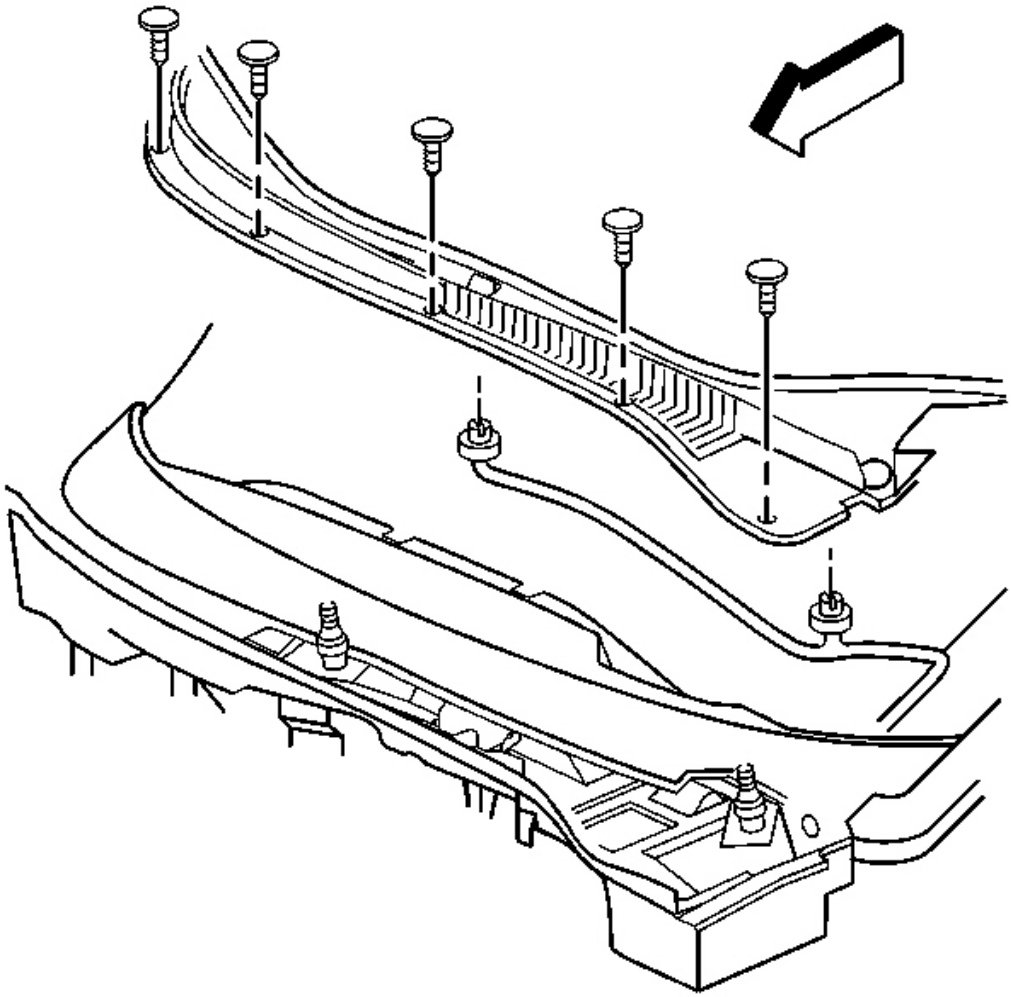

Fig. 56: Air Inlet Screen Panel
Courtesy of GENERAL MOTORS CORP.

6. Remove the air inlet screen panel. Refer to **Air Inlet Grille Panel Replacement** in Body Front End.
7. Remove the lower windshield supports (1) from the cowl panel, if equipped.

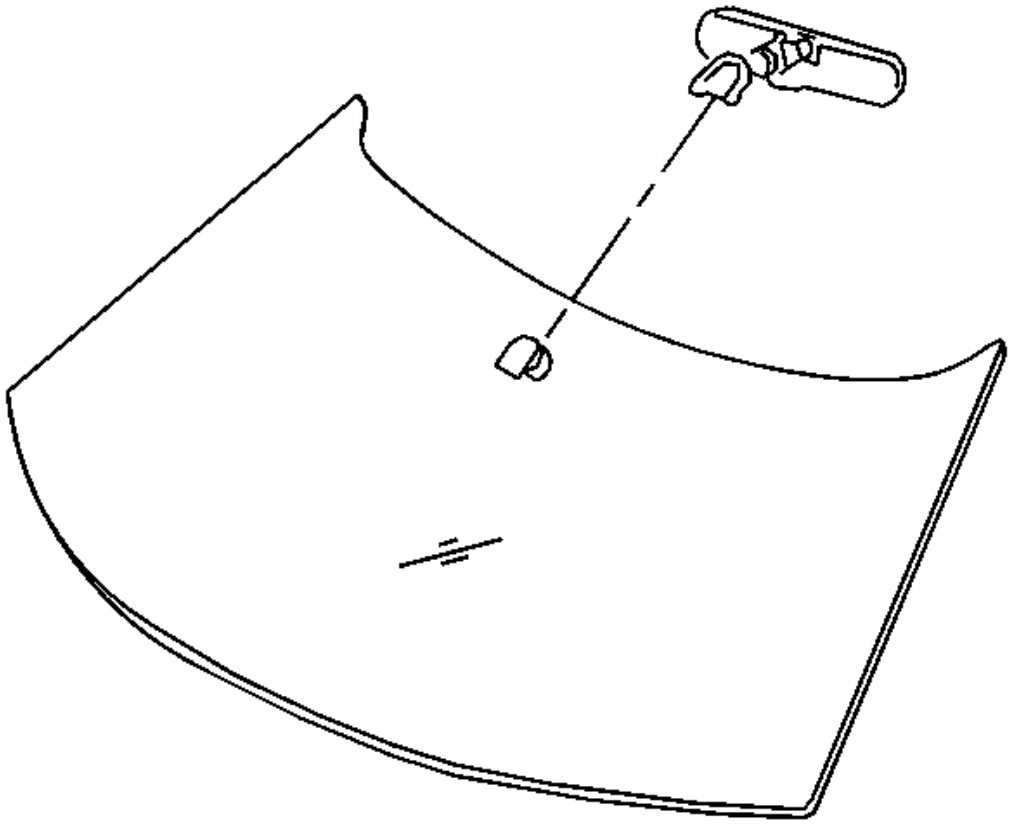

Fig. 57: Roof Lift Off Panel To Folding Top
Courtesy of GENERAL MOTORS CORP.

8. Remove the rearview mirror. Refer to **Rearview Mirror Replacement (Base)** or **Rearview Mirror Replacement (DD8)** .

CAUTION: Refer to Defroster Outlet Caution in Cautions and Notices.

9. Cover to protect the following parts from broken glass:
    1. Upper dash pad.
    2. Defroster outlets and A/C outlets.
    3. Seats and carpeting.

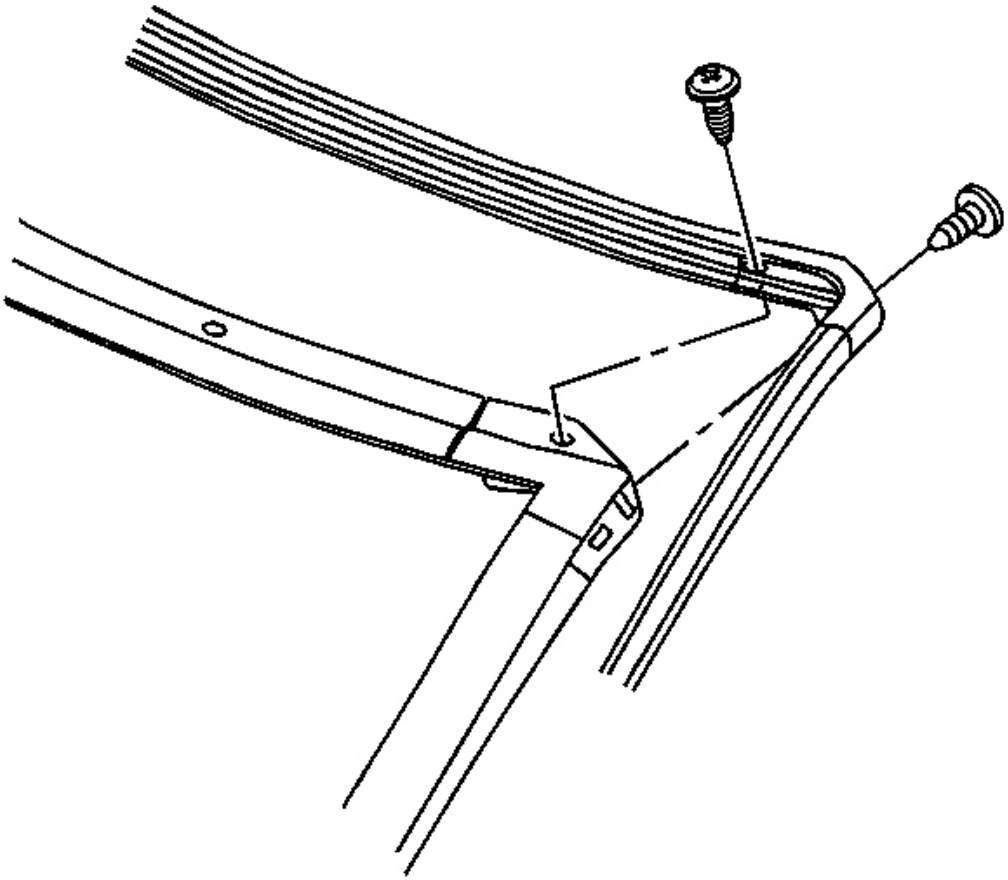

Fig. 58: Windshield Weather-Strip
Courtesy of GENERAL MOTORS CORP.

10. Remove the windshield weather-strip. Refer to **Weatherstrip Replacement (Coupe and Convertible)** or **Weatherstrip Replacement (Hardtop)** .

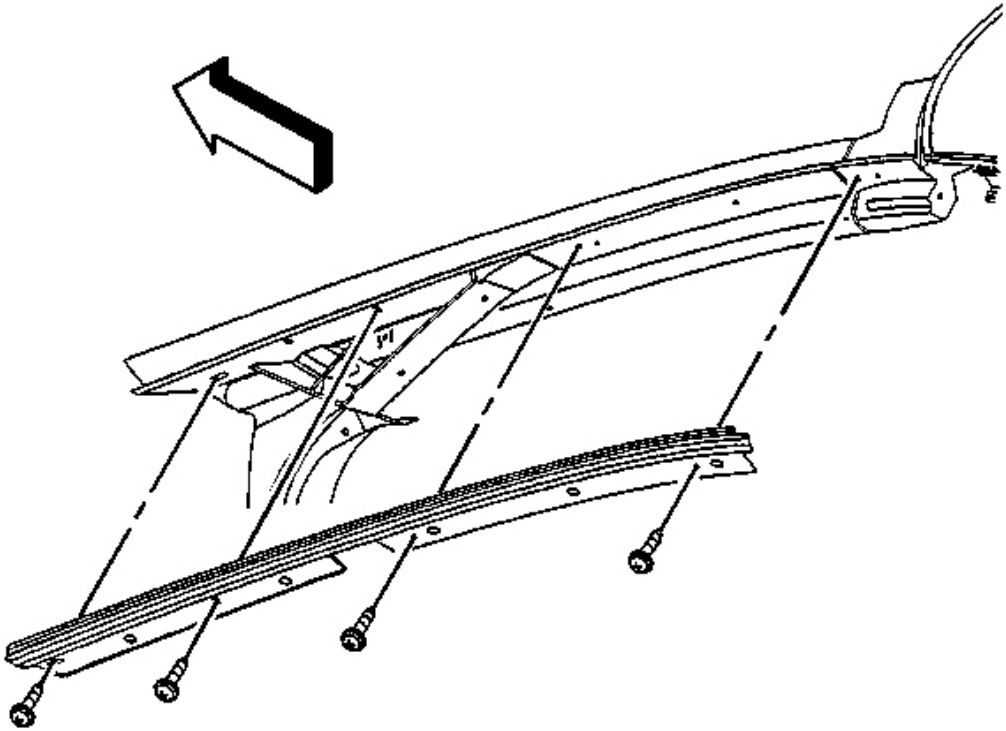

Fig. 59: Applique To Windshield Frame
Courtesy of GENERAL MOTORS CORP.

11. Remove the windshield side reveal moldings. Refer to **Side Reveal Molding Replacement (Coupe and Convertible)** or **Side Reveal Molding Replacement (Hardtop)** .

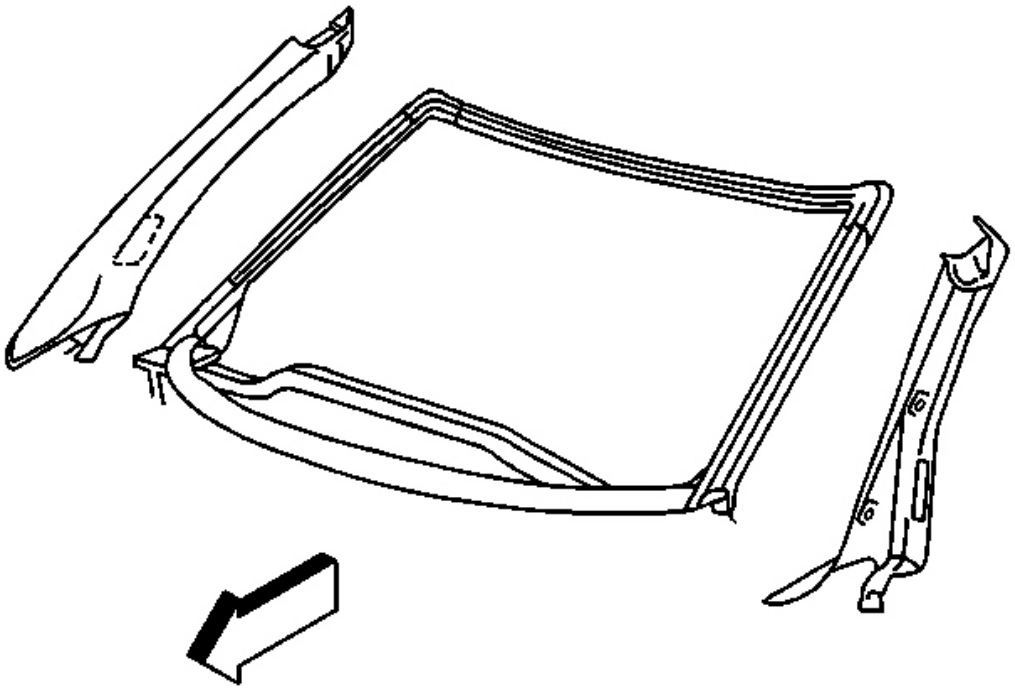

Fig. 60: Windshield Side Garnish Moldings & Retainer Clips To Windshield Frame
Courtesy of GENERAL MOTORS CORP.

12. Remove the windshield side garnish moldings and retainer clips from the windshield frame

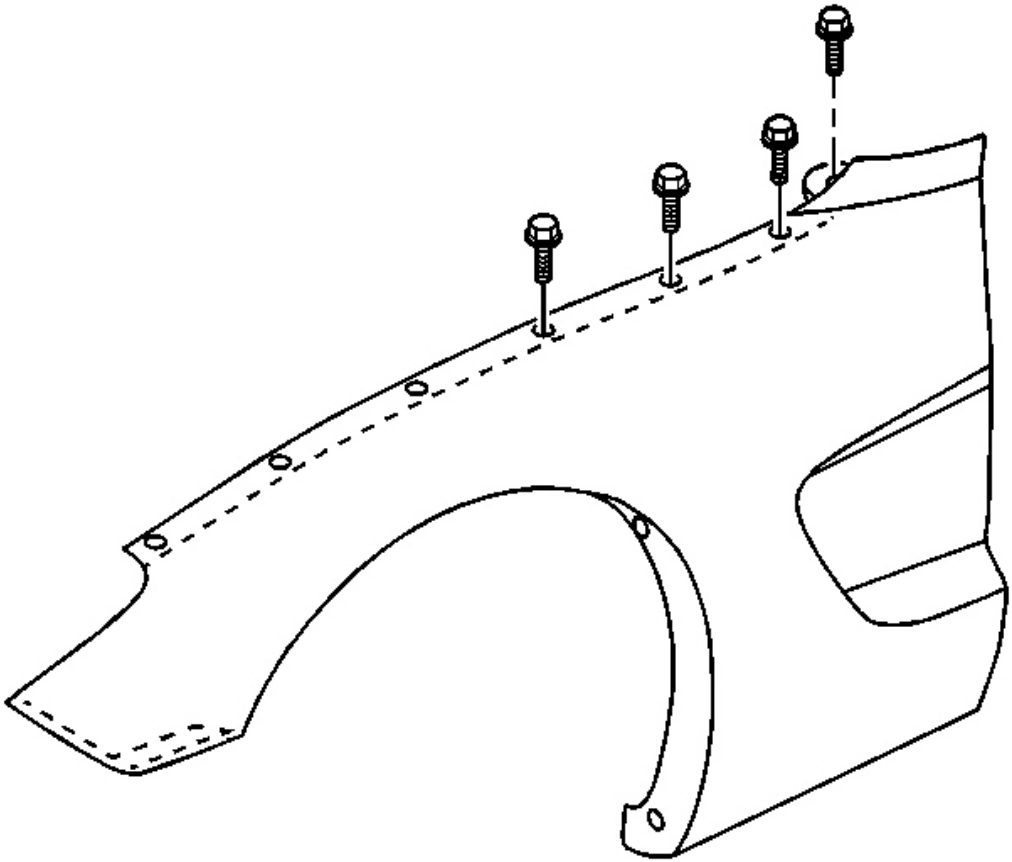

Fig. 61: Rearmost Screws At Top Of Fender To Wheelhouse
Courtesy of GENERAL MOTORS CORP.

13. Remove the 4 rearmost screws that attach the top of the fender to the wheelhouse.

IMPORTANT: Tape or otherwise protect the fender from the cutting tool.

14. Reposition the top of the fender for tool access.

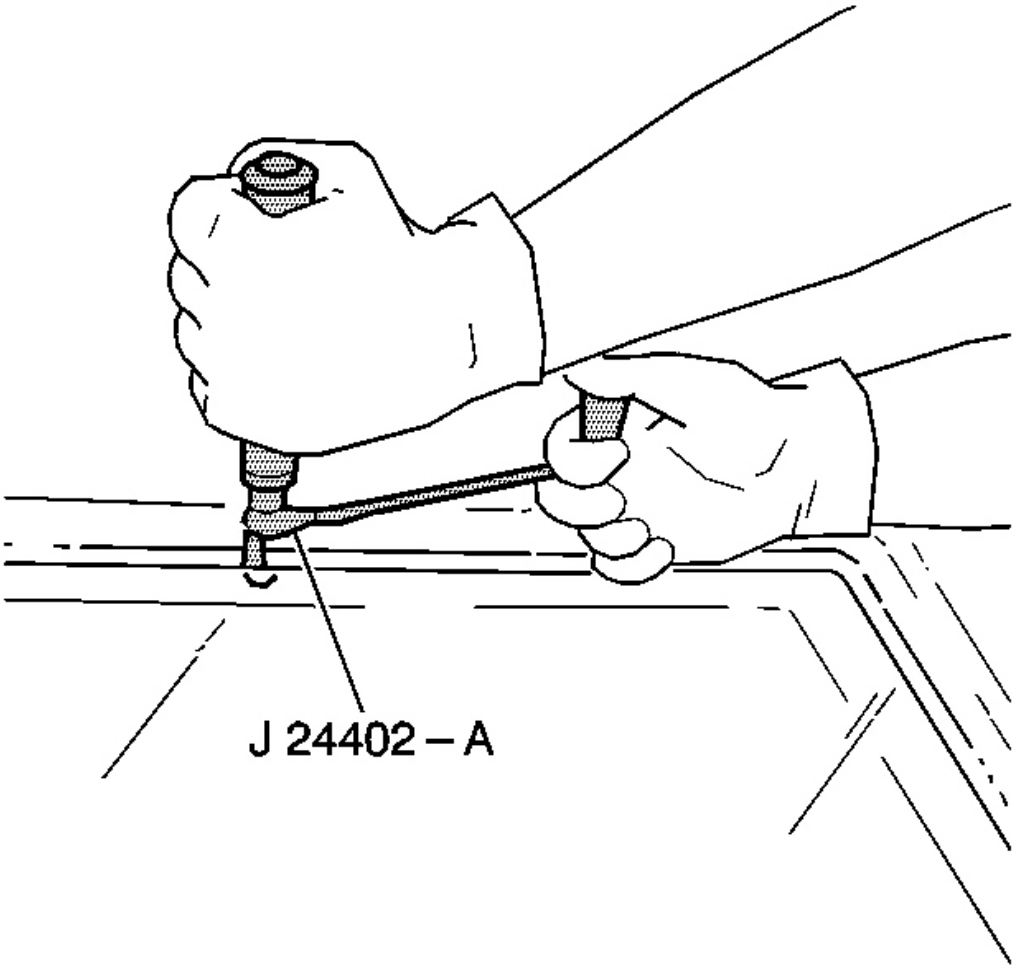

Fig. 62: Separating Urethane Adhesive From Window
Courtesy of GENERAL MOTORS CORP.

IMPORTANT: Keep the cutting edge of the tool against the window.

15. This will allow the urethane adhesive to be separated from the window.
    - Leave a base of urethane on the pinchweld flange.
    - The only suitable lubrication is clear water.
    - Use**J 24402-A** ,. See **Special Tools and Equipment** .**J 39032** or equivalent in order to remove the window. See **Special Tools and Equipment** .

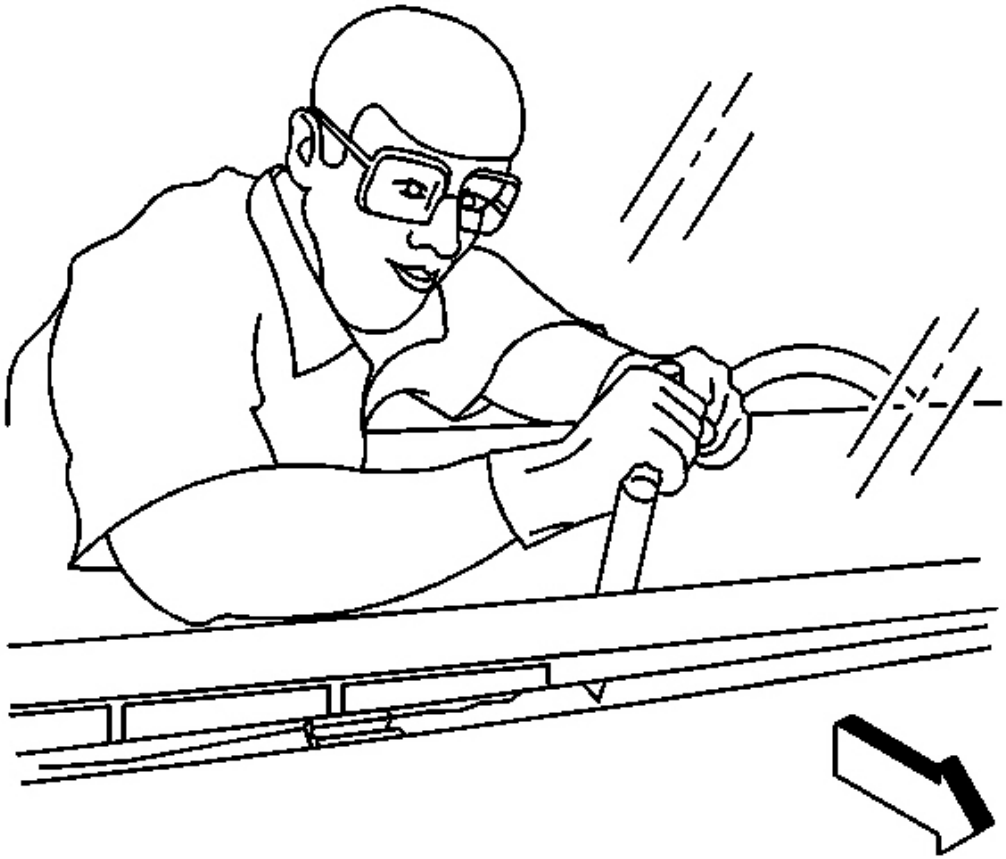

Fig. 63: Removing Bottom Of Window
Courtesy of GENERAL MOTORS CORP.

16. Remove the bottom of the window from the urethane adhesive using a long utility knife or similar tool. Keep the cutting edge of the utility knife against the glass. Do this from inside the vehicle.

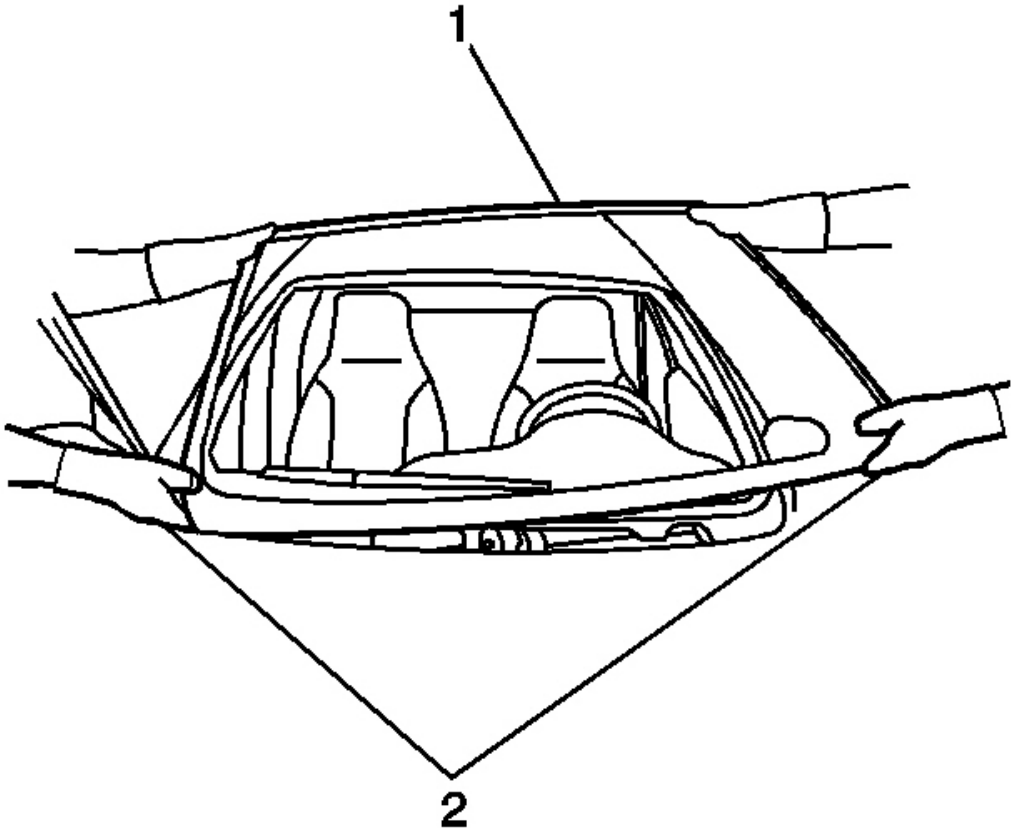

Fig. 64: Dry Fitting Windshield
Courtesy of GENERAL MOTORS CORP.

17. Remove the windshield (1) from the vehicle with the aid of an assistant (2).

Installation Procedure

1. Install a stationary window into the opening. Refer to **Urethane Adhesive Installation of Stationary Windows** .

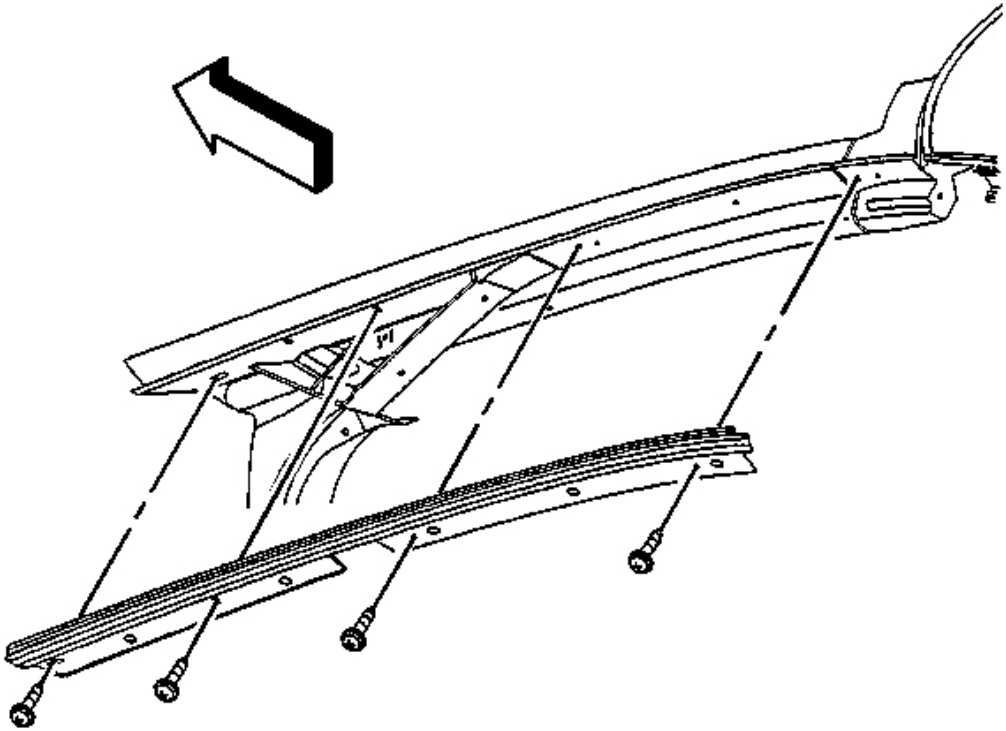

Fig. 65: Applique To Windshield Frame
Courtesy of GENERAL MOTORS CORP.

2. Install the windshield side reveal moldings. Refer to **Side Reveal Molding Replacement (Coupe and Convertible)** or **Side Reveal Molding Replacement (Hardtop)** .

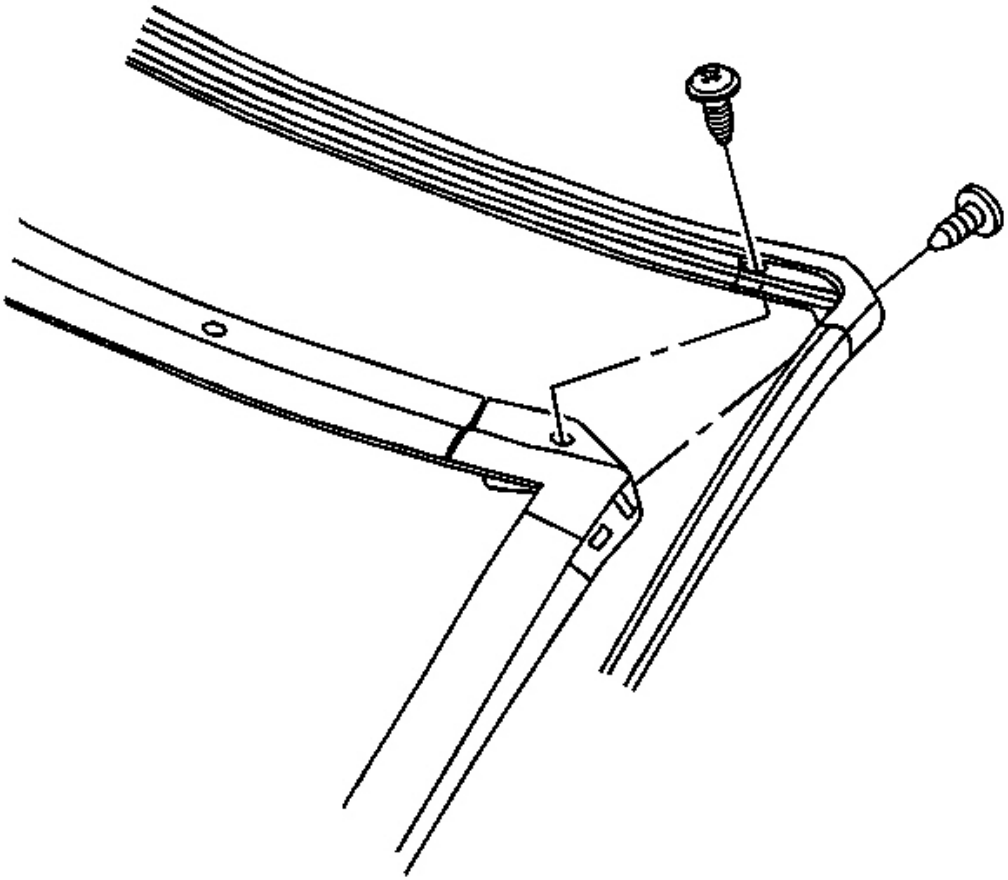

Fig. 66: Windshield Weather-Strip
Courtesy of GENERAL MOTORS CORP.

3. Install the windshield weatherstrip. Refer to **Weatherstrip Replacement (Coupe and Convertible)** or **Weatherstrip Replacement (Hardtop)** .

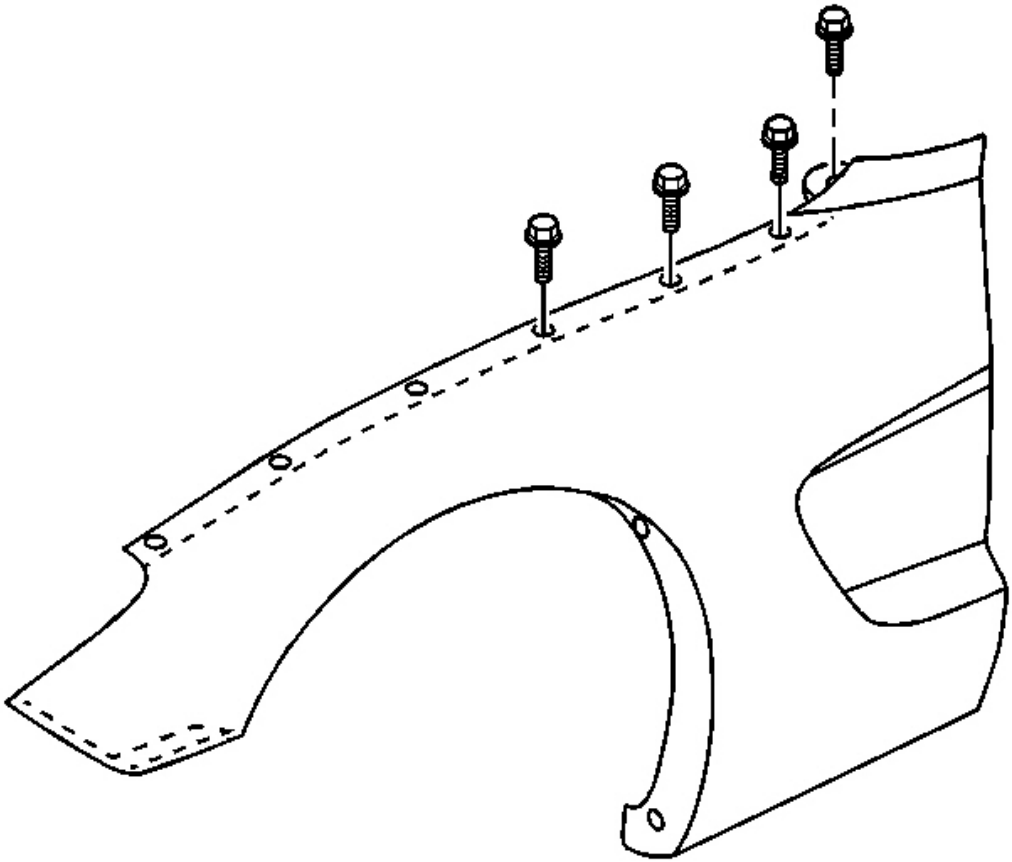

Fig. 67: Rearmost Screws At Top Of Fender To Wheelhouse
Courtesy of GENERAL MOTORS CORP.

NOTE: Refer to Fastener Notice in Cautions and Notices.

4. Install the fender mounting screws.

   Tighten: Tighten the fender upper flange screws to 1.9 N.m (17 lb in).

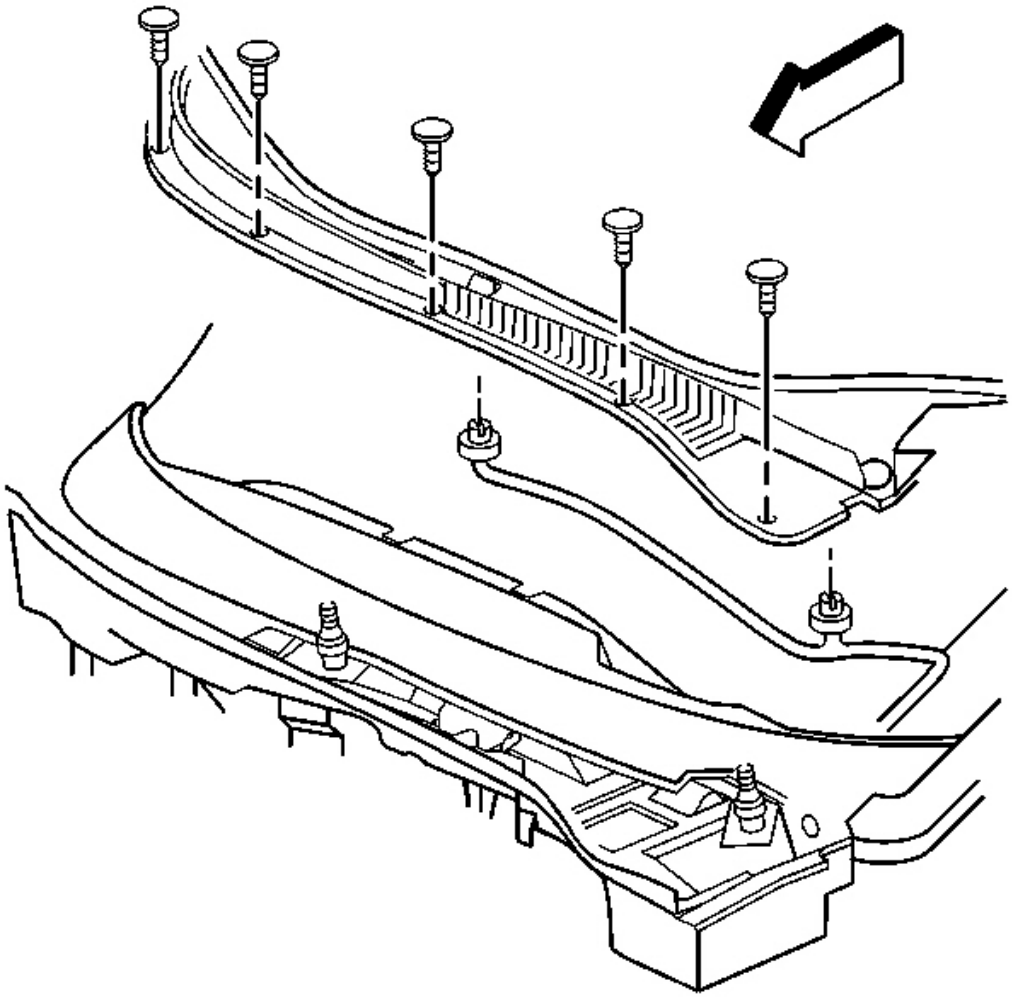

Fig. 68: Air Inlet Screen Panel
Courtesy of GENERAL MOTORS CORP.

5. Install the air inlet screen. Refer to **Air Inlet Grille Panel Replacement** in Body Front End.

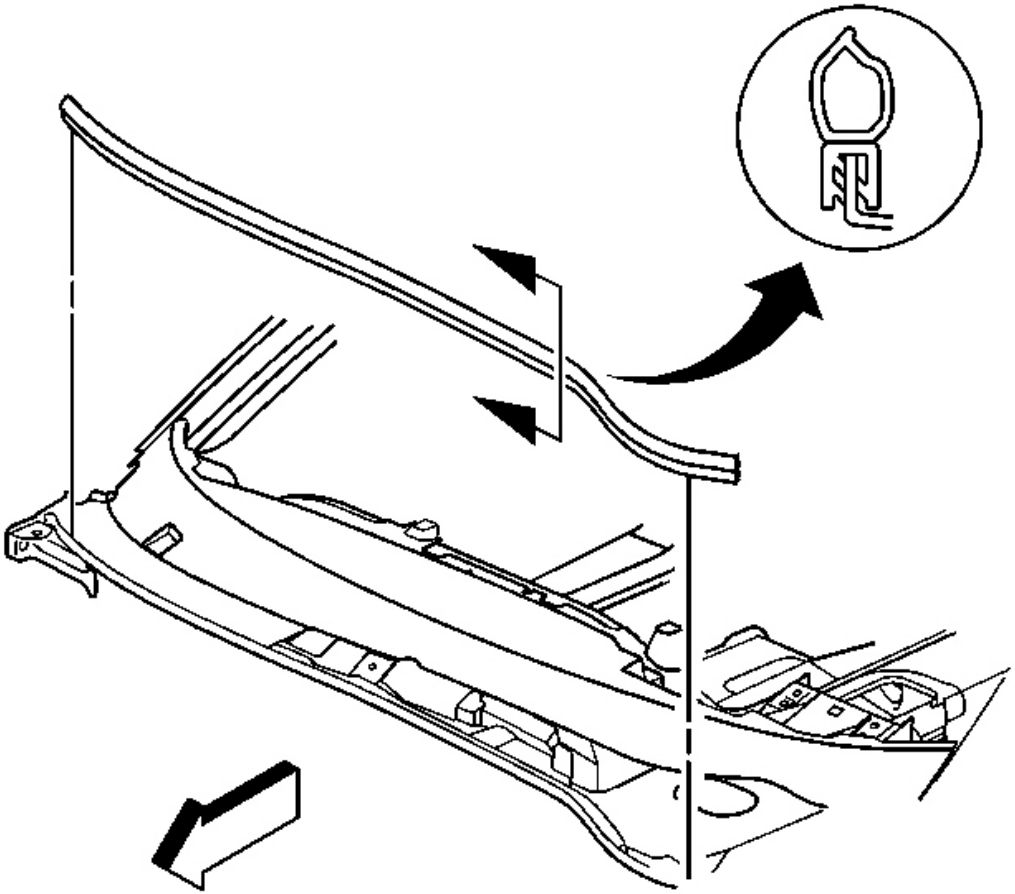

Fig. 69: Hood Air Inlet Screen Seal
Courtesy of GENERAL MOTORS CORP.

6. Install the air inlet screen seal. Refer to **Seal Replacement - Hood Rear** in Body Front End.
7. Install the windshield wiper arms and washer hoses. Refer to **Wiper Arm Replacement** in Wipers/Washer Systems.

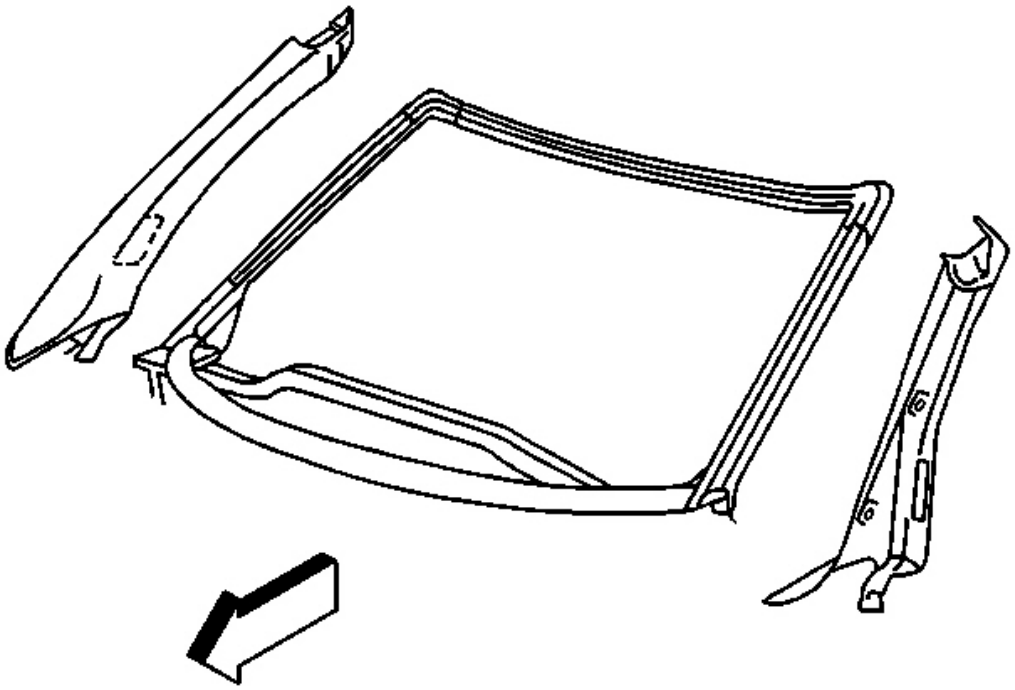

Fig. 70: Windshield Side Garnish Moldings & Retainer Clips To Windshield Frame
Courtesy of GENERAL MOTORS CORP.

8. Install the windshield side garnish moldings.

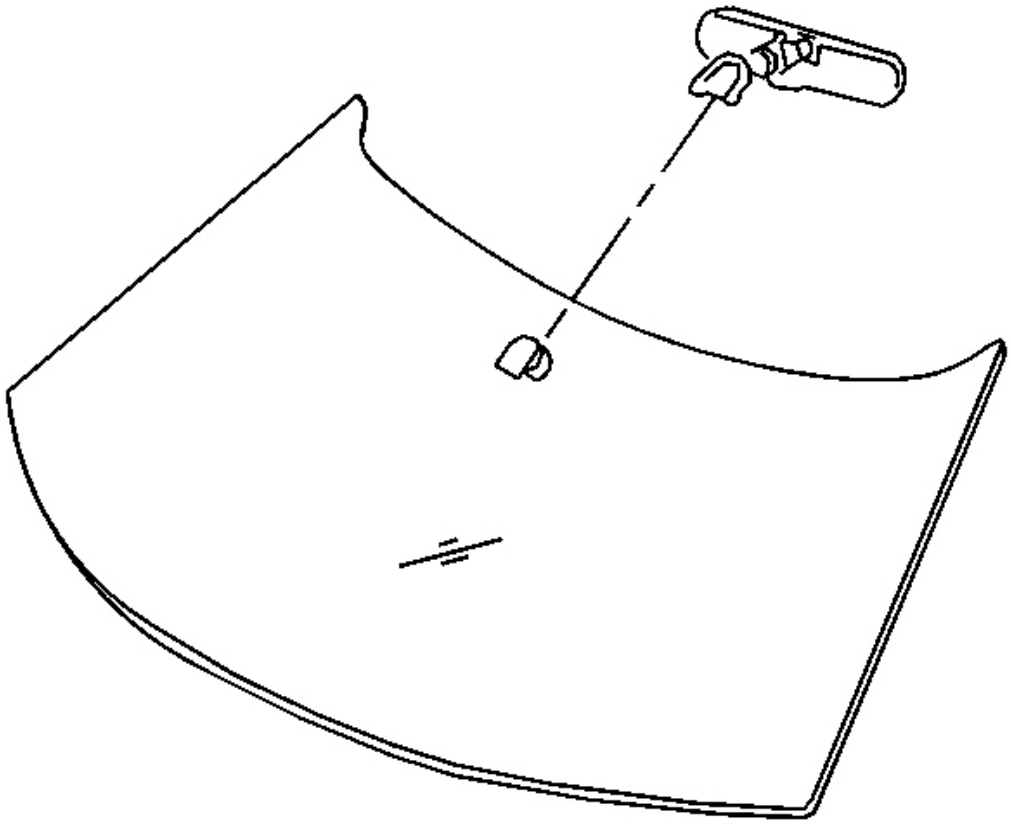

Fig. 71: Roof Lift Off Panel To Folding Top
Courtesy of GENERAL MOTORS CORP.

9. Remove the rearview mirror. Refer to **Rearview Mirror Replacement (Base)** or **Rearview Mirror Replacement (DD8)** .
10. Install the roof lift off panel (coupe) or raise and close the folding top (convertible).
11. Close the door windows.
12. Remove the double layer of masking tape around the perimeter of the painted surfaces and the interior trim.
13. Close the hood.

URETHANE ADHESIVE INSTALLATION OF STATIONARY WINDOWS

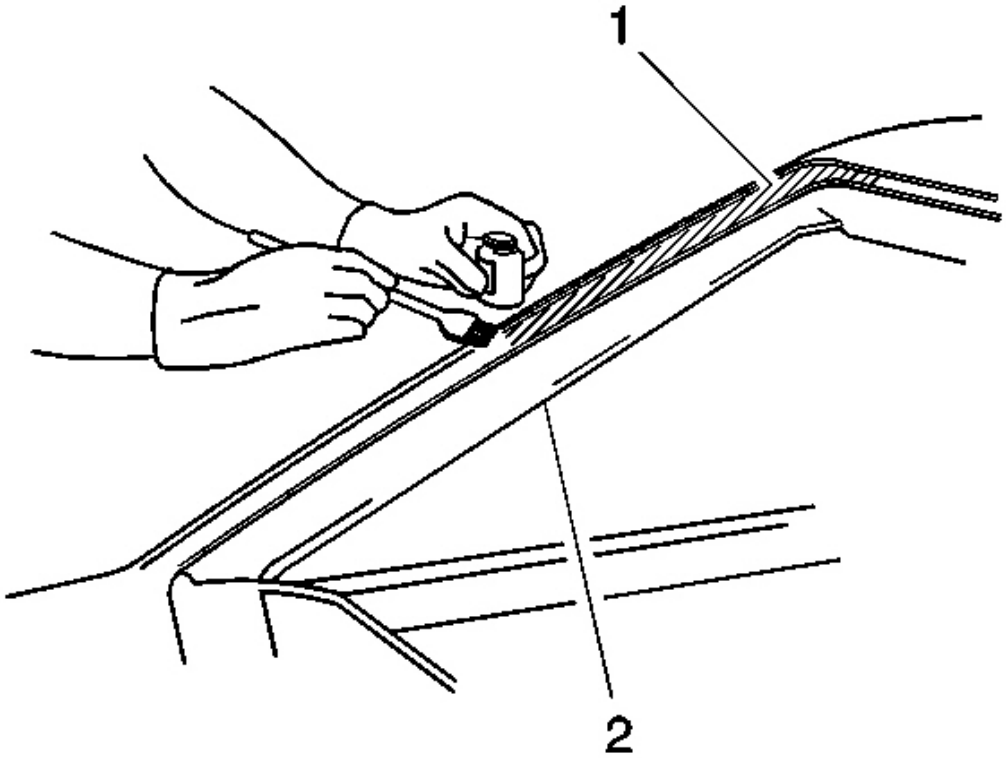

Fig. 72: Applying Pinch-Weld Primer (Black #3)
Courtesy of GENERAL MOTORS CORP.

CAUTION: Refer to Glass and Sheet Metal Handling Caution in Cautions and Notices.

IMPORTANT: Remove all but approximately 2 mm (3/64 in) of the existing bead of urethane adhesive from the pinch-weld flange.

1. Remove all mounds or loose pieces of urethane adhesive from the pinch-weld area.
2. If the original window is being reused, remove all but a thin film of the existing urethane adhesive from the window surface by using a clean utility knife or razor blade scraper.
3. Inspect the following components for the causes of a broken window:
   - The flange of the window opening
   - The window reveal molding
4. Inspect for any of the following problems in order to help prevent future breakage of the window:

- High weld
- Solder spots on the pinchweld
- Hardened sealer
- Any other obstruction or irregularity in the pinch-weld flange

IMPORTANT: If corrosion of the pinch-weld flange is present or if sheet metal repairs or replacements are required, the pinch-weld flange must be refinished in order to restore the bonding area strength. If paint repairs are required, mask the flange bonding area prior to applying the color coat in order to provide a clean primer only surface. Materials such as BASF DE15(R), DuPont 2610(R), Sherwin-Williams PSE 4600 and NP70(R) and Martin-Semour 5120 and 5130(R) PPG DP90LF SPIES/ HECKER 3688/8590 - 3688/5150 - 4070/5090 STANDOX 11158/13320 - 14653/14980 products are approved for this application.

5. After repairing the opening as indicated, perform the following steps:
   1. Remove all traces of broken glass from the outer cowl panel, seats, floor and defroster ducts.
   2. Clean around the edge of the inside surface of the window with a 50/50 mixture of isopropyl alcohol and water by volume on a dampened lint free cloth.

CAUTION: Refer to Window Retention Caution in Cautions and Notices.

6. Verify all primers and urethane adhesive are within expiration dates.

CAUTION: Failure to prep the area prior to the application of primer may cause insufficient bonding of urethane adhesive. Insufficient bonding of urethane adhesive may allow unrestrained occupants to be ejected from the vehicle resulting in personal injury.

IMPORTANT: Do not apply the black #3 primer to the existing bead (1) of the urethane adhesive on the pinch-weld flange. Apply the primer only to nicks, scratches or the primed surfaces.

7. Shake the pinch-weld primer black #3 for at least 1 minute.
8. Use a new dauber in order to apply the primer to the surface of the pinch-weld flange (1).
9. Allow the pinch-weld primer to dry for approximately 10 minutes.

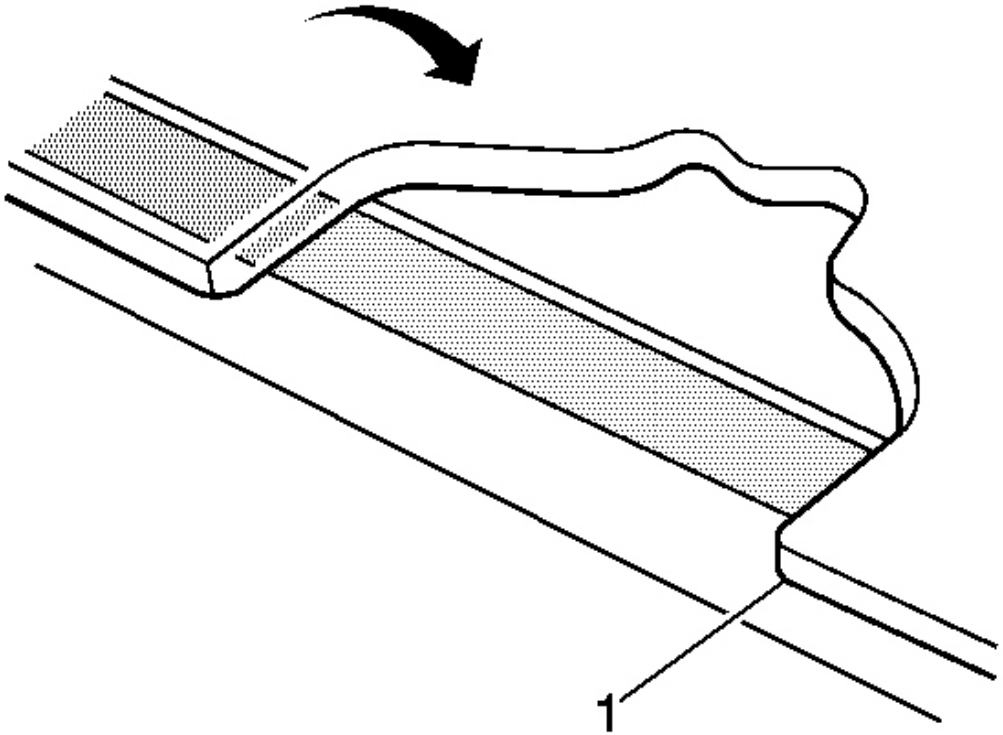

Fig. 73: Identifying VIN Plate Filler Strip
Courtesy of GENERAL MOTORS CORP.

NOTE: **Do not use spacers when installing a windshield. The stress caused by the spacers may damage the windshield.**

10. Install the windshield (1) and the VIN plate filler strip, if equipped.

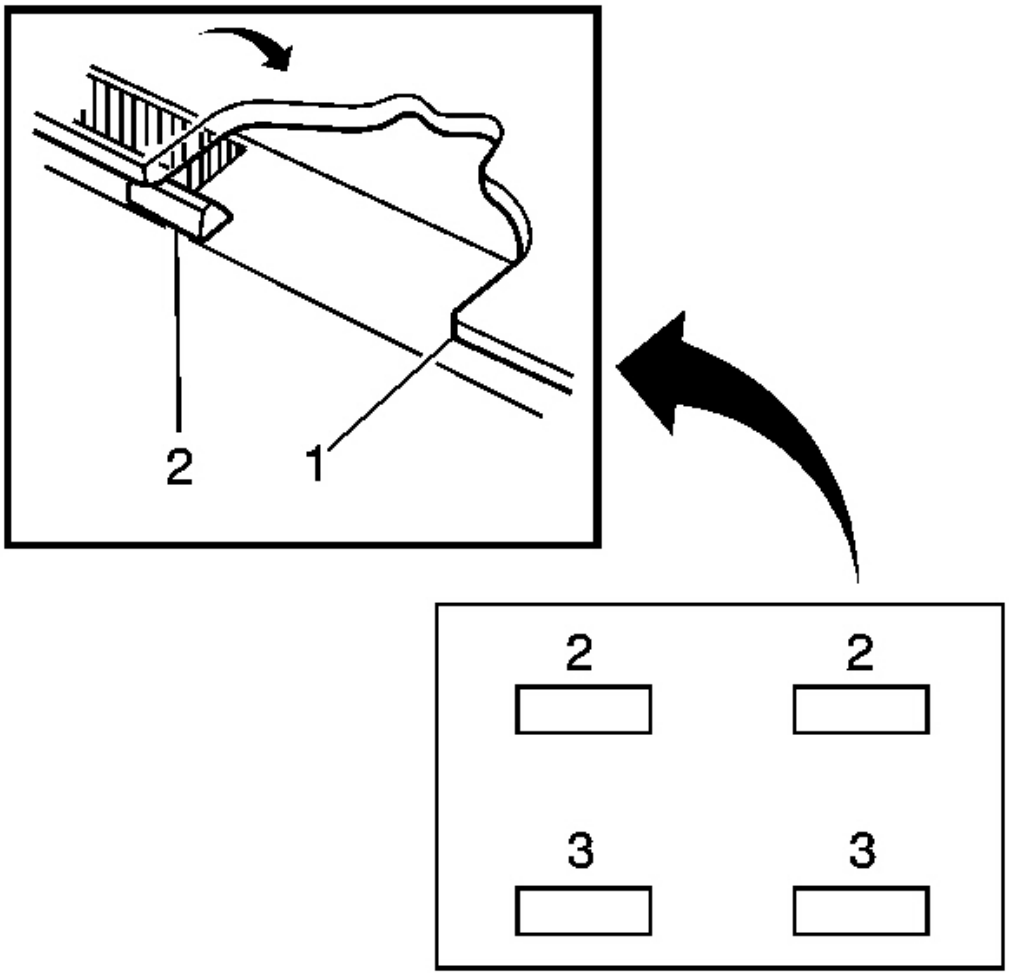

Fig. 74: Identifying Window Spacer Locations
Courtesy of GENERAL MOTORS CORP.

IMPORTANT: When installing spacers (2) and/or blocks (3) space them equally around the quarter window, back window or the liftgate window (1) to aid in the height set, if equipped.

11. Install the window to the vehicle.

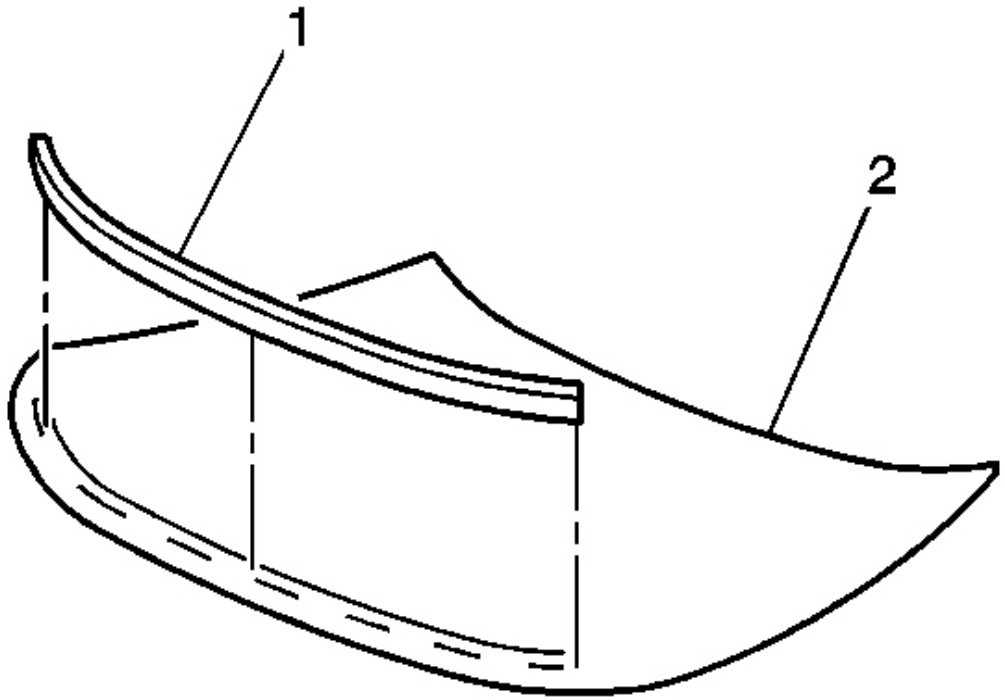

Fig. 75: Identifying Windshield Acoustic Strip
Courtesy of GENERAL MOTORS CORP.

12. Install the new windshield acoustic strip (1) to the windshield (2), if equipped or damaged.

    The acoustic strip aids in reducing noise.

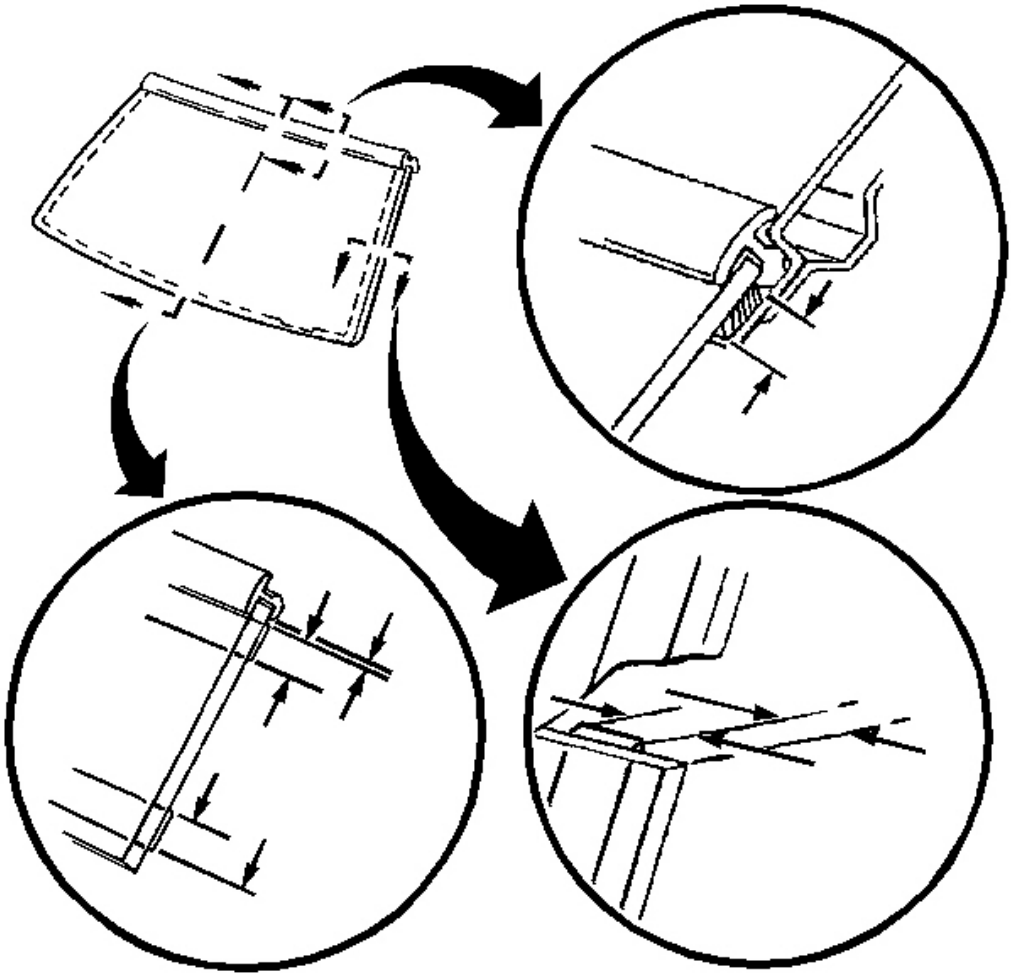

Fig. 76: Installing Window Reveal Molding
Courtesy of GENERAL MOTORS CORP.

13. If installing a new window reveal molding, start in the center and work toward each end pressing firmly into place.

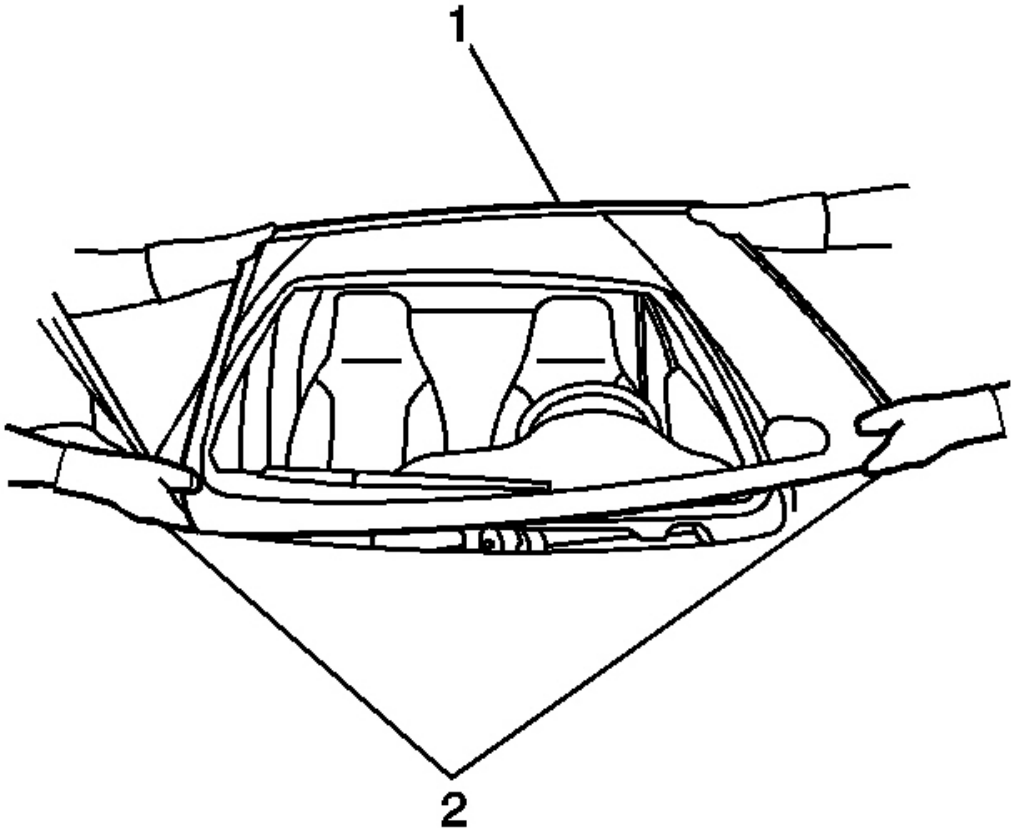

Fig. 77: Dry Fitting Windshield
Courtesy of GENERAL MOTORS CORP.

14. With the aid of an assistant, dry fit the window (1) to the opening in order to determine the correct position.

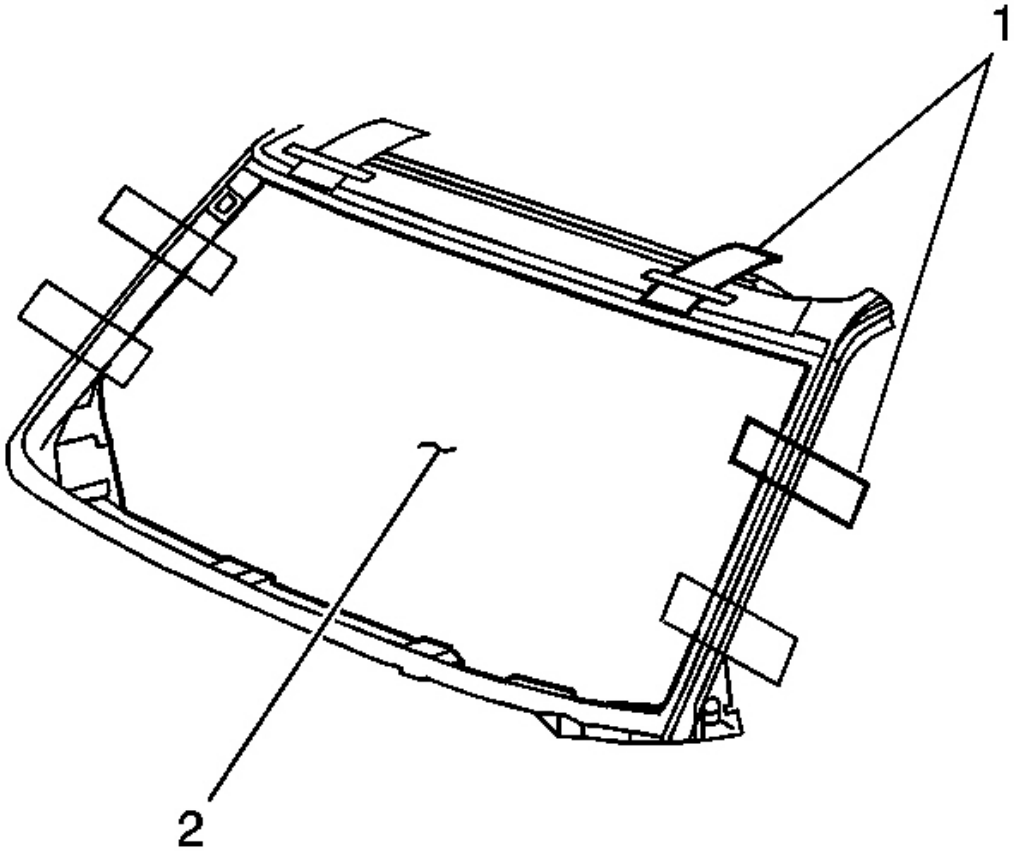

Fig. 78: Aligning Windshield
Courtesy of GENERAL MOTORS CORP.

15. Use masking tape in order to mark the locations (1) of the window (2) in the opening.
16. Cut the masking tape in the center and remove the window from the opening.

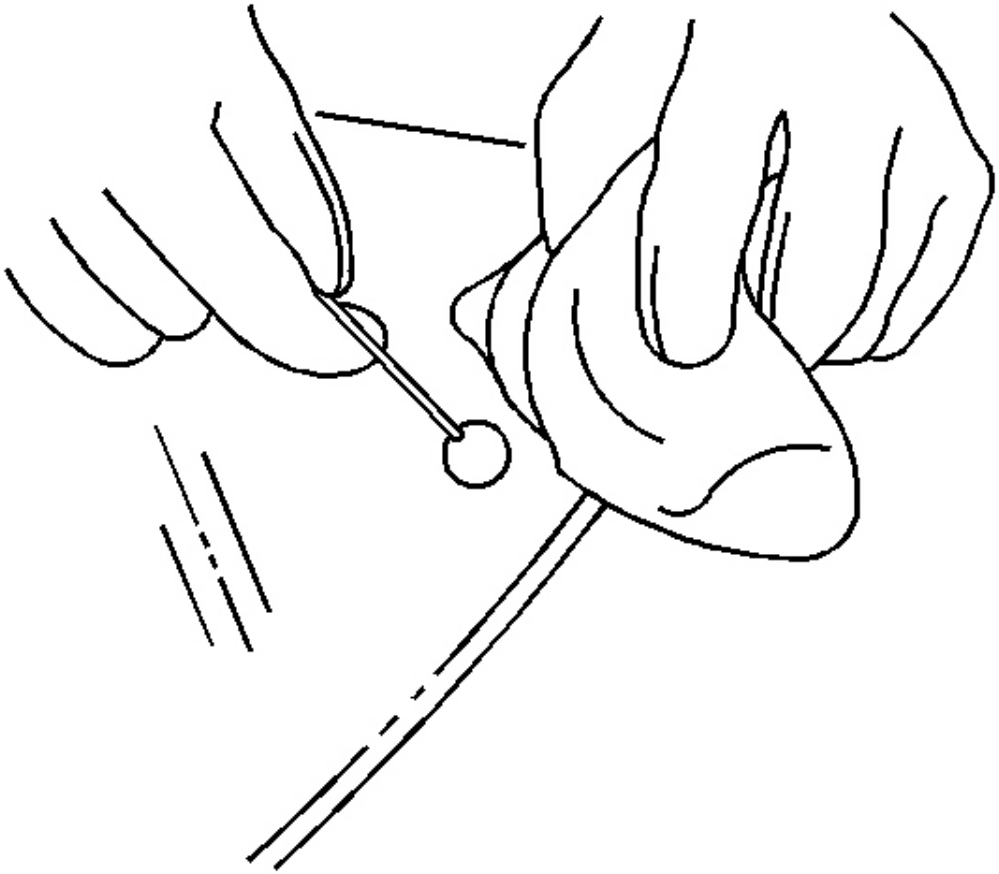

Fig. 79: Applying Glass Prep (Clear #1)
Courtesy of GENERAL MOTORS CORP.

IMPORTANT: Use care when applying glass prep clear #1 on the window. This primer dries almost instantly, and may stain the viewing area of the window if not applied evenly.

17. Use a new dauber in order to apply glass prep clear #1 to the area approximately 10-16 mm (3/8-5/8 in) around the entire perimeter of the window inner surface.

    Immediately wipe the glass primed area using a clean, lint-free cloth.

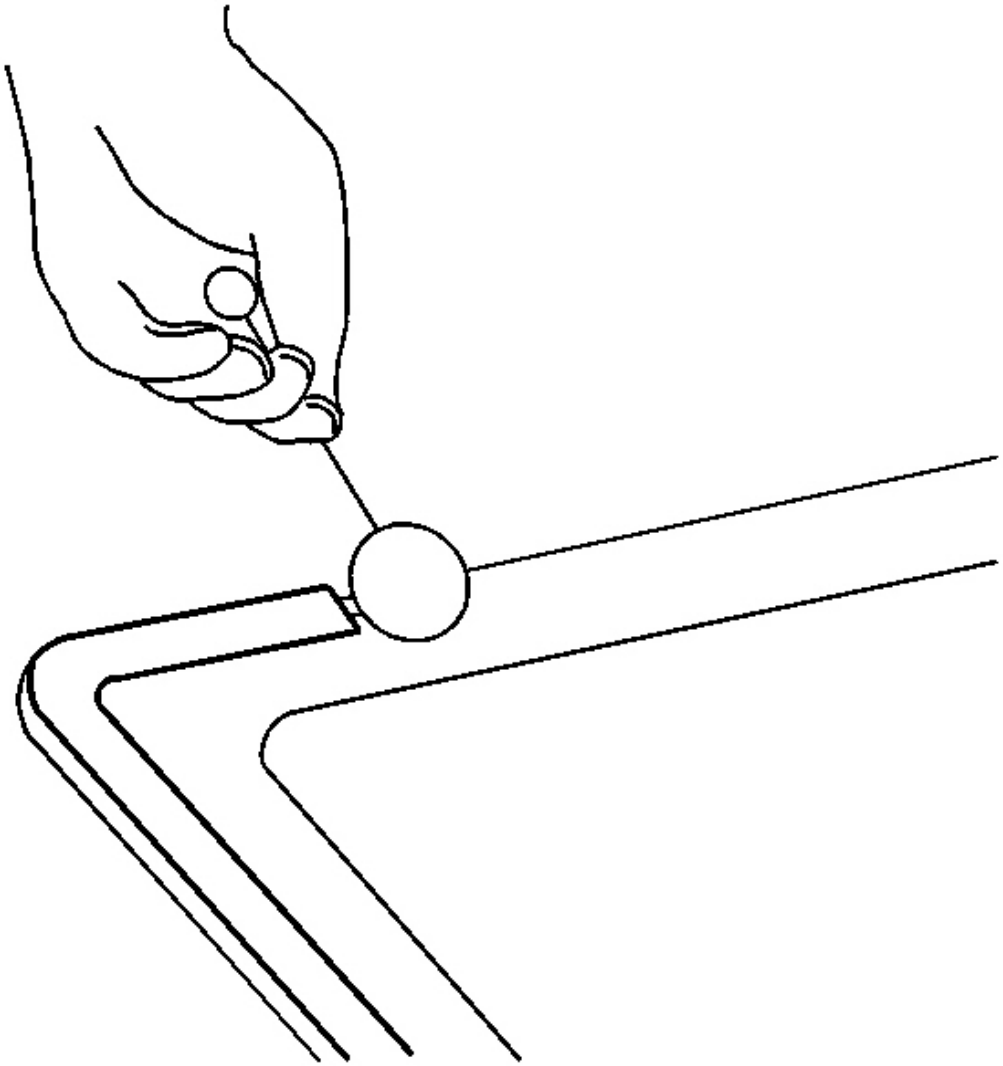

Fig. 80: Applying Glass Prep (Clear #1)
Courtesy of GENERAL MOTORS CORP.

18. Apply a second coat of the glass prep clear #1 to the same area of the glass.

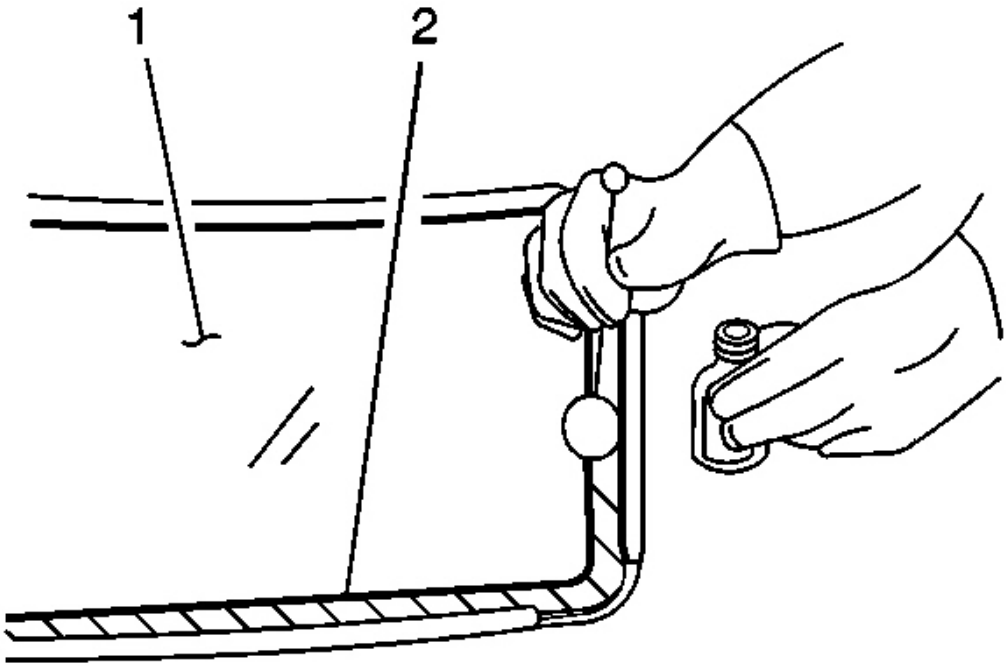

Fig. 81: Applying Glass Primer (Black #2)
Courtesy of GENERAL MOTORS CORP.

IMPORTANT: The glass primer black #2 is effective up to 8 hours after applying it to the glass. The primed surface of the glass must be kept clean.

19. Shake the glass primer black #2 for at least 1 minute.
20. Use a new dauber in order to apply the glass primer black #2 to the same areas (2) that glass prep clear #1 was applied.
21. Allow the glass primer to dry for approximately 10 minutes.

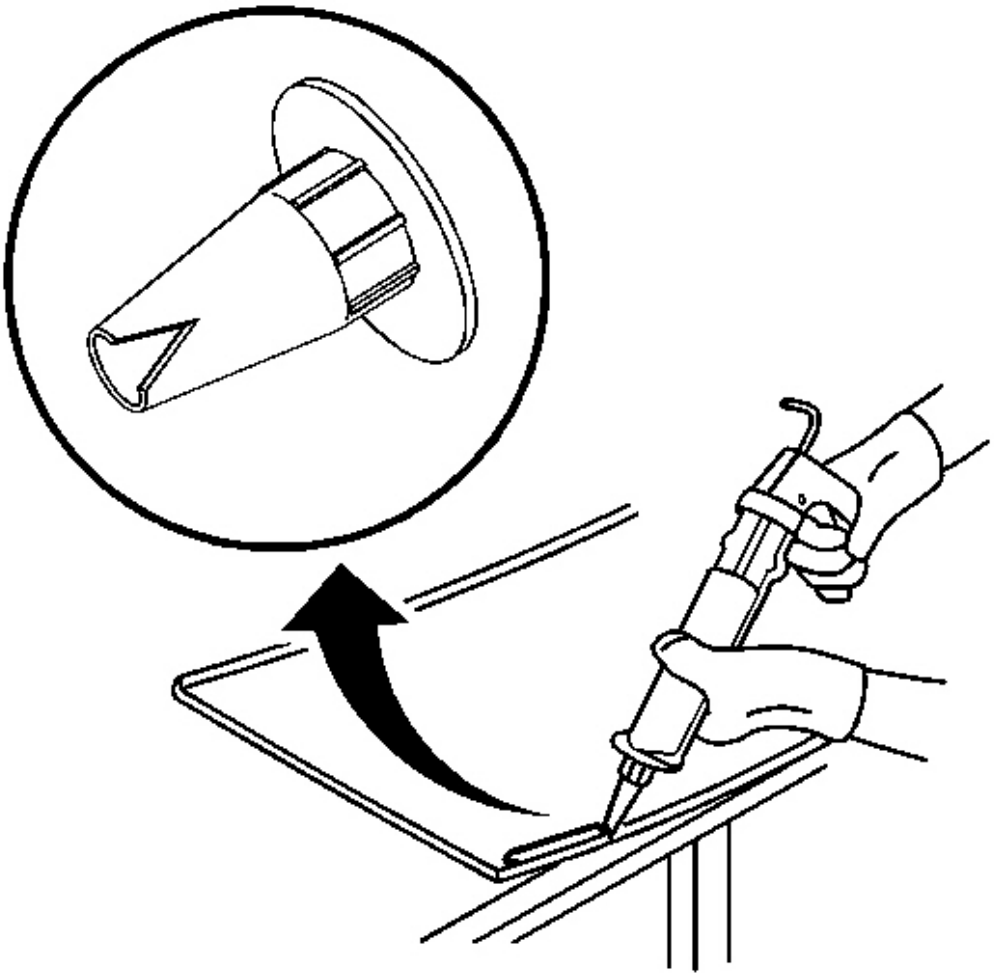

Fig. 82: Modified Applicator Nozzle
Courtesy of GENERAL MOTORS CORP.

22. Cut the applicator nozzle in order to provide a bead of 12.7 mm (1/2 in) wide and 12.7 mm (1/2 in) high.

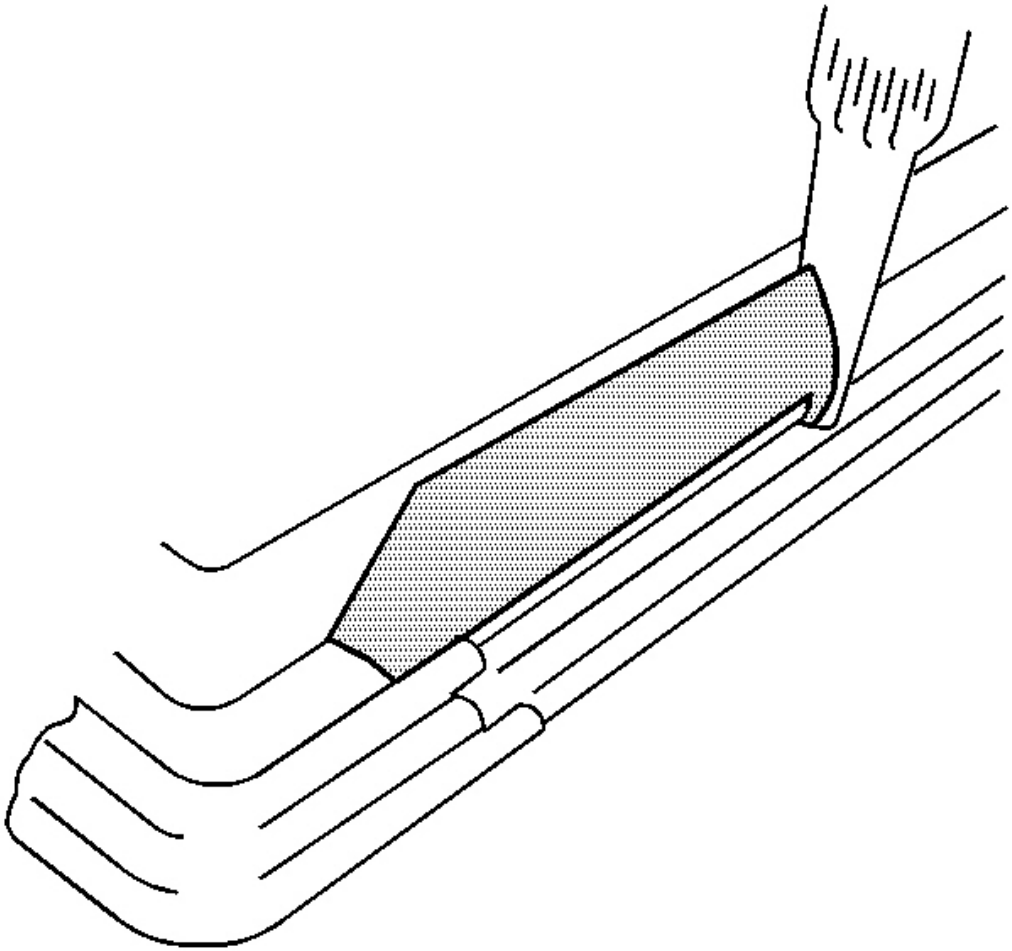

Fig. 83: Applying Urethane Adhesive
Courtesy of GENERAL MOTORS CORP.

23. Use a cartridge-type caulking gun in order to apply a smooth, continuous bead of urethane adhesive.

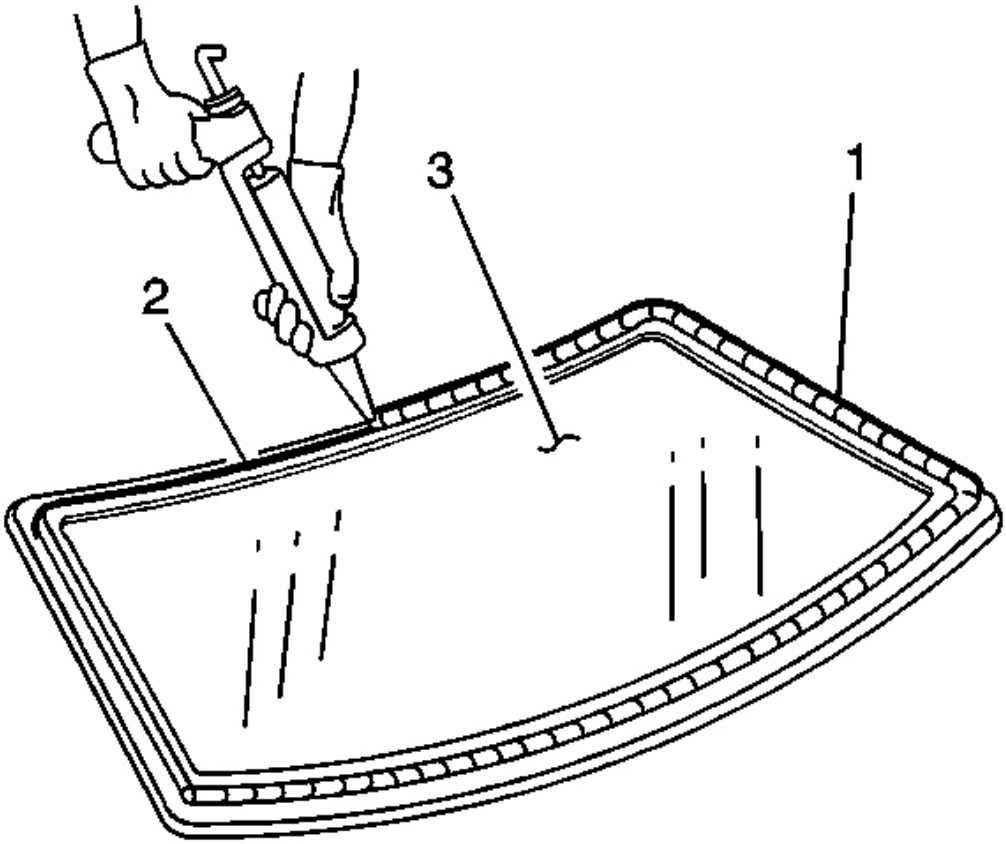

Fig. 84: Applying Urethane Adhesive To Window Inner Surface
Courtesy of GENERAL MOTORS CORP.

24. Use the edge of the window or the inside edge of the reveal molding as a guide for the nozzle in order to apply the urethane adhesive (1) to the inner surface of the window (3).

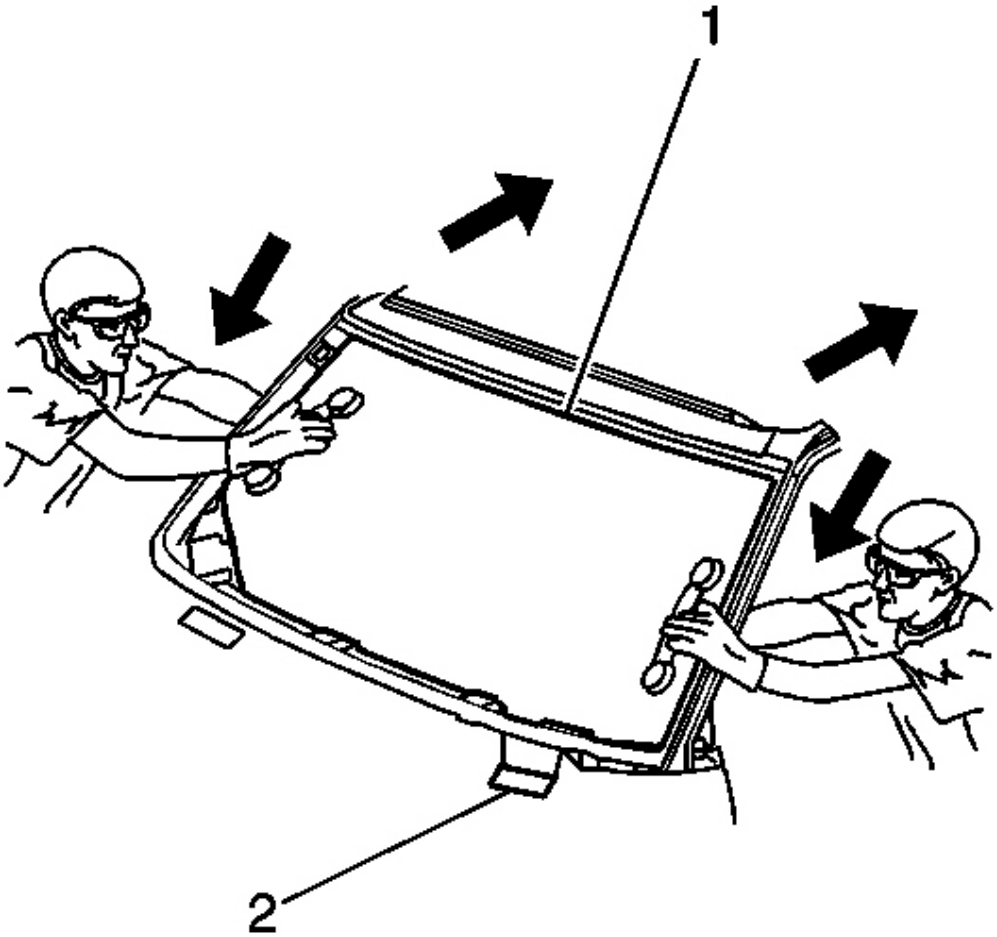

Fig. 85: Placing Window On Lower Supports
Courtesy of GENERAL MOTORS CORP.

25. With the aid of an assistant, place the window in the opening. If installing a windshield, place the windshield on the lower supports (2), if equipped.

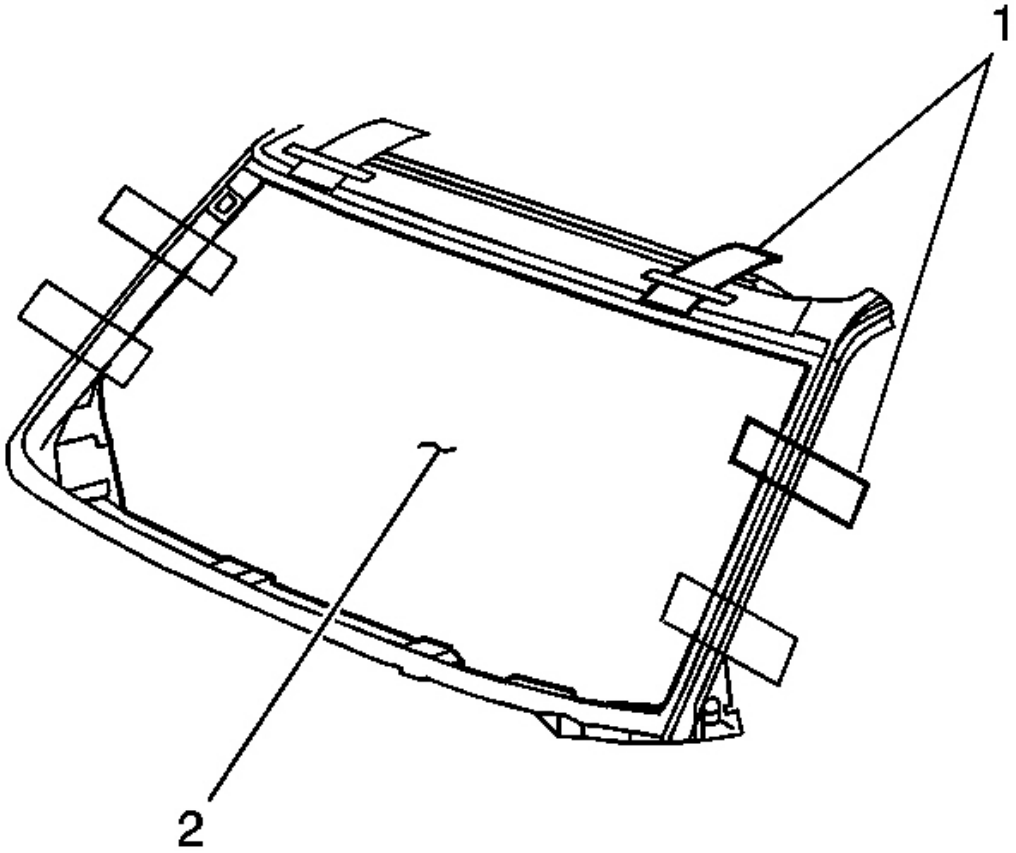

Fig. 86: Aligning Windshield
Courtesy of GENERAL MOTORS CORP.

26. Align the masking tape (1) lines on the window (2) and the body.

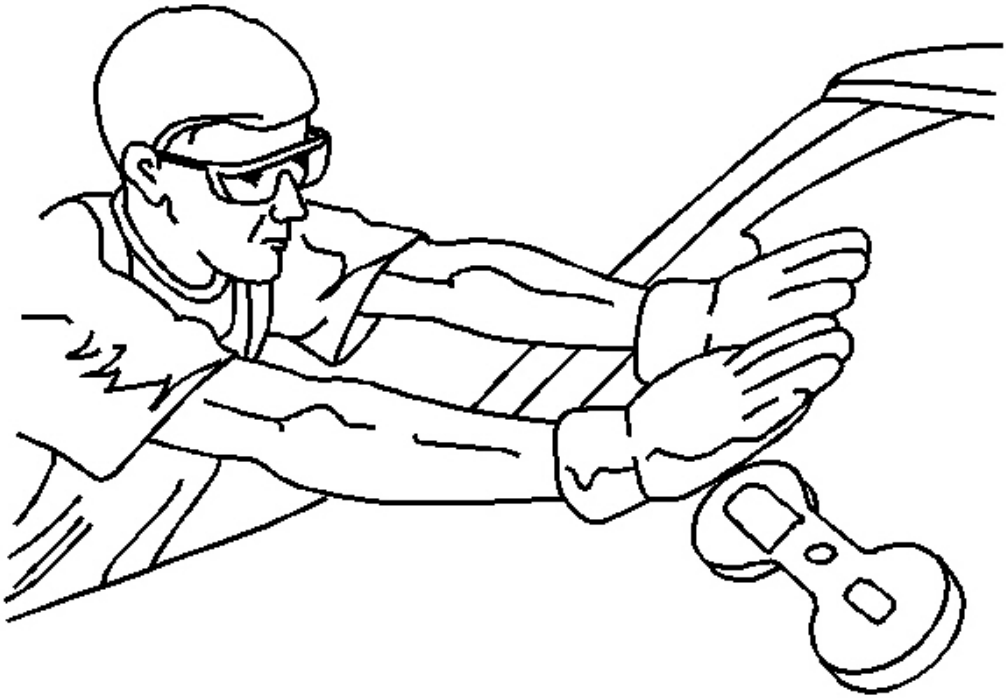

Fig. 87: Pressing Window Into Place
Courtesy of GENERAL MOTORS CORP.

27. Press the window firmly into place.
28. Tape the window to the body in order to minimize movement until the urethane adhesive cures.

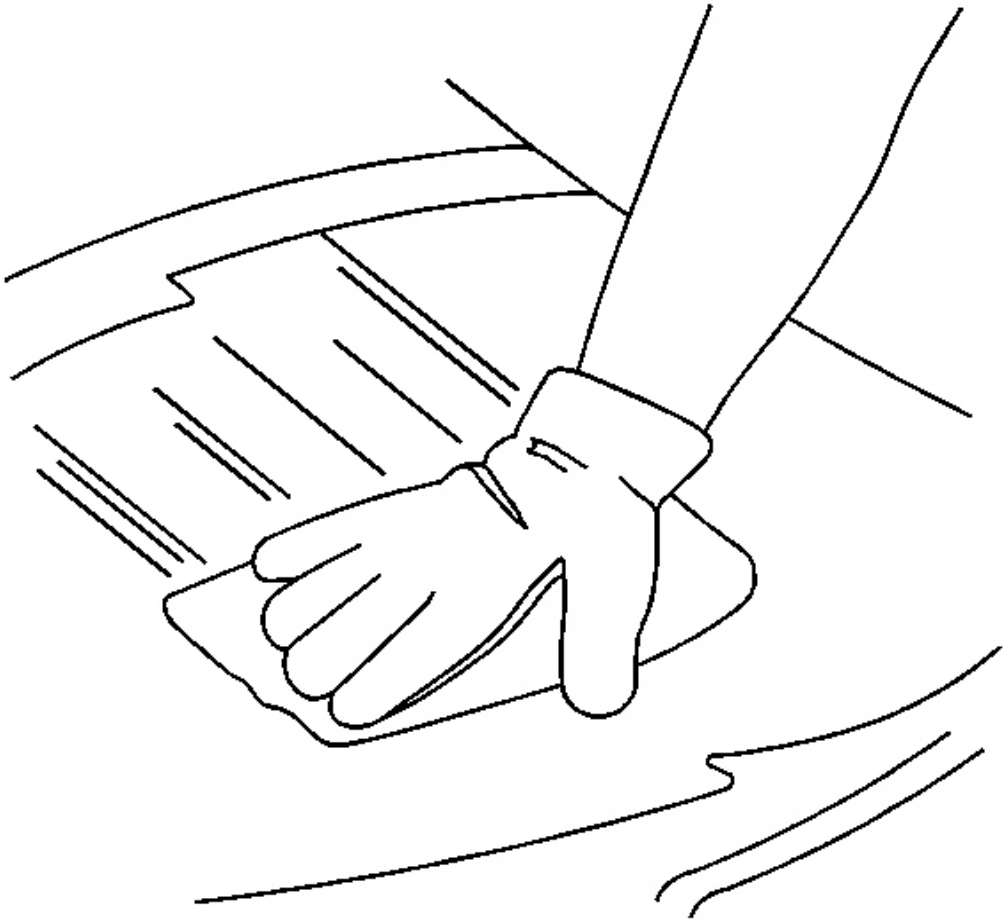

Fig. 88: Cleaning Excess Urethane Adhesive
Courtesy of GENERAL MOTORS CORP.

29. Clean any excess urethane adhesive from the body.

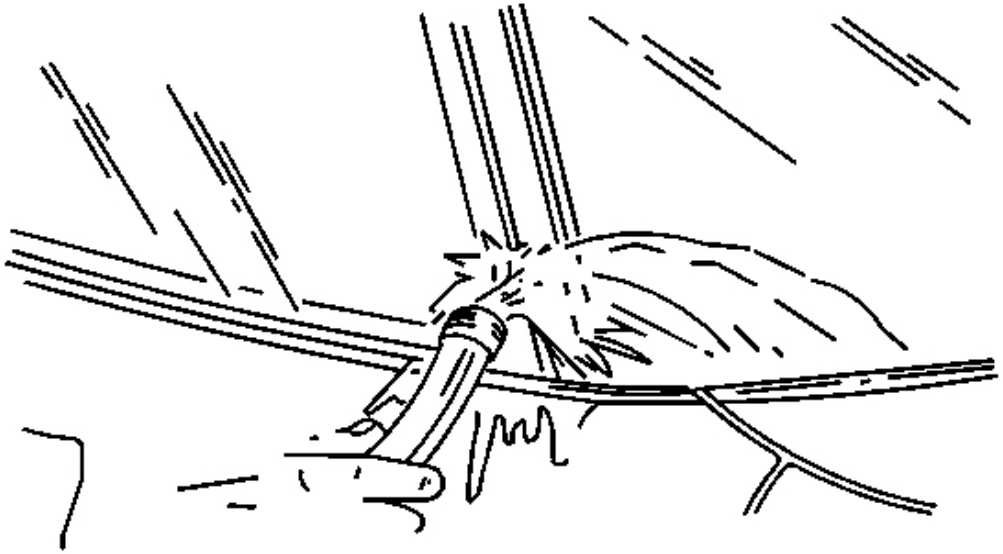

Fig. 89: Water Hose Test
Courtesy of GENERAL MOTORS CORP.

IMPORTANT: Do not direct a hard stream of high pressure water to the freshly applied urethane adhesive.

30. Use a soft spray of warm water in order to immediately water test the window.
31. Inspect the window for leaks.
32. If any leaks are found, use a plastic paddle in order to apply extra urethane adhesive at the leak point.
33. Retest the window for leaks.

CAUTION: Insufficient curing of urethane adhesive may allow unrestrained occupants to be ejected from the vehicle resulting in personal injury.

- **For the moisture-curing type of urethane adhesive, allow a minimum of 6 hours at 21°C (70°F) or greater and with at least 30 percent relative humidity. Allow at least 24 hours for the complete curing of the urethane adhesive.**
- **For the chemical-curing type of urethane adhesive, allow a minimum of 1 hour.**

Do NOT physically disturb the repair area until after these minimum times have elapsed.

34. Maintain the following conditions in order to properly cure the urethane adhesive:
    - Partially lower a door window in order to prevent pressure buildups when closing doors before the urethane adhesive cures.
    - Do not drive the vehicle until the urethane adhesive is cured. Refer to the above curing times.
    - Do not use compressed air in order to dry the urethane adhesive.
35. Complete the window installation.

REAR WINDOW REPLACEMENT

Tools Required

- **J 24402-A** Glass Sealant Cold Knife Remover. See **Special Tools and Equipment** .
- **J 39032** Stationary Glass Removal Tool. See **Special Tools and Equipment** .
- Urethane Adhesive Kit GM P/N 12346392 or Equivalent
- Isopropyl Alcohol or Equivalent
- Cartridge-type Caulking Gun
- Commercial-type Utility Knife
- Razor Blade Scraper
- Suction Cups
- Plastic Paddle

Removal Procedure

CAUTION: If a window is cracked but still intact, crisscross the window with masking tape in order to reduce the risk of damage or personal injury.

IMPORTANT: Before cutting out a stationary window, apply a double layer of masking tape around the perimeter of the painted surfaces and inner trim.

1. Remove the lower garnish molding and the rear compartment front side trim panel for access to the inside of the window. Refer to **Trim Panel Replacement - Rear Compartment Front Side (Convertible)** or **Trim Panel Replacement - Rear Compartment Front Side (Hardtop)** or **Trim Panel Replacement - Rear Compartment Front Side (Coupe)** .

CAUTION: Refer to Defroster Outlet Caution in Cautions and Notices.

2. Cover to protect the following parts from broken glass:

1. Upper dash pad
2. Defroster outlets and A/C outlets
3. Seats and carpeting

3. Disconnect the rear window defogger connectors at the window.
4. Disconnect the OnStar, if equipped.

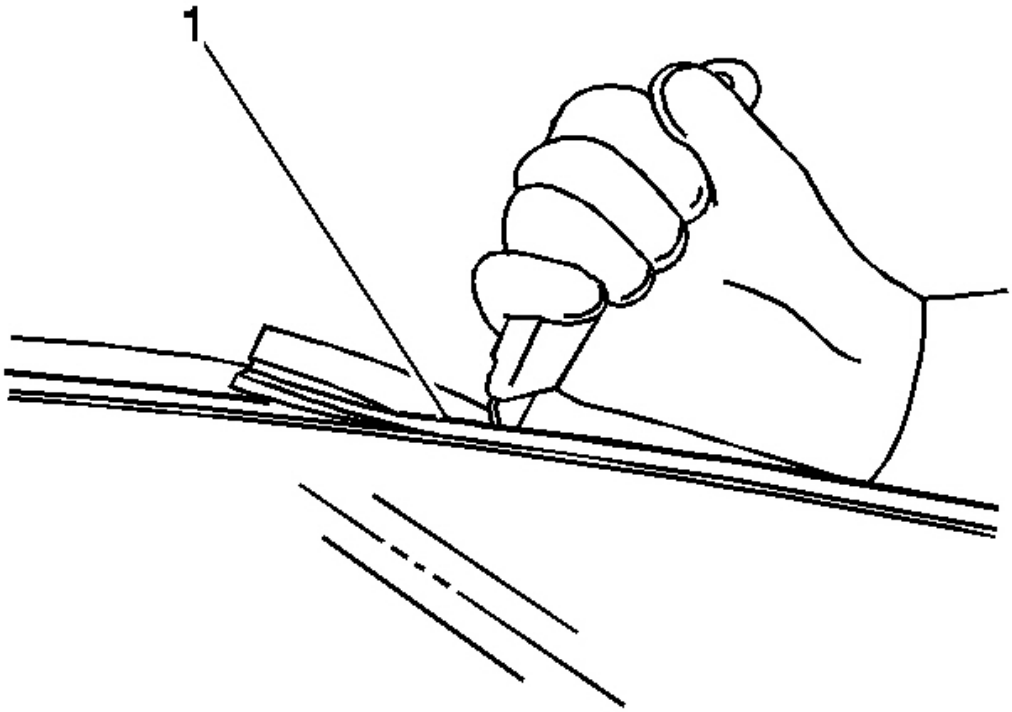

Fig. 90: Removing Window Reveal Molding
Courtesy of GENERAL MOTORS CORP.

CAUTION: Refer to Glass and Sheet Metal Handling Caution in Cautions and Notices.

IMPORTANT: The rear window reveal molding fills the cavities between the body and window.
If the reveal molding is stretched or damaged, it cannot be reused. It must be replaced.

5. Remove the rear window reveal molding.

If the window reveal molding will not release, use a utility knife in order to cut around the window in order to remove the rear window reveal molding.

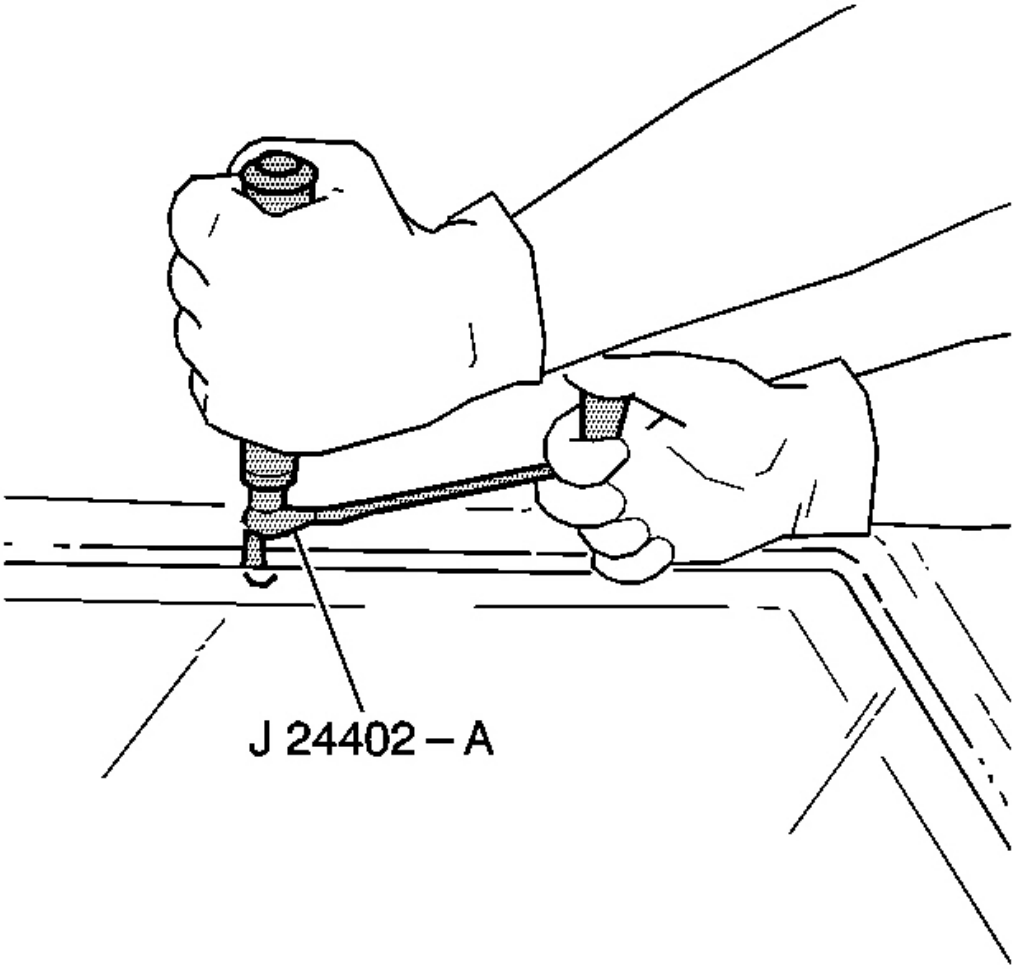

Fig. 91: Separating Urethane Adhesive From Window
Courtesy of GENERAL MOTORS CORP.

IMPORTANT: Keep the cutting edge of the tool against the window.

6. This will allow the urethane adhesive to be separated from the window.
   - Leave a base of urethane on the pinchweld flange.
   - The only suitable lubrication is clear water.
   - Use, or equivalent in order to remove the window.

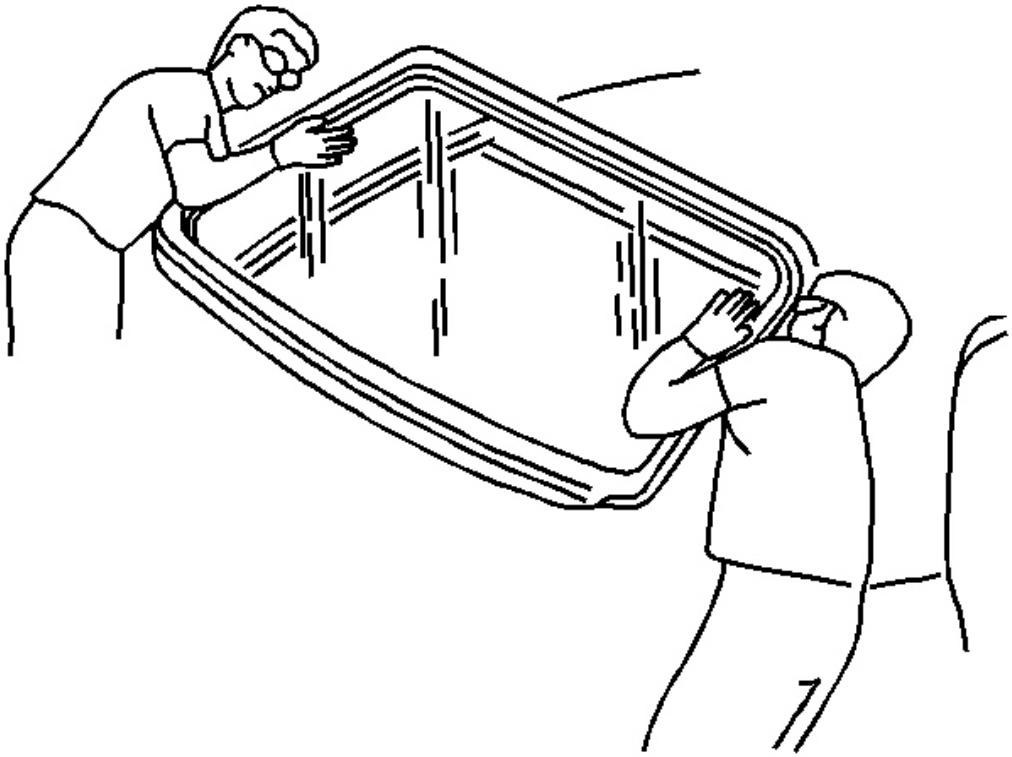

Fig. 92: Removing Rear Window
Courtesy of GENERAL MOTORS CORP.

7. With the aid of an assistant, use the suction cups in order to lift the rear window from the opening.

Installation Procedure

1. Install a stationary window into the opening. Refer to **Urethane Adhesive Installation of Stationary Windows** .
2. Install the lower garnish molding and the rear compartment front side trim panel. Refer to **Trim Panel Replacement - Rear Compartment Front Side (Convertible)** or **Trim Panel Replacement - Rear Compartment Front Side (Hardtop)** or **Trim Panel Replacement - Rear Compartment Front Side (Coupe)** .
3. Connect the rear window defogger connections.
4. Connect the OnStar, if equipped.
5. Remove the double layer of masking tape around the perimeter of the painted surfaces and the interior trim.

REAR LIFT WINDOW REPLACEMENT

Tools Required

- **J 24402-A** Glass Sealant Cold Knife Remover or Equivalent. See **Special Tools and Equipment** .
- **J 39032** Stationary Glass Removal Tool or Equivalent. See **Special Tools and Equipment** .
- GM P/N 12346392 Urethane Adhesive Kit or Equivalent
- Isopropyl Alcohol or Equivalent
- Cartridge-type Caulking Gun
- Commercial-type Utility Knife
- Razor Blade Scraper
- Rubber Suction Cups

Removal Procedure

CAUTION: If a window is cracked but still intact, crisscross the window with masking tape in order to reduce the risk of damage or personal injury.

NOTE: DO NOT close the lift window panel with the struts attached unless the window is installed and the window adhesive fully cured. The window adds strength and rigidity to the lift window panel. Attempting to close the lift window panel, with the struts installed, without a window or with the window adhesive not fully cured, could cause the panel to crack.

IMPORTANT: Before cutting out a stationary window, apply a double layer of masking tape around the perimeter of the painted surfaces and inner trim.

1. Remove the rear lift window struts. Refer to **Strut Replacement - Rear Lift Window Panel** in Body Rear End.

CAUTION: Refer to Defroster Outlet Caution in Cautions and Notices.

2. Cover to protect the following parts from broken glass:
   1. Upper dash pad
   2. Defroster outlets and A/C outlets
   3. Seats and carpeting
3. Disconnect the rear defogger electrical connections.
4. Disconnect the OnStar, if equipped.

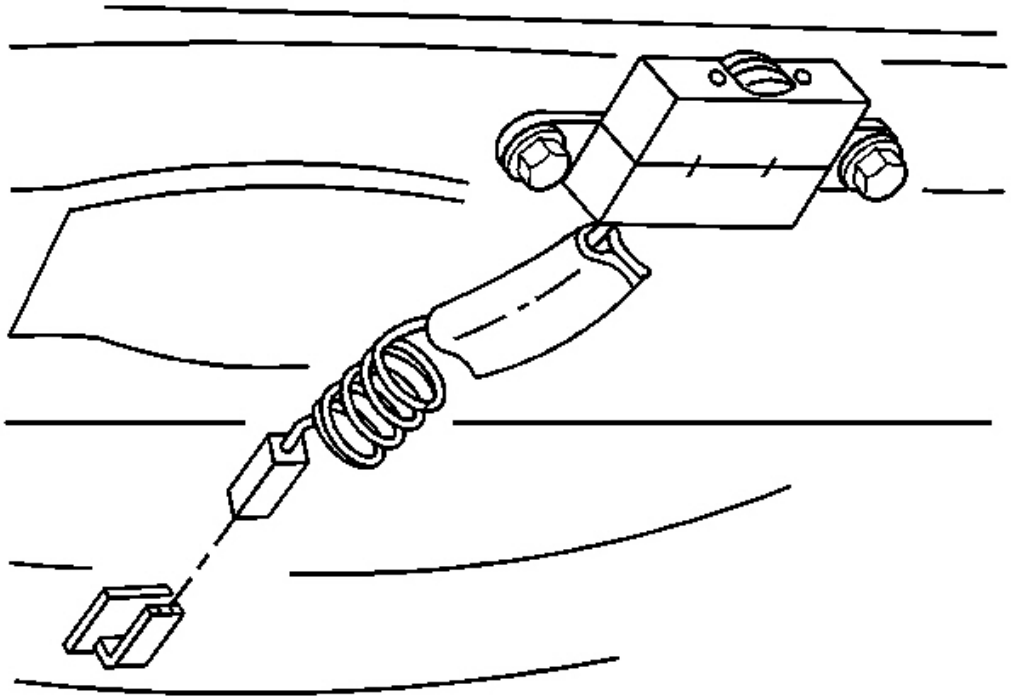

Fig. 93: Antenna Connector To Window
Courtesy of GENERAL MOTORS CORP.

5. Disconnect the antenna connector from the window.

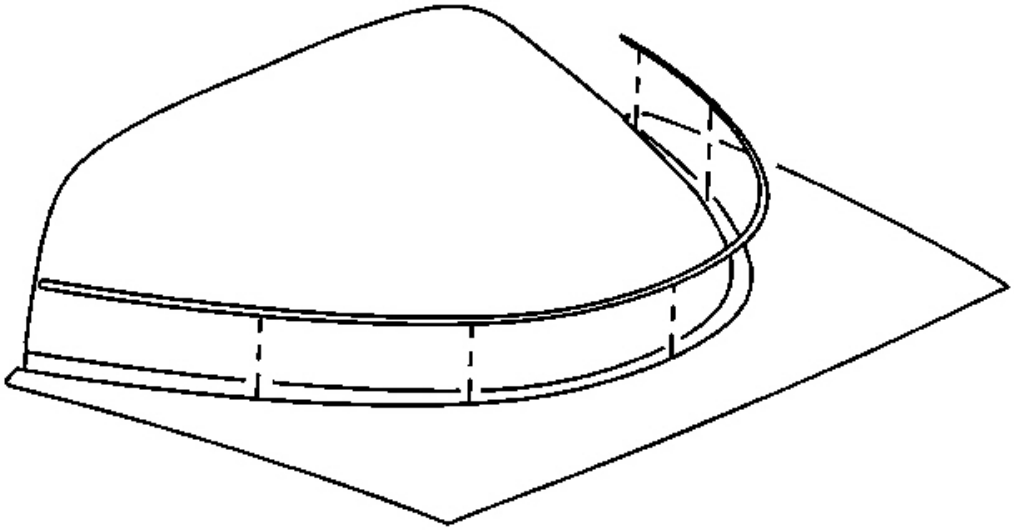

Fig. 94: Window Outer Auxiliary Seal
Courtesy of GENERAL MOTORS CORP.

6. Remove the window outer auxiliary seal.

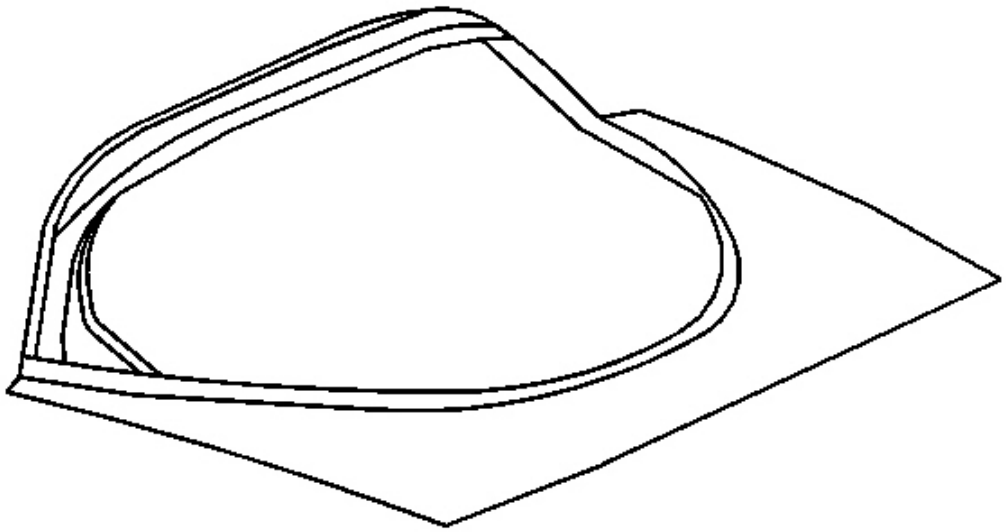

Fig. 95: Rear Lift Window Panel
Courtesy of GENERAL MOTORS CORP.

7. Remove the rear lift window panel. Refer to **Weatherstrip Replacement - Rear Lift Window Panel** in Body Rear End.
8. Place the panel face down on a clean protective surface.

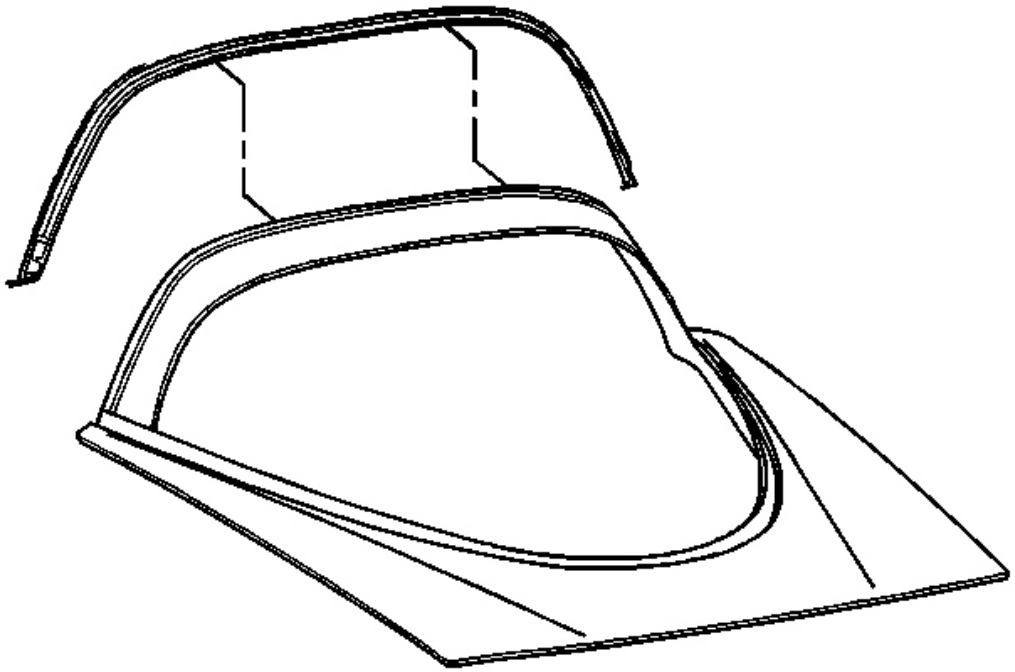

Fig. 96: Front Weatherstrip
Courtesy of GENERAL MOTORS CORP.

9. Remove the front weatherstrip.

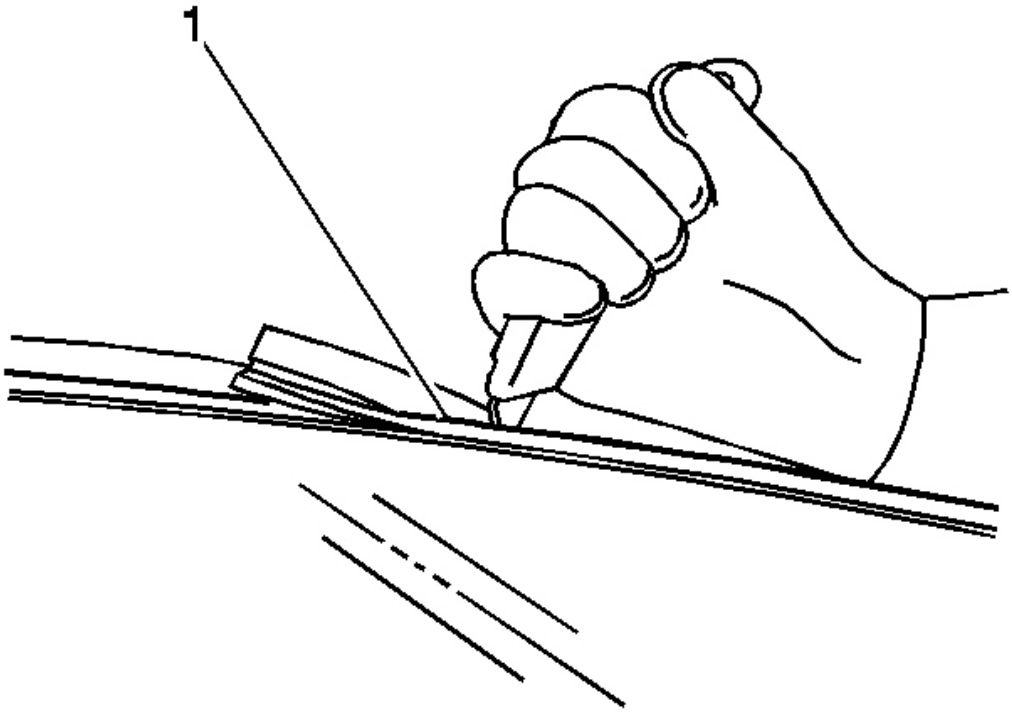

Fig. 97: Removing Window Reveal Molding
Courtesy of GENERAL MOTORS CORP.

CAUTION: Refer to Glass and Sheet Metal Handling Caution in Cautions and Notices.

IMPORTANT: The rear lift window reveal molding fills the cavities between the body and window.
If the reveal molding is stretched or damaged, it cannot be reused. It must be replaced.

10. Remove the rear lift window reveal molding.

    If the rear lift window reveal molding will not release, use a utility knife in order to cut around the window in order to remove the rear window reveal molding.

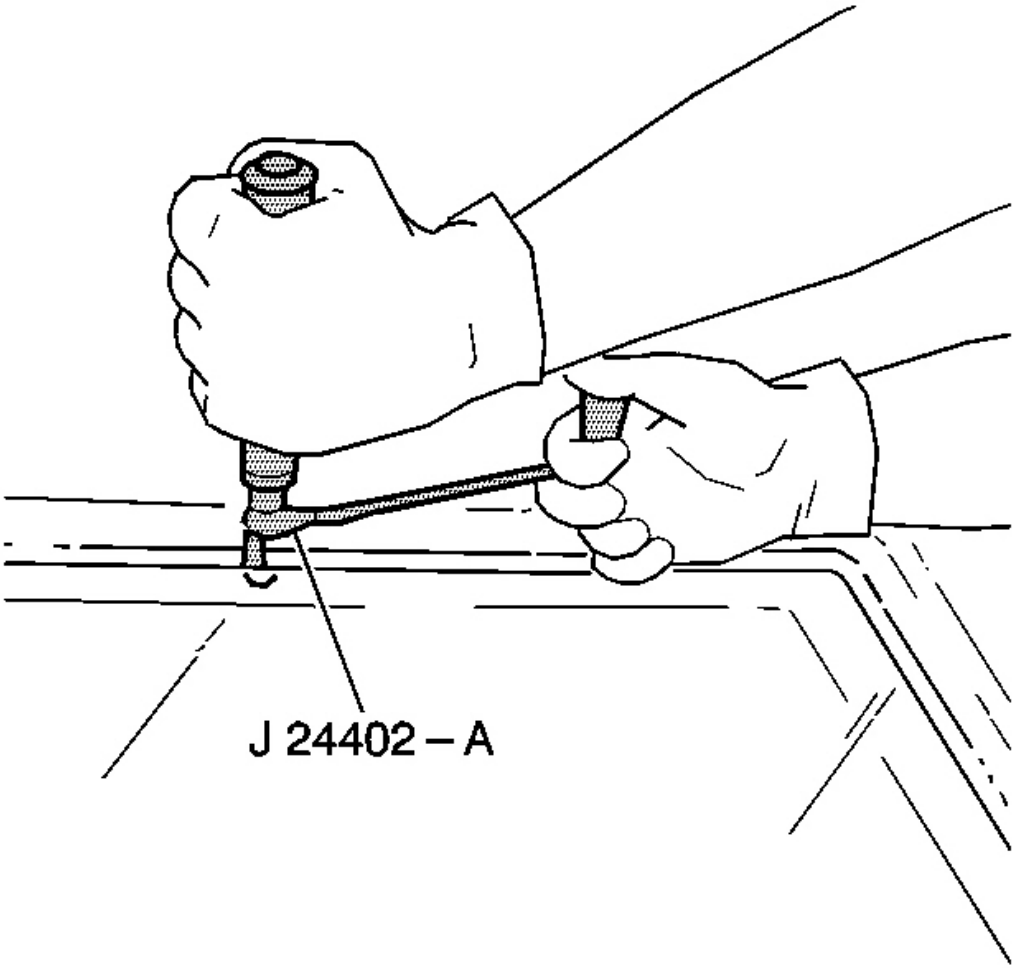

Fig. 98: Separating Urethane Adhesive From Window
Courtesy of GENERAL MOTORS CORP.

IMPORTANT: Keep the cutting edge of the tool against the window.

11. This will allow the urethane adhesive to be separated from the window.
    - Leave a base of urethane on the pinchweld flange.
    - The only suitable lubrication is clear water.
    - Use**J 24402-A** ,. See **Special Tools and Equipment** .**J 39032** or equivalent in order to remove the window. See **Special Tools and Equipment** .

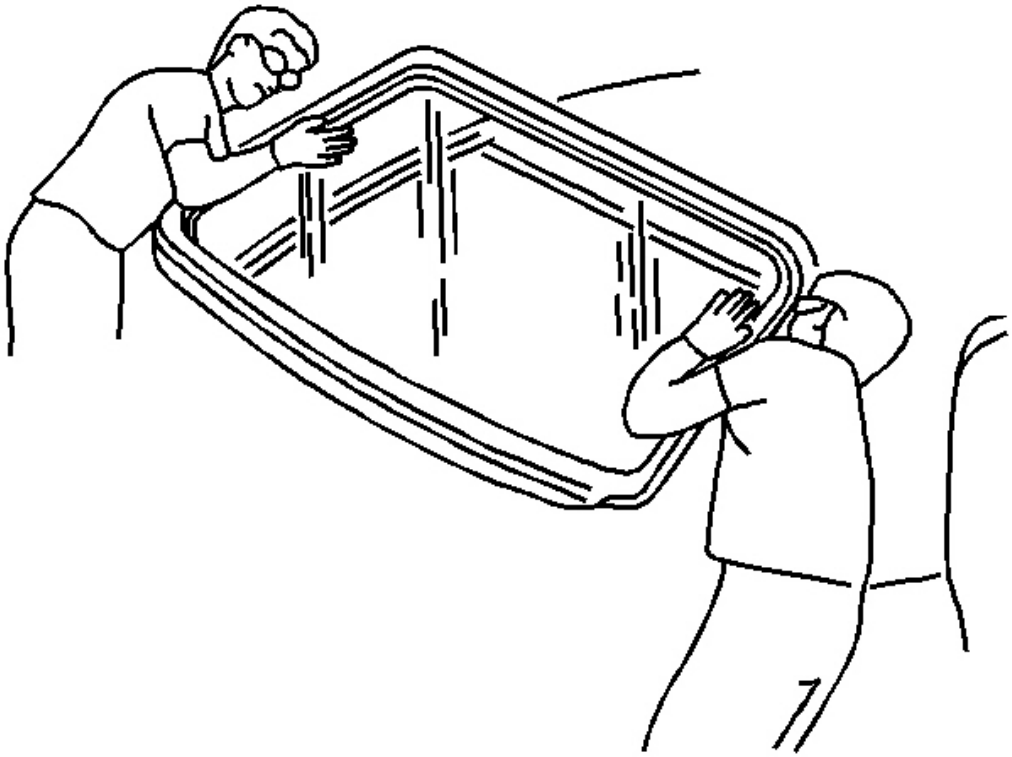

Fig. 99: Removing Rear Window
Courtesy of GENERAL MOTORS CORP.

12. With the aid of an assistant, use the suction cups in order to lift the rear lift window from the opening.

Installation Procedure

1. Install a stationary window into the opening. Refer to **Urethane Adhesive Installation of Stationary Windows** .
2. Remove the rear lift window struts. Refer to **Strut Replacement - Rear Lift Window Panel** in Body Rear End.
3. Connect the rear defogger electrical connections.
4. Connect the OnStar, if equipped.

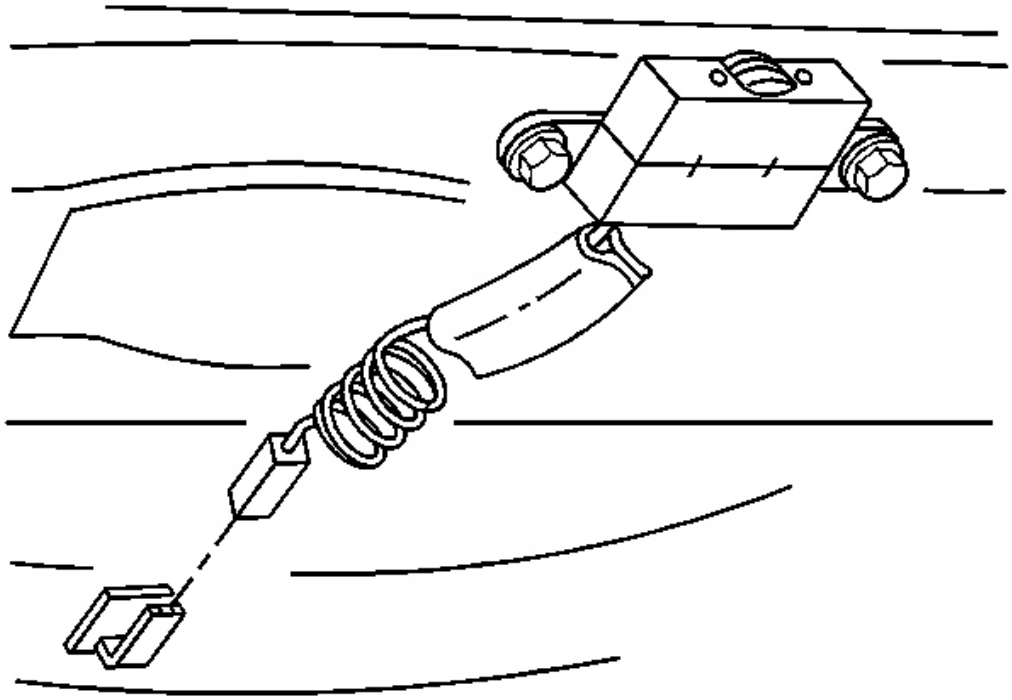

Fig. 100: Antenna Connector To Window
Courtesy of GENERAL MOTORS CORP.

5. Connect the antenna connector to the window.
6. Remove the protective coverings and tape from the vehicle and the headliner

DESCRIPTION AND OPERATION

ADHESIVE SERVICE KIT DESCRIPTION

The GM of Canada Adhesive Caulking Kit, P/N 10952983, contains the following items:

- Four different primers
- A tube of urethane adhesive with a nozzle
- Four daubers
- Instructions with warnings

Use the urethane adhesive caulking kit for replacement of any urethane adhesive-installed window using the full cut method.

In the United States or Canada, you may use any of the following equivalent urethane adhesive systems which meet GM Specification GM 3651G:

- Dow Automotive - Essex 400HV. One part and requires associated primers.
- Dow Automotive - Essex U216. Two part and requires associated primers.

  Call Dow Automotive at 1-800-453-3779 for more information.

- 3M(tm) "Fast Cure" Auto Glass Urethane. One part and requires associated primers.

  Call 3M(tm) at 1-877-666-2277 for more information.

Use these materials based on specific manufacturer. Do NOT intermix primers or adhesives from one manufacturer to another.

Always follow the system manufacturer's instructions for application, handling, and curing.

AUTOMATIC DAY-NIGHT MIRROR DESCRIPTION AND OPERATION

Inside Rearview Mirror with the Automatic Day-Night Feature System Components

The inside rearview mirror with the automatic day-night feature system consist of the following components:

- Inside rearview mirror
- Driver outside mirror with the automatic day-night feature

Power and Ground of the Inside Rearview Mirror

- With the ignition ON, ignition voltage is supplied to the mirror from the BTSI BU fuse in the I/P fuse block.
- Ground for the mirror is provided by SP202.

Inside Rearview Mirror with the Automatic Day-Night Feature System Operation

The inside rearview mirror uses 2 photocell sensors. One sensor is the headlight sensor, located on the rear side of the mirror. The headlight sensor is used to determine light conditions present at the mirror face. The other sensor is the ambient light sensor, located on the front of the mirror or windshield side. The ambient light sensor is used to determine light conditions present at the mirror. With automatic day-night feature enabled, the mirror uses ambient light sensor to determine the exterior light condition. With a low light condition detected, and a high light condition from behind at the headlight sensor, the inside rearview mirror will automatically darken the face of the mirror.

In the daytime, the mirror is in a normal state because of the high light condition that is indicated by the ambient light sensor. With the gear selector lever in the REVERSE position, backup lamp supply voltage is supplied as an input to the inside rearview mirror. In night time conditions only, the mirror monitors this input to disable the automatic day-night feature which allows the face to gradually change to a normal state. This

allows the driver to see objects in the mirror clearly when backing up.

Driver Outside Rearview Mirror with the Automatic Day-Night Feature Operation

The inside rearview mirror will also darken the driver outside rearview mirror. The inside rearview mirror supplies a low reference circuit and a signal circuit to the driver outside rearview mirror. Refer to **Outside Mirror Description and Operation** in Doors for further description and operation of the driver outside rearview mirror.

Switches of the Inside Rearview Mirror with the Automatic Day-Night Feature

The inside rearview mirror has three switches that perform the following functions:

- The switch at the center of the mirror is used to enable or disable the automatic day-night feature. With the ignition in the ON position, depress the switch to enable the automatic day-night feature of the mirror. A green indicator will illuminate on the mirror when the automatic day-night feature is enabled. To disable the automatic day-night feature of the mirror, depress the switch again.
- The other two switches are for turning the map lights on the mirror ON and OFF.

REAR WINDOW DEFOGGER DESCRIPTION AND OPERATION

Rear Window Defogger System Components (w/CJ2)

The rear window defogger system consist of the following components:

- HVAC control module
- Body control module (BCM)
- Rear window defogger grid

Rear Window Defogger Operation

Battery positive voltage is supplied through the RR DEFOG fuse, in the instrument panel electrical center, to the RR DEFOG relay switched input. Ignition voltage is supplied through the HVAC fuse, in the instrument panel electrical center, to the RR DEFOG relay coil. When you start the engine, and depress the rear window defogger switch. The HVAC control module illuminates the rear window defogger indicator and sends a class 2 message to the BCM to enable the rear window defogger system. The BCM energizes the RR DEFOG relay by grounding the control circuit of the relay. This allows battery positive voltage from the relay switched input through the switch contacts and out the relay switched output to the rear window defogger grid. Ground for the rear window defogger grid is provided by G301.

When you start the engine and press the rear window defogger switch for the first time, the defogger cycle lasts for 15 minutes. Further operation results in 7.5 minute defogger cycles. The defogger cycle resets to 15 minutes when you cycle the ignition to the OFF position and then start the engine.

Rear Window Defogger System Components (w/oCJ2)

The rear window defogger system consist of the following components:

- HVAC control module
- Body control module (BCM)
- Rear window that has a number of grid lines

Rear Window Defogger Operation

Battery positive voltage is supplied through the RR DEFOG fuse, in the instrument panel electrical center, to the RR DEFOG relay switched input. Ignition voltage is supplied through the HVAC fuse, in the instrument panel electrical center, to the RR DEFOG relay coil. The BCM supplies 12 volts on the secondary rear window defogger switch signal circuit to the HVAC control module. The BCM monitors this voltage on the secondary rear window defogger switch signal circuit. When you start the engine, and depress the rear window defogger switch. The HVAC control module illuminates the rear window defogger indicator and grounds the secondary rear window defogger switch signal circuit. The voltage is pulled low on the secondary rear window defogger switch signal circuit, which the BCM interprets as a request for the rear window defogger system. The BCM enables the rear window defogger system by grounding the control circuit of the RR DEFOG relay. This energizes the RR DEFOG relay and allows battery positive voltage from the relay switched input through the switch contacts and out the relay switched output to the rear window defogger grid. Ground for the rear window defogger grid is provided by G301.

When you start the engine and press the rear window defogger switch for the first time, the defogger cycle lasts for 15 minutes. Further operation results in 7.5 minute defogger cycles. The defogger cycle resets to 15 minutes when you cycle the ignition to the OFF position and then start the engine.

STATIONARY WINDOW DESCRIPTION

Most stationary windows, specifically windshields, are retained to the body with urethane adhesive which adheres the window to the body, increasing structural integrity. The reinstallation of the windows with urethane adhesive requires complete replacement of the urethane adhesive bead, and is known as the full cut method.

FULL-CUT METHOD DESCRIPTION

Use only the full cut method, also known in the field as full strip method, when installing windows.

This method includes the following:

- The replacement of a majority of the urethane adhesive bead. Remove all but approximately 2 mm (3/64 in) of the existing bead of urethane adhesive from the pinch-weld flange.
- Apply pinch-weld primer to any exposed painted areas on the pinch-weld flange.

No mounds or loose pieces of urethane adhesive should remain on the pinch-weld flange. Do not remove all traces of urethane adhesive.

IMPORTANT:

- **If corrosion of the pinch-weld flange is present, or if sheet metal repairs or**

replacements are required, refinish the pinch-weld flange in order to present a clean, primer-only surface.

- If paint repairs are required, mask the flange bonding area, prior to applying the color coat, in order to provide a clean, primer-only surface.
- Appropriate materials for these primer applications are typically 2 component catalyzed products. Use materials such as BASF DE15(R), DuPont 2610(R), Sherwin-Williams PSE 4600 and NP70(R) and Martin-Semour 5120,5130(R), PPG DP90LF SPIES/HECKER 3688/8590 - 3688/5150 - 4070/5090 STANDOX 11158/13320 - 14653/14980 products are approved for this application. Follow the manufacturer's directions for the mix, the application, and the drying times.
- After repairing the opening as indicated, shake the pinch-weld primer black #3 well. Using a new dauber, apply the primer to the primed surface of the flange in the bonding area. Allow the primer to dry for 10 minutes.

SPECIAL TOOLS AND EQUIPMENT

SPECIAL TOOLS

Special Tools

Illustration	Tool Number/ Description
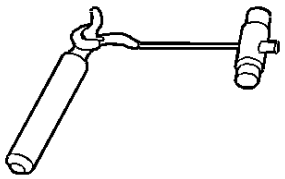	J 24402-A Glass Sealant Cold Knife Remover
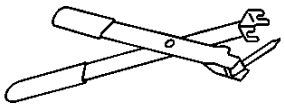	J 34946 Window Pin Remover
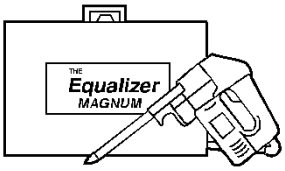	J 39032 Stationary Glass Removal Tool

	J 39040 Quarter Window Remover