AIR CONDITIONING

cardiagn.com

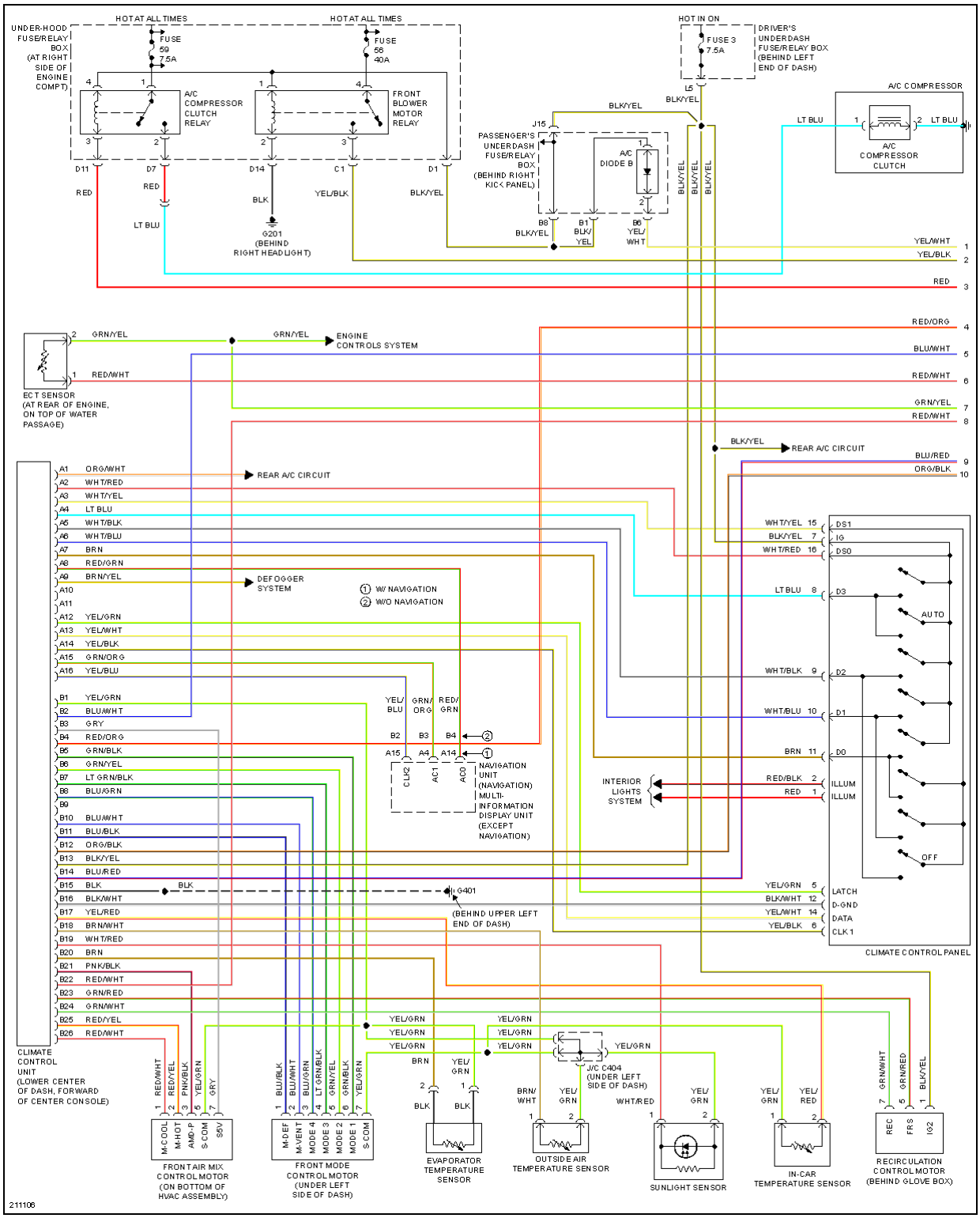

cardiagn.com

Fig. 1: Automatic A/C Circuit (1 of 2)

cardiagn.com

2006 Acura MDX

2006 SYSTEM WIRING DIAGRAMS Acura - MDX

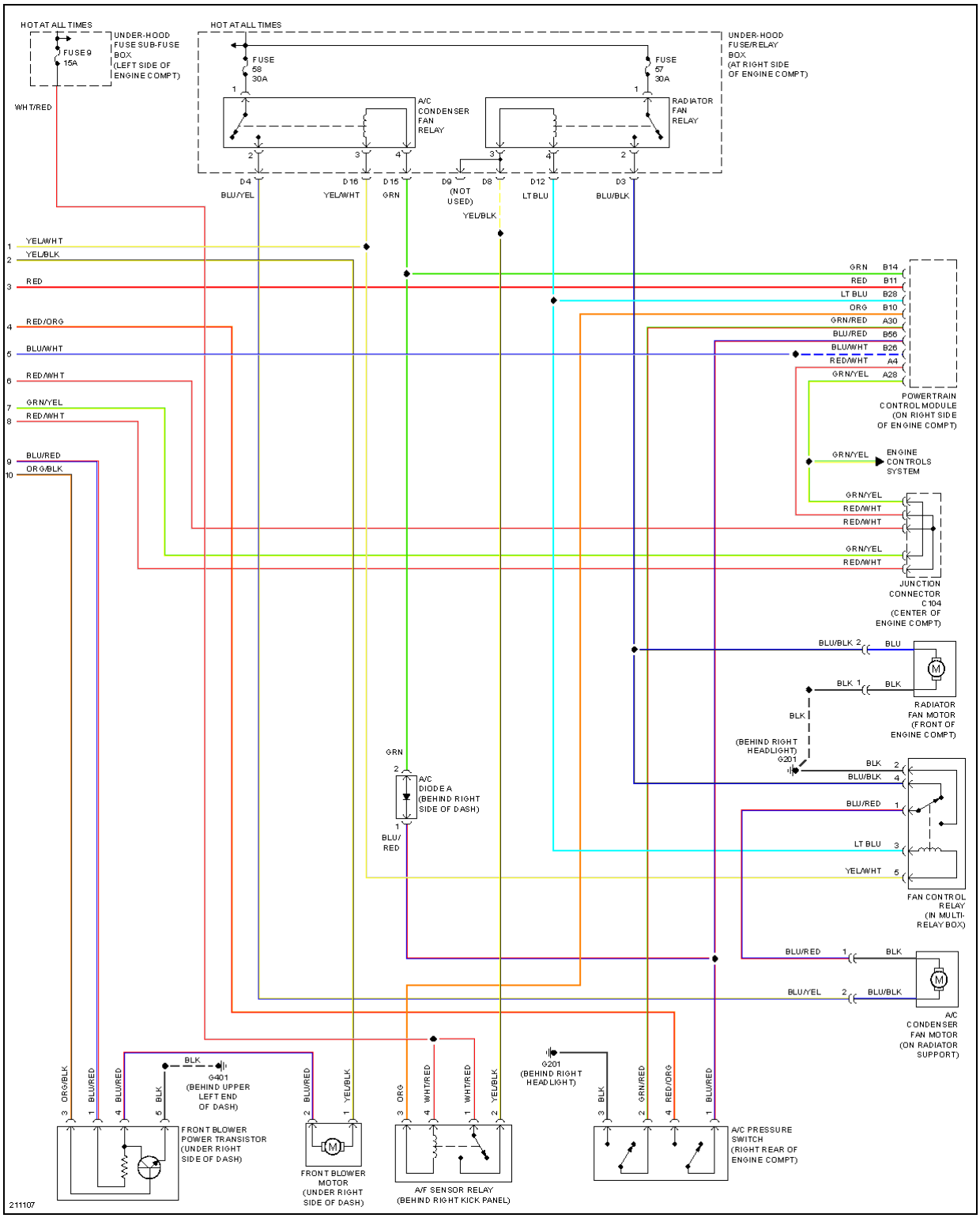

cardiagn.com

Fig. 2: Automatic A/C Circuit (2 of 2)

cardiagn.com

2006 Acura MDX

2006 SYSTEM WIRING DIAGRAMS Acura - MDX

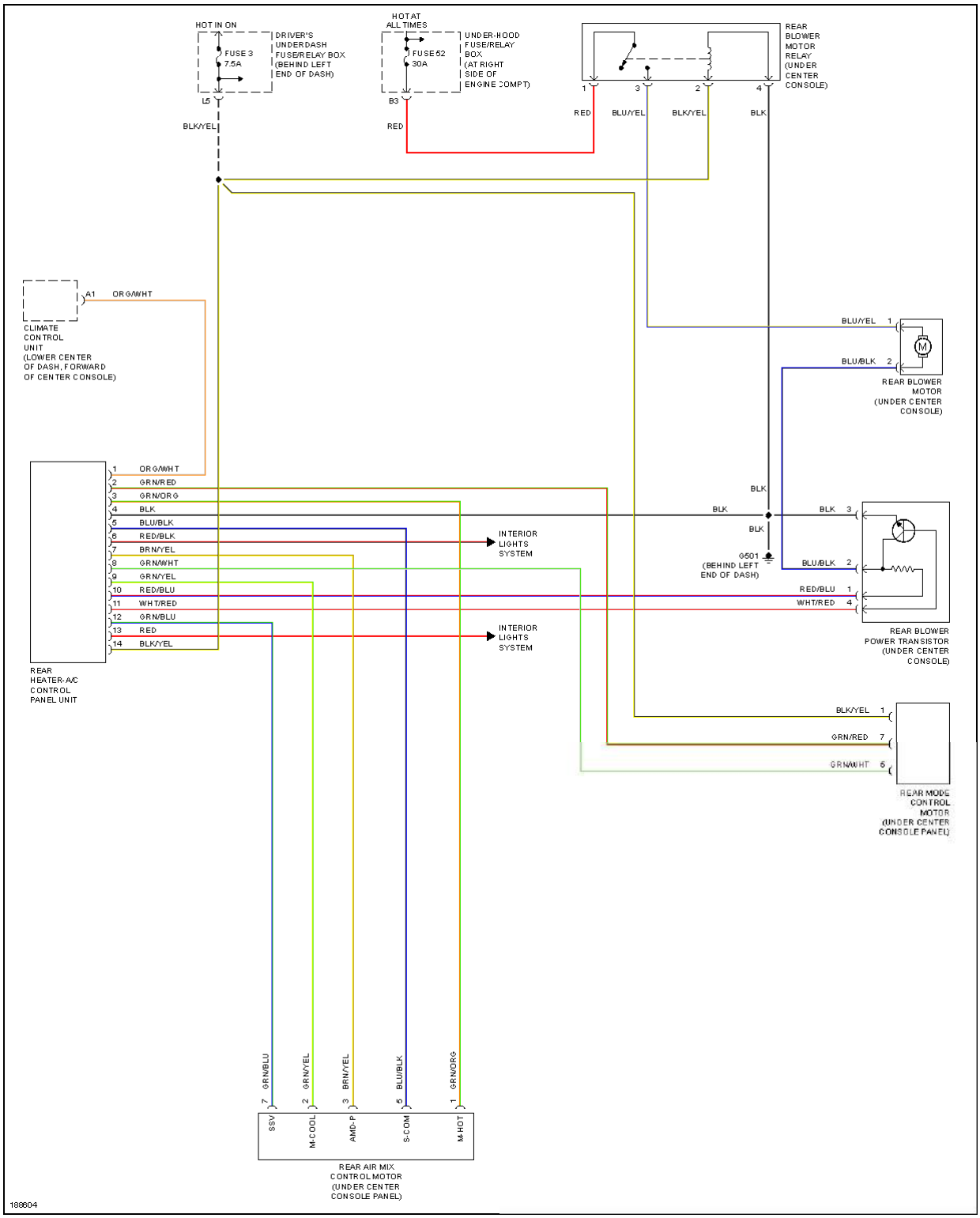

cardiagn.com

Fig. 3: Rear A/C Circuit

ANTI-LOCK BRAKES

cardiagn.com

2006 Acura MDX

2006 SYSTEM WIRING DIAGRAMS Acura - MDX

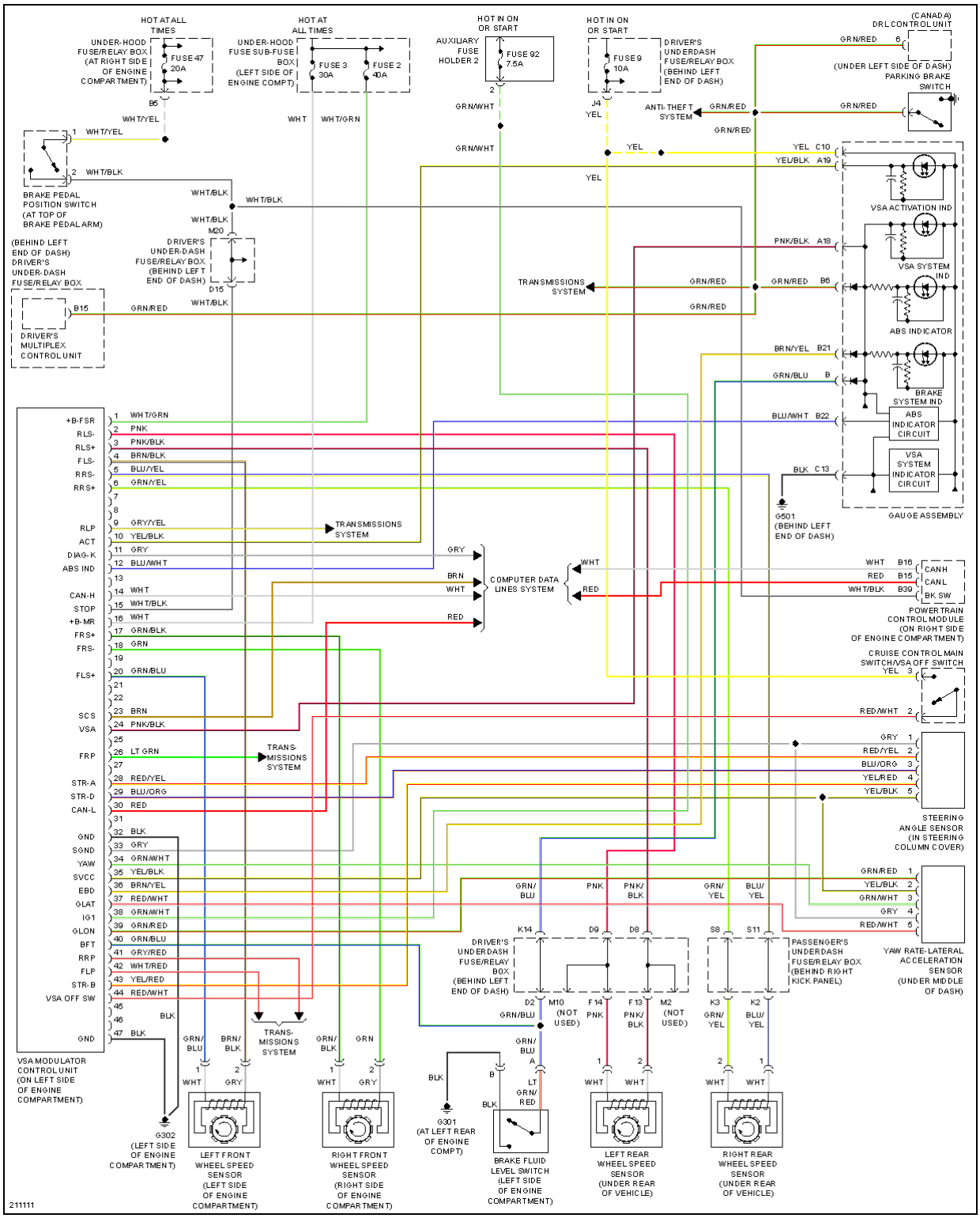

cardiagn.com

Fig. 4: Anti-lock Brakes Circuit

ANTI-THEFT

cardiagn.com

2006 Acura MDX

2006 SYSTEM WIRING DIAGRAMS Acura - MDX

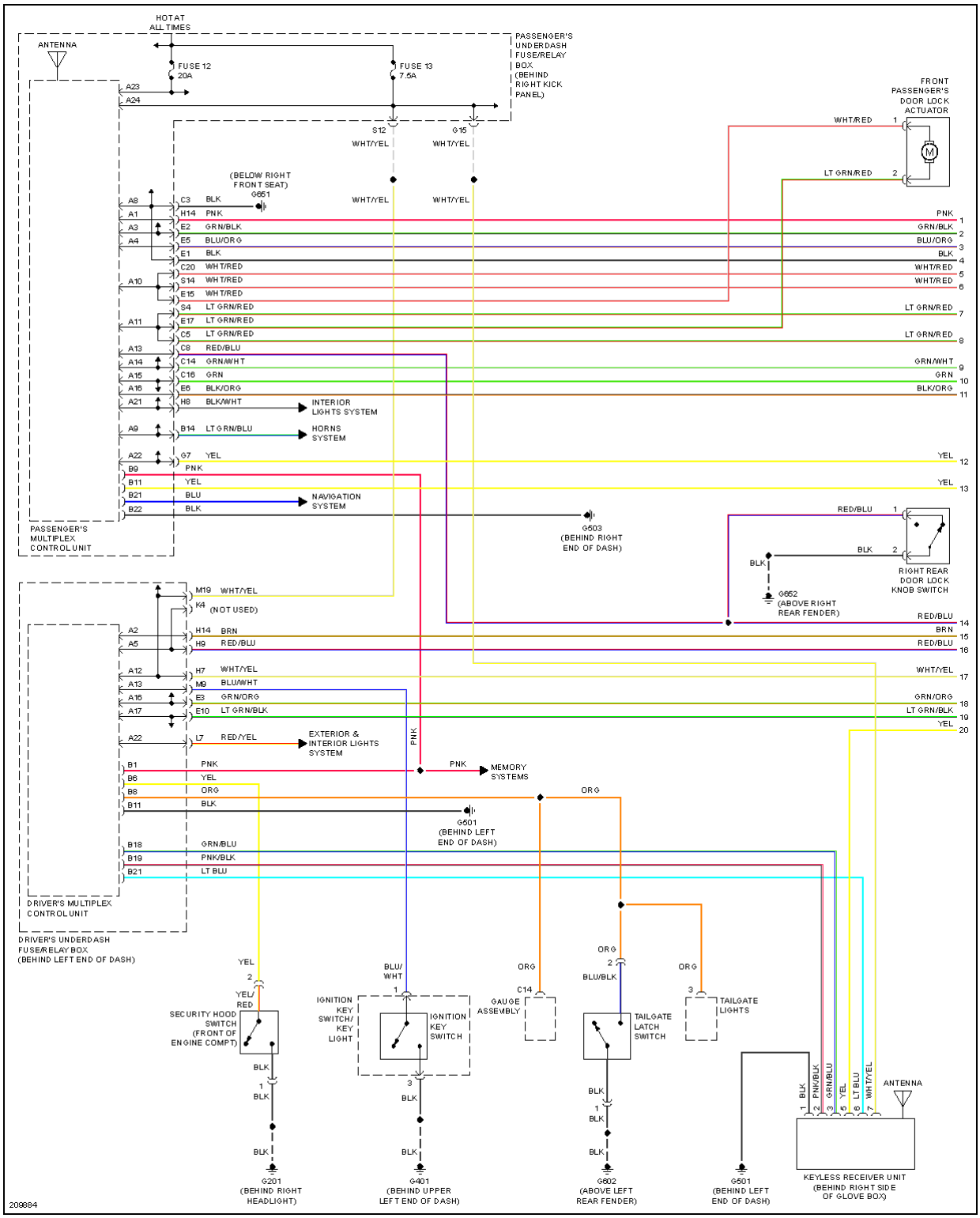

cardiagn.com

Fig. 5: Anti-theft Circuit (1 of 2)

cardiagn.com

2006 Acura MDX

2006 SYSTEM WIRING DIAGRAMS Acura - MDX

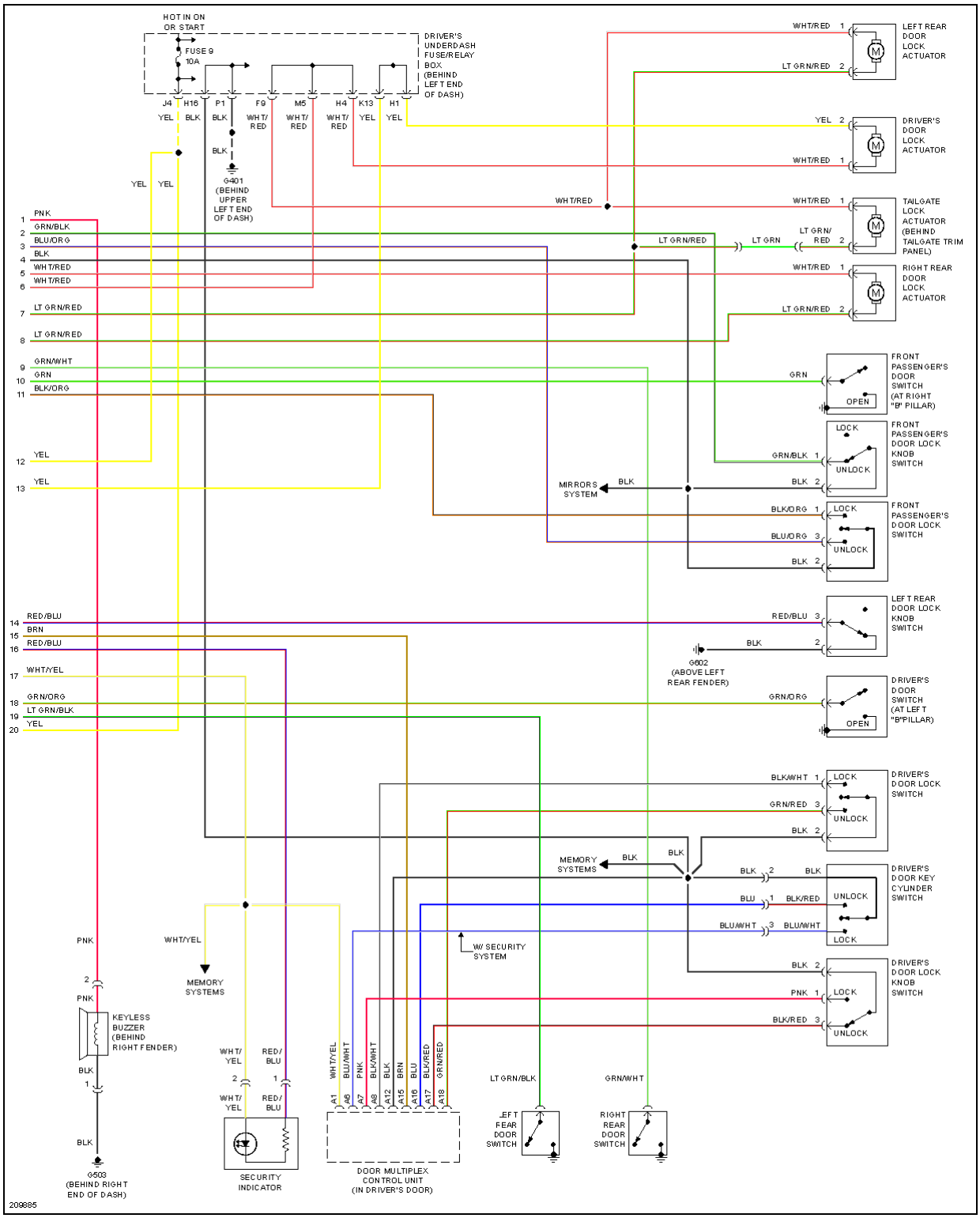

cardiagn.com

Fig. 6: Anti-theft Circuit (2 of 2)

cardiagn.com

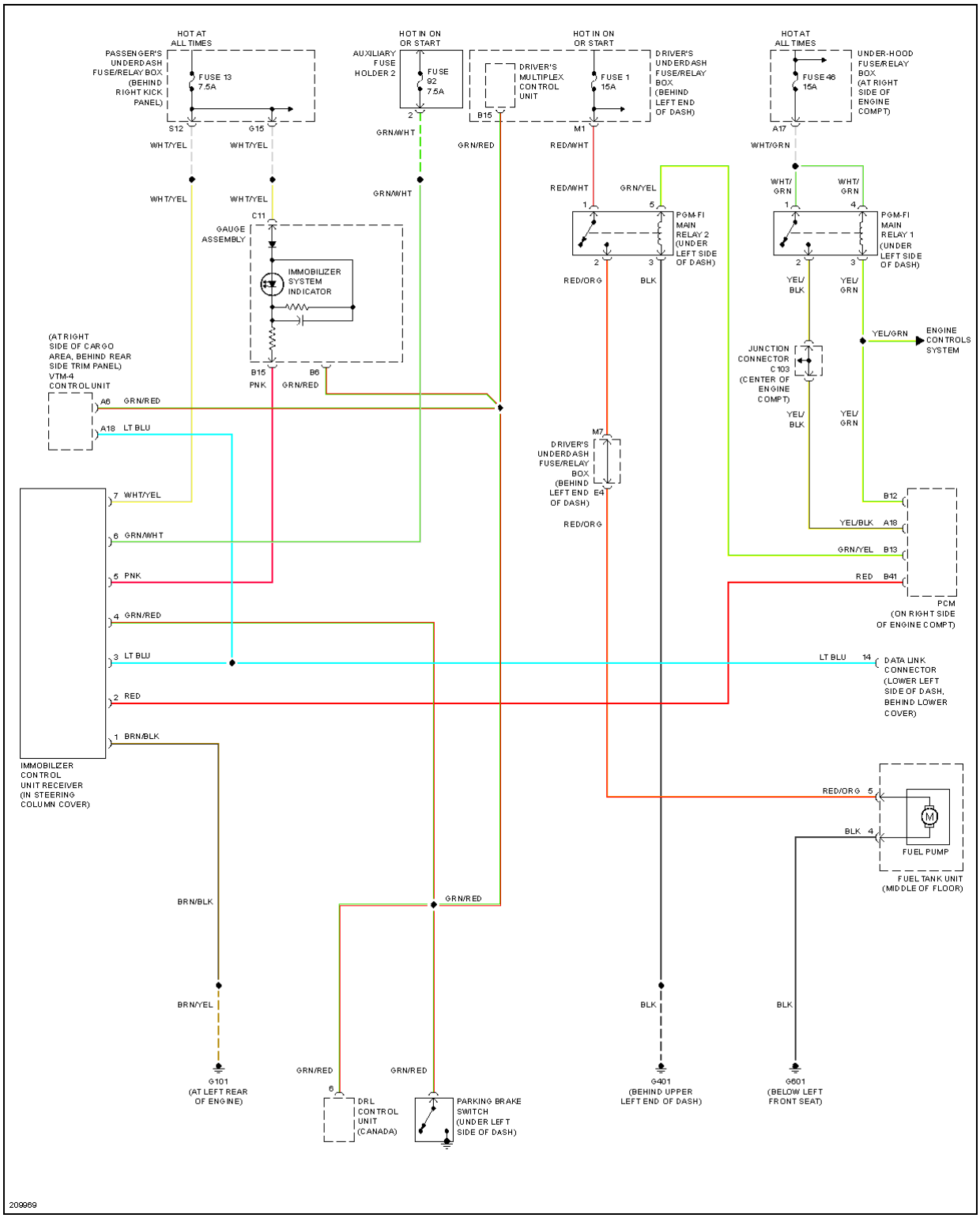

cardiagn.com

Fig. 7: Immobilizer Circuit

BODY CONTROL MODULES

cardiagn.com

2006 Acura MDX

2006 SYSTEM WIRING DIAGRAMS Acura - MDX

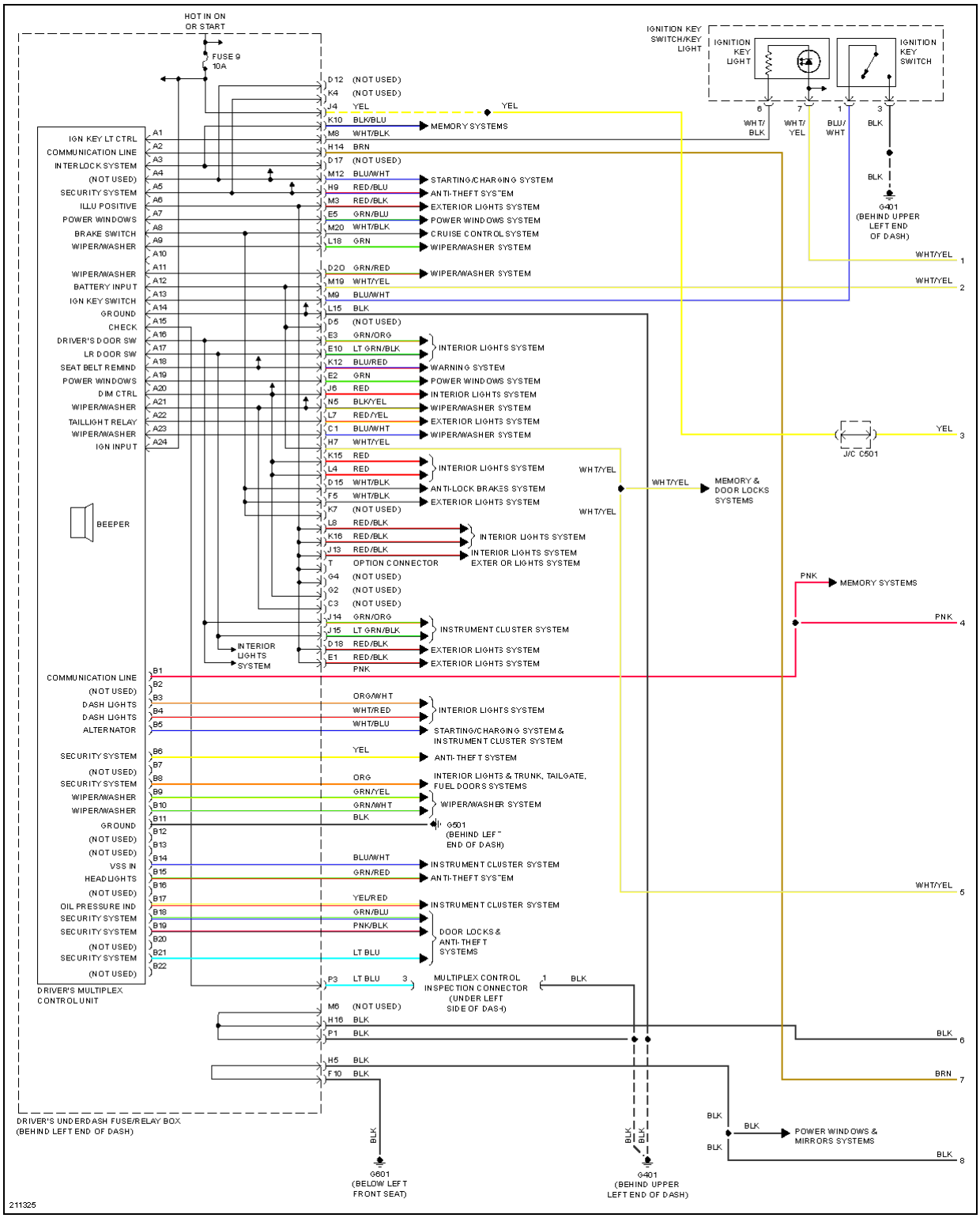

cardiagn.com

Fig. 8: Body Control Modules Circuit (1 of 2)

cardiagn.com

2006 Acura MDX

2006 SYSTEM WIRING DIAGRAMS Acura - MDX

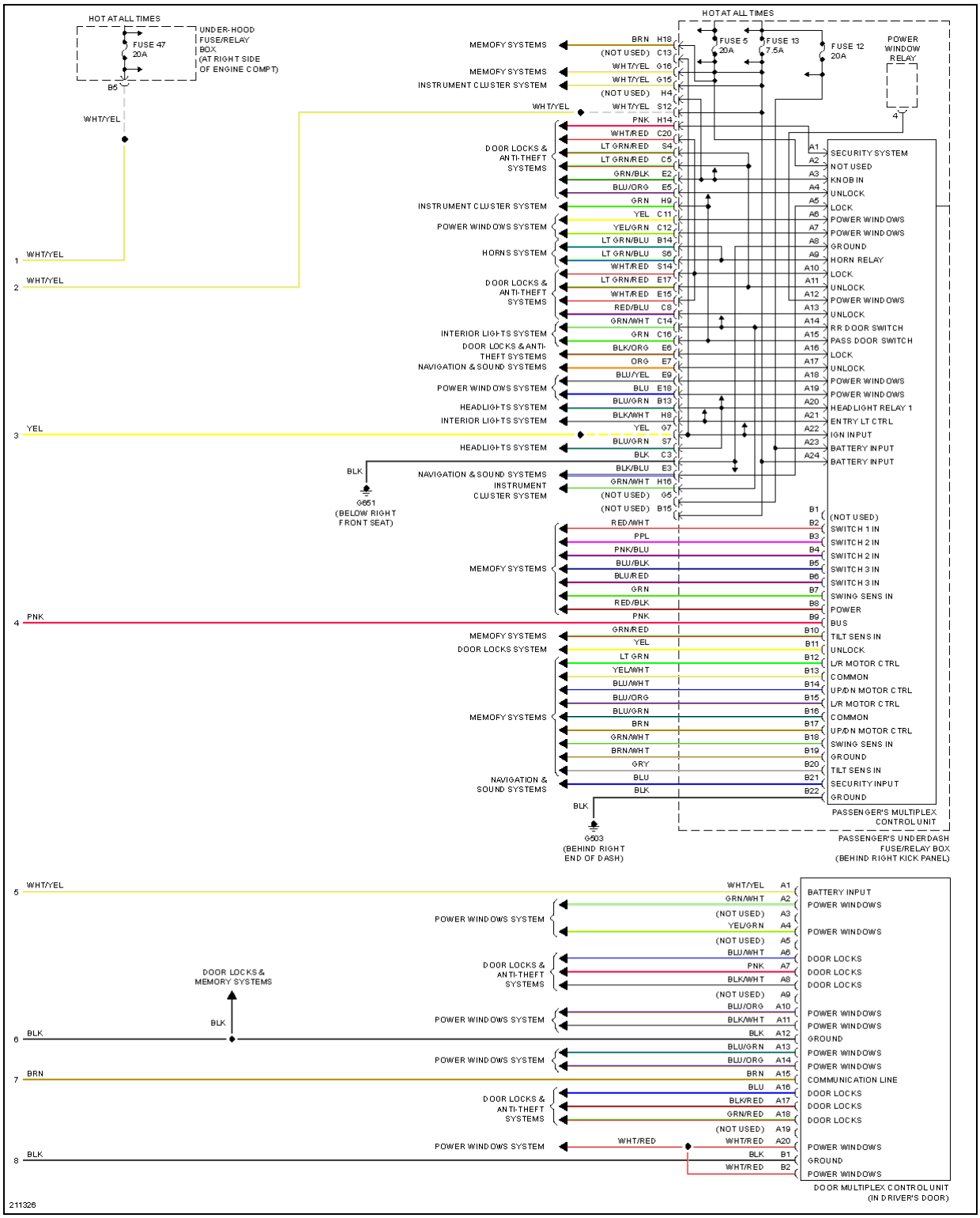

cardiagn.com

Fig. 9: Body Control Modules Circuit (2 of 2)

COMPUTER DATA LINES

cardiagn.com

2006 Acura MDX

2006 SYSTEM WIRING DIAGRAMS Acura - MDX

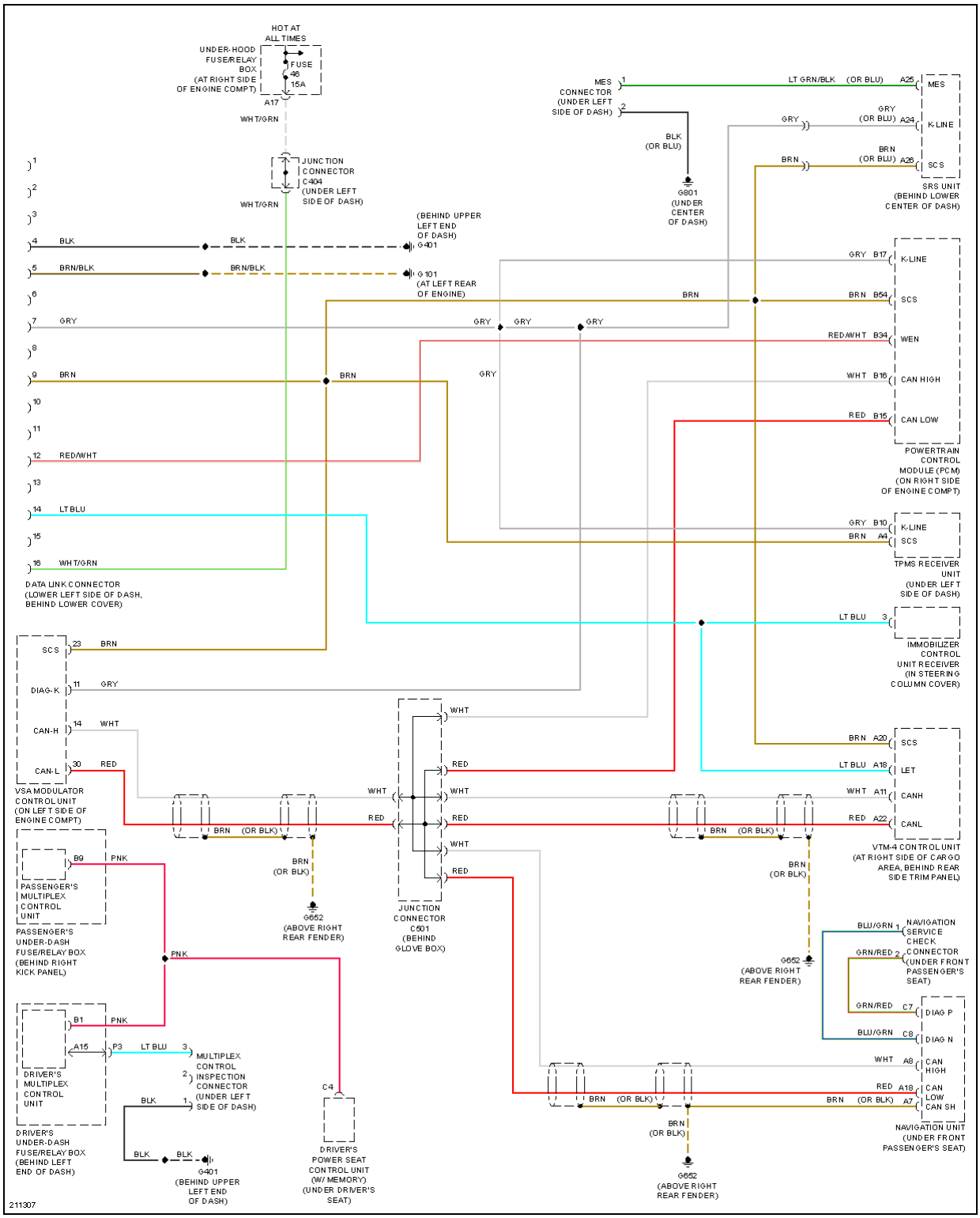

cardiagn.com

Fig. 10: Computer Data Lines Circuit

COOLING FAN

cardiagn.com

2006 Acura MDX

2006 SYSTEM WIRING DIAGRAMS Acura - MDX

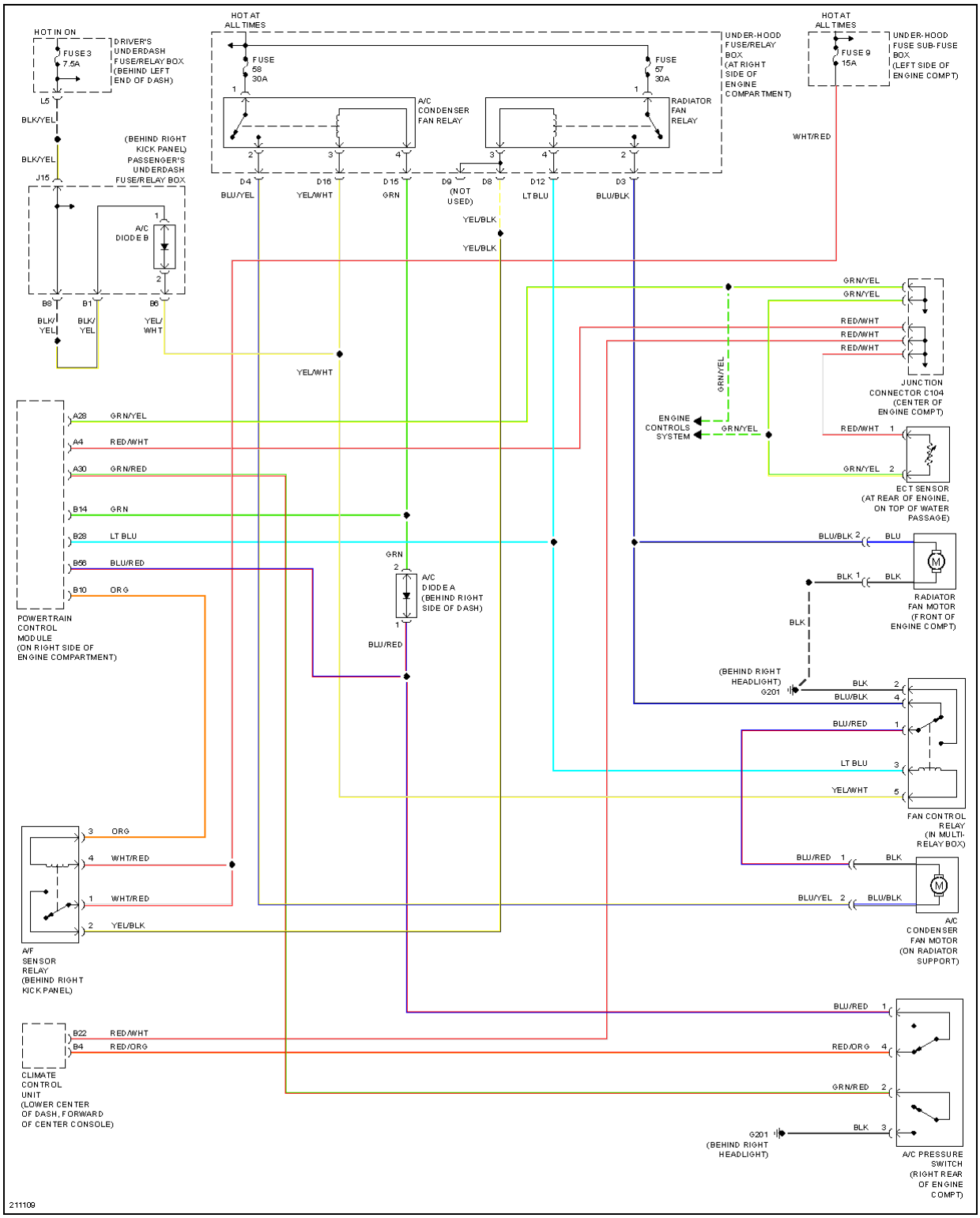

cardiagn.com

Fig. 11: Cooling Fan Circuit

CRUISE CONTROL

cardiagn.com

2006 Acura MDX

2006 SYSTEM WIRING DIAGRAMS Acura - MDX

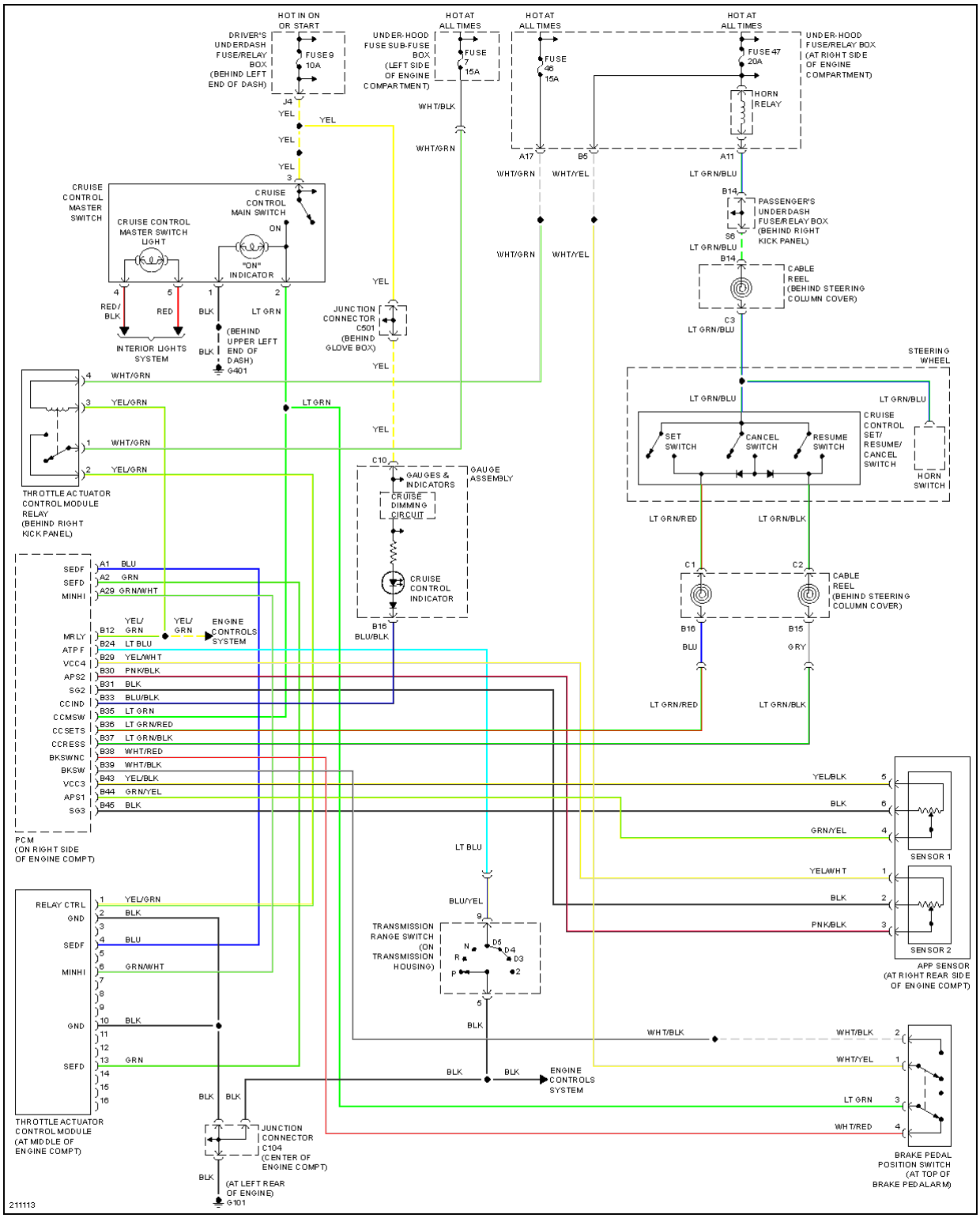

cardiagn.com

Fig. 12: Cruise Control Circuit

DEFOGGERS

cardiagn.com

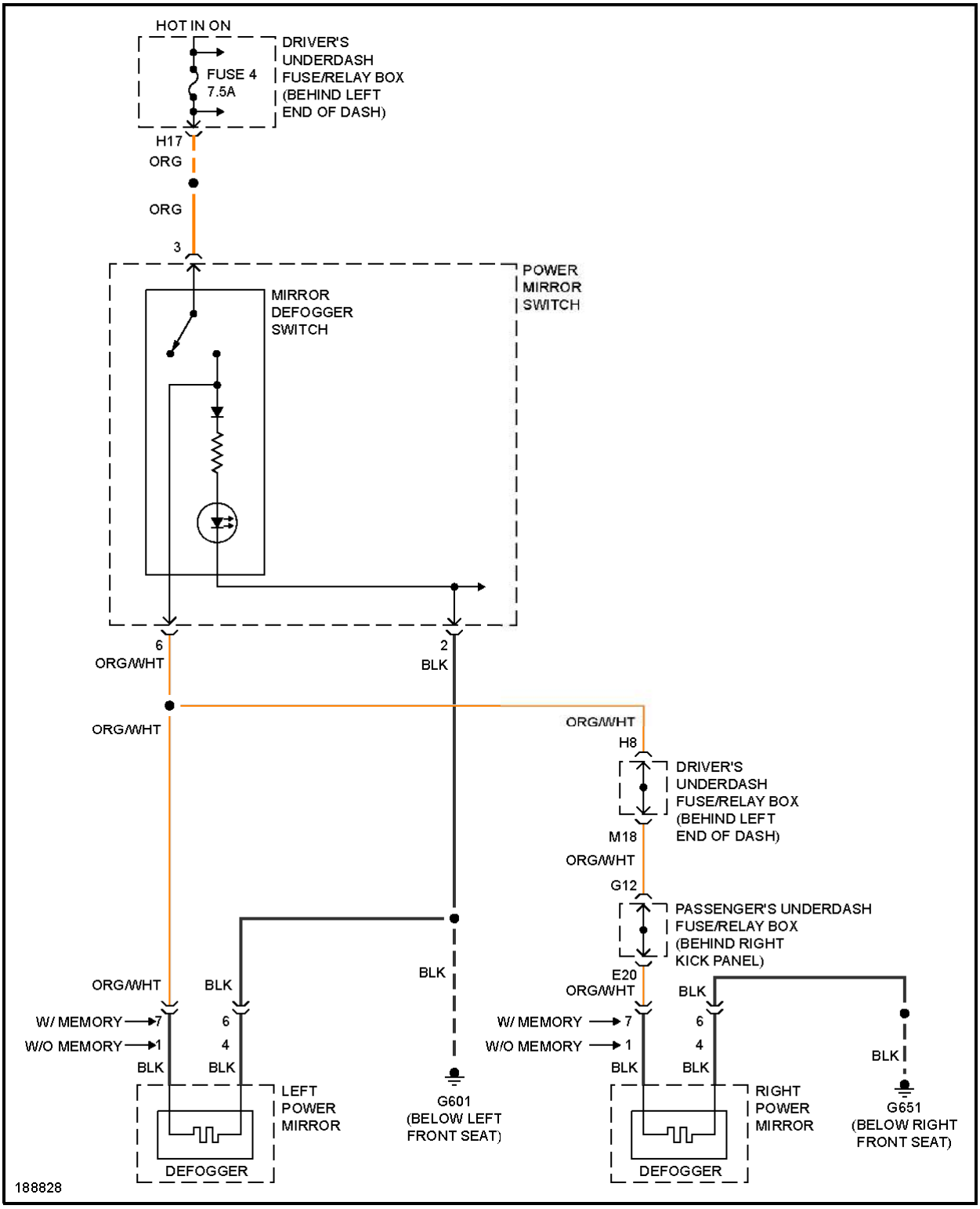

cardiagn.com

Fig. 13: Heated Mirrors Circuit

cardiagn.com

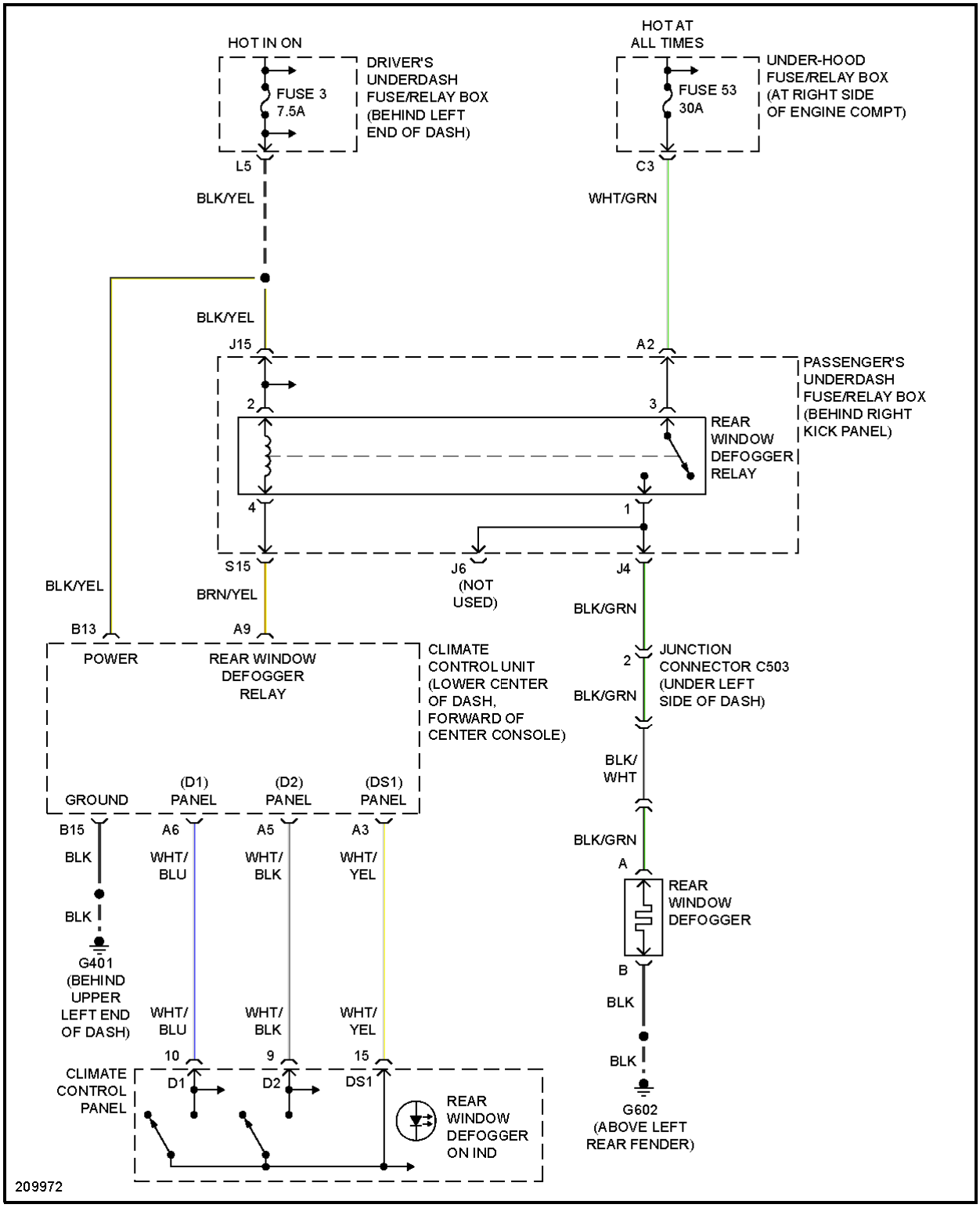

cardiagn.com

Fig. 14: Rear Defogger Circuit

ENGINE PERFORMANCE

3.5L

cardiagn.com

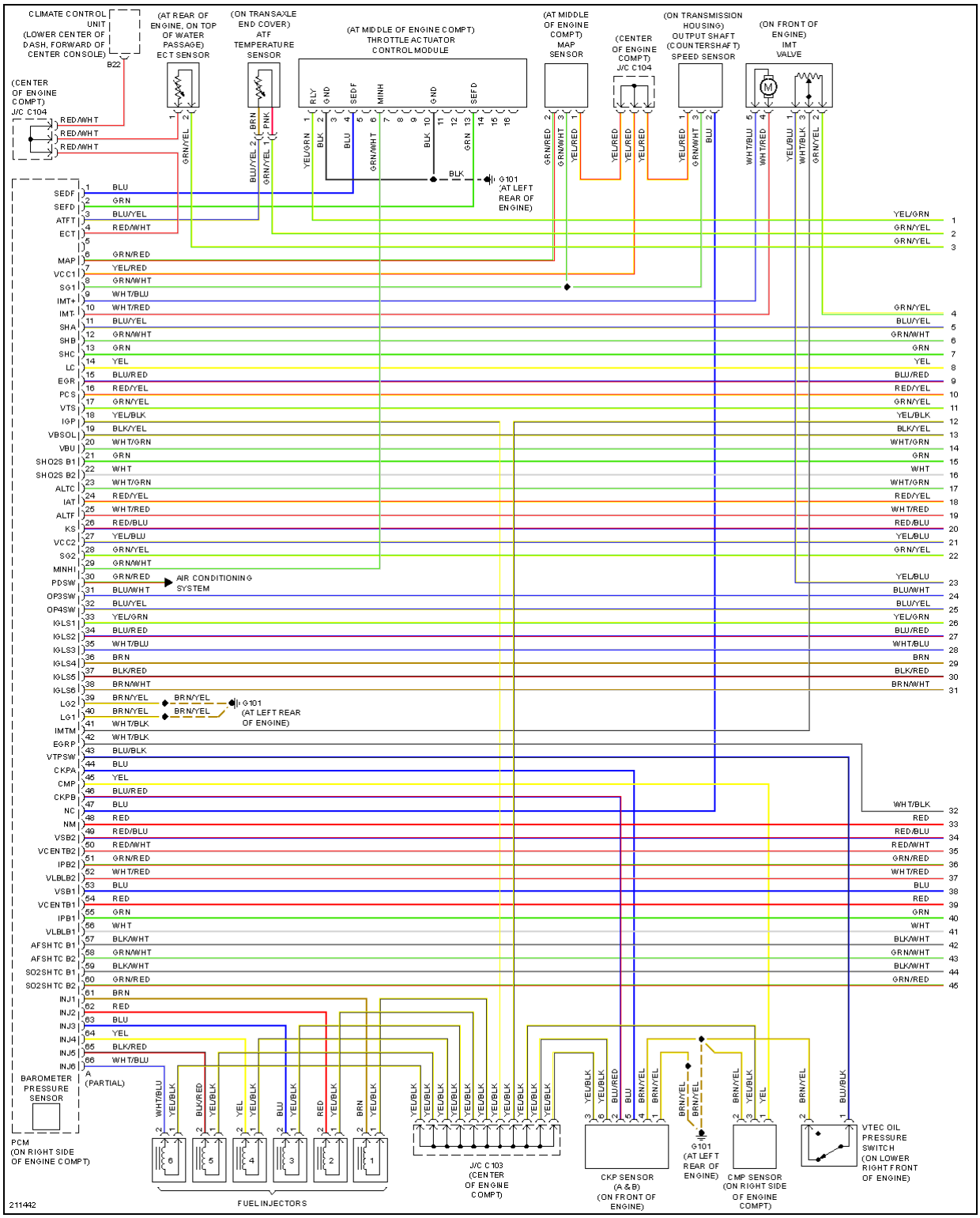

cardiagn.com

Fig. 15: 3.5L, Engine Performance Circuit (1 of 5)

cardiagn.com

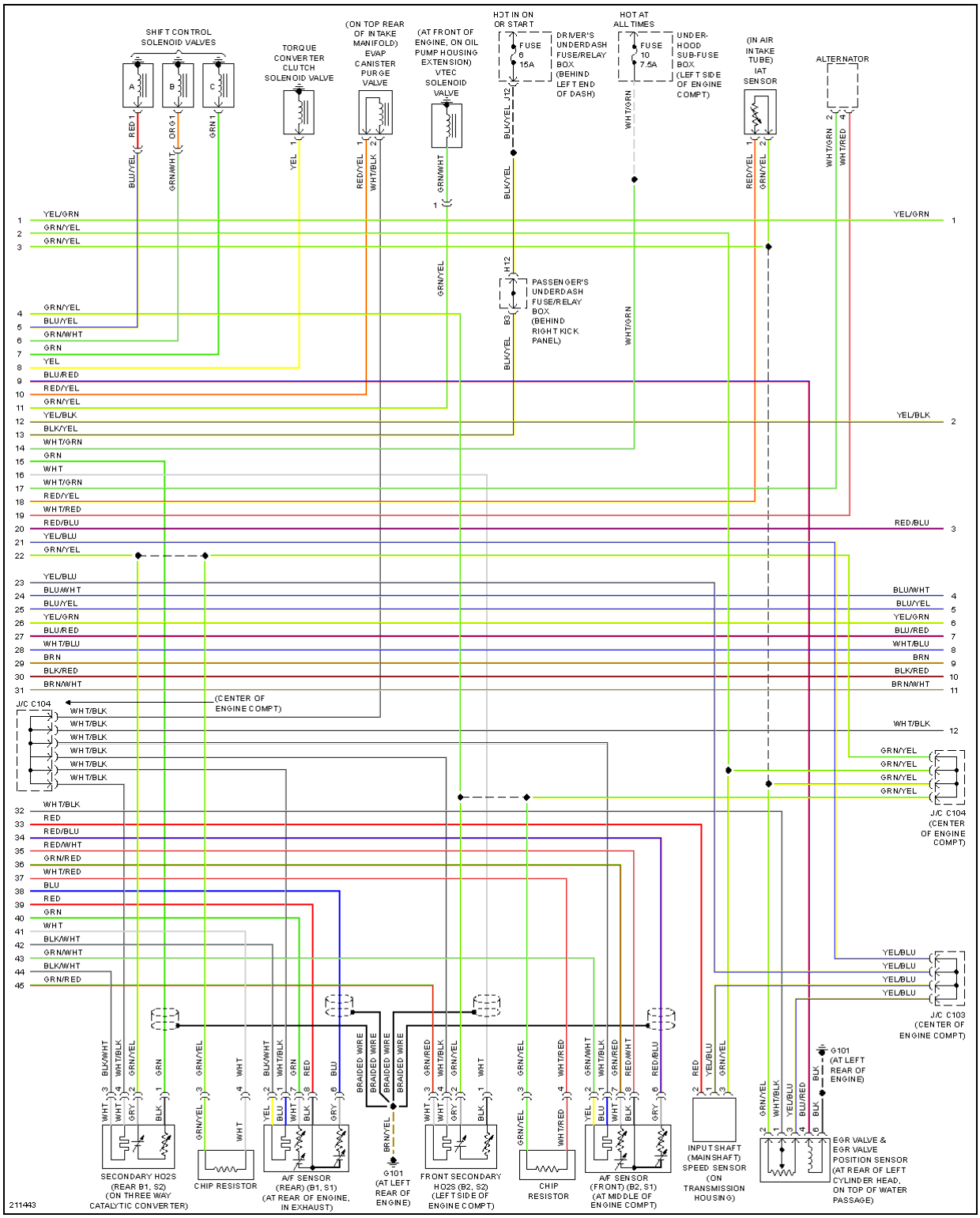

cardiagn.com

Fig. 16: 3.5L, Engine Performance Circuit (2 of 5)

cardiagn.com

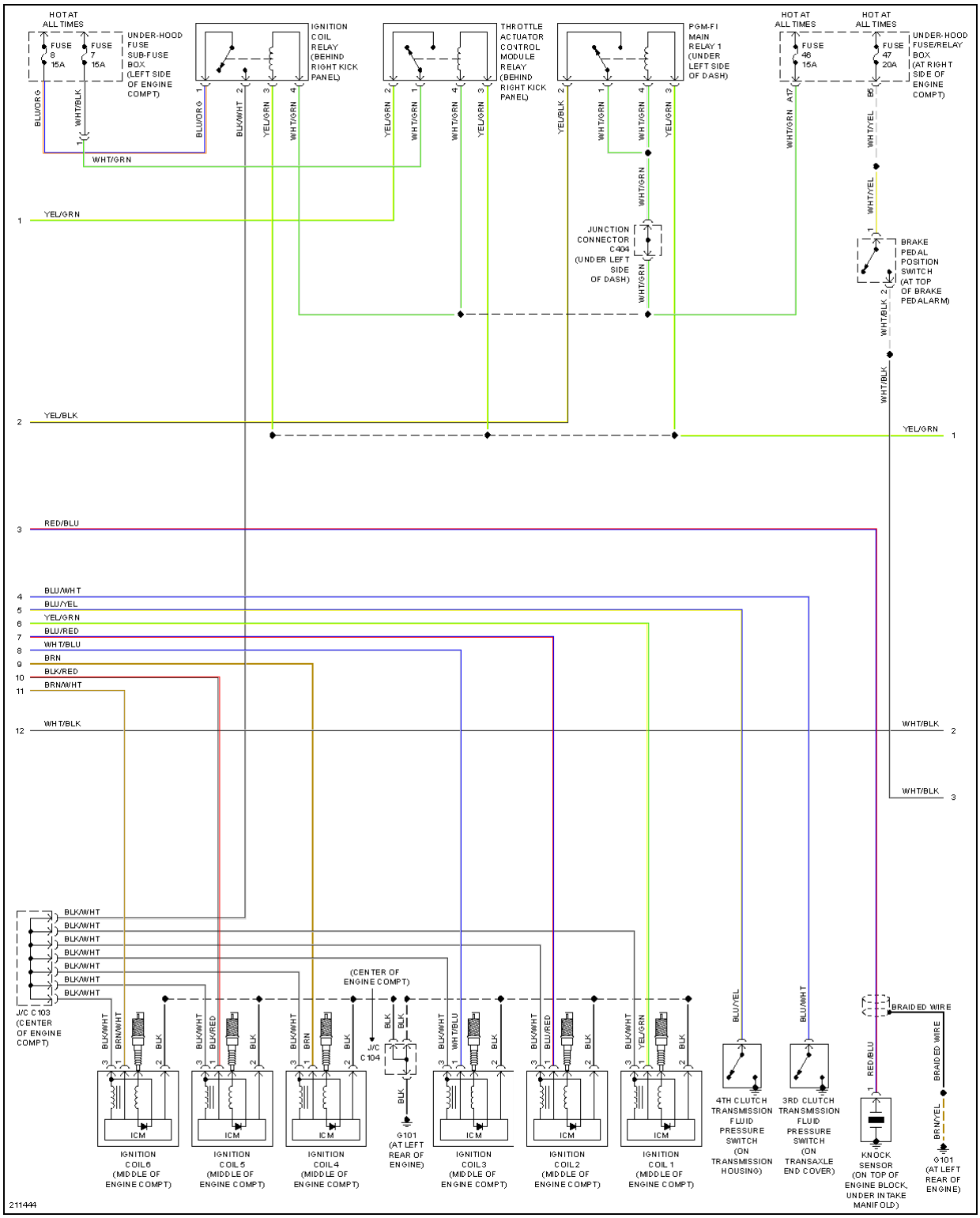

cardiagn.com

Fig. 17: 3.5L, Engine Performance Circuit (3 of 5)

cardiagn.com

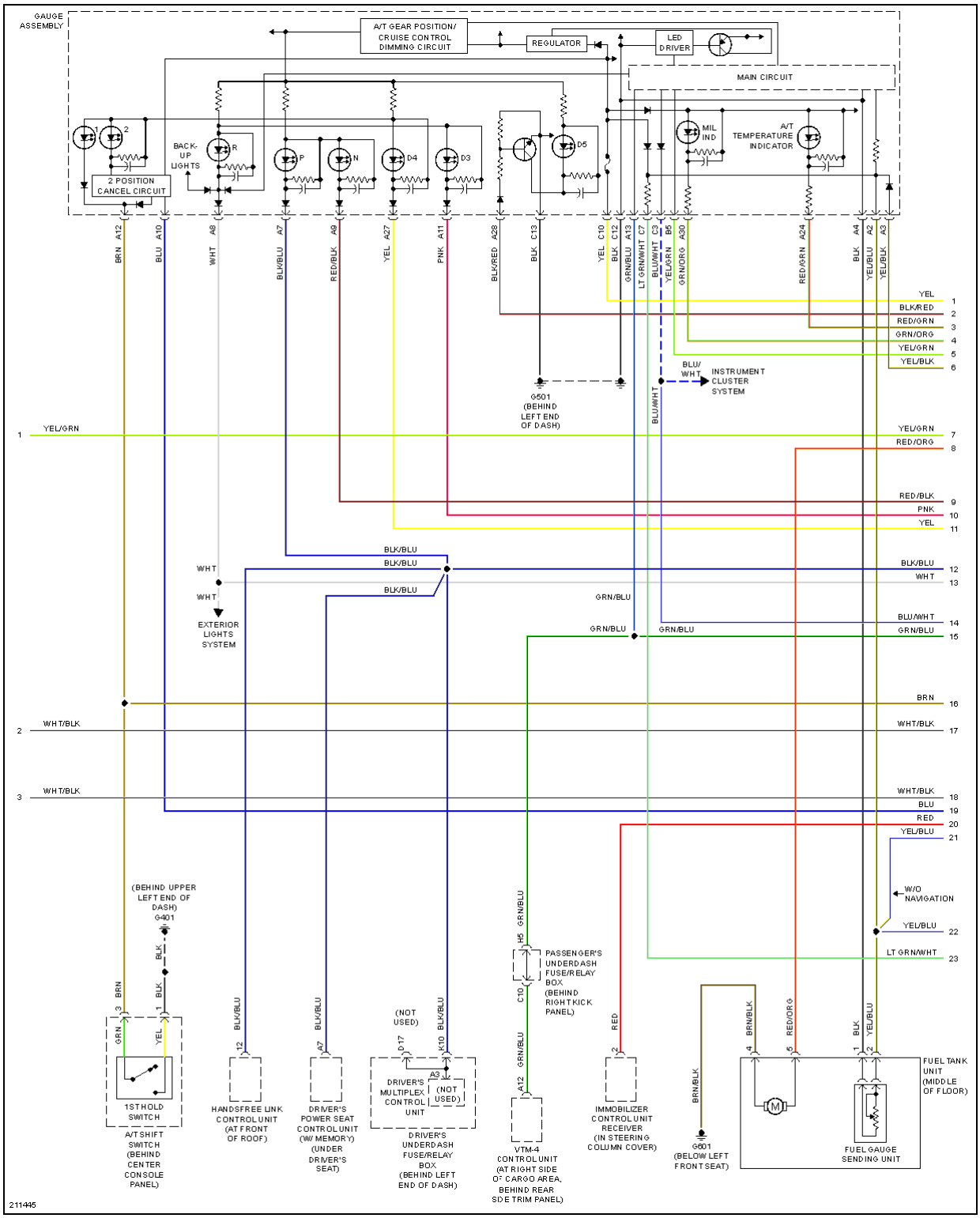

cardiagn.com

Fig. 18: 3.5L, Engine Performance Circuit (4 of 5)

cardiagn.com

2006 Acura MDX

2006 SYSTEM WIRING DIAGRAMS Acura - MDX

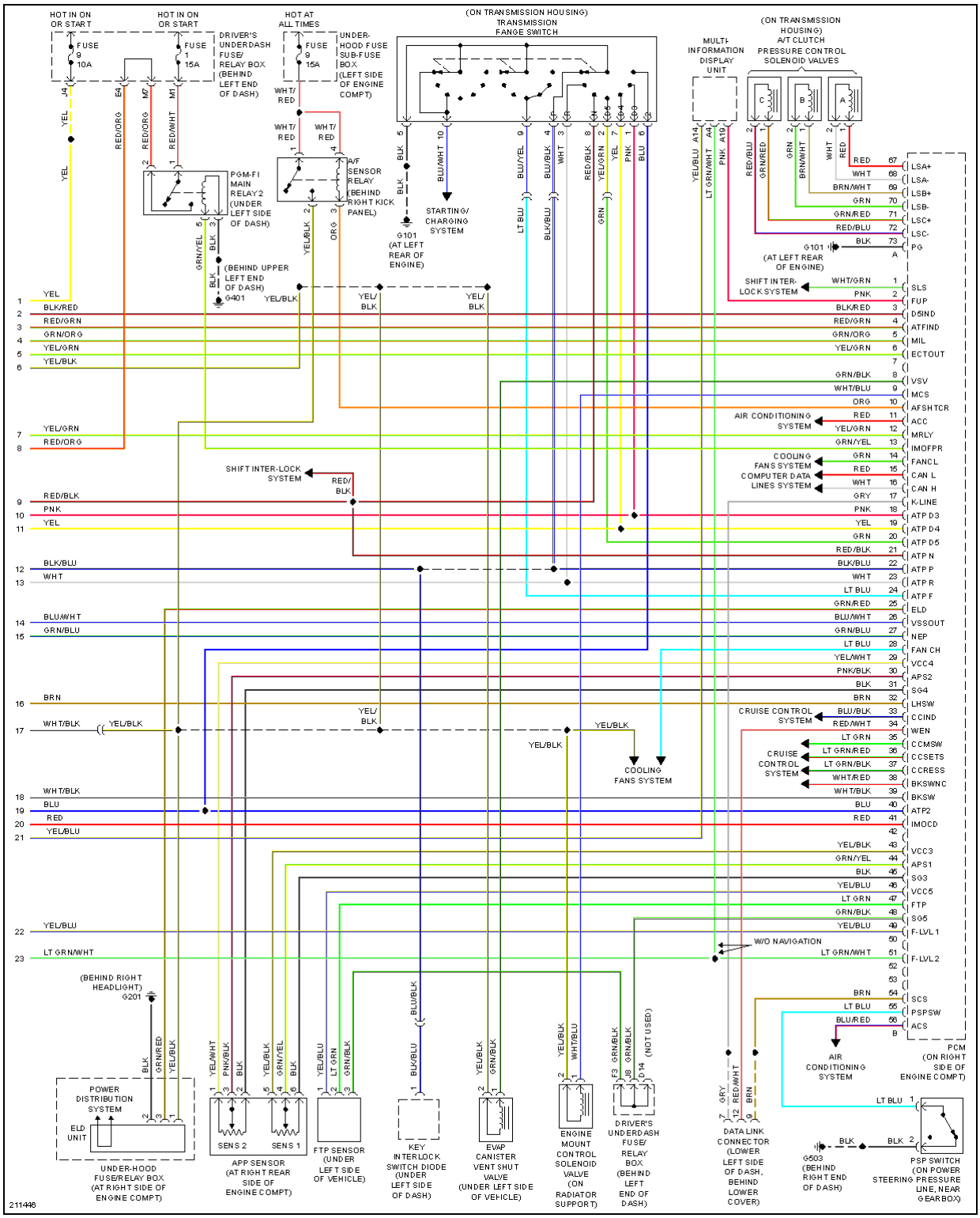

cardiagn.com

Fig. 19: 3.5L, Engine Performance Circuit (5 of 5)

EXTERIOR LIGHTS

cardiagn.com

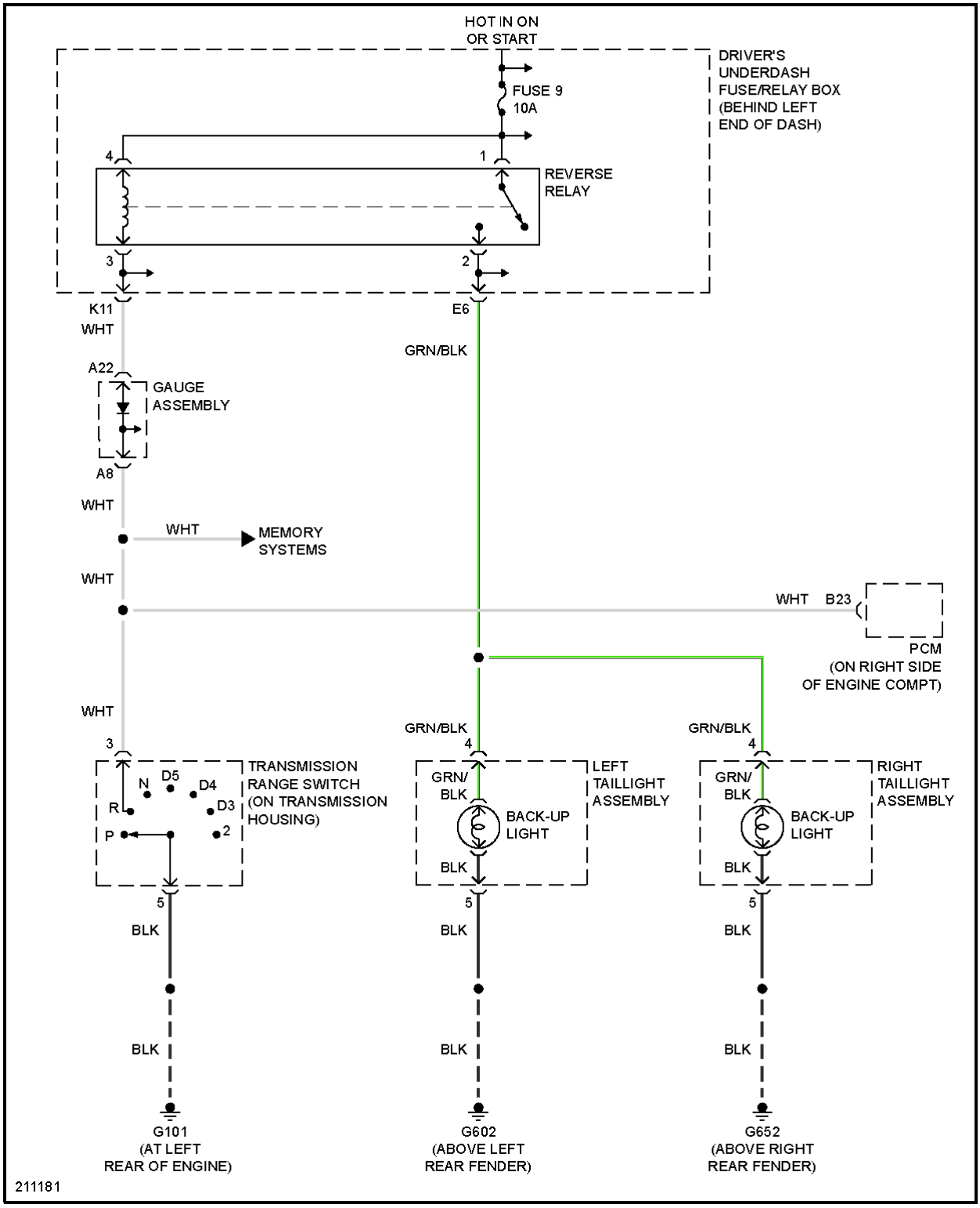

cardiagn.com

Fig. 20: Backup Lamps Circuit

cardiagn.com

2006 Acura MDX

2006 SYSTEM WIRING DIAGRAMS Acura - MDX

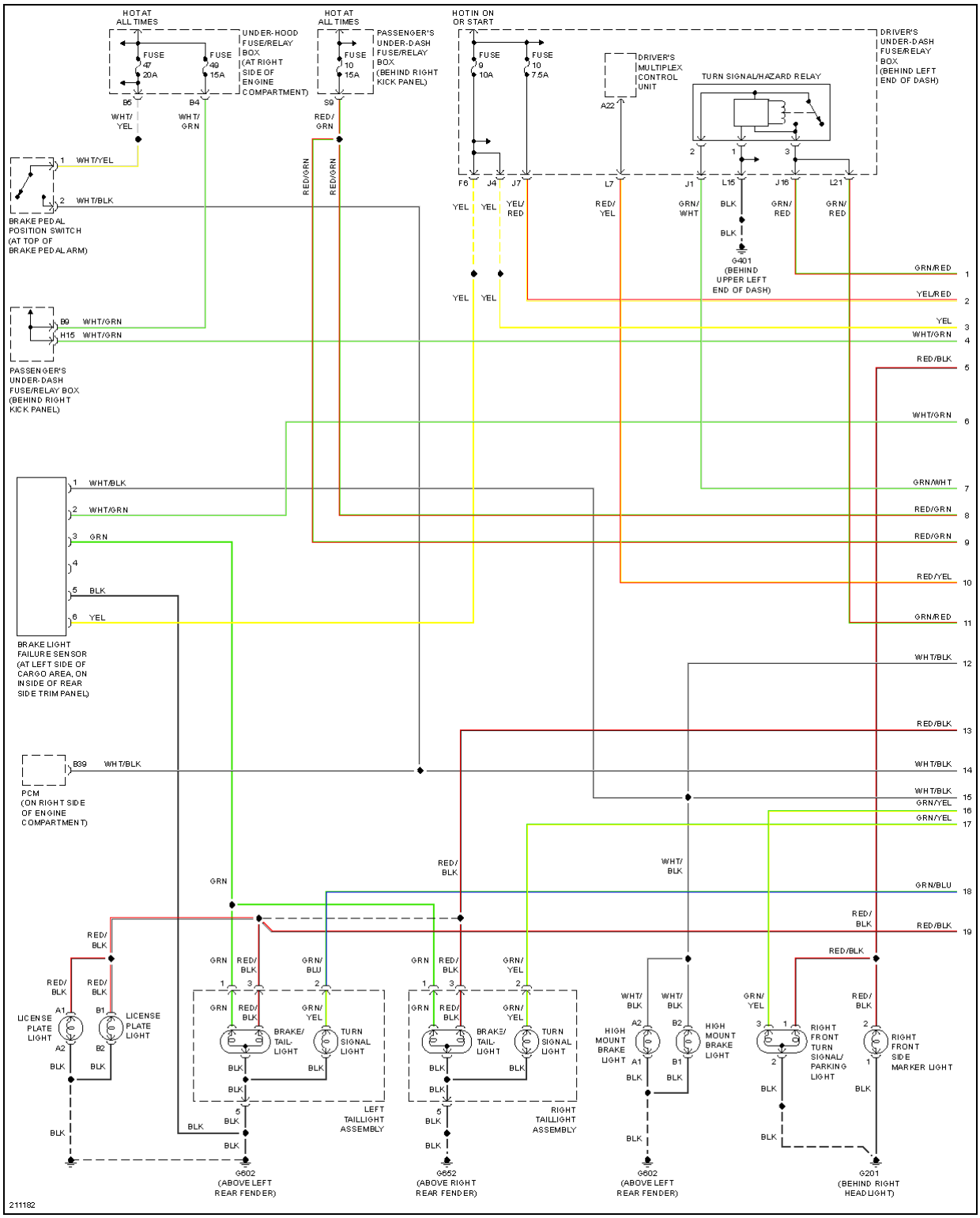

cardiagn.com

Fig. 21: Exterior Lamps Circuit (1 of 2)

cardiagn.com

2006 Acura MDX

2006 SYSTEM WIRING DIAGRAMS Acura - MDX

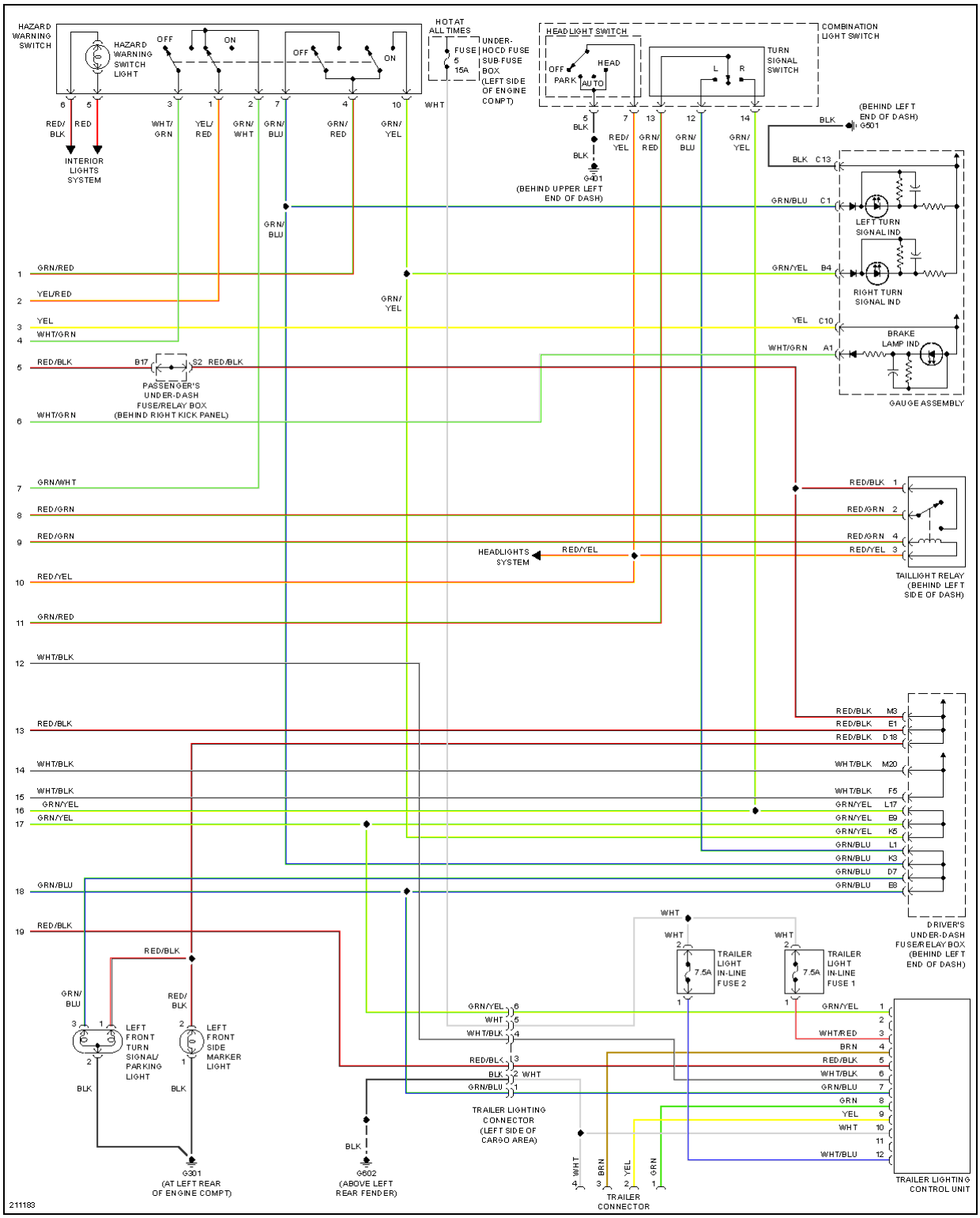

cardiagn.com

Fig. 22: Exterior Lamps Circuit (2 of 2)

GROUND DISTRIBUTION

cardiagn.com

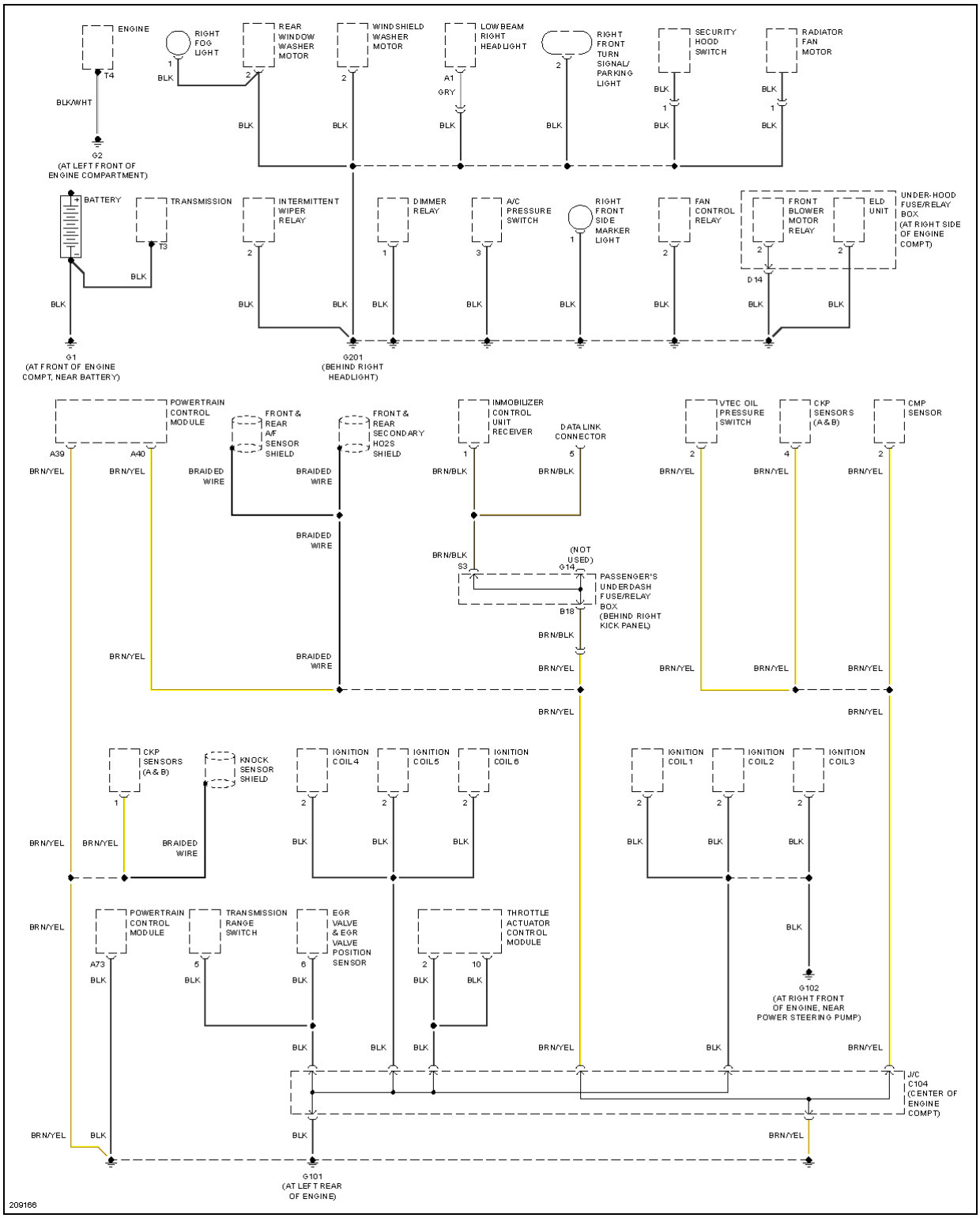

cardiagn.com

Fig. 23: Ground Distribution Circuit (1 of 4)

cardiagn.com

2006 Acura MDX

2006 SYSTEM WIRING DIAGRAMS Acura - MDX

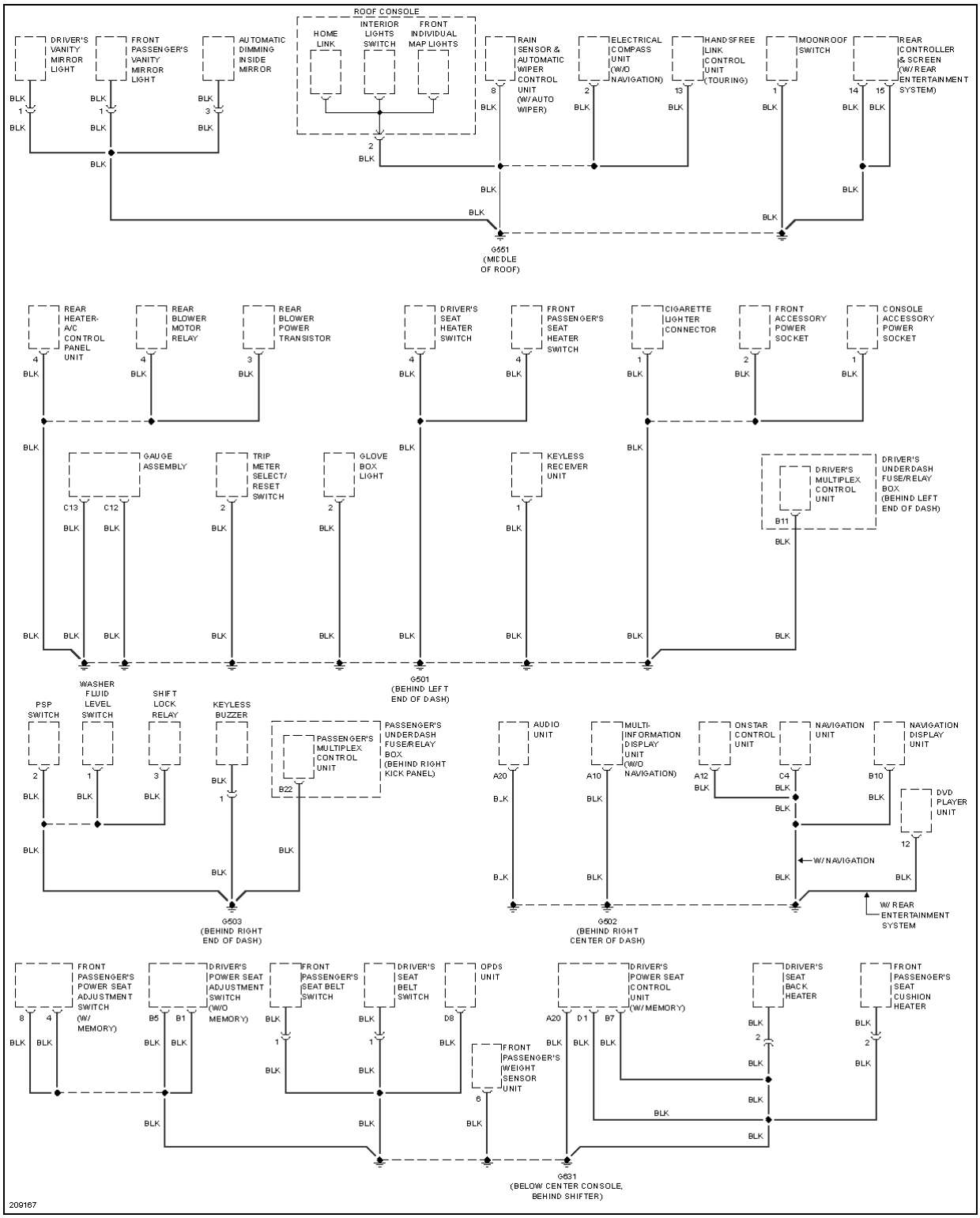

cardiagn.com

Fig. 24: Ground Distribution Circuit (2 of 4)

cardiagn.com

2006 Acura MDX

2006 SYSTEM WIRING DIAGRAMS Acura - MDX

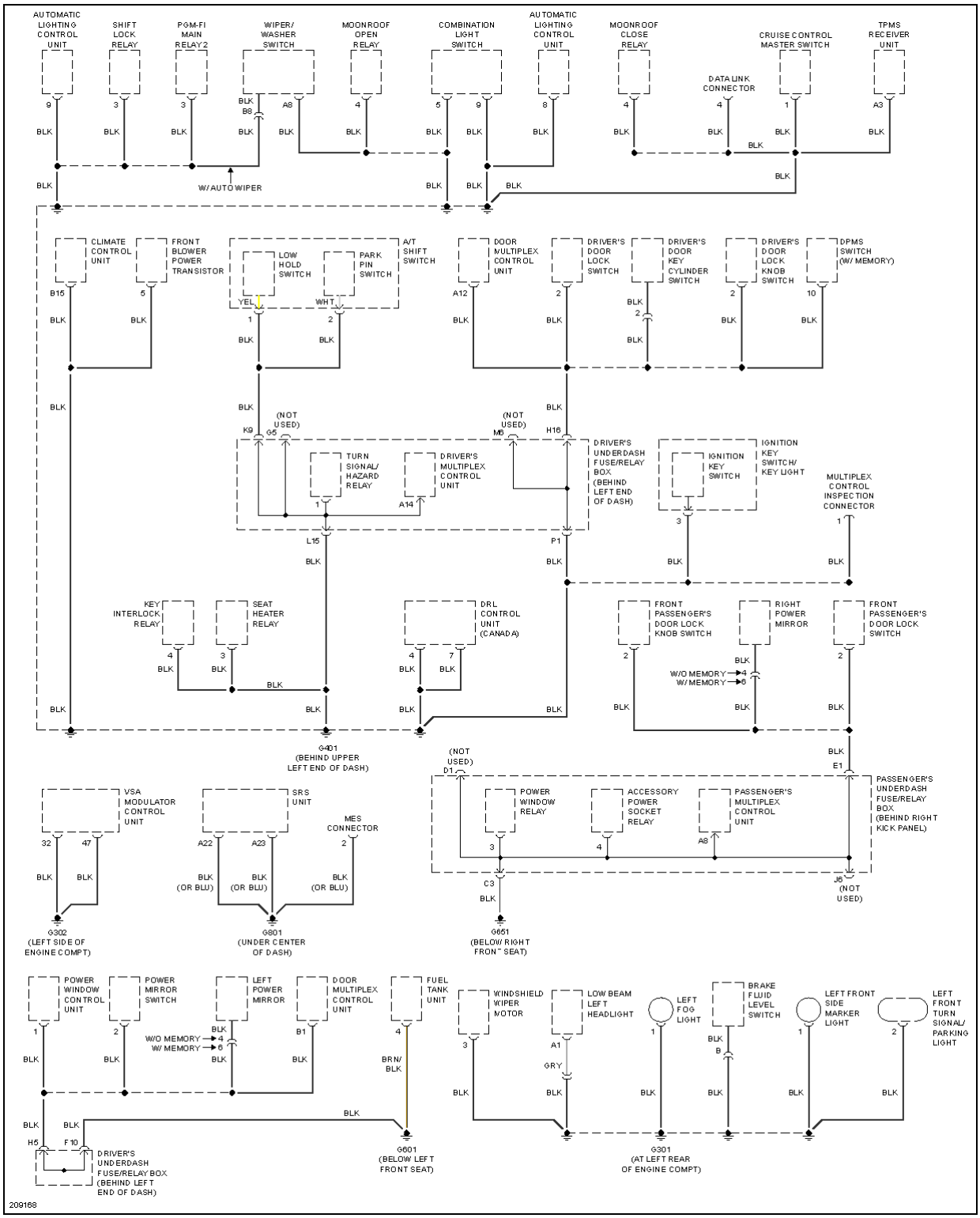

cardiagn.com

Fig. 25: Ground Distribution Circuit (3 of 4)

cardiagn.com

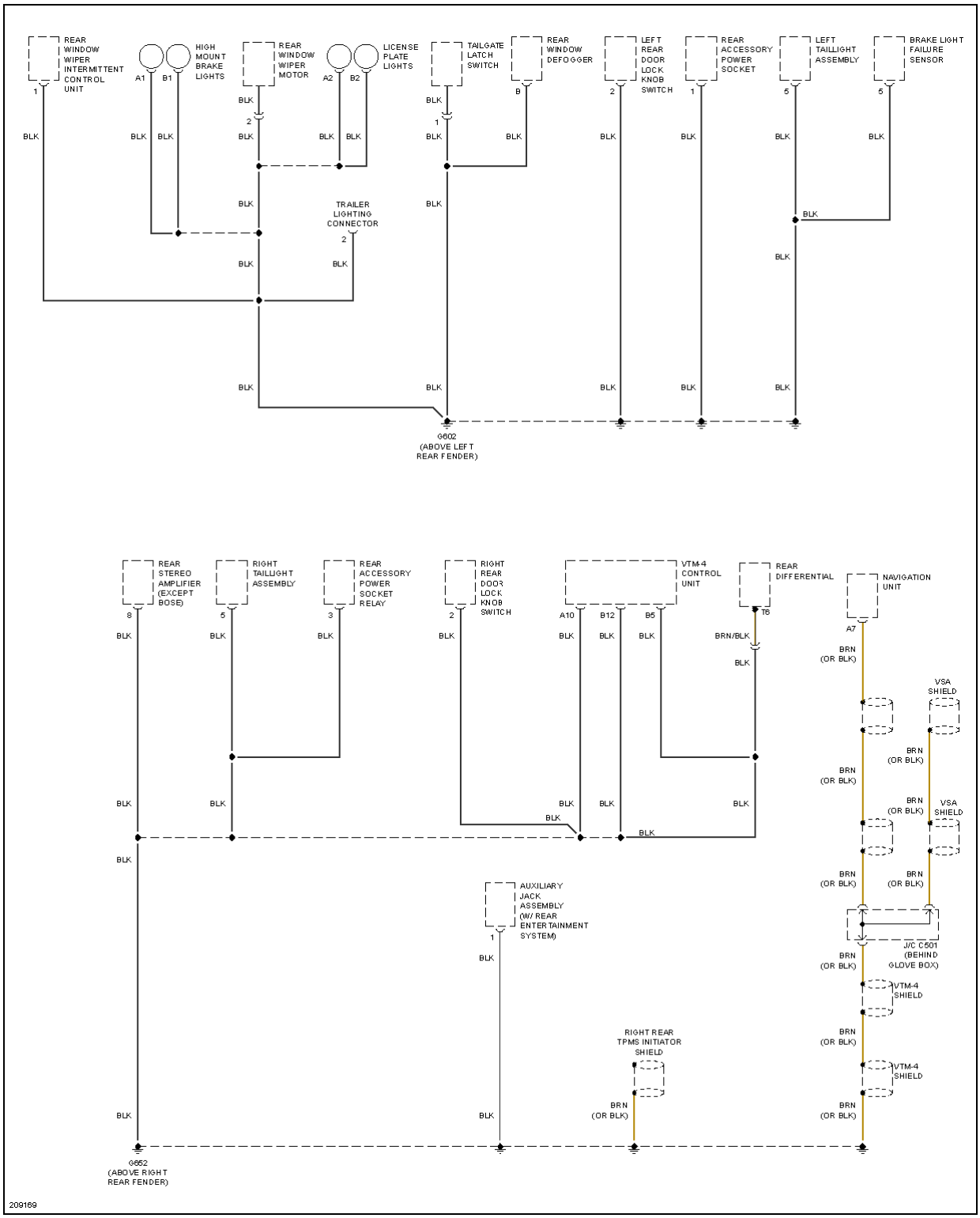

cardiagn.com

Fig. 26: Ground Distribution Circuit (4 of 4)

HEADLIGHTS

cardiagn.com

2006 Acura MDX

2006 SYSTEM WIRING DIAGRAMS Acura - MDX

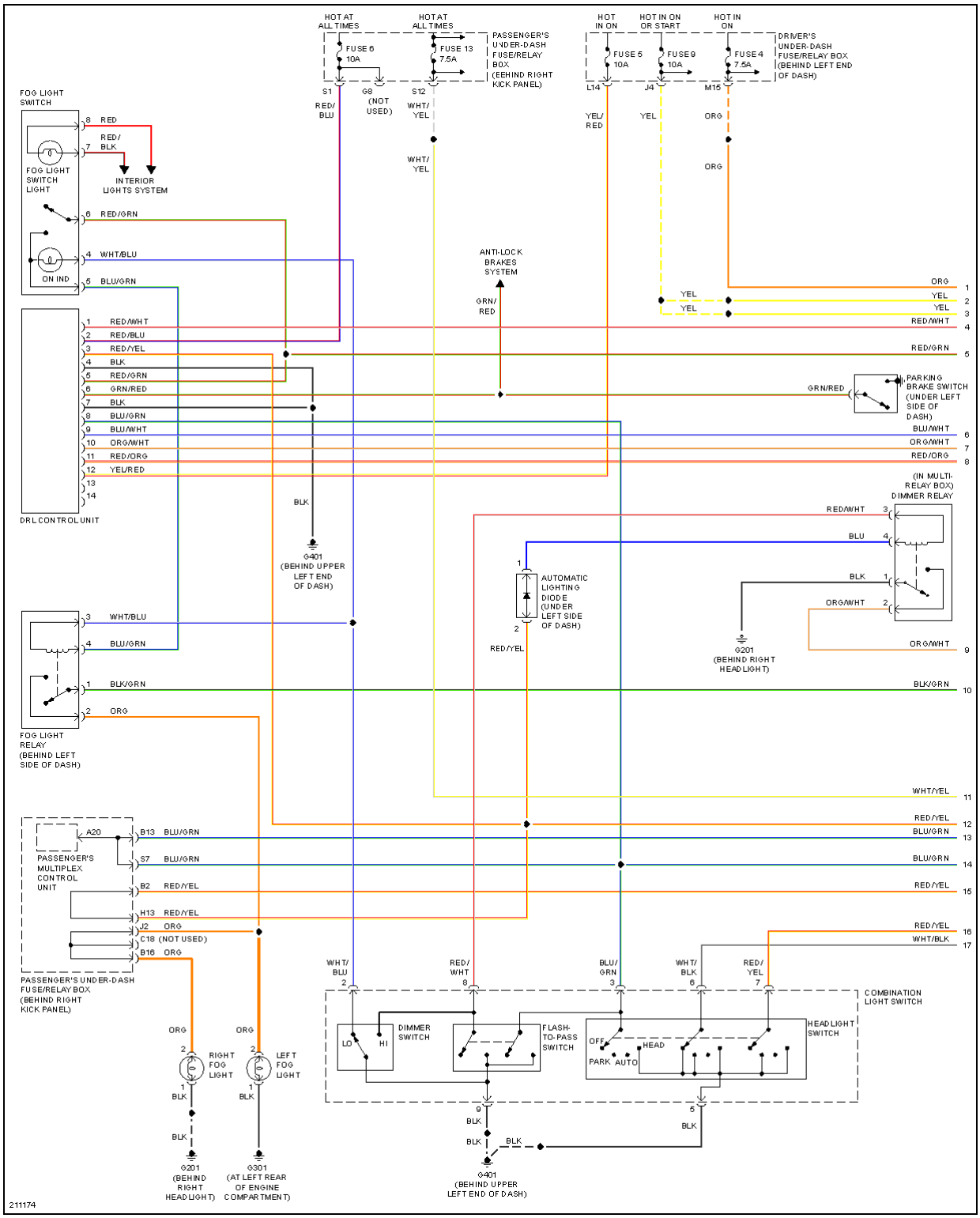

cardiagn.com

Fig. 27: Headlights Circuit, W/ DRL (1 of 2)

cardiagn.com

2006 Acura MDX

2006 SYSTEM WIRING DIAGRAMS Acura - MDX

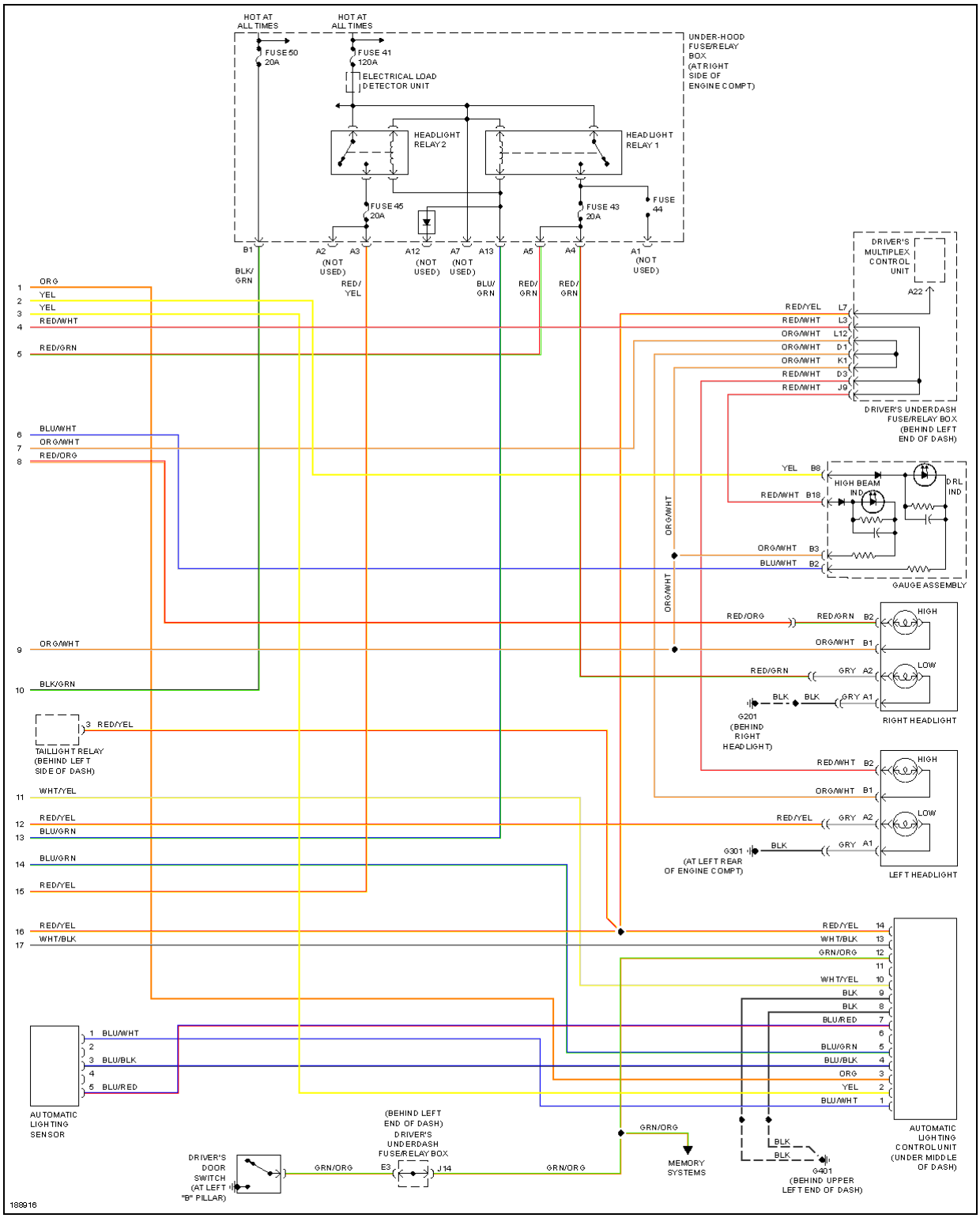

cardiagn.com

Fig. 28: Headlights Circuit, W/ DRL (2 of 2)

cardiagn.com

2006 Acura MDX

2006 SYSTEM WIRING DIAGRAMS Acura - MDX

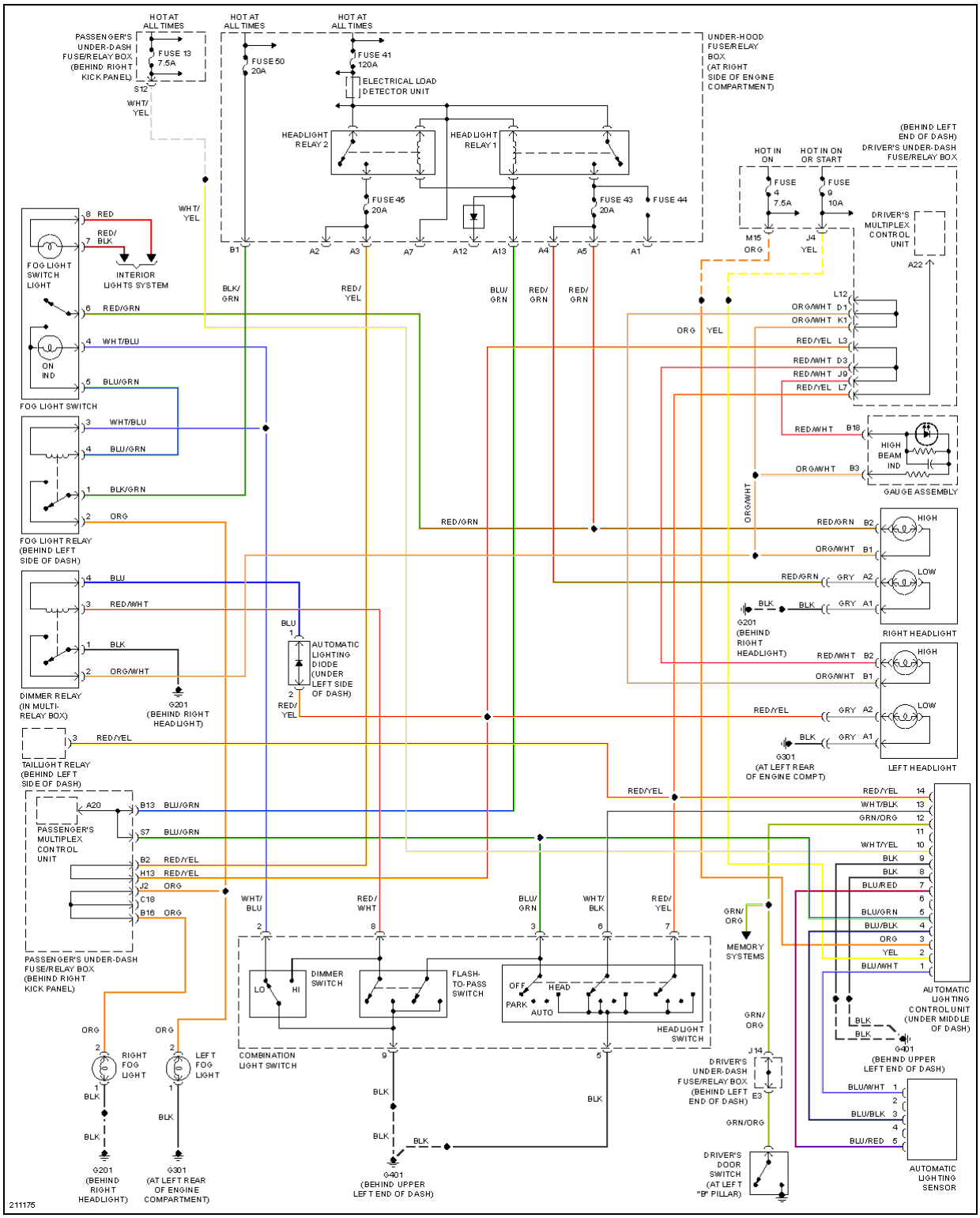

cardiagn.com

Fig. 29: Headlights Circuit, W/O DRL

HORN

cardiagn.com

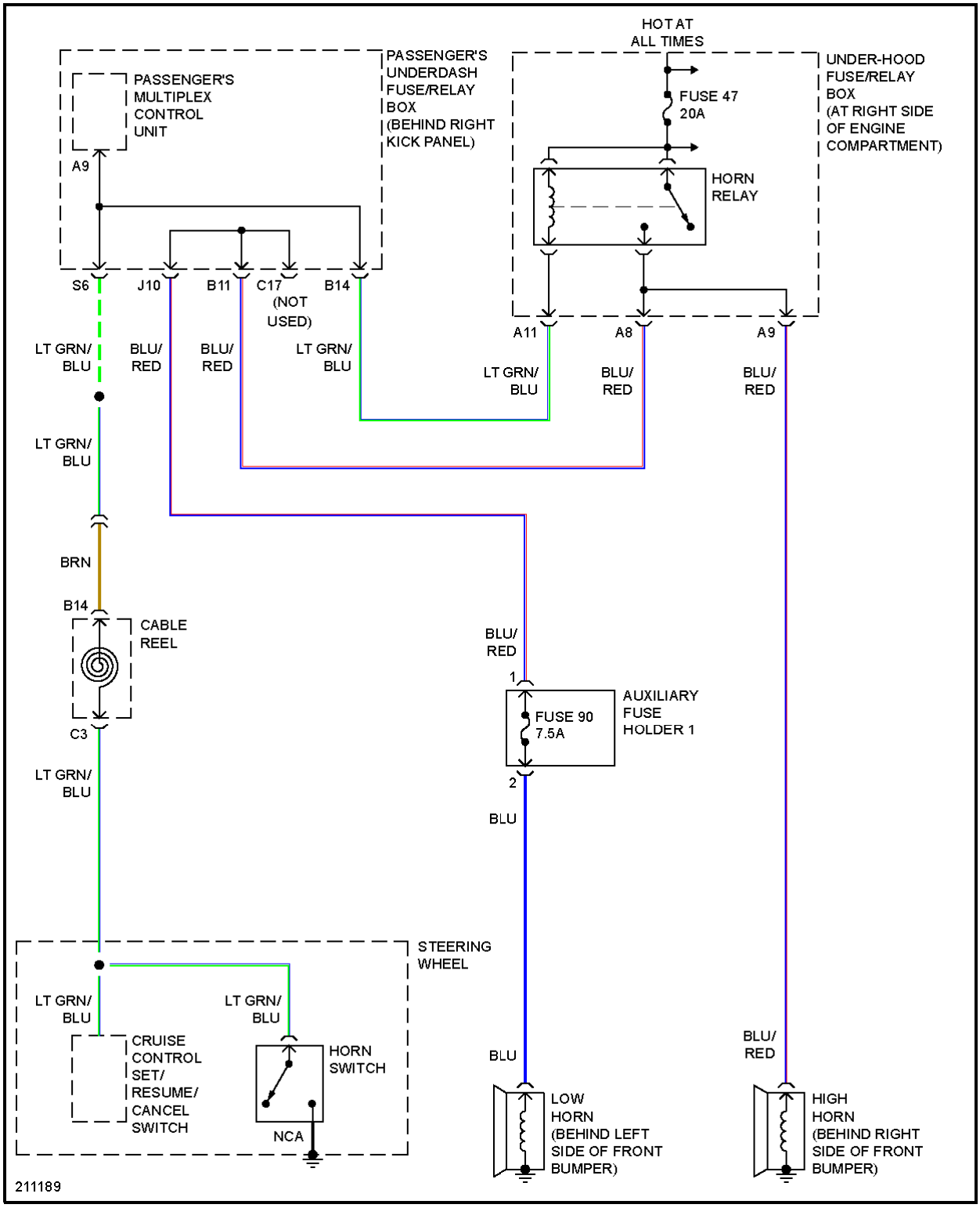

cardiagn.com

Fig. 30: Horn Circuit

INSTRUMENT CLUSTER

cardiagn.com

2006 Acura MDX

2006 SYSTEM WIRING DIAGRAMS Acura - MDX

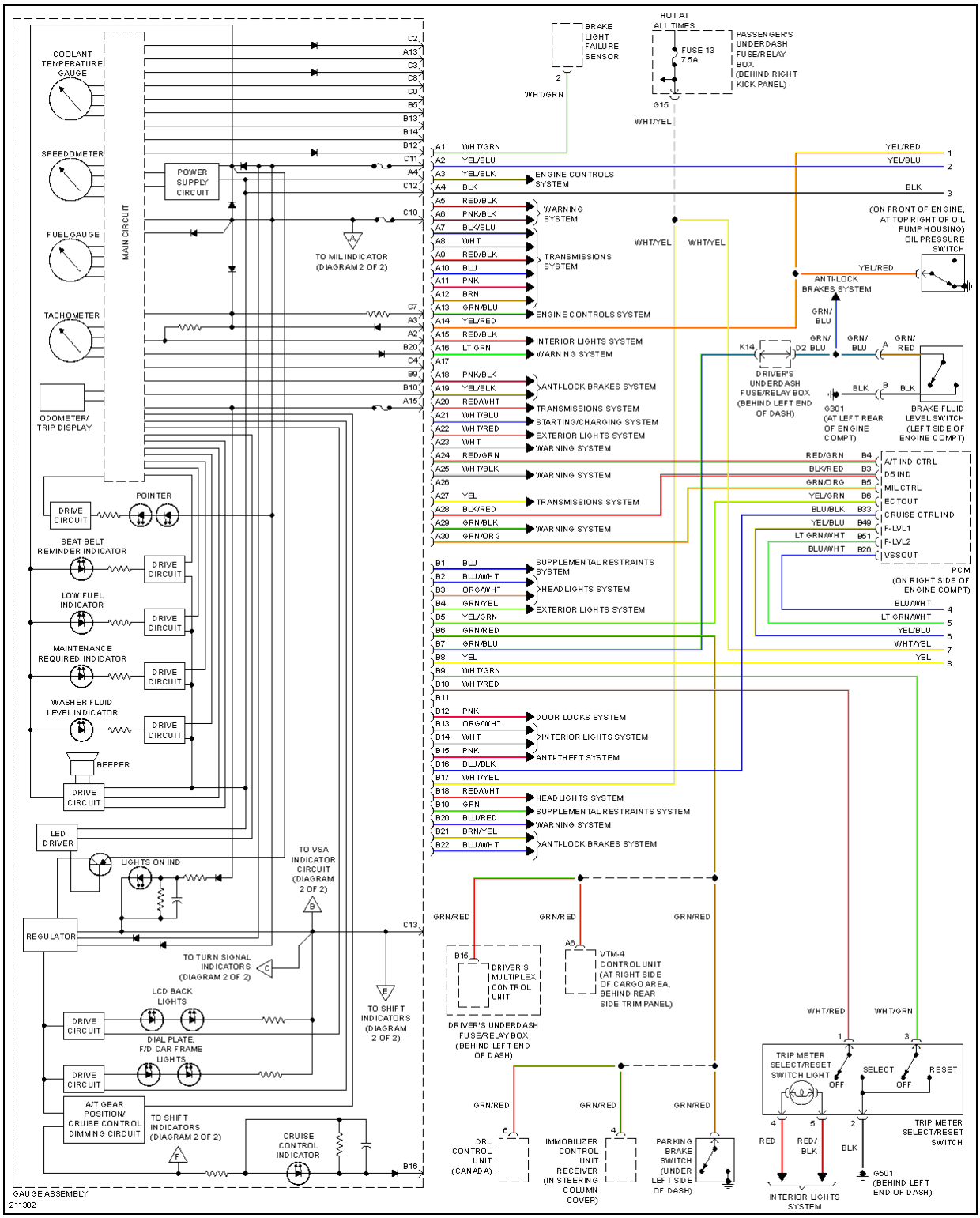

cardiagn.com

Fig. 31: Gauges & Indicators Circuit (1 of 2)

cardiagn.com

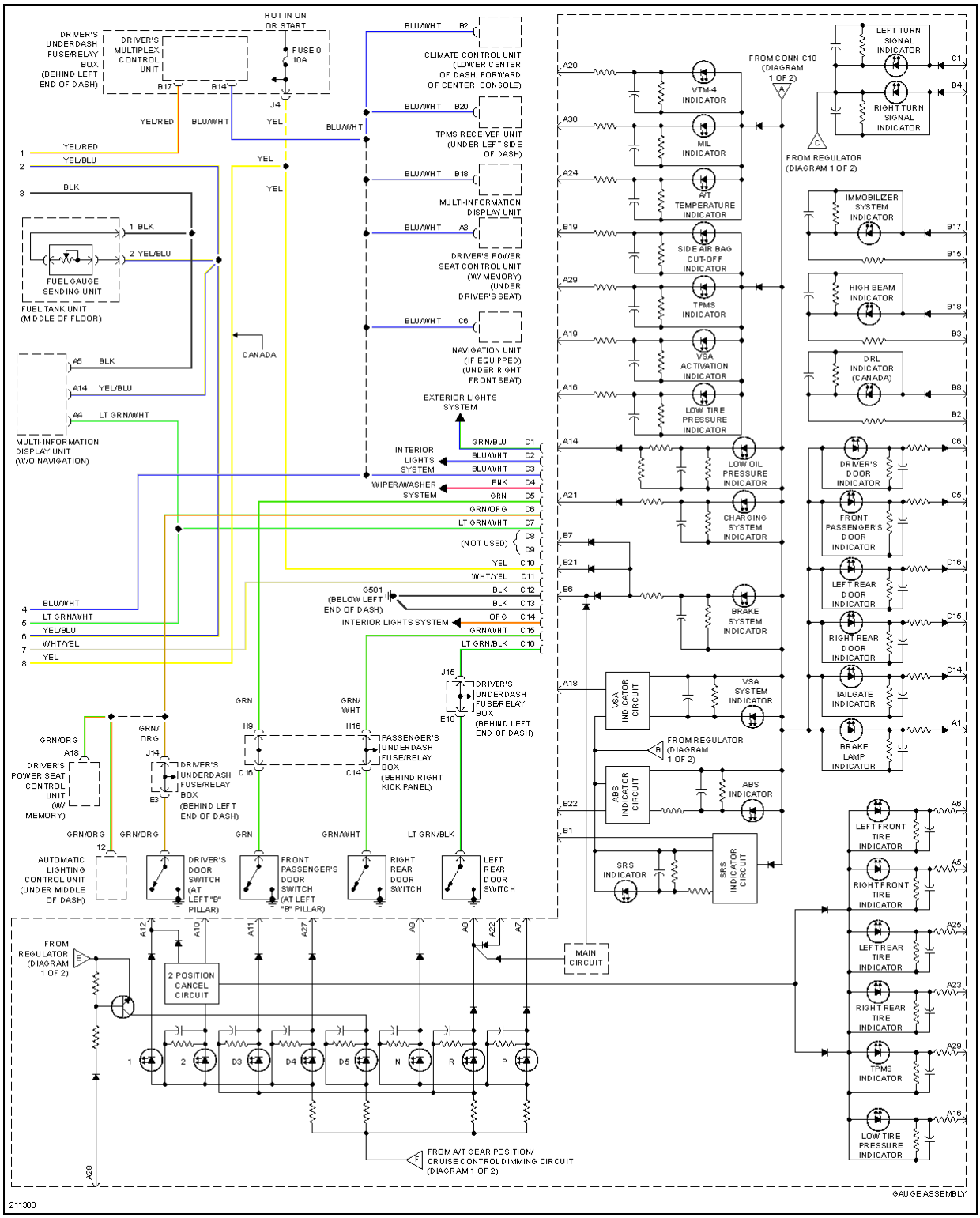

cardiagn.com

Fig. 32: Gauges & Indicators Circuit (2 of 2)

cardiagn.com

2006 Acura MDX

2006 SYSTEM WIRING DIAGRAMS Acura - MDX

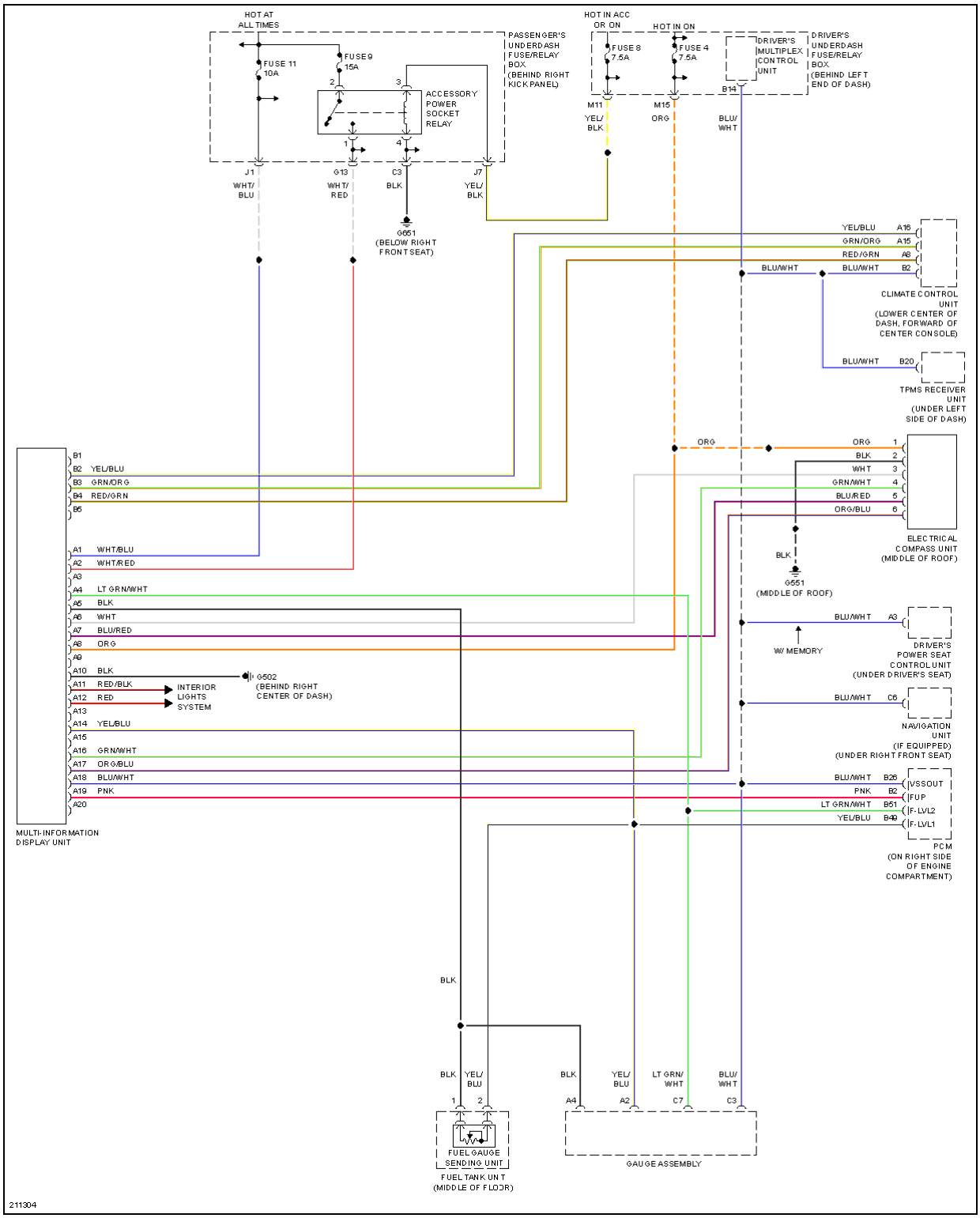

cardiagn.com

Fig. 33: Multi-Information System Circuit

INTERIOR LIGHTS

cardiagn.com

2006 Acura MDX

2006 SYSTEM WIRING DIAGRAMS Acura - MDX

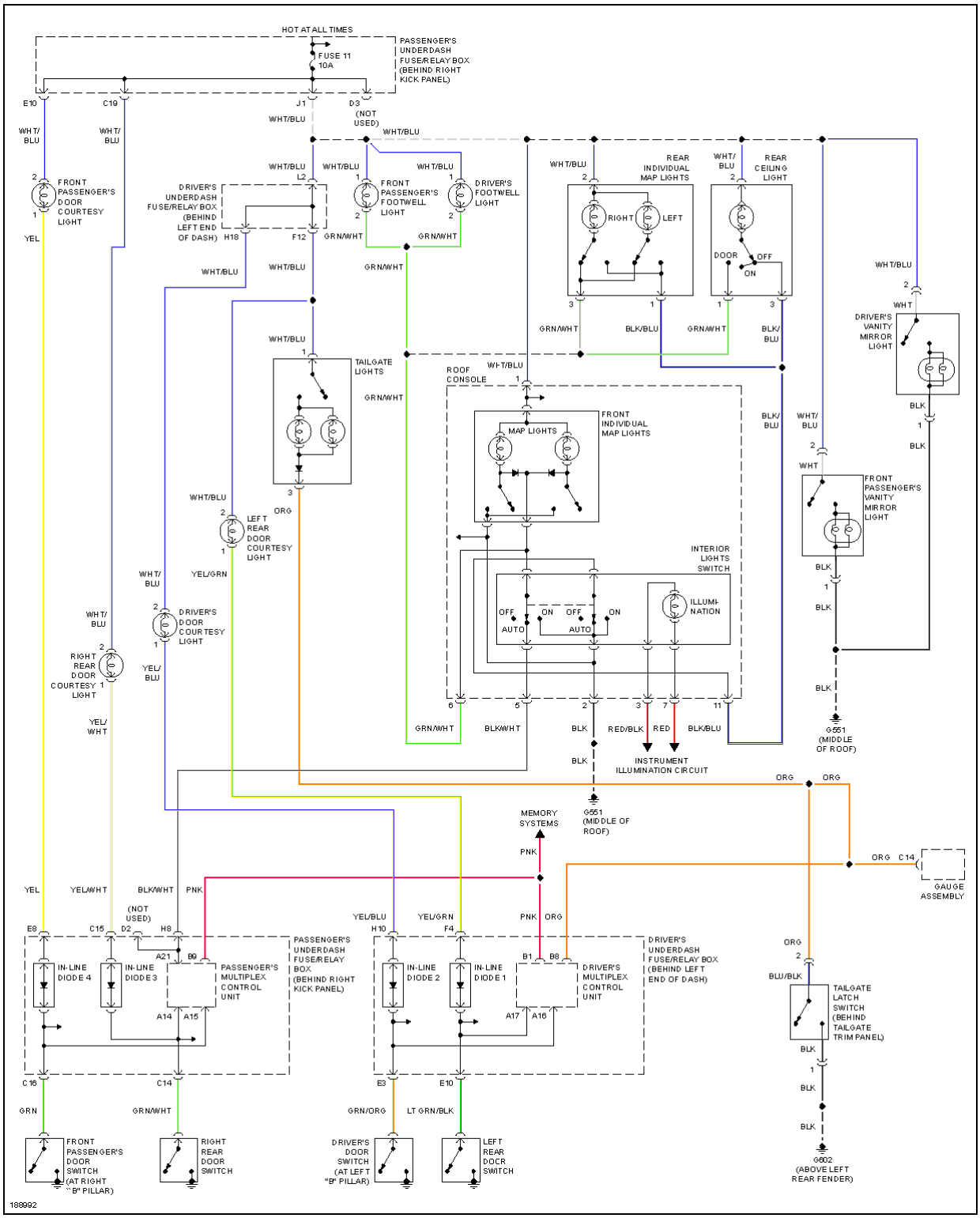

cardiagn.com

Fig. 34: Courtesy Lamps Circuit

cardiagn.com

2006 Acura MDX

2006 SYSTEM WIRING DIAGRAMS Acura - MDX

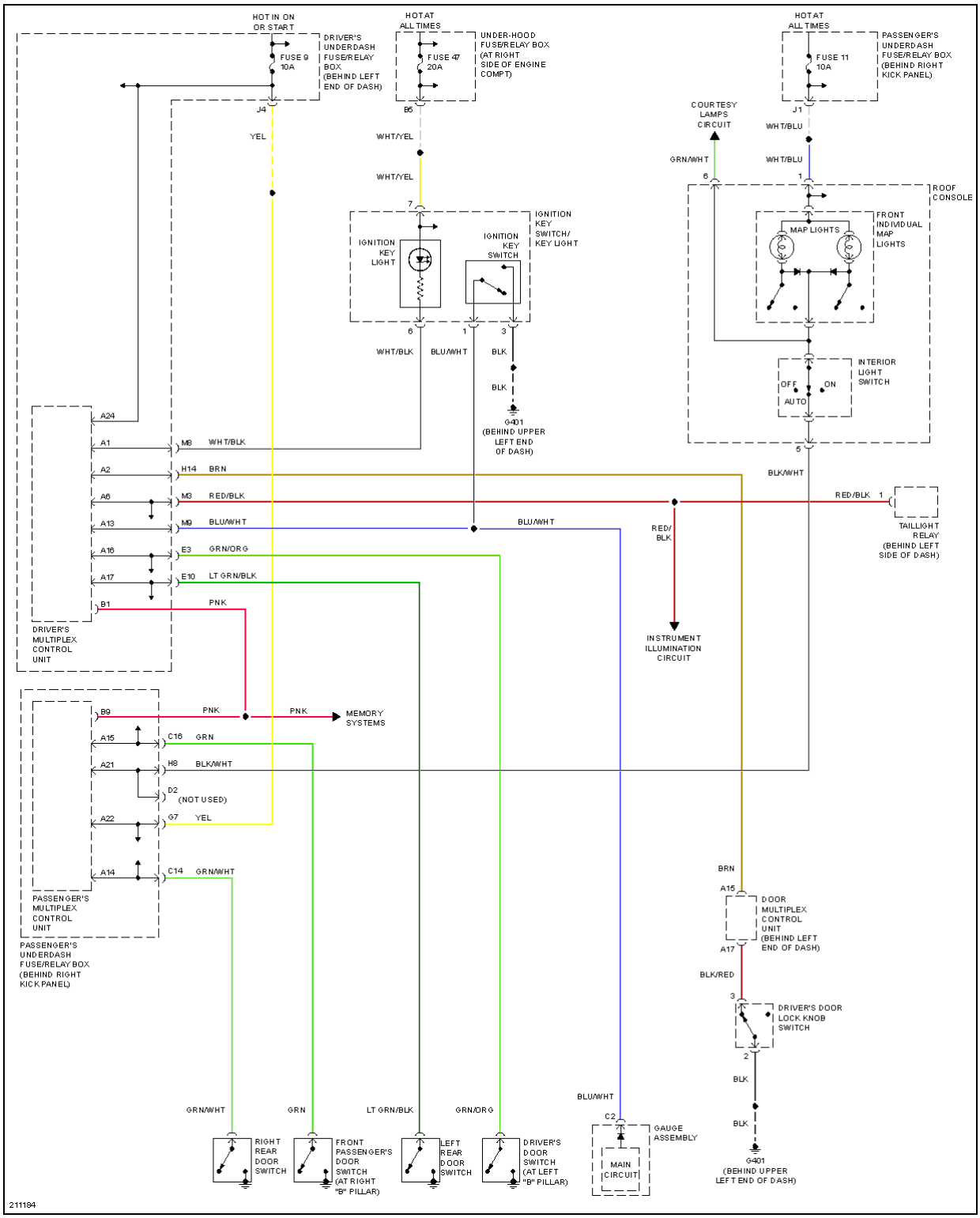

cardiagn.com

Fig. 35: Entry Light Timer Circuit

cardiagn.com

2006 Acura MDX

2006 SYSTEM WIRING DIAGRAMS Acura - MDX

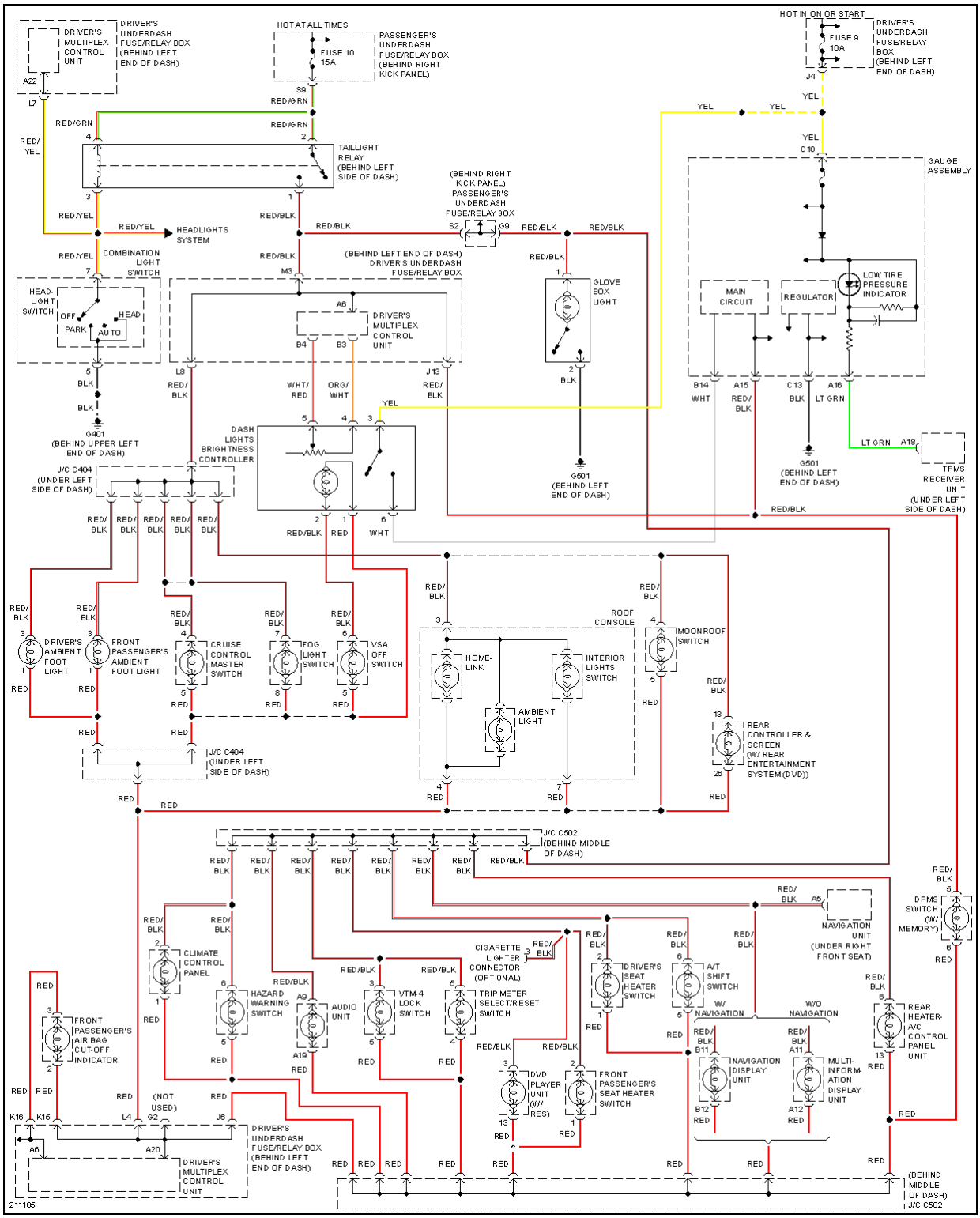

cardiagn.com

Fig. 36: Instrument Illumination Circuit

MEMORY SYSTEMS

cardiagn.com

2006 Acura MDX

2006 SYSTEM WIRING DIAGRAMS Acura - MDX

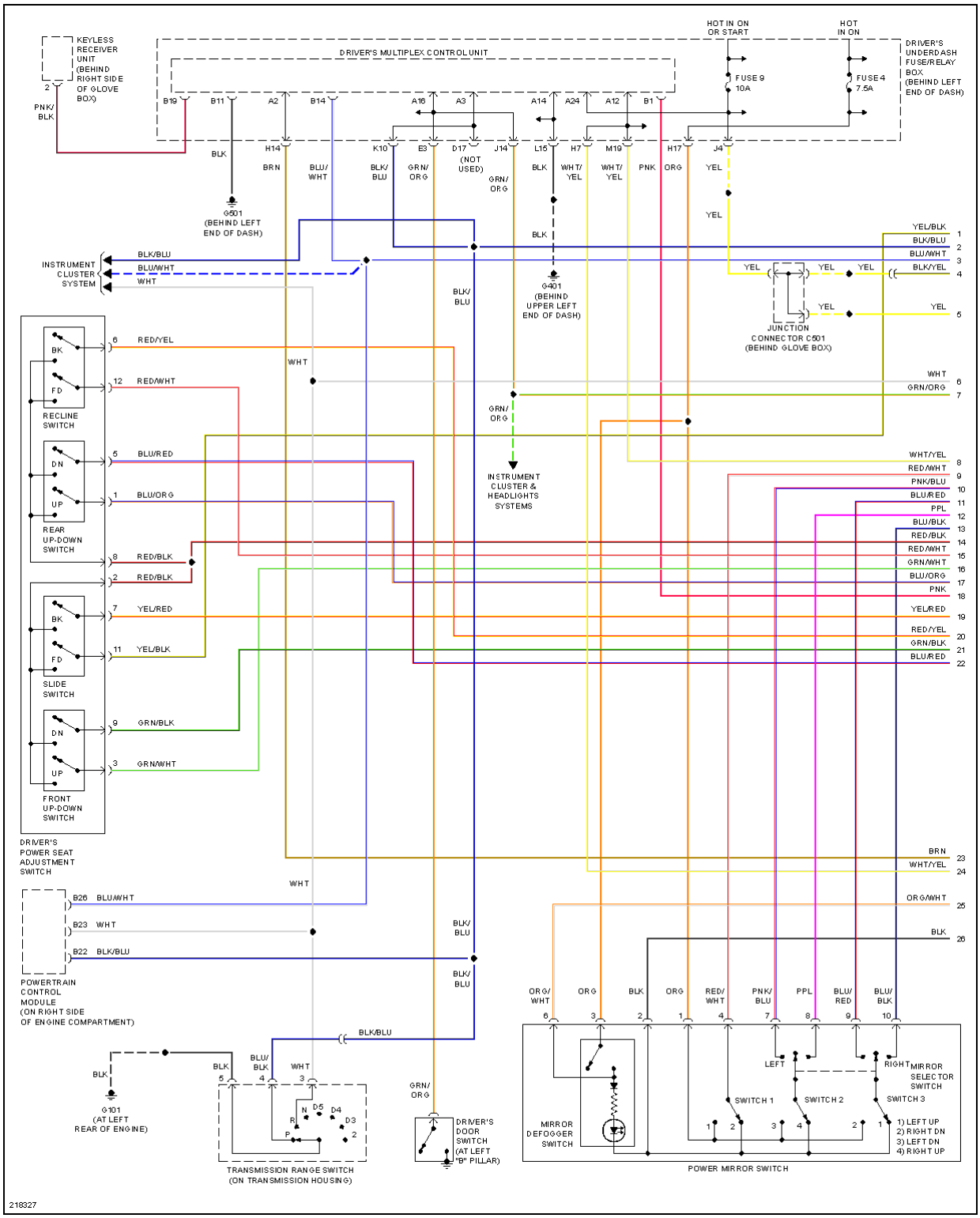

cardiagn.com

Fig. 37: Memory Systems Circuit (1 of 3)

cardiagn.com

2006 Acura MDX

2006 SYSTEM WIRING DIAGRAMS Acura - MDX

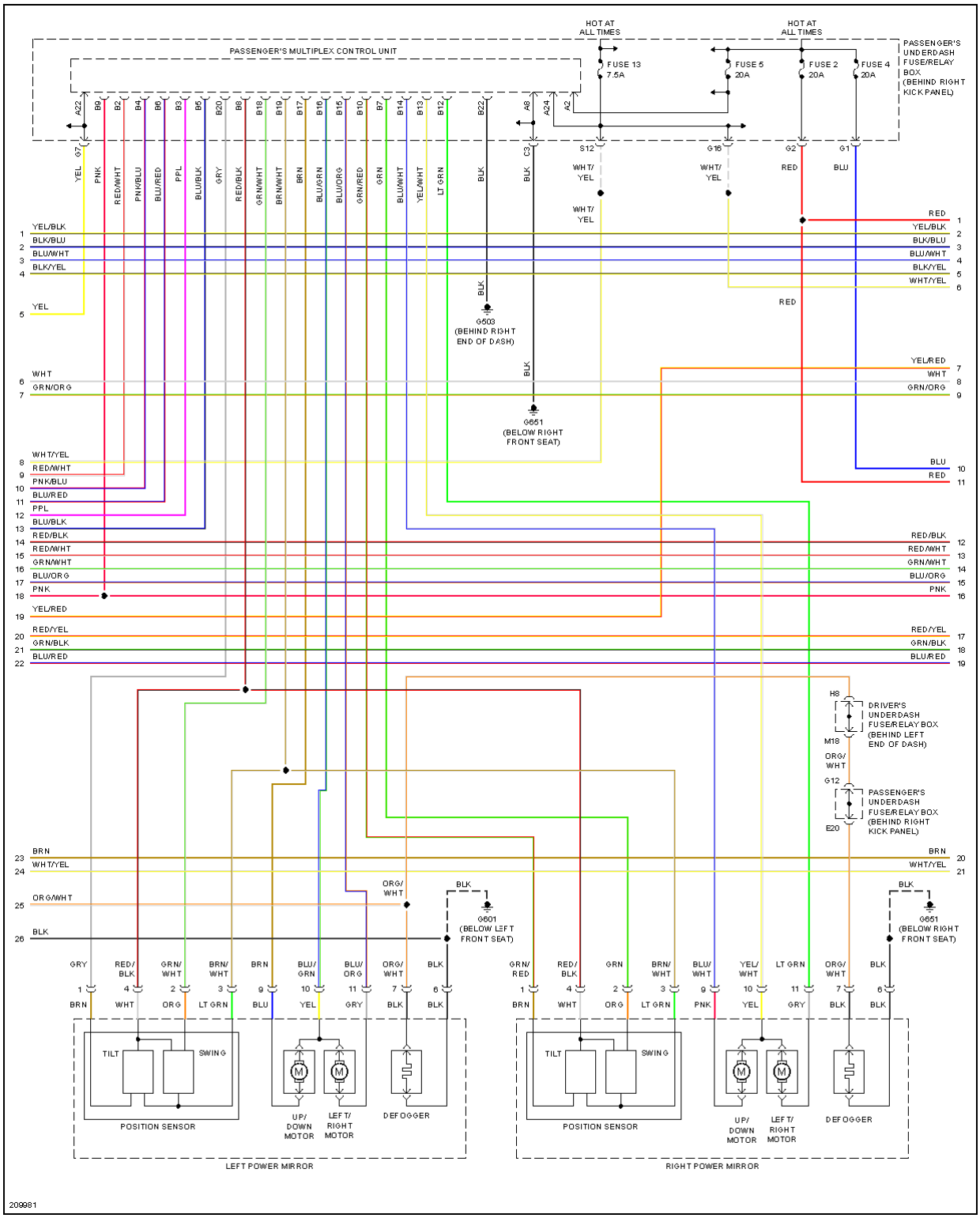

cardiagn.com

Fig. 38: Memory Systems Circuit (2 of 3)

cardiagn.com

2006 Acura MDX

2006 SYSTEM WIRING DIAGRAMS Acura - MDX

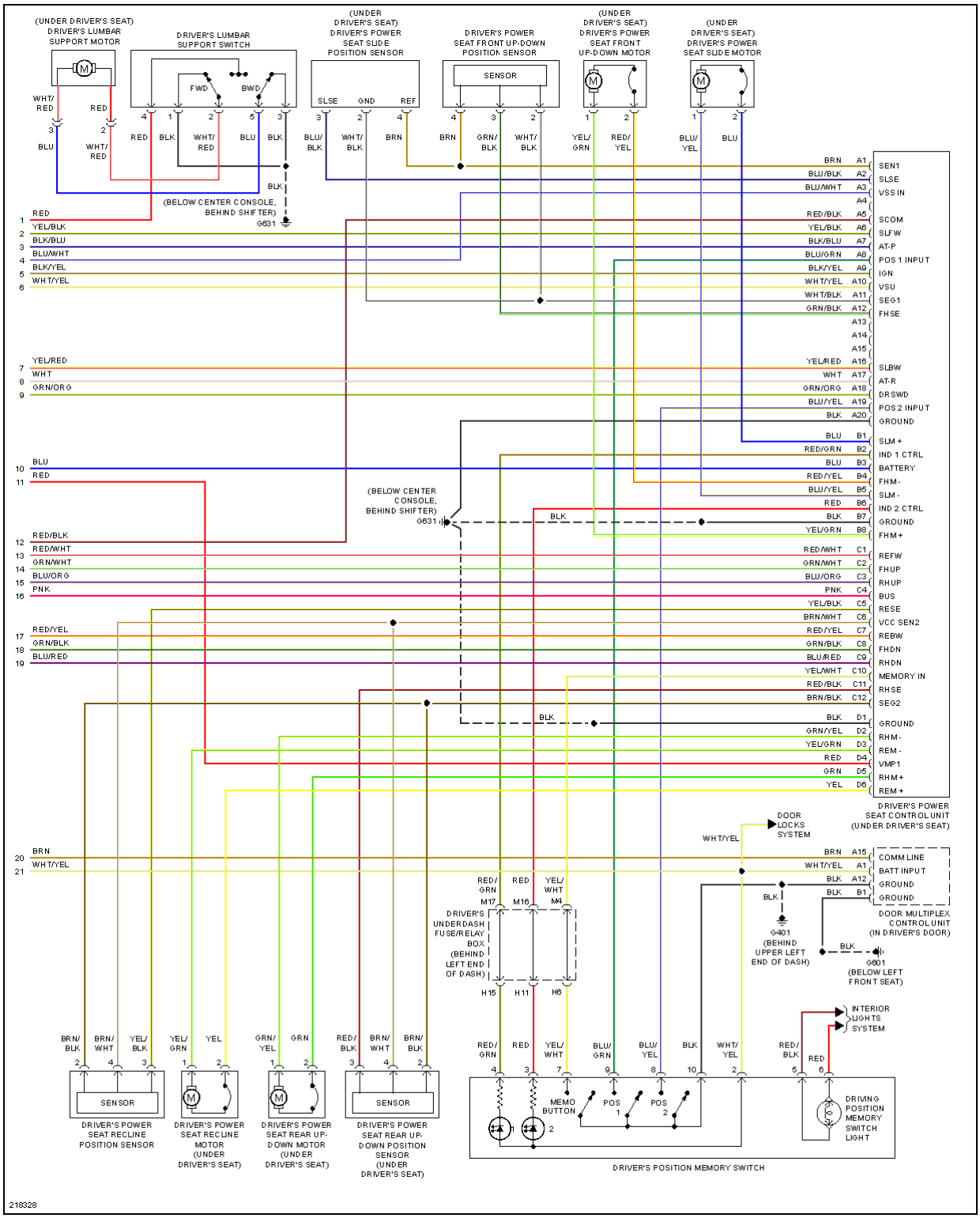

cardiagn.com

Fig. 39: Memory Systems Circuit (3 of 3)

NAVIGATION

cardiagn.com

2006 Acura MDX

2006 SYSTEM WIRING DIAGRAMS Acura - MDX

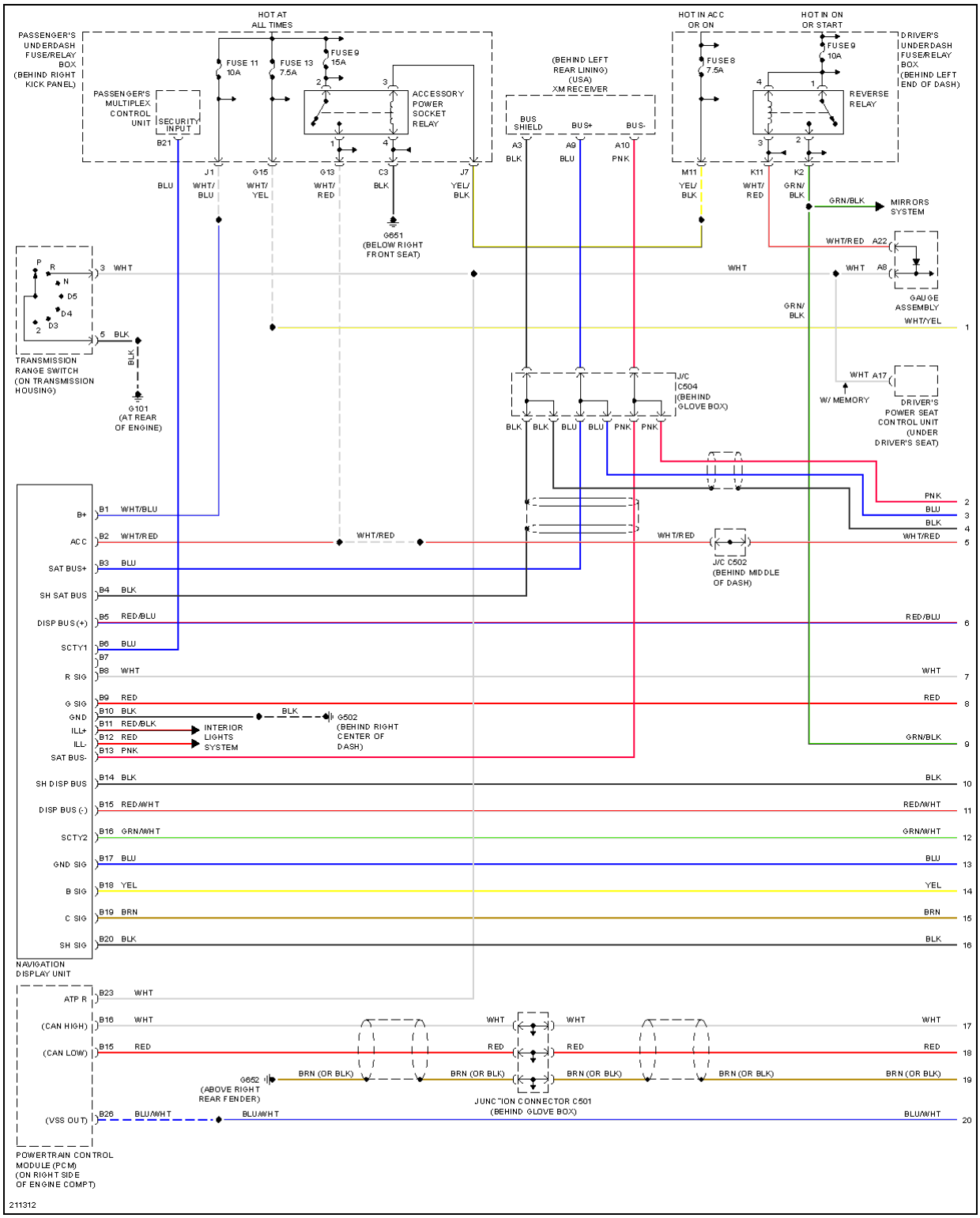

cardiagn.com

Fig. 40: Navigation Circuit (1 of 2)

cardiagn.com

2006 Acura MDX

2006 SYSTEM WIRING DIAGRAMS Acura - MDX

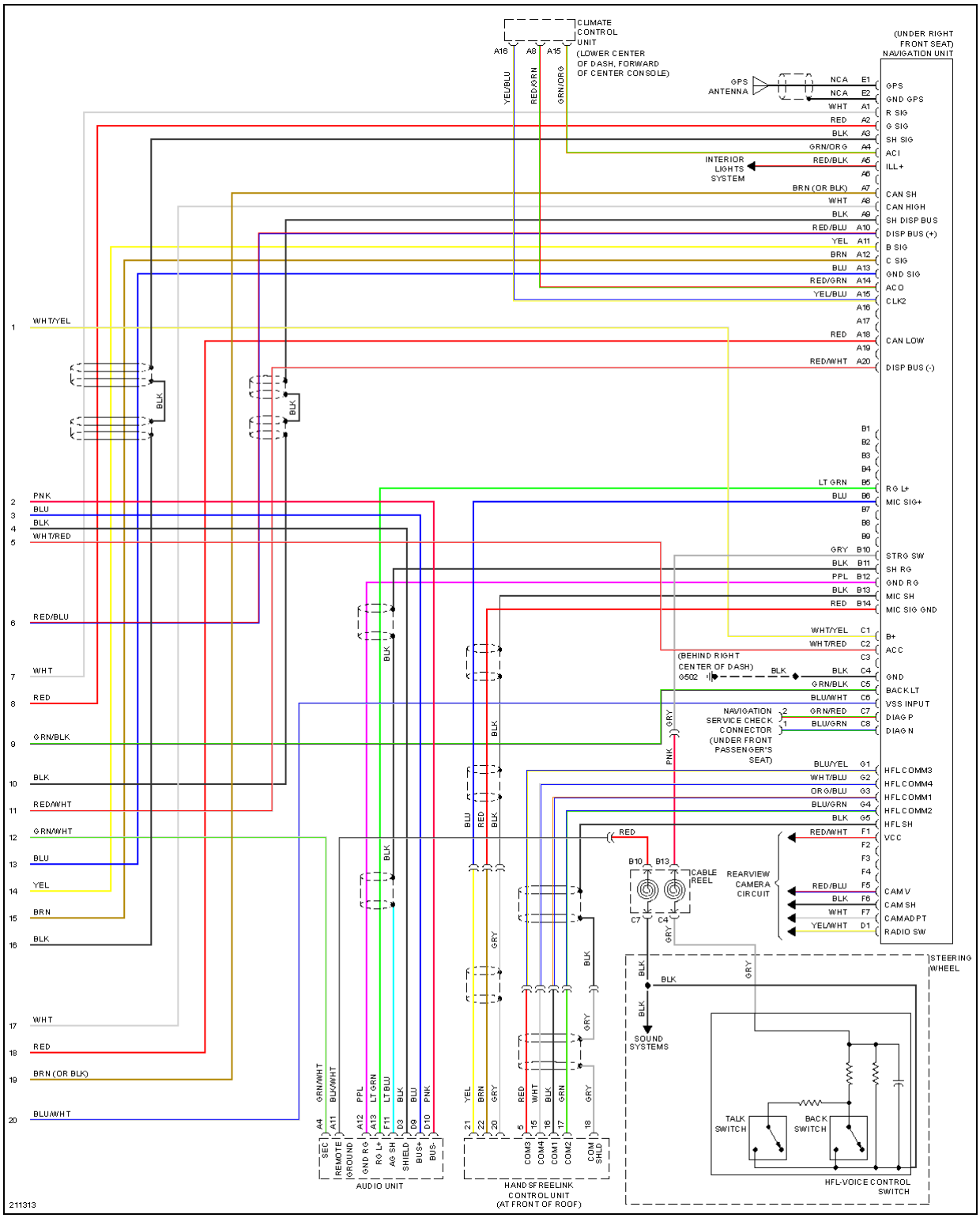

cardiagn.com

Fig. 41: Navigation Circuit (2 of 2)

cardiagn.com

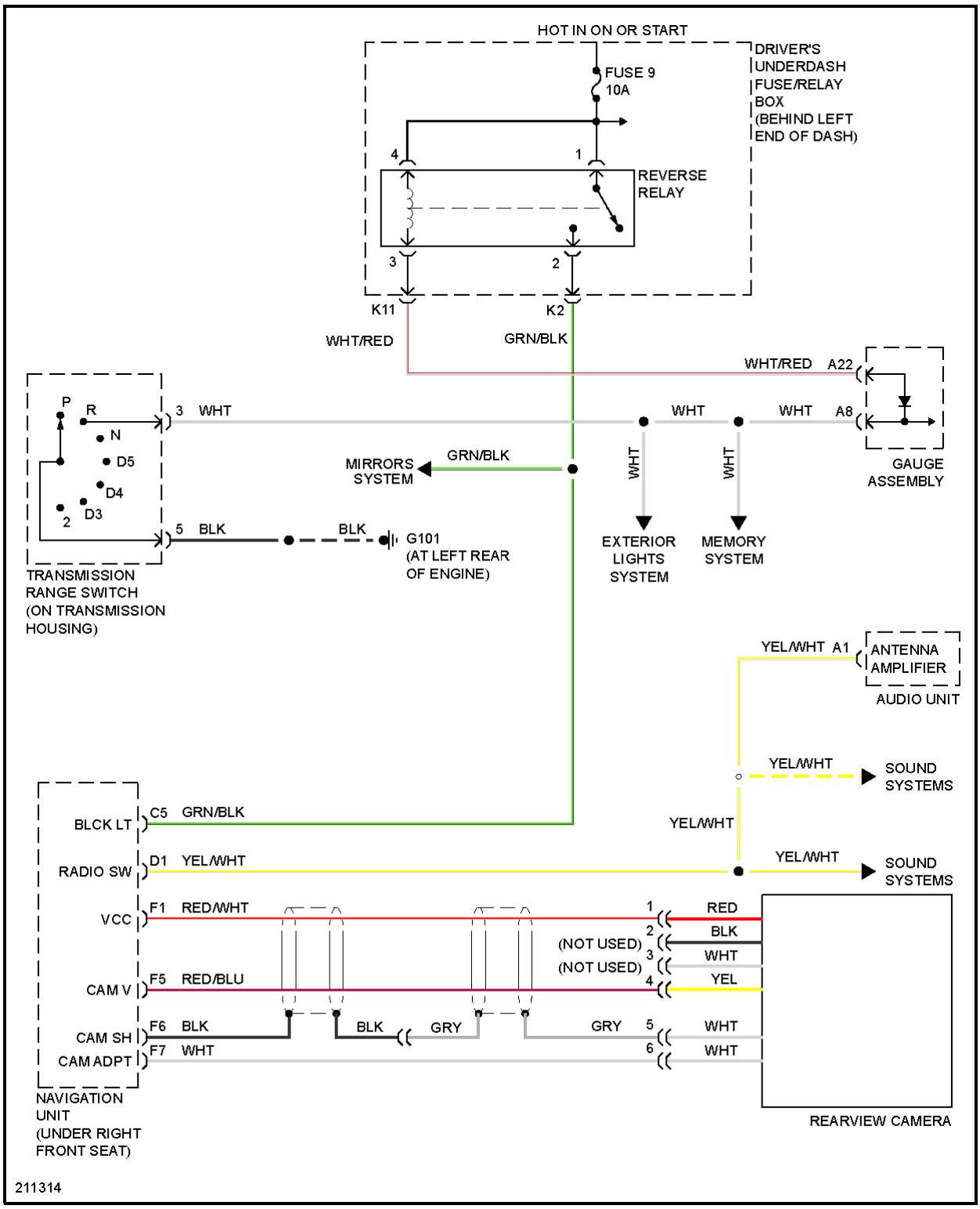

cardiagn.com

Fig. 42: Rear Camera Circuit

PASSIVE RESTRAINTS

cardiagn.com

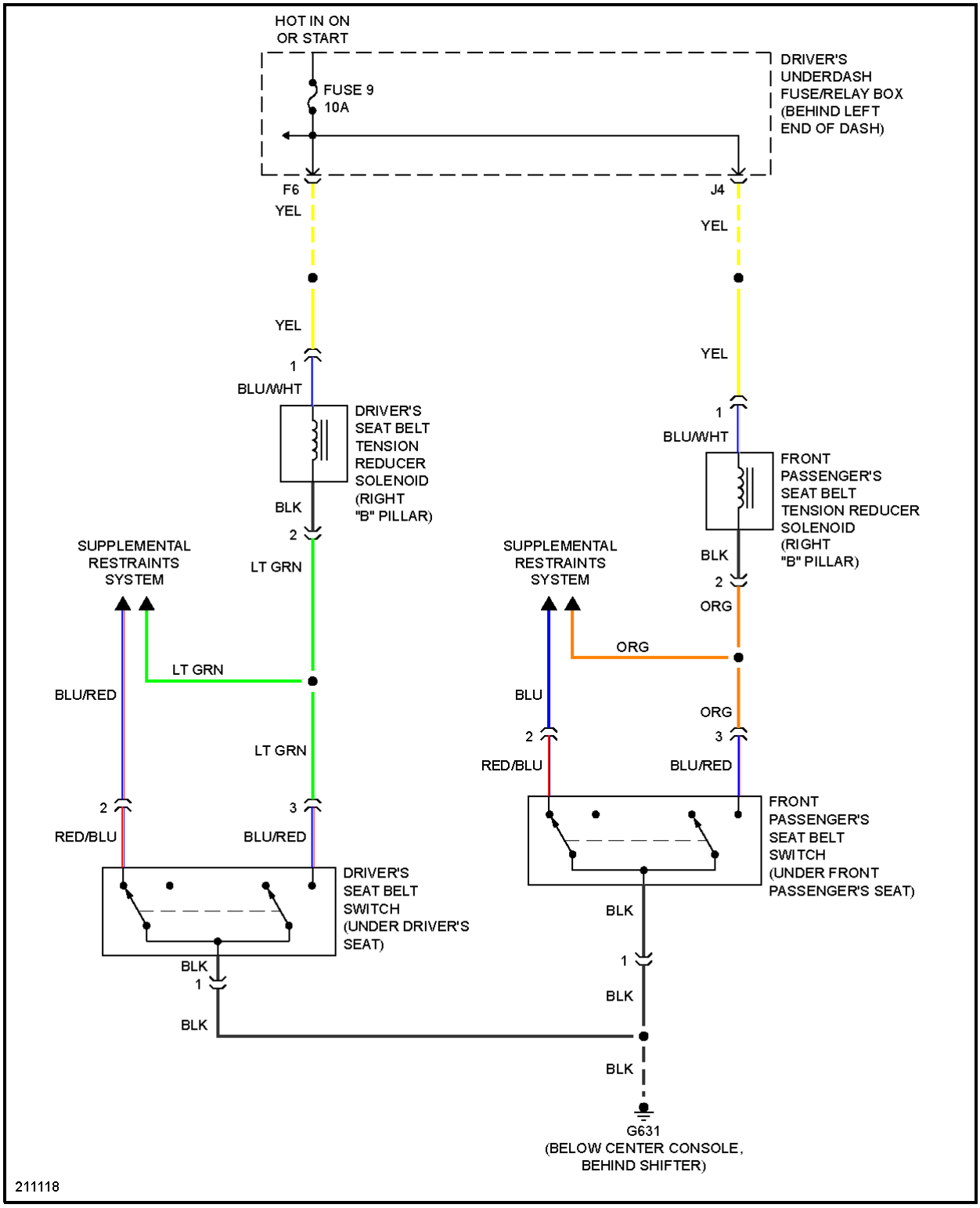

cardiagn.com

Fig. 43: Passive Restraints Circuit

POWER DISTRIBUTION

cardiagn.com

2006 Acura MDX

2006 SYSTEM WIRING DIAGRAMS Acura - MDX

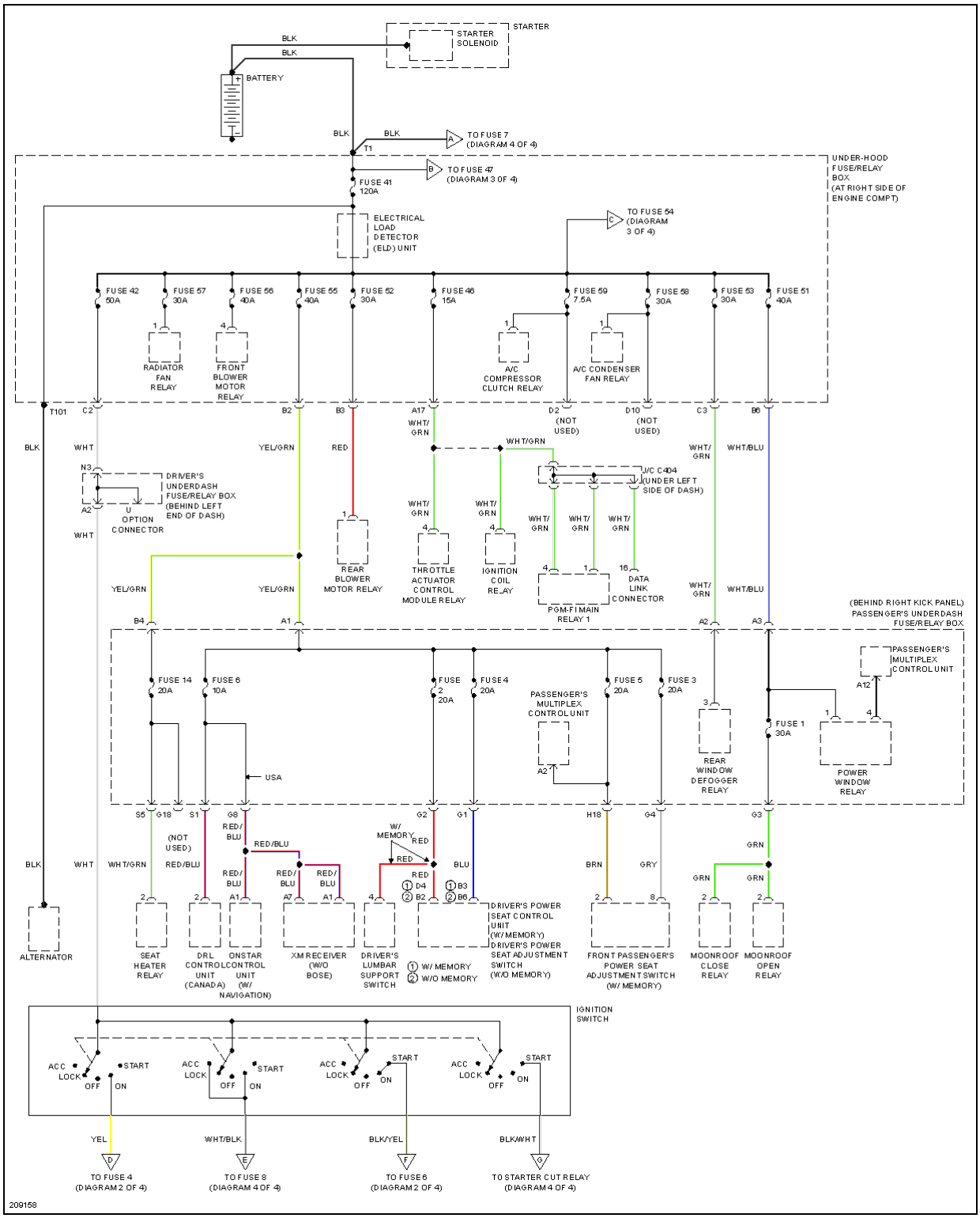

cardiagn.com

Fig. 44: Power Distribution Circuit (1 of 4)

cardiagn.com

2006 Acura MDX

2006 SYSTEM WIRING DIAGRAMS Acura - MDX

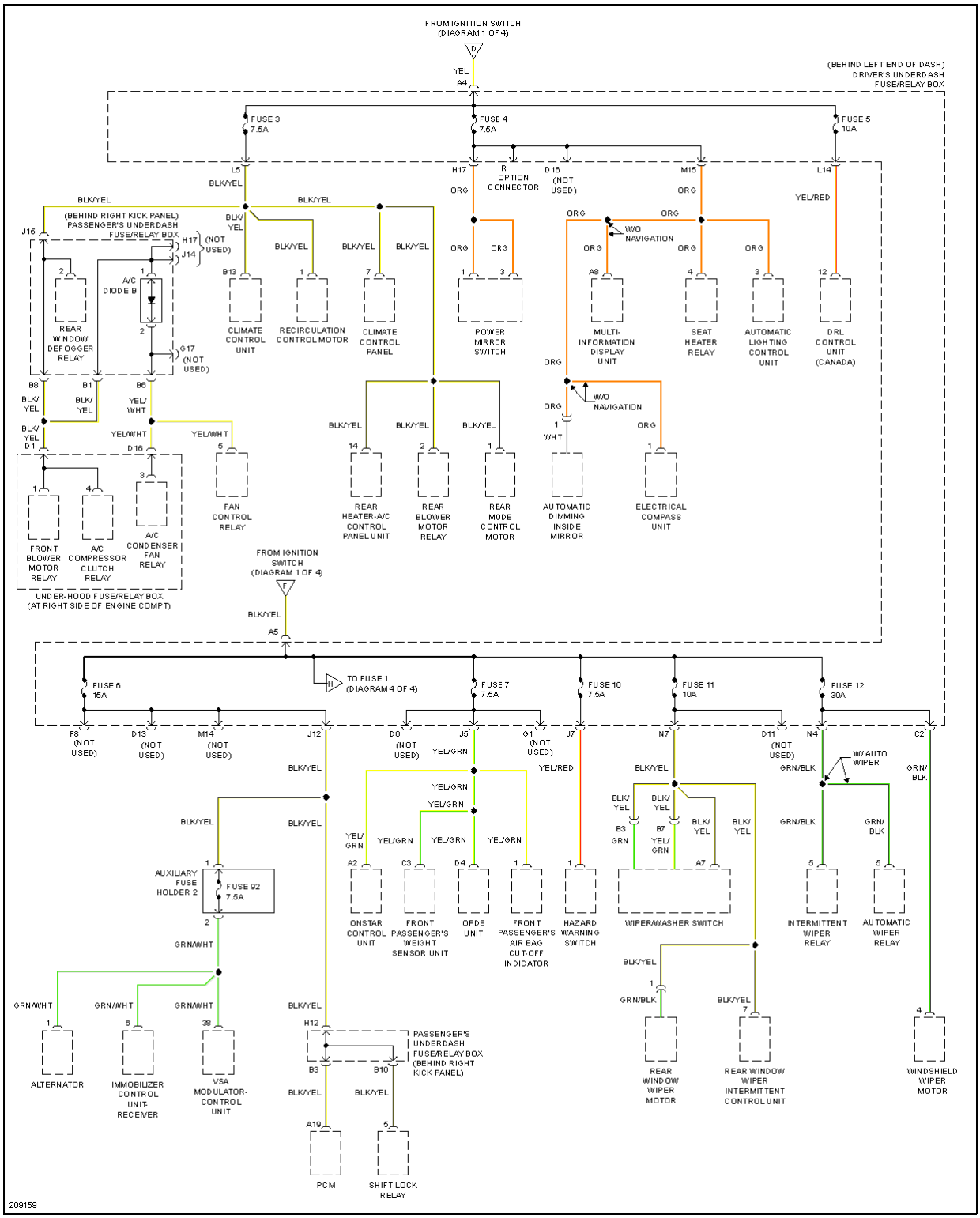

cardiagn.com

Fig. 45: Power Distribution Circuit (2 of 4)

cardiagn.com

2006 Acura MDX

2006 SYSTEM WIRING DIAGRAMS Acura - MDX

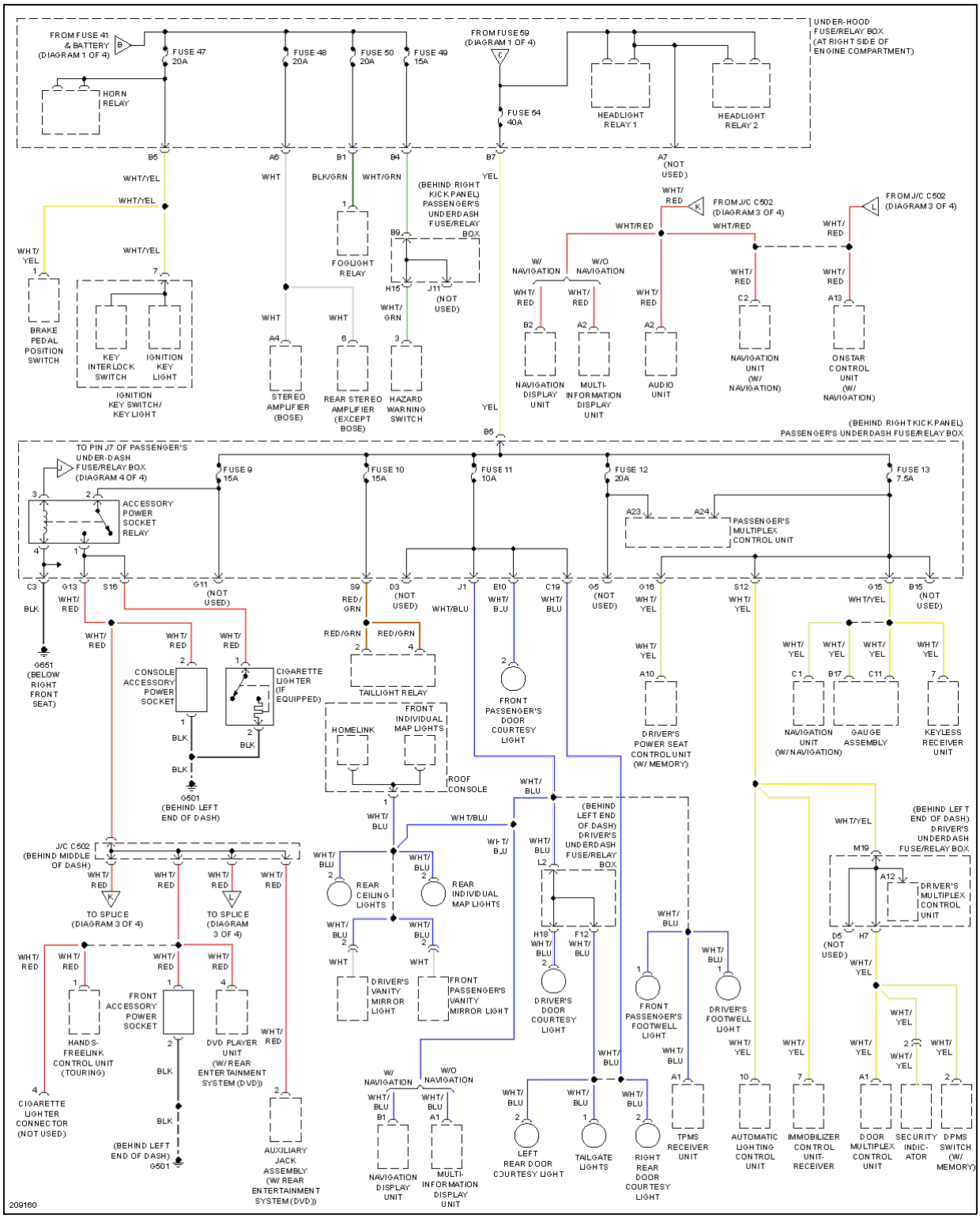

cardiagn.com

Fig. 46: Power Distribution Circuit (3 of 4)

cardiagn.com

2006 Acura MDX

2006 SYSTEM WIRING DIAGRAMS Acura - MDX

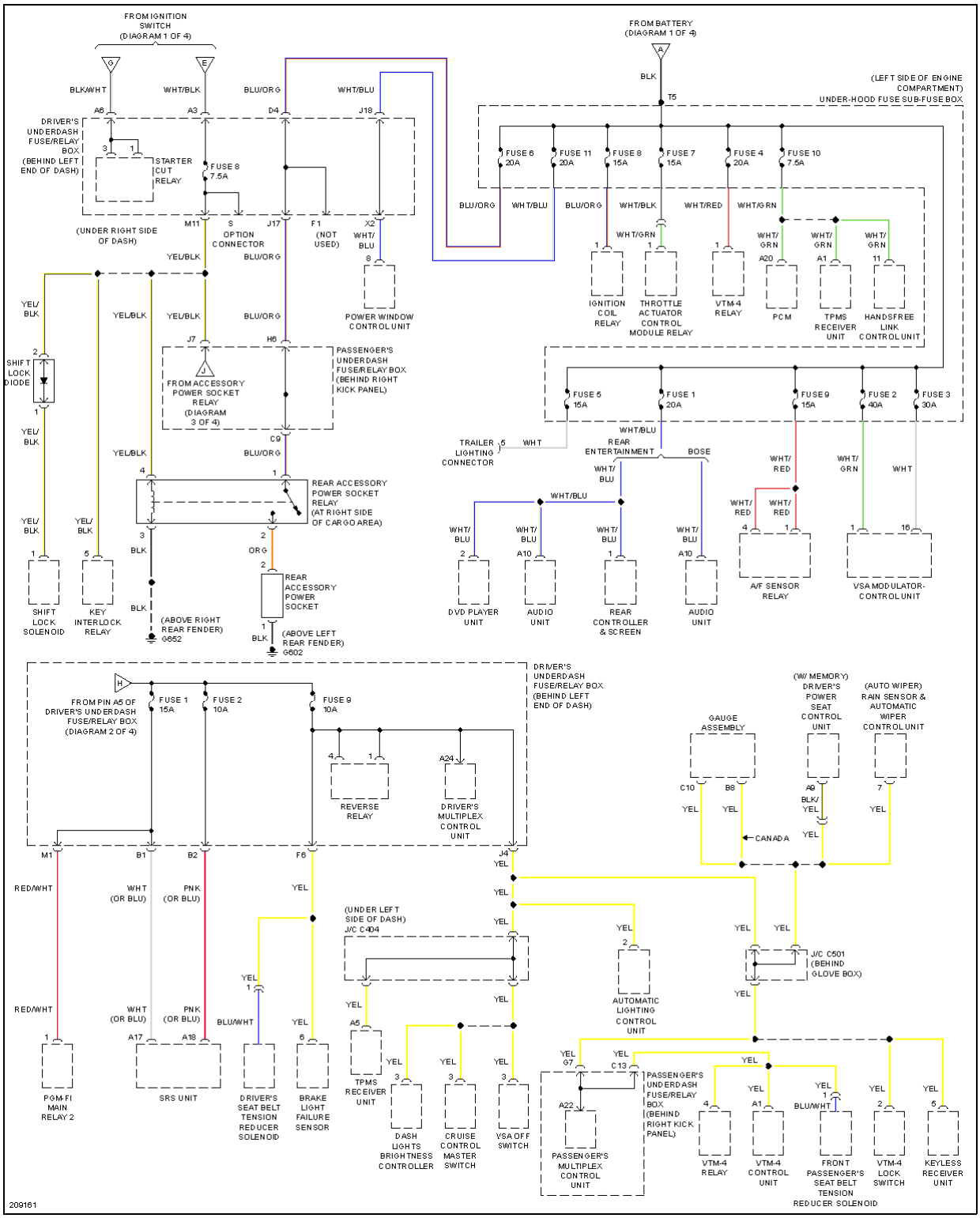

cardiagn.com

Fig. 47: Power Distribution Circuit (4 of 4)

POWER DOOR LOCKS

cardiagn.com

2006 Acura MDX

2006 SYSTEM WIRING DIAGRAMS Acura - MDX

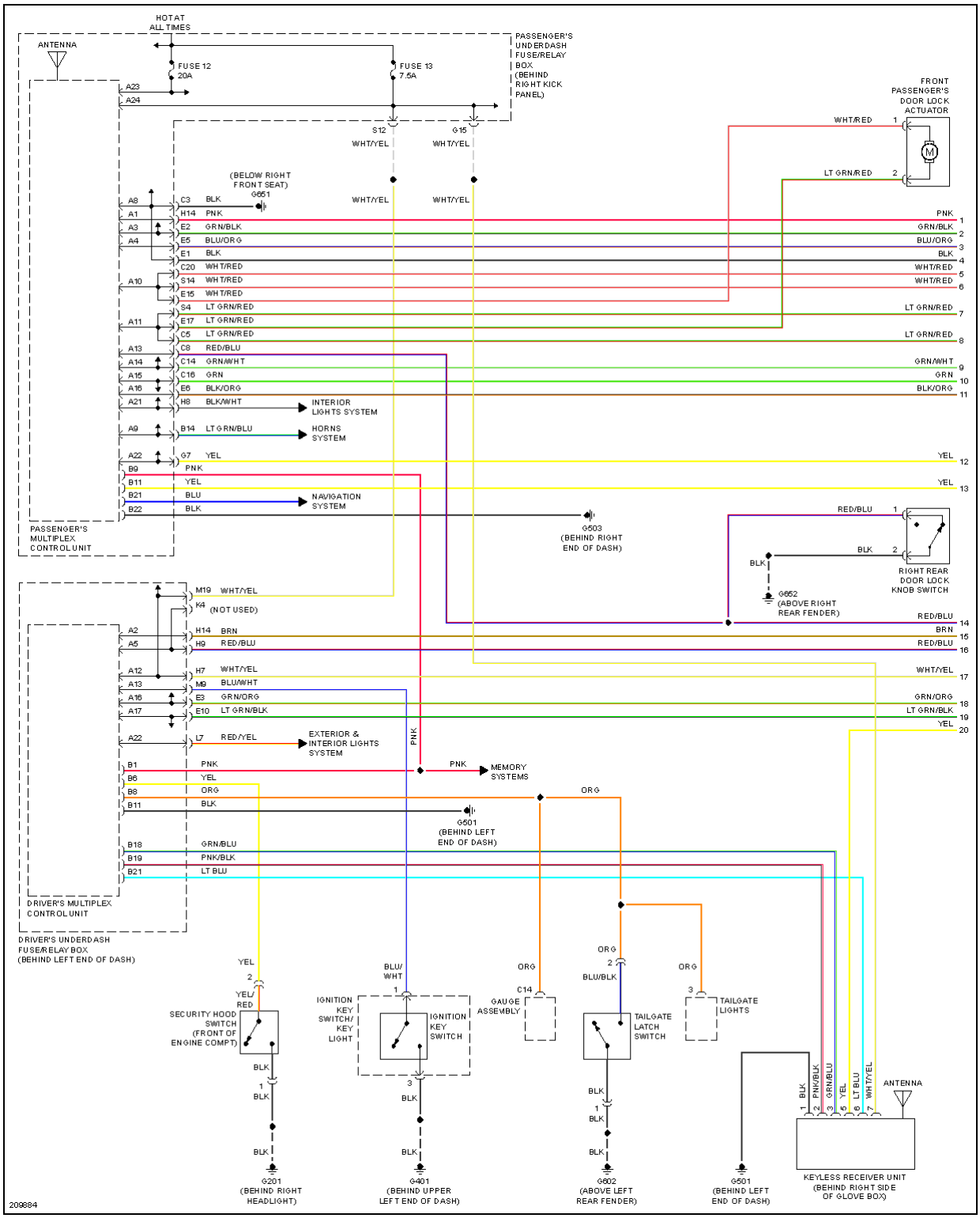

cardiagn.com

Fig. 48: Power Door Locks Circuit (1 of 2)

cardiagn.com

2006 Acura MDX

2006 SYSTEM WIRING DIAGRAMS Acura - MDX

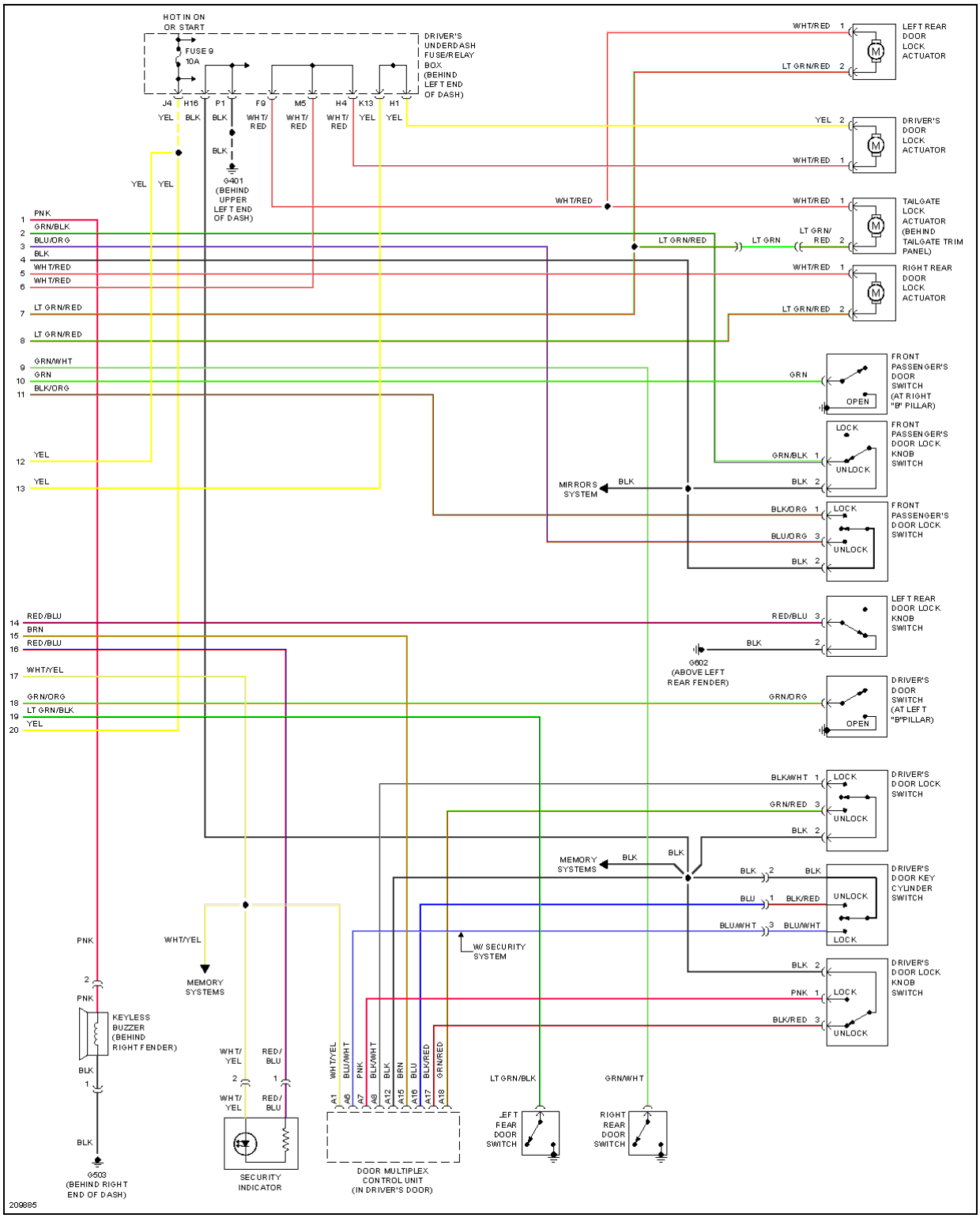

cardiagn.com

Fig. 49: Power Door Locks Circuit (2 of 2)

POWER MIRRORS

cardiagn.com

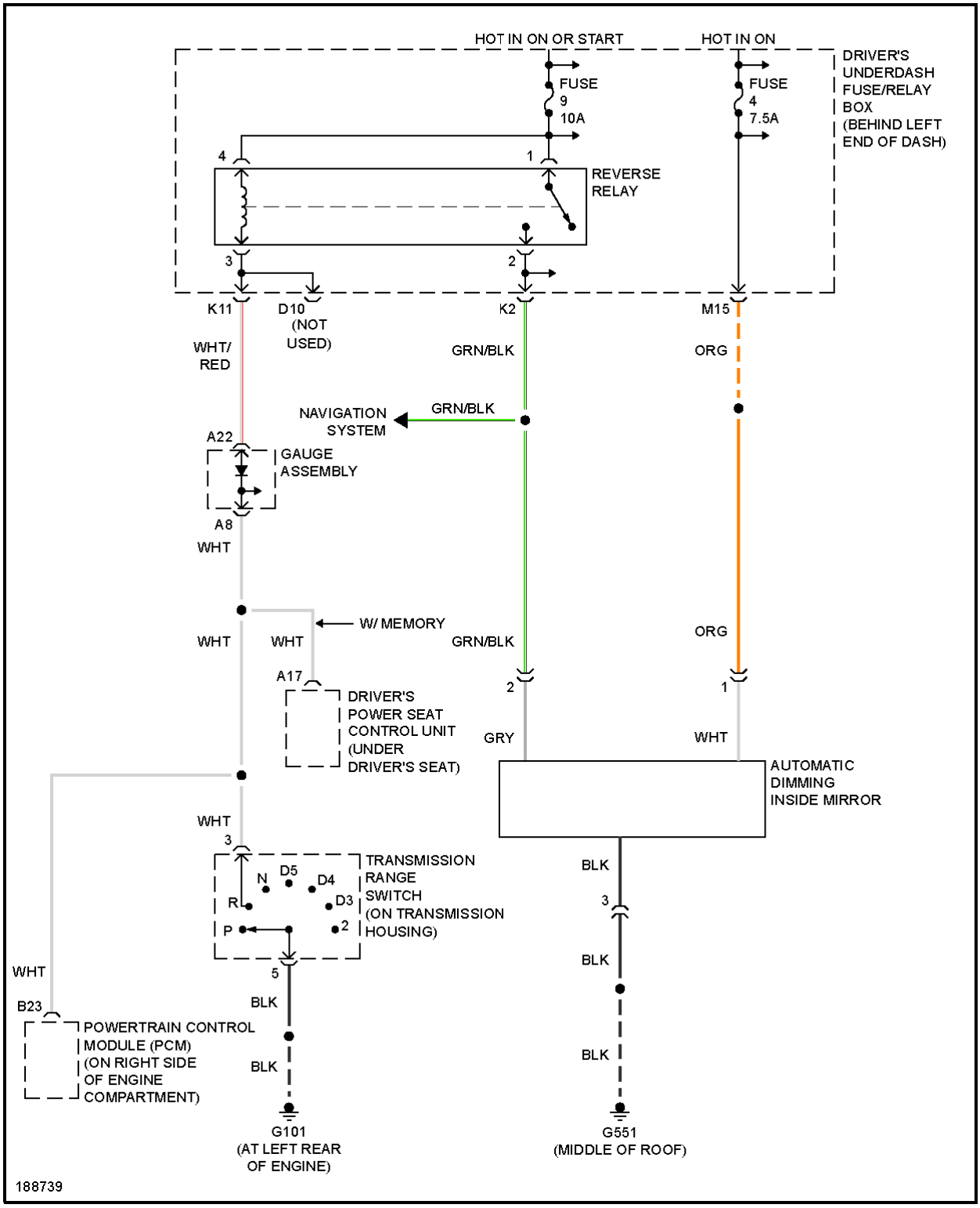

cardiagn.com

Fig. 50: Automatic Day/Night Mirror Circuit

cardiagn.com

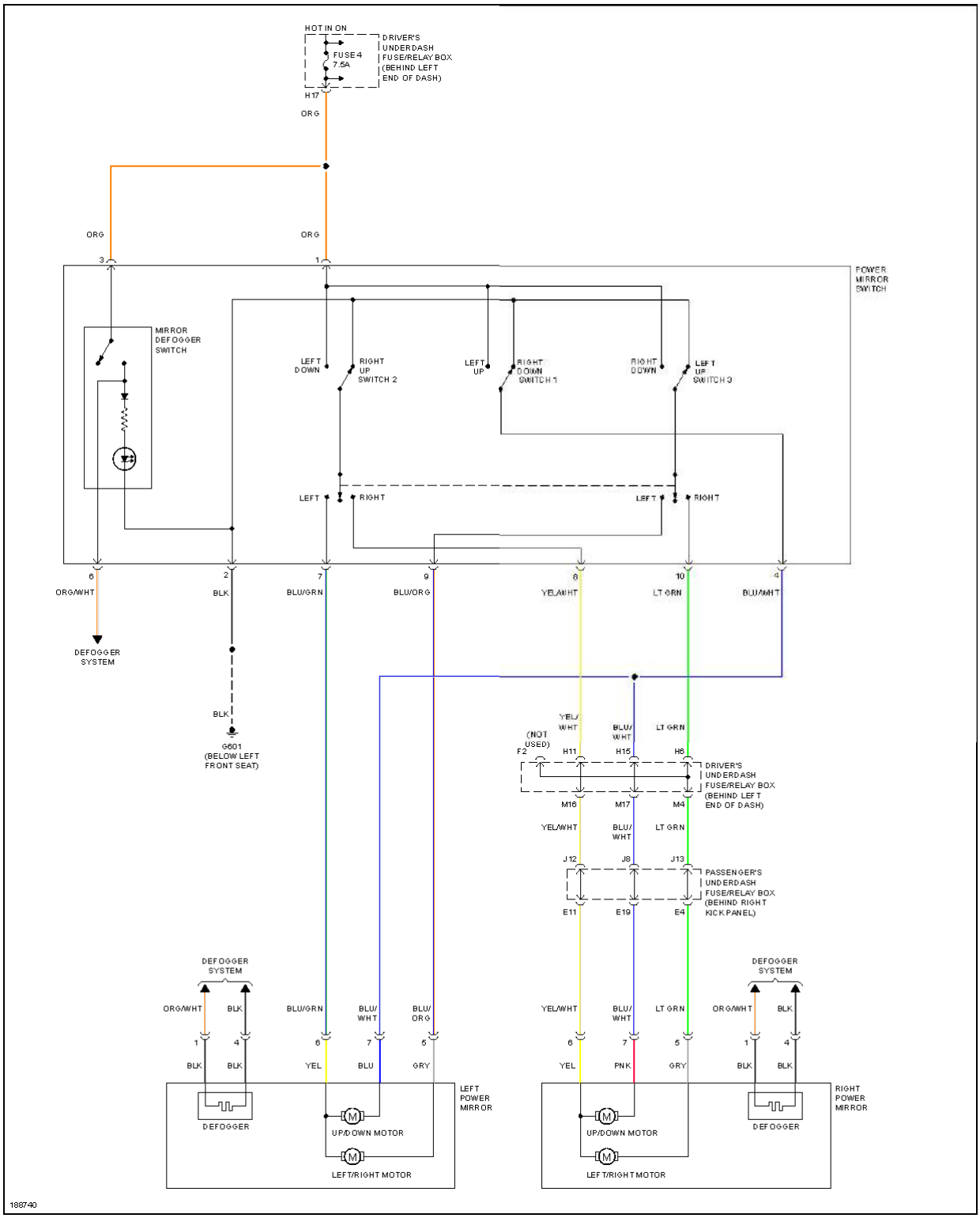

cardiagn.com

Fig. 51: Power Mirrors Circuit, W/O Memory

POWER SEATS

cardiagn.com

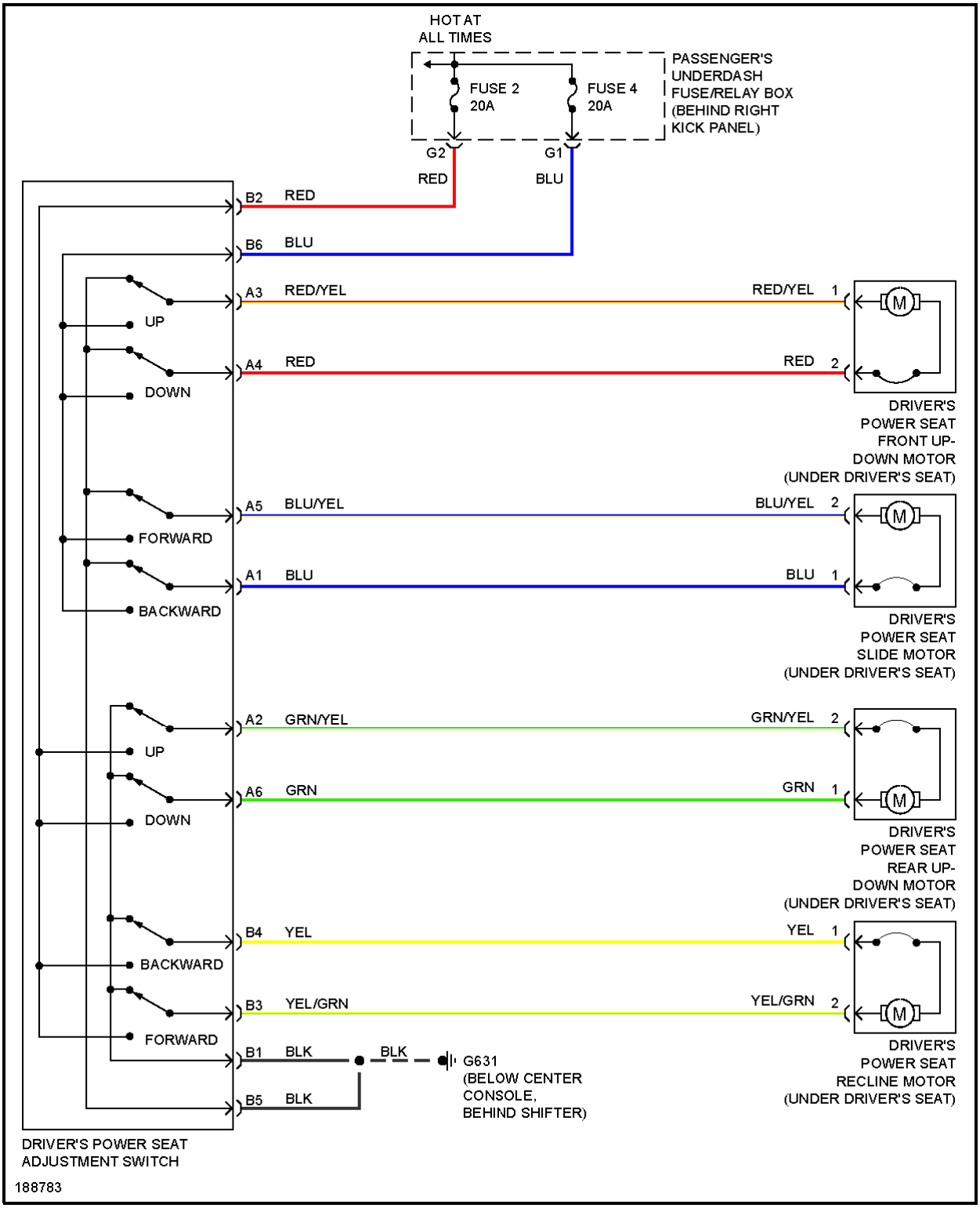

cardiagn.com

Fig. 52: Driver Power Seat Circuit, W/O Memory

cardiagn.com

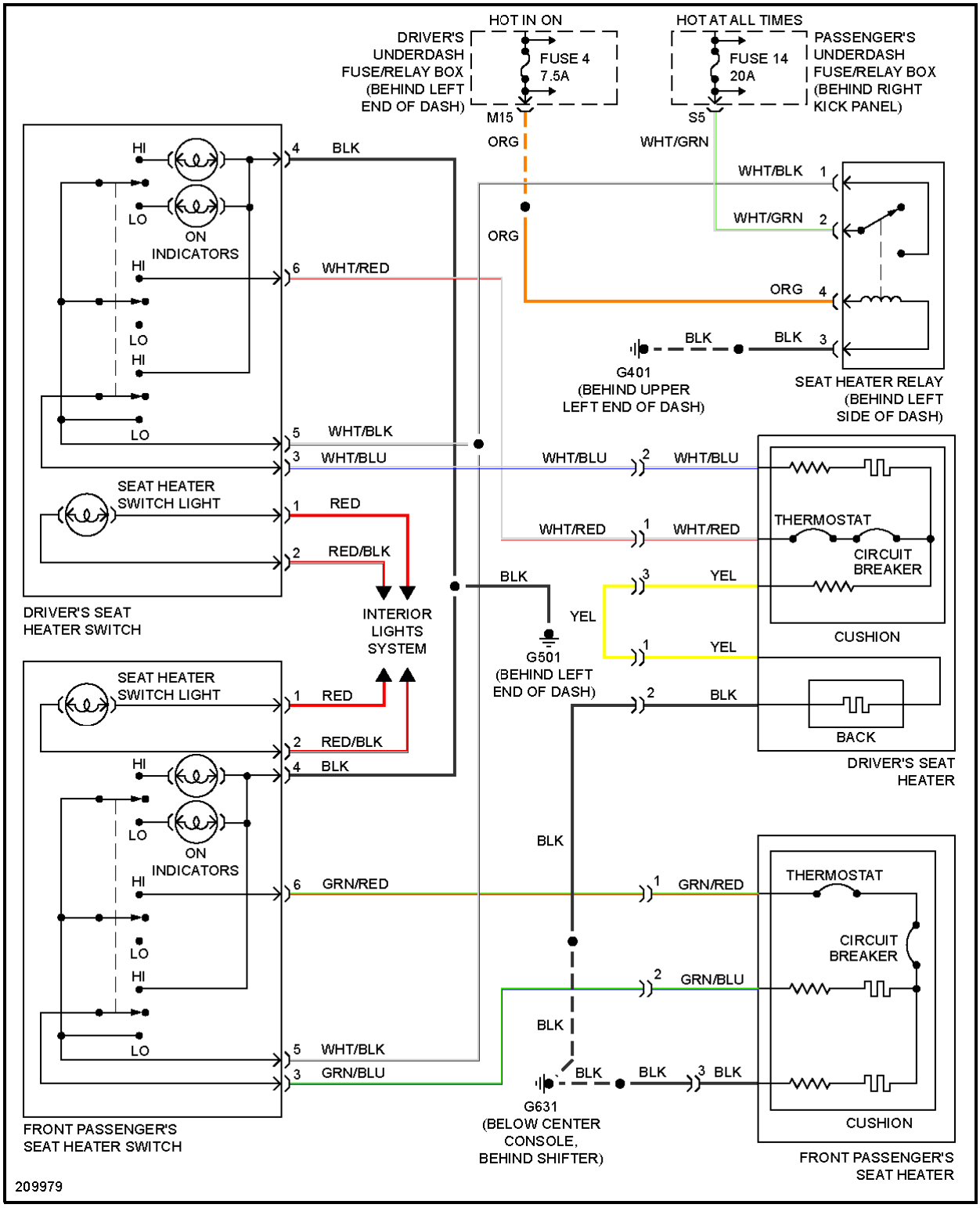

cardiagn.com

Fig. 53: Heated Seats Circuit

cardiagn.com

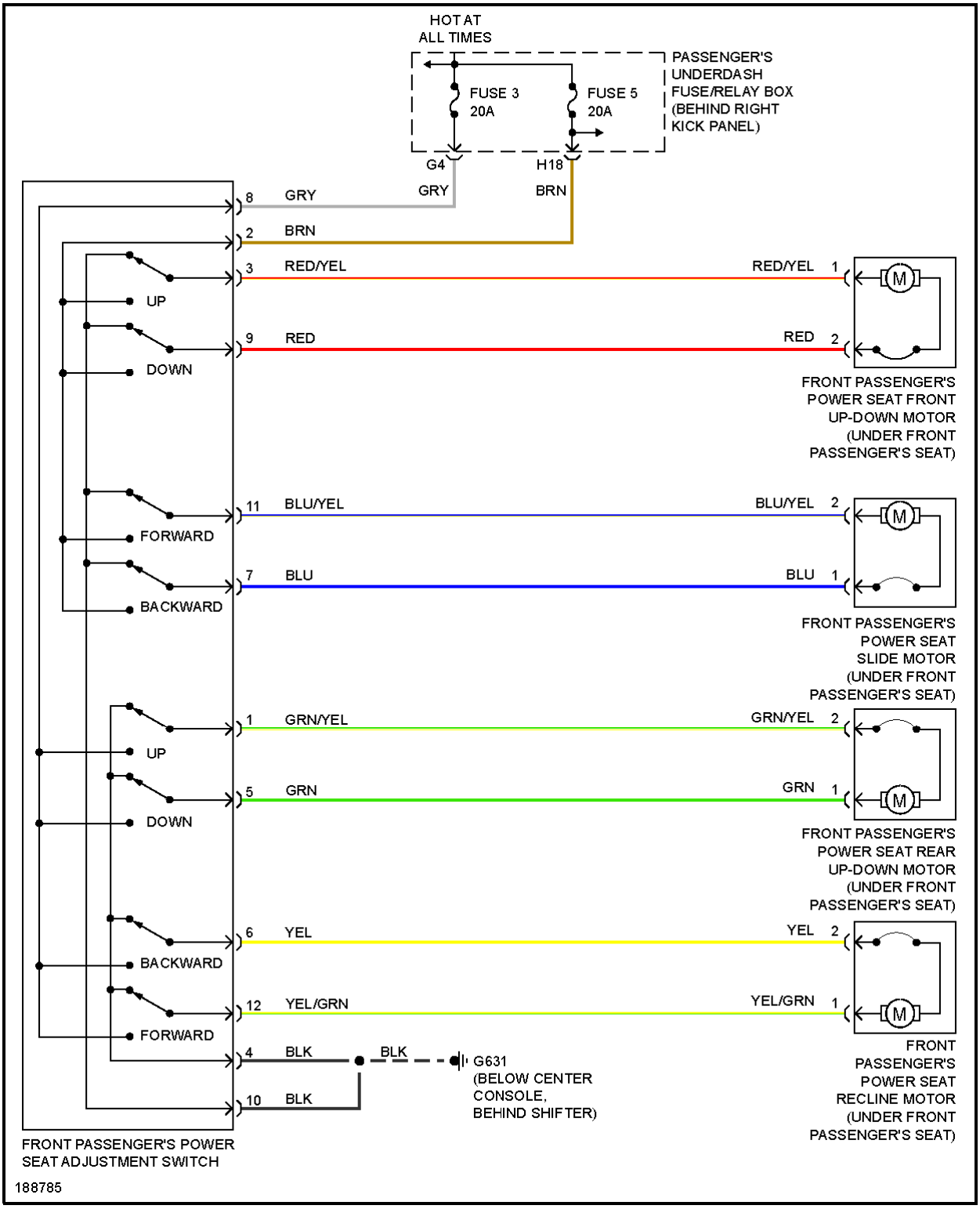

cardiagn.com

Fig. 54: Passenger Power Seat Circuit

POWER TOP/SUNROOF

cardiagn.com

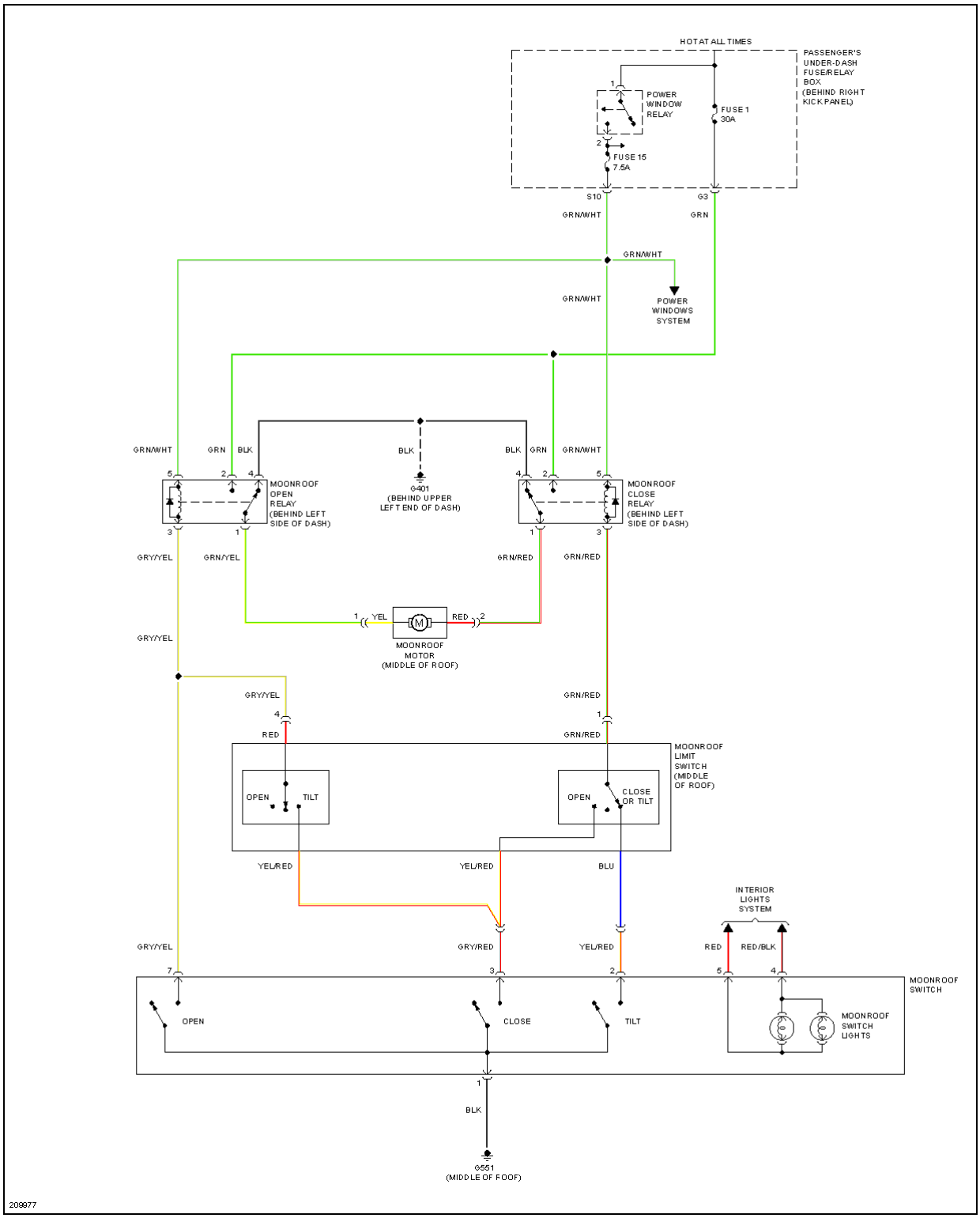

cardiagn.com

Fig. 55: Power Top/Sunroof Circuit

POWER WINDOWS

cardiagn.com

2006 Acura MDX

2006 SYSTEM WIRING DIAGRAMS Acura - MDX

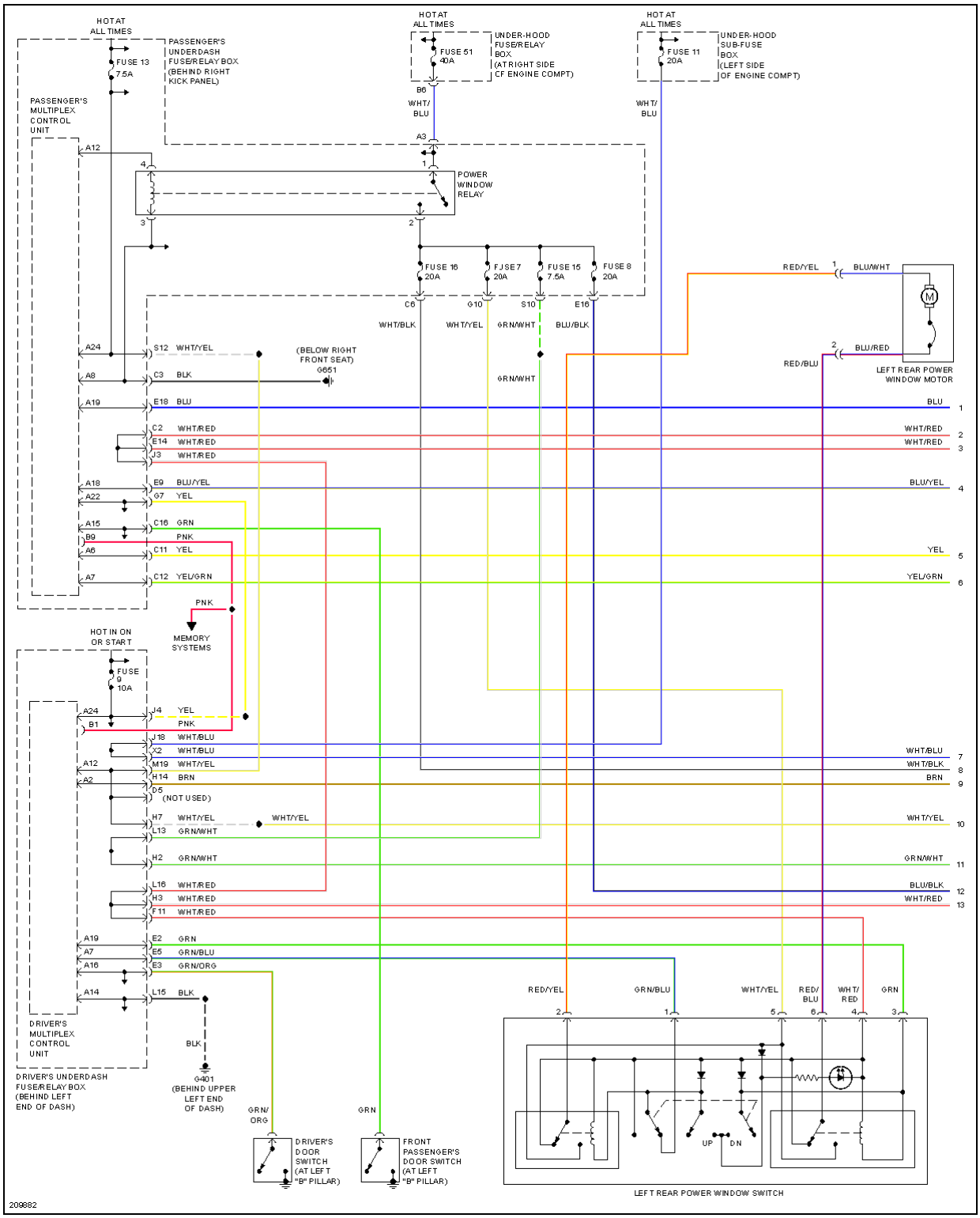

cardiagn.com

Fig. 56: Power Windows Circuit (1 of 2)

cardiagn.com

2006 Acura MDX

2006 SYSTEM WIRING DIAGRAMS Acura - MDX

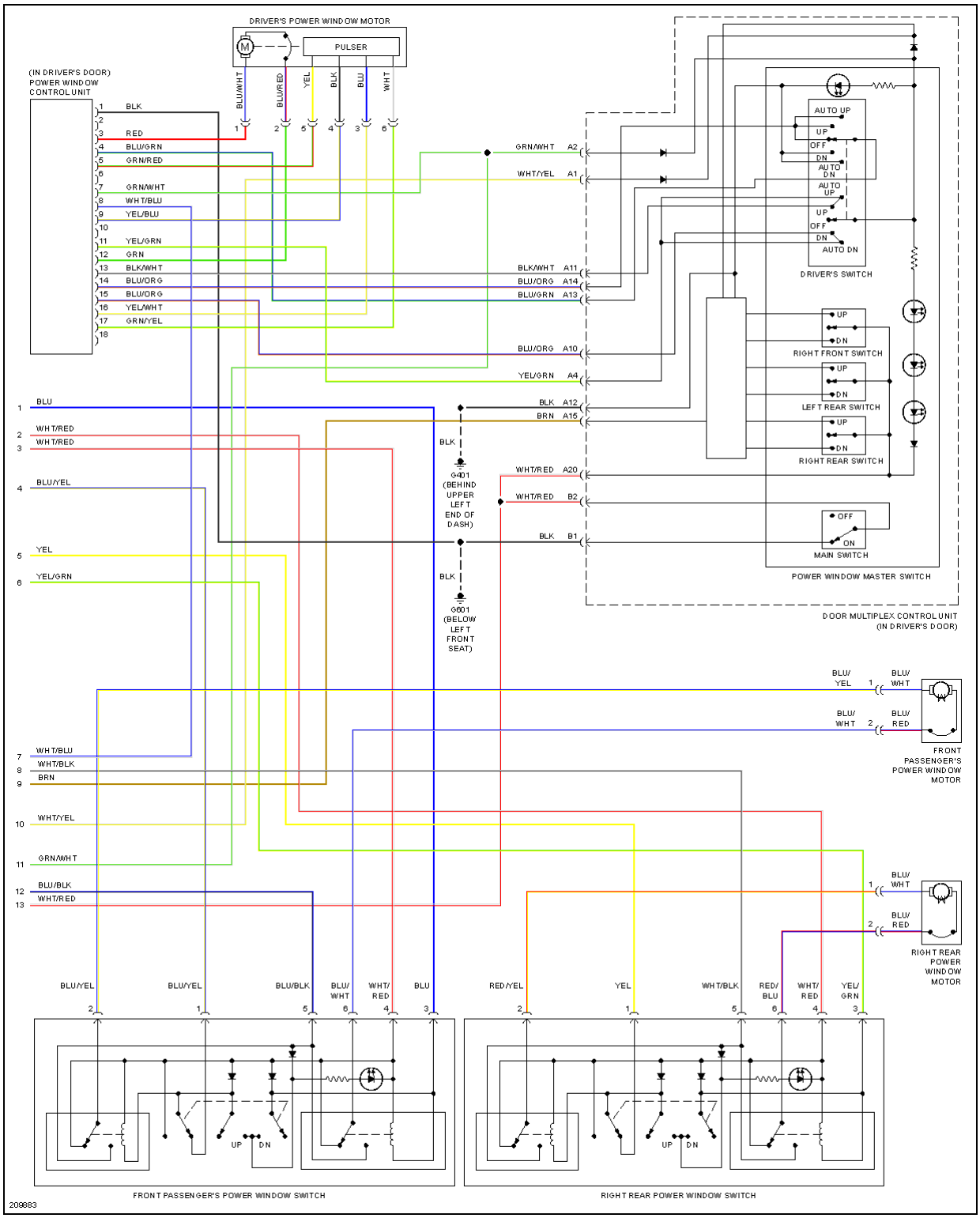

cardiagn.com

Fig. 57: Power Windows Circuit (2 of 2)

RADIO

cardiagn.com

2006 Acura MDX

2006 SYSTEM WIRING DIAGRAMS Acura - MDX

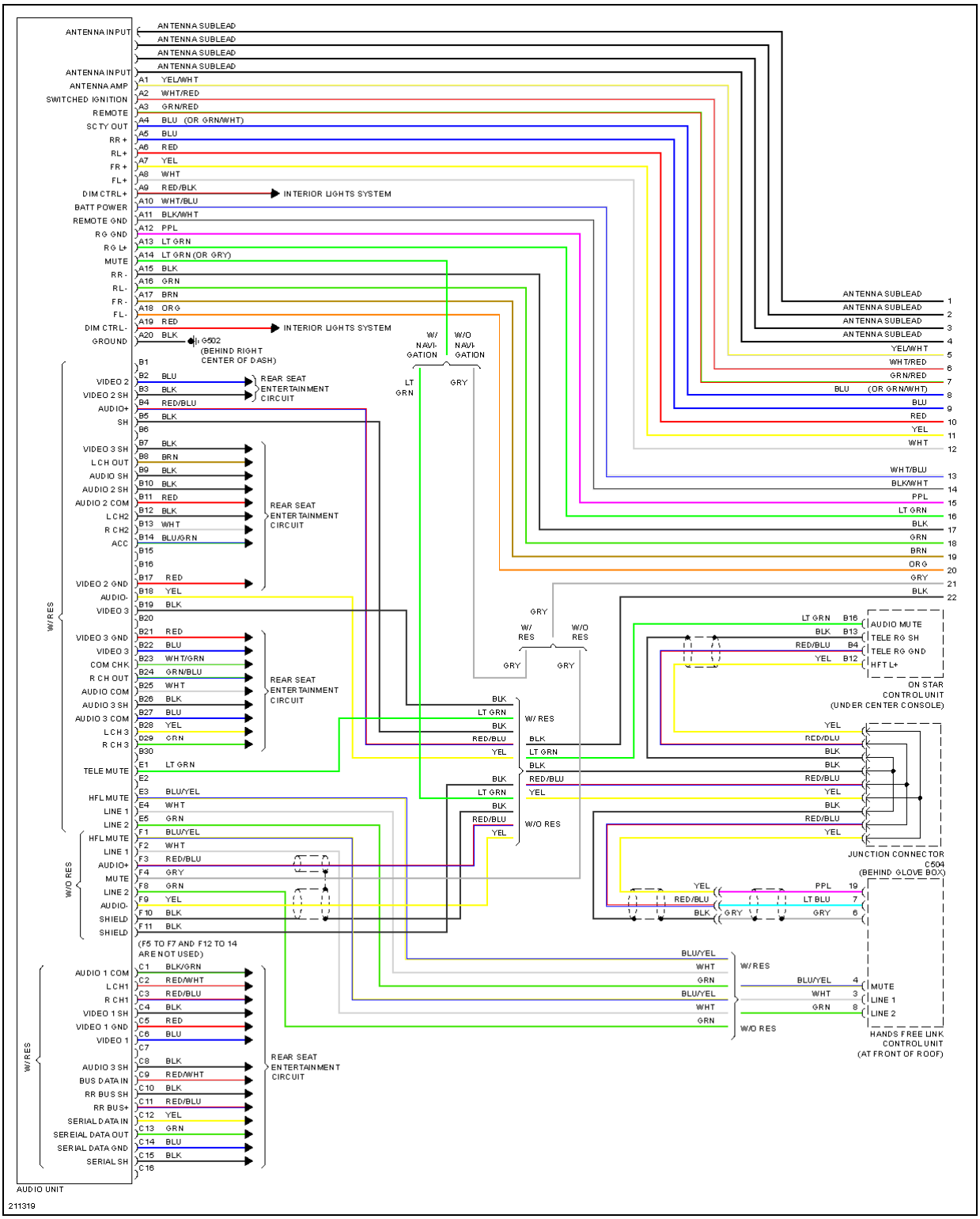

cardiagn.com

Fig. 58: Radio Circuit, W/BOSE (1 of 3)

cardiagn.com

2006 Acura MDX

2006 SYSTEM WIRING DIAGRAMS Acura - MDX

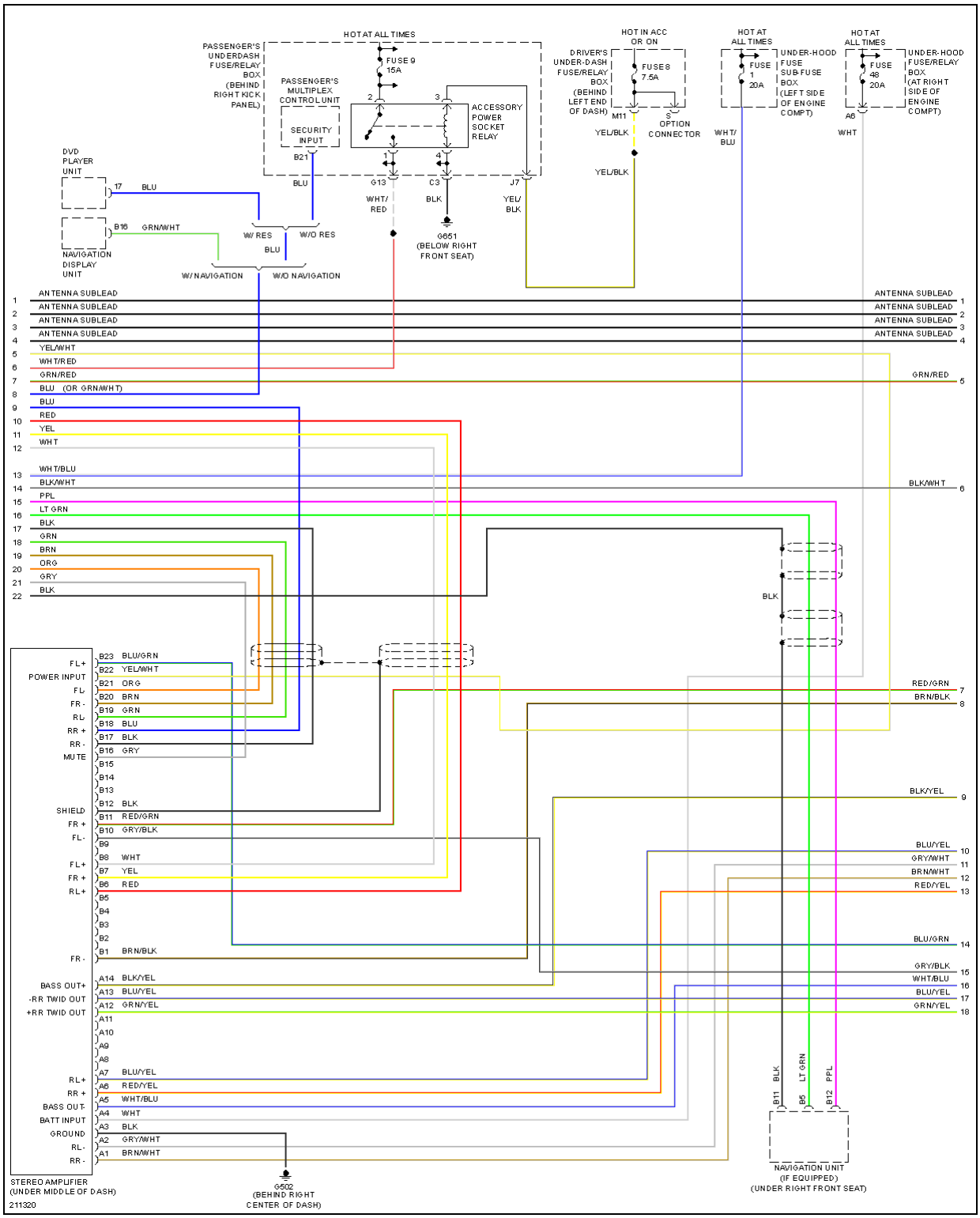

cardiagn.com

Fig. 59: Radio Circuit, W/BOSE (2 of 3)

cardiagn.com

2006 Acura MDX

2006 SYSTEM WIRING DIAGRAMS Acura - MDX

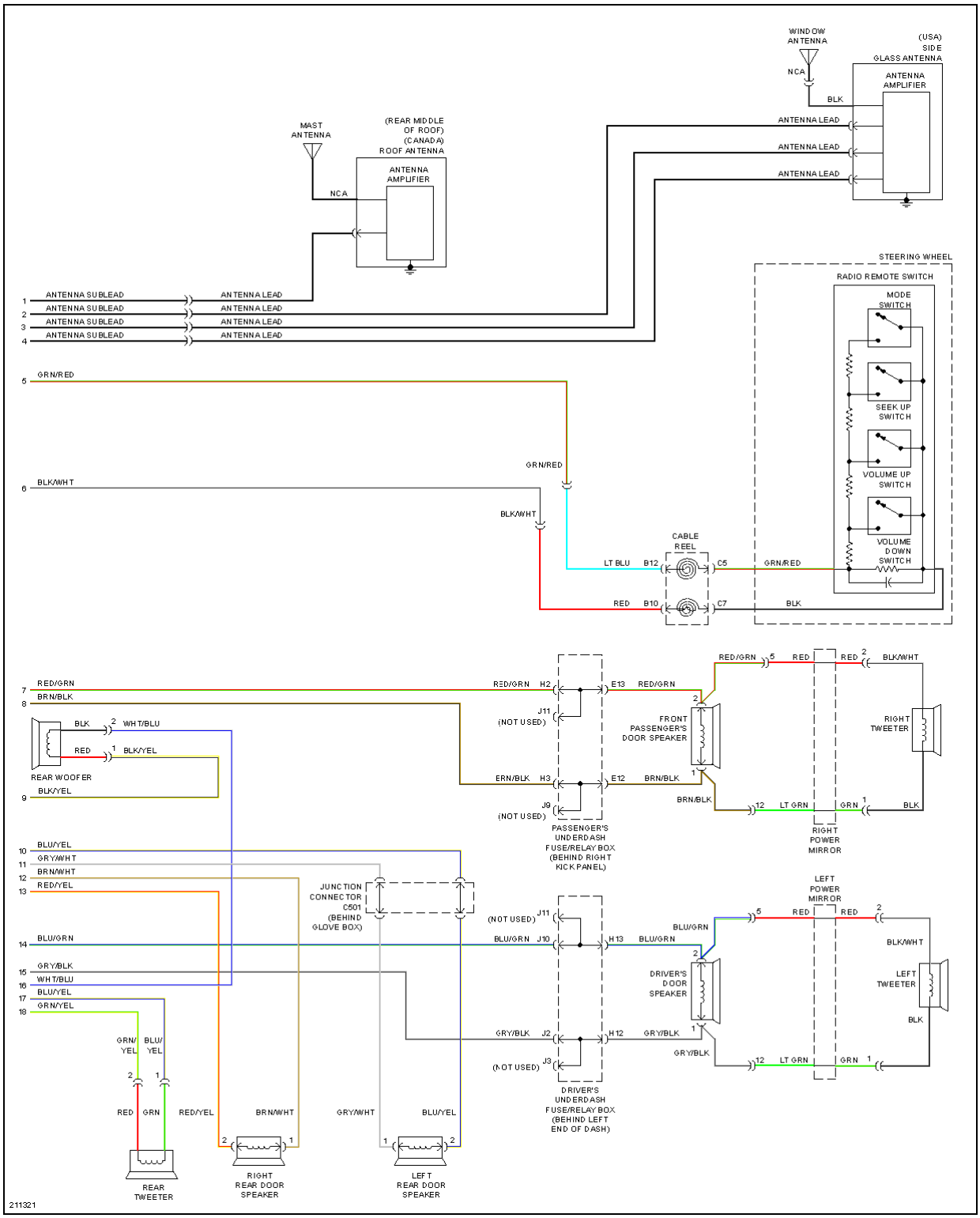

cardiagn.com

Fig. 60: Radio Circuit, W/BOSE (3 of 3)

cardiagn.com

2006 Acura MDX

2006 SYSTEM WIRING DIAGRAMS Acura - MDX

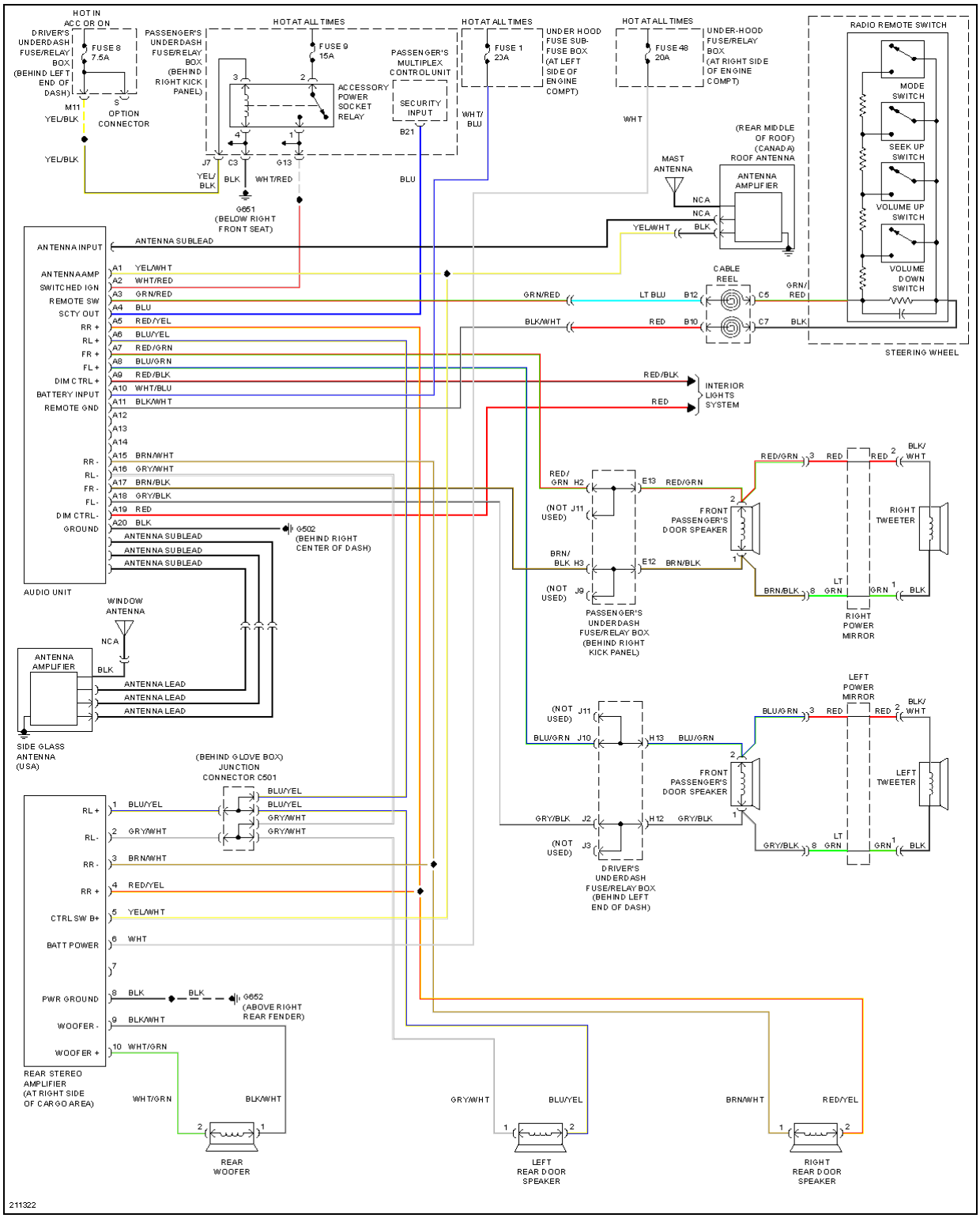

cardiagn.com

Fig. 61: Radio Circuit, W/O Bose System

cardiagn.com

2006 Acura MDX

2006 SYSTEM WIRING DIAGRAMS Acura - MDX

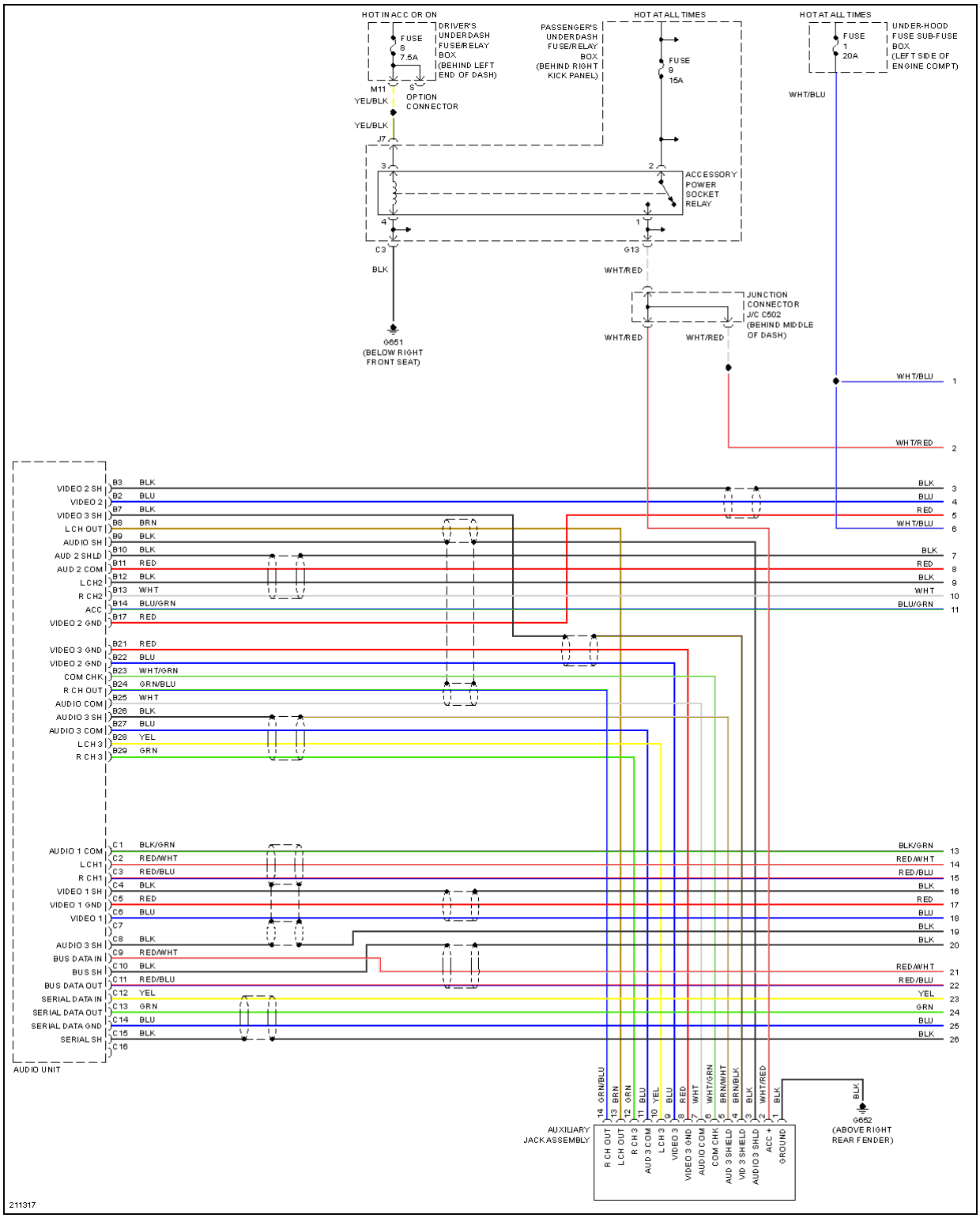

cardiagn.com

Fig. 62: Rear Seat Entertainment Circuit (1 of 2)

cardiagn.com

2006 Acura MDX

2006 SYSTEM WIRING DIAGRAMS Acura - MDX

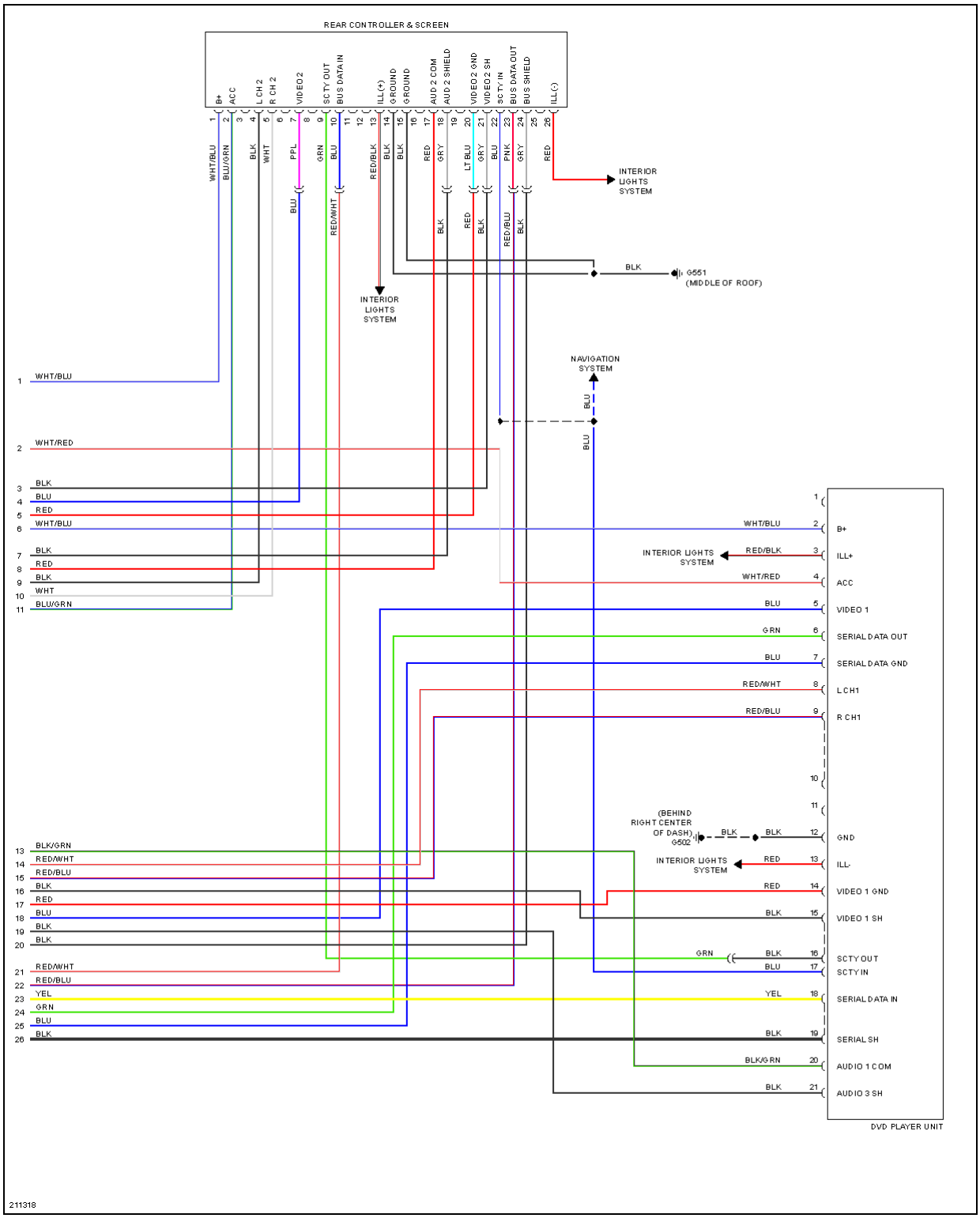

cardiagn.com

Fig. 63: Rear Seat Entertainment Circuit (2 of 2)

cardiagn.com

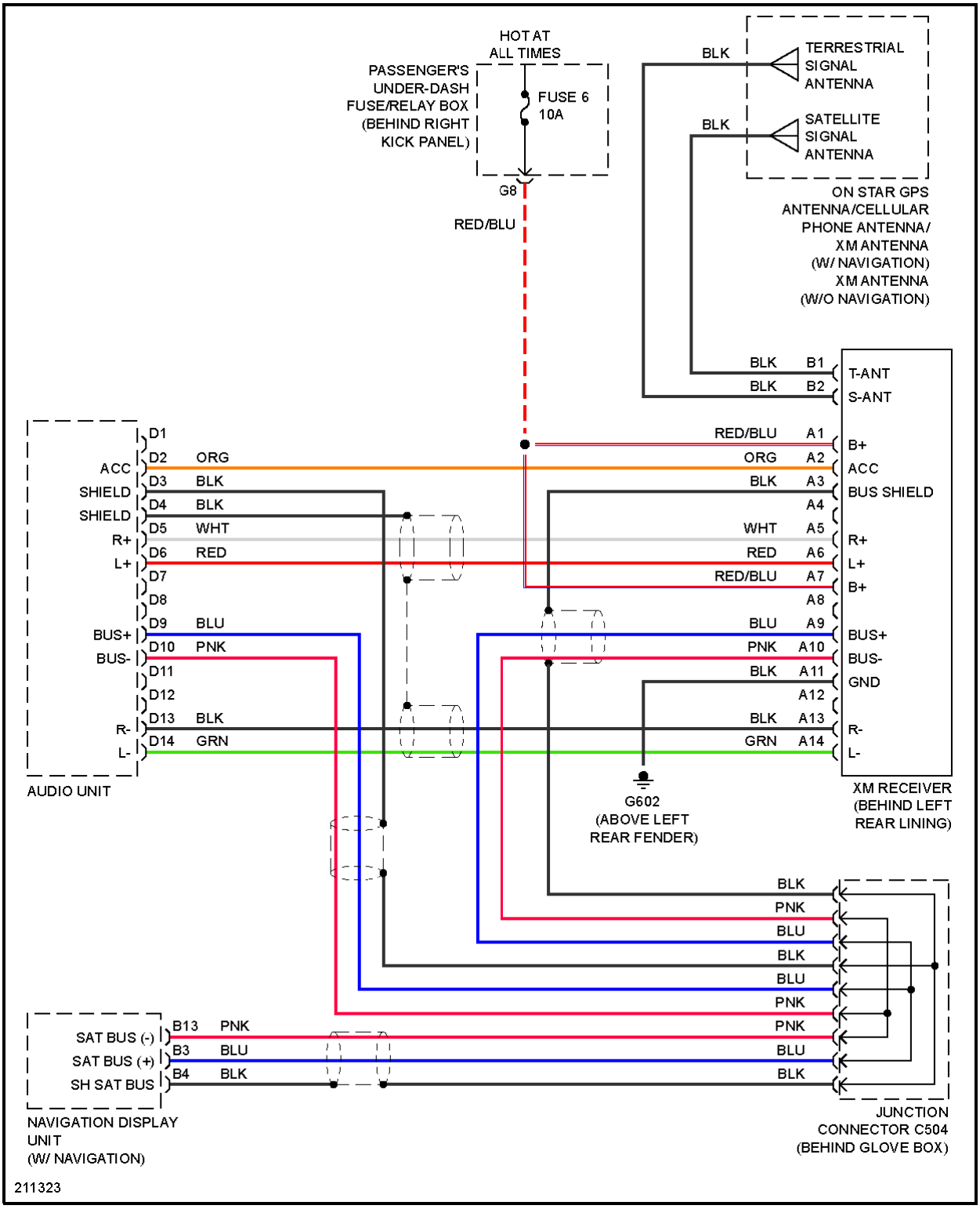

cardiagn.com

Fig. 64: Satellite Radio Circuit

SHIFT INTERLOCK

cardiagn.com

2006 Acura MDX

2006 SYSTEM WIRING DIAGRAMS Acura - MDX

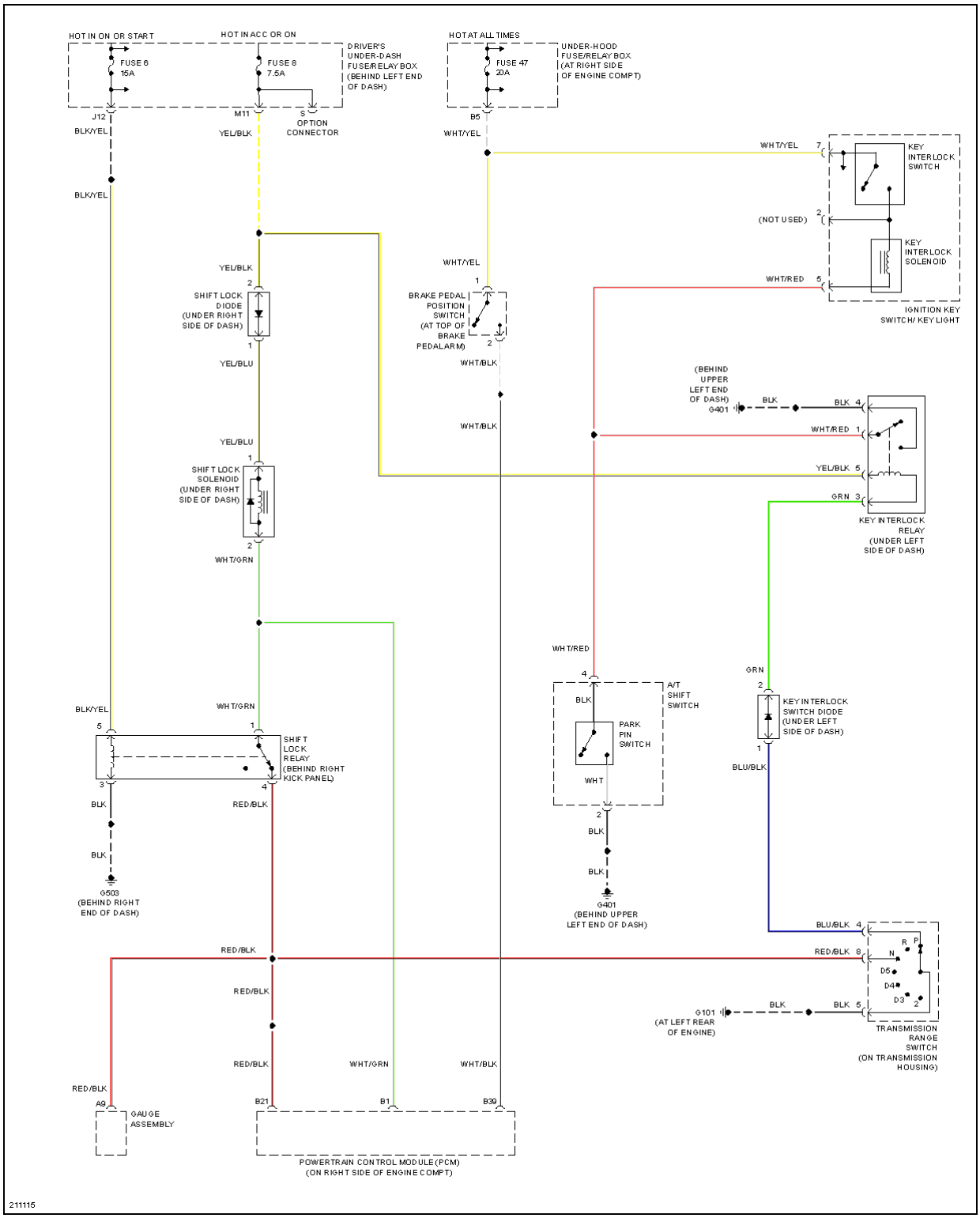

cardiagn.com

Fig. 65: Shift Interlock Circuit

STARTING/CHARGING

cardiagn.com

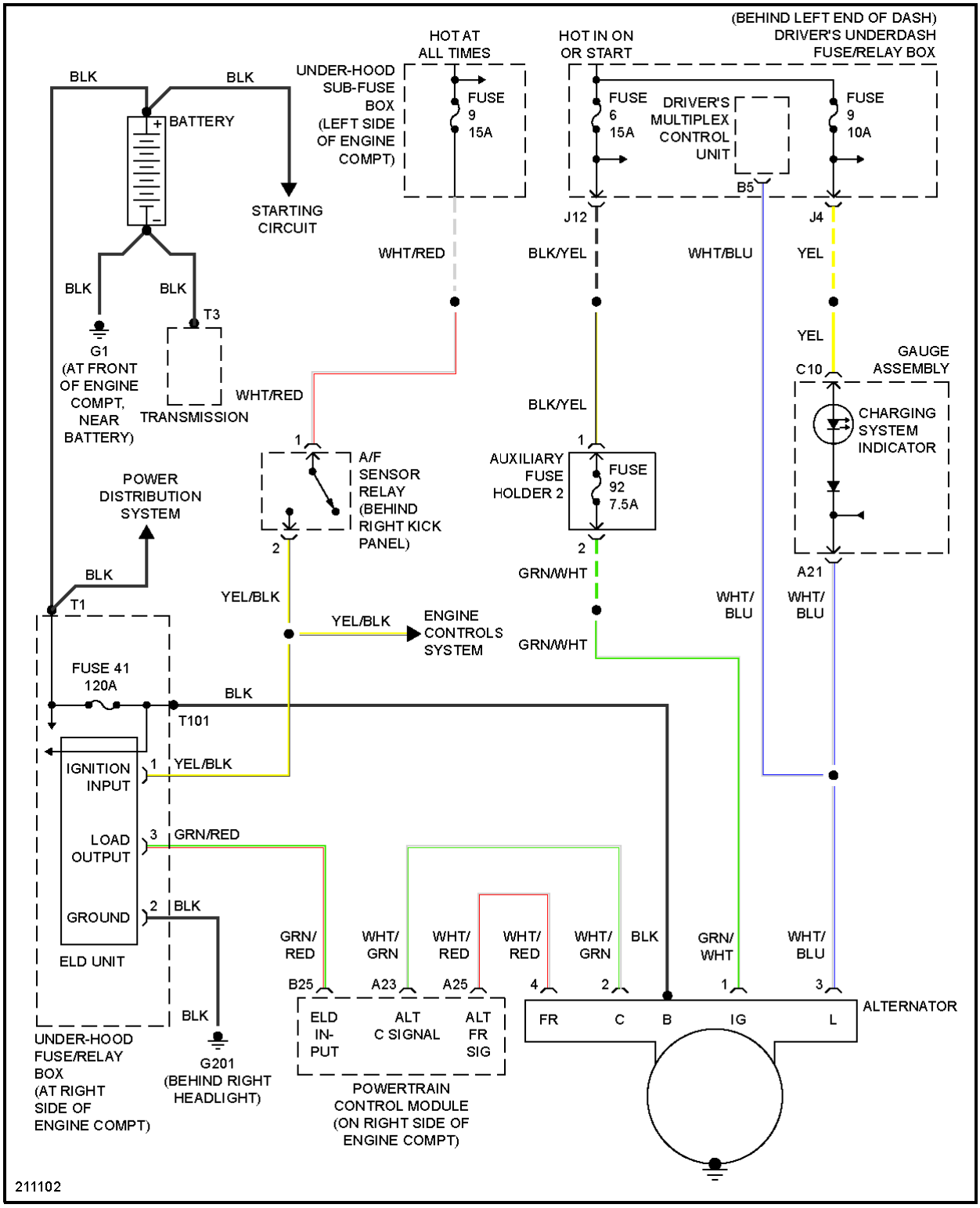

cardiagn.com

Fig. 66: Charging Circuit

cardiagn.com

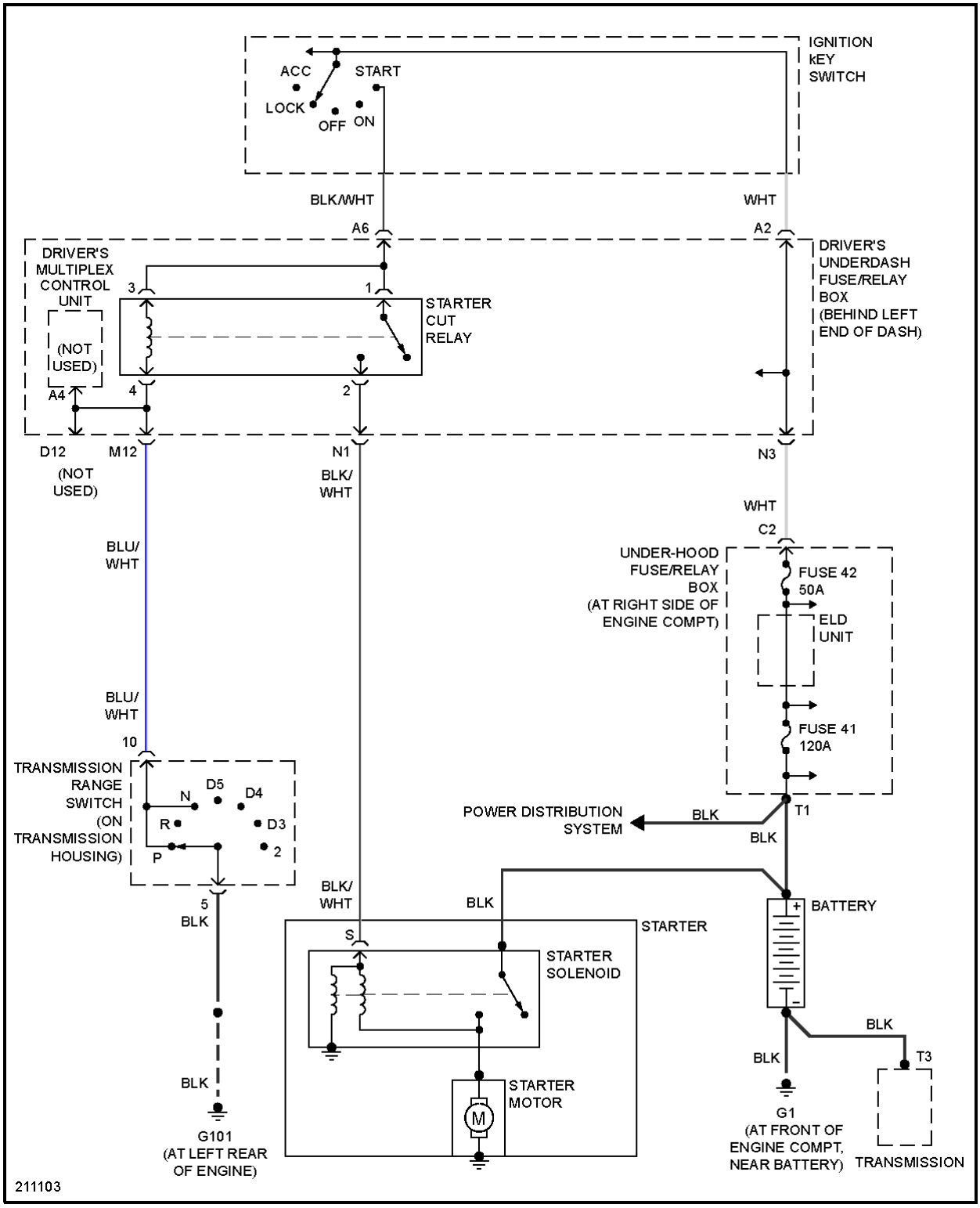

cardiagn.com

Fig. 67: Starting Circuit

SUPPLEMENTAL RESTRAINTS

cardiagn.com

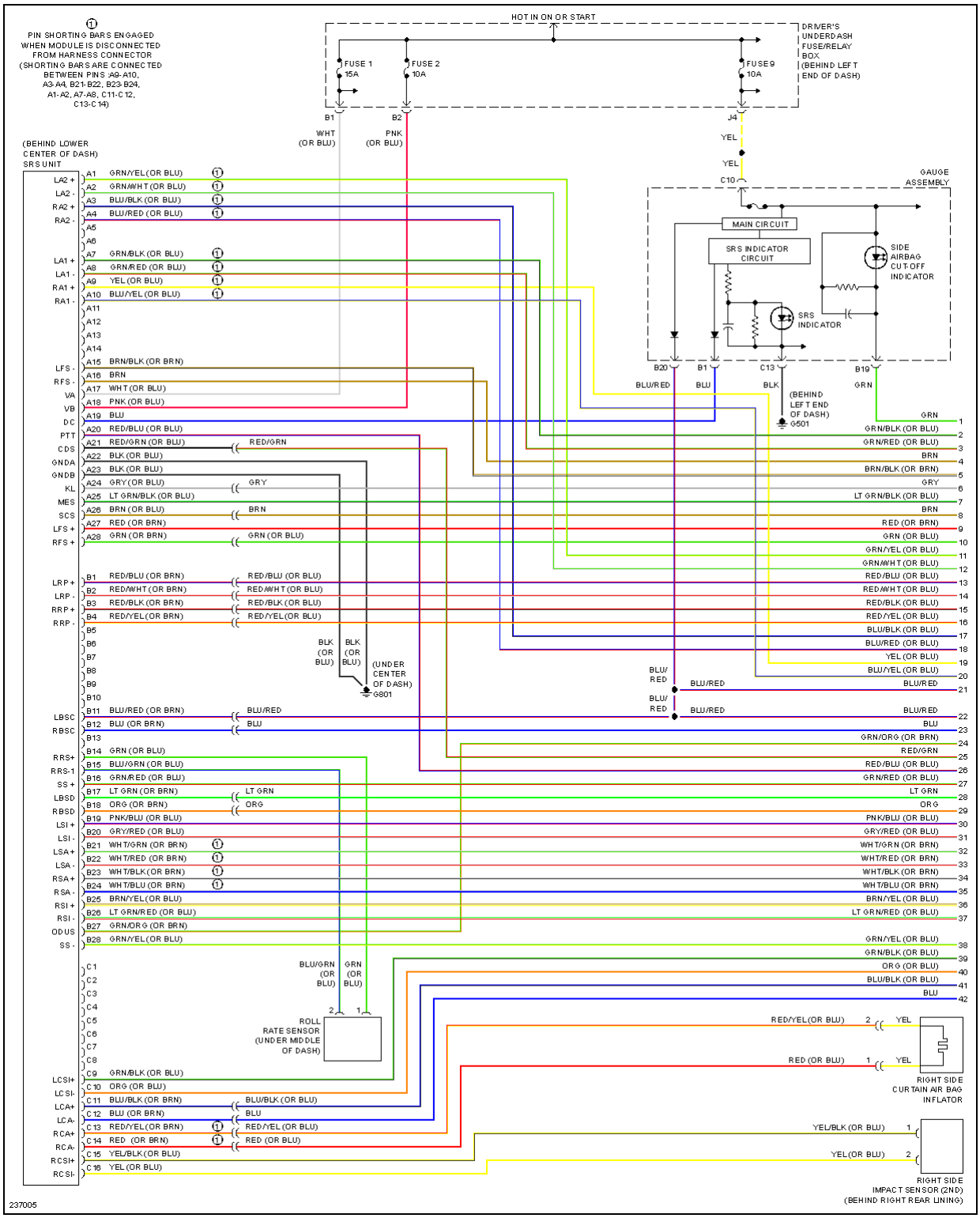

cardiagn.com

Fig. 68: Supplemental Restraints Circuit (1 of 3)

cardiagn.com

2006 Acura MDX

2006 SYSTEM WIRING DIAGRAMS Acura - MDX

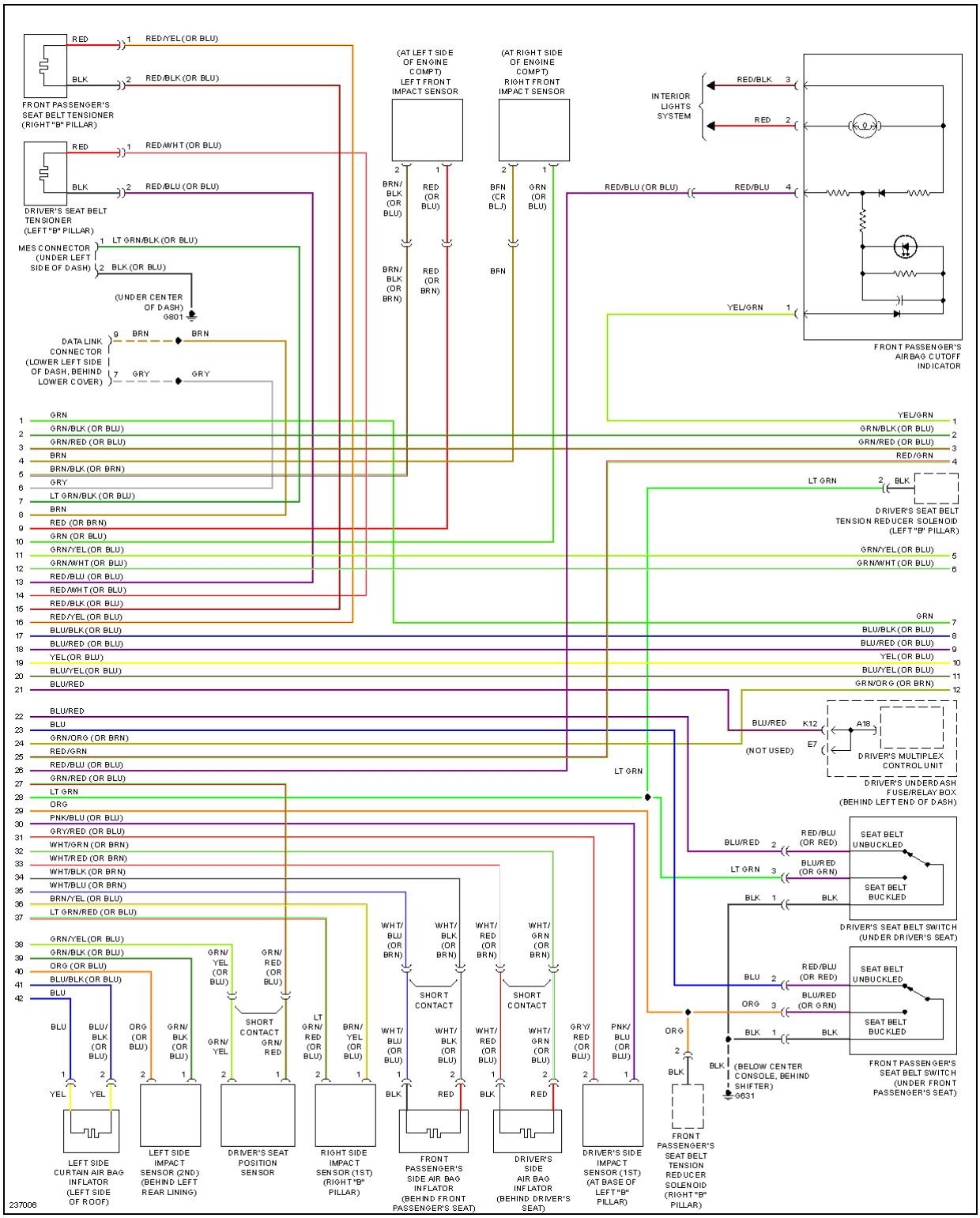

cardiagn.com

Fig. 69: Supplemental Restraints Circuit (2 of 3)

cardiagn.com

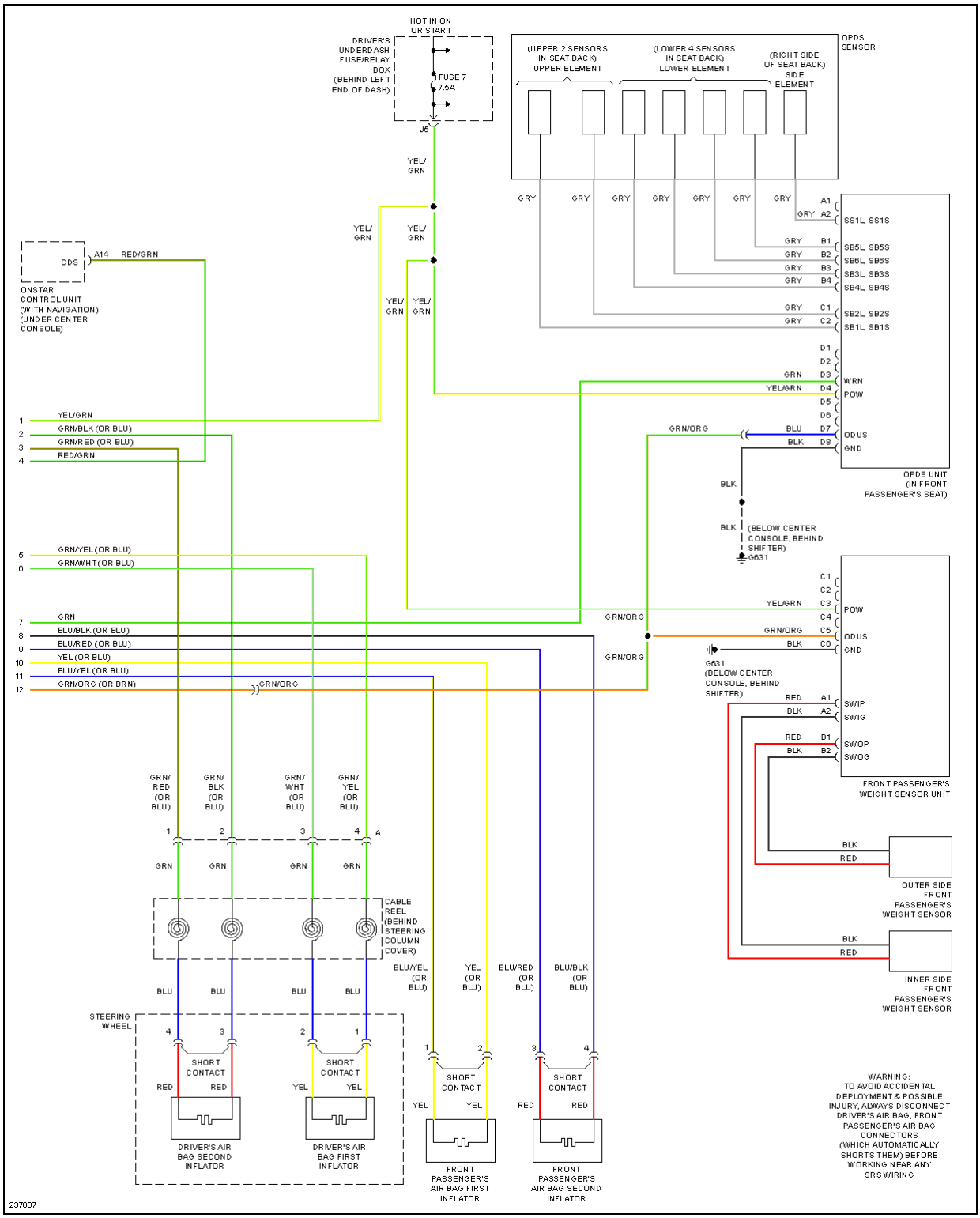

cardiagn.com

Fig. 70: Supplemental Restraints Circuit (3 of 3)

TRANSMISSION

cardiagn.com

2006 Acura MDX

2006 SYSTEM WIRING DIAGRAMS Acura - MDX

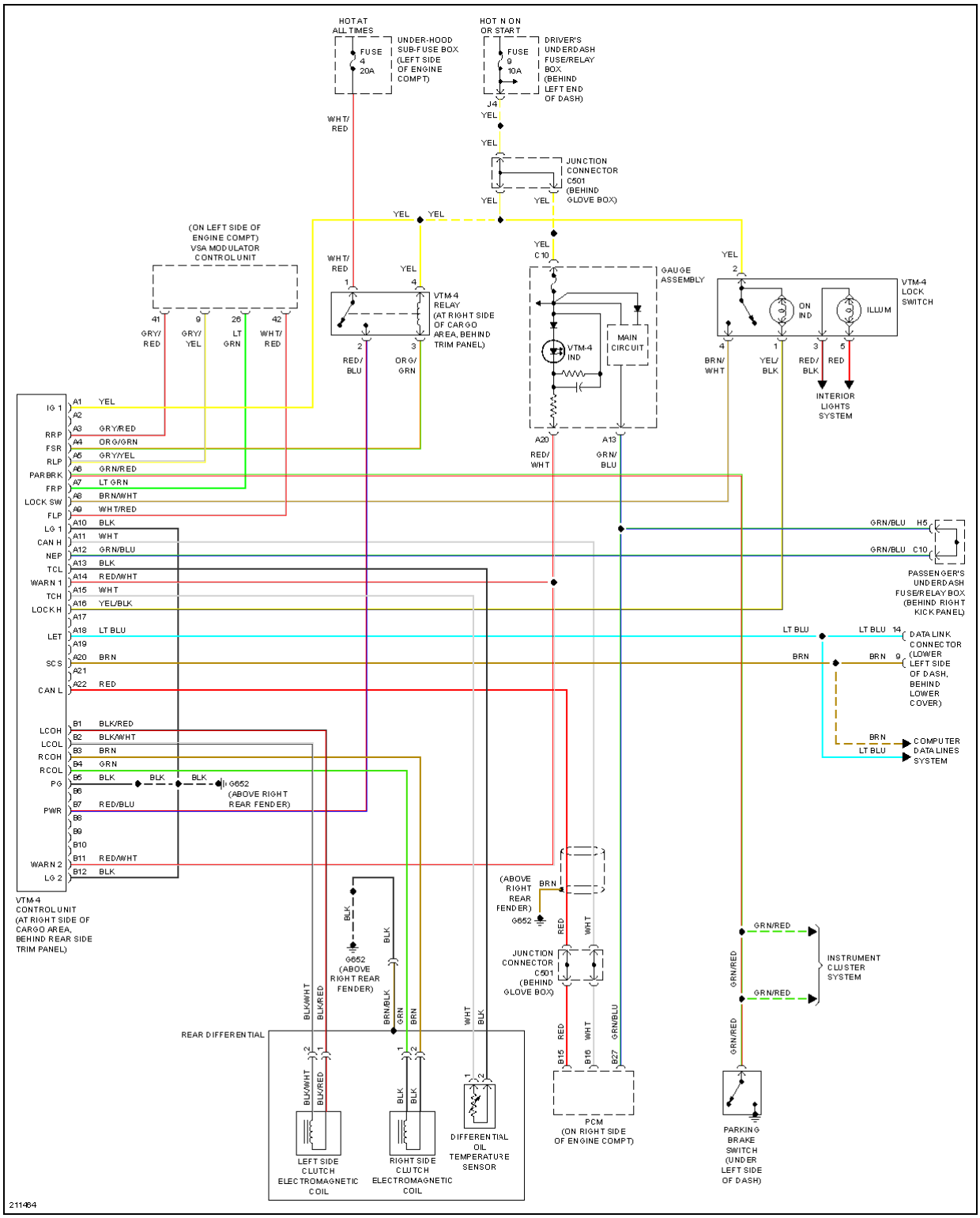

cardiagn.com

Fig. 71: 4WD Circuit

cardiagn.com

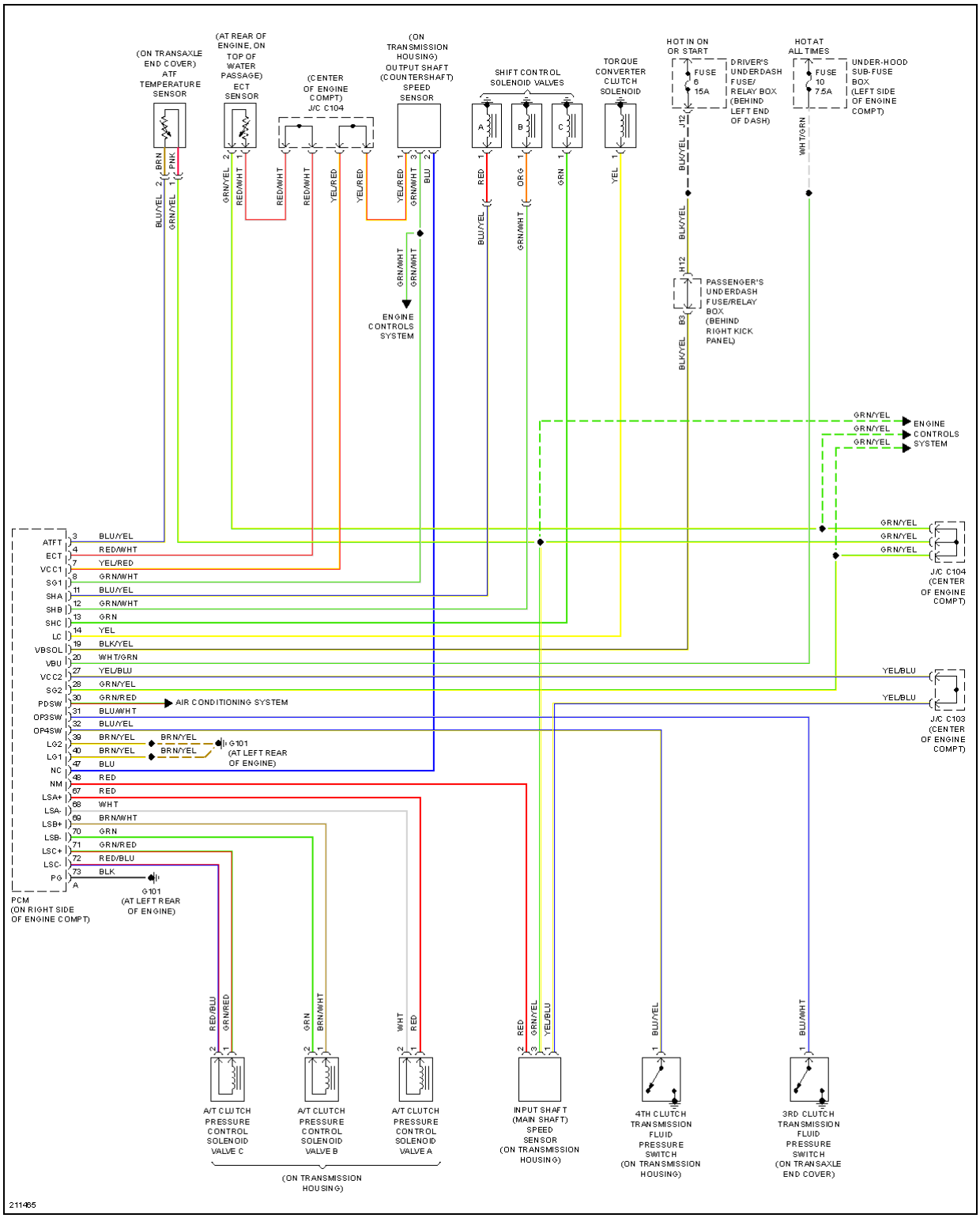

cardiagn.com

Fig. 72: A/T Circuit (1 of 2)

cardiagn.com

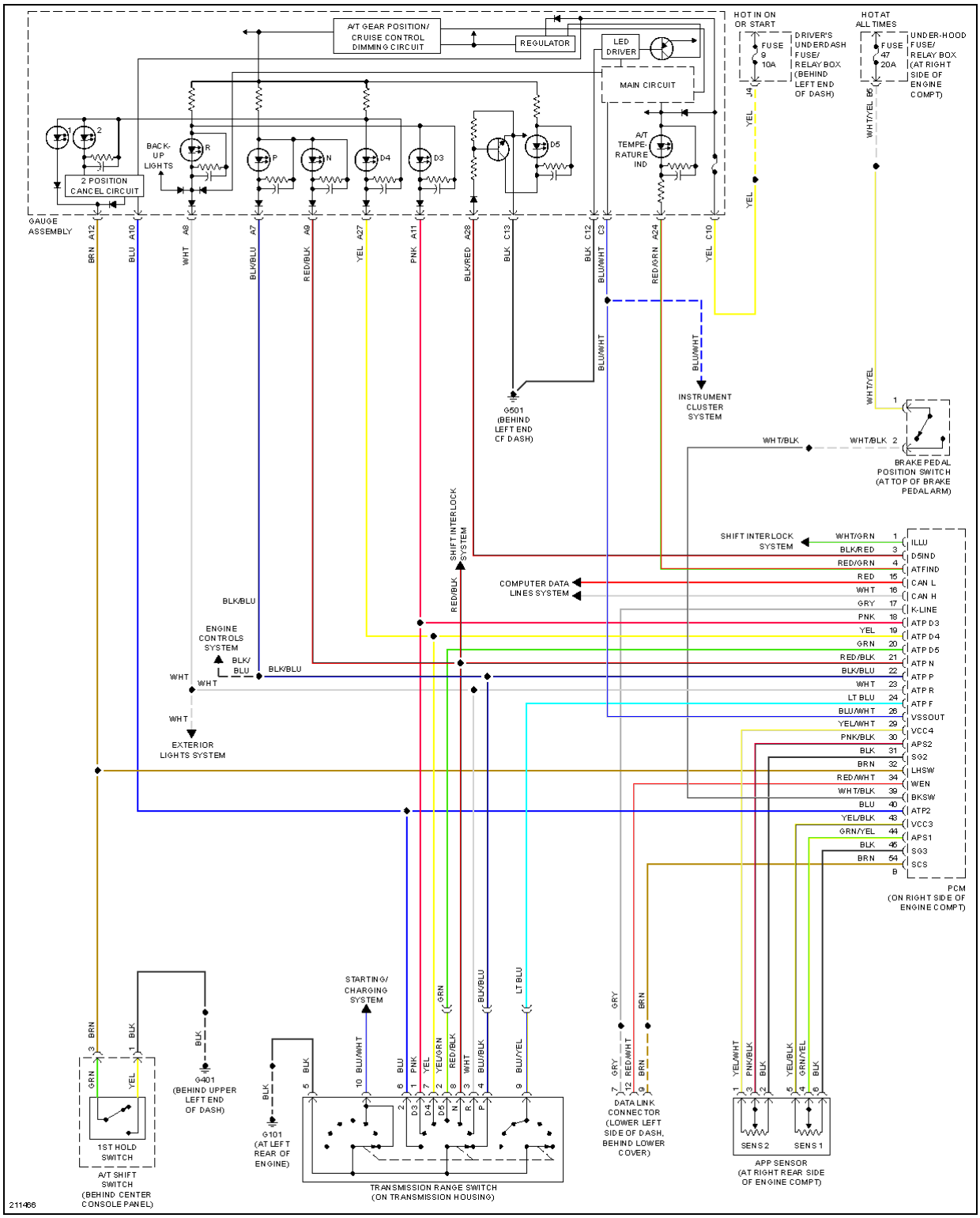

cardiagn.com

Fig. 73: A/T Circuit (2 of 2)

WARNING SYSTEMS

cardiagn.com

2006 Acura MDX

2006 SYSTEM WIRING DIAGRAMS Acura - MDX

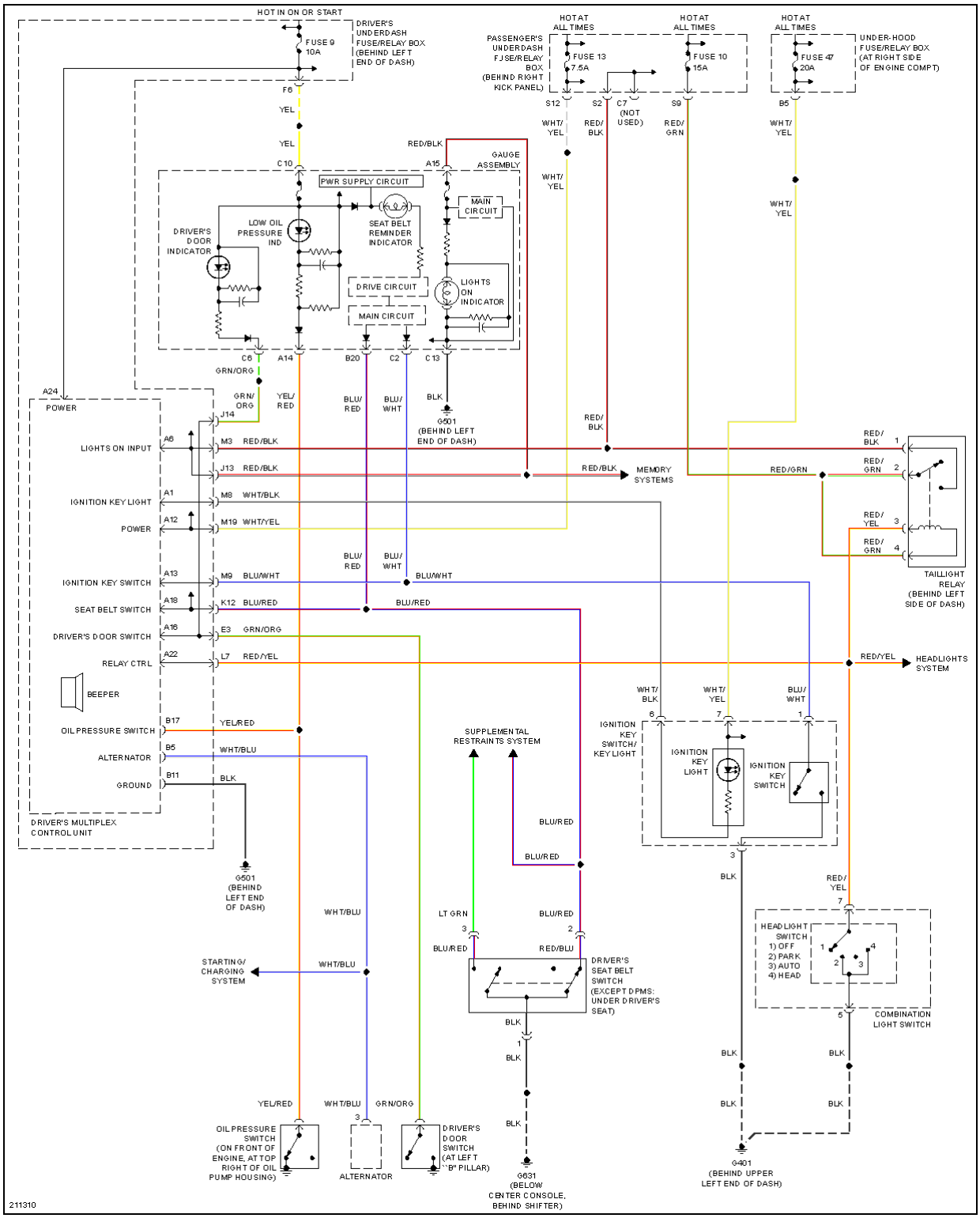

cardiagn.com

Fig. 74: Chime Circuit

cardiagn.com

2006 Acura MDX

2006 SYSTEM WIRING DIAGRAMS Acura - MDX

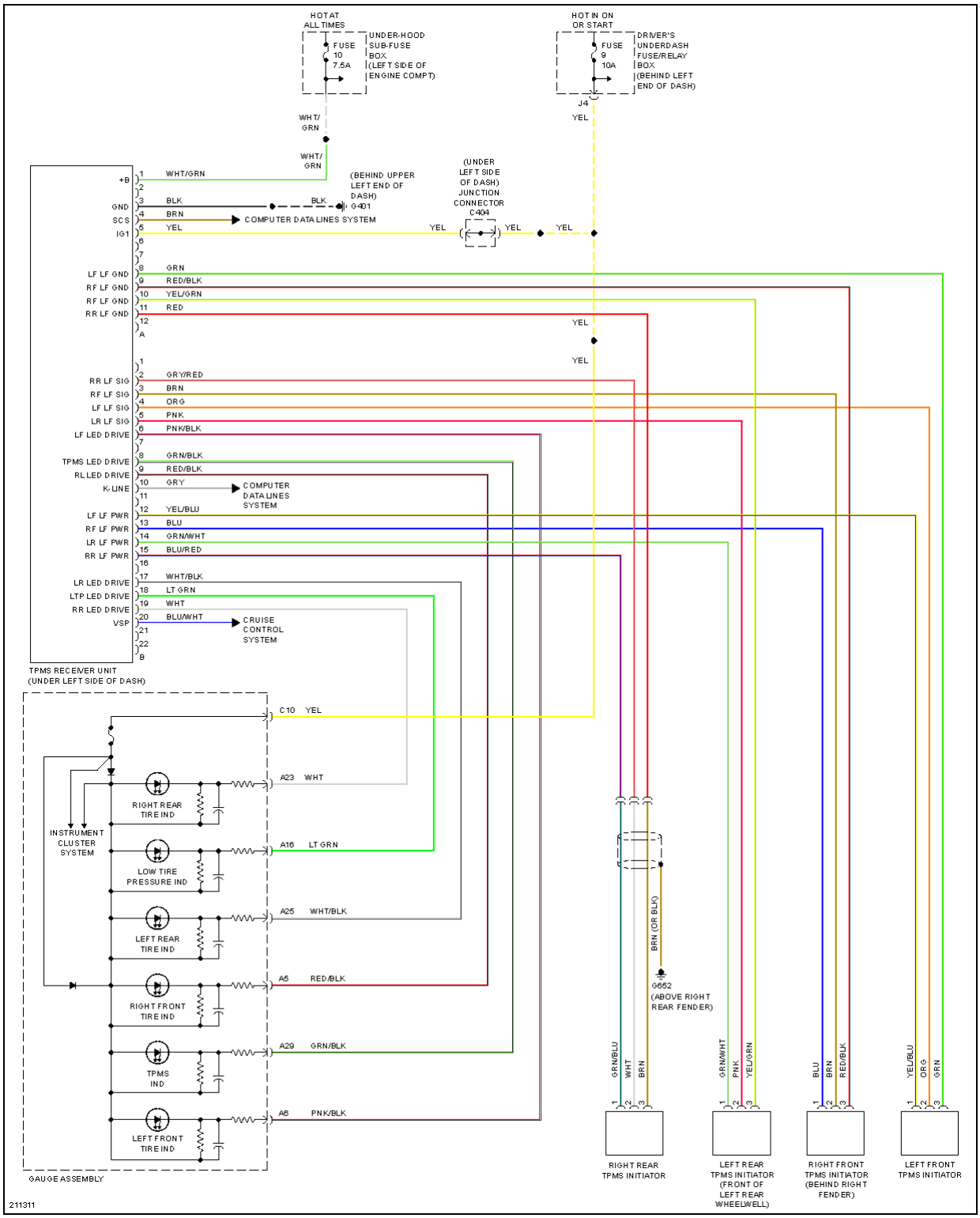

cardiagn.com

Fig. 75: Tire Pressure Monitoring Circuit

WIPER/WASHER

cardiagn.com

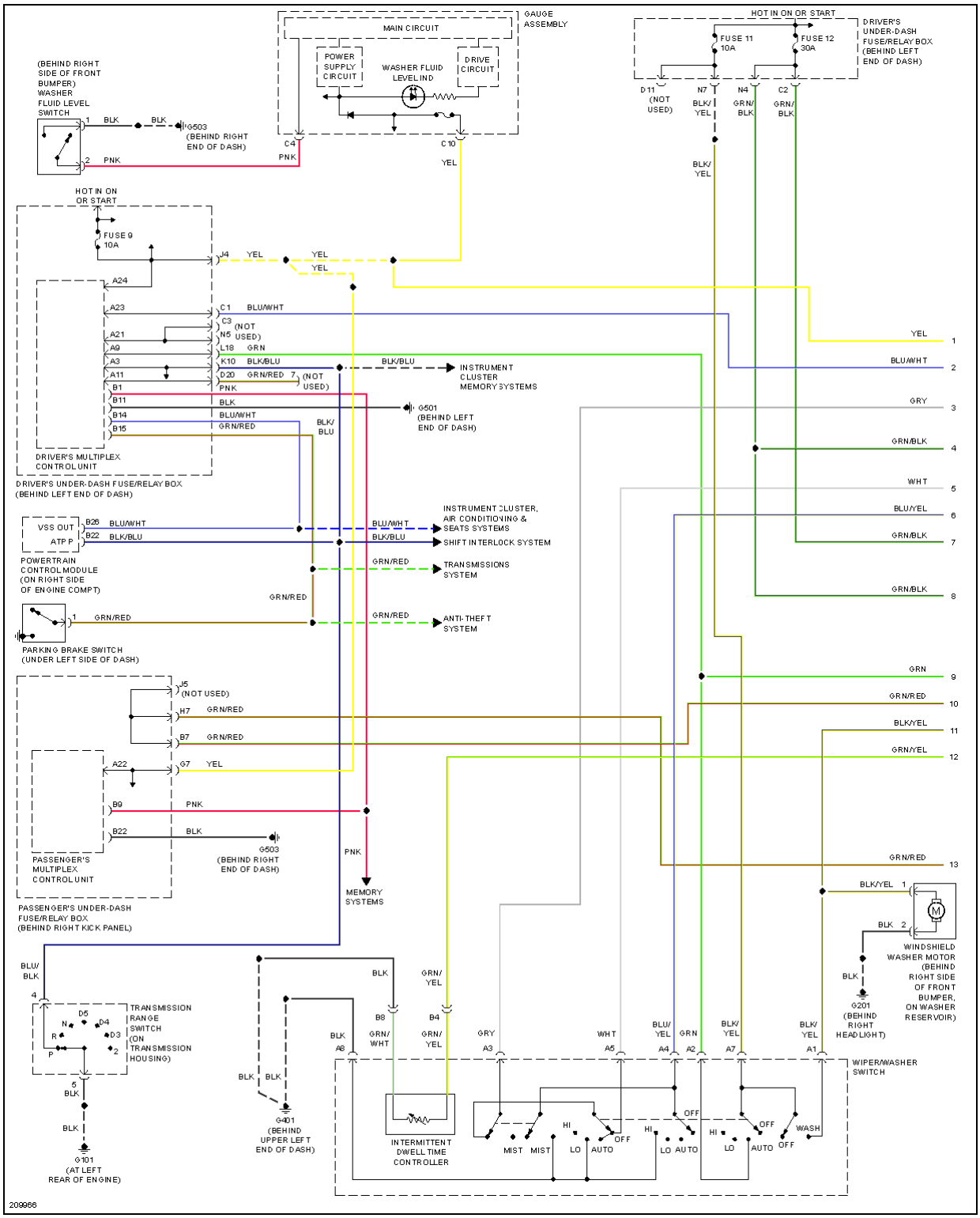

cardiagn.com

Fig. 76: Front Wiper/Washer Circuit, W/ Auto Wiper System (1 of 2)

cardiagn.com

2006 Acura MDX

2006 SYSTEM WIRING DIAGRAMS Acura - MDX

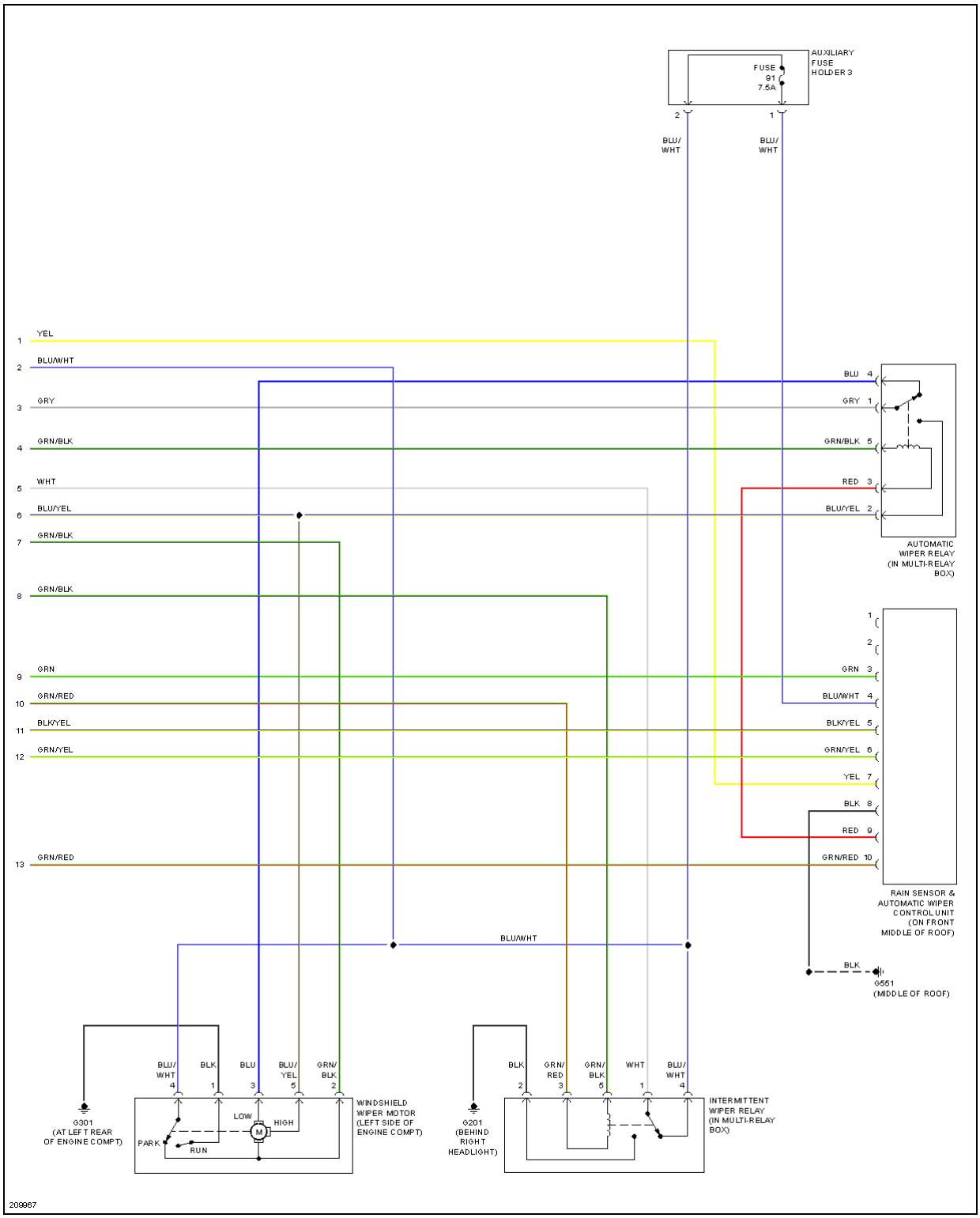

cardiagn.com

Fig. 77: Front Wiper/Washer Circuit, W/ Auto Wiper System (2 of 2)

cardiagn.com

2006 Acura MDX

2006 SYSTEM WIRING DIAGRAMS Acura - MDX

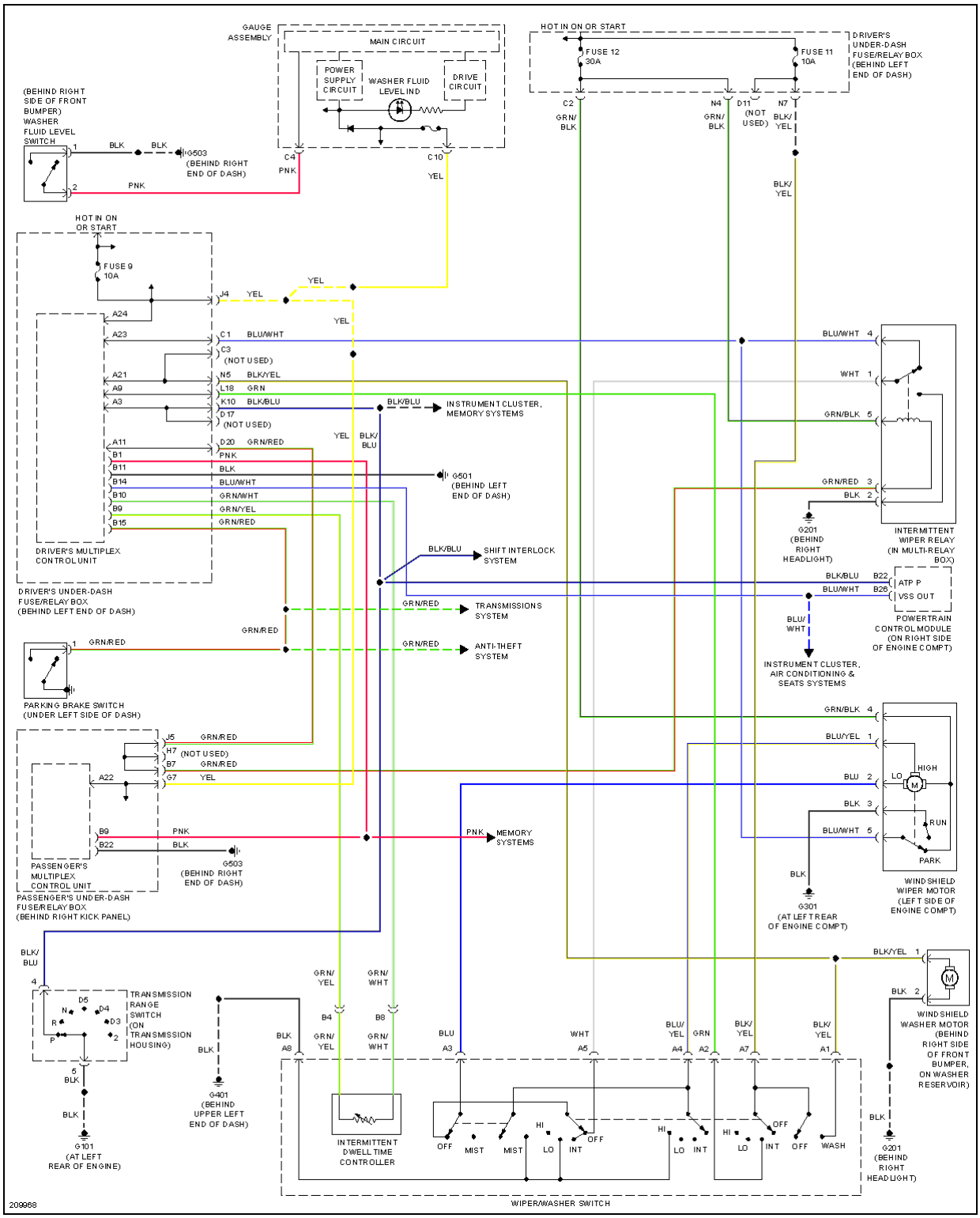

cardiagn.com

Fig. 78: Front Wiper/Washer Circuit, W/O Auto Wiper System

cardiagn.com

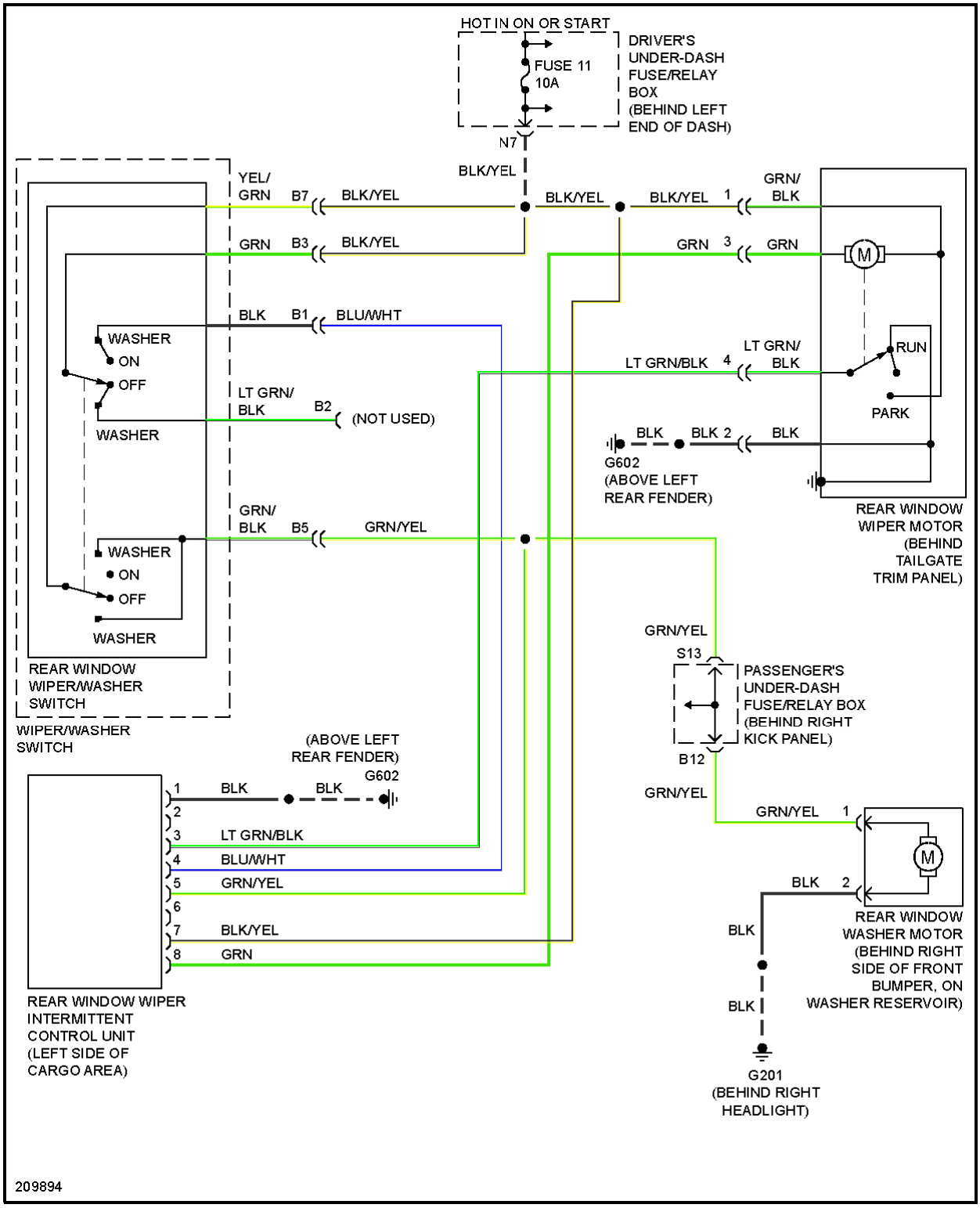

cardiagn.com

Fig. 79: Rear Wiper/Washer Circuit

cardiagn.com