Protected by copyright. Copying for private or commercial purposes, in part or in whole, is not permitted unless authorised by AUDI AG. AUDI AG does not guarantee or accept any liability with respect to the correctness of information in this document. Copyright by AUDI AG.

Workshop Manual

Audi A4 2015 ➤ , Audi A4 Avant 2015 ➤ , Audi A5 2016 ➤ , Audi A6 2011 ➤ , Audi A6 2019 ➤ , Audi A7 Sportback 2011 ➤ , Audi A7 Sportback 2018 ➤ , Audi A8 2018 ➤ , Audi Q5 2017 ➤ , Audi Q7 2016 ➤ , Audi Q8 2018 ➤

Servicing 6-cylinder TDI engine, common rail (EA 897 Gen. I)									
Engine ID	CSWB	CRTC	CVMD	CZZA	CZZB	CUEA	CVZA	CZVA	CZVB
	CZVC	CZVD	CZVE	CZVF	CRTD	CRTF	CRTE		

Edition 04.2019

List of Workshop Manual Repair Groups

Repair Group

00 - Technical data

10 - Removing and installing engine

13 - Crankshaft group

15 - Cylinder head, valve gear

17 - Lubrication

19 - Cooling

21 - Turbocharging/supercharging

23 - Mixture preparation - injection

26 - Exhaust system

28 - Glow plug system

Protected by copyright. Copying for private or commercial purposes, in part or in whole, is not permitted unless authorised by AUDI AG. AUDI AG does not guarantee or accept any liability with respect to the correctness of information in this document. Copyright by AUDI AG.

Technical information should always be available to the foremen and mechanics, because their careful and constant adherence to the instructions is essential to ensure vehicle road-worthiness and safety. In addition, the normal basic safety precautions for working on motor vehicles must, as a matter of course, be observed.

All rights reserved.
No reproduction without prior agreement from publisher.

Copyright © 2019 Audi AG, Ingolstadt

D4B80593910

Contents

00 - Technical data 1
1 Identification 1
1.1 Engine number/engine data 1
2 Safety precautions 2
2.1 Safety precautions when working on the fuel system 2
2.2 Safety precautions when working on vehicles with start/stop system 2
2.3 Safety precautions when using testers and measuring instruments during a road test 3
2.4 Safety precautions when working on the cooling system 3
2.5 Safety precautions when working on the exhaust system 3
2.6 Safety precautions when working on the SCR system 4
2.7 Safety precautions when working on the glow plug system 5
3 Repair instructions 6
3.1 Identification plates 6
3.2 Use of impact wrenches 6
3.3 Rules for cleanliness 7
3.4 General notes 7
3.5 General repair instructions 9
3.6 Foreign particles in engine 10
3.7 Contact corrosion 10
3.8 Routing and attachment of pipes, hoses and wiring 10
3.9 Installing radiators and condensers 11
3.10 Performing adaptions after renewing a component 11

10 - Removing and installing engine 12
1 Removing and installing engine 12
2 Assembly mountings 13
3 Engine cover panel 14
3.1 Removing and installing engine cover panel 14

13 - Crankshaft group 15
1 Cylinder block (pulley end) 15
1.1 Exploded view - cylinder block (pulley end) 15
1.2 Exploded view - sealing flange (pulley end) 17
1.3 Removing and installing poly V-belt 19
1.4 Removing and installing tensioner for poly V-belt 20
1.5 Removing and installing vibration damper 20
1.6 Removing and installing bracket for ancillaries 22
1.7 Removing and installing engine support 24
1.8 Renewing crankshaft oil seal (pulley end) 24
1.9 Removing and installing sealing flange (pulley end) 26
2 Cylinder block (gearbox end) 29
2.1 Exploded view - cylinder block (gearbox end) 29
2.2 Removing and installing drive plate 30
2.3 Renewing crankshaft oil seal (gearbox end) 32
3 Crankshaft 35
3.1 Exploded view - crankshaft 35
3.2 Crankshaft dimensions 36
3.3 Allocation of main bearing shells 37
3.4 Measuring axial clearance of crankshaft 37
3.5 Measuring radial clearance of crankshaft 38
3.6 Removing and installing sender wheel 38
3.7 Checking sender wheel 39

Protected by copyright. Copying for private or commercial purposes, in part or in whole, is not permitted unless authorised by AUDI AG. AUDI AG does not guarantee or assume any liability with respect to the correctness of information in this document. Copyright by AUDI AG.

4 Balance shaft . . . 41
4.1 Exploded view - balance shaft . . . 41
4.2 Removing and installing balance shaft . . . 41
4.3 Renewing roller bearing . . . 48
5 Pistons and conrods . . . 50
5.1 Exploded view - pistons and conrods . . . 50
5.2 Removing and installing pistons . . . 52
5.3 Measuring piston projection at TDC . . . 53
5.4 Checking pistons and cylinder bores . . . 56
5.5 Checking radial clearance of conrod bearings . . . 57

15 - Cylinder head, valve gear . . . 58
1 Timing chain cover . . . 58
1.1 Exploded view - timing chain cover . . . 58
1.2 Removing and installing timing chain cover . . . 61
2 Chain drive . . . 70
2.1 Exploded view - camshaft timing chains . . . 70
2.2 Exploded view - drive chain for high-pressure pump . . . 72
2.3 Exploded view - drive chain for oil pump . . . 73
2.4 Exploded view - intermediate drive . . . 74
2.5 Removing camshaft timing chain from camshafts . . . 74
2.6 Removing and installing camshaft timing chain . . . 85
2.7 Removing and installing drive chain for high-pressure pump . . . 94
2.8 Installing intermediate drive . . . 96
3 Cylinder head . . . 103
3.1 Exploded view - cylinder head . . . 103
3.2 Exploded view - cylinder head cover . . . 105
3.3 Removing and installing cylinder head . . . 107
3.4 Removing and installing cylinder head cover . . . 114
3.5 Removing and installing seals for injectors . . . 119
3.6 Checking compression . . . 120
4 Valve gear . . . 122
4.1 Exploded view - valve gear . . . 122
4.2 Measuring axial clearance of camshaft . . . 128
4.3 Measuring radial clearance of camshaft . . . 129
4.4 Removing and installing camshaft . . . 130
4.5 Removing and installing valve stem oil seals . . . 143
5 Inlet and exhaust valves . . . 150
5.1 Machining valve seats . . . 150
5.2 Checking valve guides . . . 150
5.3 Checking valves . . . 151
5.4 Valve dimensions . . . 151

17 - Lubrication . . . 152
1 Sump/oil pump . . . 152
1.1 Exploded view - sump/oil pump . . . 152
1.2 Engine oil . . . 156
1.3 Removing and installing sump (bottom section) . . . 156
1.4 Removing and installing sump (top section) . . . 158
1.5 Removing and installing oil pump . . . 161
1.6 Removing and installing oil level and oil temperature sender G266 . . . 163
2 Engine oil cooler . . . 164
2.1 Exploded view - engine oil cooler . . . 164
2.2 Removing and installing engine oil cooler . . . 165
2.3 Removing and installing temperature regulator for engine oil cooler . . . 166

Protected by copyright. Copying for private or commercial purposes, in part or in whole, is not permitted unless authorised by AUDI AG. AUDI AG does not guarantee or accept any liability with respect to the correctness of information in this document. Copyright by AUDI AG.

3 Oil filter/oil pressure switches . . . 169
3.1 Exploded view - oil filter . . . 169
3.2 Removing and installing oil pressure sender G10 . . . 170
3.3 Checking oil pressure . . . 170
3.4 Removing and installing oil filter housing . . . 171
3.5 Removing and installing valve for oil pressure control N428 . . . 172
3.6 Removing and installing oil temperature sender 2 G664 . . . 173

19 - Cooling . . . 174
1 Cooling system/coolant . . . 174
1.1 Connection diagram - coolant hoses . . . 174
1.2 Checking cooling system for leaks . . . 174
1.3 Draining and filling cooling system . . . 177
2 Coolant pump/thermostat assembly . . . 183
2.1 Exploded view - coolant pump . . . 183
2.2 Exploded view - electric coolant pump . . . 184
2.3 Exploded view - thermostat . . . 185
2.4 Exploded view - coolant temperature senders . . . 187
2.5 Removing and installing electric coolant pump . . . 187
2.6 Removing and installing coolant pump . . . 187
2.7 Removing and installing thermostat housing . . . 189
2.8 Removing and installing map-controlled engine cooling system thermostat F265 . . . 190
2.9 Removing and installing coolant temperature sender G62 . . . 191
2.10 Removing and installing temperature sender for engine temperature regulation G694 . . . 192
2.11 Removing and installing coolant temperature sender 2 G802 . . . 193
2.12 Removing and installing coolant valves . . . 194
3 Coolant pipes . . . 196
4 Radiator/radiator fans . . . 197

21 - Turbocharging/supercharging . . . 198
1 Turbocharger . . . 198
1.1 Exploded view - turbocharger . . . 198
1.2 Removing and installing turbocharger . . . 201
2 Charge air system . . . 206
2.1 Exploded view - charge air system . . . 206
2.2 Exploded view - hose connections for charge air system . . . 206
2.3 Removing and installing charge air cooler . . . 207
2.4 Removing and installing charge pressure sender G31 . . . 207
2.5 Checking charge air system for leaks . . . 207

23 - Mixture preparation - injection . . . 210
1 Injection system . . . 210
1.1 Overview - fuel system . . . 210
1.2 Overview of fitting locations - injection system . . . 210
1.3 Filling and bleeding fuel system . . . 210
1.4 Checking fuel system for leaks . . . 211
2 Vacuum system . . . 212
2.1 Connection diagram - vacuum system . . . 212
2.2 Checking vacuum system . . . 212
3 Air cleaner . . . 213
4 Intake manifold . . . 214
4.1 Exploded view - intake manifold . . . 214
4.2 Removing and installing intake manifold (top section) . . . 217
4.3 Removing and installing intake manifold (bottom section) . . . 219

Protected by copyright. Copying for private or commercial purposes, in part or in whole, is not permitted unless authorised by AUDI AG. AUDI AG does not guarantee or accept any liability with respect to the correctness of information in this document. Copyright by AUDI AG.

4.4 Removing and installing intake manifold flap motor V157 . . . 220
4.5 Removing and installing throttle valve module J338 . . . 222

5 Injectors/high-pressure reservoir (rail) . . . 224
5.1 Exploded view - injectors . . . 224
5.2 Checking injectors . . . 228
5.3 Performing adaption of correction values for injectors . . . 228
5.4 Checking for injectors sticking open . . . 229
5.5 Checking return flow rate of injectors with engine running . . . 232
5.6 Checking return flow rate of injectors at starter cranking speed . . . 236
5.7 Checking pressure retention valve in fuel return line . . . 238
5.8 Removing and installing injectors . . . 239
5.9 Removing and installing high-pressure pipes . . . 244
5.10 Removing and installing high-pressure reservoir (rail) . . . 246

6 Senders and sensors . . . 251
6.1 Removing and installing intake air temperature sender G42 . . . 251
6.2 Removing and installing air mass meter G70 . . . 251
6.3 Removing and installing fuel temperature sender G81 . . . 251
6.4 Removing and installing fuel pressure sender G247 . . . 254
6.5 Removing and installing fuel pressure sender for low pressure G410 . . . 256
6.6 Checking fuel pressure regulating valve N276 . . . 256
6.7 Removing and installing fuel pressure regulating valve N276 . . . 257
6.8 Removing and installing pressure differential sender G505 . . . 258

7 High-pressure pump . . . 259
7.1 Exploded view - high-pressure pump . . . 259
7.2 Removing and installing high-pressure pump . . . 261

8 Lambda probe . . . 265
8.1 Exploded view - Lambda probe . . . 265
8.2 Removing and installing Lambda probe . . . 266
8.3 Removing and installing NOx senders . . . 267
8.4 Removing and installing particulate sensor G784 . . . 267

9 Engine control unit . . . 268

Protected by copyright. Copying for private or commercial purposes, in part or in whole, is not permitted unless authorised by AUDI AG. AUDI AG does not guarantee or accept any liability with respect to the correctness of information in this document. Copyright by AUDI AG.

26 - Exhaust system . . . 269

1 Exhaust pipes/silencers . . . 269
1.1 Exploded view - silencers . . . 269
1.2 Removing and installing front exhaust pipe . . . 269
1.3 Separating exhaust pipes/silencers . . . 269
1.4 Removing and installing silencers . . . 269
1.5 Stress-free alignment of exhaust system . . . 269
1.6 Checking exhaust system for leaks . . . 269

2 Emission control system . . . 270

3 SCR (selective catalytic reduction) system . . . 271
3.1 Exploded view - reducing agent tank . . . 271
3.2 Exploded view - reducing agent supply line . . . 271
3.3 Draining reducing agent tank . . . 273
3.4 Removing and installing reducing agent tank . . . 273
3.5 Removing and installing injector for reducing agent N474 . . . 273
3.6 Removing and installing control unit for reducing agent metering system J880 . . . 275

4 Exhaust gas temperature control . . . 276
4.1 Exploded view - exhaust gas temperature control . . . 276
4.2 Removing and installing exhaust gas temperature sender 1 G235 . . . 278
4.3 Removing and installing exhaust gas temperature sender 2 G448 . . . 279
4.4 Removing and installing exhaust gas temperature sender 3 G495 . . . 280
4.5 Removing and installing exhaust gas temperature sender 4 G648 . . . 282

4.6 Removing and installing exhaust gas temperature sender 5 G815 284
4.7 Removing and installing catalytic converter temperature sensor 1 G20 284
5 Exhaust gas recirculation 286
5.1 Exploded view - exhaust gas recirculation system 286
5.2 Removing and installing exhaust gas recirculation cooler 291
5.3 Removing and installing exhaust gas recirculation temperature sensor G98 296
5.4 Installing repair kit for exhaust gas recirculation cooler 297
6 Exhaust manifold 300
6.1 Exploded view - exhaust manifold 300
6.2 Removing and installing exhaust manifold 301

28 - Glow plug system 302
1 Glow plug system 302
1.1 Exploded view - glow plug system 302
1.2 Removing and installing glow plug 303
1.3 Removing and installing Hall sender G40 306
1.4 Removing and installing engine speed sender G28 306

Protected by copyright. Copying for private or commercial purposes, in part or in whole, is not permitted unless authorised by AUDI AG. AUDI AG does not guarantee or accept any liability with respect to the correctness of information in this document. Copyright by AUDI AG.

Protected by copyright. Copying for private or commercial purposes, in part or in whole, is not permitted unless authorised by AUDI AG. AUDI AG does not guarantee or accept any liability with respect to the correctness of information in this document. Copyright by AUDI AG.

00 – Technical data

1 Identification

(ARL006306; Edition 04.2019)

⇒ "1.1 Engine number/engine data", page 1

1.1 Engine number/engine data

Engine number

- The engine number (engine code and serial number) can be found on the front of the cylinder block -arrow-.
- There is also a sticker on the intake manifold showing the engine code and serial number.
- In addition, the engine code is listed on the vehicle data stickers.

For engine data refer to ⇒ Technical data for engines; Rep. gr. 00 ; Overview of engines .

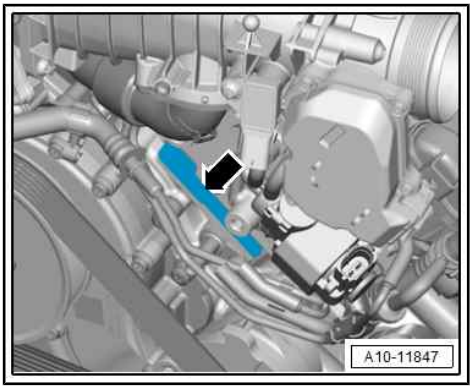

Protected by copyright. Copying for private or commercial purposes, in part or in whole, is not permitted unless authorised by AUDI AG. AUDI AG does not guarantee or accept any liability with respect to the correctness of information in this document. Copyright by AUDI AG.

2 Safety precautions

⇒ “2.1 Safety precautions when working on the fuel system”, page 2

⇒ “2.2 Safety precautions when working on vehicles with start/stop system”, page 2

⇒ “2.3 Safety precautions when using testers and measuring instruments during a road test”, page 3

⇒ “2.4 Safety precautions when working on the cooling system”, page 3

⇒ “2.5 Safety precautions when working on the exhaust system”, page 3

⇒ “2.6 Safety precautions when working on the SCR system”, page 4

⇒ “2.7 Safety precautions when working on the glow plug system”, page 5

Protected by copyright. Copying for private or commercial purposes, in part or in whole, is not permitted unless authorised by AUDI AG. AUDI AG does not guarantee or accept any liability with respect to the correctness of information in this document. Copyright by AUDI AG.

2.1 Safety precautions when working on the fuel system

Risk of injury - fuel system operates under high pressure

The fuel system is pressurised. There is a risk of injury as fuel may spray out.

Before opening the fuel system:

– Put on safety goggles.

– Put on protective gloves.

– Release pressure (wrap a clean cloth around connection and open connection carefully).

Risk of fire due to escaping fuel

If the battery is connected, the door contact switch activates the fuel pump when the driver's door is opened. Escaping fuel may ignite, causing a fire.

– Before opening the fuel system, disconnect power supply to fuel pump.

2.2 Safety precautions when working on vehicles with start/stop system

Risk of injury - engine may start unexpectedly

The engine can start unexpectedly if the vehicle's start/stop system is activated. A message in the instrument cluster indicates whether the start/stop system is activated.

– To deactivate the start/stop system, switch off the ignition.

2.3 Safety precautions when using testers and measuring instruments during a road test

Risk of injury if test equipment is not secured

If an accident occurs and the front passenger's airbag is triggered, test equipment which is not secured adequately may be catapulted through the vehicle with potentially serious consequences.

– Secure test equipment on the rear seat with a strap.

Or:

– Have a second mechanic operate test equipment on the rear seat.

Protected by copyright. Copying for private or commercial purposes, in part or in whole, is not permitted without the prior written consent of AUDI AG. AUDI AG does not guarantee or accept any liability with respect to the correctness of information in this document. Copyright by AUDI AG.

2.4 Safety precautions when working on the cooling system

Risk of scalding as hot coolant can escape

The cooling system is under pressure when the power unit is hot. Risk of scalding due to hot steam and hot coolant.

– Put on protective gloves.

– Put on safety goggles.

– Cover filler cap on expansion tank with a cloth and open carefully to release pressure.

2.5 Safety precautions when working on the exhaust system

Risk of injury caused by components of the exhaust system

Danger of injury to hands and other parts of the body due to hot or sharp parts of the exhaust system.

– Allow exhaust system to cool down.

– Put on protective gloves.

Risk to health due to chemical substances in components of exhaust system

Risk to health if components of system for after-treatment of exhaust gases are dismantled.

– Do NOT cut, saw or open components of system for after-treatment of exhaust gases.

Risk of injury when disconnecting the exhaust system

There is a risk of eye irritation caused by soot particles in the air.

– Put on safety goggles.

2.6 Safety precautions when working on the SCR system

Risk of injury caused by reducing agent

Reducing agent can cause eye and skin irritation, damage to the respiratory tract and poisoning.

– Put on safety goggles.

– Put on protective gloves.

– Wear protective clothing.

– Ensure that there is sufficient fresh air. In enclosed spaces, switch on the exhaust extraction system.

Protected by copyright. Copying for private or commercial purposes, in part or in whole, is not permitted unless authorised by AUDI AG. AUDI AG does not guarantee or accept any liability with respect to the correctness of information in this document. Copyright by AUDI AG.

Caution

Reducing agent must never be reused. For information regarding storage and disposal see ⇒ ServiceNet → Environmental protection → Workshop waste management . Contact Importer for country-specific information regarding storage and disposal.

When removing and installing components on the SCR system, please note the following:

♦ The reducing agent tank must be empty when you are working on the SCR system. Refer to the corresponding work description to find out when the reducing agent tank must be drained.

Manual drawing back of reducing agent

• The reducing agent line must be drained using a ⇒ Vehicle diagnostic tester in `Guided Functions` mode, `Drain metering line`.

2.7 Safety precautions when working on the glow plug system

It is important to note the following points regarding ceramic glow plugs:

Caution

- *Due to the special properties of the material used, ceramic glow plugs are easily damaged and require extra care when handling and removing/installing.*
- *Transport and store only in original packaging or packed separately in plastic tubes with foam inserts.*
- *Do not remove new ceramic glow plugs from packaging until they are ready to be fitted.*
- *Ceramic glow plugs are sensitive to knocks and bending. For this reason, ceramic glow plugs which have been dropped (even from a height of only about 2 cm) must not be installed, even if no damage is apparent (hair-line cracks may not be visible).*
- *Always install a new ceramic glow plug if you are not sure the old one is in perfect condition.*
- *Damaged glow plugs (e.g. heater pin of ceramic glow plug is damaged) will invariably cause engine damage.*
- *If the heater pin of the glow plug is damaged, the fragments must be removed from the combustion chamber before starting the engine for the first time, otherwise this will invariably cause mechanical damage (piston seizure). If necessary, the cylinder head must be removed.*
- *The software of the engine control unit is specifically adapted to either the ceramic or the metal glow plugs, so it is important to install the correct type.*
- *Mixed installation of ceramic glow plugs and metal glow plugs on the same engine is not permissible.*
- *After removal, the cylinder head must not be put down on the gasket side with the glow plugs still installed, because the glow plugs project beyond the gasket surface.*
- *When (re-)installing the glow plug, visually inspect the ceramic pin to make sure it is not damaged.*

Protected by copyright. Copying for private or commercial purposes, in part or in whole, is not permitted unless authorised by AUDI AG. AUDI AG does not guarantee or accept any liability with respect to the correctness of information in this document. Copyright by AUDI AG.

3 Repair instructions

⇒ “3.1 Identification plates”, page 6

⇒ “3.2 Use of impact wrenches”, page 6

⇒ “3.3 Rules for cleanliness”, page 7

⇒ “3.4 General notes”, page 7

⇒ “3.5 General repair instructions”, page 9

⇒ “3.6 Foreign particles in engine”, page 10

⇒ “3.7 Contact corrosion”, page 10

⇒ “3.8 Routing and attachment of pipes, hoses and wiring”, page 10

⇒ “3.9 Installing radiators and condensers”, page 11

⇒ “3.10 Performing adaptions after renewing a component”, page 11

3.1 Identification plates

When renewing vehicle components, the identification plates on the old parts that have a replacement part number (see ⇒ Electronic parts catalogue) must be attached to the new parts due to approval regulations.

Protected by copyright. Copying for private or commercial purposes, in part or in whole, is not permitted unless authorised by AUDI AG. AUDI AG does not guarantee or accept any liability with respect to the correctness of information in this document. Copyright by AUDI AG.

3.2 Use of impact wrenches

In general, it is permitted to use an impact wrench to unscrew bolts and nuts. An exception to this is when work is performed inside an open high-voltage battery. For this work, it is not permitted to use an impact wrench.

An impact wrench may be used to screw in bolts and nuts when performing repair work if the following requirements are observed. In general, electric and compressed-air impact wrenches should be used.

Requirements:

- Only screw in bolts with locking fluid or self-locking nuts at low speed.
- Use a suitable impact wrench with variable speed and adjustable torque range.
- Use suitable bits when working in the vicinity of sensitive surfaces, e.g. plastic-coated bits for aluminium rims.
- When working in the vicinity of natural gas systems, observe the information in the Workshop Manual “Natural gas engines - General information”.

Use:

- Fit bolts/nuts by hand.
- Only use an impact wrench to screw in bolts/nuts until the head of the bolt/nut makes contact and then continue tightening with a torque wrench.
- Clean threaded pins before unscrewing the bolt/nut.

3.3 Rules for cleanliness

Even small quantities of dirt can lead to defects. For this reason, please observe the following rules when working on the fuel supply system, turbocharger and injection system:

- Clean connections and surrounding area thoroughly with engine cleaner or brake cleaner and dry cleaned area before loosening.
- Immediately seal open lines and connections with plugs (thoroughly cleaned), for example from engine bung set - VAS 6122- .
- After removal, place parts on a clean surface and cover them. Only use lint-free cloths.
- Carefully cover or seal open components if repairs cannot be carried out immediately.
- Only install clean components; replacement parts should only be unpacked immediately prior to installation. Do not use parts that have not been stored in the proper packaging (e.g. in tool boxes etc.).
- Do not work with compressed air when the system is open. If possible, do not move vehicle.
- Protect unplugged electrical connectors against dirt and moisture and make sure connections are dry when attaching.
- Also ensure that no diesel fuel comes into contact with the coolant hoses. Should this occur, the hoses must be cleaned immediately. Damaged hoses must be renewed.

3.4 General notes

Fuel supply/injection

- The engine control unit has a self-diagnosis capability. Before carrying out repairs and fault finding, the event memory must be interrogated. The vacuum hoses and connections must also be checked (unmetered air).
- A voltage of at least 11.5 V is required for proper operation of the electrical components.
- Do not use sealants containing silicone. Particles of silicone drawn into the engine will not be burnt in the engine and will damage the Lambda probe.
- The vehicles are fitted with a crash fuel shut-off system. This system is designed to reduce the risk of a vehicle fire after a crash by deactivating the fuel pump.
- At the same time, this system also improves the engine's starting performance. When the driver's door is opened, the fuel pump is activated for 2 seconds in order to build up pressure in the fuel system ⇒ page 2 .

Protected by copyright. Copying for private or commercial purposes, in part or in whole, is not permitted without the prior written consent of AUDI AG. AUDI AG does not guarantee or accept any liability with regard to the correctness of information in this document. Copyright by AUDI AG.

Risk of irreparable damage to fuel pump

After working on the fuel system, the fuel pump may be irreparably damaged if it is allowed to run while empty.

– Never allow fuel pump to run while it is empty.

– Fill/bleed fuel pump.

Exhaust system

Risk of damage to flexible joint

The flexible joint can be damaged or develop leaks if it is handled incorrectly.

– Do not bend flexible joint more than 10°.

– Install flexible joint so that it is not under tension.

SCR (selective catalytic reduction) system

Risk of damage caused by reducing agent

Reducing agent which has come into contact with trim or body components can crystallise after some time and damage the affected surfaces.

– Ensure that no reducing agent makes contact with parts of trim or body.

– Clean any surfaces which have come into contact with reducing agent immediately with water and a cloth.

Glow plug system

- The glow plug system is activated via the automatic glow period control unit - J179- . The control unit is self-diagnosis compatible.
- Fitting location of automatic glow period control unit -J179- ⇒ Current flow diagrams, Electrical fault finding and Fitting locations.
- A fault is stored in the engine control unit - J623- if a fault occurs in the glow plug system.
- Checking glow plug system ⇒ Vehicle diagnostic tester
- For faster starting, the vehicle is equipped with electronically controlled glow plugs and a separate glow period control unit.
- Each glow plug is activated and diagnosed separately.

Protected by copyright. Copying for private or commercial purposes, in part or in whole, is not permitted unless authorised by AUDI AG. AUDI AG does not guarantee or accept any liability with respect to the correctness of information in this document. Copyright by AUDI AG.

Note

- *Wait for 60 seconds each time after performing final control diagnosis of the glow period control unit. The ignition must remain switched on.*
- *If you do not wait for 60 seconds (if ignition is switched off and immediately switched on again), the glow plugs can be damaged (due to repeated pre-heating).*
- *The activation of the glow plugs is controlled according to coolant temperature.*

Running gear, axles, steering

Risk of damage to components

Lowering the vehicle onto its wheels can damage components if the assembly mountings, steering rack or subframe cross brace are not fitted as specified.

– Never lower vehicle onto its wheels with suspension components unfastened or detached.

– Never support weight of vehicle on subframe or subframe cross brace with suspension components unfastened or detached.

Protected by copyright. Copying for private or commercial purposes, in part or in whole, is not permitted unless authorised by AUDI AG. AUDI AG does not guarantee or accept any liability with respect to the correctness of information in this document. Copyright by AUDI AG.

3.5 General repair instructions

Caution

The high-pressure pump has very close tolerances and must not be allowed to run without fuel. To prevent this and to enable the engine to start quickly after parts have been renewed, it is important to observe the following:

- *If components of the fuel system between the fuel tank and the high-pressure pump are removed or renewed, the fuel system must be filled and bled before the engine is started for the first time* *⇒ page 210* *.*

- Clean tools and workbench etc. before working on the injection system.
- Before installing, check the injectors and their surroundings visually; they must be undamaged and clean. Make sure the injector bores in the cylinder head are clean. Wipe out if necessary using a clean cloth, taking care not to cause damage. Do not use sharp objects of any kind.
- If the high-pressure fuel lines are to be re-used, you must mark them before removal. High-pressure pipes must always be re-installed on the same cylinder.
- Take care not to damage the injectors when removing the old copper seals.
- Check all new O-rings for damage before installing. Lubricate O-rings with engine oil or assembly oil before installing.
- Position high-pressure pipes so they are free of stress. Tighten all unions lightly to start with before tightening to final torque.
- Never attempt to bend high-pressure fuel lines to shape.
- When working on any parts of the high-pressure fuel system, tools may only be used for loosening and tightening pipe unions. All other components must always be removed and installed by hand without using tools or other equipment.
- Press the fuel return hoses onto the injectors by hand from above so that they engage audibly on each injector (do not press in the release pins when doing this). Then press down the release pin after connecting the return line. Check that the fuel return hoses are seated securely and sealed properly by pulling them by hand from above.
- Do not dismantle individual common rail components. If there is a fault, the complete components must be renewed.

- When the engine is running, do not perform any repairs to the common rail system.
- Do not bleed the common rail system by unfastening high-pressure components after the engine has been started.
- Use correct type of fasteners for electrical wiring (as original equipment) ⇒ Electronic parts catalogue .
- Fuel hoses in engine compartment must only be secured with spring-type clips. O-type clips or screw-type clips must not be used.

3.6 Foreign particles in engine

- When performing assembly work on the engine, all open passages in the intake and exhaust systems must be sealed with suitable plugs (e.g. from engine bung set - VAS 6122-) to prevent foreign particles from entering the engine.
- In the event of mechanical damage to one of the cylinder banks, the intake and exhaust systems and combustion chambers of the opposite cylinder bank must always be examined to prevent further damage occurring later.

Note

If the turbocharger has suffered mechanical damage
⇒ page 201

3.7 Contact corrosion

Contact corrosion can occur if unsuitable fasteners are used (e.g. bolts, nuts, washers, etc.).

For this reason, only fasteners with a special surface coating are fitted.

Copyright by AUDI AG. Copying for private or commercial purposes, in part or in whole, is not permitted unless authorised by AUDI AG. AUDI AG does not guarantee or accept any liability with respect to the correctness of information in this document. Copyright by AUDI AG.

Additionally, all rubber and plastic parts and all adhesives are made of non-conductive materials.

Always install new parts if you are not sure whether used parts can be re-fitted ⇒ Electronic parts catalogue .

Please note:

- We recommend using only genuine replacement parts; these have been tested and are compatible with aluminium.
- We recommend using Audi Genuine Accessories.
- Damage caused by contact corrosion is not covered by warranty.

3.8 Routing and attachment of pipes, hoses and wiring

Risk of damage to pipes/hoses/wiring

Moving or hot components may cause damage to pipes/hoses/wiring.

– Restore original routing when installing pipes/hoses/wiring.
– Ensure sufficient clearance from all moving or hot components.

3.9 Installing radiators and condensers

Even when the radiator, condenser and charge air cooler are correctly installed, slight impressions may be visible on the fins of these components. This does not mean that the components are damaged. If the fins are only very slightly distorted, this does not justify renewal of the radiator, charge air cooler or condenser.

3.10 Performing adaptions after renewing a component

Copyright by AUDI AG. Reproduction for commercial purposes, in part or in whole, is not permitted unless authorised by AUDI AG. AUDI AG does not guarantee or accept any liability with respect to the correctness of information in this document. Copyright by AUDI AG.

After a component has been renewed, the following programs must be performed using the ⇒ Vehicle diagnostic tester.

– Select the correct Guided Function in the Guided Fault Finding routine. The procedure for starting the ⇒ Vehicle diagnostic tester is always the same.

– Connect ⇒ Vehicle diagnostic tester.

– Select `Diagnosis` mode and then `Start diagnosis`.

Procedure - version 1:

– Choose `Select own test` tab and select following options one after the other:

♦ `Drive train`

♦ `Select engine code and engine`

♦ `0001 - Self-diagnosis compatible systems`

♦ `0001 - Engine electronics`

♦ `0001 - Engine electronics, functions`

After renewing engine control unit:

♦ `0001 - Replace engine control unit`

The learnt values must be adapted if components of the engine or reducing agent system have been renewed or if a reducing agent line has been opened:

♦ `0001 - Work steps after component replacement`

Procedure - version 2:

♦ `Systems with diagnostic capability`

♦ `0001 - Engine electronics J623`

♦ `0001 - Engine electronics, functions`

After renewing engine control unit:

♦ `0001 - Replace engine control unit`

The learnt values must be adapted if components of the engine or reducing agent system have been renewed or if a reducing agent line has been opened:

♦ `0001 - Work steps after component replacement`

10 – Removing and installing engine

1 Removing and installing engine

All procedures are described in ⇒ 6-cylinder TDI engine, 3.0 ltr. 4-valve common rail; Rep. gr. 10 ; Removing and installing engine .

Protected by copyright. Copying for private or commercial purposes, in part or in whole, is not permitted unless authorised by AUDI AG. AUDI AG does not guarantee or accept any liability with respect to the correctness of information in this document. Copyright by AUDI AG.

2 Assembly mountings

All procedures and components are described in ⇒ 6-cylinder TDI engine, 3.0 ltr. 4-valve common rail; Rep. gr. 10 ; Assembly mountings .

Protected by copyright. Copying for private or commercial purposes, in part or in whole, is not permitted unless authorised by AUDI AG. AUDI AG does not guarantee or accept any liability with respect to the correctness of information in this document. Copyright by AUDI AG.

3 Engine cover panel

⇒ “3.1 Removing and installing engine cover panel”, page 14

3.1 Removing and installing engine cover panel

Some models are not fitted with an engine cover panel.

Removing

– Carefully pull engine cover panel off retaining pins one after another -arrows-. Do not jerk engine cover panel away, and do not try to pull on one side only.

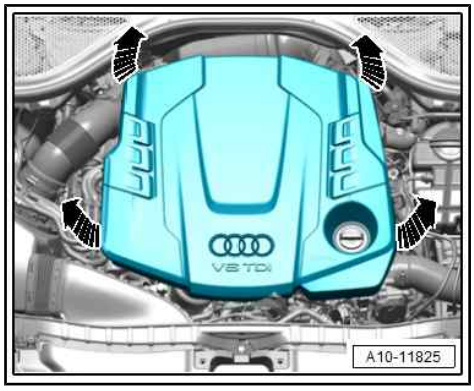

Installing

– To avoid damage, do not strike the engine cover panel with your fist or with any kind of tool.

– When fitting engine cover panel, take care not to damage oil filler neck.

– First press engine cover panel onto rear ball studs and then onto front ball studs with both hands.

Protected by copyright. Copying for private or commercial purposes, in part or in whole, is not permitted unless authorised by AUDI AG. AUDI AG does not guarantee or accept any liability with respect to the correctness of information in this document. Copyright by AUDI AG.

13 – Crankshaft group

Protected by copyright. Copying or distribution is not permitted unless authorised by AUDI AG. AUDI AG does not guarantee or accept any liability with respect to the correctness of information in this document. Copyright by AUDI AG.

1 Cylinder block (pulley end)

⇒ "1.1 Exploded view - cylinder block (pulley end)", page 15

⇒ "1.2 Exploded view - sealing flange (pulley end)", page 17

⇒ "1.3 Removing and installing poly V-belt", page 19

⇒ "1.4 Removing and installing tensioner for poly V-belt", page 20

⇒ "1.5 Removing and installing vibration damper", page 20

⇒ "1.6 Removing and installing bracket for ancillaries", page 22

⇒ "1.7 Removing and installing engine support", page 24

⇒ "1.8 Renewing crankshaft oil seal (pulley end)", page 24

⇒ "1.9 Removing and installing sealing flange (pulley end)", page 26

1.1 Exploded view - cylinder block (pulley end)

1 - Poly V-belt
- ❑ Check for wear
- ❑ Do not kink
- ❑ Routing of poly V-belt ⇒ page 17
- ❑ Before removing, mark direction of rotation with chalk or felt-tip pen
- ❑ Removing and installing ⇒ page 19
- ❑ When installing, make sure it is properly seated on pulleys

2 - Vibration damper
- ❑ With poly V-belt pulley
- ❑ Removing and installing ⇒ page 20

3 - Bolt
- ❑ Renew after removing
- ❑ 150 Nm +90°

4 - Idler roller
- ❑ For poly V-belt

5 - Bolt
- ❑ 30 Nm

6 - Cover
- ❑ For idler roller

7 - Cover
- ❑ For idler roller

8 - Bolt
- ❑ 30 Nm

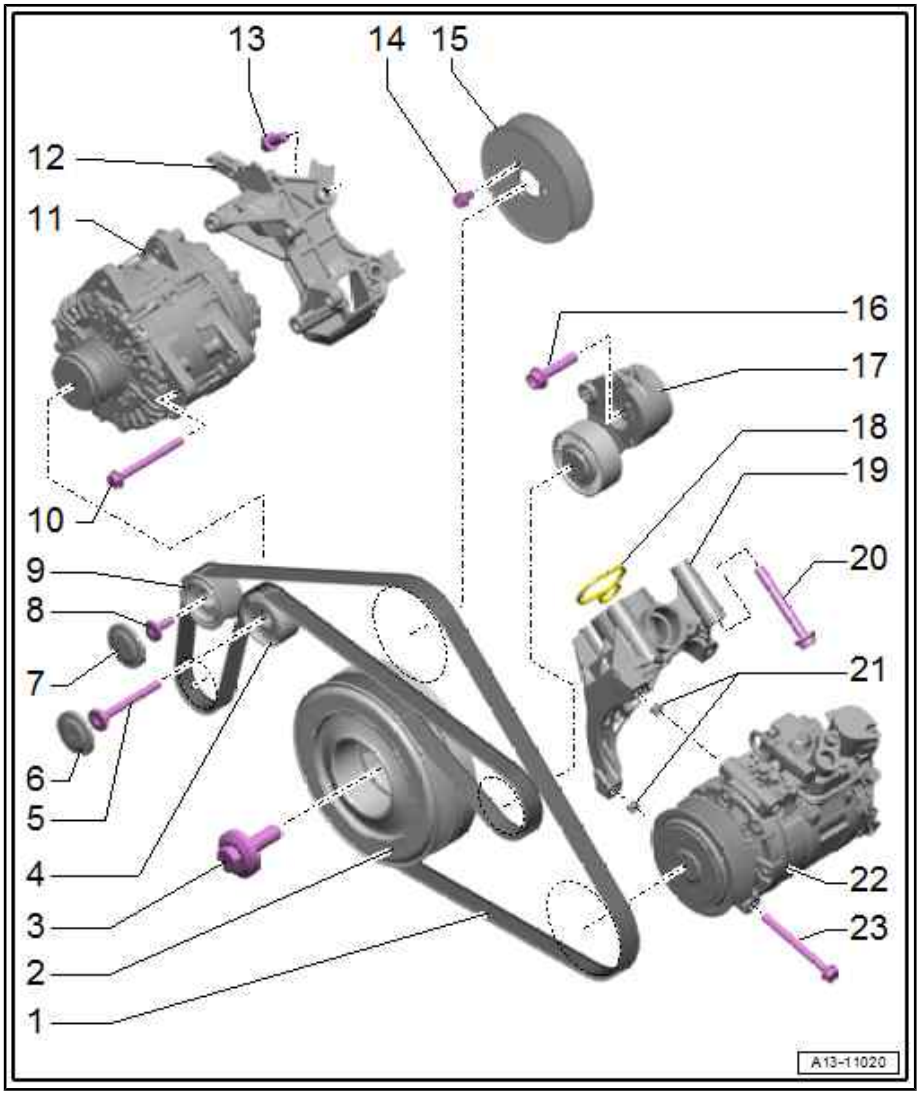

9 - Idler roller

- ❑ For poly V-belt

10 - Bolt

- ❑ Tightening torque ⇒ Electrical system; Rep. gr. 27 ; Alternator; Exploded view - alternator

11 - Alternator

- ❑ Removing and installing ⇒ Electrical system; Rep. gr. 27 ; Alternator; Removing and installing alternator

12 - Bracket

- ❑ For alternator
- ❑ Removing and installing ⇒ page 23

13 - Bolt

- ❑ Tightening torque and sequence ⇒ page 17

14 - Bolt

- ❑ Tightening torque ⇒ Item 2 (page 184)

15 - Pulley

- ❑ For coolant pump

16 - Bolt

- ❑ Renew after removing
- ❑ 50 Nm +90°

17 - Tensioner

- ❑ For poly V-belt
- ❑ Removing and installing ⇒ page 20

18 - Gasket

- ❑ Renew after removing

19 - Bracket

- ❑ For air conditioner compressor
- ❑ Removing and installing ⇒ page 22

20 - Bolt

- ❑ Self-locking
- ❑ Renew after removing
- ❑ Tighten in 2 stages and in diagonal sequence:

♦ 5 Nm

♦ 40 Nm

21 - Dowel sleeves

22 - Air conditioner compressor

- ❑ Removing and installing ⇒ Heating, air conditioning; Rep. gr. 87 ; Air conditioner compressor; Detaching and attaching air conditioner compressor at bracket

23 - Bolt

- ❑ Tightening torque ⇒ Heating, air conditioning; Rep. gr. 87 ; Air conditioner compressor; Exploded view - air conditioner compressor drive unit

Protected by copyright. Copying for private or commercial purposes, in part or in whole, is not permitted unless authorised by AUDI AG. AUDI AG does not guarantee or accept any liability with respect to the correctness of information in this document. Copyright by AUDI AG.

Bracket for alternator -1- - tightening torque and sequence

– Tighten bolts in stages as follows (illustration shows vehicle without high-voltage system):

Stage	Bolts	Tightening torque
1.	-2-	3 Nm
2.	-3-	40 Nm
3.	-2-	40 Nm

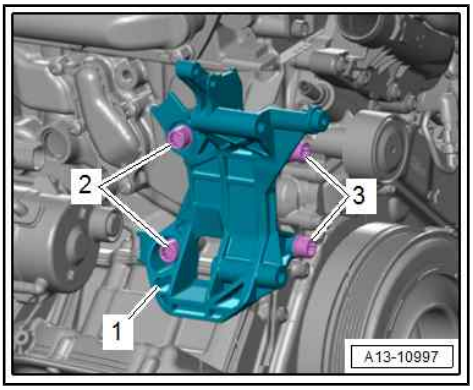

Routing of poly V-belt

1 - Alternator
2 - Idler roller
3 - Idler roller
4 - Coolant pump
5 - Air conditioner compressor
6 - Tensioner for poly V-belt
7 - Vibration damper

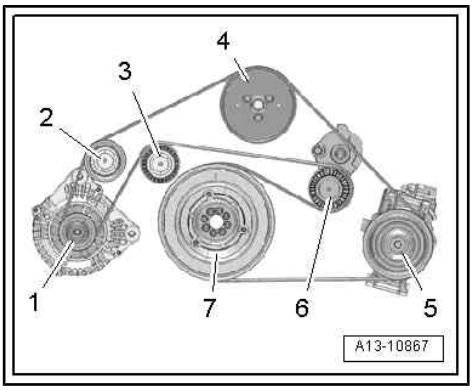

1.2 Exploded view - sealing flange (pulley end)

Protected by copyright. Copying for private or commercial purposes, in part or in whole, is not permitted unless authorised by AUDI AG. AUDI AG does not guarantee or accept any liability with respect to the correctness of information in this document. Copyright by AUDI AG.

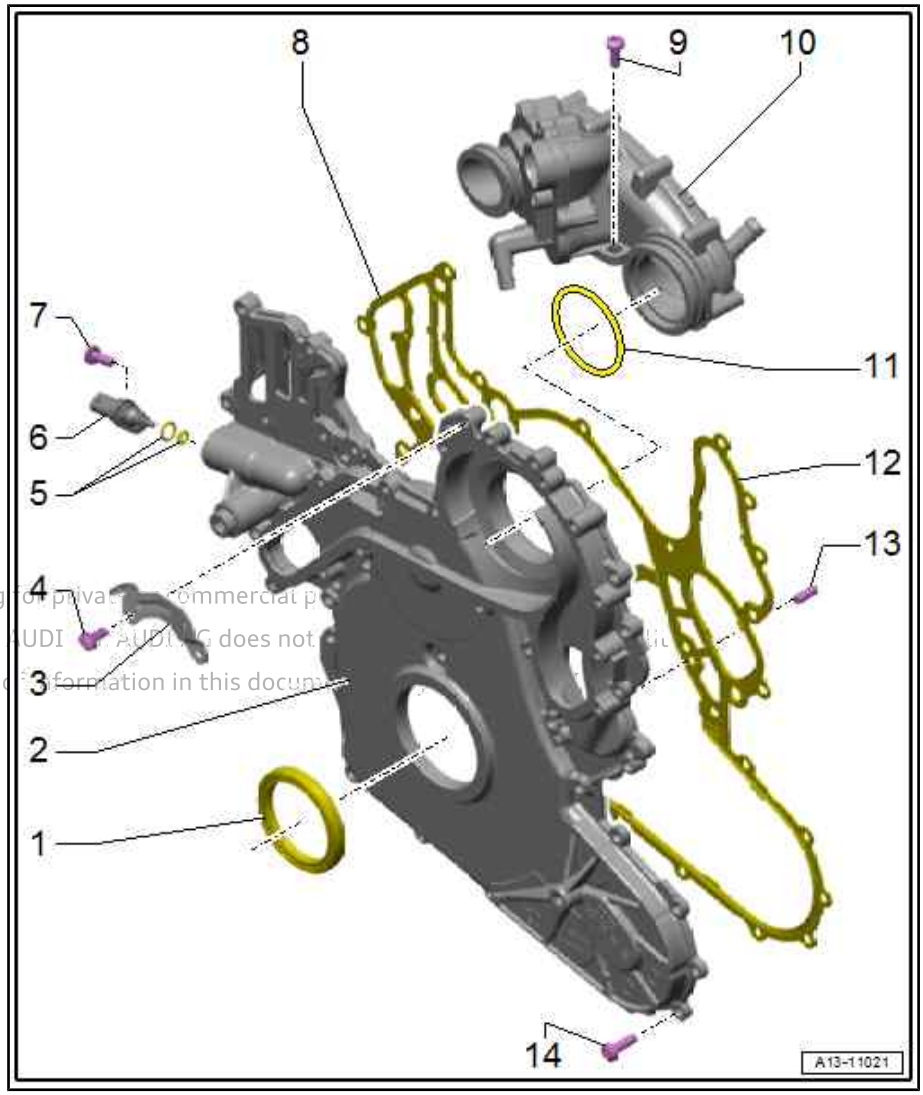

1 - Oil seal

- ❑ For crankshaft (pulley end)
- ❑ Renewing ⇒ page 24

2 - Sealing flange (pulley end)

- ❑ Removing and installing ⇒ page 26

3 - Bracket

- ❑ For intake manifold flap motor - V157-

4 - Bolt

- ❑ 9 Nm

5 - O-rings

- ❑ Renew after removing

6 - Oil temperature sender 2 - G664-

- ❑ Removing and installing ⇒ page 173

Protected by copyright. Copying for private or commercial purposes, in part or in whole, is not permitted unless authorised by AUDI AG. AUDI AG does not guarantee or assume any liability with respect to the correctness of information in this document.

7 - Bolt

- ❑ 9 Nm

8 - Gasket

- ❑ Renew after removing

9 - Bolt

- ❑ Tightening torque and sequence ⇒ page 184

10 - Thermostat housing

- ❑ Exploded view ⇒ “2.3 Exploded view - thermostat”, page 185

11 - O-ring

- ❑ Renew after removing

12 - Gasket

- ❑ Renew after removing

13 - Dowel pin

- ❑ 2x

14 - Bolt

- ❑ Renew after removing
- ❑ Tightening torque and sequence ⇒ page 19

Sealing flange (pulley end) - tightening torque and sequence

– Tighten bolts in stages in the sequence shown:

Stage	Bolts	Tightening torque/angle specification
1.	-	Fit sealing flange with gasket on cylinder block
2.	-1-	Tighten for idler roller ⇒ Item 5 (page 15)
3.	-2 … 23-	Pre-tighten to 3 Nm.
4.	-24 … 28-	Pre-tighten to 3 Nm[1)]
5.	-1-	Tighten bolts for idler roller further to same tightening torque ⇒ Item 5 (page 15) [2)]
6.	-2 … 23-	Tighten to 9 Nm
7.	-24 … 28-	Tighten to 9 Nm[1)]

♦ [1)] These bolts are only relevant if sealing flange is being installed together with oil filter and coolant pump.

♦ [2)] Final tightening to same tightening torque allows for settling of gasket.

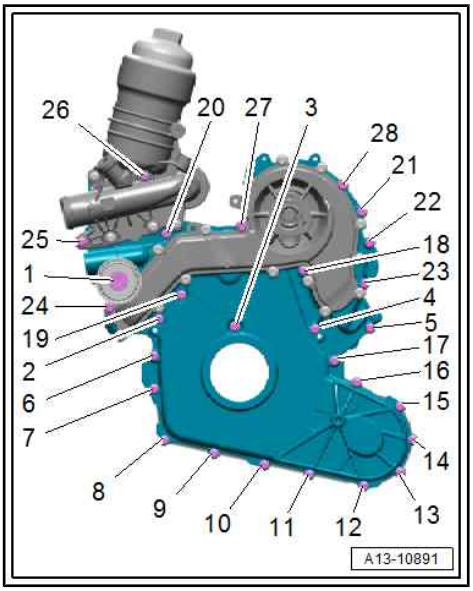

1.3 Removing and installing poly V-belt

Protected by copyright. Copying for private or commercial purposes, in part or in whole, is not permitted unless authorised by AUDI AG. AUDI AG does not guarantee or accept any liability with respect to the correctness of information in this document. Copyright by AUDI AG.

Special tools and workshop equipment required

♦ Socket Torx T60 - T40087-

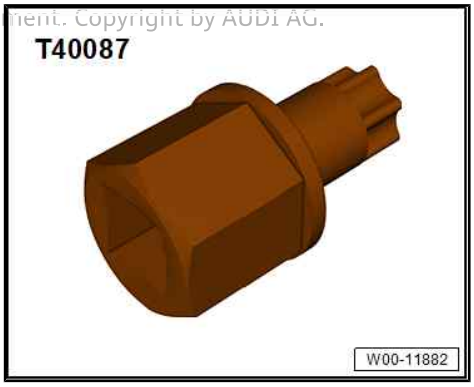

♦ Locking tool - T40098-

Removing

– If not accessible from above, remove noise insulation (front) ⇒ General body repairs, exterior; Rep. gr. 66 ; Noise insulation; Removing and installing noise insulation .

Caution

Running a used poly V-belt in the opposite direction could cause irreparable damage.

- *Before removing the poly V-belt, mark the direction of rotation with chalk or a felt-tip pen for re-installation.*

– Slacken poly V-belt by turning tensioner in clockwise direction -arrow- using socket Torx T 60 - T40087- .

– Detach poly V-belt and lock tensioner with locking tool - T40098- .

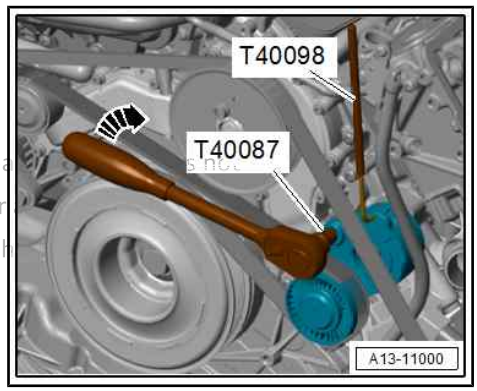

Protected by copyright. Copying for private or commercial purposes, in part or in whole, is not permitted unless authorised by AUDI AG. AUDI AG does not guarantee or assume any liability with respect to the correctness of information in this document. Copyright by AUDI AG.

Installing

Installation is carried out in reverse order; note the following:

– Fit poly V-belt ⇒ page 17 .

– Check that poly V-belt is properly seated.

– Start engine and check that poly V-belt runs properly.

Tightening torques

- ⇒ General body repairs, exterior; Rep. gr. 66 ; Noise insulation; Exploded view - noise insulation

1.4 Removing and installing tensioner for poly V-belt

Removing

– Detach poly V-belt from tensioner
⇒ “1.3 Removing and installing poly V-belt”, page 19 .

– Remove bolt -2- and detach poly V-belt tensioner -1-.

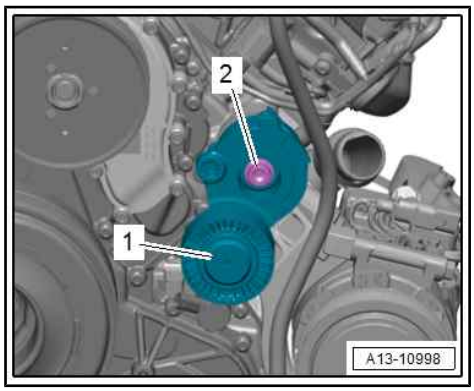

Installing

Installation is carried out in reverse order; note the following:

– Install poly V-belt ⇒ page 19 .

Tightening torques

- ⇒ “1.1 Exploded view - cylinder block (pulley end)”, page 15

1.5 Removing and installing vibration damper

Special tools and workshop equipment required

- Counterhold tool - T40298- (not illustrated)

Removing

Preparatory work may be necessary depending on model ⇒ 6-cylinder TDI engine, 3.0 ltr. 4-valve common rail; Rep. gr. 13 ; Cylinder block (pulley end); Removing and installing vibration damper .

– Remove poly V-belt ⇒ page 19 .

– Apply counterhold tool - T40298/1- to vibration damper and secure with bolts -arrows- (tighten to 23 Nm and fit spacer sleeves - T40298/2- in between).
– To insert the counterhold tool -T40298/1- , the radiator cowl may need to be pushed forwards slightly.
– Remove bolt -1-.
– Detach counterhold tool - T40298/1- and remove together with vibration damper.

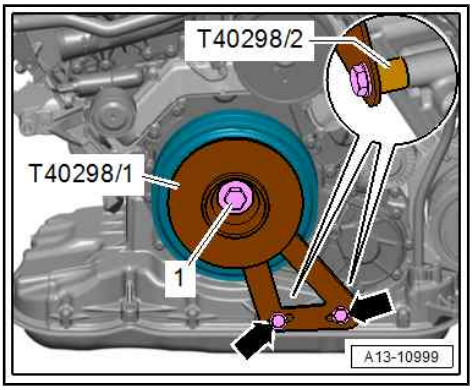

Installing

Installation is carried out in reverse order; note the following:

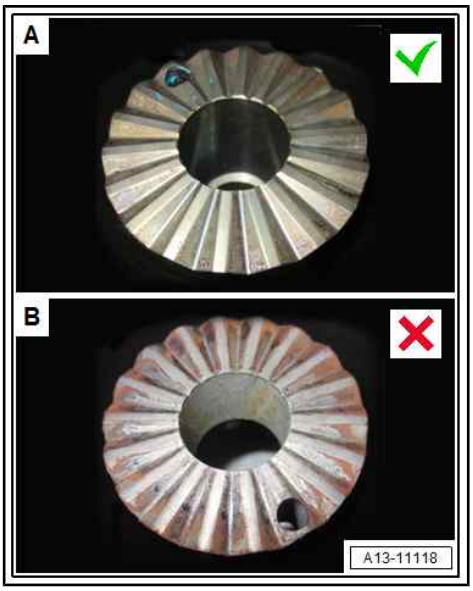

Note

- *After removing, renew bolts tightened with specified tightening angle.*
- *Before re-installation, check Hirth serration for deformation, cracks, damage, scores and corrosion.*
- *If the serration is damaged or there is excessive corrosion, renew vibration damper.*

– Position vibration damper -1- on crankshaft -2- and secure with a new bolt (pay attention to dowel sleeve -arrow-).

Protected by copyright. Copying for private or commerci
permitted unless authorised by AUDI AG. AUDI AG does
with respect to the correctness of information in this do

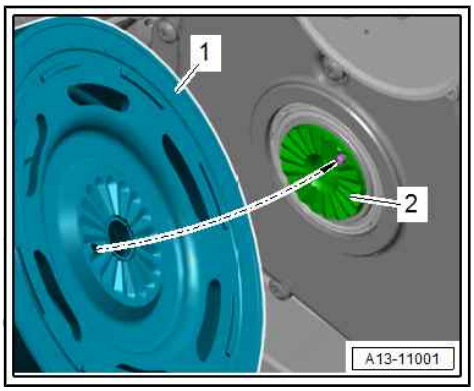

– Apply counterhold tool - T40298/1- to vibration damper and secure with bolts -arrows- (tighten to 23 Nm and fit spacer sleeves - T40298/2- in between).
– Tighten bolt -1- for vibration damper.
– Remove counterhold tool - T40298/1- .
– Install poly V-belt ⇒ page 19 .

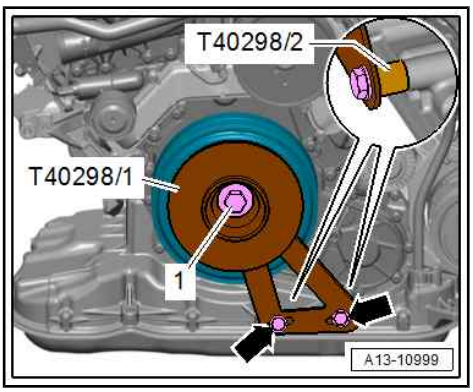

Additional work depending on model ⇒ 6-cylinder TDI engine, 3.0 ltr. 4-valve common rail; Rep. gr. 13 ; Cylinder block (pulley end); Removing and installing vibration damper

Tightening torques

- ⇒ “1.1 Exploded view - cylinder block (pulley end)”, page 15

1.6 Removing and installing bracket for ancillaries

⇒ "1.6.1 Removing and installing bracket for air conditioner compressor", page 22

⇒ "1.6.2 Removing and installing bracket for alternator", page 23

1.6.1 Removing and installing bracket for air conditioner compressor

Removing

Preparatory work may be necessary depending on model ⇒ 6-cylinder TDI engine, 3.0 ltr. 4-valve common rail; Rep. gr. 13 ; Cylinder block (pulley end); Removing and installing bracket for ancillaries .

– Drain coolant ⇒ page 177 .
– Air conditioner compressor with poly V-belt drive: Remove poly V-belt ⇒ page 19 .
– Remove air conditioner compressor from bracket and tie up to left side ⇒ Heating, air conditioning; Rep. gr. 87 ; Air conditioner compressor; Detaching and attaching air conditioner compressor at bracket .
– Remove bolts -arrows-.
– Detach coolant pipe (left-side) -1- from bracket for air conditioner compressor, but leave it in installation position (engine support has been removed in illustration).

Protected by copyright. Copying for private or commercial purposes, in part or in whole, is not permitted unless authorised by AUDI AG. AUDI AG does not guarantee or accept any liability with respect to the correctness of information in this document. Copyright by AUDI AG.

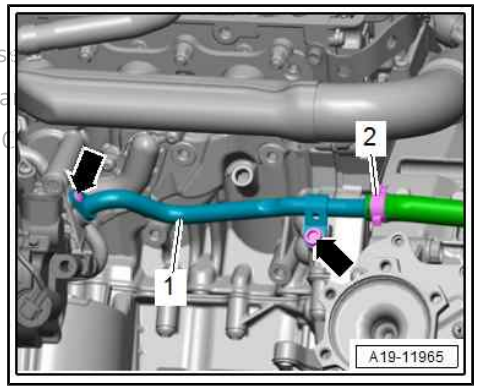

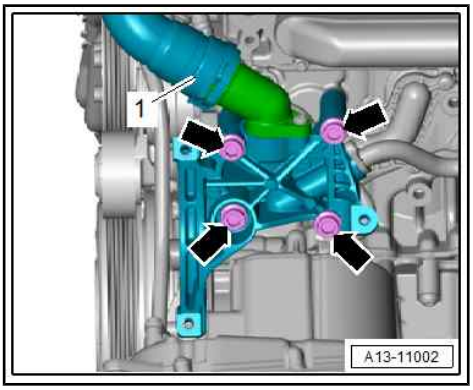

Note

Place a cloth underneath to catch escaping coolant.

– Lift retaining clip and disconnect coolant hose -1-.

– Unscrew bolts -arrows- and detach bracket for air conditioner compressor.

Installing

Installation is carried out in reverse order; note the following:

Note

Renew gasket and O-ring after removal.

– Install poly V-belt ⇒ page 19 .

– Connect coolant hose with plug-in connector ⇒ 6-cylinder TDI engine, 3.0 ltr. 4-valve common rail; Rep. gr. 19 ; Radiator/ radiator fans; Exploded view - radiator/radiator fans .

Note

Do not reuse coolant.

– Fill up with coolant ⇒ page 177 .

Additional work depending on model ⇒ 6-cylinder TDI engine, 3.0 ltr. 4-valve common rail; Rep. gr. 13 ; Cylinder block (pulley end); Removing and installing bracket for ancillaries

Tightening torques

♦ ⇒ “1.1 Exploded view - cylinder block (pulley end)”, page 15

♦ ⇒ 6-cylinder TDI engine, 3.0 ltr. 4-valve common rail; Rep. gr. 19 ; Coolant pipes; Exploded view - coolant pipes

♦ ⇒ Heating, air conditioning; Rep. gr. 87 ; Air conditioner compressor; Exploded view - air conditioner compressor drive unit

1.6.2 Removing and installing bracket for alternator

Removing

Preparatory work may be necessary depending on model ⇒ 6-cylinder TDI engine, 3.0 ltr. 4-valve common rail; Rep. gr. 13 ; Cylinder block (pulley end); Removing and installing bracket for ancillaries .

– Remove poly V-belt ⇒ page 19 .

– Remove alternator ⇒ Electrical system; Rep. gr. 27 ; Alternator; Removing and installing alternator .

Protected by copyright. Copying for private or commercial purposes, in part or in whole, is not permitted unless authorised by AUDI AG. AUDI AG does not guarantee or accept any liability with respect to the correctness of information in this document. Copyright by AUDI AG.

– Unclip cover -1-.
– If necessary, remove bolt -2- and detach idler roller.

Protected by copyright. Copying for private or com[illegible] not permitted unless authorised by AUDI AG. AUDI AG [illegible] with respect to the correctness of information in t[illegible]ent. Copyrigh[illegible]

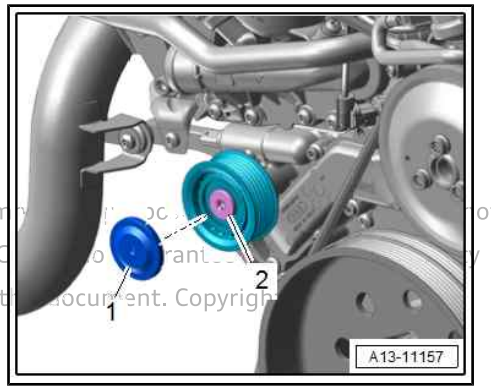

– Remove bolt -1- for air pipe.
– If fitted, remove bolt -2- for coolant pipe (front).

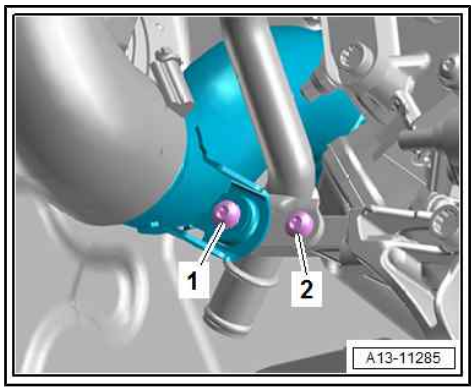

– Move electrical wiring clear.
– Unscrew bolts -2, 3- and remove bracket -1-.

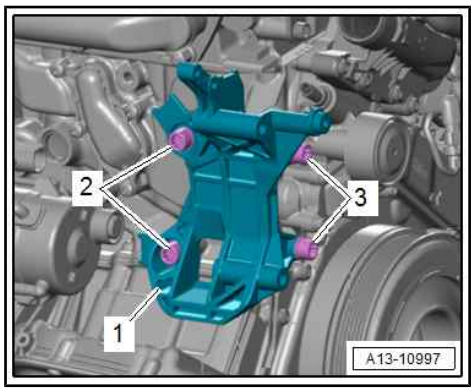

Installing

Installation is carried out in reverse order; note the following:

– Install poly V-belt ⇒ page 19 .

Additional work depending on model ⇒ 6-cylinder TDI engine, 3.0 ltr. 4-valve common rail; Rep. gr. 13 ; Cylinder block (pulley end); Removing and installing bracket for ancillaries

Tightening torques

♦ ⇒ Fig. ""Bracket for alternator -1- - tightening torque and sequence"" , page 17

♦ ⇒ Electrical system; Rep. gr. 27 ; Alternator; Exploded view - alternator

1.7 Removing and installing engine support

All procedures are described in ⇒ 6-cylinder TDI engine, 3.0 ltr. 4-valve common rail; Rep. gr. 13 ; Cylinder block (pulley end); Removing and installing engine support .

1.8 Renewing crankshaft oil seal (pulley end)

Special tools and workshop equipment required

♦ Oil seal extractor - T40019-

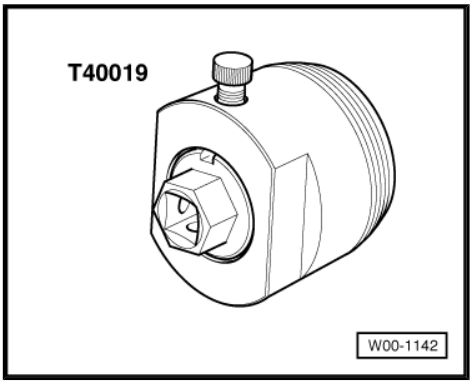

♦ Assembly tool - T40320-

Procedure

– Remove vibration damper ⇒ page 20 / remove pulley ⇒ 6-cylinder TDI engine, 3.0 ltr. 4-valve common rail; Rep. gr. 13 ; Cylinder block (pulley end); Removing and installing pulley .

– Adjust inner part of oil seal extractor -T40019- so it is flush with the outer part and lock in position with knurled screw.

– Lubricate threaded head of oil seal extractor, place it in position and screw it into oil seal as far as possible (applying firm pressure).

– Loosen knurled screw and turn inner part against crankshaft until the oil seal is pulled out.

– Clamp flats of oil seal extractor in vice and use pliers to remove seal.

– Clean contact surface and sealing surface.

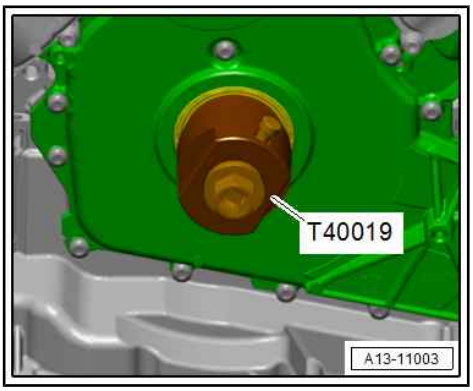

– Fit guide sleeve -T40320/2- on crankshaft and slide oil seal -1- into sealing flange (pulley end).

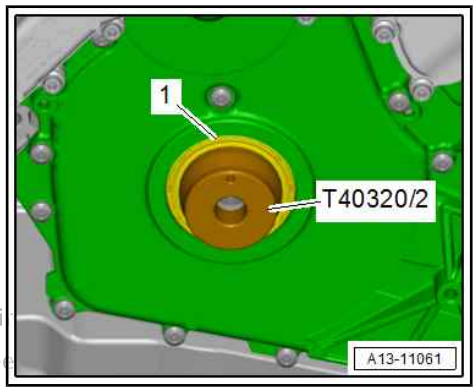

Note

Leave guide sleeve -T40320/2- in position on crankshaft for pressing in oil seal.

Protected by copyright. Copying for private or commercial purposes, i
permitted unless authorised by AUDI AG. AUDI AG does not guarantee
with respect to the correctness of information in this document. Copyright by AUDI AG.

– Insert fitting sleeve -T40320/1- and press on oil seal -2- by hand.
– Screw in fitting sleeve -T40320/1- using bolt -1- for vibration damper until it makes contact.
– Remove bolt -1- and detach fitting sleeve -T40320/1- and guide sleeve -T40320/2-.
– Put fitting sleeve -T40320/1- back on and screw it in again using bolt -1- until it makes contact.

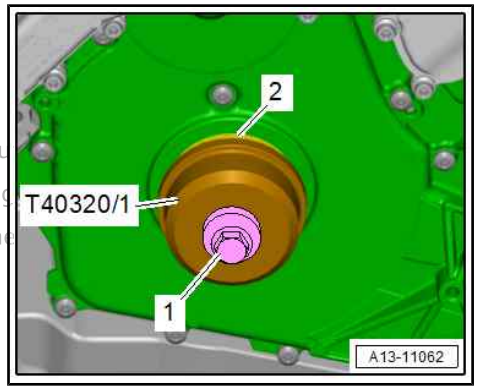

Protected by copyright. Copying for private or commercial pu
purposes, in part or in whole, is not permitted unless authorised by AUDI AG. AUDI AG does not g
the correctness of information in this document. Copyright by AUDI AG.

Note

This step is necessary to ensure that the correct installation depth of the oil seal is attained.

Remaining installation steps are carried out in reverse sequence; note the following:

– Install vibration damper ⇒ page 20 .

1.9 Removing and installing sealing flange (pulley end)

Special tools and workshop equipment required

♦ Pin wrench - 3212-

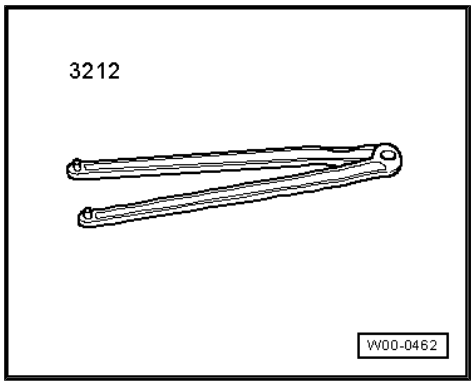

♦ Hose clip pliers - VAS 6362-

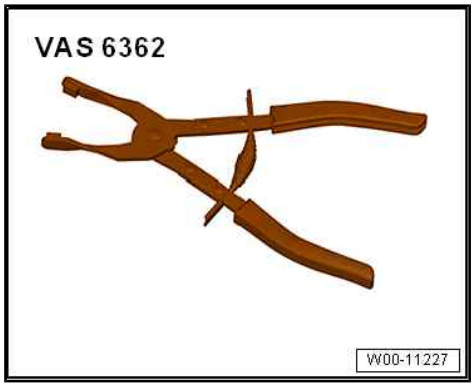

Removing

Preparatory work may be necessary depending on model ⇒ 6-cylinder TDI engine, 3.0 ltr. 4-valve common rail (EA 897 Gen. I); Rep. gr. 13 ; Cylinder block (pulley end); Removing and installing sealing flange (pulley end) .

– If fitted, remove tensioner for poly V-belt ⇒ page 20 .

– Remove vibration damper ⇒ page 20 / remove pulley ⇒ 6-cylinder TDI engine, 3.0 ltr. 4-valve common rail; Rep. gr. 13 ; Cylinder block (pulley end); Removing and installing pulley .

– Remove coolant pipe (front) ⇒ 6-cylinder TDI engine, 3.0 ltr. 4-valve common rail; Rep. gr. 19 ; Coolant pipes; Removing and installing coolant pipes .

– Unplug electrical connectors -1 ... 4- and move electrical wiring clear.

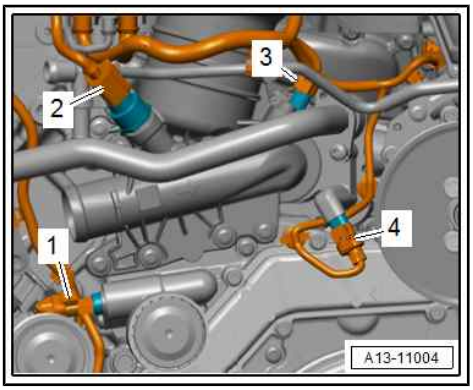

– Remove bolts -2-, move coolant connection -1- clear and push to side.

3 - Ignore

Protected by copyright. Copying for private or commercial purposes, in part or in whole, is not permitted unless authorised by AUDI AG. AUDI AG does not guarantee or accept any liability with respect to the correctness of information in this document. Copyright by AUDI AG.

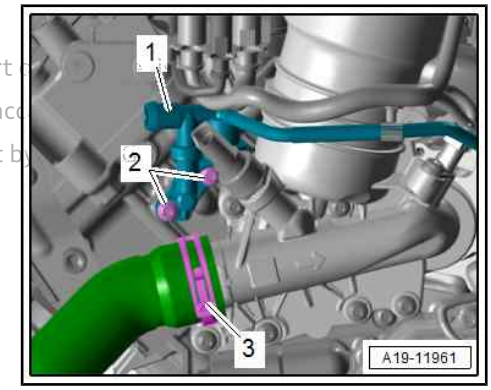

– Loosen bolts -arrows- for coolant pump pulley (counterhold with pin wrench - 3212-).

– Remove bolts and take off poly V-belt pulley.

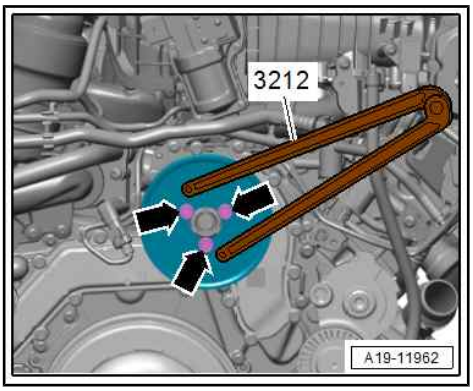

– Unplug electrical connector -1- for valve for oil pressure control - N428- .

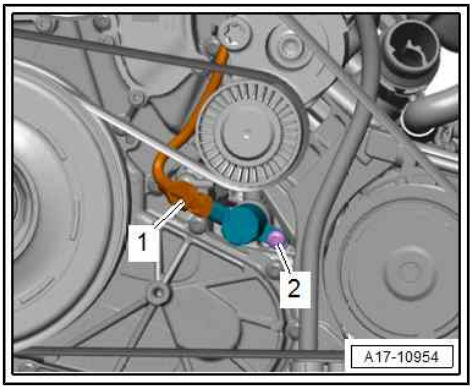

– Unclip cover for idler roller.

– Slacken and remove bolts in the sequence: -28 ... 1-.

– Drive crankshaft oil seal out of sealing flange after removing sealing flange.

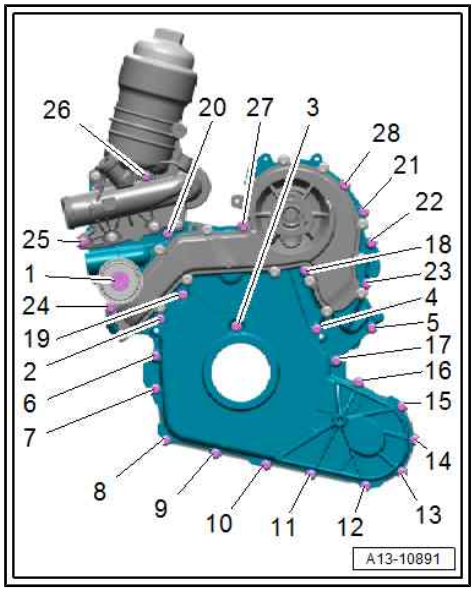

Installing

Note

- *Renew bolts after removing.*
- *Renew gasket, O-ring for temperature regulator and crankshaft oil seal after removing.*
- *Secure all hose connections with correct type of hose clips (as original equipment) ⇒ Electronic parts catalogue .*

– Clean surfaces; they must be free of oil and grease.

– Tighten sealing flange bolts (pulley end) ⇒ page 19 .

Remaining installation steps are carried out in reverse sequence; note the following:

– Install crankshaft oil seal (pulley end) ⇒ page 24 .

– Install coolant pipe (front) ⇒ 6-cylinder TDI engine, 3.0 ltr. 4-valve common rail; Rep. gr. 19 ; Coolant pipes; Removing and installing coolant pipes .

Protected by copyright. Copying for private or commercial purposes, in part or in whole, is not permitted unless authorised by AUDI AG. AUDI AG does not guarantee or accept any liability with respect to the correctness of information in this document. Copyright by AUDI AG.

– Install vibration damper ⇒ page 20 .

– Install poly V-belt tensioner ⇒ page 20 .

Note

Do not reuse coolant.

– Fill up with coolant ⇒ page 180 .

Additional work depending on model ⇒ 6-cylinder TDI engine, 3.0 ltr. 4-valve common rail; Rep. gr. 13 ; Cylinder block (pulley end); Renewing crankshaft oil seal (pulley end)

Tightening torques

- ⇒ “1.2 Exploded view - sealing flange (pulley end)”, page 17
- ⇒ Fig. ““Sealing flange (pulley end) - tightening torque and sequence”“ , page 19
- ⇒ “4.1 Exploded view - intake manifold”, page 214
- ⇒ “3.1 Exploded view - cylinder head”, page 103
- ⇒ “2.1 Exploded view - coolant pump”, page 183

2 Cylinder block (gearbox end)

⇒ "2.1 Exploded view - cylinder block (gearbox end)", page 29

⇒ "2.2 Removing and installing drive plate", page 30

⇒ "2.3 Renewing crankshaft oil seal (gearbox end)", page 32

2.1 Exploded view - cylinder block (gearbox end)

Note

Secure engine to engine and gearbox support when performing assembly work ⇒ 6-cylinder TDI engine, 3.0 ltr. 4-valve common rail; Rep. gr. 10 ; Removing and installing engine; Securing engine to engine and gearbox support .

Protected by copyright. Copying or p
permitted unless authorised by AUDI
with respect to the correctness of inf

1 - Bolt

- ❑ Renew after removing
- ❑ Clean threads in crankshaft before screwing in new bolts ⇒ page 30
- ❑ 60 Nm +90°

2 - Drive plate

- ❑ Check holes for clutch module/torque converter for cracks and scoring
- ❑ Removing and installing ⇒ page 30

3 - Dowel pin

4 - Crankshaft

5 - Oil seal

- ❑ For crankshaft (gearbox end)
- ❑ Renewing ⇒ page 32

6 - Sender wheel

- ❑ For engine speed sender - G28-

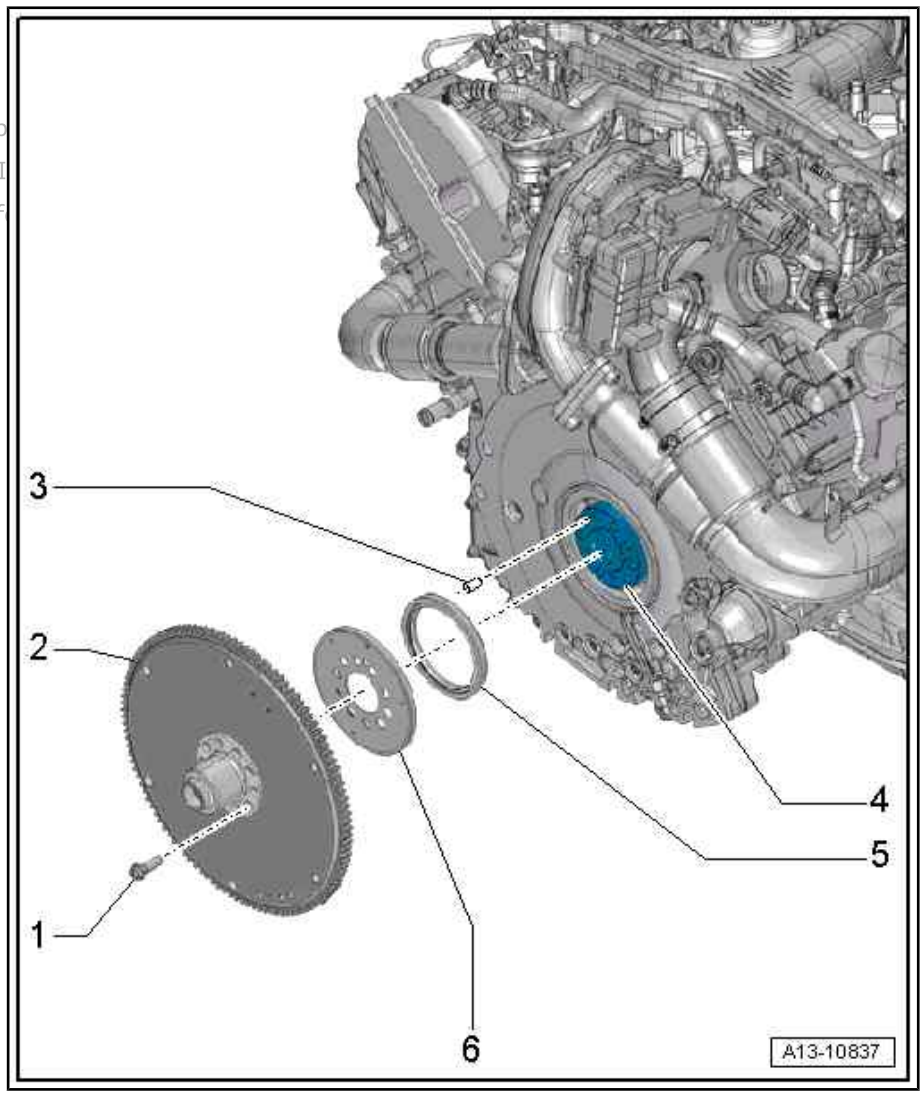

Caution

Risk of magnetic fields causing irreparable damage to sender wheel.
The sender wheel must be kept away from magnets (e.g. base of torch, loudspeaker).

If the drive plate/flywheel or the sender wheel itself has been removed or renewed, check that the sender wheel is operating correctly before installation ⇒ page 39 .

- ❑ Removing and installing ⇒ page 38

- ❑ Checking sender wheel ⇒ page 39

2.2 Removing and installing drive plate

Special tools and workshop equipment required

- ♦ Counterhold tool - 10-201-

Protected by copyright. Copying for private or commercial purposes, in part or in whole, is not permitted unless authorised by AUDI AG. AUDI AG does not guarantee or accept any liability with respect to the correctness of information in this document. Copyright by AUDI AG.

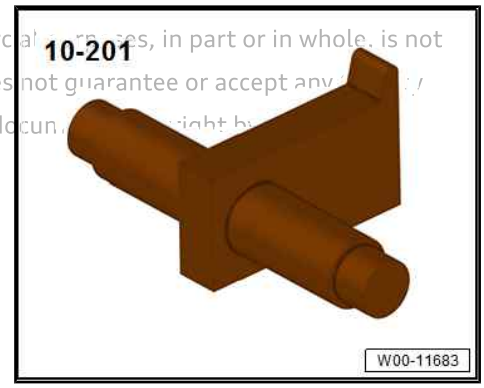

Removing

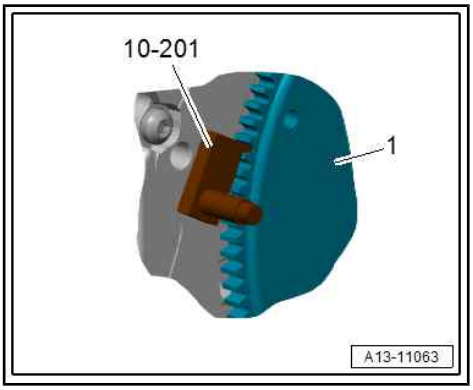

Caution

Risk of magnetic fields causing irreparable damage to sender wheel.

- *The sender wheel must be kept away from magnets (e.g. base of torch, loudspeaker).*
- *If the drive plate/flywheel or the sender wheel itself has been removed or renewed, check that the sender wheel is operating correctly before installation* *⇒ "3.7 Checking sender wheel", page 39* .

- Gearbox removed ⇒ Gearbox; Rep. gr. 34 ; Removing and installing gearbox; Removing gearbox or ⇒ Gearbox; Rep. gr. 37 ; Removing and installing gearbox; Removing gearbox .

– Insert counterhold tool - 10-201- to slacken bolts for drive plate -1-.

Caution

Take care not to damage outer surface of bearing flange on drive plate.

- *Use a multi-point socket bit with a length of at least 40 mm to slacken and tighten the drive plate bolts.*

– Remove bolts and take off drive plate and sender wheel.

Installing

Installation is carried out in reverse order; note the following:

Caution

Risk of magnetic fields causing irreparable damage to sender wheel.

- *The sender wheel must be kept away from magnets (e.g. base of torch, loudspeaker).*
- *If the drive plate/flywheel or the sender wheel itself has been removed or renewed, check that the sender wheel is operating correctly before installation* *⇒ page 39* .

Protected by copyright. Copying for private or commercial purposes, in part or in whole, is not permitted unless authorised by AUDI AG. AUDI AG does not guarantee or accept any liability with respect to the correctness of information in this document. Copyright by AUDI AG.

Note

After removing, renew bolts tightened with specified tightening angle.

Threads in crankshaft must be cleaned before any further assembly work is performed.

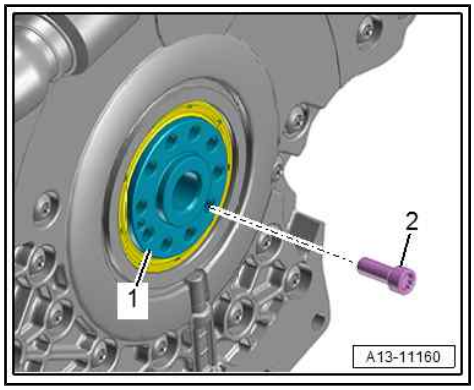

– Clean crankshaft flange until all residual adhesive has been removed completely.

• Ensure you do not damage oil seal when cleaning flange.

• Use a vacuum cleaner to hoover up residual adhesive; do NOT use compressed air.

– Remove residual adhesive from one of the old bolts -2- for drive plate using wire brush and remove oil residue using brake cleaner.

– Screw cleaned bolt into a thread on crankshaft -1- and out again; repeat this action until no further residual adhesive appears.

• Do not screw bolt in too far; otherwise, the camshaft timing chain located behind it may be damaged.

– When no further residual adhesive appears, repeat the procedure for the other crankshaft threads.

• Finally, use a vacuum cleaner to hoover up residual adhesive; do NOT use compressed air.

– Clean crankshaft flange with a cloth.

• Thread in crankshaft must be free of oil and grease.

Protected by copyright. Copying for private or commercial purposes, in part or in whole, is not permitted unless authorised by AUDI AG. AUDI AG does not guarantee or accept any liability with respect to the correctness of information in this document.

– Check sender wheel ⇒ page 39 .

– Install sender wheel -arrow-.

– Pay attention to dowel pin when installing drive plate.

– Fit counterhold tool - 10-201- the other way round to tighten bolts.

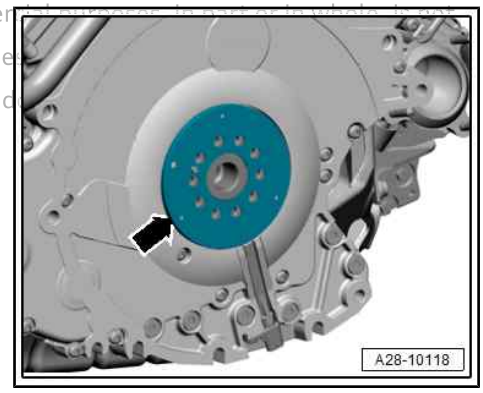

Tightening torques

♦ ⇒ “2.1 Exploded view - cylinder block (gearbox end)”, page 29

2.3 Renewing crankshaft oil seal (gearbox end)

Special tools and workshop equipment required

♦ Fitting tool - T10122B-

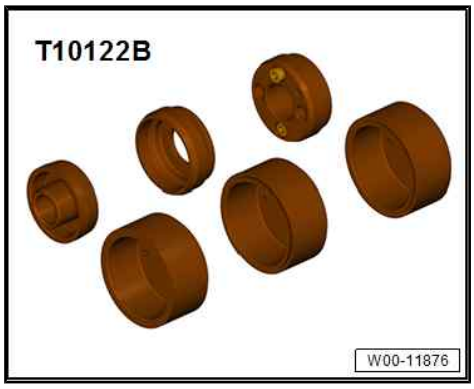

♦ Extractor tool - T20143/2-

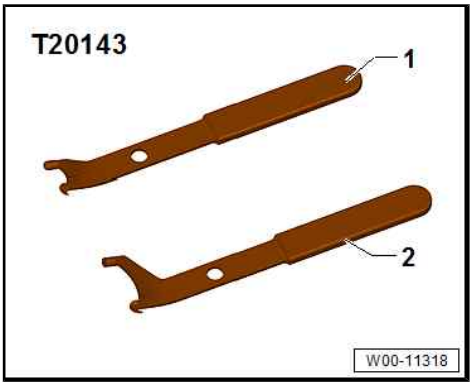

Procedure

- Gearbox removed ⇒ Gearbox; Rep. gr. 34 ; Removing and installing gearbox; Removing gearbox or ⇒ Gearbox; Rep. gr. 37 ; Removing and installing gearbox; Removing gearbox .

– Remove drive plate ⇒ page 30 .

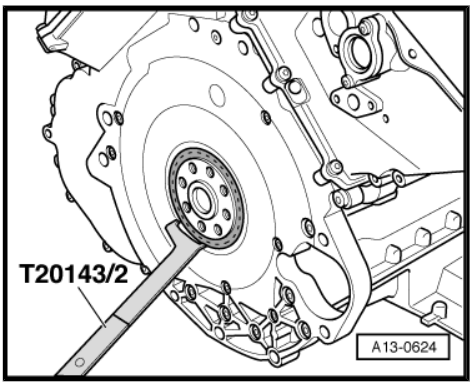

– Detach sender wheel -arrow-.

– Pry out oil seal using extractor tool -T20143/2- .

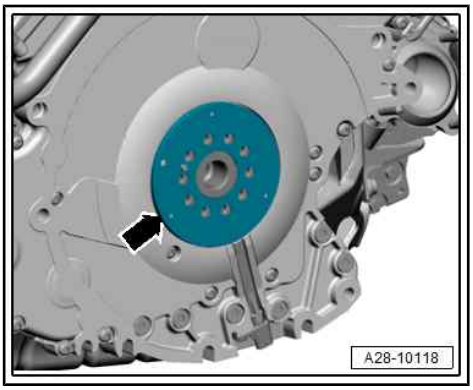

– Clean contact surface and sealing surface.

– Fit assembly aid -T10122/1- onto guide piece - T10122/6- and slide oil seal -A- onto guide piece.

– Detach assembly aid -T10122/1- .

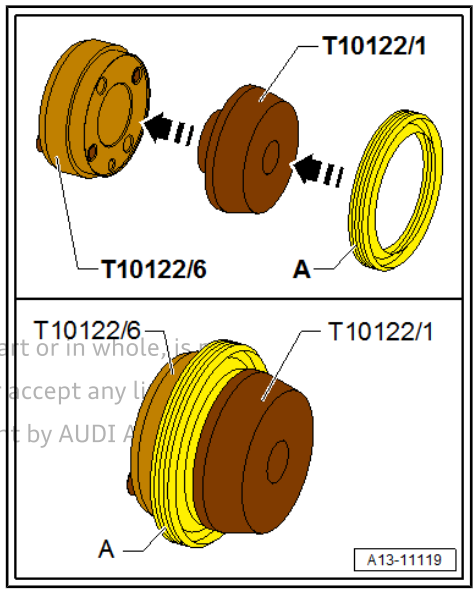

Protected by copyright. Copying for private or commercial purposes, in part or in whole, is not permitted unless authorised by AUDI AG. AUDI AG does not guarantee or accept any liability with respect to the correctness of information in this document. Copyright by AUDI AG.

– Fit guide piece - T10122/6- onto crankshaft.
– Bolt guide piece to crankshaft through securing points -A- using bolts -arrows-.

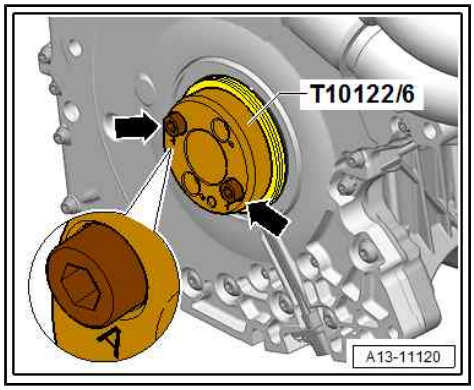

Caution

Risk of leaks if installed incorrectly.

- *Slide oil seal onto crankshaft by hand to prevent sealing lip on oil seal from folding over.*

– Slide oil seal over guide piece - T10122/6- onto crankshaft by hand.

– Press in oil seal evenly all round using thrust piece - T10122/5- .
– Remove guide piece - T10122/6- .
– Check that oil seal and its sealing lip are correctly seated. If sealing lip is partially folded over, repeat procedure with a new oil seal.
– Install drive plate ⇒ page 30 .

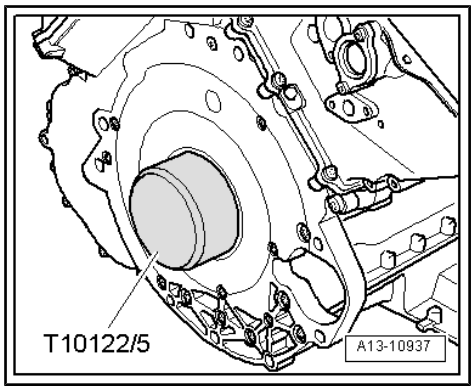

Protected by copyright. Copying for private or commercial purposes, in part or in whole, is not permitted unless authorised by AUDI AG. AUDI AG does not guarantee or accept any liability with respect to the correctness of information in this document. Copyright by AUDI AG.

3 Crankshaft

⇒ "3.1 Exploded view - crankshaft", page 35
⇒ "3.2 Crankshaft dimensions", page 36
⇒ "3.3 Allocation of main bearing shells", page 37
⇒ "3.4 Measuring axial clearance of crankshaft", page 37
⇒ "3.5 Measuring radial clearance of crankshaft", page 38
⇒ "3.6 Removing and installing sender wheel", page 38
⇒ "3.7 Checking sender wheel", page 39

3.1 Exploded view - crankshaft

Note

Secure engine to engine and gearbox support when performing assembly work ⇒ 6-cylinder TDI engine, 3.0 ltr. 4-valve common rail; Rep. gr. 10 ; Removing and installing engine; Securing engine to engine and gearbox support .

Protected by copyright. Copying for pri
permitted u
with respect to the correctness of infor

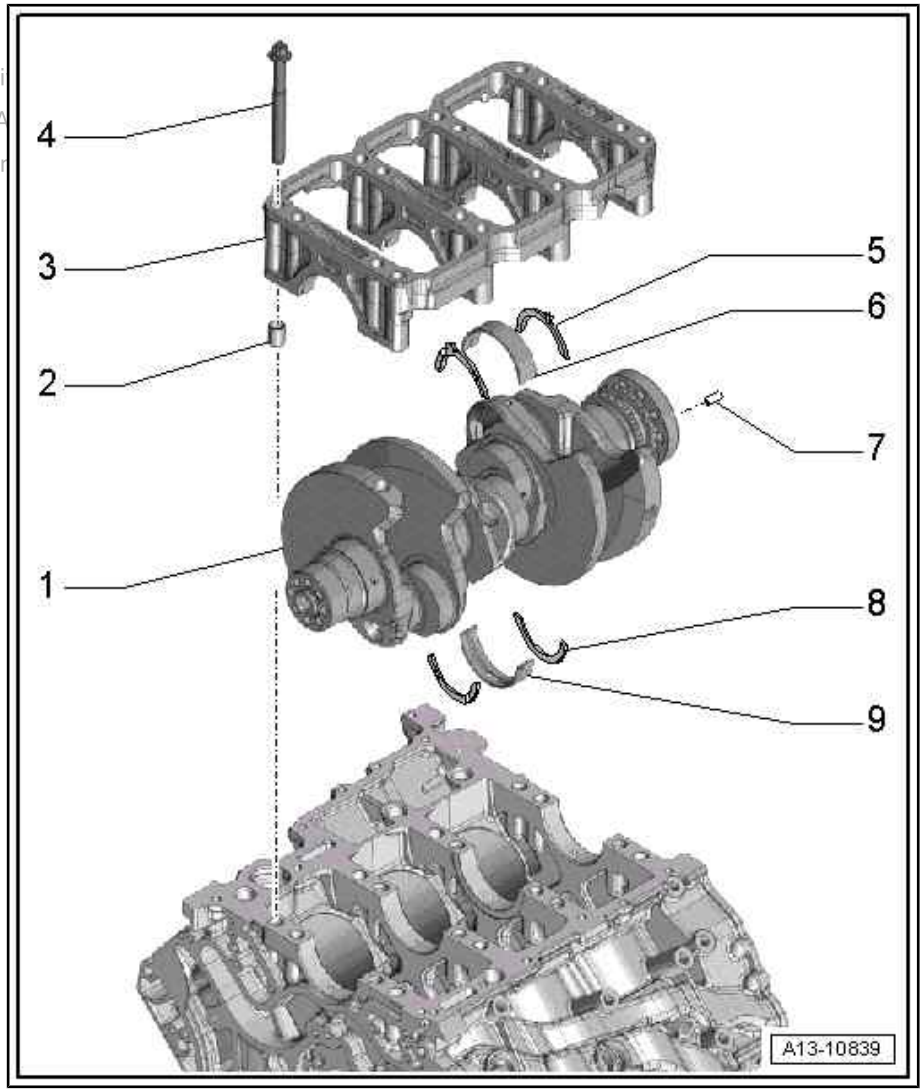

1 - Crankshaft

- ❑ Measuring axial clearance ⇒ page 37
- ❑ Measuring radial clearance ⇒ page 38
- ❑ Crankshaft dimensions ⇒ page 36

2 - Dowel sleeve

- ❑ 4x
- ❑ Insert in cylinder block

3 - Retaining frame

4 - Bolt

- ❑ Renew after removing
- ❑ Use old bolts when measuring radial clearance
- ❑ Tightening torque and sequence ⇒ page 36

5 - Thrust washer

- ❑ Only fitted on 3rd crankshaft bearing
- ❑ Installation position: oil grooves face outwards
- ❑ Note location

6 - Bearing shell

- ❑ For retaining frame (without oil groove)
- ❑ Renew used bearing shells
- ❑ Install new bearing shells for retaining frame with correct coloured markings ⇒ page 37

7 - Dowel pin

- ❑ Check that pin is firmly seated in crankshaft

8 - Thrust washer

- ❑ Only fitted on 3rd crankshaft bearing
- ❑ Installation position: oil grooves face outwards

9 - Bearing shell

- ❑ For cylinder block (with oil groove)
- ❑ Renew used bearing shells
- ❑ Install new bearing shells for the cylinder block with the correct coloured markings ⇒ page 37

Protected by copyright. Copying for private or commercial purposes, in part or in whole, is not permitted unless authorised by AUDI AG. AUDI AG does not guarantee or accept any liability with respect to the correctness of information in this document. Copyright by AUDI AG.

Retaining frame - tightening torque and sequence

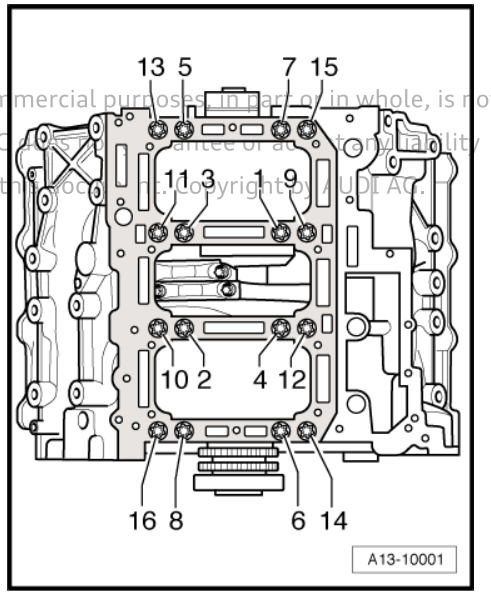

Note

After removing, renew bolts tightened with specified tightening angle.

- Insert two dowel sleeves in cylinder block.
- Tighten bolts in stages in the sequence shown:

Stage	Bolts	Tightening torque/angle specification
1.	-1 … 16-	30 Nm
2.	-1 … 16-	50 Nm
3.	-1 … 16-	Turn 180° further

Position of dowel sleeves

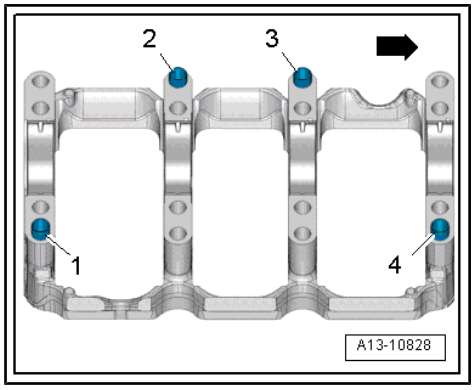

- Check that dowel sleeves -1 ... 4- are inserted in retaining frame at positions shown in illustration.

• -Arrow-: Pulley end.

3.2 Crankshaft dimensions

Honing dimension	Main bearing journal Ø mm	Conrod journal Ø mm
Basic dimension	65.000 – 0.022 – 0.042	60.000 – 0.022 – 0.042

3.3 Allocation of main bearing shells

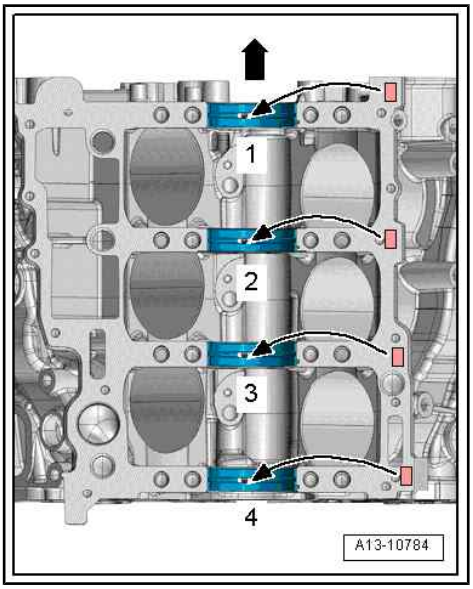

Allocation of crankshaft bearing shells for cylinder block

Bearing shells of the correct thickness are matched to the bearings in the cylinder block at the factory. Coloured dots on the bearing shells are used to identify the bearing shell thickness.

- -Arrow-: Pulley end.

The allocation of the bearing shells to the cylinder block is identified by a code letter next to the relevant bearing.

Letter on cylinder block	Colour coding of bearing
R =	Red
G =	Yellow
B =	Blue

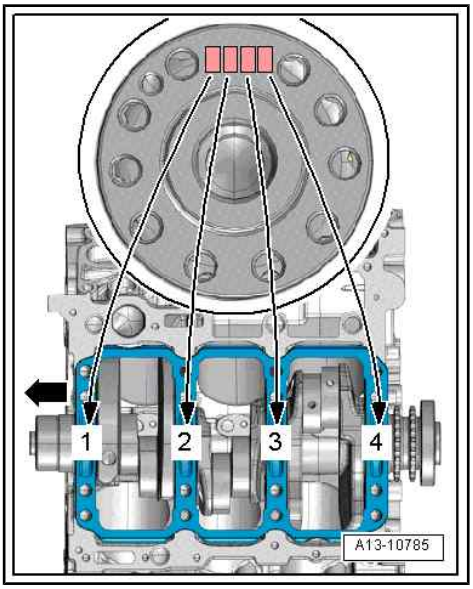

Allocation of crankshaft bearing shells for retaining frame

Bearing shells of the correct thickness are matched to the bearings in the retaining frame at the factory. Coloured dots on the side of the bearing shells are used to identify the bearing shell thickness.

The allocation of the bearing shells to the bearing positions in the retaining frame is indicated by a sequence of letters on the flywheel flange on the crankshaft. The first letter in the sequence stands for bearing “1”, the second letter for bearing “2”, etc.

Letter on crankshaft	Colour coding of bearing
R =	Red
G =	Yellow
B =	Blue

3.4 Measuring axial clearance of crankshaft

Special tools and workshop equipment required

♦ Universal dial gauge bracket - VW 387-

Protected by copyright. Copying for private or commercial purposes, in part or in whole, is not permitted unless authorised by AUDI AG. AUDI AG does not guarantee or accept any liability with respect to the correctness of information in this document. Copyright by AUDI AG.

♦ Dial gauge - VAS 6079-

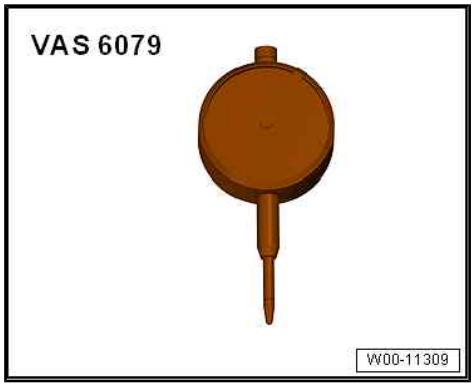

Procedure

– Secure dial gauge - VAS 6079- with universal dial gauge bracket - VW 387- to cylinder block as shown in illustration.

– Apply dial gauge to crank web.

– Press crankshaft against dial gauge by hand and set gauge to “0”.

– Push crankshaft away from dial gauge and read off value.

Axial clearance:

• New: 0.09 ... 0.25 mm.

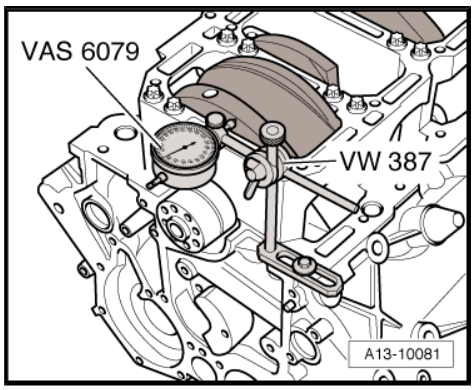

3.5 Measuring radial clearance of crankshaft

Special tools and workshop equipment required

♦ Plastigauge

Procedure

Protected by copyright. Copying for private or commercial purposes, in part or in whole, is not permitted unless authorised by AUDI AG. AUDI AG does not guarantee or accept any liability with respect to the correctness of information in this document. Copyright by AUDI AG.

– Remove retaining frame and clean bearing journals.

– Place a length of Plastigauge corresponding to the width of the bearing on the bearing journal or in the bearing shell.

• The Plastigauge must be positioned in the centre of the bearing shell

– Fit retaining frame and secure with old bolts ⇒ page 36 without rotating crankshaft.

– Remove retaining frame again.

– Compare width of Plastigauge with measurement scale.

Radial clearance:

• New: 0.018 ... 0.045 mm.

– When carrying out final assembly, renew bolts.

3.6 Removing and installing sender wheel

Removing

• Gearbox removed ⇒ Gearbox; Rep. gr. 34 ; Removing and installing gearbox; Removing gearbox or ⇒ Gearbox; Rep. gr. 37 ; Removing and installing gearbox; Removing gearbox .

– Remove drive plate ⇒ page 30 .

Caution

Risk of magnetic fields causing irreparable damage to sender wheel.

- *The sender wheel must be kept away from magnets (e.g. base of torch, loudspeaker).*
- *If the drive plate/flywheel or the sender wheel itself has been removed or renewed, check that the sender wheel is operating correctly before installation* *⇒ "3.7 Checking sender wheel", page 39* .

– Detach sender wheel -arrow-.

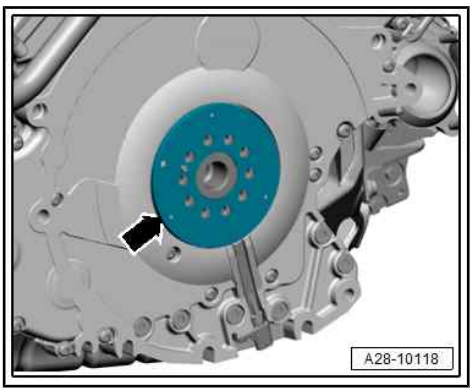

Installing

Installation is carried out in reverse order; note the following:

– Install drive plate ⇒ page 30 .

3.7 Checking sender wheel

Caution

Risk of magnetic fields causing irreparable damage to sender wheel.

- *The sender wheel must be kept away from magnets (e.g. base of torch, loudspeaker).*
- *If the drive plate/flywheel or the sender wheel itself has been removed or renewed, check that the sender wheel is operating correctly before installation.*

Protected by copyright. Copying for private or commercial purposes, in part or in whole, is not permitted unless authorised by AUDI AG. AUDI AG does not guarantee or accept any liability with respect to the correctness of information in this document. Copyright by AUDI AG.

Special tools and workshop equipment required

- Sensor gauge - T10473-

Procedure

- Sender wheel removed

– Check entire circumference of sender wheel using sensor gauge - T10473- , as shown in illustration.

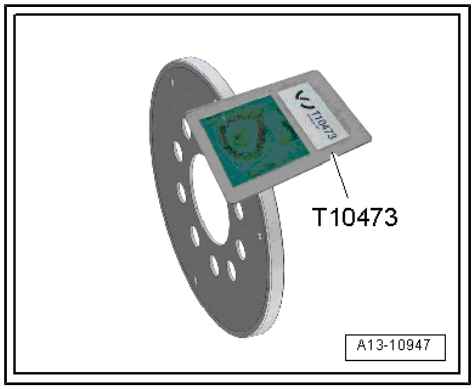

Inspection image of sender wheel

A - Sender wheel OK

B - Sender wheel defective

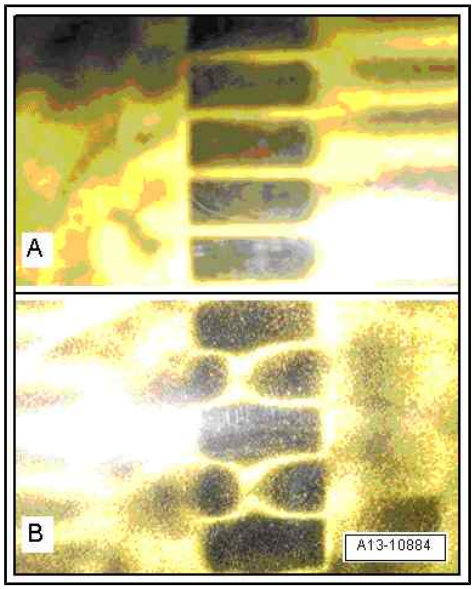

Protected by copyright. Copying for private or commercial purposes, in part or in whole, is not permitted unless authorised by AUDI AG. AUDI AG does not guarantee or accept any liability with respect to the correctness of information in this document. Copyright by AUDI AG.

4 Balance shaft

⇒ "4.1 Exploded view - balance shaft", page 41
⇒ "4.2 Removing and installing balance shaft", page 41
⇒ "4.3 Renewing roller bearing", page 48

Protected by copyright. Copying for private or commercial purposes, in part or in whole, is not permitted unless authorised by AUDI AG. AUDI AG does not guarantee or accept any liability with respect to the correctness of information in this document. Copyright by AUDI AG.

4.1 Exploded view - balance shaft

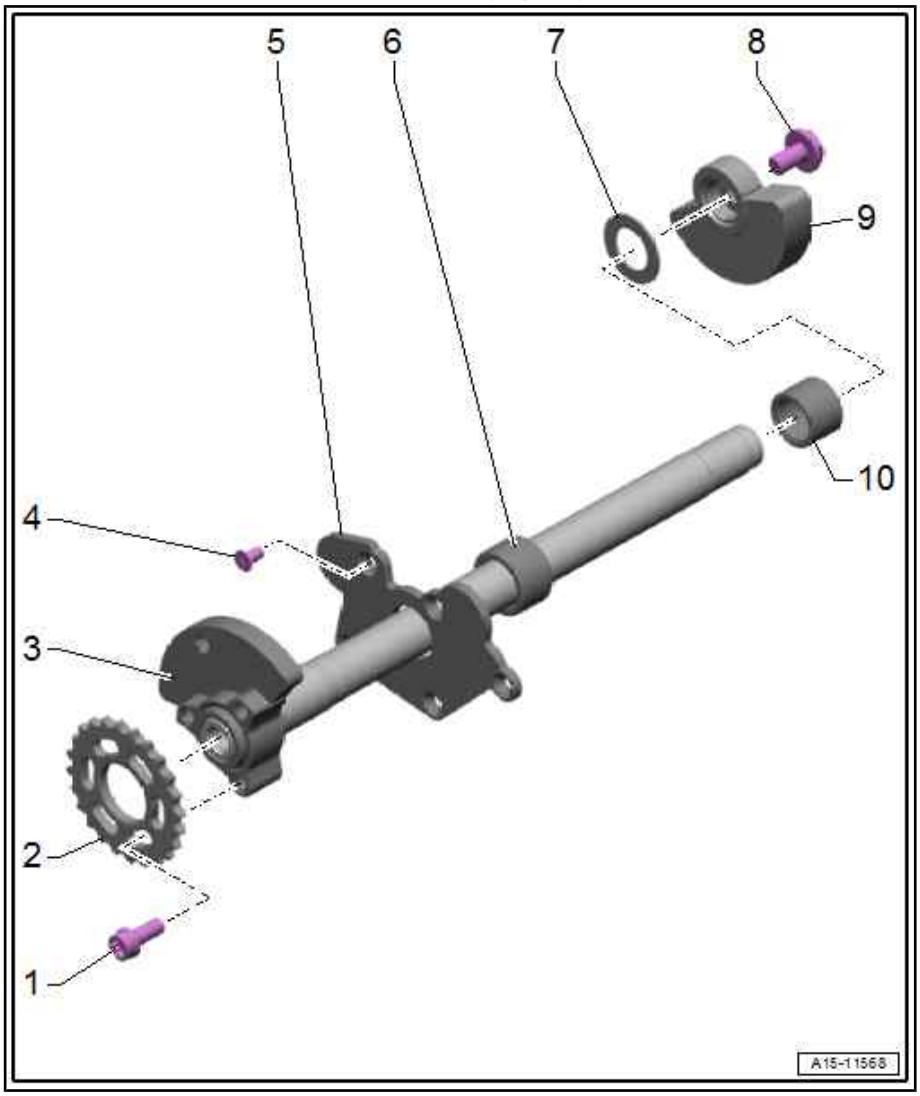

1 - Bolt
- ❑ 23 Nm

2 - Drive chain sprocket
- ❑ For balance shaft

3 - Balance shaft with balance weight
- ❑ Gearbox end
- ❑ Removing and installing ⇒ page 41
- ❑ Balance shaft must be renewed if bolt -item 4- has been loosened

4 - Bolt
- ❑ Apply locking fluid when installing; refer to ⇒ Electronic parts catalogue
- ❑ 9 Nm

5 - Bearing plate

6 - Roller bearing
- ❑ Renewing ⇒ page 48

7 - Thrust washer

8 - Bolt
- ❑ Use locking pin - 3359- as counterhold when loosening and tightening
- ❑ Renew after removing
- ❑ 20 Nm +45°

9 - Balance weight
- ❑ Pulley end

10 - Roller bearing
- ❑ Renewing ⇒ page 48

4.2 Removing and installing balance shaft

Special tools and workshop equipment required

- Locking pin - 3359-

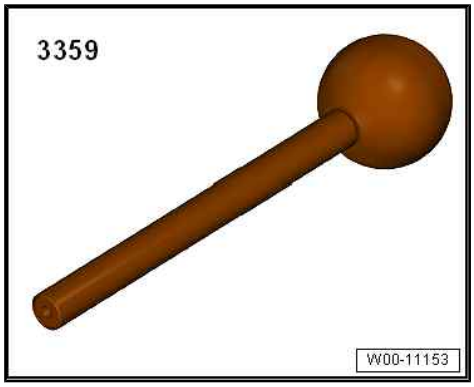

- Locking pin - T10060A- (2x)

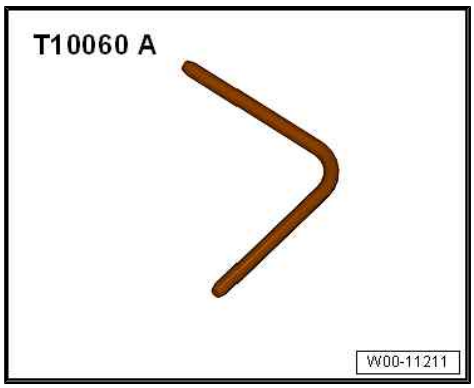

- Key - T40049-

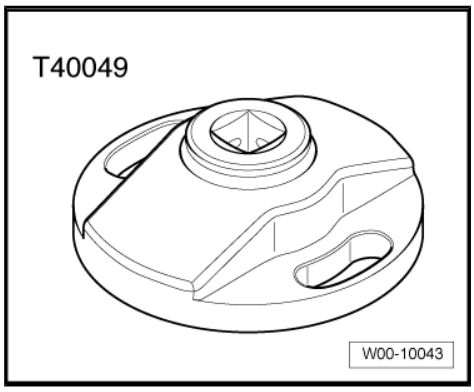

- Locking pin - T40237-

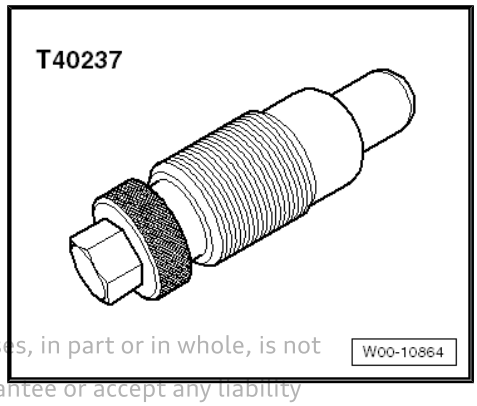

Protected by copyright. Copying for private or commercial purposes, in part or in whole, is not permitted unless authorised by AUDI AG. AUDI AG does not guarantee or accept any liability with respect to the correctness of information in this document. Copyright by AUDI AG.

♦ Locking pin - T40316-

Protected by copyright. Copying for private or commercial purposes, in part or in whole, is not permitted unless authorised by AUDI AG. AUDI AG does not guarantee or accept any liability with respect to the correctness of information in this document. Copyright by AUDI AG.

Removing

- Gearbox removed ⇒ Gearbox; Rep. gr. 34 ; Removing and installing gearbox; Removing gearbox or ⇒ Gearbox; Rep. gr. 37 ; Removing and installing gearbox; Removing gearbox .

– Remove sealing flange (pulley end) ⇒ page 26 .

– Remove timing chain cover (bottom) ⇒ page 66 .

> ⚠ **Caution**
>
> *Risk of damage to valves and piston crowns.*
>
> ♦ *The crankshaft and camshafts must only be turned with the chain drive mechanism fully installed.*

> ⚠ **Caution**
>
> *Risk of damage to drive chain if thread of bolt exceeds specified length.*
>
> ♦ *Use bolts with a maximum thread length -a- of 22 mm to attach key -T40049- .*
>
> ♦ *If no suitable bolts are available, position suitable washer (s) under bolt head so that remaining thread length does not exceed 22 mm.*

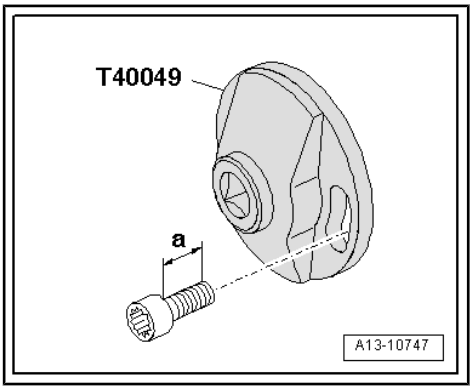

– Secure special wrench - T40049- onto crankshaft -arrows-.

> ⚠ **Caution**
>
> *Irreparable damage can be caused if the camshaft timing chain slips.*
>
> ♦ *Turn crankshaft only in direction of engine rotation -arrow-.*

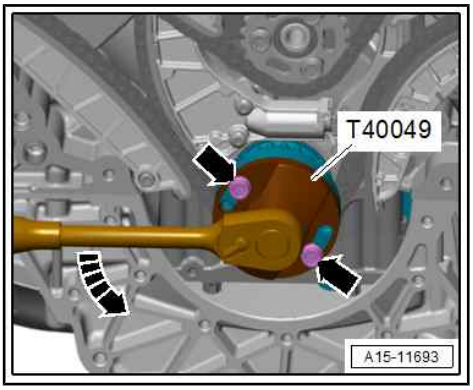

– Rotate crankshaft in normal direction of rotation to “TDC”.

- It should be possible to lock camshafts with locking pins - T10060A- .

– Lock exhaust camshaft of cylinder bank 1 (right-side) at “TDC” by inserting locking pin - T10060A- in hole -arrow-.

Protected by copyright. Copying for private or commercial purpos
permitted unless authorised by AUDI AG. AUDI AG does not guar
with respect to the correctness of information in this document.

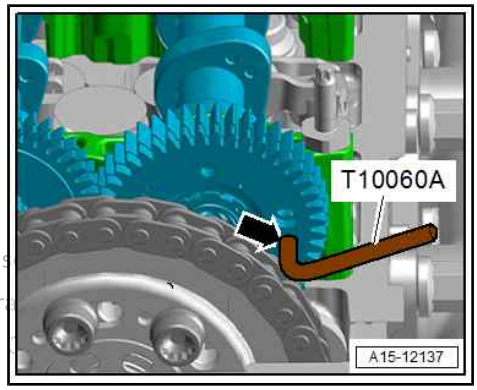

– Lock inlet camshaft of cylinder bank 2 (left-side) at “TDC” by inserting locking pin - T10060A- in hole -arrow-.

A4/A5: Remove subframe cross brace ⇒ Running gear, axles, steering; Rep. gr. 40 ; Subframe; Removing and installing subframe cross brace .

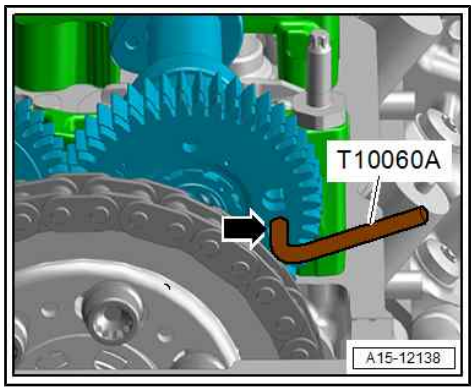

– Unscrew plug -arrow- from sump (top section).

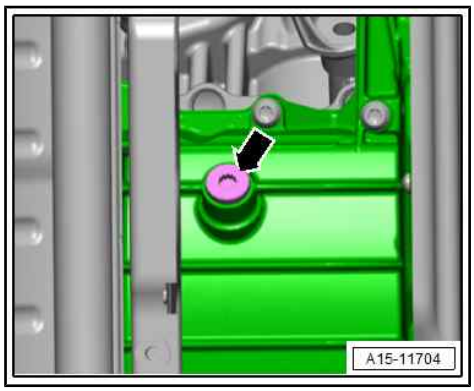

– Screw locking pin - T40237- into hole (20 Nm); if necessary, turn crankshaft -1- backwards and forwards slightly to fully centralise locking pin.

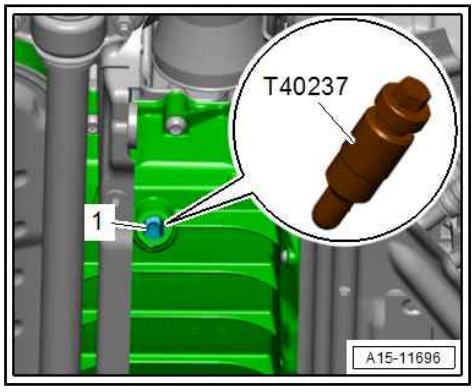

– Press tensioning rail of camshaft timing chain tensioner in direction of -arrow- and lock chain tensioner by inserting locking pin -T40316- .

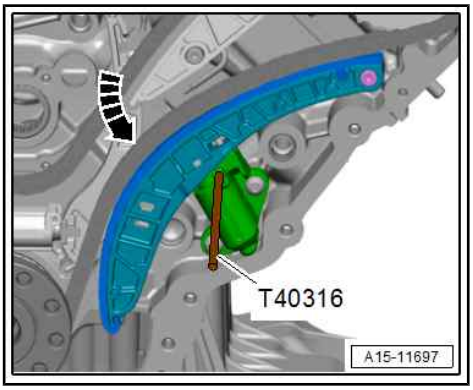

– Lock balance shaft with locking pin - 3359- .
– Remove bolts -arrows- and detach drive chain sprocket -1- from balance shaft.

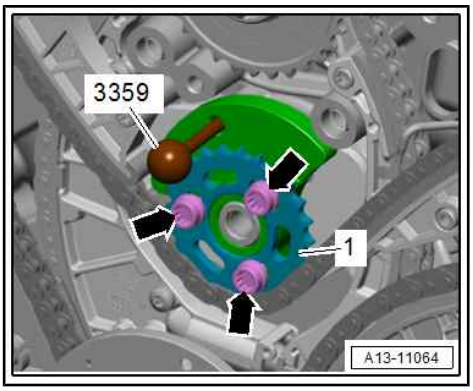

Note

The camshaft timing chain must not be removed from the camshaft sprockets or the camshaft.

– Remove bolt -arrow- at pulley end and detach balance weight -1- and washer -2- from balance shaft.

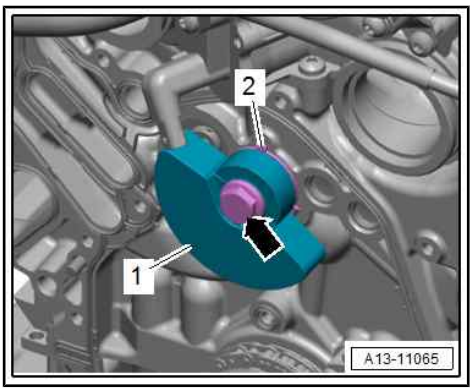

– Remove locking pin - 3359- at gearbox end and remove balance shaft -1- towards rear.

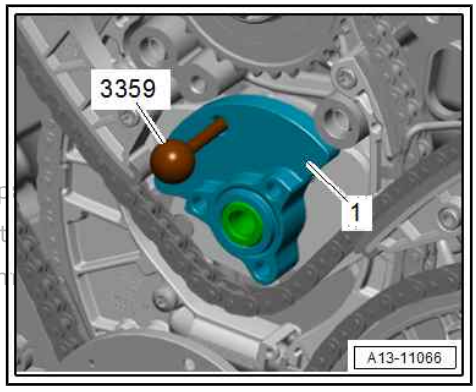

Protected by copyright. Copying for private or commercial p
permitted unless authorised by AUDI AG. AUDI AG does not
with respect to the correctness of information in this docun

Installing

Installation is carried out in reverse order; note the following:

- Crankshaft locked in “TDC” position with locking pin - T40237- .

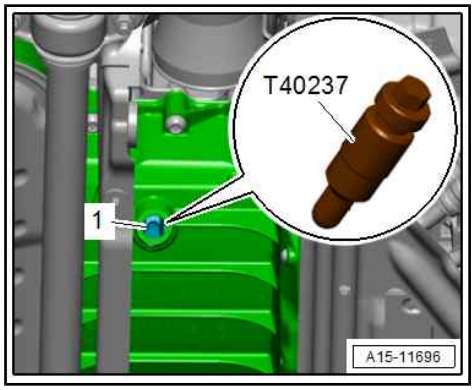

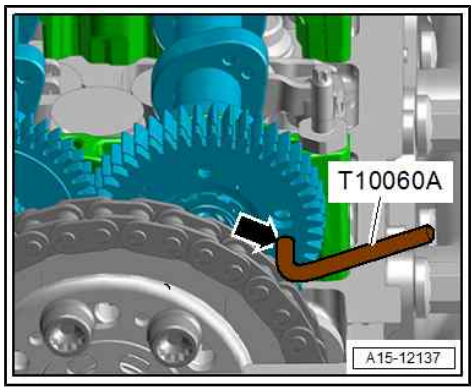

- Lock exhaust camshaft of cylinder bank 1 (right-side) at “TDC” using locking pin - T10060A- .
- Lock inlet camshaft of cylinder bank 2 (left-side) at “TDC” using locking pin - T10060A- .

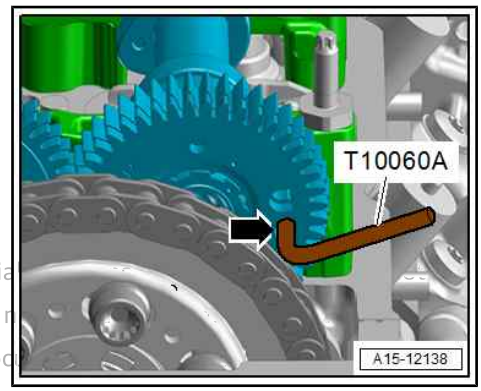

Protected by copyright. Copying for private or commercia
permitted unless authorised by AUDI AG. AUDI AG does n
with respect to the correctness of information in this doc

– Move balance shaft -1- into installation position on gearbox end and lock in “TDC” position using locking pin - 3359- .

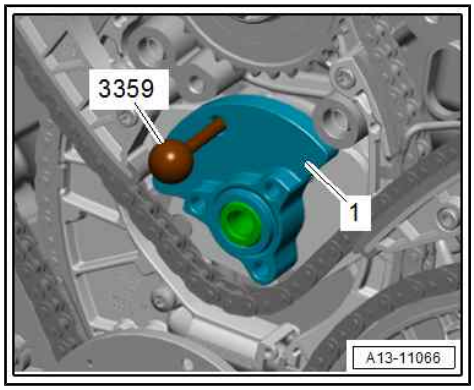

– Place washer -1- to installation position on pulley end and fit balance weight -2- onto balance shaft.

• Machined surface -arrow- of balance weight must be positioned over machined surface of balance shaft.

– Tighten bolt for balance weight.

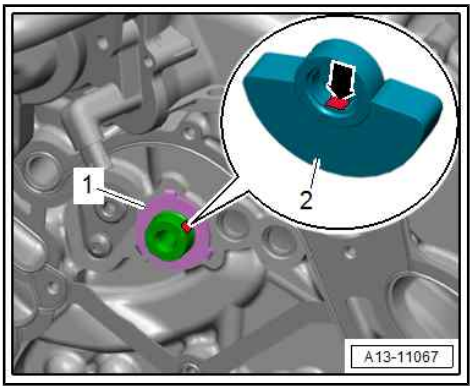

– Fit drive chain sprocket -1- with camshaft timing chain onto balance shaft on gearbox end.

• The elongated holes in the drive chain sprocket must be aligned centrally over the tapped holes in the balance shaft.

– Loosely screw in bolts -arrows-.

• It should just be possible to turn the drive chain sprocket on the intermediate drive without axial movement.

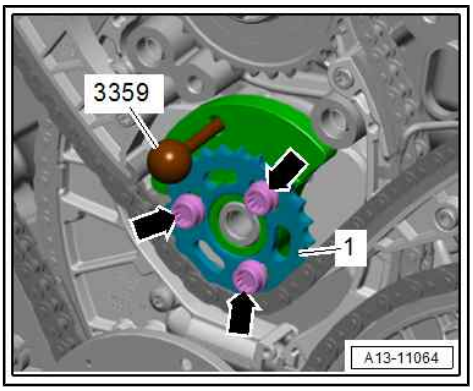

– Press tensioning rail of camshaft timing chain tensioner in direction of -arrow- and remove locking pin -T40316- .

– Release chain tensioner.

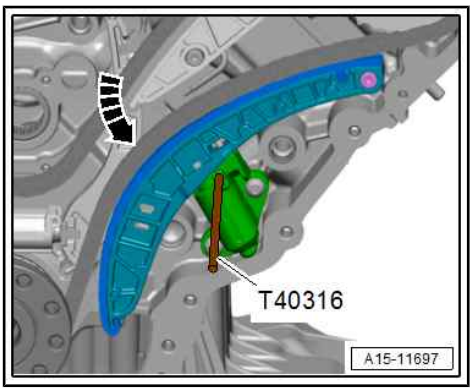

– Tighten bolts -arrows- at drive chain sprocket -1- for balance shaft.

– Remove locking pin - T40237- and locking pin - 3359- .

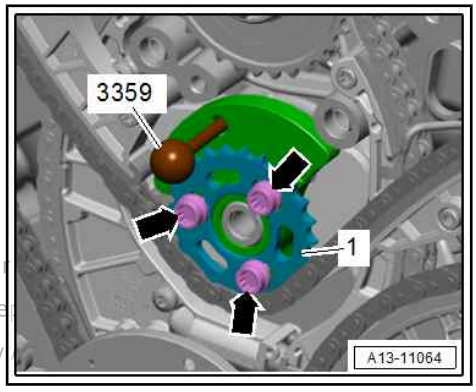

Protected by copyright. Copying for private or commercial purposes, in part o
permitted unless authorised by AUDI AG. AUDI AG does not guarantee or acce
with respect to the correctness of information in this document. Copyright by

– Remove locking pin - T10060A- (both sides).

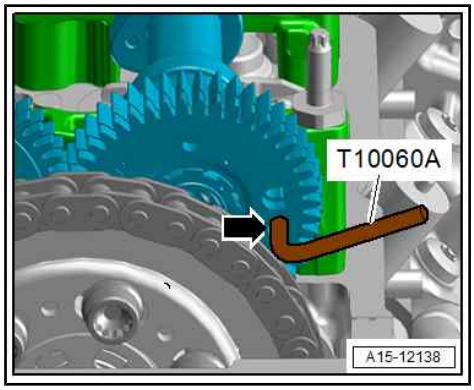

Note

If it is difficult to remove one or both locking pins -T10060A- , the valve timing must be checked ⇒ page 84 .

– Install timing chain cover (bottom) ⇒ page 66 .

– Install sealing flange (pulley end) ⇒ page 26 .

– A4/A5: Install subframe cross brace ⇒ Running gear, axles, steering; Rep. gr. 40 ; Subframe; Removing and installing subframe cross brace .

Tightening torques

♦ ⇒ “4.1 Exploded view - balance shaft”, page 41

♦ Plug for “TDC” marking ⇒ Item 19 (page 155)

4.3 Renewing roller bearing

Special tools and workshop equipment required

♦ Special tool -T40392-

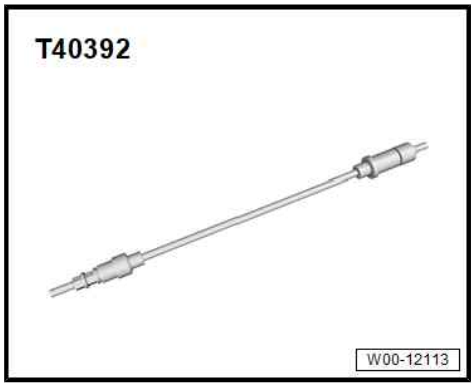

Pulling out

- Engine secured to engine and gearbox support ⇒ 6-cylinder TDI engine, 3.0 ltr. 4-valve common rail; Rep. gr. 10 ; Removing and installing engine; Securing engine to engine and gearbox support .

– Remove crankshaft ⇒ page 35 .

– Remove balance shaft ⇒ page 41 .

– Position special tool correctly on roller bearing:

- The chamfer -arrow- faces towards the roller bearing.

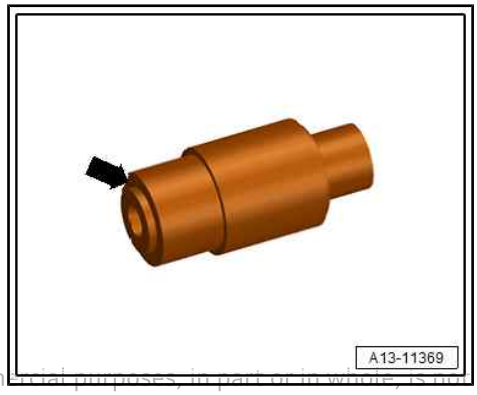

Protected by copyright. Copying for private or commercial purposes, in part or in whole, is not permitted unless authorised by AUDI AG. AUDI AG does not guarantee or accept any liability with respect to the correctness of information in this document. Copyright by AUDI AG.

– Pull roller bearings (front -1- and rear -2-) out inwards using spindle -T40392/1- and adapters -T40392/2- / -T40392/3- ; to do so, turn nut -T40392/4- .
– Detach special tool and remove roller bearing.

Protected by copyright. Copying for private or commercial purposes, in part is permitted unless authorised by AUDI AG. AUDI AG does not guarantee or assume any liability with respect to the correctness of information in this document. Copyright by AUDI AG

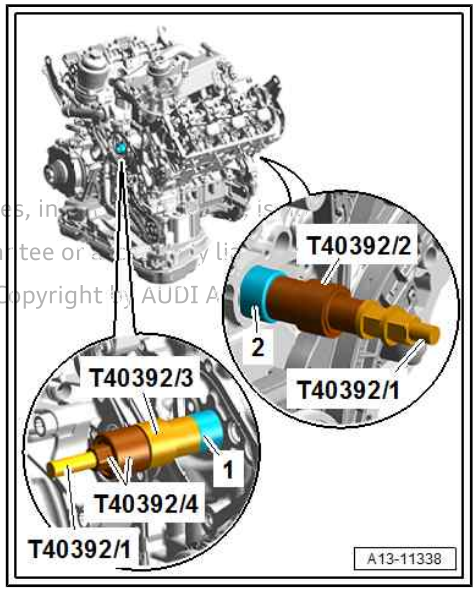

Installing

– Position adapter correctly on roller bearing:
• Chamfer -arrow- must face roller bearing; chamfer determines installation depth.

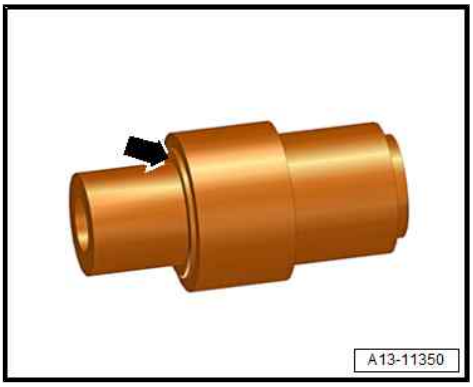

– Pull roller bearings (front -1- and rear -2-) in as far as stop using spindle -T40392/1- and adapters -T40392/2- / -T40392/3- ; to do so, turn nut -T40392/4- .
• The sides of the roller bearings with identification lettering face outwards.
– Install balance shaft ⇒ page 41 .
– Install crankshaft ⇒ page 35 .

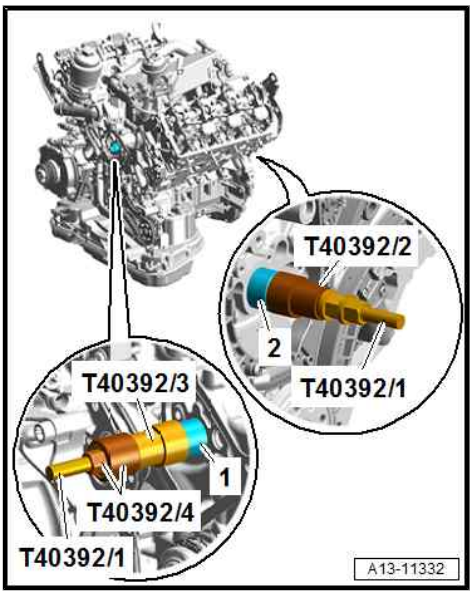

5 Pistons and conrods

⇒ “5.1 Exploded view - pistons and conrods”, page 50

⇒ “5.2 Removing and installing pistons”, page 52

⇒ “5.3 Measuring piston projection at TDC”, page 53

⇒ “5.4 Checking pistons and cylinder bores”, page 56

⇒ “5.5 Checking radial clearance of conrod bearings”, page 57

5.1 Exploded view - pistons and conrods

Note

- *All bearing and running surfaces must be oiled before assembling.*
- *Oil spray jet for piston cooling ⇒ page 51 .*

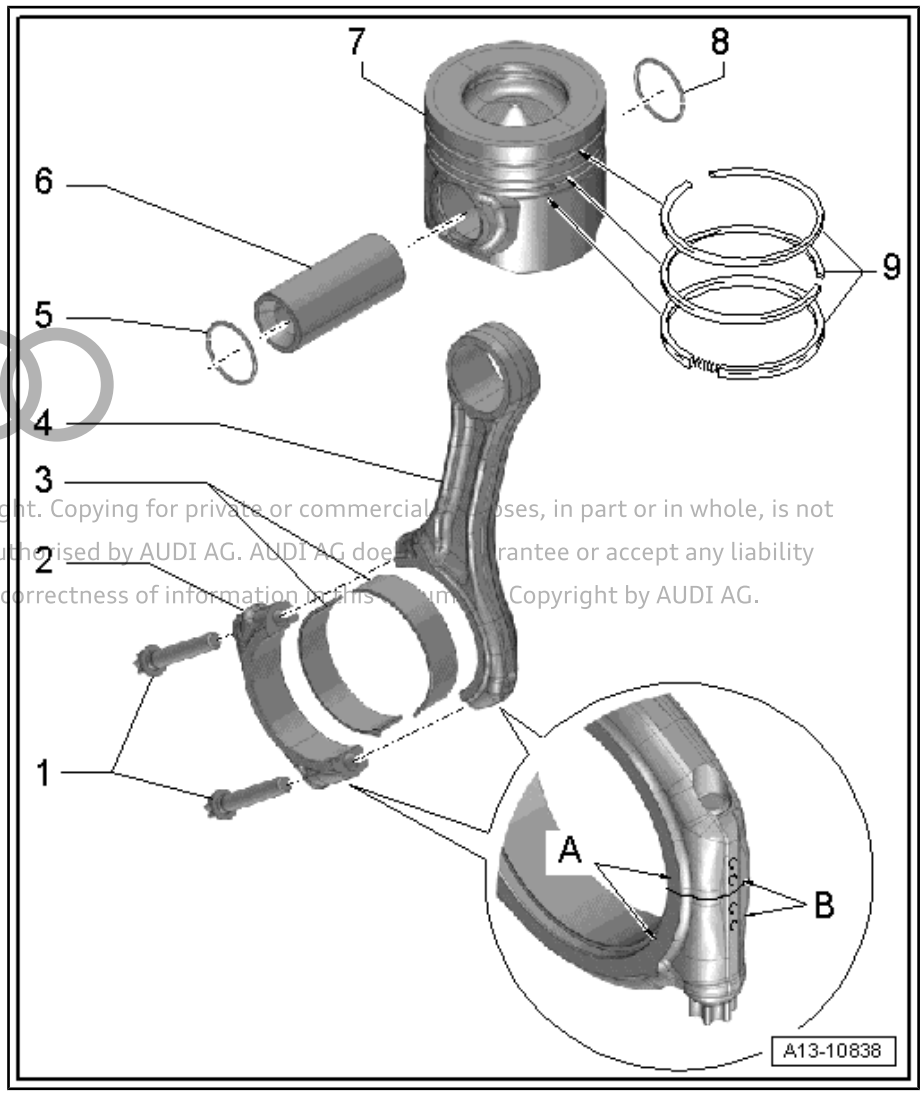

1 - Bolts

- ❑ Renew after removing
- ❑ Lubricate threads and contact surface
- ❑ 35 Nm +90°

2 - Conrod bearing cap

- ❑ Due to the cracking method used to separate the bearing cap from the conrod in manufacture, the caps only fit in one position and only on the appropriate conrod
- ❑ Mark installation position for re-installation
- ❑ Mark cylinder allocation in colour -B- ⇒ page 52
- ❑ Note when fitting: wide contact shoulder -A- must face same side on conrod and conrod bearing cap

3 - Bearing shells

- ❑ Note installation position
- ❑ Renew used bearing shells
- ❑ Note version: Upper bearing shell (closest to piston) is constructed from a more wear-resistant material; refer to ⇒ Electronic parts catalogue
- ❑ Ensure that retaining lugs are securely seated.

4 - Conrod

- ❑ With industrially cracked conrod bearing cap

Protected by copyright. Copying for private or commercial purposes, in part or in whole, is not permitted unless authorised by AUDI AG. AUDI AG does not guarantee or accept any liability with respect to the correctness of information in this document. Copyright by AUDI AG.

- ❑ Mark cylinder allocation in colour -B- ⇒ page 52
- ❑ Axial clearance for each conrod pair (when new): 0.20 … 0.44 mm
- ❑ Measuring radial clearance ⇒ page 57
- ❑ Installation position ⇒ page 52
- ❑ Only renew as a complete set
- ❑ Note when fitting: wide contact shoulder -A- must face same side on conrod and conrod bearing cap

5 - Circlip

- ❑ Renew after removing

6 - Piston pin

- ❑ Removing and installing ⇒ “5.2 Removing and installing pistons”, page 52

7 - Piston

- ❑ Measuring piston projection at “TDC” ⇒ page 53
- ❑ Mark installation position and cylinder number ⇒ page 52
- ❑ Renew piston if cracking is visible on piston crown or piston skirt
- ❑ Removing and installing ⇒ page 52
- ❑ Checking pistons and cylinder bores ⇒ page 56

8 - Circlip

- ❑ Renew after removing

9 - Piston rings

- ❑ Measuring ring gap ⇒ page 56
- ❑ Measuring ring-to-groove clearance ⇒ page 57
- ❑ Use piston ring pliers (commercially available) to remove and install
- ❑ Installation position: marking “TOP” or side with lettering faces towards piston crown
- ❑ Offset gaps by 120°

Oil spray jet for piston cooling

1 - Bolt, 9 Nm

2 - Oil spray jet with spray nozzle valve for piston cooling

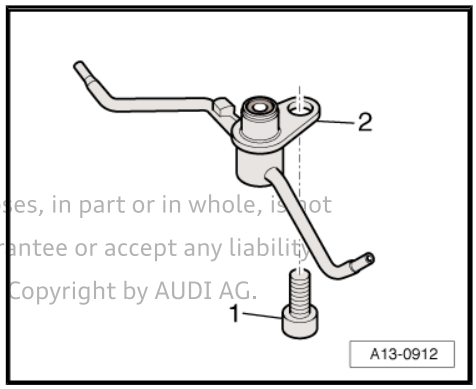

Caution

Protected by copyright. Copying for private or commercial purposes, in part or in whole, is not permitted unless authorised by AUDI AG. AUDI AG does not guarantee or accept any liability with respect to the correctness of information in this document. Copyright by AUDI AG.

Risk of damage to oil spray jets.

- ***Do not bend oil spray jets.***
- ***Check that oil spray jets have adequate clearance after re-installing pistons.***
- ***Always renew bent oil spray jets.***

Installation position of pistons

Caution

Risk of damage to piston crown.

- *If you intend to re-install used pistons, mark the cylinder number on the piston crown using paint. Do not attempt to mark the piston crown with a centre punch or by making a scratch, notch or similar.*

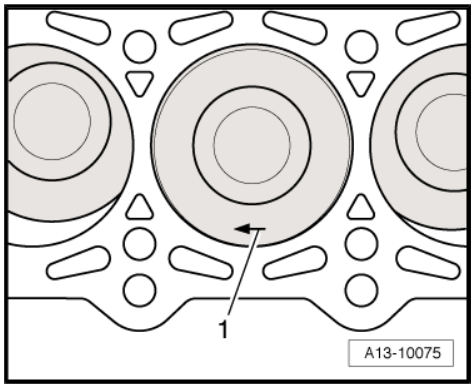

- Installation position: Arrow -item 1- on piston crown points to pulley end.

Marking conrods

– Before removing, mark mating positions of conrods and conrod bearing caps with coloured pen -arrow-.

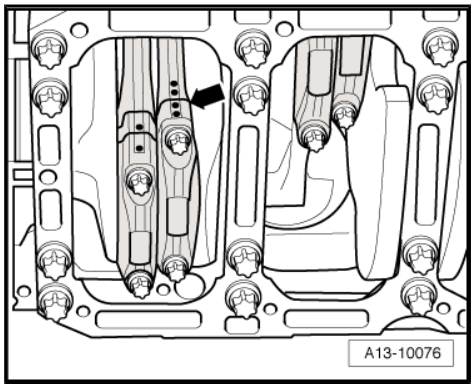

Note

- *Only renew conrods as a complete set.*
- *Do not interchange conrod bearings.*

Conrod installation position

The larger contact shoulder on the conrod -arrows- faces towards the adjacent crankshaft bearing.

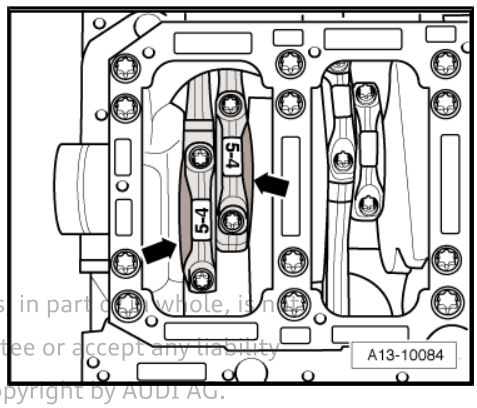

Note

Illustration shows first conrod pair.

Protected by copyright. Copying for private or commercial purposes, in part or in whole, is not permitted unless authorised by AUDI AG. AUDI AG does not guarantee or accept any liability with respect to the correctness of information in this document. Copyright by AUDI AG.

5.2 Removing and installing pistons

Special tools and workshop equipment required

- Pin - VW 222A-

- Piston ring clamp, commercially available

Removing

- Engine secured to engine and gearbox support ⇒ 6-cylinder TDI engine, 3.0 ltr. 4-valve common rail; Rep. gr. 10 ; Removing and installing engine; Securing engine to engine and gearbox support .

– Remove cylinder head ⇒ page 109 .

– Remove sump (top section) ⇒ page 158 .

– Mark installation position and matching of conrod bearing caps to cylinder and to conrods for re-installation ⇒ page 52 .

– Unbolt conrod bearing caps.

Protected by copyright. Copying for private or commercial purposes, in part or in whole, is not permitted unless authorised by AUDI AG. AUDI AG does not guarantee or accept any liability with respect to the correctness of information in this document.

– Pull out pistons upwards with conrods.

– Take circlip -2- out of piston pin boss.

– Use drift - VW 222A- to drive out piston pin -3-.

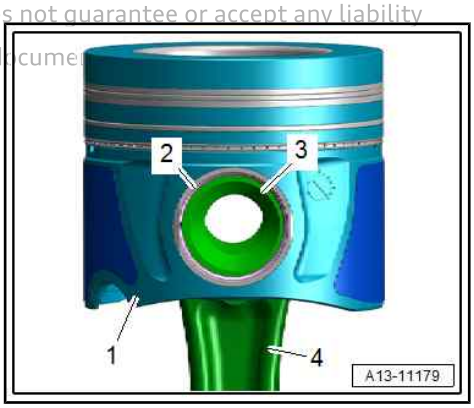

Note

If piston pin is difficult to remove, heat piston to approx. 60 °C.

– Detach piston -1- from conrod -4-.

Installing

Installation is carried out in reverse order; note the following:

Note

After removing, renew bolts tightened with specified tightening angle.

– Oil running surfaces of bearing shells.

– Install pistons using commercially available piston ring clamp.

Installation position:

- Pistons ⇒ page 52
- Conrods ⇒ page 52

– Install conrod bearing caps according to markings.

– Install sump (upper section) ⇒ page 158 .

– Install cylinder head ⇒ page 109 .

Tightening torques

◆ ⇒ “5.1 Exploded view - pistons and conrods”, page 50

5.3 Measuring piston projection at TDC

Note

Measure piston projection at “TDC” when installing new pistons or a short engine.

Special tools and workshop equipment required

- Measuring bridge -VW 382/7- from measuring tool - VW 382-

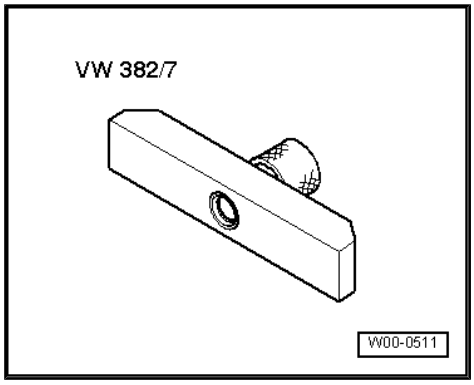

- Measuring plate -VW 385/17- from universal measuring tool - VW 385-

Protected by copyright. Copying for private or commercial purposes, in part or in whole, is not permitted unless authorised by AUDI AG. AUDI AG does not make any liability with respect to the correctness of information in this document. ©AUDI AG.

- Dial gauge - VAS 6079-

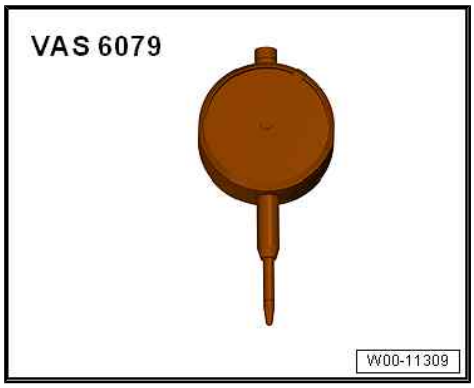

Procedure

– Secure dial gauge - VAS 6079- with measuring bridge - VW 382/7- and measuring plate -VW 385/17- to cylinder block as shown in illustration.

– Measure projection at each piston at both locations marked with -arrows- (seen in longitudinal direction of engine: at front and rear of piston).

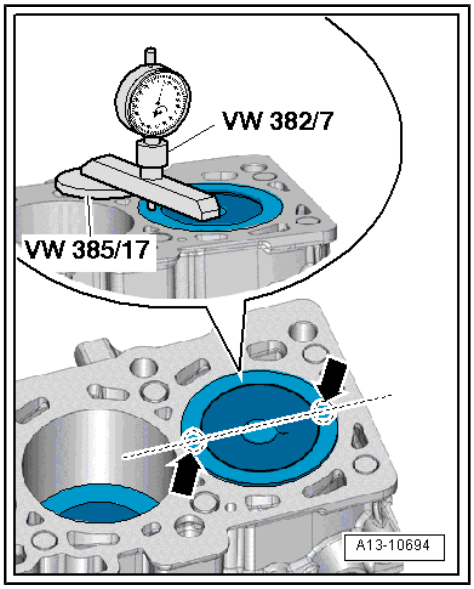

Note

- *If the values measured for piston projection are not the same for all pistons, use the highest value to determine the correct gasket size.*
- *The cylinder head gasket size must be determined separately for each cylinder bank.*

– Depending on piston projection, install corresponding cylinder head gasket according to following table:

Piston projection above top surface of cylinder block	Identification (no. of holes)
0.81…0.91 mm	1
0.91…0.96 mm	2
0.96…1.07 mm	3

Identification of cylinder head gasket

1 - Part number

2 - Holes

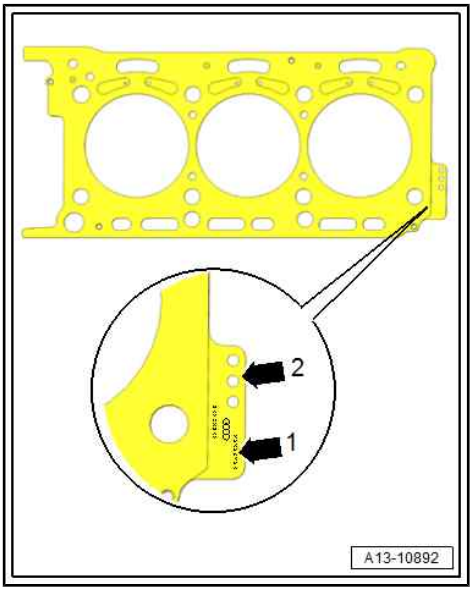

Note

The gaskets for the left and right cylinder heads have different shapes and cannot be interchanged.

Protected by copyright. Copying for private or commercial purposes, in part or in whole, is not permitted unless authorised by AUDI AG. AUDI AG does not guarantee or accept any liability with respect to the correctness of information in this document. Copyright by AUDI AG.

5.4 Checking pistons and cylinder bores

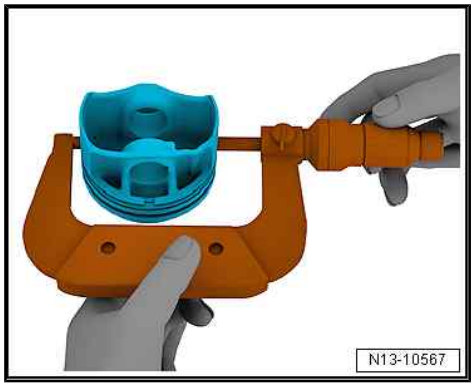

Checking piston

– Using a micrometer (75 ... 100 mm), measure approx. 10 mm from the lower edge, perpendicular to the piston pin axis.

• Maximum deviation from nominal dimension: 0.05 mm.

There are different piston sizes specifically matched to the different dimensions of the cylinder block.

Piston ∅ mm	
Nominal dimension	82.924 … 82.936 1)
Repair oversize	82.964 … 82.976 1)
• 1) Dimensions not including coating (thickness 0.02 mm). The coating will wear down partly in service.	

Measuring cylinder bore

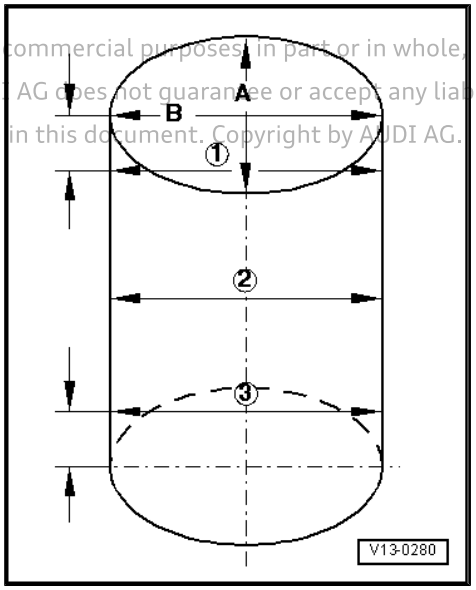

– Use a cylinder gauge - VAS 6078- to take measurements at 3 points in transverse direction -A- and in longitudinal direction -B-.

• Maximum deviation from nominal dimension: 0.08 mm.

Cylinder bore ∅ mm	
Nominal dimension	83.006 … 83.014 1)
Repair oversize	83.046 … 83.054 1)
• 1) Measure at 50 mm into cylinder bore.	

Protected by copyright. Copying for private or commercial purposes, in part or in whole, is not permitted unless authorised by AUDI AG. AUDI AG does not guarantee or accept any liability with respect to the correctness of information in this document. Copyright by AUDI AG.

Measuring piston ring gap

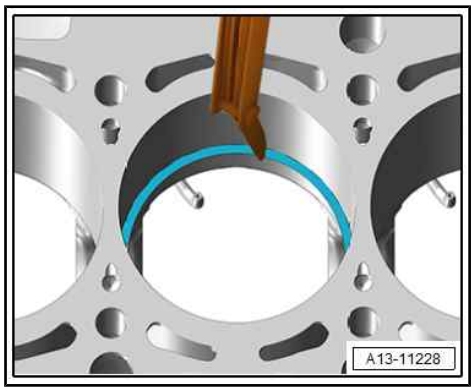

– Insert ring at right angle to cylinder wall from above and push down into lower cylinder opening approx. 50 mm from bottom of cylinder.

– To do so, use a piston without rings.

Piston ring	new mm	Wear limit mm
1st compression ring	0.26 … 0.36	0.60
2nd compression ring	0.70 … 0.90	1.20
Oil scraper ring	0.20 … 0.40	0.70

Measuring ring-to-groove clearance

– Clean groove in piston before checking clearance.

Piston ring	new mm	Wear limit mm
1st compression ring	0.09 … 0.13	0.160
2nd compression ring	0.05 … 0.09	0.11
Oil scraper ring	0.03 … 0.07	0.10

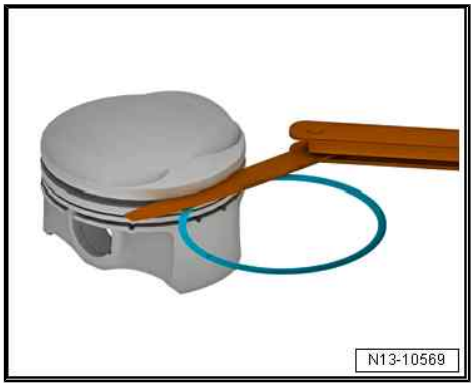

5.5 Checking radial clearance of conrod bearings

Special tools and workshop equipment required

♦ Plastigauge

Procedure

– Remove conrod bearing cap. Clean bearing cap and bearing journal.

– Place a length of Plastigauge corresponding to the width of the bearing on the bearing journal or in the bearing shell.

– Fit conrod bearing cap and secure with old bolts ⇒ Item 1 (page 50) without rotating crankshaft.

– Remove conrod bearing cap again.

– Compare width of Plastigauge with measurement scale.

Radial clearance:

• New: 0.020 ... 0.069 mm.

– Renew conrod bolts.

Protected by copyright. Copying for private or commercial purposes, in part or in whole, is not permitted unless authorised by AUDI AG. AUDI AG does not guarantee or accept any liability with respect to the correctness of information in this document. Copyright by AUDI AG.

15 – Cylinder head, valve gear

1 Timing chain cover

⇒ "1.1 Exploded view - timing chain cover", page 58

⇒ "1.2 Removing and installing timing chain cover", page 61

1.1 Exploded view - timing chain cover

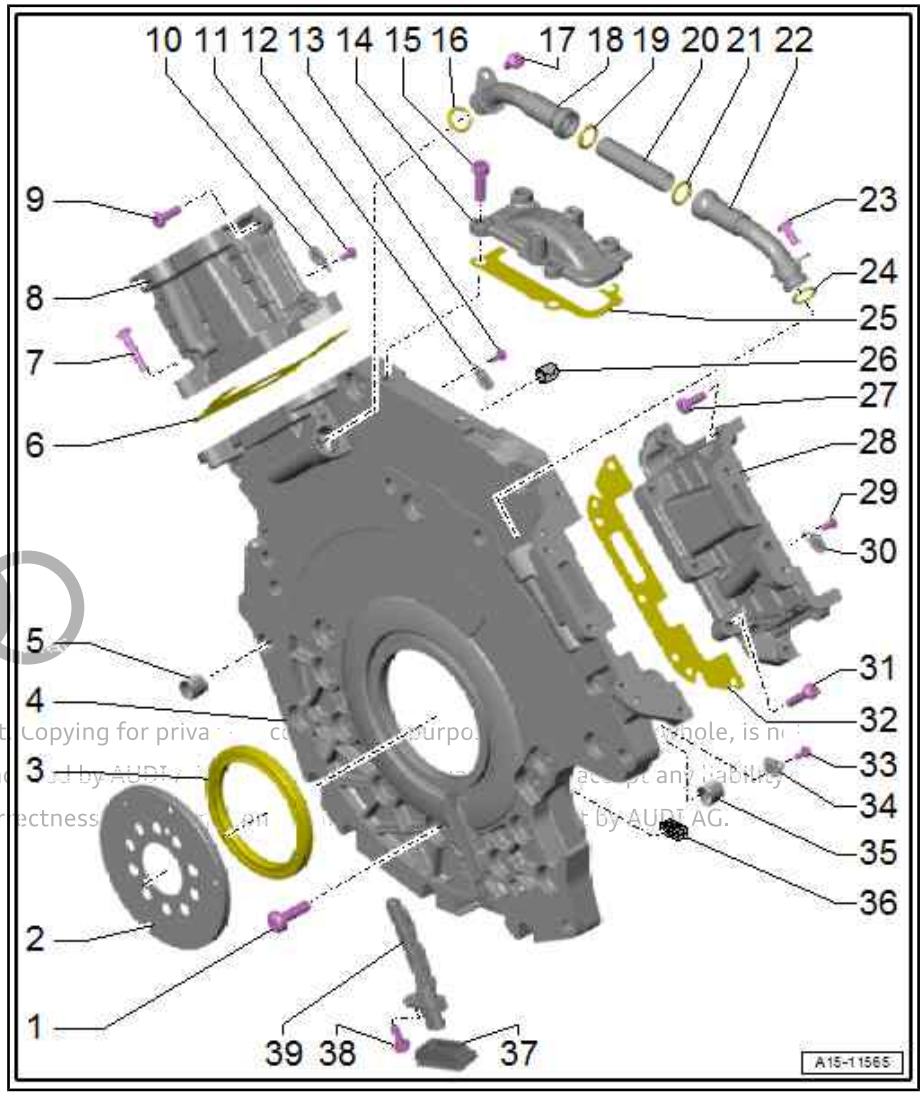

1 - Bolt
- ❑ Renew after removing
- ❑ Tightening torque and sequence ⇒ page 61

2 - Sender wheel
- ❑ For engine speed sender - G28-

3 - Oil seal
- ❑ For crankshaft (gearbox end)
- ❑ Removing and installing ⇒ page 32

4 - Timing chain cover (bottom)
- ❑ Removing and installing ⇒ page 66

5 - Dowel sleeve
- ❑ 2x

6 - Gasket
- ❑ Renew after removing

7 - Bolt
- ❑ Renew after removing
- ❑ Tightening torque and sequence ⇒ page 60

8 - Timing chain cover (left-side)
- ❑ Removing and installing ⇒ page 61

9 - Bolt
- ❑ Renew after removing
- ❑ Tightening torque and sequence ⇒ page 60

10 - Reed valve
- ❑ For crankcase breather

11 - Bolt
- ❑ 3 Nm

12 - Reed valve
- ❑ For crankcase breather

13 - Bolt
- ❑ 3 Nm

Protected by copyright. Copying for priva... purpo... whole, is n... permitted unless auth... by AUDI... accept any liability with respect to the correctness... by AUDI AG.

14 - Cover

15 - Bolt

- ❑ 23 Nm
- ❑ If insert tool, XZN 10 - V.A.G 1331/15- is used, set torque wrench to 20 Nm

16 - O-ring

- ❑ Renew after removing

17 - Bolt

- ❑ 9 Nm

18 - Line

- ❑ For crankcase breather

19 - O-ring

- ❑ Renew after removing

20 - Line

- ❑ For crankcase breather

21 - O-ring

- ❑ Renew after removing

22 - Line

- ❑ For crankcase breather

23 - Bolt

- ❑ 9 Nm

24 - O-ring

- ❑ Renew after removing

25 - Gasket

- ❑ Renew after removing

26 - Clamping sleeve

- ❑ 3x
- ❑ Prevents ingress of lubricant into threaded hole

27 - Bolt

- ❑ Renew after removing
- ❑ Tightening torque and sequence ⇒ page 60

28 - Timing chain cover (right-side)

- ❑ Removing and installing ⇒ page 61

29 - Bolt

- ❑ 3 Nm

30 - Reed valve

- ❑ For crankcase breather

31 - Bolt

- ❑ Renew after removing
- ❑ Tightening torque and sequence ⇒ page 60

32 - Gasket

- ❑ Renew after removing

Protected by copyright. Copying for private or commercial purposes, in part or in whole, is not permitted unless authorised by AUDI AG. AUDI AG does not guarantee or accept any liability with respect to the correctness of information in this document. Copyright by AUDI AG.

33 - Bolt

- ❑ 3 Nm

34 - Reed valve

- ❑ For crankcase breather

35 - Dowel sleeve

- ❑ 2x

36 - Sealing element

- ❑ 2x

37 - Cover

- ❑ Not fitted on all versions

38 - Bolt

- ❑ Tightening torque ⇒ Item 8 (page 302)

39 - Engine speed sender - G28-

- ❑ Removing and installing ⇒ page 306

Timing chain cover (top left) - tightening torque and tightening sequence

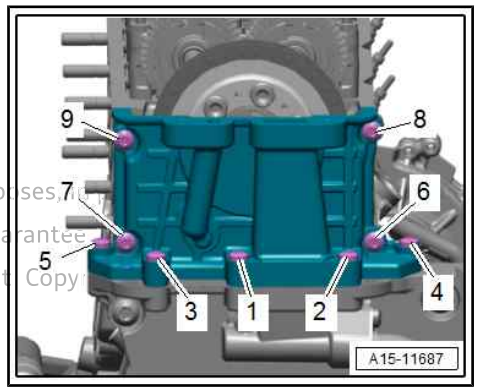

Note

After removing, renew bolts tightened with specified tightening angle.

Protected by copyright. Copying for private or commercial purposes, in part or in whole, is not permitted unless authorised by AUDI AG. AUDI AG does not guarantee the correctness of information in this document. Copyright by AUDI AG.

– Tighten bolts in stages in the sequence shown:

Stage	Bolts	Tightening torque/angle specification
1.	-1 … 9-	Screw in by hand until contact is made
2.	-1 … 9-	8 Nm
3.	-1 … 9-	8 Nm (this step is performed to allow for settling of timing chain cover)
4.	-1 … 9-	Turn 90° further

Timing chain cover (top right) - tightening torque and tightening sequence

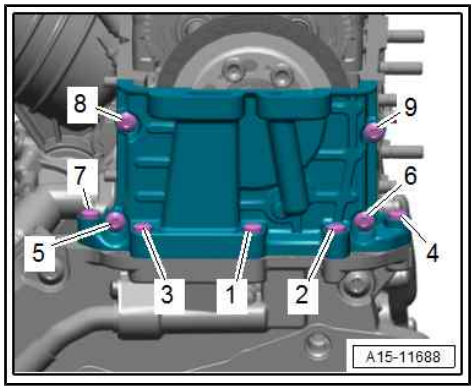

Note

After removing, renew bolts tightened with specified tightening angle.

– Tighten bolts in stages in the sequence shown:

Stage	Bolts	Tightening torque/angle specification
1.	-1 … 9-	Screw in by hand until contact is made
2.	-1 … 9-	8 Nm
3.	-1 … 9-	8 Nm (this step is performed to allow for settling of timing chain cover)
4.	-1 … 9-	Turn 90° further

Timing chain cover (bottom) - tightening torque and tightening sequence

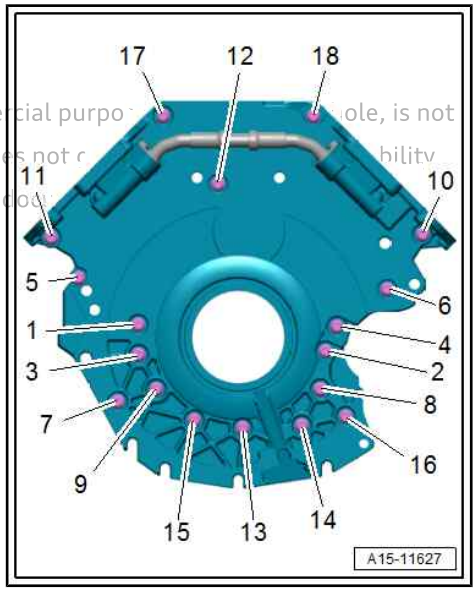

Protected by copyright. Copying for private or commercial purpo ole, is not permitted unless authorised by AUDI AG. AUDI AG does not c bility with respect to the correctness of information in this doc

Note

After removing, renew bolts tightened with specified tightening angle.

– Tighten bolts in stages in the sequence shown:

Stage	Bolts	Tightening torque/angle specification
1.	-1 … 18-	2 Nm
2.	-1 … 18-	8 Nm
3.	-1 … 18-	Turn 90° further

1.2 Removing and installing timing chain cover

⇒ "1.2.1 Removing and installing timing chain cover (top left)", page 61

⇒ "1.2.2 Removing and installing timing chain cover (top right)", page 63

⇒ "1.2.3 Removing and installing timing chain cover (bottom)", page 66

1.2.1 Removing and installing timing chain cover (top left)

Special tools and workshop equipment required

- Electric drill with plastic brush
- Safety goggles
- Sealant ⇒ Electronic parts catalogue

Removing

– Remove exhaust manifold (left-side) ⇒ 6-cylinder TDI engine, 3.0 ltr. 4-valve common rail; Rep. gr. 26 ; Exhaust manifolds; Removing and installing exhaust manifolds .

– Unscrew bolts -arrows- and remove engine lifting eye (rear left) -1-.

– Remove cylinder head cover (left-side) ⇒ page 117 .

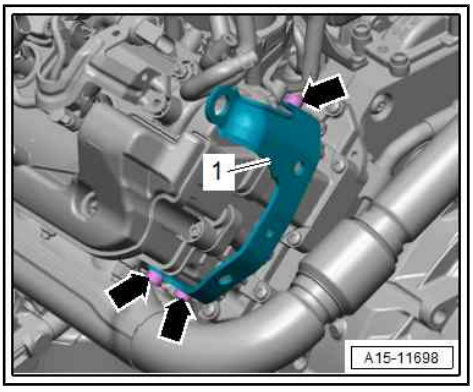

– Loosen bolts in the sequence -9 ... 1-.

– Carefully release timing chain cover (top left) from bonded joint and remove cover.

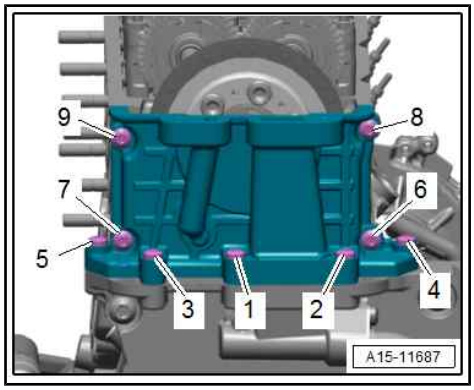

Caution

Risk of irreparable damage to engine.

- *Block off the opening in the valve timing housing with a clean cloth to prevent small items from dropping into the engine when the timing chain cover (top) is removed.*

Installing

– Remove old sealant from sealing surfaces on timing chain cover.

Caution

Protect lubrication system against contamination.

- *Cover exposed parts of the engine.*

WARNING

Risk of eye injury.

- *Put on safety goggles.*

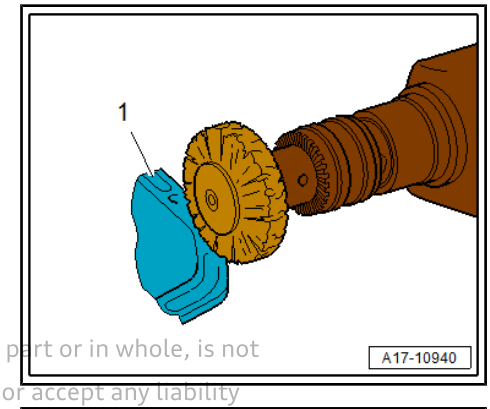

– Remove remaining sealant on timing chain cover -1- and cylinder head using rotating plastic brush or similar.

– Clean surfaces; they must be free of oil and grease.

Protected by copyright. Copying for private or commercial purposes, in part or in whole, is not permitted unless authorised by AUDI AG. AUDI AG does not guarantee or accept any liability with respect to the correctness of information in this document. Copyright by AUDI AG.

Note

Note expiry date of sealant.

– Cut off nozzle of tube at front marking (nozzle ∅ approx. 1.5 mm).

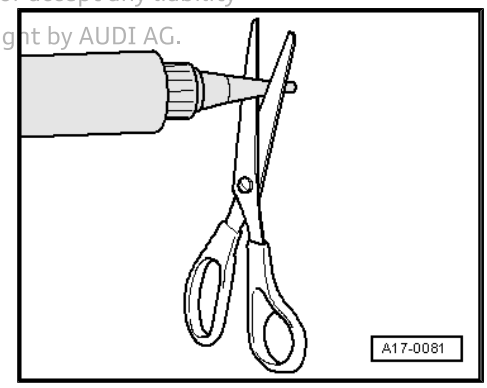

– Fit gasket -1-.

– Apply sealant at joints between cylinder head and timing chain cover (bottom) -arrow-, as shown in illustration.

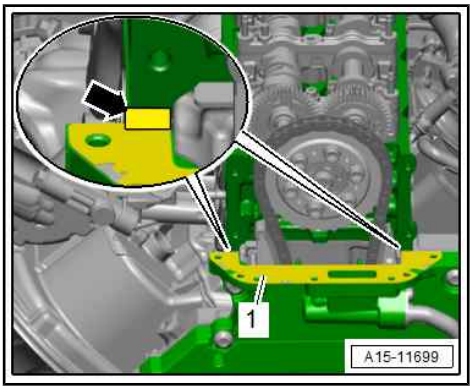

Caution

Make sure lubrication system is not clogged by excess sealant.

- *The sealant bead must not be thicker than specified.*

- The bead of sealant must project 1.5 … 2.0 mm above the sealing surface.

– Apply sealant beads -1 and 2- onto clean sealing surface of timing chain cover (left-side), as illustrated.

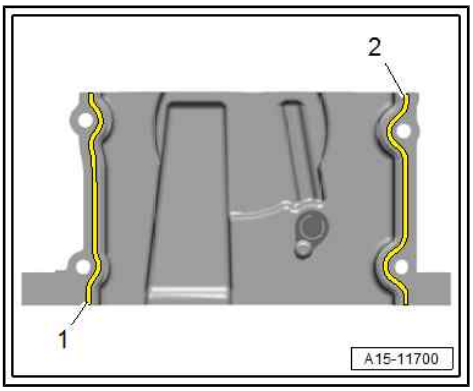

Note

Install timing chain cover within 5 minutes of applying sealant.

– Fit timing chain cover and tighten bolts ⇒ page 60 .

Remaining installation steps are carried out in reverse sequence; note the following:

– Install cylinder head cover (left-side) ⇒ page 117 .

– Install exhaust manifold (left-side) ⇒ 6-cylinder TDI engine, 3.0 ltr. 4-valve common rail; Rep. gr. 26 ; Exhaust manifolds; Removing and installing exhaust manifolds .

Tightening torques

- ⇒ Fig. ""Timing chain cover (top left) - tightening torque and tightening sequence"" , page 60
- ⇒ "3.1 Exploded view - cylinder head", page 103

1.2.2 Removing and installing timing chain cover (top right)

Special tools and workshop equipment required

- Insert tool, XZN 10 - V.A.G 1331/15- (not illustrated)
- Electric drill with plastic brush
- Safety goggles
- Sealant ⇒ Electronic parts catalogue

Removing

– Remove turbocharger ⇒ page 201 .

– Remove cylinder head cover (right-side) ⇒ page 114 .

Protected by copyright. Copying for private or commercial purposes, in part or in whole, is not permitted unless authorised by AUDI AG. AUDI AG does not guarantee or accept any liability with respect to the correctness of information in this document. Copyright by AUDI AG.

– Remove bolt -3- and press air pipe -2- slightly towards rear.

1, 4 - Ignore

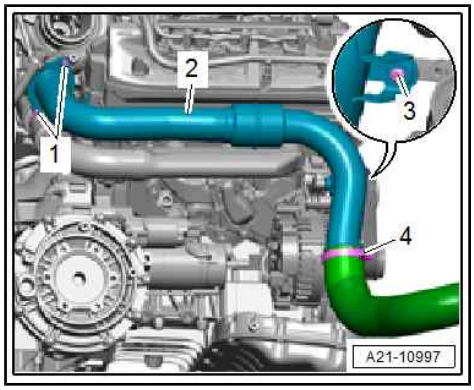

– Unscrew bolts -arrows- and detach bracket -1- for turbocharger.

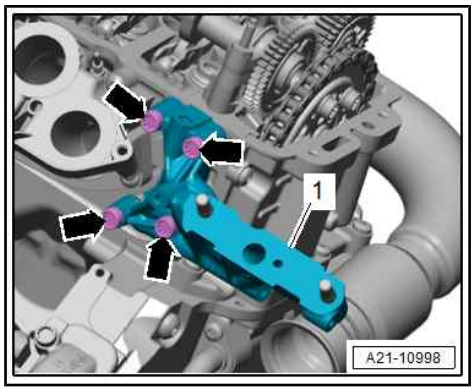

Note

Use insert tool, XZN 10 - V.A.G 1331/15- for bolts that are difficult to access.

– Loosen bolts in the sequence -9 ... 1-.

– Carefully release timing chain cover (top right) from bonded joint and detach.

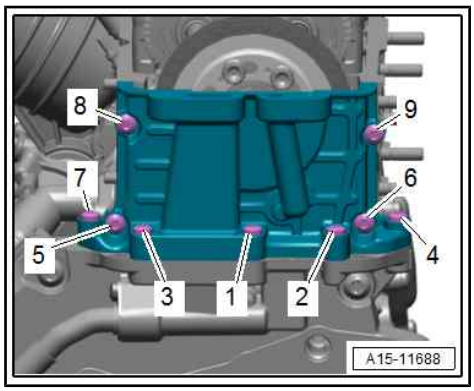

Caution

Risk of irreparable damage to engine.

- *Block off the opening in the valve timing housing with a clean cloth to prevent small items from dropping into the engine when the timing chain cover (top) is removed.*

Installing

– Remove old sealant from sealing surfaces on timing chain cover.

Protected by copyright. Copying for private or commercial purposes, in part or in whole, is not permitted unless authorised by AUDI AG. AUDI AG does not guarantee or accept any liability with respect to the correctness of information in this document. Copyright by AUDI AG.

Caution

Protect lubrication system against contamination.

- *Cover exposed parts of the engine.*

WARNING

Risk of eye injury.

- ***Put on safety goggles.***

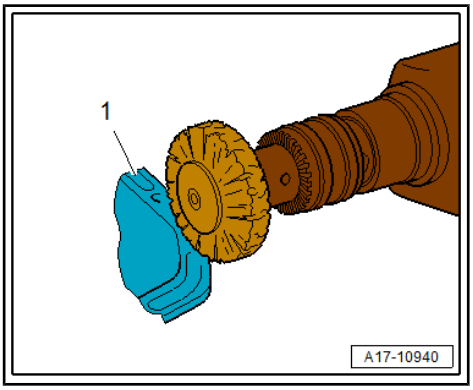

– Remove remaining sealant on timing chain cover -1- and cylinder head using rotating plastic brush or similar.

– Clean surfaces; they must be free of oil and grease.

Note

Note expiry date of sealant.

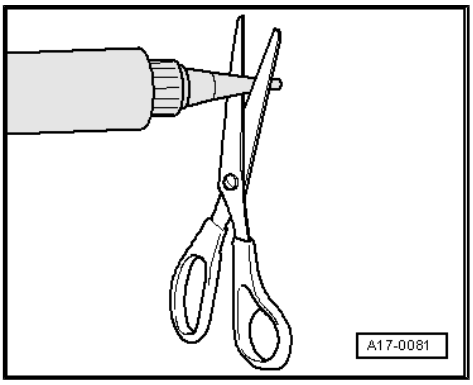

– Cut off nozzle of tube at front marking (nozzle ∅ approx. 1.5 mm).

– Fit gasket -1-.

– Apply sealant at joints between cylinder head and timing chain cover (bottom) -arrow-, as shown in illustration.

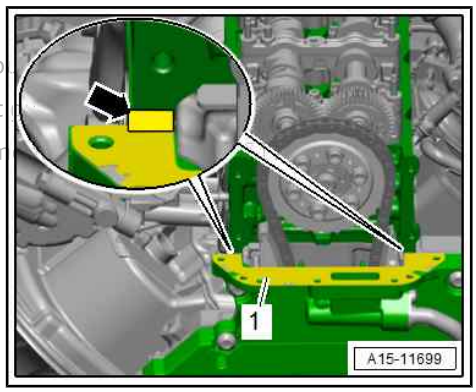

permitted unless authorised by AUDI AG. AUDI AG does not
with respect to the correctness of information in this docum

Caution

Make sure lubrication system is not clogged by excess sealant.

- ***The sealant bead must not be thicker than specified.***

- The bead of sealant must project 1.5 … 2.0 mm above the sealing surface.

– Apply sealant beads -1 and 2- onto clean sealing surface of timing chain cover (right-side), as illustrated.

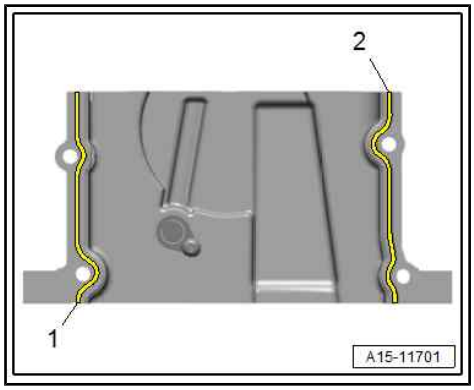

Note

Install timing chain cover within 5 minutes of applying sealant.

– Fit timing chain cover and tighten bolts ⇒ page 60 .

Remaining installation steps are carried out in reverse sequence; note the following:

– Install cylinder head cover (right-side) ⇒ page 114 .

– Install turbocharger ⇒ page 201 .

Tightening torques

- ⇒ Fig. ""Timing chain cover (top right) - tightening torque and tightening sequence"" , page 60
- ⇒ "1.1 Exploded view - turbocharger", page 198
- ⇒ "2.1 Exploded view - charge air system", page 206

1.2.3 Removing and installing timing chain cover (bottom)

Special tools and workshop equipment required

- Socket - T10574-

- Insert tool, XZN 10 - V.A.G 1331/15- (not illustrated)
- Electric drill with plastic brush
- Safety goggles
- Sealant ⇒ Electronic parts catalogue

Removing

Preparatory work may be necessary depending on model ⇒ 6-cylinder TDI engine; 3.0 ltr. 4-valve common rail; Rep. gr. 15 ; Timing chain cover; Removing and installing timing chain cover .

Protected by copyright. Copying for private or commercial purposes, in part or in whole, is not permitted unless authorised by AUDI AG. AUDI AG does not guarantee or accept any liability with respect to the correctness of information in this document. Copyright by AUDI AG.

– Remove drive plate ⇒ page 30 .

– Remove timing chain covers (top) ⇒ page 61 , ⇒ page 63 .

– Remove bolt -1-.
– Loosen bolts -arrows- 2 turns using socket - T10574- .

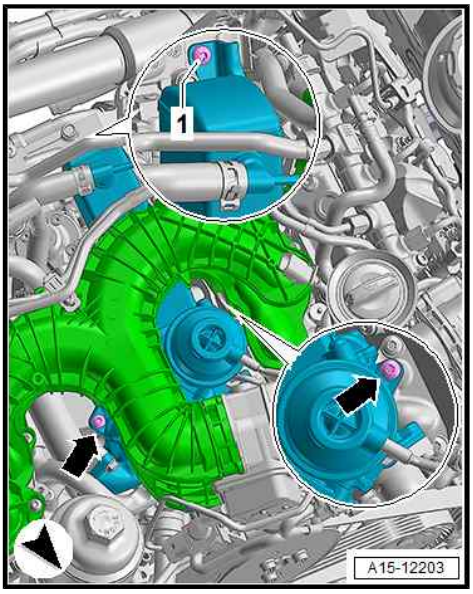

Note

The bolts -arrows- must not be loosened any further than 2 turns.

– Remove bolts -arrows-, lift exhaust gas recirculation cooler slightly and detach cover -1-.

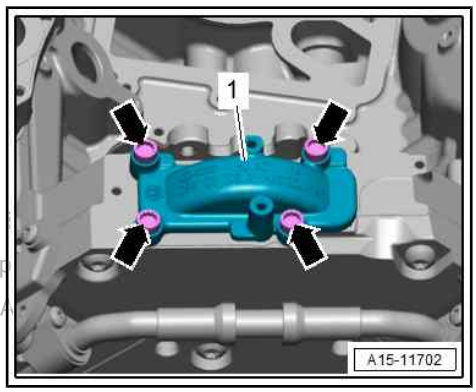

Note

Use insert tool, XZN 10 - V.A.G 1331/15- for bolts that are difficult to access.

Protected by copyright. Copying for private or commercial purposes, in part or
permitted unless authorised by AUDI AG. AUDI AG does not guarantee or accep
with respect to the correctness of information in this document. Copyright by A

– Unplug electrical connector -2- for engine speed sender - G28- . (Shown with gearbox installed.)

1 - Ignore

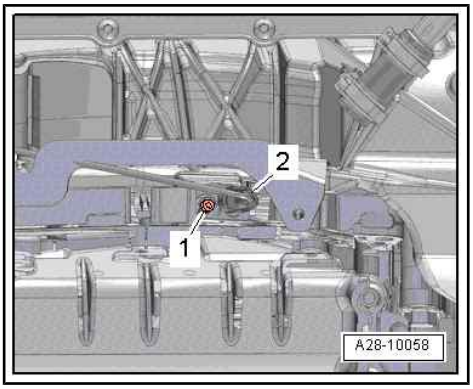

– Slacken and remove bolts in the sequence: -18 ... 1-.

– Carefully release timing chain cover (bottom) from bonded joint and remove cover.

– Press crankshaft oil seal (gearbox end) out of timing chain cover (bottom).

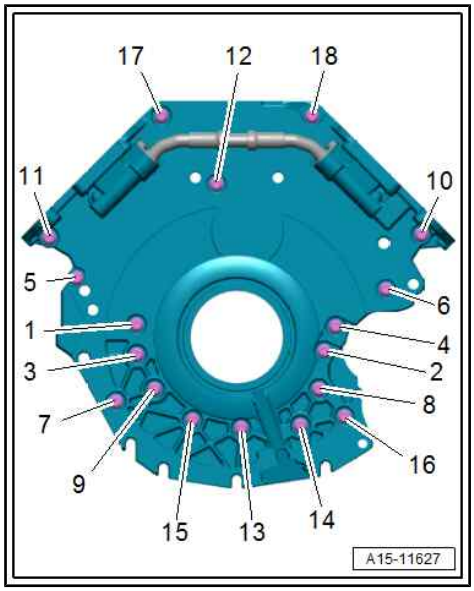

Installing

– Remove old sealant from grooves on timing chain cover and from sealing surfaces.

> **Caution**
>
> *Protect lubrication system against contamination.*
>
> ♦ *Cover exposed parts of the engine.*

> **WARNING**
>
> *Risk of eye injury.*
>
> ♦ *Put on safety goggles.*

Protected by copyright. Copying for private or commercial purposes, in part or in w
permitted unless authorised by AUDI AG. AUDI AG does not guarantee or acc
with respect to the correctness of information in this document. Copyright by

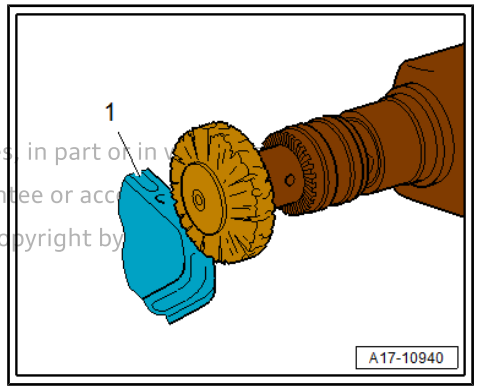

– Remove remaining sealant on timing chain cover -1- and cylinder block using rotating plastic brush or similar.

– Clean surfaces; they must be free of oil and grease.

> **Note**
>
> *Note expiry date of sealant.*

– Cut off nozzle of tube at front marking (nozzle ∅ approx. 1.5 mm).

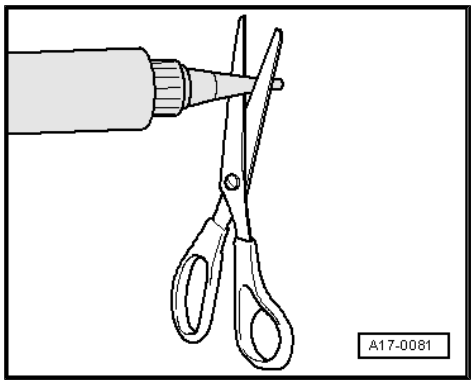

– Fit sealing elements -arrows-.

Caution

Make sure lubrication system is not clogged by excess sealant.

- ***The sealant bead must not be thicker than specified.***

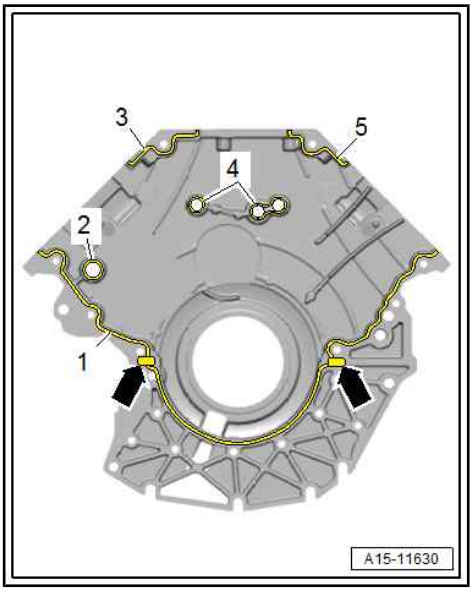

– Apply beads of sealant onto clean sealing surface of timing chain cover (bottom) as illustrated.

- The beads of sealant -1, 3, 5- must be 1.5 ... 2.0 mm thick.
- The beads of sealant around drillings -2- and -4- must be 1.5 … 2.0 mm thick.

Note

Install timing chain cover within 5 minutes of applying sealant.

– Check whether dowel sleeves -1, 5- are fitted in cylinder block; install if necessary.

– Check whether clamping sleeves -2, 3, 4- are fitted in cylinder block; install if necessary.

– Fit timing chain cover (bottom) and tighten bolts ⇒ page 61 .

Remaining installation steps are carried out in reverse sequence; note the following:

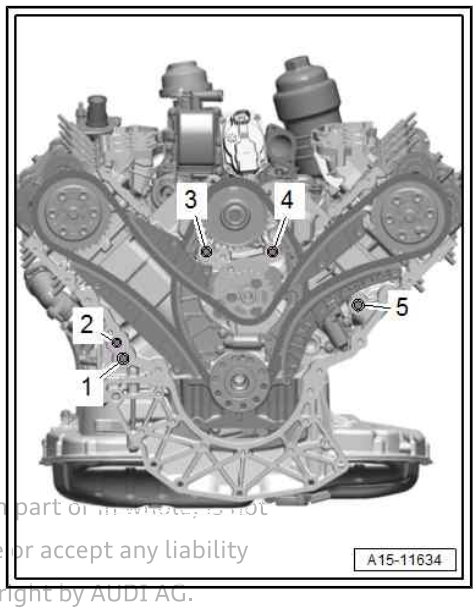

Note

Renew seal and sealing plugs after removing.

– Install crankshaft oil seal (gearbox end) ⇒ page 32 .

– Install exhaust gas recirculation cooler ⇒ page 291 .

– Install timing chain covers (top)
⇒ “1.2.1 Removing and installing timing chain cover (top left)”, page 61 and
⇒ “1.2.2 Removing and installing timing chain cover (top right)”, page 63 .

– Install drive plate ⇒ page 30 .

Additional work depending on model ⇒ 6-cylinder TDI engine, 3.0 ltr. 4-valve common rail; Rep. gr. 15 ; Timing chain cover; Removing and installing timing chain cover

Tightening torques

- ⇒ Fig. ““Timing chain cover (bottom) - tightening torque and tightening sequence”“ , page 61
- ⇒ “1.1 Exploded view - timing chain cover”, page 58

Protected by copyright. Copying for private or commercial purposes, in part or in whole, is not permitted unless authorised by AUDI AG. AUDI AG does not guarantee or accept any liability with respect to the correctness of information in this document. Copyright by AUDI AG.

2 Chain drive

⇒ “2.1 Exploded view - camshaft timing chains”, page 70

⇒ “2.2 Exploded view - drive chain for high-pressure pump”, page 72

⇒ “2.3 Exploded view - drive chain for oil pump”, page 73

⇒ “2.4 Exploded view - intermediate drive”, page 74

⇒ “2.5 Removing camshaft timing chain from camshafts”, page 74

⇒ “2.6 Removing and installing camshaft timing chain”, page 85

⇒ “2.7 Removing and installing drive chain for high-pressure pump”, page 94

⇒ “2.8 Installing intermediate drive”, page 96

2.1 Exploded view - camshaft timing chains

1 - Bolt
- ❑ 23 Nm

2 - Chain slip preventer

3 - Crankshaft
- ❑ With sprocket for camshaft timing chain

4 - Guide rail
- ❑ Note installation position

5 - Guide pin
- ❑ For guide rail
- ❑ Renew after removing
- ❑ 5 Nm +45°

6 - Camshaft timing chain
- ❑ Removing from camshafts ⇒ page 74
- ❑ Before removing, mark running direction with paint
- ❑ Removing and installing ⇒ page 85

7 - Bolt
- ❑ 23 Nm

8 - Camshaft chain sprocket
- ❑ Cylinder bank 2 (left-side)
- ❑ Installation position: Side with lettering legible from gearbox end

9 - Guide rail
- ❑ Note installation position

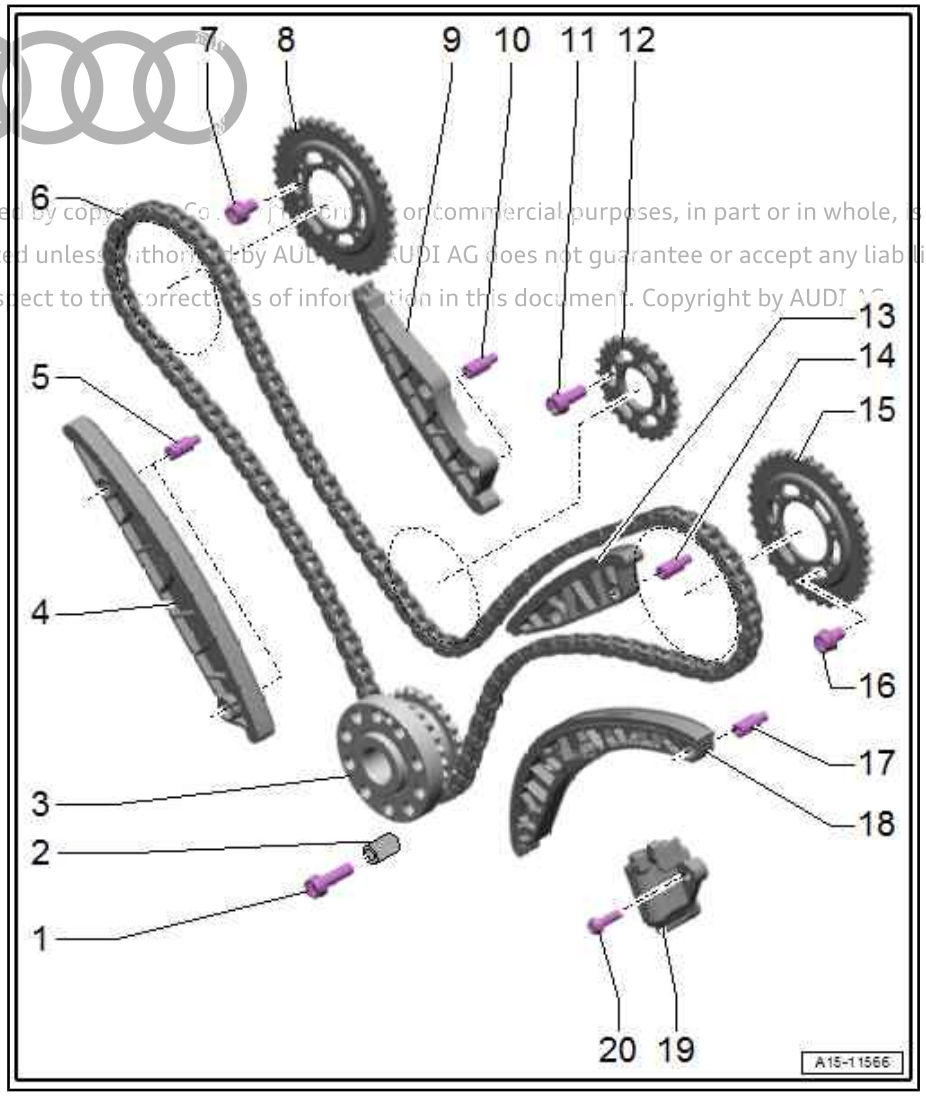

Protected by copyright. Copying for private or commercial purposes, in part or in whole, is not permitted unless authorised by AUDI AG. AUDI AG does not guarantee or accept any liability with respect to the correctness of information in this document. Copyright by AUDI AG.

10 - Guide pin
- ❑ For guide rail
- ❑ Renew after removing
- ❑ 5 Nm +45°

11 - Bolt
- ❑ Tightening torque ⇒ Item 1 (page 41)

12 - Drive chain sprocket
- ❑ For balance shaft

13 - Guide rail
- ❑ Note installation position

14 - Guide pin
- ❑ For guide rail
- ❑ Renew after removing
- ❑ 5 Nm +45°

15 - Camshaft chain sprocket
- ❑ Cylinder bank 1 (right-side)
- ❑ Installation position: Side with lettering legible from gearbox end

16 - Bolt
- ❑ 23 Nm

17 - Guide pin
- ❑ For tensioning rail
- ❑ Renew after removing
- ❑ 5 Nm +45°

18 - Tensioning rail

19 - Chain tensioner
- ❑ For camshaft timing chain

20 - Bolt
- ❑ Renew after removing
- ❑ 5 Nm +90°

Protected by copyright. Copying for private or commercial purposes, in part or in whole, is not permitted unless authorised by AUDI AG. AUDI AG does not guarantee or accept any liability with respect to the correctness of information in this document. Copyright by AUDI AG.

2.2 Exploded view - drive chain for high-pressure pump

1 - Drive chain for high-pressure pump
- ❑ Removing and installing ⇒ page 94

2 - Bolt
- ❑ Renew after removing
- ❑ 5 Nm +90°

3 - Chain tensioner
- ❑ With guide rail

4 - Drive chain sprocket
- ❑ For high-pressure pump
- ❑ Installation position: Side with lettering legible from gearbox end

5 - Guide pin
- ❑ For guide rail
- ❑ Renew after removing
- ❑ 5 Nm +45°

6 - Oil spray jet
- ❑ For chain lubrication

7 - Bolt
- ❑ Renew after removing
- ❑ 5 Nm +45°

8 - Tensioning rail

9 - Crankshaft
- ❑ With drive chain sprocket for high-pressure pump

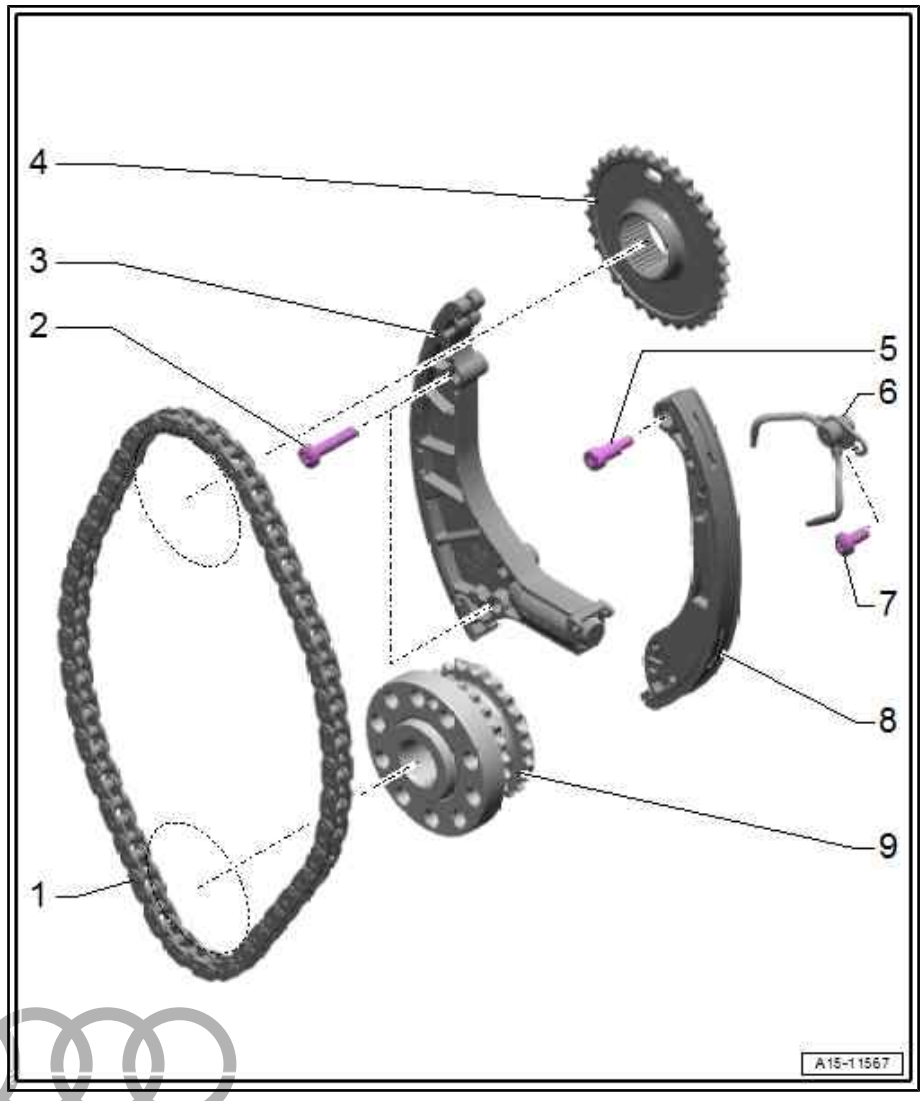

Protected by copyright. Copying for private or commercial purposes, in part or in whole, is not permitted unless authorised by AUDI AG. AUDI AG does not guarantee or accept any liability with respect to the correctness of information in this document. Copyright by AUDI AG.

2.3 Exploded view - drive chain for oil pump

1 - Guide rail

2 - Bolt
- ❑ Renew after removing
- ❑ 5 Nm +90°

3 - Bolt
- ❑ Renew after removing
- ❑ 5 Nm +90°

4 - Drive chain
- ❑ For oil pump

5 - Guide pin
- ❑ Renew after removing
- ❑ 5 Nm +45°

6 - Guide pin
- ❑ Renew after removing
- ❑ 5 Nm +45°

7 - Crankshaft
- ❑ With drive chain sprocket for oil pump

8 - Tensioning rail

9 - Oil pump
- ❑ Removing and installing ⇒ page 161

10 - Chain sprocket
- ❑ For oil pump

11 - Bolt
- ❑ Tightening torque ⇒ Item 10 (page 153)

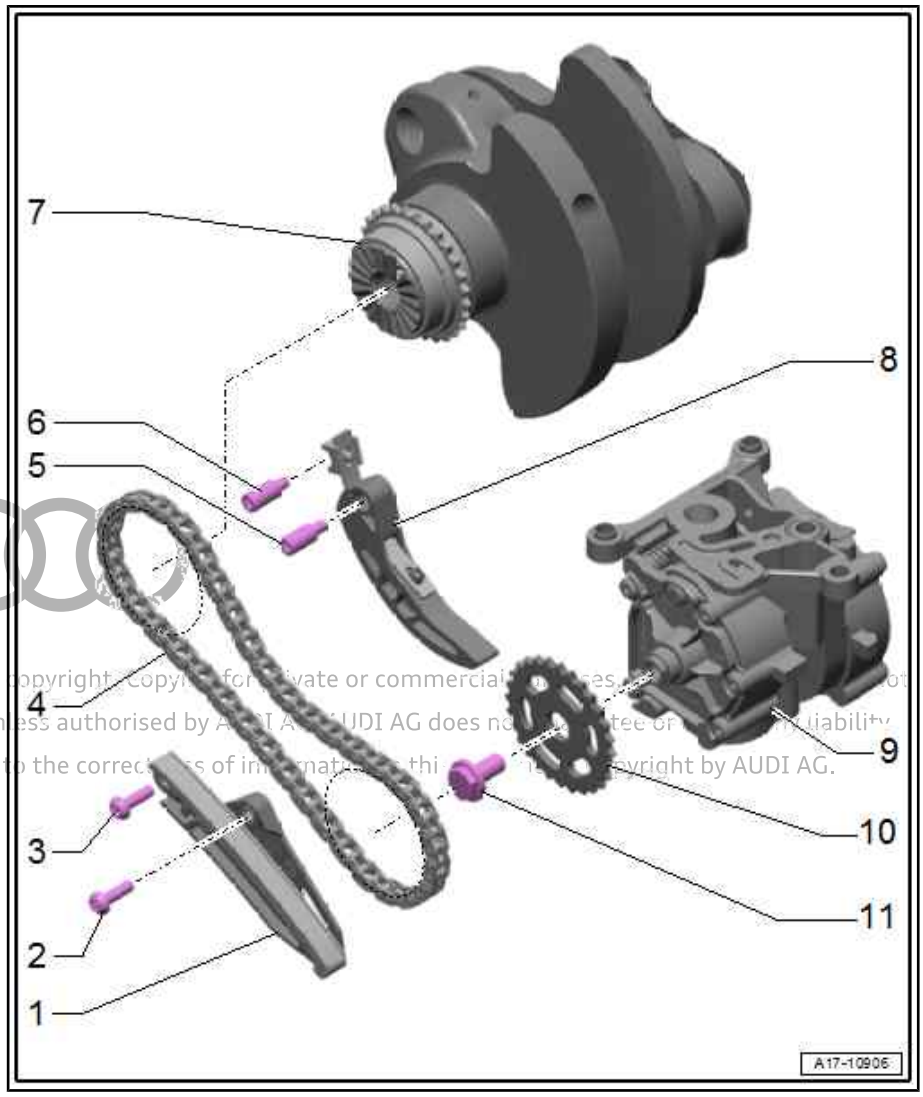

Protected by copyright. Copying for private or commercial purposes, in part or in whole, is not permitted unless authorised by AUDI AG. AUDI AG does not guarantee or assume any liability with respect to the correctness of information in this document. Copyright by AUDI AG.

2.4 Exploded view - intermediate drive

Protected by copyright. Copying for private or commercial purposes, in part is permitted unless authorised by AUDI AG. AUDI AG does not guarantee or assume any liability with respect to the correctness of information in this document.

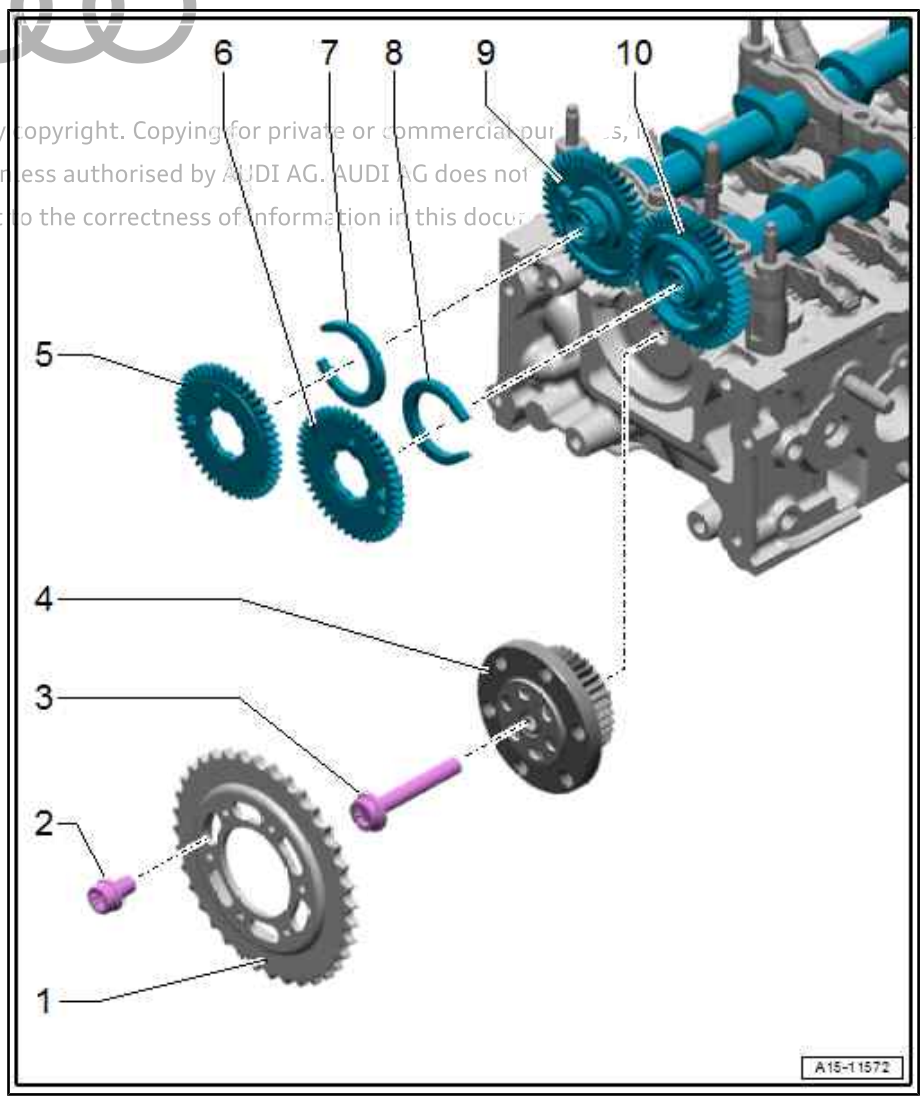

1 - Camshaft chain sprocket

- ❑ Installation position: Side with lettering legible from gearbox end

2 - Bolt

- ❑ Tightening torque ⇒ Item 16 (page 71)

3 - Bolt

- ❑ Renew after removing
- ❑ 15 Nm +90°

4 - Intermediate drive

- ❑ Installing ⇒ page 96

5 - Gear

- ❑ For backlash compensation assembly
- ❑ Do not dismantle backlash compensation assembly

6 - Gear

- ❑ For backlash compensation assembly
- ❑ Do not dismantle backlash compensation assembly

7 - Spring element

- ❑ Do not dismantle backlash compensation assembly

8 - Spring element

- ❑ Do not dismantle backlash compensation assembly

9 - Inlet camshaft

10 - Exhaust camshaft

2.5 Removing camshaft timing chain from camshafts

Special tools and workshop equipment required

- Locking pin - T10060A- (2x)

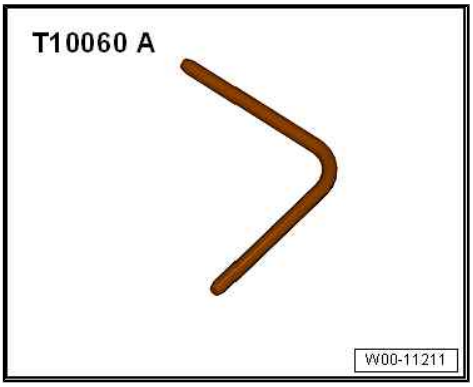

- Torque wrench - VAS 6583-

- Counterhold tool - T10172 A- with adapters -T10172/7-

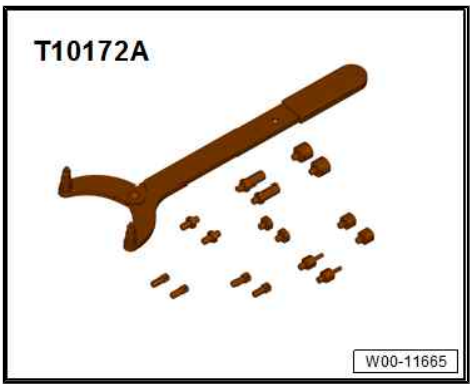

- Locking pin - T40237-

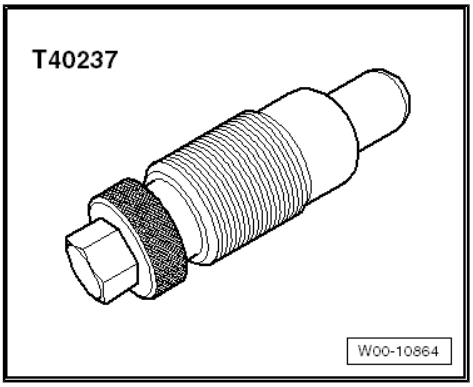

Protected by copyright. Copying for private or commercial purposes, in part or in whole, is not permitted unless authorised by AUDI AG. AUDI AG does not guarantee or accept any liability with respect to the correctness of information in this document. Copyright by AUDI AG.

- Wrench, 21 mm - T40263-

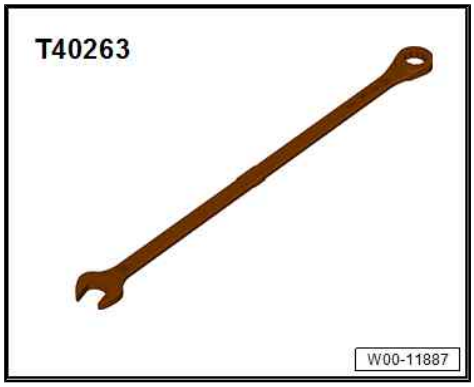

- Assembly tool - T40309-

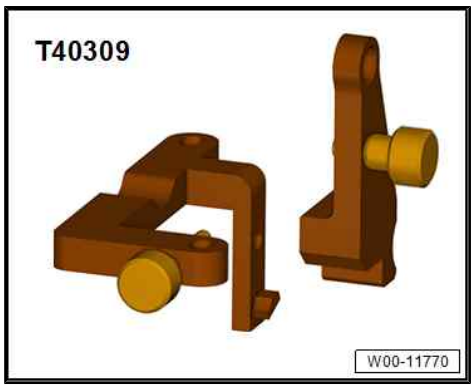

- Adapter - T40310- (not illustrated)
- Adapter - T40314-

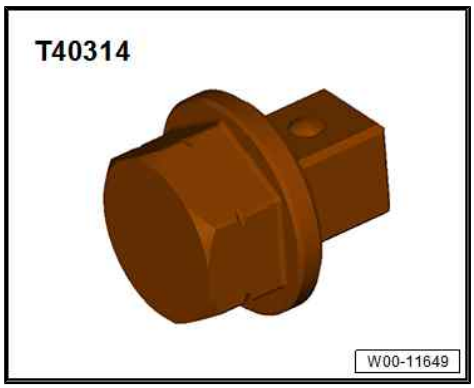

Removing

- Engine and gearbox in vehicle

> ⚠ **Caution**
>
> ***Risk of damage to valves and piston crowns.***
>
> - ***The crankshaft and camshafts must only be turned with the chain drive mechanism fully installed.***

– Remove timing chain cover (top right) ⇒ page 63 .

Protected by copyright. Copying for private or commercial purposes, in part or in whole, is not permitted unless authorised by AUDI AG. AUDI AG does not guarantee or accept any liability with respect to the correctness of information in this document. Copyright by AUDI AG.

Engine with vibration damper:

Caution

Irreparable damage can be caused if the camshaft timing chain slips.

- *Turn crankshaft only in direction of engine rotation -arrow-.*

Protected by copyright. Copying for private or commercial purposes, in part or in whole, is not permitted unless authorized by AUDI AG. AUDI AG does not guarantee or assume any liability with respect to the correctness of information in this document.

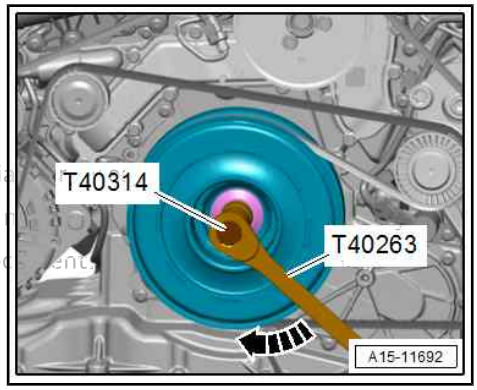

– Use wrench, 21 mm - T40263- and adapter - T40314- to turn crankshaft until vibration damper is at “TDC” position.

• Mark (stuck on) -1- must be vertical and aligned with arrow marking on coolant pump.

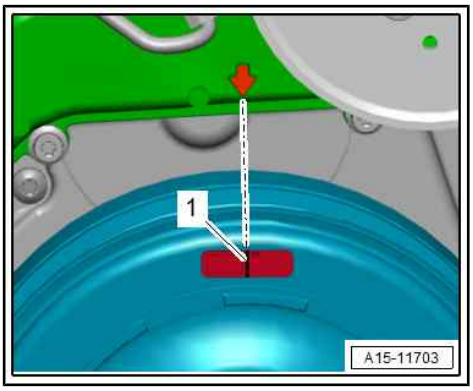

Engine with pulley:

Caution

Irreparable damage can be caused if the camshaft timing chain slips.

- *Turn crankshaft only in direction of engine rotation -arrow-.*

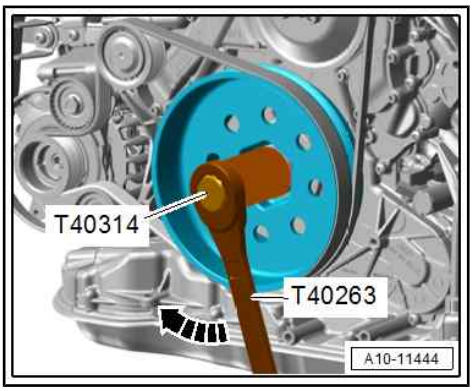

– Use wrench, 21 mm - T40263- and adapter - T40314- to turn crankshaft until pulley is at “TDC” position.

• Notch -1- should align with arrow marking on coolant pump.

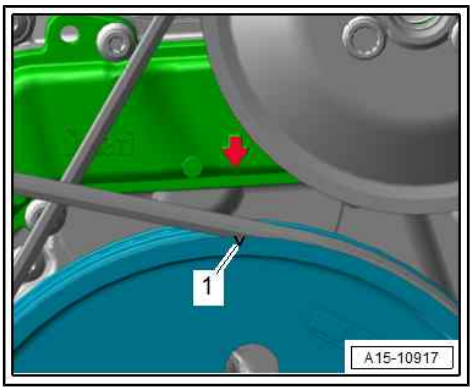

All engine versions (continued):

- It should be possible to lock camshafts with locking pins - T10060A- . If not, turn crankshaft 360° further in direction of engine rotation.

– Lock exhaust camshaft of cylinder bank 1 (right-side) at “TDC” by inserting locking pin - T10060A- in hole -arrow-.

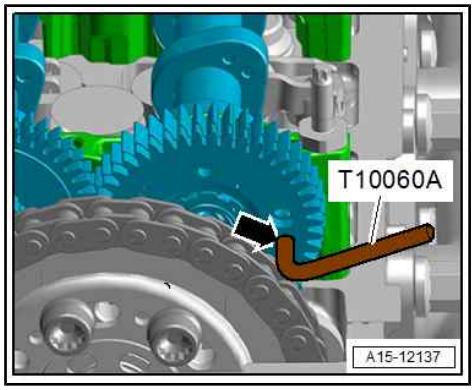

– Lock inlet camshaft of cylinder bank 2 (left-side) at “TDC” by inserting locking pin - T10060A- in hole -arrow-.

A4/A5: Remove subframe cross brace ⇒ Running gear, axles, steering; Rep. gr. 40 ; Subframe; Removing and installing subframe cross brace .

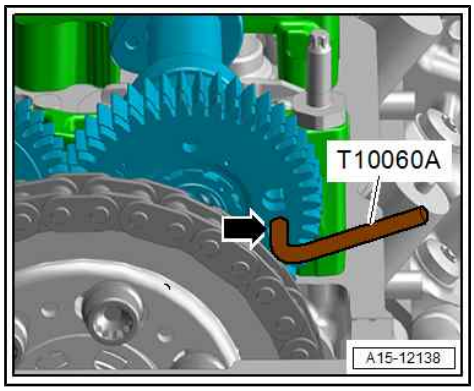

– Unscrew plug -arrow- from sump (top section).

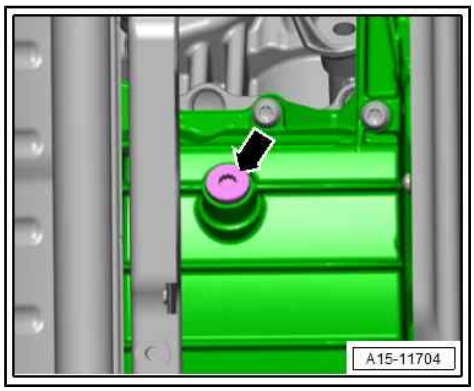

– Screw locking pin - T40237- into hole (20 Nm); if necessary, turn crankshaft -1- backwards and forwards slightly to fully centralise locking pin.

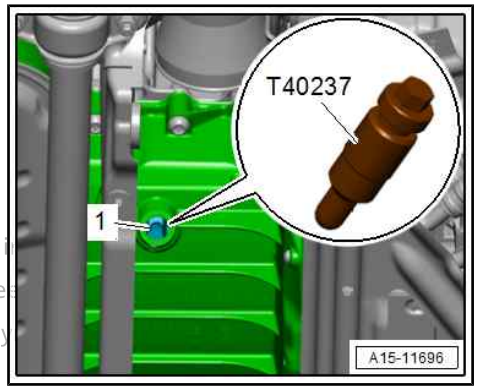

Protected by copyright. Copying for private or commercial purposes, i
permitted unless authorised by AUDI AG. AUDI AG does not guarante
with respect to the correctness of information in this document. Copy

– Remove bolts -arrows- for camshaft chain sprocket for cylinder bank 1 (right-side).

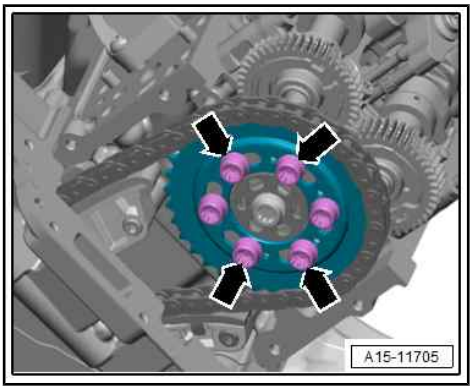

– Slacken bolts -arrows- by a half turn.

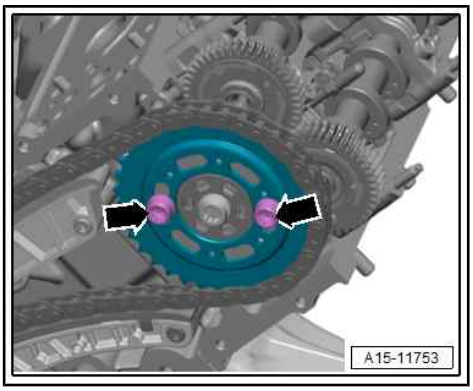

– With the help of a second mechanic, apply torque evenly to camshaft chain sprocket for cylinder bank 1 (right-side) by turning adapter - T40310- anti-clockwise -arrow- and maintain this torque.

• This will press the chain tensioner back.

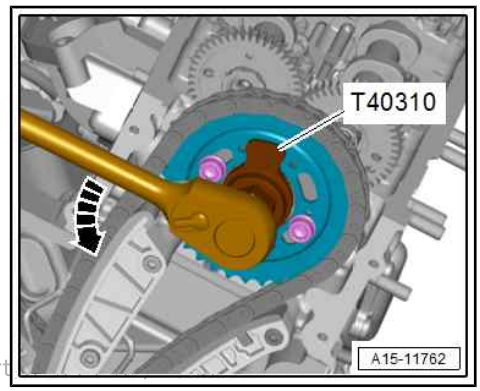

Note

The chain tensioner is oil-damped and can therefore only be pressed back slowly by applying constant pressure.

Protected by copyright. Copying for private or commercial purposes, in part
permitted unless authorised by AUDI AG. AUDI AG does not guarantee or accept any liability
with respect to the correctness of information in this document. Copyright

– Fit retainer -T40309/1- into tensioning rail -1- and tighten bolts -2, 3-, as shown in illustration.

Stage	Bolts	Tightening torque
1.	-2-	Screw in by hand until contact is made
2.	-3-	Screw in by hand until contact is made
3.	-2-	8 Nm
4.	-3-	8 Nm

– Release tension on camshaft chain sprocket for cylinder bank 1 (right-side) and remove adapter - T40310- .

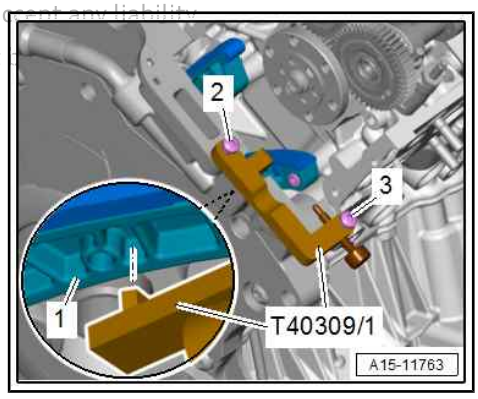

– Unscrew bolts -arrows- completely and detach camshaft chain sprocket for cylinder bank 1 (right-side).

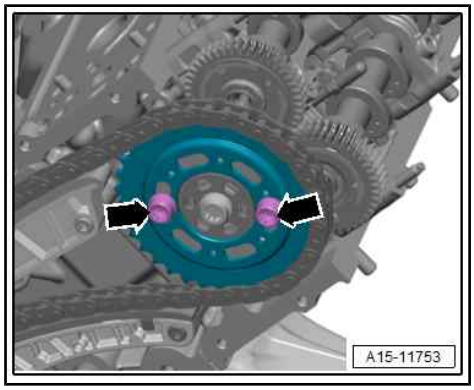

Protected by copyright. Copying for private or commercial purposes, in part
is not permitted unless authorised by AUDI AG. AUDI AG does not guarantee or
assume any liability with respect to the correctness of information in this document. Copyright

Note

Do not loosen bolt -arrow- for intermediate drive -1- for cylinder bank 1 (right-side). If bolt for intermediate drive has been loosened, backlash must be re-adjusted *⇒ page 96* *.*

– Remove timing chain cover (top left) ⇒ page 61 .

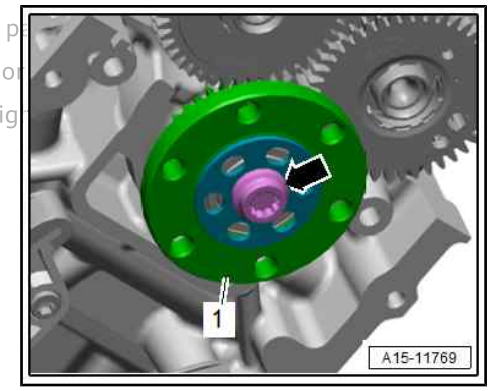

• Inlet camshaft of cylinder bank 2 (left-side) locked at “TDC” by inserting locking pin - T10060A- in hole -arrow-.

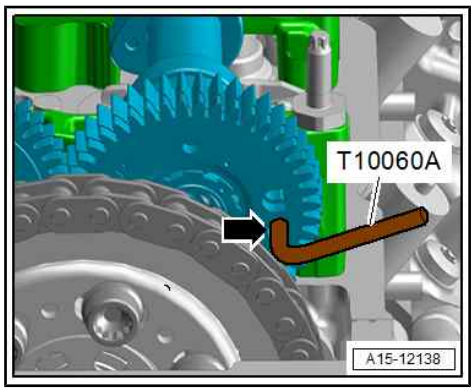

– Apply counterhold tool - T10172 A- with adapter -T10172/7- to head of bolts for camshaft chain sprocket for cylinder bank 2 (left-side) and remove bolts (re-apply counterhold tool several times as necessary).

– Detach camshaft chain sprocket for cylinder bank 2 (left-side) and secure camshaft timing chain with a piece of wire to prevent it from falling into chain case.

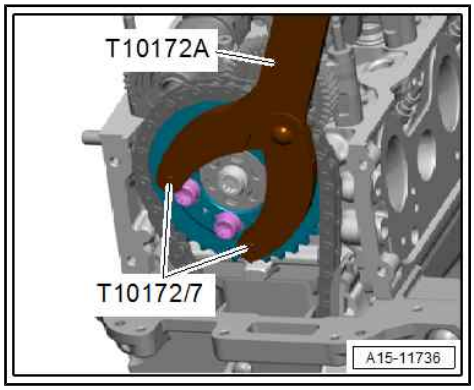

Protected by copyright. Copying for private or commercial purposes, in part
permitted unless authorized by AUDI AG. AUDI AG does not guarantee or a
with respect to the correctness of information in this document. Copyright

Note

Do not loosen bolt -arrow- for intermediate drive -1- for cylinder bank 2 (left-side). If bolt for intermediate drive has been loosened, backlash must be re-adjusted *⇒ page 99* *.*

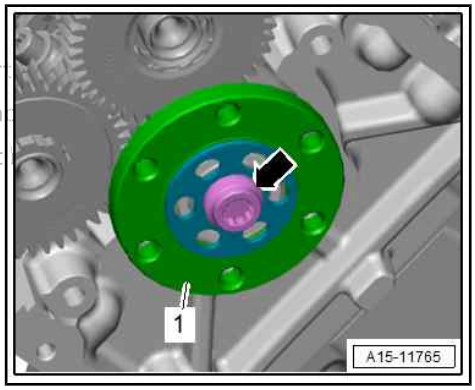

Installing

- Crankshaft locked in “TDC” position with locking pin - T40237- .

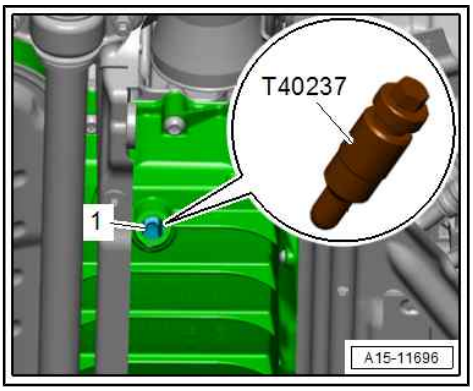

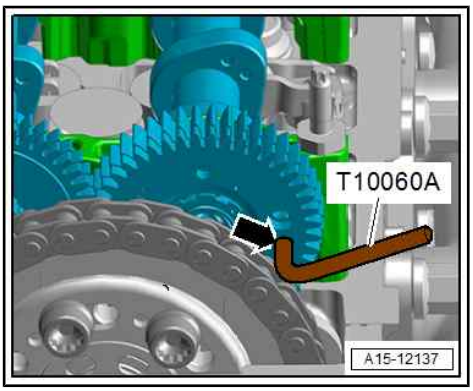

- Lock exhaust camshaft of cylinder bank 1 (right-side) at “TDC” using locking pin - T10060A- .
- Lock inlet camshaft of cylinder bank 2 (left-side) at “TDC” using locking pin - T10060A- .

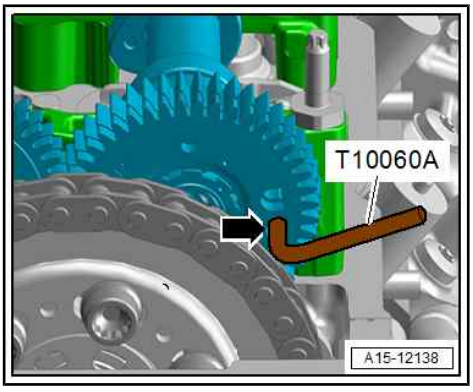

Note

Locking pins -T10060A- must not be tensioned; it should be possible to move them easily. If necessary, turn intermediate drive slightly to align camshafts (fit two bolts and turn using counterhold tool - T10172 A- and adapter -T10172/7-).

– Position camshaft chain sprocket for cylinder bank 2 (left-side) with timing chain on intermediate drive.

• The side of the chain sprocket with lettering faces the gearbox.

• The elongated holes in the camshaft chain sprocket must be aligned centrally over the threaded holes in the intermediate drive.

– Loosely screw in bolts -arrows-.

• It should just be possible to turn the camshaft chain sprocket on the intermediate drive without axial movement.

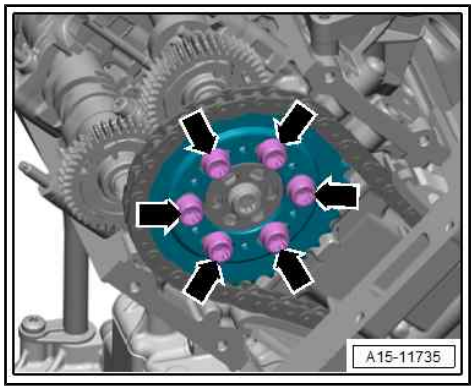

– Position camshaft chain sprocket for cylinder bank 1 (right-side) with timing chain on intermediate drive.

• The side of the chain sprocket with lettering faces the gearbox.

• The elongated holes in the camshaft chain sprocket must be aligned centrally over the threaded holes in the intermediate drive.

– Screw in bolts -arrows- loosely for camshaft chain sprocket for cylinder bank 1 (right-side).

• It should just be possible to turn the camshaft chain sprocket on the intermediate drive without axial movement.

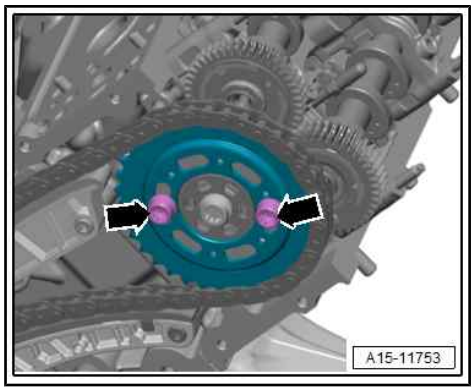

– Check that camshaft timing chain is positioned correctly on guide rail and tensioning rail.

– With the help of a second mechanic, apply torque evenly to camshaft chain sprocket for cylinder bank 1 (right-side) by turning adapter - T40310- anti-clockwise -arrow- and maintain this torque.

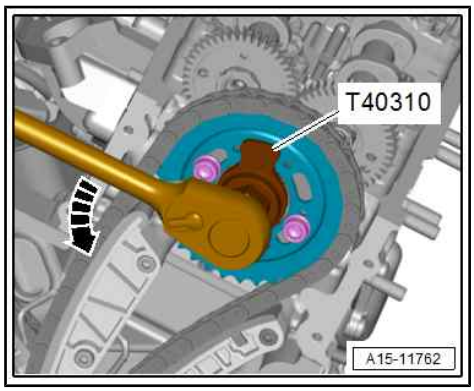

– Remove retainer -T40309/1- .

– Release camshaft chain sprocket.

– Remove bolts -2, 3-.

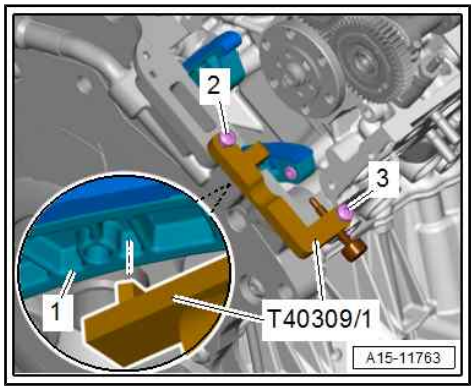

Protected by copyright. Copying for private or commercial purposes, in part or in whole, is not permitted unless authorised by AUDI AG. AUDI AG does not guarantee or accept any liability with respect to the correctness of information in this document. Copyright by AUDI AG.

– Apply an initial torque of 10 Nm to camshaft chain sprocket for cylinder bank 1 (right-side) in clockwise direction -arrow- using adapter - T40310- and torque wrench - VAS 6583- .
– Detach torque wrench and adapter - T40310- from camshaft chain sprocket.

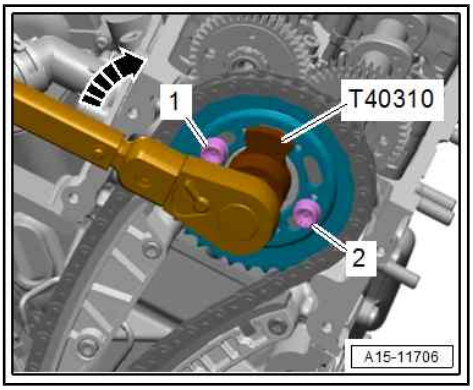

– Pre-tighten bolts -1, 2- for camshaft chain sprocket for cylinder bank 1 (right-side) to 10 Nm.

Protected by copyright. Copying for private or commercial purposes, in part or in
permitted unless authorised by AUDI AG. AUDI AG does not guarantee or accept
with respect to the correctness of information in this document. Copyright by AU

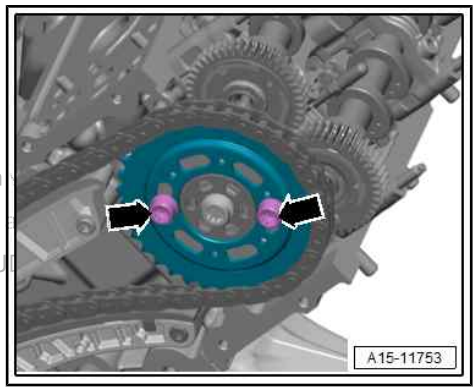

– Screw in bolts -arrows- for camshaft chain sprocket for cylinder bank 1 (right-side) and pre-tighten to 10 Nm.

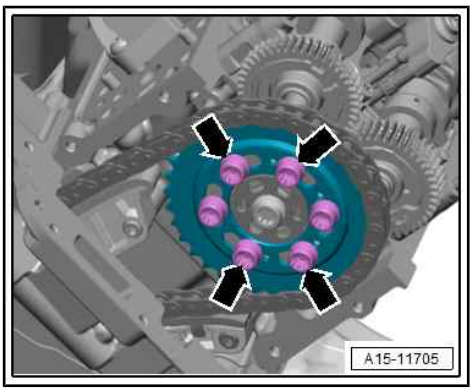

– Pre-tighten bolts -arrows- for camshaft chain sprocket for cylinder bank 2 (left-side) to 10 Nm.
– Tighten bolts for camshaft chain sprocket for cylinder bank 1 (right-side) to final torque.
– Tighten bolts for camshaft chain sprocket for cylinder bank 2 (left-side) to final torque.
– Remove locking pin - T40237- and locking pin -T10060A- .

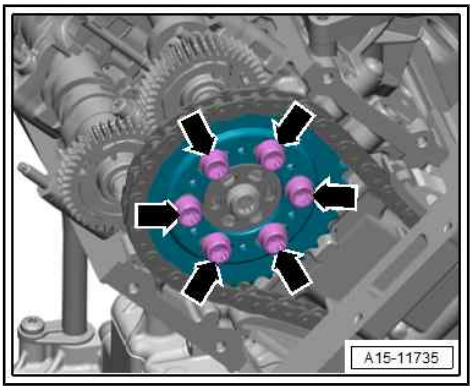

Checking valve timing

Caution

Irreparable damage can be caused if the camshaft timing chain slips.

- *Turn crankshaft only in direction of engine rotation -arrow-.*

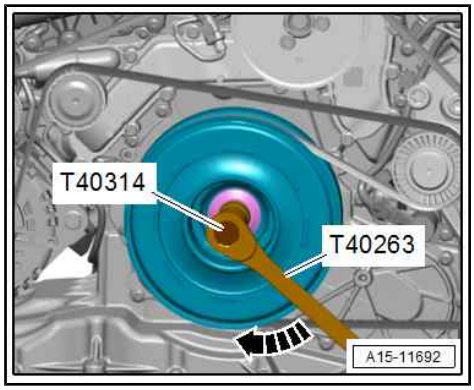

– Turn crankshaft two rotations until vibration damper/pulley reaches “TDC” again (illustration shows engine with vibration damper).

– While turning in this direction, lock crankshaft -1- with locking pin - T40237- . Tighten locking pin to 20 Nm.

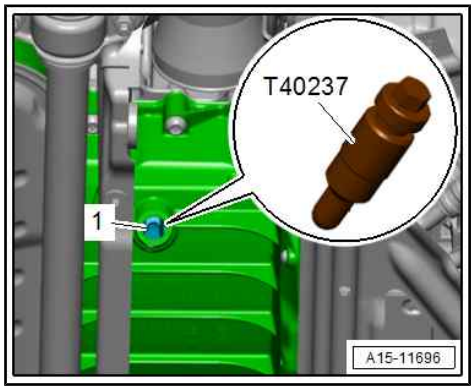

Caution

The crankshaft must be exactly in “TDC” position to ensure accurate valve timing adjustment.

- *If crankshaft has been turned past “TDC” position, turn crankshaft two further rotations until it is again positioned just before “TDC”. Then turn further in the same direction and lock crankshaft with locking pin - T40237- .*

– Check that camshafts on both cylinder heads are positioned at “TDC”.

• It should be possible to lock camshafts with locking pins - T10060A- .

– Lock exhaust camshaft of cylinder bank 1 (right-side) at “TDC” by inserting locking pin - T10060A- in hole -arrow-.

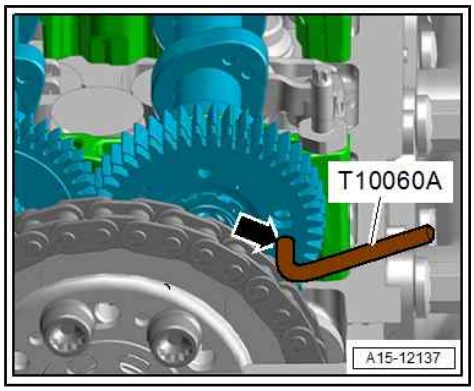

Protected by copyright. Copying for private or commercial purposes, in part or in whole, is not permitted unless authorised by AUDI AG. AUDI AG does not guarantee or accept any liability with respect to the correctness of information in this document. Copyright by AUDI AG.

– Lock inlet camshaft of cylinder bank 2 (left-side) at “TDC” by inserting locking pin - T10060A- in hole -arrow-.

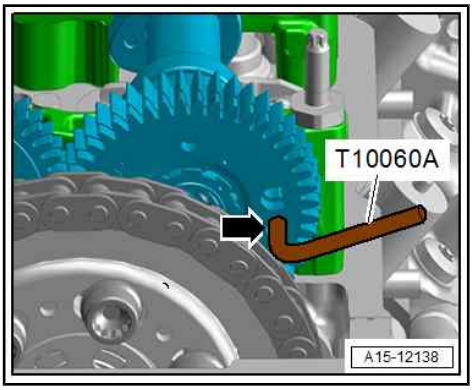

Note

- *The adjustment is OK even if the locking pins -T10060A- are difficult to insert.*
- *If it is not possible to insert the locking pins -T10060A- , repeat the adjustment procedure ⇒ page 81 .*

Remaining installation steps are carried out in reverse sequence; note the following:

– Remove locking pin - T40237- and locking pin -T10060A- .

– Install timing chain covers (top)
⇒ “1.2.1 Removing and installing timing chain cover (top left)”, page 61 and
⇒ “1.2.2 Removing and installing timing chain cover (top right)”, page 63 .

– A4/A5: Install subframe cross brace ⇒ Running gear, axles, steering; Rep. gr. 40 ; Subframe; Removing and installing subframe cross brace .

Tightening torques

- ⇒ “2.1 Exploded view - camshaft timing chains”, page 70
- Plug for “TDC” marking ⇒ Item 19 (page 155)

2.6 Removing and installing camshaft timing chain

Special tools and workshop equipment required

- Locking pin - 3359-

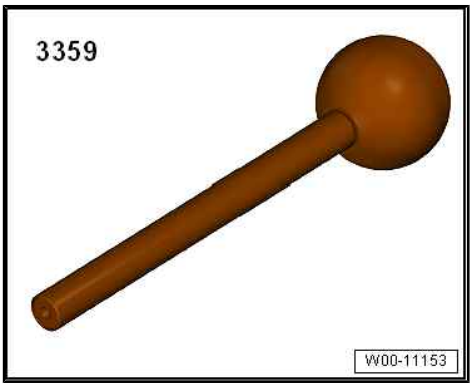

- Torque wrench - VAS 6583-

Protected by copyright. Copying for private or commercial purposes, in part or in whole, is not permitted unless authorised by AUDI AG. AUDI AG does not guarantee or accept any liability with respect to the correctness of information in this document. Copyright by AUDI AG.

- Locking pin - T10060A- (2x)

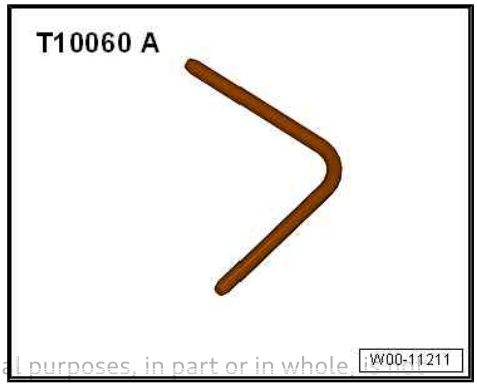

Protected by copyright. Copying for private or commercial purposes, in part or in whole, is not permitted unless authorised by AUDI AG. AUDI AG does not guarantee or accept any liability with respect to the correctness of information in this document. Copyright by AUDI AG.

- Counterhold tool - T10172A-

- Key - T40049-

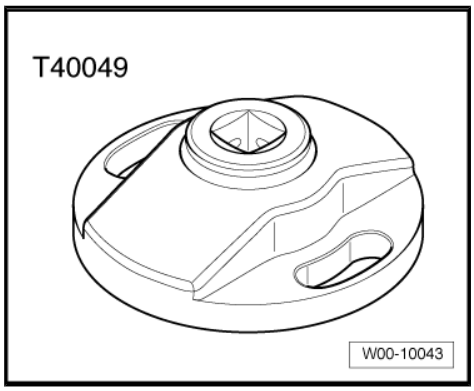

- Locking pin - T40237-

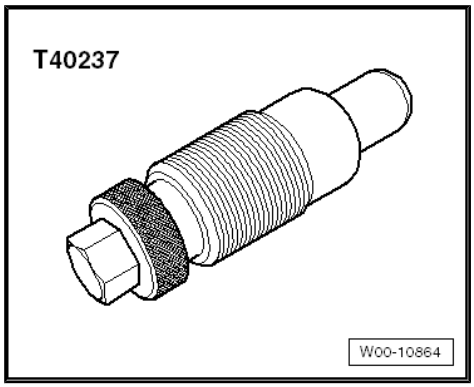

♦ Locking pin - T40316-

Removing

- Gearbox removed ⇒ Gearbox; Rep. gr. 34 ; Removing and installing gearbox; Removing gearbox or ⇒ Gearbox; Rep. gr. 37 ; Removing and installing gearbox; Removing gearbox .

– Remove timing chain cover (bottom) ⇒ page 66 .

> **Caution**
>
> *Risk of damage to valves and piston crowns.*
>
> ♦ *The crankshaft and camshafts must only be turned with the chain drive mechanism fully installed.*

> **Caution**
>
> *Risk of damage to drive chain if thread of bolt exceeds specified length.*
>
> ♦ *Use bolts with a maximum thread length -a- of 22 mm to attach key -T40049- .*
>
> ♦ *If no suitable bolts are available, position suitable washer (s) under bolt head so that remaining thread length does not exceed 22 mm.*

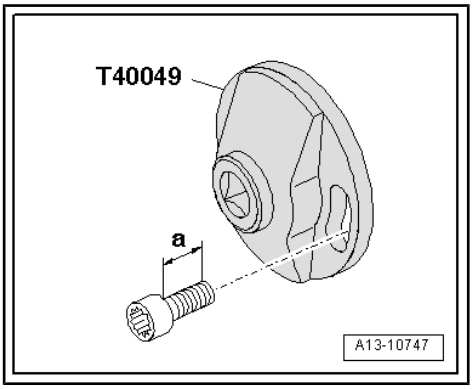

– Secure key - T40049- onto rear of crankshaft -arrows-.

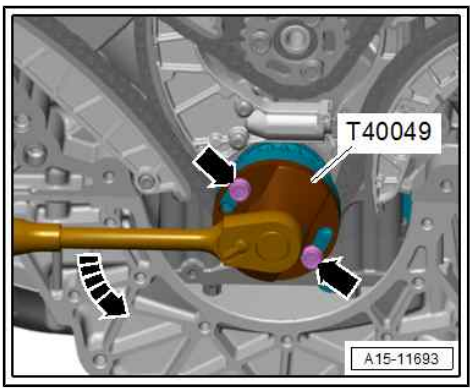

> **Caution**
>
> *Irreparable damage can be caused if the camshaft timing chain slips.*
>
> ♦ *Turn crankshaft only in direction of engine rotation -arrow-.*

– Rotate crankshaft to “TDC”.

- It should be possible to lock camshafts with locking pins - T10060A- .

Protected by copyright. Copying for private or commercial purposes, in part or in whole, is not permitted unless authorised by AUDI AG. AUDI AG does not guarantee or accept any liability with respect to the correctness of information in this document. Copyright by AUDI AG.

– Lock exhaust camshaft of cylinder bank 1 (right-side) at “TDC” by inserting locking pin - T10060A- in hole -arrow-.

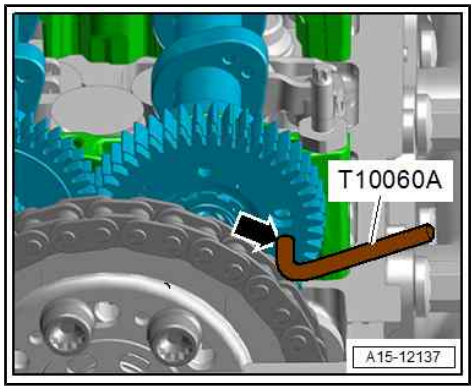

– Lock inlet camshaft of cylinder bank 2 (left-side) at “TDC” by inserting locking pin - T10060A- in hole -arrow-.

A4/A5: Remove subframe cross brace ⇒ Running gear, axles, steering; Rep. gr. 40 ; Subframe; Removing and installing subframe cross brace .

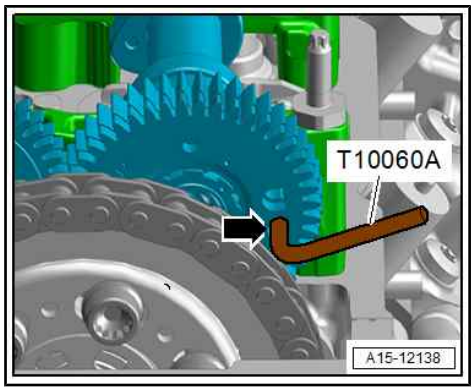

– Unscrew plug -arrow- from sump (top section).

Protected by copyright. Copying for private or commercial purposes, in pa
permitted unless authorised by AUDI AG. AUDI AG does not guarantee or a
with respect to the correctness of information in this document. Copyrigh

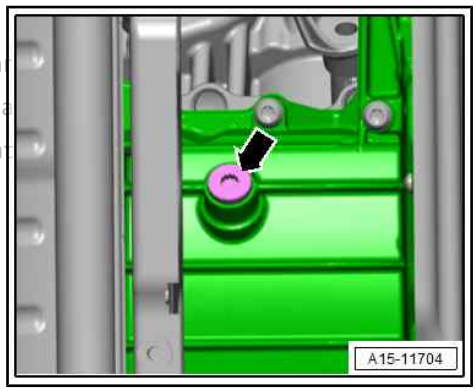

– Screw locking pin - T40237- into hole (20 Nm); if necessary, turn crankshaft -1- backwards and forwards slightly to fully centralise locking pin.

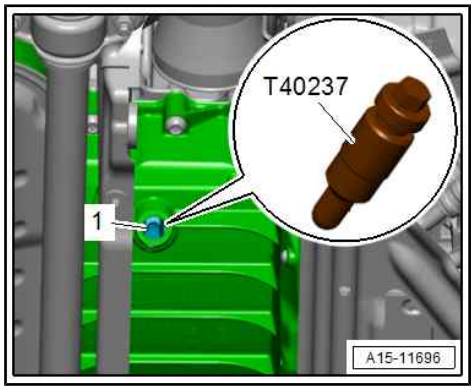

– Press tensioning rail of camshaft timing chain tensioner in direction of -arrow- and lock chain tensioner by inserting locking pin -T40316- .

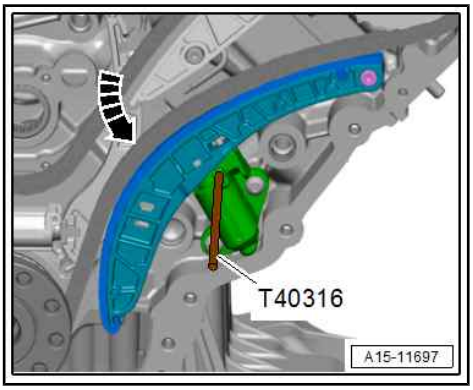

– Remove bolt -arrow- for chain slip preventer.

> **Caution**
>
> *If a used timing chain rotates in the opposite direction when it is refitted, this can cause breakage.*
>
> ♦ *Mark running direction of timing chain with coloured arrows for re-installation.*

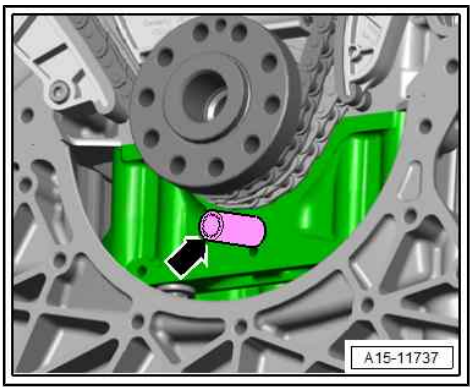

– Apply counterhold tool - T10172A- with adapter -T10172/7- to head of bolts for camshaft chain sprocket for cylinder bank 2 (left-side).

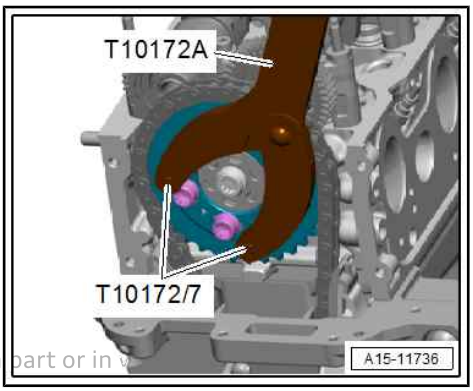

Protected by copyright. Copying for private or commercial purposes, in part or in
permitted unless authorised by AUDI AG. AUDI AG does not guarantee or accept any liability
with respect to the correctness of information in this document. Copyr

– Remove bolts -arrows- (apply counterhold tool for each one).
– Perform the same work step on the other side of the vehicle.
– Detach camshaft timing chain with camshaft chain sprockets.

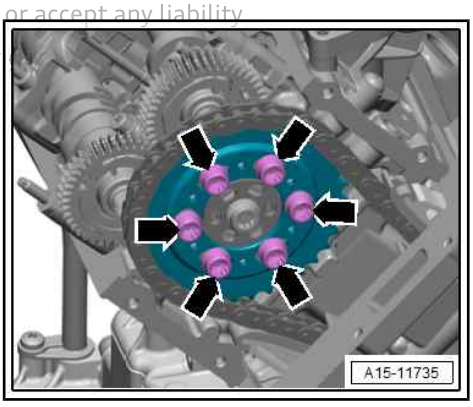

Note

Do not loosen bolt -arrow- for intermediate drive -1-. If bolt for intermediate drive has been loosened, backlash must be re-adjusted *⇒ page 96* *.*

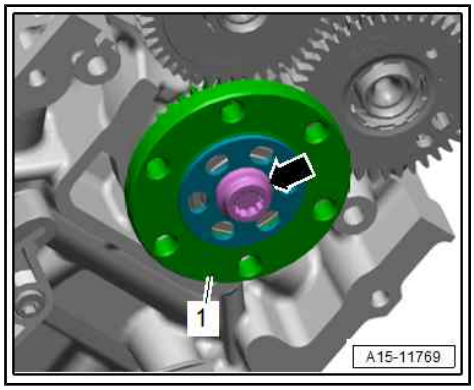

Installing

- Crankshaft locked in “TDC” position with locking pin -T40237- .

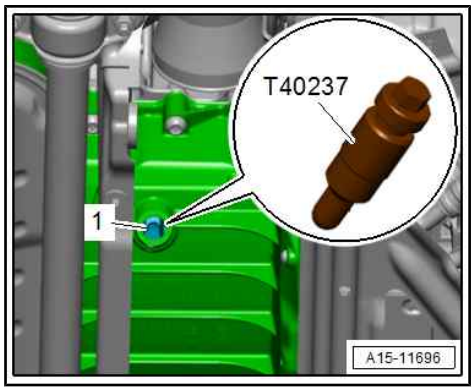

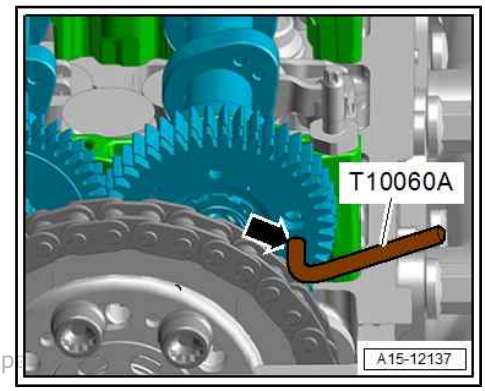

Protected by copyright. Copying for private or commercial purposes, in p
permitted unless authorised by AUDI AG. AUDI AG does not guarantee or accept any liability
with respect to the correctness of information in this document. Copyrig

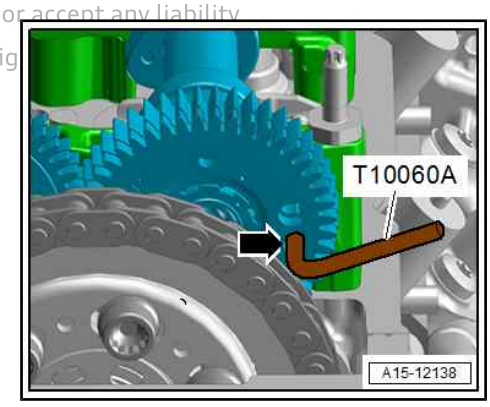

- Lock exhaust camshaft of cylinder bank 1 (right-side) at “TDC” using locking pin - T10060A- .
- Lock inlet camshaft of cylinder bank 2 (left-side) at “TDC” using locking pin - T10060A- .
- Balance shaft locked in “TDC” position with locking pin - 3359- .

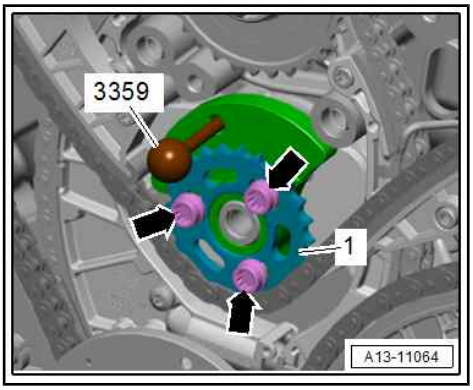

Note

- ♦ *Locking pins -T10060A- must not be tensioned; it should be possible to move them easily. If necessary, turn intermediate drive slightly to align camshafts (fit two bolts and turn using counterhold tool - T10172A- and adapter -T10172/7-).*
- ♦ *After removing, renew bolts tightened with specified tightening angle.*

Protected by copyright. Copying for private or commercial purposes, in part or in whole, is not permitted unless authorised by AUDI AG. AUDI AG does not guarantee or assume any liability with respect to the correctness of information in this document.

– Position camshaft chain sprocket for cylinder bank 2 (left-side) with timing chain on intermediate drive.
- The side of the chain sprocket with lettering faces the gearbox.
- The elongated holes in the camshaft chain sprocket must be aligned centrally over the threaded holes in the intermediate drive.

– Loosely screw in bolts -arrows-.
- It should just be possible to turn the camshaft chain sprocket on the intermediate drive without axial movement.

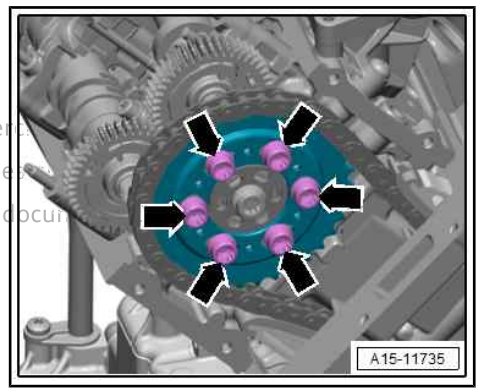

– Position camshaft chain sprocket for cylinder bank 1 (right-side) with timing chain on intermediate drive.
- The side of the chain sprocket with lettering faces the gearbox.
- The elongated holes in the camshaft chain sprocket must be aligned centrally over the threaded holes in the intermediate drive.

– Screw in bolts -arrows- loosely for camshaft chain sprocket for cylinder bank 1 (right-side).
- It should just be possible to turn the camshaft chain sprocket on the intermediate drive without axial movement.

– Check that camshaft timing chain is positioned correctly on guide rail and tensioning rail.

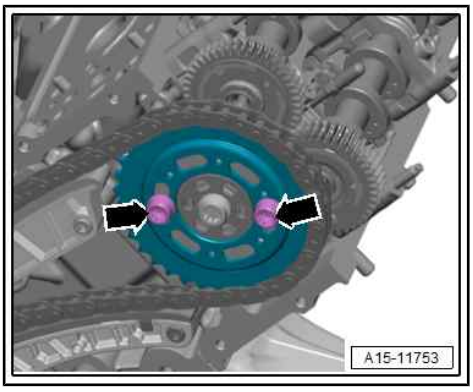

– Press tensioning rail of camshaft timing chain tensioner in direction of -arrow- and remove locking pin -T40316- .

– Release chain tensioner.

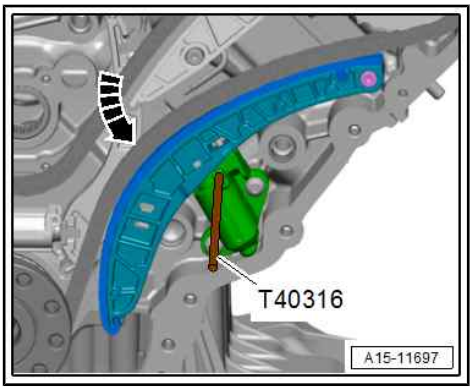

– Loosen bolts -arrows- at drive chain sprocket -1- for balance shaft.

– Lock balance shaft with locking pin - 3359- , as shown in illustration.

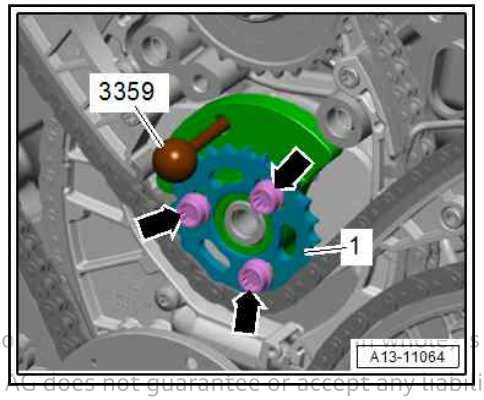

Note

If necessary, remove bolts and bring drive chain sprocket for balance shaft into position.

Protected by copyright. Copying for private or co[illegible] is not permitted unless authorised by AUDI AG. AUDI AG does not guarantee or accept any liability with respect to the correctness of information in this document. Copyright by AUDI AG.

– Loosely screw in bolts -arrows-.

- The elongated holes in the drive chain sprocket must be aligned centrally over the tapped holes in the balance shaft.
- It should just be possible to turn the drive chain sprocket on the balance shaft without axial movement.

– Apply an initial torque of 10 Nm to camshaft chain sprocket for cylinder bank 1 (right-side) in clockwise direction -arrow- using adapter - T40310- and torque wrench - VAS 6583- .

– Detach torque wrench and adapter - T40310- from camshaft chain sprocket.

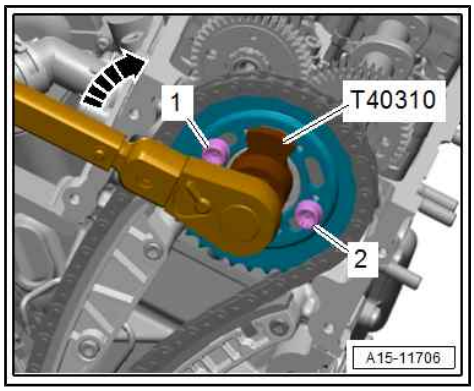

– Pre-tighten bolts -1, 2- for camshaft chain sprocket for cylinder bank 1 (right-side) to 10 Nm.

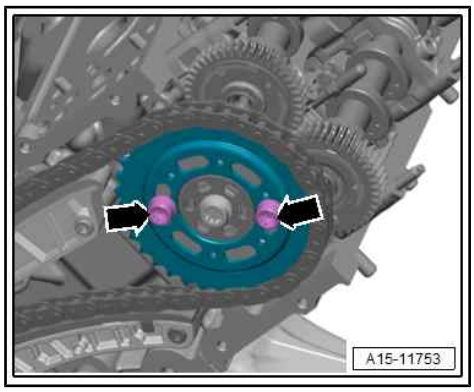

– Screw in bolts -arrows- for camshaft chain sprocket for cylinder bank 1 (right-side) and pre-tighten to 10 Nm.

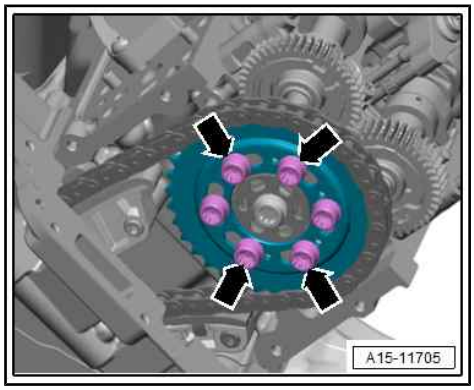

– Pre-tighten bolts -arrows- for camshaft chain sprocket for cylinder bank 2 (left-side) to 10 Nm.
– Tighten bolts for camshaft chain sprocket for cylinder bank 1 (right-side) to final torque.
– Tighten bolts for camshaft chain sprocket for cylinder bank 2 (left-side) to final torque.

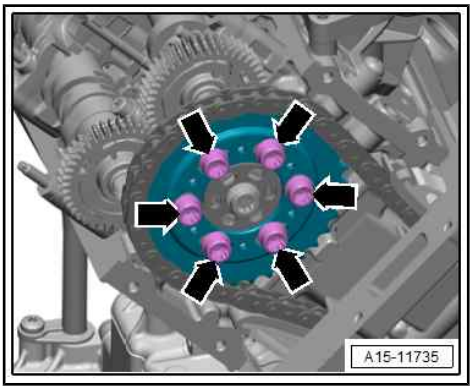

– Tighten bolts -arrows- at drive chain sprocket -1- for balance shaft.
– Remove locking pin - 3359- , adapter - T40310- and locking pin -T10060A- .
– Remove locking pin - T40237- .

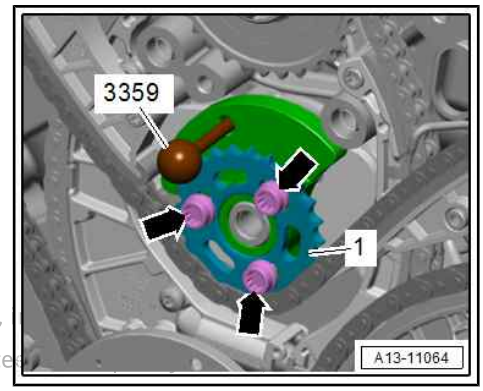

Protected by copyright. Copying for private or commercial purposes, is not permitted unless authorised by AUDI AG. AUDI AG does not guarantee or assume liability with respect to the correctness of information in this document. Copyright by AUDI AG.

Checking valve timing

Caution

Irreparable damage can be caused if the camshaft timing chain slips.

- *Turn crankshaft only in direction of engine rotation -arrow-.*

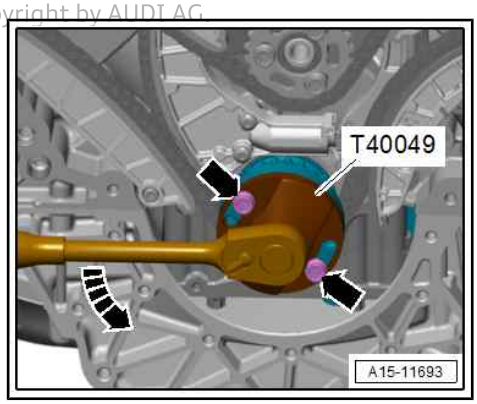

– Turn crankshaft two rotations until it is again positioned just before “TDC”.

– While turning in this direction, lock crankshaft -1- with locking pin - T40237- . Tighten locking pin to 20 Nm.

Caution

The crankshaft must be exactly in “TDC” position to ensure accurate valve timing adjustment.

- *If crankshaft has been turned past “TDC” position, turn crankshaft two further rotations until it is again positioned just before “TDC”. Then turn further in the same direction and lock crankshaft with locking pin - T40237- .*

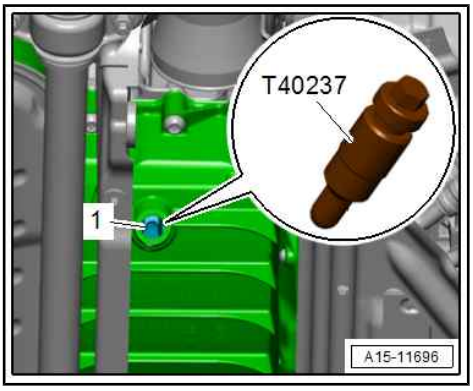

– Check that camshafts on both cylinder heads are positioned at “TDC”.

• It should be possible to lock camshafts with locking pins - T10060A- .

– Lock exhaust camshaft of cylinder bank 1 (right-side) at “TDC” by inserting locking pin - T10060A- in hole -arrow-.

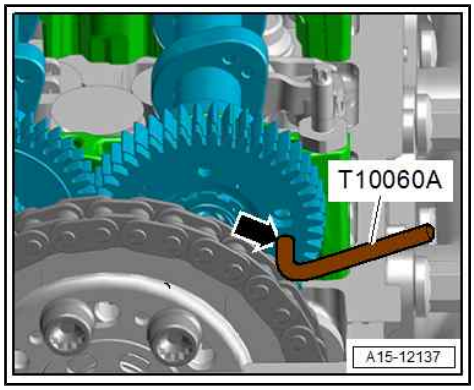

– Lock inlet camshaft of cylinder bank 2 (left-side) at “TDC” by inserting locking pin - T10060A- in hole -arrow-.

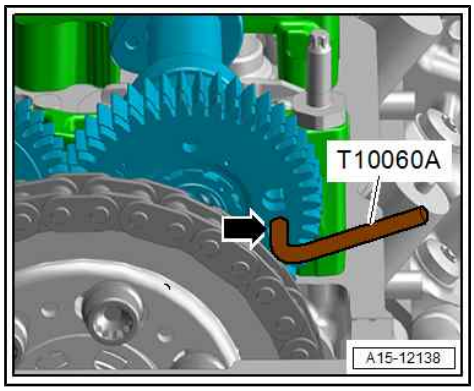

Note

- *The adjustment is OK even if the locking pins -T10060A- are difficult to insert.*
- *If it is not possible to insert the locking pins -T10060A- , repeat the adjustment procedure ⇒ page 81 .*

Remaining installation steps are carried out in reverse sequence; note the following:

– Remove locking pin - T40237- and locking pin - T10060A- .

– Install timing chain covers ⇒ page 61 .

– A4/A5: Install subframe cross brace ⇒ Running gear, axles, steering; Rep. gr. 40 ; Subframe; Removing and installing subframe cross brace .

Protected by copyright. Copying for private or commercial purposes, in part or in whole, is not permitted unless authorised by AUDI AG. AUDI AG does not guarantee or accept any liability with respect to the correctness of information in this document. Copyright by AUDI AG.

Tightening torques

- ⇒ “2.1 Exploded view - camshaft timing chains”, page 70
- ⇒ “4.1 Exploded view - balance shaft”, page 41
- Plug for “TDC” marking ⇒ Item 19 (page 155)

2.7 Removing and installing drive chain for high-pressure pump

Special tools and workshop equipment required

- Locking pin - T40245-

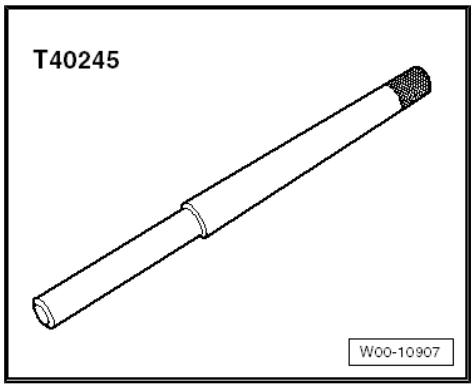

♦ Locking pin - T40316-

Removing

– Remove camshaft timing chain ⇒ page 85 .

Note

Mark position of guide rail -1- for re-installation.

– Detach guide rails -1, 2, 3- and tensioning rail -4-.

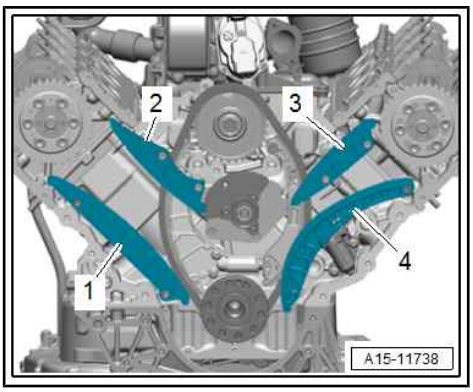

– Press tensioning rail of chain tensioner in direction of -arrow- and lock chain tensioner by inserting locking pin -T40316- .
– Unscrew bolt -1- and remove tensioning rail.
– Detach chain sprocket for high-pressure pump slightly and remove drive chain for high-pressure pump.

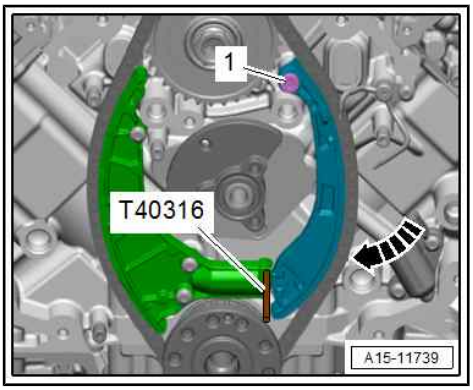

Installing

Installation is carried out in reverse order; note the following:

– Lock chain sprocket for high-pressure pump in position using locking pin - T40245- and fit drive chain for high-pressure pump.
– Install camshaft timing chain ⇒ page 85 .
– Remove locking pin - T40245- for chain sprocket for high-pressure pump.

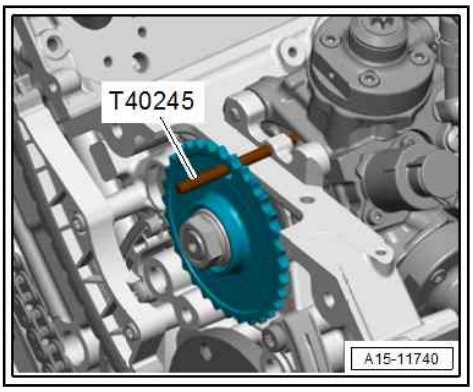

Tightening torques

♦ ⇒ “2.2 Exploded view - drive chain for high-pressure pump”, page 72

Protected by copyright. Copying for private or commercial purposes, in part or in whole, is not permitted unless authorised by AUDI AG. AUDI AG does not guarantee or accept any liability with respect to the correctness of information in this document. Copyright by AUDI AG.

2.8 Installing intermediate drive

⇒ "2.8.1 Installing intermediate drive for cylinder bank 1 (right-side) and adjusting backlash", page 96

⇒ "2.8.2 Installing intermediate drive for cylinder bank 2 (left-side) and adjusting backlash", page 99

2.8.1 Installing intermediate drive for cylinder bank 1 (right-side) and adjusting backlash

Special tools and workshop equipment required

- TDC adjustment bar - 2068A-

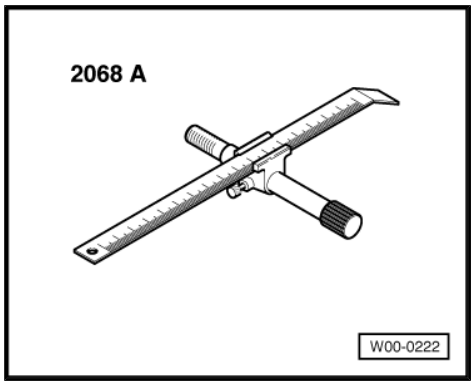

- Setting tool - T40271-

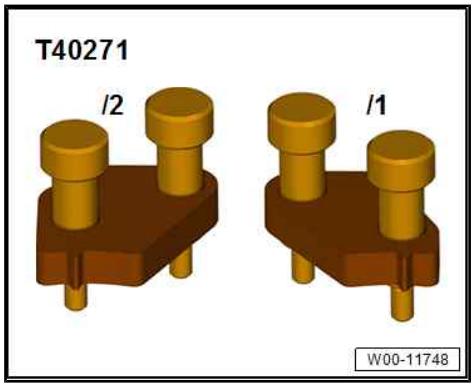

- Adjustment pin - T40313-

Protected by copyright. Copying for private or commercial purposes, in part or in whole
permitted unless authorised by AUDI AG. AUDI AG does not guarantee or accept any
with respect to the correctness of information in this document. Copyright by AU

Preparing tool

– Remove retaining ring -2- and take knurled screw -1- out of TDC adjustment bar - 2068A- .

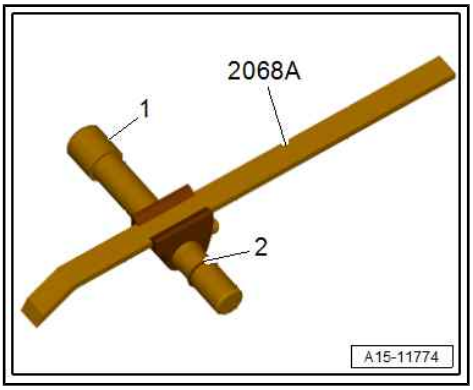

– Remove circlip -2- and take knurled screw -1- out.

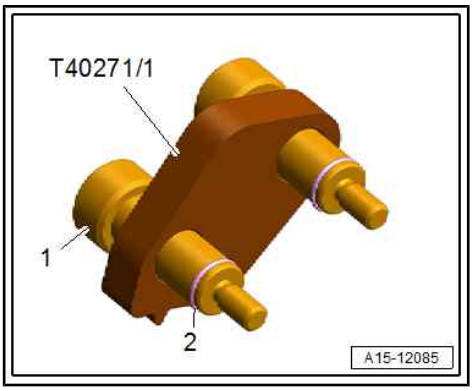

– Slide knurled screw -1- from tool -T40271/1- into TDC adjustment bar - 2068A- , as shown in illustration.

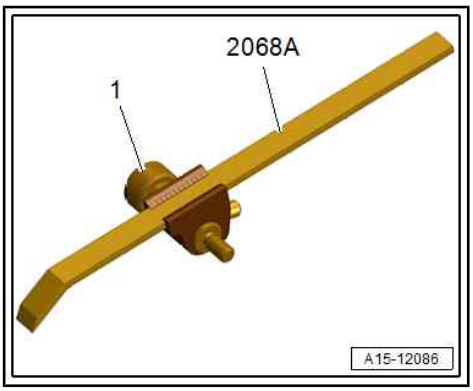

Procedure

- Timing chain removed from camshafts.
- Camshafts for cylinder bank 1 (right-side) installed.
- Exhaust camshaft of cylinder bank 1 (right-side) locked at “TDC” by inserting locking pin - T10060A- in hole -arrow-.

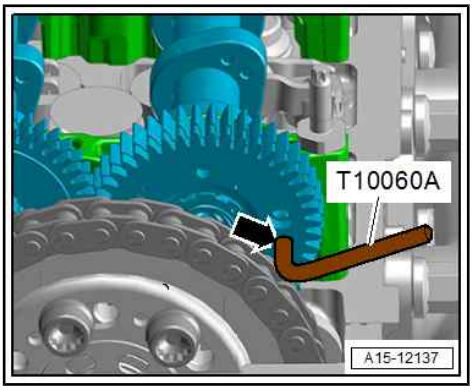

Protected by copyright. Copying for private or commercial purposes, in part or in whole, is not permitted unless authorised by AUDI AG. AUDI AG does not guarantee or accept any liability with respect to the correctness of information in this document. Copyright by AUDI AG.

- Backlash compensation assembly of exhaust camshaft for cylinder bank 1 (right-side) locked in place with adjustment pin - T40313- . Teeth of the two gears of exhaust camshaft must align ⇒ page 134 .

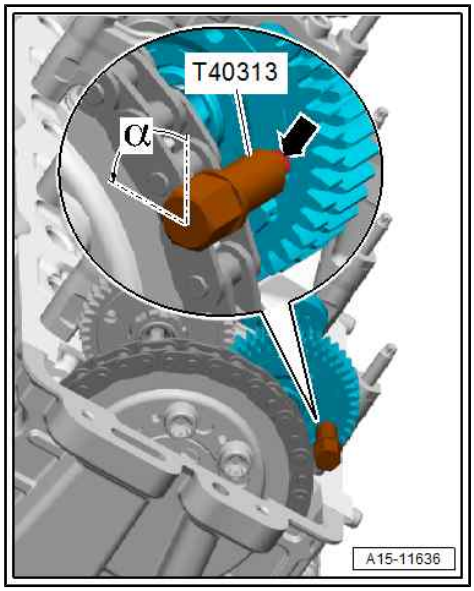

– Align flange -3- with eccentric washer -4- of intermediate drive.
- Marking -1- should align with notch -2-.
– Fit intermediate drive on cylinder head.
- Marking -1- and notch -2- must align with cast projection -arrow- on cylinder head.
– Screw in bolt -5- for intermediate drive by hand until it makes contact.
- It should just be possible to turn the eccentric washer of the intermediate drive without axial movement.

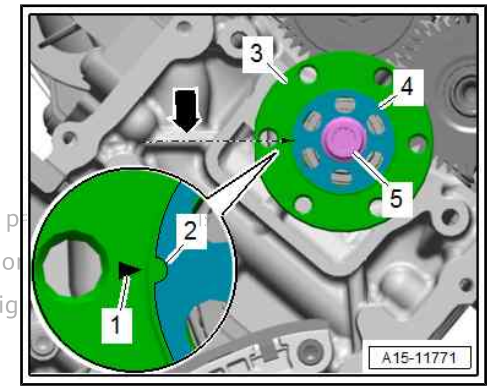

Protected by copyright. Copying for private or commercial purposes, in p
permitted unless authorised by AUDI AG. AUDI AG does not guarantee o
with respect to the correctness of information in this document. Copyrig

– Turn eccentric washer -3- by hand anti-clockwise -arrow- as far as stop.
– Secure TDC adjustment bar - 2068 A- to cylinder head using knurled screw -1-, as shown in illustration.
– Align caliper gauge of TDC adjustment bar - 2068A- with marking -4- on eccentric washer, as shown in illustration, then secure with locking bolt -2-.

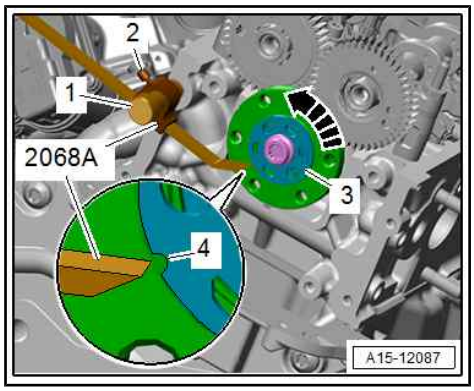

– Turn eccentric washer -1- clockwise -arrow- until line marking -3- is aligned with TDC adjustment bar - 2068 A- , as illustrated.
– Tighten bolt -2-, ensuring that eccentric washer remains in setting position.

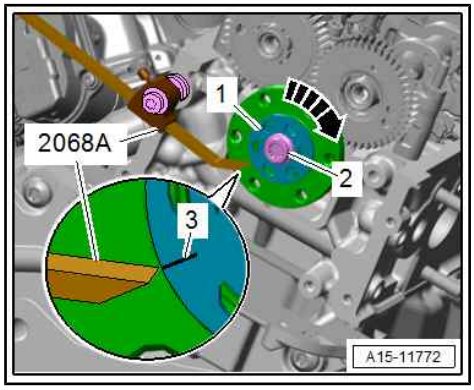

Note

On some versions, there is no line marking on the eccentric washer. If this is the case, a mark -2- must be made at a distance -a- = 5.2 mm to the right of the notch -1-.

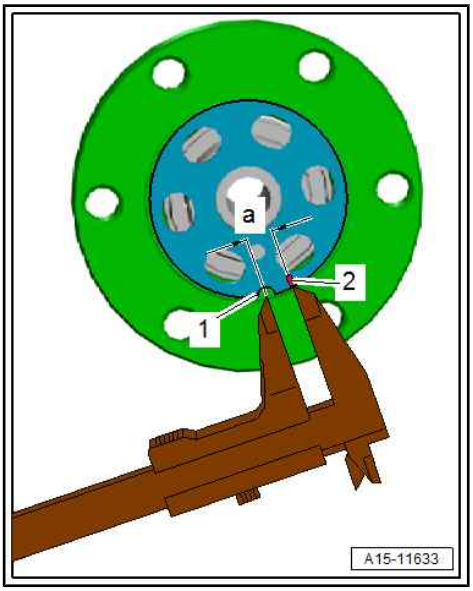

2.8.2 Installing intermediate drive for cylinder bank 2 (left-side) and adjusting backlash

Special tools and workshop equipment required

- TDC adjustment bar - 2068A-

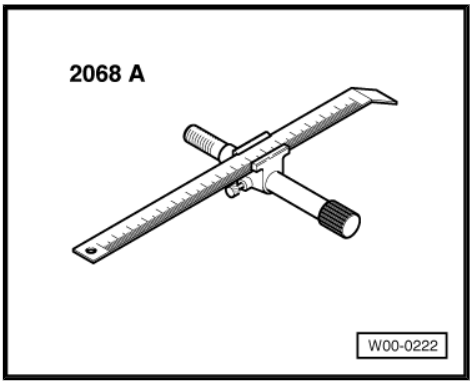

- Setting tool - T40271-

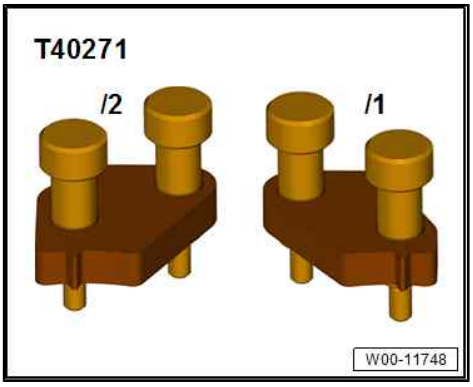

Protected by copyright. Copying for private or commercial purposes, in part or in whole, is not permitted unless authorised by AUDI AG. AUDI AG does not guarantee or accept any liability with respect to the correctness of information in this document. Copyright by AUDI AG.

♦ Adjustment pin - T40313-

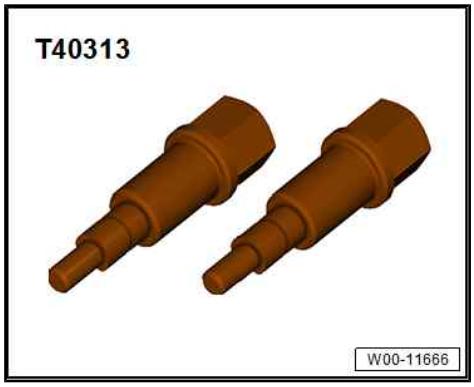

Preparing tool

– Remove retaining ring -2- and take knurled screw -1- out of TDC adjustment bar - 2068A- .

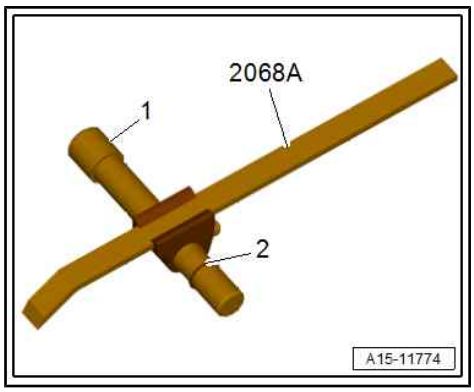

– Remove circlip -2- and take knurled screw -1- out.

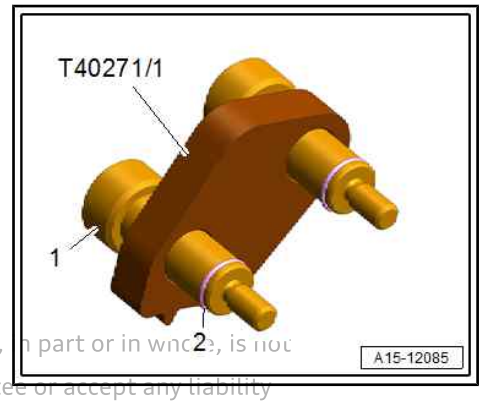

Protected by copyright. Copying for private or commercial purposes, in part or in whole, is not permitted unless authorised by AUDI AG. AUDI AG does not guarantee or accept any liability with respect to the correctness of information in this document. Copyright by AUDI AG.

– Slide knurled screw -1- from tool -T40271/1- into TDC adjustment bar - 2068A- , as shown in illustration.

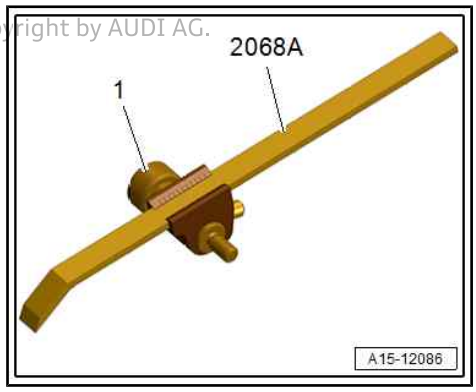

Protected by copyright. Copying for private or commer
permitted unless authorised by AUDI AG. AUDI AG doe
with respect to the correctness of information in this d

Procedure

- Timing chain removed from camshafts.
- Camshafts for cylinder bank 2 (left-side) installed.
- Inlet camshaft of cylinder bank 2 (left-side) locked at "TDC" by inserting locking pin - T10060A- in hole -arrow-.

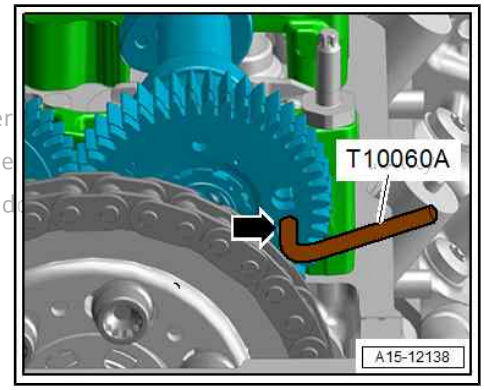

- Backlash compensation assembly of inlet camshaft for cylinder bank 2 (left-side) locked in place with adjustment pin - T40313- . The teeth of the two gears of inlet camshaft must align ⇒ page 135 .

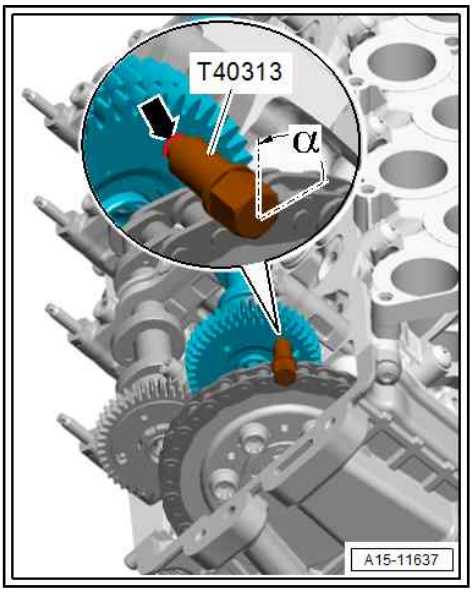

– Align flange -3- with eccentric washer -4- of intermediate drive.
- Marking -1- should align with notch -2-.
– Fit intermediate drive on cylinder head.
- Marking -1- and notch -2- must align with cast projection -arrow- on cylinder head.
– Screw in bolt -5- for intermediate drive by hand until it makes contact.
- It should just be possible to turn the eccentric washer of the intermediate drive without axial movement.

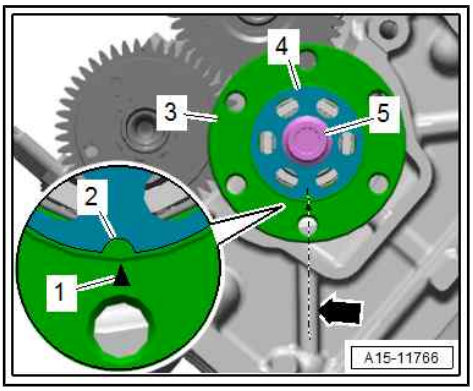

– Turn eccentric washer -1- anti-clockwise -arrow- as far as stop.
– Secure TDC adjustment bar - 2068 A- to cylinder head using knurled screw -3-, as shown in illustration.
– Align caliper gauge of TDC adjustment bar - 2068A- with marking -4- on eccentric washer, as shown in illustration, then secure with locking bolt -2-.

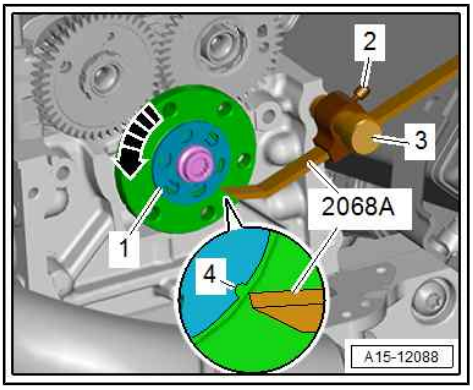

– Turn eccentric washer -1- clockwise -arrow- until notch -3- is aligned with TDC adjustment bar - 2068A- , as illustrated.
– Tighten bolt -2-, ensuring that eccentric washer remains in setting position.

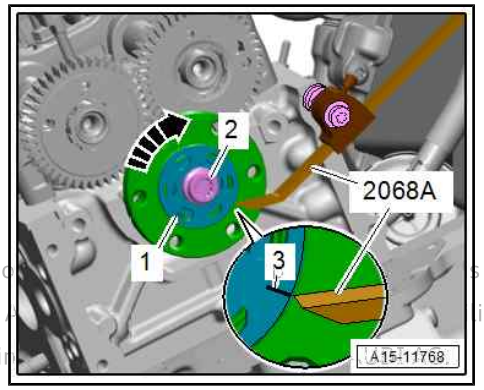

Protected by copyright. Copying for private or co s not
permitted unless authorised by AUDI AG. AUDI ity
with respect to the correctness of information in

Note

On some versions, there is no line marking on the eccentric washer. If this is the case, a mark -2- must be made at a distance -a- = 5.2 mm to the right of the notch -1-.

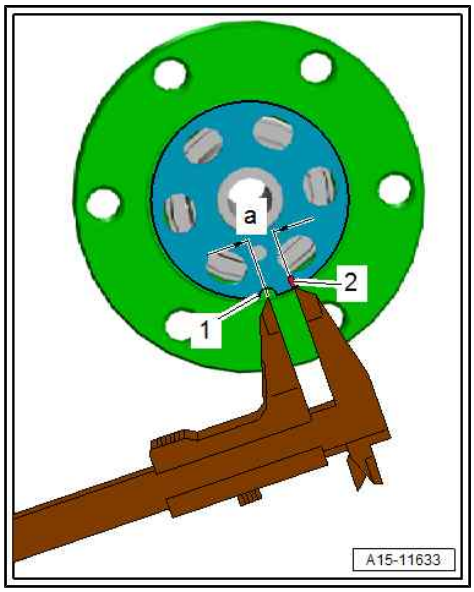

3 Cylinder head

⇒ "3.1 Exploded view - cylinder head", page 103
⇒ "3.2 Exploded view - cylinder head cover", page 105
⇒ "3.3 Removing and installing cylinder head", page 107
⇒ "3.4 Removing and installing cylinder head cover", page 114
⇒ "3.5 Removing and installing seals for injectors", page 119
⇒ "3.6 Checking compression", page 120

3.1 Exploded view - cylinder head

Note

Illustration shows the cylinder head for cylinder bank 2 (left-side) as an example.

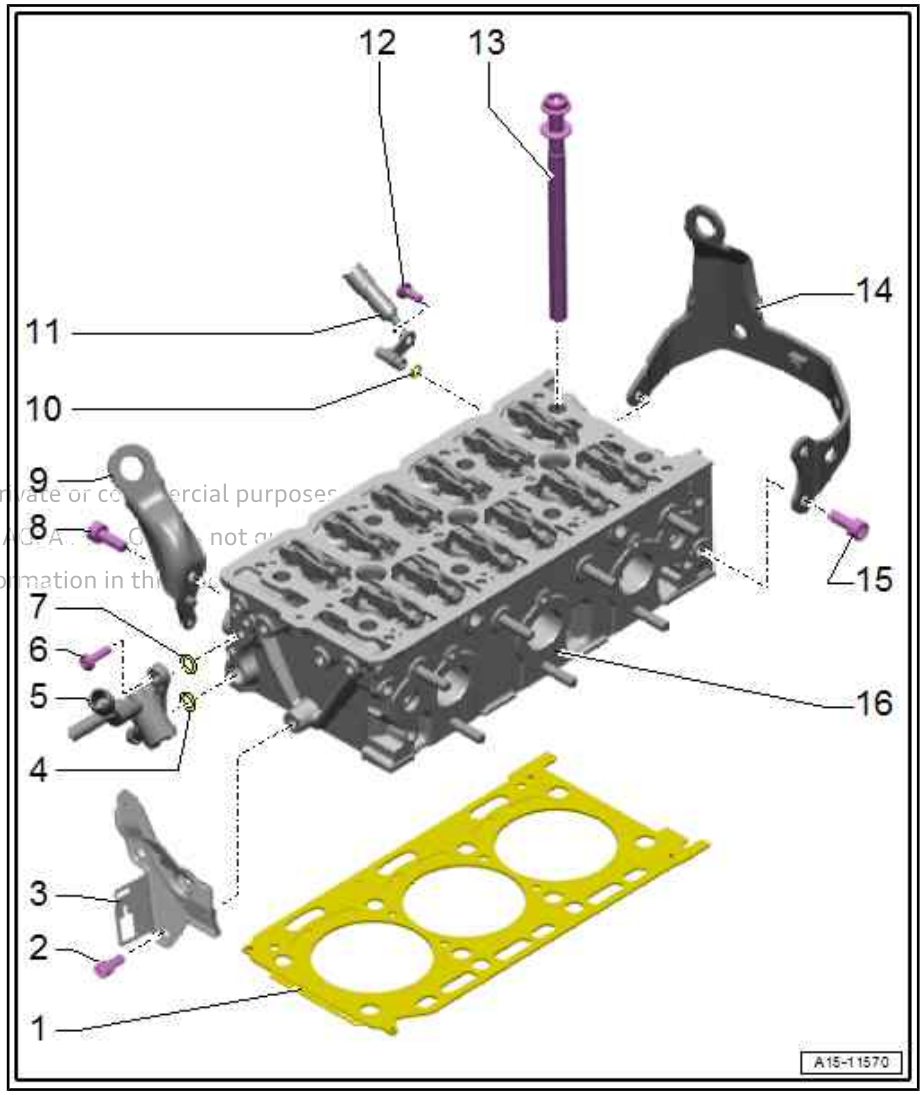

1 - Cylinder head gasket
- ❑ Renewing ⇒ page 107
- ❑ Identification ⇒ page 104
- ❑ Installation position: part number must face cylinder head
- ❑ If renewed, change coolant and engine oil

2 - Bolt
- ❑ 23 Nm

3 - Bracket

4 - O-ring
- ❑ Renew after removing

5 - Coolant pipe

6 - Bolt
- ❑ 9 Nm

7 - Seal
- ❑ Renew after removing

8 - Bolt
- ❑ 23 Nm

9 - Engine lifting eye

10 - O-ring
- ❑ Renew after removing

11 - Coolant line/sealing plug
- ❑ Depending on version

12 - Bolt
- ❑ Tightening torque ⇒ 6-cylinder TDI engine, 3.0 ltr. 4-valve common rail; Rep. gr. 19 ; Coolant pipes; Exploded view - coolant pipes

13 - Bolt
- ❑ Correct sequence when slackening ⇒ page 109
- ❑ Renew after removing

Protected by copyright. Copying for private or commercial purposes, in part or in whole, is not permitted unless authorised by AUDI AG. AUDI AG does not guarantee or assume any liability with respect to the correctness of information in this document.

- ❑ Tightening torque and sequence ⇒ page 104

14 - Engine lifting eye

15 - Bolt

- ❑ 23 Nm

16 - Cylinder head

- ❑ To prevent damage to glow plugs, always place cylinder head on a soft foam surface after removal.
- ❑ Removing and installing ⇒ page 107
- ❑ Checking for distortion ⇒ page 104
- ❑ Cylinder heads must not be reworked on TDI engines
- ❑ If renewed, change coolant and engine oil

Checking cylinder head for distortion

– Use straight edge 500 mm - VAS 6075- and feeler gauge to measure cylinder head for distortion at several points.

• Max. permissible distortion: 0.1 mm.

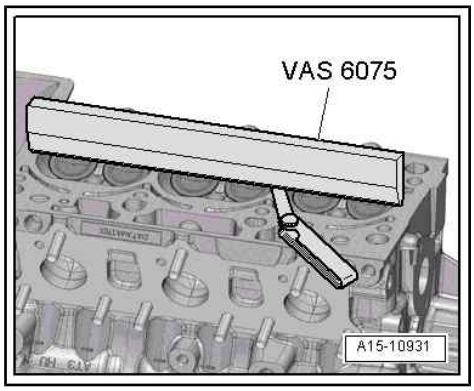

Note

Cylinder heads must not be reworked on TDI engines.

Identification of cylinder head gasket

1 - Part number

2 - Holes

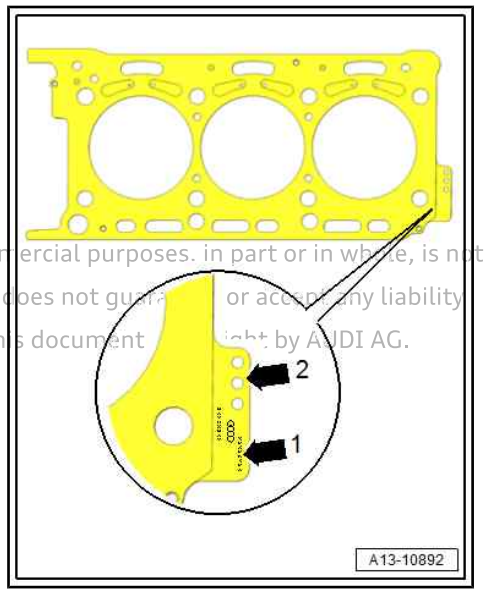

Note

- ♦ *Cylinder head gaskets of different thicknesses are fitted depending on the amount of piston projection* *⇒ page 53*. *If renewing the cylinder head gasket only, the new gasket should have the same identification as the old one.*
- ♦ *The gaskets for the left and right cylinder heads have different shapes and cannot be interchanged.*

Protected by copyright. Copying for private or commercial purposes, in part or in whole, is not permitted unless authorised by AUDI AG. AUDI AG does not guarantee or accept any liability with respect to the correctness of information in this document. Copyright by AUDI AG.

Cylinder head - tightening torque and sequence

– Tighten bolts in stages in the sequence shown:

Stage	Bolts	Tightening torque/angle specification
1.	-1 … 8-	Screw in by hand until contact is made
2.	-1 … 8-	35 Nm
3.	-1 … 8-	50 Nm
4.	-1 … 8-	Turn 90° further
5.	-1 … 8-	Turn 90° further
6.	-1 … 8-	Turn 90° further

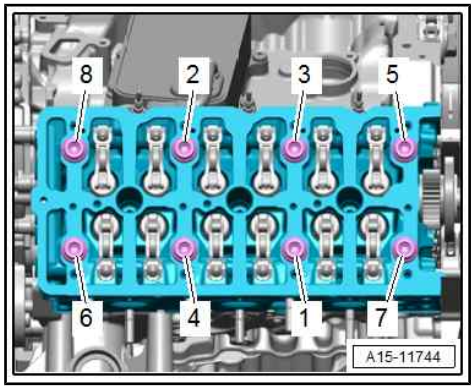

3.2 Exploded view - cylinder head cover

Note

Illustration shows the cylinder head cover for cylinder bank 2 (left-side) as an example.

Protected by copyright. Copying for private or commercial purposes, in part or in whole, is not permitted unless authorised by AUDI AG. AUDI AG does not guarantee or accept any liability with respect to the correctness of information in this document. Copyright by AUDI AG.

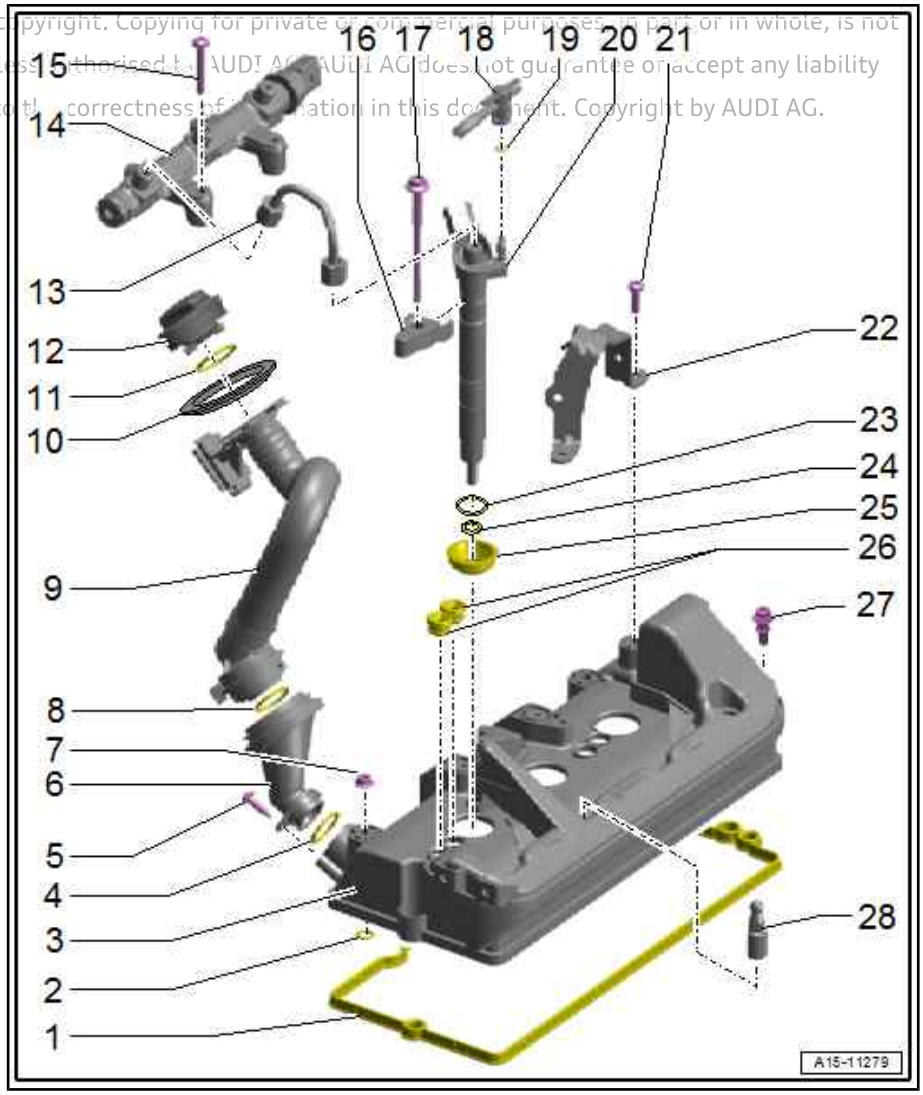

1 - Gasket
- For cylinder head cover
- Renew if damaged or leaking

2 - O-ring
- 8x
- Renew after removing

3 - Cylinder head cover
- Removing and installing ⇒ page 114

4 - O-ring
- Renew after removing

5 - Bolt
- 2x
- Thread-forming
- Fit and screw in bolt by hand so that it is screwed into old thread. Then tighten bolt to torque
- 7.5 Nm

6 - Oil filler neck

7 - Nut
- Tightening torque and sequence ⇒ page 107 , ⇒ page 106

8 - Seal
- Not fitted on all models
- Renew if damaged or leaking

9 - Extension
- For oil filler neck
- Not fitted on all models

10 - Grommet

11 - Seal
- For filler cap
- Renew if damaged or leaking

12 - Filler cap

13 - High-pressure pipe
- Do not alter shape
- Installing ⇒ page 244

14 - High-pressure reservoir (rail)
- Observe rules for cleanliness ⇒ page 7

15 - Bolt

- ❑ Tightening torque ⇒ Item 11 (page 226)

16 - Clamping piece

- ❑ Removing and installing ⇒ “5.8 Removing and installing injectors”, page 239

17 - Bolt

- ❑ Tightening torque ⇒ Item 3 (page 225)

18 - Fuel return hose

- ❑ Observe rules for cleanliness ⇒ page 7

19 - O-ring

- ❑ Renew after removing

20 - Injector

- ❑ Observe rules for cleanliness ⇒ page 7
- ❑ Removing and installing ⇒ page 239

21 - Bolt

- ❑ 7.5 Nm

22 - Bracket

- ❑ Different versions depending on model; for allocation refer to ⇒ Electronic parts catalogue

23 - O-ring

- ❑ Renew after removing

24 - Copper seal

- ❑ Renew after removing

25 - Seal for injector

- ❑ Renew if damaged or leaking
- ❑ Renew each time injector is removed
- ❑ Renewing ⇒ page 119

26 - Grommets

- ❑ Renew if damaged or leaking

27 - Bolt

- ❑ With seal
- ❑ Renew if damaged or leaking
- ❑ Tightening torque and tightening sequence: left-side ⇒ page 107 ; right-side ⇒ page 106

28 - Ball stud

- ❑ Depending on model
- ❑ Tightening torque and sequence ⇒ page 107 , ⇒ page 106

Protected by copyright. Copying for private or commercial purposes, in part or in whole, is not permitted unless authorised by AUDI AG. AUDI AG does not guarantee or accept any liability with respect to the correctness of information in this document. Copyright by AUDI AG.

Cylinder head cover of bank 1 (right-side) - tightening torque and sequence

– Tighten bolted connections in stages in the sequence shown:

Stage	Bolts, nuts, ball studs	Tightening torque
1.	-1 … 11-	Screw in by hand until contact is made
2.	-1 … 11-	8 Nm

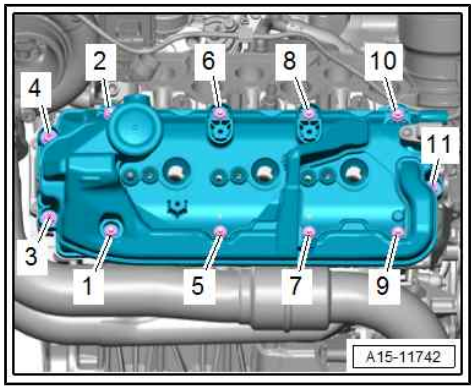

Cylinder head cover of bank 2 (left-side) - tightening torque and sequence

– Tighten bolted connections in stages in the sequence shown:

Stage	Bolts, nuts, ball studs	Tightening torque
1.	-1 … 11-	Screw in by hand until contact is made
2.	-1 … 11-	8 Nm

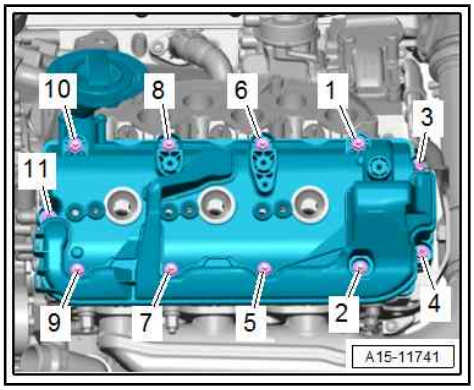

3.3 Removing and installing cylinder head

⇒ "3.3.1 Removing cylinder head - bank 1 (right-side)", page 107

⇒ "3.3.2 Removing cylinder head - bank 2 (left-side)", page 109

⇒ "3.3.3 Installing cylinder head", page 111

3.3.1 Removing cylinder head - bank 1 (right-side)

Special tools and workshop equipment required

♦ Hose clip pliers - VAS 6362-

Protected by copyright. Copying for private or commercial purposes, in part or in whole, is not permitted unless authorised by AUDI AG. AUDI AG does not guarantee or accept any liability with respect to the correctness of information in this document. Copyright by AUDI AG.

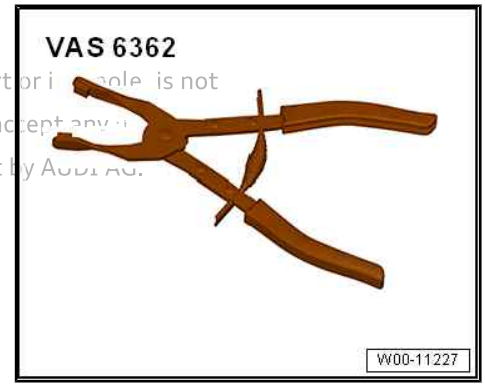

♦ Blade scraper; blade width at least 40 mm (commercially available)

Procedure

– Drain coolant ⇒ page 177 .

– Remove camshaft timing chain from camshaft timing chain sprockets ⇒ page 74 .

– Remove camshafts (right-side) ⇒ page 130 .

– Remove intake manifold (top section) ⇒ page 217 .

Note

- *If bolt -arrow- has been loosened, backlash must be re-adjusted* *⇒ page 96* *.*
- *Only loosen bolt when renewing cylinder head and fitting intermediate drive on new cylinder head.*

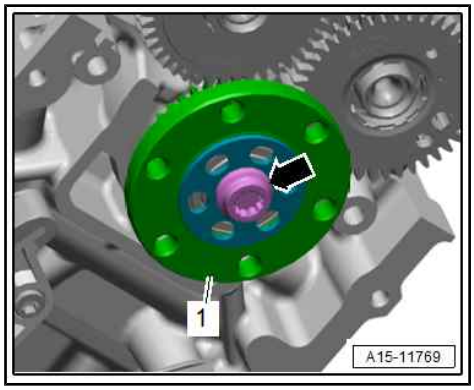

– Unbolt coolant pipe (front) and detach from map-controlled engine cooling system thermostat - F265- ⇒ 6-cylinder TDI engine, 3.0 ltr. 4-valve common rail; Rep. gr. 19 ; Coolant pipes; Removing and installing coolant pipes .

– Remove bolts -arrows- and move coolant connection -1- to one side.

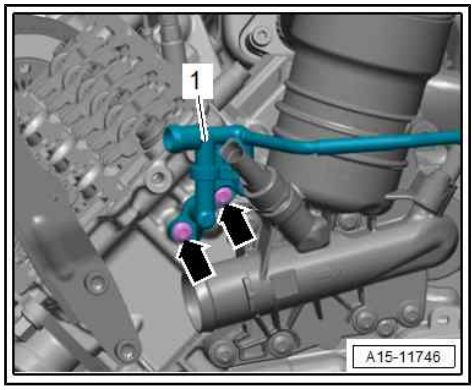

– Remove guide pin -1-.

– Secure clamp -T40309/2- to cylinder head with fitted bolt -T40309/3- , as shown in illustration.

– Support tensioning rail by tightening knurled screw -3- of bracket -T40309/1- until clamp -T40309/2- makes contact with tensioning rail.

– Loosen guide pin -2- and unscrew it by hand.

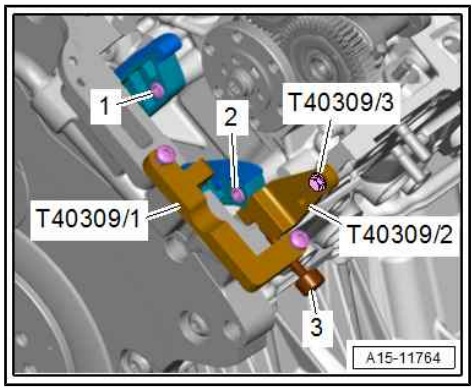

Note

To avoid damaging the thread in the cylinder head, it must be possible to unscrew the guide bolt for the tensioning rail easily. If necessary, tighten knurled screw -3- further slightly.

– Loosen knurled screw -3-, unscrew fitted bolt -T40309/3- and detach clamp -T40309/2- .

Protected by copyright. Copying for private or commercial purposes, in part or in whole, is not permitted unless authorised by AUDI AG. AUDI AG does not guarantee or accept any liability with respect to the correctness of information in this document. Copyright by AUDI AG.

– Slacken cylinder head bolts in the sequence -1 ... 8-.
– Remove bolts and carefully take off cylinder head.

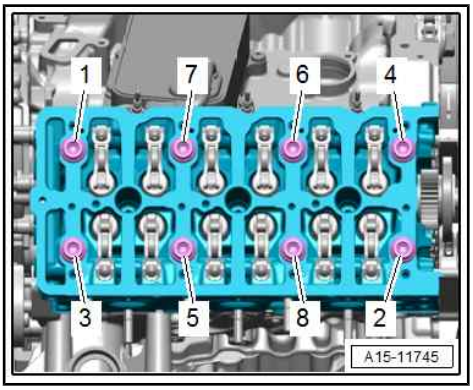

Caution

Risk of damage to glow plugs when putting down cylinder head.

- *After removal, the cylinder head must not be put down on the gasket side with the glow plugs still installed, because the glow plugs project slightly beyond the gasket surface.*

Note

Protected by copyright. Copying for private or commercial purposes, in part or in whole, is not permitted unless authorised by AUDI AG. AUDI AG does not guarantee or accept any liability with respect to the correctness of information in this document. Copyright by AUDI AG.

Seal off all open passages in the intake and exhaust system with clean cloths or plugs (thoroughly cleaned) from engine bung set - VAS 6122- .

3.3.2 Removing cylinder head - bank 2 (left-side)

Special tools and workshop equipment required

- Hose clip pliers - VAS 6362-

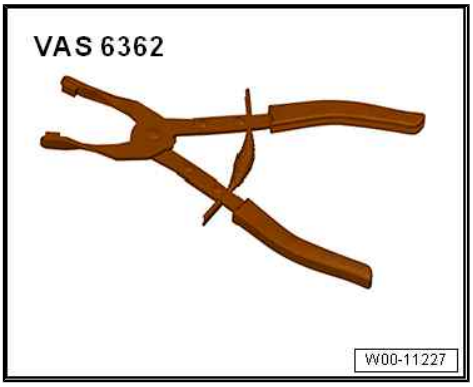

Procedure

– Drain coolant ⇒ page 177 .
– Remove camshaft timing chain from camshaft timing chain sprockets ⇒ page 74 .
– Remove camshafts (left-side) ⇒ page 130 .
– Remove intake manifold (top section) ⇒ page 217 .

Note

- *If bolt -arrow- has been loosened, backlash must be re-adjusted ⇒ page 99 .*
- *Only loosen bolt when renewing cylinder head and fitting intermediate drive on new cylinder head.*

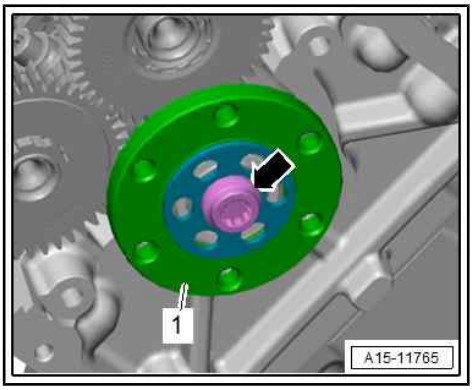

– If fitted, release hose clip -1- and detach coolant hose.

2 - Ignore

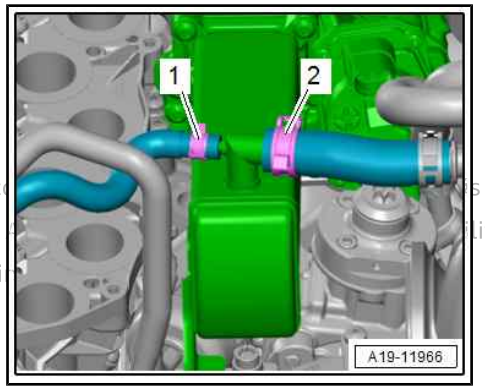

Protected by copyright. Copying for private or c s not
permitted unless authorised by AUDI AG. AUDI ity
with respect to the correctness of information i

– Remove bolts -arrows- and move coolant connection -1- to one side.
– Release retaining clip -2- and move vacuum hose clear at engine lifting eye.
– Remove solenoid valves -3, 5- from bracket and place to one side.
– Remove bolt -4- for vacuum line.

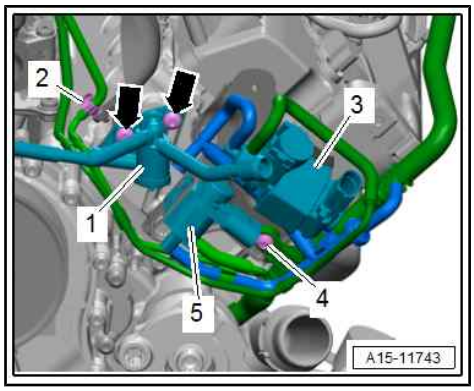

– Slacken cylinder head bolts in the sequence -1 ... 8-.
– Remove bolts and carefully take off cylinder head.

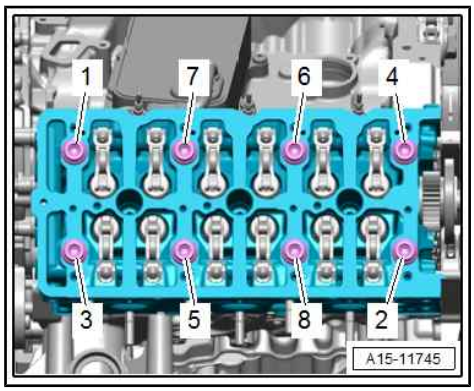

Caution

Risk of damage to glow plugs when putting down cylinder head.

- ***After removal, the cylinder head must not be put down on the gasket side with the glow plugs still installed, because the glow plugs project slightly beyond the gasket surface.***

Note

Seal off all open passages in the intake and exhaust system with clean cloths or plugs (thoroughly cleaned) from engine bung set - VAS 6122- .

3.3.3 Installing cylinder head

Procedure

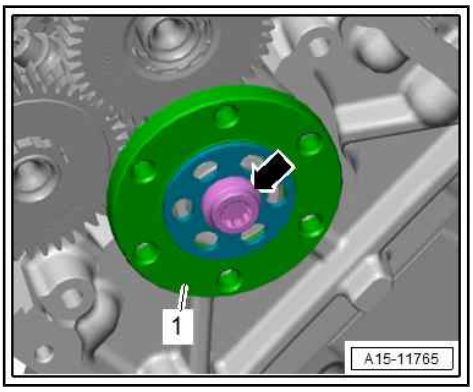

Note

- *If bolt -arrow- has been loosened, backlash must be re-adjusted* *⇒ page 99* *.*
- *Only loosen bolt when renewing cylinder head and fitting intermediate drive on new cylinder head.*
- *Illustration shows the intermediate drive for cylinder bank 2 (left-side) as an example.*

Caution

Risk of damage to sealing surfaces if handled incorrectly.

- ***Carefully remove sealant residue from cylinder head and cylinder block.***

- Do NOT use abrasive materials (sandpaper, sanding discs, sanding pads, abrasive web, wire wool, etc.).
- Sealing surface must not be raised.
- Dark discolouration does not have to be removed.
- When removing sealant residue, make sure none of the residue enters the open channels of the engine.
- Ensure that nearby workspaces are kept clean and that the abrasive materials listed above are not being used there.
- Use of impermissible abrasive materials can lead to subsequent damage to the turbocharger, conrod bearings, etc.

WARNING

Risk of eye injury due to sealant residue.

- ***Put on safety goggles.***

– Sealant residue may only be removed from the cylinder head and cylinder block using a commercially available blade scraper (blade width at least 40 mm).

– Remove loose residue with a lint-free cloth.

Protected by copyright. Copying for private or commercial purposes, in part or in whole, is not permitted unless authorised by AUDI AG. AUDI AG does not guarantee or accept any liability with respect to the correctness of information in this document. Copyright by AUDI AG.

Caution

Risk of damage to cylinder block.

- *No oil or coolant must be allowed to remain in the blind holes for the cylinder head bolts in the cylinder block.*

Risk of leaks at cylinder head gasket.

- *Carefully remove any remaining emery and abrasive material.*
- *Do not remove new cylinder head gasket from packaging until it is ready to be fitted.*
- *Handle the cylinder head gasket very carefully to prevent damage to the silicone coating or the indented area of the gasket.*

Risk of damage to open valves.

- *When installing an exchange cylinder head, the plastic protectors fitted to protect the open valves should not be removed until the cylinder head is ready to be fitted.*

Risk of damage to valves and piston crowns after working on valve gear.

- *Turn the engine carefully at least 2 rotations to ensure that none of the valves make contact when the starter is operated.*

Protected by copyright. Copying for private or commercial purposes, in part or in whole, is not permitted unless authorised by AUDI AG. AUDI AG does not guarantee or accept any liability with respect to the correctness of information in this document. Copyright by AUDI AG.

Note

- *After removing, renew bolts tightened with specified tightening angle.*
- *Renew self-locking nuts, as well as seals, gaskets and O-rings after removing.*
- *Cylinder heads must not be reworked on TDI engines.*
- *When installing an exchange cylinder head, the contact surfaces between roller rocker fingers and cams must be oiled before installing the cylinder head cover.*
- *Secure all hose connections with correct type of hose clips (as original equipment) ⇒ Electronic parts catalogue .*
- *After fitting a new cylinder head or cylinder head gasket, change engine oil and coolant in entire cooling system.*

– Note cylinder head gasket identification:

1 - Part number

2 - Holes

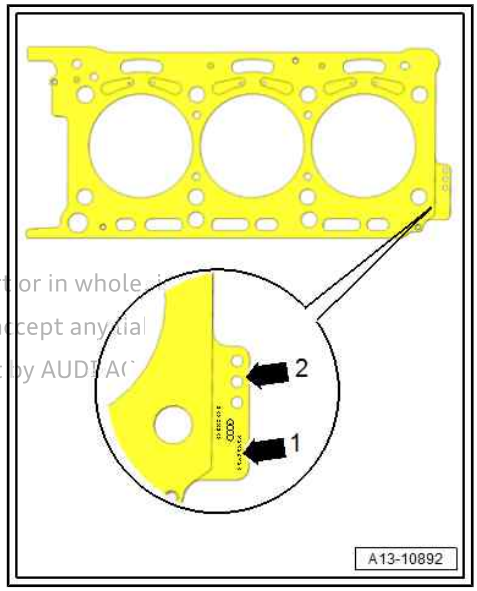

Note

- *If the cylinder head gasket or cylinder head have been renewed, select the new cylinder head gasket according to the number of holes on the old gasket.*
- *If parts of the crankshaft drive have been renewed, select the new cylinder head gasket by measuring the piston projection at "TDC"* ⇒ page 53 .
- *The gaskets for the left and right cylinder heads have different shapes and cannot be interchanged.*

Protected by copyright. Copying or distribution of this document, in part or in whole, is permitted unless authorised by AUDI AG. AUDI AG does not guarantee or accept any liability with respect to the correctness of information in this document. Copyright by AUDI AG.

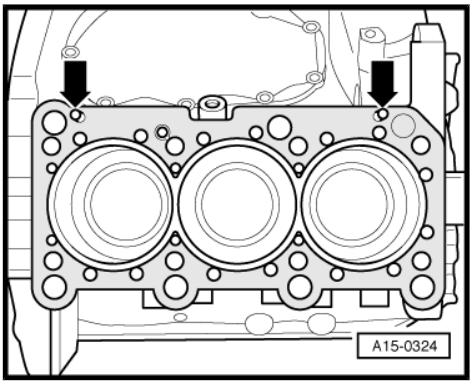

– Place cylinder head gasket in position.

- Pay attention to dowel sleeves -arrows- in cylinder block.
- Installation position of cylinder head gasket: the word "oben" (top) or the part number should face towards the cylinder head.

– Fit cylinder head.

– Tighten cylinder head bolts ⇒ page 104 .

Note

Cylinder head bolts do not have to be torqued down again later after repair work.

Remaining installation steps are carried out in reverse sequence; note the following:

Cylinder head, bank 1 (right-side):

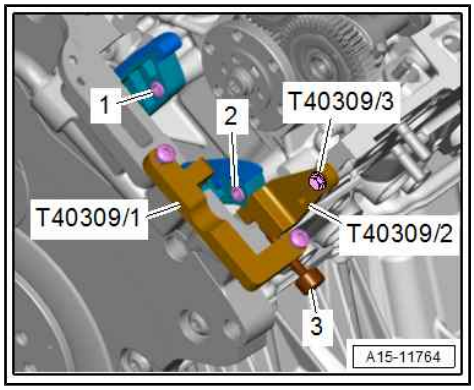

- Screw in and tighten guide pin -1- for guide rail by hand.
- Secure clamp -T40309/2- to cylinder head with fitted bolt -T40309/3- , as shown in illustration.
- Align tensioning rail with threaded hole for guide pin in cylinder head; to do so, screw in knurled screw -3- of bracket T40309/1 until clamp -T40309/2- adjusts tensioning rail into installation position.
- Screw in and tighten guide pin -2- by hand.

Note

To avoid damaging the thread in the cylinder head, it must be possible to screw in the guide bolt for the tensioning rail easily. If necessary, tighten or loosen fitted bolt -T40309/3- further slightly.

- Loosen knurled screw -3-, unscrew fitted bolt -T40309/3- and detach clamp -T40309/2- .
- Install coolant pipe (front) ⇒ 6-cylinder TDI engine, 3.0 ltr. 4-valve common rail; Rep. gr. 19 ; Coolant pipes; Removing and installing coolant pipes .

Both sides (continued):

- Install camshafts ⇒ page 130 .

Note

If the cylinder head was renewed, you must install the intermediate drive and re-adjust the backlash ⇒ page 96 .

- Install camshaft timing chain ⇒ page 74 .
- Install intake manifold (top section) ⇒ page 217 .
- Fill cooling system with fresh coolant ⇒ page 180 .

Additional work depending on model ⇒ 6-cylinder TDI engine, 3.0 ltr. 4-valve common rail; Rep. gr. 15 ; Cylinder head; Removing and installing cylinder head .

Tightening torques

- ⇒ “3.1 Exploded view - cylinder head”, page 103
- ⇒ Fig. ““Cylinder head - tightening torque and sequence”“ , page 104

Protected by copyright. Copying for private or commercial purposes, in part or in whole, is not permitted unless authorised by AUDI AG. AUDI AG does not guarantee or accept any liability with respect to the correctness of information in this document. Copyright by AUDI AG.

3.4 Removing and installing cylinder head cover

⇒ “3.4.1 Removing and installing cylinder head cover - bank 1 (right-side)”, page 114

⇒ “3.4.2 Removing and installing cylinder head cover - bank 2 (left-side)”, page 117

3.4.1 Removing and installing cylinder head cover - bank 1 (right-side)

Special tools and workshop equipment required

♦ Removal lever - 80-200-

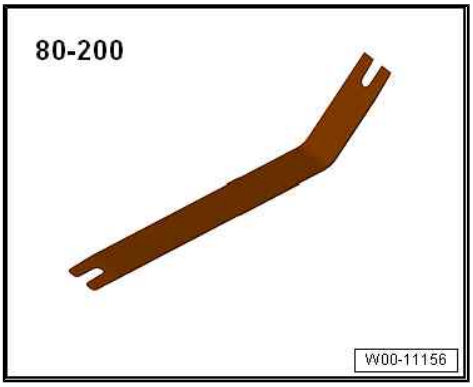

♦ Sealant ⇒ Electronic parts catalogue

Removing

Preparatory work may be necessary depending on model ⇒ 6-cylinder TDI engine, 3.0 ltr. 4-valve common rail; Rep. gr. 15 ; Cylinder head; Removing and installing cylinder head cover .

– Remove high-pressure reservoir (rail) ⇒ page 246 .

– Remove injectors ⇒ page 239 .

– Unplug electrical connector for Hall sender - G40- -item 1-.

– Detach electrical connectors -2- from bracket and move electrical wiring harness clear at cylinder head cover using removal lever - 80-200- .

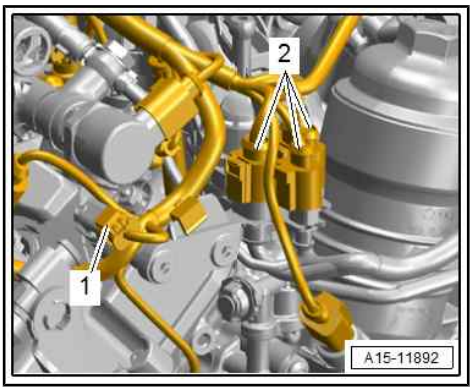

Version 1

– Press release tabs on both sides and disconnect crankcase breather hose -2-.

– Unplug electrical connector -3- and move wiring clear.

– Unscrew bolts -arrows- and detach intake connecting pipe -1-.

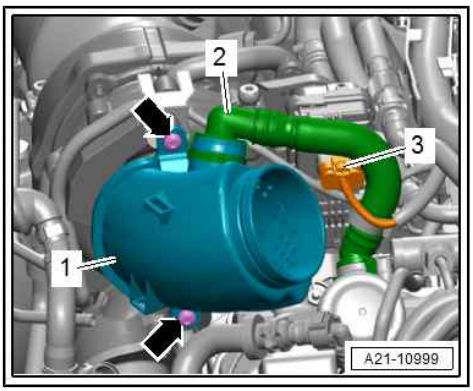

Protected by copyright. Copying for private or commercial purposes, in part or in whole, is not permitted unless authorised by AUDI AG. AUDI AG does not guarantee or accept any liability with respect to the correctness of information in this document. Copyright by AUDI AG.

Version 2

– Press release tabs on both sides and disconnect crankcase breather hose -2-.

– Unscrew bolt -1-, turn intake connecting pipe -1- anti-clockwise and detach it.

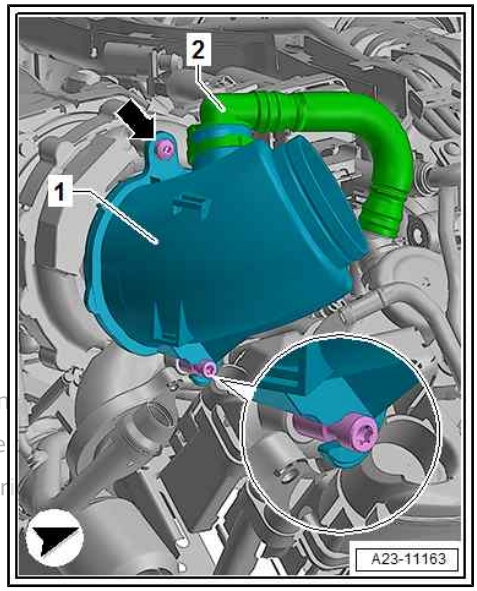

Protected by copyright. Copying for private or commercial purposes, in
permitted unless authorised by AUDI AG. AUDI AG does not guarantee
with respect to the correctness of information in this document. Copyr

All versions (continued):

– If fitted, remove bolt -arrow- and detach engine lifting eye -1-.

– Unplug electrical connectors on glow plugs for cylinder bank 1 (right-side).

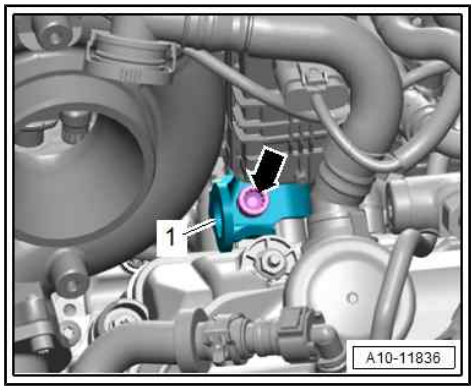

– Loosen bolts in the sequence -11 … 1-; to do so, counterhold at centre hex studs for camshaft bearing caps.

– Remove bolts and take off cylinder head cover.

– If necessary, disconnect refrigerant lines from refrigerant line with internal heat exchanger ⇒ Heating, air conditioning; Rep. gr. 87 ; Refrigerant circuit; Exploded view - refrigerant lines .

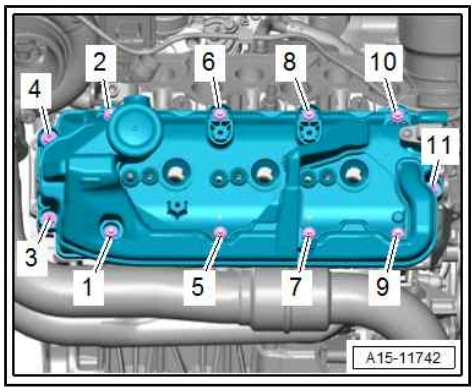

Installing

Installation is carried out in reverse order; note the following:

Note

- *Renew O-rings after removing.*
- *Renew gasket for cylinder head cover if damaged.*

– Clean surfaces; they must be free of oil and grease.

Note

Note expiry date of sealant.

– Cut off nozzle of tube at front marking (nozzle ∅ approx. 2 mm).

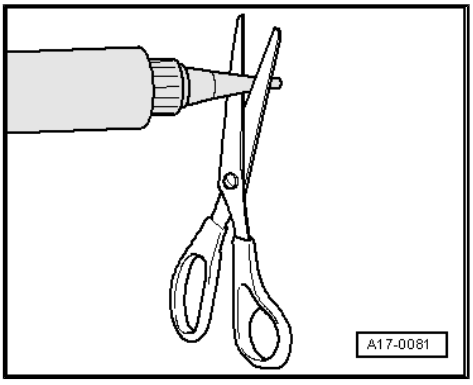

– Apply sealant bead -arrows- at each joint between cylinder head and timing chain cover (top right).

• Width of sealant beads: approx. 2 mm.

– Tighten cylinder head cover bolts ⇒ page 107 .

– Install injectors ⇒ page 239 .

– Install high-pressure reservoir (rail) ⇒ page 246 .

– Check fuel system for leaks ⇒ page 211 .

– If disconnected previously, install refrigerant lines ⇒ Heating, air conditioning; Rep. gr. 87 ; Refrigerant circuit; Exploded view - refrigerant lines .

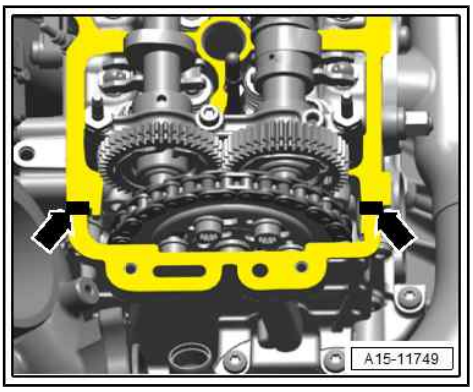

Additional work depending on model ⇒ 6-cylinder TDI engine, 3.0 ltr. 4-valve common rail; Rep. gr. 15 ; Cylinder head; Removing and installing cylinder head cover .

Tightening torques

♦ ⇒ Fig. ""Cylinder head cover of bank 2 (left-side) - tightening torque and sequence"" , page 107

♦ ⇒ "3.1 Exploded view - cylinder head", page 103

♦ ⇒ "1.1 Exploded view - turbocharger", page 198

Protected by copyright. Copying for private or commercial purposes, in part or in whole, is not permitted unless authorised by AUDI AG. AUDI AG does not guarantee or accept any liability with respect to the correctness of information in this document. Copyright by AUDI AG.

3.4.2 Removing and installing cylinder head cover - bank 2 (left-side)

Special tools and workshop equipment required

♦ Removal lever - 80-200-

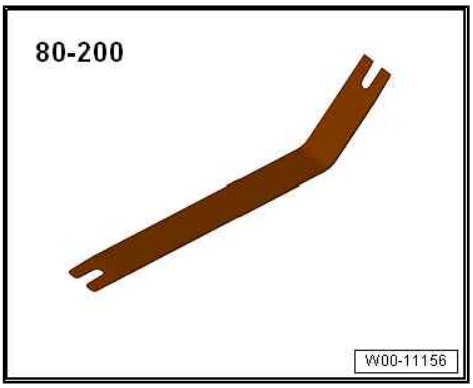

♦ Sealant ⇒ Electronic parts catalogue

Removing

Preparatory work may be necessary depending on model ⇒ 6-cylinder TDI engine, 3.0 ltr. 4-valve common rail; Rep. gr. 15 ; Cylinder head; Removing and installing cylinder head cover .

– Remove high-pressure reservoir (rail) ⇒ page 246 .

– Remove injectors ⇒ page 239 .

– Remove intake manifold flap motor - V157- ⇒ page 220 .

Equipment version with SCR system:

– Unscrew bolt -2- and release screw-type clip.

– Detach injector for reducing agent - N474- -item 1- and place to one side.

– Unplug electrical connectors on glow plugs for cylinder bank 2 (left-side).

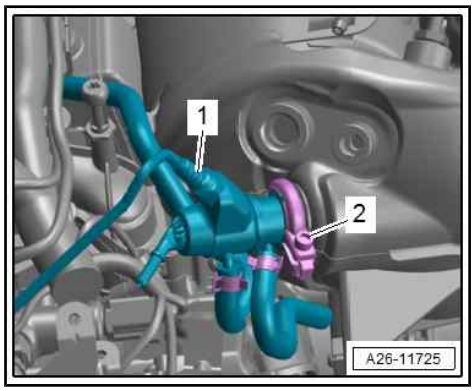

All vehicles (continued):

– Detach electrical connector -3- for exhaust gas recirculation temperature sensor - G98- -item 2- from bracket, unplug and move electrical wiring clear.

– Move electrical wiring clear and press to one side.

1 - Ignore

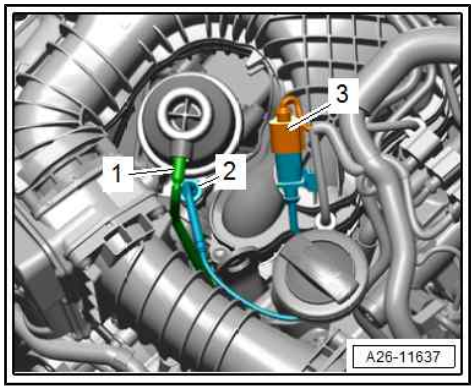

– Move electrical wiring clear and, if fitted, move SCR supply line clear.

– Loosen bolts in the sequence -11 … 1-; to do so, counterhold at centre hex studs for camshaft bearing caps.

– Remove bolts and take off cylinder head cover, paying attention to electrical wiring.

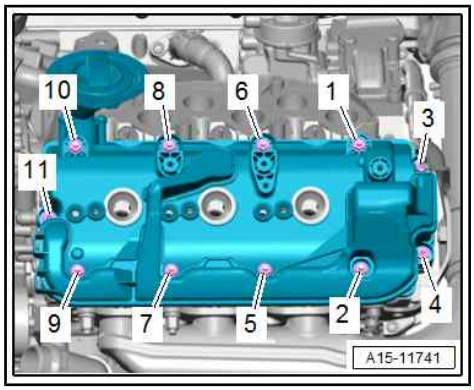

Installing

Installation is carried out in reverse order; note the following:

Note

- *Renew O-rings after removing.*
- *Renew gasket for cylinder head cover if damaged.*

– Clean surfaces; they must be free of oil and grease.

Protected by copyright. Copying for private or commercial purposes, in part or in whole, is not permitted unless authorised by AUDI AG. AUDI AG does not guarantee or accept any liability with respect to the correctness of information in this document. Copyright by AUDI AG.

Note

Note expiry date of sealant.

– Cut off nozzle of tube at front marking (nozzle ∅ approx. 2 mm).

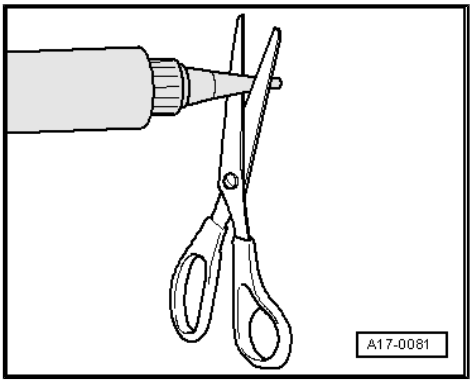

– Apply sealant bead -arrows- at each joint between cylinder head and timing chain cover (top left).

• Width of sealant beads: approx. 2 mm.

– Tighten bolts and nuts for cylinder head cover ⇒ page 107 .

– Install intake manifold flap motor - V157- ⇒ page 220 .

– Install injectors ⇒ page 239 .

– Install high-pressure reservoir (rail) ⇒ page 246 .

– Check fuel system for leaks ⇒ page 211 .

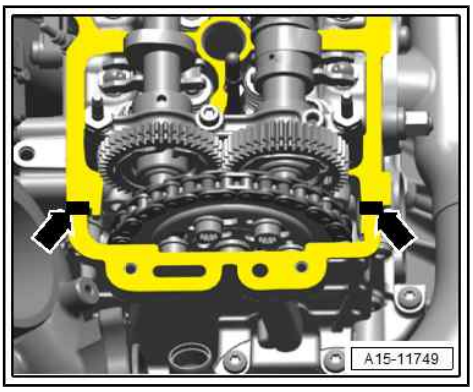

Additional work depending on model ⇒ 6-cylinder TDI engine, 3.0 ltr. 4-valve common rail; Rep. gr. 15 ; Cylinder head; Removing and installing cylinder head cover .

Tightening torques

♦ ⇒ Fig. ""Cylinder head cover of bank 2 (left-side) - tightening torque and sequence"" , page 107

3.5 Removing and installing seals for injectors

Protected by copyright. Copying for private or commercial purposes, in part or in whole, is not permitted unless authorised by AUDI AG. AUDI AG does not guarantee or accept any liability with respect to the correctness of information in this document. Copyright by AUDI AG.

Special tools and workshop equipment required

♦ Tool set for FSI engines - T10133 C-

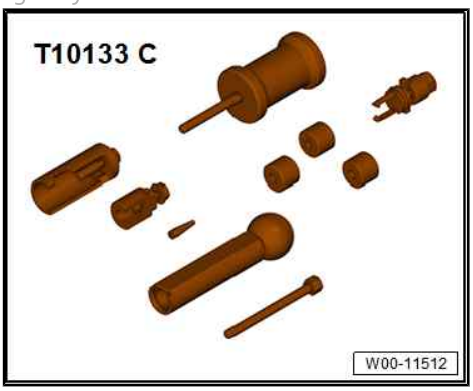

♦ Oil seal extractor - T40195-

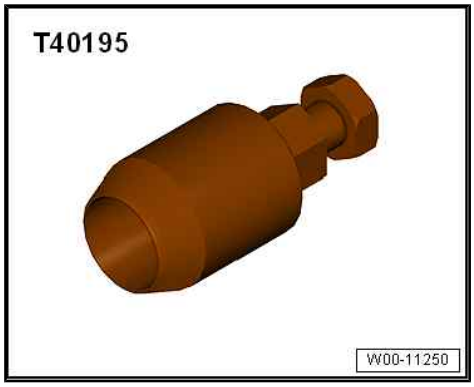

♦ Socket, 24 mm - T10361A-

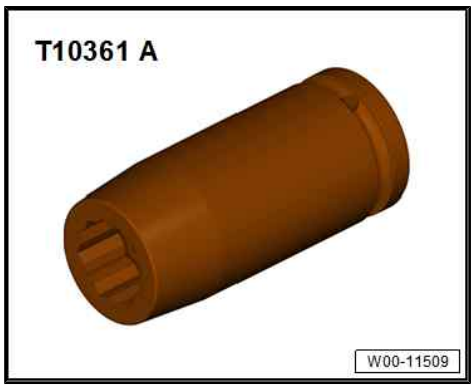

Procedure

– Remove corresponding injector ⇒ page 239 .

– Screw oil seal extractor -T40195- into seal -1- (counterhold oil seal with pliers if necessary).

– Fit striker -T10133/3- with adapter -T10133/2- on oil seal extractor, as shown in illustration, and pull out seal upwards by tapping gently.

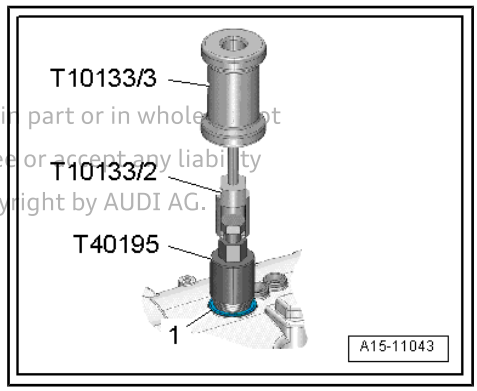

This document is protected by copyright. Copying for private or commercial purposes, in part or in whole, is not permitted unless authorised by AUDI AG. AUDI AG does not guarantee or accept any liability with respect to the correctness of information in this document. Copyright by AUDI AG.

– Drive in new injector seal as far as stop using socket, AF 24 - T10361A- and short extension -1-.

– Install injector ⇒ page 239 .

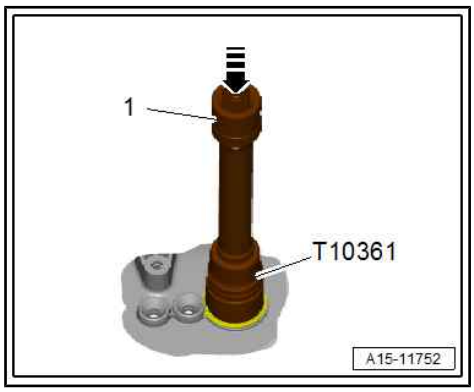

3.6 Checking compression

Special tools and workshop equipment required

Protected by copyright. Copying for private or commercial purposes, in part or in whole, is permitted unless authorised by AUDI AG. AUDI AG does not guarantee or accep with respect to the correctness of information in this document. Copyright by

♦ Compression tester - V.A.G 1763- with adapter - V.A.G 1763/8-

Procedure

- Engine oil temperature approx. 30° C
- Battery voltage at least 12.5 V

– Remove all glow plugs ⇒ page 303 .

– Unplug electrical connector -arrow- at fuel pressure regulating valve - N276- on high-pressure reservoir (rail) (cylinder bank 1, right-side).

– Briefly start engine to relieve fuel pressure in high-pressure reservoir (rail).

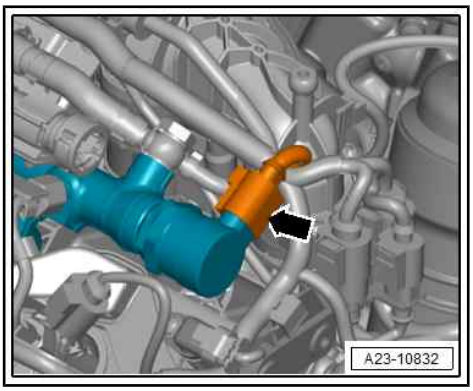

– Screw in adapter - V.A.G 1763/8- in place of the glow plugs and connect compression tester - V.A.G 1763- .

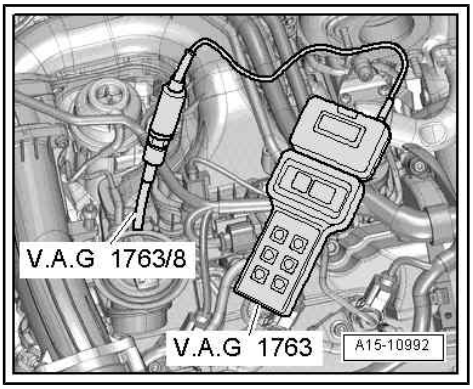

Note

Using the compression tester ⇒ Operating instructions .

– Have a second mechanic operate starter until tester shows no further pressure increase.

– Repeat procedure on each cylinder.

Compression pressure	bar
When new	28 … 33
Wear limit	21
Maximum difference between cylinders	5

Attaching

Assembly is performed in reverse sequence; note the following:

– Install glow plugs ⇒ page 303 .

– Erase any entries in engine control unit event memory resulting from work performed ⇒ Vehicle diagnostic tester.

4 Valve gear

⇒ “4.1 Exploded view - valve gear”, page 122
⇒ “4.2 Measuring axial clearance of camshaft”, page 128
⇒ “4.3 Measuring radial clearance of camshaft”, page 129
⇒ “4.4 Removing and installing camshaft”, page 130
⇒ “4.5 Removing and installing valve stem oil seals”, page 143

4.1 Exploded view - valve gear

Note

Illustration shows the cylinder head for cylinder bank 2 (left-side) as an example.

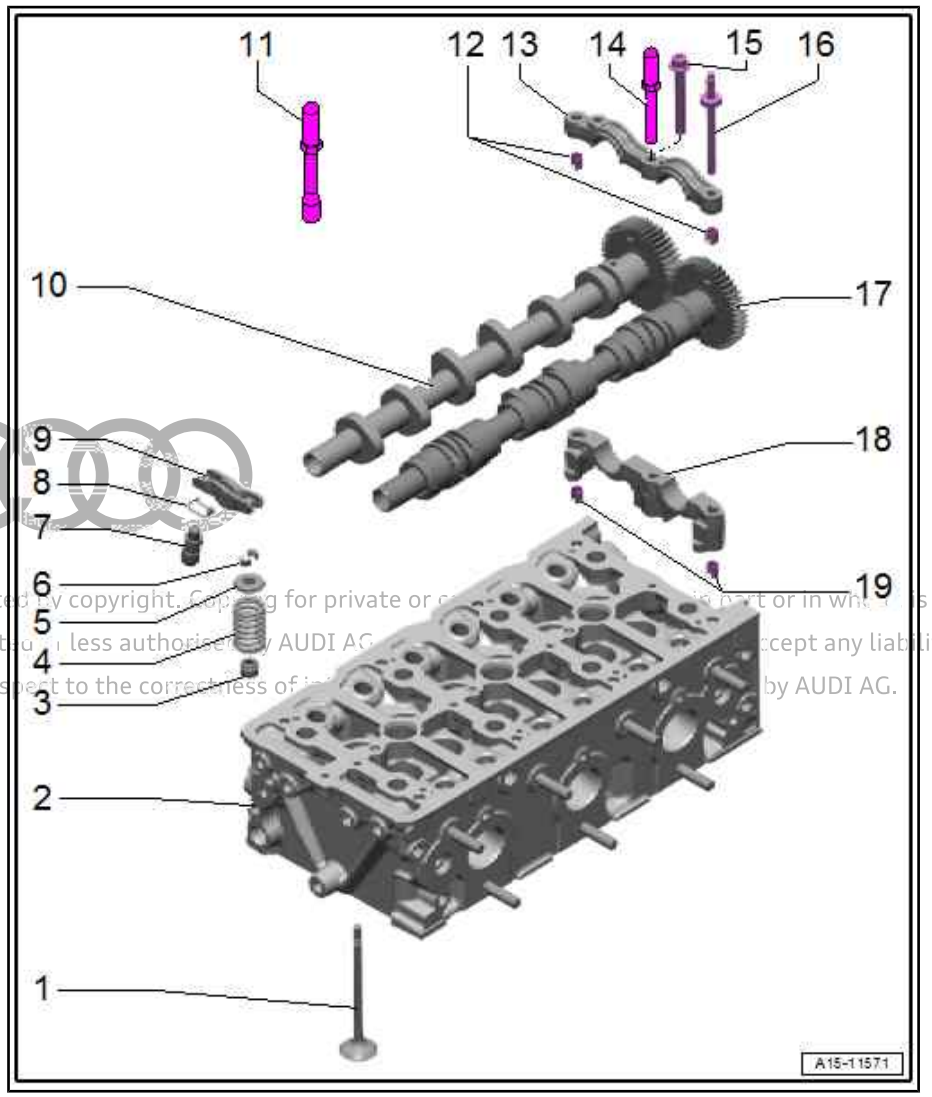

1 - Valve
- ❑ Do not machine, only grinding-in is permitted
- ❑ Mark installation position for re-installation
- ❑ Checking ⇒ page 151
- ❑ Valve dimensions ⇒ page 151
- ❑ Checking valve guides ⇒ page 150

2 - Cylinder head
- ❑ Checking valve guides ⇒ page 150
- ❑ Machining valve seats ⇒ page 150

3 - Valve stem oil seal
- ❑ Renewing ⇒ page 143

4 - Valve spring

5 - Valve spring plate

6 - Valve cotters

7 - Hydraulic compensation element
- ❑ Clipped into roller rocker finger -item 9-
- ❑ Mark installation position for re-installation
- ❑ Lubricate contact surfaces before installing

8 - Securing clip
- ❑ Not supplied separately
- ❑ Check for firm attachment

9 - Roller rocker finger
- ❑ Mark installation position for re-installation
- ❑ Check roller bearings for ease of movement
- ❑ Lubricate contact surfaces before installing

Protected by copyright. Copying for private or commercial purposes, in part or in whole, is not permitted unless authorised by AUDI AG. AUDI AG does not accept any liability with respect to the correctness of information. Copyright by AUDI AG.

- ❑ Assembly: attach to hydraulic compensation element -item 7- using securing clip -item 8-
- ❑ Note installation position ⇒ page 125

10 - Inlet camshaft

- ❑ Allocation ⇒ Electronic parts catalogue
- ❑ Removing and installing ⇒ page 130
- ❑ Measuring axial clearance ⇒ page 128
- ❑ Measuring radial clearance ⇒ page 129
- ❑ Runout: max. 0.01 mm

11 - Support bracket

- ❑ For clamping piece
- ❑ Only for cylinder bank 1 (right-side)
- ❑ Clean threads and threaded holes; they must be free of oil and grease
- ❑ Tightening torque ⇒ Item 1 (page 225)

12 - Spring pins

- ❑ Only for bearing cap (gearbox end) with camshaft axial bearing

13 - Bearing caps

- ❑ Removing and installing ⇒ page 130
- ❑ Note installation position

14 - Bolt

- ❑ With shoulder for clamping piece
- ❑ Clean threads and threaded holes; they must be free of oil and grease
- ❑ Renew after removing
- ❑ Tightening torque and sequence ⇒ page 126

15 - Bolt

- ❑ Clean threads and threaded holes; they must be free of oil and grease
- ❑ Renew after removing
- ❑ Tightening torque and sequence ⇒ page 126

16 - Centre hex stud

- ❑ With shoulder for clamping piece
- ❑ Clean threads and threaded holes; they must be free of oil and grease
- ❑ Renew after removing
- ❑ Tightening torque and sequence ⇒ page 126

Protected by copyright. Copying for private or commercial purposes, in part or in whole, is not permitted unless authorised by AUDI AG. AUDI AG does not guarantee or accept any liability with respect to the correctness of information in this document. Copyright by AUDI AG.

17 - Exhaust camshaft

- ❑ Allocation ⇒ Electronic parts catalogue
- ❑ Removing and installing ⇒ page 130
- ❑ Measuring axial clearance ⇒ page 128
- ❑ Measuring radial clearance ⇒ page 129
- ❑ Runout: max. 0.01 mm

18 - Bearing pedestal

- ❑ Removing and installing ⇒ page 130
- ❑ Note installation position

19 - Spring pins

- ❑ Only for bearing pedestal (gearbox end) with camshaft axial bearing

A - camshaft bearing - tightening torque and sequence, method 1

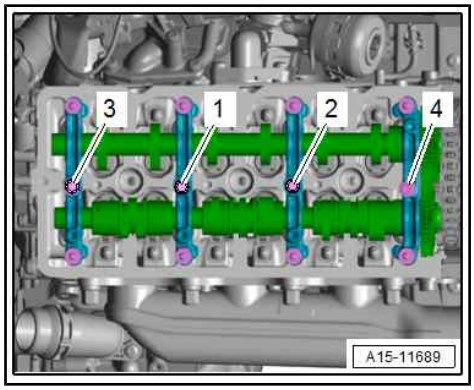

These instructions apply to:

- Timing chain detached from camshaft chain sprocket
- Intermediate drive removed

Note

Clean threads and threaded holes; they must be free of oil and grease.

– Tighten bolts in stages in the sequence shown:

Stage 1

Bolts	Tightening torque
-1 … 4-	Screw in by hand until bolt heads make contact with bearing caps

– Only if intermediate drive is installed: Check that splines of camshaft -4- and intermediate drive -5- mesh. If necessary, push down mounting bracket -2- with your hand and screw in bolt -3- by hand until it makes contact.

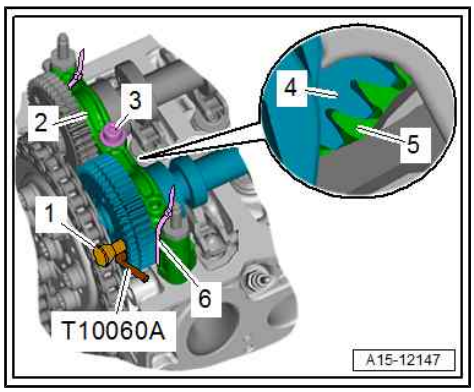

WARNING

The components of the backlash compensation assembly are under spring tension. This can cause injury.

- ***Do NOT remove locking pin - T10060A- .***
- ***Do NOT remove assembly aid -1- (only for new camshafts).***
- ***Do NOT remove adjustment pin - T40313- (for re-installing used camshafts).***

Caution

Risk of excess strain when tightening camshaft bearings.

- ***Do NOT remove cable ties -6-.***

Stage 2

Bolts	Tightening torque
-1 … 4-	Continue tightening 1 turn at a time in several stages until all bearing caps make full contact with cylinder head and a torque of 3 Nm is reached
-1 … 4-	3 Nm

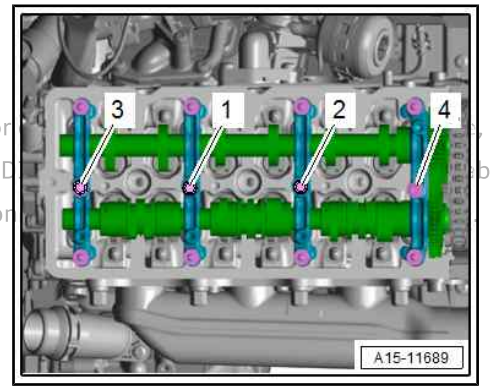

Protected by copyright. Copying for private or ... is not permitted without the express consent of AUDI AG. AUD... ability with respect to the correctness of information

Stage 3

Bolts	Tightening torque
-1 … 8-	3 Nm

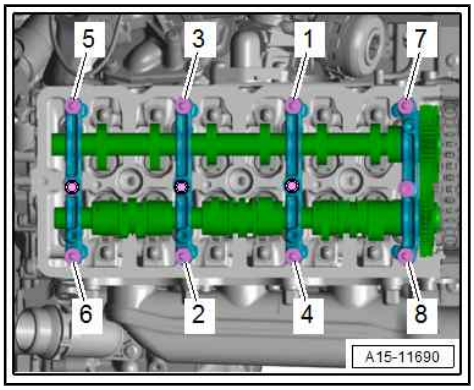

Stage 4

Bolts	Tightening torque
-1 … 4-	3 Nm (this step is performed to allow for settling of bearing caps)

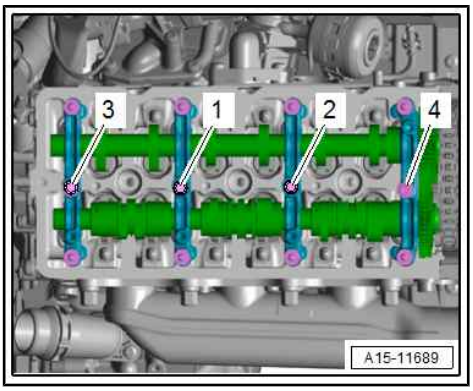

Stage 5

Bolts	Tightening torque
-1 … 12-	3 Nm (this step is performed to allow for settling of bearing caps)
-1 … 12-	Turn 45° further

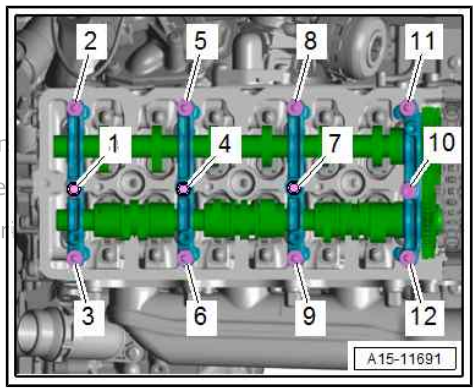

Protected by copyright. Copying for private or commercial purposes, in part is not permitted unless authorised by AUDI AG. AUDI AG does not guarantee or assume liability with respect to the correctness of information in this document. Copyright by AUDI AG.

Roller rocker fingers - installation position

> ⚠ Caution
>
> *Risk of engine damage if roller rocker fingers are installed incorrectly.*
>
> ♦ *Check that roller rocker fingers are installed in the correct position.*

– Remove cable ties.

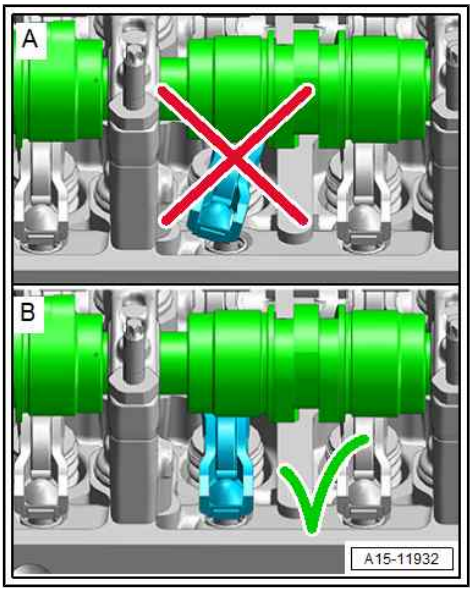

B - camshaft bearing - tightening torque and sequence, method 2

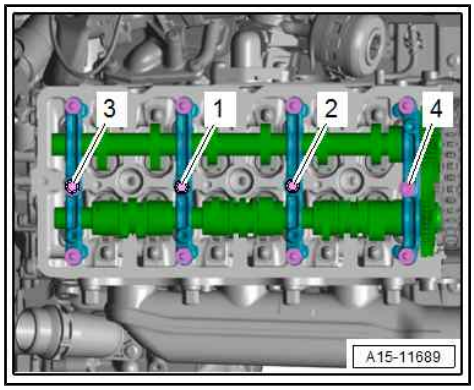

These instructions apply to:

- Timing chain drive fully installed

Note

Clean threads and threaded holes; they must be free of oil and grease.

– Tighten bolts in stages in the sequence shown:

Stage 1

Bolts	Tightening torque
-1 … 4-	Screw in by hand until bolt heads make contact with bearing caps

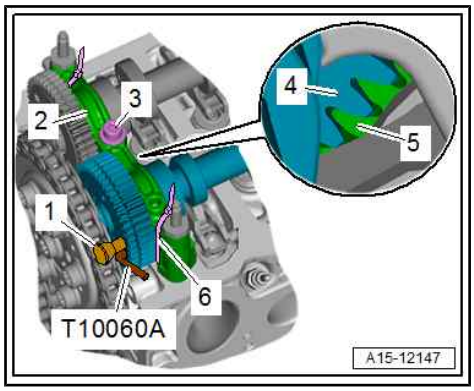

– Check that splines of camshaft -4- and intermediate drive -5- mesh. If necessary, push down mounting bracket -2- with your hand and screw in bolt -3- by hand until it makes contact.
– Remove locking pin - T10060A- .
– If a new camshaft is being installed, detach assembly aid -1-.
– If a used camshaft is being re-installed, remove adjustment pin - T40313- .

Caution

Risk of excess strain when tightening camshaft bearings.

- ***Do NOT remove cable ties -6-.***

Stage 2

Bolts	Tightening torque
-1 … 4-	Continue tightening 1 turn at a time in several stages until all bearing caps make full contact with cylinder head and a torque of 3 Nm is reached
-1 … 4-	3 Nm

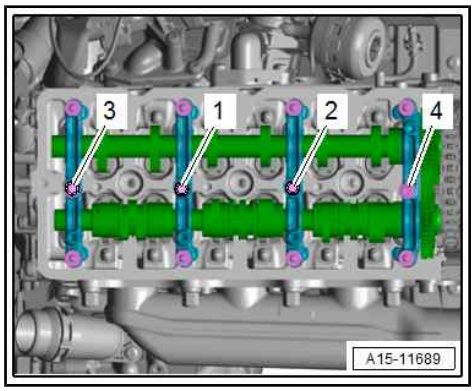

Protected by copyright. Copying for private or commercial purposes, in part or in whole, is not permitted unless authorised by AUDI AG. AUDI AG does not guarantee or accept any liability with respect to the correctness of information in this document. Copyright by AUDI AG.

Stage 3

Bolts	Tightening torque
-1 … 8-	3 Nm

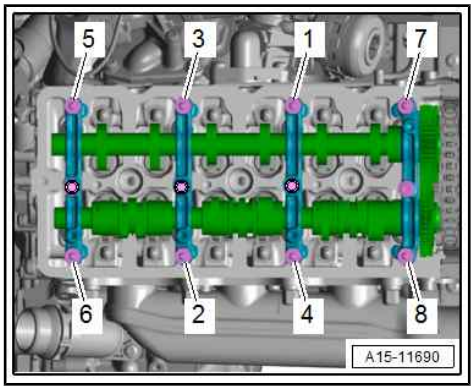

Stage 4

Bolts	Tightening torque
-1 … 4-	3 Nm (this step is performed to allow for settling of bearing caps)

Protected by copyright. Copying for private or commercial purposes, in part
permitted unless authorised by AUDI AG. AUDI AG does not guarantee or ac
with respect to the correctness of information in this document. Copyright

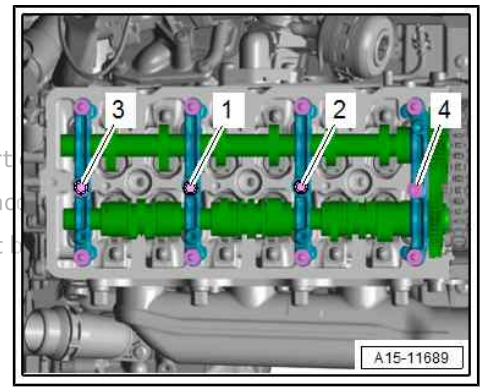

Stage 5

Bolts	Tightening torque
-1 … 12-	3 Nm (this step is performed to allow for settling of bearing caps)
-1 … 12-	Turn 45° further

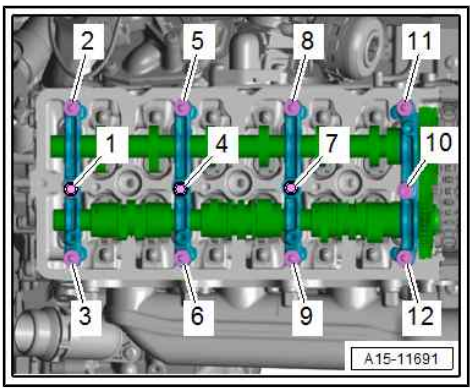

Roller rocker fingers - installation position

> ⚠ **Caution**
>
> *Risk of engine damage if roller rocker fingers are installed incorrectly.*
>
> ◆ *Check that roller rocker fingers are installed in the correct position.*

– Remove cable ties.

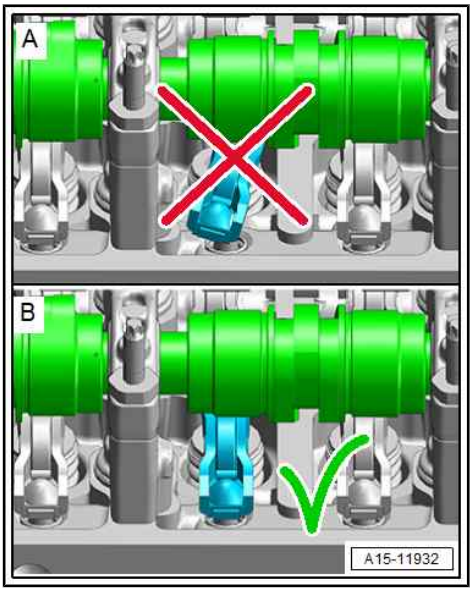

4.2 Measuring axial clearance of camshaft

Special tools and workshop equipment required

- Universal dial gauge bracket - VW 387-

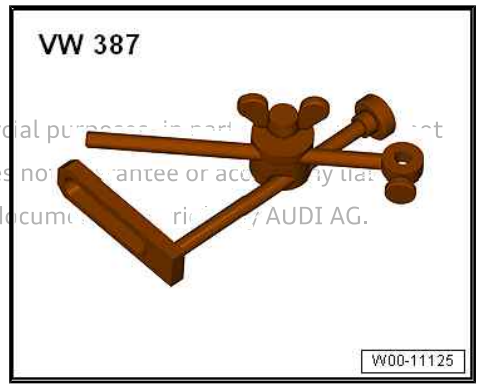

Protected by copyright. Copying for private or commercial purposes, in part or in whole, is not permitted unless authorised by AUDI AG. AUDI AG does not guarantee or accept any liability with respect to the correctness of information in this document. Copyright by AUDI AG.

- Dial gauge - VAS 6079-

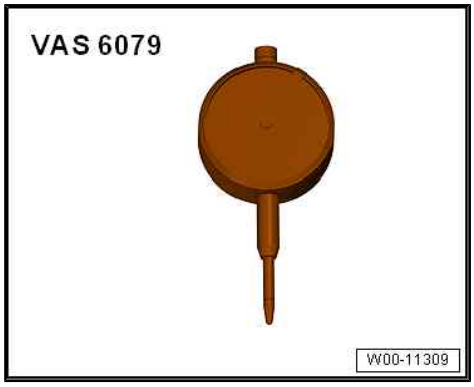

- Adjustment pin - T40313-

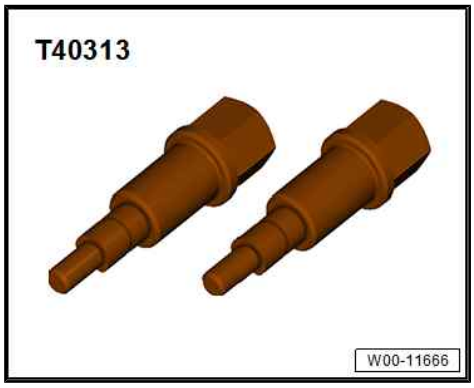

Procedure

- Remove camshafts ⇒ page 130 .
- Mark allocation of roller rocker fingers for re-installation.
- Carefully remove roller rocker fingers and place them on a clean surface.
- Move camshafts into installation position and tighten bolts on outer camshaft bearings to 9 Nm.

– Lock backlash compensation assembly of inlet and exhaust camshafts into place with adjustment pin - T40313- .

• Teeth of the two gears of exhaust camshaft must align ⇒ page 134 .

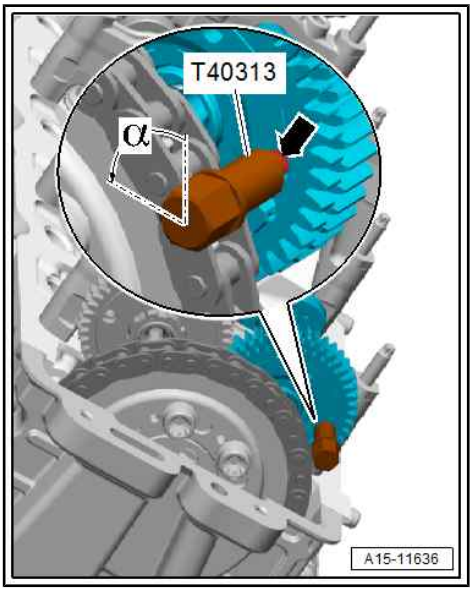

Note

Exhaust camshaft for cylinder bank 1 (right-side) is shown as an example.

– Secure dial gauge - VAS 6079- with universal dial gauge bracket - VW 387- to cylinder head as shown in illustrations.

Axial clearance (inlet camshaft)

• Specification: 0.0682 … 0.0750 mm.

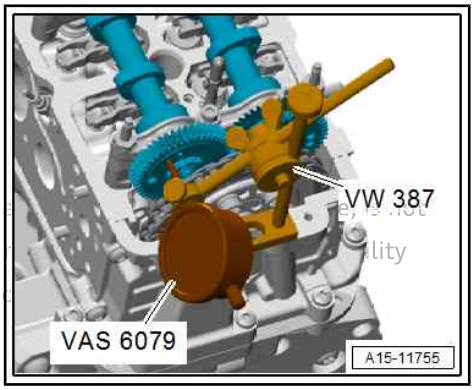

Protected by copyright. Copying for private or commercial purposes is not permitted unless authorised by AUDI AG. AUDI AG does not guarantee or assume liability with respect to the correctness of information in this document.

Axial clearance (exhaust camshaft)

• Specification: 0.0682 … 0.0750 mm.

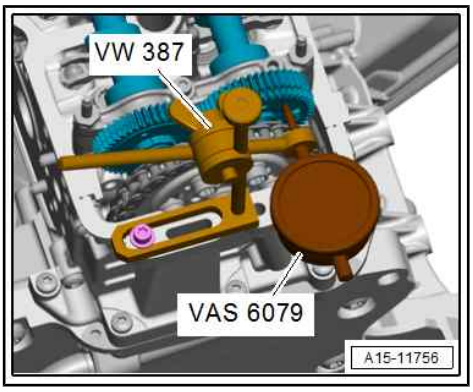

4.3 Measuring radial clearance of camshaft

Special tools and workshop equipment required

♦ Plastigauge

Procedure

– Remove camshafts ⇒ page 130 .

– Mark allocation of roller rocker fingers for re-installation.

– Carefully remove roller rocker fingers and place them on a clean surface.

– Clean bearings and bearing journals.

– Place a length of Plastigauge corresponding to the width of the bearing on the bearing journal or bearing shell to be measured.

• The Plastigauge must be positioned in the centre of the bearing.

– Re-insert camshafts with camshaft bearings and tighten without rotating camshafts.

– Remove camshafts with camshaft bearings again.

– Compare width of Plastigauge with measurement scale.

Radial clearance:

• New: 0.037 ... 0.063 mm.

4.4 Removing and installing camshaft

⇒ “4.4.1 Removing and installing camshaft”, page 130

⇒ “4.4.2 Renewing camshaft”, page 139

4.4.1 Removing and installing camshaft

Special tools and workshop equipment required

♦ Locking pin - T10060A- (2x)

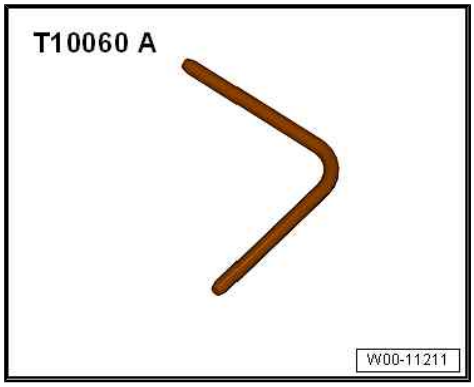

♦ Locking pin - T40237-

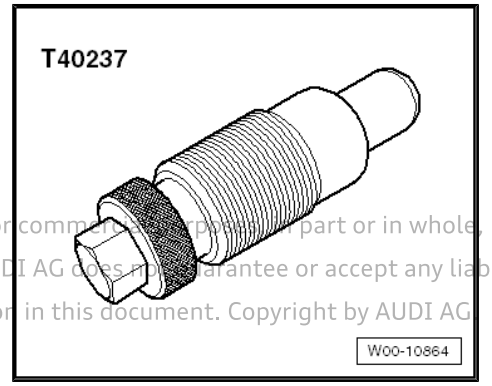

Protected by copyright. Copying for private or commercial purposes, in part or in whole, is not permitted unless authorised by AUDI AG. AUDI AG does not guarantee or accept any liability with respect to the correctness of information in this document. Copyright by AUDI AG

- Wrench, 21 mm - T40263-

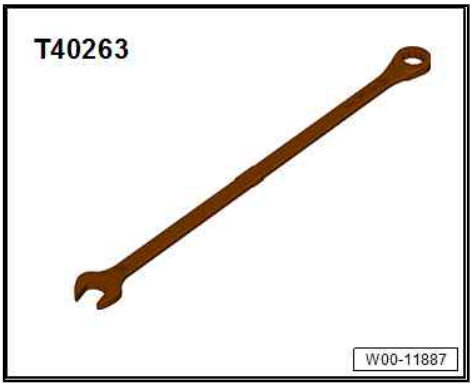

- Adjustment pin - T40313-

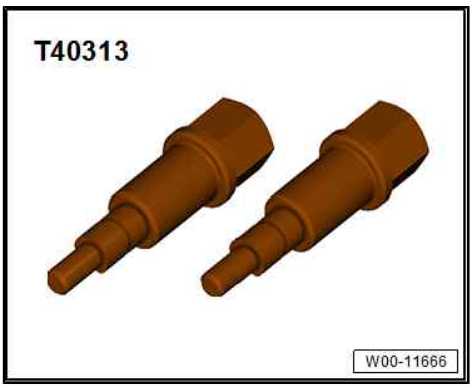

- Adapter - T40314- for engine with vibration damper

Protected by copyright. Copying for private or commercial purposes, in pa
permitted unless authorised by AUDI AG. AUDI AG does not guarantee or ac
with respect to the correctness of information in this document. Copyright by

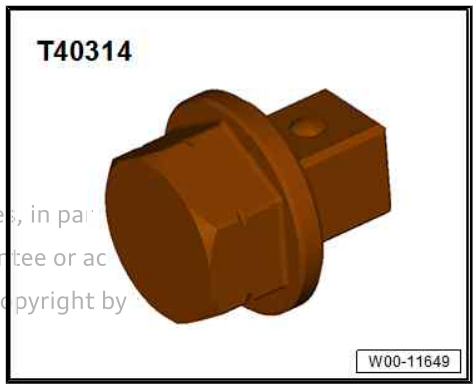

- Open-end spanner 16 mm - T10447-

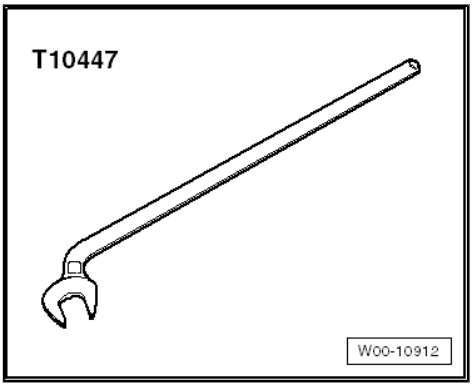

Removing

Preparatory work may be necessary depending on model ⇒ 6-cylinder TDI engine, 3.0 ltr. 4-valve common rail (EA 897 Gen. I); Rep. gr. 15 ; Valve gear .

– Remove corresponding cylinder head cover ⇒ page 114 .

– Remove noise insulation (front) ⇒ General body repairs, exterior; Rep. gr. 66 ; Noise insulation; Removing and installing noise insulation .

A4/A5: Remove subframe cross brace ⇒ Running gear, axles, steering; Rep. gr. 40 ; Subframe; Removing and installing subframe cross brace .

– Unscrew plug -arrow- from sump (top section).

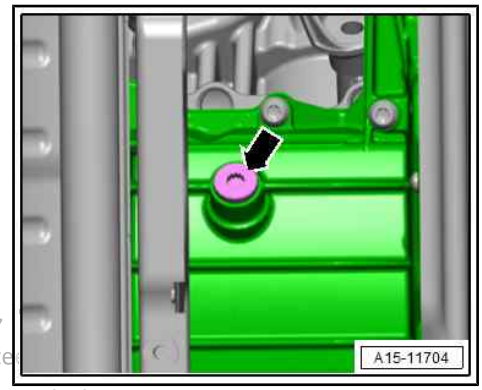

Protected by copyright. Copying for private or commercial purposes, permitted unless authorised by AUDI AG. AUDI AG does not guarante with respect to the correctness of information in this document. Copyright by AUDI AG.

Engine with vibration damper:

> ⚠ **Caution**
>
> ***Irreparable damage can be caused if the camshaft timing chain slips.***
>
> ♦ ***Turn crankshaft only in direction of engine rotation -arrow-.***

– Use wrench, 21 mm - T40263- and adapter -T40314- to turn crankshaft until vibration damper is at “TDC” position.

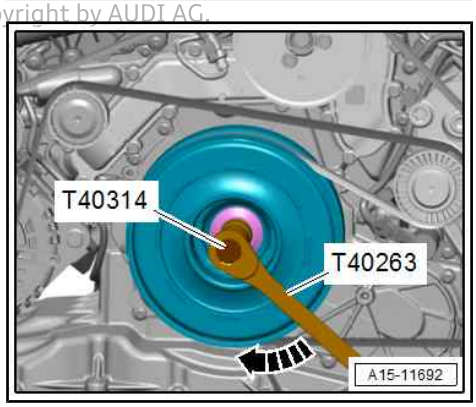

• Mark (stuck on) -1- must be vertical and aligned with arrow marking on coolant pump.

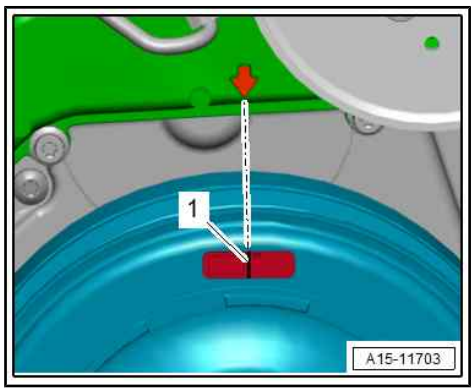

Engine with pulley:

> ⚠ **Caution**
>
> ***Irreparable damage can be caused if the camshaft timing chain slips.***
>
> ♦ ***Turn crankshaft only in direction of engine rotation -arrow-.***

– Use wrench, 21 mm - T40263- and adapter - T40314- to turn crankshaft until pulley is at “TDC” position.

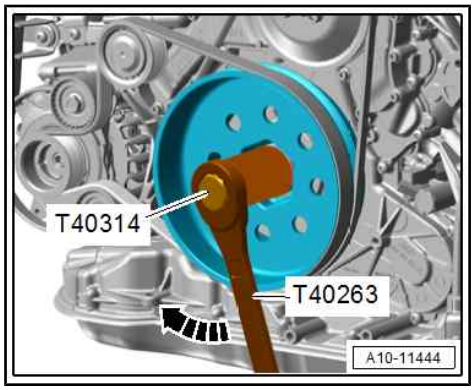

- Notch -1- should align with arrow marking on coolant pump.

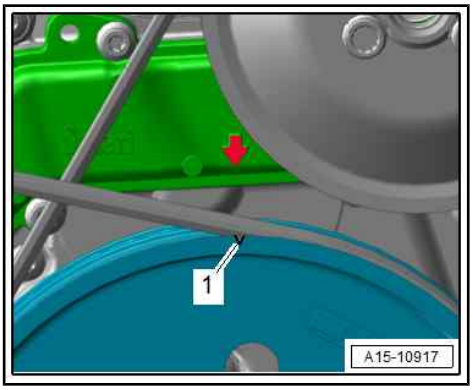

– While turning in this direction, lock crankshaft -1- with locking pin - T40237- . Tighten locking pin to 20 Nm.

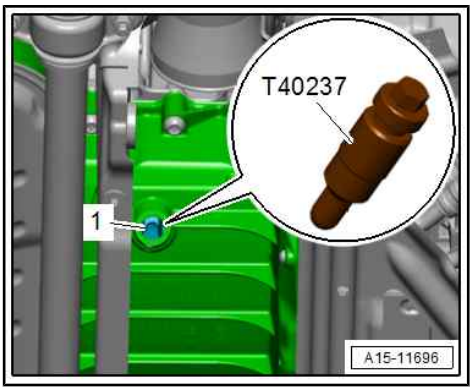

Caution

The crankshaft must be exactly in "TDC" position to ensure accurate valve timing adjustment.

- *If crankshaft has been turned past "TDC" position, turn crankshaft two further rotations until it is again positioned just before "TDC". Then turn further in the same direction and lock crankshaft with locking pin - T40237- .*

Camshafts for cylinder bank 1 (right-side):

- It should be possible to lock camshafts with locking pins - T10060A- . If not, turn crankshaft 360° further in direction of engine rotation.

– Lock exhaust camshaft of cylinder bank 1 (right-side) at "TDC" by inserting locking pin - T10060A- in hole -arrow-.

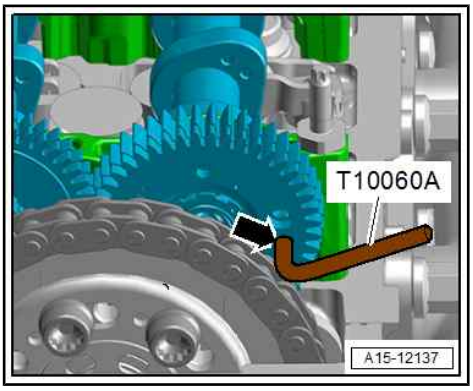

Note

If exhaust camshaft of cylinder bank 1 (right-side) cannot be locked, use open-end spanner (16 mm) - T10447- to move camshaft chain sprocket slightly back and forth, as shown in illustration.

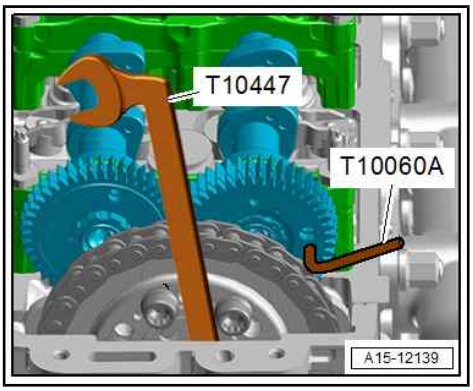

Protected by copyright. Copying for private or commercial purposes, in part or in whole, is not permitted unless authorised by AUDI AG. AUDI AG does not guarantee or accept any liability with respect to the correctness of information in this document. Copyright by AUDI AG.

– Lock backlash compensation assembly of exhaust camshaft in place by inserting adjustment pin - T40313- into sprocket as far as groove -arrow- and turning it 90° anti-clockwise.

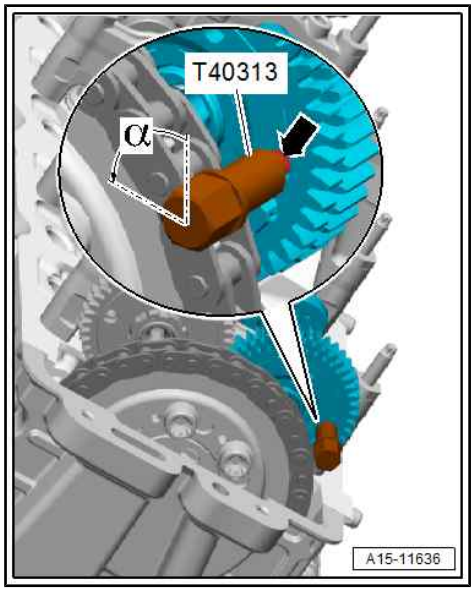

Camshafts for cylinder bank 2 (left-side):

– Lock inlet camshaft of cylinder bank 2 (left-side) at “TDC” by inserting locking pin - T10060A- in hole -arrow-.

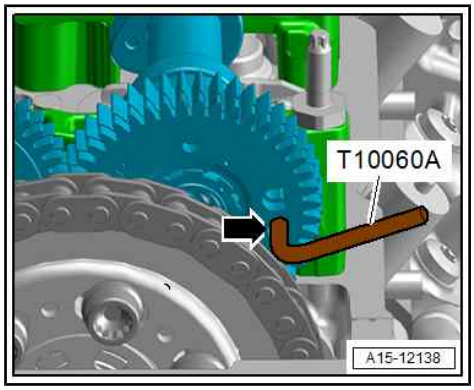

Note

If inlet camshaft of cylinder bank 2 (left-side) cannot be locked, use open-end spanner (16 mm) - T10447- to move camshaft chain sprocket slightly back and forth, as shown in illustration.

Protected by copyright. Copying for private or commercial purpos
permitted unless authorised by AUDI AG. AUDI AG does not guara
with respect to the correctness of information in this document.

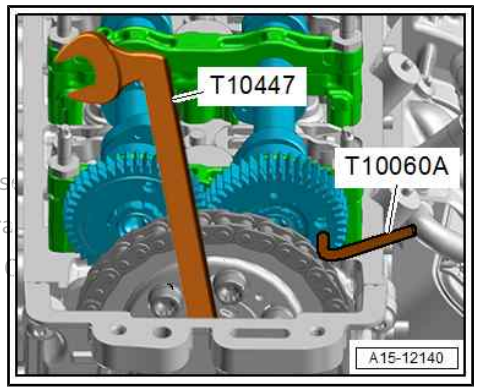

– Lock backlash compensation assembly of inlet camshaft in place by inserting adjustment pin - T40313- into sprocket as far as groove -arrow- and turning it 90° anti-clockwise.

Protected by copyright. Copying for private or commercial purposes, in part or in whole is not permitted unless authorised by AUDI AG. AUDI AG does not guarantee or accept any liability with respect to the correctness of information in this document. Copyright by AUDI AG.

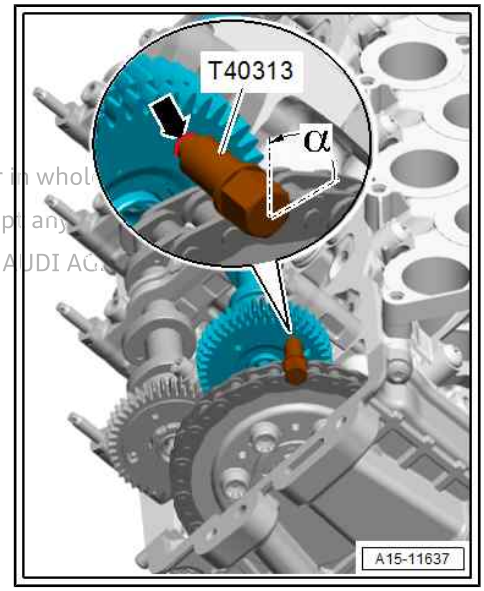

Both sides (continued):

– Wrap one cable tie -arrows- on each side around bearing pedestal and bearing cap and secure.

Note

- *Fit cable ties tightly, aligning them so that bolts on bearing cap can be slackened/tightened.*
- *With the cable ties it is possible to detach the camshafts together with the camshaft bearings. This prevents components from being interchanged and ensures that the "TDC" position is maintained.*

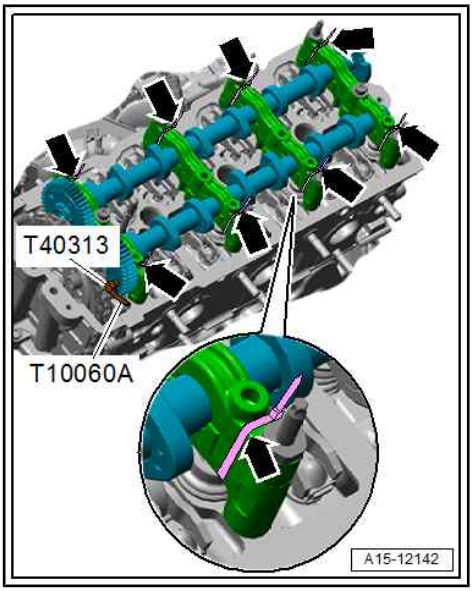

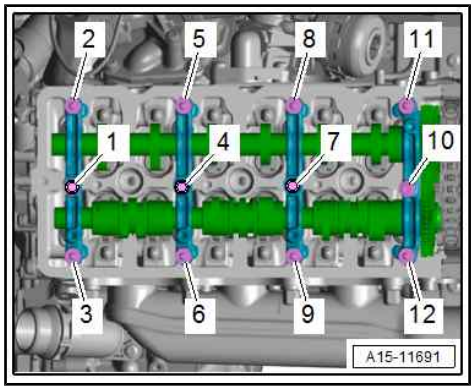

Note

Mark allocation of bolts for re-installation.

– Unscrew bolts in several stages one turn at a time in sequence -12 ... 1- until all camshaft bearings are clear.

Note

Make sure you do not damage the roller rocker fingers and hydraulic compensation elements when removing the camshafts.

– Carefully detach camshaft bearings together with camshafts.

Caution

Do NOT interchange components!

- *Do not release cable ties until after re-installation.*

– If necessary for additional work, mark roller rocker fingers and hydraulic compensation elements for re-installation, remove them and place them on a clean surface.

Installing

Note

Clean threads and threaded holes; they must be free of oil and grease.

Requirements

- Crankshaft locked in “TDC” position with locking pin - T40237- .

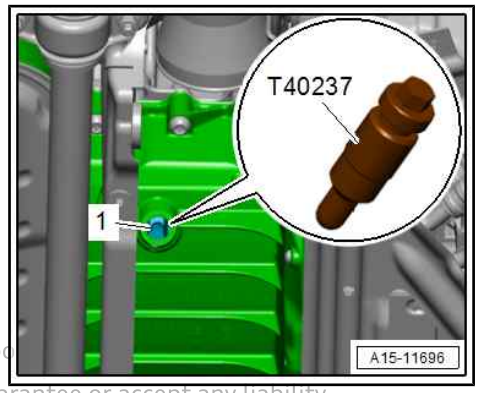

Protected by copyright. Copying for private or commercial purpo
permitted unless authorised by AUDI AG. AUDI AG does not guarantee or accept any liability
with respect to the correctness of information in this document.

- Exhaust camshaft for cylinder bank 1 (right-side) and inlet camshaft for cylinder bank 2 (left-side) locked at “TDC” by inserting locking pin - T10060A- in hole.

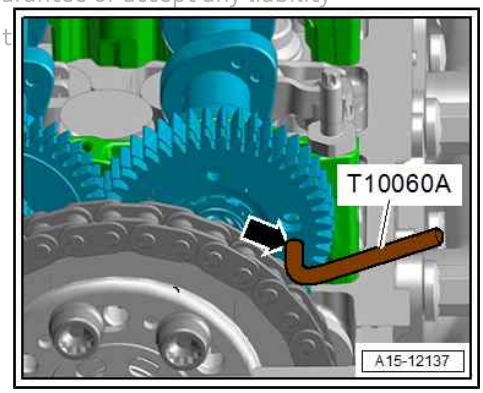

- Backlash compensation assembly of exhaust camshaft for cylinder bank 1 (right-side) and inlet camshaft for cylinder bank 2 (left-side) locked in place with adjustment pin - T40313- .

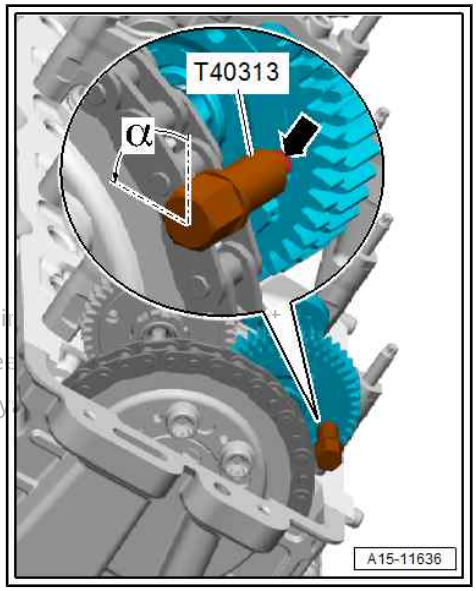

Note

New camshafts are supplied with an assembly aid which is inserted in place of the adjustment pin -T40313- .

Protected by copyright. Copying for private or commercial purposes, i
permitted unless authorised by AUDI AG. AUDI AG does not guarante
with respect to the correctness of information in this document. Copy

– Check installation position of dowel sleeves:

- Both dowel sleeves -arrows- must be inserted in holes in bearing pedestal “IV”.
- Dowel sleeves must engage in holes in cylinder head.

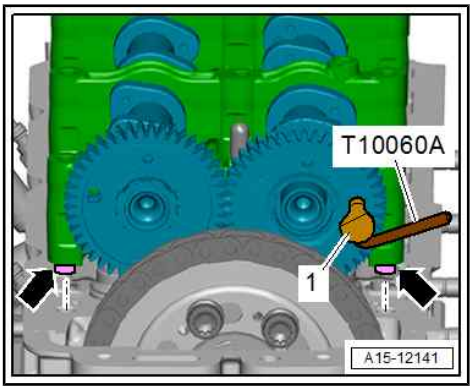

WARNING

The components of the backlash compensation assembly are under spring tension. This can cause injury.

- ***Do NOT remove locking pin - T10060A- .***
- ***Do NOT remove assembly aid -1- (only for new camshafts).***
- ***Do NOT remove adjustment pin - T40313- (for re-installing used camshafts).***

– Fit camshafts and camshaft bearings (secured with cable ties -arrows-) on cylinder head.

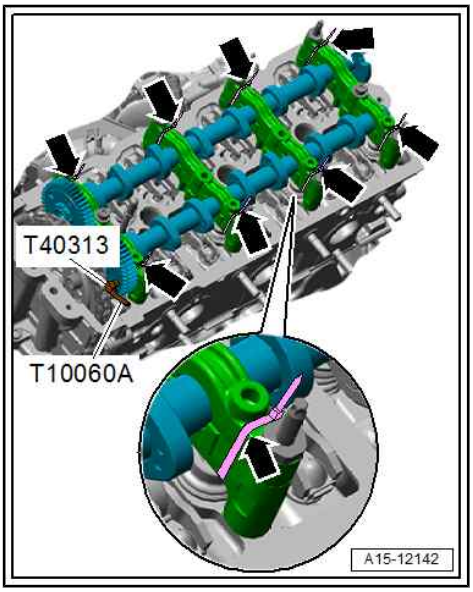

Note

The cable ties help to keep the camshafts and camshaft bearings straight when they are tightened, and to keep both camshafts in “TDC” position respective to one another.

– Push bearing IV -item 1- down fully by hand until it makes contact with cylinder head; pay attention to fitting sleeves when doing so.

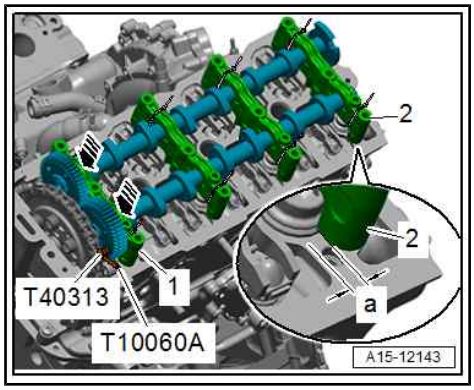

Note

- *Doing this ensures that the fitting sleeves reach their installation position in the cylinder head, and that, if the intermediate drive is installed, the splines of the exhaust camshaft for cylinder bank 1 (right-side) and the inlet camshaft for cylinder bank 2 (left-side) engage in the splines of the intermediate drive.*
- *At the same time, the front part of the bearings is lifted by distance -a-, as shown for bearing I -item 2-.*
- *Tightening the bolts against the tension of the valve springs will bring the front three bearings into a position where they make contact.*

Protected by copyright. Copying for private or commercial purposes, in part or in whole, is not permitted without the prior written consent of AUDI AG. AUDI AG does not guarantee or accept any liability with respect to the correctness of information in this document. Copyright by AUDI AG.

– Tighten bolts for camshaft bearings:
- Timing chain drive fully installed ⇒ page 126
- Timing chain removed from camshaft sprocket, or intermediate drive removed ⇒ page 124

Checking valve timing (complete timing chain drive must be installed during check)

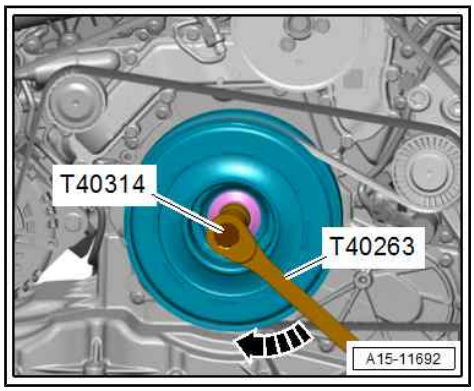

Caution

Irreparable damage can be caused if the camshaft timing chain slips.

- ***Turn crankshaft only in direction of engine rotation -arrow-.***

– Turn crankshaft two rotations until vibration damper/pulley reaches “TDC” again (illustration shows engine with vibration damper).

– While turning in this direction, lock crankshaft -1- with locking pin - T40237- . Tighten locking pin to 20 Nm.

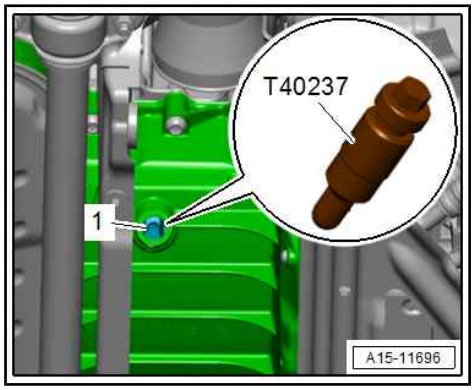

Caution

The crankshaft must be exactly in “TDC” position to ensure accurate valve timing adjustment.

- ***If crankshaft has been turned past “TDC” position, turn crankshaft two further rotations until it is again positioned just before “TDC”. Then turn further in the same direction and lock crankshaft with locking pin - T40237- .***

– Check that camshafts on both cylinder heads are positioned at “TDC”.

– Lock exhaust camshaft of cylinder bank 1 (right-side) at “TDC” by inserting locking pin - T10060A- in hole -arrow-.

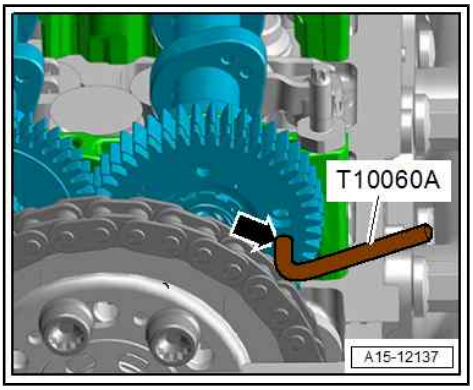

– Lock inlet camshaft of cylinder bank 2 (left-side) at “TDC” by inserting locking pin - T10060A- in hole -arrow-.

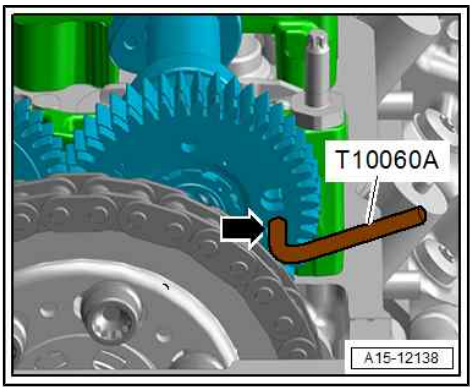

Note

The timing adjustment is O.K. even if locking pin -T10060A- is difficult to insert or if a 3.5 mm ∅ drill bit can be inserted instead of locking pin - T10060A- (wrap insulating tape around the tip and sharp edges of the drill bit to protect against injury).

Remaining installation steps are carried out in reverse sequence; note the following:

– Remove locking pin - T40237- .

– Install cylinder head cover ⇒ page 114 .

– A4/A5: Install subframe cross brace ⇒ Running gear, axles, steering; Rep. gr. 40 ; Subframe; Removing and installing subframe cross brace .

Additional work depending on model ⇒ 6-cylinder TDI engine, 3.0 ltr. 4-valve common rail; Rep. gr. 15 ; Valve gear; Removing and installing camshaft .

Protected by copyright. Copying for private or commercial purposes, in part or in whole, is not permitted unless authorised by AUDI AG. AUDI AG does not guarantee or accept any liability with respect to the correctness of information in this document. Copyright by AUDI AG.

Caution

Risk of damage to valves and piston crowns after working on valve gear.

- ***The hydraulic tappets have to settle; wait for approx. 30 minutes after installing camshafts before starting engine.***
- ***Turn the engine carefully at least 2 rotations to ensure that none of the valves make contact when the starter is operated.***

Tightening torques

- ⇒ “4.1 Exploded view - valve gear”, page 122
- Plug for “TDC” marking ⇒ Item 19 (page 155)
- ⇒ General body repairs, exterior; Rep. gr. 66 ; Noise insulation; Exploded view - noise insulation

4.4.2 Renewing camshaft

Special tools and workshop equipment required

- Adjustment pin - T40313-

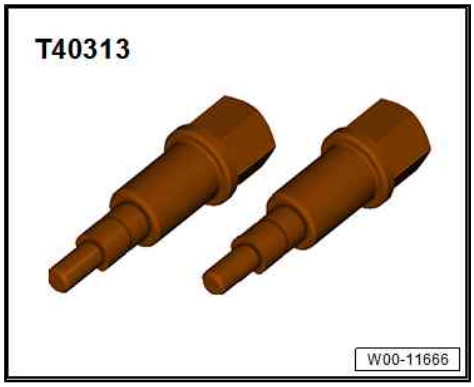

Removing

– Remove camshafts ⇒ page 130 and place them on a clean surface.

– Lock backlash compensation assembly of inlet camshaft for cylinder bank 1 (right-side) and exhaust camshaft for cylinder bank 2 (left-side) in place by inserting adjustment pin - T40313- into sprocket as far as groove -arrow- and turning it 90° clockwise.

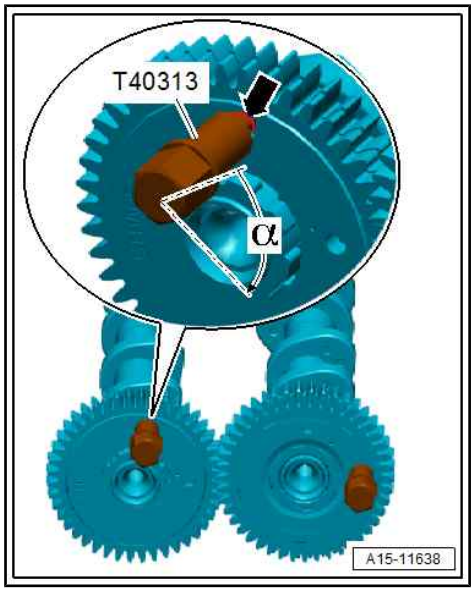

Note

The backlash compensation assembly of the exhaust camshaft for cylinder bank 1 (right-side) and inlet camshaft for cylinder bank 2 (left-side) was locked in place with adjustment pins -T40313- during removal and must remain locked in place.

Caution

Warning! Risk of damage to engine.

- ***Check markings on bearing caps and bearing pedestals, as shown below.***
- ***Mark bearing caps and bearing pedestals if no markings have yet been made.***

– Remove cable ties from camshaft bearings.

– Remove locking pin - T10060A- .

– Detach bearing caps and camshafts from bearing pedestals.

– Remove adjustment pin - T40313- from camshaft being renewed.

Protected by copyright. Copying for private or commercial purposes, in part or in whole, is not permitted unless authorised by AUDI AG. AUDI AG does not guarantee or accept any liability with respect to the correctness of information in this document. Copyright by AUDI AG.

Installing

To prevent installation at the wrong locations, the camshaft bearing pedestals and bearing caps are marked:

- Rear markings: Markings on camshaft bearings face rearwards towards camshaft sprockets.

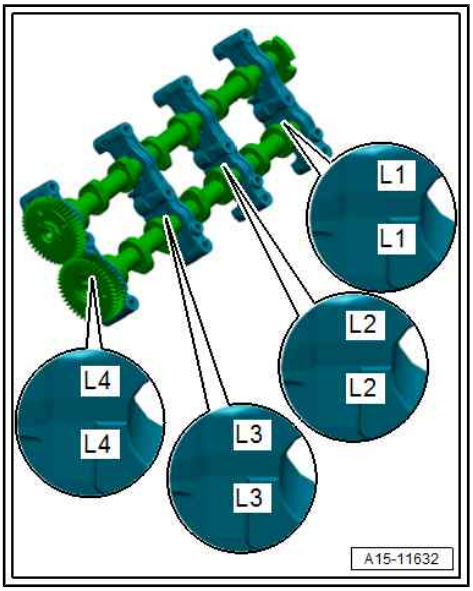

- Exhaust side markings: Markings on camshaft bearings face exhaust manifolds on left and right.

Protected by copyright. Copying for private or commercial purposes, in part or in whole, is not permitted unless authorised by AUDI AG. AUDI AG does not guarantee or assume liability with respect to the correctness of information in this document. Copyright by AUDI AG.

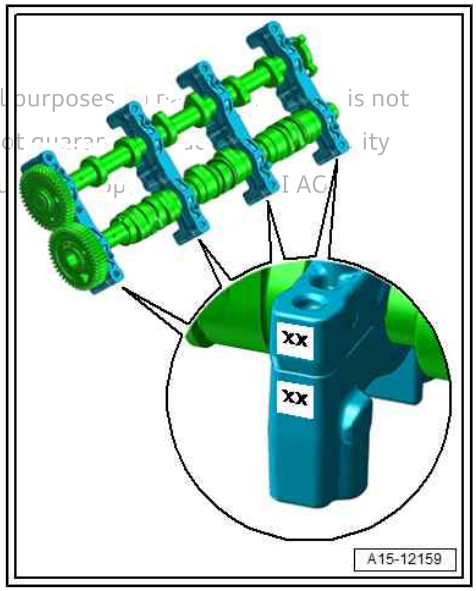

Allocation of camshaft bearings		
Cylinder bank 1 (right-side)	**Cylinder bank 2 (left-side)**	**Installation position**
R1/R1	L1/L1	Front
R2/R2	L2/L2	Front centre
R3/R3	L3/L3	Rear centre
R4/R4	L4/L4	Rear

– Place bearing pedestals on a clean surface, paying attention to allocation ⇒ page 141 .

– Place camshafts onto bearing pedestals, paying attention to markings.

Cylinder bank 1 (right-side):

- Marking -A- for inlet camshaft must be between the two markings -B- for exhaust camshaft, as shown in illustration.

– Lock exhaust camshaft at “TDC” by inserting locking pin -T10060A- in hole.

Cylinder bank 2 (left-side):

- Marking -A- for exhaust camshaft must be between the two markings -B- for inlet camshaft, as shown in illustration.

– Lock inlet camshaft at “TDC” by inserting locking pin -T10060A- in hole.

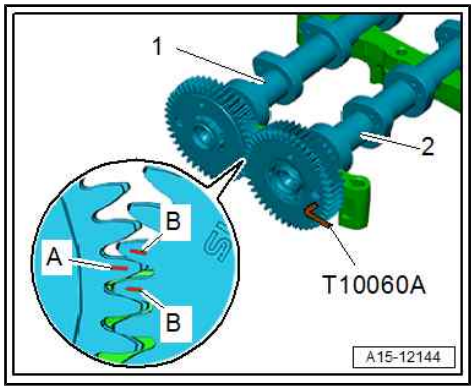

Both sides (continued):

– Place bearing caps -3- onto bearing pedestals -2-, paying attention to allocation ⇒ page 141 .

– Place bearing cap IV (gearbox end, marked “R4” or “L4”) onto bearing pedestal IV (gearbox end, marked “R4” or “L4”).

- Both dowel sleeves -arrows- must be inserted in holes in bearing cap.
- Dowel sleeves must engage in holes in bearing pedestal.

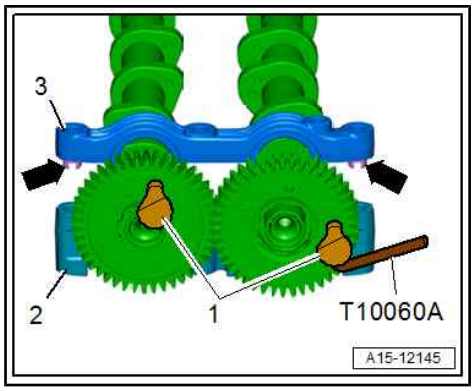

Note

New camshafts are supplied with an assembly aid -1- which is inserted in place of the adjustment pin -T40313- .

– Wrap one cable tie -arrows- on each side around bearing pedestal and bearing cap and secure.

Note

- *Fit cable ties tightly, aligning them so that bolts on bearing cap can be slackened/tightened.*
- *The cable ties help to keep the camshafts and camshaft bearings straight when they are tightened.*

Protected by copyright. Copying for private or commercial purposes, in part or in whole, is not permitted unless authorised by AUDI AG. AUDI AG does not guarantee or accept any liability with respect to the correctness of information in this document. Copyright by AUDI AG.

– Remove assembly aid -1- from inlet camshaft for cylinder bank 1 (right-side)/exhaust camshaft for cylinder bank 2 (left-side).

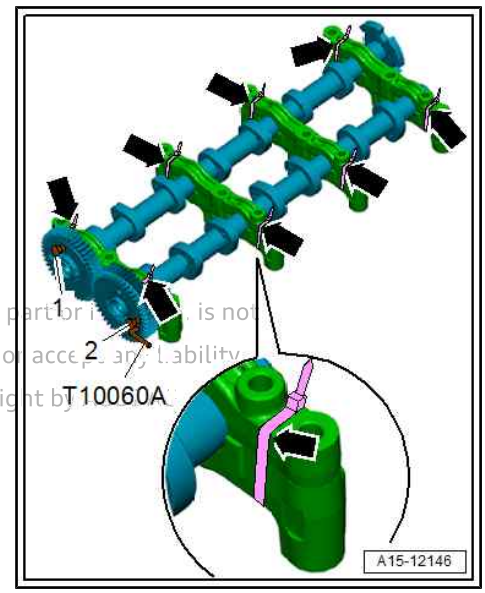

WARNING

The components of the backlash compensation assembly are under spring tension. This can cause injury.

- ***Do NOT remove assembly aid -2- from exhaust camshaft for cylinder bank 1 (right-side) or inlet camshaft for cylinder bank 2 (left-side).***

– Install camshafts ⇒ page 130 .

4.5 Removing and installing valve stem oil seals

⇒ "4.5.1 Removing and installing valve stem oil seals (cylinder head installed)", page 143
⇒ "4.5.2 Removing and installing valve stem oil seals (cylinder head removed)", page 146

Protected by copyright. Copying for private or commercial purposes, in part or in whole, is not permitted unless authorised by AUDI AG. AUDI AG does not guarantee or accept any liability with respect to the correctness of information in this document. Copyright by AUDI AG.

4.5.1 Removing and installing valve stem oil seals (cylinder head installed)

Special tools and workshop equipment required

- Valve stem seal puller - 3364-

- Valve stem oil seal fitting tool - 3365- , or (depending on manufacturer of valve shaft seal):

- Valve shaft seal fitting tool - T40376/1- (not illustrated)
- Removal and installation device for valve cotters - VAS 5161 A- with guide plate -VAS 5161 A/34- and sealing pin -VAS 5161/29-1-

- Assembly sleeve ⇒ Electronic parts catalogue

Procedure

– Remove all glow plugs ⇒ page 303 .

– Remove camshafts ⇒ page 130 .

– Set piston of appropriate cylinder to “bottom dead centre”.
– Fit guide plate -VAS 5161 A/34- onto cylinder head.
– Secure guide plate with screws -arrows-.
– Insert drift -VAS 5161/3A- into guide plate and use plastic-headed hammer to release sticking valve cotters.

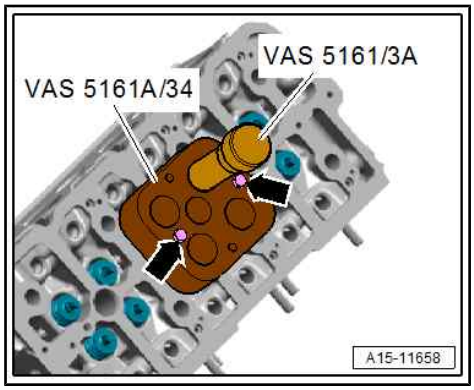

– Screw sealing pin -VAS 5161/29-1- into guide plate.
– Screw adapter -VAS 5161/11- hand-tight into corresponding glow plug thread.

Copyright by AUDI AG. Copying or publication for commercial purposes, in part or in whole, is not permitted without the prior consent of AUDI AG. AUDI AG does not guarantee or assume any liability with respect to the correctness of information in this document. Copy

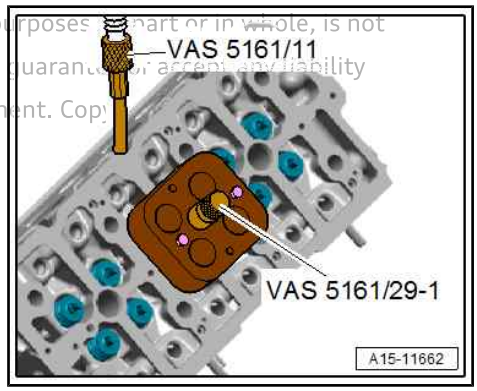

– Screw snap-in device -VAS 5161/6- with engaging fork -VAS 5161/5- into guide plate.
– Insert assembly cartridge -VAS 5161/8A- in hole above valve spring that is to be removed.
– Connect adapter to compressed air line using a commercially available connection piece and apply constant air pressure.
• Minimum pressure: 6 bar
– Attach pressure fork -VAS 5161/2- to snap-in device and push assembly cartridge down.
– At the same time, turn knurled screw of assembly cartridge clockwise until tips engage in valve cotters.
– Move knurled screw back and forth slightly; the valve cotters are thus forced apart and taken up by the assembly cartridge.
– Release pressure fork.
– Take off assembly cartridge with knurled spacer ring.
– Detach valve spring with valve spring plate.

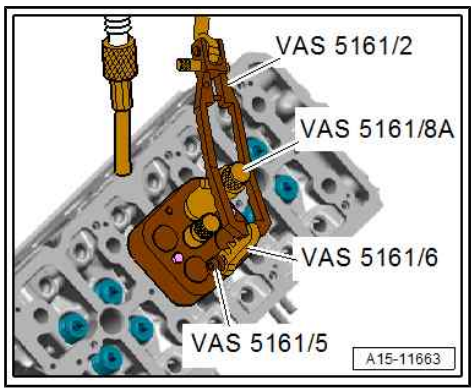

– Pull off valve stem oil seal with valve stem seal puller - 3364- .

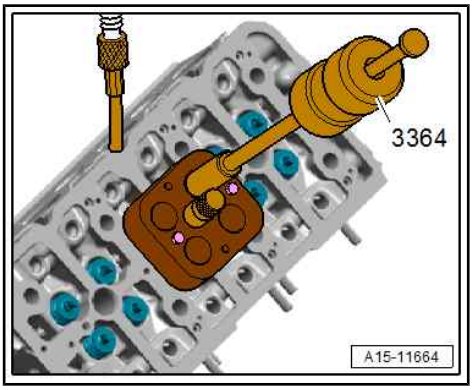

If the valve stem seal puller - 3364- cannot be used on some of the valve stem oil seals due to the confined space, proceed as follows:

– Knock out pin -arrow- of puller using a drift and remove impact extractor attachment.

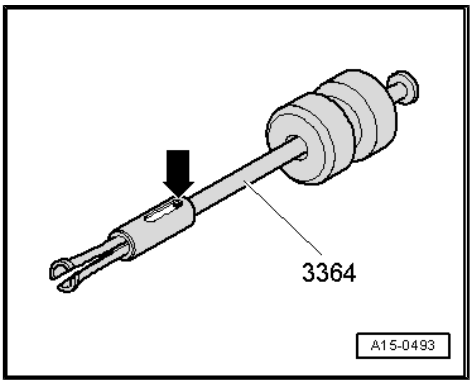

– Apply bottom section of puller -3364- to valve stem oil seal.
– Secure puller with a punch or roll-pin drift -1-, as shown in illustration.
– Apply assembly lever to puller and pull out valve stem oil seal -arrow-.

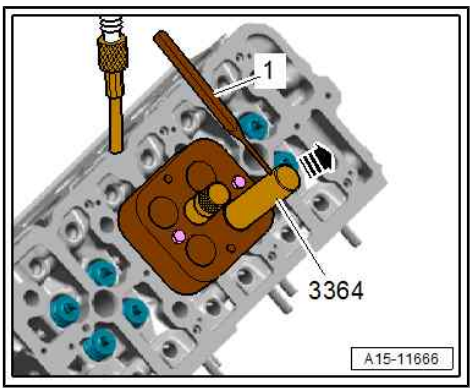

• To avoid damaging the new valve stem oil seal -4- during installation, fit the assembly sleeve -3- onto the valve stem -2-.
– Lightly oil sealing lip of valve stem oil seal.
• Use either fitting tool - 3365- or fitting tool - T40376/1- , depending on manufacturer of valve shaft seal.
– Insert valve stem oil seal into valve shaft seal fitting tool -5- and use assembly sleeve to press it carefully onto valve guide -1- as far as stop.
– Remove assembly sleeve .

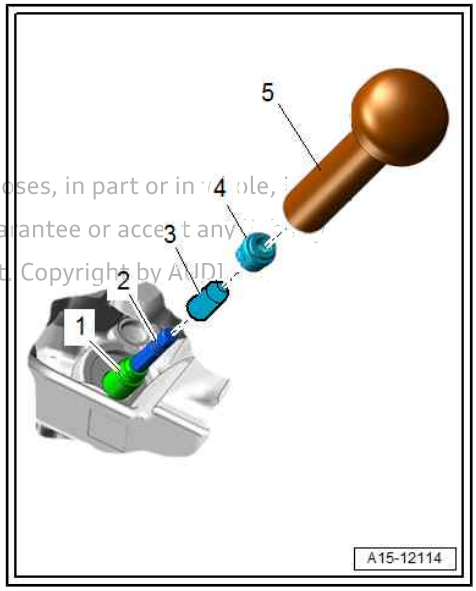

Protected by copyright. Copying for private or commercial purposes, in part or in whole, is not permitted unless authorised by AUDI AG. AUDI AG does not guarantee or accept any liability with respect to the correctness of information in this document. Copyright by AUDI AG.

If valve cotters have been removed from assembly cartridge, they must first be inserted in insertion device -VAS 5161/18- .

- Larger diameter of valve cotters faces upwards.

– Insert valve spring and valve spring plate.

– Press assembly cartridge onto insertion device from above and pick up valve cotters.

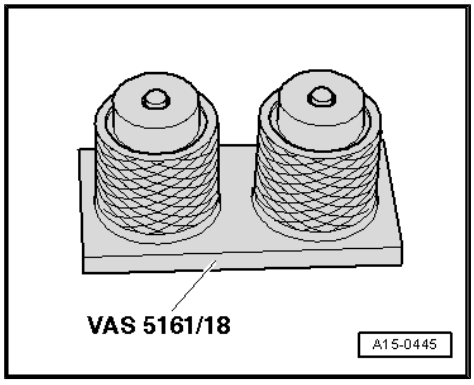

– Insert assembly cartridge in guide plate -VAS 5161 A/34- again.

– Press down pressure fork and pull knurled screw upwards while turning screw in both directions - this will insert the valve cotters.

– Release pressure fork with knurled screw still in pulled position.

– Repeat procedure for each valve.

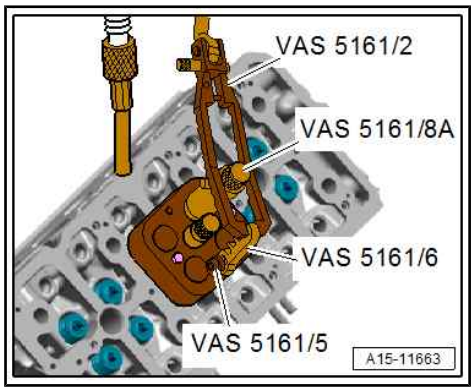

Attaching

Assembly is performed in reverse sequence; note the following:

– Install camshafts ⇒ page 130 .

– Install glow plugs ⇒ page 303 .

4.5.2 Removing and installing valve stem oil seals (cylinder head removed)

Special tools and workshop equipment required

♦ Valve stem seal puller - 3364-

♦ Valve stem oil seal fitting tool - 3365- , or (depending on manufacturer of valve shaft seal):

Protected by copyright. Copying for private or commercial purposes, in part or in whole, is not permitted unless authorised by AUDI AG. AUDI AG does not guarantee or a iability with respect to the correctness of information in this document. Copyright

- Valve shaft seal fitting tool - T40376/1- (not illustrated)
- Removal and installation device for valve cotters - VAS 5161 A- with guide plate -VAS 5161 A/34- and sealing pin -VAS 5161/29-1-

- Engine and gearbox support - VAS 6095A-

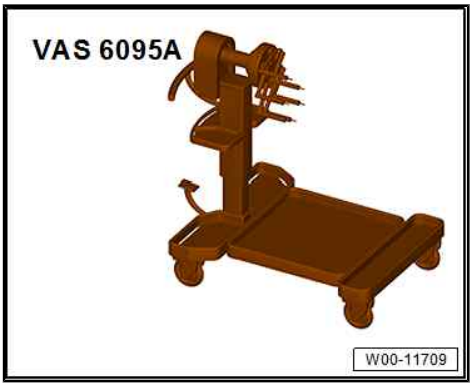

- Cylinder head tensioning device - VAS 6419-

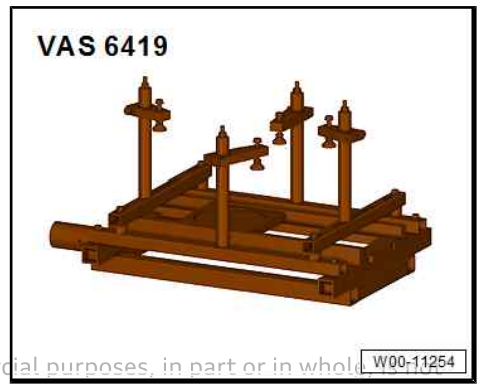

Protected by copyright. Copying for private or commercial purposes, in part or in whole, is not permitted unless authorised by AUDI AG. AUDI AG does not guarantee or accept any liability with respect to the correctness of information in this document. Copyright by AUDI AG.

- Assembly sleeve ⇒ Electronic parts catalogue

Procedure

– Insert cylinder head tensioning device - VAS 6419- into engine and gearbox support - VAS 6095A- .
– Secure cylinder head in cylinder head tensioning device, as shown in illustration.
– Connect cylinder head tensioning device to compressed air supply.
– Using lever -arrow-, slide air pad under combustion chamber where valve stem oil seal is to be removed.
– Apply just enough compressed air to bring air pad into contact with valve heads.
– Mark fitting location of roller rocker fingers for re-installation and remove.

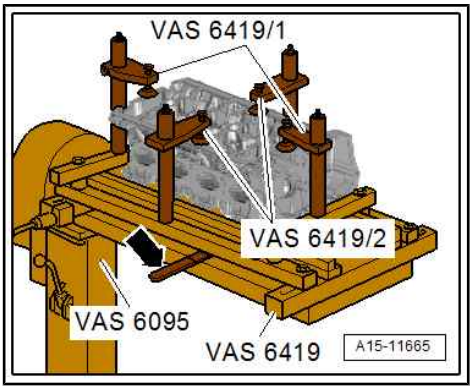

– Fit guide plate -VAS 5161 A/34- onto cylinder head.
– Secure guide plate with screws -arrows-.
– Insert drift -VAS 5161/3A- into guide plate and use plastic-headed hammer to release sticking valve cotters.

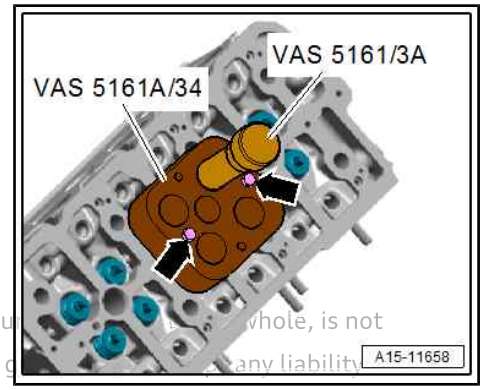

Protected by copyright. Copyright by AUDI AG.

– Screw snap-in device -VAS 5161/6- with engaging fork -VAS 5161/5- into guide plate.
– Insert assembly cartridge -VAS 5161/8A- in hole above valve spring that is to be removed.
– Attach pressure fork -VAS 5161/2- to snap-in device and push assembly cartridge down.
– At the same time, turn knurled screw of assembly cartridge clockwise until tips engage in valve cotters.
– Move knurled screw back and forth slightly; the valve cotters are thus forced apart and taken up by the assembly cartridge.
– Release pressure fork.
– Take off assembly cartridge with knurled spacer ring.
– Detach valve spring with valve spring plate.

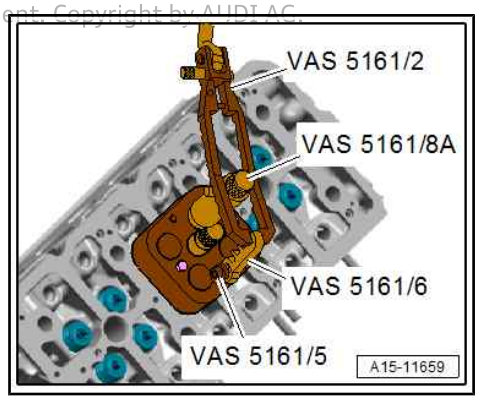

– Pull off valve stem oil seal with valve stem seal puller - 3364- .

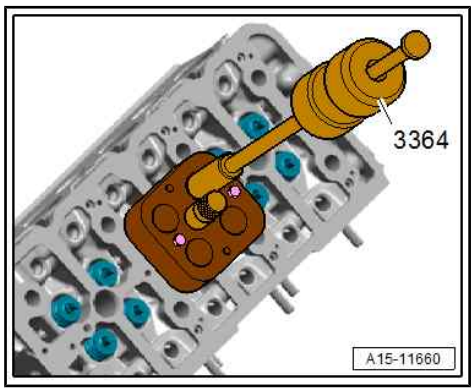

- To avoid damaging the new valve stem oil seal -4- during installation, fit the assembly sleeve -3- onto the valve stem -2-.

– Lightly oil sealing lip of valve stem oil seal.

- Use either fitting tool - 3365- or fitting tool - T40376/1- , depending on manufacturer of valve shaft seal.

– Insert valve stem oil seal into valve shaft seal fitting tool -5- and use assembly sleeve to press it carefully onto valve guide -1- as far as stop.

– Remove assembly sleeve .

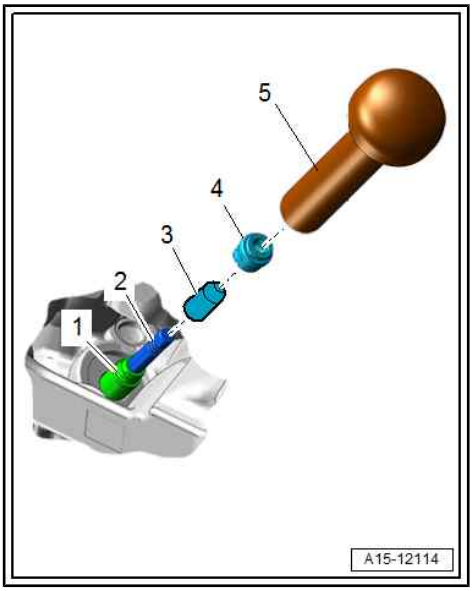

If valve cotters have been removed from assembly cartridge, they must first be inserted in insertion device -VAS 5161/18- .

- Larger diameter of valve cotters faces upwards.

– Insert valve spring and valve spring plate.

– Press assembly cartridge onto insertion device from above and pick up valve cotters.

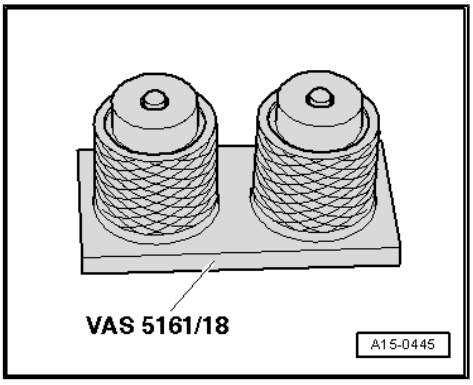

– Insert assembly cartridge in guide plate -VAS 5161 A/34- again.

– Press down pressure fork and pull knurled screw upwards while turning screw in both directions - this will insert the valve cotters.

– Release pressure fork with knurled screw still in pulled position.

– Repeat procedure for each valve.

Attaching

Assemble in reverse order.

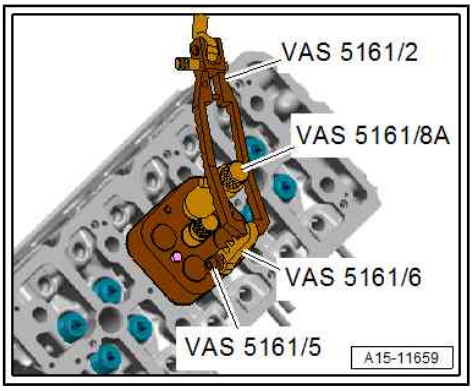

Protected by copyright. Copying for private or commercial purposes, in part or in whole, is not permitted unless authorised by AUDI AG. AUDI AG does not guarantee or accept any liability with respect to the correctness of information in this document. Copyright by AUDI AG.

5 Inlet and exhaust valves

⇒ “5.1 Machining valve seats”, page 150
⇒ “5.2 Checking valve guides”, page 150
⇒ “5.3 Checking valves”, page 151
⇒ “5.4 Valve dimensions”, page 151

5.1 Machining valve seats

Note

Valve seats may not be machined due to the very small tolerances.

5.2 Checking valve guides

Special tools and workshop equipment required

- Universal dial gauge bracket - VW 387-

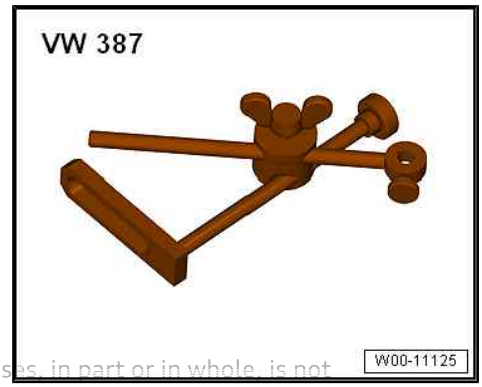

Protected by copyright. Copying for private or commercial purposes, in part or in whole, is not permitted unless authorised by AUDI AG. AUDI AG does not guarantee or accept any liability with respect to the correctness of information in this document. Copyright by AUDI AG.

- Dial gauge - VAS 6079-

Procedure

Note

- *If the valve has to be renewed as part of a repair, use a new valve for the measurement.*
- *Only insert inlet valve into inlet valve guide and exhaust valve into exhaust valve guide, as the stem diameters are different.*

– Attach dial gauge - VAS 6079- with universal dial gauge bracket - VW 387- to cylinder head.
– Insert valve into guide.
• End of valve stem must be flush with valve guide.
– Measure the amount of sideways play.
• Wear limit: 1.0 mm.
– If the wear limit is exceeded, repeat the measurement with new valves.
– Renew cylinder head if wear limit is still exceeded.

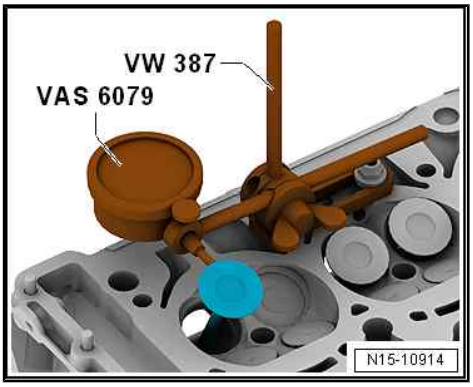

Note

Valve guides cannot be renewed.

5.3 Checking valves

– Visually inspect for scoring on valve stems and valve seat surfaces.
– Renew valve if scoring is clearly visible.

5.4 Valve dimensions

Note

Inlet and exhaust valves must not be machined. Only grinding-in is permitted.

Dimension	Inlet valve	Exhaust valve
∅ a mm	27.5 ± 0.1	25.5 ± 0.1
∅ b mm	5.975 ± 0.007	5.965 ± 0.007
c mm	99.3 ± 0.1	99.3 ± 0.1
α ∠°	45° 10'	45° 10'

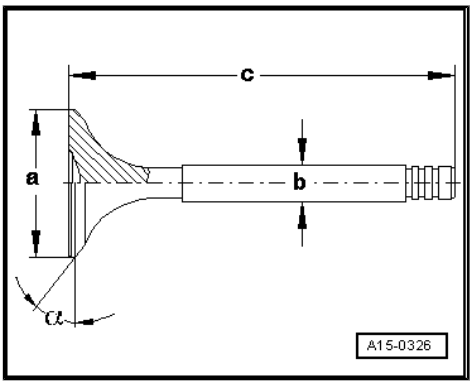

Protected by copyright. Copying for private or commercial purposes, in part or in whole, is not permitted unless authorised by AUDI AG. AUDI AG does not guarantee or accept any liability with respect to the correctness of information in this document. Copyright by AUDI AG.

17 – Lubrication

1 Sump/oil pump

⇒ “1.1 Exploded view - sump/oil pump”, page 152

⇒ “1.2 Engine oil”, page 156

⇒ “1.3 Removing and installing sump (bottom section)”, page 156

⇒ “1.4 Removing and installing sump (top section)”, page 158

⇒ “1.5 Removing and installing oil pump”, page 161

⇒ “1.6 Removing and installing oil level and oil temperature sender G266 ”, page 163

1.1 Exploded view - sump/oil pump

Exploded view - sump (bottom section)/oil pump ⇒ page 152

Exploded view - sump (top section) ⇒ page 154

Note

- *If large quantities of metal shavings or particles are found in the engine oil when repairing the engine, the oil passages must be cleaned carefully in order to prevent further damage occurring later. In addition, renew oil spray jets, engine oil cooler and oil filter.*
- *Oil spray jet for piston cooling ⇒ page 51 .*

Protected by copyright. Copying for private or commercial purposes, in part or in whole, is not permitted unless authorised by AUDI AG. AUDI AG does not guarantee or accept any liability with respect to the correctness of information in this document. Copyright by AUDI AG.

Sump (bottom section)/oil pump

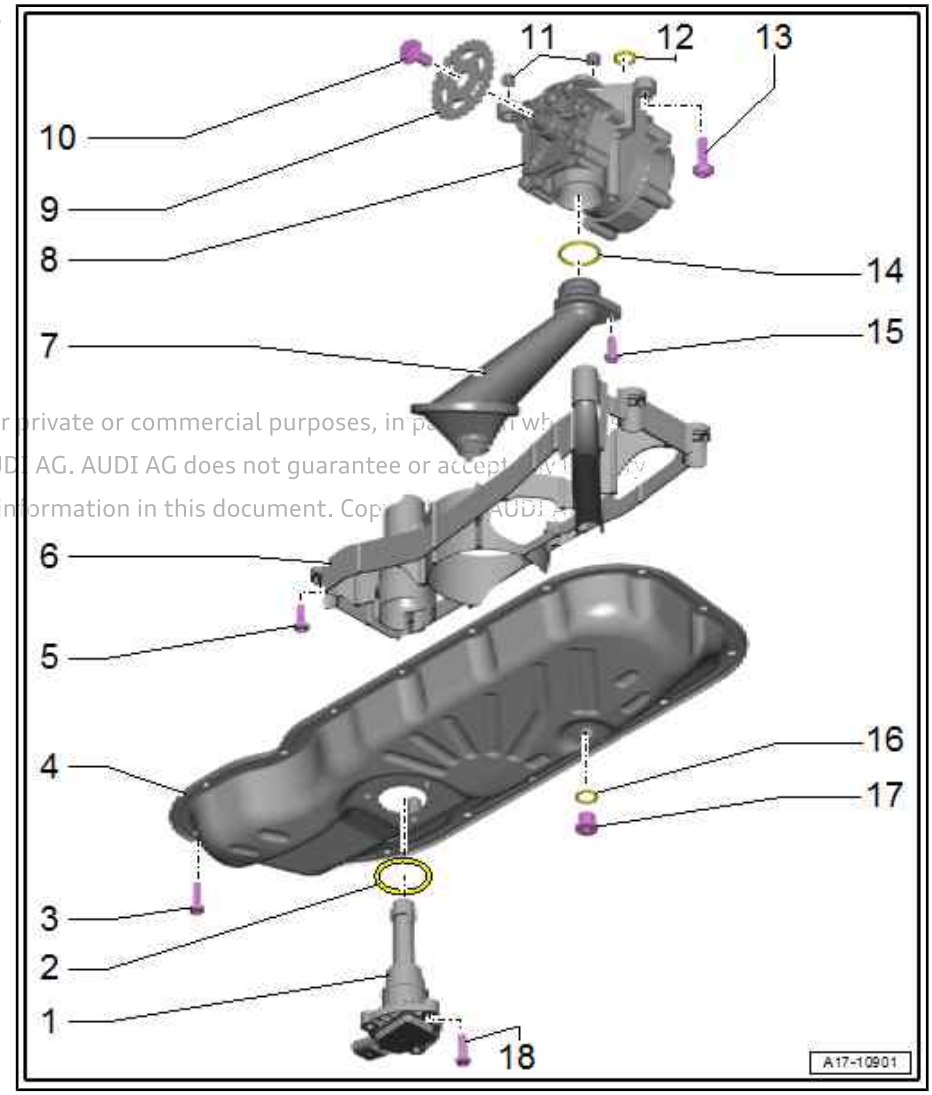

1 - Oil level and oil temperature sender - G266-

- ❑ Removing and installing ⇒ page 163

2 - Seal

- ❑ Renew after removing

3 - Bolt

- ❑ Renew after removing
- ❑ Tightening torque and sequence ⇒ page 154

4 - Sump (bottom section)

- ❑ Removing and installing ⇒ page 156

Protected by copyright. Copying for private or commercial purposes, in part or whole, is not permitted unless authorised by AUDI AG. AUDI AG does not guarantee or accept any liability with respect to the correctness of information in this document. Copyright by AUDI AG.

5 - Bolt

- ❑ Renew after removing
- ❑ 3 Nm +90°

6 - Baffle plate

7 - Suction pipe

8 - Oil pump

- ❑ With vacuum pump for brake servo
- ❑ Do not dismantle
- ❑ Removing and installing ⇒ page 161

9 - Chain sprocket

- ❑ For oil pump

10 - Bolt

- ❑ To loosen, use counter-hold tool - T10172 A- to counterhold chain sprocket
- ❑ Renew after removing
- ❑ 30 Nm +45°

11 - Dowel sleeves

- ❑ 2x

12 - Seal

- ❑ Renew after removing

13 - Bolt

- ❑ Renew after removing
- ❑ Tightening torque and sequence ⇒ page 154

14 - O-ring

- ❑ Renew after removing

15 - Bolt

- ❑ Renew after removing
- ❑ 3 Nm +90°

16 - Seal

- ❑ Renew after removing

17 - Oil drain plug

- ❑ 30 Nm

18 - Bolt

- 9 Nm

Protected by copyright. Copying for private or commercial purposes, in part or in whole, is not permitted unless authorised by AUDI AG. AUDI AG does not guarantee or accept any liability with respect to the correctness of information in this document. Copyright by AUDI AG.

Sump (bottom section) - tightening torque and sequence

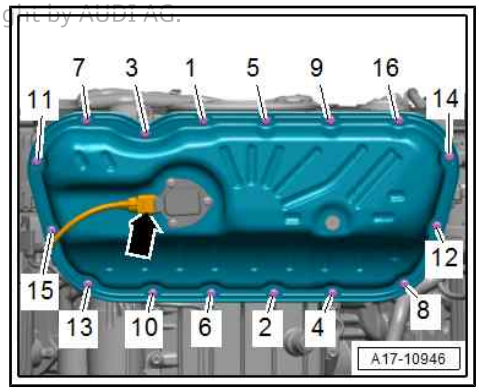

Note

After removing, renew bolts tightened with specified tightening angle.

– Tighten bolts in stages in the sequence shown:

Stage	Bolts	Tightening torque/angle specification
1.	-1 … 16-	2 Nm
2.	-1 … 16-	3 Nm
3.	-1 … 16-	Turn 45° further

Oil pump with vacuum pump - tightening torque and sequence

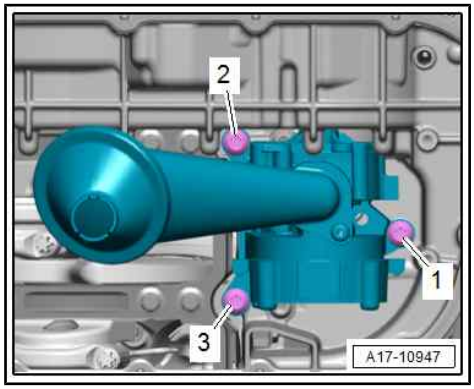

Note

After removing, renew bolts tightened with specified tightening angle.

– Tighten bolts in 3 stages in the sequence shown:

Stage	Bolts	Tightening torque/angle specification
1.	-1 … 3-	Screw in by hand until contact is made
2.	-1 … 3-	8 Nm
3.	-1 … 3-	Turn 90° further

Sump (top section)

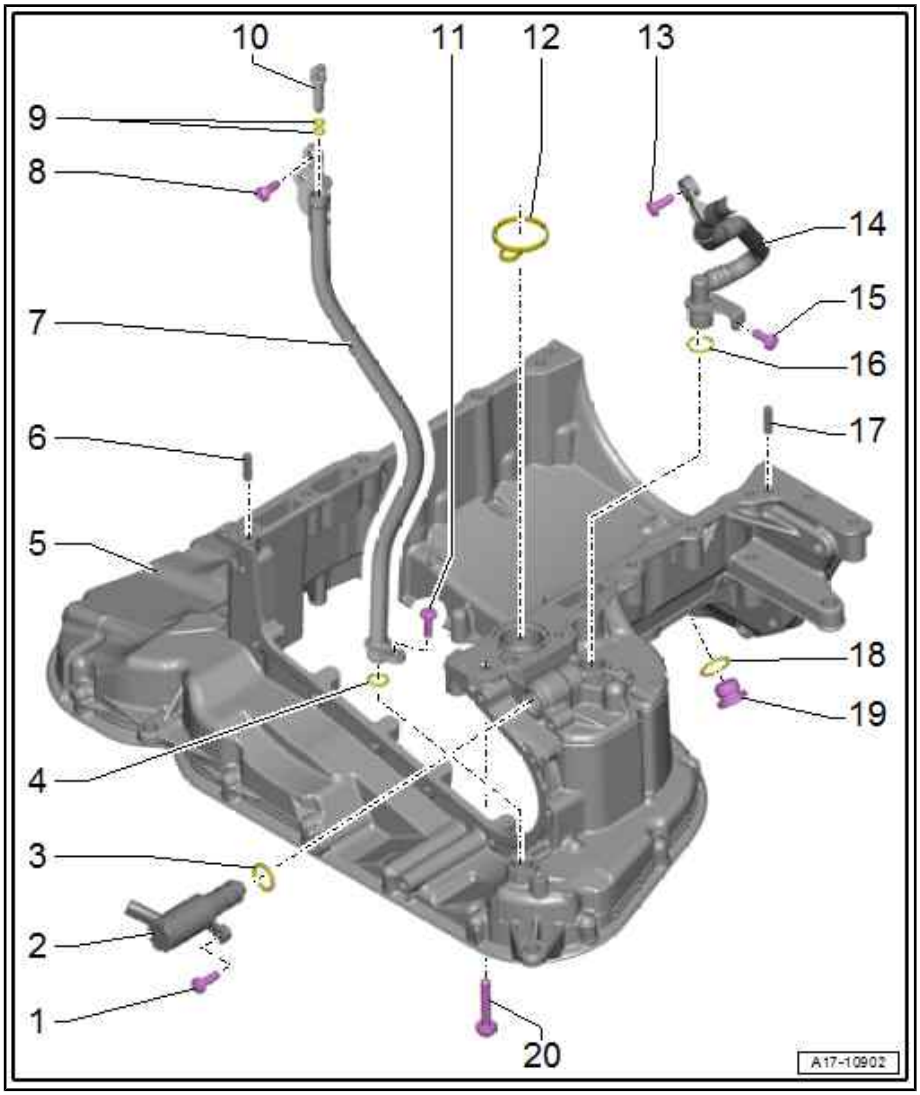

1 - Bolt
- ❑ 9 Nm

2 - Valve for oil pressure control - N428-
- ❑ Removing and installing ⇒ page 172

3 - O-ring
- ❑ Renew after removing

4 - O-ring
- ❑ Renew after removing

5 - Sump (top section)
- ❑ Removing and installing ⇒ page 158

6 - Dowel sleeve

7 - Guide tube
- ❑ For oil dipstick

8 - Bolt
- ❑ Thread-forming
- ❑ Fit and screw in bolt by hand so that it is screwed into old thread. Then tighten bolt to torque
- ❑ 7.5 Nm

9 - O-rings
- ❑ Check for damage and renew if necessary

10 - Sealing plug

11 - Bolt
- ❑ 9 Nm

12 - Seal
- ❑ Renew after removing

13 - Bolt
- ❑ 9 Nm

14 - Vacuum line
- ❑ Leading from vacuum pump

15 - Bolt
- ❑ 9 Nm

16 - O-ring
- ❑ Renew after removing

17 - Dowel sleeve

18 - Seal
- ❑ Renew after removing

19 - Plug
- ❑ For “TDC” marking
- ❑ 25 Nm

Protected by copyright. Copying for private or commercial purposes, in part or in whole, is not permitted unless authorised by AUDI AG. AUDI AG does not guarantee or accept any liability with respect to the correctness of information in this document. Copyright by AUDI AG.

20 - Bolt

❑ Tightening torque and sequence ⇒ page 156

Sump (top section) - tightening torque and sequence

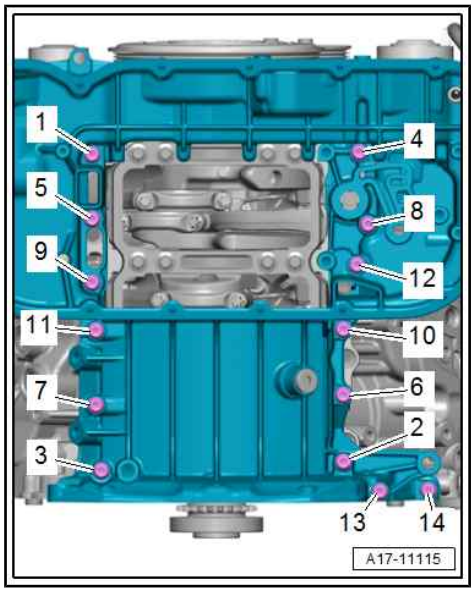

Note

After removing, renew bolts tightened with specified tightening angle.

– Tighten bolts in stages in the sequence shown:

Stage	Bolts	Tightening torque/angle specification
1.	-1 … 14-	2 Nm
2.	-1 … 14-	5 Nm
3.	-1 … 14-	Turn 180° further

1.2 Engine oil

- Draining and filling up engine oil, checking oil level, removing and installing oil filter element ⇒ 6-cylinder TDI engine, 3.0 ltr. 4-valve common rail; Rep. gr. 17 ; Sump/oil pump; Engine oil
- Oil capacities, oil specifications and viscosity grades ⇒ Maintenance tables .

1.3 Removing and installing sump (bottom section)

Protected by copyright. Copying for private or commercial purposes, in part or in whole, is not permitted unless authorised by AUDI AG. AUDI AG does not guarantee or accept any liability with respect to the correctness of information in this document. Copyright by AUDI AG.

Special tools and workshop equipment required

- Electric drill with plastic brush
- Safety goggles
- Sealant ⇒ Electronic parts catalogue
- Torx screwdriver bit T30 - VAS 6959-

Removing

Preparatory work may be necessary depending on model ⇒ 6-cylinder TDI engine, 3.0 ltr. 4-valve common rail; Rep. gr. 17 ; Sump/oil pump; Removing and installing sump (bottom section) .

– Drain off engine oil ⇒ page 156 .

– If necessary, remove bolt -1- and press bracket -2- with electrical wiring harness to one side.

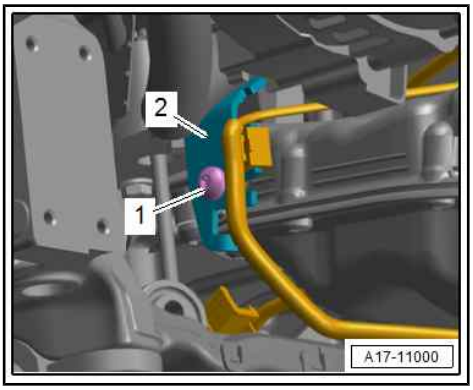

– Unplug electrical connector -arrow- at oil level and oil temperature sender - G266- .

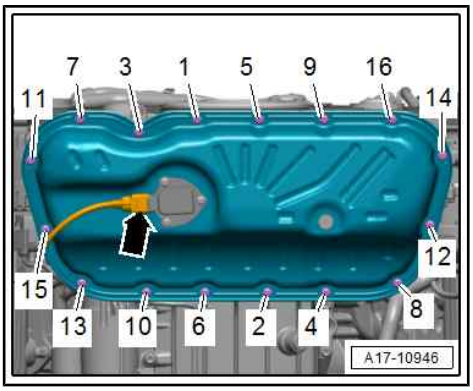

> **Caution**
>
> *Take care to keep components clean.*
>
> ◆ *There will still be some oil in the sump (bottom section).*

– Loosen and remove bolts in the sequence -16 … 1- (use Torx screwdriver bit T30 - VAS 6959- to remove bolts which are difficult to access).

– Carefully release sump (bottom section) from bonded joint and detach.

Installing

> **Caution**
>
> *Protect lubrication system and bearings against contamination.*
>
> ◆ *Cover exposed parts of the engine.*

Reproduced by AUDI AG. Copying for private or commercial purposes, in part or in whole, is not permitted unless authorised by AUDI AG. AUDI AG does not guarantee or accept any liability with respect to the correctness of information in this document. Copyright by AUDI AG.

> **WARNING**
>
> *Risk of eye injury.*
>
> ◆ *Put on safety goggles.*

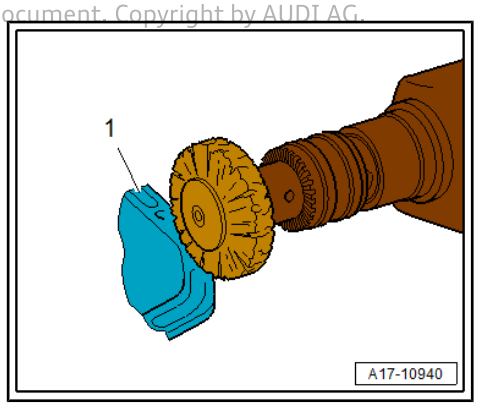

– Remove remaining sealant on bottom section -1- and top section of sump with a rotating plastic brush or similar.

– Clean surfaces; they must be free of oil and grease.

Note

Note expiry date of sealant.

– Cut off nozzle of tube at front marking (nozzle ∅ approx. 3 mm).

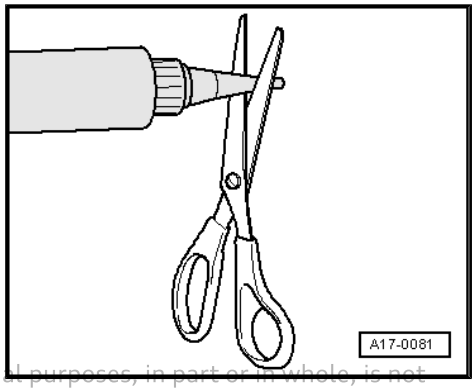

Protected by copyright. Copying for private or commercial purposes, in part or in whole, is not permitted unless authorised by AUDI AG. AUDI AG does not guarantee or accept any liability with respect to the correctness of information in this document. Copyright by AUDI AG.

Caution

Make sure lubrication system is not clogged by excess sealant.

- ***The sealant bead must not be thicker than specified.***

– Apply sealant bead -arrow- onto clean sealing surface of sump (bottom section) as shown in illustration.

- Width of sealant bead: 3.5 mm.

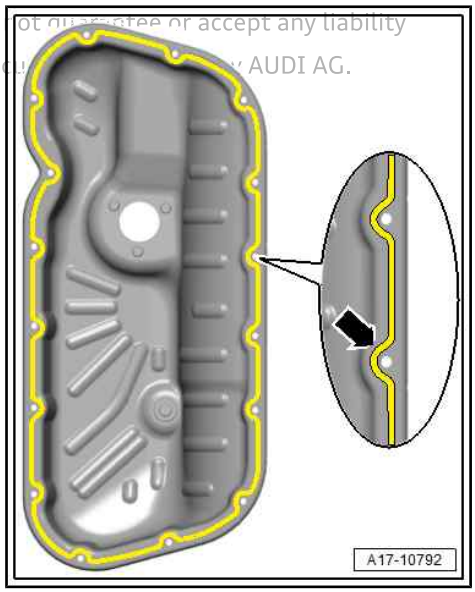

Note

Install sump (bottom section) within 5 minutes of applying sealant.

– Fit sump (bottom section) and tighten bolts.

– Top up engine oil and check oil level ⇒ page 156 .

Additional work depending on model ⇒ 6-cylinder TDI engine, 3.0 ltr. 4-valve common rail; Rep. gr. 17 ; Sump/oil pump; Removing and installing sump (bottom section)

Tightening torques

- ⇒ Fig. ""Sump (bottom section) - tightening torque and sequence"" , page 154

1.4 Removing and installing sump (top section)

Special tools and workshop equipment required

- Safety goggles
- Electric drill with plastic brush
- Sealant ⇒ Electronic parts catalogue

Removing

- Engine removed and secured to engine and gearbox support ⇒ 6-cylinder TDI engine, 3.0 ltr. 4-valve common rail; Rep. gr. 10 ; Removing and installing engine; Securing engine to engine and gearbox support .
- Engine oil drained ⇒ page 156 .

– Remove timing chain cover (bottom) ⇒ page 66 .

– Remove oil pump ⇒ page 161 .

– Remove bracket for alternator ⇒ page 23 .

– Remove bracket for air conditioner compressor ⇒ page 22 .

– Unplug electrical connector -1- for valve for oil pressure control - N428- . (Illustration shows engine with vibration damper.)

2 - Ignore

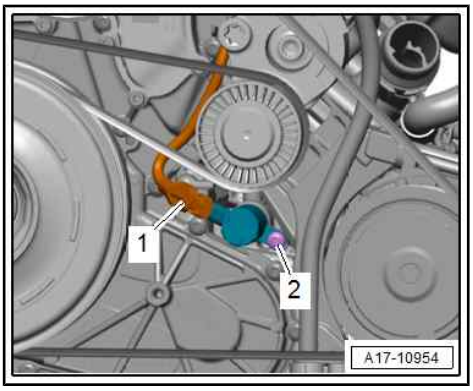

– Remove bolt -2- and disconnect vacuum hose -1-.

Protected by copyright. Copying for private or commercial purposes, in p
permitted unless authorised by AUDI AG. AUDI AG does not guarantee o
with respect to the correctness of information in this document. Copyrig

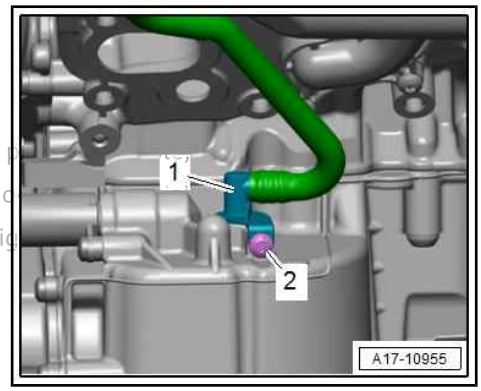

– Remove bolts -1, 3- and pull out guide tube -2- for oil dipstick.

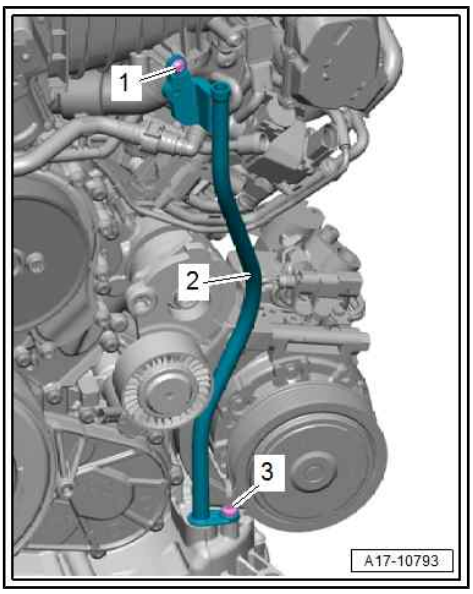

– Move electrical wiring clear.
– Slacken and remove bolts in the sequence: -14 ... 1-.
– Carefully release sump (top section) from bonded joint, pry sump off dowel sleeves and detach.

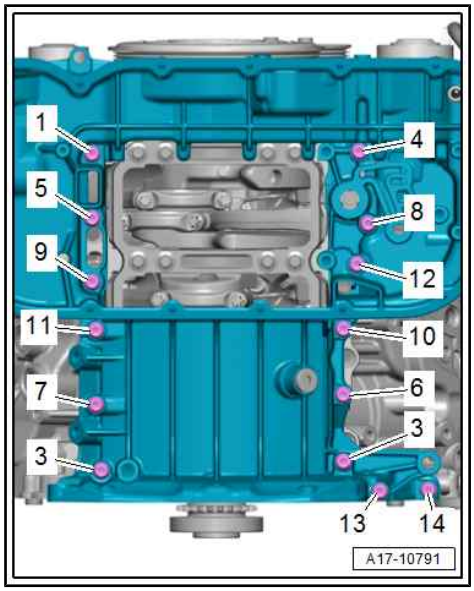

Installing

Note

Renew gaskets, seals and O-rings after removal.

Caution

Protect lubrication system against contamination.

- ***Cover exposed parts of the engine.***

WARNING

Risk of eye injury.

- ***Put on safety goggles.***

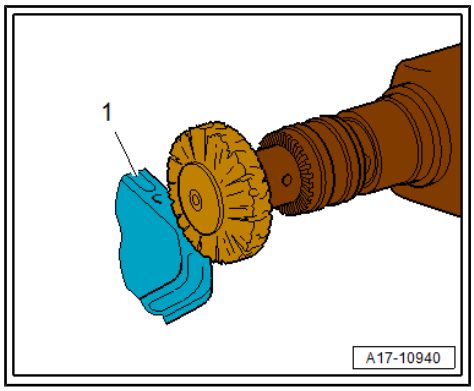

– Remove sealant residue from sump (top section) -1- and cylinder block using rotating plastic brush or similar.
– Clean surfaces; they must be free of oil and grease.

Note

Note expiry date of sealant.

– Cut off nozzle of tube at front marking (nozzle ∅ approx. 3 mm).

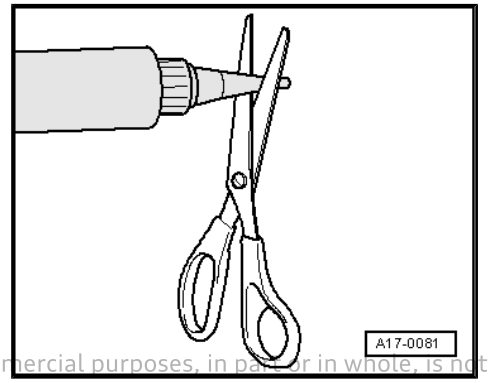

Protected by copyright. Copying for private or commercial purposes, in part or in whole, is not permitted unless authorised by AUDI AG. AUDI AG does not guarantee or accept any liability with respect to the correctness of information in this document. Copyright by AUDI AG.

– Fit seal -1- in sump (top section).

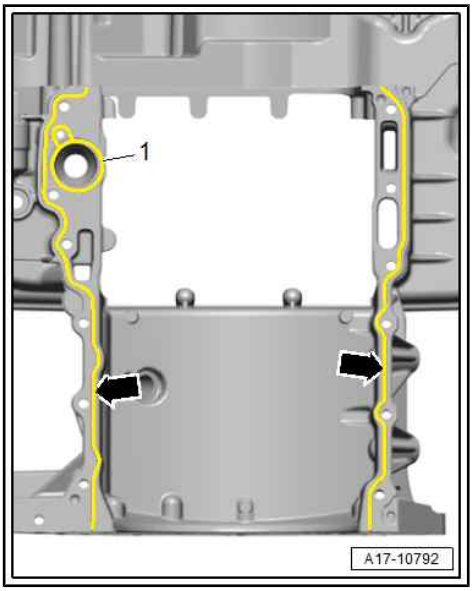

Caution

Make sure lubrication system is not clogged by excess sealant.

- *The sealant bead must not be thicker than specified.*

– Apply beads of sealant -arrows- onto clean sealing surface of sump (top section) as shown in illustration.

- The grooves on the sealing surfaces must be completely filled with sealant.
- The beads of sealant must project 3.5 mm above the sealing surface.

Note

Install sump (top section) within 5 minutes of applying sealant.

– Fit sump (top section) and tighten bolts ⇒ page 156 .

Remaining installation steps are carried out in reverse sequence; note the following:

– Install bracket for air conditioner compressor ⇒ page 22 .

– Install bracket for alternator ⇒ page 23 .

– Install oil pump ⇒ page 161 .

– Install timing chain cover (bottom) ⇒ page 66 .

Tightening torques

- ⇒ page 154

1.5 Removing and installing oil pump

Special tools and workshop equipment required

- Counterhold tool - T10172 A- with adapters -T10172/9-

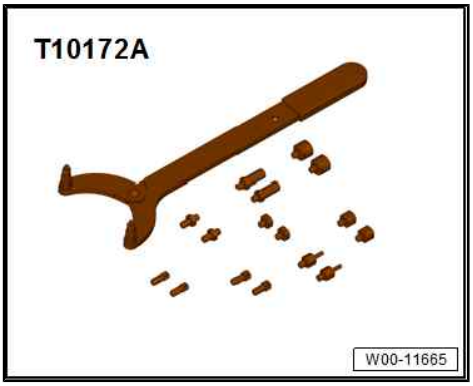

Removing

– Remove sump (bottom section) ⇒ page 156 .

– Remove sealing flange (pulley end) ⇒ page 26 .

Protected by copyright. Copying for private or commercial purposes, in part or in whole, is not permitted unless authorised by AUDI AG. AUDI AG does not guarantee or accept any liability with respect to the correctness of information in this document. Copyright by AUDI AG.

– Unscrew bolt -arrow-; to do so, counterhold chain sprocket for oil pump using counterhold tool - T10172 A- with adapter - T10172/9- .

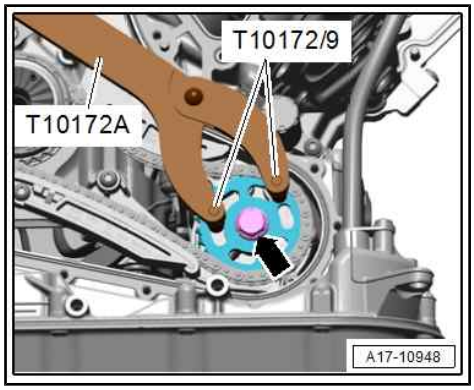

– Press tensioning rail -1- upwards -arrow- and detach chain sprocket -2-.
– Release tensioning rail.

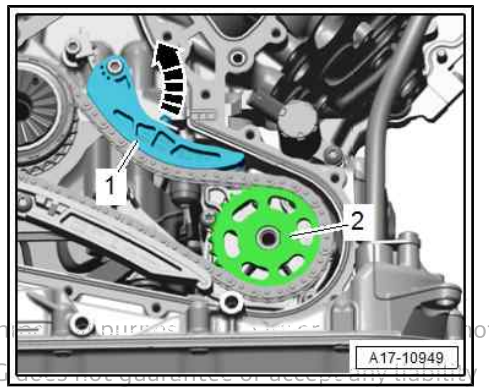

Protected by copyright. Copying for private or commercial purposes, in part or in whole, is not permitted unless authorised by AUDI AG. AUDI AG does not guarantee or accept any liability with respect to the correctness of information in this document. Copyright by AUDI AG.

– Unscrew bolts -arrows- and remove baffle plate -1-.

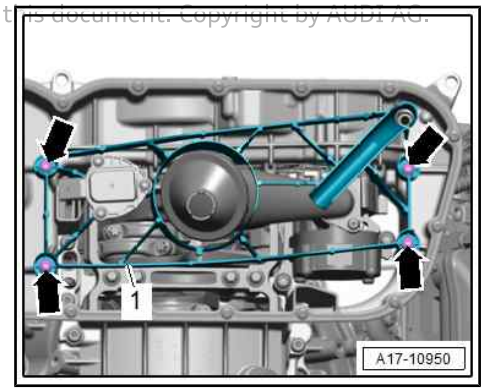

– Remove bolts -1, 2, 3- and detach oil pump.

Installing

Installation is carried out in reverse order; note the following:

Note

Renew O-rings after removing.

– Check that the two dowel sleeves are fitted in the oil pump. Install missing dowel sleeves.

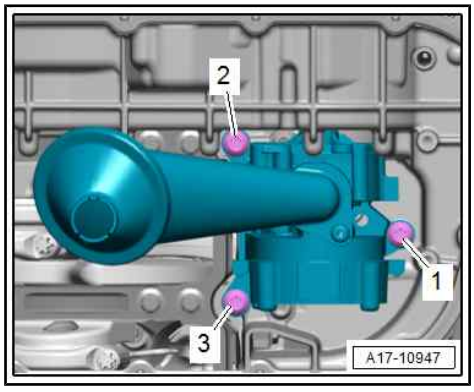

Protected by copyright. Copying for private or commercial pu
permitted unless authorised by AUDI AG. AUDI AG does not g
with respect to the correctness of information in this docume

– Observe correct installation position of chain sprocket:

• Flat section on chain sprocket must align with flat section on oil pump -arrow-.

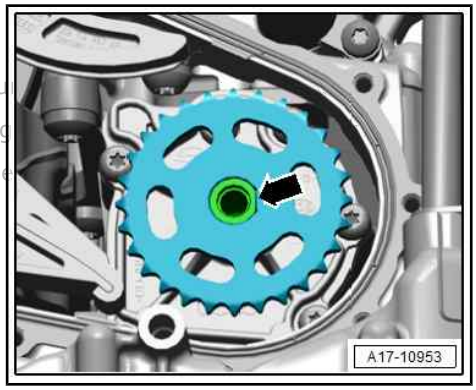

– Tighten bolt -arrow-; to do so, counterhold chain sprocket for oil pump using counterhold tool - T10172 A- with adapter - T10172/9- .

– Install sump (bottom section) ⇒ page 156 .

– Install sealing flange (pulley end) ⇒ page 26 .

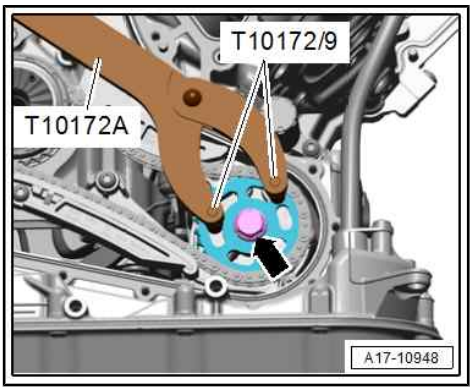

Tightening torques

♦ ⇒ “1.1 Exploded view - sump/oil pump”, page 152

1.6 Removing and installing oil level and oil temperature sender - G266-

Removing

– Drain off engine oil ⇒ page 156 .

– Unplug electrical connector -2-.

– Remove bolts -1- and detach oil level and oil temperature sender - G266- -item 3-.

Installing

Installation is carried out in reverse order; note the following:

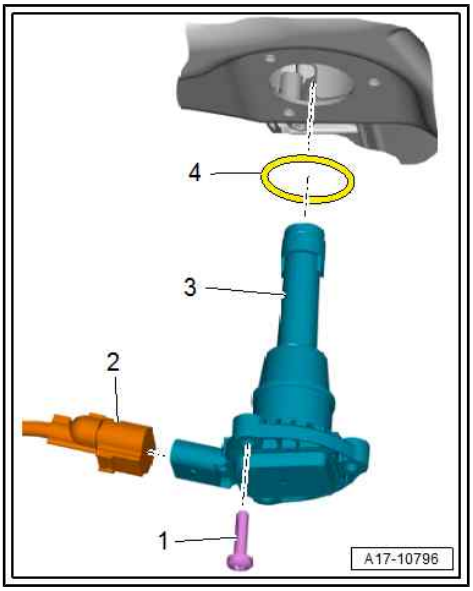

Note

Renew seal -4- after removing.

– Top up engine oil and check oil level ⇒ page 156 .

Tightening torques

♦ ⇒ “1.1 Exploded view - sump/oil pump”, page 152

2 Engine oil cooler

⇒ “2.1 Exploded view - engine oil cooler”, page 164

⇒ “2.2 Removing and installing engine oil cooler”, page 165

⇒ “2.3 Removing and installing temperature regulator for engine oil cooler”, page 166

2.1 Exploded view - engine oil cooler

Engine oil cooler

1 - Gasket

- ❑ For engine oil cooler
- ❑ Renew after removing

2 - Engine oil cooler

- ❑ See note ⇒ page 152
- ❑ Removing and installing ⇒ page 165

3 - Bolt

- ❑ Tightening torque and sequence ⇒ page 165

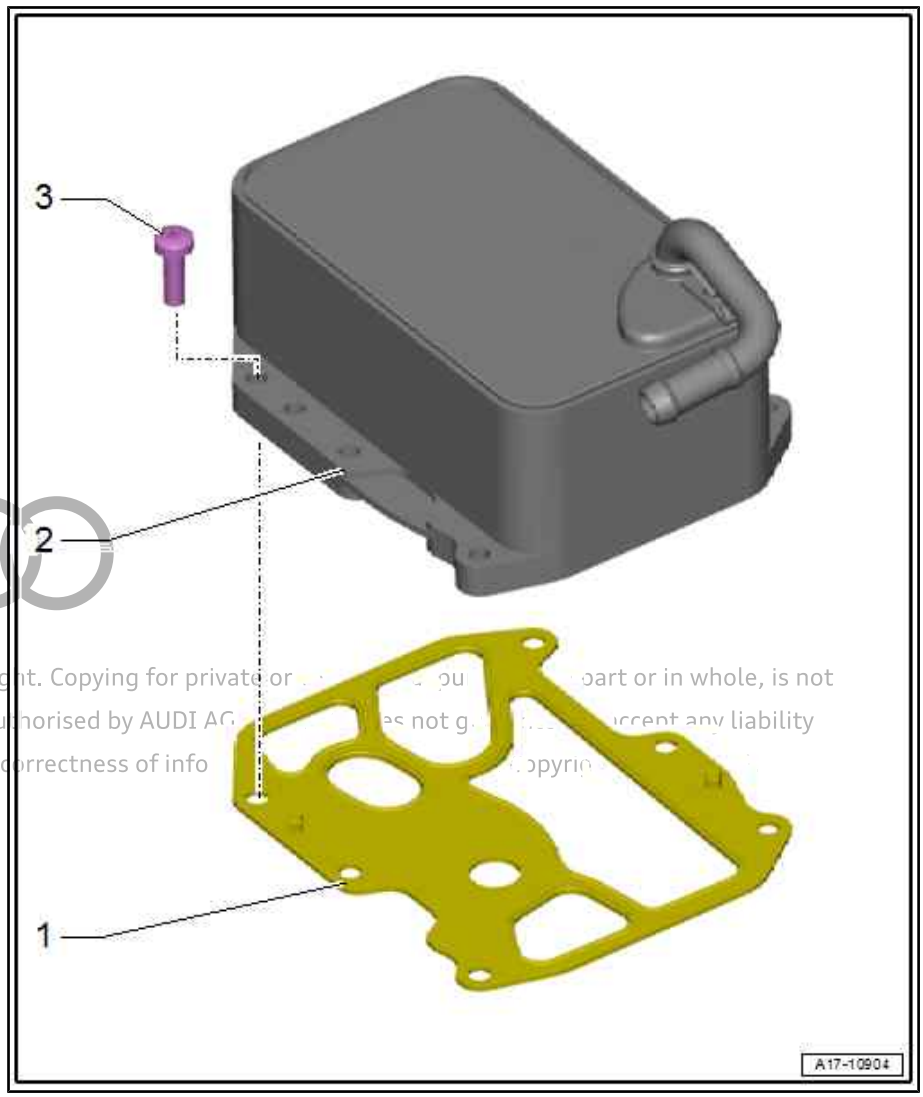

Protected by copyright. Copying for private or ... part or in whole, is not permitted unless authorised by AUDI AG ... not g... accept any liability with respect to the correctness of info... copyri...

Engine oil cooler - tightening torque and sequence

– Tighten bolts in stages in the sequence shown:

Stage	Bolts	Tightening torque
1.	-1-	2 Nm
2.	-2-	9 Nm
3.	-1, 3, 4, 5, 6-	9 Nm

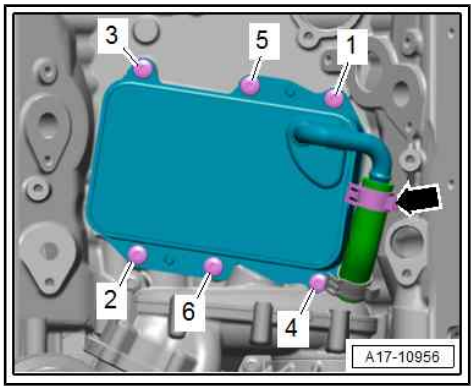

Temperature regulator for engine oil cooler

1 - Bolt
- ❑ 9 Nm

2 - Cover
- ❑ For temperature regulator for engine oil cooler

3 - O-ring
- ❑ Renew after removing

4 - Temperature regulator for engine oil cooler
- ❑ Removing and installing ⇒ page 166

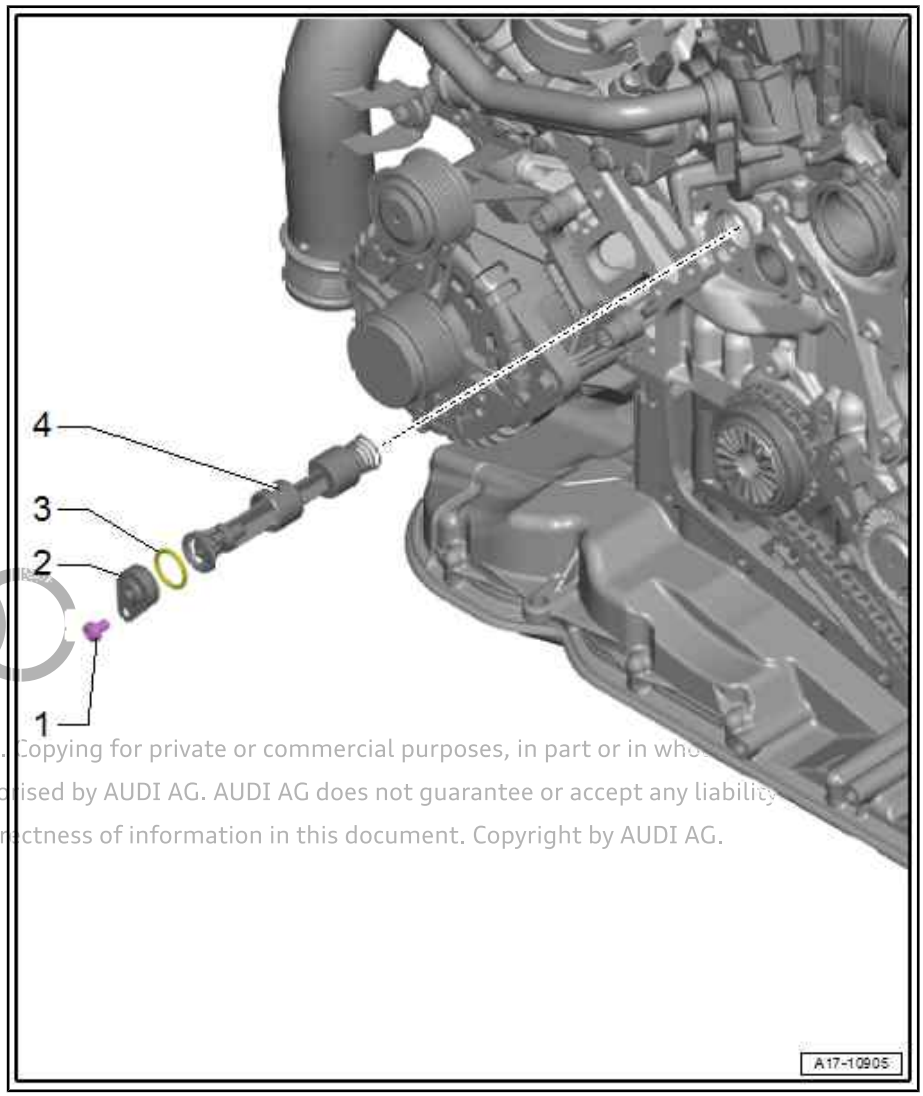

Protected by copyright. Copying for private or commercial purposes, in part or in whole, is not permitted unless authorised by AUDI AG. AUDI AG does not guarantee or accept any liability with respect to the correctness of information in this document. Copyright by AUDI AG.

2.2 Removing and installing engine oil cooler

Special tools and workshop equipment required

- Hose clip pliers - VAS 6362-

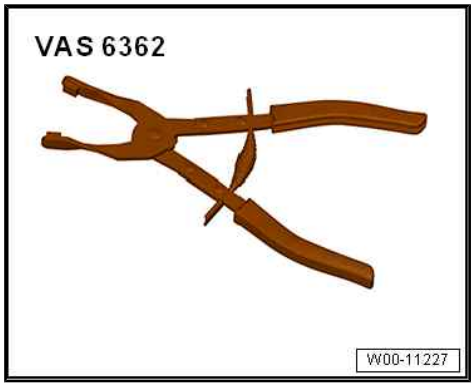

Removing

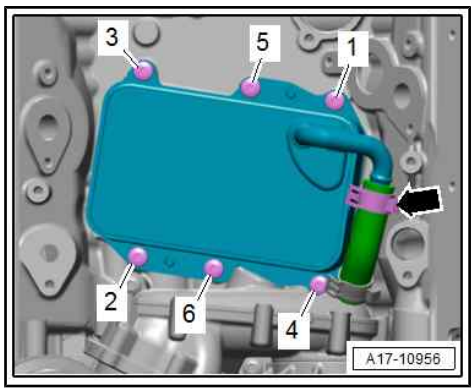

– Remove coolant pipe (top) ⇒ 6-cylinder TDI engine, 3.0 ltr. 4-valve common rail; Rep. gr. 19 ; Coolant pipes; Removing and installing coolant pipes .

– Remove coolant shut-off valve ⇒ page 194 .

– Slacken and remove bolts in the sequence: -6 ... 1-.

– Open hose clip -arrow- and disconnect coolant hose from engine oil cooler.

– Detach engine oil cooler.

Installing

Installation is carried out in reverse order; note the following:

Protected by copyright. Copying for private or commercial purposes, in part or in whole, is not permitted unless authorised by AUDI AG. AUDI AG does not guarantee or accept any liability with respect to the correctness of information in this document. Copyright by AUDI AG.

Note

- *Renew gasket after removing.*
- *Secure all hose connections with correct type of hose clips (as original equipment) ⇒ Electronic parts catalogue .*

– Install coolant shut-off valve ⇒ page 194 .

– Install coolant pipe (top) ⇒ 6-cylinder TDI engine, 3.0 ltr. 4-valve common rail; Rep. gr. 19 ; Coolant pipes; Removing and installing coolant pipes .

– Check oil level ⇒ page 156 .

Tightening torques

- ⇒ Fig. ""Engine oil cooler - tightening torque and sequence"" , page 165

2.3 Removing and installing temperature regulator for engine oil cooler

Special tools and workshop equipment required

♦ Wrench, 21 mm - T40263-

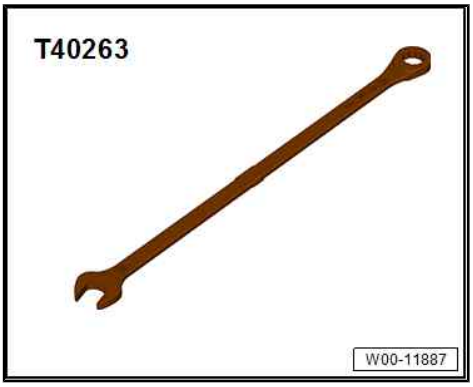

♦ Adapter - T40314-

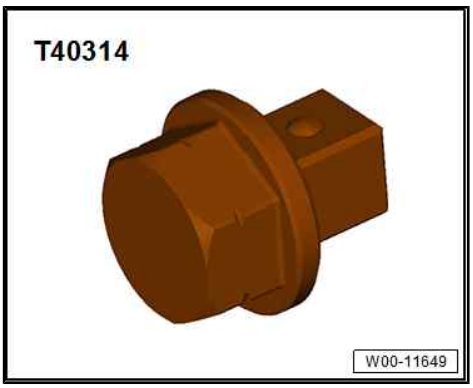

♦ M8 bolt

Removing

– Remove sealing flange (pulley end) ⇒ page 26 .

– Remove bolt -arrow- for cover -1-.

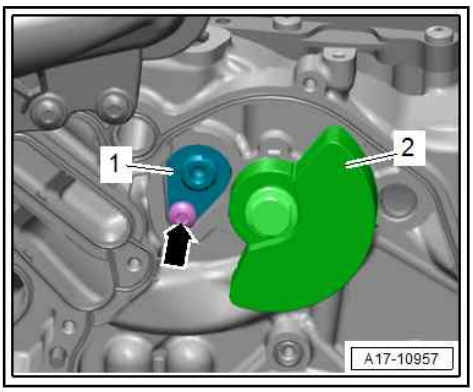

Note

If the temperature regulator for engine oil cooler is covered by the balance weight -2- of the balance shaft, proceed as follows:

– Bring vibration damper into installation position and secure with bolt.

Protected by copyright. Copying for private or commercial purposes, in part or in whole, is not permitted unless authorised by AUDI AG. AUDI AG does not guarantee or accept any liability with respect to the correctness of information in this document. Copyright by AUDI AG.

Caution

Irreparable damage can be caused if the camshaft timing chain slips.

♦ ***Turn crankshaft only in direction of engine rotation -arrow-.***

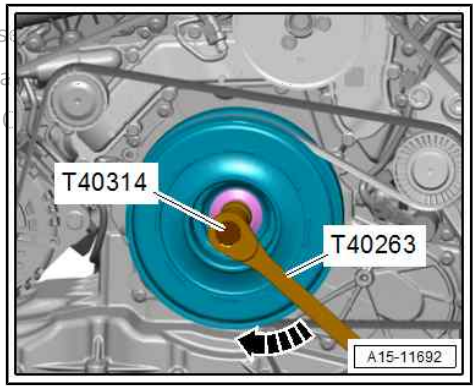

– Use wrench, 21 mm - T40263- and adapter - T40314- to turn crankshaft until temperature regulator for engine oil cooler is accessible. (Illustration shows engine with vibration damper.)

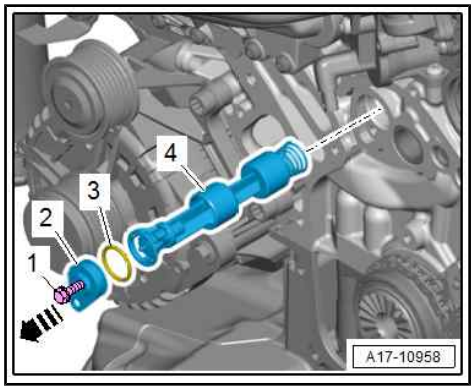

– To remove cover -2-, screw an M8 bolt -item 1- into thread in cover and pull out cover by lifting bolt -arrow-.
– Pull out temperature regulator -4- for engine oil cooler.

Installing

Installation is carried out in reverse order; note the following:

Note

Renew O-ring -3- after removal.

– Install sealing flange (pulley end) ⇒ page 26 .

Tightening torques

♦ ⇒ “2.1 Exploded view - engine oil cooler”, page 164

Protected by copyright. Copying for private or commercial purposes, in part or in whole, is not permitted unless authorised by AUDI AG. AUDI AG does not guarantee or accept any liability with respect to the correctness of information in this document. Copyright by AUDI AG.

3 Oil filter/oil pressure switches

⇒ "3.1 Exploded view - oil filter", page 169

⇒ "3.2 Removing and installing oil pressure sender G10 ", page 170

⇒ "3.3 Checking oil pressure", page 170

⇒ "3.4 Removing and installing oil filter housing", page 171

⇒ "3.5 Removing and installing valve for oil pressure control N428 ", page 172

⇒ "3.6 Removing and installing oil temperature sender 2 G664 ", page 173

3.1 Exploded view - oil filter

Protected by copyright. Copying for private or commercial purposes, in part or in whole, is not permitted unless authorised by AUDI AG. AUDI AG does not guarantee or accept any liability with respect to the correctness of information in this document. Copyright by AUDI AG.

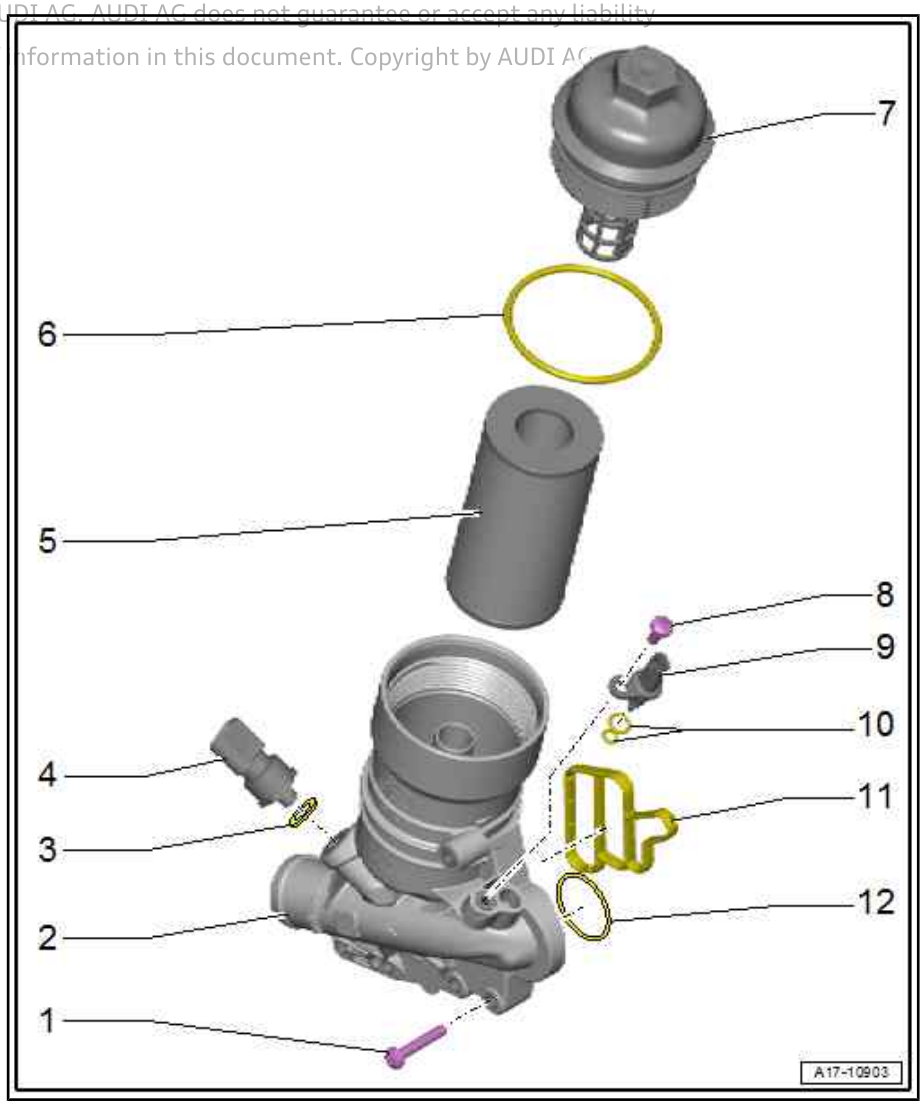

1 - Bolt

- ❑ Tightening torque and sequence ⇒ page 170

2 - Oil filter housing

- ❑ With map-controlled engine cooling system thermostat - F265-
- ❑ Removing and installing ⇒ page 171
- ❑ Renew after removing

3 - Seal

- ❑ Renew after removing

4 - Oil pressure sender - G10-

- ❑ Checking ⇒ Vehicle diagnostic tester
- ❑ Removing and installing ⇒ page 170
- ❑ 3 Nm +90°

5 - Oil filter element

- ❑ Removing and installing ⇒ page 156

6 - O-ring

- ❑ Renew after removing

7 - Sealing cap

- ❑ With oil filter bypass valve
- ❑ 25 Nm

8 - Bolt

- ❑ 9 Nm

9 - Coolant temperature sender 2 - G802-

- ❑ Removing and installing ⇒ page 193

10 - O-rings

- ❑ Renew after removing

11 - Gasket

- ❑ Renew after removing

12 - O-ring

❑ Renew after removing

Oil filter housing - tightening torque and sequence

– Tighten bolts in the sequence -1 ... 6- to 9 Nm.

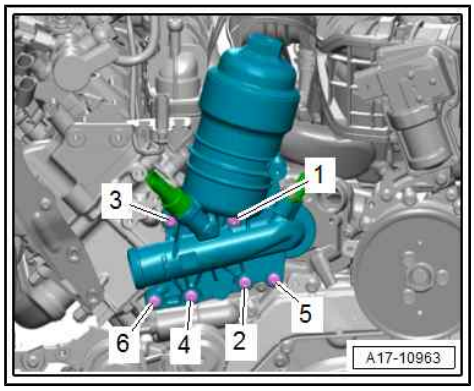

3.2 Removing and installing oil pressure sender - G10-

Special tools and workshop equipment required

♦ Socket, 24 mm - T40363- (not illustrated)

Procedure

Preparatory work may be necessary depending on model ⇒ 6-cylinder TDI engine, 3.0 ltr. 4-valve common rail; Rep. gr. 17 ; Oil filter/oil pressure switches ; Removing and installing oil pressure sender - G10- .

– Unplug electrical connector -1-.

– Place a cloth underneath to catch escaping engine oil.

– Unscrew oil pressure sender - G10- -item 2- using socket, 24 mm - T40363- .

– Renew seal after removing.

– Insert new oil pressure sender - G10- into cylinder head immediately to avoid loss of engine oil.

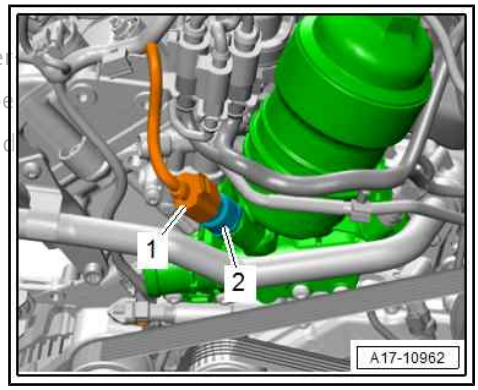

Installation is carried out in reverse order; note the following:

– Check oil level ⇒ page 156 .

Additional work depending on model ⇒ 6-cylinder TDI engine, 3.0 ltr. 4-valve common rail; Rep. gr. 17 ; Oil filter/oil pressure switches ; Removing and installing oil pressure sender - G10-

Tightening torques

♦ ⇒ “3.1 Exploded view - oil filter”, page 169

3.3 Checking oil pressure

When checking oil pressure, refer to ⇒ Vehicle diagnostic tester.

– Connect vehicle diagnostic tester .

– Select `Diagnosis` mode and then `Start diagnosis`.

– Choose `Select own test` tab and select following options one after the other:

♦ `Drive train`

♦ `Select engine code and engine`

Protected by copyright. Copying for private or commer
permitted unless authorised by AUDI AG. AUDI AG doe
with respect to the correctness of information in this d

- 0001 - Self-diagnosis compatible systems
- 0001 - Engine electronics
- 0001 - Engine electronics, functions
- 0001 - Subsystems, background conditions
- Oil pressure check

– Start selected program and follow instructions shown on display of vehicle diagnostic tester.

3.4 Removing and installing oil filter housing

Special tools and workshop equipment required

- Hose clip pliers - VAS 6340-

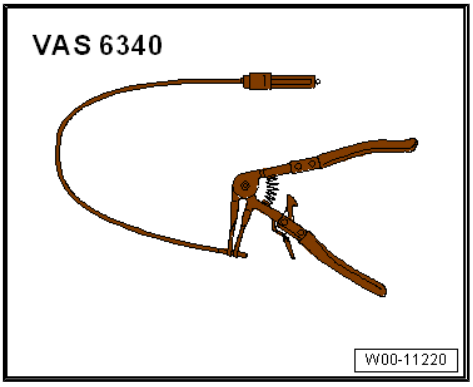

Removing

Preparatory work may be necessary depending on model ⇒ 6-cylinder TDI engine, 3.0 ltr. 4-valve common rail; Rep. gr. 17 ; Oil filter/oil pressure switches; Removing and installing oil filter housing .

– Remove oil filter element ⇒ page 156 .

– Remove poly V-belt ⇒ page 19 .

– Drain coolant ⇒ page 177 .

– Unbolt coolant pipe (front) and detach from map-controlled engine cooling system thermostat - F265- ⇒ 6-cylinder TDI engine, 3.0 ltr. 4-valve common rail; Rep. gr. 19 ; Coolant pipes; Removing and installing coolant pipes .

– Unplug electrical connectors:

2 - For oil pressure sender - G10-

3 - For coolant temperature sender 2 - G802-

1 - Ignore

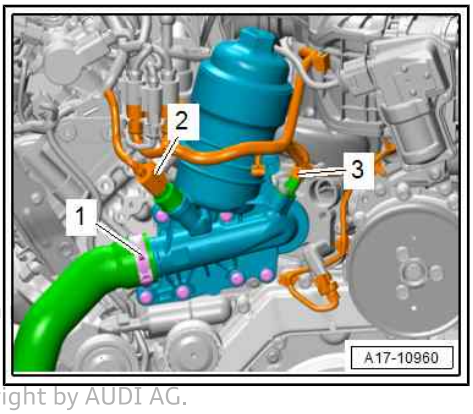

Protected by copyright. Copying for private or commercial purposes, in
permitted unless authorised by AUDI AG. AUDI AG does not guarantee
with respect to the correctness of information in this document. Copyright by AUDI AG.

– Slacken and remove bolts in the sequence: -6 ... 1-.

– Press lines slightly towards front and detach oil filter housing.

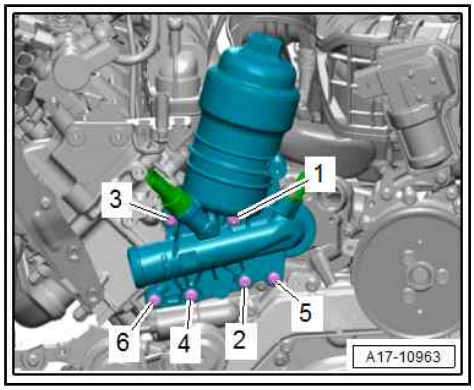

Installing

Installation is carried out in reverse order; note the following:

Note

- *Renew gasket and O-ring after removal.*
- *Secure all hose connections with correct type of hose clips (as original equipment) ⇒ Electronic parts catalogue .*

– Install coolant pipe (front) ⇒ 6-cylinder TDI engine, 3.0 ltr. 4-valve common rail; Rep. gr. 19 ; Coolant pipes; Removing and installing coolant pipes .

– Install poly V-belt ⇒ page 19 .

– Install oil filter element ⇒ page 156 .

Note

Do not reuse coolant.

– Fill up with coolant ⇒ page 180 .

Protected by copyright. Copying for private or commercial purposes, in part or in whole, is not permitted without the prior written consent of AUDI AG. We do not guarantee or accept any liability with respect to the correctness of information in this document. Copyright by AUDI AG.

Additional work depending on model ⇒ 6-cylinder TDI engine, 3.0 ltr. 4-valve common rail; Rep. gr. 17 ; Oil filter/oil pressure switches; Removing and installing oil filter housing

Tightening torques

- ⇒ Fig. ""Oil filter housing - tightening torque and sequence"" , page 170

3.5 Removing and installing valve for oil pressure control - N428-

Procedure

– Remove noise insulation (front) ⇒ General body repairs, exterior; Rep. gr. 66 ; Noise insulation; Removing and installing noise insulation .

– Unplug electrical connector -1-. (Illustration shows engine with vibration damper.)

– Place a cloth underneath to catch escaping engine oil.

– Unscrew bolt -2- and remove valve for oil pressure control - N428- .

– Renew O-ring after removal.

– To avoid loss of engine oil, insert new valve for oil pressure control - N428- immediately.

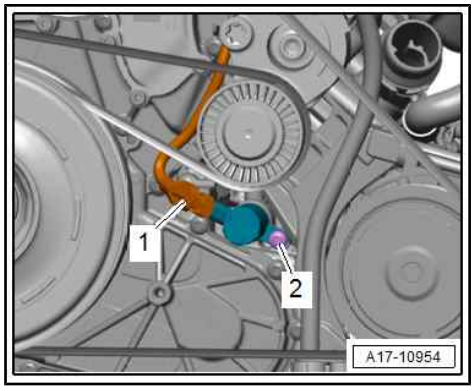

Installation is carried out in reverse order; note the following:

– Check oil level ⇒ page 156 .

Tightening torques

- ⇒ "1.1 Exploded view - sump/oil pump", page 152
- ⇒ General body repairs, exterior; Rep. gr. 66 ; Noise insulation; Exploded view - noise insulation

3.6 Removing and installing oil temperature sender 2 - G664-

Procedure

– Remove noise insulation (front) ⇒ General body repairs, exterior; Rep. gr. 66 ; Noise insulation; Removing and installing noise insulation .

– Unplug electrical connector -2-. (Illustration shows engine with vibration damper.)

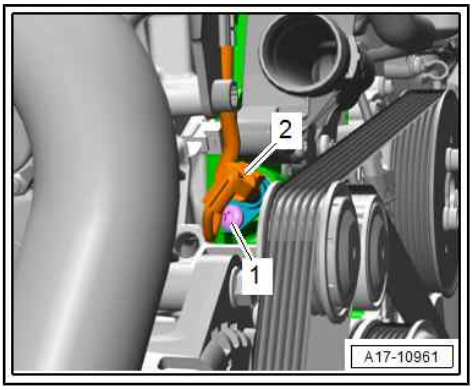

Caution

Oil will escape through mounting hole for oil temperature sender.

- *Lay a cloth under the mounting hole to catch escaping engine oil or close the mounting hole using a clean plug from the engine bung set - VAS 6122- .*

– Unscrew bolt -1- and remove oil temperature sender 2 - G664- .

Installation is carried out in reverse order; note the following:

Note

Renew O-ring after removal.

Tightening torques

- ⇒ “1.2 Exploded view - sealing flange (pulley end)”, page 17
- ⇒ General body repairs, exterior; Rep. gr. 66 ; Noise insulation; Exploded view - noise insulation

Protected by copyright. Copying for private or commercial purposes, in part or in whole, is not permitted unless authorised by AUDI AG. AUDI AG does not guarantee or accept any liability with respect to the correctness of information in this document. Copyright by AUDI AG.

19 – Cooling

1 Cooling system/coolant

⇒ “1.1 Connection diagram - coolant hoses”, page 174

⇒ “1.2 Checking cooling system for leaks”, page 174

⇒ “1.3 Draining and filling cooling system”, page 177

1.1 Connection diagram - coolant hoses

All components are described in ⇒ 6-cylinder TDI engine, 3.0 ltr. 4-valve common rail); Rep. gr. 19 ; Cooling system/coolant; Connection diagram - coolant hoses .

1.2 Checking cooling system for leaks

Special tools and workshop equipment required

- Cooling system tester - V.A.G 1274 B-

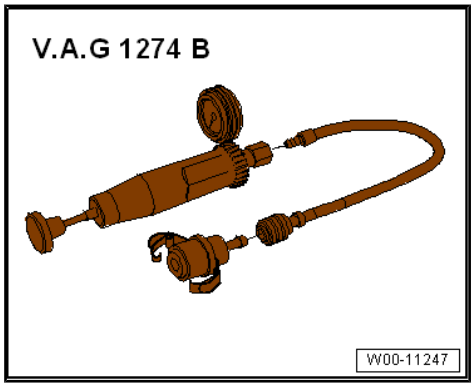

- Adapter for cooling system tester - V.A.G 1274/8-

Protected by copyright. Copying for private or commercial purposes, in part or in whole, is not permitted unless authorised by AUDI AG. AUDI AG does not guarantee or accept any liability with respect to the correctness of information in this document. Copyright by AUDI AG.

- Cooling system tester adapter - V.A.G 1274B/15- for filler cap (version 1)

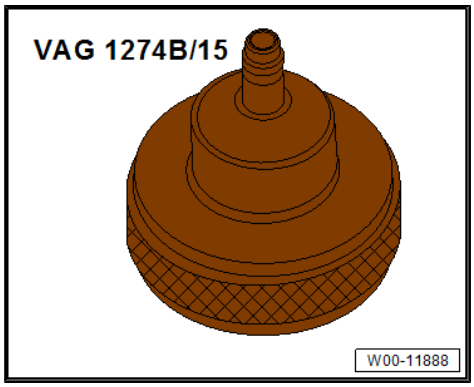

- Cooling system tester adapter - V.A.G 1274/9- for filler cap (version 2)

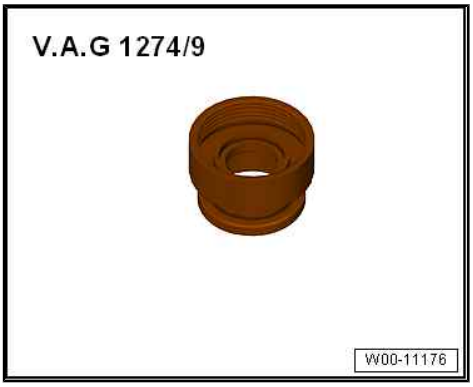

- Safety goggles
- Protective gloves

Procedure

- Engine must be warm.
- Ignition switched off.

Protected by copyright. Copying for private or commercial purposes, in part or in whole, is not permitted unless authorised by AUDI AG. AUDI AG does not guarantee or accept any liability with respect to the correctness of information in this document. Copyright by AUDI AG.

Preparatory work may be necessary depending on model ⇒ 6-cylinder TDI engine, 3.0 ltr. 4-valve common rail; Rep. gr. 19 ; Cooling system/coolant; Checking cooling system for leaks .

> **WARNING**
>
> *Risk of scalding as hot coolant can escape.*
>
> - *Observe safety precautions ⇒ page 3 .*

– Release fastener -arrow- (if necessary) and open filler cap -1- on coolant expansion tank.

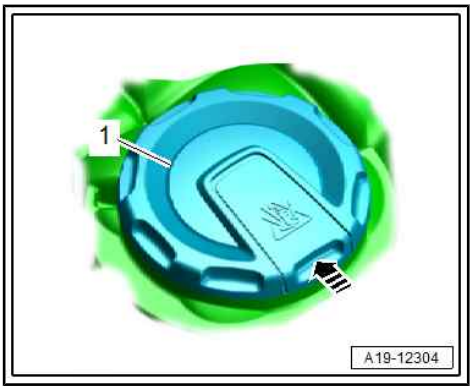

– Fit cooling system tester - V.A.G 1274 B- with adapter - V.A.G 1274/8- onto coolant expansion tank.

– Using hand pump on cooling system tester, build up a pressure of approx. 1.0 bar.

• The pressure should not drop more than 0.2 bar within 10 minutes.

– If the pressure drops more than 0.2 bar, locate leak and eliminate fault.

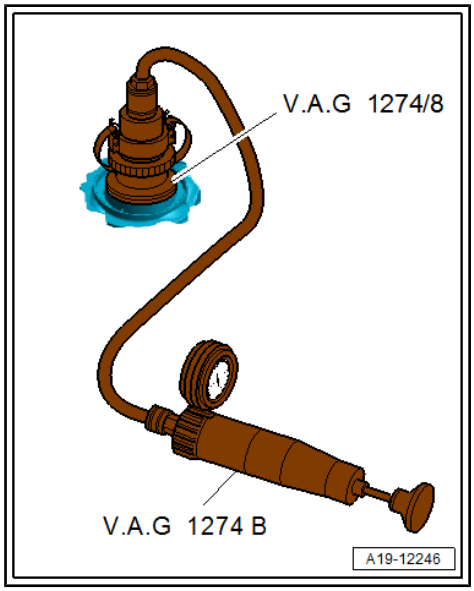

Note

The drop in pressure of 0.2 bar within 10 minutes is caused by the decrease in coolant temperature. The colder the engine is, the less the pressure will fall. If necessary, check again when the engine is cold.

Checking pressure relief valve in filler cap

Filler cap (version 1):

– Fit cooling system tester - V.A.G 1274 B- with adapter - V.A.G 1274 B/15- onto filler cap.

Copyright. Copying for private or commercial pur e, is not permitted unless authorised by AUDI AG. AUDI AG does not o ility with respect to the correctness of information in this docu.

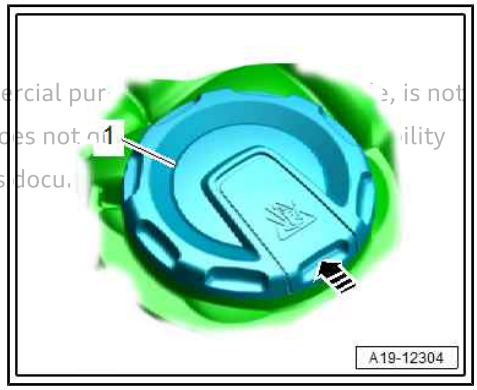

– Using hand pump on cooling system tester, build up a pressure of approx. 2 bar.

Blue filler cap

• The pressure must be reduced to 1.6 ... 1.4 bar and kept at this level.

– Renew filler cap if pressure relief valve does not react as described.

Black filler cap

• The pressure must be reduced to 1.8 ... 1.6 bar and kept at this level.

– Renew filler cap if pressure relief valve does not react as described.

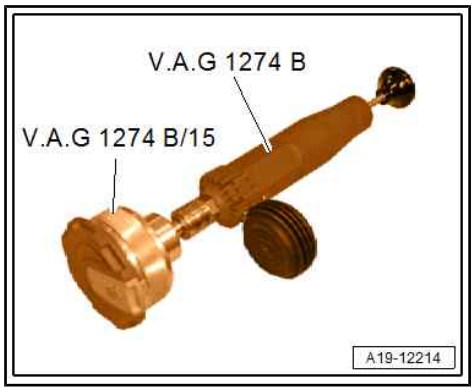

Filler cap (version 2):

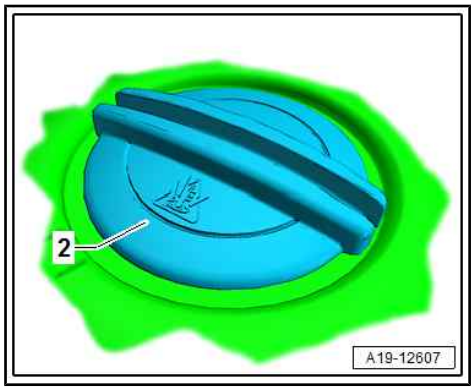

Protected by copyright. Copying for private or commercial purposes, in part or in whole, is not permitted unless authorised by AUDI AG. AUDI AG does not guarantee or accept any liability with respect to the correctness of information in this document. Copyright by AUDI AG.

– Fit cooling system tester - V.A.G 1274 B- with adapter - V.A.G 1274/9- onto filler cap.

– Build up pressure with hand pump on cooling system tester.

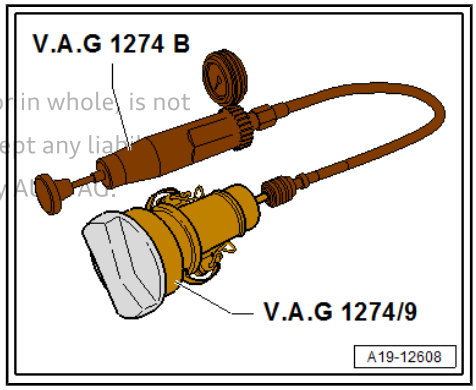

Blue filler cap

♦ The pressure relief valve should open at a pressure of 1.4 ... 1.6 bar.

– Renew filler cap if pressure relief valve does not open as described.

Black filler cap

♦ The pressure relief valve should open at a pressure of 1.6 ... 1.8 bar.

– Renew filler cap if pressure relief valve does not open as described.

1.3 Draining and filling cooling system

Special tools and workshop equipment required

♦ Adapter for cooling system tester - V.A.G 1274/8-

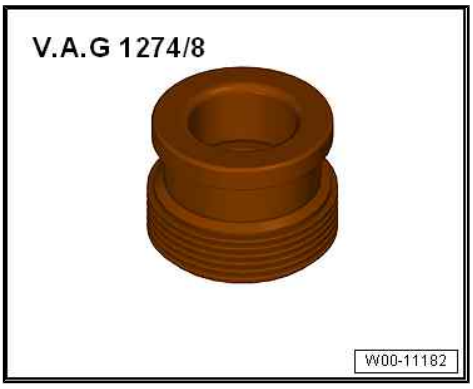

♦ Pipe for cooling system tester - V.A.G 1274/10-

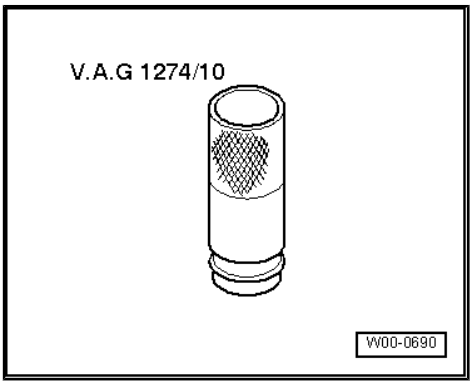

♦ Cooling system charge unit - VAS 6096-

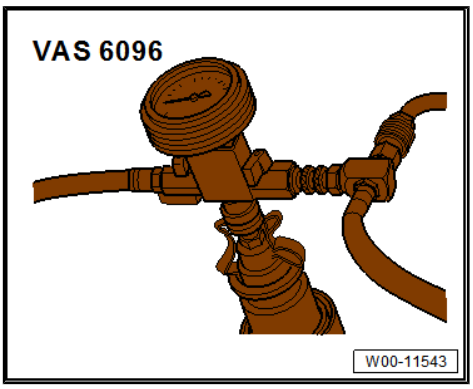

♦ Electric vacuum pump - VAS 6096/2-

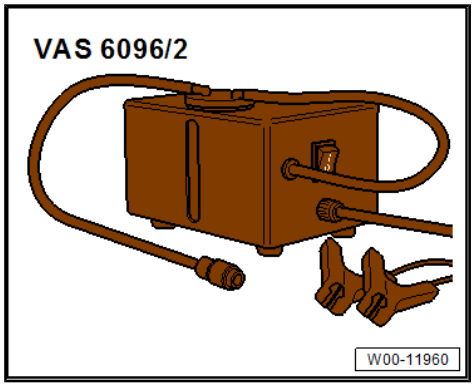

♦ Refractometer - T10007A-

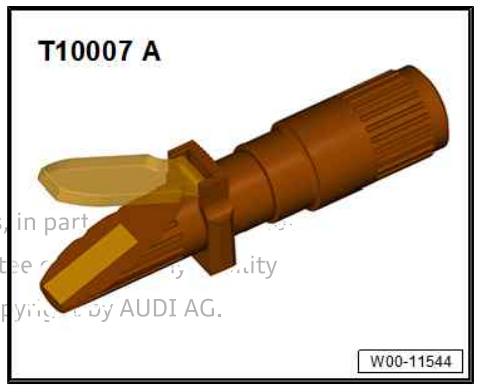

Protected by copyright. Copying for private or commercial purposes, in part
permitted unless authorised by AUDI AG. AUDI AG does not guarantee
with respect to the correctness of information in this document. Copyright by AUDI AG.

Draining coolant

– Drain coolant ⇒ 6-cylinder TDI engine, 3.0 ltr. 4-valve common rail; Rep. gr. 19 ; Cooling system/coolant; Draining and filling cooling system .

Preparing coolant mixture

> ⚠ **Caution**
>
> *To ensure optimal corrosion protection, only distilled water may be mixed with coolant additives.*

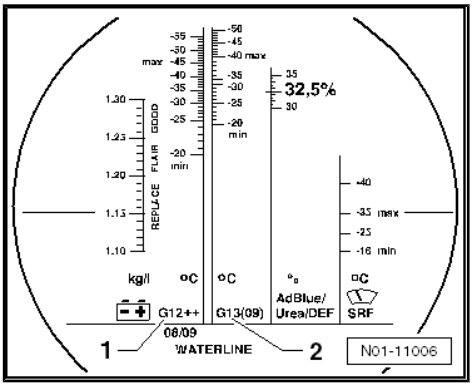

Note

- *The effectiveness of the coolant is greatly influenced by the quality of the water with which it is mixed. Because water may contain different substances depending on the country or even the region, the water quality to be used for cooling systems has been specified. Distilled water meets all the requirements and is therefore recommended for use when topping up or filling up with coolant.*
- *Use only coolant additives listed in the ⇒ Electronic parts catalogue (ETKA) . If you use other coolant additives, this can significantly impair in particular the corrosion protection effect. The resulting damage could lead to loss of coolant and consequently to serious engine damage.*
- *Coolant with the recommended mixture ratio prevents frost and corrosion damage and stops scaling. At the same time it raises the boiling point of the fluid in the system. For this reason the cooling system must be filled all year round with the correct coolant additive.*
- *Because of its high boiling point, the coolant improves engine reliability under heavy loads, particularly in countries with tropical climates.*
- *The refractometer - T10007A- MUST be used to determine the current level of frost protection.*
- *The mixture must guarantee frost protection down to at least -25 °C (in countries with arctic climate: down to -36 °C). The amount of antifreeze should only be increased if greater frost protection is required in very cold climates. This must only be down to -48 °C, however, as otherwise the cooling efficiency of the coolant is impaired.*
- *The coolant concentration must not be reduced by adding water even in warmer seasons and in warmer countries. Frost protection must be provided to at least -25 °C.*
- *Read off the level of frost protection on the scale for the relevant coolant additive.*
- *The temperature indicated on the refractometer - T10007A- corresponds to the temperature at which the first ice crystals can form in the coolant.*
- *Do not reuse coolant.*
- *Only use water/coolant additive as a lubricant for coolant hoses.*

Recommended mixture ratio for coolant

- Coolant (40 %) and distilled water (60 %) for frost protection to -25 °C
- Coolant (50 %) and distilled water (50 %) for frost protection to -36 °C
- Coolant ⇒ Electronic parts catalogue

Protected by copyright. Copying for private or commercial purposes, in part or in whole, is not permitted unless authorised by AUDI AG. AUDI AG does not guarantee or accept any liability with respect to the correctness of information in this document. Copyright by AUDI AG.

Protected by copyright. Copying for private or commercial purposes, in part or in whole, is not permitted unless authorised by AUDI AG. AUDI AG does not guarantee or accept any liability with respect to the correctness of information in this document. Copyright by AUDI AG.

Filling cooling system

- Ignition switched off.

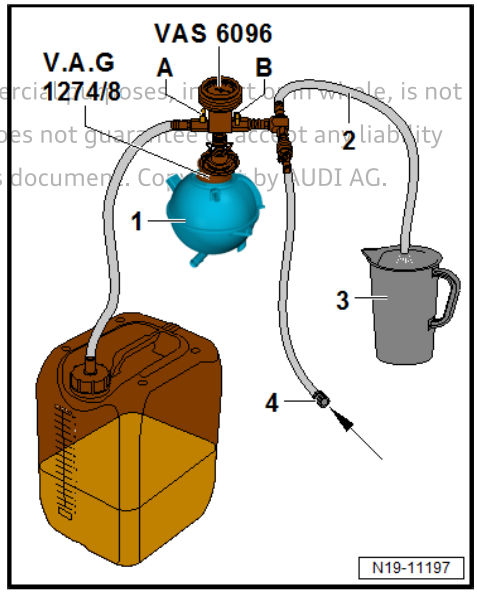

Note

Do not reuse coolant.

– Fill reservoir of cooling system charge unit -VAS 6096- with at least 15 litres of premixed coolant (according to recommended ratio).

– To simplify filling procedure, place filled reservoir on as high a surface as possible, e.g. on a workshop trolley or the engine and gearbox jack.

– Fit adapter for cooling system tester - V.A.G 1274/8- onto coolant expansion tank.

– Attach cooling system charge unit - VAS 6096- to adapter - V.A.G 1274/8- .

– Run vent hose -1- into a small container -2-.

Note

The vented air draws along a small amount of coolant, which should be collected.

– Close both valves -A- and -B- (turn lever at right angles to direction of flow).

– Connect hose -3- to compressed air supply.

- Pressure: 7 ... 10 bar.

– Open valve -B- by setting lever in direction of flow.

• The suction jet pump generates a partial vacuum in the cooling system; the needle on the gauge should move into the green zone.

– Also briefly open valve -A- (turn lever in direction of flow) so that hose on reservoir of -VAS 6096- can fill with coolant.

– Close valve -A- again.

– Leave valve -B- open for another 2 minutes.

• The suction jet pump continues to generate a partial vacuum in the cooling system; the needle on the gauge should remain in the green zone.

– Close valve -B-.

• The needle on the gauge should stop in the green zone. The vacuum level in the cooling system is then sufficient for subsequent filling.

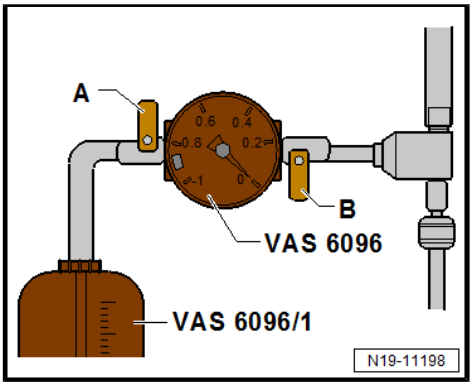

Note

♦ *If the needle does not reach the green zone, repeat the process.*

♦ *Check cooling system for leaks if the vacuum is not maintained.*

– Detach compressed air hose.

For high-voltage cooling circuit only

– Disconnect suction-jet pump and connect electric vacuum pump - VAS 6096/2- as shown in illustration.

– Connect electric vacuum pump - VAS 6096/2- to power supply.

– Switch on electric vacuum pump .

– Open valve -B- to increase the evacuation of the high-voltage cooling circuit.

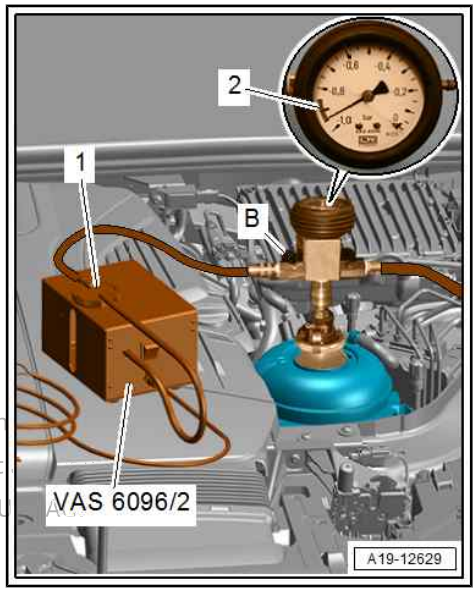

Note

Take care that reservoir -1- of electric vacuum pump does not become too full of coolant.

– The needle should be at the end of the green zone -2-.

– Close valve -B-.

Protected by copyright. Copying for private or commercial purposes, in part or in
permitted unless authorised by AUDI AG. AUDI AG does not guarantee or accept
with respect to the correctness of information in this document. Copyright by AU

All vehicles:

– Open valve -A-.

• The vacuum in the cooling system causes the coolant to be drawn out of the reservoir of -VAS 6096- ; the cooling system is then filled.

– Detach cooling system charge unit - VAS 6096- from adapter -V.A.G 1274/8- on coolant expansion tank.

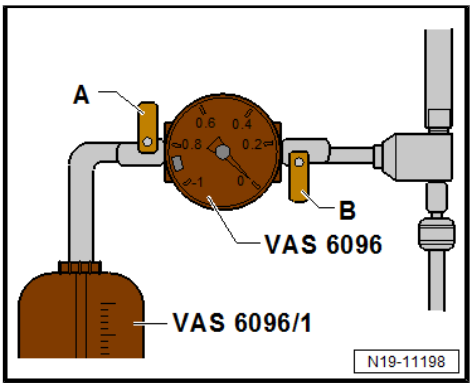

– Attach pipe -V.A.G 1274/10- onto adapter -V.A.G 1274/8- .
– Fill up with coolant until pipe for cooling system tester is filled. If required, add further coolant when performing bleeding procedure.

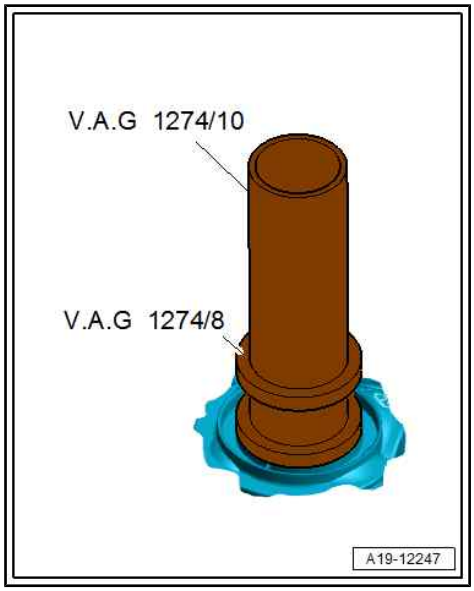

Bleeding cooling system and checking coolant level

⇒ 6-cylinder TDI engine, 3.0 ltr. 4-valve common rail; Rep. gr. 19 ; Cooling system/coolant; Draining and filling cooling system

Protected by copyright. Copying for private or commercial purposes, in part or in whole, is not permitted unless authorised by AUDI AG. AUDI AG does not guarantee or accept any liability with respect to the correctness of information in this document. Copyright by AUDI AG.

2 Coolant pump/thermostat assembly

⇒ “2.1 Exploded view - coolant pump”, page 183

⇒ “2.2 Exploded view - electric coolant pump”, page 184

⇒ “2.3 Exploded view - thermostat”, page 185

⇒ “2.4 Exploded view - coolant temperature senders”, page 187

⇒ “2.5 Removing and installing electric coolant pump”, page 187

⇒ “2.6 Removing and installing coolant pump”, page 187

⇒ “2.7 Removing and installing thermostat housing”, page 189

⇒ “2.8 Removing and installing map-controlled engine cooling system thermostat F265 ”, page 190

⇒ “2.9 Removing and installing coolant temperature sender G62 ”, page 191

⇒ “2.10 Removing and installing temperature sender for engine temperature regulation G694 ”, page 192

⇒ “2.11 Removing and installing coolant temperature sender 2 G802 ”, page 193

⇒ “2.12 Removing and installing coolant valves”, page 194

Reproduction of this copyright protected or confidential purposes, in part or in whole, is not permitted unless authorised by AUDI AG. AUDI AG does not guarantee or accept any liability with respect to the correctness of information in this document. Copyright by AUDI AG.

2.1 Exploded view - coolant pump

1 - Bolt

- ❑ Aluminium or steel bolts, depending on version
- ❑ Renew aluminium bolts after removing
- ❑ Tightening torque and sequence ⇒ page 184

2 - Bolt

- ❑ 23 Nm

3 - Poly V-belt pulley for coolant pump

- ❑ Installation position: marking "vorne" (front) faces in direction of travel

4 - Coolant pump

- ❑ It is only permissible to re-install the coolant pump if the gasket is still secured to the housing in all areas; check this with your hand
- ❑ Removing and installing ⇒ page 187

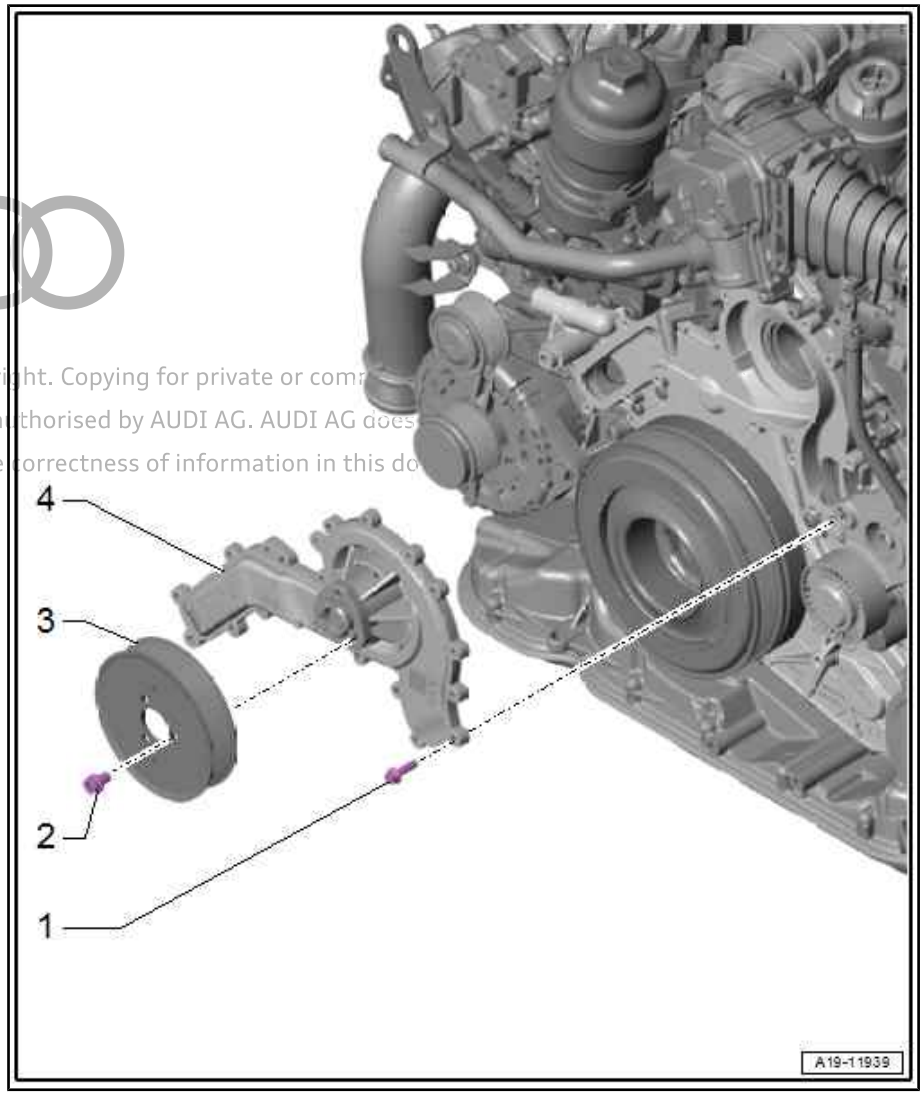

Protected by copyright. Copying for private or commercial purposes, in part or in whole, is not permitted unless authorised by AUDI AG. AUDI AG does not guarantee or accept any liability with respect to the correctness of information in this document.

Coolant pump - tightening torque and sequence

A - Steel bolts:

– Tighten steel bolts in the sequence shown:

Stage	Bolts	Tightening torque
1.	-1 … 17-	9 Nm

B - Aluminium bolts:

– Tighten aluminium bolts in stages in the sequence shown:

Stage	Bolts	Tightening torque/angle specification
1.	-1 … 17-	3 Nm
2.	-1 … 17-	Turn 90° further

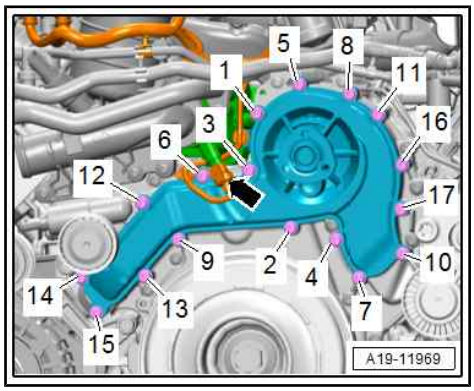

2.2 Exploded view - electric coolant pump

All components are described in ⇒ 6-cylinder TDI engine, 3.0 ltr. 4-valve common rail; Rep. gr. 19 ; Coolant pump/thermostat assembly; Exploded view - electric coolant pump .

2.3 Exploded view - thermostat

Map-controlled engine cooling system thermostat - F265-

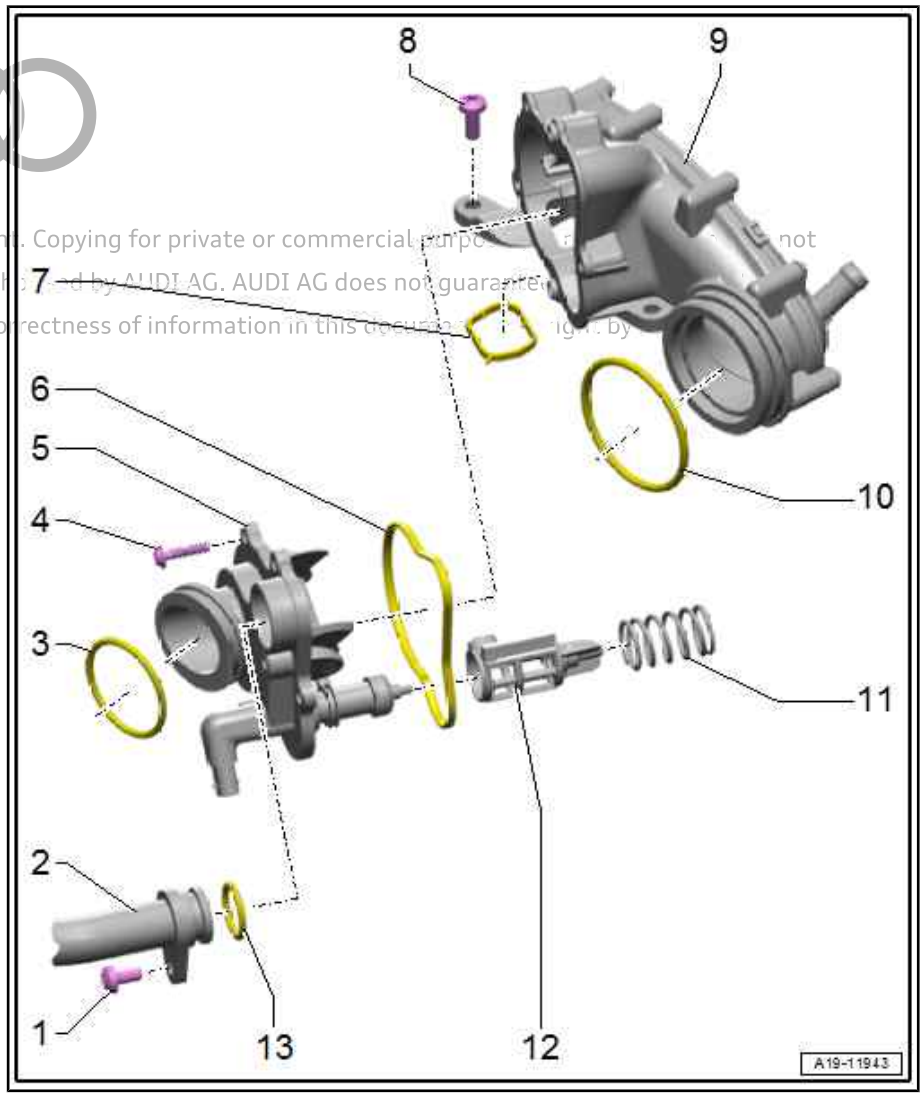

Copyright. Copying for private or commercial purposes, in part or in whole, is not permitted unless authorized by AUDI AG. AUDI AG does not guarantee or assume any liability with respect to the correctness of information in this document. Copyright by AUDI AG.

1 - Bolt

- ❑ Tightening torque ⇒ 6-cylinder TDI engine, 3.0 ltr. 4-valve common rail; Rep. gr. 19 ; Coolant pipes; Exploded view - coolant pipes

2 - Coolant pipe (front)

3 - O-ring

- ❑ Renew after removing

4 - Bolt

- ❑ Thread-forming
- ❑ Fit and screw in bolt by hand so that it is screwed into old thread. Then tighten bolt to torque
- ❑ 5.5 Nm

5 - Map-controlled engine cooling system thermostat - F265-

- ❑ Removing and installing ⇒ page 190

6 - Seal

- ❑ Renew after removing

7 - Seal

- ❑ Renew after removing

8 - Bolt

- ❑ 9 Nm

9 - Thermostat housing

- ❑ Removing and installing ⇒ page 189

10 - O-ring

- ❑ Renew after removing

11 - Compression spring

- ❑ Removing and installing ⇒ “2.8 Removing and installing map-controlled engine cooling system thermostat F265 ”, page 190

12 - Valve

- ❑ For coolant flap
- ❑ Removing and installing ⇒ “2.8 Removing and installing map-controlled engine cooling system thermostat F265 ”, page 190

13 - O-ring

- ❑ Renew after removing

Coolant shut-off valve

1 - Seal
- ❑ Renew after removing

2 - Bolt
- ❑ 9 Nm

3 - Coolant connection

4 - Coolant hose

5 - Bolt
- ❑ 9 Nm

6 - Coolant shut-off valve
- ❑ Removing and installing ⇒ page 194

7 - Gasket
- ❑ Renew after removing

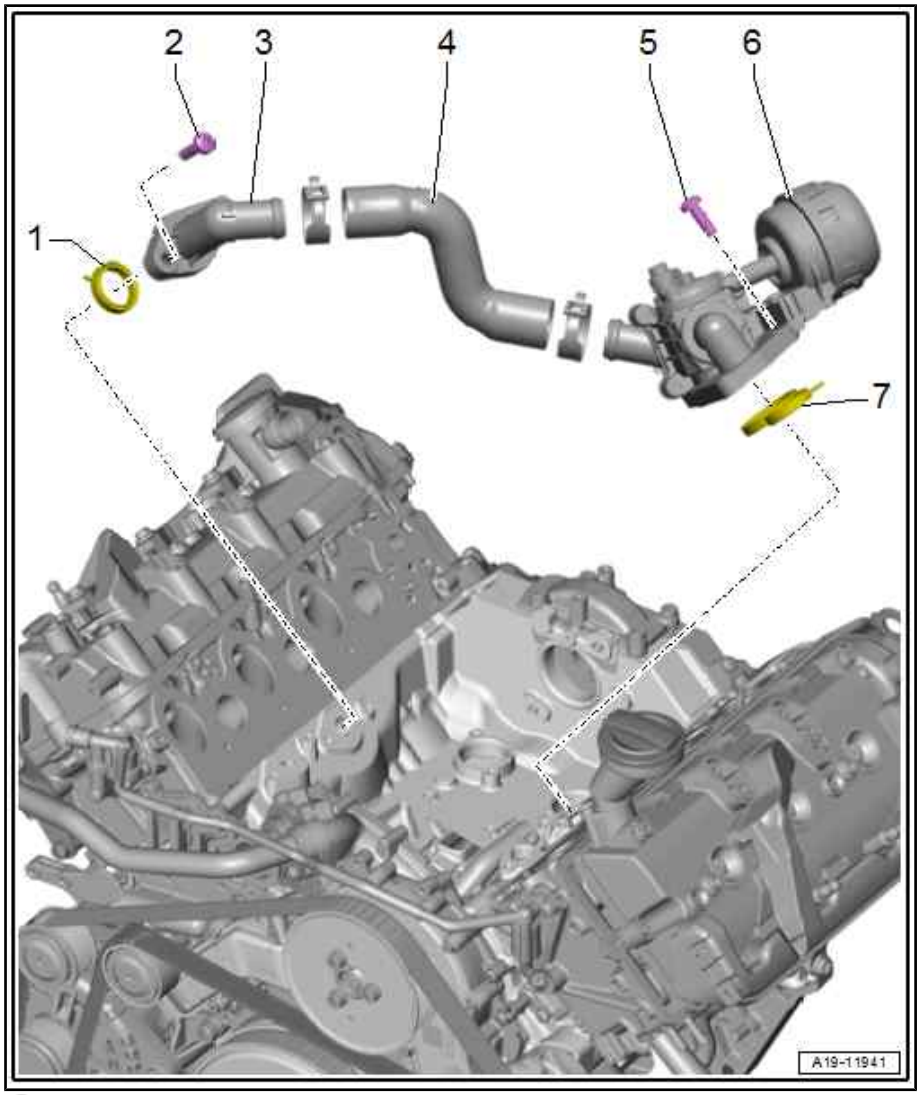

Protected by copyright. Copying for private or commercial purposes, in part or in whole, is not permitted unless authorised by AUDI AG. AUDI AG does not guarantee or accept any liability with respect to the correctness of information in this document. Copyright by AUDI AG.

2.4 Exploded view - coolant temperature senders

1 - Bolt
- ❑ 9 Nm

2 - Coolant temperature sender - G62-
- ❑ Removing and installing ⇒ page 191

3 - O-rings
- ❑ Renew after removing

4 - O-rings
- ❑ Renew after removing

5 - Coolant temperature sender 2 - G802-
- ❑ Removing and installing ⇒ page 193

6 - Bolt
- ❑ 9 Nm

7 - O-rings
- ❑ Renew after removing

8 - Temperature sender for engine temperature regulation - G694-
- ❑ Removing and installing ⇒ page 192

9 - Bolt
- ❑ 9 Nm

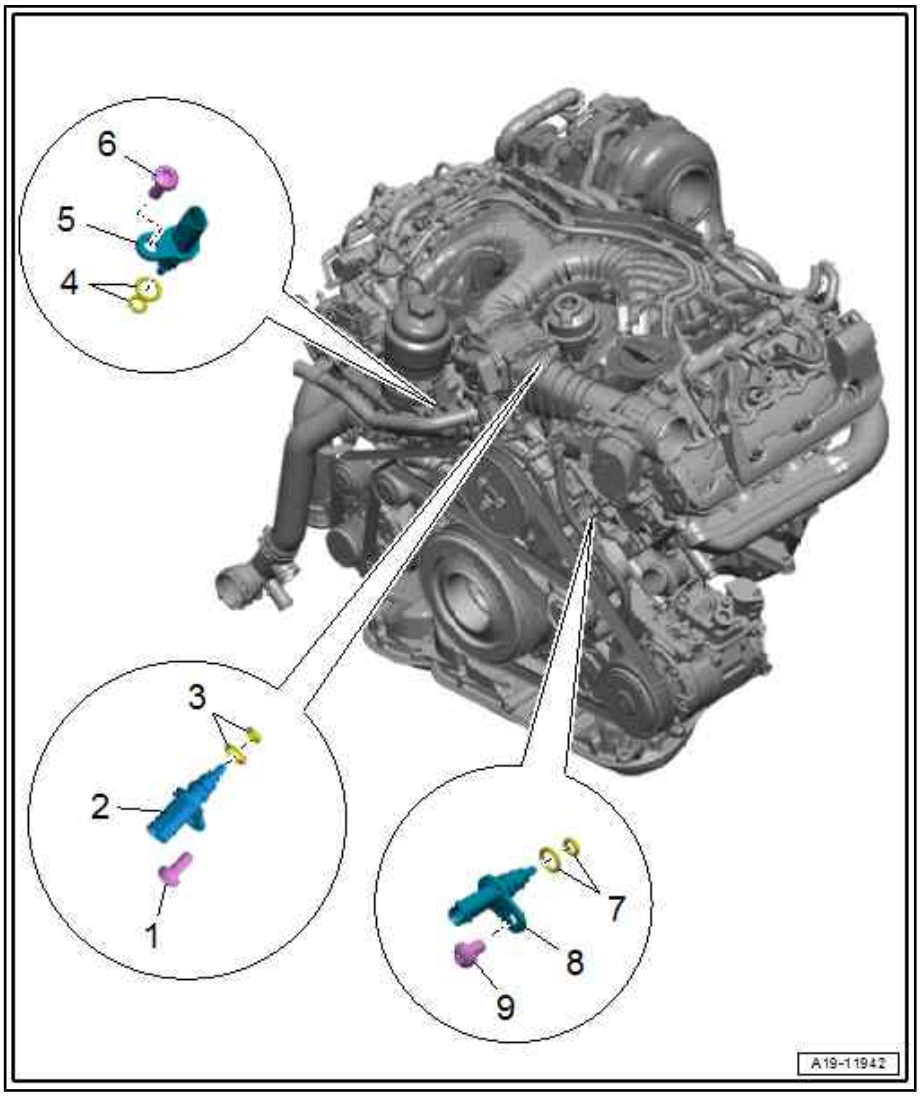

2.5 Removing and installing electric coolant pump

All procedures are described in ⇒ 6-cylinder TDI engine, 3.0 ltr. 4-valve common rail; Rep. gr. 19 ; Coolant pump/thermostat assembly; Removing and installing electric coolant pump .

2.6 Removing and installing coolant pump

Special tools and workshop equipment required

Protected by copyright. Copying for private or commercial purposes, in part or in whole, is not permitted unless authorised by AUDI AG. AUDI AG does not guarantee or accept any liability with respect to the correctness of information in this document. Copyright by AUDI AG.

- Pin wrench - 3212-

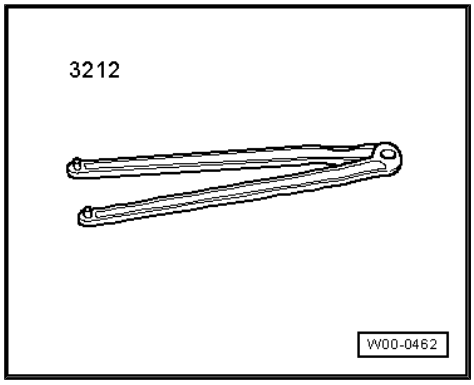

- Coolant collecting system - VAS 5014- or drip tray for workshop hoist - VAS 6208-

Protected by copyright. Copying for private or commercial purposes, in part is not permitted unless authorised by AUDI AG. AUDI AG does not guarantee or accept any liability with respect to the correctness of information in this document. Copyright by AUDI AG.

- Socket Torx T30 - T10405-

Removing

Preparatory work may be necessary depending on model ⇒ 6-cylinder TDI engine, 3.0 ltr. 4-valve common rail; Rep. gr. 19 ; Coolant pump/thermostat assembly; Removing and installing coolant pump .

– Drain coolant ⇒ page 177 .

– Remove poly V-belt ⇒ page 19 .

– Remove bolts for coolant pump pulley -arrows- (counterhold with pin wrench - 3212-).

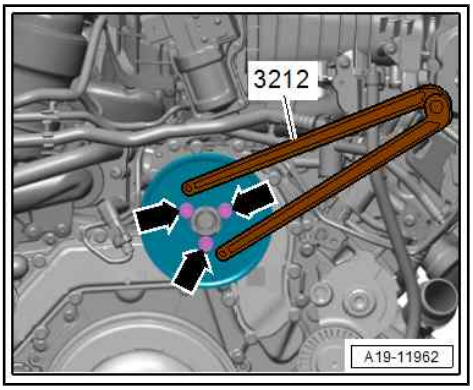

– Unplug electrical connector -arrow- for map-controlled engine cooling thermostat - F265- and move wiring clear.
– Place collector tank from coolant collecting system -VAS 5014- or drip tray for workshop hoist - VAS 6208- underneath.
– Loosen bolts in the sequence -17 ... 1-.
– Remove bolts and detach coolant pump.

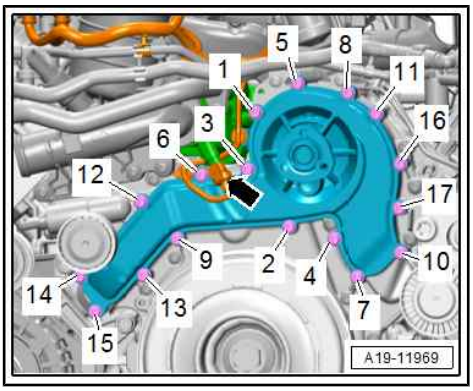

Note

Remove tensioner if coolant pump cannot be removed.

Installing

Installation is carried out in reverse order; note the following:

– Clean sealing surface.
– Install poly V-belt ⇒ page 19 .

Note

Do not reuse coolant.

– Fill up with coolant ⇒ page 180 .

Additional work depending on model ⇒ 6-cylinder TDI engine, 3.0 ltr. 4-valve common rail; Rep. gr. 19 ; Coolant pump/thermostat assembly; Removing and installing coolant pump .

Tightening torques

◆ ⇒ Fig. ""Coolant pump - tightening torque and sequence"" , page 184
◆ ⇒ "2.1 Exploded view - coolant pump", page 183

Protected by copyright. Copying for private or commercial purposes, in part or in whole, is not permitted unless authorised by AUDI AG. AUDI AG does not guarantee or accept any liability with respect to the correctness of information in this document. Copyright by AUDI AG.

2.7 Removing and installing thermostat housing

Removing

– Drain coolant ⇒ page 177 .
– Remove intake manifold (top section) ⇒ page 217 .
– Remove exhaust gas recirculation cooler ⇒ page 291 .
– Remove coolant pipe (top) ⇒ 6-cylinder TDI engine, 3.0 ltr. 4-valve common rail; Rep. gr. 19 ; Coolant pipes; Removing and installing coolant pipes .

– Remove oil filter housing ⇒ page 171 .
– Remove coolant shut-off valve ⇒ page 194 .
– Remove engine oil cooler ⇒ page 165 .
– Unplug electrical connector -arrow- for map-controlled engine cooling system thermostat - F265- .

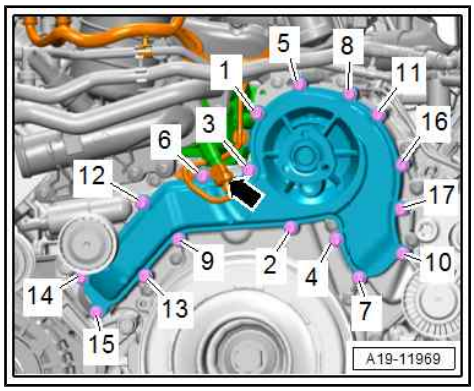

– Unscrew bolts -arrows-, pull thermostat housing off towards rear.

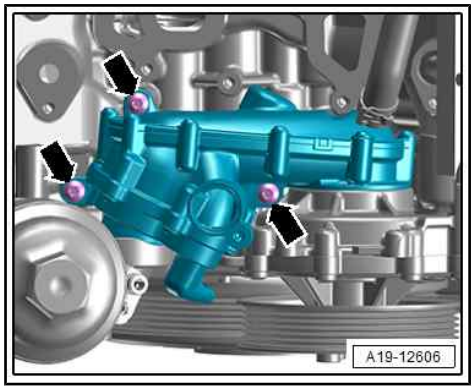

Installing

Installation is carried out in reverse order; note the following:

Note

- *Renew gasket after removing.*
- *Secure all hose connections with correct type of hose clips (as original equipment) ⇒ Electronic parts catalogue .*

– Fill up with coolant ⇒ page 180 .
– Check oil level ⇒ page 156 .

Tightening torques

- ⇒ “2.3 Exploded view - thermostat”, page 185
- ⇒ Fig. ““Engine oil cooler - tightening torque and sequence”“ , page 165
- ⇒ “5.1 Exploded view - exhaust gas recirculation system”, page 286
- ⇒ “3.1 Exploded view - oil filter”, page 169
- ⇒ “4.1 Exploded view - intake manifold”, page 214

2.8 Removing and installing map-controlled engine cooling system thermostat - F265-

Removing

– Remove oil filter housing ⇒ page 171 .
– Remove coolant pump ⇒ page 187 .

Protected by copyright. Copying for private or commercial purposes, in part or in whole, is not permitted unless authorised by AUDI AG. AUDI AG does not guarantee or accept any liability with respect to the correctness of information in this document. Copyright by AUDI AG.

– Remove bolts -arrows- and detach map-controlled engine cooling system thermostat - F265- -item 1-.

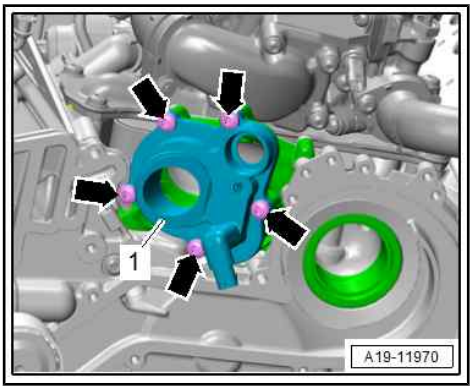

Installing

Installation is carried out in reverse order; note the following:

Note

Renew seal and O-ring after removal.

– Install coolant pump ⇒ page 187 .

– Install oil filter housing ⇒ page 171 .

Tightening torques

♦ ⇒ “2.1 Exploded view - coolant pump”, page 183

2.9 Removing and installing coolant temperature sender - G62-

Procedure

• Engine cold.

– Preparatory work may be necessary depending on model ⇒ 6-cylinder TDI engine, 3.0 ltr. 4-valve common rail; Rep. gr. 19 ; Coolant pump/thermostat assembly; Removing and installing coolant temperature sender - G62- .

– Release fastener -arrow- (if necessary) and open filler cap -1- on coolant expansion tank.

– Remove intake manifold flap motor - V157- ⇒ page 220 .

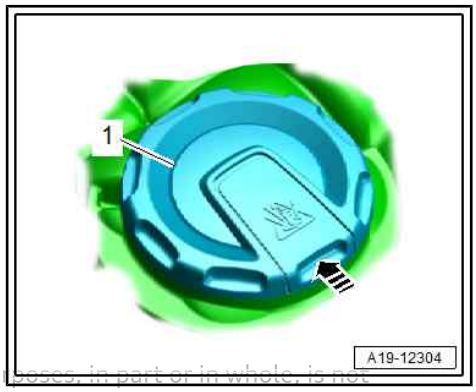

Protected by copyright. Copying for private or commercial purposes, in part or in whole, is not permitted unless authorised by AUDI AG. AUDI AG does not guarantee or accept any liability with respect to the correctness of information in this document. Copyright by AUDI AG.

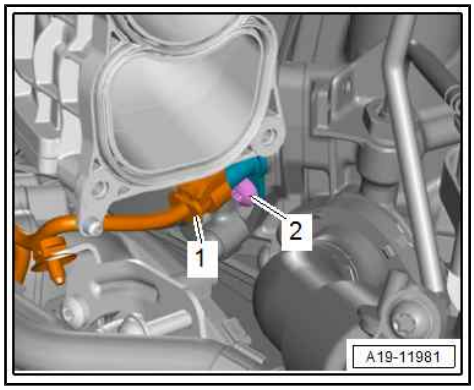

– Unplug electrical connector -1-.
– Unscrew bolt -2- and pull off coolant temperature sender - G62- .
– Renew O-rings after removing.
– To avoid loss of coolant, insert new coolant temperature sender - G62- immediately.

Remaining installation steps are carried out in reverse sequence; note the following:

– Install intake manifold flap motor - V157- ⇒ page 220 .
– Check coolant level ⇒ 6-cylinder TDI engine, 3.0 ltr. 4-valve common rail; Rep. gr. 19 ; Cooling system/coolant; Draining and filling cooling system .
– Additional work depending on model ⇒ 6-cylinder TDI engine, 3.0 ltr. 4-valve common rail; Rep. gr. 19 ; Coolant pump/thermostat assembly; Removing and installing coolant temperature sender - G62- .

Protected by copyright. Copying for private or commercial purposes, in part or in whole, is not permitted unless authorised by AUDI AG. AUDI AG does not guarantee or accept any liability with respect to the correctness of information in this document. Copyright by AUDI AG.

Tightening torques

♦ ⇒ “5.1 Exploded view - exhaust gas recirculation system”, page 286

2.10 Removing and installing temperature sender for engine temperature regulation - G694-

Procedure

• Engine cold.

Preparatory work may be necessary depending on model ⇒ 6-cylinder TDI engine, 3.0 ltr. 4-valve common rail; Rep. gr. 19 ; Coolant pump/thermostat assembly; Removing and installing temperature sender for engine temperature regulation - G694- .

– Release fastener -arrow- (if necessary) and open filler cap -1- on coolant expansion tank.

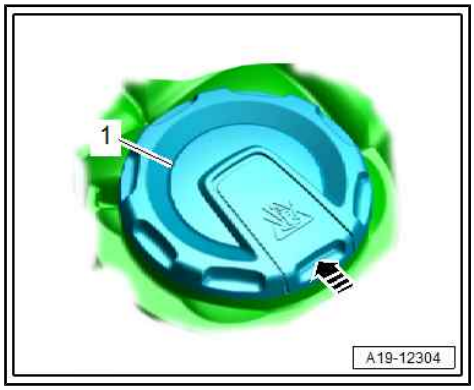

– Unplug electrical connector -1-.
– Place a cloth underneath to catch escaping coolant.
– Unscrew bolt -2- and detach temperature sender for engine temperature regulation - G694- .
– Renew O-rings after removing.
– To avoid loss of coolant, insert new temperature sender for engine temperature regulation - G694- immediately.

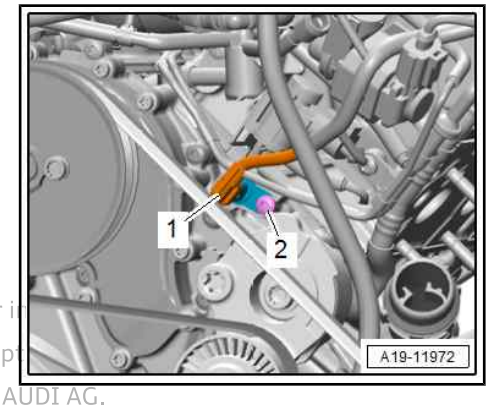

Remaining installation steps are carried out in reverse sequence; note the following:

– Check coolant level ⇒ 6-cylinder TDI engine, 3.0 ltr. 4-valve common rail; Rep. gr. 19 ; Cooling system/coolant; Draining and filling cooling system .

Protected by copyright. Copying for private or commercial purposes, in part or in
permitted unless authorised by AUDI AG. AUDI AG does not guarantee or accept
with respect to the correctness of information in this document. Copyright by AUDI AG.

Additional work depending on model ⇒ 6-cylinder TDI engine, 3.0 ltr. 4-valve common rail; Rep. gr. 19 ; Coolant pump/thermostat assembly; Removing and installing temperature sender for engine temperature regulation - G694- .

Tightening torques

♦ ⇒ “2.4 Exploded view - coolant temperature senders”, page 187

2.11 Removing and installing coolant temperature sender 2 - G802-

Procedure

• Engine cold.

Preparatory work may be necessary depending on model ⇒ 6-cylinder TDI engine, 3.0 ltr. 4-valve common rail; Rep. gr. 19 ; Coolant pump/thermostat assembly ; Removing and installing coolant temperature sender 2 - G802- .

– Release fastener -arrow- (if necessary) and open filler cap -1- on coolant expansion tank.

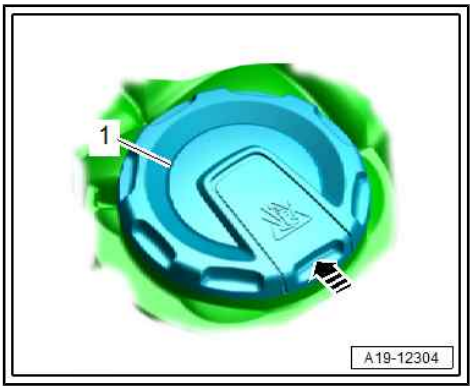

– Depending on equipment version: Release fastener -arrow-, detach exhaust gas recirculation cooling bypass valve 2 - N387- -item 2- from bracket and move it to one side.

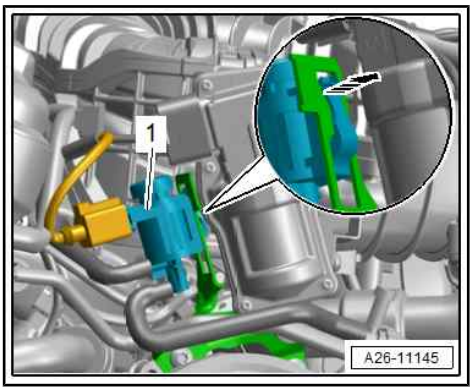

– Unplug electrical connector -2-.
– Unscrew bolt -1- and pull off coolant temperature sender 2 - G802- .
– Renew O-rings after removing.
– To avoid loss of coolant, insert new coolant temperature sender 2 - G802- immediately.

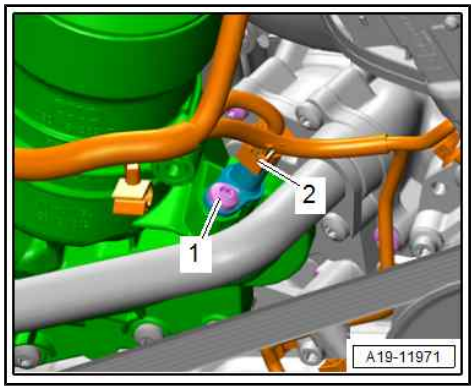

Remaining installation steps are carried out in reverse sequence; note the following:

– Check coolant level ⇒ 6-cylinder TDI engine, 3.0 ltr. 4-valve common rail; Rep. gr. 19 ; Cooling system/coolant; Draining and filling cooling system .

Additional work depending on model ⇒ 6-cylinder TDI engine, 3.0 ltr. 4-valve common rail; Rep. gr. 19 ; Coolant pump/thermostat assembly ; Removing and installing coolant temperature sender 2 - G802- .

Tightening torques

♦ ⇒ “2.4 Exploded view - coolant temperature senders”, page 187

2.12 Removing and installing coolant valves

⇒ “2.12.1 Removing and installing coolant shut-off valve”, page 194

⇒ “2.12.2 Removing and installing electric coolant valves”, page 195

2.12.1 Removing and installing coolant shut-off valve

Special tools and workshop equipment required

♦ Hose clip pliers - VAS 6362-

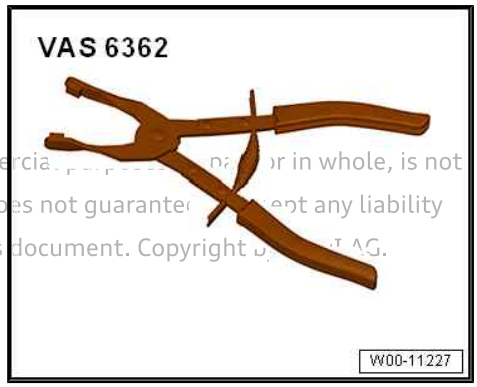

Protected by copyright. Copying for private or commercial purposes, in part or in whole, is not permitted unless authorised by AUDI AG. AUDI AG does not guarantee or assume any liability with respect to the correctness of information in this document. Copyright by AUDI AG.

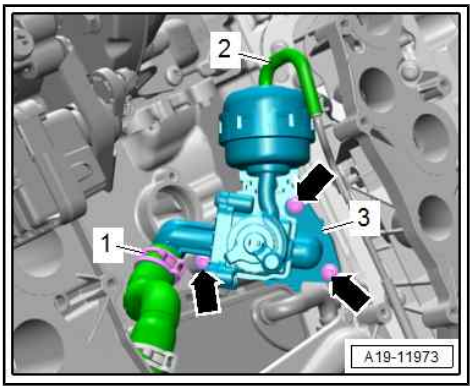

Removing

– Versions without auxiliary cooler: Remove exhaust gas recirculation cooler ⇒ page 291 .

– Versions with auxiliary cooler: Remove auxiliary cooler for exhaust gas recirculation ⇒ page 295 .

– Disconnect vacuum hose -2-.

– Unscrew bolts -arrows- and detach shut-off valve -3-.

– Release hose clip -1- and detach coolant hose.

Installing

Installation is carried out in reverse order; note the following:

Note

♦ *Renew gasket after removing.*

♦ *Secure all hose connections with correct type of hose clips (as original equipment) ⇒ Electronic parts catalogue .*

– Install exhaust gas recirculation cooler ⇒ page 291 .

Tightening torques

♦ ⇒ “2.3 Exploded view - thermostat”, page 185

2.12.2 Removing and installing electric coolant valves

All procedures are described in ⇒ 6-cylinder TDI engine, 3.0 ltr. 4-valve common rail; Rep. gr. 19 ; Coolant pump/thermostat assembly; Removing and installing coolant valves .

Protected by copyright. Copying for private or commercial purposes, in part or in whole, is not permitted unless authorised by AUDI AG. AUDI AG does not guarantee or accept any liability with respect to the correctness of information in this document. Copyright by AUDI AG.

3 Coolant pipes

All procedures and components are described in ⇒ 6-cylinder TDI engine, 3.0 ltr. 4-valve common rail; Rep. gr. 19 ; Coolant pipes .

Protected by copyright. Copying for private or commercial purposes, in part or in whole, is not permitted unless authorised by AUDI AG. AUDI AG does not guarantee or accept any liability with respect to the correctness of information in this document. Copyright by AUDI AG.

4 Radiator/radiator fans

All procedures and components are described in ⇒ 6-cylinder TDI engine, 3.0 ltr. 4-valve common rail; Rep. gr. 19 ; Radiator/radiator fans .

Protected by copyright. Copying for private or commercial purposes, in part or in whole, is not permitted unless authorised by AUDI AG. AUDI AG does not guarantee or accept any liability with respect to the correctness of information in this document. Copyright by AUDI AG.

21 – Turbocharging/supercharging

Protected by copyright. Copying for private or commercial purposes, in part or in whole, is not permitted unless authorised by AUDI AG. AUDI AG does not guarantee or accept any liability with respect to the correctness of information in this document. Copyright by AUDI AG.

1 Turbocharger

⇒ "1.1 Exploded view - turbocharger", page 198
⇒ "1.2 Removing and installing turbocharger", page 201

1.1 Exploded view - turbocharger

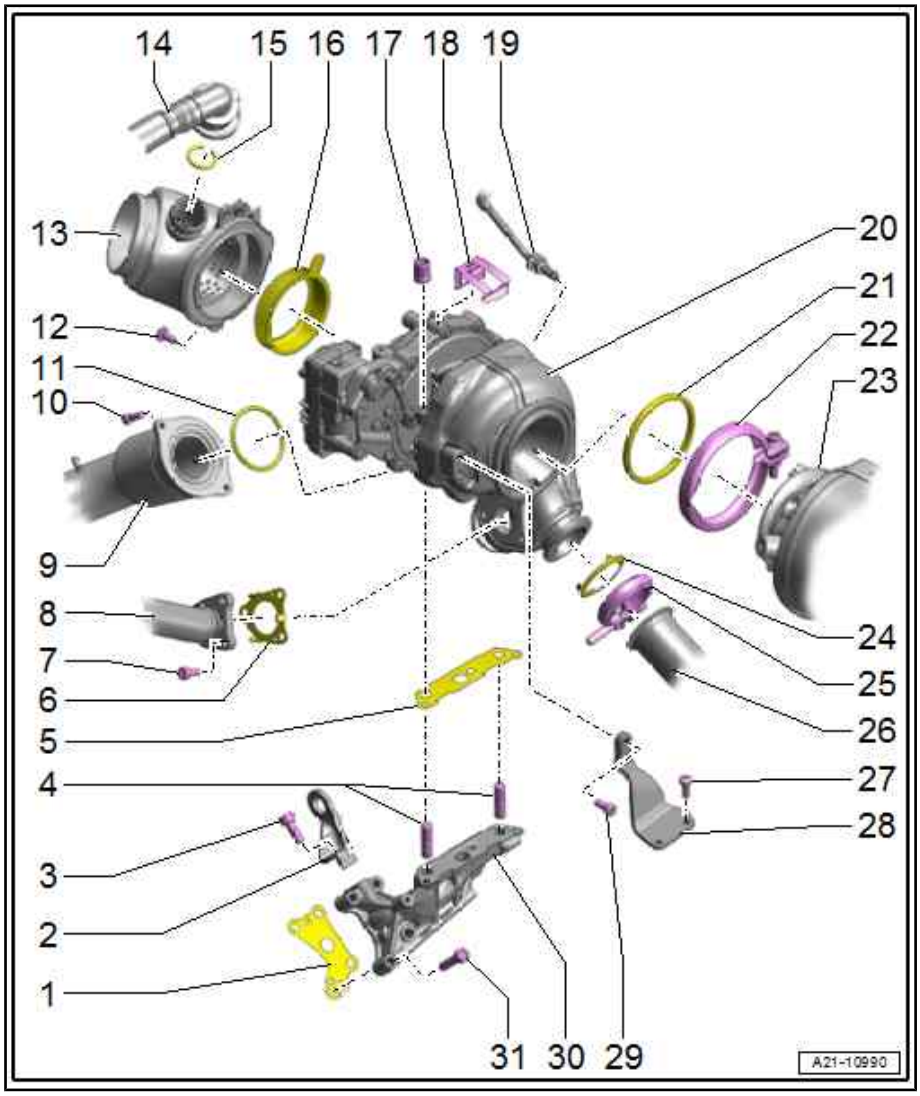

1 - Gasket
- ❑ Renew after removing

2 - Engine lifting eye
- ❑ Not applicable to more recent versions

3 - Bolt
- ❑ For version with engine lifting eye
- ❑ 23 Nm

4 - Studs
- ❑ Different versions available ⇒ Electronic parts catalogue
- ❑ Must always be renewed if nuts are loosened
- ❑ Tightening torque and sequence ⇒ page 200

5 - Gasket
- ❑ Renew after removing

6 - Gasket
- ❑ Renew after removing

7 - Bolt
- ❑ Renew after removing
- ❑ 5 Nm +90°

8 - Pipe
- ❑ To exhaust gas recirculation cooler

9 - Air pipe

10 - Bolt
- ❑ Only tighten to final torque after air pipe -item 9- has been secured to bracket for alternator
- ❑ 9 Nm

11 - O-ring
- ❑ Renew after removing

12 - Bolt
- ❑ 9 Nm
- ❑ Different securing methods - version 1 ⇒ page 115
- ❑ Different securing methods - version 2 ⇒ page 116

13 - Connection
- ❑ For air hose

- ❑ From air mass meter - G70- to turbocharger
- ❑ Must be free of oil and grease when installing
- ❑ Different securing methods - version 1 ⇒ page 115
- ❑ Different securing methods - version 2 ⇒ page 116

14 - Hose

- ❑ For crankcase breather

15 - O-ring

- ❑ Renew after removing

16 - Seal

- ❑ Renew after removing

17 - Nut

- ❑ Different versions available ⇒ Electronic parts catalogue
- ❑ Renew after removing
- ❑ Coat thread with high-temperature paste ⇒ Electronic parts catalogue
- ❑ Tightening torque and sequence ⇒ page 200

18 - Retaining clip

19 - Exhaust gas temperature sender 1 - G235-

- ❑ Exploded view ⇒ page 276

20 - Turbocharger

Protected by copyright. Copying for private or commercial purposes, in part or in whole, is not permitted unless authorised by AUDI AG. AUDI AG does not guarantee or accept any liability with respect to the suitability of information or data for any purpose. Copyright by AUDI AG.

- ❑ With turbocharger 1 control unit - J724-
- ❑ Performing adaptions required after renewing a component (using ⇒ Vehicle diagnostic tester) ⇒ "3.10 Performing adaptions after renewing a component", page 11
- ❑ Removing and installing ⇒ page 201

21 - Seal

- ❑ Renew after removing

22 - Screw-type clip

- ❑ Renew after removing
- ❑ Tightening torque ⇒ 6-cylinder TDI engine, 3.0 ltr. 4-valve common rail; Rep. gr. 26 ; Emission control system; Exploded view - emission control system

23 - Emission control module

- ❑ Exploded view ⇒ 6-cylinder TDI engine, 3.0 ltr. 4-valve common rail; Rep. gr. 26 ; Emission control system; Exploded view - emission control system

24 - Gasket

- ❑ Renew after removing

25 - Screw-type clip

- ❑ Renew after removing
- ❑ Mark position of screw-type clip prior to removal
- ❑ 8 Nm

26 - Exhaust manifold

- ❑ Exploded view ⇒ page 300

27 - Bolt

- ❑ Tightening torque and sequence ⇒ page 201

28 - Bracket

- ❑ For turbocharger

29 - Bolt

- ❑ Tightening torque and sequence ⇒ page 200

30 - Bracket

- ❑ For turbocharger

31 - Bolt

- ❑ Tightening torque and sequence ⇒ page 200

Turbocharger - tightening torque and sequence

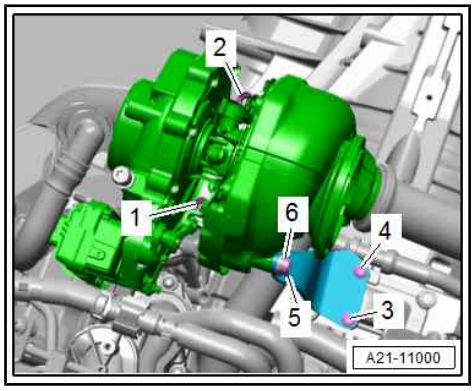

Caution

Risk of damage to bolted connections.

- *Please note that there are separate instructions for M8 and M10 studs.*

Note

Renew studs and nuts after removing.

– Tighten bolts and nuts in stages in the sequence shown:

Turbocharger with M8 studs:

Stage	Bolts/nuts	Torque for tightening/tightening further
1.	Studs for nuts -1, 2-	10 Nm
2.	-1, 2-	Screw in by hand until contact is made
3.	-1, 2-	8 Nm
4.	-1, 2-	Re-tighten to 8 Nm [1)]
5.	-1, 2-	Turn 90° further
6.	-3, 4, 5, 6-	Screw in by hand until contact is made
7.	-3, 4-	9 Nm
8.	-5, 6-	9 Nm

- [1)] Final tightening to same tightening torque allows for settling of gasket.

Turbocharger with M10 studs:

Stage	Bolts/nuts	Torque for tightening/tightening further
1.	Studs for nuts -1, 2-	14 Nm
2.	-1, 2-	Screw in by hand until contact is made
3.	-1, 2-	12 Nm
4.	-1, 2-	50 Nm
5.	-1, 2-	Turn 90° further
6.	-3, 4, 5, 6-	Screw in by hand until contact is made
7.	-3, 4-	9 Nm
8.	-5, 6-	9 Nm

Protected by copyright. Copying for private or commercial purposes, in part or in whole, is not permitted unless authorised by AUDI AG. AUDI AG does not guarantee or accept any liability with respect to the correctness of information in this document. Copyright by AUDI AG.

Copyright by AUDI AG. Copying for private or commercial purposes, in part or in whole, is not permitted unless authorised by AUDI AG. AUDI AG does not guarantee or assume any liability with respect to the correctness of information in this document.

Bracket -1- for turbocharger - tightening torque

– Tighten bolts in stages as follows:

Stage	Bolts	Tightening torque
1.	-arrows-	15 Nm
2.	-arrows-	28 Nm (If insert tool, XZN 10 - V.A.G 1331/15- is used, set torque wrench to 25 Nm)

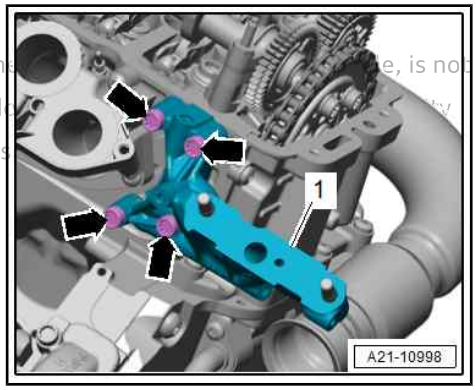

1.2 Removing and installing turbocharger

Special tools and workshop equipment required

- Vehicle diagnostic tester
- Hose clamps, up to 25 mm - 3094-

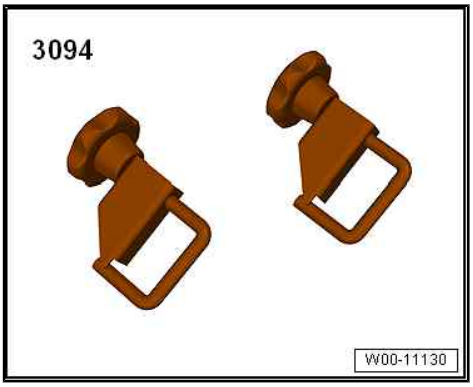

- Engine bung set - VAS 6122-

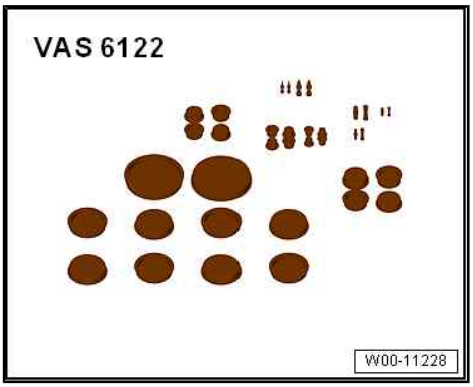

Removing

Caution

If the turbocharger has suffered mechanical damage (e.g. damaged compressor wheel), it is not sufficient merely to fit a new turbocharger. The following work must be performed in order to avoid further damage:

- *Check air cleaner housing, air filter element and air hoses for dirt and foreign particles.*
- *Mechanical faults on the turbocharger can be caused by foreign matter from the exhaust manifold.*
- *Check the entire charge air system (including the charge air cooler) for foreign matter.*
- *If foreign matter is found in the charge air system, clean all relevant ducts and hoses and renew charge air cooler if necessary.*

Risk of malfunctions caused by dirt.

- *Observe rules for cleanliness* *⇒ page 7* *.*

Preparatory work may be necessary depending on model ⇒ 6-cylinder TDI engine, 3.0 ltr. 4-valve common rail (EA 897 Gen. I); Rep. gr. 21 ; Turbocharger .

– Select `Final control diagnosis` in `01-Engine electronics` ⇒ Vehicle diagnostic tester.

– Unplug electrical connector -arrow- as soon as turbocharger 1 control unit - J724- is in closed position (held 10 seconds). This will cause an entry to be stored in the event memory of the engine control unit.

• The de-energised turbocharger 1 control unit - J724- remains in this position, allowing access to the bolts for the turbocharger.

– Remove emission control module ⇒ 6-cylinder TDI engine, 3.0 ltr. 4-valve common rail; Rep. gr. 26 ; Emission control system; Removing and installing emission control module .

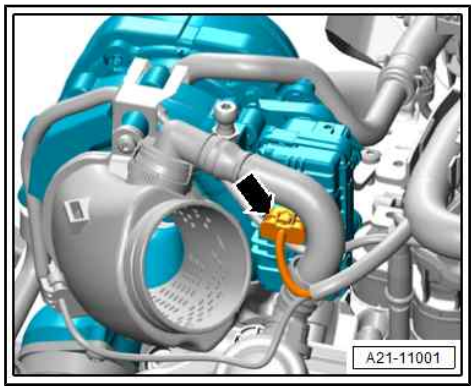

– Press release tabs on both sides and disconnect crankcase breather hose -2- from intake connecting pipe -1-.

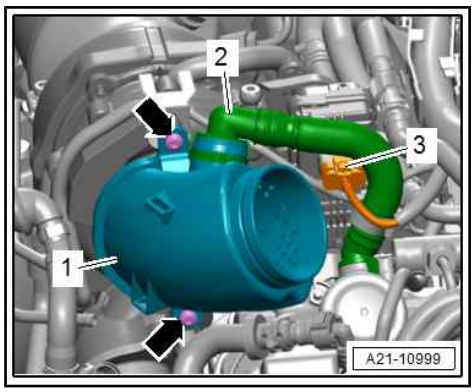

Protected by copyright. Copying for private or commercial purposes, in part or in whole, is not permitted unless authorised by AUDI AG. AUDI AG does not guarantee or accept any liability with respect to the correctness of information in this document. Copyright by AUDI AG.

– Remove bolts -1- and pull air pipe -2- off turbocharger (leave in installation position). (Different versions.)

3, 4 - Ignore

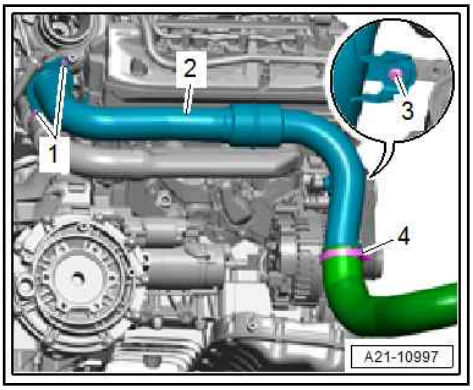

– Remove exhaust gas temperature sender 1 - G235- -item 1-.

2 - Ignore

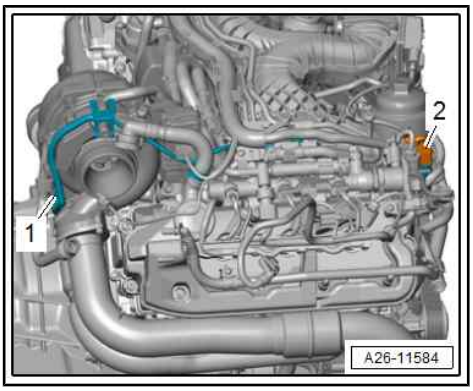

– If fitted, unscrew bolts -arrows- and detach heat shield -1-.

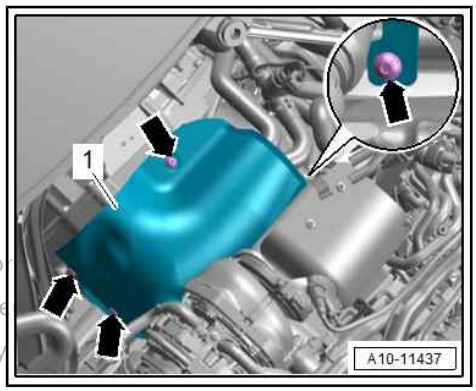

Protected by copyright. Copying for private or commercial purposes, in part o
permitted unless authorised by AUDI AG. AUDI AG does not guarantee or acce
with respect to the correctness of information in this document. Copyright by

– Use a felt-tip pen to mark installation position of screw-type clips -1 and 2-.
– Release clips -1, 2- and slide them onto exhaust manifold/turbocharger.

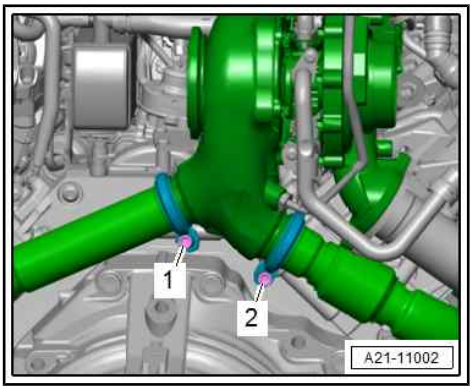

Versions without auxiliary cooler for exhaust gas recirculation:

– Remove bolts -arrows- for exhaust gas recirculation pipe.

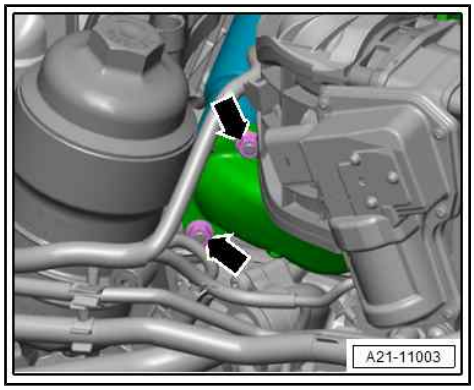

– Clamp off coolant hose -4- with hose clamp, up to 25 mm -3094- .

– Clamp off coolant hose using hose clamp up to 25 mm -3094- , lift retaining clip -1- and disconnect hose.

– Remove bolt -2- and push coolant pipe -3- at top of turbocharger slightly to side.

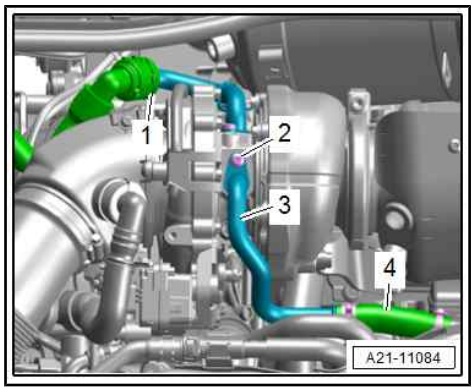

Versions with auxiliary cooler for exhaust gas recirculation:

– Remove coolant pipe (front) for turbocharger ⇒ 6-cylinder TDI engine, 3.0 ltr. 4-valve common rail; Rep. gr. 19 ; Coolant pipes; Removing and installing coolant pipes .

– Release screw-type clip -arrow- and place it on exhaust gas recirculation pipe.

Protected by copyright. Copying for private or commercial
permitted unless authorised by AUDI AG. AUDI AG does no
with respect to the correctness of information in this docu

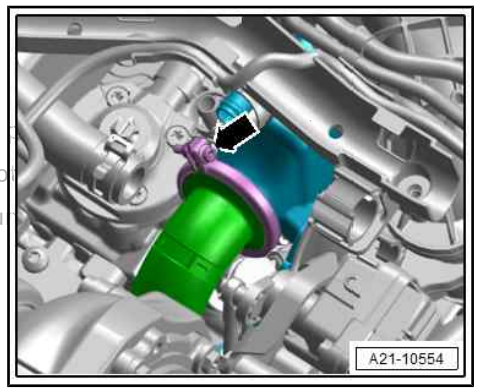

– Lift retaining clip -arrow- and disconnect coolant hose.

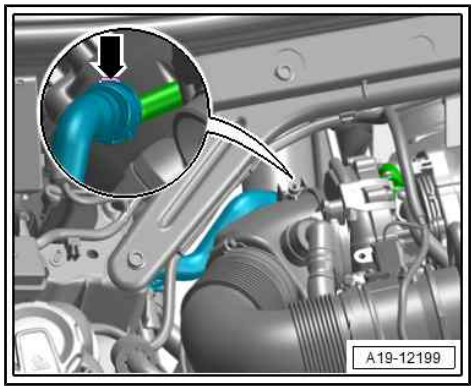

All vehicles (continued):

– Loosen bolts -5, 6-.

– Unscrew nuts -1, 2- and bolts -3, 4- and detach turbocharger.

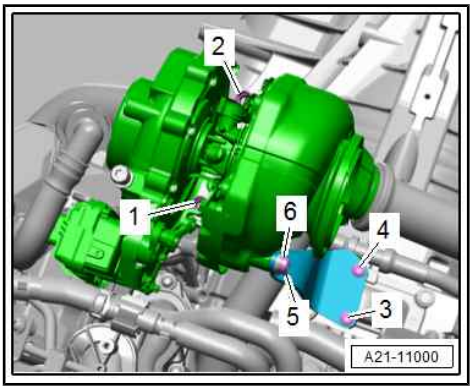

Installing

Installation is carried out in reverse order; note the following:

Note

- *Renew seals, gaskets, nuts and O-ring after removal.*
- *If installation positions have been marked, pay attention to these when installing parts.*
- *Secure all hose connections with correct type of hose clips (as original equipment) ⇒ Electronic parts catalogue .*
- *Fill turbocharger with engine oil at connection for oil supply line.*
- *After installing the turbocharger, allow the engine to idle for approx. 1 minute without pressing the accelerator to ensure that the turbocharger is supplied with oil.*

Protected by copyright. Copying for private or commercial purposes, in part or in whole, is not permitted unless authorized by AUDI AG. AUDI AG does not guarantee or accept any liability with respect to the correctness of information in this document. Copyright by AUDI AG.

– Install emission control module ⇒ 6-cylinder TDI engine, 3.0 ltr. 4-valve common rail; Rep. gr. 26 ; Emission control system; Removing and installing emission control module .

– Erase any entries in engine control unit event memory resulting from work performed ⇒ Vehicle diagnostic tester.

Additional work depending on model ⇒ 6-cylinder TDI engine, 3.0 ltr. 4-valve common rail; Rep. gr. 21 ; Turbocharger; Removing and installing turbocharger .

Perform adaptions required after renewing a component (using ⇒ Vehicle diagnostic tester)
⇒ “3.10 Performing adaptions after renewing a component”, page 11 .

Tightening torques

- ⇒ “1.1 Exploded view - turbocharger”, page 198
- ⇒ “5.1 Exploded view - exhaust gas recirculation system”, page 286
- ⇒ “2.1 Exploded view - charge air system”, page 206
- ⇒ “2.2 Exploded view - hose connections for charge air system”, page 206

Protected by copyright. Copying for private or commercial purposes, in part or in whole, is not permitted unless authorised by AUDI AG. AUDI AG does not guarantee or accept any liability with respect to the correctness of information in this document. Copyright by AUDI AG.

2 Charge air system

⇒ "2.1 Exploded view - charge air system", page 206

⇒ "2.2 Exploded view - hose connections for charge air system", page 206

⇒ "2.3 Removing and installing charge air cooler", page 207

⇒ "2.4 Removing and installing charge pressure sender G31 ", page 207

⇒ "2.5 Checking charge air system for leaks", page 207

2.1 Exploded view - charge air system

All components are described in ⇒ 6-cylinder TDI engine, 3.0 ltr. 4-valve common rail; Rep. gr. 21 ; Charge air system; Exploded view - charge air system .

2.2 Exploded view - hose connections for charge air system

Note

- *Hose connections and air pipes/hoses must be free of oil and grease prior to fitting.*
- *Secure all hose connections with correct type of hose clips (as original equipment) ⇒ Electronic parts catalogue .*
- *If using used hose clips to secure the air hoses at their connections, spray rust remover onto the worm threads before installing.*

Hose clips on pressure side are fitted with retaining hooks -arrows-.

- To disconnect air hose, hose clip must be loosened far enough.
- Hose clips which have been loosened can be re-used.

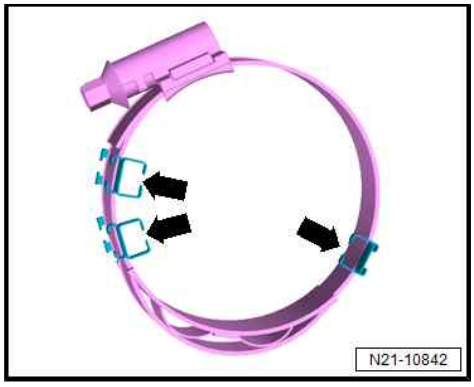

- Hose clip -1- with retaining hooks -arrows- must not be pulled off air hose.
- If a hose clip with retaining hooks is pulled off air hose, air hose must be renewed.
- New air hoses are supplied with hose clip fitted.

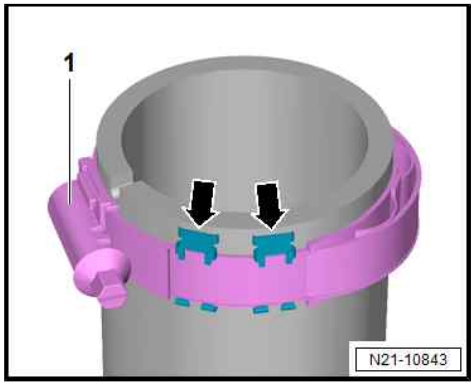

Tightening torque for

1 - Hose clip with width -a- = 12 mm: 5.5 Nm

2 - Hose clip with width -b- = 9 mm: 3.4 Nm

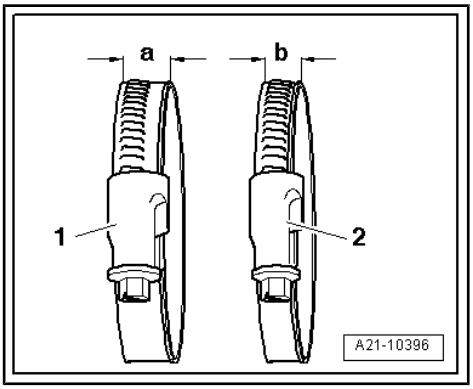

2.3 Removing and installing charge air cooler

All procedures are described in ⇒ 6-cylinder TDI engine, 3.0 ltr. 4-valve common rail; Rep. gr. 21 ; Charge air system; Removing and installing charge air cooler .

2.4 Removing and installing charge pressure sender - G31-

Removing

Preparatory work may be necessary depending on model ⇒ 6-cylinder TDI engine, 3.0 ltr. 4-valve common rail; Rep. gr. 21 ; Charge air system; Removing and installing charge pressure sender - G31- .

– Unplug electrical connector -2-.

– Unscrew bolt -1- and remove charge pressure sender - G31- .

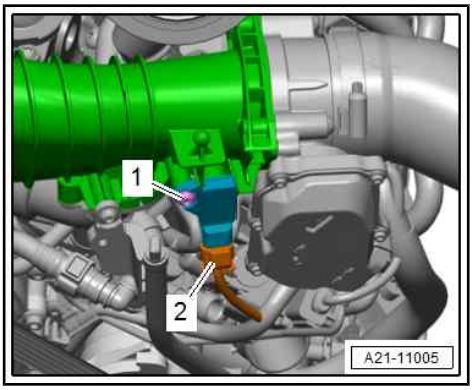

Installing

Installation is carried out in reverse sequence.

Additional work depending on model ⇒ 6-cylinder TDI engine, 3.0 ltr. 4-valve common rail; Rep. gr. 21 ; Charge air system; Removing and installing charge pressure sender - G31- .

Tightening torques

♦ ⇒ “4.1 Exploded view - intake manifold”, page 214

2.5 Checking charge air system for leaks

Special tools and workshop equipment required

♦ Charge air system tester - V.A.G 1687-

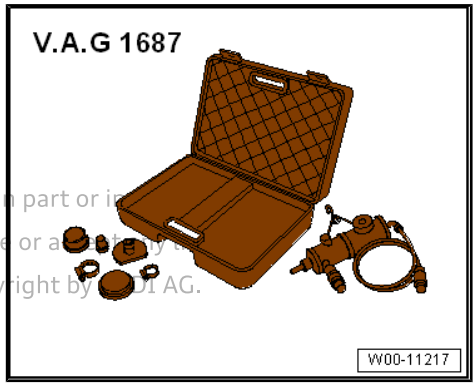

Protected by copyright. Copying for private or commercial purposes, in part or in
permitted unless authorised by AUDI AG. AUDI AG does not guarantee or a
with respect to the correctness of information in this document. Copyright by AUDI AG.

- Adapter - V.A.G 1687/10-

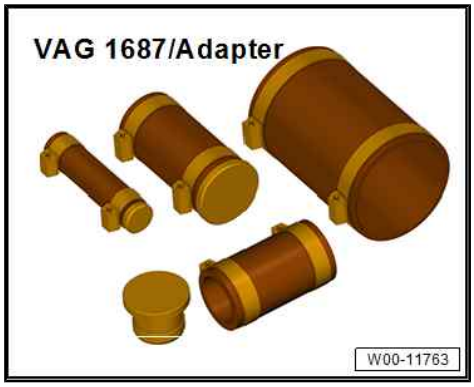

- Ultrasonic tester - V.A.G 1842-
- Leak detection spray (commercially available)

Procedure

– Observe rules for cleanliness ⇒ page 7 .

Preparatory work may be necessary depending on model ⇒ 6-cylinder TDI engine, 3.0 ltr. 4-valve common rail; Rep. gr. 21 ; Charge air system; Checking charge air system for leaks .

– Connect adapter -V.A.G 1687/10- to turbocharger.

– Connect hose -1- of charge air system tester -V.A.G 1687- to adapter.

Protected by copyright. Copying for private or comme
permitted unless authorised by AUDI AG. AUDI AG do
with respect to the correctness of information in this

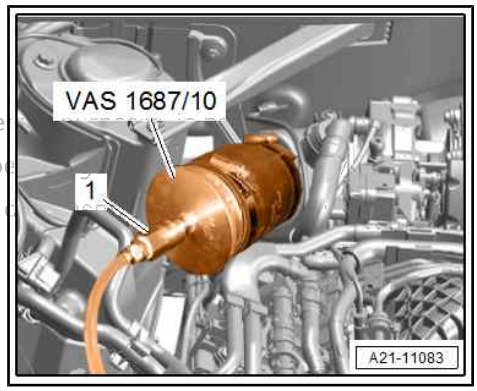

Prepare charge air system tester - V.A.G 1687- as follows:

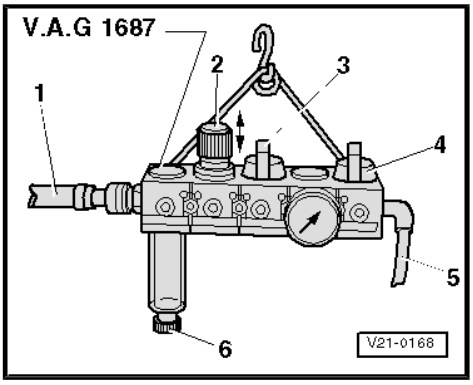

– Unscrew pressure control valve -2- completely and close valves -3- and -4-.

• Make sure knob is pulled out before turning pressure control valve -2-.

– Using a commercially available connection piece, connect charge air system tester - V.A.G 1687- to compressed air -1-.

– If there is water in sight glass, remove drain plug -6- and drain water.

– Open valve -3-.

> ⚠ **Caution**
>
> *Risk of damage if pressure is set too high.*
>
> ♦ *The pressure must not exceed 0.2 bar.*

– Adjust pressure to 0.2 bar via pressure control valve -2-.

– Open valve -4- and wait until test system is pressurised. If necessary, adjust pressure to 0.2 bar again.

– Check charge air system for audible leaks or leaks that can be felt with the hand; apply commercially available leak detection spray or use ultrasonic tester - V.A.G 1842- . (Refer to ⇒ operating instructions -V.A.G 1842- .)

Note:

A small amount of air escapes through the valves and enters the engine. Therefore it is not possible to perform a pressure retention test.

– Release pressure in test circuit by detaching hose coupling from adapter before removing adapter.

Attaching

Assemble in reverse order.

Additional work depending on model ⇒ 6-cylinder TDI engine, 3.0 ltr. 4-valve common rail; Rep. gr. 21 ; Charge air system; Checking charge air system for leaks .

Protected by copyright. Copying for private or commercial purposes, in part or in whole, is not permitted unless authorised by AUDI AG. AUDI AG does not guarantee or accept any liability with respect to the correctness of information in this document. Copyright by AUDI AG.

23 – Mixture preparation - injection

1 Injection system

⇒ “1.1 Overview - fuel system”, page 210

⇒ “1.2 Overview of fitting locations - injection system”, page 210

⇒ “1.3 Filling and bleeding fuel system”, page 210

⇒ “1.4 Checking fuel system for leaks”, page 211

1.1 Overview - fuel system

All components are described in ⇒ 6-cylinder TDI engine, 3.0 ltr. 4-valve common rail; Rep. gr. 23 ; Injection system; Overview - fuel system .

1.2 Overview of fitting locations - injection system

All components are described in ⇒ 6-cylinder TDI engine, 3.0 ltr. 4-valve common rail; Rep. gr. 23 ; Injection system; Overview of fitting locations - injection system .

1.3 Filling and bleeding fuel system

Special tools and workshop equipment required

- Vehicle diagnostic tester

Procedure

If components of the fuel system between the fuel tank and the high-pressure pump are removed or renewed, the fuel system must be bled.

> ⚠ **Caution**
>
> *Running when dry causes irreparable damage to fuel pump.*
>
> - *Never allow fuel pump to run while it is empty.*

Proceed as follows to fill high-pressure pump with fuel.

Protected by copyright. Copying for private or commercial purposes, in part or in whole, is not permitted unless authorised by AUDI AG. AUDI AG does not guarantee or accept any liability with respect to the correctness of information in this document. Copyright by AUDI AG.

- Check fuel gauge in instrument cluster; fuel gauge needle must indicate that fuel is above reserve level.

– Connect ⇒ Vehicle diagnostic tester.

– Select `Diagnosis` mode and then `Start diagnosis`.

– Choose `Select own test` tab and select following options one after the other:

- `Drive train`
- `Select engine code and engine`
- `01 - Self-diagnosis compatible systems`
- `01 - Engine electronics`
- `01 - Engine electronics, functions`
- `Activate fuel pump`
- Press `Carry out check`

♦ Select 120 seconds.

– The fuel pump must run for 120 seconds to ensure that the fuel system is filled sufficiently with fuel.

– Start engine after filling fuel system.

– Allow engine to run for several minutes at moderate rpm.

– Switch off ignition.

– Check complete fuel system for leaks.

– Erase entry in event memory.

– Road-test vehicle and accelerate with full throttle at least once.

– As a last step, inspect high-pressure section of fuel system again for leaks.

1.4 Checking fuel system for leaks

Procedure

– Allow engine to run for several minutes at moderate rpm.

– Switch off ignition.

– Check complete fuel system for leaks.

– If leaks are found although the connections have been tightened to the correct torque, the relevant component must be renewed.

– Road-test vehicle and accelerate with full throttle at least once.

– As a last step, inspect high-pressure section of fuel system again for leaks.

Protected by copyright. Copying for private or commercial purposes, in part or in whole, is not permitted unless authorised by AUDI AG. AUDI AG does not guarantee or accept any liability with respect to the correctness of information in this document. Copyright by AUDI AG.

2 Vacuum system

⇒ “2.1 Connection diagram - vacuum system”, page 212

⇒ “2.2 Checking vacuum system”, page 212

2.1 Connection diagram - vacuum system

All components are described in ⇒ 6-cylinder TDI engine, 3.0 ltr. 4-valve common rail; Rep. gr. 23 ; Vacuum system; Connection diagram - vacuum system .

2.2 Checking vacuum system

Special tools and workshop equipment required

- Hand vacuum pump - VAS 6213-

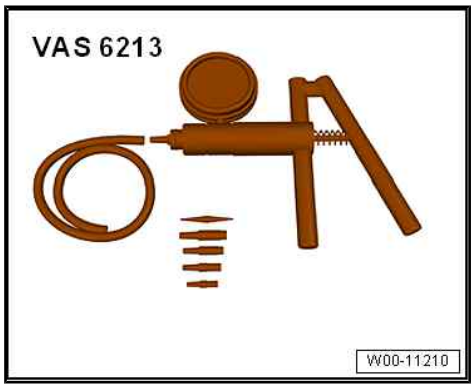

Procedure

– Check all vacuum lines in the complete vacuum system for:

- Cracks
- Traces of animal bites
- Kinked or crushed lines
- Porous or leaking lines

– Check vacuum line to solenoid valve and from solenoid valve to corresponding component.

– If a fault is stored in the event memory, check the vacuum lines leading to the relevant component and also check the remaining vacuum lines in the system.

– If it is not possible to build up a vacuum with the hand vacuum pump - VAS 6213- or if the vacuum pressure drops again immediately, check the hand vacuum pump and connecting hoses for leaks.

Protected by copyright. Copying for private or commercial purposes, in part or in whole, is not permitted unless authorised by AUDI AG. AUDI AG does not guarantee or accept any liability with respect to the correctness of information in this document. Copyright by AUDI AG.

3 Air cleaner

All procedures and components are described in ⇒ 6-cylinder TDI engine, 3.0 ltr. 4-valve common rail; Rep. gr. 23 ; Air cleaner .

Protected by copyright. Copying for private or commercial purposes, in part or in whole, is not permitted unless authorised by AUDI AG. AUDI AG does not guarantee or accept any liability with respect to the correctness of information in this document. Copyright by AUDI AG.

4 Intake manifold

⇒ “4.1 Exploded view - intake manifold”, page 214

⇒ “4.2 Removing and installing intake manifold (top section)”, page 217

⇒ “4.3 Removing and installing intake manifold (bottom section)”, page 219

⇒ “4.4 Removing and installing intake manifold flap motor V157 ”, page 220

⇒ “4.5 Removing and installing throttle valve module J338 ”, page 222

4.1 Exploded view - intake manifold

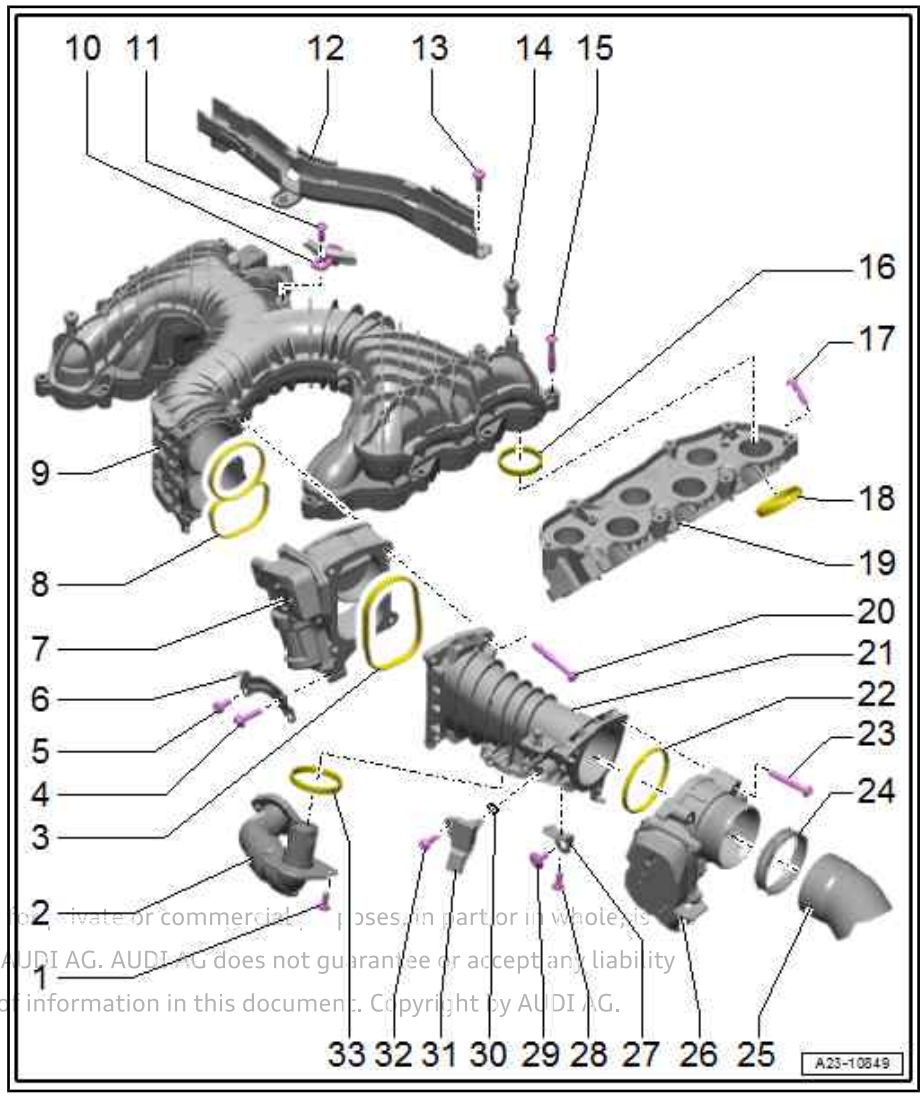

1 - Bolt
- ❑ 9 Nm

2 - Pipe
- ❑ For exhaust gas recirculation

3 - Gasket
- ❑ Renew after removing

4 - Bolt
- ❑ 9 Nm

5 - Bolt
- ❑ 9 Nm

6 - Bracket
- ❑ For air pipe

7 - Intake manifold flap motor - V157-
- ❑ Removing and installing ⇒ page 220
- ❑ Performing adaptions required after renewing a component (using ⇒ Vehicle diagnostic tester) ⇒ “3.10 Performing adaptions after renewing a component”, page 11

Protected by copyright. Copying for private or commercial purposes, in part or in whole, is permitted unless authorised by AUDI AG. AUDI AG does not guarantee or accept any liability with respect to the correctness of information in this document. Copyright by AUDI AG.

8 - Gasket
- ❑ Renew after removing

9 - Intake manifold (top section)
- ❑ Removing and installing ⇒ page 217

10 - Bracket
- ❑ For high-pressure pipe

11 - Bolt
- ❑ Thread-forming
- ❑ Fit and screw in bolt by hand so that it is screwed into old thread. Then tighten bolt to torque
- ❑ 7.5 Nm

12 - Cable guide

13 - Bolt

- ❑ Thread-forming
- ❑ Fit and screw in bolt by hand so that it is screwed into old thread. Then tighten bolt to torque
- ❑ 7.5 Nm

14 - Mounting pin

- ❑ For engine cover panel
- ❑ Thread-forming
- ❑ Fit and screw in bolt by hand so that it is screwed into old thread. Then tighten bolt to torque
- ❑ 7.5 Nm

15 - Bolt

- ❑ Tightening torque and sequence ⇒ page 216

16 - Seal

- ❑ Available in different sizes
- ❑ Renew after removing

17 - Bolt

- ❑ 9 Nm

18 - Seal

- ❑ Available in different sizes
- ❑ Renew after removing

19 - Intake manifold (bottom section)

- ❑ Removing and installing ⇒ page 219

20 - Bolt

- ❑ Thread-forming
- ❑ Fit and screw in bolt by hand so that it is screwed into old thread. Then tighten bolt to torque
- ❑ 7.5 Nm

21 - Air pipe

22 - Seal

- ❑ Renew after removing

23 - Bolt

- ❑ Thread-forming
- ❑ Fit and screw in bolt by hand so that it is screwed into old thread. Then tighten bolt to torque
- ❑ 7.5 Nm

24 - Screw-type clip

- ❑ Tightening torque ⇒ page 206

25 - Air hose

26 - Throttle valve module - J338-

- ❑ Removing and installing ⇒ page 222
- ❑ Performing adaptions required after renewing a component (using ⇒ Vehicle diagnostic tester) ⇒ “3.10 Performing adaptions after renewing a component”, page 11

27 - Bracket

- ❑ For air pipe

Protected by copyright. Copying for private or commercial purposes, in part or in whole, is not permitted unless authorised by AUDI AG. AUDI AG does not guarantee or accept any liability with respect to the correctness of information in this document. Copyright by AUDI AG.

28 - Bolt

- ❑ Thread-forming
- ❑ Fit and screw in bolt by hand so that it is screwed into old thread. Then tighten bolt to torque
- ❑ 7.5 Nm

29 - Bolt

- ❑ 9 Nm

30 - O-ring

- ❑ Renew after removing

31 - Charge pressure sender - G31-

- ❑ Removing and installing ⇒ page 207

32 - Bolt

- ❑ Thread-forming
- ❑ Fit and screw in bolt by hand so that it is screwed into old thread. Then tighten bolt to torque
- ❑ 7.5 Nm

33 - Seal

- ❑ Renew after removing

Protected by copyright. Copying for private or commercial purposes, in part or in whole, is not permitted unless authorised by AUDI AG. AUDI AG does not guarantee or accept any liability with respect to the correctness of information in this document. Copyright by AUDI AG.

Intake manifold (top section) onto intake manifold (bottom section) - tightening torque and sequence

A - Intake manifold (top section) onto old intake manifold (bottom section)

– Tighten bolts in stages in the sequence shown:

Stage	Bolts	Tightening torque
1.	-1 … 14-	Fit and screw in bolts by hand so that they are screwed into old thread.
2.	-1 … 14-	10 Nm

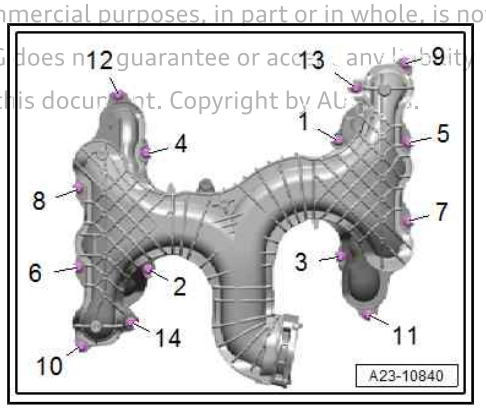

B - Intake manifold (top section) onto new intake manifold (bottom section)

– Tighten bolts in stages in the sequence shown:

Stage	Bolts	Tightening torque
1.	-1 … 4-	10 Nm
2.	-5 … 14-	14 Nm
3.	-1 … 4-	14 Nm

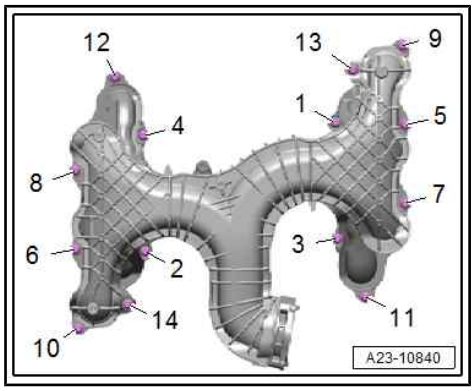

Fuel lines to intake manifold (top section) - tightening torque

– Fit bolts -arrows- and screw in by hand so that bolt finds old thread again. Then tighten bolt to 7.5 Nm.

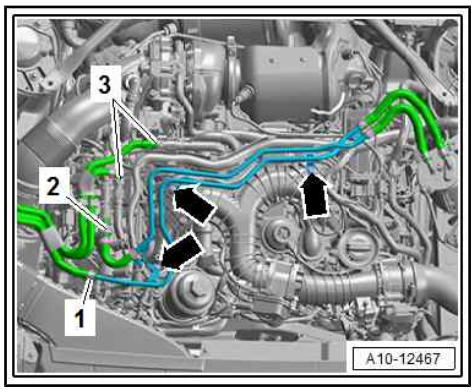

4.2 Removing and installing intake manifold (top section)

Removing

Caution

Risk of malfunctions caused by dirt.

- *Observe rules for cleanliness ⇒ page 7 .*

Preparatory work may be necessary depending on model ⇒ 6-cylinder TDI engine, 3.0 ltr. 4-valve common rail; Rep. gr. 23 ; Intake manifold; Removing and installing intake manifold (top section) .

– Remove throttle valve module - J338- ⇒ page 222 .

– Unplug electrical connector -1- for fuel pressure sender for low pressure - G410- .

– Country-specific version: Move electrical connector -4- for catalytic converter temperature sensor 1 - G20- clear.

– Move clear electrical connector -5- for exhaust gas temperature sender 4 - G648- .

– Move electrical wiring harnesses -2- and fuel hose -arrow- clear at bracket -3-.

– Unclip bracket from high-pressure lines and push to one side.

– Unplug electrical connectors on glow plugs.

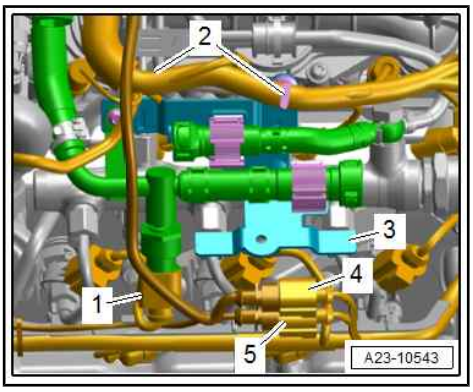

– Release retaining clip -3- and move fuel hose clear.

– Move electrical wiring harness -4- clear at wiring duct -2-.

– Unscrew bolt -1- (left and right) and detach wiring duct.

– Move fuel return hose -5- clear at intake manifold and high-pressure line.

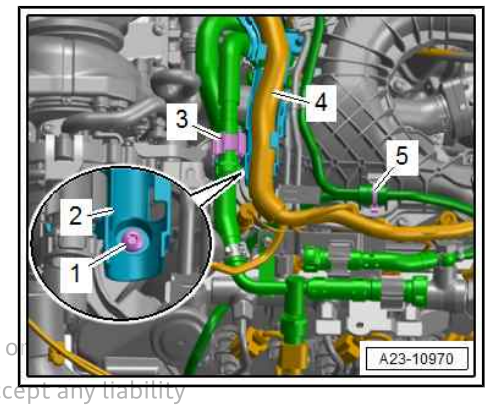

Protected by copyright. Copying for private or commercial purposes, in part or in whole, is not permitted unless authorised by AUDI AG. AUDI AG does not guarantee or accept any liability with respect to the correctness of information in this document. Copyright by AUDI AG.

– If fitted, disconnect vacuum hose -4- and move hose clear at bracket.

– Detach electrical connectors -1, 2- from bracket, unplug connectors and move electrical wiring clear.

– Unclip bracket -3- from high-pressure lines and detach.

– Unclip bracket -5- from high-pressure pipes and press to one side together with electrical wiring harness.

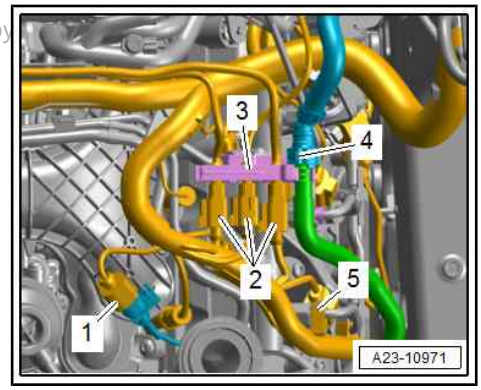

– Unscrew bolts -arrows- and remove retaining clips.

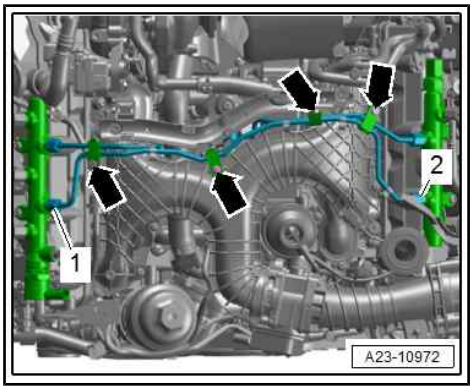

WARNING

The fuel system is pressurised.

Risk of injury as fuel may spray out.

- *Put on safety goggles.*
- *Put on protective gloves.*
- *Release pressure (wrap clean cloth around connection and open connection carefully).*

– Unscrew union nuts -1, 2- and detach high-pressure pipe.

– Unplug electrical connector -2- for exhaust gas recirculation control motor - V338- .

– Unscrew union nuts -arrows- and detach high-pressure pipe -1-.

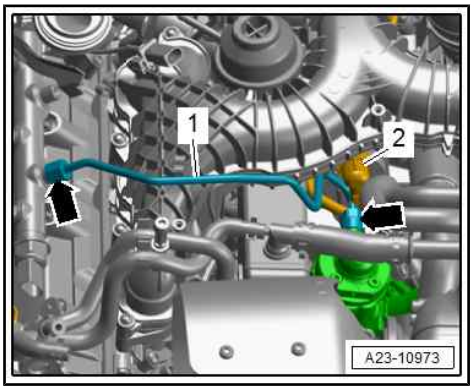

– Remove bolt -1- and push guide tube -2- for oil dipstick slightly towards front.

3 - Ignore

Protected by copyright. Copying for private or com[illegible]cle, is not permitted unless authorised by AUDI AG. AUDI A[illegible]ny liability with respect to the correctness of information in [illegible]UDI AG.

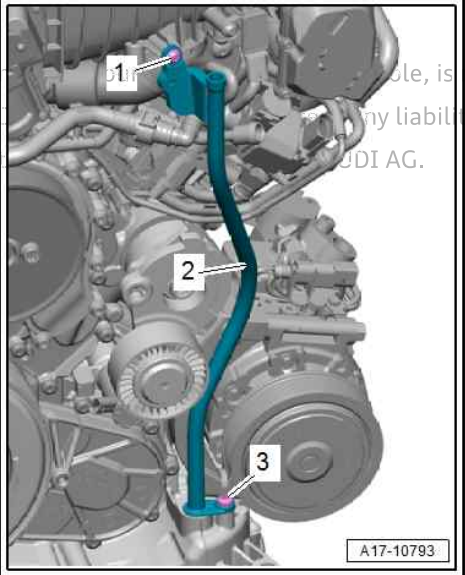

– Unplug electrical connectors:

1 - For intake manifold flap motor - V157-

3 - For charge pressure sender - G31-

– Remove bolt -2-.

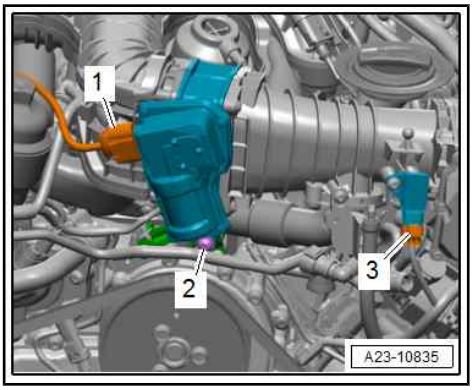

– Unscrew bolts -1- for exhaust gas recirculation pipe and bolt -2- on bracket for air pipe.

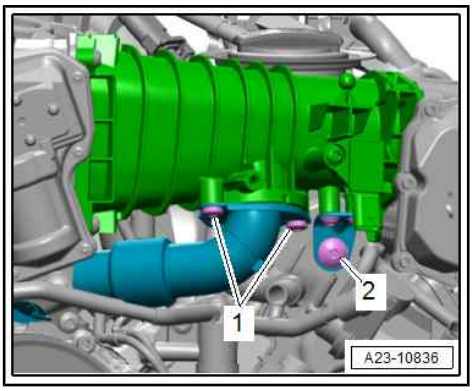

– If necessary, move electrical wiring clear.

– Loosen and remove bolts in the sequence -14 ... 1- and detach intake manifold (top section).

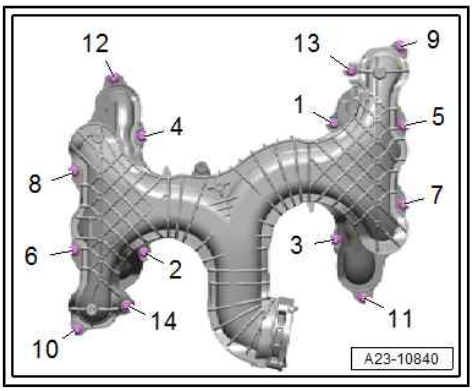

Installing

Installation is carried out in reverse order; note the following:

Note

- *Renew seals/gaskets after removing.*
- *Hose connections and air pipes/hoses must be free of oil and grease prior to fitting.*

– Install high-pressure pipes ⇒ page 244 .

– Install throttle valve module - J338- ⇒ page 222 .

Additional work depending on model ⇒ 6-cylinder TDI engine, 3.0 ltr. 4-valve common rail; Rep. gr. 23 ; Intake manifold; Removing and installing intake manifold (top section) .

Tightening torques

- ⇒ Fig. ""Intake manifold (top section) onto intake manifold (bottom section) - tightening torque and sequence"" , page 216
- Dipstick guide tube ⇒ Item 8 (page 155)

Protected by copyright. Copying for private or commercial purposes, in part or in whole, is not permitted unless authorised by AUDI AG. AUDI AG does not guarantee or accept any liability with respect to the correctness of information in this document. Copyright by AUDI AG.

4.3 Removing and installing intake manifold (bottom section)

Special tools and workshop equipment required

- Socket Torx T30 - T10405-

Removing

– Remove intake manifold (top section) ⇒ page 217 .

Intake manifold (bottom section, left-side):

– Remove exhaust gas recirculation cooler ⇒ page 291 .

Bottom section of intake manifold (right-side) on versions with auxiliary cooler for exhaust gas recirculation

– Remove auxiliary cooler for exhaust gas recirculation ⇒ page 295 .

Both sides (continued):

– Unscrew bolts -arrows- and detach intake manifold (bottom section) -1-.

Protected by copyright. Copying for private or commercial purposes, in part or in whole, is not permitted unless authorised by AUDI AG. AUDI AG does not guarantee or assume any liability with respect to the correctness of information in this document. Copyright

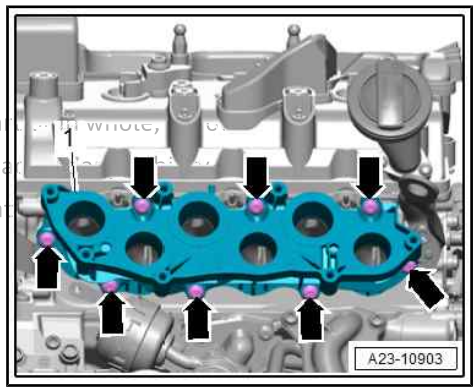

Note

The illustration shows the installation position on cylinder bank 2 (left-side) as an example.

Installing

Installation is carried out in reverse order; note the following:

Note

Renew seals/gaskets after removing.

– Install auxiliary cooler for exhaust gas recirculation ⇒ page 295 .

– Install exhaust gas recirculation cooler ⇒ page 291 .

– Install intake manifold (top section) ⇒ page 217 .

Tightening torques

- ⇒ “4.1 Exploded view - intake manifold”, page 214

4.4 Removing and installing intake manifold flap motor - V157-

Special tools and workshop equipment required

♦ Socket Torx T30 - T10405-

Protected by copyright. Copying for private or commercial purposes, in part or in whole, is not permitted unless authorised by AUDI AG. AUDI AG does not guarantee or accept any liability with respect to the correctness of information in this document. Copyright by AUDI AG.

Removing

Preparatory work may be necessary depending on model ⇒ 6-cylinder TDI engine, 3.0 ltr. 4-valve common rail; Rep. gr. 23 ; Intake manifold; Removing and installing intake manifold flap motor - V157- .

– Remove throttle valve module - J338- ⇒ page 222 .

– Remove bolt -1- and push guide tube -2- for oil dipstick slightly towards front.

3 - Ignore

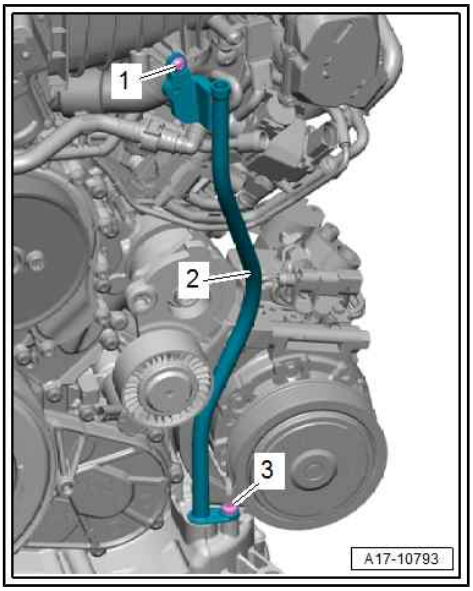

– Unplug electrical connectors:

1 - For intake manifold flap motor - V157-

3 - For charge pressure sender - G31-

– Remove bolt -2-.

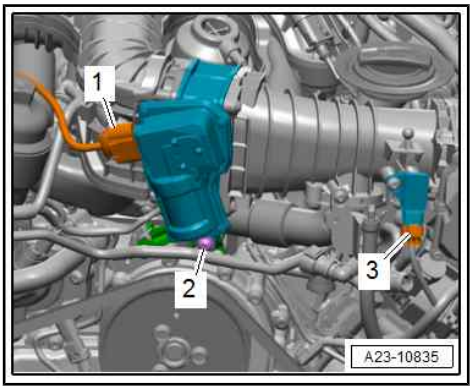

– Unscrew bolts -1- for exhaust gas recirculation pipe and bolt -2- on bracket for air pipe.

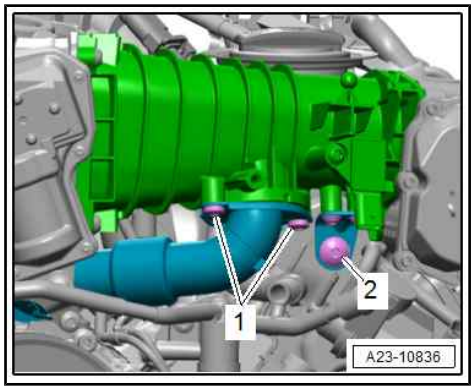

– Unscrew bolts -arrows- using socket Torx T30 - T10405- and detach air pipe -2- together with intake manifold flap motor - V157- -item 1-.

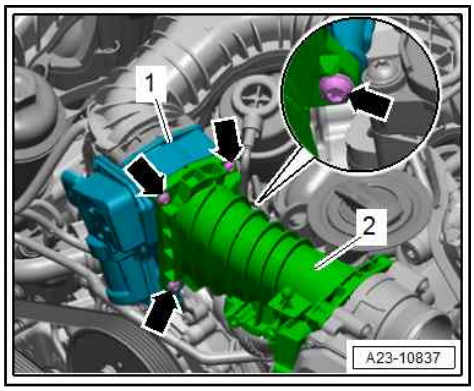

Installing

Installation is carried out in reverse order; note the following:

Note

Renew seals/gaskets after removing.

– Install throttle valve module - J338- ⇒ page 222 .

Additional work depending on model ⇒ 6-cylinder TDI engine, 3.0 ltr. 4-valve common rail; Rep. gr. 23 ; Intake manifold; Removing and installing intake manifold flap motor - V157-

Perform adaptions required after renewing a component (using ⇒ Vehicle diagnostic tester)
⇒ “3.10 Performing adaptions after renewing a component”, page 11 .

Tightening torques

- ⇒ “4.1 Exploded view - intake manifold”, page 214
- Dipstick guide tube ⇒ Item 8 (page 155)

4.5 Removing and installing throttle valve module - J338-

Protected by copyright. Copying for private or commercial purposes, in part or in whole, is not permitted unless authorised by AUDI AG. AUDI AG does not guarantee or accept any liability with respect to the correctness of information in this document. Copyright by AUDI AG.

Removing

Preparatory work may be necessary depending on model ⇒ 6-cylinder TDI engine, 3.0 ltr. 4-valve common rail; Rep. gr. 23 ; Intake manifold; Removing and installing throttle valve module - J338- .

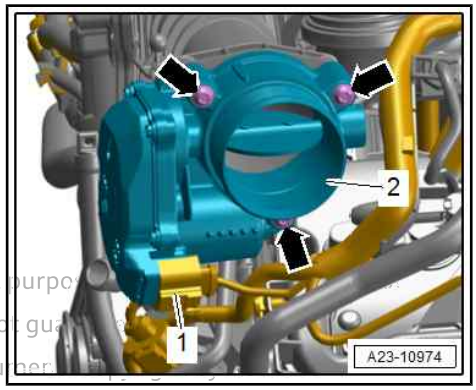

– Unplug electrical connector -1-.

– Remove bolts -arrows- and detach throttle valve module - J338- -2-.

Installing

Installation is carried out in reverse order; note the following:

Note

Protected by copyright. Copying for private or commercial purpo
not permitted unless authorised by AUDI AG. AUDI AG does no gu
with respect to the correctness of information in this docu

Renew gasket after removing.

Additional work depending on model ⇒ 6-cylinder TDI engine, 3.0 ltr. 4-valve common rail; Rep. gr. 23 ; Intake manifold; Removing and installing throttle valve module - J338- .

Perform adaptions required after renewing a component (using ⇒ Vehicle diagnostic tester)
⇒ “3.10 Performing adaptions after renewing a component”, page 11 .

Tightening torques

- ⇒ “4.1 Exploded view - intake manifold”, page 214
- ⇒ “2.2 Exploded view - hose connections for charge air system”, page 206

5 Injectors/high-pressure reservoir (rail)

⇒ “5.1 Exploded view - injectors”, page 224

⇒ “5.2 Checking injectors”, page 228

⇒ “5.3 Performing adaption of correction values for injectors”, page 228

⇒ “5.4 Checking for injectors sticking open”, page 229

⇒ “5.5 Checking return flow rate of injectors with engine running”, page 232

⇒ “5.6 Checking return flow rate of injectors at starter cranking speed”, page 236

⇒ “5.7 Checking pressure retention valve in fuel return line”, page 238

⇒ “5.8 Removing and installing injectors”, page 239

⇒ “5.9 Removing and installing high-pressure pipes”, page 244

⇒ “5.10 Removing and installing high-pressure reservoir (rail)”, page 246

Protected by copyright. Copying for private or commercial purposes, in part or in whole, is not permitted unless authorised by AUDI AG. AUDI AG does not guarantee or accept any liability with respect to the correctness of information in this document. Copyright by AUDI AG.

5.1 Exploded view - injectors

Caution

Risk of malfunctions caused by dirt.

- *Observe rules for cleanliness ⇒ page 7 .*

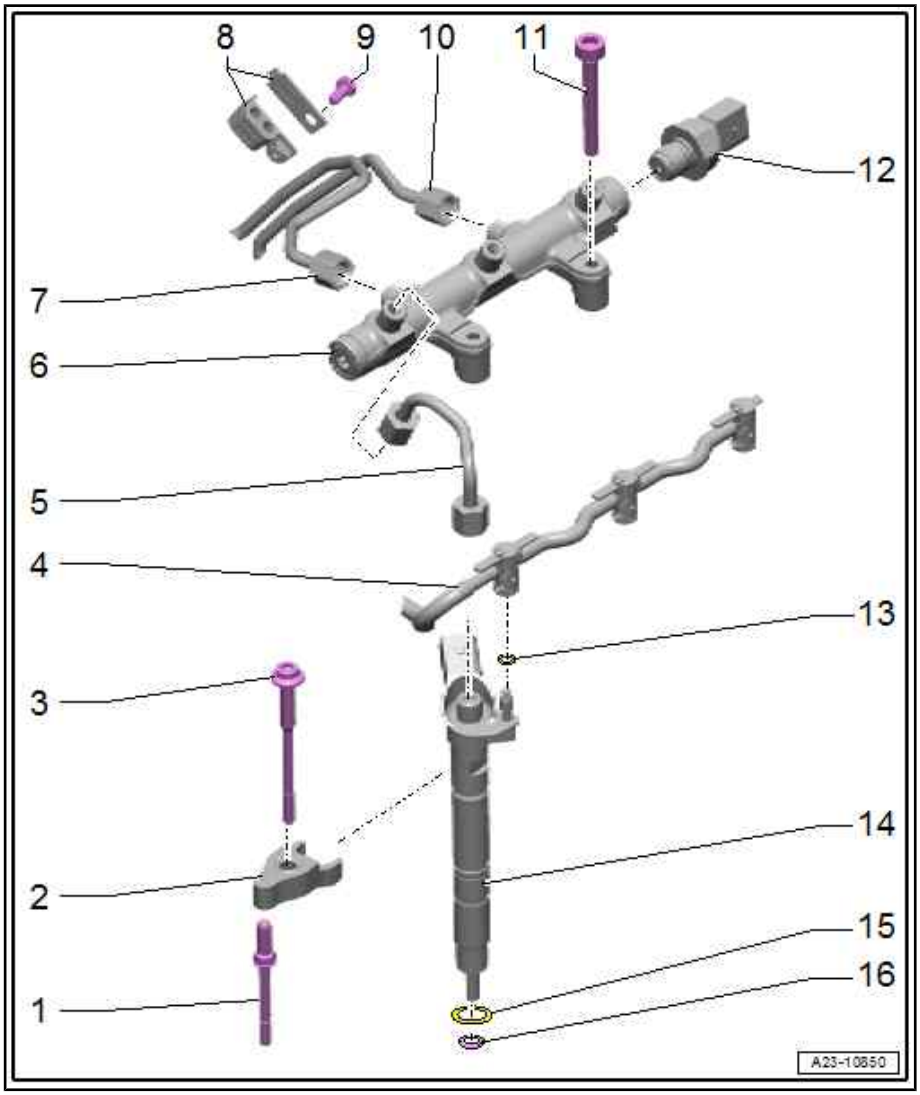

1 - Support bracket

- ❑ For clamping piece
- ❑ Different tightening torques:

♦ To camshaft bearing ⇒ page 126

♦ To cylinder head: 9 Nm

2 - Clamping piece

- ❑ Use a coloured pen to mark injectors and corresponding clamping piece and cylinder for re-installation; pay attention to markings when installing
- ❑ If the injector is installed on another cylinder for testing purposes, the clamping piece must also be moved
- ❑ After looking for the fault, the injector and the clamping piece must be re-installed on their original cylinder
- ❑ The clamping pieces can be re-used when installing new injectors

3 - Bolt

- ❑ Renew after removing
- ❑ 6 Nm +90°

4 - Fuel return hose

- ❑ From injectors
- ❑ Do not dismantle
- ❑ Only renew together with pressure retention valve
- ❑ After renewing, engine must be run at idling speed for approx. 2 minutes to bleed fuel system
- ❑ Then check fuel return hoses for leaks

5 - High-pressure pipe

- ❑ From high-pressure reservoir (rail) to injector
- ❑ Do not alter shape
- ❑ Mark allocation for re-installation; pay attention to marking when installing
- ❑ Check for damage before re-installing
- ❑ Installing ⇒ page 244
- ❑ Lubricate threads of union nuts with clean engine oil
- ❑ When re-installing a high-pressure pipe: 25 Nm
- ❑ When installing a new high-pressure pipe: 15 Nm + 60°

6 - High-pressure reservoir (rail)

- ❑ Removing and installing ⇒ page 246

Protected by copyright. Copying for private or commercial purposes, in part or in whole, is not permitted unless authorised by AUDI AG. AUDI AG does not guarantee or accept any liability with respect to the correctness of information in this document. Copyright by AUDI AG.

7 - High-pressure pipe

- ❑ From high-pressure reservoir (rail) on opposite side
- ❑ Do not alter shape
- ❑ Check for damage before re-installing
- ❑ Installing ⇒ page 244

- ❑ Lubricate threads of union nuts with clean engine oil
- ❑ When re-installing a high-pressure pipe: 25 Nm
- ❑ When installing a new high-pressure pipe: 15 Nm + 60°

8 - Retaining clamp

- ❑ For high-pressure pipe

9 - Bolt

- ❑ 9 Nm

10 - High-pressure pipe

- ❑ From high-pressure pump to high-pressure reservoir (rail)
- ❑ Do not alter shape
- ❑ Check for damage before re-installing
- ❑ Installing ⇒ page 244
- ❑ Lubricate threads of union nuts with clean engine oil
- ❑ When re-installing a high-pressure pipe: 25 Nm
- ❑ When installing a new high-pressure pipe: 15 Nm + 60°

11 - Bolt

- ❑ 9 Nm

12 - Fuel pressure sender - G247-

- ❑ Use socket - T40218- to loosen and tighten
- ❑ Removing and installing ⇒ page 254

Copyright. Copying for private or commercial purposes, in part or in whole, is not permitted unless authorised by AUDI AG. AUDI AG does not guarantee or accept any liability with respect to the correctness of information in this document. Copyright by AUDI AG.

13 - O-ring

- ❑ Renew after removing

14 - Injector

- ❑ Use a coloured pen to mark allocation of injectors to corresponding clamping piece and high-pressure pipe, and to corresponding cylinder for re-installation; pay attention to markings when installing
- ❑ If the injector is installed on another cylinder for testing purposes, the clamping piece must also be moved
- ❑ Always renew copper seal when removing and installing
- ❑ After looking for the fault (switching the injectors around), the injector and the clamping piece must be re-installed on their original cylinder
- ❑ To remove carbon deposits from the injector sealing surface, clean the injector bore in the cylinder head with cleaning kit - VAS 6811- (it is important to do this to avoid leaks)
- ❑ Removing and installing ⇒ page 239

15 - O-ring

- ❑ Renew after removing

16 - Copper seal

- ❑ Renew after removing
- ❑ Copper seal without chamfer: has no specified installation position
- ❑ Copper seal with chamfer: note installation position ⇒ page 227

Note installation position for copper seal with chamfer:

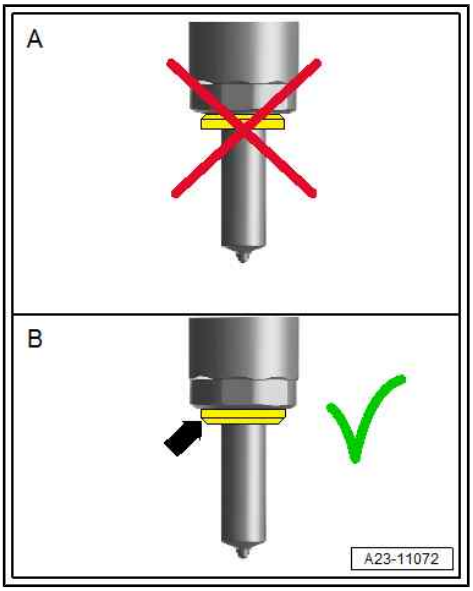

Banjo bolt for fuel return line connection - tightening torque

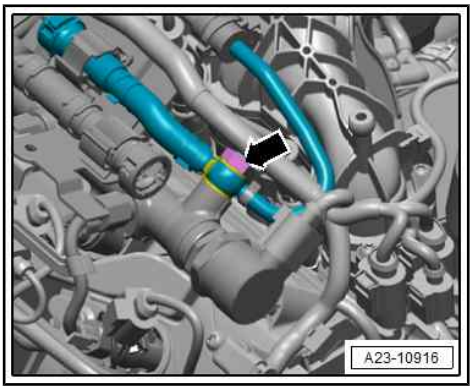

Note

After removing, renew bolts tightened with specified tightening angle.

– Tighten banjo bolt -arrow- to 8 Nm +90°.

Fuel pressure regulating valve - N276- - tightening torque

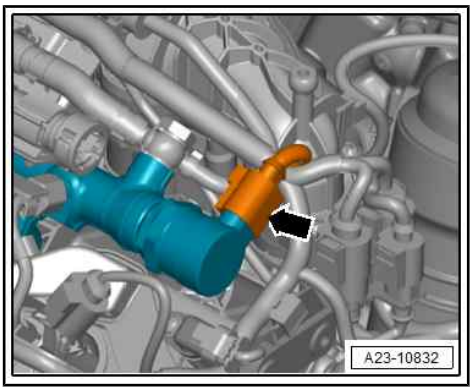

- With deformable sealing lip
- Cannot be re-installed
- Removing and installing
  ⇒ “6.7 Removing and installing fuel pressure regulating valve N276 ”, page 257

– Position fuel pressure regulating valve - N276- so that electrical wiring is not under tension when connector -arrow- is plugged in.

– Use insert tool, 30 mm - T10553- to tighten union screw on regulating valve in stages as follows (counterhold hexagon flats on housing):

Stage	Tightening torque
1.	Screw in by hand until contact is made
2.	60 Nm
3.	Turn back by 90°
4.	85 Nm

Protected by copyright. Copying for private or commercial purposes, in part or in whole, is not permitted unless authorised by AUDI AG. AUDI AG does not guarantee or accept any liability with respect to the correctness of information in this document. Copyright by AUDI AG.

Fuel pressure sender - G247- - tightening torque

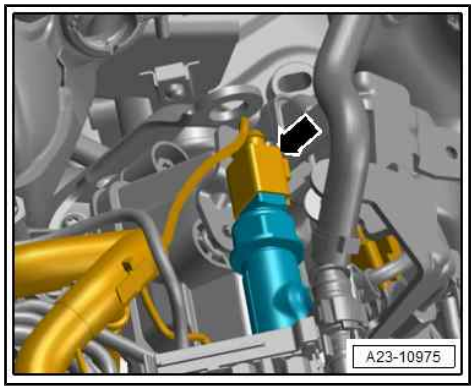

Note

An open-end spanner must not be used for loosening or tightening.

– Use socket, 27 mm - T40218- to tighten fuel pressure sender - G247- -arrow- in stages as follows:

Stage	Tightening torque
1.	Screw in by hand until contact is made
2.	60 Nm
3.	Turn back by 180°
4.	85 Nm

5.2 Checking injectors

There are four different tests for checking the operation of the injectors.

- Performing adaption of correction values for injectors ⇒ page 228
- Checking for injectors sticking open ⇒ page 229
- Checking return flow rate of injectors with engine running ⇒ page 232
- Checking return flow rate of injectors at starter cranking speed ⇒ page 236

Perform the following tests first if the engine does not start at all:

- Checking for injectors sticking open ⇒ page 229
- Checking return flow rate of injectors at starter cranking speed ⇒ page 236
- Checking fuel pressure regulating valve - N276- ⇒ 6-cylinder TDI engine, 3.0 ltr. 4-valve common rail; Rep. gr. 23 ; Senders and sensors; Removing and installing fuel pressure regulating valve - N276- .

Protected by copyright. Copying for private or commercial purposes, in part or in whole, is not permitted unless authorised by AUDI AG. AUDI AG does not guarantee or accept any liability with respect to the correctness of information in this document. Copyright by AUDI AG.

5.3 Performing adaption of correction values for injectors

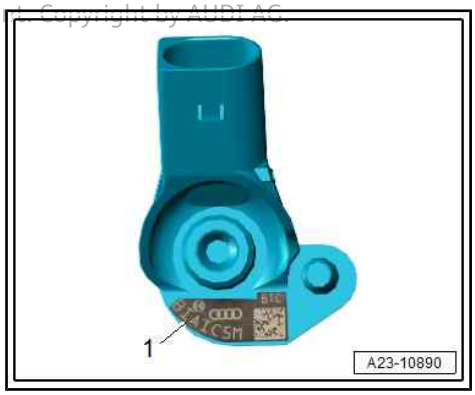

- The “Injector delivery calibration” and “Injector voltage calibration” serve to correct the injection rates for each cylinder of a common rail system individually across the entire operating range.
- The 7-digit adaption value -1- (example) is marked separately on each injector. It may consist of letters and/or numbers (ASCII code).
- Reference table for reading out letters and/or numbers on each injector

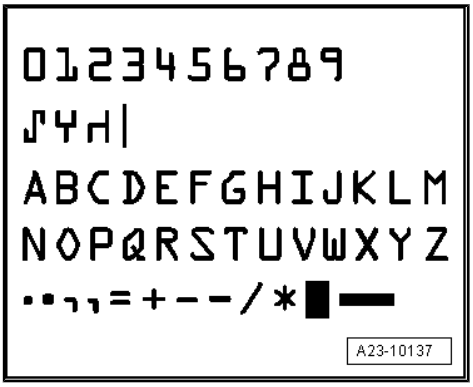

Special tools and workshop equipment required

- Vehicle diagnostic tester

Perform adaptions required after renewing a component (using ⇒ Vehicle diagnostic tester)
⇒ “3.10 Performing adaptions after renewing a component”, page 11 .

– When a new injector is installed, the adaption value for the new injector must be stored in the engine control unit.
– Additionally, check that the “Injector delivery calibration values” with “Injector voltage calibration values” are correctly entered for all the other injectors. Do NOT attempt to re-enter these values if the correct values are already stored in the engine control unit.
– When the engine control unit is renewed, the appropriate “Injector delivery calibration values” with “Injector voltage calibration” values must be written into the new engine control unit.

5.4 Checking for injectors sticking open

Note

If one of the injectors is sticking open, this means that the injector needle is not closing fully and fuel escapes into the cylinder.

Special tools and workshop equipment required

- Vehicle diagnostic tester
- Hand vacuum pump - VAS 6213-

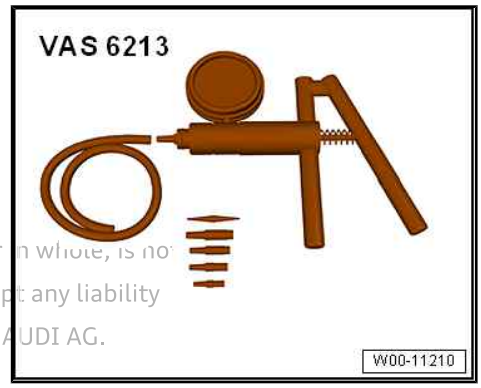

Protected by copyright. Copying for private or commercial purposes, in part or in whole, is not permitted unless authorised by AUDI AG. AUDI AG does not guarantee or accept any liability with respect to the correctness of information in this document. Copyright by AUDI AG.

- Adapter of return flow meter - VAS 6684-

Procedure

Preparatory work may be necessary depending on model ⇒ 6-cylinder TDI engine, 3.0 ltr. 4-valve common rail; Rep. gr. 23 ;

Injectors/high-pressure reservoir (rail); Checking for injectors sticking open

Caution

Risk of malfunctions caused by dirt.

- *Observe rules for cleanliness ⇒ page 7 .*

Protected by copyright. Copying for private or commercial purposes, in part or in whole, is not permitted unless authorised by AUDI AG. AUDI AG does not guarantee or accept any liability with respect to the correctness of information in this document. Copyright by AUDI AG.

– Erase entries in engine control unit event memory ⇒ Vehicle diagnostic tester.

– Clean all high-pressure reservoir (rail) connections with engine cleaner or brake cleaner and dry.

Version 1

– Open clip -arrow- and disconnect fuel return hose -1- from banjo bolt.

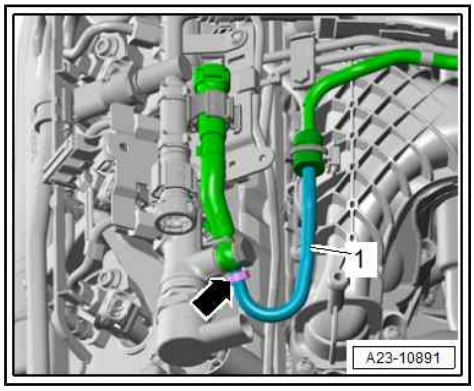

– Connect hand vacuum pump - VAS 6213- to fuel return hose -1-.

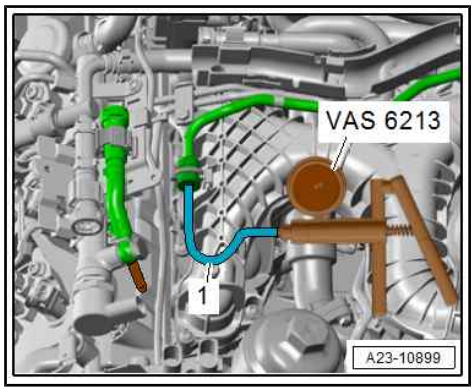

Note

Make sure you do not widen the fuel return hose -1- when attaching the adapter of the hand vacuum pump - VAS 6213- .

Version 2

– Detach retaining clip -1- and disconnect fuel return hose -2-.

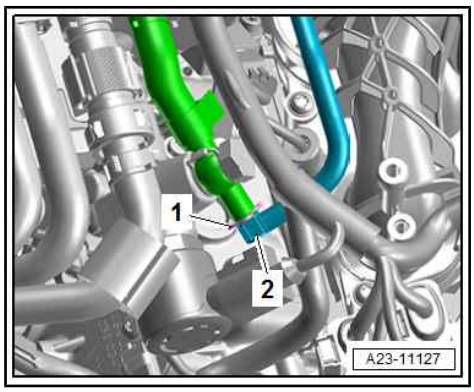

– Connect hand vacuum pump - VAS 6213- to fuel return hose -1-.

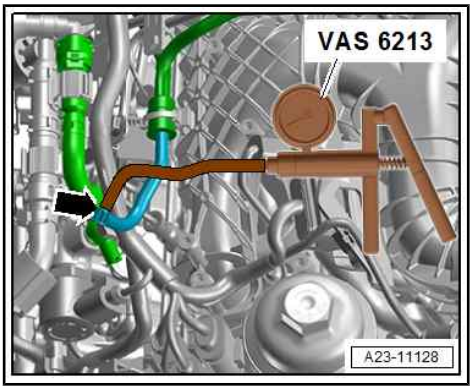

Note

Make sure you do not widen the fuel return hose -1- when attaching the adapter of the hand vacuum pump - VAS 6213- .

All versions (continued):

– Generate a vacuum of -500 mbar using hand vacuum pump - VAS 6213- .

- If the vacuum reading remains the same for 30 seconds, the injectors are OK.
- In the case of a faulty injector, the vacuum will fall back to 0 bar within 2 to 3 seconds.

– If pressure drops, check injectors on individual cylinder banks.

Cylinder bank 1 (right-side):

– Detach bracket -1- with wiring harness from high-pressure pipes towards front and push upwards slightly.

– Disconnect fuel return hoses from injectors; to do so, press down both tabs and at the same time pull centre piece up to release connection -arrow-.

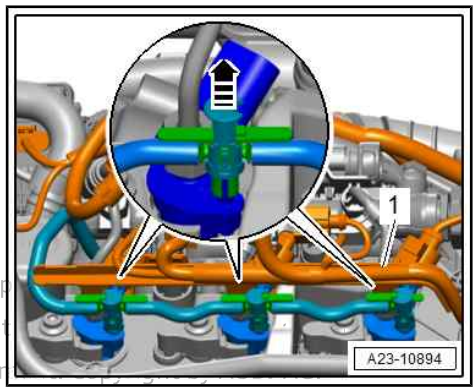

Protected by copyright. Copying for private or commercial p
permitted unless authorised by AUDI AG. AUDI AG does not
with respect to the correctness of information in this docum

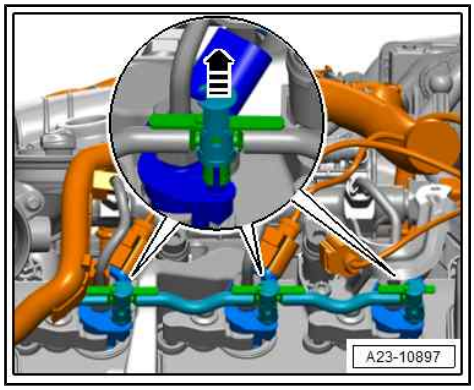

Cylinder bank 2 (left-side):

– Disconnect fuel return hoses from injectors; to do so, press down both tabs and at the same time pull centre piece up to release connection -arrow-.

Both sides (continued):

– Connect adapter to return line connection of injector to be tested after adapter has been cleaned and blown out.

– Generate a vacuum of -500 mbar using hand vacuum pump - VAS 6213- .

• If the vacuum reading remains the same for 30 seconds, the injector is OK.

• In the case of a faulty injector, the vacuum will fall back to 0 bar within 2 to 3 seconds.

Protected by copyright. Copying for private or commercial purposes, in part or in whole, is not permitted unless authorised by AUDI AG. AUDI AG does not guarantee or accept any liability with respect to the correctness of information in this document. Copyright by AUDI AG.

– Repeat test if necessary; note drop in vacuum reading on hand vacuum pump - VAS 6213- .

– Renew faulty injectors ⇒ page 239 .

Attaching

Note

♦ *Renew O-ring for fuel return line connection if it is damaged or deformed.*

♦ *Lubricate O-rings with engine oil or assembly oil before installing.*

– Push the return line connections carefully over the new seals and onto the injectors.

• The connection must engage audibly.

– Then press down release pin carefully.

– Erase any entries in engine control unit event memory resulting from testing ⇒ Vehicle diagnostic tester.

– Check fuel system for leaks ⇒ page 211 .

Additional work depending on model ⇒ 6-cylinder TDI engine, 3.0 ltr. 4-valve common rail; Rep. gr. 23 ; Injectors/high-pressure reservoir (rail); Checking for injectors sticking open .

Note

If there is any air left in the fuel system, the engine may switch to the backup mode ('emergency running' mode) during the road test. Stop engine and erase event memory. Then continue the road test.

5.5 Checking return flow rate of injectors with engine running

Note

Each injector normally has a relatively low fuel return flow rate. If the return flow rate at one injector is relatively high compared to the other injectors, that injector is probably defective.

Special tools and workshop equipment required

- Hose clamps, up to 25 mm - 3094-

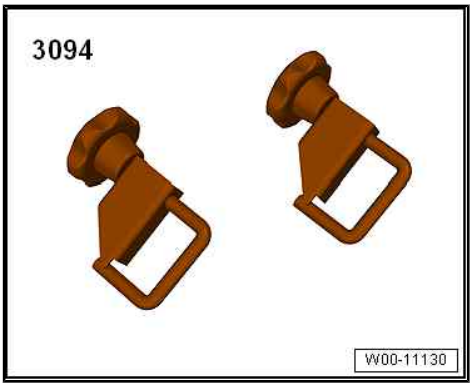

- Engine bung set - VAS 6122-

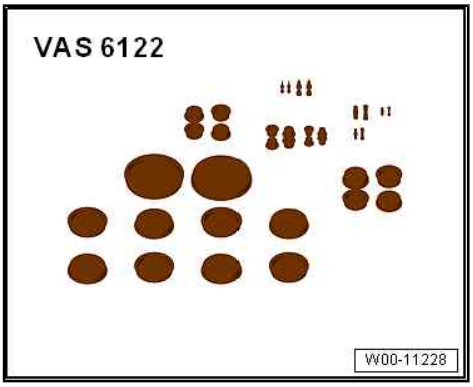

- Return flow meter - VAS 6684-

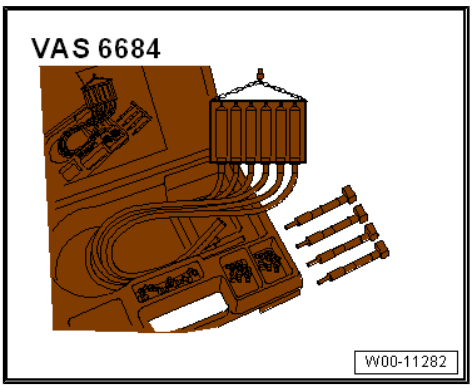

- Fuel-resistant measuring container

Procedure

Preparatory work may be necessary depending on model ⇒ 6-cylinder TDI engine, 3.0 ltr. 4-valve common rail; Rep. gr. 23 ; Injectors/high-pressure reservoir (rail); Checking return flow rate of injectors with engine running .

Caution

Risk of malfunctions caused by dirt.

- *Observe rules for cleanliness ⇒ page 7 .*

Protected by copyright. Copying for private or commercial purposes, in part or in whole, is not permitted unless authorised by AUDI AG. AUDI AG does not guarantee or accept any liability with respect to the correctness of information in this document. Copyright by AUDI AG.

– Clean all return line connections with engine cleaner or brake cleaner and dry.

– Clamp off fuel return line downstream of pressure retention valve using a hose clamp -3094- .

Protected by copyright. Copying for private or comme
permitted unless authorised by AUDI AG. AUDI AG do
with respect to the correctness of information in this

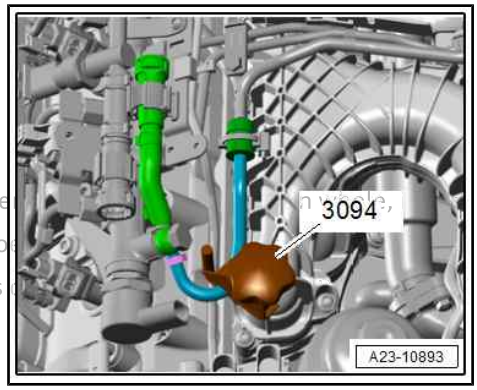

Cylinder bank 1 (right-side):

– Detach bracket -1- with wiring harness from high-pressure pipes towards front and push upwards slightly.

– Disconnect fuel return hoses from injectors; to do so, press down both tabs and at the same time pull centre piece up to release connection -arrow-.

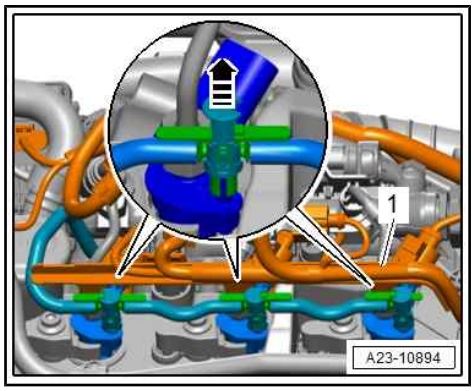

Cylinder bank 2 (left-side):

– Re-connect air hose to throttle valve module - J338- .

– Disconnect fuel return hoses from injectors; to do so, press down both tabs and at the same time pull centre piece up to release connection -arrow-.

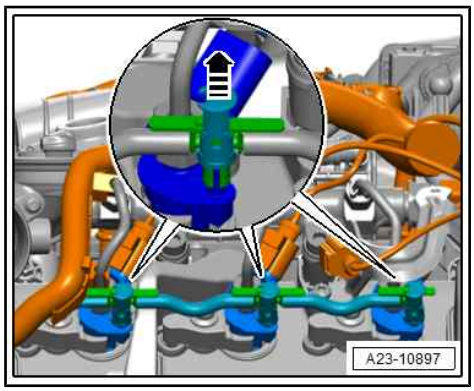

Both sides (continued):

– Connect hoses of return flow meter -VAS 6684/1- to return line connections of all six injectors.

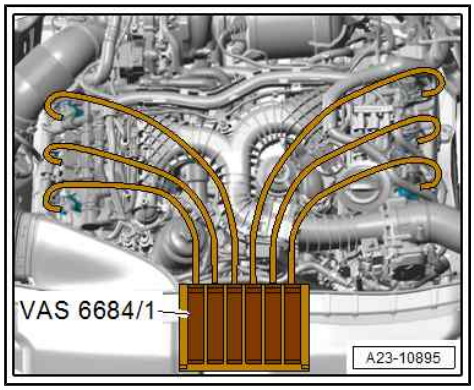

> ⚠ **Caution**
>
> *Risk of damage to injectors due to increased engine speed.*
>
> ♦ *Do NOT press the accelerator during this test; the engine must only run at idling speed.*

– Start engine and run at idling speed for several minutes:

– When the engine is warm and running at idling speed, the return flow rates at each of the 6 injectors must not differ by more than a small amount.

Evaluating return flow rate:

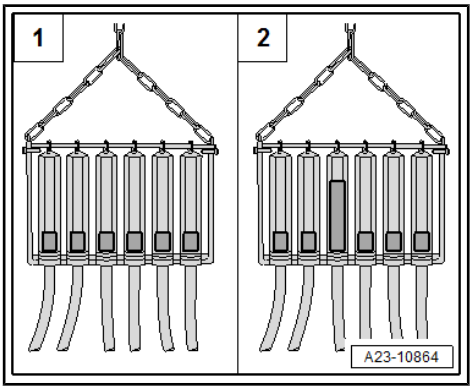

1 - Injectors OK. Return flow rate approx. identical on all injectors.

2 - Injector for cylinder 3 not OK. Return flow rate greater than three times the volume of smallest measured return flow rate.

Note

There is a mechanical fault at the injector if the return flow rate is greater than three times the volume of the smallest measured return flow rate.

– If one injector has a significantly higher return flow rate than the others it must be renewed ⇒ page 239 .

– Remove hose clamp, up to 25 mm - 3094- from fuel return line.

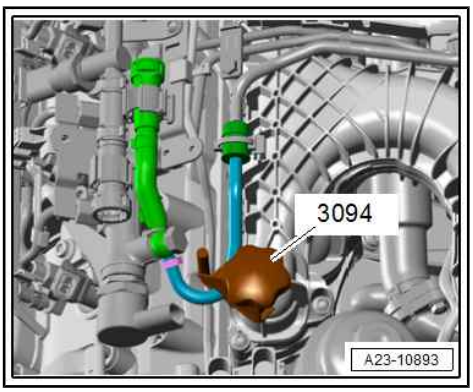

Attaching

Note

- *Renew O-ring for fuel return line connection if it is damaged or deformed.*
- *Lubricate all O-rings with engine oil or assembly oil before installing.*

– Push the return line connections carefully over the new seals and onto the injectors.

• The connection must engage audibly.

– Then press down release pin carefully.

– Erase any entries in engine control unit event memory resulting from testing ⇒ Vehicle diagnostic tester.

– Check fuel system for leaks ⇒ page 211 .

Protected by copyright. Copying for private or commercial purposes, in part or in whole, is not permitted unless authorised by AUDI AG. AUDI AG does not guarantee or accept any liability with respect to the correctness of information in this document. Copyright by AUDI AG.

Additional work depending on model ⇒ 6-cylinder TDI engine, 3.0 ltr. 4-valve common rail; Rep. gr. 23 ; Injectors/high-pressure reservoir (rail); Checking return flow rate of injectors with engine running .

Note

If there is any air left in the fuel system, the engine may switch to the backup mode ('emergency running' mode) during the road test. Stop engine and erase event memory. Then continue the road test.

5.6 Checking return flow rate of injectors at starter cranking speed

Note

- *Only perform this test if the engine does not start at all.*
- *Each injector normally has a relatively low fuel return flow rate. If the return flow rate at one injector is relatively high compared to the other injectors, that injector is probably defective.*

Special tools and workshop equipment required

- Hose clamps, up to 25 mm - 3094-

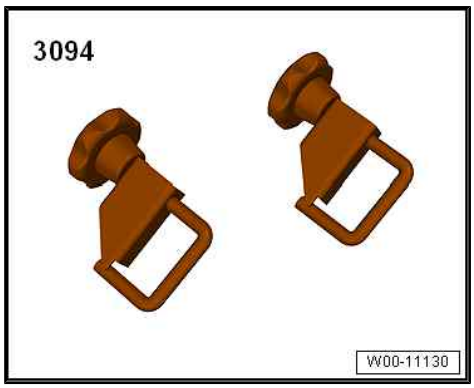

- Return flow meter - VAS 6684-

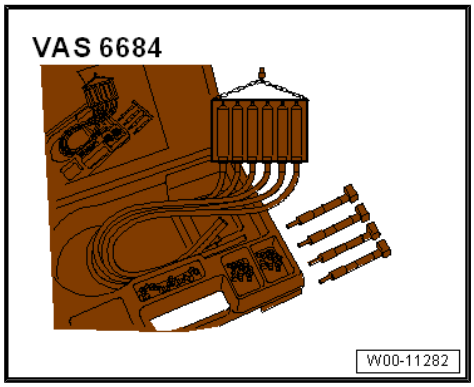

Protected by copyright. Copying for private or commercial purposes, in part or in whole, is not permitted unless authorised by AUDI AG. AUDI AG does not guarantee or accept any liability with respect to the correctness of information in this document. Copyright by AUDI AG.

- Fuel-resistant measuring container

Procedure

Preparatory work may be necessary depending on model ⇒ 6-cylinder TDI engine, 3.0 ltr. 4-valve common rail; Rep. gr. 23 ; Injectors/high-pressure reservoir (rail); Checking return flow rate of injectors at starter cranking speed .

Caution

Risk of malfunctions caused by dirt.

- *Observe rules for cleanliness* *⇒ page 7* *.*

– Clean all return line connections with engine cleaner or brake cleaner and dry.

– Clamp off fuel return line downstream of pressure retention valve using a hose clamp -3094- .

Protected by copyright. Copying for private or commercial purposes, in
permitted unless authorised by AUDI AG. AUDI AG does not guarantee
with respect to the correctness of information in this document. Copyr

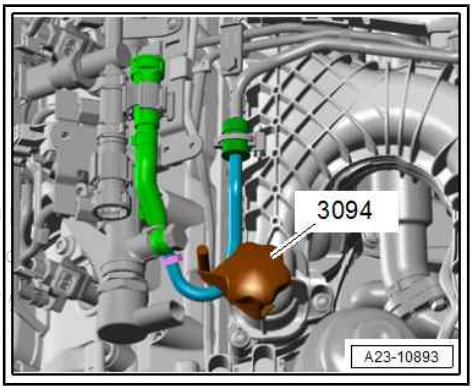

Cylinder bank 1 (right-side):

– Detach bracket -1- with wiring harness from high-pressure pipes towards front and push upwards slightly.

– Disconnect fuel return hoses from injectors; to do so, press down both tabs and at the same time pull centre piece up to release connection -arrow-.

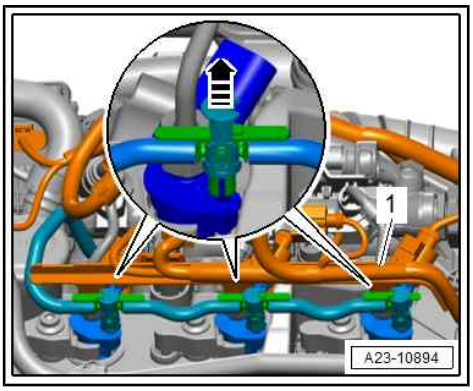

Cylinder bank 2 (left-side):

– Re-connect air hose to throttle valve module - J338- .

– Disconnect fuel return hoses from injectors; to do so, press down both tabs and at the same time pull centre piece up to release connection -arrow-.

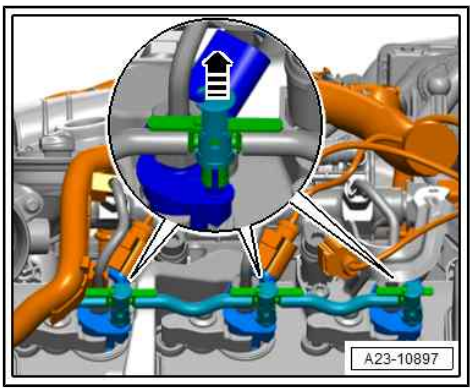

Both sides (continued):

– Connect hoses of return flow meter -VAS 6684/1- to return line connections of all six injectors.

– Operate starter three times (wait approx. 20 seconds each time after operating starter to prevent it from overheating).

• Specification of return flow rate: 0 ml

– If fuel comes out of one injector, that injector must be renewed ⇒ page 239 .

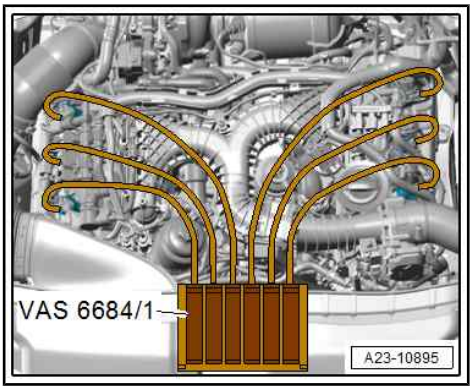

– Remove hose clamp -3094- from fuel return line.

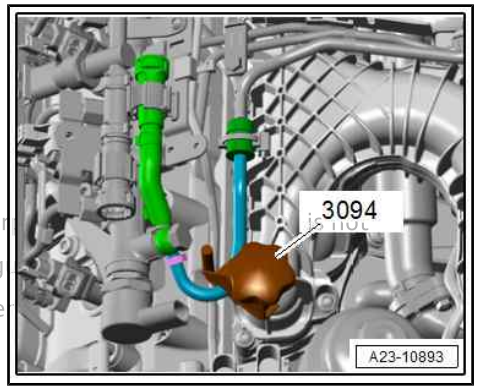

Attaching

Note

- *Renew O-ring for fuel return line connection if it is damaged or deformed.*
- *Lubricate all O-rings with engine oil or assembly oil before installing.*

Protected by copyright. Copying for private or commercial purposes is not permitted unless authorised by AUDI AG. AUDI AG does not guarantee or assume any liability with respect to the correctness of information in this document.

– Push the return line connections carefully over the new seals and onto the injectors.

• The connection must engage audibly.

– Then press down release pin carefully.

– Erase any entries in engine control unit event memory resulting from testing ⇒ Vehicle diagnostic tester.

– Check fuel system for leaks ⇒ page 211 .

Additional work depending on model ⇒ 6-cylinder TDI engine, 3.0 ltr. 4-valve common rail; Rep. gr. 23 ; Injectors/high-pressure reservoir (rail); Checking return flow rate of injectors with engine running .

Note

If there is any air left in the fuel system, the engine may switch to the backup mode ('emergency running' mode) during the road test. Stop engine and erase event memory. Then continue the road test.

5.7 Checking pressure retention valve in fuel return line

Special tools and workshop equipment required

- Tester for fuel return system - VAS 6330-

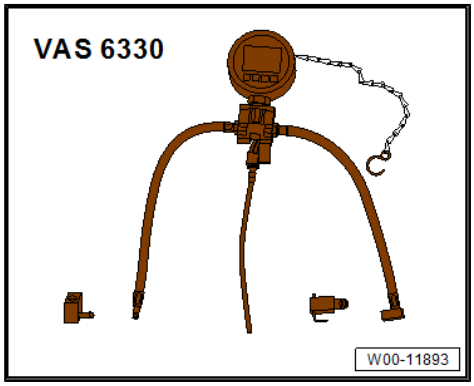

Procedure

Preparatory work may be necessary depending on model ⇒ 6-cylinder TDI engine, 3.0 ltr. 4-valve common rail; Rep. gr. 23 ; Injectors/high-pressure reservoir (rail); Checking pressure retention valve in fuel return line .

Caution

Risk of malfunctions caused by dirt.

- *Observe rules for cleanliness ⇒ page 7 .*
- *No dirt must be allowed to get into the disconnected return line or the open connection on the injector.*

– Clean return line connection on cylinder 4 with engine cleaner/ brake cleaner and dry.

– Pull return line connection off cylinder 4; to do so, press both tabs down and at the same time pull centre piece upwards -arrow- to release connection.

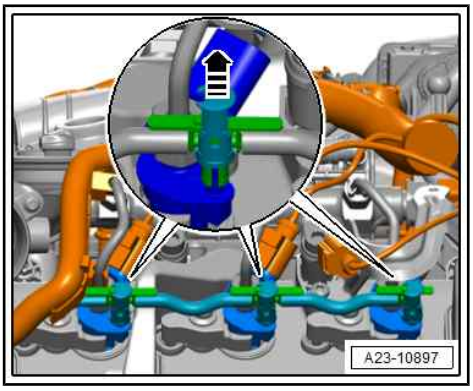

– Connect tester for fuel return system - VAS 6330- between return line connection on injector and return line.

– Start engine.

– Check pressure on pressure gauge.

♦ Specification: approx. 12 bar

– If specification is not attained, renew fuel return line with pressure retention valve and ring/hose connector.

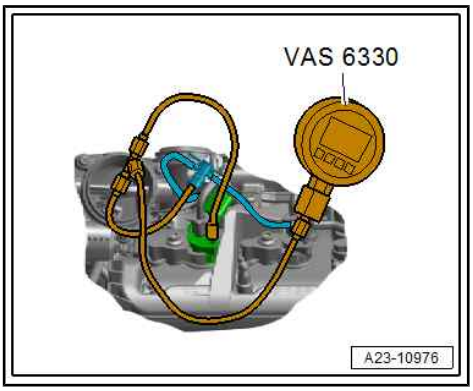

Additional work depending on model ⇒ 6-cylinder TDI engine, 3.0 ltr. 4-valve common rail; Rep. gr. 23 ; Injectors/high-pressure reservoir (rail); Checking pressure retention valve in fuel return line .

5.8 Removing and installing injectors

Special tools and workshop equipment required

Protected by copyright. Copying for private or commercial purposes, in part or in whole, is not permitted unless authorised by AUDI AG. AUDI AG does not guarantee or accept any liability with respect to the correctness of information in this document. Copyright by AUDI AG.

♦ Cleaning kit - VAS 6811- (not illustrated)

♦ Removal lever - 80-200-

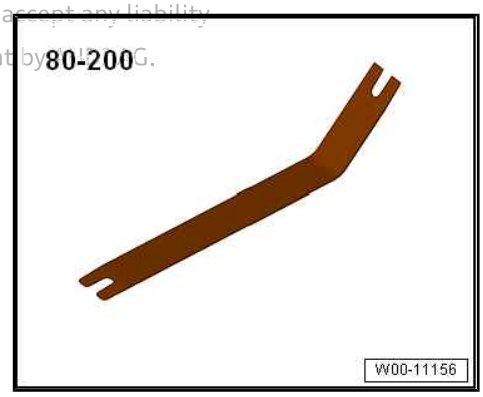

- Puller - T10055- with adapter - T10055/1-

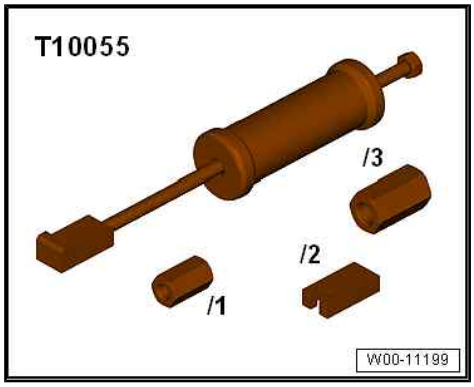

- Assembly sleeve - T10377-

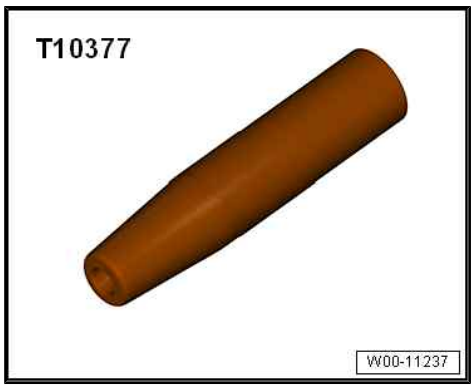

- Socket - T40055-

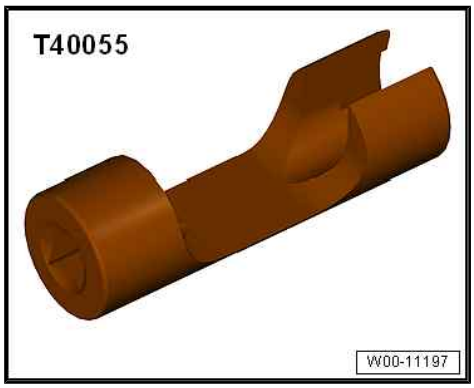

- Puller - T40059-

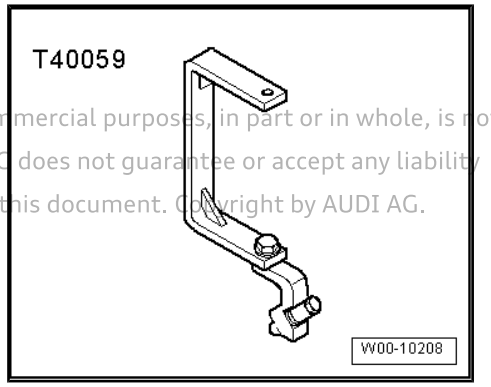

Protected by copyright. Copying for private or commercial purposes, in part or in whole, is not permitted unless authorised by AUDI AG. AUDI AG does not guarantee or accept any liability with respect to the correctness of information in this document. Copyright by AUDI AG.

Removing

> **Caution**
>
> *Risk of malfunctions caused by dirt.*
>
> ♦ *Observe rules for cleanliness ⇒ page 7 .*

Preparatory work may be necessary depending on model ⇒ 6-cylinder TDI engine, 3.0 ltr. 4-valve common rail; Rep. gr. 23 ; Injectors/high-pressure reservoir (rail); Removing and installing injectors .

Cylinder bank 1 (right-side):

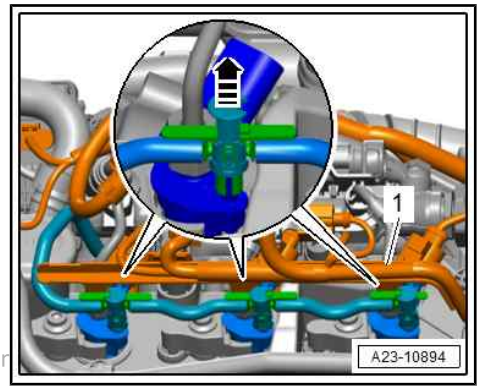

– Detach bracket -1- with wiring harness from high-pressure pipes towards front and push slightly upwards.

– Disconnect fuel return hoses from injectors; to do so, press down both tabs and at the same time pull centre piece up to release connection -arrow-.

Protected by copyright. Copying for private or commercial purposes, in part or
permitted unless authorised by AUDI AG. AUDI AG does not guarantee or accept any liability
with respect to the correctness of information in this document. Copyright by

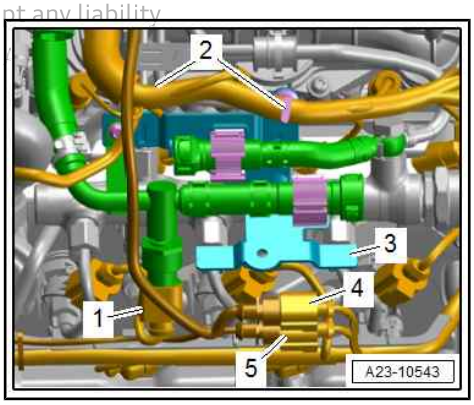

– Unplug electrical connector -1- for fuel pressure sender for low pressure - G410- .

– Country-specific version: Move electrical connector -4- for catalytic converter temperature sensor 1 - G20- clear.

– Move clear electrical connector -5- for exhaust gas temperature sender 4 - G648- .

– Move electrical wiring harnesses -2- and fuel hose clear at bracket -3-.

– Unclip bracket from high-pressure lines and push to one side.

Cylinder bank 2 (left-side):

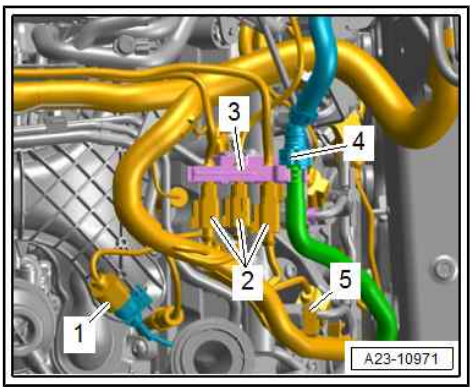

– If fitted, disconnect vacuum hose -4- and move hose clear at bracket.

– Take electrical connectors -2- out of bracket, disconnect them and move electrical wiring clear.

– Unclip bracket -3- from high-pressure lines and detach.

– Unclip bracket -5- from high-pressure lines and press to one side together with electrical wiring harness.

1 - Ignore

– Disconnect fuel return hoses from injectors; to do so, press down both tabs and at the same time pull centre piece up to release connection -arrow-.

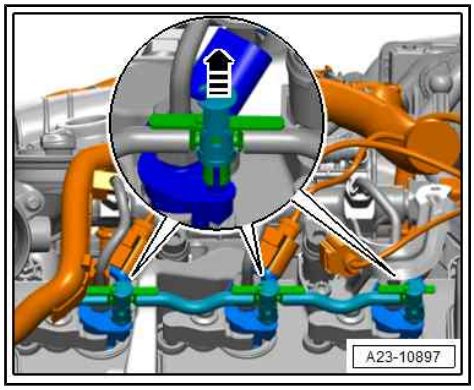

Both sides (continued)

> **Caution**
>
> *Used injectors must always be re-installed on the same cylinder.*
>
> ◆ *Mark injectors to ensure that they are re-installed at the correct cylinders.*

– Unplug electrical connectors -4- at injectors.

> **WARNING**
>
> *The fuel system is pressurised.*
>
> *Risk of injury as fuel may spray out.*
>
> - *Put on safety goggles.*
> - *Put on protective gloves.*
> - *Release pressure (wrap a clean cloth around connection and open connection carefully).*

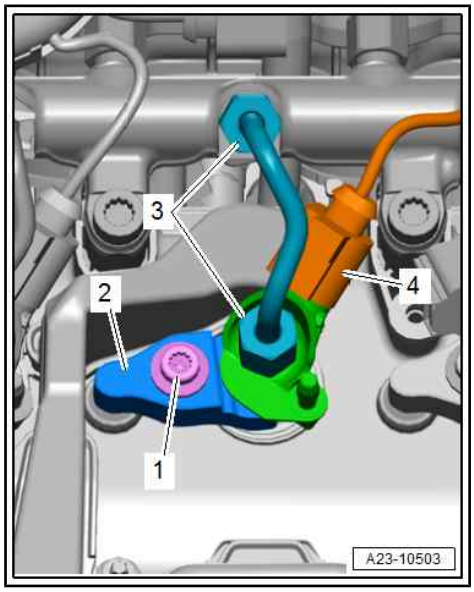

– Unscrew union nuts -3- and detach high-pressure pipe.
– Mark position of clamping piece -2- in relation to injector with paint for re-installation.
– Unscrew bolt -1- and remove clamping piece.

Note

If it is not possible to remove the clamping piece, detach injector.

– Fit puller - T10055- with adapter -T10055/1- on injector -2-, as shown in illustration.
– Detach injector with clamping piece -1-.

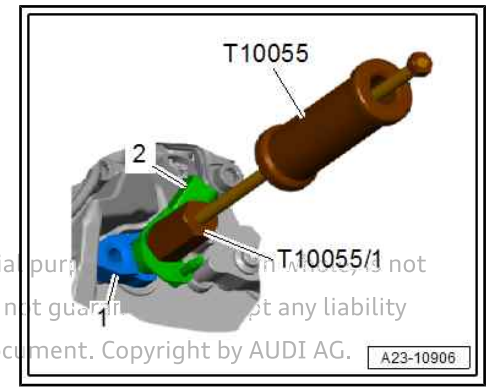

Protected by copyright. Copying for private or commercial purposes, in whole or in part, is not permitted unless authorised by AUDI AG. AUDI AG does not guarantee or accept any liability with respect to the correctness of information in this document. Copyright by AUDI AG.

– If puller - T10055- with adapter -T10055/1- cannot be fitted directly, use puller - T40059- with corresponding bolt -1- in addition.

– Place removed injectors on a clean cloth.

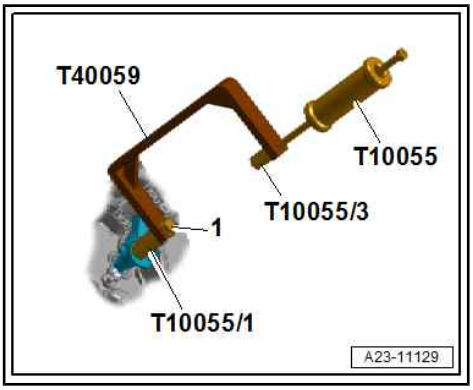

Installing new injectors

When installing a new injector, the following components must be renewed:

- Bolt for clamping piece
- Copper seal
- O-ring for injector bore
- O-ring for fuel return line connection

Installing used injectors

When re-installing a used injector in the same cylinder, the following components must be renewed:

- Bolt for clamping piece
- Copper seal
- O-ring for injector bore
- O-ring for fuel return line connection

– Spray tip of injector nozzle with rust-solvent spray. Wait approx. 5 minutes and wipe off soot particles and oil with a cloth.

– To remove the old copper seal from the injector, clamp the seal carefully in a vice so that it is just held between the jaws without turning. Then carefully pull and twist the injector out of the copper seal by hand.

– Clean off deposits under the copper seal using a suitable scraper.

Protected by copyright. Copying for private or commercial purposes, in part or in whole, is not permitted unless authorised by AUDI AG. AUDI AG does not guarantee or accept any liability with respect to the correctness of information in this document. Copyright by AUDI AG.

Continued (same procedure for used and new injectors):

> ⚠ **Caution**
>
> ***Risk of damage to injector sealing surface.***
>
> - ***To remove carbon deposits from the injector sealing surface, clean the injector bore in the cylinder head with cleaning kit - VAS 6811- .***

– Fit new copper seal.

– Lubricate all O-rings with engine oil or assembly oil before installing.

– Renew O-ring for injector bore using assembly sleeve - T10377- .

– Install injectors.

Remaining installation steps are carried out in reverse sequence; note the following:

– Install high-pressure pipes ⇒ page 244 .

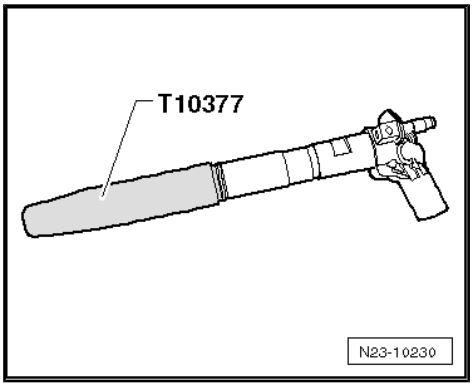

Note

Lubricate all O-rings with engine oil or assembly oil before installing.

– Push the return line connections carefully over the new seals and onto the injectors.

• The connection must engage audibly.

– Carefully press down release pin.

Note

After renewing one or more injectors, the "injector delivery calibration values" and "injector voltage calibration values" for the new injectors must be written into the engine control unit *⇒ page 228* *.*

Additional work depending on model ⇒ 6-cylinder TDI engine, 3.0 ltr. 4-valve common rail; Rep. gr. 23 ; Injectors/high-pressure reservoir (rail); Removing and installing injectors

Tightening torques

♦ ⇒ "5.1 Exploded view - injectors", page 224

♦ ⇒ "2.2 Exploded view - hose connections for charge air system", page 206

5.9 Removing and installing high-pressure pipes

Special tools and workshop equipment required

♦ Ratchet - V.A.G 1331/1-

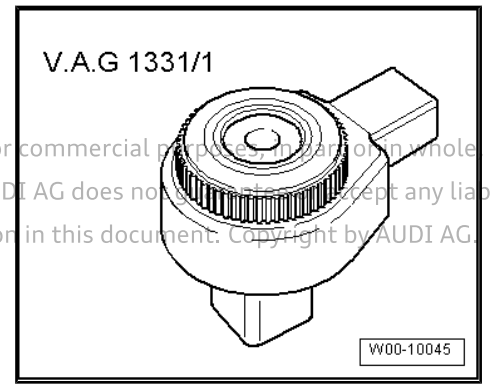

Protected by copyright. Copying for private or commercial purposes, in part or in whole, is not permitted unless authorised by AUDI AG. AUDI AG does not guarantee or accept any liability with respect to the correctness of information in this document. Copyright by AUDI AG.

- Open end spanner insert, AF 17 - V.A.G 1331/6-

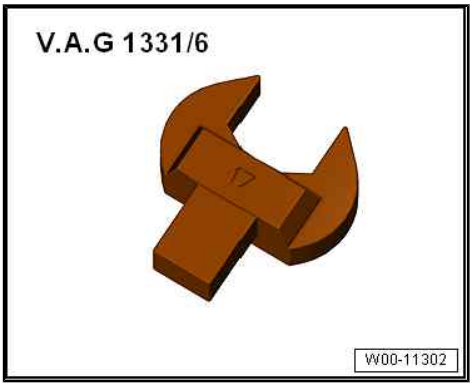

- Socket - T40055-

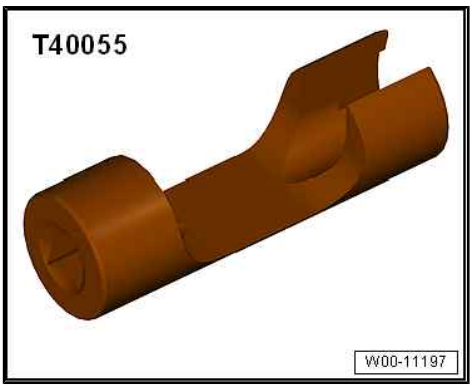

Procedure

Caution

Risk of malfunctions caused by dirt.

- *Observe rules for cleanliness ⇒ page 7 .*

Protected by copyright. Copying for private or commercial purposes, in part or in whole, is not permitted unless authorised by AUDI AG. AUDI AG does not guarantee or accept any liability with respect to the correctness of information in this document. Copyright by AUDI AG.

Note

- *Before re-installation, check taper seats for deformation, cracks, damage, scores and corrosion; renew high-pressure pipes if they are damaged or corroded.*
- *Check that bore in pipe is not distorted, restricted or damaged in any other way.*
- *When re-installing "old" high-pressure pipe, observe marking for installation position.*

– Use vacuum cleaner to remove dirt from taper seat at high-pressure reservoir (rail).

– Clean fuel pipe and end of pipe with engine cleaner or brake cleaner and dry.

– Lubricate threads of union nuts with clean engine oil.

– Hand-tighten union nuts on high-pressure pipes until they make contact (ensure that pipes are not under tension).

17 mm union nuts on high-pressure reservoir (rail):

– To secure high-pressure pipes, use torque wrench - V.A.G 1331- with tool insert, AF 17 - V.A.G 1331/6- .

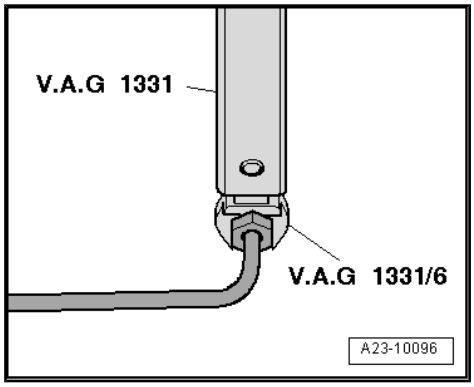

17 mm union nuts on injectors:

– To tighten unions of injectors, use torque wrench - V.A.G 1331- with ratchet - V.A.G 1331/1- and socket - T40055- .

Tightening torques

- ⇒ “5.1 Exploded view - injectors”, page 224
- ⇒ “3.2 Exploded view - cylinder head cover”, page 105

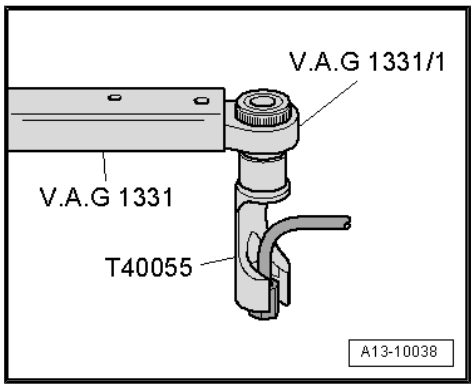

5.10 Removing and installing high-pressure reservoir (rail)

Special tools and workshop equipment required

- Removal lever - 80-200-

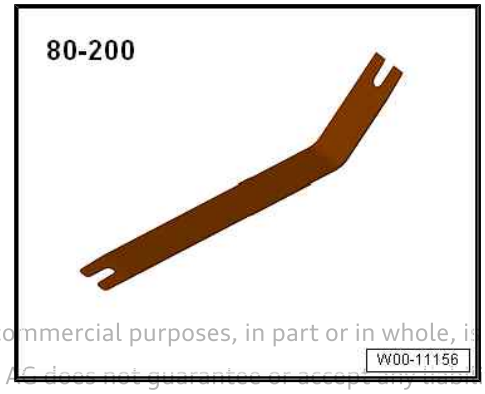

Protected by copyright. Copying for private or commercial purposes, in part or in whole, is not permitted unless authorised by AUDI AG. AUDI AG does not guarantee or accept any liability with respect to the correctness of information in this document. Copyright by AUDI AG.

- Open end spanner insert, AF 17 - V.A.G 1331/6-

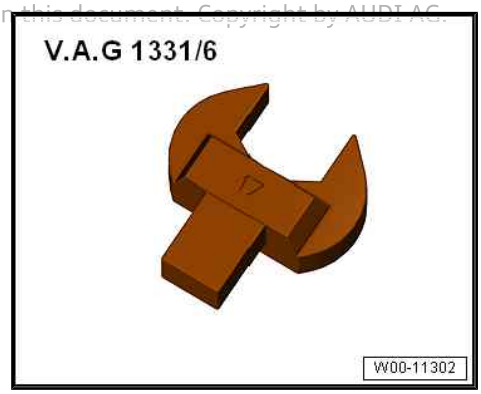

- Socket - T40055-

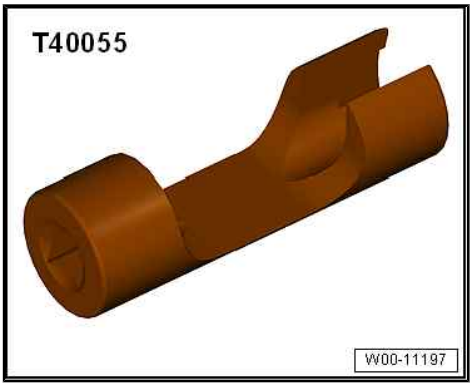

- Engine bung set - VAS 6122-

Protected by copyright. Copying for private or commercial purposes, in part or in whole, is not permitted unless authorised by AUDI AG. AUDI AG does not guarantee or accept any liability with respect to the correctness of information in this document. Copyright by AUDI AG.

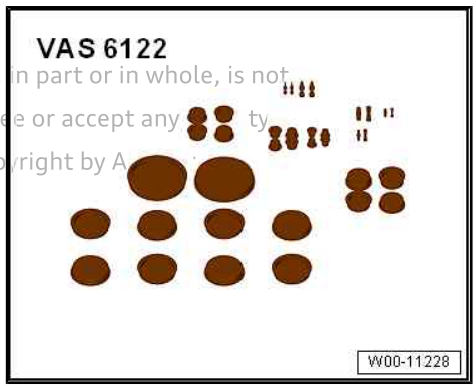

Removing

Caution

Risk of malfunctions caused by dirt.

- *Observe rules for cleanliness ⇒ page 7 .*

Preparatory work may be necessary depending on model ⇒ 6-cylinder TDI engine, 3.0 ltr. 4-valve common rail; Rep. gr. 23 ; Injectors/high-pressure reservoir (rail); Removing and installing high-pressure reservoir (rail) .

Cylinder bank 1 (right-side):

– Unplug electrical connector -1- for fuel pressure sender for low pressure - G410- .

– Country-specific version: Move electrical connector -4- for catalytic converter temperature sensor 1 - G20- clear.

– Move clear electrical connector -5- for exhaust gas temperature sender 4 - G648- .

– Move electrical wiring harnesses -2- and fuel hose clear at bracket -3-.

– Unclip bracket from high-pressure lines and push to one side.

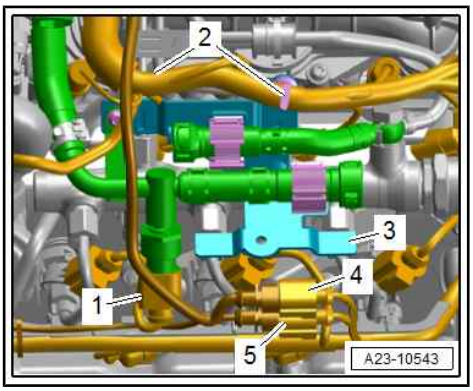

– Detach bracket -1- with wiring harness from high-pressure pipes towards front and push slightly upwards.
– Disconnect fuel return hoses from injectors; to do so, press down both tabs and at the same time pull centre piece up to release connection -arrow-.

Protected by copyright. Copying for private or [illegible] is not permitted unless authorised by AUDI AG. AUD[illegible] [illegible]bility with respect to the correctness of information

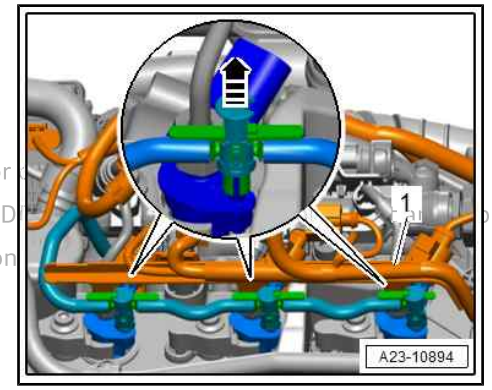

Version with hose clip:

– Remove banjo bolt -arrow-.

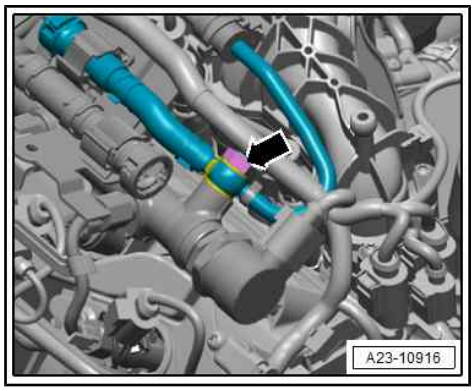

Version with retaining clip:

– Lift retaining clip -1- and disconnect fuel return hose -2-.

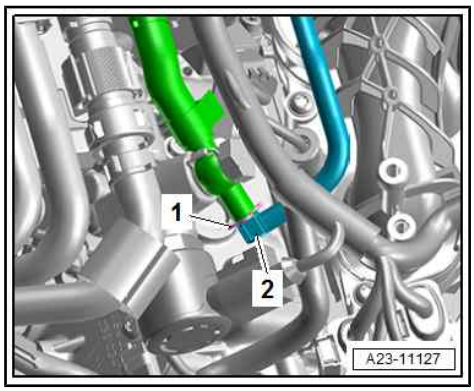

All versions (continued):

– Unplug electrical connector -2-.

> ⚠ **WARNING**
>
> *The fuel system is pressurised.*
>
> *Risk of injury as fuel may spray out.*
>
> - *Put on safety goggles.*
> - *Put on protective gloves.*
> - *Release pressure (wrap a clean cloth around connection and open connection carefully).*

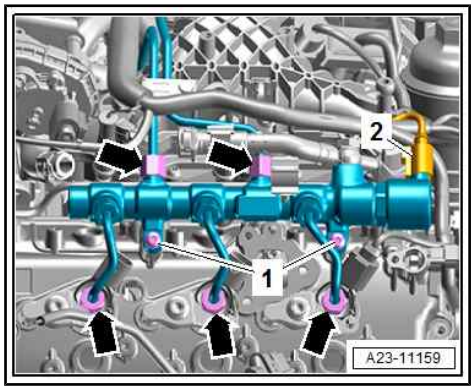

– Remove union nuts -arrows- and bolts -1- and detach fuel rail.

Cylinder bank 2 (left-side):

– If fitted, disconnect vacuum hose -4- and move hose clear at bracket.

– Take electrical connectors -2- out of bracket, disconnect them and move electrical wiring clear.

– Unclip bracket -3- from high-pressure lines and detach.

– Unclip bracket -5- from high-pressure lines and press to one side together with electrical wiring harness.

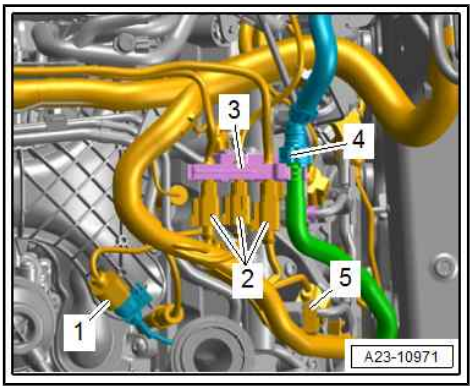

– Equipment version with SCR system: Remove electrical connector -2- for injector for reducing agent - N474- from bracket.

– Unplug electrical connector -1- for injector, cylinder 4 - N33- .

Protected by copyright. Copying for private or commercial purpo
permitted unless authorised by AUDI AG. AUDI AG does not gua
with respect to the correctness of information in this document.

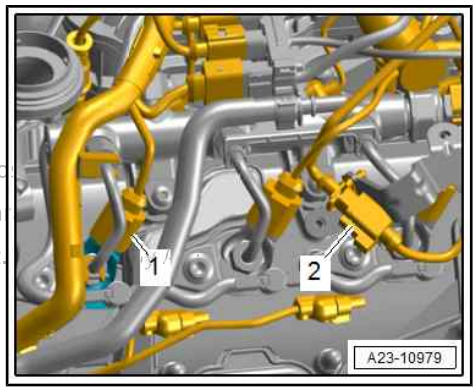

– Remove bolts -arrows-, move bracket -2- clear and detach it.

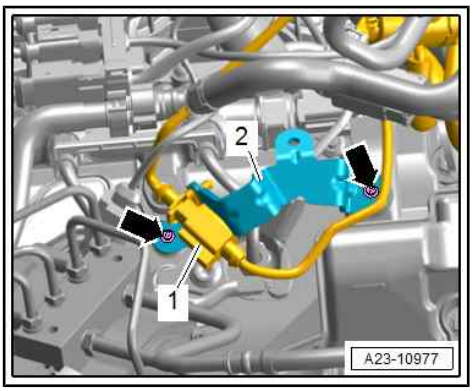

– Disconnect fuel return hoses from injectors; to do so, press down both tabs and at the same time pull centre piece up to release connection -arrow-.

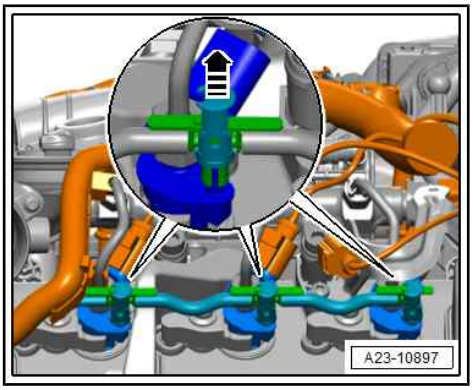

> ⚠ **WARNING**
>
> *The fuel system is pressurised.*
>
> *Risk of injury as fuel may spray out.*
>
> - *Put on safety goggles.*
> - *Put on protective gloves.*
> - *Release pressure (wrap a clean cloth around connection and open connection carefully).*

– Remove union nuts -arrows- and bolts -2- and detach fuel rail -1-.

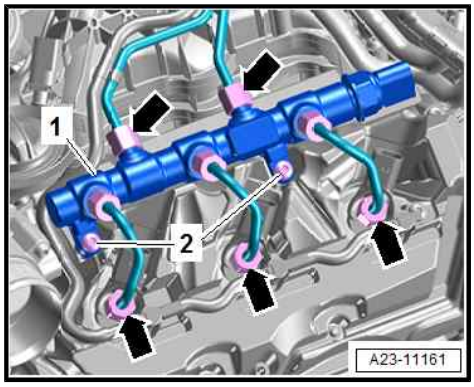

– Unplug electrical connector -arrow-.

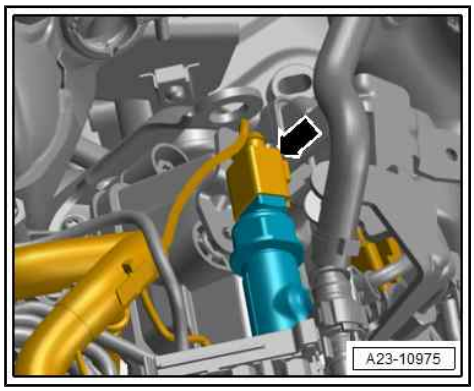

Both sides (continued):

– Seal off open lines and connections with plugs (thoroughly cleaned) from engine bung set - VAS 6122- .

Installing

Installation is carried out in reverse order; note the following:

– Install high-pressure pipes ⇒ page 244 .

Additional work depending on model ⇒ 6-cylinder TDI engine, 3.0 ltr. 4-valve common rail; Rep. gr. 23 ; Injectors/high-pressure reservoir (rail); Removing and installing high-pressure reservoir (rail) .

Tightening torques

- ⇒ “5.1 Exploded view - injectors”, page 224
- ⇒ Fig. ““Banjo bolt for fuel return line connection - tightening torque”“ , page 227
- ⇒ “2.2 Exploded view - hose connections for charge air system”, page 206

Protected by copyright. Copying for private or commercial purposes, in part or in whole, is not permitted unless authorised by AUDI AG. AUDI AG does not guarantee or accept any liability with respect to the correctness of information in this document. Copyright by AUDI AG.

6 Senders and sensors

⇒ "6.1 Removing and installing intake air temperature sender G42 ", page 251

⇒ "6.2 Removing and installing air mass meter G70 ", page 251

⇒ "6.3 Removing and installing fuel temperature sender G81 ", page 251

⇒ "6.4 Removing and installing fuel pressure sender G247 ", page 254

⇒ "6.5 Removing and installing fuel pressure sender for low pressure G410 ", page 256

⇒ "6.6 Checking fuel pressure regulating valve N276 ", page 256

⇒ "6.7 Removing and installing fuel pressure regulating valve N276 ", page 257

⇒ "6.8 Removing and installing pressure differential sender G505 ", page 258

6.1 Removing and installing intake air temperature sender - G42-

All procedures are described in ⇒ 6-cylinder TDI engine, 3.0 ltr. 4-valve common rail; Rep. gr. 23 ; Senders and sensors ; Removing and installing intake air temperature sender - G42- .

6.2 Removing and installing air mass meter - G70-

All procedures are described in ⇒ 6-cylinder TDI engine, 3.0 ltr. 4-valve common rail; Rep. gr. 23 ; Senders and sensors; Removing and installing air mass meter - G70- .

6.3 Removing and installing fuel temperature sender - G81-

⇒ "6.3.1 Removing and installing fuel temperature sender G81 - equipment version without auxiliary cooler for exhaust gas recirculation", page 251

⇒ "6.3.2 Removing and installing fuel temperature sender G81 - equipment version with auxiliary cooler for exhaust gas recirculation", page 253

6.3.1 Removing and installing fuel temperature sender - G81- - equipment version without auxiliary cooler for exhaust gas recirculation

Removing

Preparatory work may be necessary depending on model ⇒ 6-cylinder TDI engine, 3.0 ltr. 4-valve common rail; Rep. gr. 23 ; Senders and sensors ; Removing and installing fuel temperature sender - G81- .

Protected by copyright. Copying for private or commercial purposes, in part or in whole, is not permitted unless authorised by AUDI AG. AUDI AG does not guarantee or accept any liability with respect to the correctness of information in this document. Copyright by AUDI AG.

Caution

Risk of malfunctions caused by dirt.

- *Observe rules for cleanliness* *⇒ page 7* *.*
- *Make sure no dirt gets into opening in high-pressure reservoir (rail).*

– Clean area all around connection to high-pressure pump with engine cleaner or brake cleaner and dry.

Note

Clean carefully; cleaning solution must not enter the electrical connector.

– Release retaining clip -3- and move fuel hose clear.
– Move electrical wiring harness -4- clear at wiring duct -2-.
– Unscrew bolt -1- (left and right) and detach wiring duct.

5 - Ignore

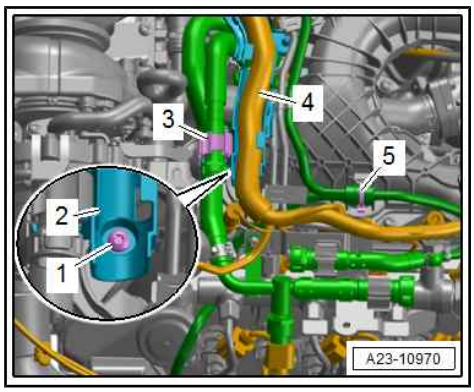

– Remove bolt -1- and detach bracket -4-.
– Detach connection -2- and unplug electrical connector -3-.

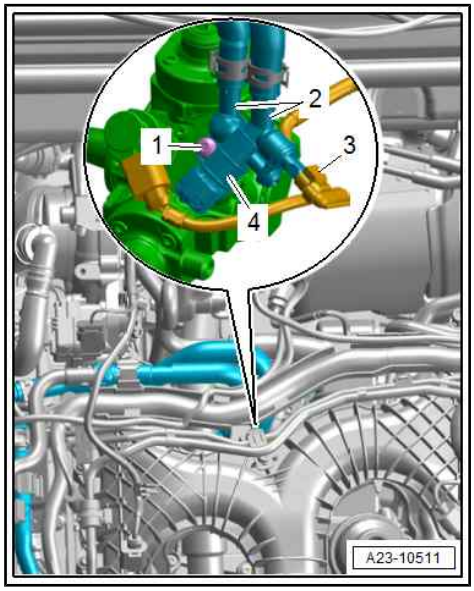

Protected by copyright. Copying for private or commercial purposes, in part or in whole, is not permitted unless authorised by AUDI AG. AUDI AG does not guarantee or accept any liability with respect to the correctness of information in this document. Copyright by AUDI AG.

– Remove bolt -2- and disconnect fuel temperature sender - G81- -item 3- from connection -1-.

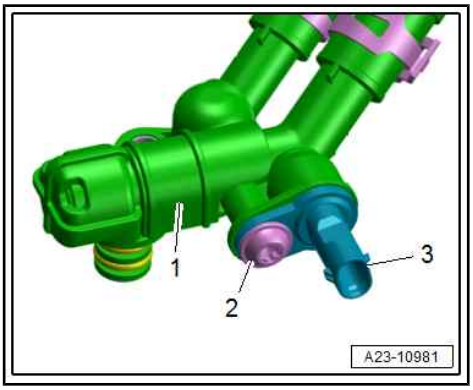

Installing

Installation is carried out in reverse order; note the following:

Note

Renew O-rings after removing; ensure correct allocation ⇒ page 261 .

WARNING

Danger! Fuel may escape.

- *When the fuel temperature sender - G81- is removed, fuel will enter the inner V of the cylinder block. The engine must be washed after the repair is performed.*

Additional work depending on model ⇒ 6-cylinder TDI engine, 3.0 ltr. 4-valve common rail; Rep. gr. 23 ; Senders and sensors ; Removing and installing fuel temperature sender - G81- .

Tightening torques

- ⇒ “4.1 Exploded view - intake manifold”, page 214
- ⇒ “7.1 Exploded view - high-pressure pump”, page 259

6.3.2 Removing and installing fuel temperature sender - G81- - equipment version with auxiliary cooler for exhaust gas recirculation

Removing

– Remove auxiliary cooler for exhaust gas recirculation ⇒ page 295 .

Protected by copyright. Copying for private or commercial purposes, in part or in whole, is not permitted unless authorised by AUDI AG. AUDI AG does not guarantee or accept any liability with respect to the correctness of information in this document.

– Unplug electrical connector -2-.
– Remove bolt -1- and detach fuel temperature sender - G81- from connection.

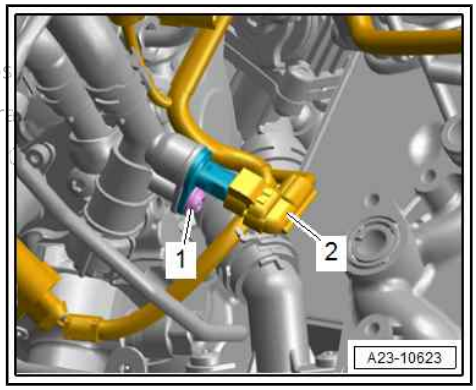

Installing

– Install auxiliary cooler for exhaust gas recirculation ⇒ page 295 .

Tightening torques

- ⇒ “4.1 Exploded view - intake manifold”, page 214

6.4 Removing and installing fuel pressure sender - G247-

Note

- *The fuel pressure sender - G247- continuously measures the fuel pressure in the high-pressure system. It transmits a corresponding voltage signal to the engine control unit - J623- .*
- *Should the fuel pressure sender fail, the engine control unit will control the fuel pressure via a mapped open-loop backup function. Maximum engine speed in this mode is restricted.*
- *The fuel pressure sender - G247- has a deformable sealing lip.*

Special tools and workshop equipment required

- Engine bung set - VAS 6122-

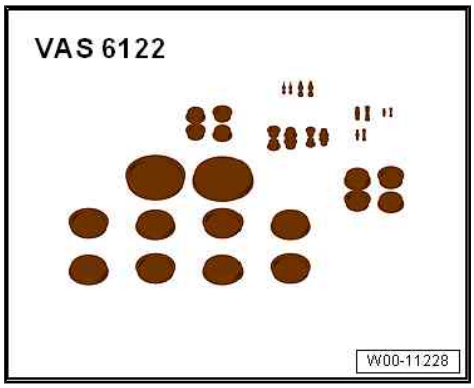

- Socket - T40218-

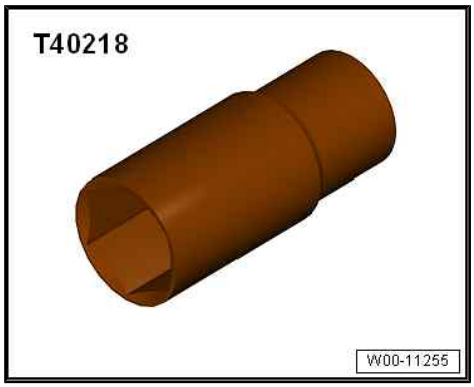

Removing

Preparatory work may be necessary depending on model ⇒ 6-cylinder TDI engine, 3.0 ltr. 4-valve common rail; Rep. gr. 23 ; Senders and sensors; Removing and installing fuel pressure sender - G247- .

Protected by copyright. Copying for private or commercial purposes, in part or in whole, is not permitted unless authorised by AUDI AG. AUDI AG does not guarantee or accept any liability with respect to the correctness of information in this document. Copyright by AUDI AG.

Caution

Risk of malfunctions caused by dirt.

- *Observe rules for cleanliness* *⇒ page 7* *.*

Equipment version with SCR system:

– Unscrew bolt -2- and release screw-type clip.

– Detach injector for reducing agent - N474- -item 1- and place to one side.

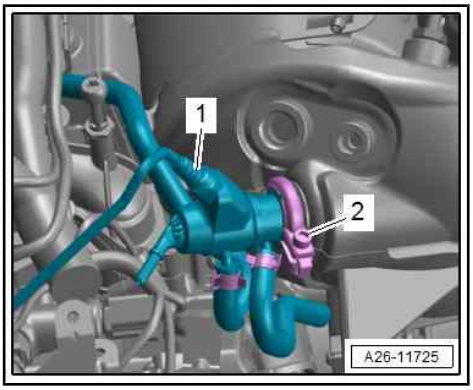

All vehicles (continued):

– Clean area all around fuel pressure sender - G247- with engine cleaner or brake cleaner and dry.

Note

♦ *Clean carefully; cleaning solution must not enter the electrical connector.*

♦ *Make sure no dirt gets into opening in high-pressure reservoir (rail).*

– Unplug electrical connector -arrow-.

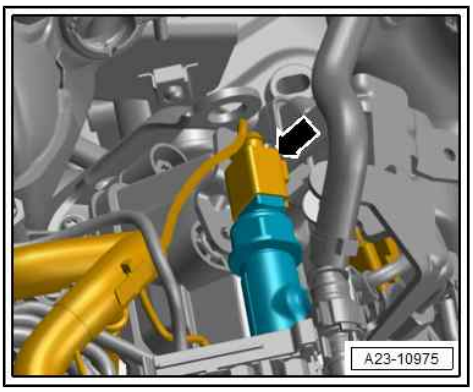

Note

Do not use an open-end spanner for loosening or tightening.

– Unscrew fuel pressure sender - G247- using socket, 27 mm - T40218- .

– Remove dirt from opening in high-pressure reservoir (rail) using a vacuum cleaner. Do not use metal tools, etc.

– Seal off hole in high-pressure reservoir (rail) with a plug (thoroughly cleaned) from engine bung set - VAS 6122- .

Installing

Installation is carried out in reverse order; note the following:

Note

♦ *If the deformable sealing lip and the thread of the fuel pressure sender - G247- are not damaged, the sender can be re-used once.*

Protected by copyright. Copying for private or commercial purposes, in part or in whole, is not permitted unless authorised by AUDI AG. AUDI AG does not guarantee or accept any liability with respect to the correctness of information in this document. Copyright by AUDI AG.

♦ *Check sealing surface at opening in high-pressure reservoir.*

♦ *Check that the deformable sealing lip and the thread on the new fuel pressure sender are not damaged.*

♦ *The beginning of the thread and the deformable sealing lip of the fuel pressure sender must be coated with diesel fuel.*

– Screw in fuel pressure sender - G247- by hand until it makes contact and then tighten.

– Install injector for reducing agent - N474- ⇒ page 273 .

Additional work depending on model ⇒ 6-cylinder TDI engine, 3.0 ltr. 4-valve common rail; Rep. gr. 23 ; Senders and sensors; Removing and installing fuel pressure sender - G247- .

Tightening torques

♦ ⇒ Fig. "" Fuel pressure sender -G247- - tightening torque"" , page 228

6.5 Removing and installing fuel pressure sender for low pressure - G410-

Removing

Preparatory work may be necessary depending on model ⇒ 6-cylinder TDI engine, 3.0 ltr. 4-valve common rail; Rep. gr. 23 ; Senders and sensors ; Removing and installing fuel pressure sender for low pressure - G410- .

Caution

Risk of malfunctions caused by dirt.

- *Observe rules for cleanliness when working on the fuel supply system ⇒ page 7 .*

– Unplug electrical connector -1-.

– Unscrew fuel pressure sender for low pressure - G410- -item 2- (counterhold at connection -3-).

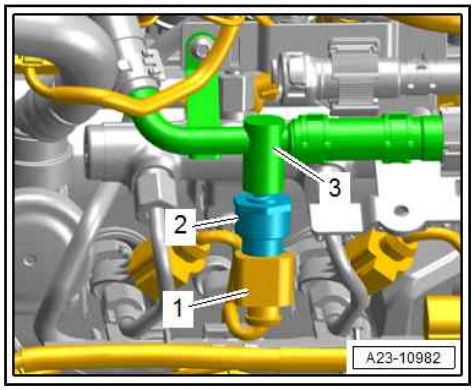

Installing

Installation is carried out in reverse order; note the following:

– Screw in fuel pressure sender for low pressure - G410- by hand until it makes contact and then tighten.

Additional work depending on model ⇒ 6-cylinder TDI engine, 3.0 ltr. 4-valve common rail; Rep. gr. 23 ; Senders and sensors ; Removing and installing fuel pressure sender for low pressure - G410- .

Tightening torques

- ⇒ Fig. "" Fuel pressure sender for low pressure -G410- - tightening torque"" , page 261

Protected by copyright. Copying for private or commercial purposes, in part or in whole, is not permitted unless authorised by AUDI AG. AUDI AG does not guarantee or accept any liability with respect to the correctness of information in this document. Copyright by AUDI AG.

6.6 Checking fuel pressure regulating valve - N276-

All procedures are described in ⇒ 6-cylinder TDI engine, 3.0 ltr. 4-valve common rail; Rep. gr. 23 ; Senders and sensors; Checking fuel pressure regulating valve - N276- .

6.7 Removing and installing fuel pressure regulating valve - N276-

Note

- *The fuel pressure regulating valve - N276- maintains a constant pressure in the high-pressure reservoir (rail) and the injector pipes (high-pressure fuel circuit).*
- *It is not possible to start engine if fuel pressure regulating valve - N276- is defective.*
- *If the pressure in the high-pressure fuel circuit is too high, the regulating valve opens to allow some of the fuel to flow back from the high-pressure reservoir (rail) to the fuel tank via a return hose.*
- *If the pressure in the high-pressure fuel circuit is too low, the valve closes and seals off the high-pressure section of the system from the low-pressure section.*
- *The fuel pressure regulating valve - N276- has a deformable sealing lip and can only be used once. Do not install it for test purposes.*

Special tools and workshop equipment required

- Vehicle diagnostic tester
- Engine bung set - VAS 6122-

Protected by copyright. Copying for private or commercial purposes, in part or in [illegible] permitted unless authorised by AUDI AG. AUDI AG does not guarantee or assume liability with respect to the correctness of information in this document. Copyright [illegible]

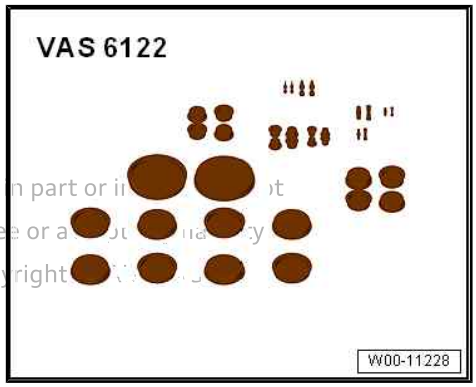

- Insert tool, 30 mm - T10553- (not illustrated)

Removing

Preparatory work may be necessary depending on model ⇒ 6-cylinder TDI engine, 3.0 ltr. 4-valve common rail; Rep. gr. 23 ; Senders and sensors; Removing and installing fuel pressure regulating valve - N276- .

Caution

Risk of malfunctions caused by dirt.

- ***Observe rules for cleanliness*** ⇒ page 7 .

– Clean thread and area all around fuel pressure regulating valve with engine cleaner or brake cleaner and dry.

Note

- *Clean carefully; cleaning solution must not enter the electrical connector.*
- *Make sure no dirt gets into opening in high-pressure reservoir (rail).*

– Remove banjo bolt for fuel return hoses.

– Unplug electrical connector -arrow- at fuel pressure regulating valve - N276- .

– Loosen union screw on regulating valve (counterhold at high-pressure reservoir (rail)). Then remove by hand.

– Remove dirt from thread and sealing surface of high-pressure reservoir (rail) using a vacuum cleaner. Do not use metal tools, etc.

– Seal off hole in high-pressure reservoir (rail) with a plug (thoroughly cleaned) from engine bung set - VAS 6122- .

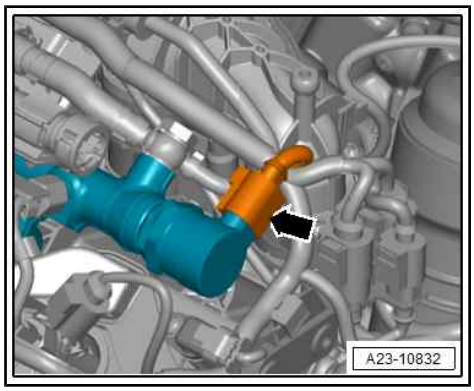

Installing

Installation is carried out in reverse order; note the following:

Note

- *Fuel pressure regulating valve - N276- must always be renewed after it has been removed.*
- *Check sealing surface at opening in high-pressure reservoir.*
- *Check that the deformable sealing lip and the thread on the new regulating valve are not damaged.*
- *Coat beginning of thread, deformable sealing lip and O-ring of regulating valve lightly with diesel fuel.*

– Position fuel pressure regulating valve - N276- so that electrical wiring is not under tension when connector -arrow- is plugged in.

– Use insert tool, 30 mm - T10553- to tighten union nut on regulating valve in stages (counterhold hexagon flats on housing) ⇒ page 227 .

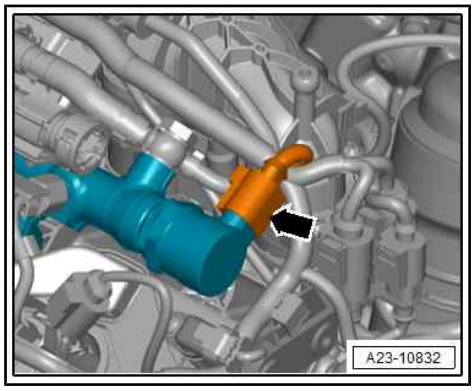

Additional work depending on model ⇒ 6-cylinder TDI engine, 3.0 ltr. 4-valve common rail; Rep. gr. 23 ; Senders and sensors; Removing and installing fuel pressure regulating valve - N276- .

Perform adaptions required after renewing a component (using ⇒ Vehicle diagnostic tester)
⇒ “3.10 Performing adaptions after renewing a component”, page 11 .

Tightening torques

- ⇒ Fig. “” Fuel pressure regulating valve -N276- - tightening torque”” , page 227

Protected by copyright. Copying for private or commercial purposes, in part or in whole, is not permitted unless authorised by AUDI AG. AUDI AG does not guarantee or accept any liability with respect to the correctness of information in this document. Copyright by AUDI AG.

6.8 Removing and installing pressure differential sender - G505-

All procedures are described in ⇒ 6-cylinder TDI engine, 3.0 ltr. 4-valve common rail; Rep. gr. 23 ; Senders and sensors; Removing and installing pressure differential sender - G505- .

7 High-pressure pump

⇒ "7.1 Exploded view - high-pressure pump", page 259

⇒ "7.2 Removing and installing high-pressure pump", page 261

Protected by copyright. Copying for private or commercial purposes, in part or in whole, is not permitted unless authorized by AUDI AG. AUDI AG does not guarantee or accept any liability with respect to the correctness of information in this document. Copyright by AUDI AG.

7.1 Exploded view - high-pressure pump

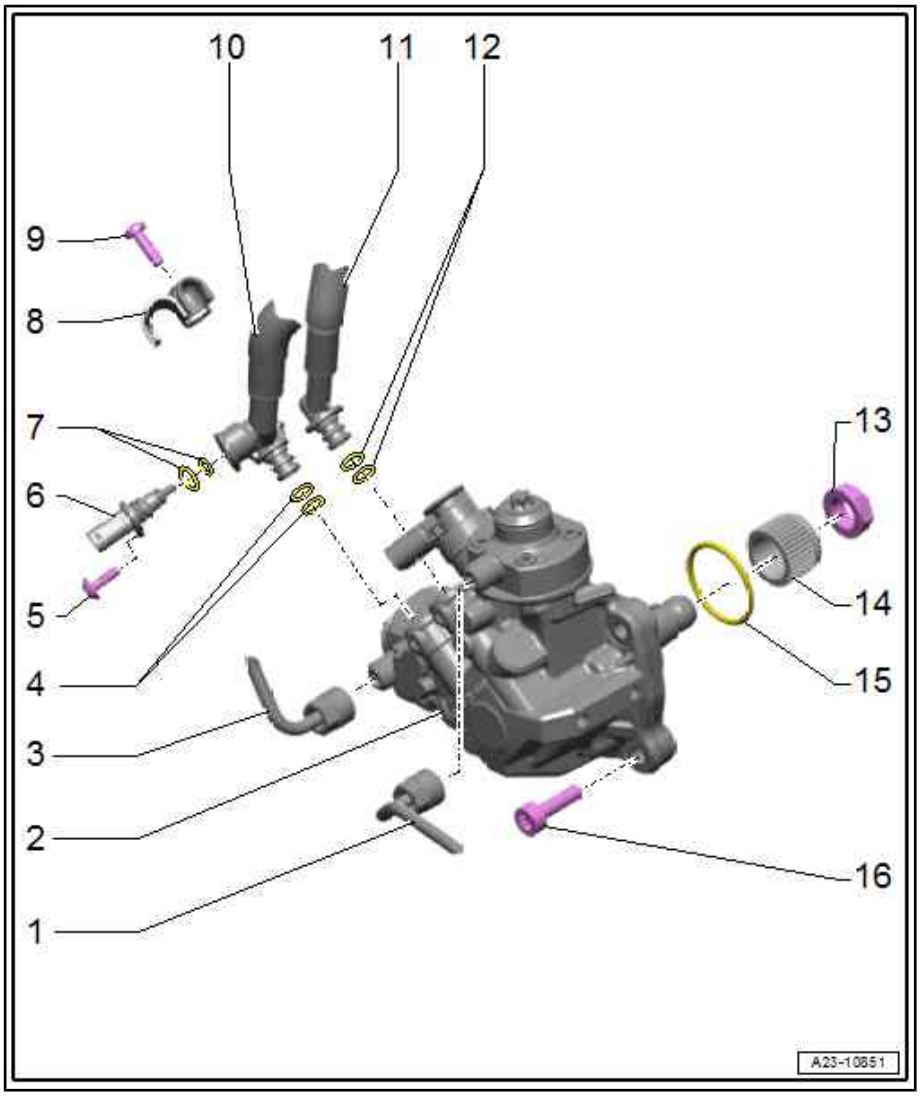

1 - High-pressure pipe

- ❑ Do not alter shape
- ❑ Check for damage before re-installing
- ❑ Always renew high-pressure pipe when renewing high-pressure pump
- ❑ Installing ⇒ page 244
- ❑ Lubricate threads of union nuts with clean engine oil
- ❑ When re-installing a high-pressure pipe: 25 Nm
- ❑ When installing a new high-pressure pipe: 15 Nm + 60°

2 - High-pressure pump

- ❑ Removing and installing ⇒ page 261
- ❑ Perform adaptions required after renewing a component (using ⇒ Vehicle diagnostic tester) ⇒ "3.10 Performing adaptions after renewing a component", page 11 .

3 - High-pressure pipe

- ❑ Do not alter shape
- ❑ Check for damage before re-installing
- ❑ Always renew high-pressure pipe when renewing high-pressure pump
- ❑ Installing ⇒ page 244
- ❑ Lubricate threads of union nuts with clean engine oil
- ❑ When re-installing a high-pressure pipe: 25 Nm
- ❑ When installing a new high-pressure pipe: 15 Nm + 60°

4 - O-rings

- ❑ Renew after removing
- ❑ Different versions available ⇒ Electronic parts catalogue
- ❑ Allocation ⇒ page 261

5 - Bolt

- ❑ Thread-forming
- ❑ Fit and screw in bolt by hand so that it is screwed into old thread. Then tighten bolt to torque
- ❑ 7.5 Nm

6 - Fuel temperature sender - G81-

- ❑ Removing and installing ⇒ "6.3 Removing and installing fuel temperature sender G81 ", page 251

7 - O-rings

- ❑ Renew after removing

8 - Bracket

- ❑ For fuel hoses

9 - Bolt

- ❑ 9 Nm

10 - Connection

- ❑ Fuel supply line

11 - Connection

- ❑ Fuel return line

12 - O-rings

- ❑ Renew after removing
- ❑ Different versions available ⇒ Electronic parts catalogue
- ❑ Allocation ⇒ page 261

13 - Nut

- ❑ Renew after removing
- ❑ To loosen, counterhold adapter -item 14- using counterhold tool - T40248- or counterhold tool - T40292-
- ❑ 70 Nm

14 - Adapter

- ❑ For chain sprocket for high-pressure pump
- ❑ Different types of adapters are fitted depending on version
- ❑ Renew after removing
- ❑ To loosen nut -item 13-, use counterhold tool - T40248- or counterhold tool - T40292-

15 - O-ring

- ❑ Renew after removing

16 - Bolt

- ❑ 23 Nm
- ❑ Renew

Connection to bracket - tightening torque

– Tighten bolt -arrow- to 3.5 Nm.

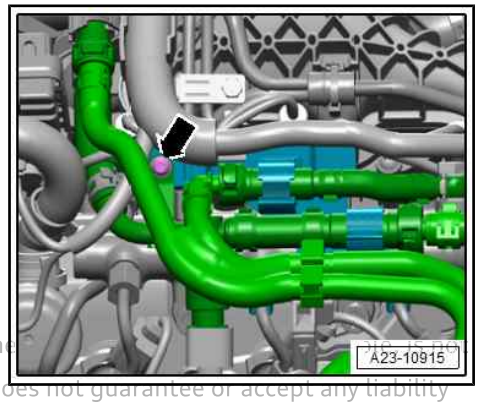

Protected by copyright. Copying for private or comm
permitted unless authorised by AUDI AG. AUDI AG does not guarantee or accept any liability
with respect to the correctness of information in this document. Copyright by AUDI AG.

Fuel pressure sender for low pressure - G410- - tightening torque

– Tighten fuel pressure sender for low pressure - G410- -item 2- to 22 Nm.

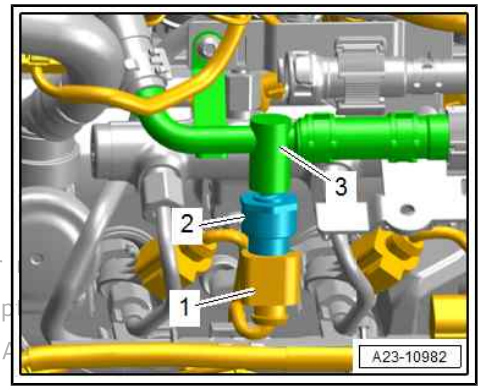

Protected by copyright. Copying for private or commercial purposes, in part or
permitted unless authorised by AUDI AG. AUDI AG does not guarantee or accep
with respect to the correctness of information in this document. Copyright by A

Allocation of O-rings to connection -2-

1 - Blue O-ring

3 - Blue O-ring

4 - O-ring, green

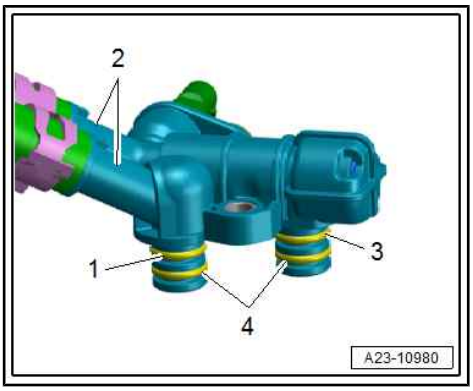

7.2 Removing and installing high-pressure pump

Special tools and workshop equipment required

♦ Locking pin - T40245-

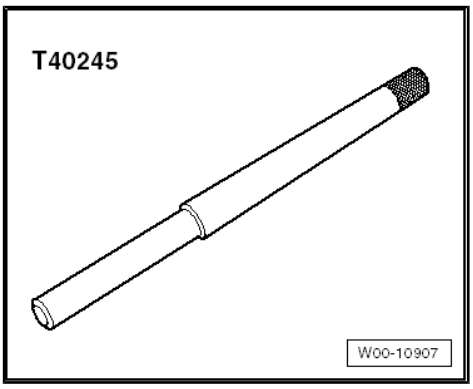

♦ Wrench, 21 mm - T40263-

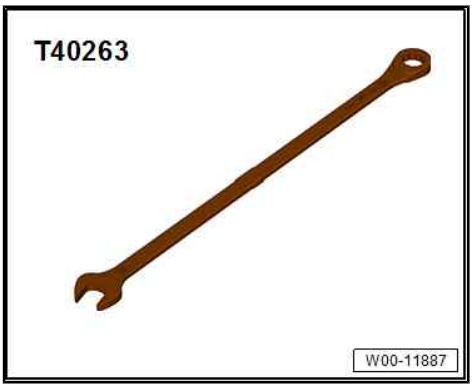

♦ Counterhold tool - T40292-

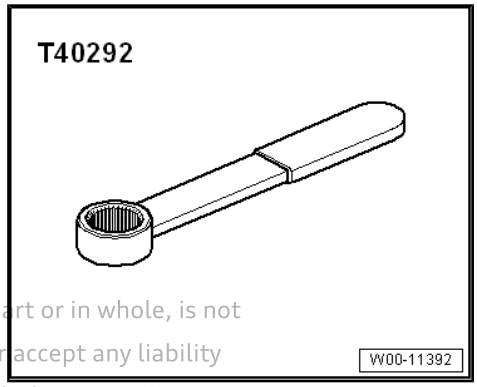

Protected by copyright. Copying for private or commercial purposes, in part or in whole, is not permitted unless authorised by AUDI AG. AUDI AG does not guarantee or accept any liability with respect to the correctness of information in this document. Copyright by AUDI AG.

♦ Adapter - T40314-

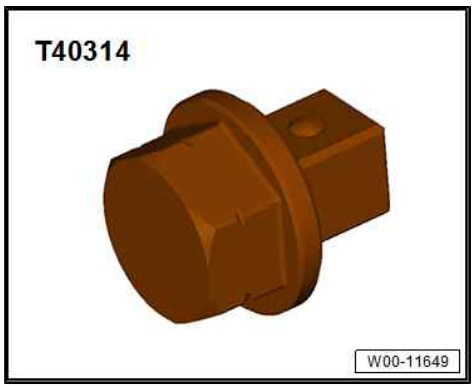

Removing

– Remove emission control module ⇒ 6-cylinder TDI engine, 3.0 ltr. 4-valve common rail; Rep. gr. 26 ; Emission control system; Removing and installing emission control module .

– Remove coolant shut-off valve ⇒ page 194 .

– Equipment version with auxiliary cooler for exhaust gas recirculation: Remove bolts -1 and 4- and detach bracket -2-.

– Unscrew bolts -arrows- and detach cover -3-.

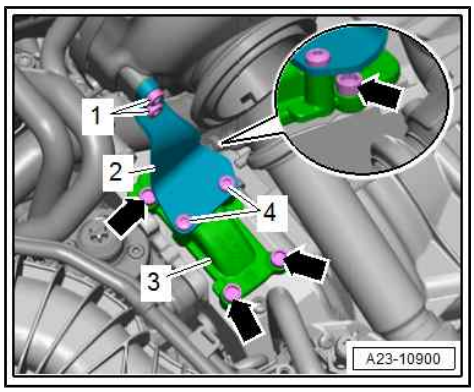

Caution

Irreparable damage can be caused if the camshaft timing chain slips.

♦ *Turn crankshaft only in direction of engine rotation -arrow-.*

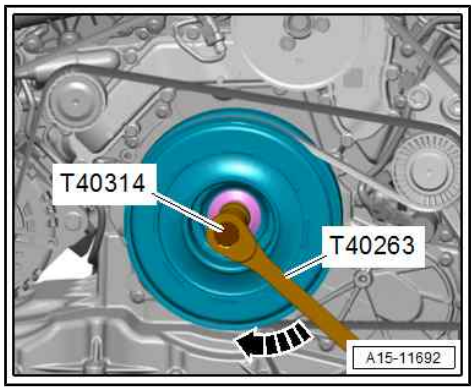

– Use wrench, 21 mm - T40263- and adapter - T40314- to turn crankshaft until it is possible to lock chain sprocket for high-pressure pump with locking pin - T40245- .

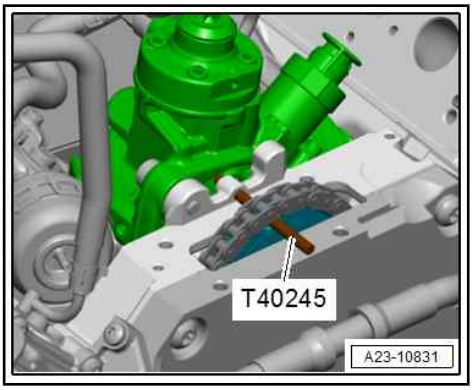

Caution

Risk of malfunctions caused by dirt.

- *Observe rules for cleanliness* *⇒ page 7* *.*

– Unplug electrical connector -1- for fuel temperature sender - G81- .

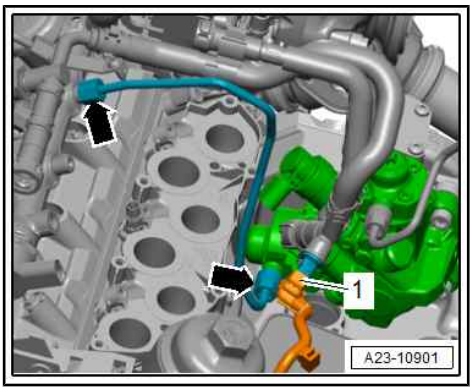

WARNING

The fuel system is pressurised.

Risk of injury as fuel may spray out.

- *Put on safety goggles.*
- *Put on protective gloves.*
- *Release pressure (wrap a clean cloth around connection and open connection carefully).*

– Unscrew union nuts -arrows- and detach high-pressure pipe.

Unplug electrical connector -1- for fuel metering valve - N290- .

– Unscrew bolts -arrows- and detach high-pressure pump.

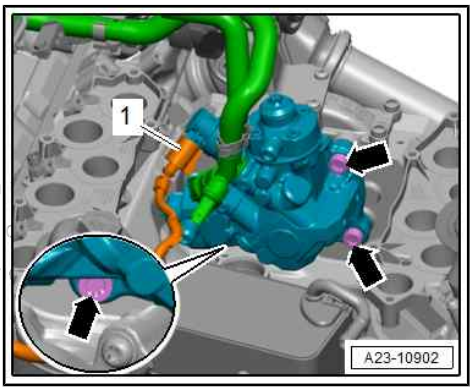

Note

For illustration purposes, the installation position is shown with the exhaust gas recirculation pipe removed.

Protected by copyright. Copying for private or commercial purposes, in part or in whole, is not permitted unless authorised by AUDI AG. AUDI AG does not guarantee or assume any liability with respect to the correctness of information in this document. Copyright by AUDI AG.

Installing

Installation is carried out in reverse order; note the following:

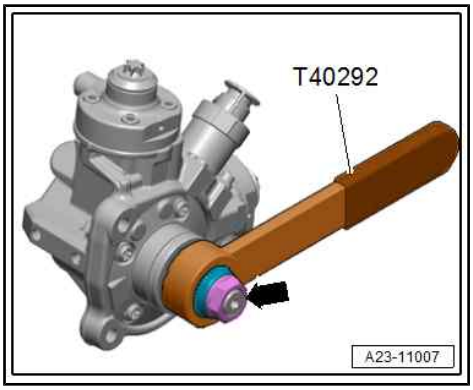

Note

- *Renew seal and O-ring after removal.*
- *Always renew high-pressure pipes when renewing high-pressure pump.*

– Use counterhold tool - T40292- to tighten nut -arrow- of adapter.

Note

Different types of adapters are fitted depending on version.

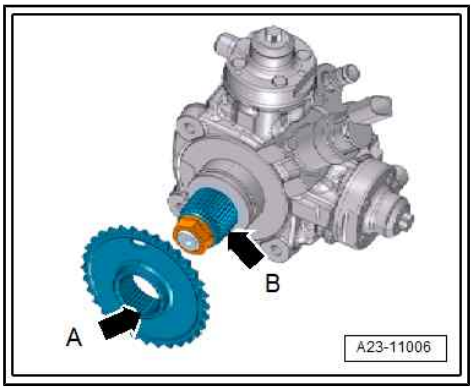

– Insert high-pressure pump into chain sprocket.

• The dual toothing -arrow A- on the chain sprocket must align with the groove -arrow B- in the adapter on the high-pressure pump shaft.

– Install high-pressure pipes ⇒ page 244 .

– Install coolant shut-off valve ⇒ page 194 .

– Install emission control module ⇒ 6-cylinder TDI engine, 3.0 ltr. 4-valve common rail; Rep. gr. 26 ; Emission control system; Removing and installing emission control module .

Caution

Running when dry causes irreparable damage to high-pressure pump.

- ***After installing the high-pressure pump, the pump must first be filled with fuel before the engine is started for the first time*** ***⇒ page 210*** ***.***

Tightening torques

- ⇒ “7.1 Exploded view - high-pressure pump”, page 259
- ⇒ “1.1 Exploded view - turbocharger”, page 198
- ⇒ “1.1 Exploded view - timing chain cover”, page 58

Protected by copyright. Copying for private or commercial purposes, in part or in whole, is not permitted unless authorised by AUDI AG. AUDI AG does not guarantee or accept any liability with respect to the correctness of information in this document. Copyright by AUDI AG.

8 Lambda probe

Protected by copyright. Copying for private or commercial purposes, in part or in whole, is not permitted unless authorised by AUDI AG. AUDI AG does not guarantee or accept any liability with respect to the correctness of information in this document. Copyright by AUDI AG.

⇒ "8.1 Exploded view - Lambda probe", page 265
⇒ "8.2 Removing and installing Lambda probe", page 266
⇒ "8.3 Removing and installing NOx senders", page 267
⇒ "8.4 Removing and installing particulate sensor G784 ", page 267

8.1 Exploded view - Lambda probe

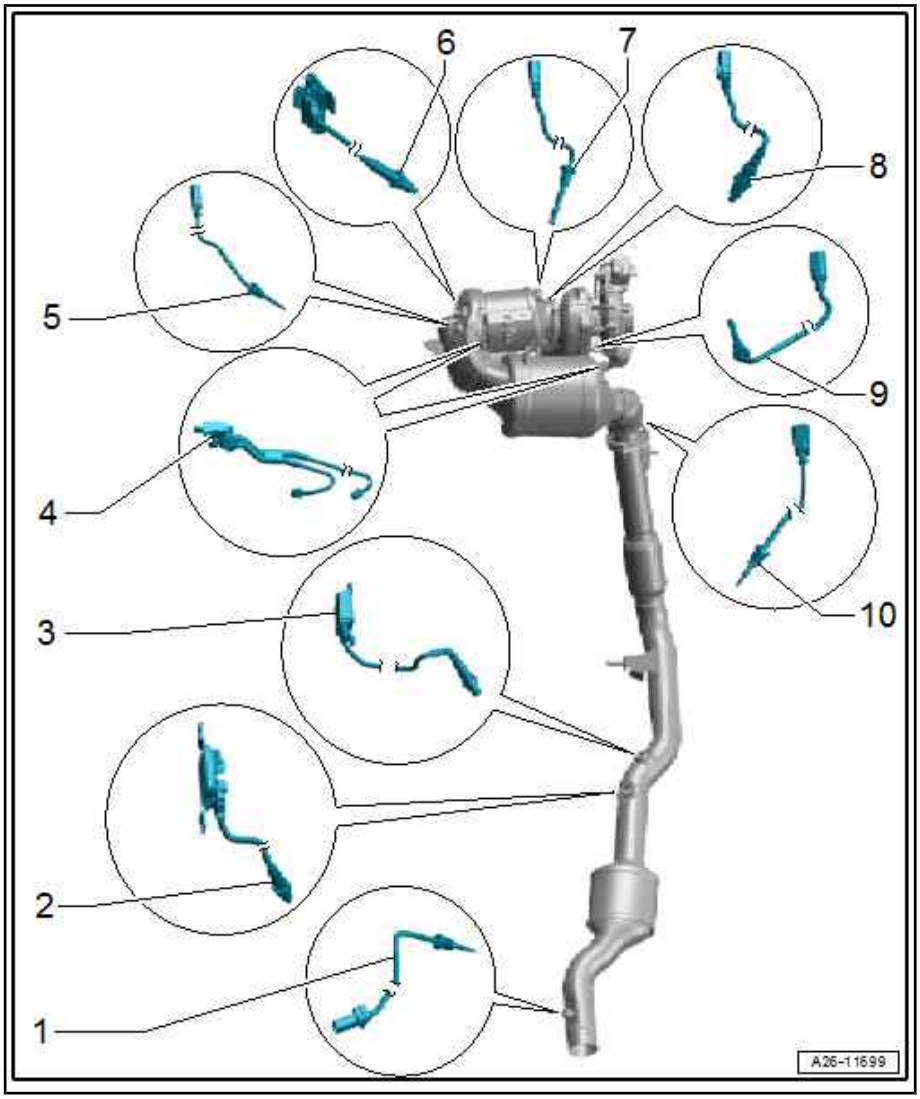

1 - Exhaust gas temperature sender 5 - G815-

- ⇒ Item 1 (page 277)

2 - NOx sender 2 - G687- with control unit for NOx sender 2 - J881-

- Not fitted on all models ⇒ Current flow diagrams, Electrical fault finding and Fitting locations
- Removing and installing ⇒ 6-cylinder TDI engine, 3.0 ltr. 4-valve common rail; Rep. gr. 23 ; Lambda probe ; Removing and installing NOx sender
- 52 Nm

3 - Particulate sensor - G784-

- Installation position varies depending on model version ⇒ Current flow diagrams, Electrical fault finding and Fitting locations
- Removing and installing ⇒ 6-cylinder TDI engine, 3.0 ltr. 4-valve common rail; Rep. gr. 23 ; Lambda probe; Removing and installing particulate sensor - G784-
- 52 Nm

4 - Pressure differential sender - G505-

- Removing and installing ⇒ 6-cylinder TDI engine, 3.0 ltr. 4-valve common rail; Rep. gr. 23 ; Senders and sensors; Removing and installing pressure differential sender - G505-
- Performing adaptions required after renewing a component (using ⇒ Vehicle diagnostic tester) ⇒ "3.10 Performing adaptions after renewing a component", page 11
- Tighten pressure line to 45 Nm

5 - Exhaust gas temperature sender 3 - G495-

- ⇒ Item 5 (page 277)

6 - NOx sender - G295- with control unit for NOx sender - J583-

- Not fitted on all models ⇒ Current flow diagrams, Electrical fault finding and Fitting locations

- ❑ Removing and installing ⇒ 6-cylinder TDI engine, 3.0 ltr. 4-valve common rail; Rep. gr. 23 ; Lambda probe ; Removing and installing NOx sender
- ❑ 52 Nm

7 - Exhaust gas temperature sender 2 - G448-

- ❑ ⇒ Item 8 (page 277)

8 - Lambda probe - G39- with Lambda probe heater - Z19-

- ❑ Removing and installing ⇒ page 266
- ❑ Observe fitting instructions ⇒ page 267
- ❑ Performing adaptions required after renewing a component using ⇒ Vehicle diagnostic tester (depending on version) ⇒ “3.10 Performing adaptions after renewing a component”, page 11
- ❑ 52 Nm

9 - Exhaust gas temperature sender 1 - G235-

- ❑ ⇒ Item 10 (page 277)

10 - Exhaust gas temperature sender 4 - G648-

- ❑ ⇒ Item 11 (page 277)

8.2 Removing and installing Lambda probe

Protected by copyright. Copying for private or commercial purposes, in part or in whole, is not permitted unless authorised by AUDI AG. AUDI AG does not guarantee or accept any liability with respect to the correctness of information in this document. Copyright by AUDI AG.

Special tools and workshop equipment required

- ♦ Vehicle diagnostic tester
- ♦ Lambda probe open ring spanner set - 3337-

Removing

Preparatory work may be necessary depending on model ⇒ 6-cylinder TDI engine, 3.0 ltr. 4-valve common rail; Rep. gr. 23 ; Lambda probe; Removing and installing Lambda probe .

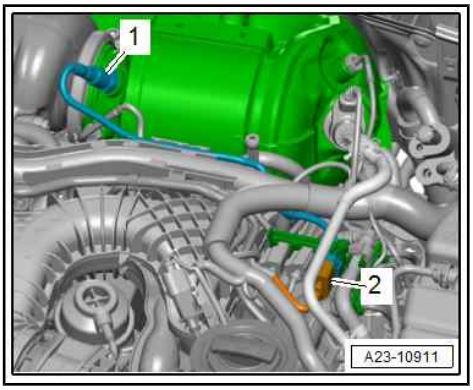

– Take electrical connector -2- out of bracket, unplug it and move electrical wiring clear.

– Unscrew Lambda probe - G39- -item 1- using a tool from Lambda probe open ring spanner set - 3337- .

Installing

Installation is carried out in reverse order; note the following:

Note

- *Threads of new Lambda probes are already coated with assembly paste; the paste must not get into the slots on the probe body.*
- *In the case of a used Lambda probe grease only the thread with high-temperature paste. The paste must not get into the slots on the Lambda probe body. For high-temperature paste refer to ⇒ Electronic parts catalogue*
- *When installing, the Lambda probe wiring must always be reattached at the same locations to prevent it from coming into contact with the exhaust pipe.*

Additional work depending on model ⇒ 6-cylinder TDI engine, 3.0 ltr. 4-valve common rail; Rep. gr. 23 ; Lambda probe; Removing and installing Lambda probe .

Performing adaptions required after renewing a component using ⇒ Vehicle diagnostic tester (depending on version)
⇒ "3.10 Performing adaptions after renewing a component", page 11 .

Caution

Risk of damage to components.

- ***Only perform adaptions for those components which were actually renewed.***

Protected by copyright. Copying for private or commercial purposes, in part or in whole, is not permitted unless authorised by AUDI AG. AUDI AG does not guarantee or accept any liability with respect to the correctness of information in this document. Copyright by AUDI AG.

Tightening torque

- ⇒ "8.1 Exploded view - Lambda probe", page 265

8.3 Removing and installing NOx senders

All procedures are described in ⇒ 6-cylinder TDI engine, 3.0 ltr. 4-valve common rail; Rep. gr. 23 ; Lambda probe ; Removing and installing NOx senders.

8.4 Removing and installing particulate sensor - G784-

All procedures are described in ⇒ 6-cylinder TDI engine, 3.0 ltr. 4-valve common rail; Rep. gr. 23 ; Lambda probe ; Removing and installing particulate sensor - G784- .

9 Engine control unit

All procedures and components are described in ⇒ 6-cylinder TDI engine, 3.0 ltr. 4-valve common rail; Rep. gr. 23 ; Engine control unit .

Protected by copyright. Copying for private or commercial purposes, in part or in whole, is not permitted unless authorised by AUDI AG. AUDI AG does not guarantee or accept any liability with respect to the correctness of information in this document. Copyright by AUDI AG.

26 – Exhaust system

1 Exhaust pipes/silencers

⇒ "1.1 Exploded view - silencers", page 269

⇒ "1.2 Removing and installing front exhaust pipe", page 269

⇒ "1.3 Separating exhaust pipes/silencers", page 269

⇒ "1.4 Removing and installing silencers", page 269

⇒ "1.5 Stress-free alignment of exhaust system", page 269

⇒ "1.6 Checking exhaust system for leaks", page 269

Protected by copyright. Copying for private or commercial purposes, in part or in whole, is not permitted unless authorised by AUDI AG. AUDI AG does not guarantee or accept any liability with respect to the correctness of information in this document. Copyright by AUDI AG.

1.1 Exploded view - silencers

All components are described in ⇒ 6-cylinder TDI engine, 3.0 ltr. 4-valve common rail; Rep. gr. 26 ; Exhaust pipes/silencers; Exploded view - silencers .

1.2 Removing and installing front exhaust pipe

All procedures are described in ⇒ 6-cylinder TDI engine, 3.0 ltr. 4-valve common rail; Rep. gr. 26 ; Exhaust pipes/silencers; Removing and installing front exhaust pipe .

1.3 Separating exhaust pipes/silencers

All procedures are described in ⇒ 6-cylinder TDI engine, 3.0 ltr. 4-valve common rail; Rep. gr. 26 ; Exhaust pipes/silencers; Separating exhaust pipes/silencers .

1.4 Removing and installing silencers

All procedures are described in ⇒ 6-cylinder TDI engine, 3.0 ltr. 4-valve common rail; Rep. gr. 26 ; Exhaust pipes/silencers; Removing and installing silencers .

1.5 Stress-free alignment of exhaust system

All procedures are described in ⇒ 6-cylinder TDI engine, 3.0 ltr. 4-valve common rail; Rep. gr. 26 ; Exhaust pipes/silencers; Stress-free alignment of exhaust system .

1.6 Checking exhaust system for leaks

Procedure

> ⚠ WARNING
>
> *When working on all parts of the exhaust system:*
>
> ♦ *Observe safety precautions when working on the exhaust system ⇒ page 3 .*

– Start the engine and run at idling speed.

– Plug tailpipes during leak test (e.g. with cloth or plug).

– Listen for noise at the connection points of cylinder head/exhaust manifold, turbocharger/front exhaust pipe etc. to locate any leaks.

– Rectify any leaks that are found.

2 Emission control system

All procedures and components are described in ⇒ 6-cylinder TDI engine, 3.0 ltr. 4-valve common rail; Rep. gr. 26 ; Emission control system .

Protected by copyright. Copying for private or commercial purposes, in part or in whole, is not permitted unless authorised by AUDI AG. AUDI AG does not guarantee or accept any liability with respect to the correctness of information in this document. Copyright by AUDI AG.

3 SCR (selective catalytic reduction) system

⇒ “3.1 Exploded view - reducing agent tank”, page 271

⇒ “3.2 Exploded view - reducing agent supply line”, page 271

⇒ “3.3 Draining reducing agent tank”, page 273

⇒ “3.4 Removing and installing reducing agent tank”, page 273

⇒ “3.5 Removing and installing injector for reducing agent N474 ”, page 273

⇒ “3.6 Removing and installing control unit for reducing agent metering system J880 ”, page 275

3.1 Exploded view - reducing agent tank

All components are described in ⇒ 6-cylinder TDI engine, 3.0 ltr. 4-valve common rail; Rep. gr. 26 ; SCR (selective catalytic reduction) system; Exploded view - reducing agent tank .

3.2 Exploded view - reducing agent supply line

Protected by copyright. Copying for private or commercial purposes, in part or in whole, is not permitted unless authorised by AUDI AG. AUDI AG does not guarantee or accept any liability with respect to the correctness of information in this document. Copyright by AUDI AG.

Caution

Reducing agent must never be reused. For information regarding storage and disposal see ⇒ ServiceNet → Environmental protection → Workshop waste management . Contact Importer for country-specific information regarding storage and disposal.

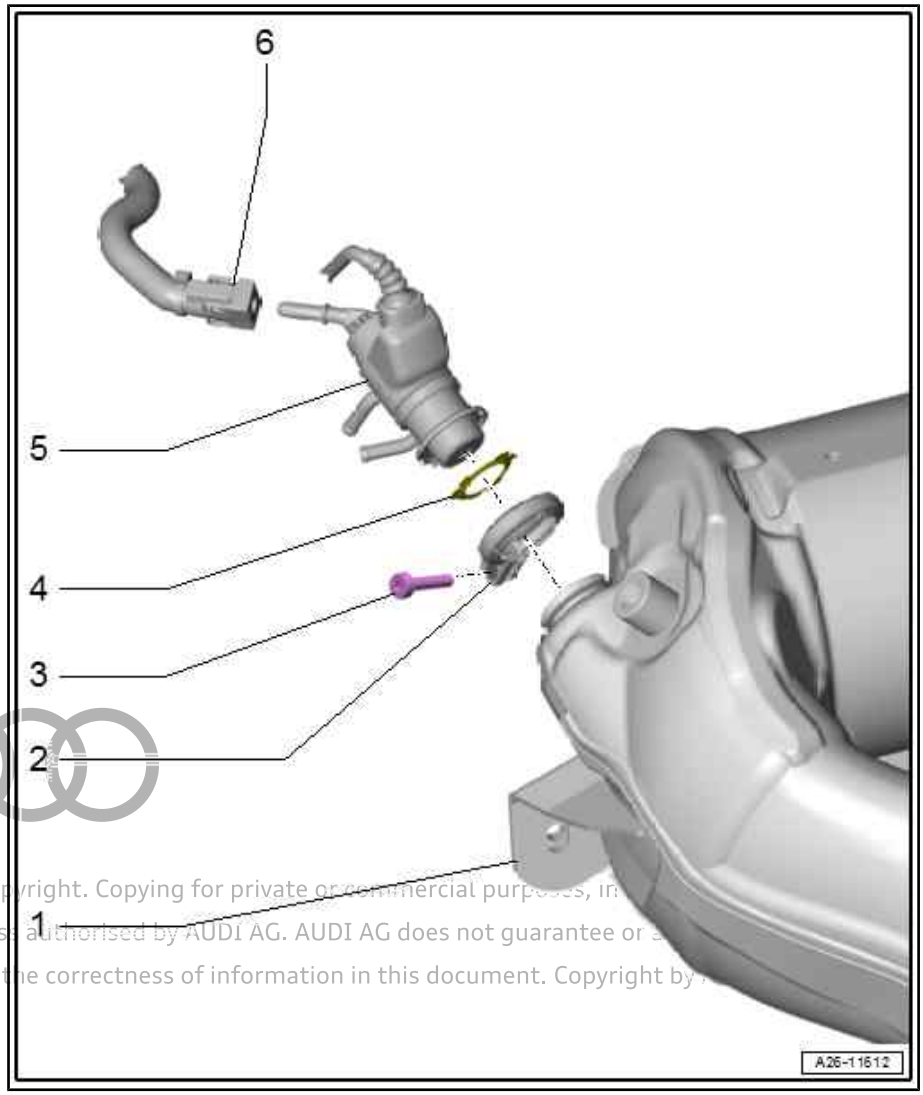

1 - Emission control module

2 - Retaining clamp

- ❑ Renew after removing

3 - Bolt

- ❑ 5 Nm

4 - Gasket

- ❑ Renew after removing

5 - Injector for reducing agent - N474-

- ❑ Removing and installing ⇒ page 273
- ❑ Lugs in injector for reducing agent - N474- must be inserted in corresponding mountings in front exhaust pipe.
- ❑ After renewing component(s) or draining reducing agent (opening a reducing agent line), perform required adaptions using ⇒ Vehicle diagnostic tester ⇒ "3.10 Performing adaptions after renewing a component", page 11

Protected by copyright. Copying for private or commercial purposes, in
part is not permitted unless authorised by AUDI AG. AUDI AG does not guarantee or
assume any liability for the correctness of information in this document. Copyright by

6 - Supply line

- ❑ For reducing agent tank
- ❑ With heater for reducing agent line (heater circuit 2) - Z104-
- ❑ Heater for reducing agent line (heater circuit 2) - Z104- may consist of several segments
- ❑ Disconnecting ⇒ page 273

Disconnecting and connecting supply line

Disconnecting

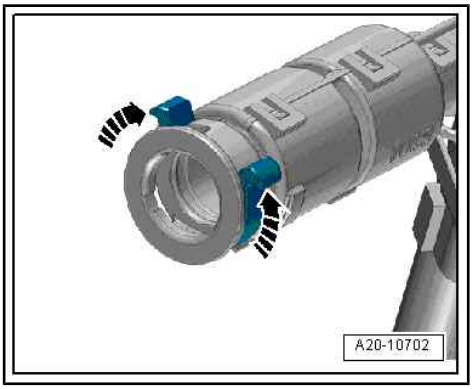

WARNING

Safety risk due to escaping reducing agent.

- *To prevent large amounts of reducing agent from escaping when the supply line is opened, reducing agent must be drawn back* *⇒ page 4* *.*
- *Put on safety goggles.*

Note

Hold a cloth under separating point to catch escaping reducing agent.

– To disconnect supply line, press release catches in direction of -arrows-.

Connecting

- Plug-in connector must engage audibly when connecting.

– Pull to check that plug-in connectors are correctly engaged.

3.3 Draining reducing agent tank

All procedures are described in ⇒ 6-cylinder TDI engine, 3.0 ltr. 4-valve common rail; Rep. gr. 26 ; SCR (selective catalytic reduction) system; Draining reducing agent tank .

3.4 Removing and installing reducing agent tank

All procedures are described in ⇒ 6-cylinder TDI engine, 3.0 ltr. 4-valve common rail; Rep. gr. 26 ; SCR (selective catalytic reduction) system; Removing and installing reducing agent tank .

3.5 Removing and installing injector for reducing agent - N474-

Special tools and workshop equipment required

- Hose clip pliers - VAS 6362-

Protected by copyright. Copying for private or commercial purposes, in part or in whole, is not permitted unless authorised by AUDI AG. AUDI AG does not guarantee or accept any liability with respect to the correctness of information in this document. Copyright by AUDI AG.

Removing

Preparatory work may be necessary depending on model ⇒ 6-cylinder TDI engine, 3.0 ltr. 4-valve common rail; Rep. gr. 26 ;

SCR (selective catalytic reduction) system; Removing and installing injector for reducing agent - N474- .

WARNING

When working on all parts of the exhaust system:

- *Observe safety precautions when working on the exhaust system ⇒ page 3 .*

Reducing agent can cause skin irritation.

- *Observe safety measures when handling reducing agent ⇒ page 4 .*

Note

Hold a clean cloth under the separating point to catch escaping reducing agent.

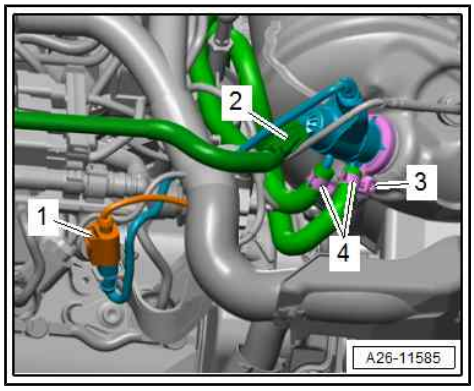

– Disconnect supply line -2- from injector for reducing agent - N474- ⇒ page 273 .
– Unplug electrical connector -1- and move wiring clear.
– Release retaining clip -3- and detach injector for reducing agent - N474- .
– Disconnect and seal off coolant hoses -4-.

Installing

Installation is carried out in reverse order; note the following:

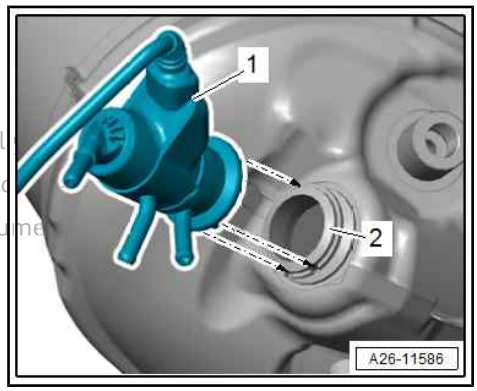

Note

Protected by copyright. Copying for private or commercial
permitted unless authorised by AUDI AG. AUDI AG does no
with respect to the correctness of information in this docume

- *Renew gasket and retaining clip after removing.*
- *Secure all hose connections with correct type of hose clips (as original equipment) ⇒ Electronic parts catalogue .*

- Installation position: lugs in injector for reducing agent - N474- -item 1- must be inserted in corresponding mountings in emission control module -2-.

– Connect supply line ⇒ page 273 .

After renewing component(s) or draining reducing agent (opening a reducing agent line), perform required adaptions using ⇒ Vehicle diagnostic tester
⇒ "3.10 Performing adaptions after renewing a component", page 11 .

Additional work depending on model ⇒ 6-cylinder TDI engine, 3.0 ltr. 4-valve common rail; Rep. gr. 26 ; SCR (selective catalytic reduction) system; Removing and installing injector for reducing agent - N474-

Tightening torques

- ⇒ "3.2 Exploded view - reducing agent supply line", page 271

3.6 Removing and installing control unit for reducing agent metering system - J880-

All procedures are described in ⇒ 6-cyl. TDI engine, 3.0 ltr. 4-valve common rail; Rep. gr. 26 ; SCR (selective catalytic reduction) system ; Removing and installing control unit for reducing agent metering system - J880- .

Protected by copyright. Copying for private or commercial purposes, in part or in whole, is not permitted unless authorised by AUDI AG. AUDI AG does not guarantee or accept any liability with respect to the correctness of information in this document. Copyright by AUDI AG.

4 Exhaust gas temperature control

⇒ “4.1 Exploded view - exhaust gas temperature control”, page 276

⇒ “4.2 Removing and installing exhaust gas temperature sender 1 G235 ”, page 278

⇒ “4.3 Removing and installing exhaust gas temperature sender 2 G448 ”, page 279

⇒ “4.4 Removing and installing exhaust gas temperature sender 3 G495 ”, page 280

⇒ “4.5 Removing and installing exhaust gas temperature sender 4 G648 ”, page 282

⇒ “4.6 Removing and installing exhaust gas temperature sender 5 G815 ”, page 284

⇒ “4.7 Removing and installing catalytic converter temperature sensor 1 G20 ”, page 284

4.1 Exploded view - exhaust gas temperature control

WARNING

When working on all parts of the exhaust system:

- *Observe safety precautions when working on the exhaust system ⇒ page 3 .*

Protected by copyright. Copying for private or commercial purposes, in part or in whole, is not permitted unless authorised by AUDI AG. AUDI AG does not guarantee or accept any liability with respect to the correctness of information in this document. Copyright by AUDI AG.

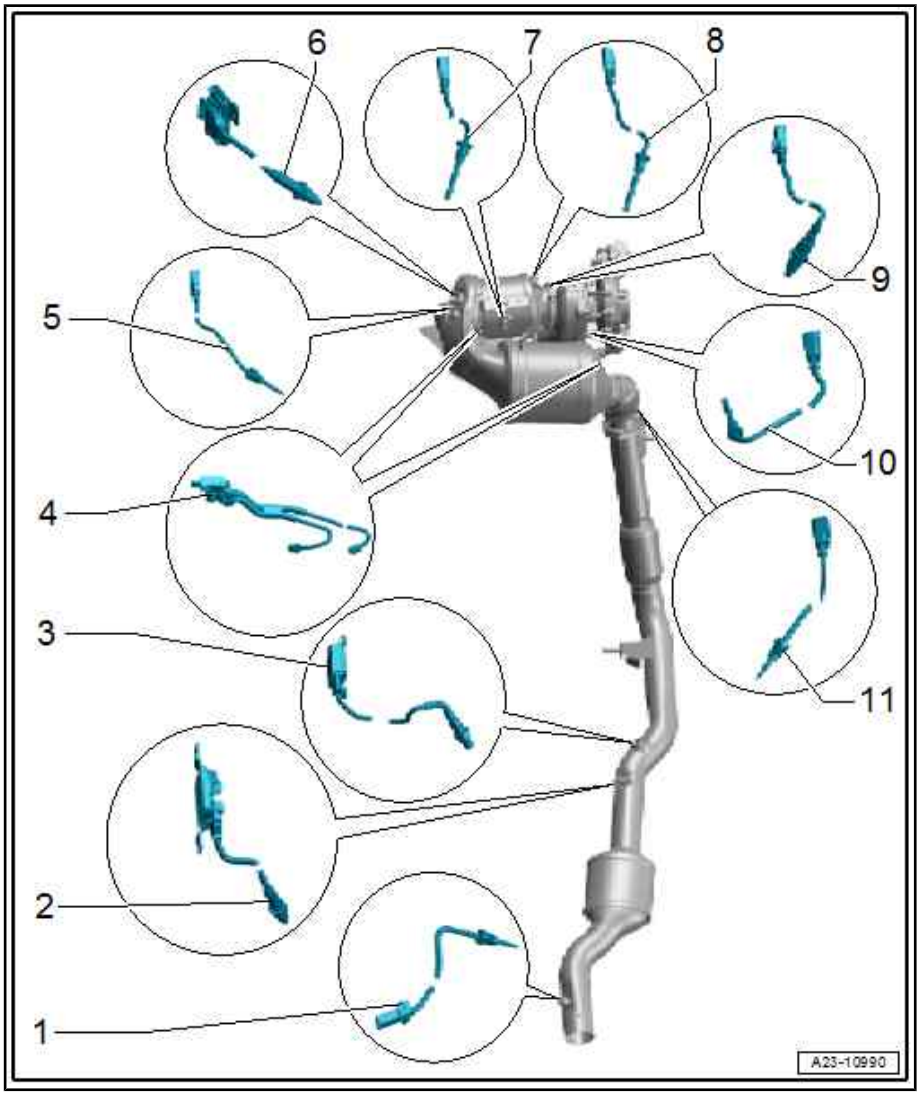

1 - Exhaust gas temperature sender 5 - G815-

- ❑ Not fitted on all models ⇒ Current flow diagrams, Electrical fault finding and Fitting locations
- ❑ Removing and installing ⇒ 6-cylinder TDI engine, 3.0 ltr. 4-valve common rail; Rep. gr. 26 ; Exhaust gas temperature control ; Removing and installing exhaust gas temperature sender 5 - G815-
- ❑ 45 Nm

2 - NOx sender 2 - G687- with control unit for NOx sender 2 - J881-

- ❑ ⇒ Item 2 (page 265)

3 - Particulate sensor - G784-

- ❑ ⇒ Item 3 (page 265)

4 - Pressure differential sender - G505-

- ❑ ⇒ Item 4 (page 265)

5 - Exhaust gas temperature sender 3 - G495-

- ❑ Removing and installing ⇒ page 280
- ❑ 45 Nm

6 - NOx sender - G295- with control unit for NOx sender - J583-

- ❑ ⇒ Item 6 (page 265)

7 - Catalytic converter temperature sensor 1 - G20-

- ❑ Country-specific version
- ❑ Removing and installing ⇒ 6-cylinder TDI engine, 3.0 ltr. 4-valve common rail; Rep. gr. 26 ; Exhaust gas temperature control ; Removing and installing catalytic converter temperature sensor 1 - G20-
- ❑ 45 Nm

8 - Exhaust gas temperature sender 2 - G448-

- ❑ For equipment version with SCR system
- ❑ Removing and installing ⇒ page 279
- ❑ 45 Nm

9 - Lambda probe - G39- with Lambda probe heater - Z19-

- ❑ ⇒ Item 8 (page 266)

10 - Exhaust gas temperature sender 1 - G235-

- ❑ Removing and installing ⇒ page 278
- ❑ 45 Nm

11 - Exhaust gas temperature sender 4 - G648-

- ❑ Removing and installing ⇒ page 282
- ❑ 45 Nm

Protected by copyright. Copying for private or commercial purposes, in part or in whole, is not permitted unless authorised by AUDI AG. AUDI AG does not guarantee or accept any liability with respect to the correctness of information in this document. Copyright by AUDI AG.

4.2 Removing and installing exhaust gas temperature sender 1 - G235-

Special tools and workshop equipment required

- Tool set - T10395 A- with suitable tool insert

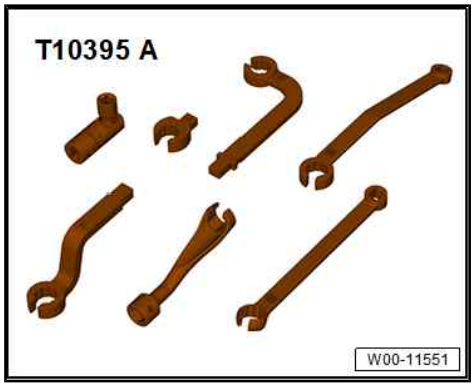

Removing

Preparatory work may be necessary depending on model ⇒ 6-cylinder TDI engine, 3.0 ltr. 4-valve common rail; Rep. gr. 26 ; Exhaust gas temperature control; Removing and installing parts of exhaust gas temperature control .

This document is copyright. Copying for private or commercial purposes, in part or in whole, is not permitted unless authorised by AUDI AG. AUDI AG does not guarantee or accept any liability with respect to the correctness of information in this document. Copyright by AUDI AG.

WARNING

When working on all parts of the exhaust system:

- ***Observe safety precautions when working on the exhaust system ⇒ page 3 .***

Note

- *Use correct type of fasteners for electrical wiring (as original equipment) ⇒ Electronic parts catalogue .*
- *When removing, the electrical wiring must not be cut, otherwise a fault diagnosis would no longer be possible.*

– Remove emission control module ⇒ 6-cylinder TDI engine, 3.0 ltr. 4-valve common rail; Rep. gr. 26 ; Emission control system; Removing and installing emission control module .

– Take electrical connector -2- out of bracket, unplug it and move electrical wiring clear.

– Remove exhaust gas temperature sender 1 - G235- -item 1-.

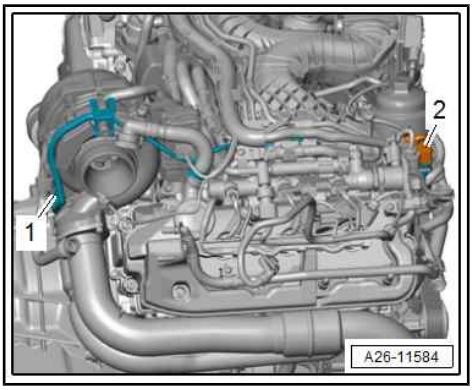

Installing

Installation is carried out in reverse order; note the following:

Note

- *Take care to protect exhaust gas temperature sender from knocks and impact; if dropped, the exhaust gas temperature sender can no longer be used.*
- *Coat thread with high-temperature paste; for high-temperature paste refer to ⇒ Electronic parts catalogue .*

– Align exhaust gas temperature sender 1 - G235- with as much clearance from surrounding components as possible.

– Install emission control module ⇒ 6-cylinder TDI engine, 3.0 ltr. 4-valve common rail; Rep. gr. 26 ; Emission control system; Removing and installing emission control module .

Additional work depending on model ⇒ 6-cylinder TDI engine, 3.0 ltr. 4-valve common rail; Rep. gr. 26 ; Exhaust gas temperature control; Removing and installing parts of exhaust gas temperature control

Tightening torques

- ⇒ “4.1 Exploded view - exhaust gas temperature control”, page 276

4.3 Removing and installing exhaust gas temperature sender 2 - G448-

Special tools and workshop equipment required

- Tool set - T10395 A- with suitable tool insert

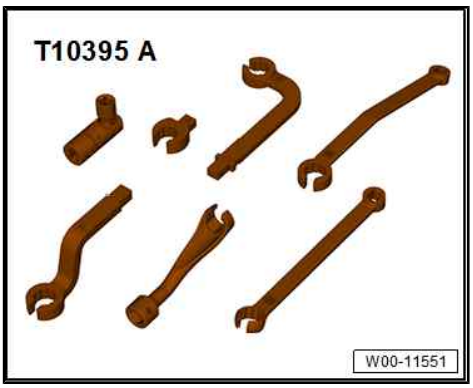

Removing

Preparatory work may be necessary depending on model ⇒ 6-cylinder TDI engine, 3.0 ltr. 4-valve common rail; Rep. gr. 26 ; Exhaust gas temperature control; Removing and installing parts of exhaust gas temperature control .

Protected by copyright. Copying for private or commercial purposes, in part or in whole, is not permitted unless authorised by AUDI AG. AUDI AG does not guarantee or accept any liability with respect to the correctness of information in this document. Copyright by AUDI AG.

WARNING

When working on all parts of the exhaust system:

- ***Observe safety precautions when working on the exhaust system ⇒ page 3 .***

Note

- *Use correct type of fasteners for electrical wiring (as original equipment) ⇒ Electronic parts catalogue .*
- *When removing, the electrical wiring must not be cut, otherwise a fault diagnosis would no longer be possible.*

– Take electrical connector -2- out of bracket, unplug it and move electrical wiring clear.

– Remove exhaust gas temperature sender 2 - G448- -item 1-.

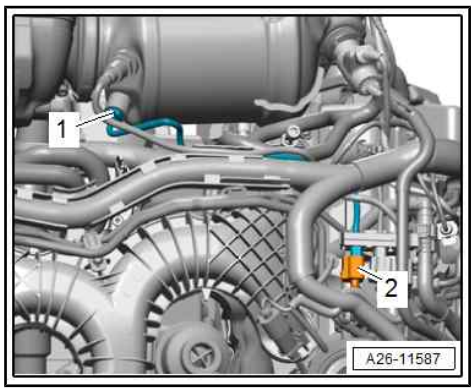

Installing

Installation is carried out in reverse order; note the following:

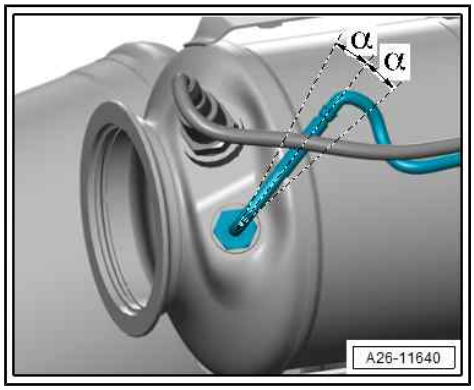

Note

Take care to protect exhaust gas temperature sender from knocks and impact; if dropped, the exhaust gas temperature sender can no longer be used.

– Move exhaust gas temperature sender 2 - G448- into correct installation position.

- Angle -α- = max. 5°

Additional work depending on model ⇒ 6-cylinder TDI engine, 3.0 ltr. 4-valve common rail; Rep. gr. 26 ; Exhaust gas temperature control; Removing and installing parts of exhaust gas temperature control

Tightening torques

- ⇒ “4.1 Exploded view - exhaust gas temperature control”, page 276

4.4 Removing and installing exhaust gas temperature sender 3 - G495-

Copyright by AUDI AG. AUDI AG does not guarantee or accept any liability with respect to the correctness of information in this document. Copyright by AUDI AG.

Special tools and workshop equipment required

- Tool set - T10395 A- with suitable tool insert

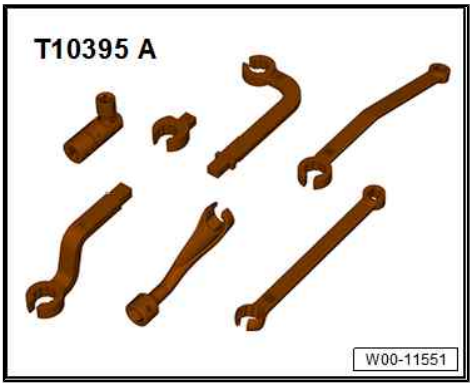

Removing

Preparatory work may be necessary depending on model ⇒ 6-cylinder TDI engine, 3.0 ltr. 4-valve common rail; Rep. gr. 26 ; Exhaust gas temperature control; Removing and installing parts of exhaust gas temperature control .

Protected by copyright. Copying for private or commercial purposes, in part or in whole, is not permitted unless authorised by AUDI AG. AUDI AG does not guarantee or accept any liability with respect to the correctness of information in this document. Copyright by AUDI AG.

WARNING

When working on all parts of the exhaust system:

- ***Observe safety precautions when working on the exhaust system*** ⇒ page 3 .

Note

- *Use correct type of fasteners for electrical wiring (as original equipment) ⇒ Electronic parts catalogue .*
- *When removing, the electrical wiring must not be cut, otherwise a fault diagnosis would no longer be possible.*

– Take electrical connector -1- out of bracket, unplug it and move electrical wiring clear.

– Remove exhaust gas temperature sender 3 - G495- -item 2-.

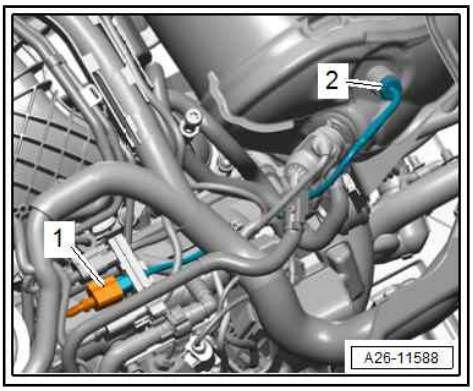

Installing

Installation is carried out in reverse order; note the following:

Note

- *Take care to protect exhaust gas temperature sender from knocks and impact; if dropped, the exhaust gas temperature sender can no longer be used.*
- *Coat thread with high-temperature paste; for high-temperature paste refer to ⇒ Electronic parts catalogue .*

– Move exhaust gas temperature sender 3 - G495- into correct installation position.

• Angle -α- = max. 5°

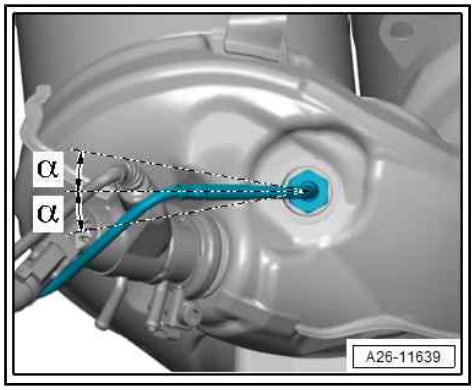

Additional work depending on model ⇒ 6-cylinder TDI engine, 3.0 ltr. 4-valve common rail; Rep. gr. 26 ; Exhaust gas temperature control; Removing and installing parts of exhaust gas temperature control

Tightening torques

♦ ⇒ "4.1 Exploded view - exhaust gas temperature control", page 276

4.5 Removing and installing exhaust gas temperature sender 4 - G648-

Special tools and workshop equipment required

♦ Tool set - T10395 A- with suitable tool insert

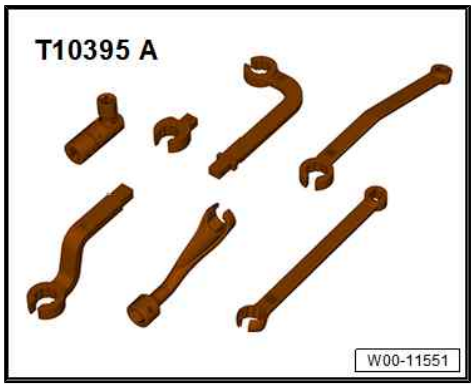

Removing

Preparatory work may be necessary depending on model ⇒ 6-cylinder TDI engine, 3.0 ltr. 4-valve common rail; Rep. gr. 26 ; Exhaust gas temperature control; Removing and installing parts of exhaust gas temperature control .

Protected by copyright. Copying for private or commercial purposes, in part or in whole, is not permitted unless authorised by AUDI AG. AUDI AG does not guarantee or accept any liability with respect to the correctness of information in this document. Copyright by AUDI AG.

WARNING

When working on all parts of the exhaust system:

♦ *Observe safety precautions when working on the exhaust system* *⇒ page 3* .

Note

♦ *Use correct type of fasteners for electrical wiring (as original equipment) ⇒ Electronic parts catalogue .*

♦ *When removing, the electrical wiring must not be cut, otherwise a fault diagnosis would no longer be possible.*

Version 1

– Press release tabs on both sides and disconnect crankcase breather hose -2-.
– Unplug electrical connector -3- and move wiring clear.
– Unscrew bolts -arrows- and detach intake connecting pipe -1-.

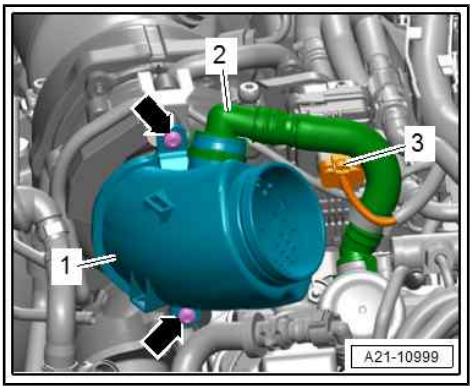

Version 2

– Press release tabs on both sides and disconnect crankcase breather hose -2-.
– Unscrew bolt -1-, turn intake connecting pipe -1- anti-clockwise and detach it.

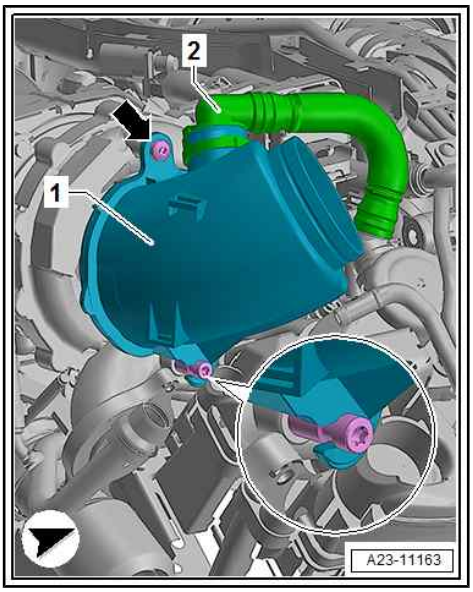

Protected by copyright. Copying for private or commercial purposes, in part or in whole, is not permitted unless authorised by AUDI AG. AUDI AG does not guarantee or accept any liability with respect to the correctness of information in this document. Copyright by AUDI AG.

All versions (continued):

– Take electrical connector -2- out of bracket, unplug it and move electrical wiring clear.

– Remove exhaust gas temperature sender 4 - G648- -item 1-.

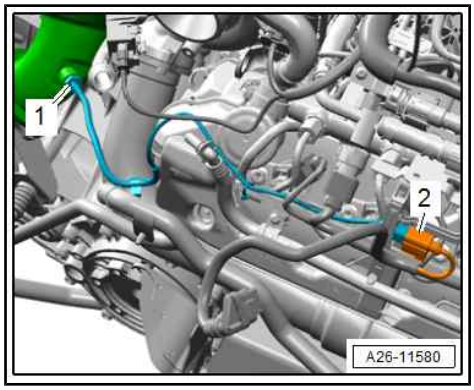

Installing

Installation is carried out in reverse order; note the following:

Note

- *Take care to protect exhaust gas temperature sender from knocks and impact; if dropped, the exhaust gas temperature sender can no longer be used.*
- *Coat thread with high-temperature paste; for high-temperature paste refer to ⇒ Electronic parts catalogue .*

– Move exhaust gas temperature sender 4 - G648- into installation position, screw in by hand and then tighten from above.

Additional work depending on model ⇒ 6-cylinder TDI engine, 3.0 ltr. 4-valve common rail; Rep. gr. 26 ; Exhaust gas temperature control; Removing and installing parts of exhaust gas temperature control

Tightening torques

- ⇒ “4.1 Exploded view - exhaust gas temperature control”, page 276
- ⇒ “1.1 Exploded view - turbocharger”, page 198

4.6 Removing and installing exhaust gas temperature sender 5 - G815-

All procedures are described in ⇒ 6-cylinder TDI engine, 3.0 ltr. 4-valve common rail; Rep. gr. 26 ; Exhaust gas temperature control; Removing and installing exhaust gas temperature sender 5 - G815- .

4.7 Removing and installing catalytic converter temperature sensor 1 - G20-

Removing

Preparatory work may be necessary depending on model ⇒ 6-cylinder TDI engine, 3.0 ltr. 4-valve common rail; Rep. gr. 26 ; Exhaust gas temperature control ; Removing and installing catalytic converter temperature sensor 1 - G20- .

WARNING

When working on all parts of the exhaust system:

- ***Observe safety precautions when working on the exhaust system ⇒ page 3 .***

Protected by copyright. Copying for private or commercial purposes, in part or in whole, is not permitted unless authorised by AUDI AG. AUDI AG does not guarantee or accept any liability with respect to the correctness of information in this document. Copyright by AUDI AG.

Note

- *Use correct type of fasteners for electrical wiring (as original equipment) ⇒ Electronic parts catalogue .*
- *When removing, the electrical wiring must not be cut, otherwise a fault diagnosis would no longer be possible.*

– Take electrical connector -2- out of bracket, unplug it and move electrical wiring clear.

– Remove catalytic converter temperature sensor 1 - G20- -item 1-.

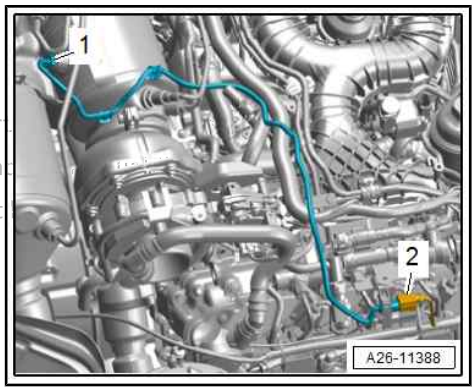

Protected by copyright. Copying for private or commercial purposes, in part
permitted unless authorised by AUDI AG. AUDI AG does not guarantee or a
whole or part of the contents of this document is not to be reproduced. Copyright

Installing

Installation is carried out in reverse order; note the following:

Note

Take care to protect exhaust gas temperature sender from knocks and impact; if dropped, the exhaust gas temperature sender can no longer be used.

Additional work depending on model ⇒ 6-cylinder TDI engine, 3.0 ltr. 4-valve common rail; Rep. gr. 26 ; Exhaust gas temperature control ; Removing and installing catalytic converter temperature sensor 1 - G20-

Tightening torques

- ⇒ “4.1 Exploded view - exhaust gas temperature control”, page 276

5 Exhaust gas recirculation

⇒ “5.1 Exploded view - exhaust gas recirculation system”, page 286

⇒ “5.2 Removing and installing exhaust gas recirculation cooler”, page 291

⇒ “5.3 Removing and installing exhaust gas recirculation temperature sensor G98 ”, page 296

⇒ “5.4 Installing repair kit for exhaust gas recirculation cooler”, page 297

5.1 Exploded view - exhaust gas recirculation system

⇒ “5.1.1 Exploded view - exhaust gas recirculation system, equipment version without auxiliary radiator”, page 286

⇒ “5.1.2 Exploded view - exhaust gas recirculation system, equipment version with auxiliary radiator”, page 288

⇒ “5.1.3 Exploded view - repair kit for exhaust gas recirculation cooler”, page 290

5.1.1 Exploded view - exhaust gas recirculation system, equipment version without auxiliary radiator

Protected by copyright. Copying for private or commercial purposes, in part or in whole, is not permitted unless authorised by AUDI AG. AUDI AG does not guarantee or accept any liability with respect to the correctness of information in this document. Copyright by AUDI AG.

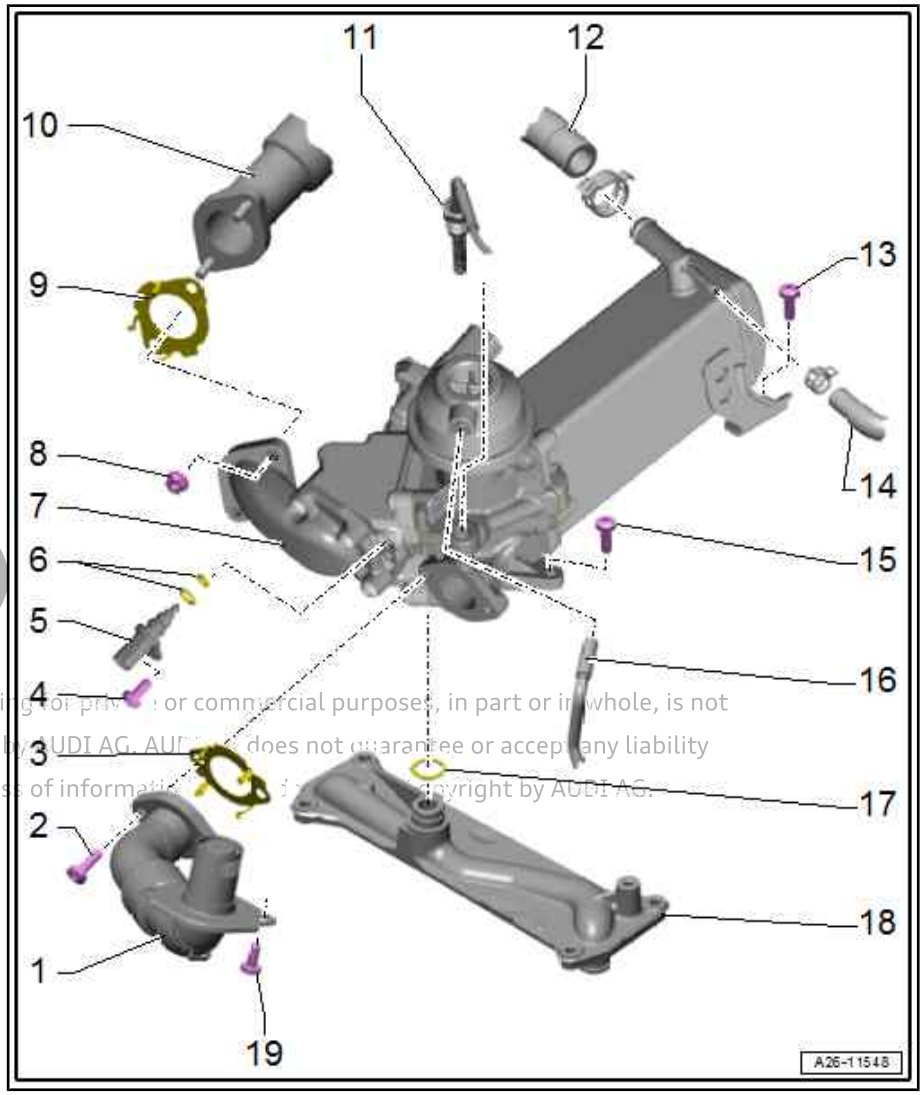

1 - Exhaust gas recirculation pipe

- ❑ To intake manifold

2 - Bolt

- ❑ 9 Nm

3 - Gasket

- ❑ Renew after removing

4 - Bolt

- ❑ 9 Nm

5 - Coolant temperature sender - G62-

- ❑ Removing and installing ⇒ page 191

6 - O-rings

- ❑ Renew after removing

7 - Exhaust gas recirculation cooler

- ❑ With exhaust gas recirculation control motor - V338- and exhaust gas recirculation potentiometer - G212- / exhaust gas recirculation valve 1 - GX5-
- ❑ Perform adaptions required after renewing a component (using ⇒ Vehicle diagnostic tester) ⇒ “3.10 Performing adaptions after renewing a component”, page 11 .
- ❑ Installing repair kit for exhaust gas recirculation cooler ⇒ page 297
- ❑ Removing and installing ⇒ page 291

Protected by copyright. Copying for private or commercial purposes, in part or in whole, is not permitted unless authorised by AUDI AG. AUDI AG does not guarantee or accept any liability with respect to the correctness of information. Copyright by AUDI AG.

8 - Nut

- ❑ Renew after removing
- ❑ 5 Nm +90°

9 - Gasket

- ❑ Renew after removing

10 - Exhaust gas recirculation pipe

- ❑ From turbocharger

11 - Exhaust gas recirculation temperature sensor - G98-

- ❑ Removing and installing ⇒ page 296
- ❑ 35 Nm for aluminium exhaust gas recirculation cooler
- ❑ 45 Nm for steel exhaust gas recirculation cooler

12 - Coolant hose

13 - Bolt

- ❑ 9 Nm

14 - Coolant hose

- ❑ For equipment version with SCR system

15 - Bolt

- ❑ 9 Nm

16 - Vacuum hose

17 - O-ring

- ❑ Renew after removing

18 - Coolant pipe (top)

- ❑ Removing and installing ⇒ 6-cylinder TDI engine, 3.0 ltr. 4-valve common rail; Rep. gr. 19 ; Coolant pipes; Removing and installing coolant pipes

19 - Bolt

- ❑ 9 Nm

5.1.2 Exploded view - exhaust gas recirculation system, equipment version with auxiliary radiator

Protected by copyright. Copying for private or commercial purposes, in part or in whole, is not permitted unless authorised by AUDI AG. AUDI AG does not guarantee or accept any liability with respect to the correctness of information in this document. Copyright by AUDI AG.

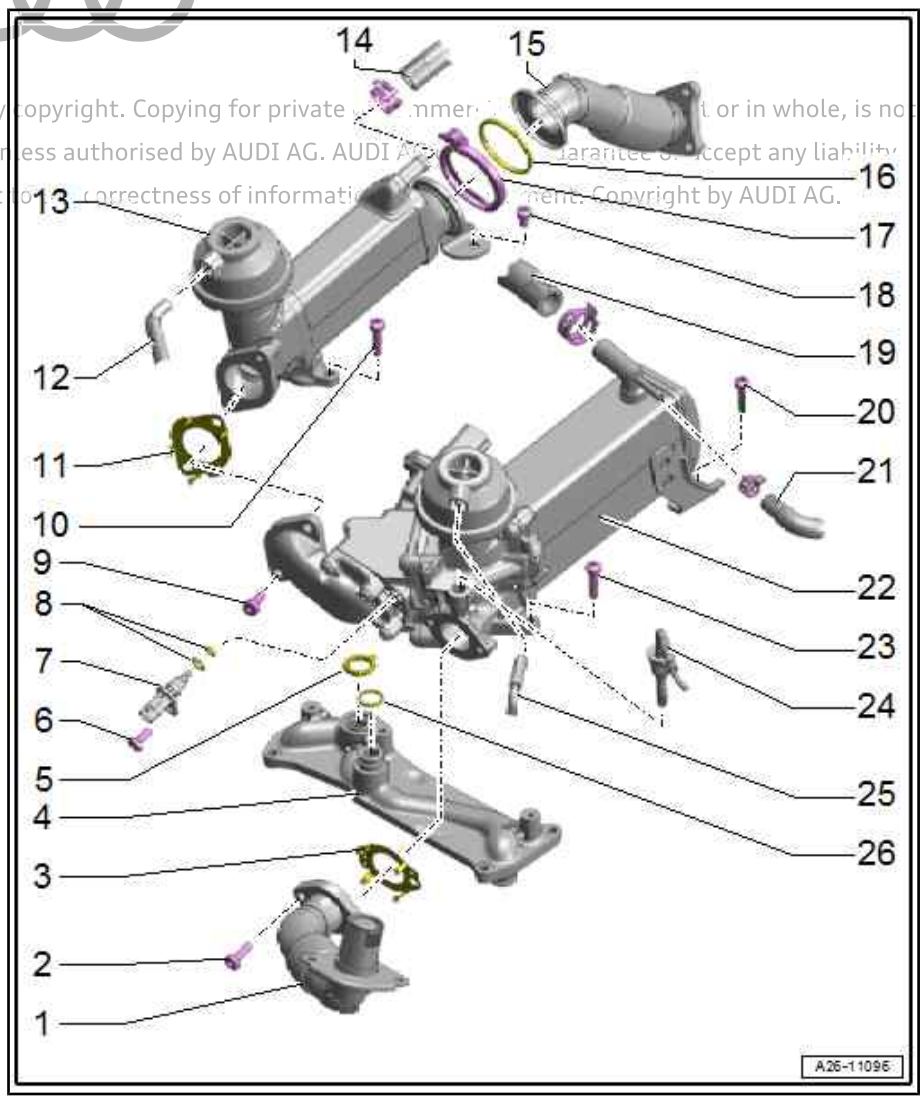

1 - Exhaust gas recirculation pipe

- ❑ To intake manifold

2 - Bolt

- ❑ 9 Nm

3 - Gasket

- ❑ Renew after removing

4 - Coolant pipe (top)

- ❑ Removing and installing ⇒ 6-cylinder TDI engine, 3.0 ltr. 4-valve common rail; Rep. gr. 19 ; Coolant pipes; Removing and installing coolant pipes

5 - Seal

- ❑ Renew after removing

6 - Bolt

- ❑ 9 Nm

7 - Coolant temperature sender - G62-

- ❑ Removing and installing ⇒ page 191

8 - O-rings

- ❑ Renew after removing

9 - Bolt

- ❑ Renew after removing
- ❑ 5 Nm +90°

10 - Bolt

- ❑ 9 Nm

11 - Gasket

- ❑ Renew after removing

12 - Vacuum hose

13 - Auxiliary cooler for exhaust gas recirculation

- ❑ From turbocharger
- ❑ Removing and installing ⇒ page 295

14 - Coolant hose

15 - Exhaust gas recirculation pipe

- ❑ From turbocharger

16 - Seal

- ❑ Renew after removing

17 - Screw-type clip

- ❑ 2.5 Nm

18 - Bolt

- ❑ 9 Nm

Protected by copyright. Copying for private or commercial purposes, in part or in whole, is not permitted unless authorised by AUDI AG. AUDI AG does not guarantee or accept any liability with respect to the correctness of information in this document. Copyright by AUDI AG.

19 - Coolant hose

20 - Bolt

- ❑ 9 Nm

21 - Coolant hose

22 - Exhaust gas recirculation cooler

- ❑ With exhaust gas recirculation control motor - V338- and exhaust gas recirculation potentiometer - G212- / exhaust gas recirculation valve 1 - GX5-
- ❑ Perform adaptions required after renewing a component (using ⇒ Vehicle diagnostic tester) ⇒ “3.10 Performing adaptions after renewing a component”, page 11 .
- ❑ Installing repair kit for exhaust gas recirculation cooler ⇒ page 297
- ❑ Removing and installing ⇒ page 294

23 - Bolt

- ❑ 9 Nm

24 - Exhaust gas recirculation temperature sensor - G98-

- ❑ Removing and installing ⇒ page 296
- ❑ 35 Nm for aluminium exhaust gas recirculation cooler
- ❑ 45 Nm for steel exhaust gas recirculation cooler

25 - Vacuum hose

26 - O-ring

- ❑ Renew after removing

5.1.3 Exploded view - repair kit for exhaust gas recirculation cooler

Protected by copyright. Copying for private or commercial purposes, in part or in whole, is not permitted unless authorised by AUDI AG. AUDI AG does not guarantee or accept any liability with respect to the correctness of information in this document. Copyright by AUDI AG.

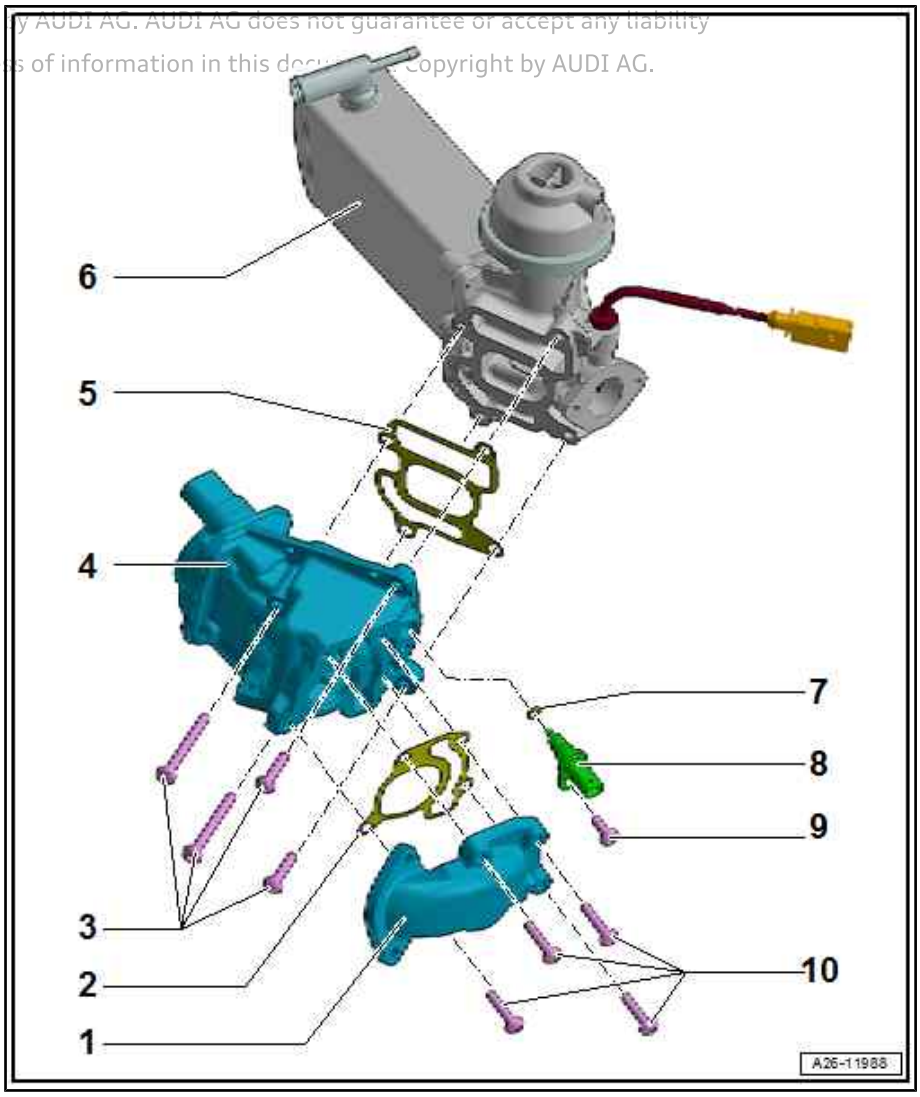

1 - Exhaust manifold

- ❑ Installing repair kit for exhaust gas recirculation cooler ⇒ page 297

2 - Gasket

- ❑ Renew after removing

3 - Bolts

- ❑ Renew after removing
- ❑ Tightening torque and sequence ⇒ page 291

4 - Exhaust gas recirculation valve

- ❑ Installing repair kit for exhaust gas recirculation cooler ⇒ page 297

5 - Gasket

- ❑ Renew after removing

6 - Exhaust gas recirculation cooler

- ❑ With exhaust gas recirculation control motor - V338- and exhaust gas recirculation potentiometer - G212- / exhaust gas recirculation valve 1 - GX5-
- ❑ Perform adaptions required after renewing a component (using ⇒ Vehicle diagnostic tester) ⇒ “3.10 Performing adaptions after renewing a component”, page 11 .
- ❑ Installing repair kit for exhaust gas recirculation cooler ⇒ page 297

7 - O-ring

- ❑ Renew after removing

8 - Coolant temperature sender - G62-

9 - Bolt

- ❑ 9 Nm

10 - Bolts

- ❑ Renew after removing
- ❑ Tightening torque and sequence ⇒ page 291

Exhaust gas recirculation valve - tightening torque and sequence

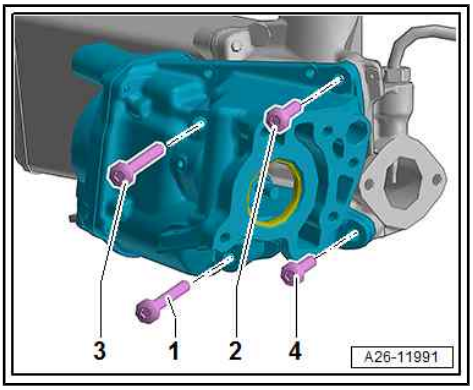

Note

After removing, renew bolts tightened with specified tightening angle.

– Tighten bolts in stages in the sequence shown:

Stage	Bolts	Tightening torque/angle specification
1.	-1 … 4-	8 Nm
2.	-1 … 4-	Turn 45° further

Exhaust manifold - tightening torque and sequence

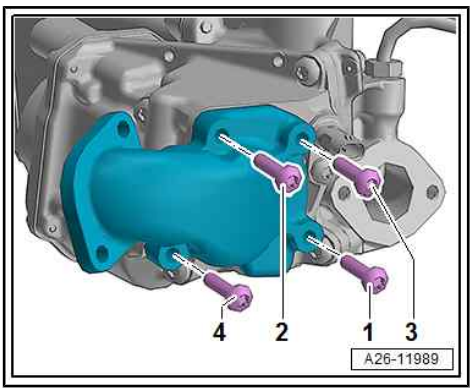

Note

After removing, renew bolts tightened with specified tightening angle.

– Tighten bolts in stages in the sequence shown:

Stage	Bolts	Tightening torque/angle specification
1.	-1 … 4-	8 Nm
2.	-1 … 4-	Turn 45° further

5.2 Removing and installing exhaust gas recirculation cooler

⇒ "5.2.1 Removing and installing exhaust gas recirculation cooler - equipment version without auxiliary radiator", page 291

⇒ "5.2.2 Removing and installing exhaust gas recirculation cooler - equipment version with auxiliary radiator", page 294

⇒ "5.2.3 Removing and installing auxiliary cooler for exhaust gas recirculation", page 295

5.2.1 Removing and installing exhaust gas recirculation cooler - equipment version without auxiliary radiator

Special tools and workshop equipment required

♦ Hose clip pliers - VAS 6362-

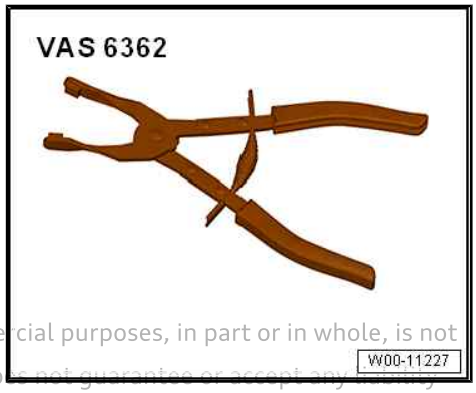

Protected by copyright. Copying for private or commercial purposes, in part or in whole, is not permitted unless authorised by AUDI AG. AUDI AG does not guarantee or accept any liability with respect to the correctness of information in this document. Copyright by AUDI AG.

Removing

– Drain coolant ⇒ page 177 .

– Remove intake manifold (top section) ⇒ page 217 .

– Unscrew bolt -2- and release screw-type clip.

– Detach injector for reducing agent - N474- -item 1- and place to one side.

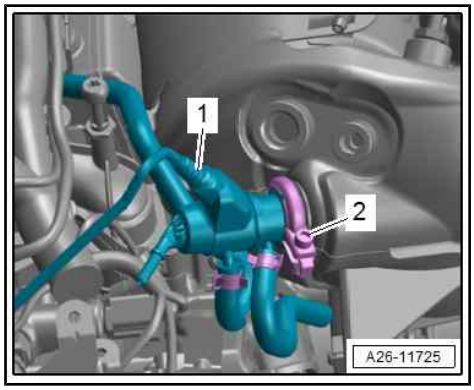

– Move electrical wiring and metering line for SCR system clear.

– Remove bolt -3- on retainer.

– Open screw-type clip -1- and place it on intake funnel of emission control module.

– Press emission control module -2- towards rear.

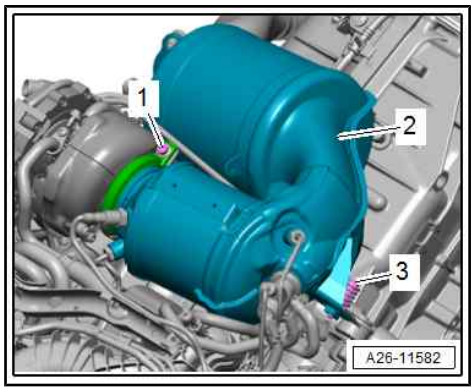

– Unscrew bolts -1, 3- and remove bracket -2-.

Protected by copyright. Copying for private or commercial purpo
permitted unless authorised by AUDI AG. AUDI AG does not guar
with respect to the correctness of information in this document.

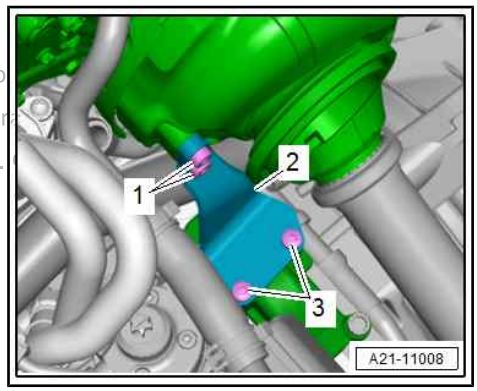

– Remove bolts -arrows- for exhaust gas recirculation pipe.

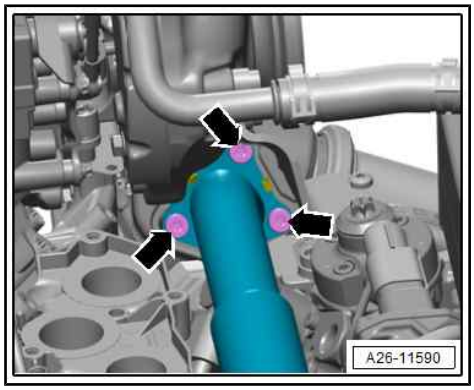

– Release hose clips -1- and disconnect coolant hoses.
– Remove bolt -2-.

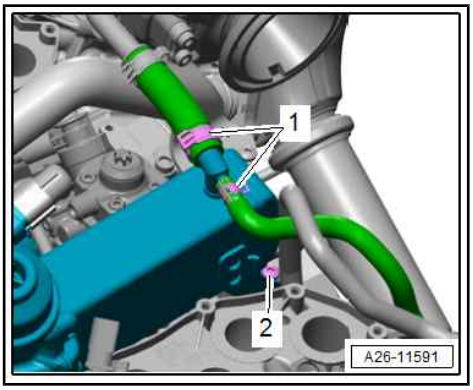

– Unplug electrical connectors:

1 - For exhaust gas recirculation control motor - V338-

3 - For coolant temperature sender - G62-

– Disconnect vacuum hose -2-.
– Remove bolts -arrows-, detach exhaust gas recirculation cooler upwards from coolant pipe (top) and remove it.

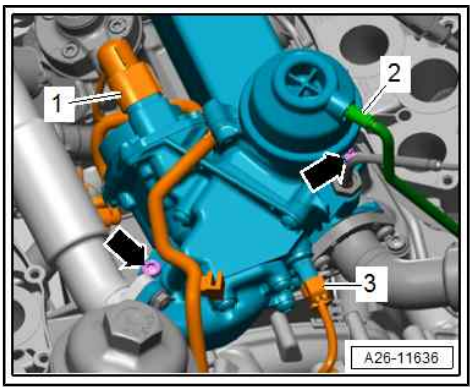

Installing

Installation is carried out in reverse order; note the following:

Note

- *Renew gaskets and O-rings after removal.*
- *Secure all hose connections with correct type of hose clips (as original equipment) ⇒ Electronic parts catalogue .*

– Install intake manifold (top section) ⇒ page 217 .

Note

Do not reuse coolant.

– Fill up with coolant ⇒ page 180 .

Perform adaptions required after renewing a component (using ⇒ Vehicle diagnostic tester)
⇒ “3.10 Performing adaptions after renewing a component”, page 11 .

Protected by copyright. Copying or distribution in any form, in part or in whole, is not permitted unless authorised by AUDI AG. AUDI AG does not guarantee or accept any liability with respect to the correctness of information in this document. Copyright by AUDI AG.

Additional work ⇒ 6-cylinder TDI engine, 3.0 ltr. 4-valve common rail; Rep. gr. 26 ; Exhaust gas recirculation; Removing and installing exhaust gas recirculation cooler

Tightening torques

- ⇒ “5.1.1 Exploded view - exhaust gas recirculation system, equipment version without auxiliary radiator”, page 286
- ⇒ “3.2 Exploded view - reducing agent supply line”, page 271
- ⇒ “1.1 Exploded view - turbocharger”, page 198
- ⇒ Fig. ““Turbocharger - tightening torque and sequence”“ , page 200

5.2.2 Removing and installing exhaust gas recirculation cooler - equipment version with auxiliary radiator

Special tools and workshop equipment required

- Hose clip pliers - VAS 6362-

Protected by copyright. Copying for private or commercial purposes, in part or in whole, is not permitted unless authorised by AUDI AG. AUDI AG does not guarantee or assume any liability with respect to the correctness of information in this document. Copyright by AUDI AG.

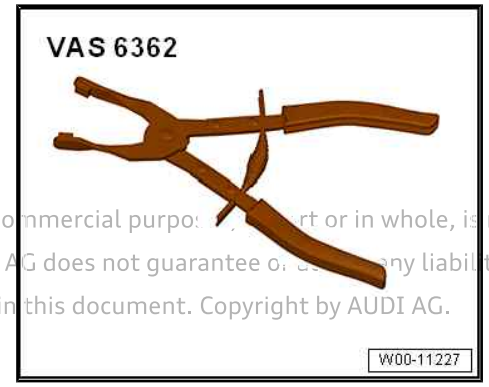

- Socket Torx T30 - T10405-

Removing

– Drain coolant ⇒ page 177 .
– Remove intake manifold (top section) ⇒ page 217 .
– Release hose clips -1- and disconnect coolant hoses.
– Unscrew bolt -2- using socket Torx T30 - T10405- .

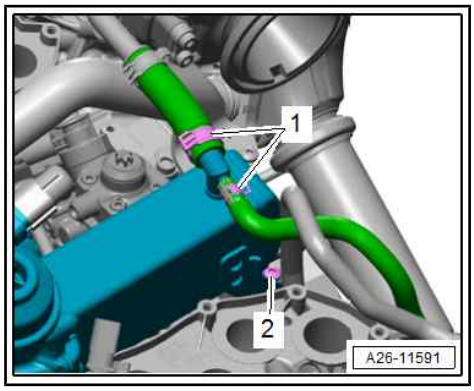

Note

Shown in illustration with emission control module removed.

– Unplug electrical connector -2- for coolant temperature sender - G62- .

– Disconnect vacuum hose -3-.

– Remove bolts -arrows-, detach exhaust gas recirculation cooler -1- upwards from coolant pipe (top) and remove cooler.

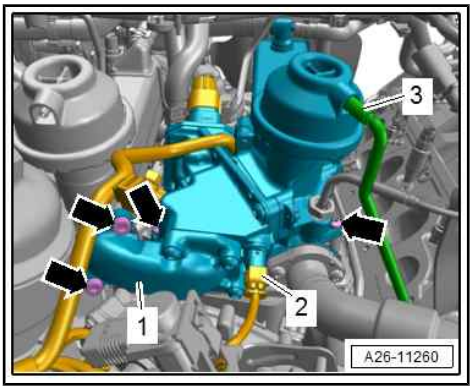

Installing

Installation is carried out in reverse order; note the following:

Note

- *Renew gaskets and O-rings after removal.*
- *Secure all hose connections with correct type of hose clips (as original equipment) ⇒ Electronic parts catalogue .*

– Install intake manifold (top section) ⇒ page 217 .

Note

Do not reuse coolant.

– Fill up with coolant ⇒ page 180 .

Perform adaptions required after renewing a component (using ⇒ Vehicle diagnostic tester)
⇒ “3.10 Performing adaptions after renewing a component”, page 11 .

Tightening torques

- ⇒ “5.1.2 Exploded view - exhaust gas recirculation system, equipment version with auxiliary radiator”, page 288
- ⇒ “3.2 Exploded view - reducing agent supply line”, page 271
- ⇒ “1.1 Exploded view - turbocharger”, page 198
- ⇒ Fig. ““Turbocharger - tightening torque and sequence”“ , page 200

5.2.3 Removing and installing auxiliary cooler for exhaust gas recirculation

Special tools and workshop equipment required

- Hose clip pliers - VAS 6362-

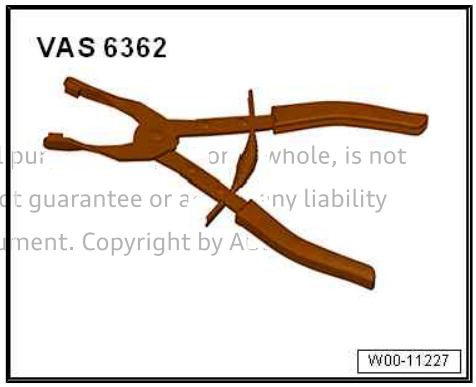

Protected by copyright. Copying for private or commercial pur[illegible] or [illegible] whole, is not permitted unless authorised by AUDI AG. AUDI AG does no[illegible] guarantee or a[illegible] any liability with respect to the correctness of information in this docu[illegible]ent. Copyright by A[illegible]

Removing

– Remove exhaust gas recirculation cooler ⇒ page 294 .

– Release screw-type clip -4- and slide it onto exhaust gas recirculation pipe.

– Disconnect vacuum hose -1-.

– Remove bolts -arrows-.

– Release screw-type clip -3- and detach auxiliary cooler for exhaust gas recirculation.

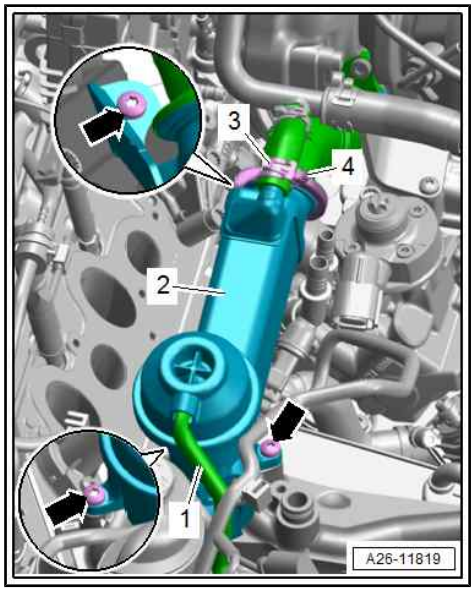

Installing

Installation is carried out in reverse order; note the following:

Note

- *Renew gaskets and O-rings after removal.*
- *Secure all hose connections with correct type of hose clips (as original equipment) ⇒ Electronic parts catalogue .*

– Install exhaust gas recirculation cooler ⇒ page 294 .

Tightening torques

- ⇒ “5.1.2 Exploded view - exhaust gas recirculation system, equipment version with auxiliary radiator”, page 288

5.3 Removing and installing exhaust gas recirculation temperature sensor - G98-

Special tools and workshop equipment required

- Crow-foot ring spanner, 14 mm (commercially available)

Removing

Preparatory work may be necessary depending on model ⇒ 6-cylinder TDI engine, 3.0 ltr. 4-valve common rail; Rep. gr. 26 ; Exhaust gas recirculation; Removing and installing exhaust gas recirculation temperature sensor - G98- .

WARNING

When working on all parts of the exhaust system:

- ***Observe safety precautions when working on the exhaust system ⇒ page 3 .***

Protected by copyright. Copying for private or commercial purposes, in part or in whole, is not permitted unless authorised by AUDI AG. AUDI AG does not guarantee or accept any liability with respect to the correctness of information in this document. Copyright by AUDI AG.

– Disconnect vacuum hose -1-.

– Take electrical connector -3- out of bracket, unplug it and move electrical wiring clear.

– Use a crow-foot ring spanner, 14 mm to unscrew exhaust gas recirculation temperature sensor - G98- -item 2-.

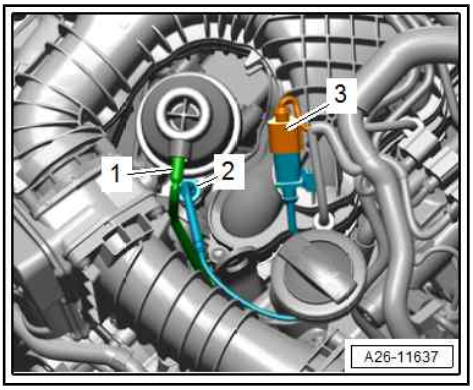

Installing

Installation is carried out in reverse order; note the following:

– Align exhaust gas recirculation temperature sensor - G98- with as much clearance from surrounding components as possible.

Additional work depending on model ⇒ 6-cylinder TDI engine, 3.0 ltr. 4-valve common rail; Rep. gr. 26 ; Exhaust gas recirculation; Removing and installing exhaust gas recirculation temperature sensor - G98-

Tightening torques

♦ ⇒ “5.1 Exploded view - exhaust gas recirculation system”, page 286

5.4 Installing repair kit for exhaust gas recirculation cooler

Dismantling

Protected by copyright. Copying for private or commercial purposes, in part or in whole, is not permitted unless authorised by AUDI AG. AUDI AG does not guarantee or accept any liability with respect to the correctness of information in this document. Copyright by AUDI AG.

Remove exhaust gas recirculation cooler.

♦ Removing exhaust gas recirculation cooler, equipment version without auxiliary radiator ⇒ page 291

♦ Removing exhaust gas recirculation cooler, equipment version with auxiliary radiator ⇒ page 294

– Remove bolts -1 to 4-.

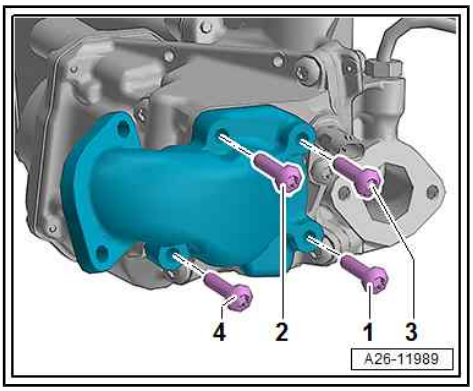

– Detach exhaust manifold -1- and gasket -2-.

– Unscrew bolt -4- and remove coolant temperature sender - G62- -3-.

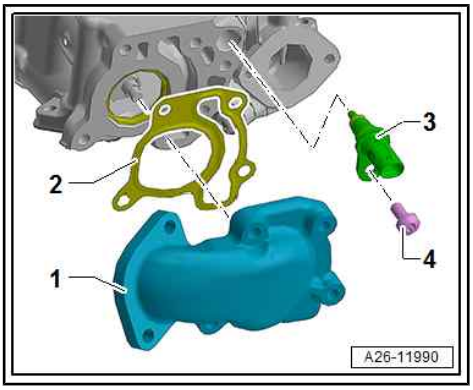

Remove bolts -1 to 4-.

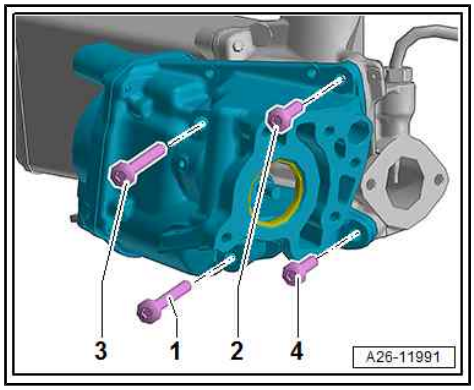

– Detach exhaust gas recirculation valve -1- and gasket -2-.
– Clean sealing surface -arrow- of exhaust gas recirculation cooler with brake cleaner.

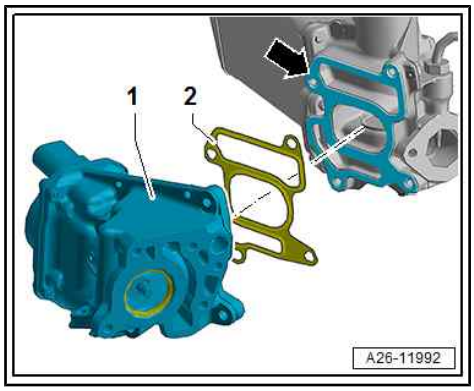

Note

Sandpaper/three-point scrapers or similar must NOT be used on the sealing surface -arrow-.

Assembling

– Fit exhaust gas recirculation valve -1- with gasket -2-.

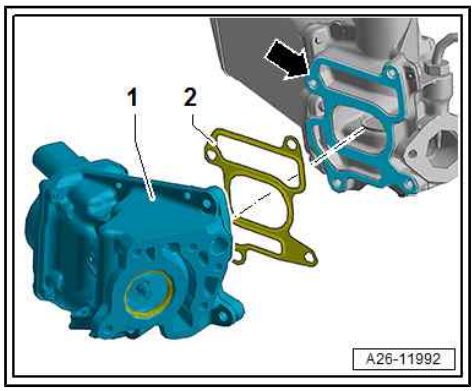

Insert and tighten bolts -1 to 4- ⇒ page 291 .

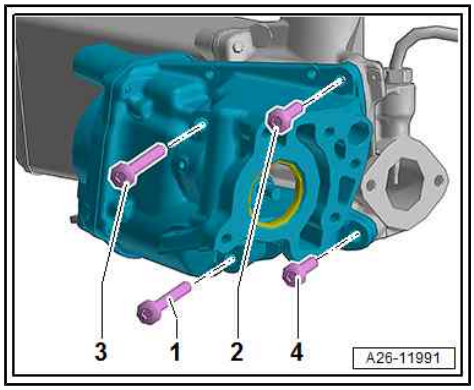

Protected by copyright. Copying for private or commercial purposes, in part or in whole, is not permitted unless authorised by AUDI AG. AUDI AG does not guarantee or accept any liability with respect to the correctness of information in this document. Copyright by AUDI AG.

– Check centring ring -1- for damage. If damaged, renew coolant temperature sender .
– Renew O-ring -2- if fitting old coolant temperature sender .

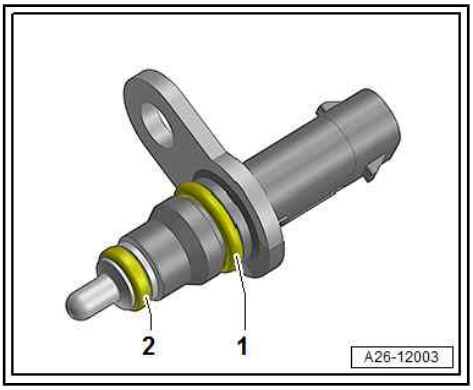

– Fit coolant temperature sender - G62- -3- and secure with bolt -4- ⇒ Item 9 (page 290) .
– Fit exhaust manifold -1- with gasket -2-.

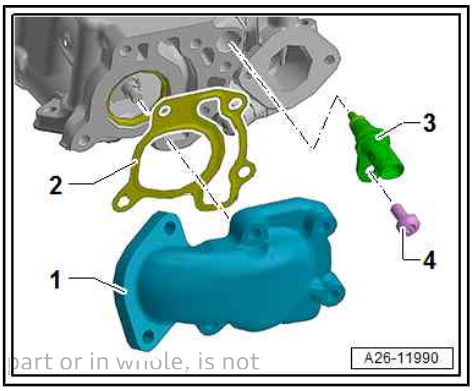

Protected by copyright. Copying for private or commercial purposes, in part or in whole, is not permitted unless authorised by AUDI AG. AUDI AG does not guarantee or accept any liability with respect to the correctness of information in this document. Copyright

Insert and tighten bolts -1 to 4- ⇒ page 291 .
Install exhaust gas recirculation cooler.

♦ Installing exhaust gas recirculation cooler, equipment version without auxiliary radiator ⇒ page 291
♦ Installing exhaust gas recirculation cooler, equipment version with auxiliary radiator ⇒ page 294

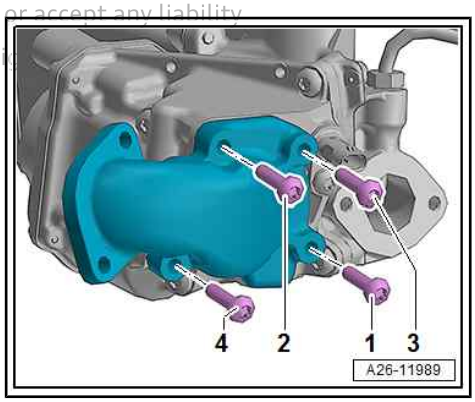

6 Exhaust manifold

⇒ “6.1 Exploded view - exhaust manifold”, page 300

⇒ “6.2 Removing and installing exhaust manifold”, page 301

6.1 Exploded view - exhaust manifold

WARNING

When working on all parts of the exhaust system:

- *Observe safety precautions when working on the exhaust system ⇒ page 3 .*

Note

Illustration shows the exhaust manifold for cylinder bank 2 (left-side) as an example.

1 - Nut

- ❑ Renew after removing
- ❑ Coat thread with high-temperature paste; for high-temperature paste refer to ⇒ Electronic parts catalogue
- ❑ 25 Nm

2 - Exhaust manifold

- ❑ Removing and installing ⇒ 6-cylinder TDI engine, 3.0 ltr. 4-valve common rail; Rep. gr. 26 ; Exhaust manifolds; Removing and installing exhaust manifolds

3 - Gasket

- ❑ Renew after removing

4 - Gasket

- ❑ Renew after removing

5 - Screw-type clip

- ❑ Renew after removing
- ❑ Mark position of screw-type clip prior to removal
- ❑ Tightening torque of bolt ⇒ Item 25 (page 199)

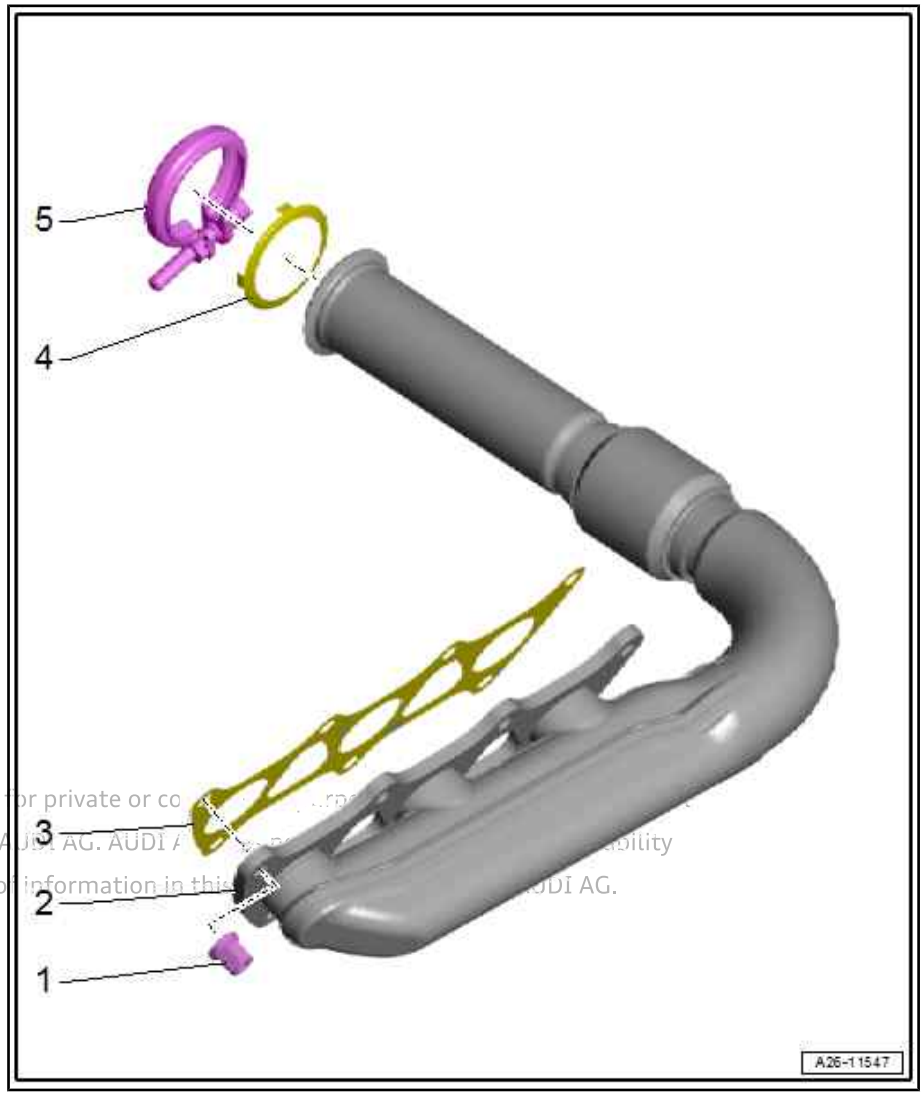

Protected by copyright. Copying for private or co
permitted unless authorised by AUDI AG. AUDI A
with respect to the correctness of information in thi
AUDI AG.

6.2 Removing and installing exhaust manifold

All procedures are described in ⇒ 6-cylinder TDI engine, 3.0 ltr. 4-valve common rail; Rep. gr. 26 ; Exhaust manifolds; Removing and installing exhaust manifolds .

Protected by copyright. Copying for private or commercial purposes, in part or in whole, is not permitted unless authorised by AUDI AG. AUDI AG does not guarantee or accept any liability with respect to the correctness of information in this document. Copyright by AUDI AG.

28 – Glow plug system

1 Glow plug system

⇒ "1.1 Exploded view - glow plug system", page 302

⇒ "1.2 Removing and installing glow plug", page 303

⇒ "1.3 Removing and installing Hall sender G40 ", page 306

⇒ "1.4 Removing and installing engine speed sender G28 ", page 306

1.1 Exploded view - glow plug system

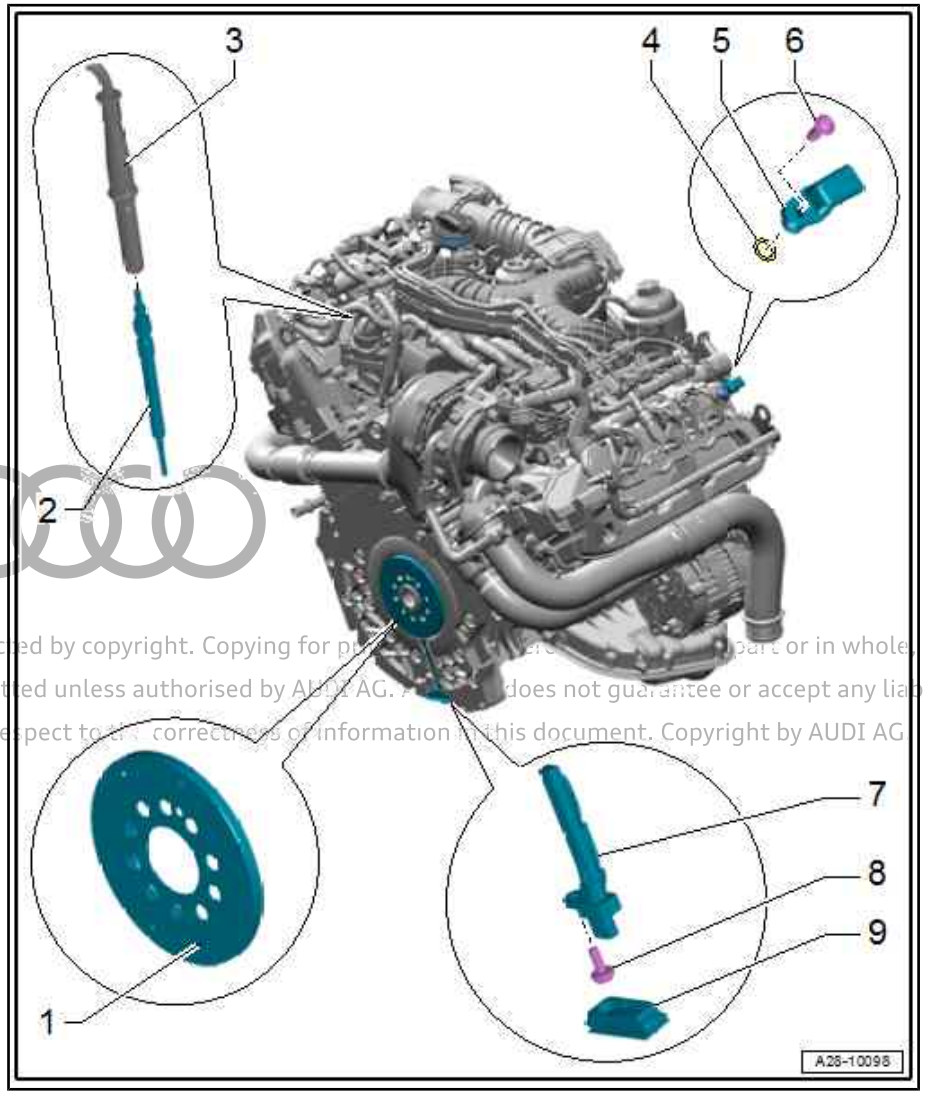

1 - Sender wheel

- ❑ For engine speed sender - G28-
- ❑ Removing and installing ⇒ page 38

2 - Glow plug

- ❑ Cylinder bank 1 (right-side):

- ♦ Glow plug 1 - Q10-
- ♦ Glow plug 2 - Q11- ; on some country-specific versions with cylinder 2 combustion chamber pressure sender - G678- ⇒ page 303
- ♦ Glow plug 3 - Q12-

- ❑ Cylinder bank 2 (left-side):

- ♦ Glow plug 4 - Q13-
- ♦ Glow plug 5 - Q14-
- ♦ Glow plug 6 - Q15-

- ❑ Removing and installing ⇒ page 303
- ❑ Glow plug versions and tightening torques ⇒ page 303

3 - Electrical connector

4 - O-ring

- ❑ Renew after removing

5 - Hall sender - G40-

- ❑ Removing and installing ⇒ page 306

6 - Bolt

- ❑ 7.5 Nm

7 - Engine speed sender - G28-

- ❑ Removing and installing ⇒ page 306

8 - Bolt

- ❑ 9 Nm

Protected by copyright. Copying for private or commercial purposes, in part or in whole, is not permitted unless authorised by AUDI AG. AUDI AG does not guarantee or accept any liability with respect to the correctness of information in this document. Copyright by AUDI AG

9 - Cover

Glow plug versions and tightening torques

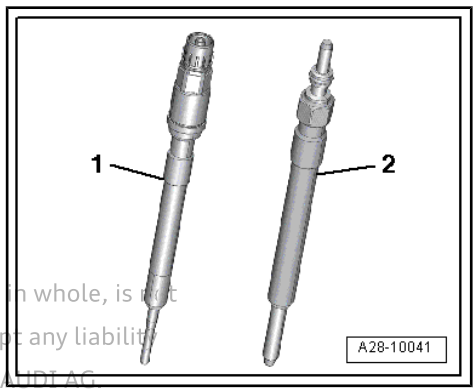

1 - Glow plug with combustion chamber pressure sender

- Only fitted on cylinder “2” on some country-specific versions; glow plug 2 - Q11- with cylinder 2 combustion chamber pressure sender - G678-
- 12 Nm

2 - Glow plug without combustion chamber pressure sender

- 12 Nm

Protected by copyright. Copying for private or commercial purposes, in part or in whole, is not permitted unless authorised by AUDI AG. AUDI AG does not guarantee or accept any liability with respect to the correctness of information in this document. Copyright by AUDI AG.

1.2 Removing and installing glow plug

Special tools and workshop equipment required

- Articulated wrench, 10 mm - 3220-

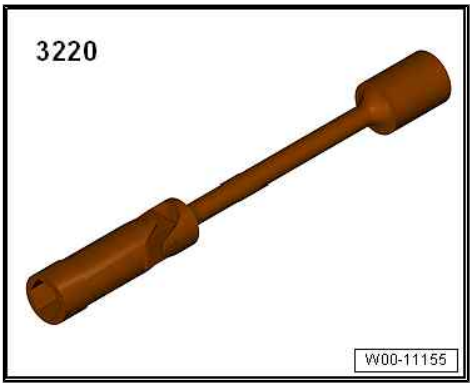

- Socket insert AF 12 for glow plugs 4-cyl. TDI CR diesel - VAS 6454-

Removing

Preparatory work may be necessary depending on model ⇒ 6-cylinder TDI engine, 3.0 ltr. 4-valve common rail; Rep. gr. 28 ; Glow plug system; Removing and installing glow plug .

> ⚠ **Caution**
>
> *Incorrect handling of ceramic glow plugs can cause engine damage.*
>
> - *Observe safety precautions ⇒ page 5 .*

– Unplug electrical connectors on glow plugs.

– Clean glow plug opening to make sure no dirt gets into cylinders; note the following:

WARNING

Risk of eye injury.

- *Put on safety goggles.*

- Use a vacuum cleaner to remove coarse dirt.
- Spray brake cleaner or suitable cleaning agent into glow plug apertures, let it work in briefly, and blow out with compressed air.
- Clean glow plug opening with an oily cloth.

Protected by copyright. Copying for private or commercial purposes, in part or in whole, is not permitted unless authorised by AUDI AG. AUDI AG does not guarantee or accept any liability with respect to the correctness of information in this document. Copyright by AUDI AG.

Glow plug versions ⇒ page 303

– Release glow plugs.

Releasing glow plugs without combustion chamber pressure sender

With T-bar and socket, 10 mm - 3220-

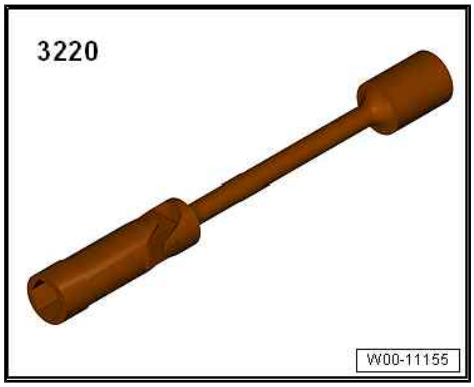

Releasing glow plugs with combustion chamber pressure sender

With socket insert AF 12 for glow plugs 4-cyl. TDI CR diesel - VAS 6454-

Note

- *The glow plugs can only be released up to an angle of approx. 90°. After this, the turning movement is hindered in part by a tendency to seize.*
- *This tendency to seize is caused by particles of dirt (e.g. sand) entering the first glow plug threads as heat causes the glow plugs (steel) and the cylinder head (aluminium) to expand.*

– Unscrew glow plug until it begins to stick, then screw it in again. After this, unscrew it again until it begins to stick.

- Keep turning the glow plug back and forth up to the point where it begins to stick. Repeat this procedure until the glow plug can be removed.

– Pull out glow plugs carefully by hand or using a suitable hose, as shown in illustration. Keep glow plugs straight while unscrewing.

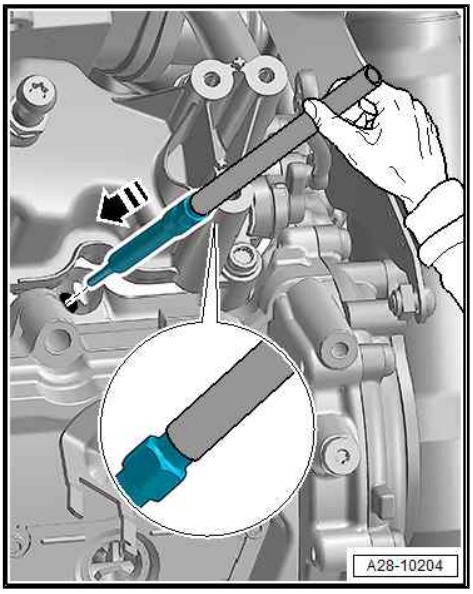

Installing

Installation is carried out in reverse order; note the following:

Note

Due to the special properties of the material used, ceramic glow plugs are easily damaged and require extra care when installing.

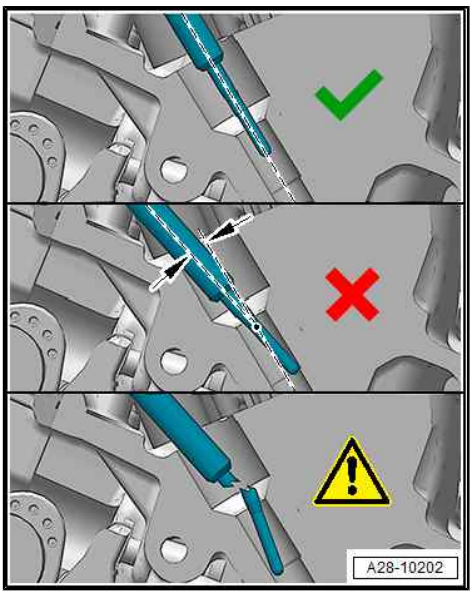

– Screw in glow plugs carefully by hand or using a suitable hose, as shown in illustration. Keep glow plugs straight while unscrewing.

Protected by Copyright. Copying for private or commercial purpo
permitted unless authorised by AUDI AG. AUDI AG does not gua
with respect to the correctness of information in this document

– Ensure that electrical connectors are securely seated.

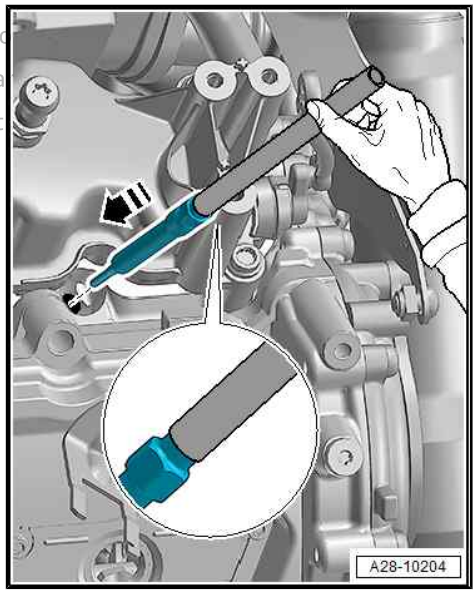

Additional work depending on model ⇒ 6-cylinder TDI engine, 3.0 ltr. 4-valve common rail; Rep. gr. 28 ; Glow plug system; Removing and installing glow plug .

Glow plugs with combustion chamber pressure senders: Performing adaptions required after renewing a component using ⇒ Vehicle diagnostic tester
⇒ “3.10 Performing adaptions after renewing a component”, page 11 .

Tightening torques

♦ ⇒ Fig. ““Glow plug versions and tightening torques”“ , page 303

1.3 Removing and installing Hall sender - G40-

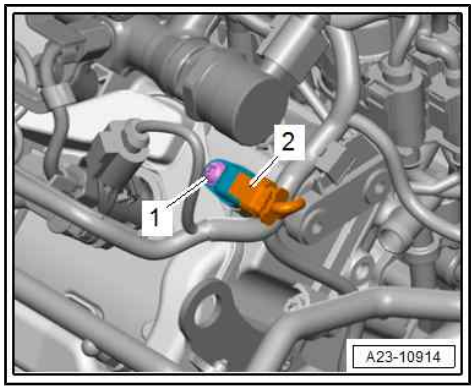

Removing

Preparatory work may be necessary depending on model ⇒ 6-cylinder TDI engine, 3.0 ltr. 4-valve common rail; Rep. gr. 28 ; Glow plug system; Removing and installing Hall sender - G40- .

– Unplug electrical connector -2-.

– Unscrew bolt -1- and remove Hall sender - G40- .

Installing

Installation is carried out in reverse order; note the following:

Note

Renew O-ring after removal.

Additional work depending on model ⇒ 6-cylinder TDI engine, 3.0 ltr. 4-valve common rail; Rep. gr. 28 ; Glow plug system; Removing and installing Hall sender - G40- .

Protected by copyright. Copying for private or commercial purposes, in part or in whole, is not permitted unless authorised by AUDI AG. AUDI AG does not guarantee or accept any liability with respect to the correctness of information in this document. Copyright by AUDI AG.

Tightening torques

♦ ⇒ “1.1 Exploded view - glow plug system”, page 302

1.4 Removing and installing engine speed sender - G28-

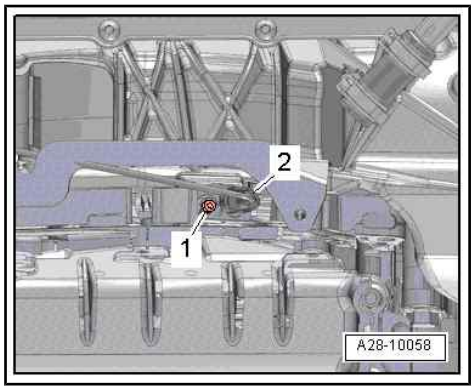

Removing

Preparatory work may be necessary depending on model ⇒ 6-cylinder TDI engine, 3.0 ltr. 4-valve common rail; Rep. gr. 28 ; Glow plug system; Removing and installing engine speed sender - G28- .

– Remove noise insulation (rear) ⇒ General body repairs, exterior; Rep. gr. 66 ; Noise insulation; Removing and installing noise insulation .

– Unplug electrical connector -2-.

– Unscrew bolt -1- and detach engine speed sender - G28- .

Installing

Installation is carried out in reverse sequence.

Additional work depending on model ⇒ 6-cylinder TDI engine, 3.0 ltr. 4-valve common rail; Rep. gr. 28 ; Glow plug system; Removing and installing engine speed sender - G28- .

Tightening torques

♦ ⇒ “1.1 Exploded view - glow plug system”, page 302

♦ ⇒ General body repairs, exterior; Rep. gr. 66 ; Noise insulation; Exploded view - noise insulation