SPECIFICATIONS

MAIN FEATURES

The Magneti Marelli 8 GMF system with motorised throttle is based on drive torque control through the feeding of the intake valve lift control solenoid valves through a UNIAIR module.
This belongs to the sequential, phased category of integrated electronic injection and ignition systems.
The control unit memory is "flash EPROM", i.e. it can be reprogrammed externally without operating on the hardware.
The engine management control unit manages the engine and connected systems, it is directly fitted to the engine compartment and is resistant to high temperatures.
The main system functions are as follows:
1. CODE recognition
2. fuel pump control
3. cylinder position recognition
4. engine start-up strategy
5. cold starting control
6. drive torque management
7. UNIAIR module solenoid valve management
8. idle speed management
9. injection time adjustment
10. enrichment control during acceleration
11. fuel cut-off during deceleration
12. ignition advance adjustment
13. detonation control
14. supercharging control
15. control of maximum rpm
16. control of combustion with oxygen sensors
17. control of engine cooling fan
18. climate control system control
19. Cruise Control control
20. emission control systems
21. self-diagnosis and recovery
22. self-adaptation

cardiagn.com

Injection system

The basic conditions that must be satisfied in the preparation of the air/fuel mixture for the smooth running of ignition-controlled engines are, basically:

- the “metering” (air/fuel ratio) must be kept as close as possible to the stoichiometric value to ensure that combustion is quick, avoiding unnecessary fuel consumption
- the "homogeneity" of the mixture, comprising petrol vapours, dispersed in the air as finely and uniformly as possible in order to ensure the stability and efficiency of the catalytic converter over a period of time.

The injection/ignition system uses an indirect measuring system known as the SPEED DENSITY-LAMBDA type.
In other words, the angular rotation, density of the intake air and control of the mixture strength (feedback).
In practice the system uses the ENGINE SPEED (rpm) data and the AIR DENSITY information (pressure and temperature) to measure the quantity of air drawn in by the engine.
The quantity of air drawn in by each cylinder, for every engine cycle, depends on the density of the intake air and also on the unit displacement, the volumetric efficiency, the supercharging, the intake valve lift due to the UNIAIR module and the temperature of the engine oil entering the module.
The density of the air refers to the air drawn in by the engine and is calculated according to the absolute pressure and temperature, both measured in the intake manifold.
This calculation also considers the value of ambient pressure and turbocharger pressure.
Volumetric efficiency is the parameter relative to the cylinder filling coefficient, measured on the basis of experiments conducted on the engine with UNIAIR module for the entire operating range and then stored in the electronic control unit memory.
Having established the quantity of intake air, the system must provide the correct amount of fuel depending on the desired mixture strength.
The end of injection impulse or supply timing is stored in the control unit memory and varies according to the engine speed and pressure in the intake manifold.
In practice it involves the processing that the electronic control unit carries out to operate the sequential, timed opening of the four injectors, one per cylinder, for the exact amount of time required to produce the air/petrol mixture closest to the stoichiometric ratio.
The fuel is injected directly into the manifold near the inlet valves at a pressure of about 3.0 bar.
The speed (rpm) and the density of the air (pressure and temperature) are used for measuring the quantity of intake air which, when established, is used for metering the amount of fuel needed for the desired mixture strength.
The other sensors in the system (coolant temperature, throttle valve position, battery voltage, engine oil temperature etc.) allow the electronic control unit to correct the basic strategy for all engine operating conditions.

Ignition system

The ignition system is the inductive discharge, static advance type, i.e. there is no high tension distributor with the power modules located inside the injection/ignition electronic control unit.
The primary winding of each coil is connected to the power relay (thereby receiving battery voltage) and to the pins of the electronic control unit for earth connection.

After the starting stage, the electronic unit manages the basic advance taken from special maps dependent on:

- engine rotation speed
- absolute pressure value (mmHg) measured in the intake manifold;
- engine and engine oil temperature.

The ignition advance is correct, as in the case of the fuel injection, by the torque management strategy.
The spark plugs for the cylinders are connected directly to the coil secondary winding terminals (one per spark plug).

OPERATION

Diagram of information entering/leaving the control unit

The following diagram shows the information entering/leaving the control unit.

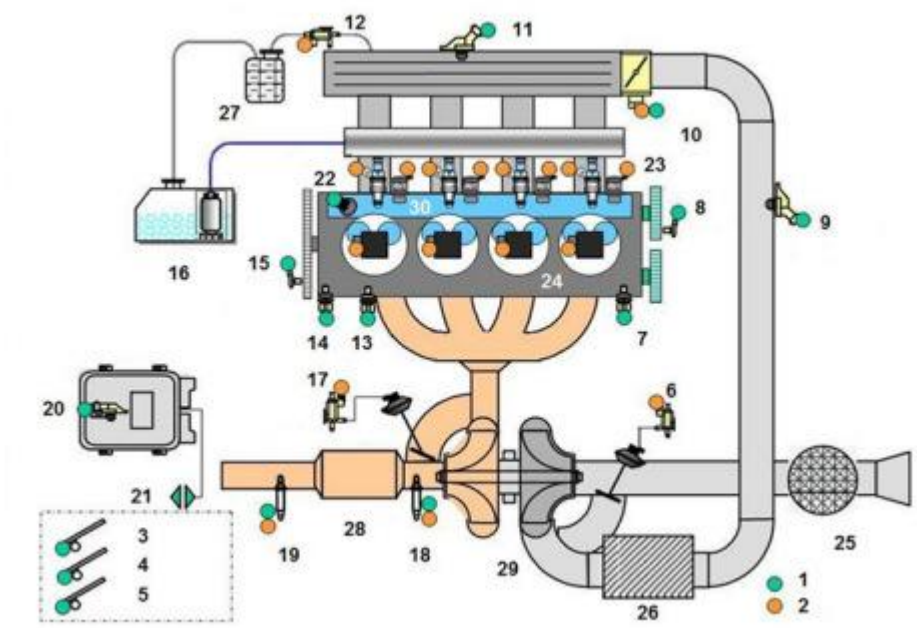

cardiagn.com

1. Input signals to the engine management control unit
2. Output signals from the engine management control unit
3. Accelerator pedal sensor
4. Brake pedal sensor
5. Clutch pedal sensor
6. DUMP valve
7. Engine coolant temperature sensor
8. timing sensor
9. Excess pressure sensor
10. Throttle valve
11. Air pressure/temperature sensor
12. Fuel vapour recovery solenoid valve
13. Oil pressure switch
14. Knock sensor
15. Engine rpm sensor
16. Fuel electric pump
17. Waste gate solenoid valve
18. Lambda sensor upstream of the catalytic converter
19. Lambda sensor downstream of the catalytic converter
20. Ambient pressure sensor
21. CAN line interface
22. Engine oil temperature sensor
23. UNIAIR module solenoid valves
24. Ignition coils
25. Air cleaner
26. Intercooler
27. Activated charcoal filter (canister)
28. Catalytic converter
29. Turbocharger
30. Injectors

SELF-LEARNING

The control unit implements the self-learning logic under the following conditions:

- removing-refitting or replacement of the injection control unit
- removing-refitting or replacing the throttle body

The values stored by the control unit are retained when the battery is disconnected.

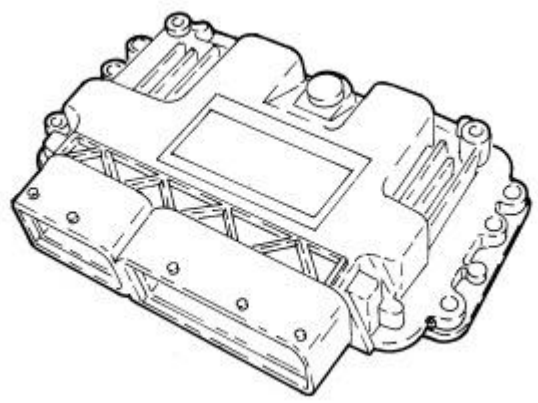

SYSTEM SELF-ADJUSTMENT

The control unit is equipped with a self-adaption function that is designed to recognize the changes that take place in the engine due to the processes of bedding in over a period of time and ageing, both of components and engine itself.
These changes are stored in the form of modifications to the basic map and are designed to adapt the system operation to the gradual alterations in the engine and the components, compared with the characteristics of the new engine/components.
This self-adjustment function also makes it possible to compensate for the inevitable differences in any replacement components (owing to production tolerances).
From the analysis of the exhaust gases, the control unit modifies the basic map in relation to the specifications of the engine when new.
The following self-adaption strategies are provided in the control unit:
- mixture strength control multiplication coefficient; takes into account the mixture strength slips linked to the sensor differences, injectors, air chamber and continually updates while the engine is running.
- mixture strength control additive coefficient, corrects injector leaks and updates when idling.
The self-adjustment parameters are not deleted when the battery is disconnected.

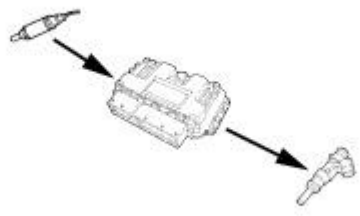

cardiagn.com

SELF-DIAGNOSIS AND RECOVERY

The control unit auto-diagnostic system checks that the system is working properly and signals any irregularities by means of an MIL warning light in the instrument panel with a standardised icon and colour, as laid down by European regulations.
This warning light indicates engine management faults and also faults detected by EOBD diagnosis strategies.
The MIL warning light operating logic is as follows.
The warning light comes on with the ignition on and remains on until the engine is started up; the control unit autodiagnostic system checks the signals coming from the sensors and compares them with the permitted data limits.

Indication of faults during engine starting:

- the failure of the warning light to go out when the engine has been started indicates that there is an error memorized in the control unit.

Indication of faults during operation:

- the warning light comes on in flashing mode to indicate possible catalytic converter damage due to misfiring.
- If the warning light comes on constantly, this indicates the engine management errors or EOBD diagnosis errors.

The control unit defines the recovery settings on each specific occasion according to which components are faulty.
The recovery parameters are managed by non-faulty components.
The recovery strategies that can be activated from the control unit are:
- limp home following throttle body error
- limp home following accelerator pedal error
- turbocharging; the throttle is closed when there is a rise in the turbocharging pressure during the transient stages of acceleration and the difference between the target pressure and the measured pressure is greater than 200 mbar, while a turbocharging pressure limit is activated if there is an error with the accelerator pedal, throttle actuator and/or the UNIAIR module solenoid valves
- UNIAIR module solenoid valves
- engine oil temperature sensor
European regulations require the EOBD system to use the following strategies relating to the engine subsystems that have a direct impact on emissions:
- fuel supply system (fuel system diagnosis), to detect any malfunctions on the fuel line.
- Lambda sensor diagnosis to detect operating errors in the sensor upstream of the catalytic converter.
- catalytic converter diagnosis to detect deterioration via indirect measuring of the oxygen storage capacity.
- diagnosis relating to irregular ignition (misfire diagnosis) that stops the catalytic converter working correctly, potentially causing irreversible damage.

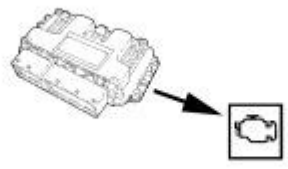

SYSTEM CONTROLS AND MANAGEMENT

Code recognition

The moment the control unit receives the key ON signal it converses with the body computer to obtain the go ahead for starting.
The starter is controlled directly by the key and not by the control unit.
The communication takes place through the CAN line.
As in the last example, the W recovery line is not used again.

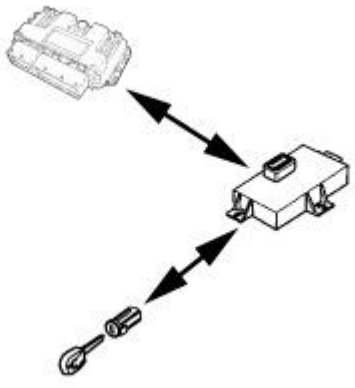

Cold start control

The following occurs in cold start conditions:

- a natural weakening of the mixture (as a result of the poor turbulence of the particles of fuel at low temperatures)
- the reduced evaporation of the fuel
- condensation of the fuel on the internal walls of the intake manifold
- greater viscosity of the lubricant oil.

The electronic control unit recognises this condition and corrects the basic injection time according to the:

- coolant and engine oil temperature
- intake air temperature
- battery voltage
- engine rpm.

The ignition advance depends on the rpm and the engine coolant and engine oil temperature.
The rotation speed decreases proportionally as the engine temperature increases until the nominal value is reached when the engine is warmed up.

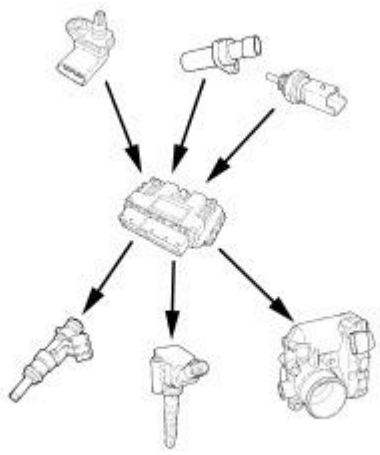

cardiagn.com

Combustion control - lambda sensors

In EOBD systems the Lambda sensors, which are all the same type, are fitted upstream of the catalyser system and downstream of the catalyser.
The pre-converter sensor controls 1st loop mixture strength (upstream sensor closed loop).
The post-converter sensor is used for the catalytic converter diagnosis and for a fine modulation of the 1st loop control parameters.
The second loop is therefore adaptive to make up for production discrepancies and slight drift that pre-converter sensor responses could experience due to ageing and contamination.
Fuel injection time correction strategy and K parameter calculation

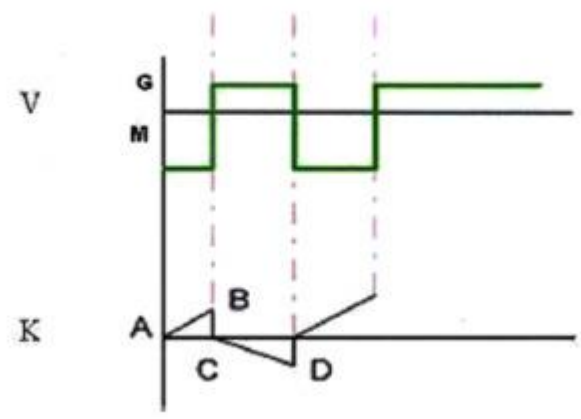

V. Oxygen sensor voltage
G. Rich range
M. Lean range
K. Correction parameter
A;B;C;D Variation points
This correction parameter K is calculated by the control unit using a suitable algorithm considering only the rich/lean and lean/rich transitions of the sensor voltage.
The engine management control unit performs oxygen sensor diagnosis.

Detonation control

The control unit detects the presence of detonation (engine knock) by processing the signal coming from the appropriate sensor.
The control unit continuously compares the signals coming from the sensor with a reference value which is, in turn, constantly updated in order to take into account background noise and the ageing of the engine.
The control unit is therefore capable of detecting the presence of detonation (or the onset of detonation) in each individual cylinder and reduces the ignition advance in the cylinder concerned (in steps of 3 degrees up to a maximum of 6 degrees) until the phenomenon has disappeared. Later on, the advance is gradually restored to the basic value (in steps of 0.8°).
In acceleration conditions, a higher threshold is used to take into account the increased noise of the engine under such circumstances.
The detonation control logic also has a self-adjustment function which memorises the reductions in the advance that are continuously repeated in order to adapt the map to the different conditions that may affect the engine.

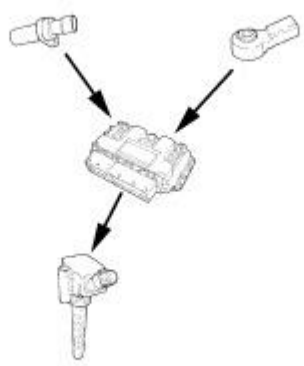

cardiagn.com

Control of enrichment during acceleration

During this stage, the control unit suitably increases the amount of fuel supplied to the engine (to produce maximum torque) according to the signals coming from the following components:

- accelerator pedal potentiometer and throttle position.
- rpm and TDC sensor

The basic injection time is multiplied by a coefficient depending on the temperature of the engine coolant, the UNIAIR module solenoid valve supply and the increase in pressure in the intake manifold.
ASR and VDC management requires the control unit to reduce the torque and therefore the ignition time together with action on the UNIAIR module solenoid valves and on the ignition advances.

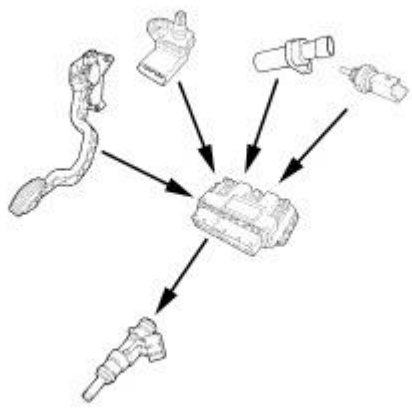

Fuel supply - electric fuel pump check

The control unit supplies the electric pump:

- with the ignition ON for 0.8 secs.
- with the ignition in the starting position AVV and the engine speed > 20 rpm.

The control unit interrupts the supply to the electric pump:

- with key on STOP
- with the engine speed < 40 rpm.

The fuel supply system with recirculation ensures a constant pressure differential of 3.0 bar.

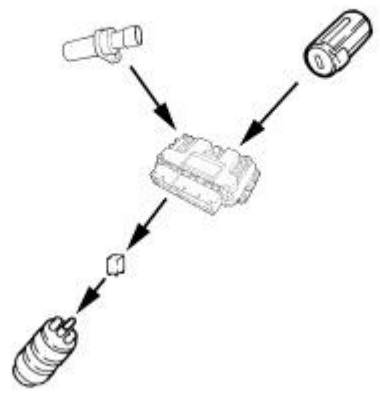

Connection to the climate control system

The climate control system is constantly managed by adding together the torque required by the user and the torque required for the operation of the compressor:
- when the total is less than the calibrated threshold, depending on the engine rpm, the user request is enabled;
- when the total is more than the calibrated threshold, depending on the engine rpm and the speed being below 10 km/h, the user request is not enabled.

The control unit momentarily interrupts the supply to the compressor:

- during starting
- switching it off when the engine temperature > 115 °C and reactivating it with a hysteresis of 5.3 °C.
- during take off with the accelerator pedal fully depressed.

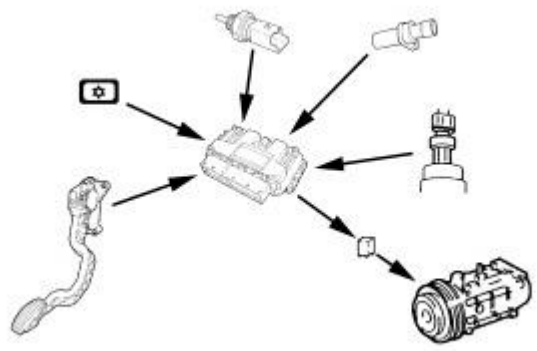

cardiagn.com

Recognition of cylinder position

The engine timing signal, together with the engine rpm and TDC signal, allow the control unit to recognize the succession of cylinders to implement the timed injection.
This signal is produced by a Hall effect sensor, positioned on the cylinder head near the toothed wheel on the camshaft.

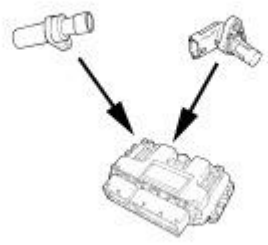

Fuel cut-off during decelerationn

When the accelerator pedal is released and beyond a pre-set engine speed level, the control unit:

- cuts off the supply to the injectors
- reactivates the supply to the injectors at 1200 rpm in first gear and at 1000 rpm in other gears.

In the absence of fuel, the number of revs decreases at a rate determined by the vehicle driving conditions.
Before the idle speed is reached the progress of the engine speed decrease is checked.
If it is above a certain figure, the fuel supply is partly reactivated to ensure the “gentle accompaniment” of the engine to the idle speed.

The thresholds for restoring the fuel supply and the fuel cut-off vary according to:

- engine coolant temperature
- vehicle speed
- engine rpm.

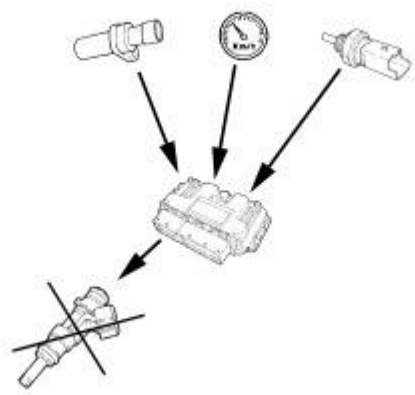

Fuel vapour recovery

The (pollutant) fuel vapours, collected in an active charcoal filter (canister), are sent to the intake ducts to be burnt.
This takes place by means of a solenoid valve which is only operated by the control unit when the engine operating conditions allow it.
The control unit compensates for this additional amount of fuel with a reduction in the delivery to the injectors.

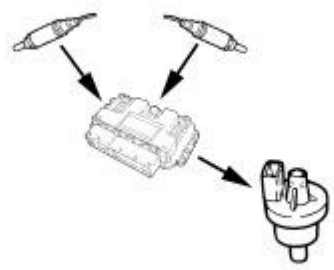

cardiagn.com

Maximum rpm control

The unit controls the maximum number of revs by limiting the drive torque.
First of all, the control unit cuts the fuel supply by adjusting the injection times.
If the injection time adjustment is not sufficient, the control unit changes the UNIAIR module solenoid valve supply times and closes the motorised throttle.

Injection time adjustment

The control unit calculates the injector opening time and controls them extremely quickly and precisely on the basis of the:

- engine load (rpm and air flow rate)
- engine coolant temperature.

The air flow rate is calculated by taking into consideration the parameters recorded by the air temperature and pressure sensor fitted on the air chamber, the UNIAIR module solenoid valve supply time and the intake valve opening degrees. Air pressure entering the throttle body, the ambient pressure measured by the sensor on the control unit and the engine oil temperature are also corrective factors in the calculation of the flow.
The injection is the sequential, phased type for each cylinder and takes place at the optimum start of injection point whilst the end of injection point is fixed.

Ignition advance adjustment;

Thanks to a map stored in the control unit memory it is capable of calculating the ignition advance according to:

- the engine load (minimum, partial, full, according to the rpm and air flow rate)
- intake air temperature
- engine coolant temperature.

The ignition can be selectively delayed at the cylinder required, recognized through the combination of the value recorded by the rpm sensor and the

“timing” data.

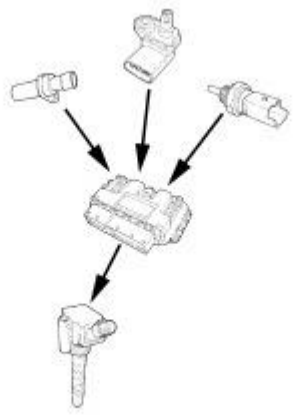

Idling speed control

The control unit recognizes the idle condition through the accelerator pedal in the released position.
To control idle speed, depending on the users connected and the brake/clutch pedal signals, the control unit controls the supply for the UNIAIR module solenoid valves.
The idling speed when warm is 750 ± 50 rpm.
On the basis of an electrical balancing strategy, the control unit increases the idle speed when the battery voltage is reduced to the calibrated threshold value.

Radiator cooling fan control

Depending on the temperature of the coolant, the control unit switches on the fan:

- first speed activation temperature: 97°C with a hysteresis of about 5°C
- second speed activation temperature: 102°C with a hysteresis of about 5°C

There is then a further check (linear pressure sensor signal) which switches on the fan at the 1st or 2nd speed depending on the pressure of the refrigerant gas when the air conditioning system is switched on.
If there is no coolant temperature signal, the control unit implements the recovery function switching on the fan at the 2nd speed until the error disappears.

Cardiagn.com

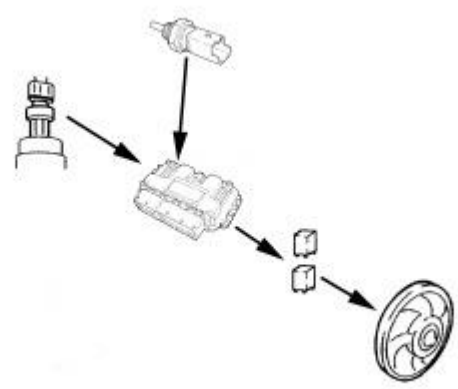

Engine starting

During start-up, the control unit measures the engine oil and coolant temperature and controls UNIAIR module solenoid valves, throttle body module, injection time and suitable ignition advance.
Above a threshold of 20 rpm and with engine timing detected, the control unit controls the injectors and the coils in timed sequence to reduce unburnt hydrocarbon exhaust emissions.
If the engine will not start, the control unit reduces the amount of fuel using a multiplication factor in order to reduce the possibility of flooding the engine.

Torque control

The control unit for managing the various operating strategies is mainly based on control of engine torque.
The control unit measures the required torque through the accelerator pedal and, after performing the relevant calculations, acts on the ignition advances, on throttle opening, on the intake valves and on injection times.
There are five main tables for calculating the engine torque:
- low loads calculation table
- intermediate load calculation table
- intermediate/high load calculation table
- high loads calculation table
- reverse gear calculation table.

When the "Dynamic" function is active, a further five calculation tables are taken into consideration, namely:
- low load with dynamic function activated calculation table
- medium load with "Dynamic" function activated calculation table
- medium/high load with "Dynamic" function activated calculation table
- heavy load with dynamic function activated calculation table
- reverse gear with dynamic function activated calculation table.

The dynamic function can be activated via the DNA "manettino" dial described later on.

Car handling

The handling strategy includes three actions carried out by the control unit to make longitudinal fluctuations caused by the dynamics of the vehicle during transitions smoother and more gradual in order to make the use of the car as comfortable as possible.

Transitions refer to acceleration and deceleration of varying suddenness, due to the action on the accelerator pedal and gear changes.

The control unit detects the acceleration and deceleration transient stages through the accelerator sensor and the clutch and brake pedal switches, therefore intervening in torque management through the TIP-UP and TIP-DOWN calculation modules.
Depending on the situation, the control unit sets a fast torque control, adjusting the ignition advances and, if this is not enough, it activates a slow torque control adjusting the UNIAIR module solenoid valve supply and consequently the injection times.

Supercharging control

Turbocharger pressure management
The control unit controls the engine torque directly taking turbocharging into account, operating the waste gate valve directly to achieve the target pressure in the intake manifold depending on:
- engine load
- ambient pressure
- turbocharger pressure.

In particular, when the desired pressure reaches a calculated threshold, the control unit starts to adjust the exhaust gas flow through the waste gate. This introduces a feedback that guarantees system stability.
As well as the desired pressure, the power supplied to the compressor to achieve it is calculated. This power must be supplied from the turbine and therefore the exhaust gas flow is regulated to guarantee that this power is reached.

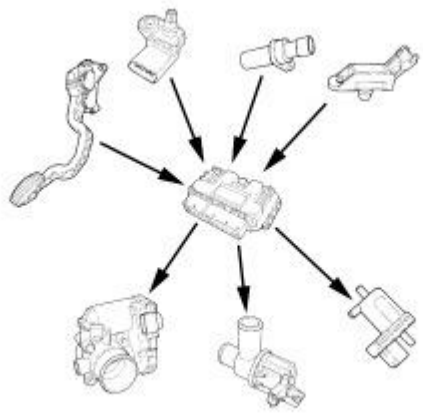

cardiagn.com

DUMP solenoid valve management (shut-off)
In systems with a turbocharger, when the throttle is closed quickly (during release) overpressure is produced in the duct upstream of the throttle; this tends to slow the compressor impeller, leading to strong vibrations and noise.
The shut-off valve allows the recirculation of the air from downstream to upstream of the compressor, reducing the pressure in the manifold.
The control unit directly controls the shut-off valve depending on:
- engine load
- atmospheric pressure
- turbocharger pressure.

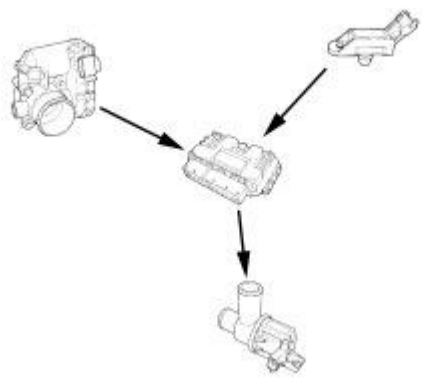

NORMAL/DYNAMIC operation check
Using the DNA "manettino" dial (Dynamic-Normal-All weather), in addition to the differentiated management of the electric steering and the VDC functions, the OVERBOOST function can also be turned on.
The DNA "manettino" dial is connected via discreet line to the Body Computer node, therefore the information concerning the programme selected is made available to the Engine Management Node via the C-CAN.
To manage the OVERBOOST function the Engine Management Node mainly takes into account the position of the accelerator pedal and consequently acts on the wastegate valve regulating the pressure of the turbocharger and adjusting the UNIAIR module solenoid valve supply system.
With the dynamic function engaged, the maximum torque condition (OVERBOOST) remains activated for a maximum of 80 seconds.
The important specifications of the Normal/Dynamic functions are described below.
Normal/All weather function on
- maximum torque 180 Nm at 1750 rpm
- maximum power 135 HP
- soft driving strategy
- contained consumption at high engine loads.

Dynamic function

- maximum torque 206 Nm at 2000 rpm
- maximum power 135 HP
- sporty driving strategy
- higher consumption at high engine loads.

The management of the OVERBOOST should not be understood as a pressure causing damage to the turbine, but as the possibility of providing greater pressure than the maximum at that moment.

The operation of the DNA "manettino" dial is described later on.

Turbocharging recovery

During the supercharging pressure increase in acceleration transitions, if the difference between the target pressure and the pressure measured is more than 200 mbar the throttle is closed.
If there is an error at the accelerator pedal or the throttle actuator a supercharging pressure restriction is activated.
In order to guarantee the protection of the turbocharger the engine management control unit evaluates the temperature of the exhaust gases, using a mapped calculation model, because an excessive increase could cause damage to the turbine.

Cruise control

Depending on the position of the cruise control lever, the control unit directly manages the quantity of fuel injected in order to control and maintain the vehicle speed which has been memorised.
A warning light on the control panel, activated by the control unit, indicates system operation or deactivation status.
For Cruise Control operation
See descriptions 5580A CRUISE CONTROL SYSTEM

Drive torque evaluation

The requested torque is supplied by the engine and transmitted to the wheels by means of the transmission drive line (clutch, gearbox, drive shafts, etc.).
The engine/transmission unit can therefore be seen as a system with supplied torque at the input and a series of kinematic values at the output, such as:
- angular speed of crankshaft and flywheel
- angular speed and acceleration of the wheels, linked to the speed and longitudinal acceleration by a proportionality factor.

The torque generated by the engine can be divided in two modes:
- torque generation in fast mode, only the ignition advance varies
- torque generation in slow mode, variation of UNIAIR module solenoid valve supply time and degrees of intake valve opening.

cardiagn.com

INJECTION-IGNITION CONTROL UNIT

Characteristics

The control unit is fitted in the engine compartment on the flame bulkhead.
The control unit memory is the flash EPROM type, i.e. it can be reprogrammed from the outside without operations to the hardware.
The self-learning procedure must be carried out if the injection control unit is replaced.

Control unit pin out

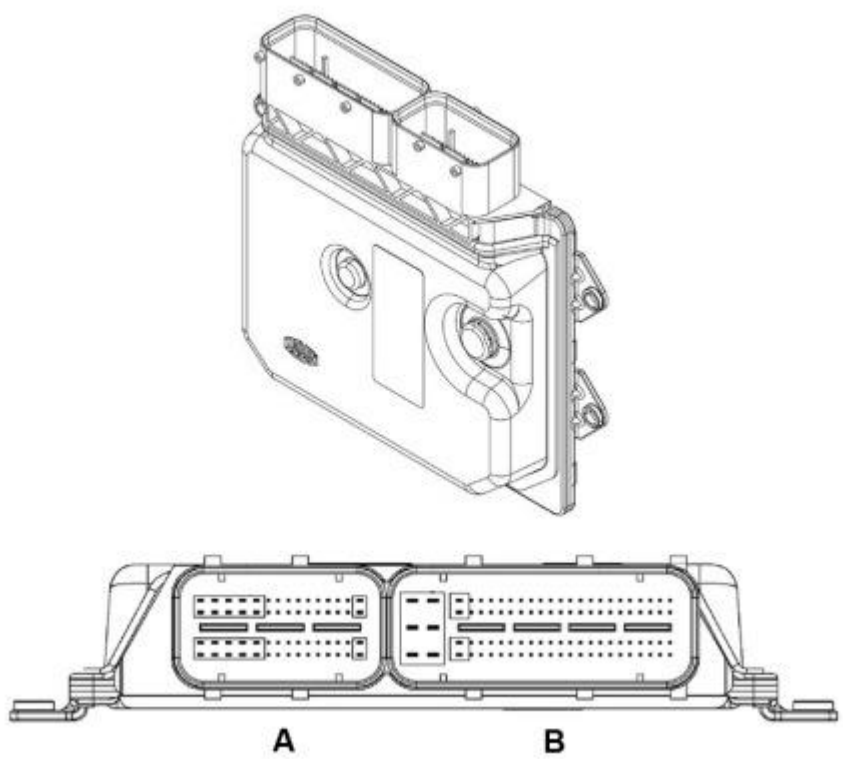

Connector A
1. Ignition coil control cylinder 3
2. Ignition coil control cylinder 4
3. Injector control for cylinder 1
4. Injector control for cylinder 2
5. Not connected

6. Throttle potentiometer 1 and 2
7. Sensor power supply
8. Not connected
9. Knock sensor earth shielding
10. (+) detonation sensor
11. (-) detonation sensor
12. Not connected
13. Not connected
14. Rpm sensor earth
15. Not connected
16. Ignition coil control cylinder 2
17. Ignition coil control cylinder 1
18. Injector control for cylinder 4
19. Cylinder 3 injector control
20. Not connected
21. Not connected
22. Not connected
23. Not connected
24. Sensor earth
25. Throttle potentiometer 1 and 2 reference earth
26. Not connected
27. timing sensor
28. Not connected
29. Rpm sensor signal
30. Not connected
31. (-) cylinder 2 UNIAIR module solenoid valve control
32. (-) cylinder 1 UNIAIR module solenoid valve control
33. (-) cylinder 4 UNIAIR module solenoid valve control
34. (-) cylinder 3 UNIAIR module solenoid valve control
35. Not connected
36. Not connected
37. Alternator
38. Not connected
39. Engine coolant temperature sensor
40. Engine oil temperature sensor (UNIAIR module)
41. Not connected
42. Not connected
43. Throttle potentiometer 1
44. Oil pressure sensor
45. (-) throttle motor
46. (+) cylinder 2 UNIAIR module solenoid valve control
47. (+) cylinder 1 UNIAIR module solenoid valve control
48. (+) cylinder 4 UNIAIR module solenoid valve control
49. (+) cylinder 3 UNIAIR module solenoid valve control
50. Not connected
51. Not connected
52. DUMP solenoid valve control
53. Canister valve earth
54. Canister valve supply
55. Air temperature sensor
56. Not connected
57. Air pressure sensor
58. Excess pressure sensor
59. Throttle potentiometer 2
60. (+) throttle motor

Connector B

1. Power earth
2. Power earth
3. Supply from main relay
4. Power earth
5. Supply from main relay
6. Supply from main relay
7. Not connected
8. Wastegate solenoid valve control
9. Not connected
10 . Not connected
11. Not connected
12. Not connected
13. Not connected
14. Not connected
15. Not connected
16. Not connected
17. Not connected
18. Not connected
19. Not connected
20. Neutral position sensor

cardiagn.com

21. Cruise Control set+ switch
22. Cruise Control resume switch
23. Not connected
24. Reversing light switch
25. Clutch switch
26. Cruise Control set switch
27. Braking system vacuum sensor
28. Radio voltage stabiliser feedback
29. Not connected
30. Not connected
31. Not connected
32. High speed fan control
33. Low speed fan control
34. Not connected
35. A/C relay control
36. Accelerator pedal potentiometer 1
37. Accelerator pedal potentiometer 2
38. A/C pressure sensor, neutral position sensor
39. Not connected
40. Not connected
41. Not connected
42. A/C pressure sensor, neutral position sensor
43. Not connected
44. Cruise Control ON/OFF switch
45. Not connected
46. Not connected
47. Not connected
48. Not connected
49. Not connected
50. Direct supply from battery
51. Linear oxygen sensor heater control
52. Main relay control
53. Accelerator pedal potentiometer 2 reference earth
54. Not connected
55. Accelerator pedal potentiometer 1 reference earth
56. Not connected
57. Not connected
58. Not connected
59. Not connected
60. Not connected
61. Accelerator pedal potentiometer 1
62. Brake pedal switch
63. (+) oxygen sensor ON-OFF
64. Linear oxygen sensor trigger
65. Linear oxygen sensor pumping current
66. Not connected
67. Not connected
68. Not connected
69. CAN 1 high
70. CAN 1 low
71. Not connected
72. Starter control
73. Not connected
74. Not connected
75. Not connected
76. Not connected
77. Oxygen sensor heater ON/OFF control
78. Not connected
79. Not connected
80. Not connected
81. Not connected
82. AC pressure sensor
83. Accelerator pedal potentiometer 2
84. Clutch switch (upper stroke)
85. (-) oxygen sensor ON-OFF
86. Linear oxygen sensor output voltage
87. Linear oxygen sensor reference earth
88. Key request
89. Not connected
90. Not connected
91. Not connected
92. Not connected
93. Not connected
94. Fuel pump control

cardiagn.com

"DNA" DYNAMIC CONTROL OF THE VEHICLE

The Alfa DNA system is a device that acts on the vehicle dynamic control systems and is electrically connected to the Body Computer which notifies the nodes involved of the configuration selected.

Engine management control unit

The accelerator pedal is more or less reactive depending on the Alfa DNA system mode. There is an OVERBOOST effect in Dynamic mode.

Instrument panel

The display shows specific information consistent with the mode selected (e.g.: turbo pressure in dynamic mode).

VDC system

The VDC has three settings for each of the three Alfa DNA system positions (e.g.: in dynamic mode the intervention of the VDC is delayed to allow a more active driving style; in all weather mode braking on surfaces with differentiated grip is improved).

Steering

The steering is more or less stiff depending on the mode selected via the "DNA".

Suspension

Gearbox

Where an automatic transmission is fitted, the gear change takes place at a higher engine speed and the Alfa DNA system also reduces the change time.

Operation

The "manettino" dial is a lever which always remains in the middle position. The configuration selected is recognized by the corresponding LED being lit up or the display in the control panel as illustrated below:

Dynamic display

All weather display

cardiagn.com

Normal display
No symbol is shown in the display for this configuration.
To turn the dynamic mode on, move the lever forwards (corresponding to the letter "D"), stay in this position for half a second until the LED lights up or the words "Dynamic on" appear in the control panel.

When the lever is released it will return to its middle position.
To return to Normal mode from Dynamic mode, repeat the same movement for the lever with the same time scales, but in this case the LED for the Normal position will light up and the control panel will show "Normal on" in the display.

To engage the All weather mode, move the lever backwards (to position A), stay in this position for half a second or until the LED lights up and the control panel shows "All weather on" in the display.

The procedure to return to Normal is the same as the one described for Dynamic.
It is not possible to go directly from Dynamic mode to All Weather mode and viceversa. It is always necessary to return to the Normal mode.
If Dynamic mode was on before a key-off, then the configuration will automatically return to Normal mode at the next key-on.
If, on the other hand, the All weather or Normal mode was engaged, the configuration will be maintained at the next key-on.
The Dynamic mode can only be engaged at speeds below 110 km/h and remains on beyond this speed.
If there is a DNA system or selector failure, no configuration can be engaged and the message "mode not available" will be shown in the panel display.

INJECTORS

Characteristics

The twin jet injectors (with the spray inclined in relation to the injector axis) are specially designed for engines with 4 valves per cylinder and make it possible to direct the jets towards the two inlet valves.
The injectors are top-feed type, i.e. fuel is fed in through the top of the casing, which also houses the electrical winding connected to the connector terminals.
When the current passes through the winding, the magnetic field produced attracts the shutter causing the opening of the injector and the flow of fuel.
Two O-rings provide the seal, one on the fuel manifold side and one on the intake manifold side.
A reference mark determines the angular position of the injector and the correct direction of the jets in relation to the intake valves.

cardiagn.com

Inspection of the jets will show different openings, in total 10 divided into 2 sections of 5, in practice there are 10 small diffusion cones that together make 2 diffusion cones directed to the 2 intake valves.

Electrical specifications

The injector resistance can be measured by disconnecting the connector and connecting an ohmmeter as illustrated.
Resistance value: 12 Ω.

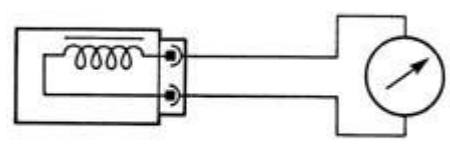

Electrical connections

Pin 1, +12V Power supply
Pin 2, Control to earth from control unit

Operation

The jets of fuel come out of the injector at a differential pressure of 3.0 bar and are instantly atomised forming two cones.
The injector operating logic is the sequential, phased type, in other words the four injectors are controlled in accordance with the engine cylinder inlet sequence whilst the supply can already commence for any cylinder in the expansion stroke until the inlet stroke has already started.
The amount of fuel injected depends on the shutter opening time which, in turn, depends on the solenoid supply time.
This time, known as the injection time, is calculated by the control unit in the different engine operating conditions.

FUEL MANIFOLD

The fuel manifold, which distributes the fuel to the injectors, incorporates the seats for the injectors and the differential pressure regulator.
The fuel supply and return are carried out through rapid attachment.
The pressure regulator ensures the right fuel supply pressure depending on the air chamber pressure.

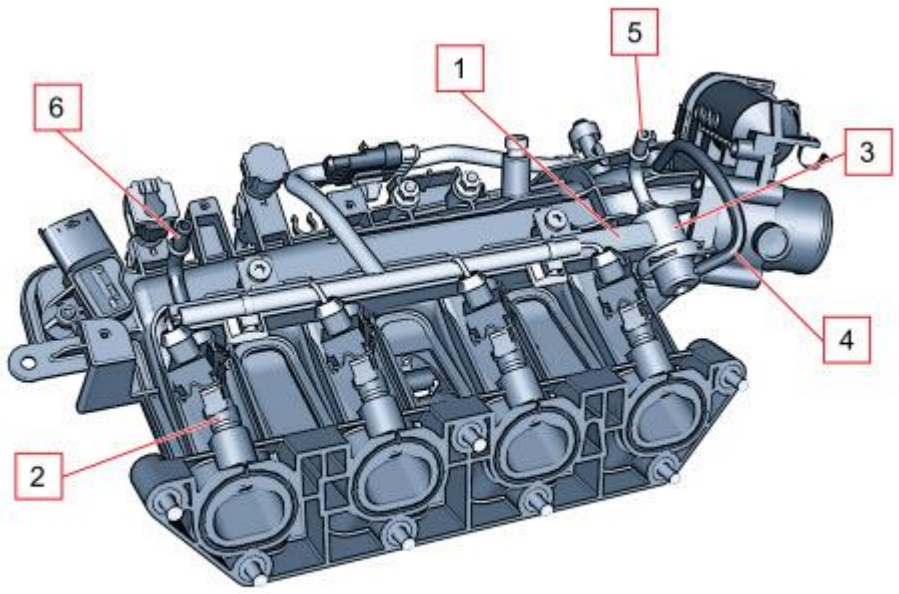

cardiagn.com

1, Fuel manifold
2, Injector
3, Differential pressure regulator
4, Air pipe
5, Connector for fuel return rapid connector to the tank
6, Connector for fuel supply rapid connector

ENGINE COOLANT TEMPERATURE SENSOR

Characteristics

It is fitted on the thermostat and measures the temperature of the coolant by means of an NTC thermistor with a negative resistance coefficient.
The variation in the resistance depending on the temperature is illustrated in the table below.

°C	Ω
-20	15971
-10	9620
0	5975
10	3816
20	2502
25	2044
30	1679
40	1152
50	807
60	576
70	418
80	309
90	231
100	176

cardiagn.com

Electrical specifications

- Power supply: 5V
- Maximum current: 2.5 mA
- Maximum power at 25 °C: 15 mV

Pin 1, Signal
Pin 2, Earth

Operation

The reference voltage for the NTC element for the injection system is 5 Volt, because the input circuit in the control unit has been designed as a tension divider, this voltage is divided between a resistance in the control unit and the sensor NTC resistance.
As a result, the control unit is capable of evaluating the sensor resistance variations by means of the changes in voltage and thereby obtaining temperature information.

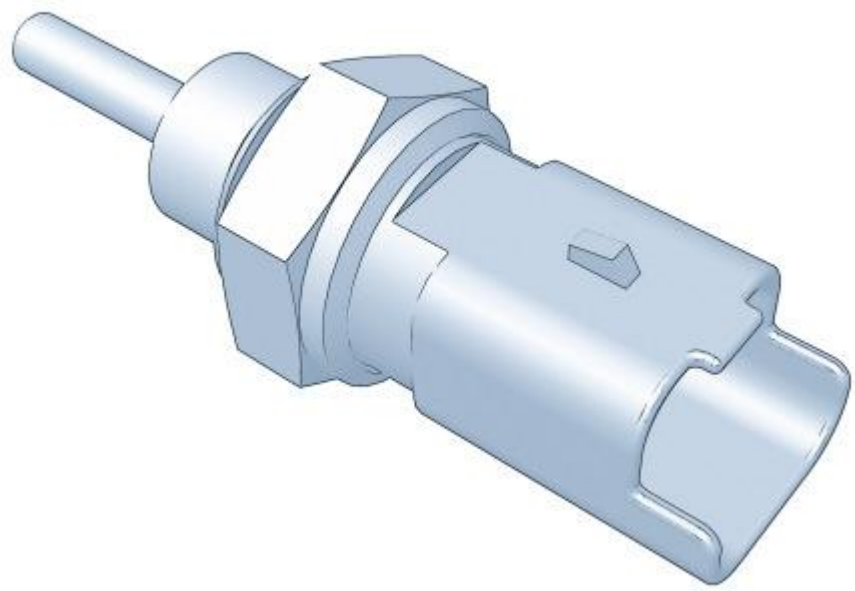

Composition

The composition of the sensor is illustrated in the diagram below

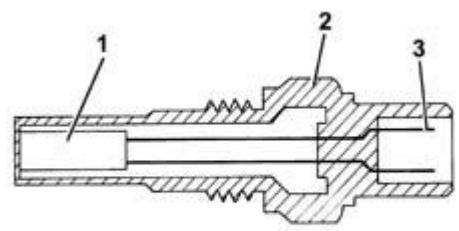

cardiagn.com

1, NTC resistance
2, Sensor casing
3, Electrical connector

KNOCK SENSOR

Characteristics

The detonation sensor is the piezoelectric type and is fitted on the crankcase to detect the intensity of the vibrations caused by detonation in the combustion chambers.
The phenomenon produces a mechanical repercussion on a piezoelectric crystal that sends a signal to the control unit and, on the basis of this signal, the control unit reduces the ignition advance until the phenomenon disappears. Later on, the advance is gradually restored to the basic value.
Electrical specifications: resistance 4.9 MΩ ± 20%.

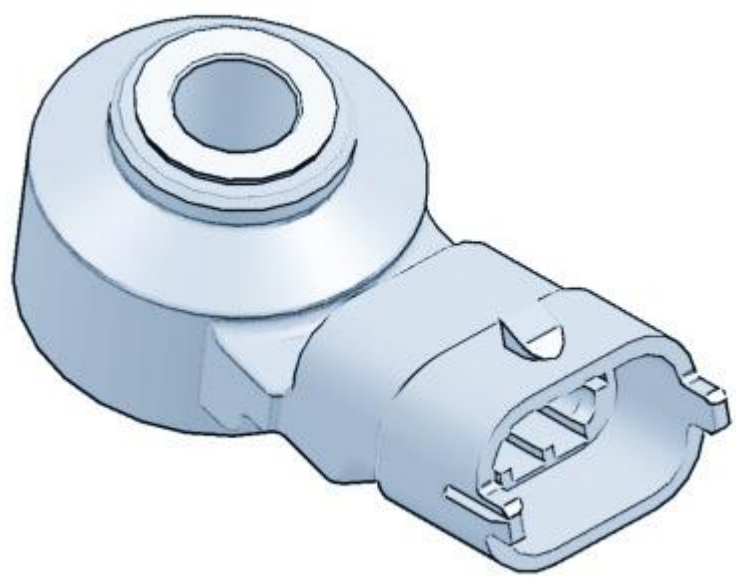

Electrical connections

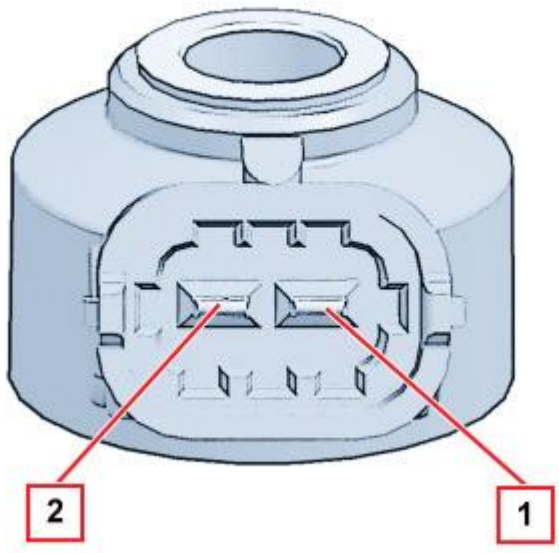

Pin 1, Signal
Pin 2, Earth

Operation

The molecules of a quartz crystal are characterised by electrical polarisation.
In rest conditions (A) the molecules are not arranged in a particular way.
When the crystal is subjected to pressure or to an impact (B), the higher the pressure, the more marked their arrangement.
This arrangement produces a voltage at the ends of the crystal

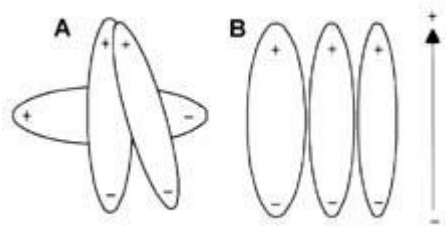

cardiagn.com

A. Rest position
B. Position under pressure

RPM SENSOR - Version without Start&Stop

Characteristics

It is fitted on the crankcase front cover facing the phonic wheel built into the crankshaft pulley.
It is the inductive type, in other words it operates through the variation in the magnetic field produced when the flywheel teeth (60 – 2) pass by.

The injection control unit uses the RPM signal to:

- determining the rotation speed
- determining the angular position of the crankshaft.

Electrical specifications: resistance 1134 - 1386 Ω at 20°C.
The recommended distance (gap), between the end of the sensor and flywheel, to produce correct signals, should be between 0.5 and 1.5 mm.

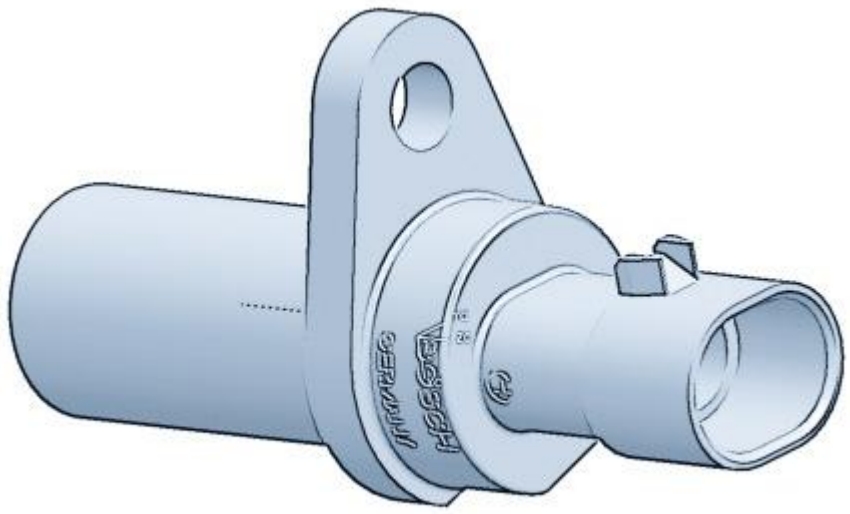

Composition

The sensor consists of a tubular casing (1) containing a permanent magnet (3) and an electrical winding (2).

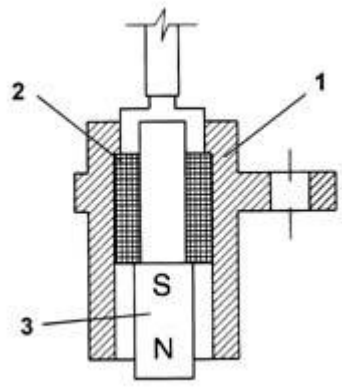

Operation

As a result of the passage of the wheel's teeth, the magnetic flow created by the magnet (3) fluctuates because of the variation in the gap.
These fluctuations set up an electromotive force in winding (2) and a voltage is set up at the terminals that alternates between positive (tooth facing sensor) and negative (gap facing sensor).

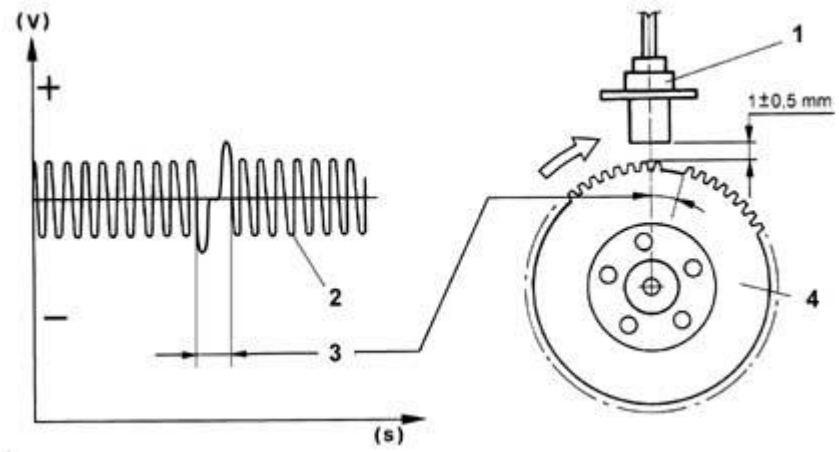

1, Sensor
2, Output signal
3, Signal corresponding to two missing teeth
4, Crankshaft pulley with phonic wheel
All things being equal, the peak sensor output voltage value depends on the distance between the sensor and the tooth (gap).
There are sixty teeth on the toothed wheel, two which have been removed to create a reference: the passage of the wheel therefore corresponds to an angle of 6° (360° divided by the 60 teeth).
The synchronism point is recognised at the end of the first tooth after the space for the two missing teeth: when it passes under the sensor, the pair of engine pistons 1-4 is at 114° before TDC.

Electrical connections

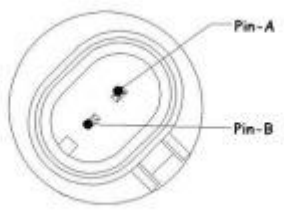

Pin A, Signal +
Pin B, Signal -

RPM SENSOR - Version with Start&Stop

Characteristics

It is fitted on the crankcase front cover facing the toothed wheel built into the crankshaft pulley.
The rpm sensor is a Hall effect sensor.
It is used in petrol engines with Start&Stop for a faster engine restart, especially in critical conditions.
The rpm sensor is used by the Engine Management Node to:
- determining the rotational speed of the crankshaft
- determine the angular position of the crankshaft.

cardiagn.com

A current-carrying semiconductor layer immersed in a normal magnetic field (force lines at right angles to current direction) generates a potential difference known as a Hall voltage at its terminals.
If current intensity remains constant, the generated voltage depends on magnetic field intensity alone. Periodic changes in magnetic field intensity are sufficient to generate a modulated electrical signal with frequency proportional to the speed of magnetic field change.
The distance between the sensor and the toothed wheel on the crankshaft is altered to produce this change; the teeth of the toothed wheel are used in the process.
The rotation of the pulley alters the distance and produces a high voltage signal corresponding to each tooth.
The sensor has an electronic circuit that squares the Hall effect sensor signal; to correctly measure the signal the connection with the control unit providing the correct power supply must be maintained.
The output signal has a pattern similar to a square wave.

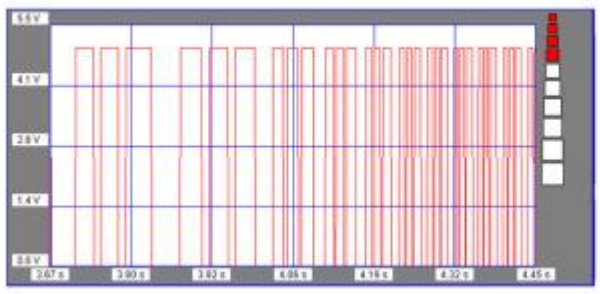

cardiagn.com

Electrical connections

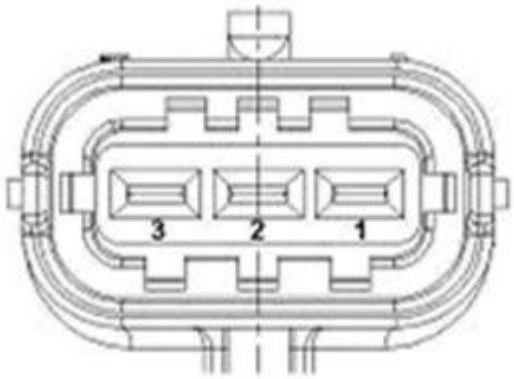

Pin 1, Earth
Pin 2, signal (0<Vout<4.5 V)
Pin 3, 5 V power supply

TIMING SENSOR

Characteristics

The Hall effect type sensor is used by the injection control unit in conjunction with the rpm and TDC signal to recognize the position of the cylinders and determine the injection and ignition point.
The timing sensor is located on the camshaft housing in the dedicated housing and faces the camshaft.

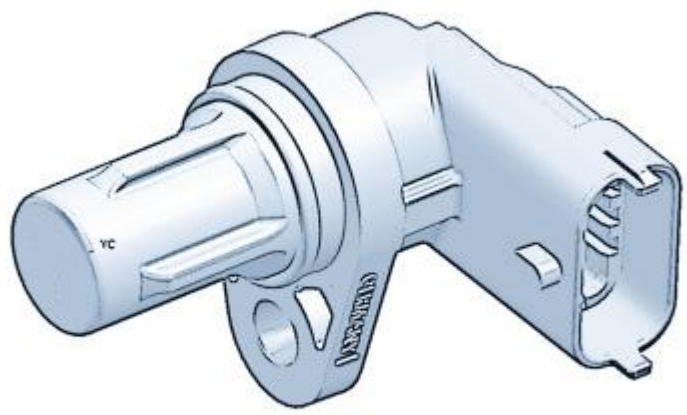

A current-carrying semiconductor layer immersed in a normal magnetic field (force lines at right angles to current direction) generates a potential difference known as a Hall voltage at its terminals.
If current intensity remains constant, the generated voltage depends on magnetic field intensity alone.Periodic changes in magnetic field intensity are sufficient to generate a modulated electrical signal with frequency proportional to the speed of magnetic field change.
The distance between the sensor and the flywheel on the inlet cam axis is altered to produce this change and the reference mark for the timing is used in the process.

Electrical specifications

Supply voltage: 5V +/- 10%
Maximum voltage: 16V
The sensor receives a direct power supply from the injection control unit.

Electrical connections

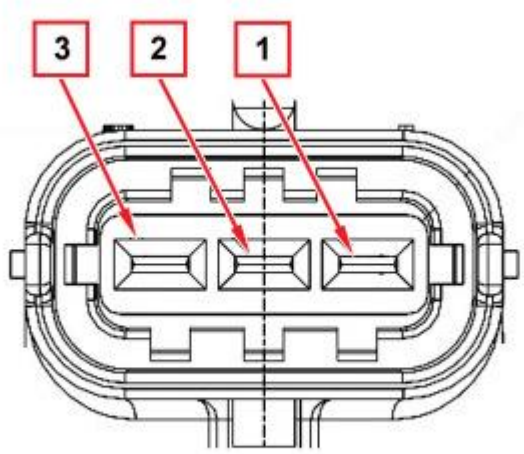

cardiagn.com

Pin 1, Earth
Pin 2, Signal
Pin 3, 5V power supply

ACCELERATOR PEDAL POTENTIOMETER

Characteristics

The accelerator pedal is equipped with two built-in potentiometers:

- one main one
- one safety one.

The injection control unit implements the following recovery strategies under the following conditions:

- if one of the two potentiometers fails, the control unit uses the remaining track without restricting the torque and checks the plausibility with the brake switch.
- if both potentiometers fail completely, throttle opening is prevented.

Operation

The sensor consists of a casing, fastened to the accelerator pedal support which contains a shaft connected to the twin track potentiometer in an axial position.
A coil spring on the shaft guarantees the correct resistance to pressure whilst a second spring ensures the return on release.

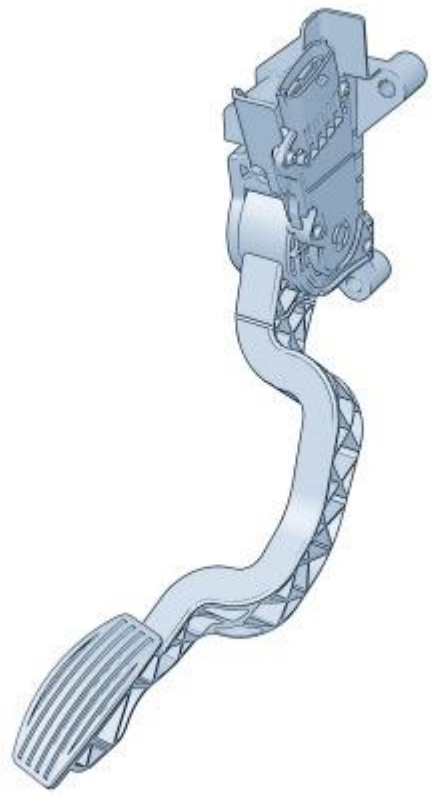

Electrical connections

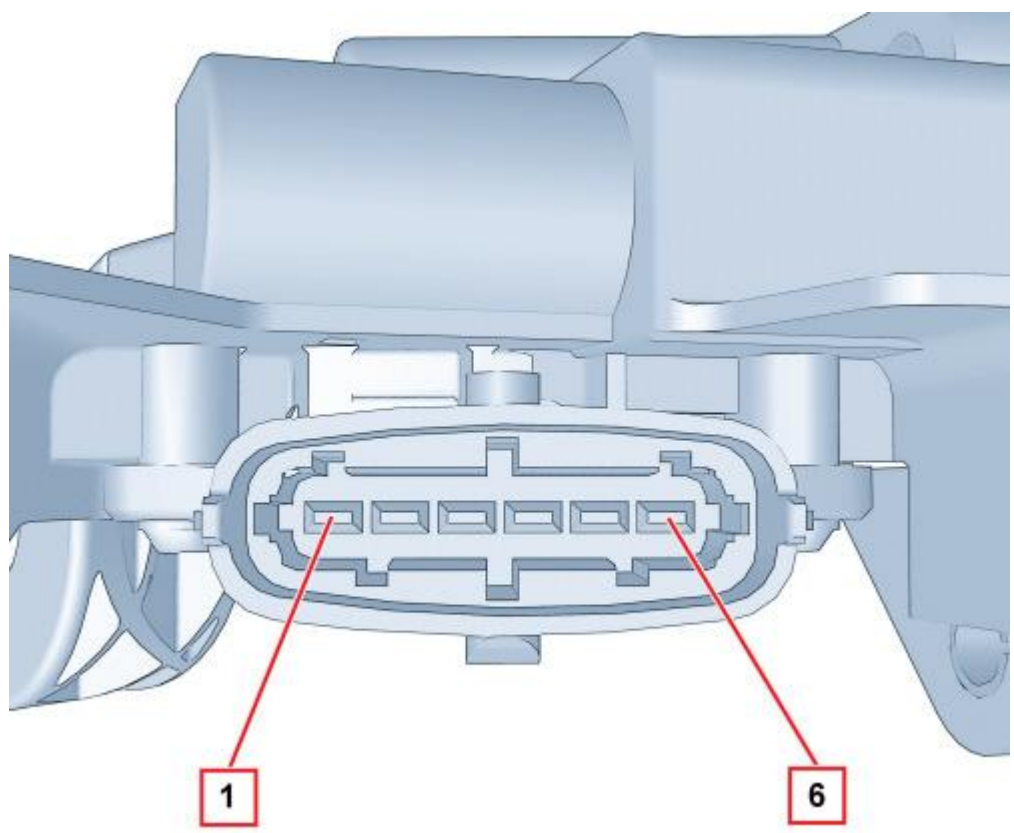

cardiagn.com

Pin 1, 5V power supply potentiometer 2
Pin 2, 5V power supply potentiometer 1
Pin 3, Potentiometer earth 1
Pin 4, Potentiometer signal 1
Pin 5, Potentiometer earth 2
Pin 6, Potentiometer signal 2

THROTTLE BODY

Characteristics

It is fitted on the intake chamber and regulates the quantity of air drawn in by the engine.
Depending on the signal coming from the accelerator pedal potentiometer, the injection control unit controls the opening of the throttle by means of a direct current motor incorporated in the throttle casing.
The opening of the throttle takes place between 0° and 80° thereby including the adjustment of the idle speed.
The throttle body is equipped with two built-in potentiometers, each of which controls the other.

If there is a failure with the two potentiometers or a supply failure, depending on the position of the accelerator pedal, the control unit reduces the engine torque:

- fully depressed, it cuts off the supply to one or more pistons until a maximum speed of 2500 rpm is reached
- in the intermediate positions, it cuts off the supply to one or more pistons until a speed of below 1200 rpm is reached

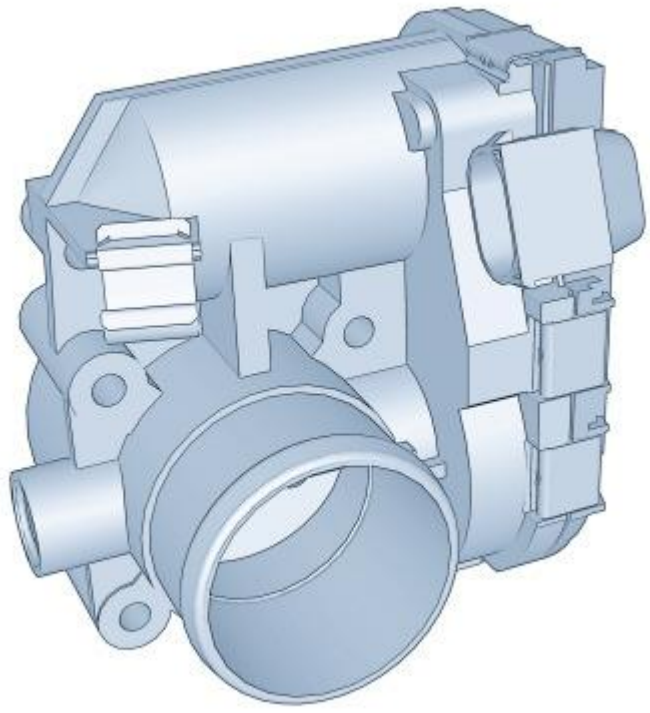

Operation

The injection control unit operates the motorised throttle according to accelerator pedal requests; a potentiometer connected to it sends a voltage signal to the control unit where it is processed and opening laws are produced.

Electrical connections

cardiagn.com

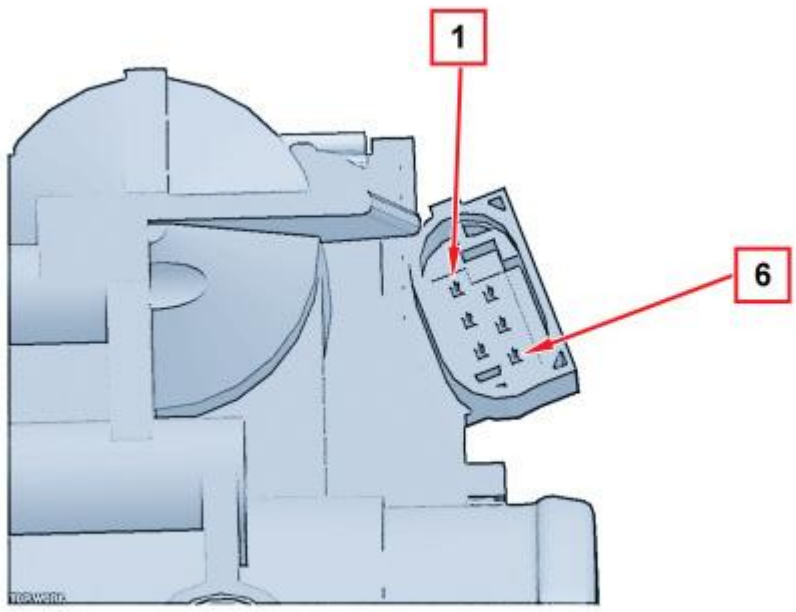

Pin 1, Throttle opening motor earth
Pin 2, TPS1 and TPS2 potentiometer earth
Pin 3, TPS1 and TPS2 potentiometer 5V positive
Pin 4, Throttle opening motor positive
Pin 5, TPS2 potentiometer signal
Pin 6, TPS1 potentiometer signal

INTAKE AIR TEMPERATURE AND PRESSURE SENSOR

Characteristics

The intake air temperature and pressure sensor is an integrated component that has the function of measuring the pressure and the temperature of the air inside the intake manifold.
Both pieces of information are needed by the control unit to define the quantity of air drawn in by the engine; this information is then used to calculate the injection time and the ignition point.
The sensor is fitted to the air chamber.

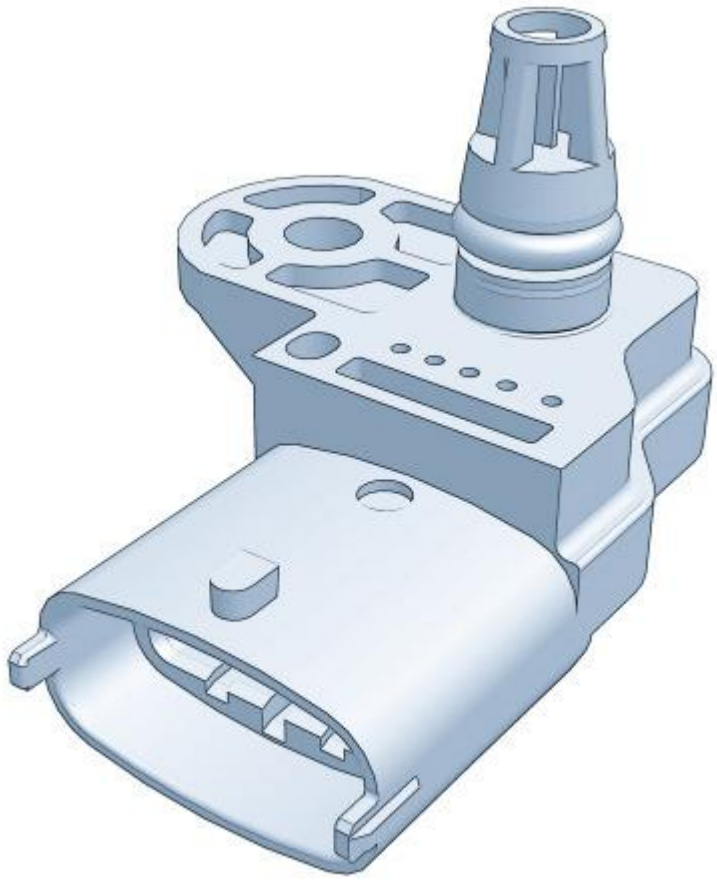

Composition

The air temperature sensor is an NTC thermistor (Negative Temperature Coefficient). The resistance offered by the sensor decreases as the temperature increases.
The control unit intake circuit creates a division of the 5 V reference voltage between the sensor resistance and a fixed reference value, thereby producing a voltage that is proportional to the resistance and consequently to the temperature.
The sensitive element of the pressure sensor consists of a Wheatstone bridge etched on a ceramic diaphragm. On one side of the diaphragm the absolute reference vacuum is present, whilst the vacuum present in the intake manifold acts on the other side.
Before being sent to the engine management control unit, the (piezoresistive) signal from the distortion suffered by the diaphragm is amplified by an electronic circuit contained in the same support which houses the ceramic diaphragm.
When the engine is switched off, the diaphragm bends according to the value of the atmospheric pressure so that when the key is inserted exact altitude information is provided.
When the engine is running, the effect of the vacuum produces a mechanical effect on the sensor diaphragm which bends causing a variation in the resistance value.
Since the supply is kept strictly constant (5V) by the control unit, varying the value of the resistances alters the output voltage.

Electrical specifications

The electrical properties of the sensor are illustrated in the diagram below.

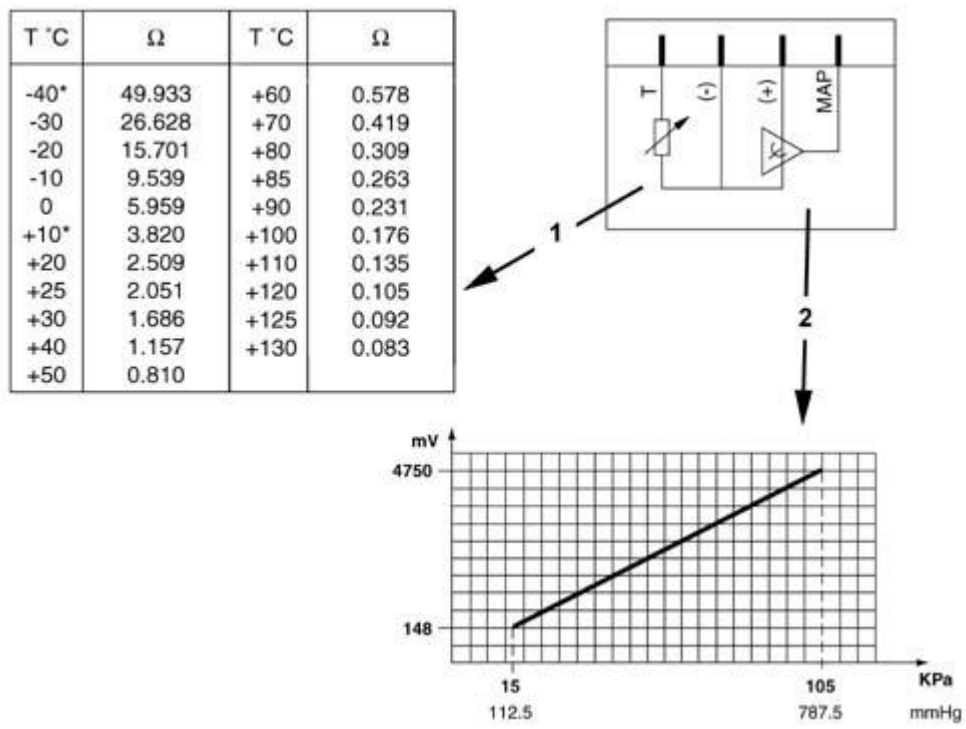

T °C	Ω	T °C	Ω
-40*	49.933	+60	0.578
-30	26.628	+70	0.419
-20	15.701	+80	0.309
-10	9.539	+85	0.263
0	5.959	+90	0.231
+10*	3.820	+100	0.176
+20	2.509	+110	0.135
+25	2.051	+120	0.105
+30	1.686	+125	0.092
+40	1.157	+130	0.083
+50	0.810		

1, Air temperature sensor
2, Intake air pressure sensor

Electrical connections

Pin 1, Earth
Pin 2, Air temperature sensor signal
Pin 3, 5V power supply
Pin 4, Air pressure signal in intake manifolds

cardiagn.com

IGNITION COILS

Composition

The coils are connected directly to the spark plugs and are the "PLUG TOP" type comprising a magnetic internal core made up of a silicon steel pack arranged along the axis of the coil and secondary and primary coils which contain the electrical windings, coaxial to the magnetic core.
The windings are housed in a pressed plastic container which has the low voltage connector and the fastening bush on the cylinder head and they are insulated through immersion in an epoxide resin which has excellent dielectric, mechanical and also thermal properties, as the coils are exposed to high temperatures. The proximity of the primary winding to the magnetic core reduces magnetic flux losses thereby ensuring optimum coupling at the secondary winding.

cardiagn.com

The head of the coil is connected to the spark plug by means of a silicone rubber cap which contains a spring that transfers the secondary winding high tension to the spark plug terminal.
The coils are directly controlled by the injection control unit in sequential timed mode.
The control unit earths the primary coil power supply circuit thereby creating a strong magnetic field on the primary coil. When the primary circuit is open a high voltage is produced at the secondary circuit through induction.
The high tension is discharged to the engine earth via the spark plug electrodes producing the spark that ignites the air/fuel mixture.

Electrical specifications:

Primary circuit resistance: 0.53 Ω ± 5% at 23°C
Secondary circuit resistance: 8100 Ω ± 5% at 23°C.
Rated current at primary winding: 7.3 A
Voltage at secondary winding: 27 kW

Electrical connections

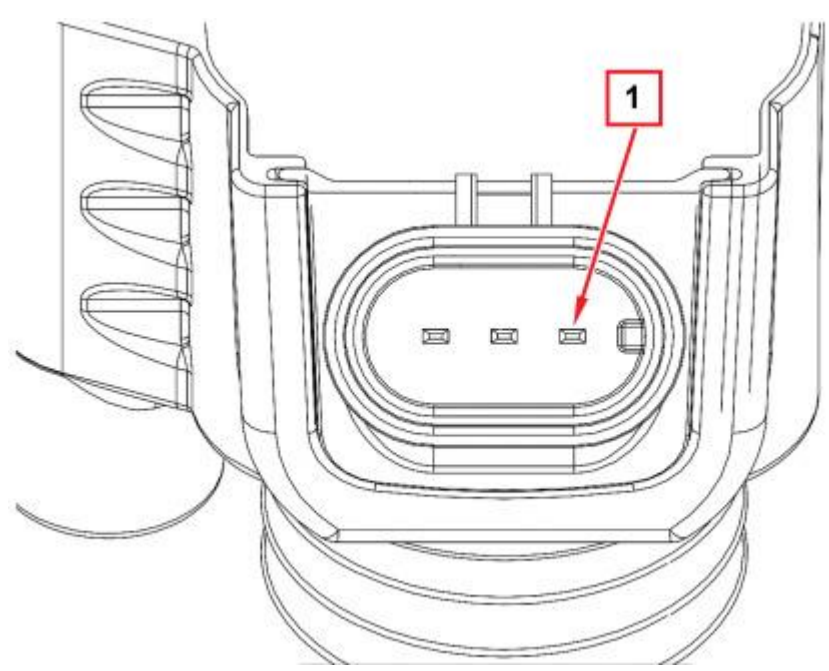

Pin 1, Connection to engine of engine secondary circuit
Pin 2, primary circuit +12 V power supply
Pin 3, Control to earth from primary circuit control unit

Vehicle speed sensor

Characteristics

The vehicle speed signal is produced by the ABS control unit and sent to the engine management control unit via the CAN.

TURBO PRESSURE SENSOR

Characteristics

The turbo pressure sensor comprises a Wheatstone bridge serigraphed on a ceramic diaphragm and is used by the control unit for measuring the supercharging pressure downstream of the intercooler.

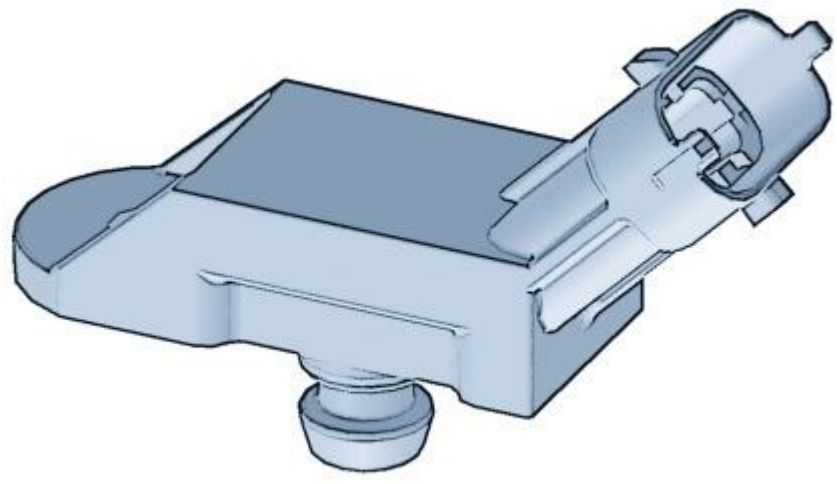

cardiagn.com

The sensor is fitted to the rigid intake pipe located before the motorised throttle valve.
The control unit uses the signal coming from the sensor to manage the supercharging pressure and to calculate the mass of air required for the subsequent fuel metering.

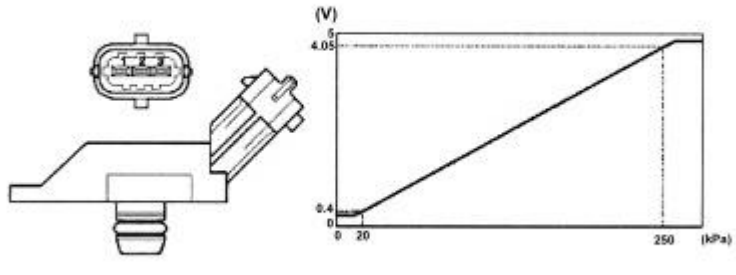

Pin 1, 5V power supply
Pin 2, Earth signal
Pin 3, Turbo pressure signal

DUMP SOLENOID VALVE (SHUT-OFF)

The DUMP solenoid valve is integrated into the turbocharger; therefore
See descriptions 1064A TURBOCHARGER ASSEMBLY

WASTEGATE SOLENOID VALVE

See descriptions 1064A TURBOCHARGER ASSEMBLY

BRAKE PEDAL SWITCH

The dual stage brake pedal switch is used by the Engine Management Node to manage the strategies linked to driveability.
The brake pedal switch (1) is fitted on the pedal unit support as illustrated.

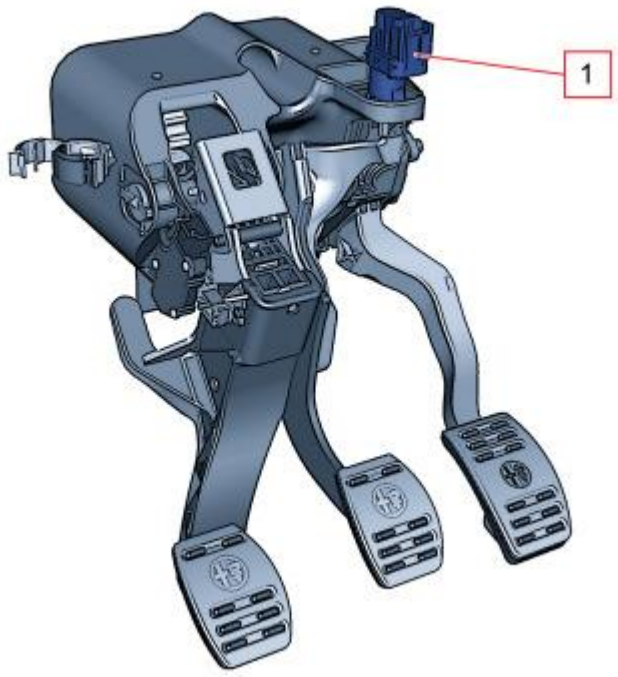

Characteristics and operation

The brake pedal switch contains two switches, one normally open (N.A.) type and one normally closed (N.C.) type.

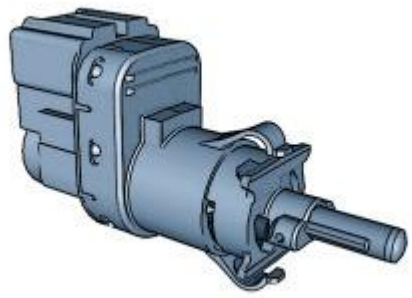

cardiagn.com

During operation, the (N.A.) switch closes, whilst the (N.C.) one opens, therefore the (N.C.) switch is designed to recognize the brake pedal in the rest position, whilst the (N.A.) switch is designed to recognize the brake pedal pressed.
The diagram below illustrates the internal electrical circuit with the brake pedal pressed and the operating diagram.

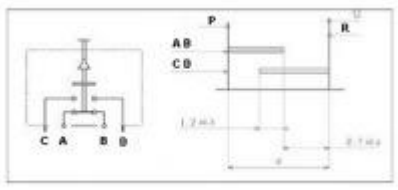

A. Power supply positive
B. Electrical consumer power supply
C - D. Redundant control switch
P. Brake pedal pressed status
R. Brake pedal released status

Both switches are closed in the halfway position, a situation used to check the consistency of the signal for the two switches.

CLUTCH PEDAL SWITCH

The clutch pedal switch is used by the Engine Management Node to manage the strategies linked to driveability.
The clutch pedal switch (1) is fitted on the pedal unit support as illustrated.

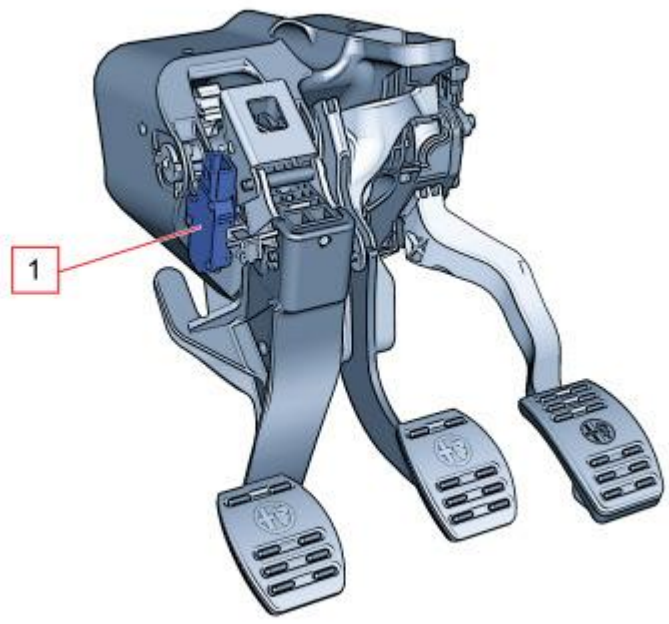

The switch comprises a casing that contains an (N.A.) switch which closes on a sliding track when the pedal is pressed.

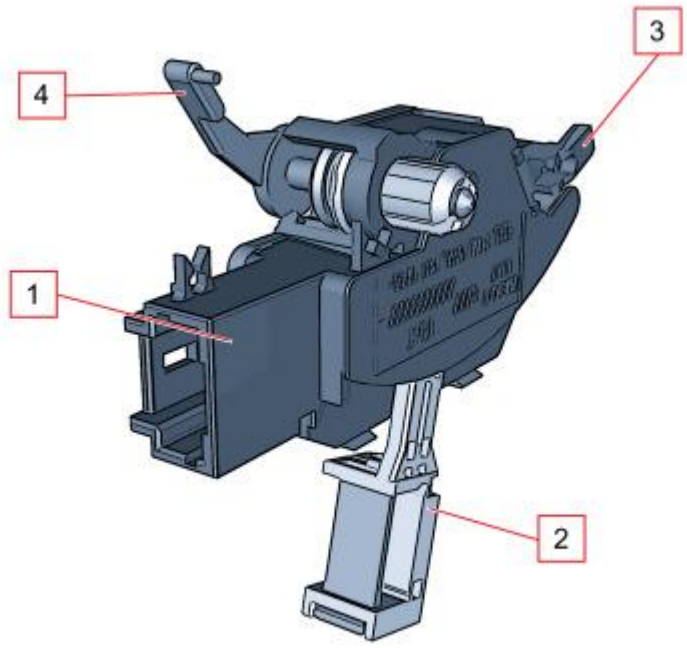

cardiagn.com

1. Connector
2. Outer lever with drive pin lock
3. Fastening tooth
4. Fastening lever

Electrical connections

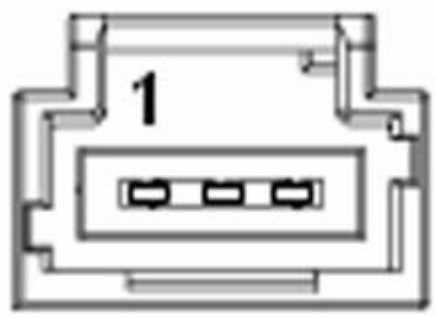

Pin 1. Frame earth connection
Pin 2. Not connected
Pin 3. Switch signal