# SPECIFICATIONS

## FASTENER TIGHTENING SPECIFICATIONS

### Fastener Tightening Specifications

| Application | Specification | |
|---|---|---|
| | Metric | English |
| Inflatable Restraint IP Module Fasteners | 10 N.m | 89 lb in |
| Inflatable Restraint Sensing and Diagnostic Module Fasteners | 14 N.m | 124 lb in |
| Inflatable Restraint Steering Wheel Module Fasteners | 6 N.m | 54 lb in |

# SCHEMATIC AND ROUTING DIAGRAMS

## SIR SCHEMATIC ICONS

### SIR Schematic Icons

| Icon | Icon Definition |
|---|---|
| 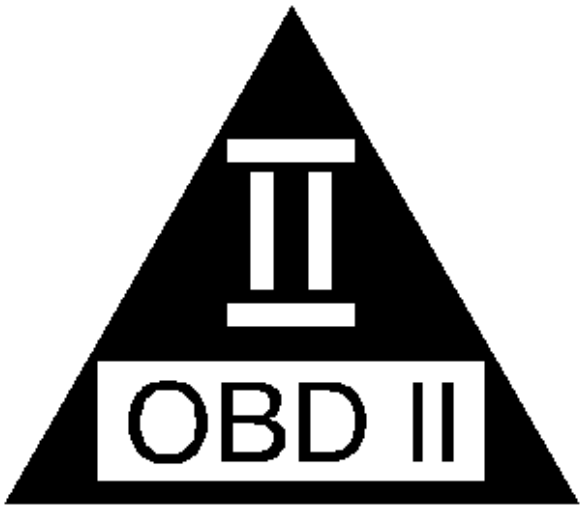  | **CAUTION:**<br>**When performing service on or near the SIR components or the SIR wiring, the SIR system must be disabled. Refer to SIR Disabling and Enabling Zones. Failure to observe the correct procedure could cause deployment of the SIR components, personal injury, or unnecessary SIR system repairs.** |
| | **IMPORTANT:** |

| | |
|---|---|
| | **In order to prevent accidental deployment, the shorting bars close in order to short the connectors when the connectors are separated.** |

**SIR SCHEMATICS**

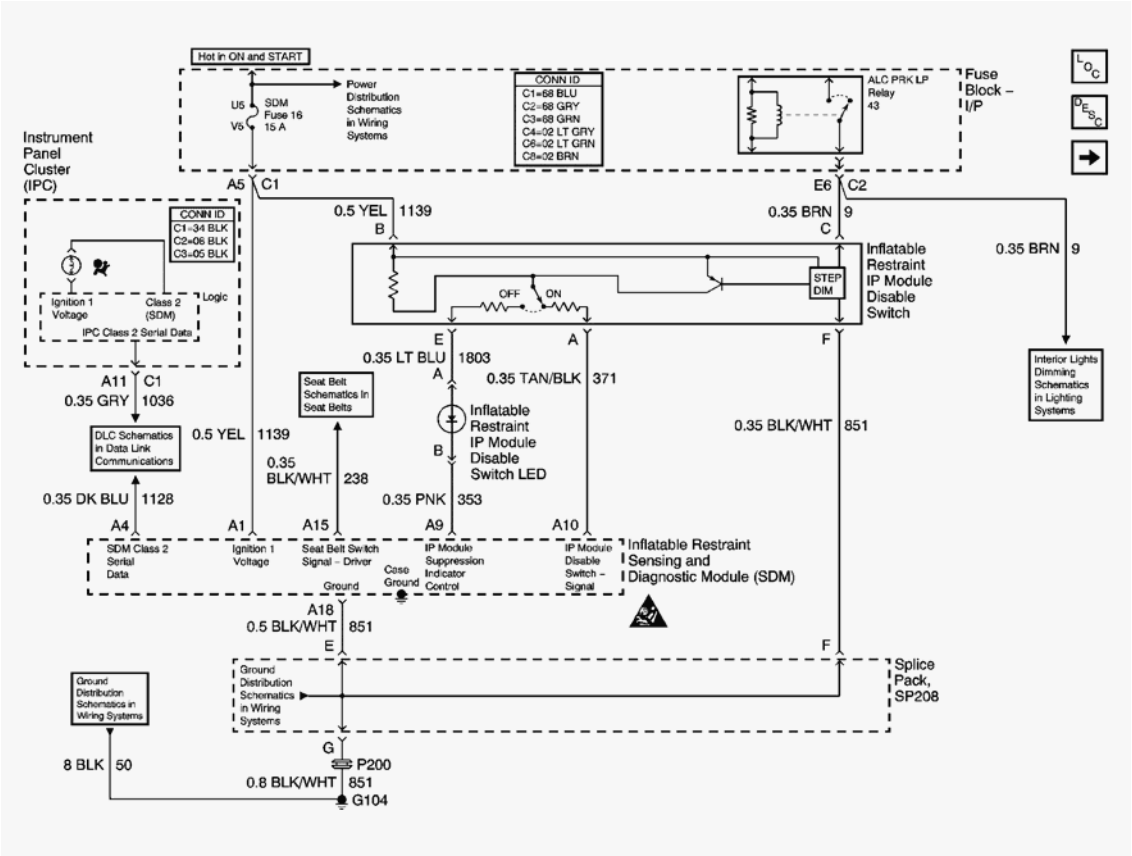


**Fig. 1: Passenger Side Inflatable Restraint Schematics (PSIR) I/P Module Switch**
**Courtesy of GENERAL MOTORS CORP.**

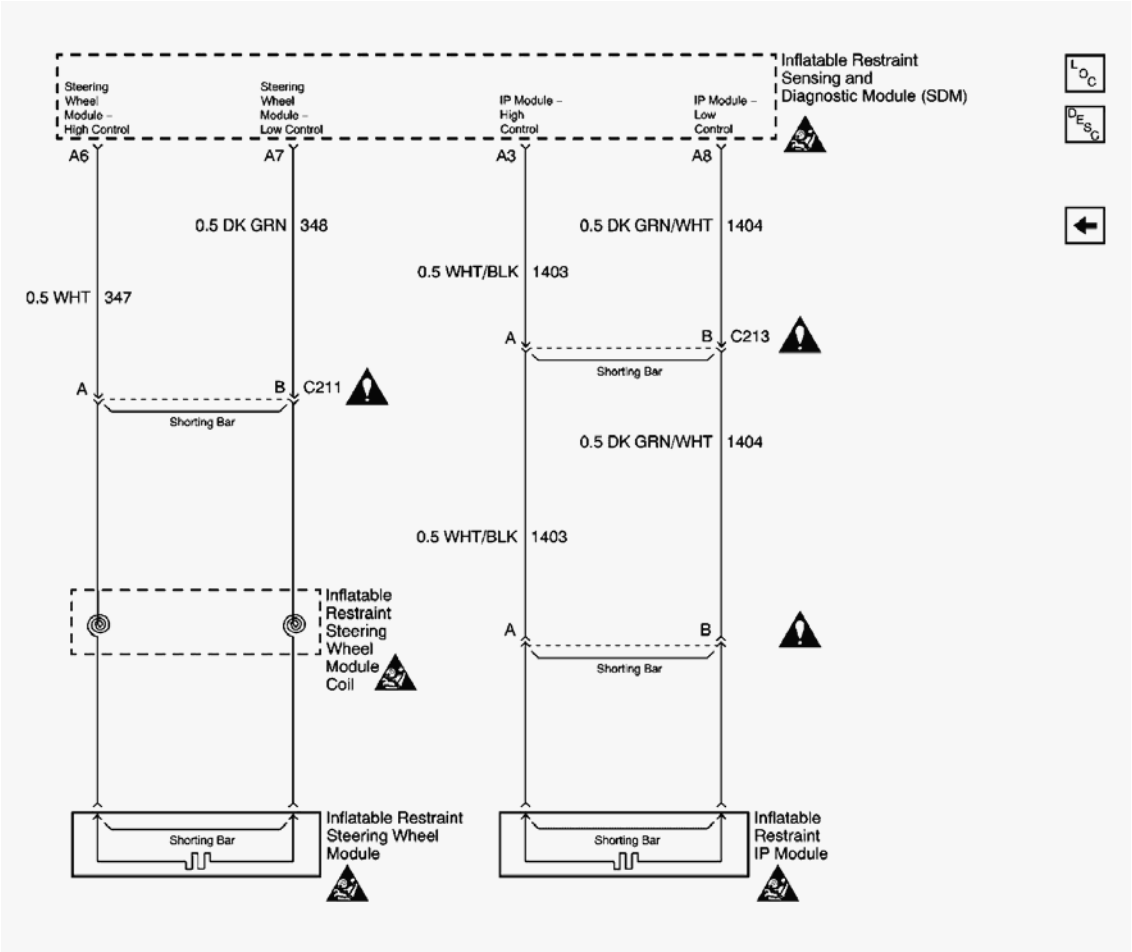


**Fig. 2: Inflatable Restraint Modules Schematics**
**Courtesy of GENERAL MOTORS CORP.**

## COMPONENT LOCATOR

### SIR COMPONENT VIEWS

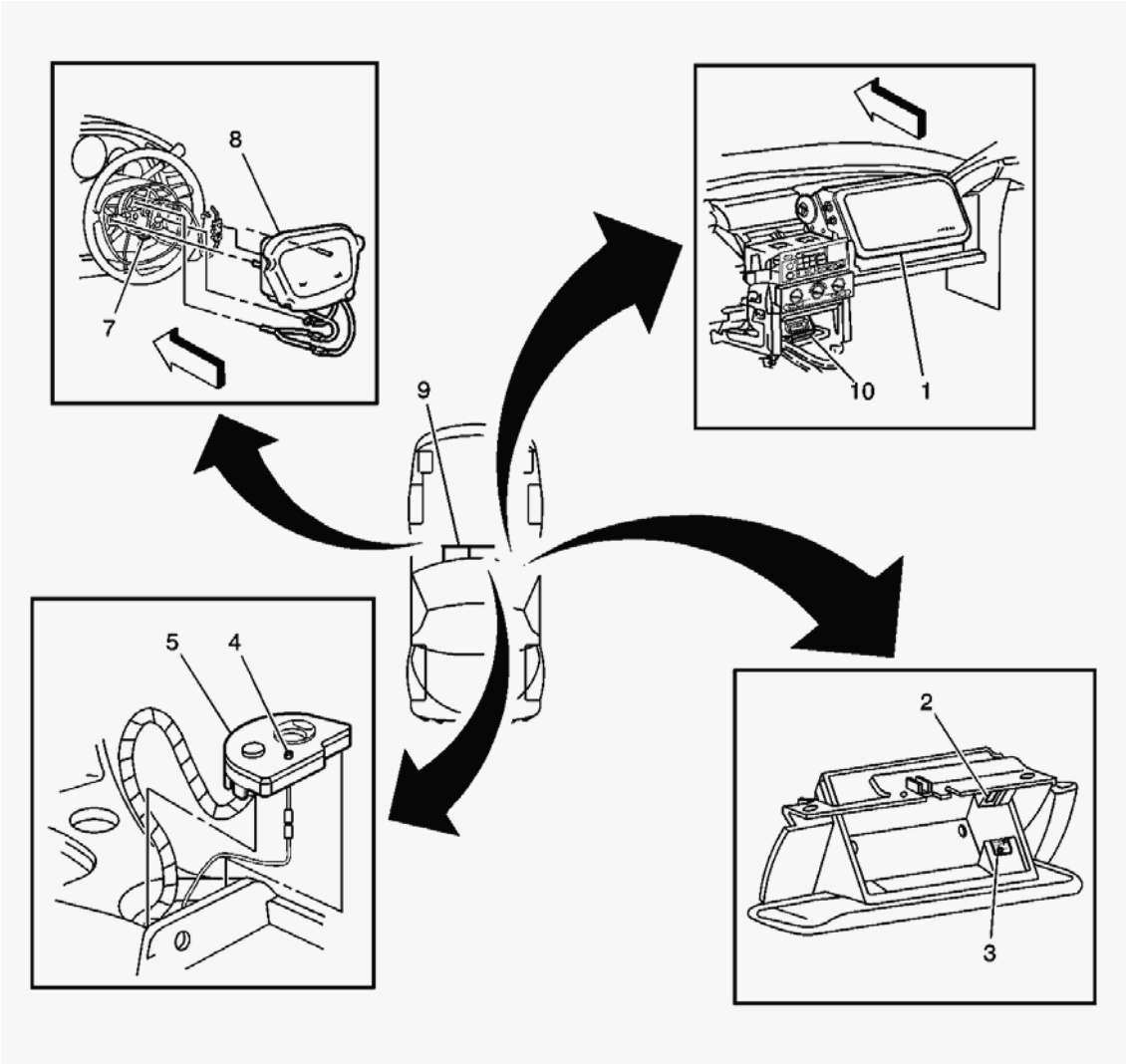


**Fig. 3: SIR Components View**
**Courtesy of GENERAL MOTORS CORP.**

**Callouts For Fig. 3**

| Callout | Component Name |
|---|---|
| 1 | Inflatable Restraint IP Module |
| 2 | IP Compartment Lamp |
| 3 | Inflatable Restraint IP Module Disable Switch |
| 4 | Inflatable Restraint IP Module Disable Switch LED |
| 5 | Traction/Suspension Control Switch |
| 7 | Inflatable Restraint Steering Wheel Module Coil |
| 8 | Inflatable Restraint Steering Wheel Module |
| 9 | SIR Wiring Harness |
| 10 | Inflatable Restraint Sensing and Diagnostic Module (SDM) |

**SIR ZONE IDENTIFICATION VIEWS**

The SIR Zone Identification Views shown below illustrate the approximate location of all SIR components available for the vehicle. This will assist in determining the appropriate SIR Disabling and Enabling Zones for a given service procedure, refer to **SIR Disabling and Enabling Zones** .

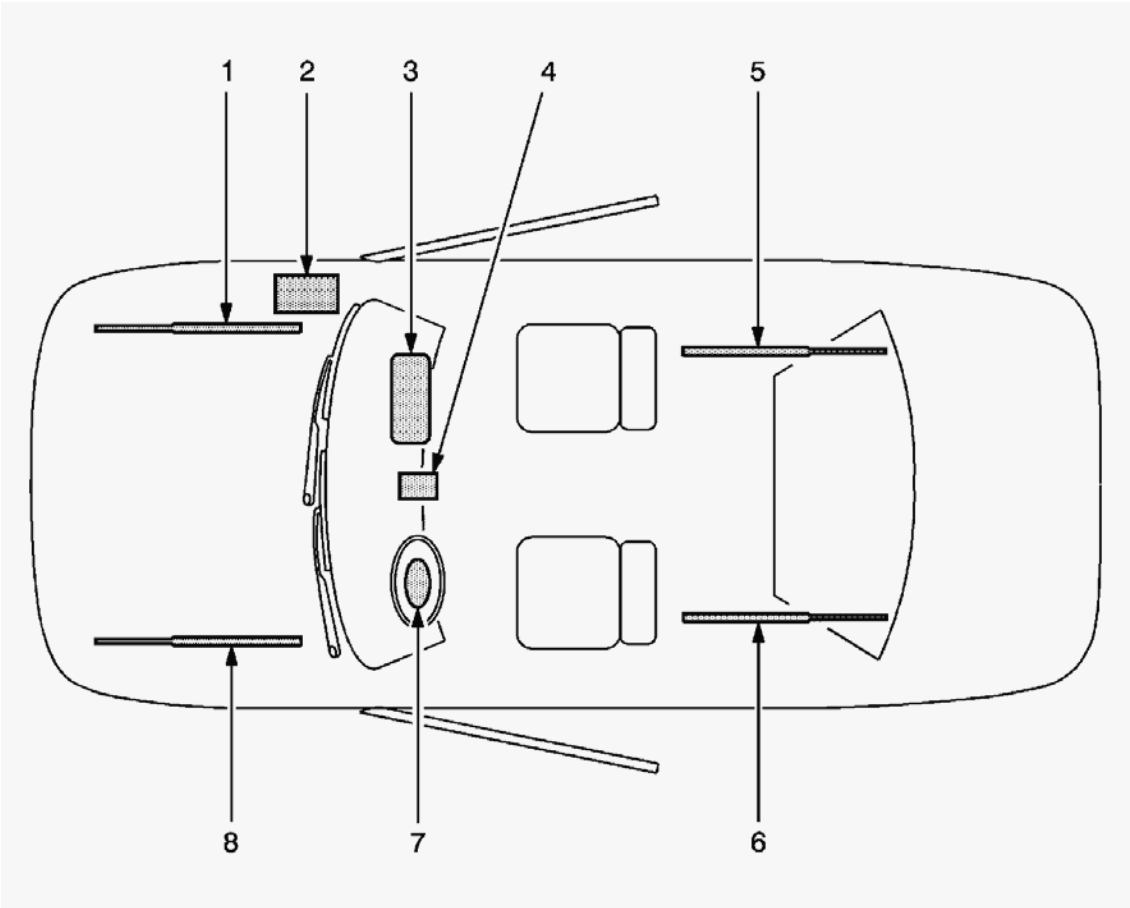


**Fig. 4: Corvette Component View**
**Courtesy of GENERAL MOTORS CORP.**

**Callouts For Fig. 4**

| Callout | Component Name |
|---|---|
| 1 | Front Hood Assist Rod - A gas shock located under the hood on the right side. |
| 2 | Vehicle Battery - Located under the hood on the right side. |
| 3 | I/P Module - Located at the top right under the instrument panel. |
| 4 | Sensing and Diagnostic Module (SDM) - Located in the instrument panel below the radio. |
| 5 | Rear Lift Window Struts - Located under the rear lift window on the right side. |
| 6 | Rear Lift Window Struts - Located under the rear lift window on the left side. |
| 7 | Steering Wheel Module - Located on the steering wheel. |
| 8 | Front Hood Assist Rod - A gas shock located under the hood on the left side. |

## SIR CONNECTOR END VIEWS

### Inflatable Restraint Terminal Identification I/P Module

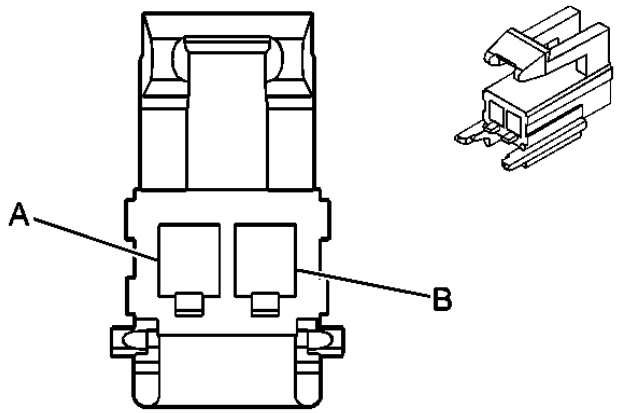


| Connector Part Information | | • 12110505<br>• 2-Way F Metri-Pack 150 Series (YEL) | |
|---|---|---|---|
| **Pin** | **Wire Color** | **Circuit No.** | **Function** |
| A | WHT/BLK | 1403 | I/P Module - High Control |
| B | DK GRN/WHT | 1404 | I/P Module - Low Control |

### Inflatable Restraint Sensing And Diagnostic Module Terminal Identification (SDM)

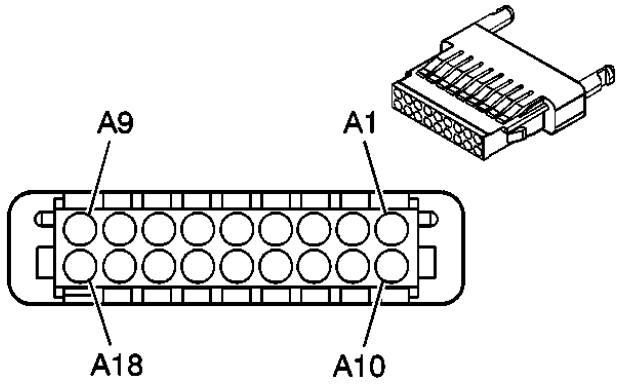


| Connector Part Information | | • 15357037<br>• 18-Way F Micro-Pack 100 Series Sealed (NAT) | |
|---|---|---|---|
| **Pin** | **Wire Color** | **Circuit No.** | **Function** |
| A1 | YEL | 1139 | Ignition 1 Voltage |

| | | | |
|---|---|---|---|
| A2 | - | - | Not Used |
| A3 | WHT/BLK | 1403 | I/P Module - High Control |
| A4 | DK BLU | 1128 | SDM Class 2 Serial Data |
| A5 | - | - | Not Used |
| A6 | WHT | 347 | Steering Wheel Module - High Control |
| A7 | DK GRN | 348 | Steering Wheel Module - Low Control |
| A8 | DK GRN/WHT | 1404 | I/P Module - Low Control |
| A9 | PNK | 353 | I/P Module Suppression Indicator Control |
| A10 | TAN/BLK | 371 | I/P Module Disable Switch - Signal |
| A11-A14 | - | - | Not Used |
| A15 | BLK/WHT | 238 | Seat Belt Switch - Left |
| A16-A17 | - | - | Not Used |
| A18 | BLK/WHT | 851 | Ground |

**Inflatable Restraint I/P Module Disable Switch LED Terminal Identification**

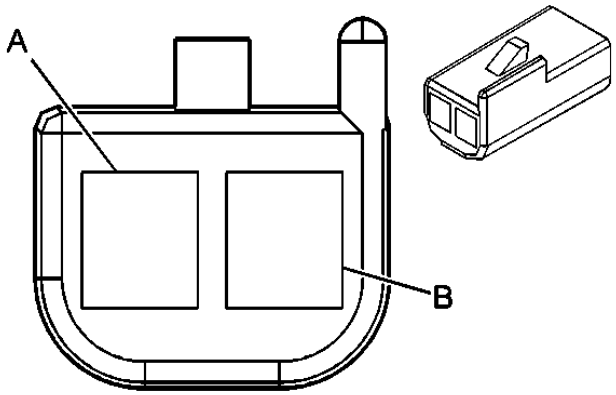


| **Connector Part Information** | | • **12047662**<br>• **2-Way F Metri-Pack 150 Series (BLK)** | |
|---|---|---|---|
| **Pin** | **Wire Color** | **Circuit No.** | **Function** |
| A | LT BLU | 1803 | I/P Module Suppression Indicator - Supply |
| B | PNK | 353 | I/P Module Suppression Indicator Control |

**Inflatable Restraint I/P Module Disable Switch Terminal Identification**

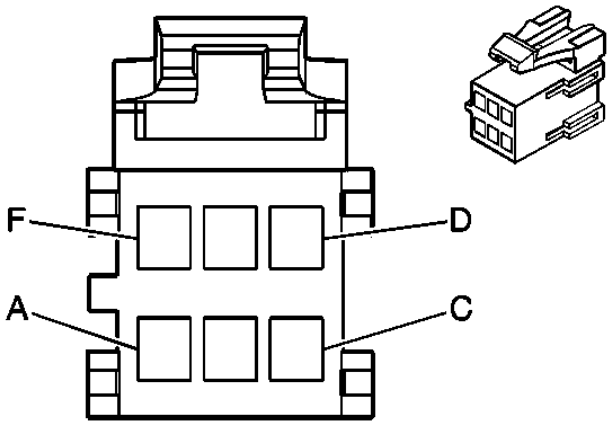


| Connector Part Information | | • 15305286<br>• 6-Way F Metri-Pack 150 Series (YEL) | |
|---|---|---|---|
| **Pin** | **Wire Color** | **Circuit No.** | **Function** |
| A | TAN/BLK | 371 | I/P Module Disable Switch - Signal |
| B | YEL | 1139 | Ignition 1 Voltage |
| C | BRN | 9 | Park Lamp Supply Voltage |
| D | - | - | Not Used |
| E | LT BLU | 1803 | I/P Module Suppression Indicator - Supply |
| F | BLK/WHT | 851 | Ground |

## DIAGNOSTIC INFORMATION AND PROCEDURES

### DIAGNOSTIC STARTING POINT - SIR

Begin the system diagnosis with the **Diagnostic System Check - SIR** . The Diagnostic System Check-SIR will provide the following information:

- The identification of the control module which commands the system.
- The ability of the control modules to communicate through the serial data circuit.
- The identification of any stored diagnostic trouble codes (DTCs) and their status.

The use of the Diagnostic System Check-SIR will identify the correct procedure for diagnosing the system and where the procedure is located.

### DIAGNOSTIC SYSTEM CHECK - SIR

**CAUTION: Refer to SIR Special Tool Caution in Cautions and Notices.**

These diagnostic procedures will help you to find and repair SIR system malfunctions. For best results, use the diagnostic tables, and follow the sequence listed below:

1. Refer to the diagnostic table as directed by the Diagnostic System Check-SIR. The diagnostic tables will help you to diagnose any SIR system malfunction. Bypassing these procedures may result in the following:
   - Extended Diagnostic Time
   - Incorrect Diagnosis
   - Incorrect Parts Replacement
2. Repeat the Diagnostic System Check-SIR after you perform any repair or diagnostic procedures. This will verify that you correctly performed the repair, and will also ensure that no other malfunctions exist.

**Test Description**

The numbers below refer to the step numbers on the diagnostic table.

**2:** This step checks to see if the scan tool is able to communicate with the inflatable restraint sensing and diagnostic module (SDM).

**4:** This step checks to see if there are communication DTCs, or U-codes, present.

**Diagnostic System Check - SIR**

| Step | Action | Yes | No |
|---|---|---|---|
| **Schematic Reference:SIR Schematics** | | | |
| 1 | Install a scan tool.<br>Does the scan tool power up? | Go to **Step 2** | Go to **Scan Tool Does Not Power Up** in Data Link Communications |
| **2** | 1. Turn ON the ignition, with the engine OFF.<br>2. Attempt to establish communication with the SDM.<br><br>Does the scan tool communicate with the SDM? | Go to **Step 3** | Go to **Scan Tool Does Not Communicate with Class 2 Device** in Data Link Communications |
| 3 | Select the SIR display DTCs function on the scan tool.<br>Does the scan tool display any DTCs? | Go to **Step 4** | Go to **Symptoms - SIR** |
| **4** | Does the scan tool display any DTCs which begin with a "U"? | Go to **Scan Tool Does Not Communicate with Class 2 Device** in Data Link Communications | Go to **Step 5** |

| | | | |
|---|---|---|---|
| 5 | Does the scan tool display DTC B1000? | Go to **Diagnostic Trouble Code (DTC) List** in Body Control System | Go to **Diagnostic Trouble Code (DTC) List** |

**SCAN TOOL DATA LIST**

The SIR Scan Tool Data List contains all the restraint system related parameters that are available on the scan tool. The parameters in the list are arranged in alphabetical order. The column, "Data List," indicates the location of the parameter within the scan tool menu selections.

Use the SIR Scan Tool Data List as directed by a diagnostic table or in order to supplement the diagnostic procedures. Begin all of the diagnostic procedures with the Diagnostic System Check-SIR. Use the SIR Scan Tool Data List after the following is determined:

- There is no published Diagnostic Trouble Code (DTC) procedure nor published symptom procedure for the customer concern.
- The DTC or symptom diagnostic procedure indicated by the diagnostic system check does not resolve the customer concern.

The Typical Data Values are obtained from a properly operating vehicle under the conditions specified in the second row of the Scan Tool Data List table. Comparison of the parameter values from the suspect vehicle with the Typical Data Values may reveal the source of the customer concern.

**Scan Tool Data List**

| Scan Tool Parameter | Data List | Units Displayed | Typical Data Value |
|---|---|---|---|
| **Ignition ON/Engine OFF/Driver Seat Belt Buckled/Passenger Seat Belt Buckled** | | | |
| 8-Digit GM Part Number | Module 2 Information | 8-digit number | Varies |
| Calibration ID | Module 1 Information | 4-digit number | Varies |
| Component Serial Number | Module 2 Information | 5-digit number | Varies |
| Driver Frontal Loop | Inputs | Enabled/Disabled | Enabled |
| Driver Side Belt Status | Inputs | Buckled/Unbuckled | Buckled |
| Ignition Voltage | Data | Volts | 12 volts |
| Julian Date of Build | Module 1 Information | 3-digit number | Varies |
| Passenger Frontal Loop | Inputs | Enabled/Disabled | Enabled |
| PROM ID | Module 1 Information | 4-digit number | Varies |
| PSIR Suppression | Inputs | Enabled/Disabled | Disabled |
| Year Module Built | Module 1 Information | 4-digit number | Varies |

**SCAN TOOL DATA DEFINITIONS**

The SIR scan tool data definitions contain a brief description of all SIR related parameters available on the scan tool. The parameters that are available on the scan tool are listed below in alphabetical order.

**8-Digit GM Part Number**

The scan tool displays an 8-digit part number. This number is the GM part number that is stored within the SDM memory.

**PSIR Suppression**

The scan tool displays Enabled/Disabled. The signal from the SDM indicates whether the inflatable restraint IP module switch is in the ON or OFF position.

**Calibration ID**

The scan tool displays a 4-digit number. This calibration ID is the check sum of the SDM read only memory contents.

**Component Serial Number**

The scan tool displays the serial number of the SDM.

**Driver Frontal Loop**

The scan tool displays Enabled/Disabled. The signal from the SDM indicates whether the driver frontal loop is enabled or disabled.

**Driver Side Belt Status**

The scan tool displays Buckled or Unbuckled. The signal from the drivers seat belt switch indicates whether the driver seat is buckled or unbuckled.

**Ignition Voltage**

The scan tool displays 0-20 volts. The Ignition represents the system voltage measured by the SDM at its ignition feed.

**Julian Date of Build**

This number represents the day of the year that the module was built.

**Passenger Frontal Loop**

The scan tool displays Enabled/Disabled. The signal from the SDM indicates whether the passenger frontal loop is enabled or disabled.

**PROM ID**

The scan tool displays a 4-digit number. This number is the programmable read-only memory (PROM) ID.

**Year Module Built**

The scan tool displays what year the module was built.

## DIAGNOSTIC TROUBLE CODE (DTC) LIST

**Diagnostic Trouble Code (DTC) List**

| DTC | Description | Module |
|---|---|---|
| B0016, B0017, or B0018 | **DTC B0016, B0017, or B0018** | SDM |
| B0022, B0024, or B0026 | **DTC B0022, B0024, or B0026** | SDM |
| B0051 | **DTC B0051** | SDM |
| B0053 | **DTC B0053** | SDM |
| B0090 | **DTC B0090** | SDM |
| B0091 | **DTC B0091** | SDM |
| B1001 | **DTC B1001** | SDM |

## DTC B0016, B0017, OR B0018

### Circuit Description

The inflatable restraint I/P module deployment loop consists of the inflatable restraint I/P module and the I/P module high and low circuits. A shorting bar used within the I/P module connector shorts together the I/P module high and low circuits when the connector is disconnected. This helps to prevent unwanted deployment of the inflator module during servicing. During a frontal crash of sufficient force, the inflatable restraint sensing and diagnostic module (SDM) allows current to flow through the deployment loop in order to deploy the I/P module. When the ignition is turned ON, the SDM performs continuous diagnostic tests on the deployment loops to check for proper circuit continuity and for shorts to ground or voltage. If a malfunction is detected, a diagnostic trouble code (DTC) will be stored in memory.

### Conditions for Running the DTC

Ignition 1 voltage is within the normal operating voltage range.

### Conditions for Setting the DTC

- DTC B0016 will set when the I/P module deployment loop resistance is less than 1.3 ohms for 300 milliseconds.
- DTC B0017 will set when one of the following conditions occur:
  - I/P module high circuit is less than 2 volts and the I/P module deployment loop resistance is more than 3.7 ohms for 300 milliseconds.
  - I/P module deployment loop resistance is more than 6 ohms for 300 milliseconds.
- DTC B0018 will set when one of the following conditions occur:
  - I/P module high circuit is more than 6 volts for 300 milliseconds.
  - I/P module high circuit is less than 2 volts and I/P module deployment loop resistance is less than 6

ohms for 300 milliseconds.

**Action Taken When the DTC Sets**

The SDM commands the AIR BAG indicator ON via Class 2 serial data.

**Conditions for Clearing the DTC**

- The condition responsible for setting the DTC no longer exists and the scan tool Clear DTCs function is used.
- A history DTC will clear once 255 malfunction free ignition cycles have occurred.

**Diagnostic Aids**

The following are possible causes of the malfunction:

- A short between the I/P module high and low circuits.
- An open or a high resistance in the I/P module high or low circuits.
- A short to ground or a short to voltage in the I/P module high or low circuits.
- The I/P module connector
- The SDM connector
- A malfunctioning I/P module
- A malfunctioning SDM

Thoroughly inspect the wiring and the connectors. An incomplete inspection of the wiring and the connectors may result in a misdiagnosis, causing a part replacement with the reappearance of the malfunction. If an intermittent malfunction exists, refer to **Testing for Intermittent Conditions and Poor Connections** in Wiring Systems.

**Test Description**

The numbers below refer to the step numbers on the diagnostic table.

**4:** This step tests to see if the malfunction is caused by the I/P module.

**6:** This step tests to see what DTCs are present. If DTC B0016 is present, test for a short between the I/P module high and low circuits. If DTC B0017 is present, test the I/P module high and low circuits for an open and for high resistance. If DTC B0018 is present, test the I/P module high and low circuits for a short to ground and for a short to voltage.

**DTC B0016, B0017, or B0018**

| Step | Action | Yes | No |
|---|---|---|---|
| **Schematic Reference:SIR Schematics** | | | |
| 1 | Did you perform the Diagnostic System Check-SIR? | Go to **Step** | Go to **Diagnostic System Check -** |

| | | 2 | SIR |
|---|---|---|---|
| 2 | 1. Turn OFF the ignition.<br>2. Disconnect I/P module connector. Refer to **Inflatable Restraint Instrument Panel Module Replacement** .<br>3. Inspect the component and harness sides of the I/P module connector for damage or corrosion that may cause the malfunction. Refer to **Testing for Intermittent Conditions and Poor Connections** and **Connector Repairs** in Wiring Systems.<br><br>Does the connector exhibit any signs of damage or corrosion? | Go to **Step 3** | Go to **Step 4** |
| 3 | 1. If the component side of the I/P module connector is damaged, the I/P module must be replaced. Refer to **Inflatable Restraint Instrument Panel Module Replacement** .<br>2. If the wiring harness side of the I/P module connector is damaged, replace the harness side of the connector. Refer to **Connector Repairs** in Wiring Systems.<br><br>Did you complete the repair? | Go to **Step 9** | - |
| **4** | 1. Install the **J 38715-A** SIR Driver/Passenger Load Tool to the harness side of the I/P module connector. See **Special Tools and Equipment** . Use PASSENGER INFLATOR connector.<br>2. Turn ON the ignition, with the engine OFF.<br>3. With the scan tool, request the SIR DTC display.<br><br>Does the scan tool indicate that DTC B0016, B0017, or B0018 are current? | Go to **Step 5** | Go to **Step 7** |
| 5 | 1. Turn OFF the ignition.<br>2. Disconnect and remove the **J 38715-A** . See **Special Tools and Equipment** .<br>3. Disconnect the inflatable restraint sensing and diagnostic module (SDM) connector. Refer to **Inflatable Restraint Sensing and Diagnostic Module Replacement** .<br>4. Inspect the SDM connector for damage or corrosion that may cause a malfunction in the I/P module high and/or low circuits. Refer to **Testing for Intermittent Conditions and Poor Connections** and **Connector Repairs** in Wiring Systems.<br><br>Did you find and correct the condition? | Go to **Step 9** | Go to **Step 6** |
| | • If DTC B0016 is present, test for a short between the I/P module high and low circuits.<br>• If DTC B0017 is present, test the I/P module high and low circuits for an open or high resistance. | | |

| | | | |
|---|---|---|---|
| **6** | • If DTC B0018 is present, test the I/P module high and low circuits for a short to ground or a short to voltage.<br>• All the above conditions refer to **Circuit Testing** and **Wiring Repairs** in Wiring Systems.<br><br>Did you find and correct the condition? | Go to **Step 9** | Go to **Step 8** |
| 7 | 1. Turn OFF the ignition.<br>2. Replace the I/P module. Refer to **Inflatable Restraint Instrument Panel Module Replacement** .<br><br>Did you complete the replacement? | Go to **Step 9** | - |
| 8 | 1. Turn OFF the ignition.<br>2. Replace the SDM. Refer to **Inflatable Restraint Sensing and Diagnostic Module Replacement** .<br><br>Did you complete the replacement? | Go to **Step 9** | - |
| 9 | 1. Connect all SIR components.<br>2. Turn ON the ignition, with the engine OFF.<br>3. Use the scan tool in order to clear the DTCs.<br>4. Operate the vehicle within the Conditions for Running the DTC as specified in the supporting text.<br><br>Does the DTC reset? | Go to **Step 2** | System OK |

## DTC B0022, B0024, OR B0026

### Circuit Description

The inflatable restraint steering wheel module deployment loop consists of the inflatable restraint steering wheel module, the inflatable restraint steering wheel module coil, and the steering wheel module high and low circuits. A shorting bar used within the steering wheel module coil connector shorts together the steering wheel module high and low circuits when the connector is disconnected. This helps to prevent unwanted deployment of the inflator module during servicing. During a frontal crash of sufficient force, the inflatable restraint sensing and diagnostic module (SDM) allows current to flow through the deployment loop in order to deploy the steering wheel module. When the ignition is turned ON, the SDM performs continuous diagnostic tests on the deployment loops to check for proper circuit continuity and for shorts to ground or voltage. If a malfunction is detected, a diagnostic trouble code (DTC) will be stored in memory.

### Conditions for Running the DTC

Ignition 1 voltage is within the normal operating voltage range.

### Conditions for Setting the DTC

- DTC B0022 will set when the steering wheel module deployment loop resistance is less than 1.3 ohms for 300 milliseconds.
- DTC B0024 will set when one of the following conditions occur:
  - Steering wheel module high circuits is more than 6 volts for 300 milliseconds.
  - Steering wheel module high circuit is less than 2 volts and steering wheel module deployment loop resistance is less than 6 ohms for 300 milliseconds.
- DTC B0026 will set when one of the following conditions occurs:
  - Steering wheel module high circuit is less than 2 volts and the steering wheel module deployment loop resistance is more than 4.8 ohms for 500 milliseconds.
  - Steering wheel module deployment loop resistance is more than 6 ohms for 300 milliseconds.

**Action Taken When the DTC Sets**

The SDM commands the AIR BAG indicator ON via Class 2 serial data.

**Conditions for Clearing the DTC**

- The condition responsible for setting the DTC no longer exists and the scan tool Clear DTCs function is used.
- A history DTC will clear once 255 malfunction free ignition cycles have occurred.

**Diagnostic Aids**

The following are possible causes of the malfunction:

- A short between the steering wheel module high and low circuits.
- An open or a high resistance in the steering wheel module high or low circuits.
- A short to ground or a short to voltage in the steering wheel module high or low circuits.
- The steering wheel module coil connector
- The SDM connector
- A malfunctioning steering wheel module
- A malfunctioning steering wheel module coil
- A malfunctioning SDM

Thoroughly inspect the wiring and the connectors. An incomplete inspection of the wiring and the connectors may result in a misdiagnosis, causing a part replacement with the reappearance of the malfunction. If an intermittent malfunction exists, refer to **Testing for Intermittent Conditions and Poor Connections** in Wiring Systems.

**Test Description**

The numbers below refer to the step numbers on the diagnostic table.

**5:** This step tests to see if the malfunction is caused by the steering wheel module or by the steering wheel module coil.

**7:** This step tests to see what DTCs are present. If DTC B0022 is present, test for a short between the steering wheel module high and low circuits. If DTC B0024 is present, test the steering wheel module high and low circuits for an open and for high resistance. If DTC B0026 is present, test the steering wheel module high and low circuits for an open and for high resistance.

**DTC B0022, B0024, or B0026**

| Step | Action | Yes | No |
|---|---|---|---|
| **Schematic Reference:SIR Schematics** | | | |
| 1 | Did you perform the Diagnostic System Check-SIR? | Go to **Step 2** | Go to **Diagnostic System Check - SIR** |
| 2 | 1. Turn OFF the ignition.<br>2. Disconnect the steering wheel module coil connector. Refer to **Inflatable Restraint Steering Wheel Module Coil Replacement** .<br>3. Inspect the component and harness sides of the steering wheel module coil connector for damage or corrosion that may cause the malfunction. Refer to **Testing for Intermittent Conditions and Poor Connections** and **Connector Repairs** in Wiring Systems.<br><br>Does the connector exhibit any signs of damage or corrosion? | Go to **Step 3** | Go to **Step 4** |
| 3 | 1. If the component side of the steering wheel module coil connector is damaged, the steering wheel module coil must be replaced. Refer to **Inflatable Restraint Steering Wheel Module Coil Replacement** .<br>2. If the wiring harness side of steering wheel module coil connector is damaged, replace the harness side of the connector. Refer to **Connector Repairs** in Wiring Systems.<br><br>Did you complete the repair? | Go to **Step 11** | - |
| 4 | 1. Install the **J 38715-A** SIR Driver/Passenger Load Tool to the harness side of the steering wheel module coil connector. See **Special Tools and Equipment** . Use BASE OF COLUMN connector.<br>2. Turn ON the ignition, with the engine OFF.<br>3. Use the scan tool to request SIR DTCs displayed.<br><br>Does the scan tool indicate that DTC B0022, B0024, or B0026 are current? | Go to **Step 6** | Go to **Step 5** |
| | 1. Turn OFF the ignition.<br>2. Disconnect and remove the **J 38715-A** . See **Special Tools and** | | |

| | | | |
|---|---|---|---|
| 5 | **Equipment** .<br>3. Connect the steering wheel module coil connector.<br>4. Remove the steering wheel module. Refer to **Inflatable Restraint Steering Wheel Module Replacement** .<br>5. Use the J 38715-30A adapter to connect the **J 38715-A** to the upper steering wheel module coil connector on top of the steering column. See **Special Tools and Equipment** . Use STEERING COLUMN connector.<br>6. Turn ON the ignition, with the engine OFF.<br>7. Use the scan tool to request SIR DTCs displayed.<br><br>Does the scan tool indicate that DTC B0022, B0024, or B0026 are current? | Go to **Step 9** | Go to **Step 8** |
| 6 | 1. Turn OFF the ignition.<br>2. Disconnect and remove the **J 38715-A** and adapter. See **Special Tools and Equipment** .<br>3. Disconnect the inflatable restraint sensing and diagnostic module (SDM) connector. Refer to **Inflatable Restraint Sensing and Diagnostic Module Replacement** .<br>4. Inspect the SDM connector for damage or corrosion that may cause a malfunction in the steering wheel module high and/or low circuits. Refer to **Testing for Intermittent Conditions and Poor Connections** and **Connector Repairs** in Wiring Systems.<br><br>Did you find and correct the condition? | Go to **Step 11** | Go to **Step 7** |
| 7 | • If DTC B0022 is present, test for a short between the steering wheel module high and low circuits.<br>• If DTC B0024 is present, test the steering wheel module high and low circuits for a short to ground or a short to voltage.<br>• If DTC B0026 is present, test the steering wheel module high and low circuits for an open or high resistance.<br>• All the above conditions refer to **Circuit Testing** and **Wiring Repairs** in Wiring Systems.<br><br>Did you find and correct the condition? | Go to **Step 11** | Go to **Step 10** |
| 8 | 1. Turn OFF the ignition.<br>2. Replace the steering wheel module. Refer to **Inflatable Restraint Steering Wheel Module Replacement** .<br><br>Did you complete the replacement? | Go to **Step 11** | - |
| | 1. Turn OFF the ignition.<br>2. Replace the steering wheel module coil. Refer to **Inflatable** | | |

| | | | |
|---|---|---|---|
| 9 | **Restraint Steering Wheel Module Coil Replacement** .<br><br>Did you complete the replacement? | Go to **Step 11** | - |
| 10 | 1. Turn OFF the ignition.<br>2. Replace the SDM. Refer to **Inflatable Restraint Sensing and Diagnostic Module Replacement** .<br><br>Did you complete the replacement? | Go to **Step 11** | - |
| 11 | 1. Connect all SIR components.<br>2. Turn ON the ignition, with the engine OFF.<br>3. Use the scan tool in order to clear the DTCs.<br>4. Operate the vehicle within the Conditions for Running the DTC as specified in the supporting text.<br><br>Does the DTC reset? | Go to **Step 2** | System OK |

## DTC B0051

### Circuit Description

The inflatable restraint sensing and diagnostic module (SDM) contains a sensing device that converts vehicle velocity changes into an electrical signal. The SDM compares this electrical signal to a value stored in memory. When the generated signal exceeds the stored value, the SDM performs additional signal processing and compares the generated signals to values stored in memory. When two of the generated signals exceed the stored values, the SDM will cause current to flow through the inflator modules, deploying the air bags, and causing DTC B0051 to set.

### Conditions for Running the DTC

Ignition 1 Voltage is within the normal operating voltage range.

### Conditions for Setting the DTC

The SDM detects a frontal crash of sufficient force to warrant deployment of the frontal air bags.

### Action Taken When the DTC Sets

- The SDM commands the AIR BAG indicator ON.
- The SDM records crash data.

### Conditions for Clearing the DTC

DTC B0051 is a latched code which cannot be cleared. Replace the SDM after following the instructions in the diagnostic table.

**DTC B0051**

| Step | Action | Yes | No |
|---|---|---|---|
| 1 | Did you perform the Diagnostic System Check-SIR? | Go to **Step 2** | Go to **Diagnostic System Check - SIR** |
| 2 | 1. Turn OFF the ignition.<br>2. Inspect the vehicle for signs of inflator module deployment.<br>Does the vehicle show any signs of inflator module deployment? | Go to **Step 5** | Go to **Step 3** |
| 3 | Inspect the front of the vehicle and undercarriage for signs of impact/collision.<br>Does the vehicle show any signs of impact/collision? | Go to **Step 5** | Go to **Step 4** |
| 4 | Replace the SDM. Refer to **Inflatable Restraint Sensing and Diagnostic Module Replacement** .<br>Did you complete the replacement? | Go to **Step 6** | - |
| 5 | 1. Install a scan tool.<br>2. Turn ON the ignition, with the engine OFF.<br>3. With the scan tool request the SIR DTC display.<br>4. If a history DTC exists, refer to Diagnostic Aids for that specific DTC and diagnose the problem.<br>5. Replace components and perform inspections as required following an accident. Refer to **Repairs and Inspections Required After a Collision** .<br>Did you complete the appropriate inspections and necessary repairs? | Go to **Step 6** | - |
| 6 | 1. Use the scan tool in order to clear the DTCs.<br>2. Operate the vehicle within the Conditions for Running the DTC as specified in the supporting text.<br>Does the DTC reset? | Go to **Step 2** | System OK |

**DTC B0053**

**Circuit Description**

The inflatable restraint sensing and diagnostic module (SDM) contains a sensing device that converts vehicle velocity changes into an electrical signal. The SDM compares this electrical signal to a value stored in memory. When the generated signal exceeds the stored value, the SDM performs additional signal processing and compares the generated signals to values stored in memory. When two of the generated signals exceed the stored values, the SDM will cause current to flow through the inflator modules, deploying the air bags. DTC B0053 will set instead of DTC B0051 when a deployment occurs while an inflator circuit malfunction is present that could possibly result in a non-deployment situation in one or both inflator modules.

**Conditions for Running the DTC**

Ignition 1 Voltage is within the normal operating voltage range.

**Conditions for Setting the DTC**

- The SDM detects a frontal crash of sufficient force to warrant deployment of the frontal air bags.
- A deployment loop malfunction exists.

**Action Taken When the DTC Sets**

- The SDM commands the AIR BAG indicator ON.
- The SDM records crash data.

**Conditions for Clearing the DTC**

DTC B0053 is a latched code which cannot be cleared. Replace the SDM after following the instructions in the diagnostic table.

**Diagnostic Aids**

DTC B0053 will be accompanied by another DTC. Repair the malfunction causing the other DTC(s) before installing a new SDM.

**DTC B0053**

| Step | Action | Yes | No |
|---|---|---|---|
| 1 | Did you perform the Diagnostic System Check-SIR? | Go to **Step 2** | Go to **Diagnostic System Check - SIR** |
| 2 | 1. Turn OFF the ignition.<br>2. Inspect the vehicle for signs of inflator module deployment.<br><br>Does the vehicle show any signs of inflator module deployment? | Go to **Step 5** | Go to **Step 3** |
| 3 | Inspect the front of the vehicle and undercarriage for signs of impact/collision.<br>Does the vehicle show any signs of impact/collision? | Go to **Step 5** | Go to **Step 4** |
| 4 | Replace the SDM. Refer to **Inflatable Restraint Sensing and Diagnostic Module Replacement** .<br>Did you complete the replacement? | Go to **Step 6** | - |
| 5 | 1. Install a scan tool.<br>2. Turn ON the ignition, with the engine OFF.<br>3. With the scan tool request the SIR DTC display.<br>4. If a history DTC exists, refer to Diagnostic Aids for that specific DTC and diagnose the problem.<br>5. Replace components and perform inspections as required following an accident. Refer to **Repairs and Inspections Required After a Collision** . | | |

| | | | |
|---|---|---|---|
| | Did you complete the appropriate inspections and necessary repairs? | Go to **Step 6** | - |
| 6 | 1. Use the scan tool in order to clear the DTCs.<br>2. Operate the vehicle within the Conditions for Running the DTC as specified in the supporting text.<br><br>Does the DTC reset? | Go to **Step 2** | System OK |

## DTC B0090

### Circuit Description

When the ignition is turned ON, the inflatable restraint sensing and diagnostic module (SDM) performs tests to diagnose critical malfunctions within the SIR system. The SDM monitors the I/P module disable switch-signal and I/P module disable switch indicator-control circuits in order to determine whether or not to disable the inflatable restraint I/P module. The SDM also monitors the I/P module disable switch-signal and the I/P module disable switch indicator-control circuits for an open, high resistance, short to ground or short to voltage condition.

### Conditions for Running the DTC

Ignition 1 voltage is within the normal operating voltage range.

### Conditions for Setting the DTC

- The I/P module disable switch must be in the ON position.
- The voltage detected in the I/P module disable switch indicator-control and the I/P module disable switch-signal circuits is less than 1 volt.
- The voltage detected in the I/P module disable switch indicator-control and the I/P module disable switch-signal circuits is greater than 1 volt.

### Action Taken When the DTC Sets

- The SDM defaults to the OFF position, disabling the I/P module.
- The SDM attempts to turn the inflatable restraint I/P module disable switch ON.
- The SDM commands the AIR BAG indicator ON via Class 2 serial data.

### Conditions for Clearing the DTC

- The condition responsible for setting the DTC no longer exists and the scan tool Clear DTCs function is used.
- A history DTC will clear once 255 malfunction free ignition cycles have occurred.

### Diagnostic Aids

Thoroughly inspect the wiring and the connectors. An incomplete inspection of the wiring and the connectors may result in misdiagnosis, causing a part replacement with the reappearance of the malfunction.

The following are possible causes of the malfunction:

- A short to ground or a short to voltage in the I/P module disable switch-signal circuit
- A short to ground or a short to voltage in the I/P module disable switch indicator-control circuit
- Damage or corrosion on the I/P module disable switch harness connector
- Damage or corrosion on the I/P module disable switch indicator harness connector
- Damage or corrosion on the SDM harness connector
- An internal I/P module disable switch malfunction
- An internal I/P module disable switch indicator malfunction
- An internal SDM malfunction

If an intermittent condition exists, refer to **Testing for Intermittent Conditions and Poor Connections** in Wiring Systems.

**Test Description**

The numbers below refer to the step numbers on the diagnostic table:

**6:** This step tests to see if there is an open or high resistance in the I/P module disable switch.

**9:** This step tests to see if there is a short to ground or a short to voltage in the I/P module disable switch-signal circuit.

**10:** This step tests to see if there is a short to ground or a short to voltage in the I/P module disable switch indicator-control circuit.

**DTC B0090**

| Step | Action | Yes | No |
|---|---|---|---|
| **Schematic Reference:SIR Schematics** | | | |
| 1 | Did you perform the Diagnostic System Check-SIR? | Go to **Step 2** | Go to **Diagnostic System Check - SIR** |
| 2 | 1. Turn OFF the ignition.<br>2. Disconnect the I/P module disable switch harness connector. Refer to **Inflatable Restraint Instrument Panel (I/P) Module Disable Switch Replacement** .<br>3. Inspect the I/P module disable switch harness connector for damage or corrosion that may cause the malfunction. Refer to **Testing for Intermittent Conditions and Poor Connections** and **Connector Repairs** in Wiring Systems.<br><br>Did you find and correct the condition? | Go to **Step 14** | Go to **Step 3** |

| | | | |
|---|---|---|---|
| 3 | Inspect the I/P module disable switch terminals for damage or corrosion that may cause the malfunction. Refer to **Testing for Intermittent Conditions and Poor Connections** and **Connector Repairs** in Wiring Systems.<br>Do the I/P module disable switch terminals exhibit signs of damage or corrosion? | Go to **Step 11** | Go to **Step 4** |
| 4 | 1. Remove the I/P module disable switch indicator harness connector. Refer to **Inflatable Restraint Instrument Panel (I/P) Module Disable Switch LED Replacement** .<br>2. Inspect the I/P module disable switch indicator harness connector for damage or corrosion that may cause the malfunction. Refer to **Testing for Intermittent Conditions and Poor Connections** and **Connector Repairs** in Wiring Systems.<br>Did you find and correct the condition? | Go to **Step 14** | Go to **Step 5** |
| 5 | Inspect the I/P module disable switch indicator connector for damage or corrosion that may cause the malfunction. Refer to **Testing for Intermittent Conditions and Poor Connections** and **Connector Repairs** in Wiring Systems.<br>Did you find and correct the condition? | Go to **Step 14** | Go to **Step 6** |
| **6** | Test the I/P module disable switch indicator for an open or high resistance. Refer to **Circuit Testing** and **Wiring Repairs** in Wiring Systems.<br>Did you find and correct the condition? | Go to **Step 14** | Go to **Step 7** |
| 7 | 1. Disconnect the inflatable restraint sensing and diagnostic module (SDM) harness connector. Refer to **Inflatable Restraint Sensing and Diagnostic Module Replacement** .<br>2. Inspect the SDM harness connector for damage or corrosion that may cause the malfunction. Refer to **Testing for Intermittent Conditions and Poor Connections** and **Connector Repairs** in Wiring Systems.<br>Did you find and correct the condition? | Go to **Step 14** | Go to **Step 8** |
| 8 | Inspect the SDM terminals for damage or corrosion that may cause the malfunction. Refer to **Testing for Intermittent Conditions and Poor Connections** and **Connector Repairs** in Wiring Systems.<br>Do the SDM terminals exhibit signs of damage or corrosion? | Go to **Step 13** | Go to **Step 9** |
| **9** | Test the I/P module disable switch - signal circuit for a short to ground or a short to voltage. Refer to **Circuit Testing** and **Wiring Repairs** in Wiring Systems.<br>Did you find and correct the condition? | Go to **Step 14** | Go to **Step 10** |
| **10** | Test the I/P module disable switch indicator - control circuit for a short to ground or a short to voltage. Refer to **Circuit Testing** and **Wiring Repairs** in Wiring Systems.<br>Did you find and correct the condition? | Go to **Step 14** | Go to **Step 11** |

| | | | |
|---|---|---|---|
| 11 | Replace the I/P module disable switch. Refer to **Inflatable Restraint Instrument Panel (I/P) Module Disable Switch Replacement** .<br>Did you complete the replacement? | Go to **Step 12** | - |
| 12 | 1. Reconnect all SIR components.<br>2. Use the scan tool in order to clear the DTCs.<br>3. Operate the vehicle within the Conditions for Running the DTC as specified within the supporting text.<br>Does the DTC rest? | Go to **Step 13** | System OK |
| 13 | Replace the SDM. Refer to **Inflatable Restraint Sensing and Diagnostic Module Replacement** .<br>Did you complete the replacement? | Go to **Step 14** | - |
| 14 | 1. Reconnect all SIR components.<br>2. Use the scan tool in order to clear the DTCs.<br>3. Operate the vehicle within the Conditions for Running the DTC as specified within the supporting text.<br>Does the DTC rest? | Go to **Step 2** | System OK |

## DTC B0091

### Circuit Description

When the ignition is turned ON, the inflatable restraint sensing and diagnostic module (SDM) performs tests to diagnose critical malfunctions within the SIR system. The SDM monitors the I/P module disable switch-signal and I/P module disable switch indicator-control circuits in order to determine whether or not to disable the inflatable restraint I/P module. The SDM also monitors the I/P module disable switch-signal and the I/P module disable switch indicator-control circuits for an open, high resistance, short to ground or short to voltage condition.

### Conditions for Running the DTC

Ignition 1 voltage is within the normal operating voltage range.

### Conditions for Setting the DTC

- The PSIR switch must be in the OFF position.
- The voltage detected in the I/P module disable switch-signal circuit is less than 1 volt.
- The voltage detected in the I/P module disable switch indicator-control circuit is greater than 1 volt.

### Action Taken When the DTC Sets

- The SDM defaults to the OFF position, disabling the I/P module.
- The SDM attempts to turn the inflatable restraint I/P module disable switch indicator ON and OFF every

5 seconds.

- The SDM commands the AIR BAG indicator ON via Class 2 serial data.

**Conditions for Clearing the DTC**

- The condition responsible for setting the DTC no longer exists and the scan tool Clear DTCs function is used.
- A history DTC will clear once 255 malfunction free ignition cycles have occurred.

**Diagnostic Aids**

Thoroughly inspect the wiring and the connectors. An incomplete inspection of the wiring and the connectors may result in misdiagnosis, causing a part replacement with the reappearance of the malfunction.

The following are possible causes of the malfunction:

- An open or a high resistance in the I/P module disable switch-signal circuit
- An open or a high resistance in the I/P module disable switch indicator-control circuit
- A short between the I/P module disable switch-signal and I/P module disable switch indicator-control circuits
- Damage or corrosion on the I/P module disable switch harness connector
- Damage or corrosion on the I/P module disable switch harness connector
- Damage or corrosion on the SDM harness connector
- An internal I/P module disable switch malfunction
- An internal I/P module disable switch indicator malfunction
- An internal SDM malfunction

If an intermittent condition exists, refer to **Testing for Intermittent Conditions and Poor Connections** in Wiring Systems.

**Test Description**

The numbers below refer to the step numbers on the diagnostic table:

**6:** This step tests to see if the I/P module disable switch indicator is damaged.

**9:** This step tests to see if there is an open or high resistance in the I/P module disable switch-signal circuit.

**10:** This step tests to see if there is an open or high resistance in the I/P module disable switch indicator-control circuit.

**11:** This step test to see if there is a short between the I/P module disable switch-signal and the I/P module disable switch indicator-control circuits.

## DTC B0091

| | | | |
|---|---|---|---|

| Step | Action | Yes | No |
|---|---|---|---|
| **Schematic Reference:SIR Schematics** | | | |
| 1 | Did you perform the Diagnostic System Check-SIR? | Go to **Step 2** | Go to **Diagnostic System Check - SIR** |
| 2 | 1. Turn OFF the ignition.<br>2. Disconnect the I/P module disable switch harness connector. Refer to **Inflatable Restraint Instrument Panel (I/P) Module Disable Switch Replacement** .<br>3. Inspect the I/P module disable switch harness connector for damage or corrosion that may cause the malfunction. Refer to **Testing for Intermittent Conditions and Poor Connections** and **Connector Repairs** in Wiring Systems.<br>Did you find and correct the condition? | Go to **Step 15** | Go to **Step 3** |
| 3 | Inspect the I/P module disable switch terminals for damage or corrosion that may cause the malfunction. Refer to **Testing for Intermittent Conditions and Poor Connections** and **Connector Repairs** in Wiring Systems.<br>Do the I/P module disable switch terminals exhibit signs of damage or corrosion? | Go to **Step 12** | Go to **Step 4** |
| 4 | 1. Remove the I/P module disable switch indicator harness connector. Refer to **Inflatable Restraint Instrument Panel (I/P) Module Disable Switch LED Replacement** .<br>2. Inspect the I/P module disable switch indicator harness connector for damage or corrosion that may cause the malfunction. Refer to **Testing for Intermittent Conditions and Poor Connections** and **Connector Repairs** in Wiring Systems.<br>Did you find and correct the condition? | Go to **Step 15** | Go to **Step 5** |
| 5 | Inspect the I/P module disable switch indicator connector for damage or corrosion that may cause the malfunction. Refer to **Testing for Intermittent Conditions and Poor Connections** and **Connector Repairs** in Wiring Systems.<br>Did you find and correct the condition? | Go to **Step 15** | Go to **Step 6** |
| **6** | Test the I/P module disable switch indicator for an open or high resistance. Refer to **Circuit Testing** and **Wiring Repairs** in Wiring Systems.<br>Did you find and correct the condition? | Go to **Step 15** | Go to **Step 7** |
| 7 | 1. Disconnect the Sensing and Diagnostic Module (SDM) harness connector. Refer to **Inflatable Restraint Sensing and Diagnostic Module Replacement** .<br>2. Inspect the SDM harness connector for damage or corrosion that may cause the malfunction. Refer to **Testing for Intermittent** | | |

| | | | |
|---|---|---|---|
| | **Conditions and Poor Connections** and **Connector Repairs** in Wiring Systems.<br><br>Did you find and correct the condition? | Go to **Step 15** | Go to **Step 8** |
| 8 | Inspect the SDM terminals for damage or corrosion that may cause the malfunction. Refer to **Testing for Intermittent Conditions and Poor Connections** and **Connector Repairs** in Wiring Systems.<br>Do the SDM terminals exhibit signs of damage or corrosion? | Go to **Step 14** | Go to **Step 9** |
| **9** | Test the I/P module disable switch - signal circuit for an open or high resistance. Refer to **Circuit Testing** and **Wiring Repairs** in Wiring Systems.<br>Did you find and correct the condition? | Go to **Step 15** | Go to **Step 10** |
| **10** | Test the I/P module disable switch indicator - control circuit for an open or high resistance. Refer to **Circuit Testing** and **Wiring Repairs** in Wiring Systems.<br>Did you find and correct the condition? | Go to **Step 15** | Go to **Step 11** |
| **11** | Test the I/P module disable switch - signal circuit and the I/P module disable switch indicator - control circuit for a short between the two circuits. Refer to **Circuit Testing** and **Wiring Repairs** in Wiring Systems.<br>Did you find and correct the condition? | Go to **Step 15** | - |
| 12 | Replace the I/P module disable switch. Refer to **Inflatable Restraint Instrument Panel (I/P) Module Disable Switch Replacement** .<br>Did you complete the replacement? | Go to **Step 13** | - |
| 13 | 1. Reconnect all SIR components.<br>2. Use the scan tool in order to clear the DTCs.<br>3. Operate the vehicle within the Conditions for Running the DTC as specified within the supporting text.<br><br>Does the DTC rest? | Go to **Step 14** | System OK |
| 14 | Replace the SDM. Refer to **Inflatable Restraint Sensing and Diagnostic Module Replacement** .<br>Did you complete the replacement? | Go to **Step 15** | - |
| 15 | 1. Reconnect all SIR components.<br>2. Use the scan tool in order to clear the DTCs.<br>3. Operate the vehicle within the Conditions for Running the DTC as specified within the supporting text.<br><br>Does the DTC rest? | Go to **Step 2** | System OK |

## DTC B1001

### Circuit Description

When the ignition is turned ON, the inflatable restraint sensing and diagnostic module (SDM) compares the restraints ID that is stored in the SDM to the restraints ID that is stored in the body control module (BCM). The restraints ID that is being compared contains the last four digits of the SDM part number. Also, the VIN that is stored in the SDM is compared to the VIN that is stored in the powertrain control module (PCM). For more detailed information concerning the Class 2 data lines, refer to **Data Link Communications Description and Operation** in Data Link Communications.

#### Conditions for Running the DTC

Ignition 1 voltage is within the normal operating voltage range.

#### Conditions for Setting the DTC

The restraints ID that is stored in the SDM does not match the restraints ID that is stored in the BCM and/or the VIN that is stored in the SDM does not match the VIN that is stored in the PCM.

#### Action Taken When the DTC Sets

- The SDM commands the AIR BAG warning lamp ON via Class 2 serial data.
- The SDM disables all deployments.

#### Conditions for Clearing the DTC

The restraints ID that is stored in the SDM matches the restraints ID that is stored in the BCM and/or the VIN that is stored in the SDM matches the VIN that is stored in the PCM.

#### Diagnostic Aids

DTC B1001 is an indication that the restraints ID's stored in both the BCM and SDM and/or the VIN information stored in the PCM and the SDM do not match. If either the BCM and/or powertrain control module (PCM) were replaced, the replacement modules need to be reprogrammed for proper operation.

#### Test Description

The numbers below refer to the step numbers on the diagnostic table.

**2:** This step checks to see if the correct VIN is programmed in the PCM.

**4:** This step checks to see if the BCM has been replaced.

### DTC B1001 Option Configuration Error

| Step | Action | Yes | No |
|---|---|---|---|
| 1 | Was the Diagnostic System Check-SIR performed? | Go to **Step 2** | Go to **Diagnostic System Check - SIR** |
| | 1. Install a scan tool. | | |

| | | | |
|---|---|---|---|
| **2** | 2. With a scan tool, verify that the PCM is programmed with the correct VIN by comparing the VIN that is stored in the PCM to the VIN plate of the vehicle.<br><br>Is the PCM programmed with the correct VIN? | Go to **Step 4** | Go to **Step 3** |
| 3 | Use a scan tool and/or the techline machine to program the correct VIN into the PCM.<br>Did you complete the programming procedure? | Go to **Step 6** | - |
| **4** | Was the BCM replaced? | Go to **Body Control Module (BCM) Programming/RPO Configuration** in Body Control System | Go to **Step 5** |
| 5 | 1. Turn OFF the ignition.<br>2. Replace the inflatable restraint sensing and diagnostic module (SDM). Refer to **Inflatable Restraint Sensing and Diagnostic Module Replacement** .<br><br>Did you complete the replacement? | Go to **Step 6** | - |
| 6 | 1. Use the scan tool in order to clear the DTCs.<br>2. Operate the vehicle within the Conditions for Running the DTC as specified in the supporting text.<br><br>Does the DTC reset? | Go to **Step 2** | - |

**SYMPTOMS - SIR**

**IMPORTANT:**

1. **Perform Diagnostic System Check - SIR before using the Symptom Tables in order to verify that all of the following are true:**
   - **There are no DTCs set.**
   - **The inflatable restraint sensing and diagnostic module (SDM) can communicate via the serial data link.**
2. **Review the system operation in order to familiarize yourself with the system functions. Refer to SIR System Description and Operation .**

**Visual/Physical Inspection**

- Inspect for aftermarket devices which could affect the operation of the SIR system. Refer to **Checking**

**Aftermarket Accessories** in Wiring Systems.

- Inspect the easily accessible or visible system components for obvious damage or conditions which could cause the symptom.

#### Intermittent

Faulty electrical connections or wiring may be the cause of intermittent conditions. Refer to **Testing for Intermittent Conditions and Poor Connections** in Wiring Systems.

#### Symptom List

Refer to **Air Bag Indicator Circuit Malfunction** in order to diagnose the symptom.

### AIR BAG INDICATOR CIRCUIT MALFUNCTION

#### Circuit Description

When the ignition is turned ON, the instrument panel cluster (IPC) flashes the AIR BAG indicator seven times. The inflatable restraint sensing and diagnostic module (SDM) performs diagnostic tests on the SIR system and then commands the IPC to turn the AIR BAG indicator OFF if no SIR malfunctions exist. The AIR BAG indicator is controlled by the SDM via Class 2 serial data. If the Ignition 1 voltage is outside of the normal operating voltage range of 9-16 volts, the SDM will command the IPC to turn the AIR BAG indicator ON with no diagnostic trouble codes (DTCs) present.

#### Diagnostic Aids

The IPC will turn the AIR BAG indicator ON if there is a loss of serial data communication between the IPC and the SDM. For more detailed information concerning the Class 2 data lines, refer to **Data Link Communications Description and Operation** in Data Link Communications.

The following are possible causes of the malfunction:

- Ignition 1 voltage out of range.
- An internal IPC malfunction.
- An internal SDM malfunction.

#### Test Description

The numbers below refer to the step numbers on the diagnostic table.

**5:** This step tests to see if the scan tool can communicate with the IPC.
**6:** This step tests to see if the Ignition 1 voltage is more than 9 V.
**7:** This step tests to see if the Ignition 1 voltage is more than 16 V.
**8:** This step tests to see if the SDM connector is damaged or corroded.
**9:** This step tests for an open or high resistance in the Ignition 1 voltage feed circuit to the SDM.

**10:** This step tests for an open or high resistance in the Ignition 1 voltage feed circuit to the AIR BAG Fuse.

**11:** This step tests for an open or high resistance in the SDM ground circuit.

**Air Bag Indicator Circuit Malfunction**

| Step | Action | Value | Yes | No |
|---|---|---|---|---|
| **Schematic Reference:SIR Schematics** | | | | |
| 1 | Did you perform the Diagnostic System Check-SIR? | - | Go to **Step 2** | Go to **Diagnostic System Check - SIR** |
| 2 | 1. Turn OFF the ignition.<br>2. Note the AIR BAG indicator while turning the ignition ON.<br><br>Does the AIR BAG indicator flash seven times? | - | Go to **Step 4** | Go to **Step 3** |
| 3 | Replace the IPC. Refer to **Instrument Panel Cluster (IPC) Replacement** in Instrument Panel, Gauges and Console.<br>Did you complete the replacement? | - | Go to **Step 13** | - |
| 4 | Note the AIR BAG indicator after it has flashed seven times.<br>Does the AIR BAG indicator turn OFF after flashing seven times? | - | Go to **Testing for Intermittent Conditions and Poor Connections** in Wiring Systems | Go to **Step 5** |
| **5** | 1. Install a scan tool.<br>2. Attempt to communicate with the IPC.<br><br>Does the scan tool communicate with the IPC? | - | Go to **Step 6** | Go to **Scan Tool Does Not Communicate with Class 2 Device** in Data Link Communications |
| **6** | With a scan tool, observe the SIR data list display.<br>Does the scan tool indicate that the ignition voltage is greater than the specified value? | 9 V | Go to **Step 7** | Go to **Step 8** |
| **7** | Does the scan tool indicate that the ignition voltage is greater than the specified value? | 16 V | Go to **Diagnostic System Check - Engine Electrical** in Engine Electrical | Go to **Step 12** |
| | 1. Turn OFF the ignition.<br>2. Disconnect the SDM. Refer to **Inflatable Restraint Sensing and Diagnostic Module Replacement** .<br>3. Inspect the SDM connector for | | | |

| | | | | |
|---|---|---|---|---|
| **8** | damage or corrosion that may cause an open or high resistance. Refer to **Testing for Intermittent Conditions and Poor Connections** and **Connector Repairs** in Wiring Systems.<br><br>Did you find and correct the condition? | - | Go to **Step 13** | Go to **Step 9** |
| **9** | 1. Remove the AIR BAG Fuse.<br>2. Test the Ignition 1 voltage feed circuit to the SDM for an open or high resistance.<br><br>Did you find and correct the condition? | - | Go to **Step 13** | Go to **Step 10** |
| **10** | Test the Ignition 1 voltage feed circuit to the AIR BAG Fuse for an open or high resistance.<br>Did you find and correct the condition? | - | Go to **Step 13** | Go to **Step 11** |
| **11** | 1. Turn OFF the ignition.<br>2. Test the SDM ground circuit for an open or high resistance.<br><br>Did you find and correct the condition? | - | Go to **Step 13** | Go to **Step 12** |
| 12 | Replace the SDM. Refer to **Inflatable Restraint Sensing and Diagnostic Module Replacement** .<br>Did you complete the replacement? | - | Go to **Step 13** | - |
| 13 | Operate the system in order to verify the repair.<br>Did you correct the condition? | - | System OK | Go to **Step 2** |

**SIR DISABLING AND ENABLING ZONES**

**IMPORTANT: Refer to SIR Service Precautions before disabling the SIR system.**

The SIR system has been divided into Disabling and Enabling Zones. When performing service on or near SIR components or SIR wiring, it may be necessary to disable the SIR components in that zone. It may be necessary to disable more than one zone depending on the location of other SIR components and the area being serviced, refer to **SIR Zone Identification Views** . Refer to the illustration below, to identify the specific zone or zones in which service will be performed. After identifying the zone or zones, proceed to the disabling and enabling procedures for that particular zone or zones.

**Corvette**

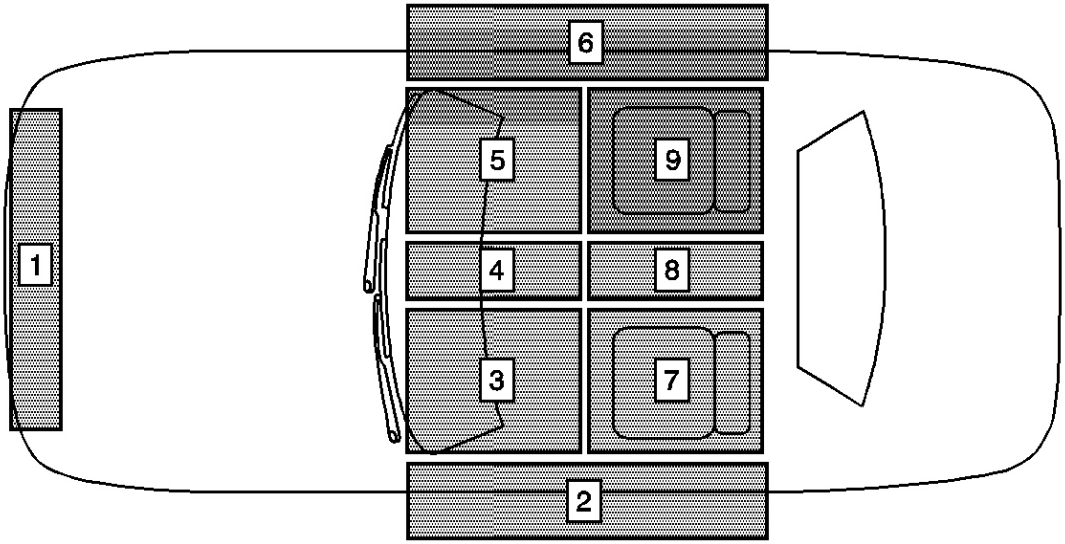


**Fig. 5: SIR Disabling And Enabling Zones**
**Courtesy of GENERAL MOTORS CORP.**

**SIR Disabling and Enabling Zones**

| Zone | Description |
|---|---|
| 1-2 | Not Used |
| 3 | Inflatable Restraint Steering Wheel Module and Coil<br>Refer to SIR Disabling and Enabling Zone 3. |
| 4 | Sensing and Diagnostic Module (SDM)<br>Refer to SIR Disabling and Enabling Zone 4. |
| 5 | Inflatable Restraint Instrument Panel (I/P) Module<br>Refer to SIR Disabling and Enabling Zone 5. |
| 6-9 | Not Used |

## REPAIR INSTRUCTIONS

### SIR SERVICE PRECAUTIONS

**CAUTION: Refer to SIR Caution in Cautions and Notices.**

The inflatable restraint sensing and diagnostic module (SDM) maintains a reserved energy supply. The reserved energy supply provides deployment power for the air bags. Deployment power is available for as much as 10 seconds after disconnecting the vehicle power. Disabling the SIR system prevents deployment of the air bags from the reserved energy supply.

### General Service Instructions

The following are general service instructions which must be followed in order to properly repair the vehicle and return it to its original integrity:

- Do not expose inflator modules to temperatures above 65°C (150°F).
- Verify the correct replacement part number. Do not substitute a component from a different vehicle.
- Use only original GM replacement parts available from your authorized GM dealer. Do not use salvaged parts for repairs to the SIR system.

Discard any of the following components if it has been dropped from a height of 91 cm (3 ft) or greater:

- Inflatable restraint I/P module
- Inflatable restraint I/P module disable switch
- Inflatable restraint sensing and diagnostic module (SDM)
- Inflatable restraint steering wheel module
- Inflatable restraint steering wheel module coil

## SIR DISABLING AND ENABLING ZONE 3

### Disabling Procedure

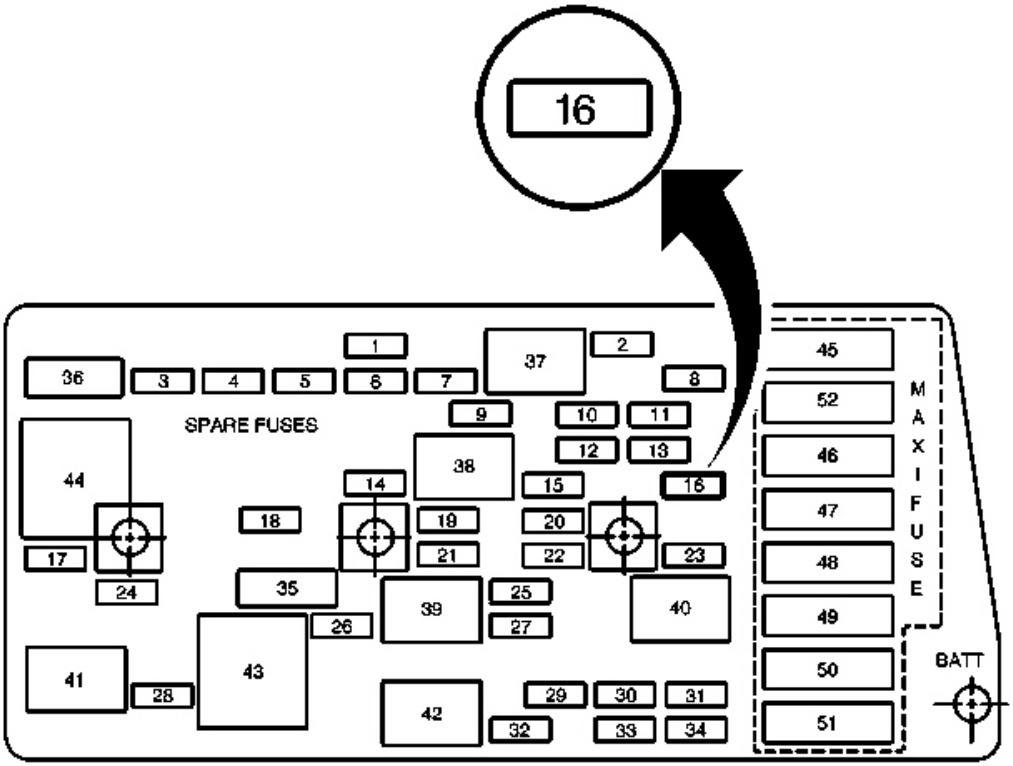


**Fig. 6: I/P Fuse Block & SDM Fuse**
**Courtesy of GENERAL MOTORS CORP.**

1. Turn the steering wheel so that the vehicle's wheels are pointing straight ahead.
2. Turn the ignition switch to the OFF position.
3. Remove the key from the ignition.
4. Remove the front floor kick-up panel. Refer to **Kick-Up Panel Replacement - Front Floor** in Interior Trim.

**IMPORTANT: With the SDM Fuse removed and the ignition switch in the ON position, the AIR BAG indicator illuminates. This is normal operation and does not indicate an SIR system malfunction.**

5. Remove the SDM Fuse from the I/P fuse block.

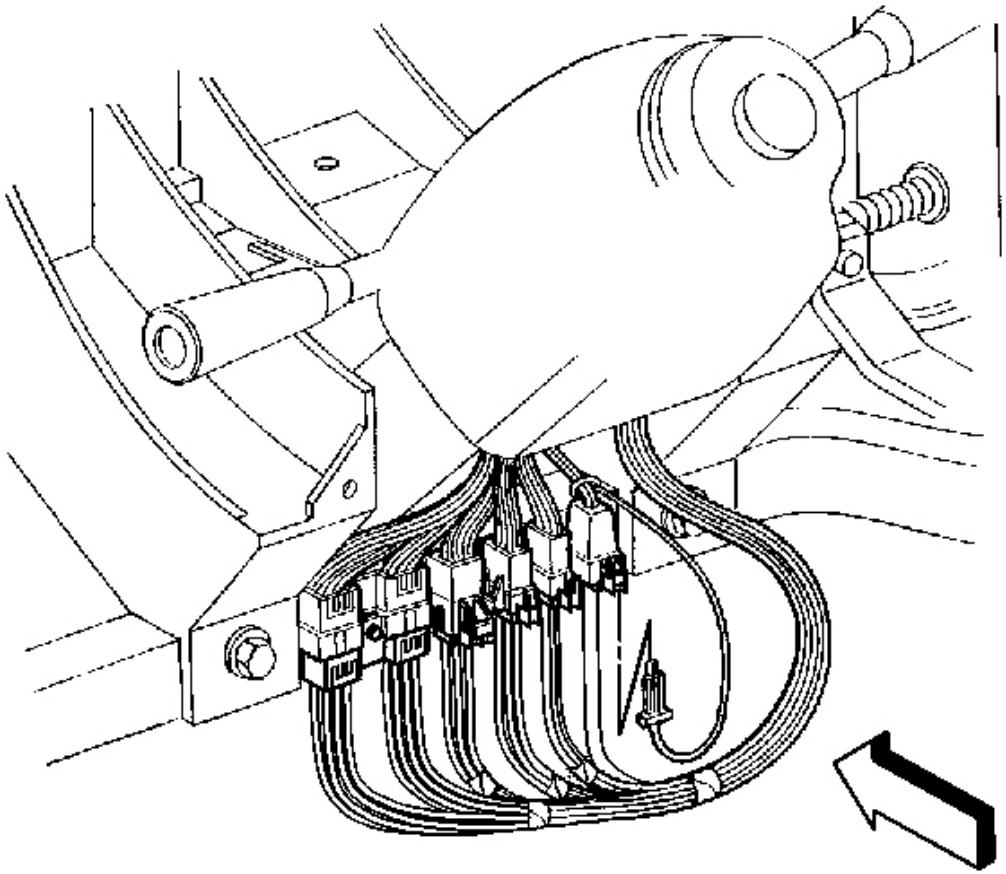

**Fig. 7: Steering Wheel Module Coil & CPA**
**Courtesy of GENERAL MOTORS CORP.**

6. Remove the left sound insulator. Refer to **Closeout/Insulator Panel Replacement - Left** in Instrument Panel, Gages, and Console.
7. Remove the connector position assurance (CPA) from the inflatable restraint steering wheel module coil connector located at the base of the steering column.

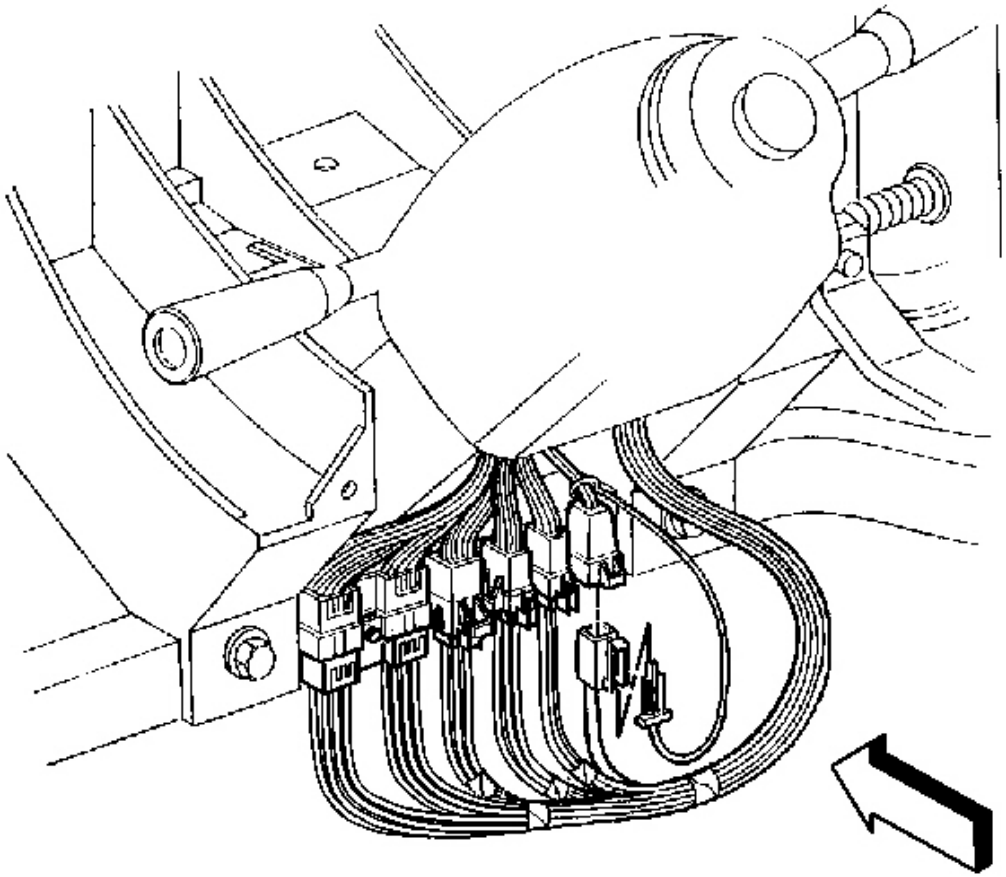

**Fig. 8: Steering Wheel Module Coil Connector Removed**
**Courtesy of GENERAL MOTORS CORP.**

8. Disconnect the steering wheel module coil connector located at the base of the steering column.

**Enabling Procedure**

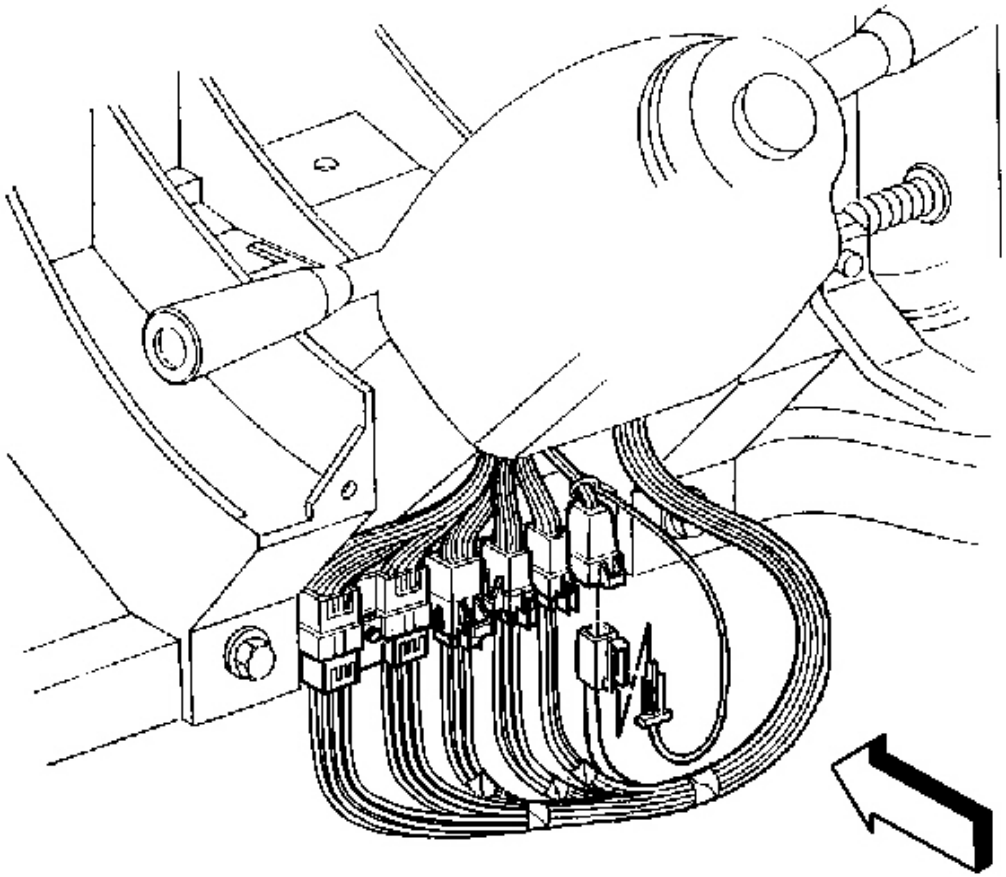

**Fig. 9: Steering Wheel Module Coil Connector Removed**
**Courtesy of GENERAL MOTORS CORP.**

1. Remove the key from the ignition switch.
2. Connect the inflatable restraint steering wheel module coil connector located at the base of the steering.

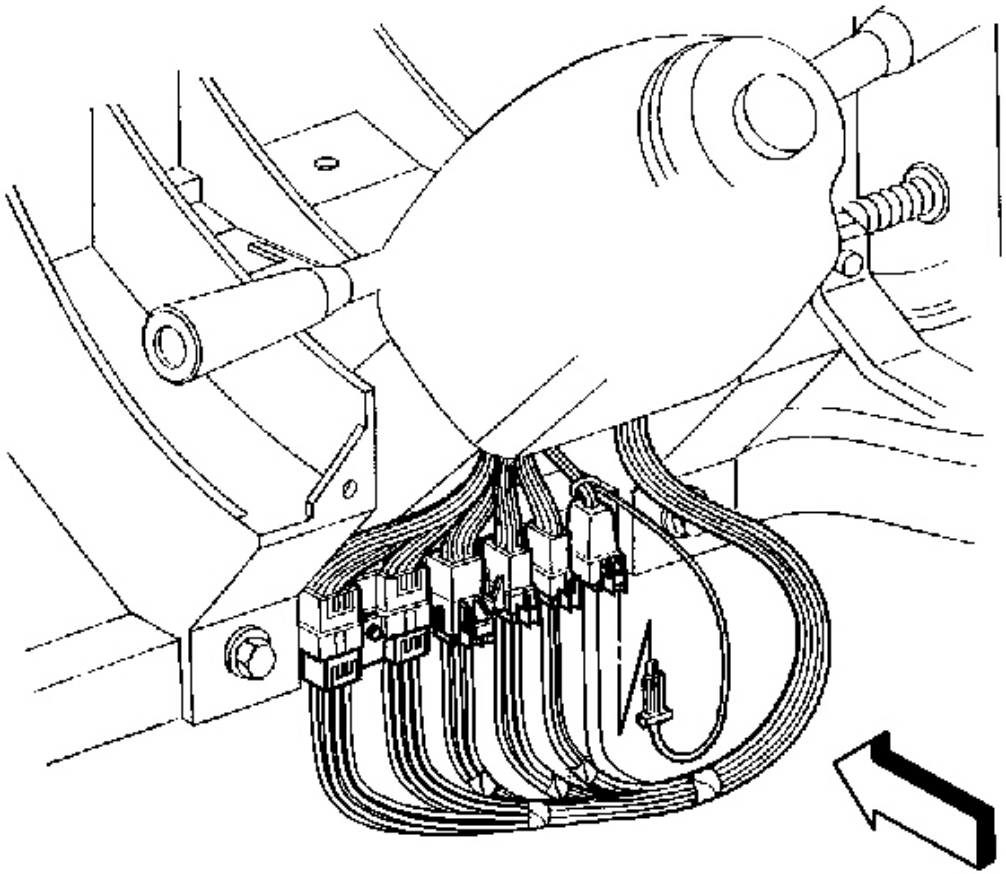

**Fig. 10: Steering Wheel Module Coil & CPA**
**Courtesy of GENERAL MOTORS CORP.**

3. Install the CPA to the steering wheel module coil connector located at the base of the steering column.

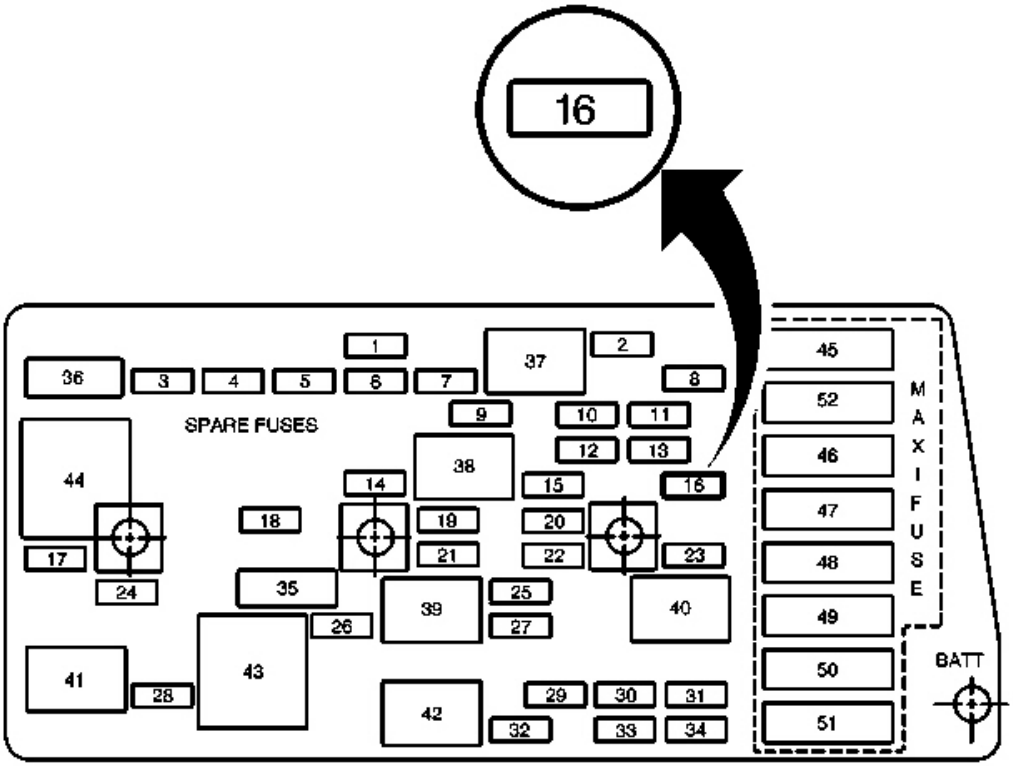


**Fig. 11: I/P Fuse Block & SDM Fuse**
**Courtesy of GENERAL MOTORS CORP.**

4. Install the left sound insulator. Refer to **Closeout/Insulator Panel Replacement - Left** in Instrument Panel, Gages, and Console.
5. Install the SDM Fuse to the I/P fuse block.
6. Install the front floor kick-up panel. Refer to **Kick-Up Panel Replacement - Front Floor** in Interior Trim.
7. Staying well away from both air bags, turn the ignition switch to the ON position.
    1. The AIR BAG indicator will flash seven times.
    2. The AIR BAG indicator will then turn OFF.
8. Perform the **Diagnostic System Check - SIR** if the AIR BAG indicator does not operate as described.

## SIR DISABLING AND ENABLING ZONE 4

### Disabling Procedure

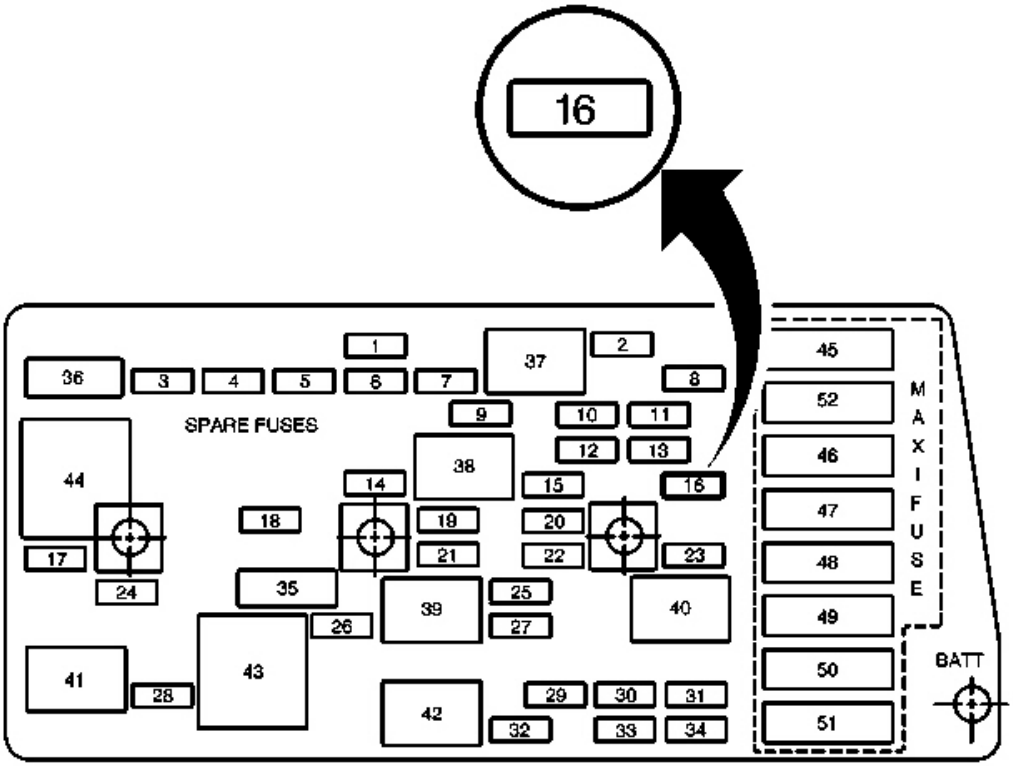


**Fig. 12: I/P Fuse Block & SDM Fuse**
**Courtesy of GENERAL MOTORS CORP.**

1. Turn the steering wheel so that the vehicle's wheels are pointing straight ahead.
2. Turn the ignition switch to the OFF position.
3. Remove the key from the ignition switch.
4. Remove the front floor kick-up panel. Refer to **Kick-Up Panel Replacement - Front Floor** in Interior Trim.

**IMPORTANT: With the SDM Fuse removed and the ignition switch in the ON position, The AIR BAG indicator illuminates. This is normal operation, and does not indicate an SIR system malfunction.**

5. Remove the SDM Fuse from the I/P fuse block.

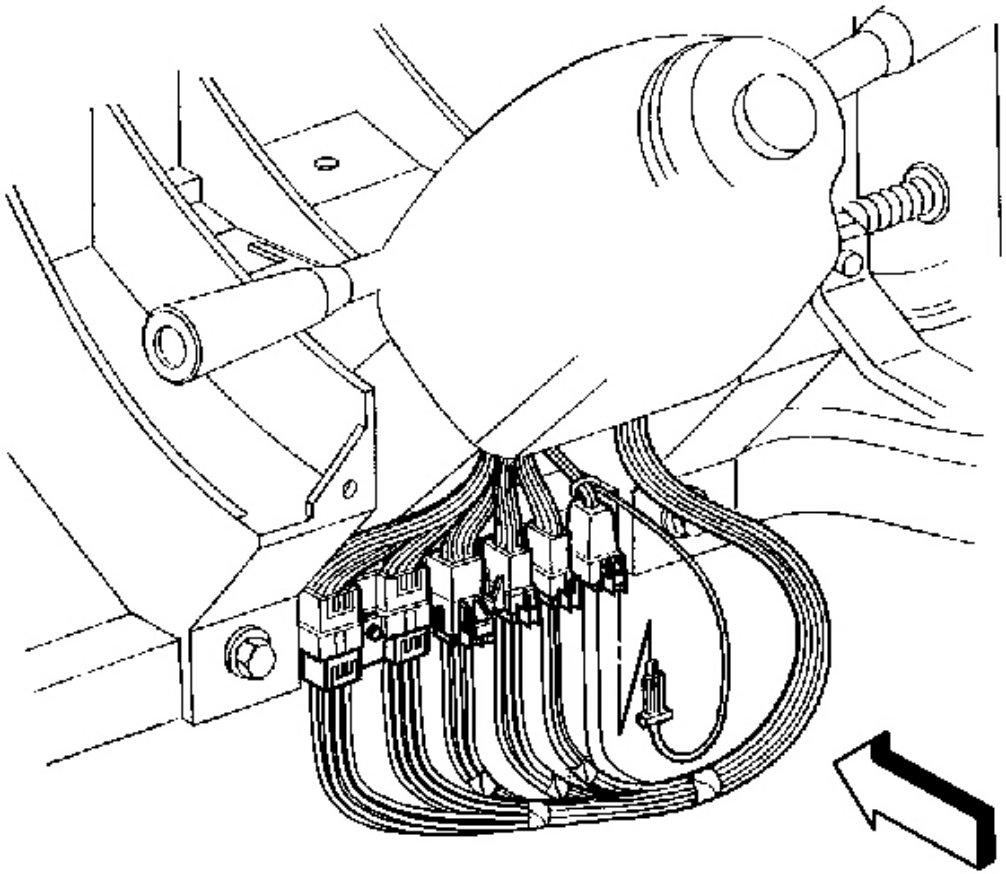

**Fig. 13: Steering Wheel Module Coil & CPA**
**Courtesy of GENERAL MOTORS CORP.**

6. Remove the left sound insulator. Refer to **Closeout/Insulator Panel Replacement - Left** in Instrument Panel, Gages and Console.
7. Remove the connector position assurance (CPA) from the inflatable restraint steering wheel module coil connector located at the base of the steering column.

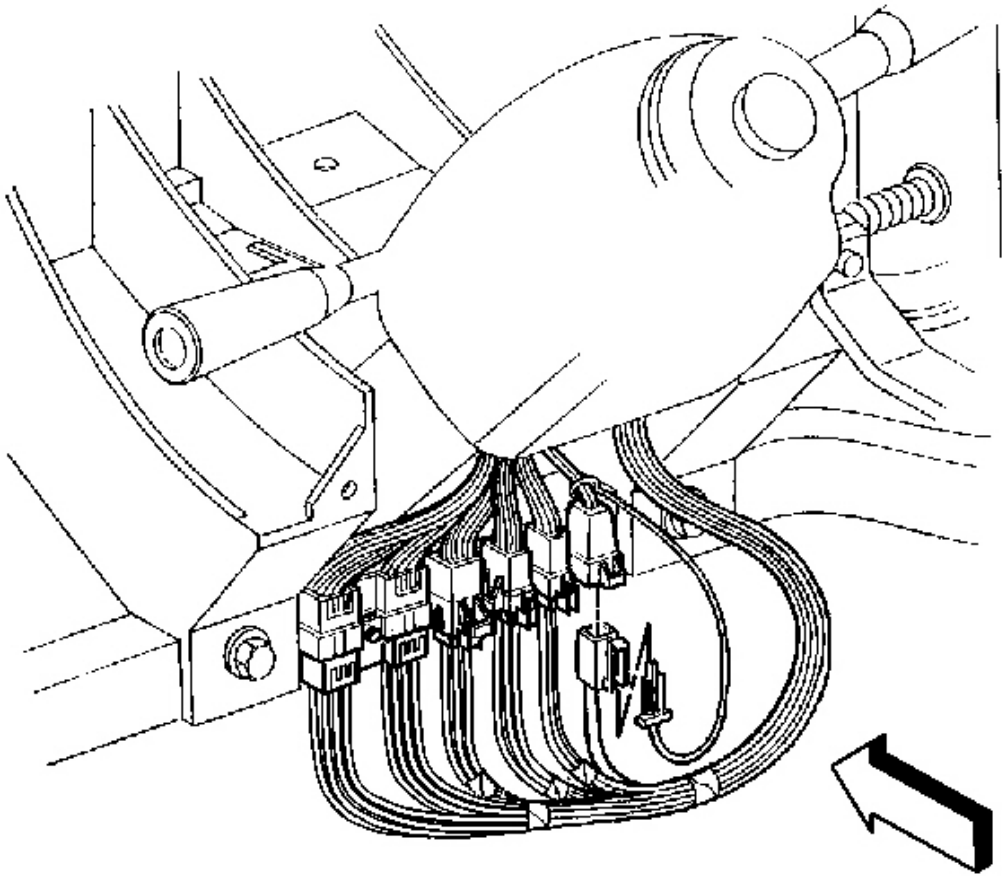

**Fig. 14: Steering Wheel Module Coil Connector Removed**
**Courtesy of GENERAL MOTORS CORP.**

8. Disconnect the steering wheel module coil connector located at the base of the steering column.

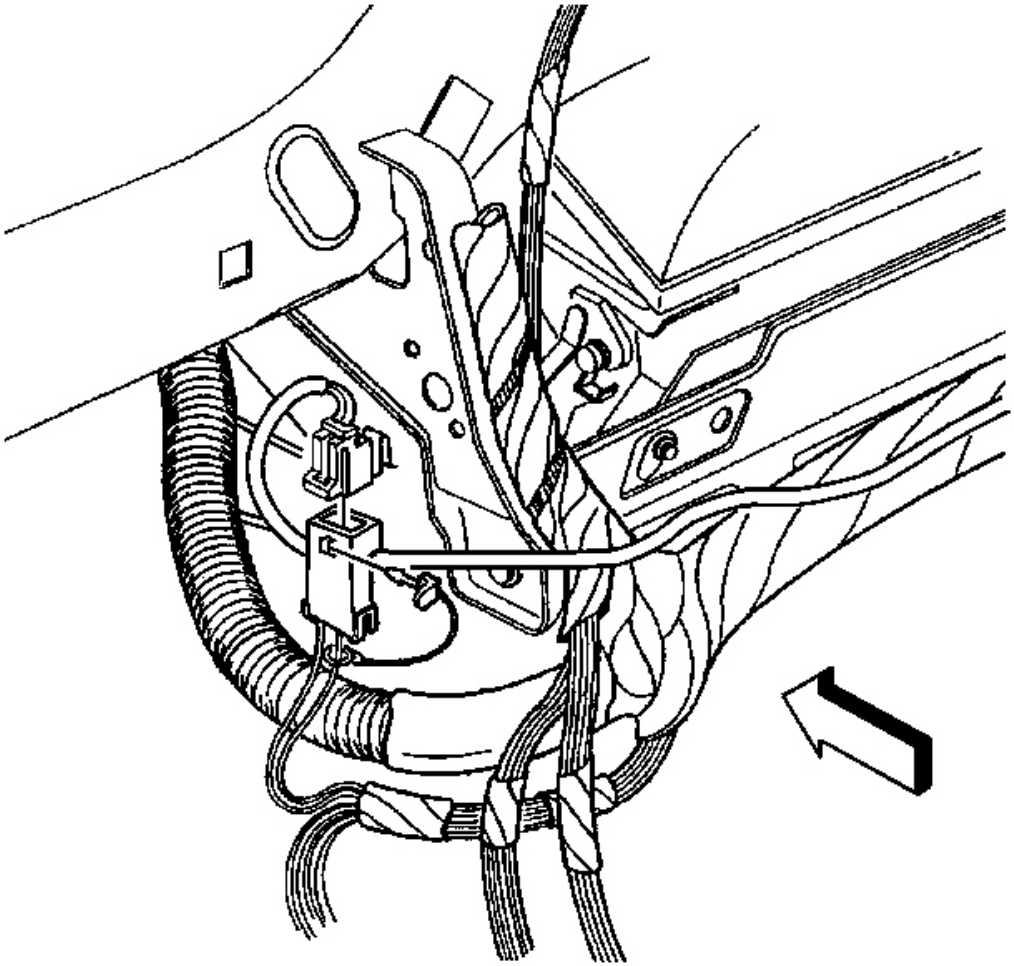

**Fig. 15: I/P Module Connector Removed**
**Courtesy of GENERAL MOTORS CORP.**

9. Remove the CPA from the inflatable restraint I/P module connector located near the base of the steering column.
10. Disconnect the I/P module connector located near the base of the steering column.

**Enabling Procedure**

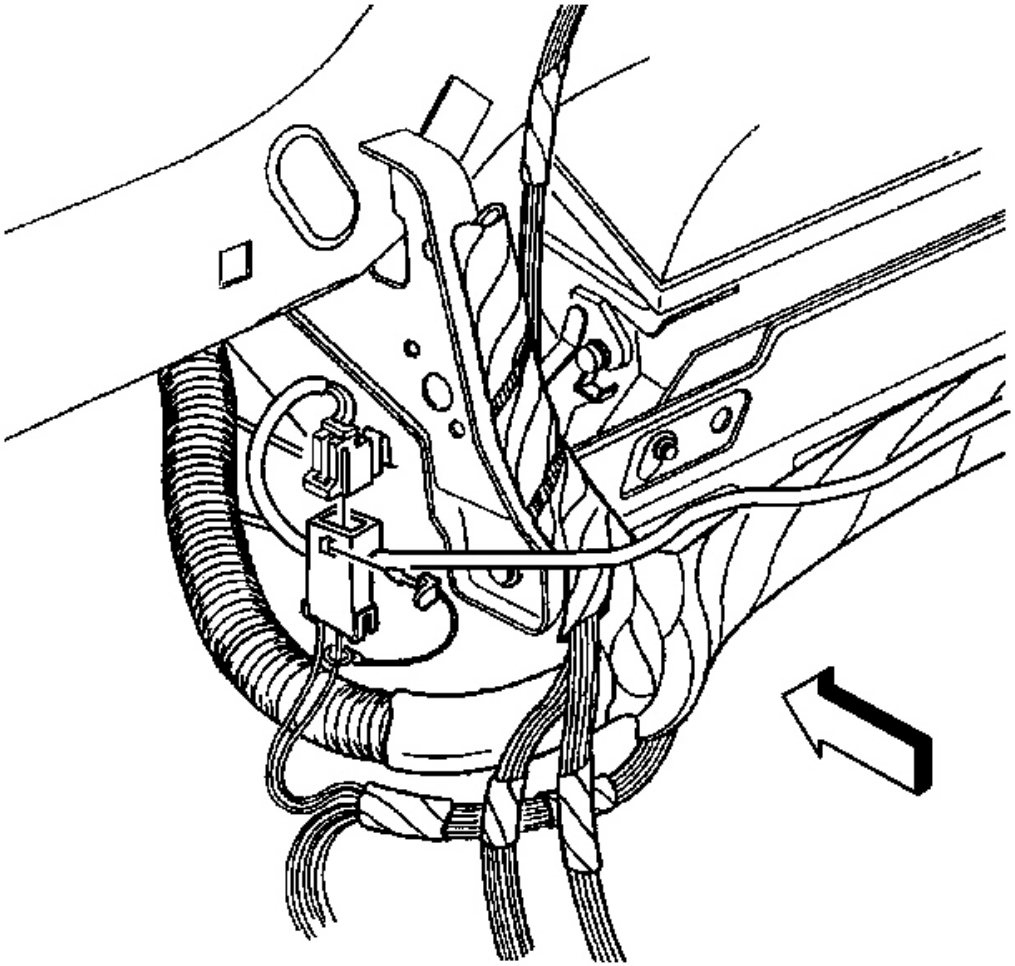

**Fig. 16: I/P Module Connector Removed**
**Courtesy of GENERAL MOTORS CORP.**

1. Remove the key from the ignition switch.
2. Connect the inflatable restraint I/P module connector located near the base of the steering column.
3. Install the CPA to the I/P module connector located near the base of the steering column.

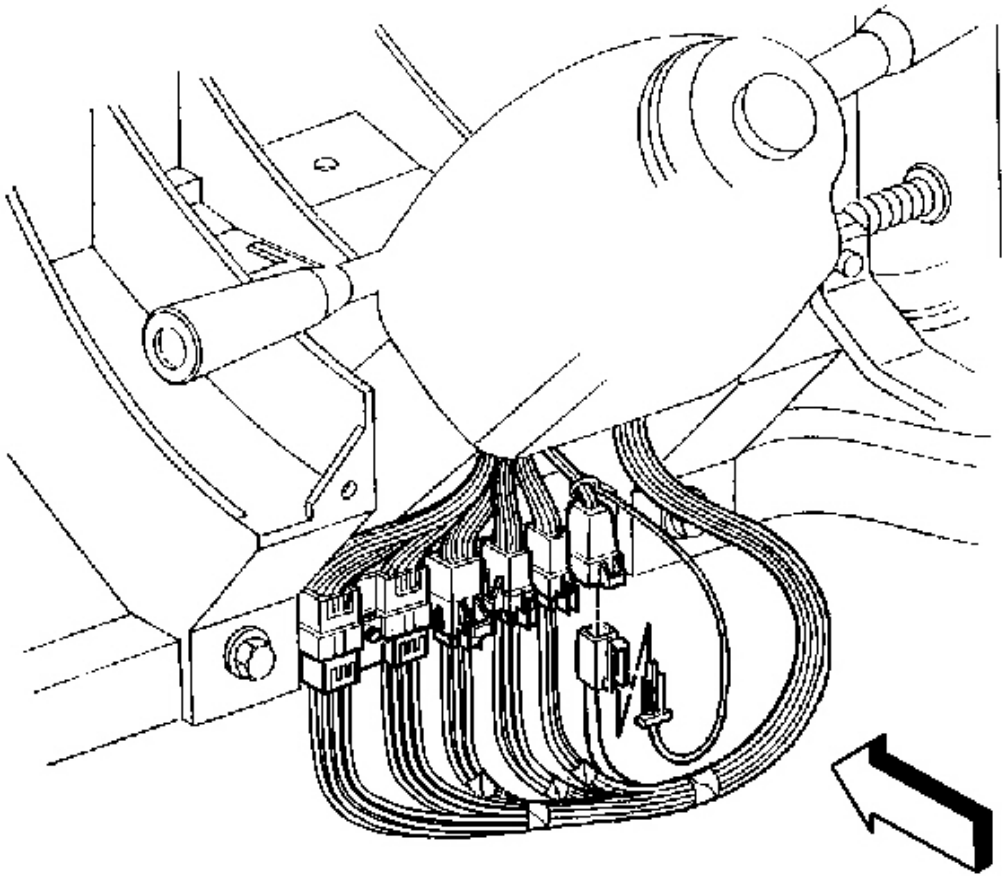

**Fig. 17: Steering Wheel Module Coil Connector Removed**
**Courtesy of GENERAL MOTORS CORP.**

4. Connect the inflatable restraint steering wheel module coil connector located at the base of the steering column.

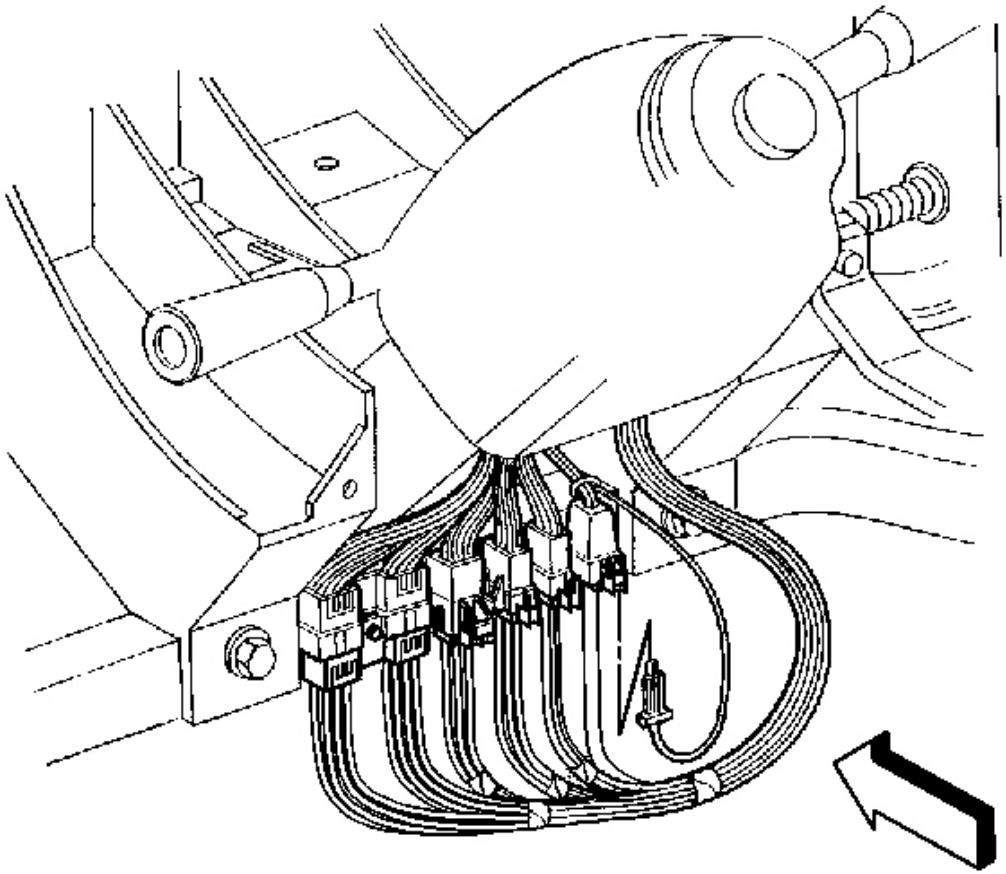

**Fig. 18: Steering Wheel Module Coil & CPA**
**Courtesy of GENERAL MOTORS CORP.**

5. Install the CPA to the steering wheel module coil connector located at the base of the steering column.

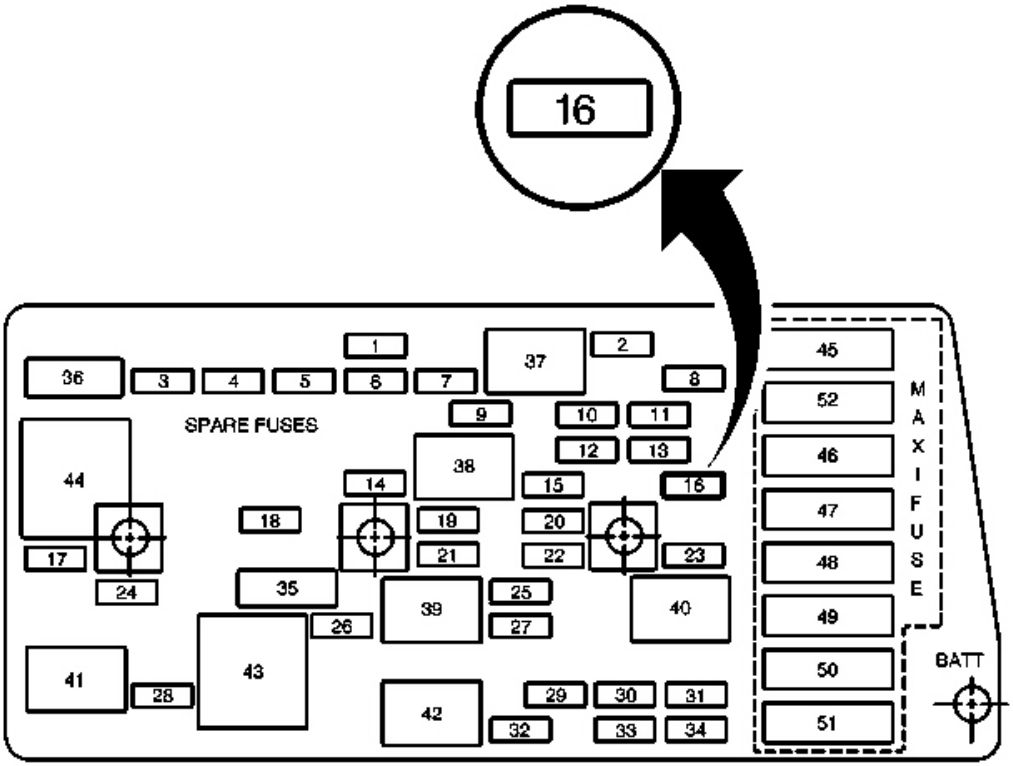


**Fig. 19: I/P Fuse Block & SDM Fuse**
**Courtesy of GENERAL MOTORS CORP.**

6. Install the left sound insulator. Refer to **Closeout/Insulator Panel Replacement - Left** in Instrument Panel, Gages and Console.
7. Install the SDM Fuse to the I/P fuse block.
8. Install the front floor kick-up panel. Refer to **Kick-Up Panel Replacement - Front Floor** in Interior Trim.
9. Staying well away from both air bags, turn the ignition switch to the ON position.
    1. The AIR BAG indicator will flash seven times.
    2. The AIR BAG indicator will then turn OFF.
10. Perform **Diagnostic System Check - SIR** if the AIR BAG indicator does not operate as described.

## SIR DISABLING AND ENABLING ZONE 5

### Disabling Procedure

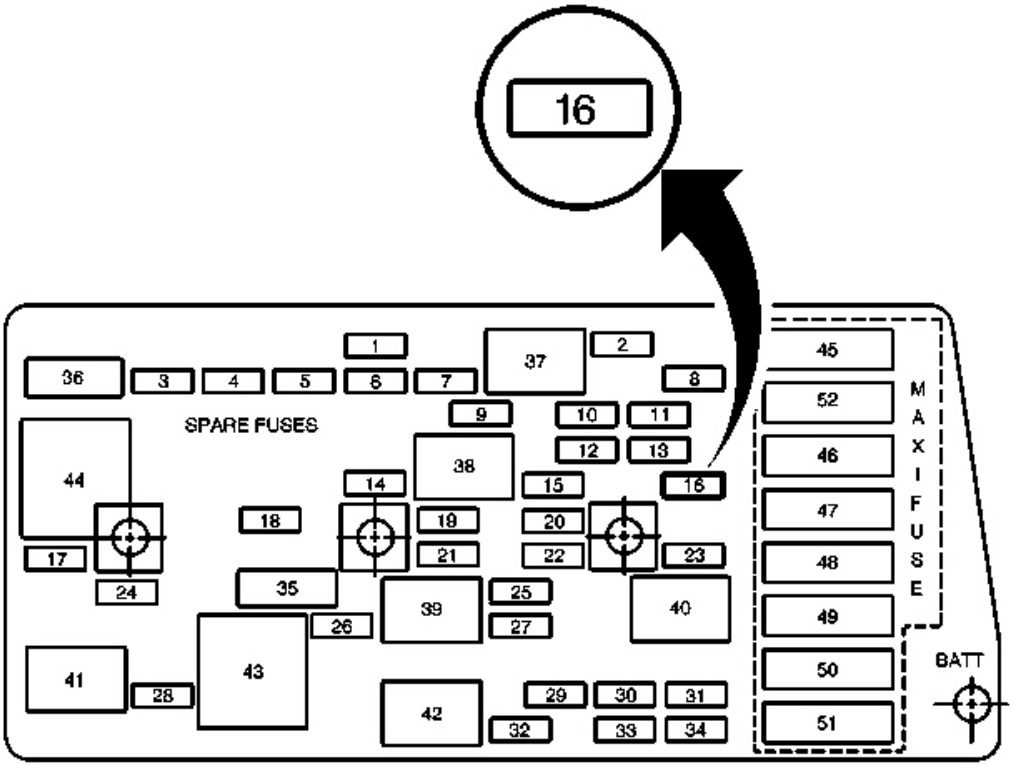


**Fig. 20: I/P Fuse Block & SDM Fuse**
**Courtesy of GENERAL MOTORS CORP.**

1. Turn the steering wheel so that the vehicle's wheels are pointing straight ahead.
2. Turn the ignition switch to the OFF position.
3. Remove the key from the ignition.
4. Remove the front floor kick-up panel. Refer to **Kick-Up Panel Replacement - Front Floor** in Interior Trim.

**IMPORTANT: With the SDM Fuse removed and the ignition switch in the ON position, the AIR BAG indicator illuminates. This is normal operation and does not indicate an SIR system malfunction.**

5. Remove the SDM Fuse from the I/P fuse block.

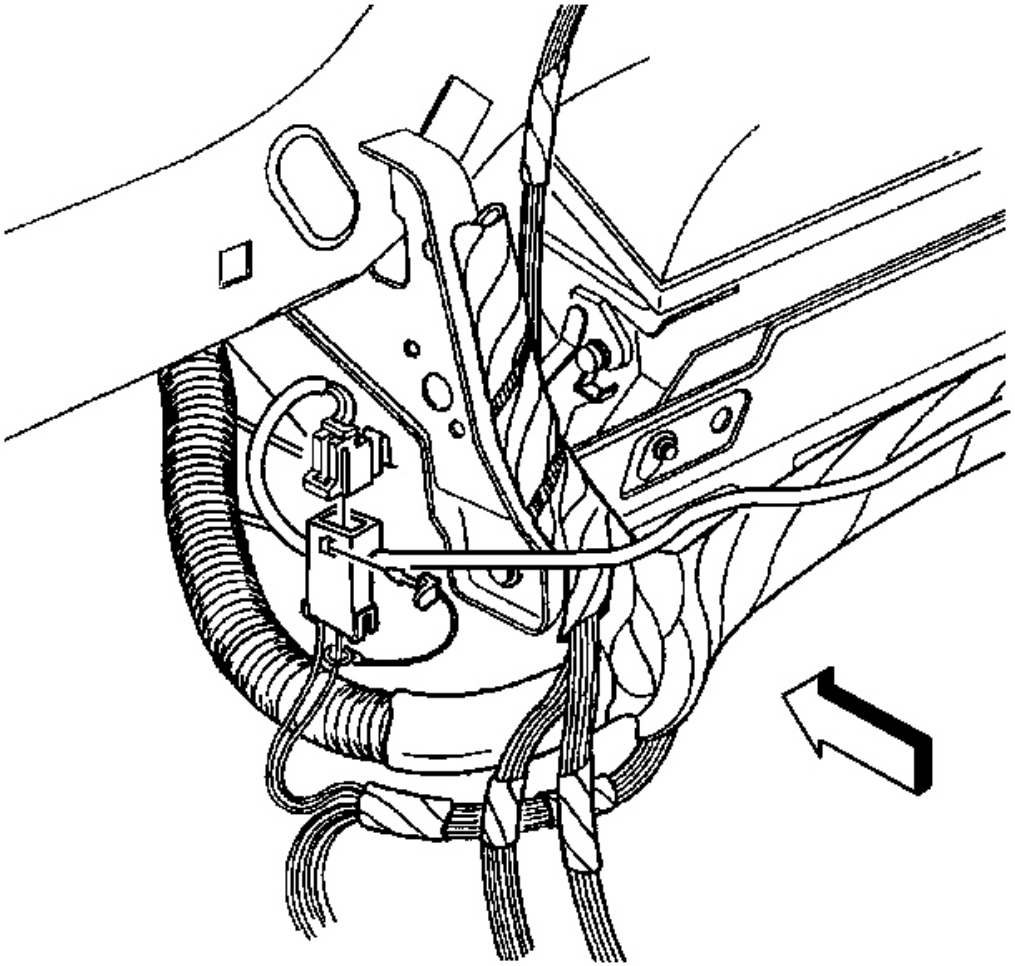

**Fig. 21: I/P Module Connector Removed**
**Courtesy of GENERAL MOTORS CORP.**

6. Remove the left sound insulator. Refer to **Closeout/Insulator Panel Replacement - Left** in Instrument Panel, Gages, and Console.
7. Remove the connector position assurance (CPA) from the inflatable restraint I/P module connector located at the base of the steering column.
8. Disconnect the I/P module connector located at the base of the steering column.

**Enabling Procedure**

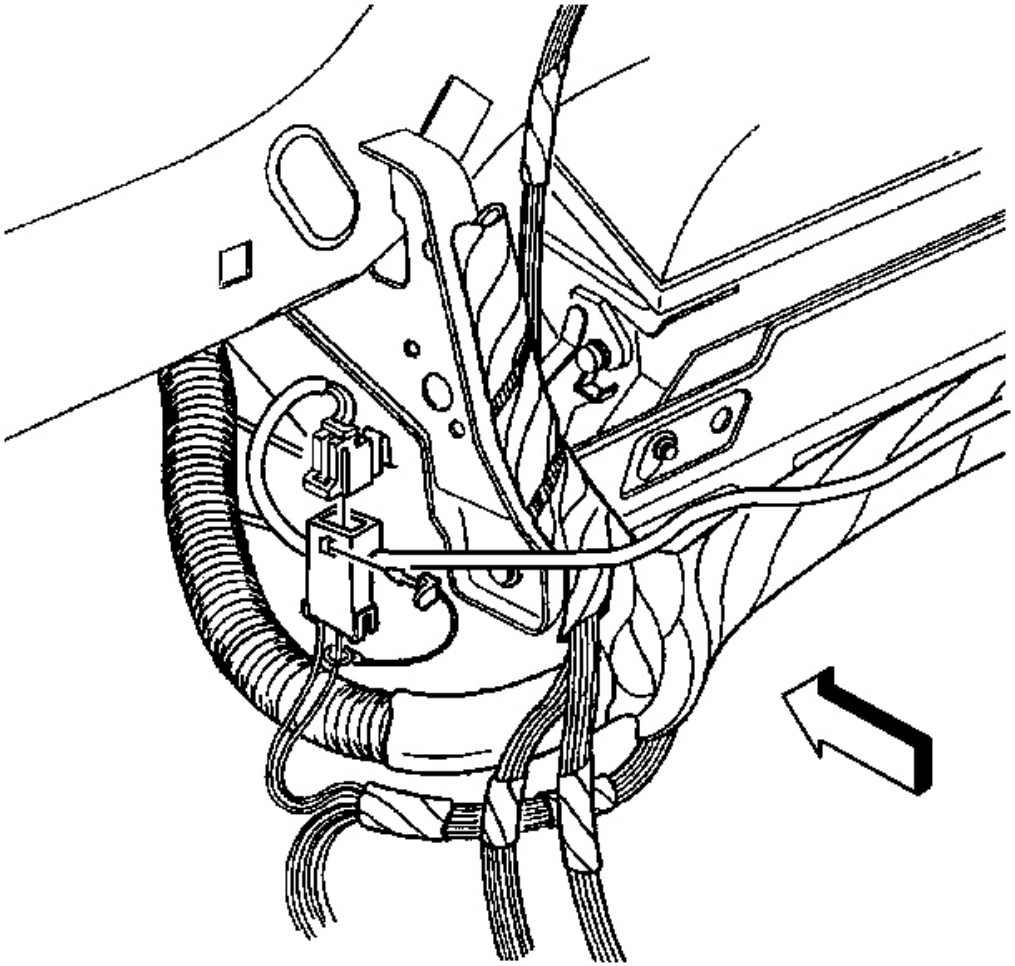

**Fig. 22: I/P Module Connector Removed**
**Courtesy of GENERAL MOTORS CORP.**

1. Remove the key from the ignition switch.
2. Connect the inflatable restraint I/P module connector located at the base of the steering column.
3. Install the CPA to the I/P module coil connector located at the base of the steering column.

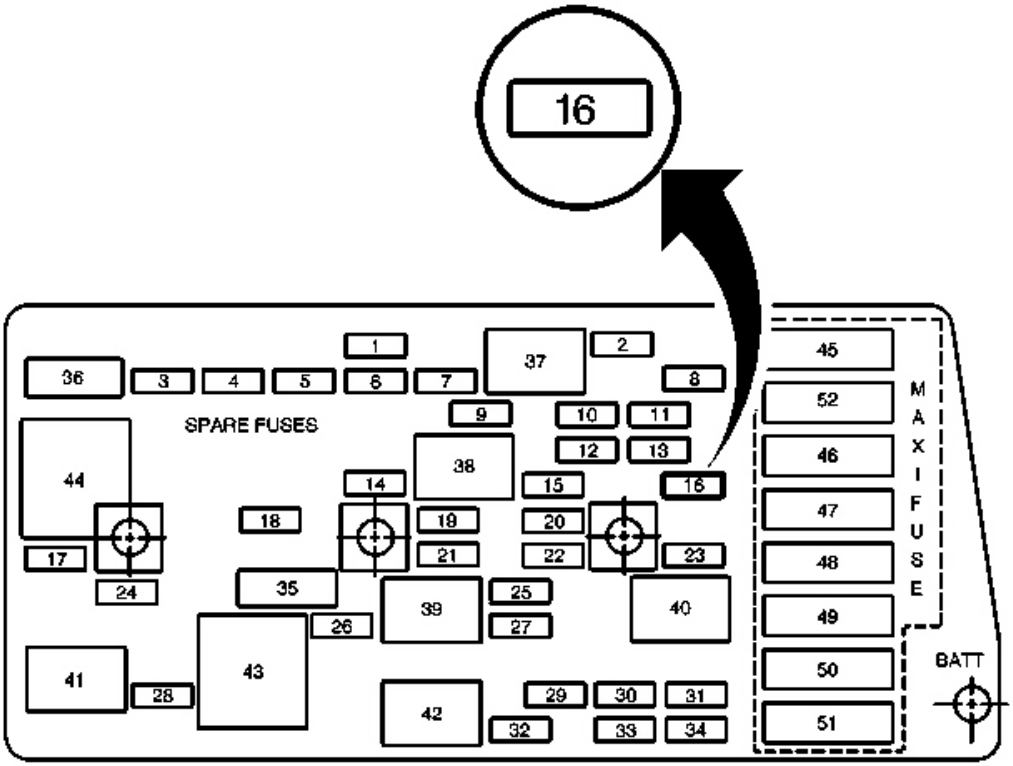


**Fig. 23: I/P Fuse Block & SDM Fuse**
**Courtesy of GENERAL MOTORS CORP.**

4. Install the left sound insulator. Refer to **Closeout/Insulator Panel Replacement - Left** in Instrument Panel, Gages, and Console.
5. Install the SDM Fuse to the I/P fuse block.
6. Install the front floor kick-up panel. Refer to **Kick-Up Panel Replacement - Front Floor** in Interior Trim.
7. Staying well away from both air bags, turn the ignition switch to the ON position.
    1. The AIR BAG indicator will flash seven times.
    2. The AIR BAG indicator will then turn OFF.
8. Perform the **Diagnostic System Check - SIR** if the AIR BAG indicator does not operate as described.

## INFLATABLE RESTRAINT SENSING AND DIAGNOSTIC MODULE REPLACEMENT

### Removal Procedure

**CAUTION: Do not strike or jolt the inflatable restraint sensing and diagnostic module (SDM). Before applying power to the SDM, make sure that it is securely fastened with the arrow facing toward the front of the vehicle. Failure to observe the correct installation procedure could cause SIR deployment, personal injury, or unnecessary SIR system repairs.**

**CAUTION: If the vehicle interior is exposed to moisture and becomes soaked up to the level of the sensing and diagnostic module (SDM), the SDM and SDM harness connector must be replaced. The SDM could be activated when powered, which could cause airbag deployment and result in personal injury.**

**CAUTION: Refer to SIR Caution in Cautions and Notices.**

1. Disable the SIR system. Refer to **SIR Disabling and Enabling Zone 4** .
2. Remove the accessory trim plate. Refer to **Trim Plate Replacement - Instrument Panel (I/P) Accessory** in Instrument Panel, Gages and Console.

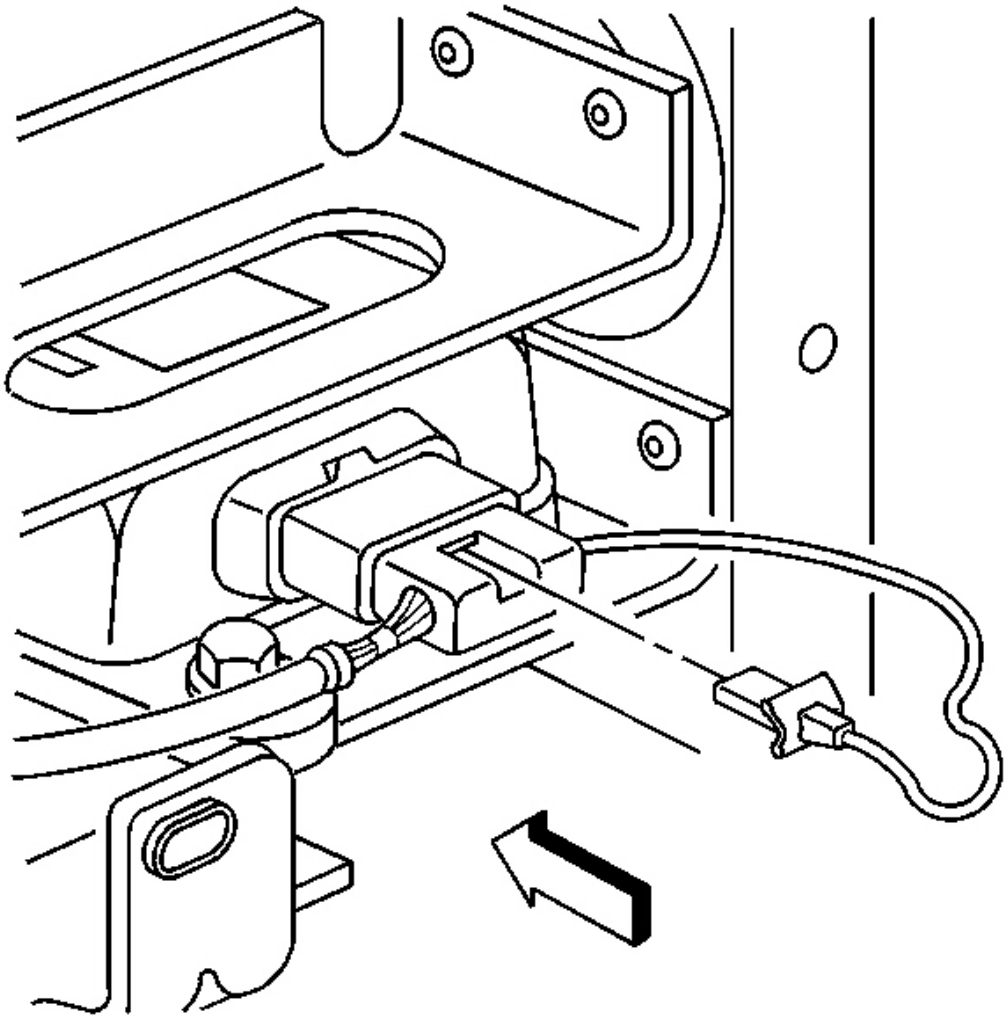

**Fig. 24: SDM Harness Connector & CPA**
**Courtesy of GENERAL MOTORS CORP.**

3. Remove the heater and A/C control head.
4. Remove the connector position assurance (CPA) from the SDM harness connector.

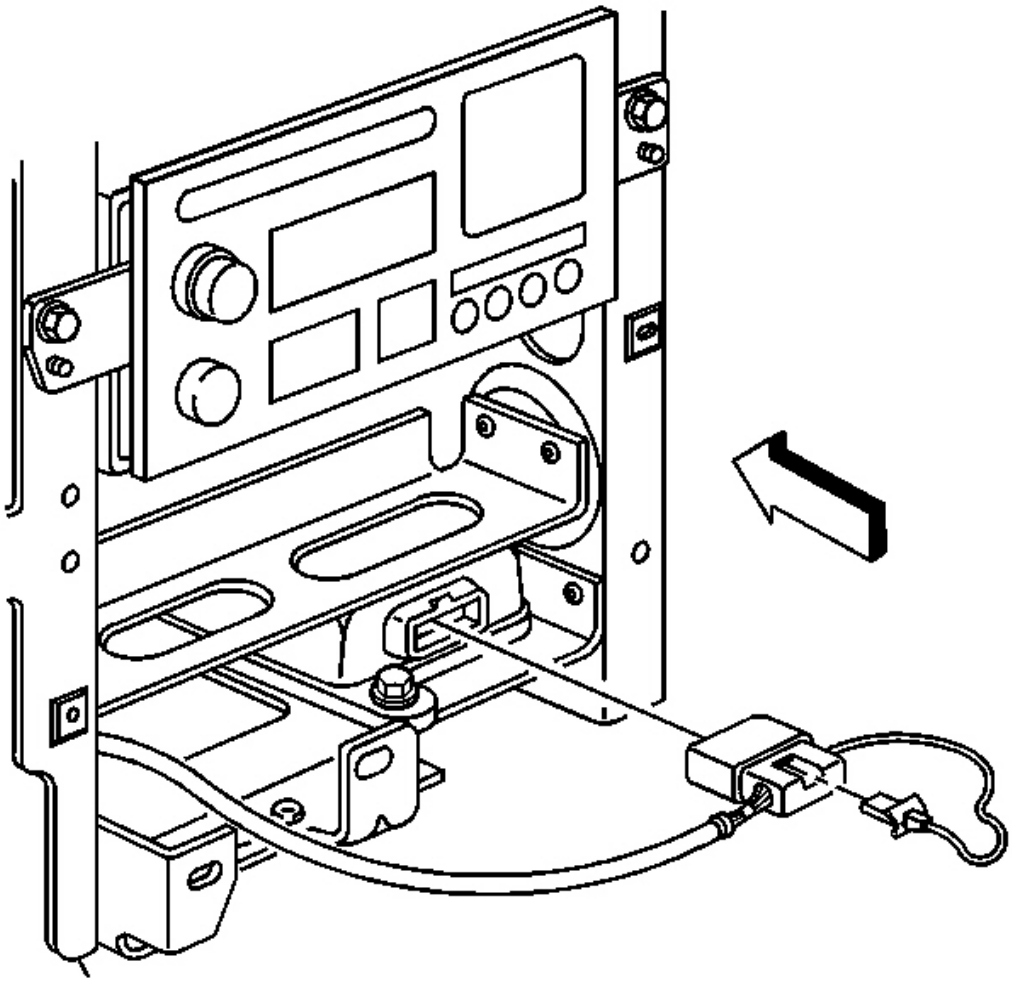

**Fig. 25: SDM Harness Connector**
**Courtesy of GENERAL MOTORS CORP.**

5. Disconnect the SDM harness connector.

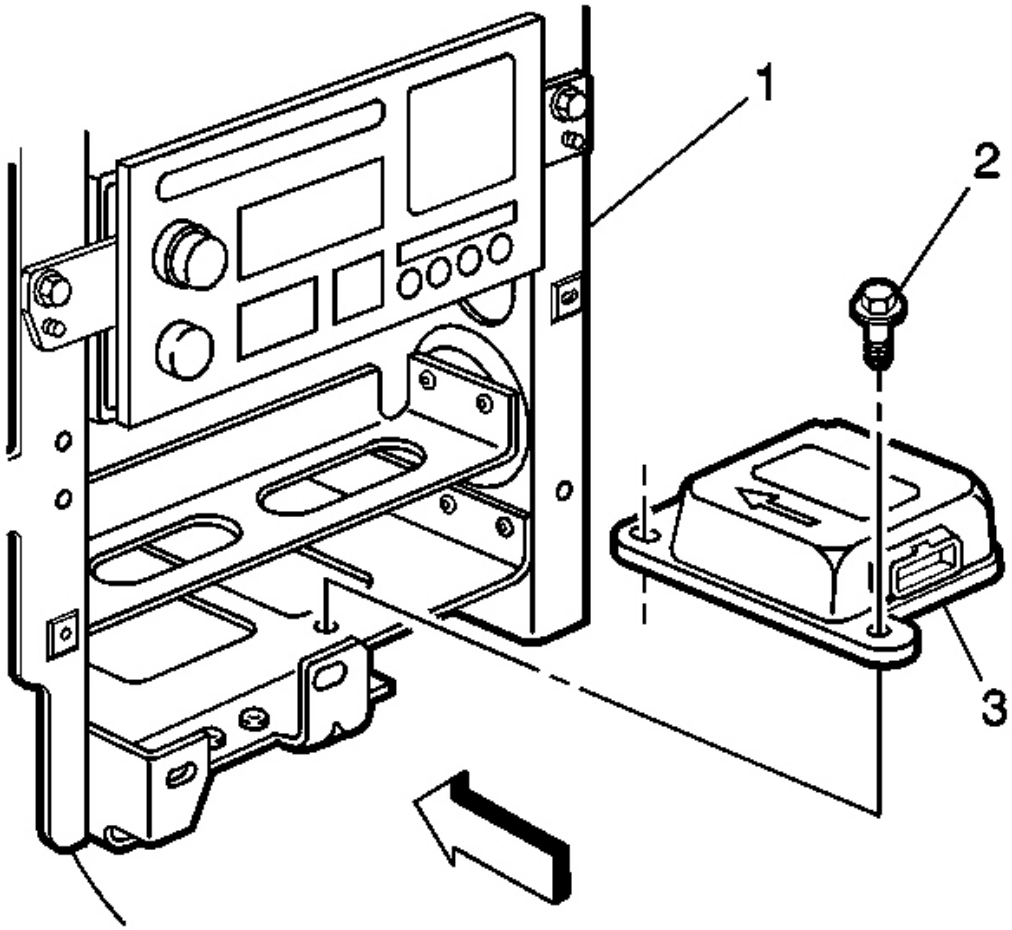


**Fig. 26: I/P Center Support System, SDM & Mounting Fasteners**
**Courtesy of GENERAL MOTORS CORP.**

6. Remove the SDM (3) mounting fasteners (2).
7. Remove the SDM from the I/P center support system (1).

**Installation Procedure**

1. Remove any dirt, grease, or other impurities from the mounting surface.

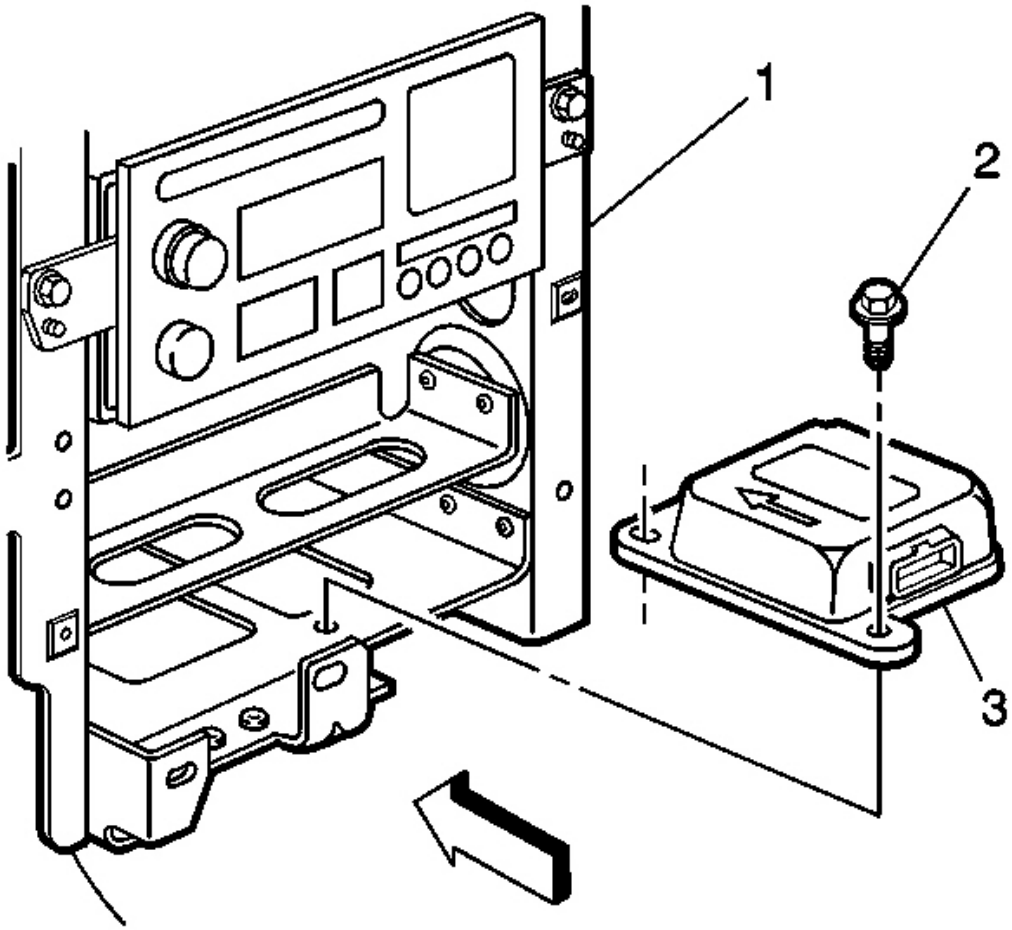


**Fig. 27: I/P Center Support System, SDM & Mounting Fasteners**
**Courtesy of GENERAL MOTORS CORP.**

2. Install the SDM (3) horizontally to the I/P center support system (1).
3. Point the arrow on the SDM toward the front of the vehicle.

**NOTE: Refer to Fastener Notice in Cautions and Notices.**

4. Install the SDM mounting fasteners (2).

**Tighten:** Tighten the fasteners to 10 N.m (89 lb in).

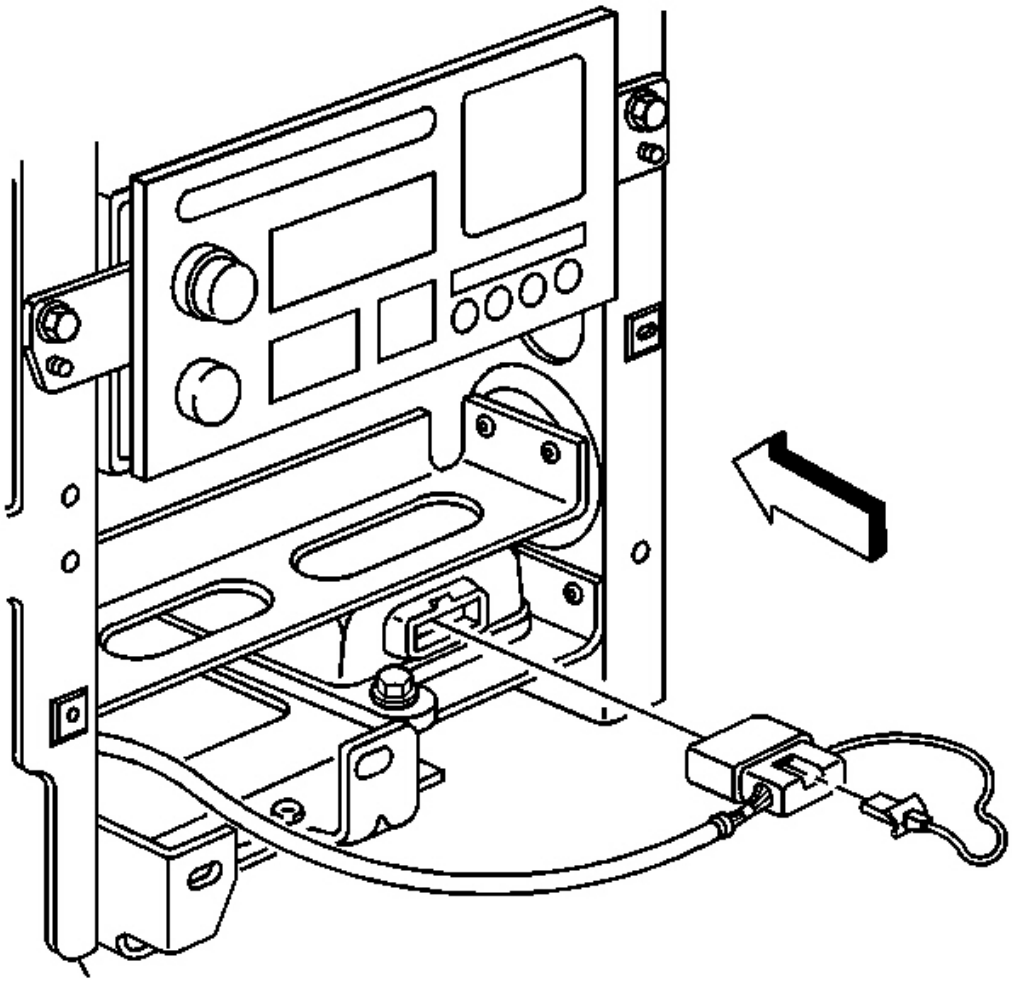

**Fig. 28: SDM Harness Connector**
**Courtesy of GENERAL MOTORS CORP.**

5. Install the SDM harness connector to the SDM.

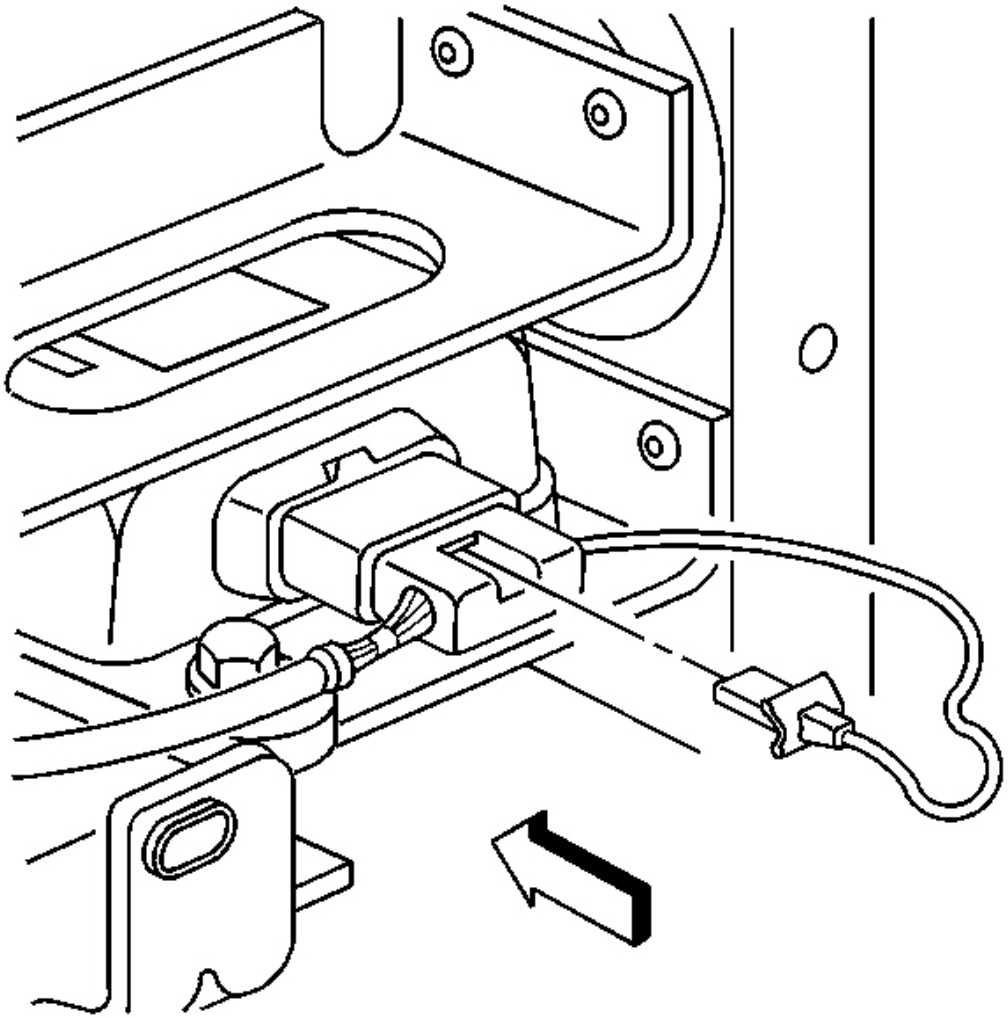

**Fig. 29: SDM Harness Connector & CPA**
**Courtesy of GENERAL MOTORS CORP.**

6. Install the CPA to the SDM harness connector.
7. Install the heater and A/C control head.
8. Install the accessory trim plate. Refer to **Trim Plate Replacement - Instrument Panel (I/P) Accessory** in Instrument Panel, Gages and Console.

**IMPORTANT: The AIR BAG indicator may remain ON after the SDM has been replaced. DTC B1001 may set requiring the SDM part number to be set in multiple**

**modules. If the indicator remains ON after enabling the SIR system, perform the diagnostic system check and follow the steps thoroughly to ensure that the SDM is set properly.**

9. Enable the SIR system. Refer to **SIR Disabling and Enabling Zone 4** .

## INFLATABLE RESTRAINT STEERING WHEEL MODULE REPLACEMENT

### Removal Procedure

**CAUTION: Refer to SIR Caution in Cautions and Notices.**

**CAUTION: Refer to SIR Inflator Module Handling and Storage Caution in Cautions and Notices.**

1. Disable the SIR system. Refer to **SIR Disabling and Enabling Zone 3** .

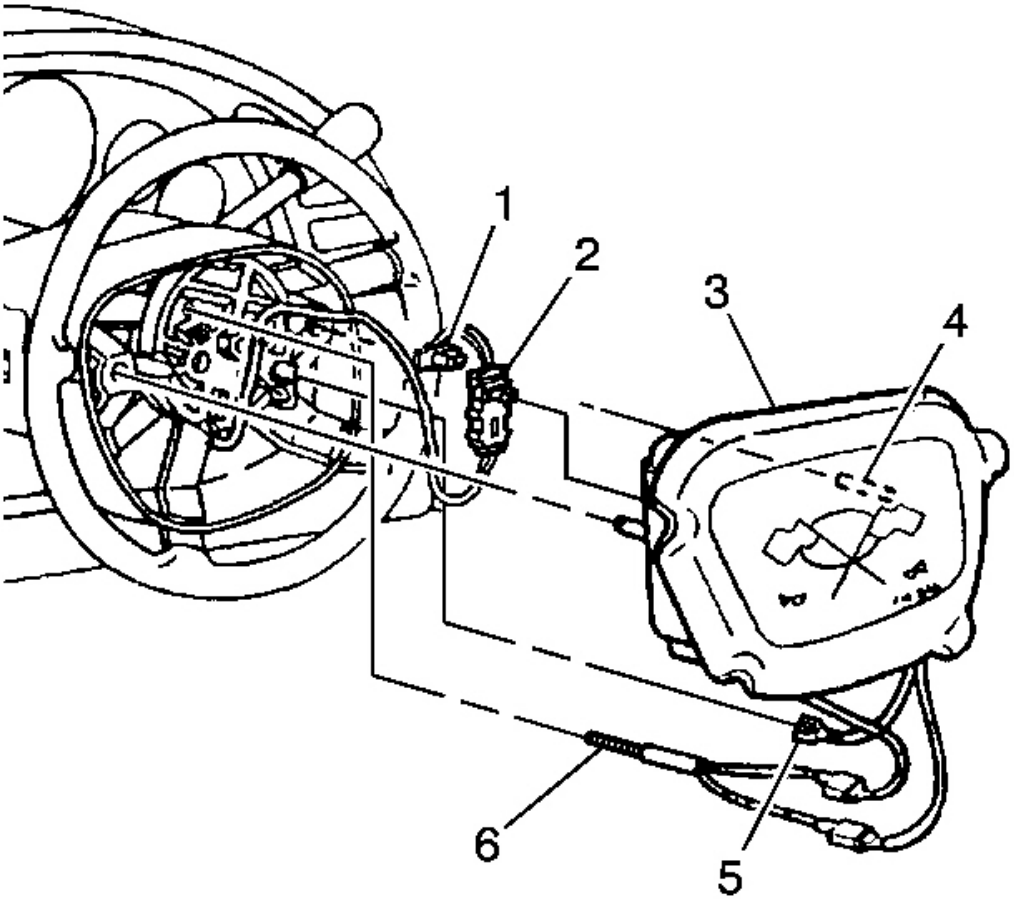


**Fig. 30: Inflatable Restraint Module, Steering Wheel Module, Ground Wire, Horn Wiring Harness & Screws**
**Courtesy of GENERAL MOTORS CORP.**

2. Remove the screws (4) retaining the inflatable restraint module (3) to the steering wheel.
3. Remove the inflatable restraint module (3) from the steering wheel.
4. Disconnect the connector position assurance (CPA) (1) from the electrical connector (2) on the module coil.
5. Disconnect the electrical connector (2) from the back of the steering wheel module (3).
6. Disconnect the horn wiring harness (6) from the steering column.
7. Disconnect the ground wire (5) from the steering column.
8. Remove the steering wheel module (3) from the vehicle.
9. Fully deploy the module before disposal. If the module was replaced under warranty, fully deploy and

dispose of the module after the required retention period. Refer to **Inflator Module Handling and Scrapping** .

**Installation Procedure**

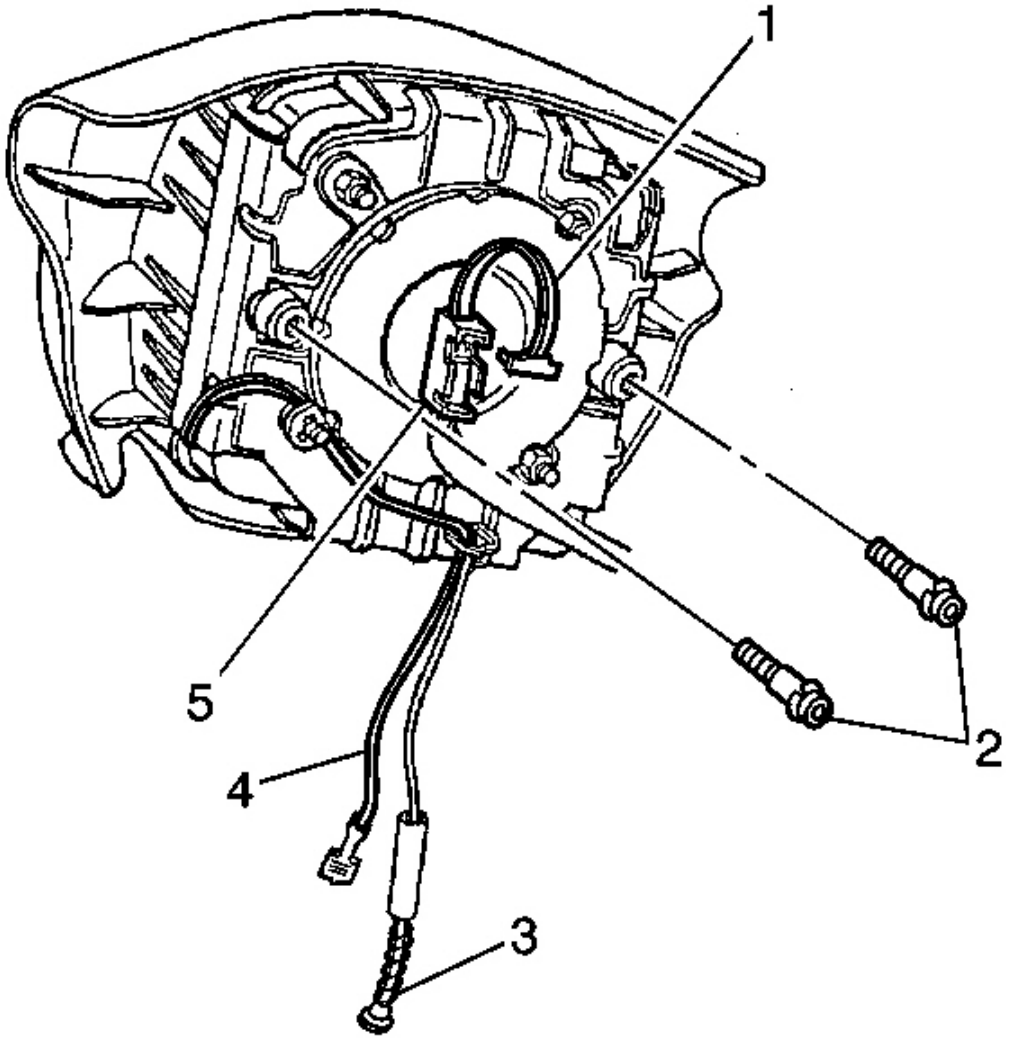


**Fig. 31: Inflatable Restraint Steering Wheel Module & Screws**
**Courtesy of GENERAL MOTORS CORP.**

**NOTE: Refer to Fastener Notice in Cautions and Notices.**

1. Install the inflatable restraint steering wheel module (3) and secure with the retaining screws (2).

   **Tighten:** Tighten the screws to 6 N.m (54 lb in).

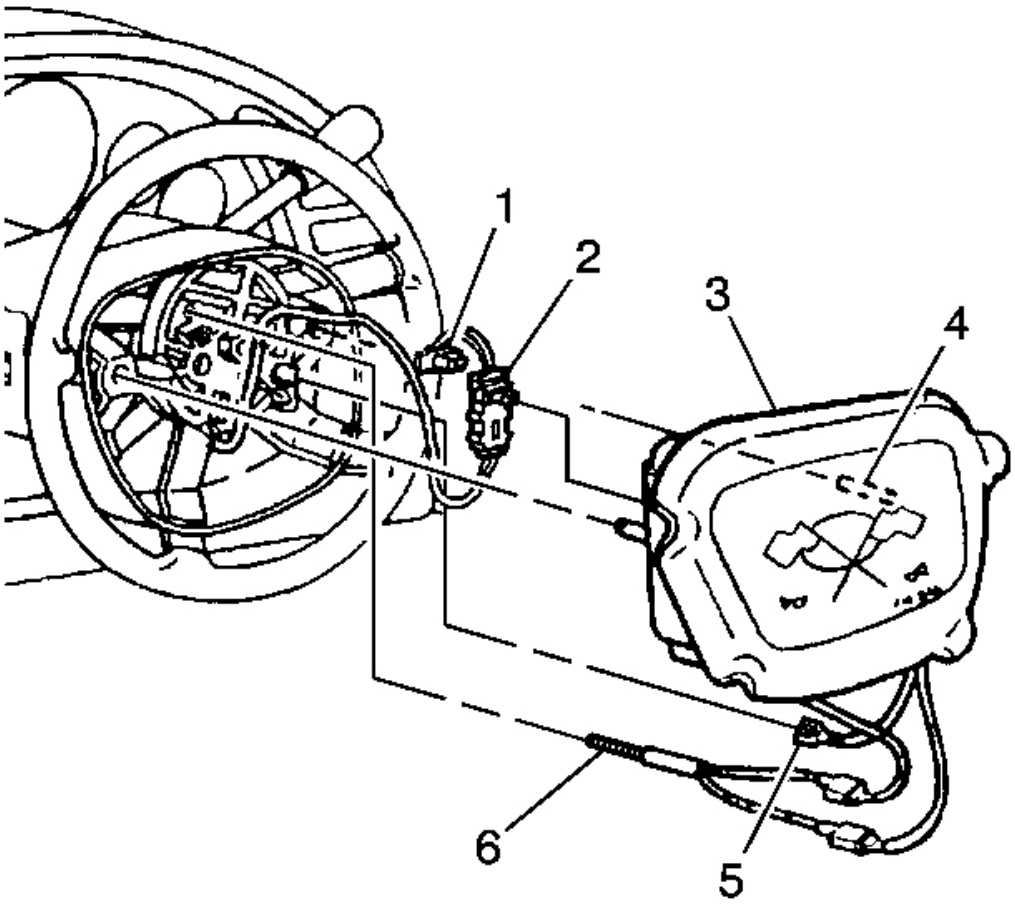


**Fig. 32: Inflatable Restraint Module, Steering Wheel Module, Ground Wire, Horn Wiring Harness & Screws**
**Courtesy of GENERAL MOTORS CORP.**

2. Connect the ground wire (5) to the steering column.
3. Connect the horn wiring harness (6) to the steering column.
4. Connect the electrical connector (2) to the back of the steering wheel module (3).
5. Install the CPA (1) to the electrical connector (2).
6. Install the inflatable restraint module (3) onto the steering wheel by pushing on both sides of the module until the retaining screws snap into place.

7. Enable the SIR system. Refer to **SIR Disabling and Enabling Zone 3** .

## INFLATABLE RESTRAINT STEERING WHEEL MODULE COIL REPLACEMENT

### Removal Procedure

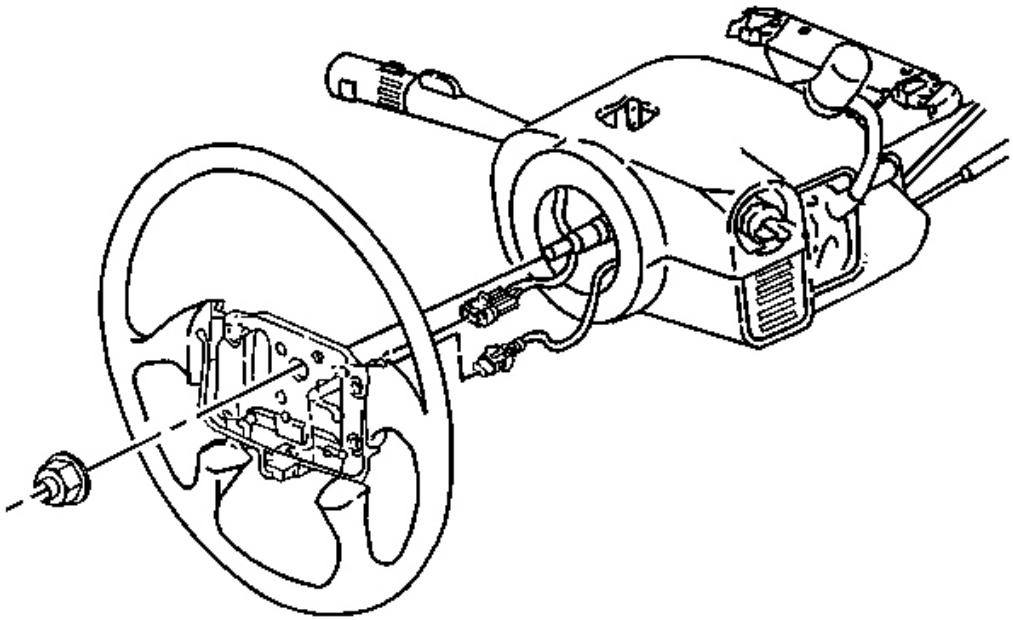

**Fig. 33: Steering Wheel, Sir System & Upper & Lower Shrouds**
**Courtesy of GENERAL MOTORS CORP.**

1. Disable the SIR system. Refer to **SIR Disabling and Enabling Zone 3** .
2. Remove the SIR system. Refer to **Inflatable Restraint Steering Wheel Module Replacement** .
3. Remove the upper and lower shrouds. Refer to **Steering Column Trim Covers Replacement (Telescoping)** or **Steering Column Trim Covers Replacement (Manual)** in Steering Wheel and Column.
4. Remove the steering wheel. Refer to **Steering Wheel Replacement** in Steering Wheel and Column.

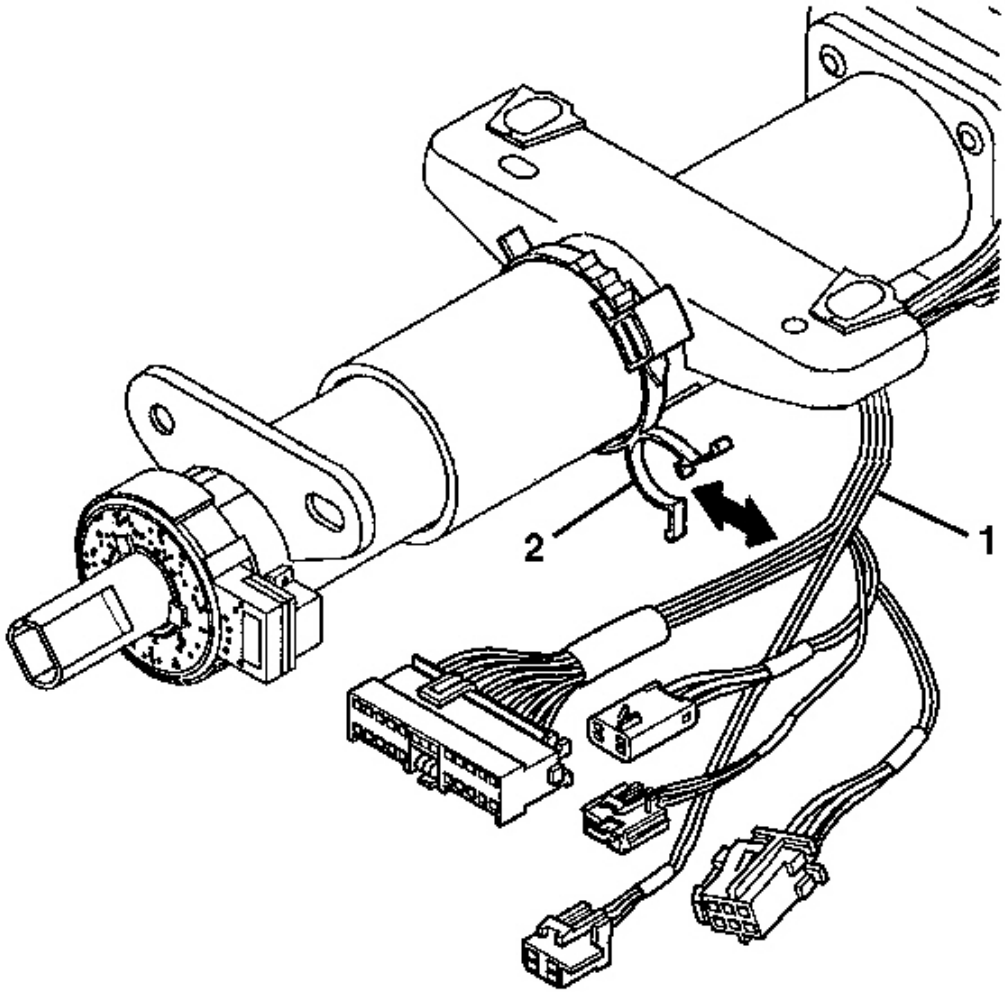


**Fig. 34: Steering Wheel Column Wire Harness & Wire Harness Straps**
**Courtesy of GENERAL MOTORS CORP.**

5. Remove the steering wheel column wire harness (1) from the wire harness straps (2).

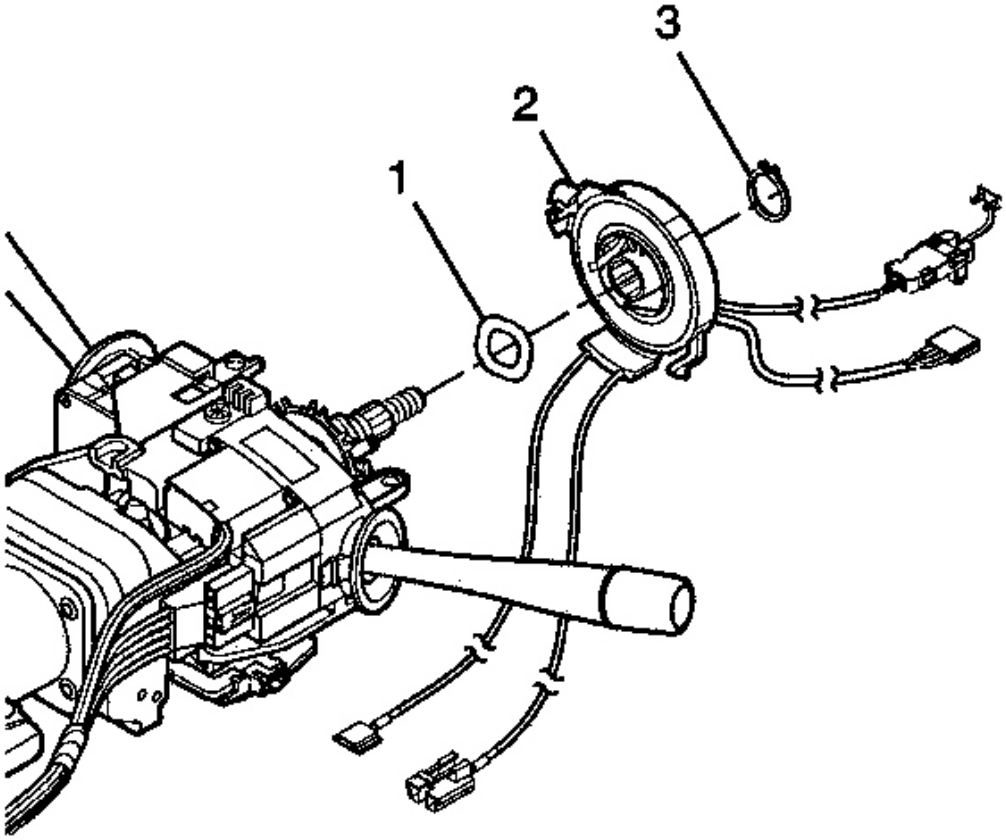


**Fig. 35: Steering Shaft, SIR Coil & Retaining Ring**
**Courtesy of GENERAL MOTORS CORP.**

6. Remove the retaining ring (3).
7. Remove the SIR coil (2) from the steering shaft.

**Installation Procedure**

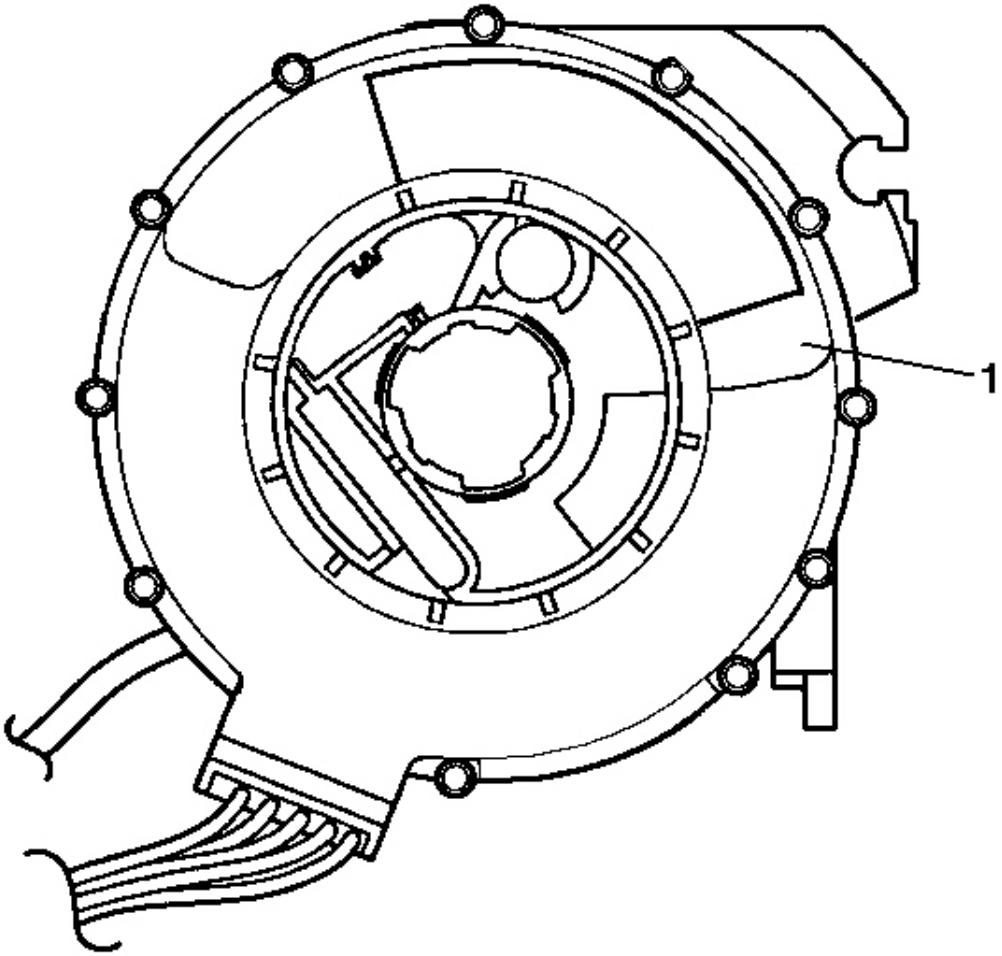


**Fig. 36: SIR Coil Assembly**
**Courtesy of GENERAL MOTORS CORP.**

**IMPORTANT: Center the SIR coil assembly before installation.**

1. Align the wheels straight ahead.
2. Center the SIR coil assembly (1), if needed. Refer to **Inflatable Restraint Steering Wheel Module Coil Centering** in Steering Wheel and Column.

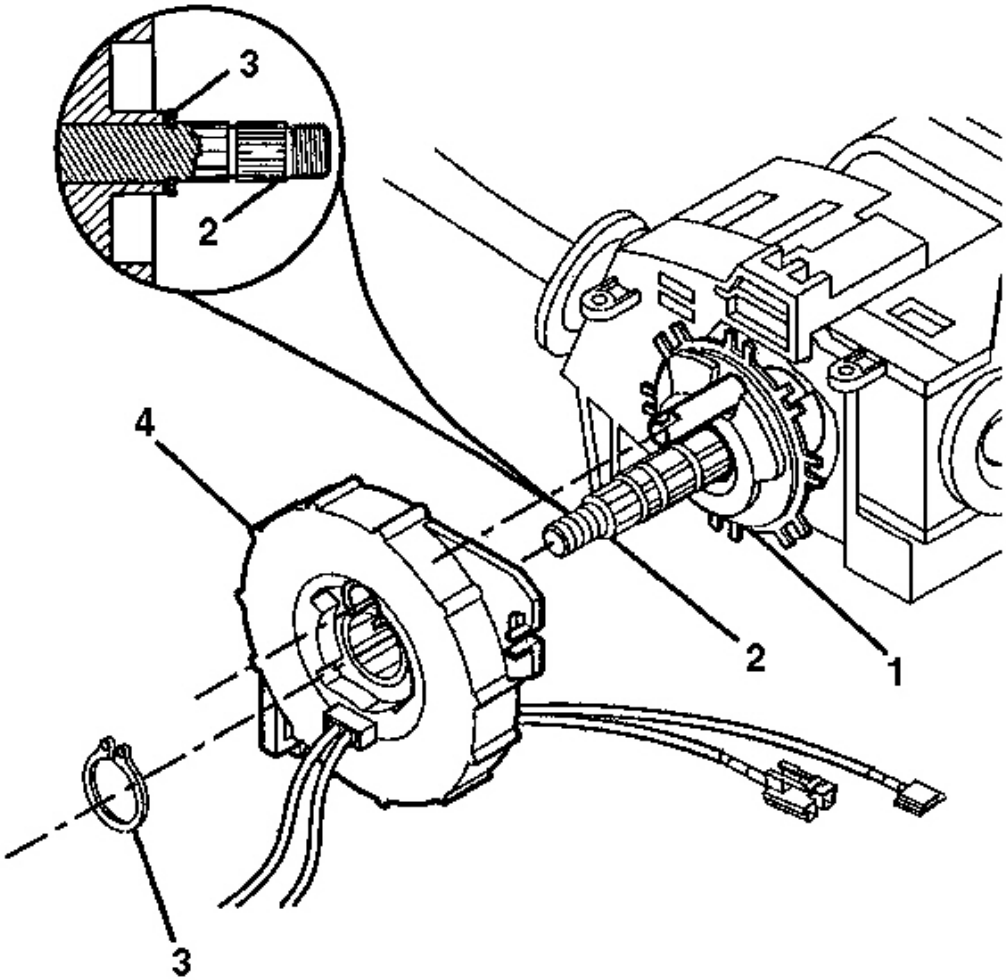


**Fig. 37: SIR Coil, Steering Shaft & Retaining Ring**
**Courtesy of GENERAL MOTORS CORP.**

3. Install the existing SIR coil assembly (4) to the steering shaft assembly (2) following these steps:
    1. Position the SIR coil assembly (4) to the steering shaft assembly (2).
    2. Align the opening in the SIR coil assembly (4) with the horn tower and the locating bump between the 2 tabs on the lock housing cover and sleeve assembly.
    3. Seat the SIR coil assembly (4) onto the steering shaft assembly (2).
4. Install a new SIR coil assembly (4) to the steering shaft assembly (2) following these steps:
    1. Assemble the pre-centered SIR coil assembly (4) to the steering shaft assembly (2).
    2. Position the SIR coil assembly (4) to the steering shaft assembly (2).

3. Align the opening in the SIR coil assembly (4) with the horn tower and the locating bump between the 2 tabs on the lock housing cover and sleeve assembly.
4. Remove and discard the centering tab.

5. Install the retaining ring (3) to the steering shaft assembly (2).

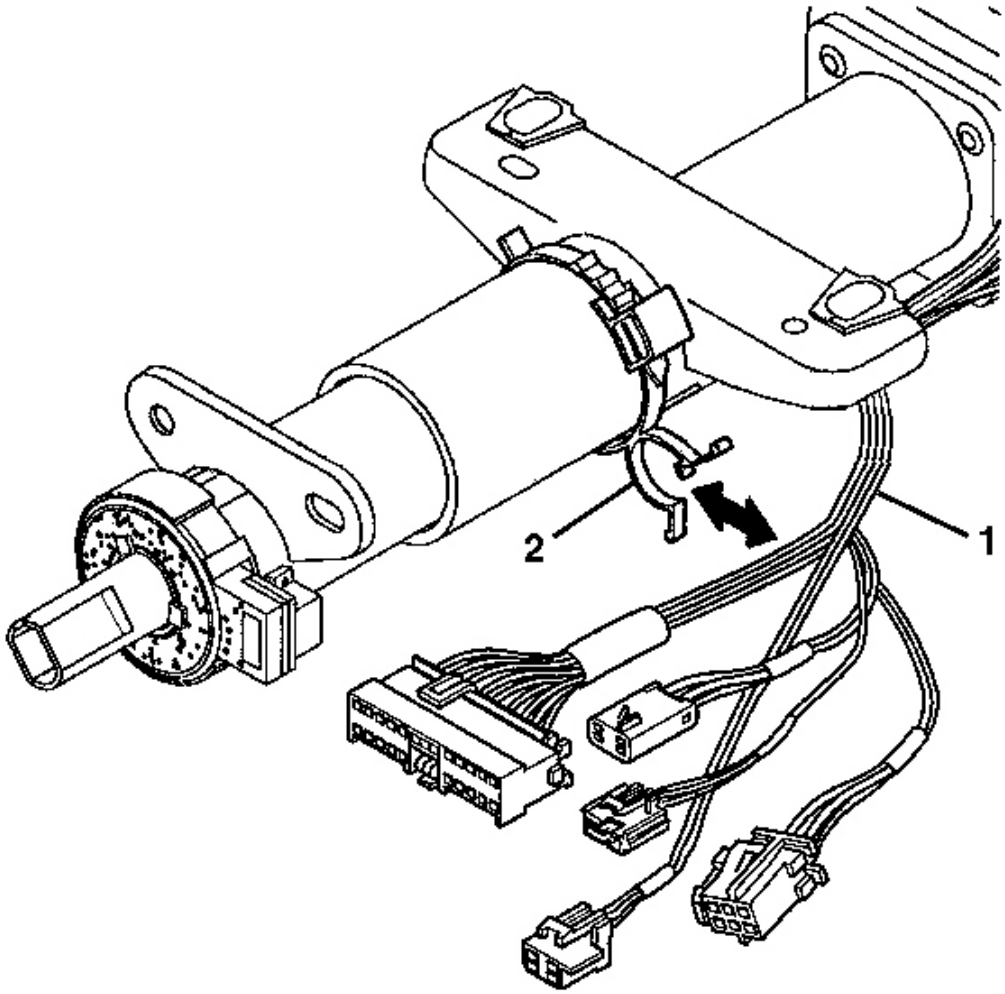


**Fig. 38: Steering Wheel Column Wire Harness & Wire Harness Straps**
**Courtesy of GENERAL MOTORS CORP.**

6. Route the lower coil wire harness along the steering column.
7. Install the steering wheel column wire harness (1) to the wire harness straps (2).

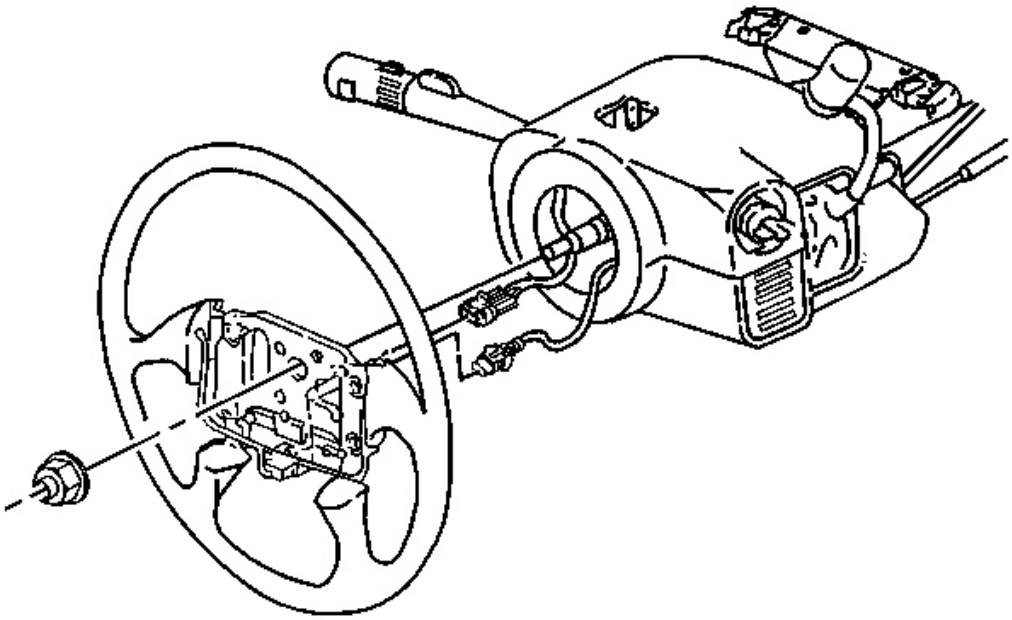

**Fig. 39: Steering Wheel, Sir System & Upper & Lower Shrouds**
**Courtesy of GENERAL MOTORS CORP.**

8. Install the steering wheel. Refer to **Steering Wheel Replacement** in Steering Wheel and Column.
9. Remove the upper and lower shrouds. Refer to **Steering Column Trim Covers Replacement (Telescoping)** or **Steering Column Trim Covers Replacement (Manual)** in Steering Wheel and Column.
10. Install the SIR system. Refer to **Inflatable Restraint Steering Wheel Module Replacement** .
11. Enable the SIR system. Refer to **SIR Disabling and Enabling Zone 3** .

## INFLATABLE RESTRAINT INSTRUMENT PANEL MODULE REPLACEMENT

### Removal Procedure

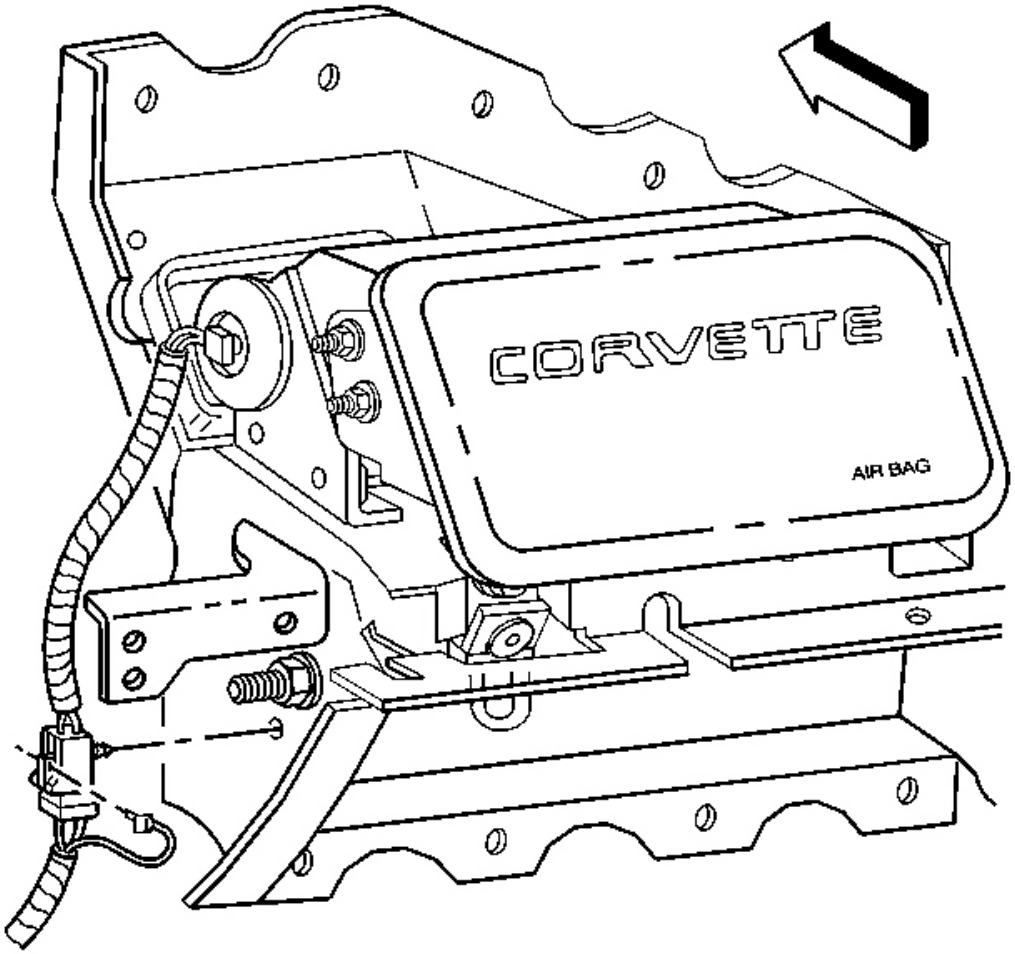


**Fig. 40: Inflatable Restraint Instrument Panel Module**
**Courtesy of GENERAL MOTORS CORP.**

**CAUTION: Refer to SIR Inflator Module Handling and Storage Caution in Cautions and Notices.**

**CAUTION: Refer to SIR Caution in Cautions and Notices.**

1. Disable the SIR system. Refer to **SIR Disabling and Enabling Zone 5** .
2. Remove the I/P upper trim pad. Refer to **Trim Pad Replacement - Instrument Panel (I/P) Upper** in Instrument Panel, Gages and Console.

3. Remove the connector position assurance (CPA) from the I/P module harness connector.

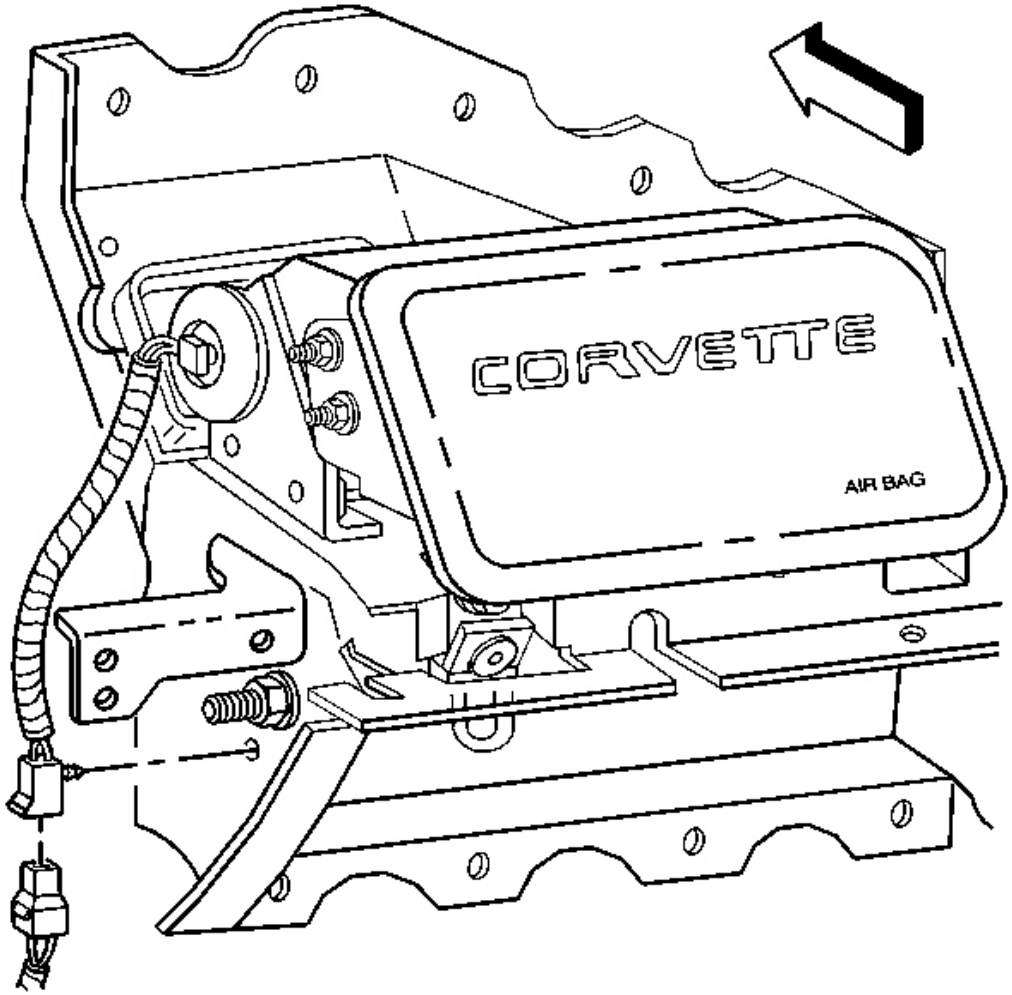


**Fig. 41: I/P Module & Pigtail Connector**
**Courtesy of GENERAL MOTORS CORP.**

4. Disconnect the pigtail connector from the I/P module.

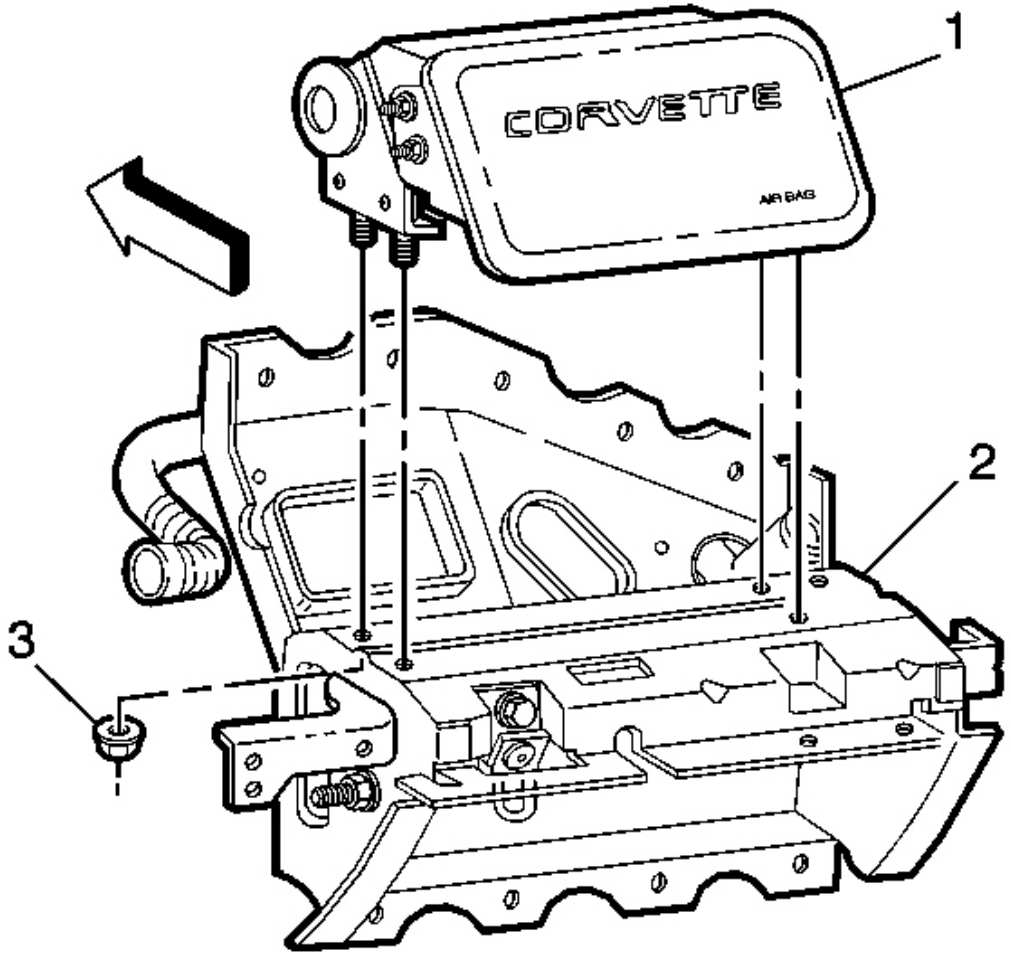


**Fig. 42: I/P Module, Mounting Fasteners & Bracket**
**Courtesy of GENERAL MOTORS CORP.**

5. Remove the mounting fasteners (3) from the I/P module.
6. Remove the I/P module (1) from the bracket (2).
7. Fully deploy the module before disposal. If the module was replaced under warranty, fully deploy and dispose of the module after the required retention period. Refer to **Inflator Module Handling and Scrapping** .

**Installation Procedure**

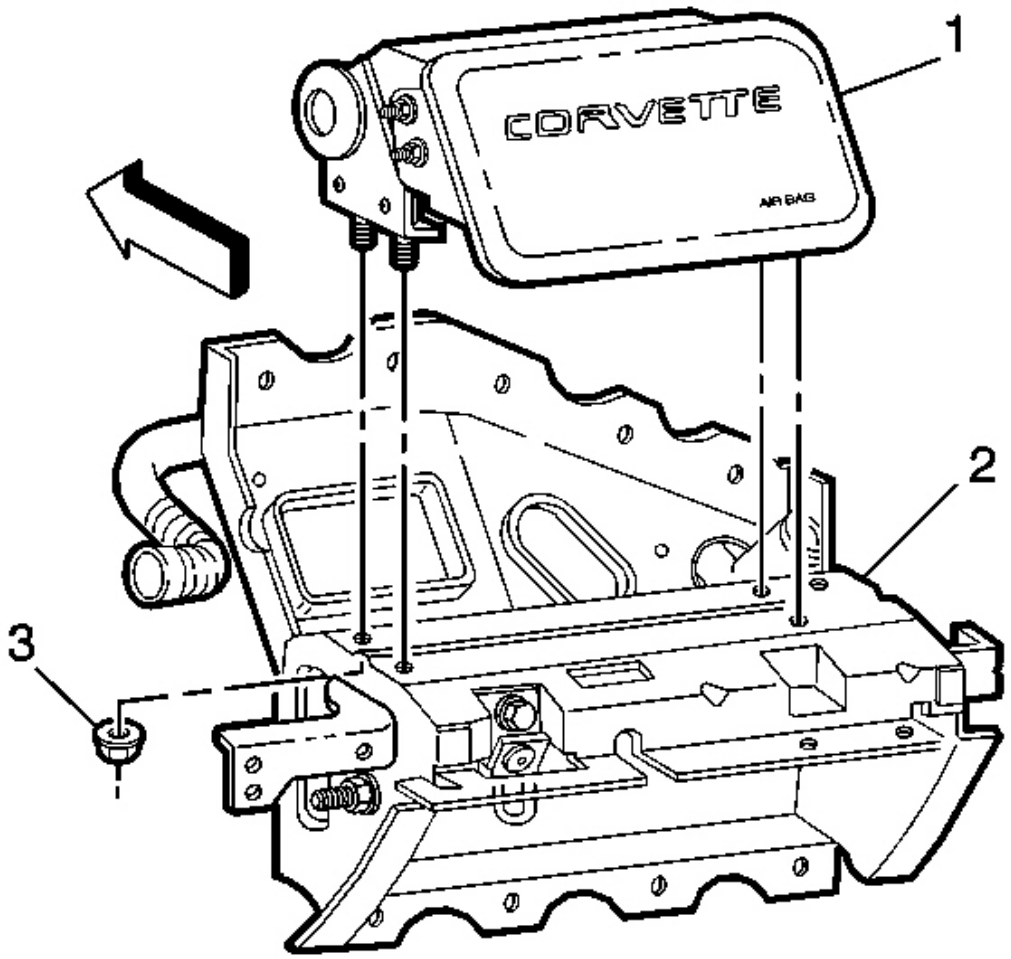


**Fig. 43: I/P Module, Mounting Fasteners & Bracket**
**Courtesy of GENERAL MOTORS CORP.**

1. Install the I/P module (1) to the bracket (2).

   **NOTE: Refer to Fastener Notice in Cautions and Notices.**

2. Install the I/P module mounting fasteners (3).

   **Tighten:** Tighten the fasteners to 10 N.m (89 lb in).

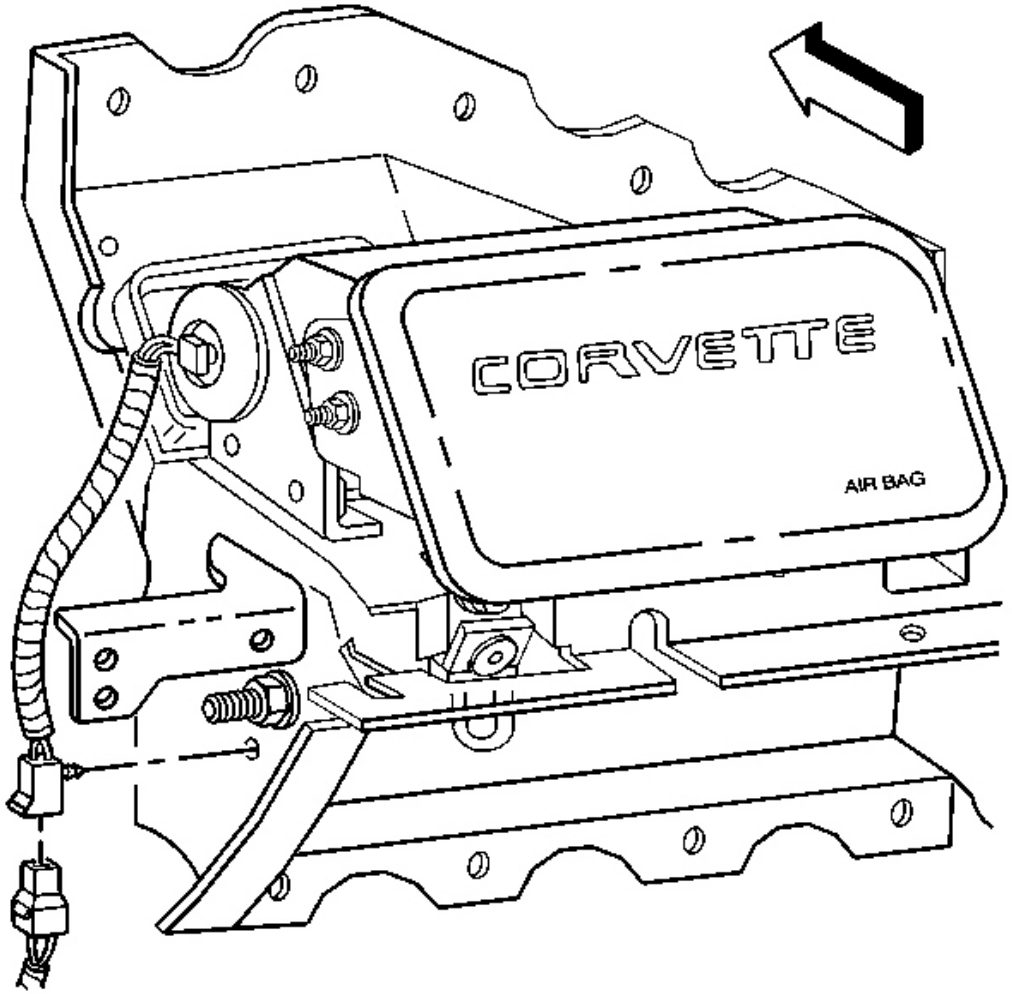


**Fig. 44: I/P Module & Pigtail Connector**
**Courtesy of GENERAL MOTORS CORP.**

3. Connect the pigtail connector to the I/P module.

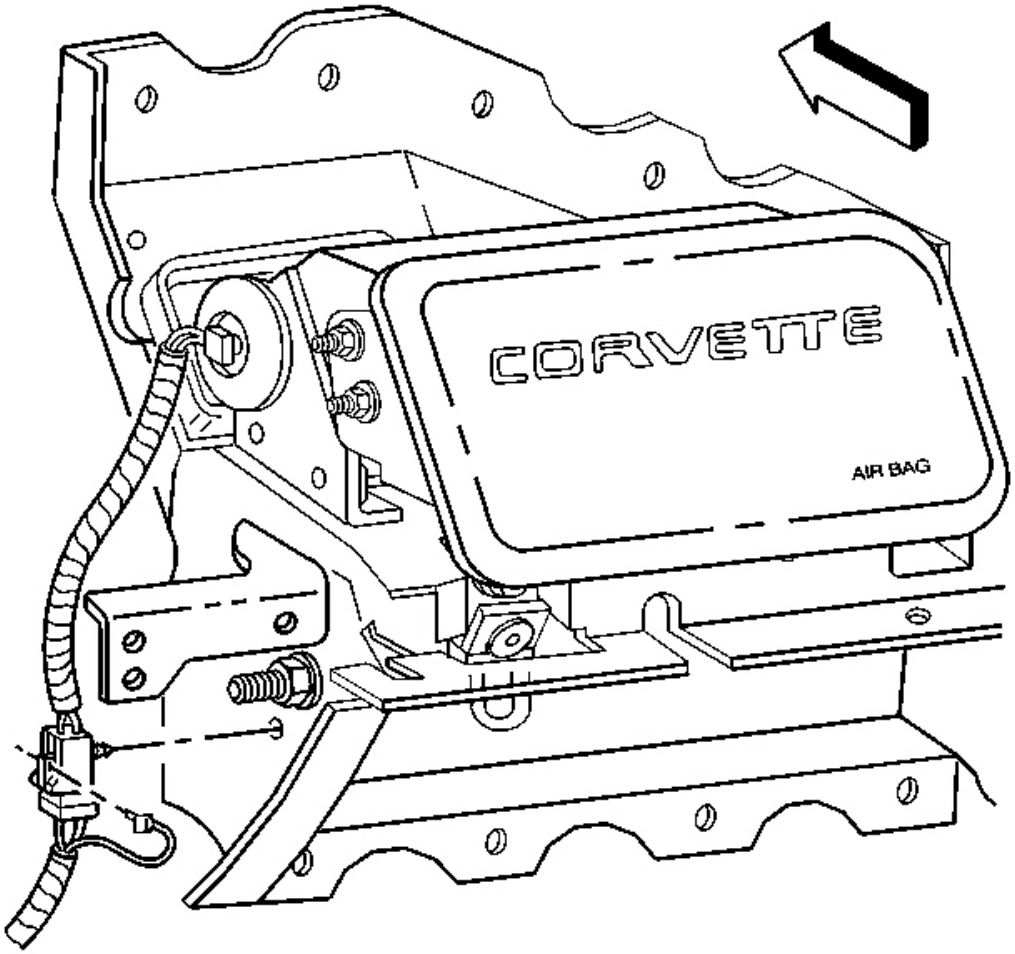


**Fig. 45: Inflatable Restraint Instrument Panel Module**
**Courtesy of GENERAL MOTORS CORP.**

4. Install the CPA to the harness connector on the I/P module.
5. Install the I/P upper trim pad. Refer to **Trim Pad Replacement - Instrument Panel (I/P) Upper** in Instrument Panel, Gages and Console.
6. Enable the SIR system. Refer to **SIR Disabling and Enabling Zone 5** .

## INFLATABLE RESTRAINT INSTRUMENT PANEL (I/P) MODULE DISABLE SWITCH REPLACEMENT

### Removal Procedure

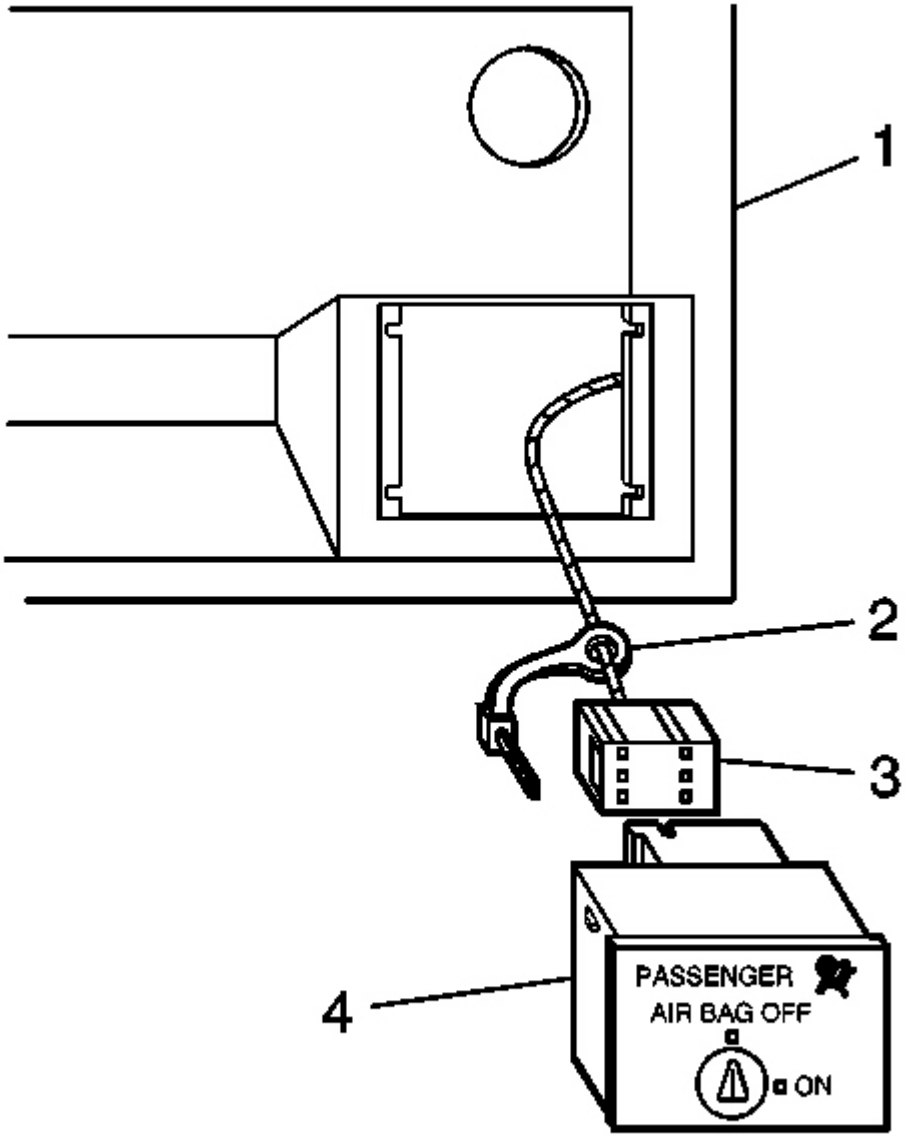


**Fig. 46: CPA, Wiring Harness Connector, Passenger Compartment Door & Inflatable Restraint IP Module Switch**
**Courtesy of GENERAL MOTORS CORP.**

1. Open the instrument panel (IP) passenger compartment door (1).
2. Use a small flat blade screwdriver behind the top right hand side of the switch mounting to pry the inflatable restraint IP module switch (4) from the switch mounting in the instrument panel (IP) passenger

compartment door (1).

3. Remove the CPA (2) from the wiring harness connector (3).
4. Disconnect the wiring harness connector (3) from the inflatable restraint IP module switch (4) connector.

**Installation Procedure**

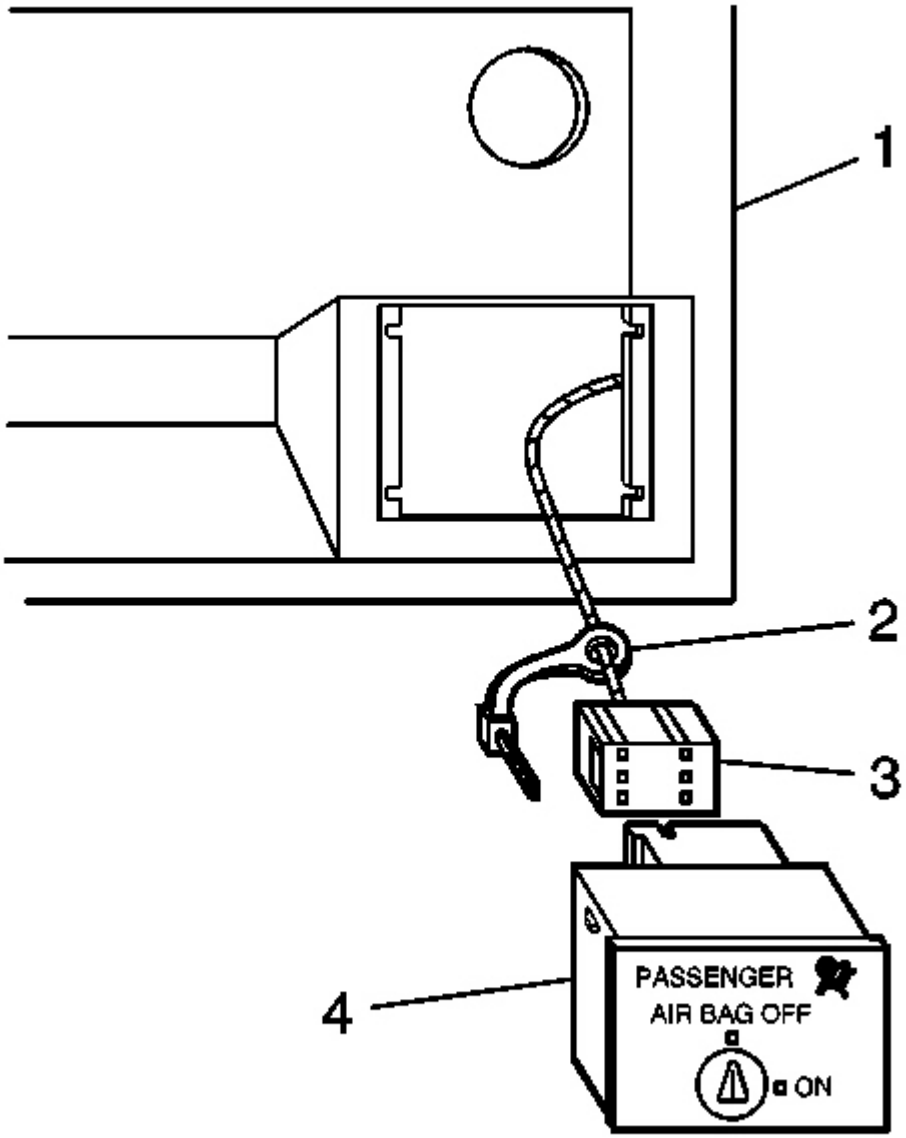


**Fig. 47: CPA, Wiring Harness Connector, Passenger Compartment Door & Inflatable Restraint IP**

**Module Switch**
**Courtesy of GENERAL MOTORS CORP.**

1. Connect the wiring harness connector (3) to the inflatable restraint IP module switch (4) connector.
2. Install the CPA (2) on the wiring harness connector (3).
3. Insert the inflatable restraint IP module switch (4) into the switch mounting in the instrument panel (IP) compartment door (1) and snap into place.
4. Close the instrument panel (IP) passenger compartment door (1).

## INFLATABLE RESTRAINT INSTRUMENT PANEL (I/P) MODULE DISABLE SWITCH LED REPLACEMENT

**Tools Required**

**J 35616** Connector Test Adapter Kit

**Removal Procedure**

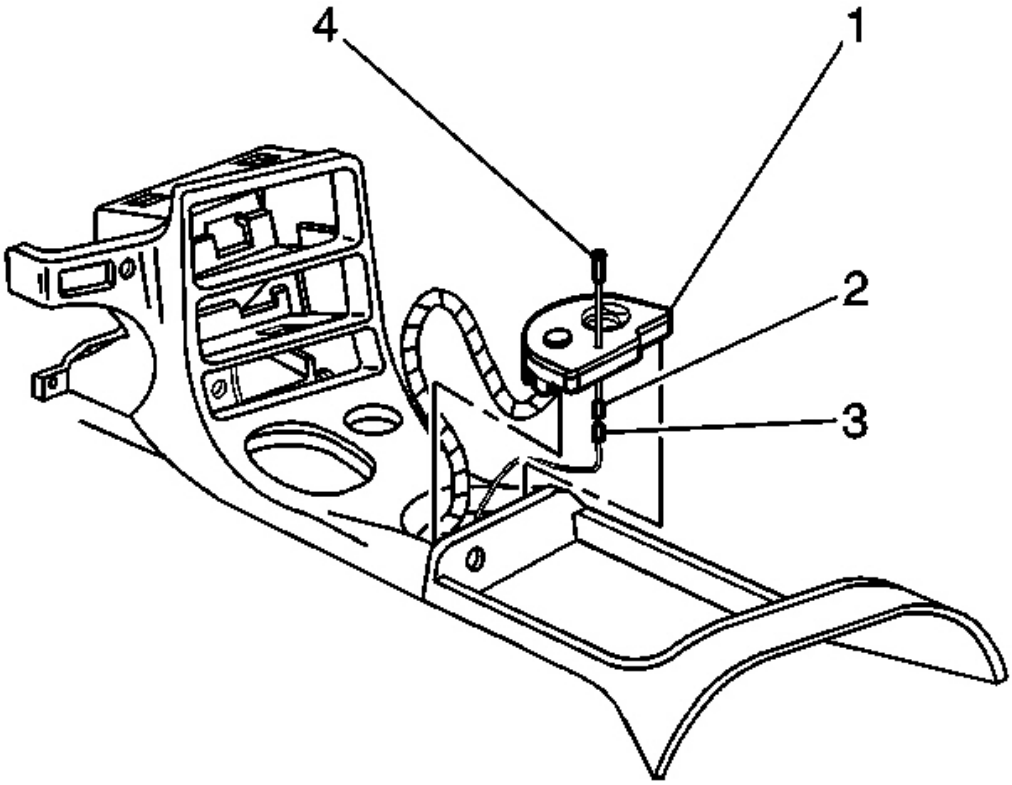

**Fig. 48: IP Accessory Trim Plate, Wiring Harness Connector & Electrical Led Connector**
**Courtesy of GENERAL MOTORS CORP.**

1. Open the console compartment door.
2. Lift up on the IP accessory trim plate (1) to gain access to the LED wiring connector (2).
3. Disconnect the electrical LED connector (2) from the wiring harness connector (3).
4. Use the **J 35616** to extract terminals from the LED connector (2).
5. Push up on LED (4) from underneath IP accessory trim plate (1) and remove.

**Installation Procedure**

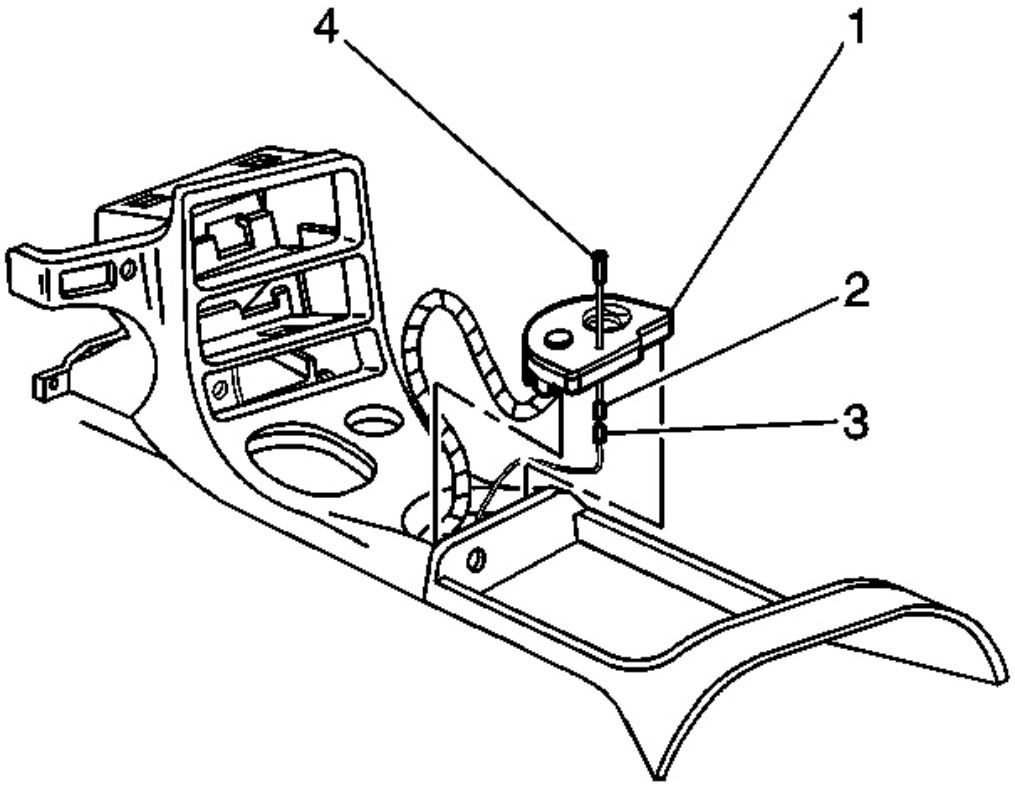


**Fig. 49: IP Accessory Trim Plate, Wiring Harness Connector & Electrical Led Connector**
**Courtesy of GENERAL MOTORS CORP.**

1. Use the **J 35616** to extract terminals from the replacement LED connector (2).
2. Insert LED wiring through opening in the IP accessory trim plate (1) and press the LED (4) into place.
3. Install terminals in LED connector (2).

4. Connect the electrical LED connector (2) to the wiring harness connector (3).
5. Position the IP accessory trim plate (1) and press into place.
6. Close the console compartment door.

## REPAIRS AND INSPECTIONS REQUIRED AFTER A COLLISION

**CAUTION: Proper operation of the SIR sensing system requires that any repairs to the vehicle structure return the vehicle structure to the original production configuration. Not properly repairing the vehicle structure could cause non-deployment in a collision or deployment for conditions less severe than intended.**

After a collision, the following components need to be inspected as indicated. If any damage is detected, replace the component. If damage to the mounting points or mounting hardware is detected, repair or replace the mounting points and mounting hardware as needed.

- Steering column - Perform the steering column accident damage checking procedures. Refer to **Steering Column Accident Damage Inspection (Telescoping)** or **Steering Column Accident Damage Inspection (Manual)** in Steering Wheel and Column.
- I/P Knee Bolsters and Mounting Points - Inspect the knee bolsters for bending, twisting, buckling, or any other type of damage.
- I/P brackets, braces, etc. - Inspect for bending, twisting, buckling, or any other type of damage.
- Seat Belts - Perform the seat belt operational and functional checks. Refer to **Operational and Functional Checks** in Seat Belts.
- Seats and Seat Mounting Points - Inspect for bending, twisting, buckling, or any other type of damage.

After inspecting the components listed above, proceed to the following Component Replacement and Inspections if air bag deployment has occurred.

### Frontal Inflator Module Deployment - Component Replacement and Inspections

After a collision involving frontal air bag deployment, replace the following components.

- Inflatable restraint I/P module
- Inflatable restraint steering wheel module
- Inflatable restraint sensing and diagnostic module (SDM)

Perform additional inspections on the following components.

- Steering wheel module coil and coil wiring pigtail - Inspect for melting, scorching, or other damage due to excessive heat.
- Mounting points and mounting hardware for the I/P module, steering wheel module, and SDM - Inspect for damage and repair or replace each component as needed.

## INFLATOR MODULE HANDLING AND SCRAPPING

**CAUTION: Refer to SIR Inflator Module Handling and Storage Caution in Cautions and Notices.**

**Live and Undeployed Inflator Module**

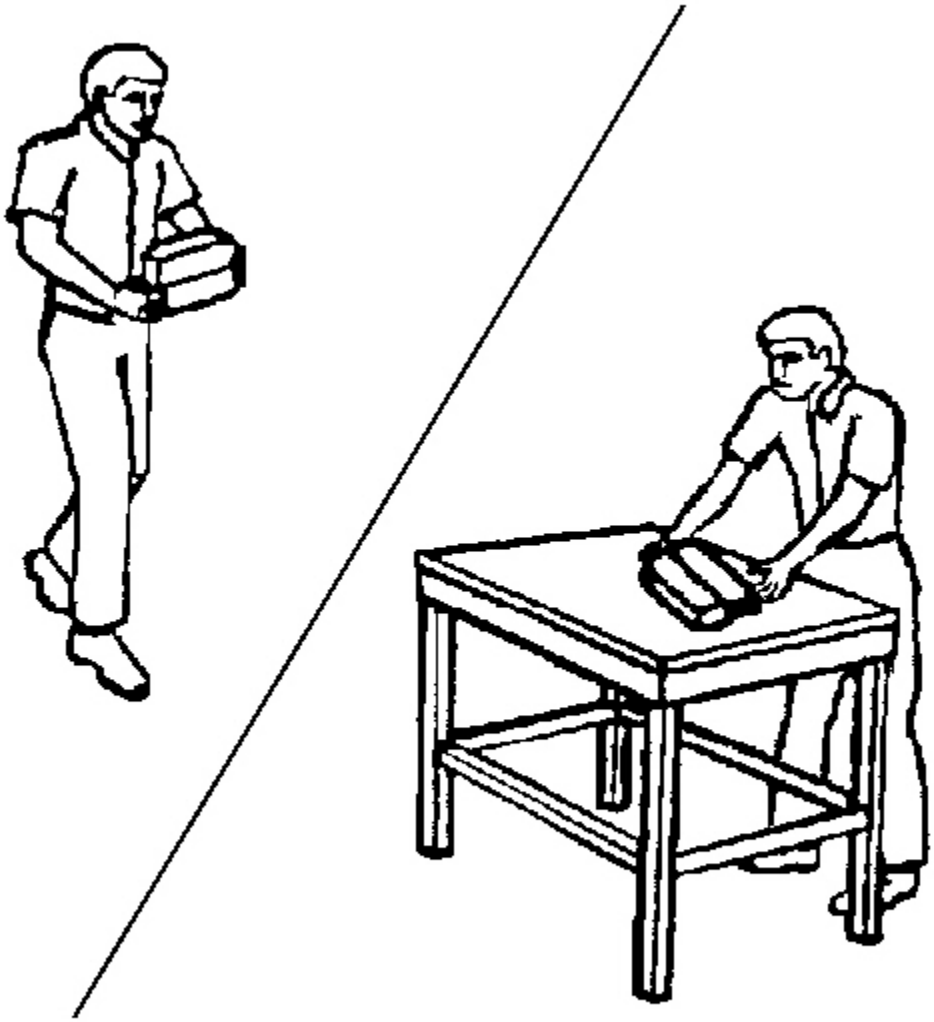

**Fig. 50: Handling Undeployed Inflator Module**
**Courtesy of GENERAL MOTORS CORP.**

Take special care when handling or storing a live and undeployed inflator module. An inflator module deployment produces a rapid generation of gas. This may cause the inflator module, or an object in front of the inflator module, to project through the air in the event of an unlikely deployment.

**Scrapping Procedure**

During the course of a vehicle's useful life, certain situations may arise which will require the disposal of a live and undeployed inflator module. Do not dispose of a live and undeployed inflator module through normal disposal channels until the inflator module has been deployed. The following information covers the proper procedures for the disposing of a live and undeployed inflator module.

Do not deploy the inflator module in the following situations:

- After replacement of an inflator module under warranty. The inflator module may need to be returned undeployed to the manufacturer.
- If the vehicle is the subject of a product liability report, GM-1241, related to the SIR system. When a vehicle is the subject of a product liability report, do not alter the SIR system in any manner.
- If the vehicle is involved in a campaign affecting the inflator modules. Follow the instructions in the campaign service bulletin for proper SIR handling procedures.

**Deployment Procedures**

The inflator module can be deployed inside or outside of the vehicle. The method used depends upon the final disposition of the vehicle. Review the following procedures in order to determine which will work best in a given situation:

**Deployment Outside Vehicle - Steering Wheel Module and I/P Module**

## Tools Required

- **J 38826** SIR Deployment Harness. See **Special Tools and Equipment** .
- **J 39401-B** SIR Deployment Fixture. See **Special Tools and Equipment** .
- An appropriate pigtail adaptor

Deploy the inflator module outside of the vehicle when the vehicle will be returned to service. Situations that require deployment outside of the vehicle include the following:

- Using the SIR diagnostics, it is determined that the inflator module is malfunctioning.
- The inflator module is cosmetically damaged, scratched, or ripped.
- The inflator module pigtail, if equipped, is damaged.
- The inflator module connector is damaged.
- The inflator module connector terminals are damaged.

Deployment and disposal of a malfunctioning inflator module is subject to any required retention period.

**CAUTION: Refer to SIR Inflator Module Disposal Caution in Cautions and Notices.**

1. Turn OFF the ignition.
2. Remove the ignition key.
3. Put on safety glasses.
4. Remove the inflator module. Refer to the following:
   - When removing the steering wheel module, refer to **Inflatable Restraint Steering Wheel Module Replacement** .
   - When removing the I/P module, refer to **Inflatable Restraint Instrument Panel Module Replacement** .

**CAUTION: Refer to SIR Inflator Module Handling and Storage Caution in Cautions and Notices.**

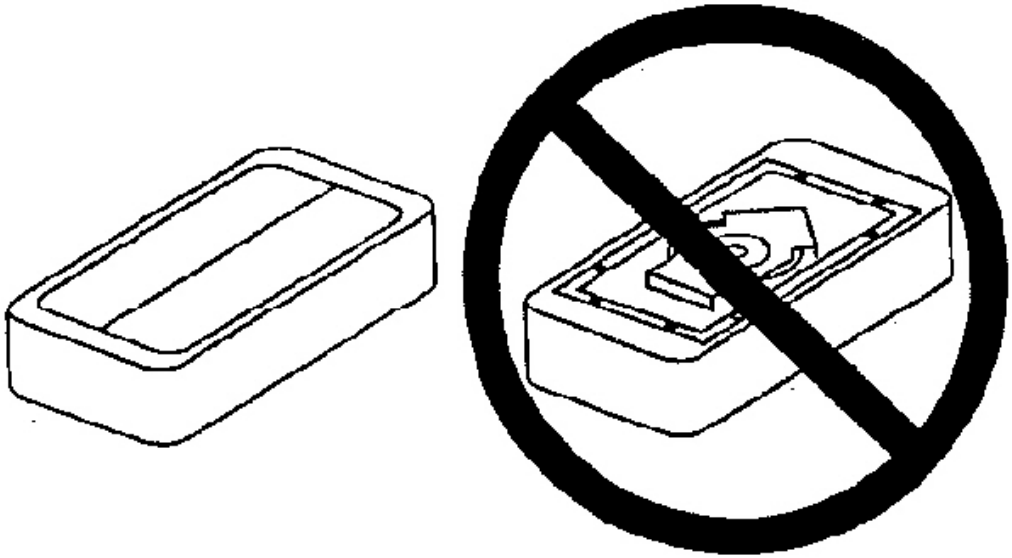

**Fig. 51: Proper Storage Of Inflator Module**
**Courtesy of GENERAL MOTORS CORP.**

5. Place the inflator module with the vinyl trim cover facing up and away from the surface on a work bench, floor, or deployment fixture.

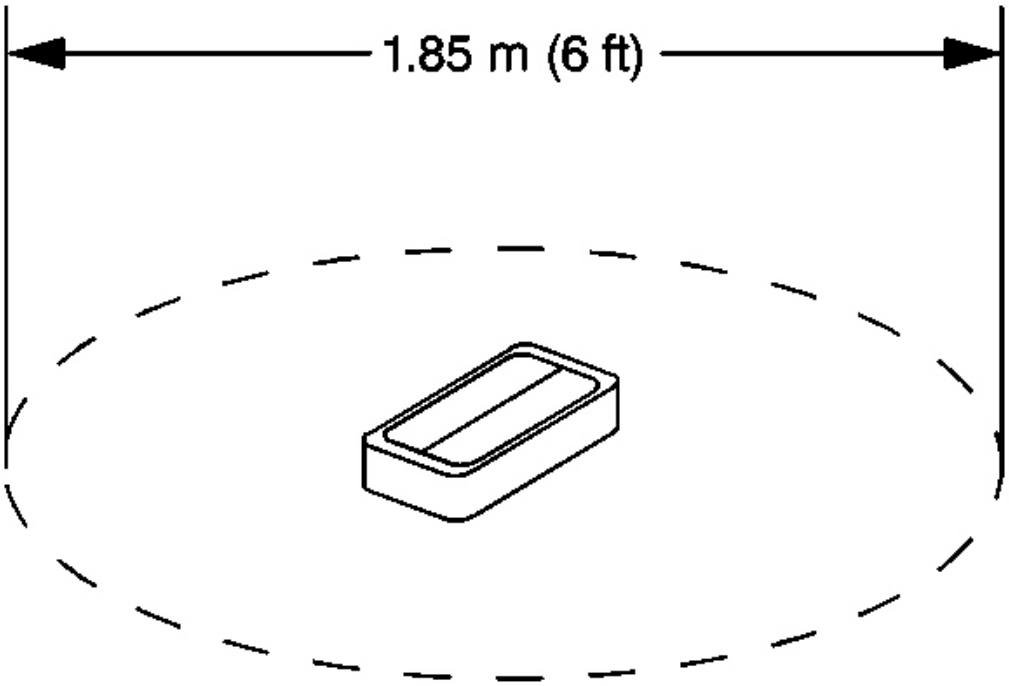


**Fig. 52: Clearing Space For Deployment Of Inflator Module**
**Courtesy of GENERAL MOTORS CORP.**

6. Clear a space on the floor approximately 1.85 m (6 ft) in diameter for deployment of the inflator module. If possible, use a paved, outdoor location free of activity. Otherwise, use a space free of activity on the shop floor. Make sure you have sufficient ventilation.
7. Make sure no loose or flammable objects are in the area.
8. When deploying the steering wheel module, place the steering wheel module in the center of the space.

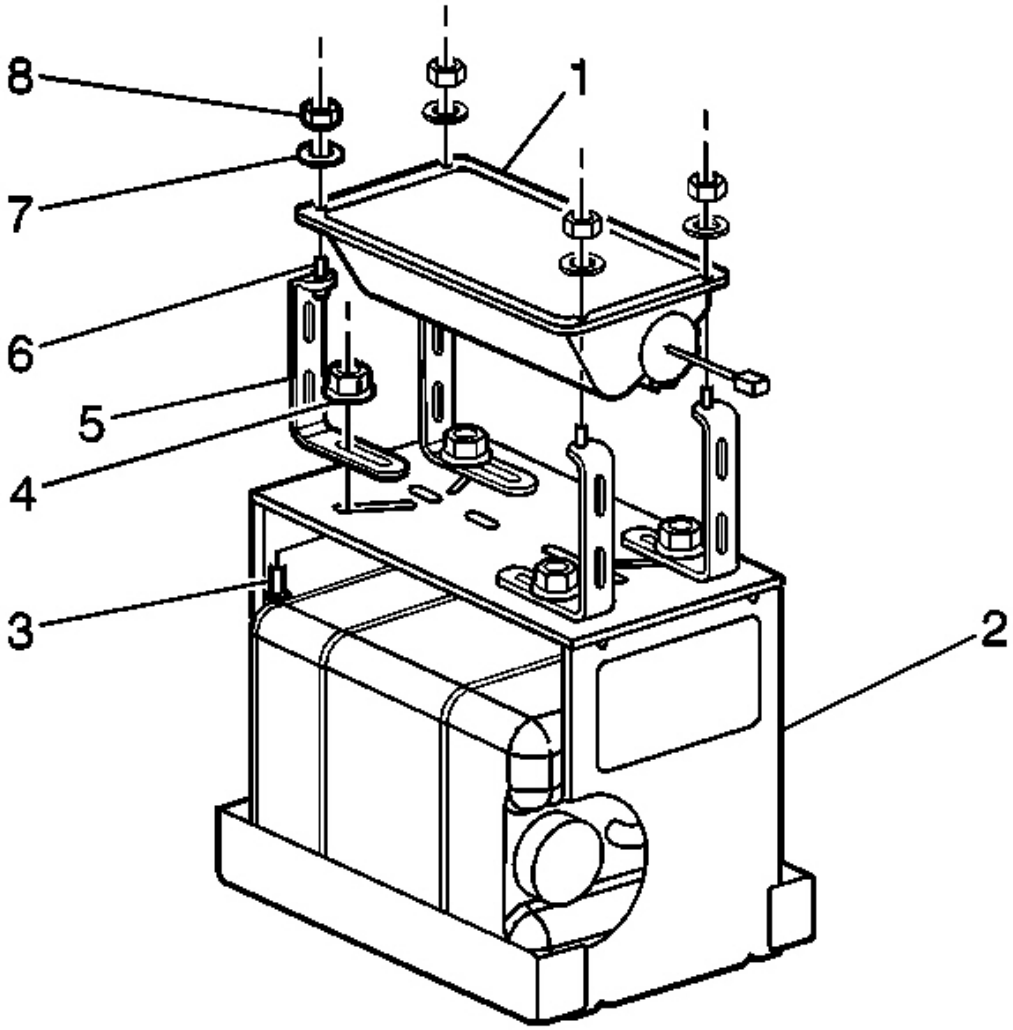


**Fig. 53: I/P Module Components**
**Courtesy of GENERAL MOTORS CORP.**

9. When deploying the I/P module, refer to the following instructions:
    1. Place the **J 39401-B** (2) in the center of the cleared area. See **Special Tools and Equipment** .
    2. Fill the deployment fixture with water or sand.
    3. Mount the I/P module (1) in the deployment fixture (2) with the vinyl/plastic trim cover facing up.
    4. To mount, use 4 M 6 bolts (6), nuts (8), and washers (7) in order to properly secure the I/P module (1) to the **J 39401-B** . See **Special Tools and Equipment** .
    5. Tighten all fasteners prior to deployment.

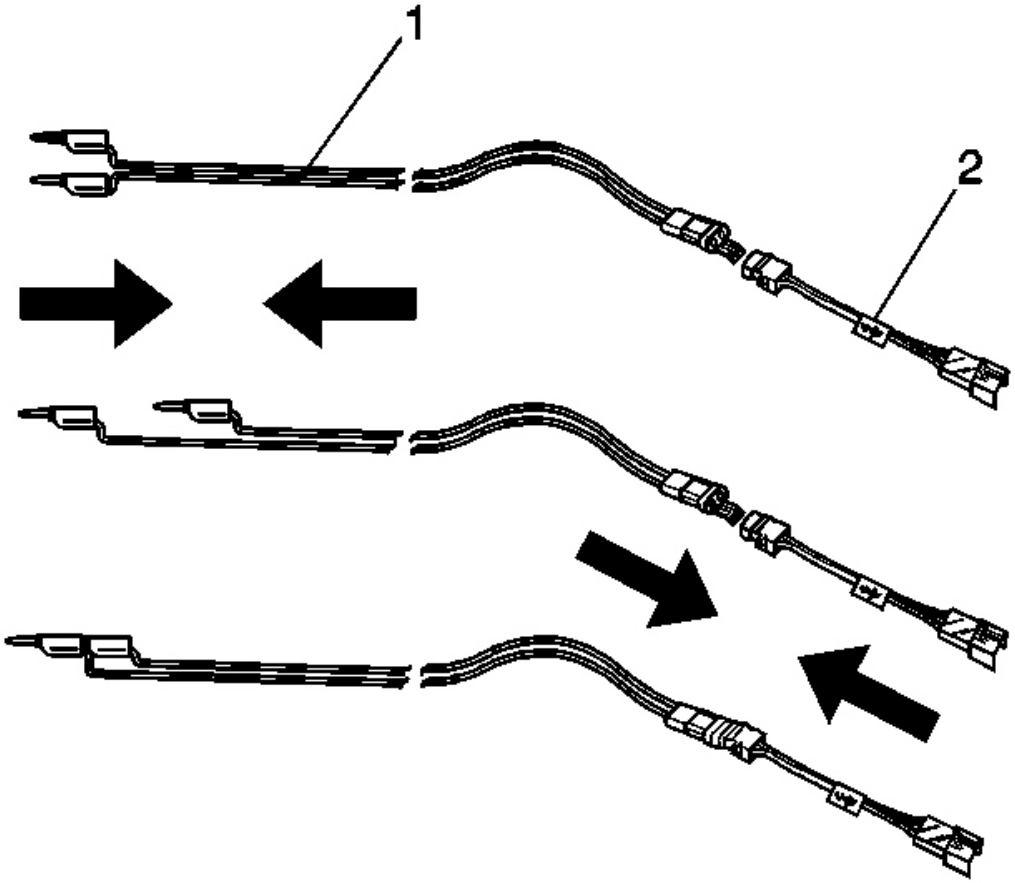


**Fig. 54: , SIR Deployment Harness & Adapter**
**Courtesy of GENERAL MOTORS CORP.**

10. Inspect the **J 38826** and the appropriate pigtail adapter for damage. See **Special Tools and Equipment** . Replace as needed.
11. Short the SIR deployment harness (1) leads together using 1 banana plug seated into the other.
12. Connect the appropriate pigtail adapter (2) to the **J 38826** (1). See **Special Tools and Equipment** .

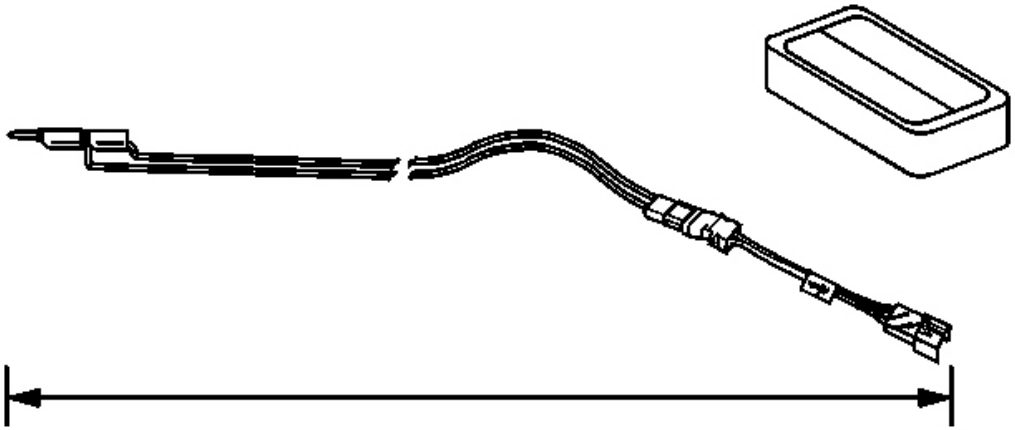

**Fig. 55: Extending SIR Deployment Harness & Adapter**
**Courtesy of GENERAL MOTORS CORP.**

13. Extend the SIR deployment harness and adapter to full length from the deployment fixture.

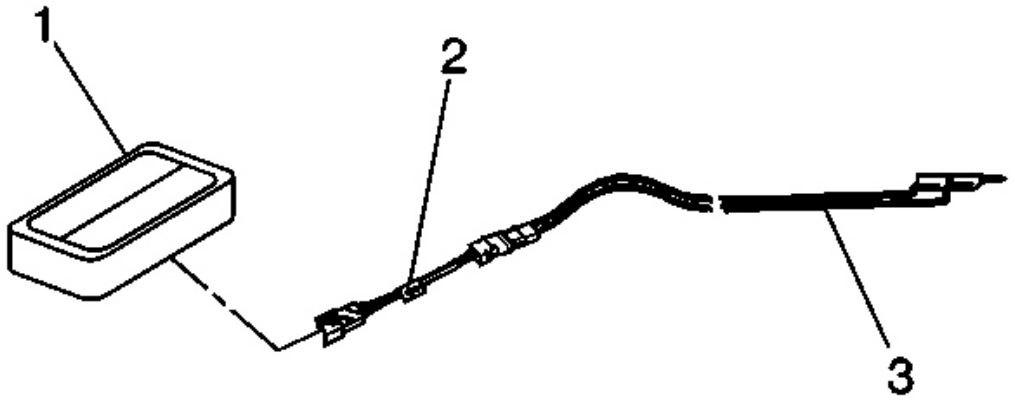


**Fig. 56: Inflator Module, Adapter &**
**Courtesy of GENERAL MOTORS CORP.**

**IMPORTANT: When deploying an inflator module the rapid expansion of gas involved**

**with deploying an inflator module is very loud. Notify all the people in the immediate area that an inflator module will be deployed. When the inflator module deploys, the deployment fixture may jump about 30 cm (1 ft) vertically. This is a normal reaction of a deploying inflator module.**

14. Connect the inflator module (1) to the adapter (2) on the **J 38826** (3). See **Special Tools and Equipment** .
15. Clear the area of people.

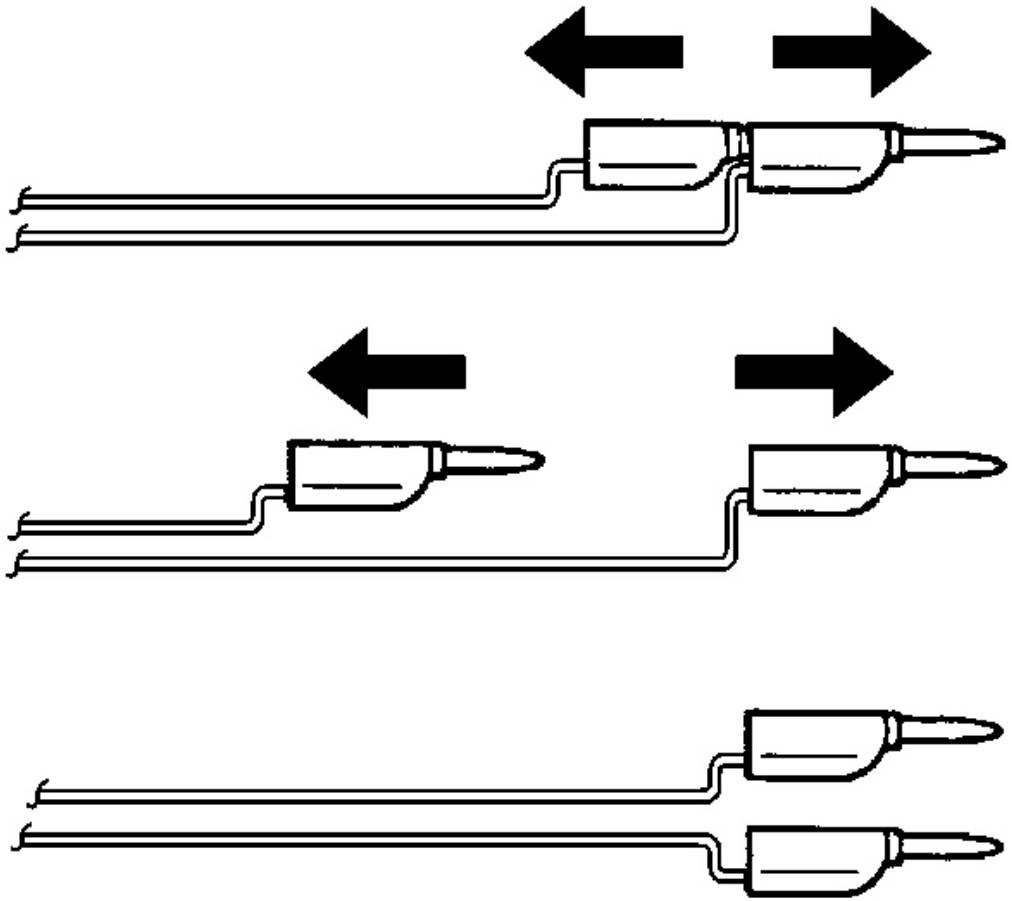

**Fig. 57: Separating Banana Plugs**
**Courtesy of GENERAL MOTORS CORP.**

16. Place a 12 volt minimum A minimum power source, i.e. vehicle battery, near the shorted end of the **J 38826** . See **Special Tools and Equipment** .

17. Separate the banana plugs on the **J 38826** . See **Special Tools and Equipment** .

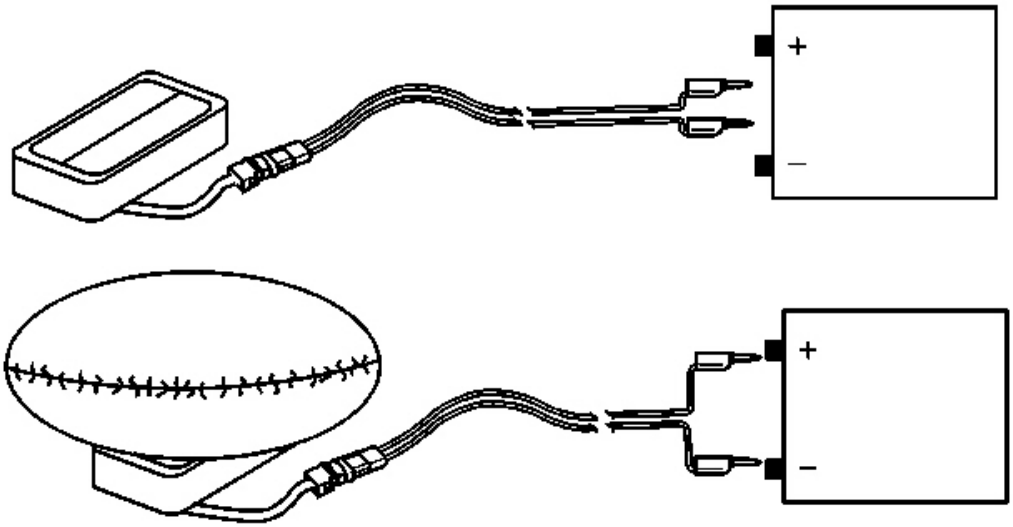


**Fig. 58: Connecting SIR Deployment Harness Wires To Power Source**
**Courtesy of GENERAL MOTORS CORP.**

**IMPORTANT: The inflator module will deploy when the SIR deployment harness wires contact the power source.**

18. Connect the SIR deployment harness wires to the power source. Inflator module deployment will occur when contact is made.
19. Disconnect the SIR deployment harness from the power source.

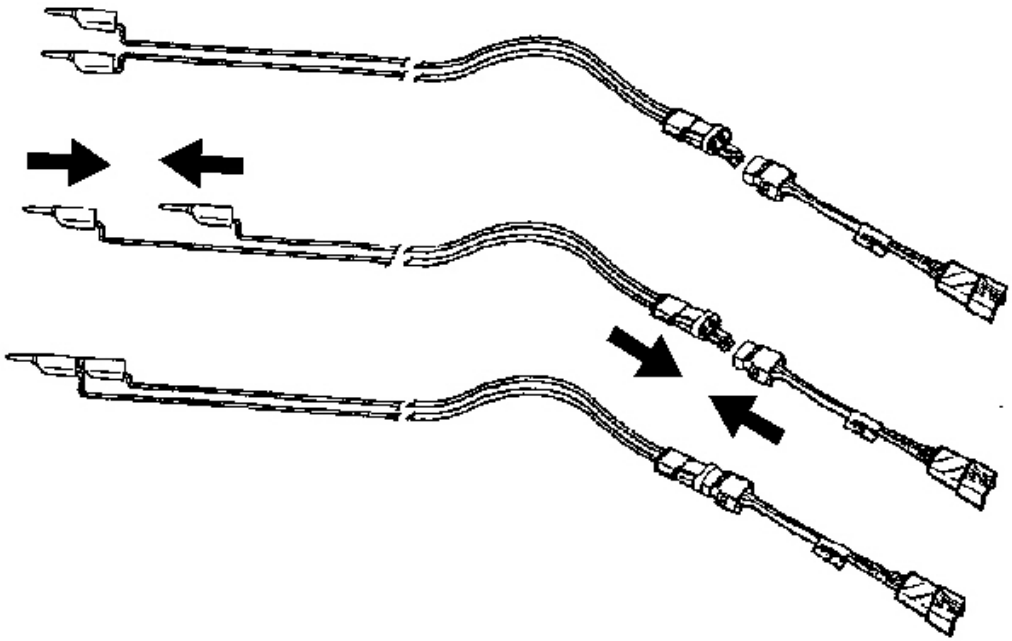

**Fig. 59: Shorting Deployment Harness Leads**
**Courtesy of GENERAL MOTORS CORP.**

20. Seat one banana plug into the other in order to short the deployment harness leads.
21. If the inflator module did not deploy, disconnect the adapter and discontinue the procedure. Contact the Technical Assistance Group. Otherwise, proceed to the following steps.

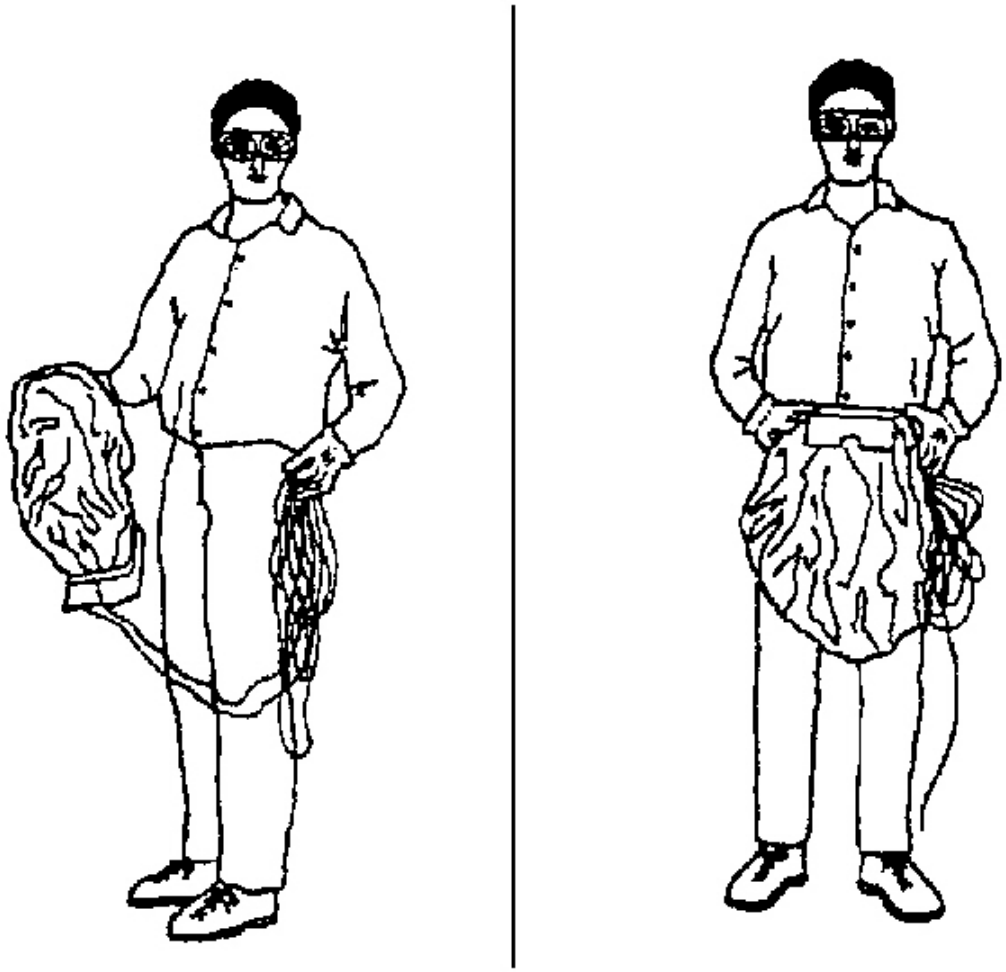

**Fig. 60: Disposing Of Deployed Inflator Module**
**Courtesy of GENERAL MOTORS CORP.**

**CAUTION: Refer to SIR Deployed Inflator Modules Are Hot Caution in Cautions and Notices.**

22. Put on a pair of shop gloves.
23. Disconnect the pigtail adapter from the inflator module as soon as possible.
24. Dispose of the deployed inflator module through normal refuse channels.
25. Wash hands with a mild soap.

**Deployment Inside Vehicle - Vehicle Scrapping Procedure**

**CAUTION: Refer to SIR Inflatable Module Deployment Outside Vehicle Caution in Cautions and Notices.**

Deploy the inflator modules inside of the vehicle when destroying the vehicle or when salvaging the vehicle for parts. This includes but is not limited to the following situations:

- The vehicle has completed its useful life.
- Irreparable damage occurs to the vehicle in a non-deployment type accident.
- Irreparable damage occurs to the vehicle during a theft.
- The vehicle is being salvaged for parts to be used on a vehicle with a different VIN as opposed to rebuilding as the same VIN.

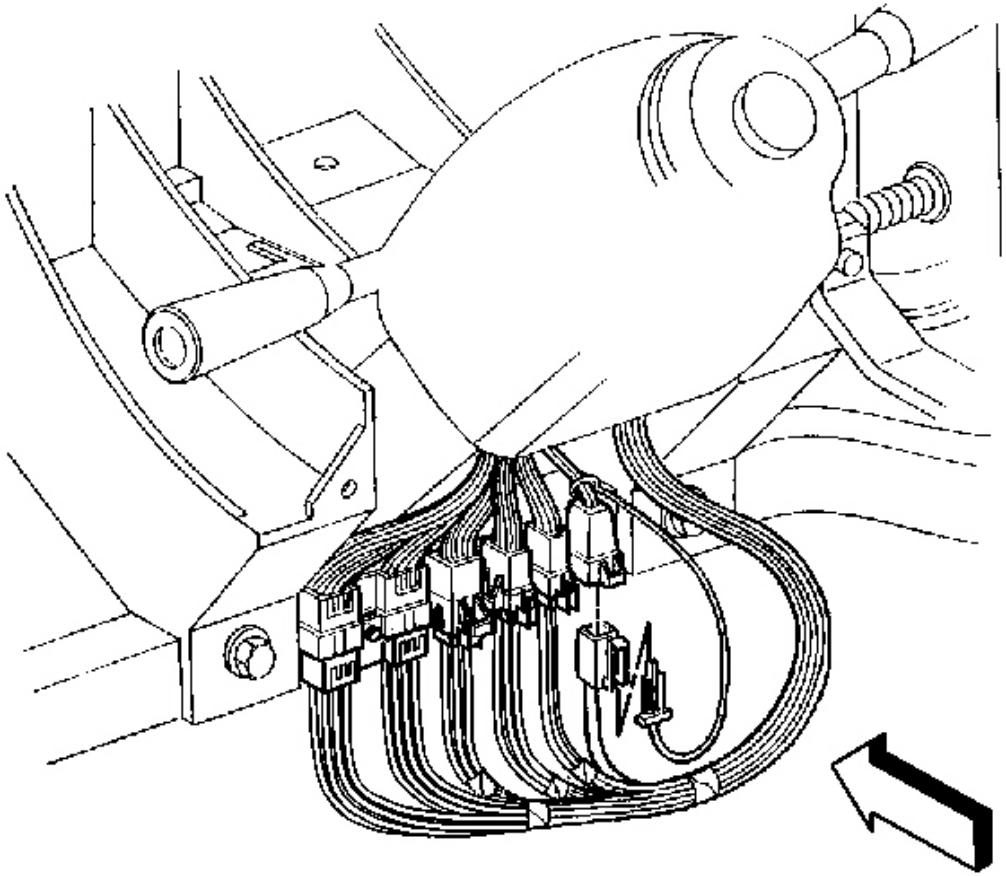

**Fig. 61: Steering Wheel Module Coil Connector Removed**
**Courtesy of GENERAL MOTORS CORP.**

1. Disable the SIR system. Refer to **SIR Disabling and Enabling Zones** .
2. Put on safety glasses.
3. Remove all loose objects from the front seats.
4. Disconnect the inflatable restraint steering wheel module coil connector (1).

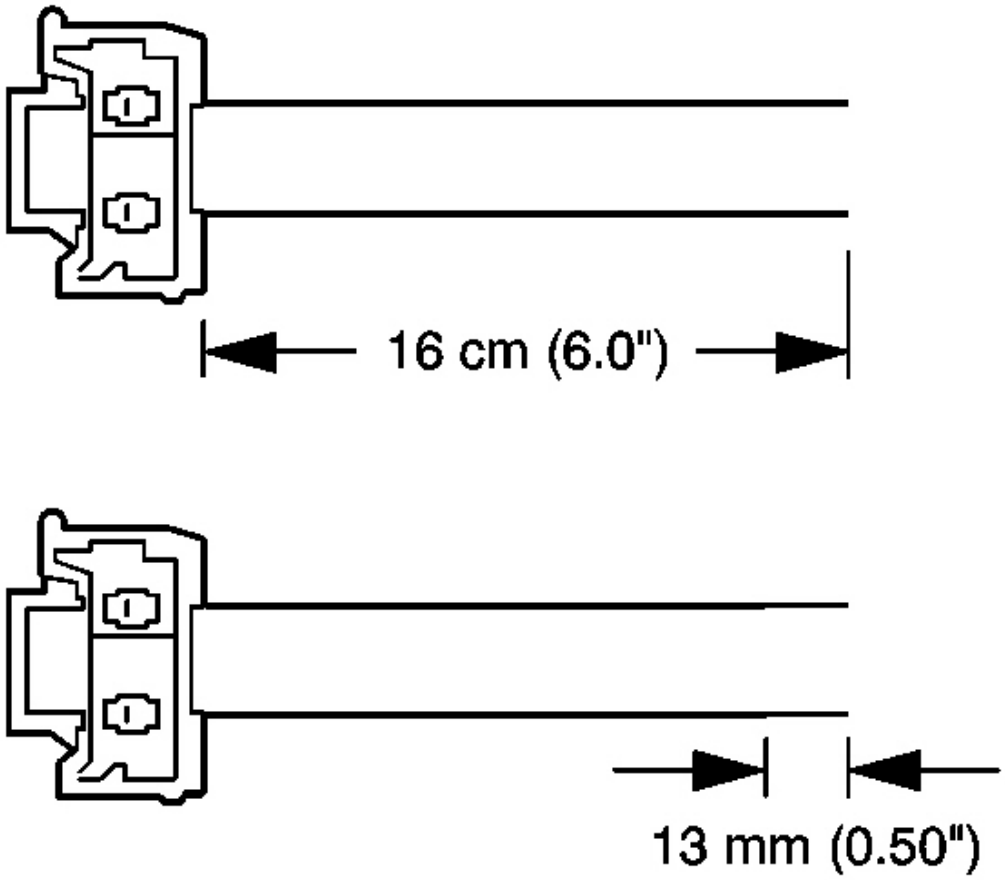


**Fig. 62: Measuring Connector Wires**
**Courtesy of GENERAL MOTORS CORP.**

5. Cut the steering wheel module coil harness connector out of the vehicle, leaving at least 16 cm (6 in) of wire at the connector.
6. Strip 13 mm (0.5 in) of insulation from each of the connector wire leads.

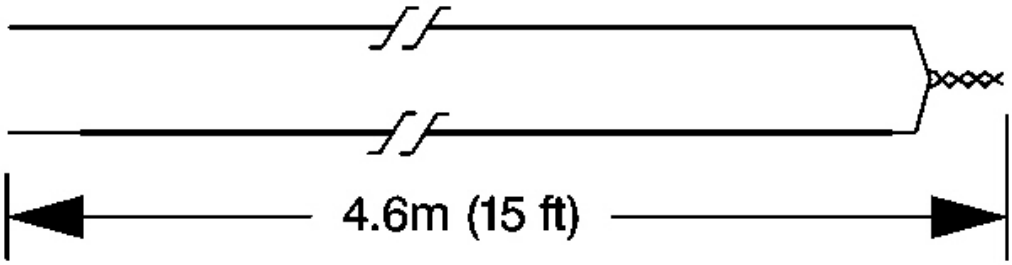


**Fig. 63: Cutting Deployment Wires**
**Courtesy of GENERAL MOTORS CORP.**

7. Cut two 4.6 m (15 ft) deployment wires from a 0.8 mm (18 gage) or thicker multi-strand wire. These wires will be used for the steering wheel module deployment harness.
8. Strip 13 mm (0.5 in) of insulation from both ends of the wires cut in the previous step.
9. Twist together one end from each of the wires in order to short the wires. Deployment wires shall remain shorted, and not connected to a power source until you are ready to deploy the inflator module.

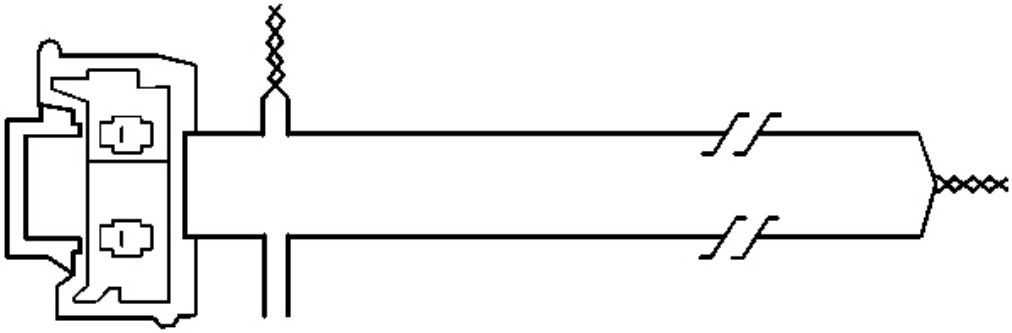

**Fig. 64: View Of Twisted Connector Wire To Deployment Wire**
**Courtesy of GENERAL MOTORS CORP.**

10. Twist together one connector wire lead to 1 deployment wire.
11. Inspect that the previous connection is secure.

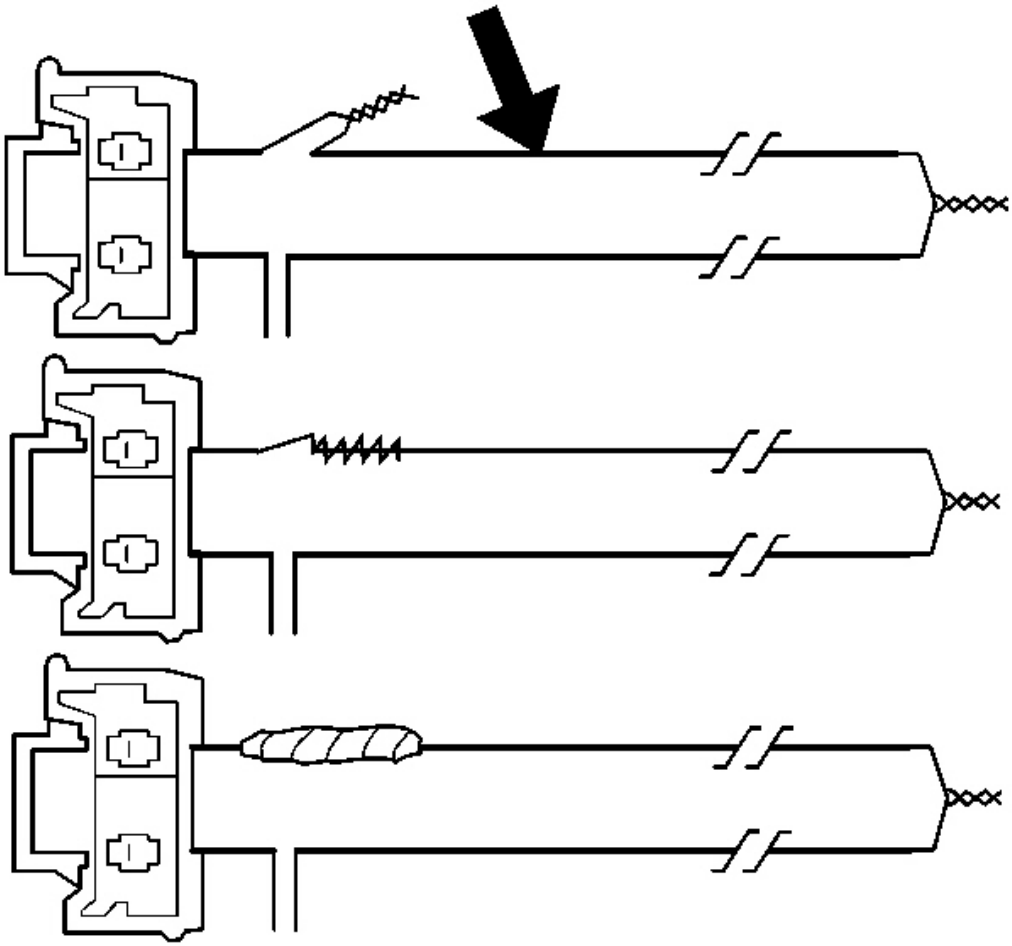

**Fig. 65: Identifying Steering Wheel Module Twisted Connection**
**Courtesy of GENERAL MOTORS CORP.**

12. Bend flat the twisted connection.
13. Secure and insulate the connection using electrical tape.

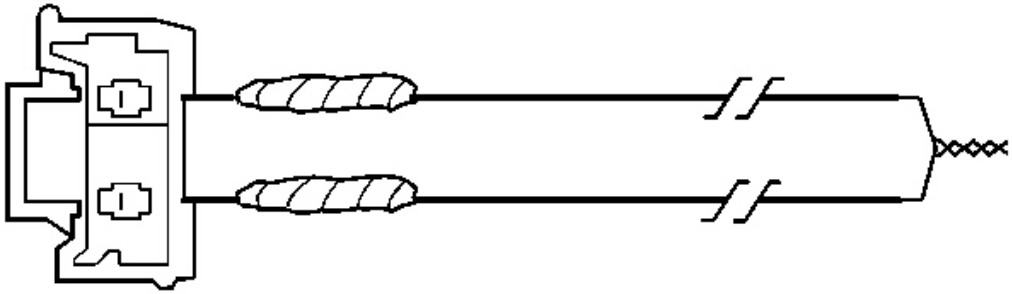

**Fig. 66: View Of Insulated Connector Wire To Deployment Wire**
**Courtesy of GENERAL MOTORS CORP.**

14. Twist together, bend, and tape the remaining connector wire lead to the remaining deployment wire.

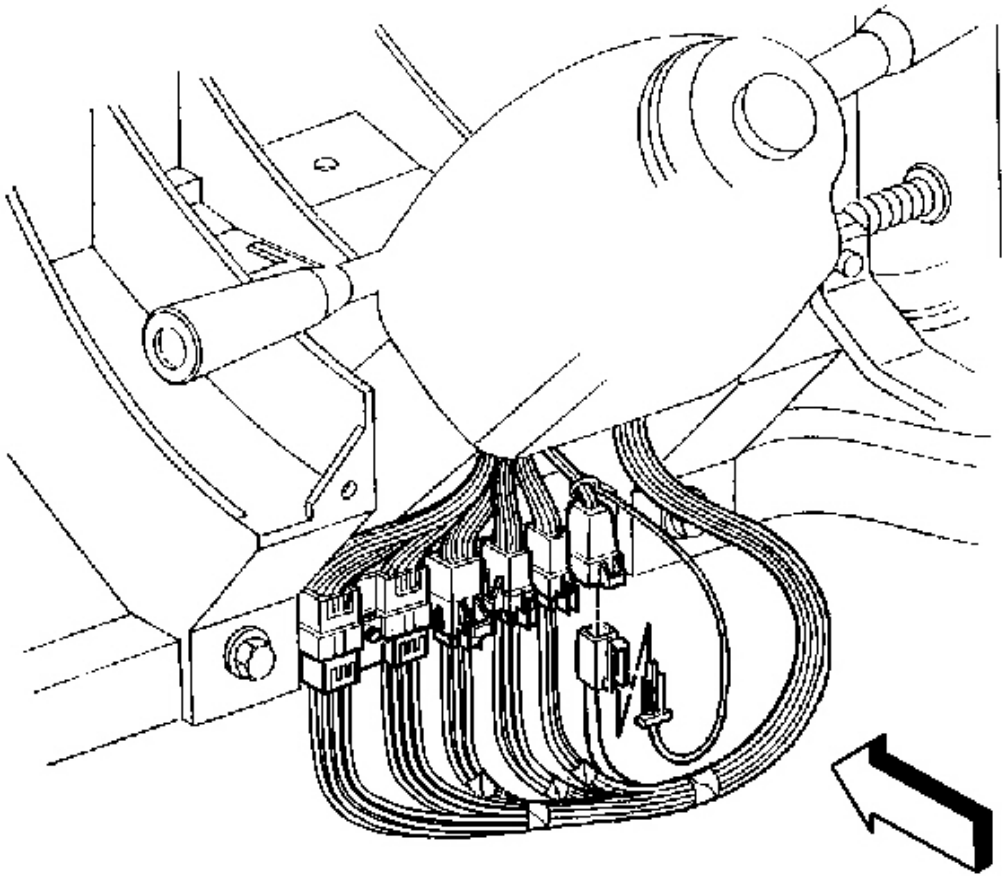

**Fig. 67: Steering Wheel Module Coil Connector Removed**
**Courtesy of GENERAL MOTORS CORP.**

15. Connect the deployment harness to the steering wheel module coil connector (1).

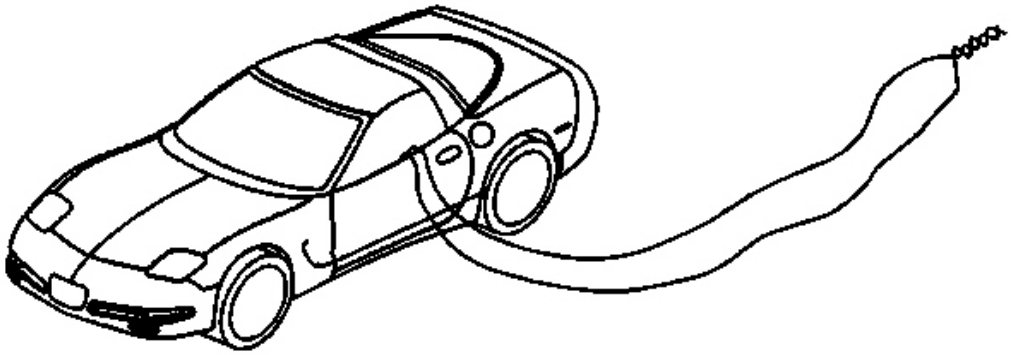

**Fig. 68: Deployment Harness Driver Side**
**Courtesy of GENERAL MOTORS CORP.**

16. Route the deployment harness out of the driver side of the vehicle.

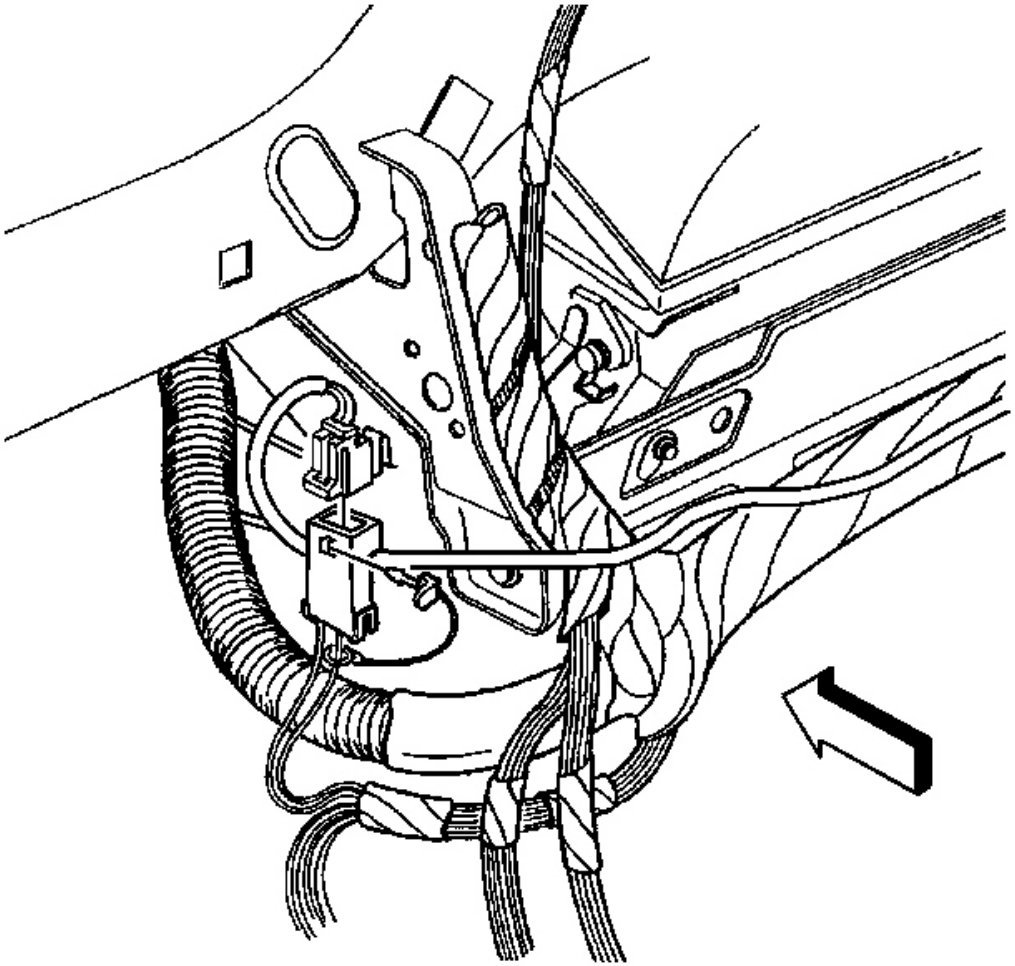

**Fig. 69: I/P Module Connector Removed**
**Courtesy of GENERAL MOTORS CORP.**

17. Disconnect the inflatable restraint I/P module connector.

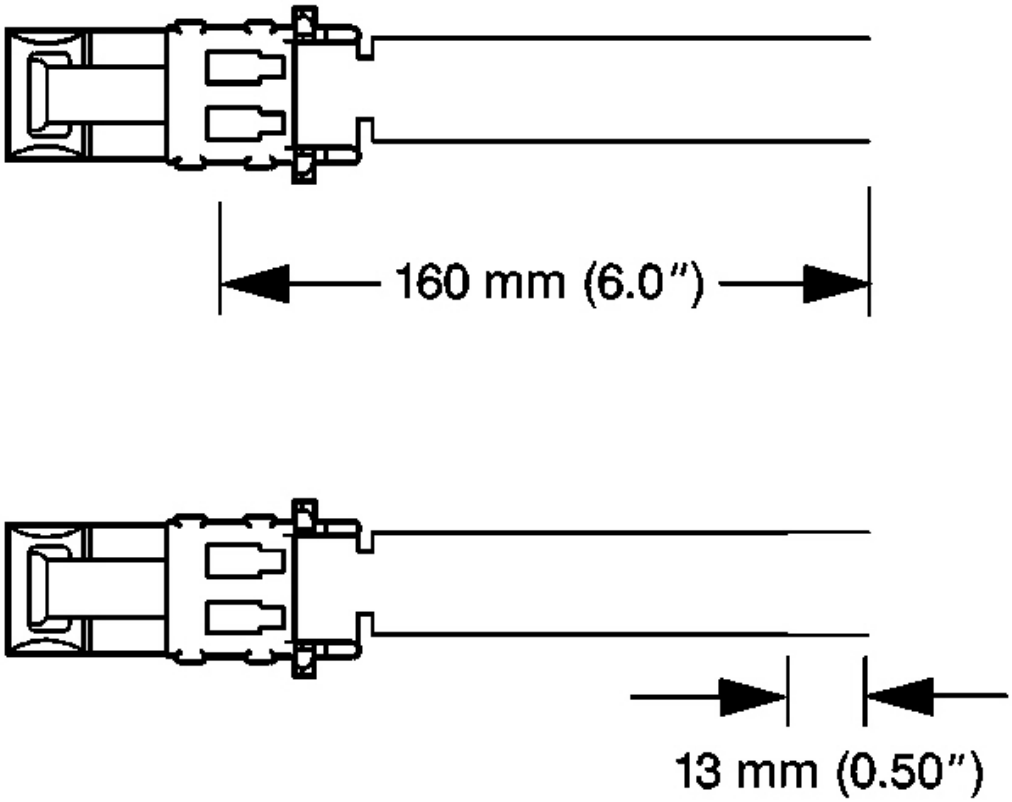


**Fig. 70: Stripping Connector Wire Lead**
**Courtesy of GENERAL MOTORS CORP.**

18. Cut the I/P module harness connector out of the vehicle, leaving at least 16 cm (6 in) of wire at the connector.
19. Strip 13 mm (0.5 in) of insulation from each of the connector wire leads.

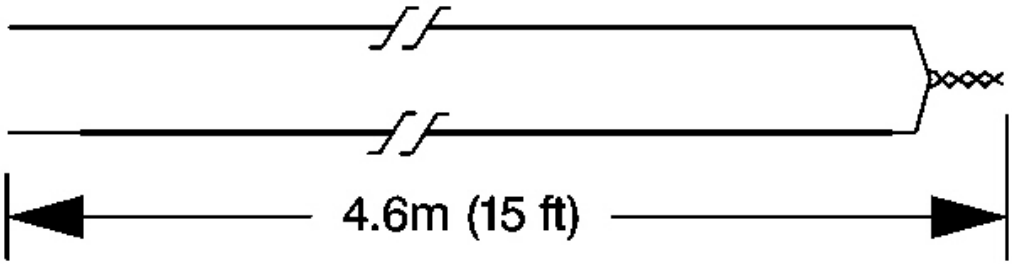


**Fig. 71: Cutting Deployment Wires**
**Courtesy of GENERAL MOTORS CORP.**

20. Cut two 4.6 m (15 ft) deployment wires from a 0.8 mm (18 gage) or thicker multi-strand wire. These wires will be used for the I/P module deployment harness.
21. Strip 13 mm (0.5 in) of insulation from both ends of the wires cut in the previous step.
22. Twist together one end from each of the wires in order to short the wires. Deployment wires shall remain shorted, and not connected to a power source until the inflator module is ready to be deployed.

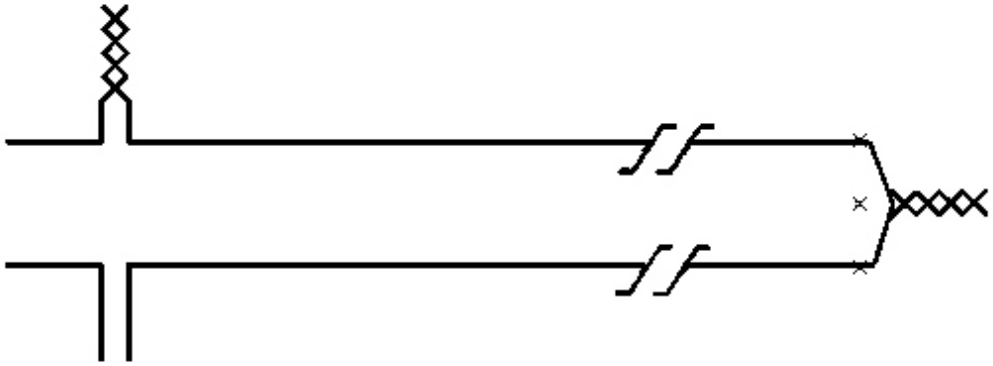

**Fig. 72: Twisting Together Connector Wire Lead To Deployment Wire**
**Courtesy of GENERAL MOTORS CORP.**

23. Twist together one connector wire lead to 1 deployment wire.

24. Inspect that the previous connection is secure.

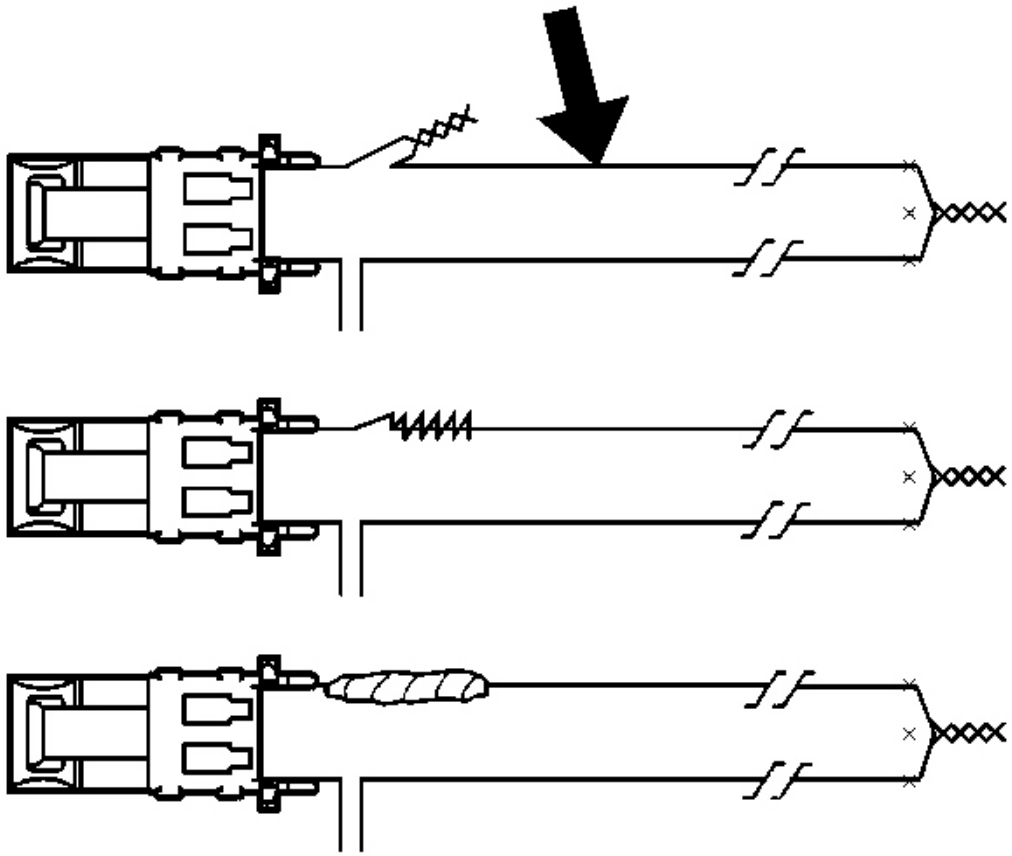

**Fig. 73: Identifying I/P Module Twisted Connection**
**Courtesy of GENERAL MOTORS CORP.**

25. Bend flat the twisted connection.
26. Secure and insulate the connection using electrical tape.

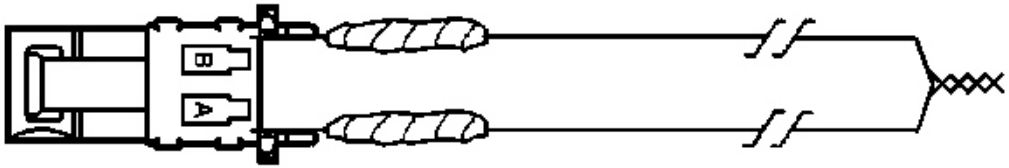


**Fig. 74: View Of Dual Insulated Connector Wires**
**Courtesy of GENERAL MOTORS CORP.**

27. Twist together, bend, and tape the remaining connector wire lead to the remaining deployment wire.

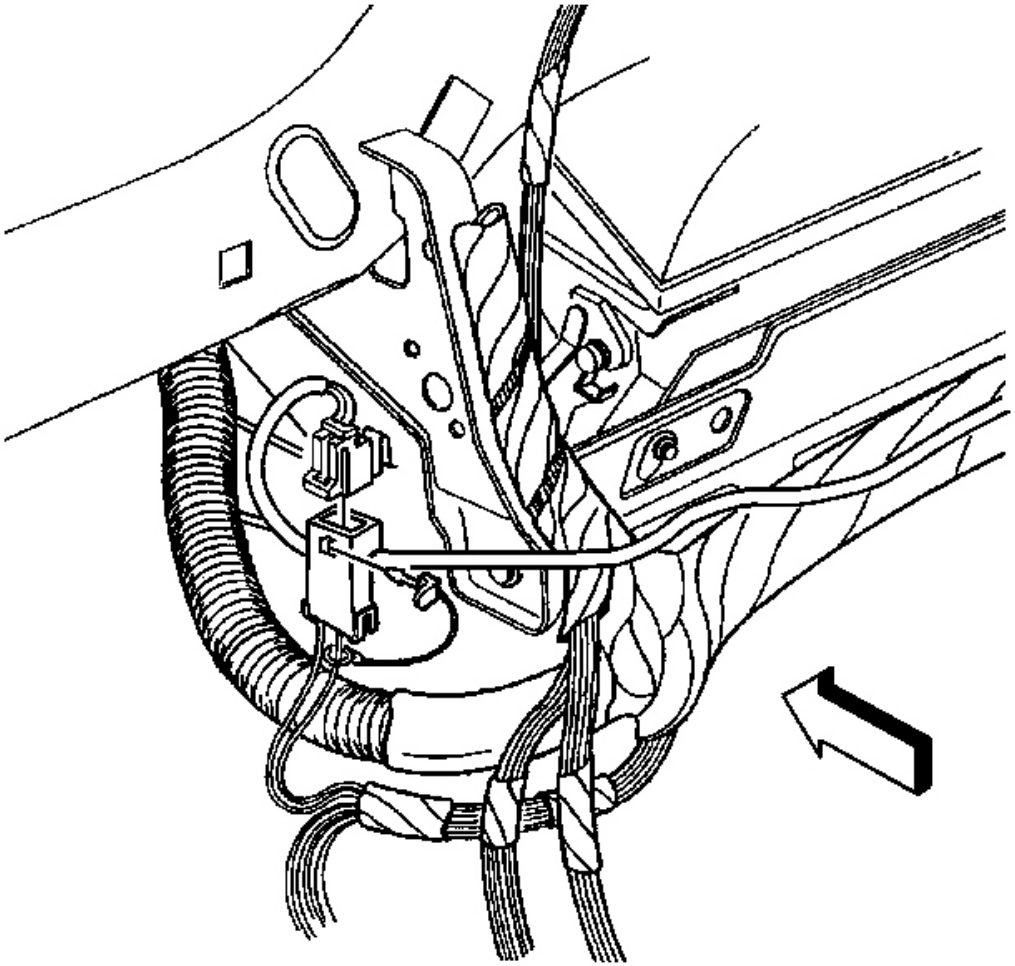

**Fig. 75: I/P Module Connector Removed**
**Courtesy of GENERAL MOTORS CORP.**

28. Connect the deployment harness to the I/P module connector.

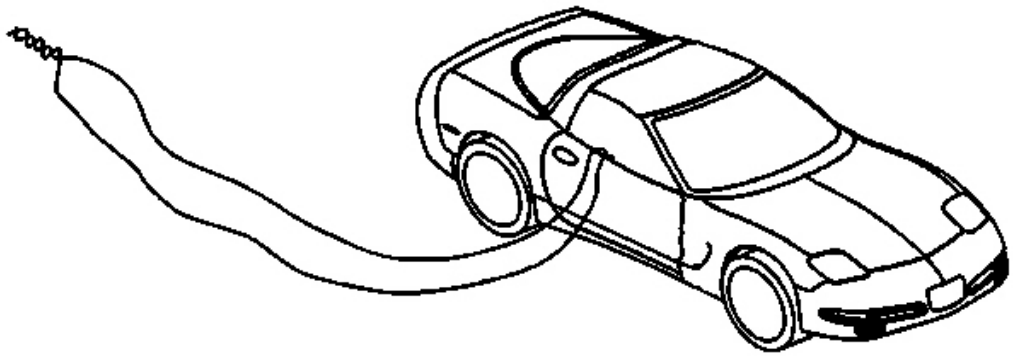

**Fig. 76: Deployment Harness Passenger Side**
**Courtesy of GENERAL MOTORS CORP.**

29. Route the deployment harness out of the passenger side of the vehicle.
30. Completely cover the windshield and the front door openings with a drop cloth.
31. Deploy each deployment loop one at a time.
32. Stretch out all of the deployment harness wires on the left and right side of the vehicle to their full length.
33. Place a power source, 12 V minimum A minimum, i.e., a vehicle battery, near the shorted end of the harnesses.

**IMPORTANT: The inflator module will deploy when the wire ends contact the power source.**

34. Separate one set of wires and touch the wire ends to the power source in order to deploy the inflator modules.
35. Disconnect the deployment harness from the power source and twist the wire ends together.
36. Continue the same process with the remaining deployment harnesses that are available.
37. Remove the drop cloth from the vehicle.
38. Disconnect all harnesses from the vehicle.
39. Discard the harnesses.
40. Scrap the vehicle in the same manner as a non-SIR equipped vehicle.
41. If one or more of the inflator modules did not deploy, perform the following steps to remove the undeployed modules from the vehicle:
    - If the steering wheel module did not deploy, refer to **Inflatable Restraint Steering Wheel Module Replacement** .
    - If the I/P module did not deploy, refer to **Inflatable Restraint Instrument Panel Module**

**Replacement** .

42. Call the Technical Assistance Group for further assistance.

# DESCRIPTION AND OPERATION

## SIR SYSTEM DESCRIPTION AND OPERATION

### SIR System Overview

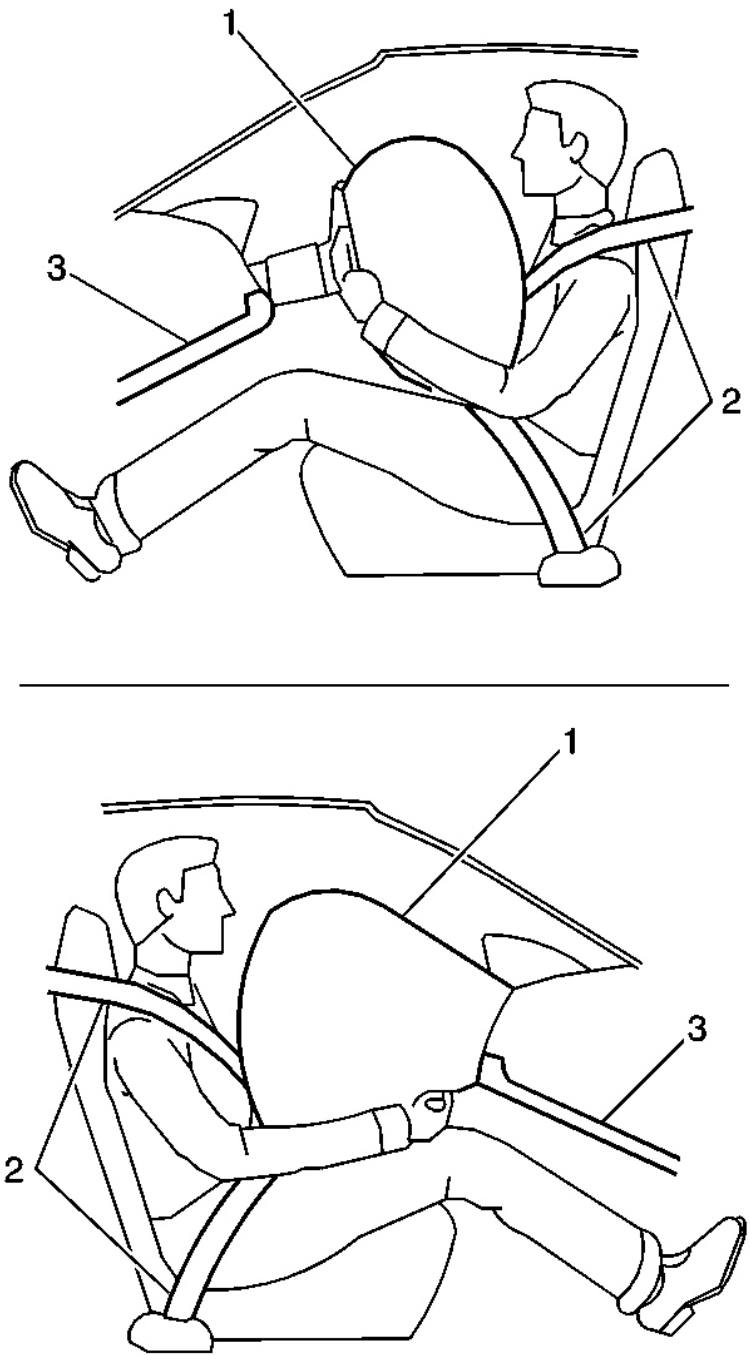


**Fig. 77: Deployed Inflatable Restraint**
**Courtesy of GENERAL MOTORS CORP.**

The supplemental inflatable restraint (SIR) system supplements the protection offered by the occupant's seat

belt system (2). The SIR system may contain several inflator modules located throughout the vehicle, i.e. steering wheel module (1), instrument panel (I/P) module (1). Each inflator module has a deployment loop that is controlled by the sensing and diagnostic module (SDM) mounted inside the vehicle. The SDM determines the severity of a collision with the assistance of various sensor inputs. When the SDM detects a collision of sufficient force it will process the information provided by the sensors to further support air bag deployment. The SDM performs continuous diagnostic monitoring of the SIR system electrical components. Upon detection of a circuit malfunction, the SDM will set a diagnostic trouble code (DTC) and inform the driver by turning the AIR BAG indicator ON. The steering column and knee bolsters (3) are designed to absorb energy and compress during frontal collisions in order to limit leg movement and decrease the chance of injury to the driver and passenger.

**Frontal SIR System Description**

The frontal SIR system consists of the following components:

- AIR BAG indicator located in the instrument panel cluster (IPC).
- Driver and passenger knee bolsters.
- Inflatable restraint I/P module.
- Inflatable restraint I/P module disable switch.
- Inflatable restraint I/P module disable switch indicator.
- Inflatable restraint sensing and diagnostic module (SDM).
- Inflatable restraint steering wheel module.
- Inflatable restraint steering wheel module coil.
- Inflatable restraint wiring harnesses.
- Steering wheel and column.

A frontal collision of sufficient force will deploy the frontal air bags. The SDM contains a sensing device that converts vehicle velocity changes to an electrical signal. The SDM also contains a microprocessor that performs calculations using the measured accelerations and compares these calculations to a value stored in memory. When the generated calculations exceed the stored value, the SDM will cause current to flow through the frontal deployment loops deploying the frontal air bags. Once the air bags are inflated they quickly deflate through the air bag vent holes and/or the bag fabric. After the air bags have deployed, the SDM sets a diagnostic trouble code (DTC) and turns the AIR BAG indicator ON. The SDM, I/P module, steering wheel module, steering wheel module coil and the connecting wires makeup the frontal deployment loops. The SDM continuously monitors the deployment loops for malfunctions and turns the AIR BAG indicator ON if a fault is detected.

**Air Bag Indicator**

The AIR BAG indicator, located in the IPC is used to notify the driver of SIR system malfunctions and to verify that the SDM is communicating with the IPC. When the ignition is turned ON, the SDM is supplied with Ignition 1 voltage and the IPC flashes the AIR BAG indicator seven times. While flashing the indicator, the SDM conducts test on all SIR system components and circuits. If no malfunctions are detected the SDM will communicate with the IPC through the class 2 serial data circuit and command the AIR BAG indicator OFF. The SDM provides continuous monitoring of the air bag circuits by conducting a sequence of checks. If a malfunction is detected the SDM will store a diagnostic trouble code (DTC) and command the AIR BAG

indicator ON. The presence of a SIR system malfunction could result in non-deployment of the air bags. The AIR BAG indicator will remain ON until the malfunction has been repaired.

**Driver and Passenger Knee Bolsters**

The knee bolsters are designed to help restrain the lower torsos of front seat occupants by absorbing energy through the front seat occupants' upper legs. In a frontal collision the front seat occupants legs may come in contact with the knee bolsters. The knee bolsters are designed to crush or deform absorbing some of the impact, which helps to reduce bodily injuries. The driver and passenger knee bolsters are located in the lower part of the instrument panel and must be inspected for damage after a collision.

**Inflatable Restraint Inflator Modules**

The inflator modules contain a housing, inflatable air bag, initiating device, and a canister of gas generating material. The initiator is part of the inflator module deployment loop. When the vehicle is involved in a collision of sufficient force, the SDM will cause current to flow through the deployment loops to the initiator. Current passing through the initiator ignites the material in the canister producing a rapid generation of gas. The gas produced from this reaction rapidly inflates the air bag. Once the air bag is inflated it quickly deflates through the air bag vent holes and/or the bag fabric.

Each inflator module is equipped with a shorting bar located in the connector of the module. The shorting bar shorts the inflator module deployment loop circuitry to prevent unwanted deployment of the air bag when it is disconnected.

**Inflatable Restraint I/P Module Disable Switch**

The instrument panel (I/P) module disable switch is a manual 2-position key switch located inside the vehicle. The I/P module disable switch allows the vehicle operator the ability to enable or disable the I/P module (passenger frontal air bag). The vehicle operator should disable the I/P module if there is a rear-facing child seat installed or no occupant in the front passenger seat. The I/P module disable switch interfaces with the sensing and diagnostic module (SDM) to request the enabling or disabling of the I/P module. The occupants are notified of the enabling or disabling of the I/P module via the I/P module disable switch ON/OFF indicator located on the console.

**Inflatable Restraint I/P Module Disable Switch Indicator**

The instrument panel (I/P) module disable switch ON/OFF indicator is an LED located in a position that can been viewed by the occupants in the front seats. When the I/P module disable switch is in the disable position, the I/P module disable switch indicator illuminates. When the I/P module disable switch is in the enable position, the I/P module disable switch indicator is not illuminated. The I/P module disable switch indicator will dim to a lower intensity when the headlamp switch is turned ON.

**Inflatable Restraint Sensing and Diagnostic Module (SDM)**

The sensing and diagnostic module (SDM) is a microprocessor and the control center for the SIR system that contains internal sensors. In the event of a collision, the SDM performs calculations using the signals received from the internal sensors. The SDM compares the results of the calculations to values stored in memory. When these calculations exceed the stored value, the SDM will cause current to flow through the appropriate

deployment loops to deploy the air bags. The SDM records the SIR system status when a deployment occurs and turns the AIR BAG indicator ON. The SDM performs continuous diagnostic monitoring of the SIR system electrical components and circuitry when the ignition is turned ON. If the SDM detects a malfunction, a DTC will be stored and the SDM will command the AIR BAG indicator ON. In the event that Ignition 1 voltage is lost during a collision, the SDM maintains a 23-volt loop reserve (23 VLR) for deployment of the air bags. It is important to note, when disabling the SIR system for servicing or rescue operations to allow the 23 VLR to dissipate, which could take up to 1 minute.

**Inflatable Restraint Steering Wheel Module Coil**

The steering wheel module coil is attached to the steering column and is located under the steering wheel. The steering wheel module coil consists of two or more current-carrying coils. The coils allow the rotation of the steering wheel while maintaining continuous electrical contact between the driver deployment loop and the steering wheel module. Two coil wires are used for the steering wheel module deployment loop. Additional coil wires are used for accessories attached to the steering wheel depending on the vehicle model. The steering wheel module coil connector is located near the base of the steering column. The connector contains a shorting bar that shorts the steering wheel module coil deployment loop circuitry to prevent unwanted deployment of the air bag when it is disconnected.

**Inflatable Restraint Wiring Harness**

The inflatable restraint wiring harnesses connect the sensing and diagnostic module (SDM), inflator modules, deployment loops, and the class 2 serial data circuit together using weather pack connectors. SIR system connectors are yellow in color for easy identification. When repairing SIR system wiring harnesses, follow the proper testing and wiring repair procedures outlined in this manual.

**Steering Wheel and Column**

The steering wheel and column are designed to absorb energy when driver contact is made with the steering wheel or inflated air bag. In a frontal collision the driver may contact the steering wheel directly or load the steering wheel and column through the inflated air bag. When the driver applies load to the air bag or steering wheel the column will compress downward absorbing some of the impact, helping to reduce bodily injuries to the driver. The steering wheel and column must be inspected for damage after a collision.

# SPECIAL TOOLS AND EQUIPMENT

## SPECIAL TOOLS

### Special Tools

| Illustration | Tool Number/ Description |
|---|---|
| | J 35616-A<br>GM Terminal Test Kit |

| | |
|---|---|
| 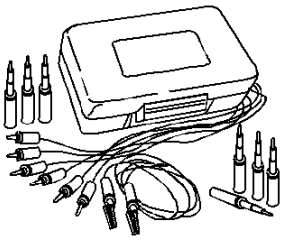 | |
| 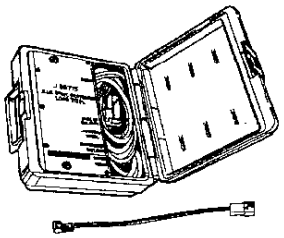 | J 38715-A<br>SIR Driver/Passenger Load Tool |
| | J 38826<br>SIR Deployment Harness |
| 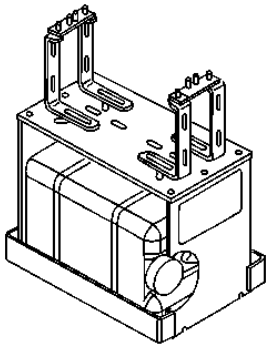 | J 39401-B<br>SIR Deployment Fixture |