Protected by copyright. Copying for private or commercial purposes, in part or in whole, is not permitted unless authorised by AUDI AG. AUDI AG does not guarantee or accept any liability with respect to the correctness of information in this document. Copyright by AUDI AG.

Workshop Manual

Audi A3 2013 ➤ ,
Audi A3 Limousine 2014 ➤ ,
Audi A3 Limousine China 2014 ➤ ,
Audi A3 Sportback 2013 ➤ ,
Audi A3 Sportback China 2014 ➤

7-speed dual clutch gearbox 0CW (S tronic)

Edition 05.2019

List of Workshop Manual Repair Groups

Protected by copyright. Copying for private or commercial purposes, in part or in whole, is not permitted unless authorised by AUDI AG. AUDI AG does not guarantee or accept any liability with respect to the correctness of information in this document. Copyright by AUDI AG.

Repair Group

00 - Technical data
30 - Clutch
34 - Controls, housing
35 - Gears, shafts
39 - Final drive - differential

Technical information should always be available to the foremen and mechanics, because their careful and constant adherence to the instructions is essential to ensure vehicle road-worthiness and safety. In addition, the normal basic safety precautions for working on motor vehicles must, as a matter of course, be observed.

All rights reserved.
No reproduction without prior agreement from publisher.

Copyright © 2019 Audi AG, Ingolstadt

Contents

00 - Technical data . . . 1
1 Identification . . . 1
1.1 Gearbox identification . . . 1
2 Technical data . . . 3
2.1 Capacities . . . 3
3 Safety precautions . . . 4
3.1 General safety precautions . . . 4
3.2 Safety precautions when working on vehicles with start/stop system . . . 4
3.3 Safety precautions when using testers and measuring instruments during a road test . . . 5
3.4 Safety precautions when working on mechatronic unit for dual clutch gearbox J743 . . . 5
3.5 Notes on tow-starting and towing . . . 6
4 Repair instructions . . . 7
4.1 General notes . . . 7
4.2 Rules for cleanliness . . . 10
4.3 General repair instructions . . . 11
4.4 Contact corrosion . . . 12
4.5 Use of impact wrenches . . . 12

30 - Clutch . . . 14
1 Clutch . . . 14
2 Clutch mechanism . . . 15

34 - Controls, housing . . . 16
1 Selector mechanism . . . 16
1.1 Exploded view - selector lever handle . . . 16
1.2 Exploded view - selector mechanism . . . 17
1.3 Manual release from position P . . . 18
1.4 Removing and installing selector lever handle . . . 18
1.5 Moving interlock button on selector lever handle into installation position . . . 20
1.6 Removing and installing selector lever position display Y26 . . . 22
1.7 Removing and installing selector mechanism . . . 23
1.8 Checking selector mechanism . . . 24
1.9 Checking and adjusting selector lever cable . . . 27
1.10 Renewing selector shaft oil seal . . . 28
2 Removing and installing gearbox . . . 29
2.1 Removing gearbox . . . 29
2.2 Installing gearbox . . . 43
2.3 Tightening torques for gearbox . . . 47
3 Transporting gearbox . . . 49
4 Securing to engine and gearbox support . . . 51
5 Assembly mountings . . . 53
5.1 Exploded view - assembly mountings . . . 53
5.2 Removing and installing pendulum support . . . 53
6 Gear oil . . . 55
6.1 Draining and filling gear oil . . . 55
7 Mechatronic unit . . . 58
7.1 Exploded view - mechatronic unit . . . 58
7.2 Removing and installing mechatronic unit . . . 58

35 - Gears, shafts . . . 60
1 Parking lock . . . 60

Protected by copyright. Copying for private or commercial purposes, in part or in whole, is not permitted unless authorised by AUDI AG. AUDI AG does not guarantee or accept any liability with respect to the correctness of information in this document. Copyright by AUDI AG.

1.1 Removing and installing cover for parking lock 60
1.2 Removing and installing parking lock 60

39 - Final drive - differential 61

1 Gearbox control system 61
1.1 Overview of fitting locations - gearbox control system 61
1.2 Basic settings for dual clutch gearbox 62

2 Oil seals 64
2.1 Overview of fitting locations - oil seals 64
2.2 Renewing oil seal (left-side) 64
2.3 Renewing oil seal (right-side) 66

3 Differential 68
3.1 Exploded view - differential 68
3.2 Removing and installing flange shaft (left-side) 68
3.3 Removing and installing flange shaft (right-side) 70

Protected by copyright. Copying for private or commercial purposes, in part or in whole, is not permitted unless authorised by AUDI AG. AUDI AG does not guarantee or accept any liability with respect to the correctness of information in this document. Copyright by AUDI AG.

00 – Technical data

1 Identification

Protected by copyright. Copying for private or commercial purposes, in part or in whole, is not permitted unless authorised by AUDI AG. AUDI AG does not guarantee or accept any liability with respect to the correctness of information in this document. Copyright by AUDI AG.

(ARL006424; Edition 05.2019)

⇒ “1.1 Gearbox identification”, page 1

1.1 Gearbox identification

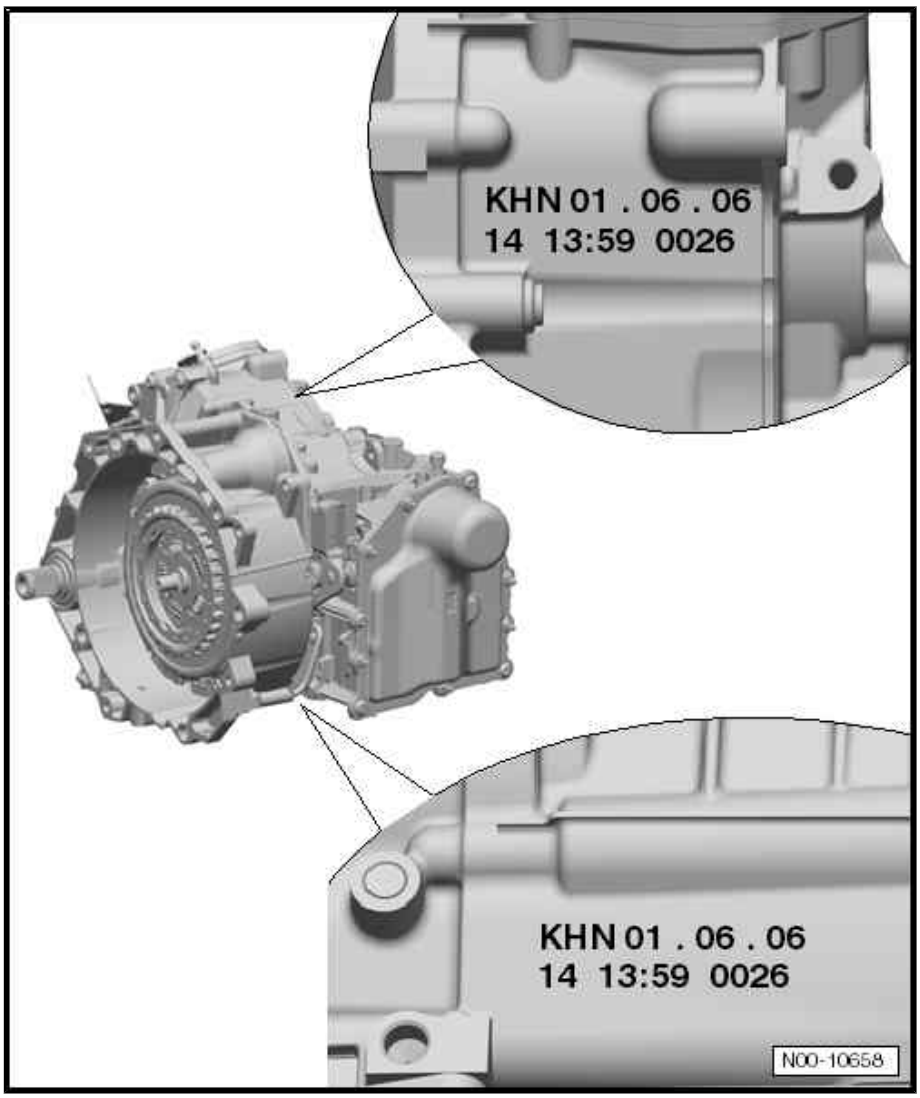

The following details are given at the top of the gearbox (example):

- KHN = gearbox code letters
- 01.06.06 = production date
- 14 = factory code
- 13:59 = time of production
- 0026 = serial number
- The code letters for the gearbox are also given on the vehicle data stickers.

- Location of vehicle data stickers ⇒ Maintenance ; Booklet 821 .

Protected by copyright. Copying for private or commercial purposes, in part or in whole, is not permitted unless authorised by AUDI AG. AUDI AG does not guarantee or accept any liability with respect to the correctness of information in this document. Copyright by AUDI AG.

2 Technical data

⇒ "2.1 Capacities", page 3

2.1 Capacities

The 7-speed dual clutch gearbox has separate oil and fluid fillings. One section is filled with gear oil -arrow A-, the other with hydraulic fluid -arrow B-.

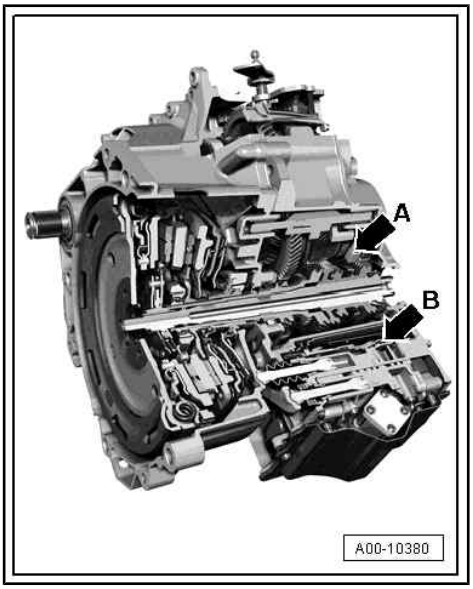

Gear oil section	
Capacity	Gearboxes up to manufacture date 23.03.2015: 2.1 litres Gearboxes from manufacture date 23.03.2015 onwards: 1.7 litres
Oil change	No change required
Lubricant	Gear oil for dual clutch gearbox 0CW Part No. ⇒ Electronic parts catalogue

Hydraulic fluid section with mechatronic unit for dual clutch gearbox - J743-	
Capacity	1 ltr.
Fluid change	No change required It is not possible to check the fluid level in the hydraulic section of the mechatronic unit for dual clutch gearbox - J743- . When filling up after repairs refer to ⇒ Servicing 7-speed dual clutch gearbox 0CW ; Rep. gr. 34 ; Gear oil
Lubricant	Hydraulic fluid

- Use only the gear oil available as a replacement part for the 7-speed dual clutch gearbox 0CW ⇒ Electronic parts catalogue .
- Other types of oil cause malfunctions and/or failure of the gearbox.
- It is not possible to check the fluid level in the hydraulic section of the mechatronic unit for dual clutch gearbox - J743- . When performing repairs, the breather opening on the mechatronic unit for dual clutch gearbox - J743- must be sealed off ⇒ page 49 . Fluid which escapes from the mechatronic unit for dual clutch gearbox - J743- cannot be replenished and the fluid level cannot be checked!
- If oil escapes from the gear oil section, the gear oil must be replaced completely ⇒ page 55 . It is not possible to check the level.
- Underfilling or overfilling either of the oil/fluid sections will impair the function of the gearbox.

Protected by copyright. Copying for private or commercial purposes, in part or in whole, is not permitted unless authorised by AUDI AG. AUDI AG does not guarantee or accept any liability with respect to the correctness of information in this document. Copyright by AUDI AG.

3 Safety precautions

⇒ “3.1 General safety precautions”, page 4

⇒ “3.2 Safety precautions when working on vehicles with start/stop system”, page 4

⇒ “3.3 Safety precautions when using testers and measuring instruments during a road test”, page 5

⇒ “3.4 Safety precautions when working on mechatronic unit for dual clutch gearbox J743 ”, page 5

⇒ “3.5 Notes on tow-starting and towing”, page 6

3.1 General safety precautions

Observe the following precautions to avoid possible injury and/or damage to the vehicle:

Accident risk; vehicle may start to move

If you select a gear while the engine is running, the vehicle may start to move.

– Move selector lever to position “P”.

– Apply parking brake.

Protected by copyright. Copying for private or commercial purposes, in part or in whole, is not permitted unless authorised by AUDI AG. AUDI AG does not guarantee or accept any liability with respect to the correctness of information in this document. Copyright by AUDI AG.

Risk of irreparable damage to electronic components

When disconnecting the battery there is a risk of irreparable damage to electronic components.

– Always switch off the ignition before disconnecting the battery.

♦ Switch off ignition before disconnecting and connecting test equipment.

– Disconnect battery ⇒ Electrical system; Rep. gr. 27 ; Battery; Disconnecting and connecting battery .

3.2 Safety precautions when working on vehicles with start/stop system

Risk of injury - engine may start unexpectedly

The engine can start unexpectedly if the vehicle's start/stop system is activated. A message in the instrument cluster indicates whether the start/stop system is activated.

– To deactivate the start/stop system, switch off the ignition.

3.3 Safety precautions when using testers and measuring instruments during a road test

Protected by copyright. Copying for private or commercial purposes, in part or in whole, is not permitted unless authorised by AUDI AG. AUDI AG does not guarantee or accept any liability with respect to the correctness of information in this document. Copyright by AUDI AG.

Risk of injury if test equipment is not secured

If an accident occurs and the front passenger's airbag is triggered, test equipment which is not secured adequately may be catapulted through the vehicle with potentially serious consequences.

– Secure test equipment on the rear seat with a strap.

Or:

– Have a second mechanic operate test equipment on the rear seat.

3.4 Safety precautions when working on mechatronic unit for dual clutch gearbox - J743-

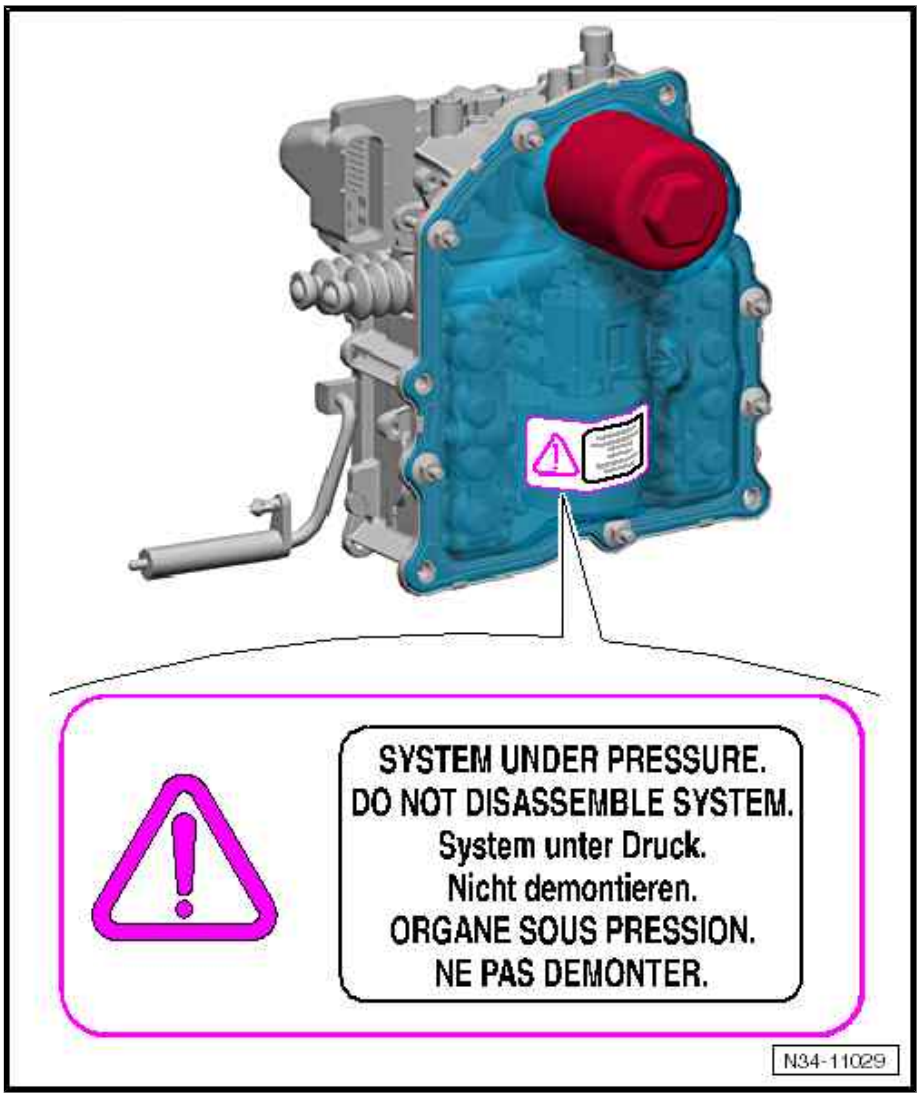

- The mechatronic unit for dual clutch gearbox - J743- has an accumulator which maintains a system pressure of up to 60 bar.
- The cover of the mechatronic unit for dual clutch gearbox - J743- and the accumulator must not be opened.
- The maximum specification for pressure in the accumulator, which is controlled by software and adjusted via the pump, is 60 bar. The pump is switched off if the pressure exceeds this value. When the pressure drops to 42 bar due to gearshifts, the pump is switched on again. In the event of a software fault, it is possible for the pressure to reach approx. 75 bar. The pressure relief valve then opens automatically.

Protected by copyright. Copying for private or commercial purposes, in part or in whole, is not permitted unless authorised by AUDI AG. AUDI AG does not guarantee or accept any liability with respect to the correctness of information in this document. Copyright by AUDI AG.

3.5 Notes on tow-starting and towing

Risk of damage to gearbox

Incorrect towing of the vehicle may result in damage to the gearbox.

– Move selector lever into position “N” before towing the vehicle.
– Do not exceed a speed of 50 km/h or a distance of 50 km when towing the vehicle.

4 Repair instructions

⇒ “4.1 General notes”, page 7

⇒ “4.2 Rules for cleanliness”, page 10

⇒ “4.3 General repair instructions”, page 11

⇒ “4.4 Contact corrosion”, page 12

⇒ “4.5 Use of impact wrenches”, page 12

4.1 General notes

Gearbox

- The engine torque is transferred to the dual clutch via the flywheel. The flywheel and the dual clutch are connected by splines. The two combined components perform the function of a dual-mass flywheel.
- The layout of the gearbox is similar to that of a 7-speed manual gearbox. The two multi-plate dry clutches are regulated hydraulically and actuated alternately so that the gearbox is operated like an automatic gearbox. There is no clutch pedal.
- Both clutches are disengaged when the ignition is switched off. The 1st gear on gear train half 1 and the reverse gear on gear train half 2 are engaged.

Protected by copyright. Copying for private or commercial purposes, in part or in whole, is not permitted unless authorised by AUDI AG. AUDI AG does not guarantee or accept any liability with respect to the correctness of information in this document. Copyright by AUDI AG.

Protected by copyright. Copying for private or com
permitted unless authorised by AUDI AG. AUDI AG d
with respect to the cor

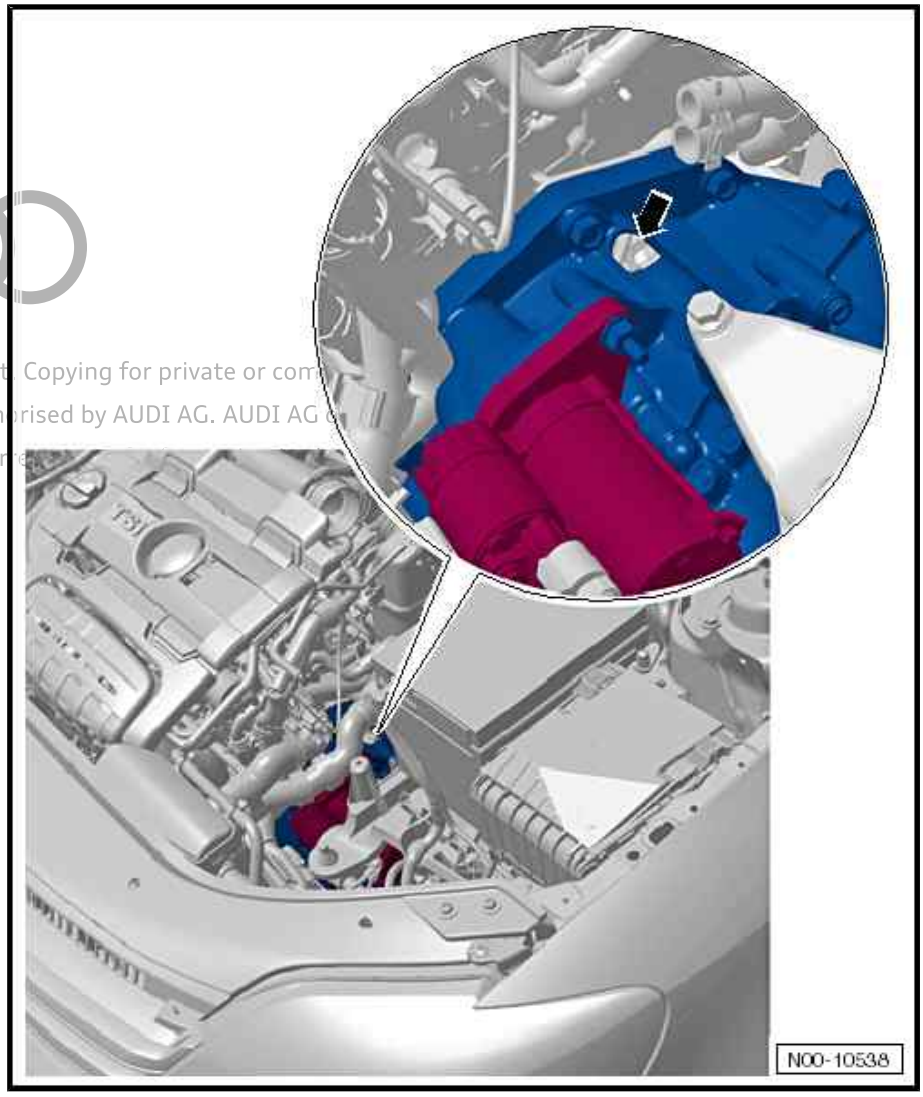

The gearbox has an opening on the housing.

– Make sure no small parts drop into the gearbox through this opening -arrow- when carrying out repairs. Cover the opening if necessary.

Cover above engaging levers

Some versions are fitted with a cover above the engaging levers to prevent dirt from entering.

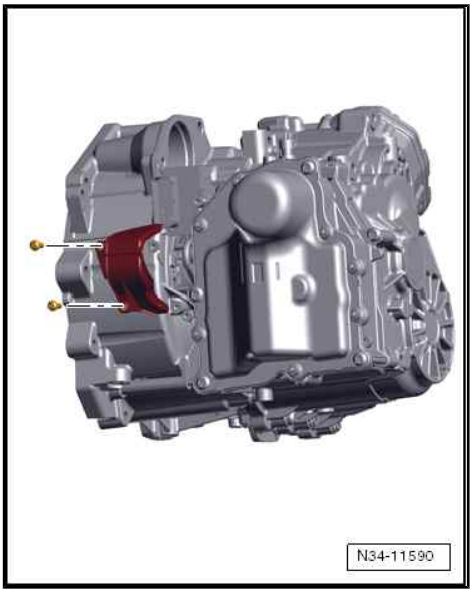

Selector mechanism

Protected by copyright. Copying for private or commercial purposes, in part or in whole, is not permitted unless authorised by AUDI AG. AUDI AG does not guarantee or accept any liability with respect to the correctness of information in this document. Copyright by AUDI

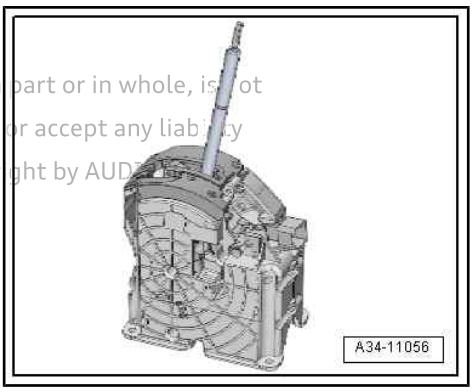

Selector lever lock solenoid - N110-

- The selector lever lock solenoid - N110- locks the selector lever in position “P”. The selector lever can then only be shifted out of position “P” when the ignition is on / the engine is running, the brake pedal is depressed and the button on the selector lever handle is pressed ⇒ page 24 .
- In the event of a fault in the power supply to the selector lever lock solenoid - N110- (discharged battery or defective fuse) or if the solenoid is defective, the selector lever cannot be shifted out of position “P”. The vehicle cannot be moved because the parking lock is engaged.

In this case:

– Check fuses ⇒ Current flow diagrams, Electrical fault finding and Fitting locations.

– Check battery voltage ⇒ Electrical system; General information; Rep. gr. 27 .

If fault finding has not been successful and selector lever can still not be shifted from “P” the solenoid must be released manually. However, if the selector lever is then moved back to “P” it will remain locked in position “P” once again.

Integrated components

- With integrated printed circuit for selector mechanism (selector lever - E313-)
- With integrated selector lever - E313- with selector lever sensors control unit - J587- , selector lever locked in position P switch - F319- and selector lever lock solenoid - N110-
- The selector lever - E313- with selector lever sensors control unit - J587- , selector lever locked in position P switch - F319- and selector lever lock solenoid - N110- can only be renewed together with shift unit as a complete unit ⇒ page 23

Gear oil

The 7-speed dual clutch gearbox has separate oil and fluid fillings. One section is filled with gear oil -arrow A-, the other with hydraulic fluid -arrow B-.

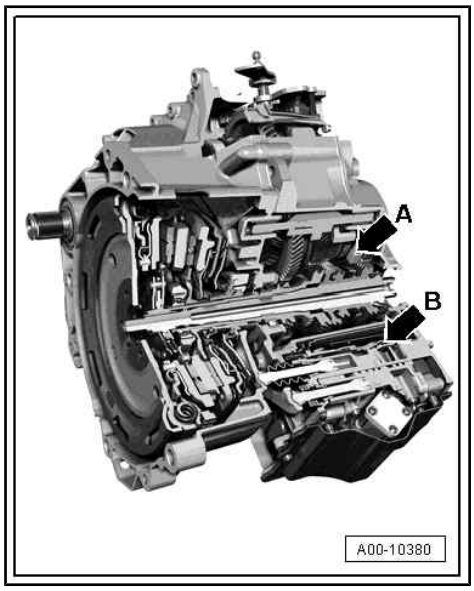

Only the types of gear oil available as a replacement part may be used for the dual clutch gearbox 0CW. Other types of oil will cause malfunctions and/or failure of the gearbox; for part number refer to ⇒ Electronic parts catalogue .

The gear oil level cannot be checked. The correct gear oil level can only be achieved by replacing the gear oil, e.g. if the gearbox is leaking ⇒ “6.1 Draining and filling gear oil”, page 55 .

Variation of gear-change points for gradients

An additional gear change map automatically selects gear changes for gradients depending on accelerator pedal position and driving speed.

- Gear change map for extreme uphill gradients is matched to engine output.
- Gear change map for extreme downhill gradients is matched to the braking effect of the engine.
- Increased engine braking effect can also be obtained by directly selecting a specific gear via the tiptronic function, e.g. when towing a trailer on downhill gradients

4.2 Rules for cleanliness

- Carefully clean connection points and the surrounding area with engine cleaner or brake cleaner and dry thoroughly before opening.
- Use cleaning fluid - D 009 401 04- to clean the gearbox and its components.
- Use lint-free cloths for cleaning, such as the “WYPALL X70 / WORKHORSE” cloth from Kimberly-Clark Professional.
- Seal off open lines and connections immediately with clean plugs or protective caps from engine bung set - VAS 6122- .
- After removal, place parts on a clean surface and cover them. Use sheeting and paper. Use lint-free cloths.
- Carefully cover or seal open components if repairs cannot be carried out immediately.
- Only install clean components; replacement parts should only be unpacked immediately prior to installation.
- Protect unplugged electrical connectors against dirt and moisture and make sure connections are dry when attaching.

Protected by copyright. Copying for private or commercial purposes, in part or in whole, is not permitted unless authorised by AUDI AG. AUDI AG does not guarantee or accept any liability with respect to the correctness of information in this document. Copyright by AUDI AG.

4.3 General repair instructions

Protected by copyright. Copying for private or commercial purposes, in part or in whole, is not permitted unless authorised by AUDI AG. AUDI AG does not guarantee or accept any liability with respect to the correctness of information in this document. Copyright by AUDI AG.

- Proper tools and the maximum possible care and cleanliness are essential for satisfactory repairs to the transmission units. The usual basic safety precautions also naturally apply when carrying out repair work.
- To avoid repetition, a number of generally applicable instructions for the various repair procedures are summarised here. They apply to the work described in this Manual.

Guided Fault Finding, Vehicle self-diagnosis and Test Instruments

- Before servicing the gearbox, the cause of the fault should be identified as exactly as possible using the vehicle diagnostic tester via `Guided Fault Finding`, `Vehicle Self-diagnosis` and `Test Instruments`.

Special tools

For a complete list of special tools used in this Workshop Manual please refer to ⇒ "Workshop equipment and special tools" .

Environmental and waste disposal regulations for oil

- ATF, gear oil and any other type of oil must be handled with care.
- Dispose of drained oil properly.
- Always adhere to statutory environmental and waste disposal regulations.
- Observe the information shown on the packaging of the oil.

Gearbox

- Do not run the engine or tow the vehicle with the oil pan or mechatronic unit removed or when there is no gear oil in the gearbox.
- Thoroughly clean all joints and connections and the surrounding areas before disconnecting.
- When installing gearbox, ensure that dowel sleeves are fitted correctly.

O-rings, seals, oil seals and gaskets

- Always renew O-rings, seals, oil seals and gaskets.
- In certain cases, seals are also referred to as oil seals.
- After removing gaskets and seals, always inspect the contact surface on the housing or shaft for burrs resulting from removal or for other signs of damage.
- Thoroughly clean housing joint surfaces before assembling.
- Always replace paper gaskets. Completely remove old gasket and clean sealing surfaces thoroughly.
- Lightly lubricate the outer circumference and sealing lip of oil seals with gear oil before installing.
- Lightly lubricate O-rings with gear oil or vaseline before installation to prevent them from getting crushed during assembly.
- Do not use any other lubricants where gear oil is specified. Otherwise, there is a risk of problems occurring in the gearbox hydraulics.
- The open side of the oil seal should face the side containing the fluid.

- When installing a new oil seal, position the seal such that the sealing lip does not contact the shaft in the same place as the old seal (make use of installation depth tolerances).
- Observe rules for cleanliness ⇒ page 10 .

Locking elements

- Do not over-stretch circlips.
- Renew circlips which have been damaged or over-tensioned.
- Circlips must be properly seated in the base of the groove.

Shims

- Use a micrometer to measure the shims at several points.
- Check for burrs and damage.
- Do not install shims which are damaged or not in perfect condition.

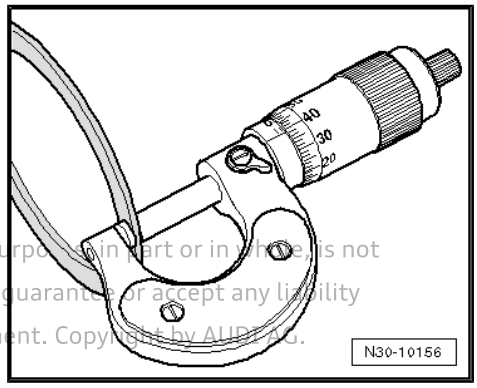

Protected by copyright. Copying for private or commercial purposes, in part or in whole, is not permitted unless authorised by AUDI AG. AUDI AG does not guarantee or accept any liability with respect to the correctness of information in this document. Copyright by AUDI AG.

Nuts, bolts

- Loosen bolts in reverse sequence to the specified tightening sequence.
- Bolts and nuts which secure covers and housings should be loosened and tightened in diagonal sequence and in stages if no tightening sequence is specified.
- Renew self-locking nuts.
- Use a wire brush to clean the threads of bolts which are secured with locking fluid. Then apply locking fluid - AMV 185 101 A1- to bolt threads before installing.
- The tightening torques stated apply to non-oiled nuts and bolts.

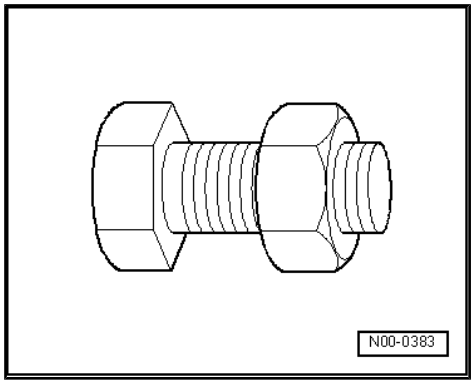

4.4 Contact corrosion

Contact corrosion can occur if unsuitable fasteners are used (e.g. bolts, nuts, washers, etc.).

For this reason, only fasteners with a special surface coating are fitted.

Additionally, all rubber and plastic parts and all adhesives are made of non-conductive materials.

Always install new parts if you are not sure whether used parts can be re-fitted ⇒ Electronic parts catalogue .

Please note:

- We recommend using only genuine replacement parts; these have been tested and are compatible with aluminium.
- We recommend using Audi Genuine Accessories.
- Damage caused by contact corrosion is not covered by warranty.

4.5 Use of impact wrenches

In general, it is permitted to use an impact wrench to unscrew bolts and nuts. An exception to this is when work is performed

inside an open high-voltage battery. For this work, it is not permitted to use an impact wrench.

Protected by copyright. Copying for private or commercial purposes, in part or in whole, is not permitted unless authorised by AUDI AG. AUDI AG does not guarantee or accept any liability with respect to the correctness of information in this document. Copyright by AUDI AG.

An impact wrench may be used to screw in bolts and nuts when performing repair work if the following requirements are observed. In general, electric and compressed-air impact wrenches should be used.

Requirements:

- Only screw in bolts with locking fluid or self-locking nuts at low speed.
- Use a suitable impact wrench with variable speed and adjustable torque range.
- Use suitable bits when working in the vicinity of sensitive surfaces, e.g. plastic-coated bits for aluminium rims.
- When working in the vicinity of natural gas systems, observe the information in the Workshop Manual “Natural gas engines - General information”.

Use:

- Fit bolts/nuts by hand.
- Only use an impact wrench to screw in bolts/nuts until the head of the bolt/nut makes contact and then continue tightening with a torque wrench.
- Clean threaded pins before unscrewing the bolt/nut.

30 – Clutch

1 Clutch

All work on the clutch is described in “Servicing 7-speed dual clutch gearbox 0CW” ⇒ Servicing 7-speed dual clutch gearbox 0CW; Rep. gr. 30 ; Clutch .

Protected by copyright. Copying for private or commercial purposes, in part or in whole, is not permitted unless authorised by AUDI AG. AUDI AG does not guarantee or accept any liability with respect to the correctness of information in this document. Copyright by AUDI AG.

2 Clutch mechanism

Protected by copyright. Copying for private or commercial purposes, in part or in whole, is not permitted without the prior written consent of AUDI AG. AUDI AG does not guarantee or accept any liability with respect to the correctness of information in this document. Copyright by AUDI AG.

All work on the clutch mechanism is described in “Servicing 7-speed dual clutch gearbox 0CW” ⇒ Servicing 7-speed dual clutch gearbox 0CW; Rep. gr. 30 ; Clutch mechanism .

34 – Controls, housing

1 Selector mechanism

⇒ “1.1 Exploded view - selector lever handle”, page 16

⇒ “1.2 Exploded view - selector mechanism”, page 17

⇒ “1.3 Manual release from position P”, page 18

⇒ “1.4 Removing and installing selector lever handle”, page 18

⇒ “1.5 Moving interlock button on selector lever handle into installation position”, page 20

⇒ “1.6 Removing and installing selector lever position display Y26 ”, page 22

⇒ “1.7 Removing and installing selector mechanism”, page 23

⇒ “1.8 Checking selector mechanism”, page 24

⇒ “1.9 Checking and adjusting selector lever cable”, page 27

⇒ “1.10 Renewing selector shaft oil seal”, page 28

1.1 Exploded view - selector lever handle

1 - Selector lever position display - Y26-

- ❑ Removing and installing ⇒ page 22

2 - Selector lever handle

- ❑ With selector lever boot
- ❑ Removing and installing ⇒ page 18
- ❑ Removing and installing

Protected by copyright. Copying for commercial purposes, in part or in whole, is not permitted unless authorised. We do not guarantee or accept any liability with respect to the correctness of this document. Copyright by AUDI AG.

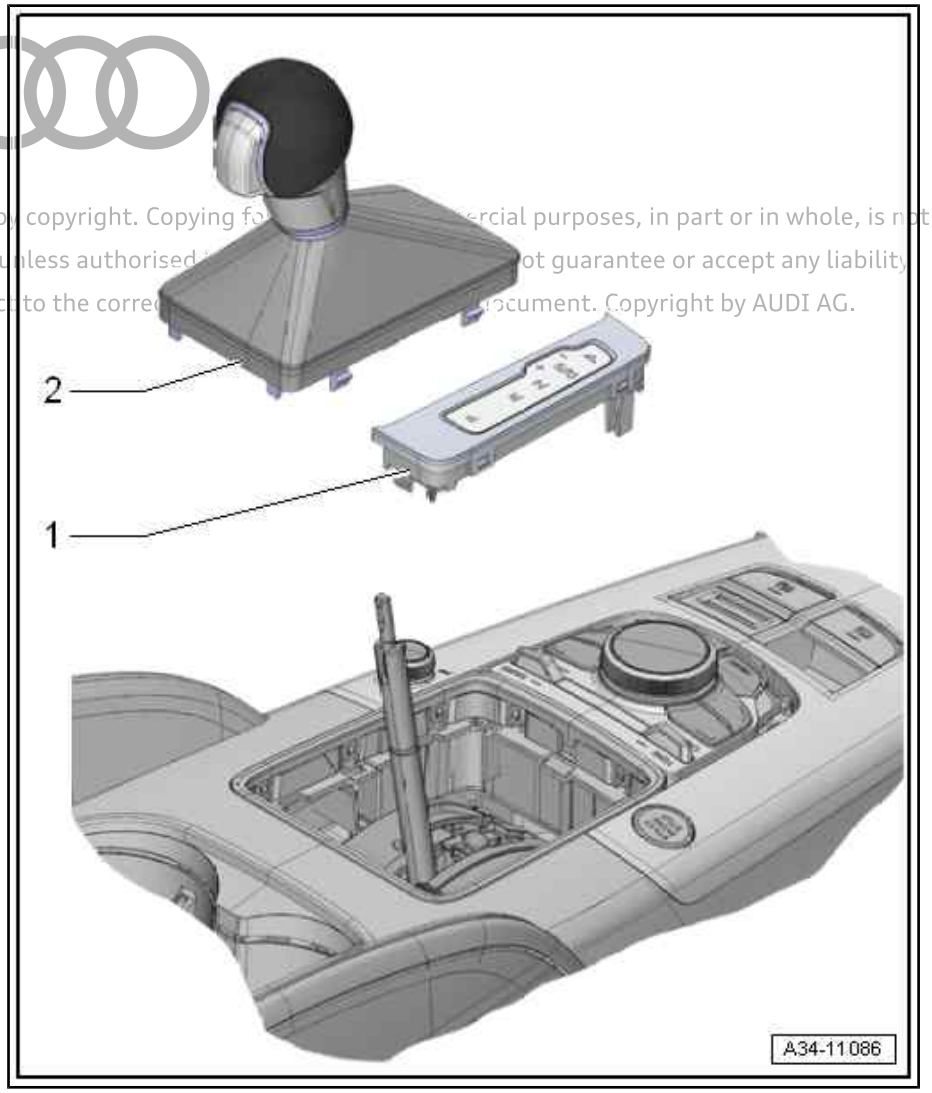

⇒ page 20

1.2 Exploded view - selector mechanism

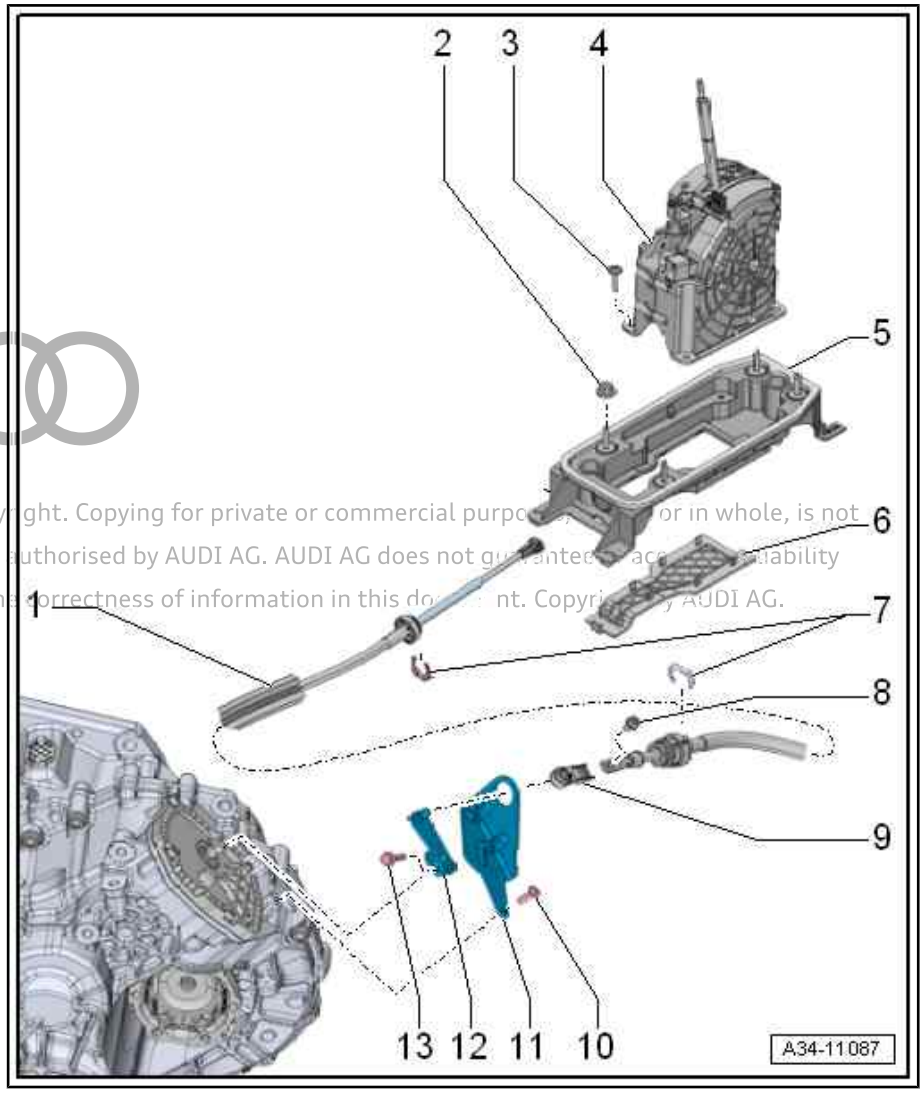

Protected by copyright. Copying for private or commercial purposes, in part or in whole, is not permitted unless authorised by AUDI AG. AUDI AG does not guarantee or assume liability with respect to the correctness of information in this document. Copyright by AUDI AG.

1 - Selector lever cable
- ❑ Selector lever cable can only be renewed together with selector mechanism ⇒ page 23
- ❑ Do not grease selector lever cable

2 - Nut
- ❑ Secures selector mechanism to body
- ❑ 4x
- ❑ 8 Nm

3 - Bolt
- ❑ Secures selector mechanism to selector housing
- ❑ 4x
- ❑ 4 Nm

4 - Shift unit
- ❑ Manual release of selector mechanism ⇒ page 18
- ❑ Removing and installing ⇒ page 23
- ❑ Information on selector mechanism ⇒ page 9

5 - Selector housing

6 - Floor plate
- ❑ Always renew if removed

7 - Retaining clips
- ❑ Renew

8 - Bolt
- ❑ Adjuster screw for selector lever cable
- ❑ 13 Nm

9 - Joint

10 - Bolt
- ❑ 3x
- ❑ 8 Nm

11 - Cable support bracket
- ❑ For selector lever cable

12 - Gearbox selector lever

13 - Bolt
- ❑ 15 Nm

1.3 Manual release from position P

Special tools and workshop equipment required

- Wedges - T10383-

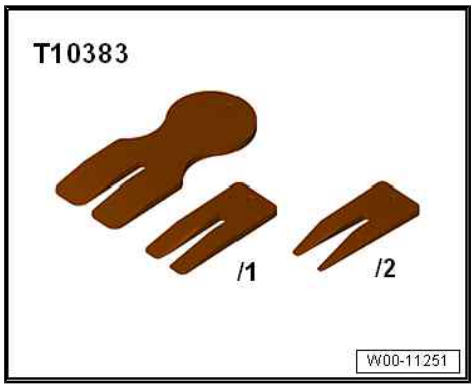

Procedure

– Pull up parking brake button to apply electromechanical parking brake.

– Unclip selector lever boot on both sides using wedge -T10383/1- and turn inside out -arrows-.

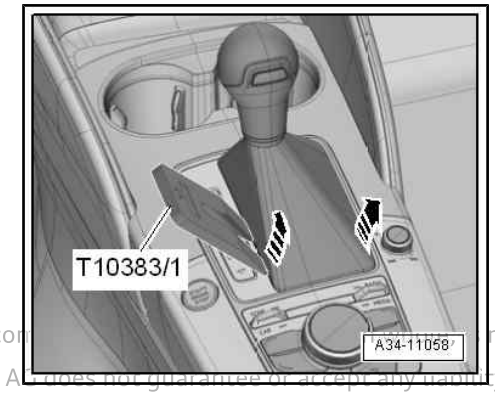

Protected by copyright. Copying for private or com not
permitted unless authorised by AUDI AG. AUDI AG does not guarantee or accept any liability
with respect to the correctness of information in

– Use a screwdriver -1- or similar to release selector lever lock solenoid in direction of -arrow- and hold in this position.

• The solenoid will then release the selector lever.

– With solenoid released, press interlock button on selector lever handle and shift selector lever out of “P”.

• However, if the selector lever is now moved back to “P” the selector lever lock solenoid will once again mechanically lock it in position “P”. The solenoid must be released once again.

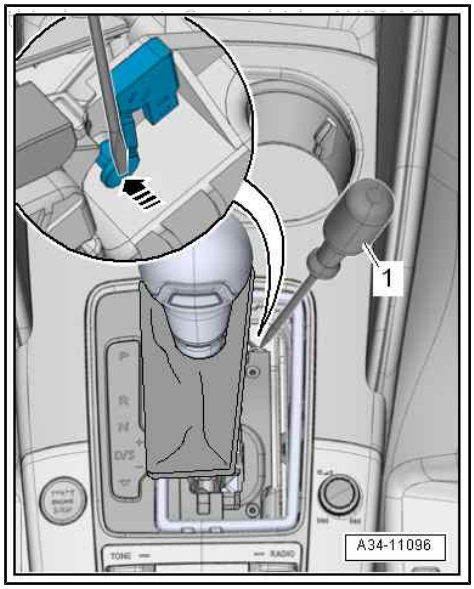

1.4 Removing and installing selector lever handle

Special tools and workshop equipment required

♦ Wedges - T10383-

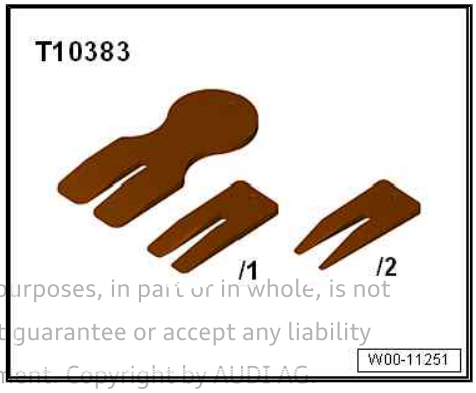

Protected by copyright. Copying for private or commercial purposes, in part or in whole, is not permitted unless authorised by AUDI AG. AUDI AG does not guarantee or accept any liability with respect to the correctness of information in this document. Copyright by AUDI AG.

Removing

– Pull up parking brake button to apply electromechanical parking brake.

– Shift selector lever to position “D/S”.

– Switch off ignition.

– Unclip selector lever boot on both sides using wedge -T10383/1- and turn inside out -arrows-.

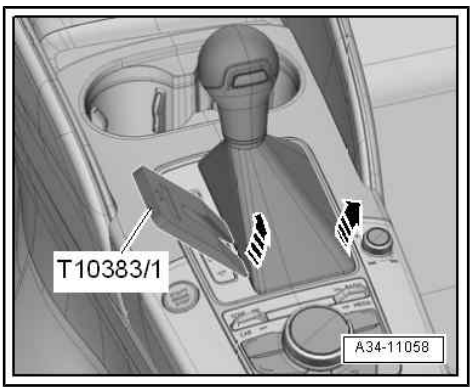

– Turn locking ring in direction of -arrow A- as far as stop.

• Lug -1- on locking ring and lug -2- on selector lever handle are offset.

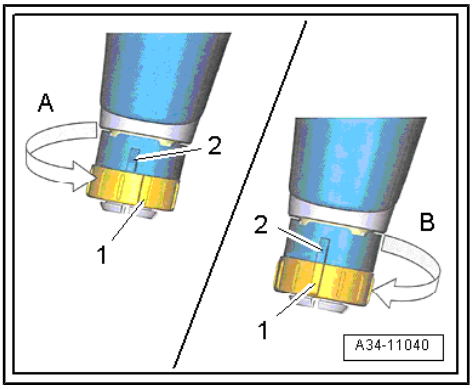

– Pull off selector lever handle -1- together with selector lever boot upwards -arrow A-, taking care not to touch interlock button -2-.

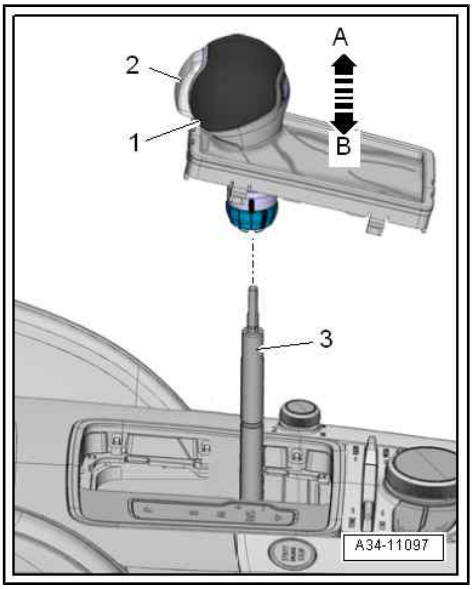

Installing

Installation is carried out in reverse order; note the following:

- Interlock button -2- faces direction of travel.

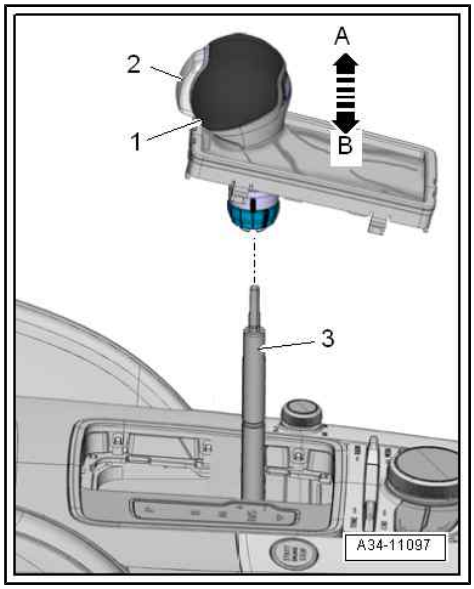

NOTICE

Risk of damage to selector mechanism if selector lever is installed incorrectly.

– Do not press interlock button on selector lever handle.

– Carefully press selector lever handle -1- fully onto selector lever -arrow B-, taking care not to touch interlock button -2-.

- The selector lever handle must engage in the annular groove on the selector lever.

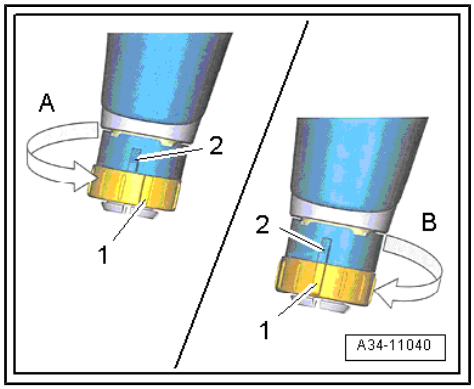

– Turn locking ring in direction of -arrow B- as far as stop.

- It must be possible to turn the locking ring; press selector lever handle if necessary.
- Lug -1- on locking ring is aligned below lug -2- on selector lever handle.

Note

♦ The selector lever handle is not locked properly until the locking ring has been turned. Only then should you press the interlock button on the handle.

♦ There may be increased resistance when you press the interlock button for the first time after installation.

– Press interlock button on selector lever handle.

– Fold selector lever boot down and clip it in.

– Check selector mechanism ⇒ page 24 .

1.5 Moving interlock button on selector lever handle into installation position

Special tools and workshop equipment required

♦ Release tool - T40203-

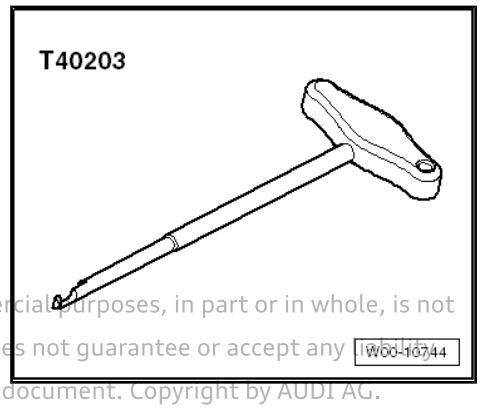

Protected by copyright. Copying for private or commercial purposes, in part or in whole, is not permitted unless authorised by AUDI AG. AUDI AG does not guarantee or accept any liability with respect to the correctness of information in this document. Copyright by AUDI AG.

Procedure

- Installation position: The interlock button -2- must protrude from the selector lever handle.
- If the interlock button has been pressed in, it must be moved back into its installation position so that the selector lever handle can be installed.

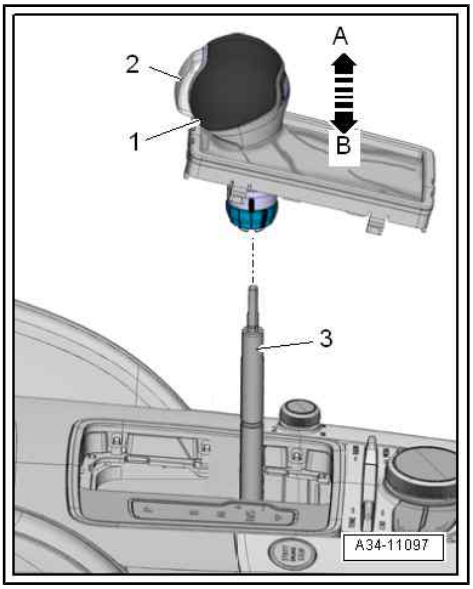

– Carefully insert release tool - T40203- into selector lever handle -1- as far as stop -arrow-.
- For illustration purposes, the selector lever handle is shown without selector lever boot. The selector lever boot cannot be removed from the handle.
- Recess on release tool - T40203- should face interlock button, hook should point towards left.

Protected by copyright. Copying for private or commercial purposes, in part or in whole, is not permitted unless authorised by AUDI AG. AUDI AG does not guarantee or accept any liability with respect to the correctness of information in this document. Copyright by AUDI AG.

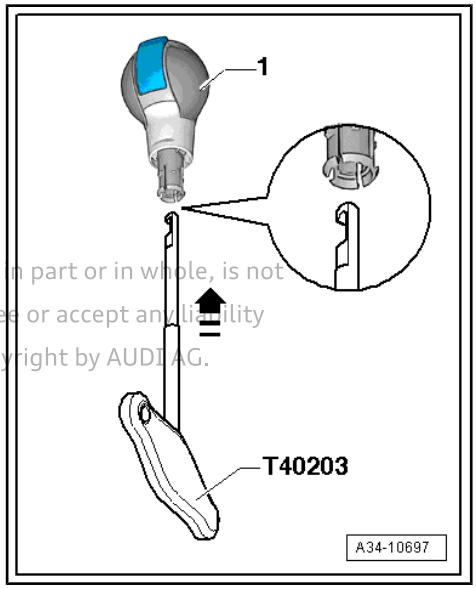

– Hold selector lever handle -A- and turn release tool - T40203- 180° in direction of -arrow 1-.
– Hold selector lever handle and carefully pull out release tool - T40203- -arrow 2-.

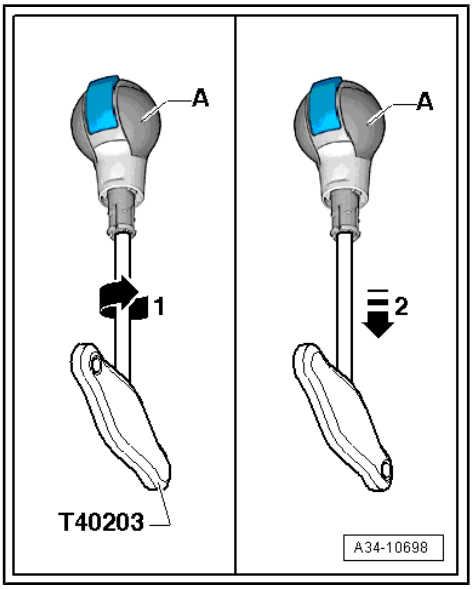

- When pulling out release tool - T40203- , interlock button on selector lever handle -A- is pressed out and locked in position.
- Do not touch interlock button before installing selector lever handle so that interlock button is not pressed in again.

Protected by copyright. Copying for private or commercial purposes, in part or in whole, is not permitted unless authorised by AUDI AG. AUDI AG does not guarantee or accept any liability with respect to the correctness of information in this document. Copyright by AUDI AG.

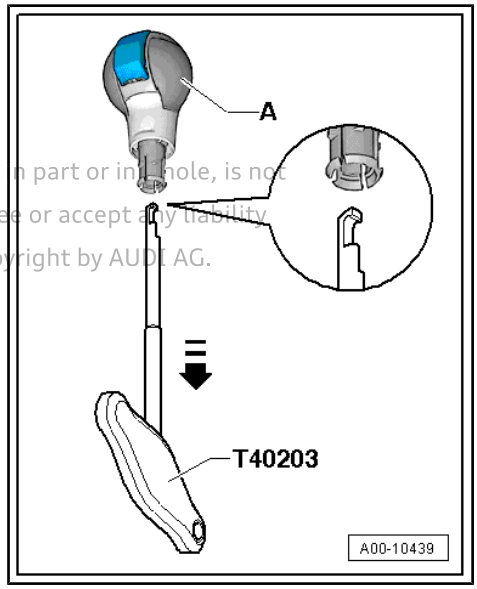

1.6 Removing and installing selector lever position display - Y26-

Special tools and workshop equipment required

♦ Wedges - T10383-

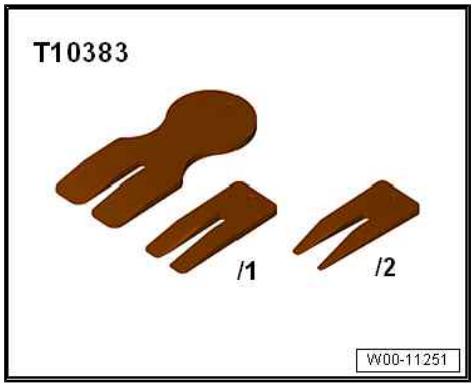

Removing

– Pull up parking brake button to apply electromechanical parking brake.

– Shift selector lever to position “D/S”.

– Switch off ignition.

– Unclip selector lever boot on both sides using wedge - T10383/1- and turn inside out -arrows-.

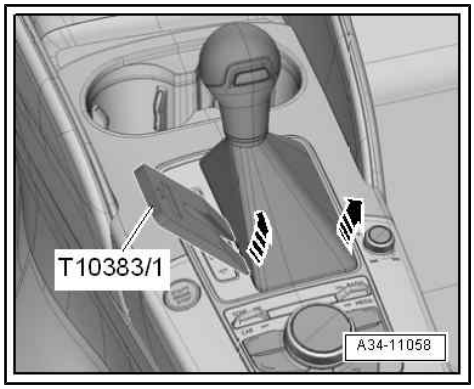

– Release retaining spring -2- and detach selector lever position display - Y26- -item 1- upwards -arrow-.
– Unplug electrical connector -3-.

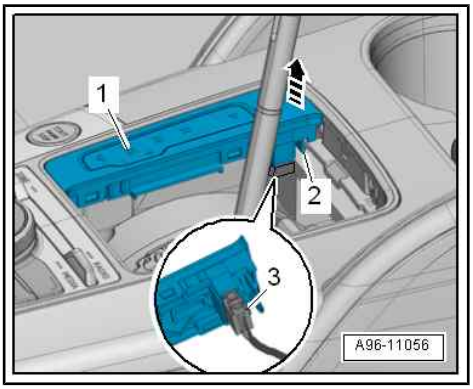

Removing

Installation is carried out in reverse sequence.

1.7 Removing and installing selector mechanism

Special tools and workshop equipment required

♦ Removal lever - 80 - 200-

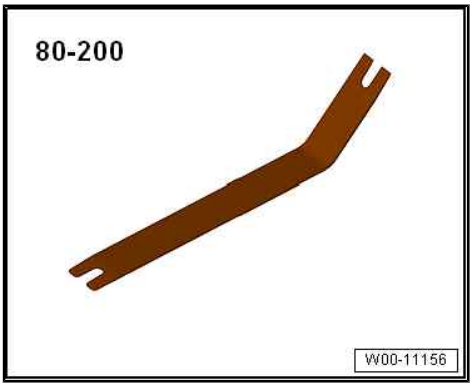

Removing

– Remove selector lever handle ⇒ page 18 .
– Remove selector lever position display - Y26- ⇒ page 22 .
– Remove centre console insert -1- ⇒ General body repairs, interior; Rep. gr. 68 ; Centre console; Removing and installing centre console insert .

Protected by copyright. Copying for private or commercial purposes, in part or in whole, is not permitted unless authorised by AUDI AG. AUDI AG does not guarantee or accept any liability with respect to the correctness of information in this document. Copyright by AUDI AG.

– Unplug electrical connector -1- between shift unit and vehicle wiring harness.
– Remove air cleaner housing ⇒ Rep. gr. 23 ; Air cleaner; Removing and installing air cleaner housing or ⇒ Rep. gr. 24 ; Air cleaner; Removing and installing air cleaner housing .

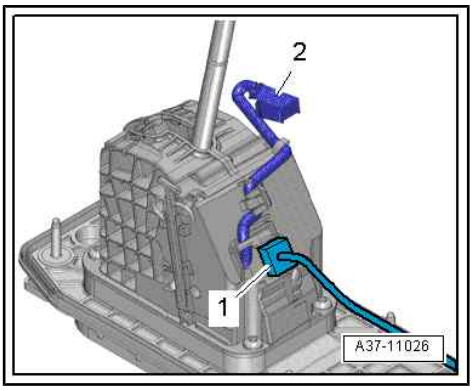

– Pry selector lever cable -2- off gearbox selector lever using removal lever - 80 - 200- .

– Pull off retaining clip -1- for selector lever cable.

– Remove heat shield for underbody ⇒ General body repairs, exterior; Rep. gr. 66 ; Strips / trim panels / extensions; Removing and installing heat shield for floor .

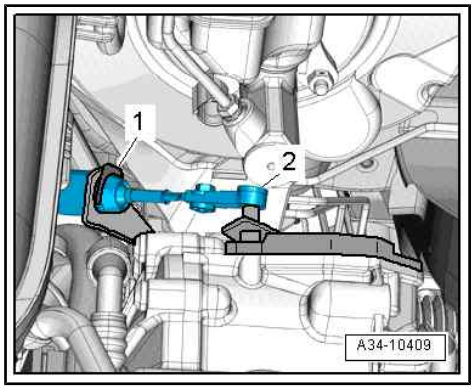

– Remove nuts -arrows- in vehicle interior.

• The assistance of a second mechanic is required to detach the shift unit from below.

– Detach shift unit together with selector lever cable from below. Guide selector lever cable out of cable support bracket.

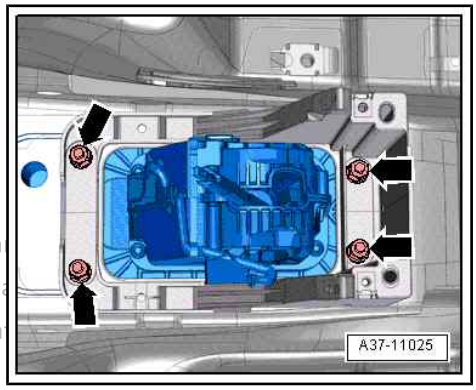

NOTICE

Protected by copyright. Copying for private or commercial purposes, in pa
permitted unless authorised by AUDI AG. AUDI AG does not guarantee or a
with respect to the correctness of information in this document. Copyrigh

Risk of damage to operating cable (may become deformed).

– **Operating cable must never be bent or kinked excessively.**

Installing

Installation is carried out in reverse order; note the following:

NOTICE

Risk of damage to operating cable (may become deformed).

– **Operating cable must never be bent or kinked excessively.**

– Adjust selector lever cable ⇒ page 27 .

– Check selector mechanism and ignition key removal lock ⇒ page 24 .

Tightening torques

♦ Exploded view - selector mechanism ⇒ “1.2 Exploded view - selector mechanism”, page 17

♦ Air cleaner; Exploded view - air cleaner housing ⇒ Rep. gr. 23 ; Air cleaner; Exploded view - air cleaner housing or ⇒ Rep. gr. 24 ; Air cleaner; Exploded view - air cleaner housing

♦ Heat shield for floor ⇒ General body repairs, exterior; Rep. gr. 66 ; Strips / trim panels / extensions; Exploded view - heat shield

1.8 Checking selector mechanism

Overview:

♦ 1. Checking operation of selector mechanism ⇒ page 25

♦ Check 2: Checking ignition key removal lock ⇒ page 26

♦ 3. Checking door locking disable ⇒ page 26

♦ 4. Check interlock button on selector lever handle ⇒ page 26 .

♦ 5. Checking connectors on selector mechanism ⇒ page 27

1. Checking operation of selector mechanism

- It should not be possible to operate the starter while the selector lever is in positions “D/S”, “R” or in the “tiptronic gate”.
- When travelling at speeds above 5 km/h and shifting into selector lever position “N”, the solenoid for the selector lever lock must not engage and block the selector lever. The selector lever can be shifted into a driving gear.
- When travelling at speeds below 2 km/h (almost stationary), the solenoid for the selector lever lock should only engage about 1 second after you shift into selector lever position “N”. The selector lever cannot be shifted out of “N” position until the brake pedal is pressed.

Protected by copyright. Copying for private or commercial purposes, in part or in whole, is not permitted unless authorised by AUDI AG. AUDI AG does not guarantee or accept any liability with respect to the correctness of information in this document. Copyright by AUDI AG.

Selector lever in position “P”:

– Pull up parking brake button to apply electromechanical parking brake.
– Switch off ignition.
- The selector lever is locked and cannot be shifted out of “P” position, even when the interlock button on the handle is pressed in.
– To obtain the “ignition on” position, briefly press key in ignition lock or entry and start authorisation button - E408- .
– Do not press brake pedal.
- The selector lever is locked and cannot be shifted out of “P” position, even when the interlock button on the handle is pressed in. Selector lever lock solenoid - N110- blocks selector lever.
– Press and hold brake pedal.
- Selector lever lock solenoid - N110- releases selector lever. It is possible to shift into a driving gear. With interlock button on selector lever handle pressed, shift selector lever slowly from “P” position through “R, N, and D/S” and check whether the selector lever position display - Y6- in the instrument cluster shows the correct selector lever position in each case.
– Pull selector lever from “D/S” towards the rear and release selector lever.
- The selector lever will return automatically to the position “D/S”. The selector lever position display - Y6- in the instrument cluster should change from “D” to “S1” and then back to “D” when the selector lever is pulled back once again.

Selector lever in position “N” and ignition switched on:

– Do not press brake pedal.
- After a short delay: Selector lever is locked and cannot be shifted out of “N” position even when pressing the interlock button on the selector lever handle. Selector lever lock solenoid - N110- blocks selector lever.
– Depress brake pedal.
- Selector lever lock solenoid - N110- releases selector lever. Shifting into position “D/S” is possible.

Selector lever in position “D/S”, ignition switched on:

– Shift selector lever into “tiptronic gate”.
- The illuminated “D/S” symbol in the selector lever position display - Y26- should go out and the “+” and “–” symbols should light up.

- The selector lever position display - Y6- in the instrument cluster should change from “D” to “M1” when the selector lever is moved into the “tiptronic gate”.

If results do not match specifications:

– Perform `Guided Fault Finding` ⇒ Vehicle diagnostic tester.

– Adjust selector lever cable ⇒ page 27 .

– Check interlock button on selector lever handle ⇒ page 26 .

2. Checking ignition key removal lock

– Pull up parking brake button to apply electromechanical parking brake.

– Do not press brake pedal.

– Briefly press ignition key in ignition lock to reach position “ignition on”.

– Press and hold brake pedal.

- When interlock button in selector lever handle is pressed, it should be possible to move selector lever out of position “P” without “catching”.

– Switch off ignition.

- It should not be possible to remove the ignition key when the selector lever is in any position other than “P”.

– Move selector lever to position “P”.

– Pull out ignition key.

- It should only be possible to remove ignition key in selector lever position “P”.
- It should not be possible to shift selector lever out of “P” position with interlock button pressed and foot brake depressed.

If the ignition key removal lock does not function as described, perform `Guided Fault Finding` ⇒ Vehicle diagnostic tester.

Protected by copyright. Copying for private or commercial purposes, in part or in whole, is not permitted unless authorised by AUDI AG. AUDI AG does not guarantee or accept any liability with respect to the correctness of information in this document. Copyright by AUDI AG.

3. Checking door locking disable - vehicles with keyless locking and starting system

– To obtain the “ignition on” position, briefly press the entry and start authorisation button - E408- .

– Do not move selector lever to position “P”; select e.g. position “N”.

– Switch off ignition.

- A warning message should be displayed in the instrument cluster.
- The vehicle cannot be locked.

– Switch on ignition and shift selector lever into position “P”.

– Switch off ignition.

- The vehicle can now be locked.

If results do not match specifications:

– Perform `Guided Fault Finding` ⇒ Vehicle diagnostic tester.

– Adjust selector lever cable ⇒ page 27 .

– Check interlock button on selector lever handle ⇒ page 26 .

4. Checking interlock button on selector lever handle

Check that interlock button moves freely:

- Interlock button should move easily when pressed without force.
- Interlock button should spring back fully on its own when released.

– If specified results are not obtained, check that selector lever handle is correctly installed ⇒ page 18 .

– Check whether selector lever is bent.

Functional check:

- Ignition switched on

Protected by copyright. Copying for private or commercial purposes, in part or in whole, is not permitted unless authorized by AUDI AG. AUDI AG does not guarantee or accept any liability with respect to the correctness of information in this document. Copyright by AUDI AG.

Press the interlock button on the selector lever handle to move the handle into the positions listed below; it should not be possible to move the selector lever into these positions unless the interlock button is pressed.

♦ “P” to “R” (also depress brake pedal)

♦ “N” to “R” (brake pedal also has to be depressed after a short delay when vehicle is stationary)

♦ “R” to “P”

If results do not match specifications:

– Check whether selector lever handle is correctly installed ⇒ page 18 .

– Check electrical connectors on selector mechanism.

– Check selector lever lock solenoid - N110- in `Guided Fault Finding` ⇒ Vehicle diagnostic tester.

– Adjust selector lever cable ⇒ page 27 .

5. Checking connectors on selector mechanism

Before servicing or checking the connectors, the cause of the fault must be determined via `Guided Fault Finding` ⇒ Vehicle diagnostic tester.

Before checking the connectors, all the control units in the vehicle should be checked for entries in the event memory; repair faults as necessary ⇒ Vehicle diagnostic tester.

– Check connectors according to ⇒ Current flow diagrams, Electrical fault finding and Fitting locations.

1 - Electrical connector for wiring from shift unit to gearbox (with CAN bus wire) and to selector lever lock solenoid - N110- and selector lever locked in position P switch - F319-

2 - Electrical connector for selector lever position display - Y26-

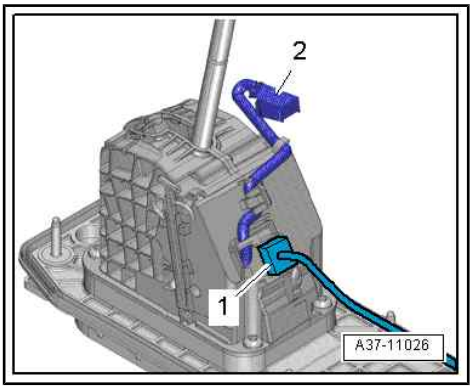

1.9 Checking and adjusting selector lever cable

Adjusting selector lever cable

– Remove air cleaner housing ⇒ Rep. gr. 23 ; Air cleaner; Removing and installing air cleaner housing or ⇒ Rep. gr. 24 ; Air cleaner; Removing and installing air cleaner housing .

- Selector mechanism and selector lever cable operate smoothly when changing gears.
- Sleeve on selector lever cable is undamaged.

The selector lever cable must be adjusted if:

♦ The selector lever cable has been detached from the gearbox.

♦ The engine and/or gearbox have been removed and installed.

♦ The selector lever cable has been removed and installed with the selector mechanism.

♦ The selector lever cable has been removed and installed.

♦ The position of the engine/gearbox assembly has been altered, e.g. installed so it is free of stress.

– Move selector lever to position “P”.

– Loosen bolt -arrow- for adjustment of selector lever cable.

– To release tension in selector lever cable, carefully move selector lever slightly forwards and backwards, without shifting into a different position.

– Tighten adjuster screw -arrow-, taking care not to alter position of selector lever cable. Tightening torque ⇒ page 17

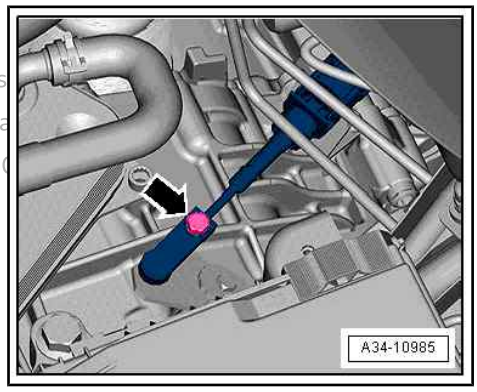

Powered by CarWorks. Copyright for private or commercial purpos
permission is not authorised by AUDI AG. AUDI AG does not guara
completeness of this information. Use at your own risk.

Checking adjustment of selector lever cable

– Keep button pressed, while pulling selector lever approx. 5 mm to the rear out of position “P”. Then keep lever in this position, do not move it into “R”.

– Release selector lever.

- The selector lever should spring back into position “P” by itself.

– Shift selector lever into position “N”.

– Keep button pressed, while pulling selector lever approx. 5 mm to the rear out of position “N”. Then keep lever in this position, do not move it into “D/S”.

– Release selector lever.

- The selector lever should spring back into position “N” by itself.

– Keep button pressed, while pushing selector lever approx. 5 mm to the front out of position “N”. Then keep lever in this position, do not move it into “R”.

– Release selector lever.

- The selector lever should spring back into position “N” by itself.

– Repeat the adjustment if the selector lever does not react as described.

– Check selector mechanism ⇒ page 24 .

– Install air cleaner housing ⇒ Rep. gr. 23 ; Air cleaner; Removing and installing air cleaner housing or ⇒ Rep. gr. 24 ; Air cleaner; Removing and installing air cleaner housing .

1.10 Renewing selector shaft oil seal

The selector shaft oil seal can only be renewed in conjunction with cover for parking lock
⇒ “1.1 Removing and installing cover for parking lock”, page 60 .

2 Removing and installing gearbox

⇒ “2.1 Removing gearbox”, page 29

⇒ “2.2 Installing gearbox”, page 43

⇒ “2.3 Tightening torques for gearbox”, page 47

Protected by copyright. Copying for private or commercial purposes, in part or in whole, is not permitted unless authorised by AUDI AG. AUDI AG does not guarantee or accept any liability with respect to the correctness of information in this document. Copyright by AUDI AG.

2.1 Removing gearbox

⇒ “2.1.1 Removing gearbox - vehicles with 1.0 ltr., 1.2 ltr., 1.4 ltr. and 1.5 ltr. TFSI engine”, page 29

⇒ “2.1.2 Removing gearbox - vehicles with 1.8 ltr. TFSI engine”, page 36

⇒ “2.1.3 Removing gearbox - vehicles with 1.6 ltr. TDI engine”, page 40

2.1.1 Removing gearbox - vehicles with 1.0 ltr., 1.2 ltr., 1.4 ltr. and 1.5 ltr. TFSI engine

Special tools and workshop equipment required

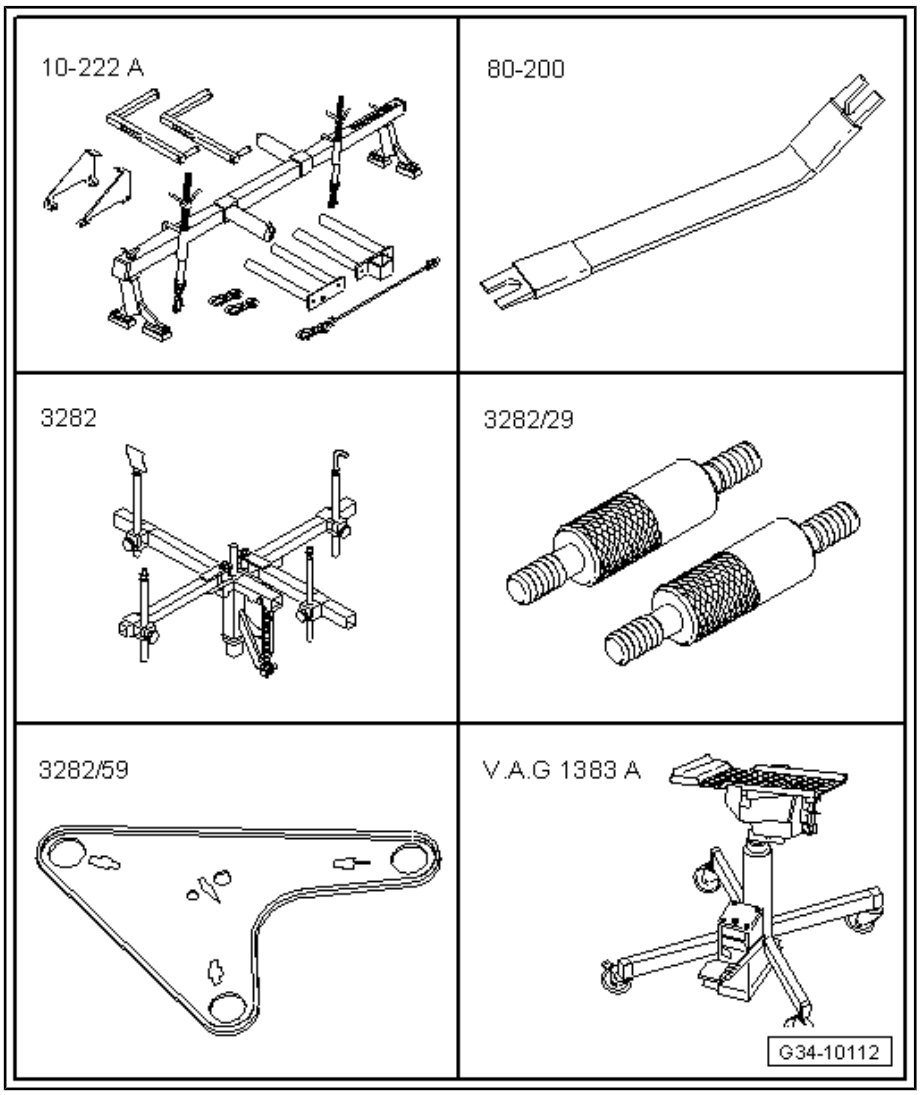

- Removal lever - 80 - 200-
- Gearbox support - 3282-

- Pin - 3282/29-
- Adjustment plate - 3282/59-
- Engine and gearbox jack - V.A.G 1383 A-

Procedure

- Observe ⇒ “4.1 General notes”, page 7 .
- Observe ⇒ “4.2 Rules for cleanliness”, page 10 .
- Observe ⇒ “4.3 General repair instructions”, page 11 .
- Fit all cable ties in the original positions when installing.

– Move selector lever to position “P”.

– Switch off ignition.

– Remove battery tray -1- ⇒ Electrical system; Rep. gr. 27 ; Battery; Removing and installing battery tray .

– Remove radiator cowl ⇒ Rep. gr. 19 ; Radiators/radiator fans; Removing and installing radiator cowl .

– Remove noise insulation ⇒ General body repairs, exterior; Rep. gr. 66 ; Noise insulation; Removing and installing noise insulation .

– Remove wheel housing liner (front left) ⇒ General body repairs, exterior; Rep. gr. 66 ; Wheel housing liners; Removing and installing wheel housing liner (front) .

– Unplug electrical connector -2- on radiator outlet coolant temperature sender - G83- .

– Place drip tray for workshop hoist - VAS 6208- underneath.

– Lift retaining clip -1-, disconnect coolant hose from radiator (bottom left) and drain off coolant.

Vehicles with 1.2 ltr./1.4 ltr./1.5 ltr. TFSI engine

– Remove engine cover panel ⇒ Rep. gr. 10 ; Engine cover panel; Removing and installing engine cover panel .

– Remove air cleaner housing ⇒ Rep. gr. 24 ; Air cleaner; Removing and installing air cleaner housing .

– Release hose clip -1- and detach air pipe.

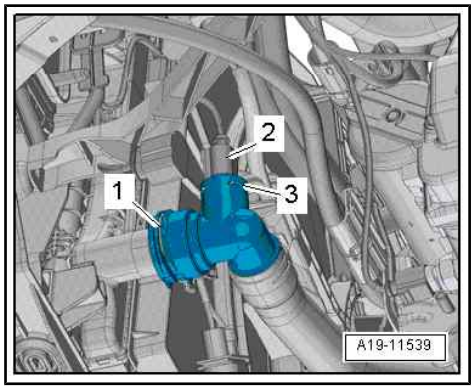

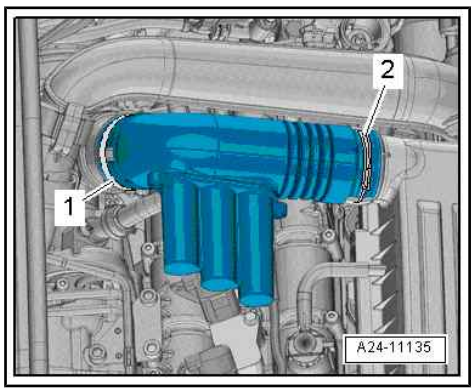

Protected by copyright. Copying for private or commercial purposes, in part or in whole, is not permitted unless authorised by AUDI AG. AUDI AG does not guarantee or accept any liability with respect to the correctness of information in this document. Copyright by AUDI AG.

Vehicles with 1.0 ltr. TFSI engine

– Disconnect crankcase breather hose -2-.

– Move vacuum line -5- clear.

– Remove bolt -1-.

– Release hose clip -4-.

– Lift air cleaner housing -3- off ball studs and detach.

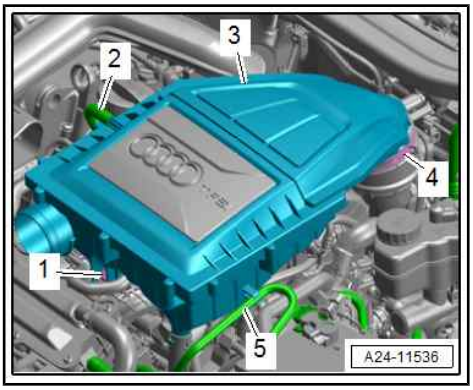

All vehicles (continued)

– Remove starter -3- ⇒ Electrical system; Rep. gr. 27 ; Starter; Removing and installing starter .

– Remove nut -arrow- and detach earth wire.

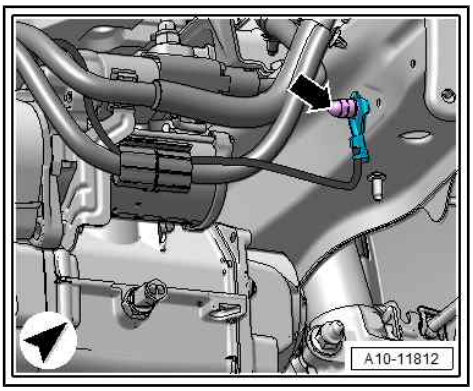

– Pry selector lever cable -1- off gearbox selector lever using removal lever - 80 - 200- .

– Remove bolts -2- and tie up selector lever cable together with support bracket.

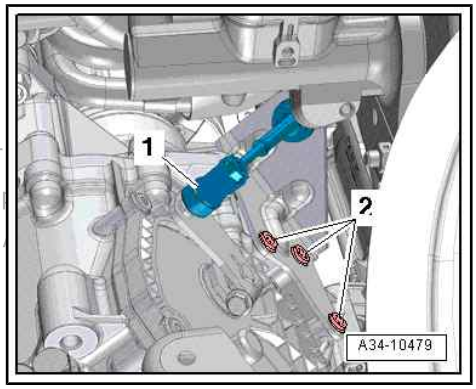

Protected by copyright. Copying for private or commercial purposes, in part or in whole, is not permitted unless authorised by AUDI AG. AUDI AG does not guarantee or accept any liability with respect to the correctness of information in this document. Copyright by AUDI AG.

NOTICE

Risk of damage to operating cable (may become deformed).

– **Operating cable must never be bent or kinked excessively.**

– Remove bolts -2, 3, 4- securing gearbox to engine.

– Support engine in installation position ⇒ Engine; Rep. gr. 10 ; Assembly mountings; Supporting engine in installation position .

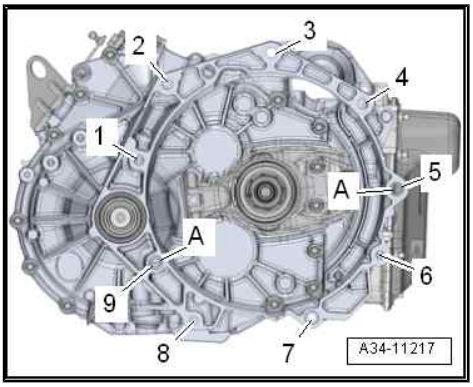

– If fitted, remove nut -arrow- and move earth wire clear.

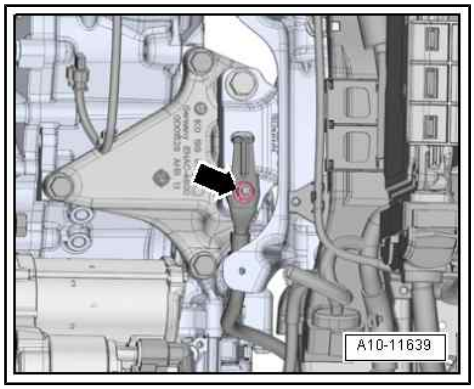

– Remove bolts -arrows- from gearbox mounting -1-.

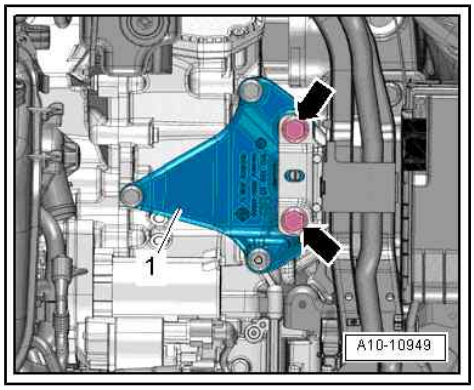

– Lower engine/gearbox assembly using spindle - 10 - 222 A / 11- until distance -a- is obtained between gearbox housing and gearbox mounting.

• Dimension -a- = 30 mm

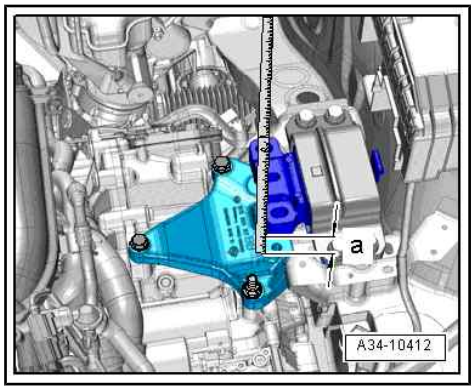

– Remove bolts -arrows- and detach gearbox support.

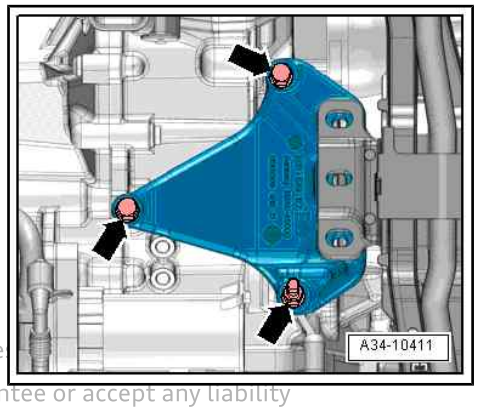

Protected by copyright. Copying for private or commercial purposes is permitted unless authorised by AUDI AG. AUDI AG does not guarantee or accept any liability with respect to the correctness of information in this document. Copyright by AUDI AG.

– Remove bolts -1, 2, 3- and detach pendulum support.

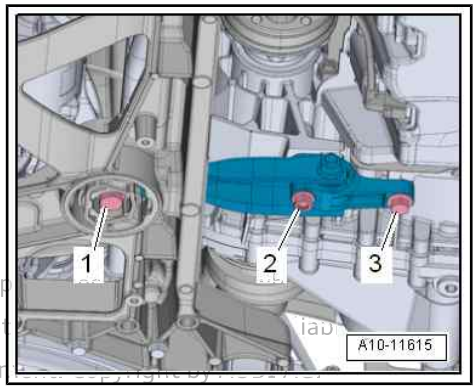

Protected by copyright. Copying for private or commercial p
permitted unless authorised by AUDI AG. AUDI AG does not
with respect to the correctness of information in this docum

NOTICE

Risk of irreparable damage due to electrostatic discharge.

- **Do not touch connector contacts with your hands.**
- **Touch the lifting platform or other earthed object to discharge static electricity.**

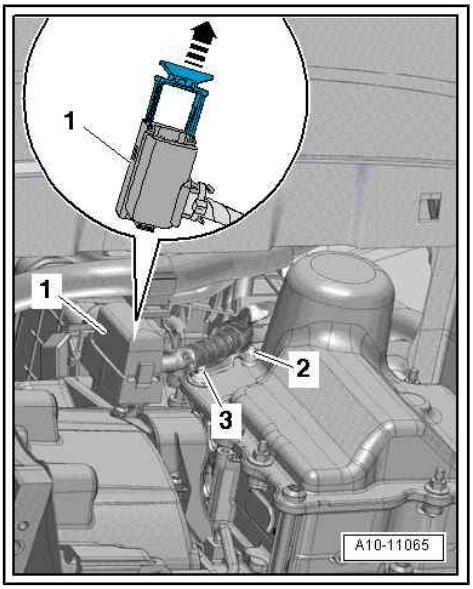

– Touch vehicle earth with bare hands to eliminate any static charge.

– Pull catch upwards -arrow- and unplug electrical connector -1- for mechatronic unit for dual clutch gearbox - J743- .

– Remove nuts -2 and 3- and detach bracket for electrical wiring from gearbox.

– Remove bolts -arrows- for exhaust pipe bracket from sub-frame.

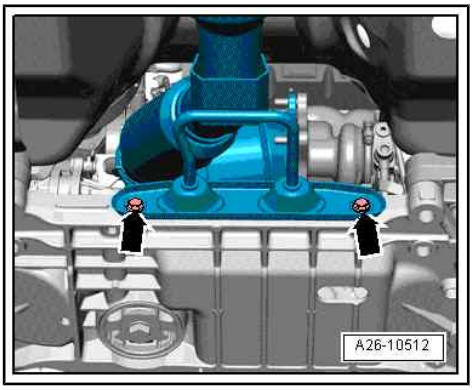

– Disconnect exhaust system at clamp -arrow-.

NOTICE

Risk of damage to flexible joint if handled incorrectly.

- **Do not bend flexible joint more than 10°.**
- **Install flexible joint so that it is not under tension.**

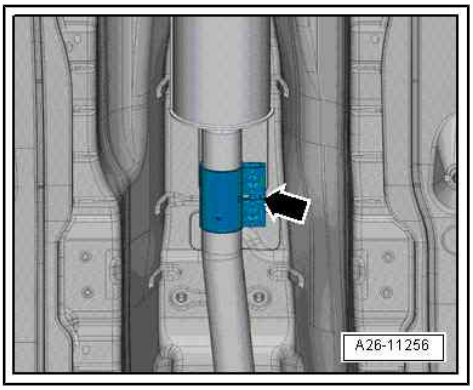

– Left side: Remove nut -1- for coupling rod -3- on anti-roll bar -2-.

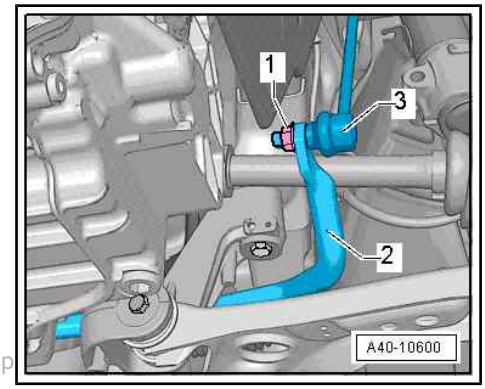

Protected by copyright. Copying for private or commercial purposes, in p
permitted unless authorised by AUDI AG. AUDI AG does not guarantee or accept any liability
with respect to the correctness of information in this document. Copyrig

– If fitted, remove nut -4- and bolt -1- and move front left vehicle level sender - G78- item 3- aside.

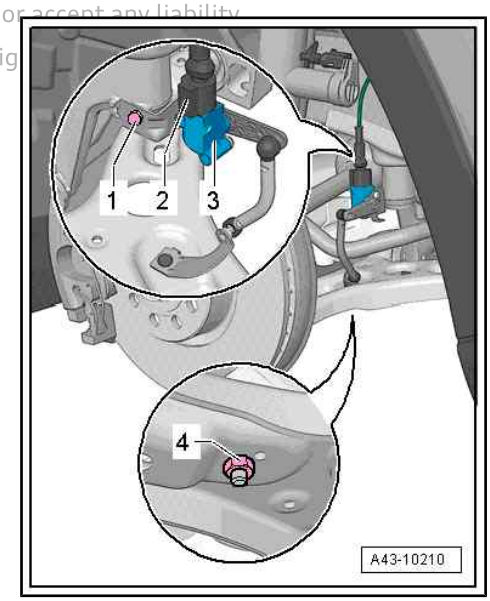

– Left side: Unscrew nuts -arrows- for swivel joint.
– Disengage swivel joint from wishbone.

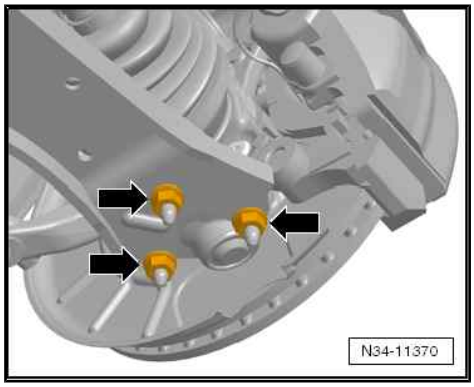

– Remove bolts -arrows- and detach heat shield for drive shaft (right-side).
– Unbolt drive shaft from gearbox on both sides and tie up to rear ⇒ Running gear, axles, steering; Rep. gr. 40 ; Drive shaft; Removing and installing drive shaft .

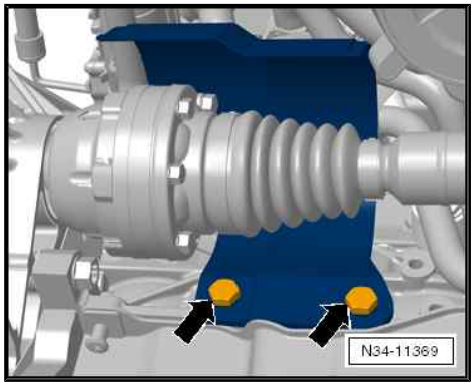

– Swivel suspension strut (left-side) outwards and support with extension -2024 A /1- as shown in illustration.

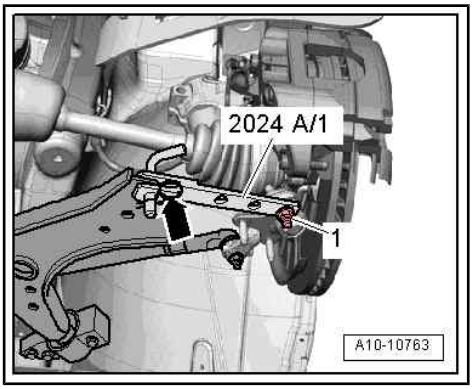

NOTICE

Risk of accidents if components of support are loose

– **Secure retaining pin and swivel joint with locking pin -arrow- and nut -1-.**

– Remove flange shaft (right-side) ⇒ page 70 .

– If fitted, detach electric vacuum pump -arrow- at rear of gearbox ⇒ Brake system; Rep. gr. 47 ; Vacuum system; Exploded view - electric vacuum pump .

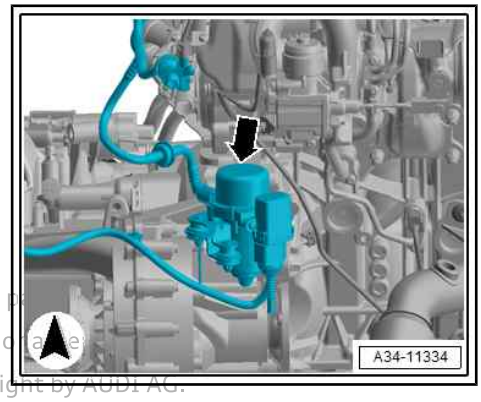

Protected by copyright. Copying for private or commercial purposes, in p
permitted unless authorised by AUDI AG. AUDI AG does not guarantee o
with respect to the correctness of information in this document. Copyright by AUDI AG.

To remove dual clutch gearbox 0CW, set up gearbox support - 3282- with adjustment plate - 3282/59- .

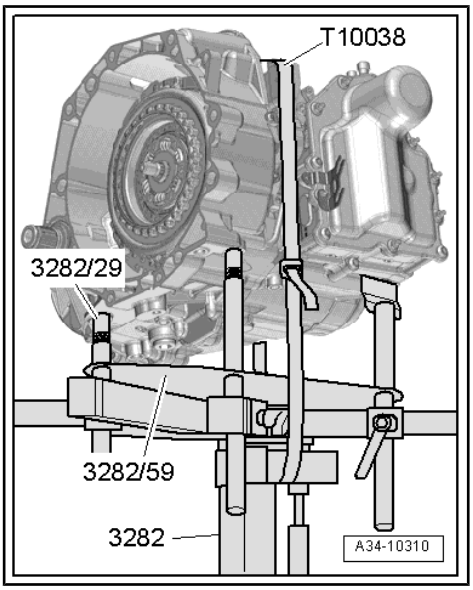

– Set up gearbox support - 3282- on engine and gearbox jack - V.A.G 1383 A- .

– Align arms of gearbox support according to holes in adjustment plate - 3282/59- .

– Secure support elements as illustrated on adjustment plate - 3282/59- .

– Place engine and gearbox jack - V.A.G 1383 A- underneath vehicle.

• The “arrow symbol” on the adjustment plate - 3282/59- points in the direction of travel.

– Align gearbox support - 3282- parallel with gearbox.

– Screw pin - 3282/29- into gearbox.

– Insert last support element in gearbox as illustrated.

– Use tensioning strap - T10038- to secure gearbox.

– Support gearbox by lifting from underneath with engine and gearbox jack - V.A.G 1383 A- .

Protected by copyright. Copying for private or commercial purposes, in part or in whole, is not permitted unless authorised by AUDI AG. AUDI AG does not guarantee or assume any liability with respect to the correctness of information in this document.

– Remove remaining bolts -1, 5, 6, 7, 8, 9- securing gearbox to engine.
– Push gearbox off dowel sleeves -A-.
– Detach gearbox from engine.
– Carefully lower gearbox using engine and gearbox jack - V.A.G 1383 A- .
– While lowering gearbox, adjust position of gearbox using spindles on gearbox support - 3282- .

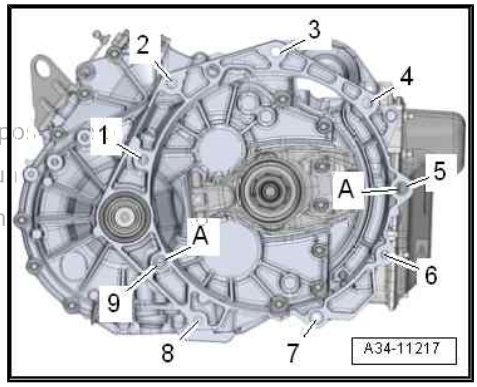

2.1.2 Removing gearbox - vehicles with 1.8 ltr. TFSI engine

Special tools and workshop equipment required

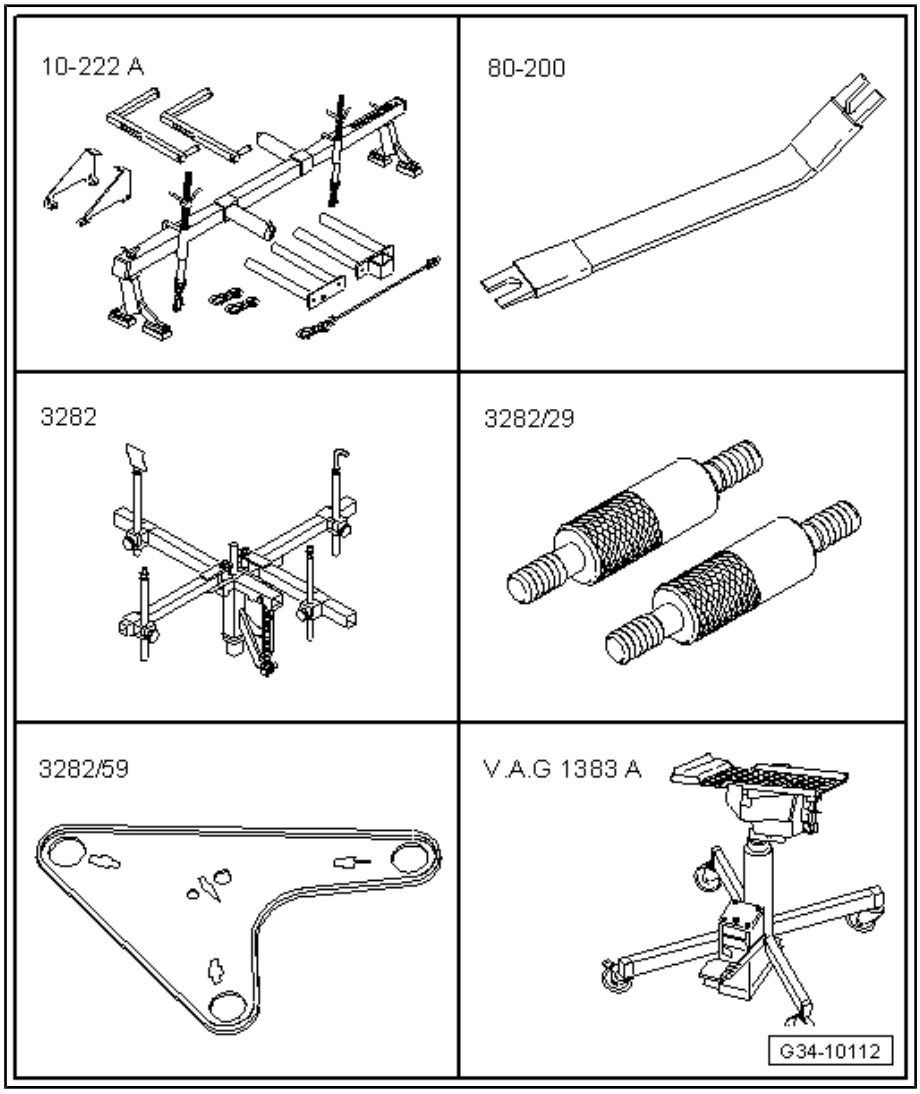

- Support bracket - 10 - 222 A- with -10 - 222 A /31-
- Removal lever - 80 - 200-
- Gearbox support - 3282-
- Pin - 3282/29-
- Adjustment plate - 3282/59-

- Engine and gearbox jack - V.A.G 1383 A-

Procedure

- Observe ⇒ “4.1 General notes”, page 7 .
- Observe ⇒ “4.2 Rules for cleanliness”, page 10 .
- Observe ⇒ “4.3 General repair instructions”, page 11 .
- Fit all cable ties in the original positions when installing.

– Move selector lever to position “P”.

– Switch off ignition.

– Remove battery tray ⇒ Electrical system; Rep. gr. 27 ; Battery; Removing and installing battery tray .

– Remove starter ⇒ Electrical system; Rep. gr. 27 ; Starter; Removing and installing starter .

– Remove subframe without steering rack ⇒ Running gear, axles, steering; Rep. gr. 40 ; Subframe; Removing and installing subframe without steering rack .

Protected by copyright. Distribution or private or commercial purposes, in part or in whole, is not permitted unless authorised by AUDI AG. AUDI AG does not guarantee or accept any liability with respect to the correctness of information in this document. Copyright by AUDI AG.

– Remove wheel housing liner (front left) ⇒ General body repairs, exterior; Rep. gr. 66 ; Wheel housing liners; Removing and installing wheel housing liner (front) .

– Pry selector lever cable -1- off gearbox selector lever using removal lever - 80 - 200- .

– Remove bolts -2- and tie up selector lever cable together with support bracket.

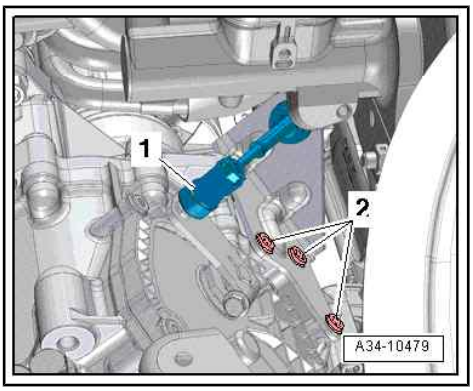

NOTICE

Risk of damage to operating cable (may become deformed).

– Operating cable must never be bent or kinked excessively.

– Support engine in installation position ⇒ Engine; Rep. gr. 10 ; Assembly mountings; Supporting engine in installation position .

– Remove bolts -1, 3, 4- securing gearbox to engine.

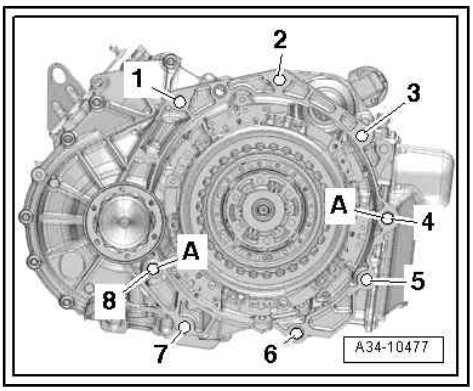

– If fitted, remove nut -arrow- and move earth wire clear.

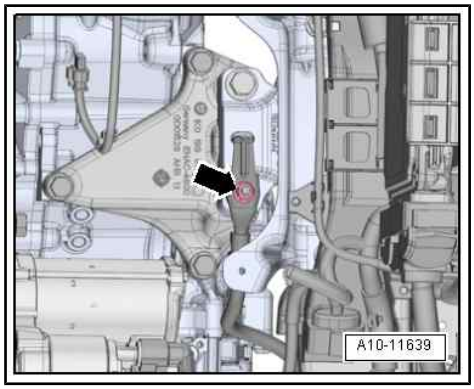

– Remove bolts -arrows- from gearbox mounting -1-.

Protected by copyright. Copying for private or commercial
permitted unless authorised by AUDI AG. AUDI AG does n
with respect to the correctness of information in this docu

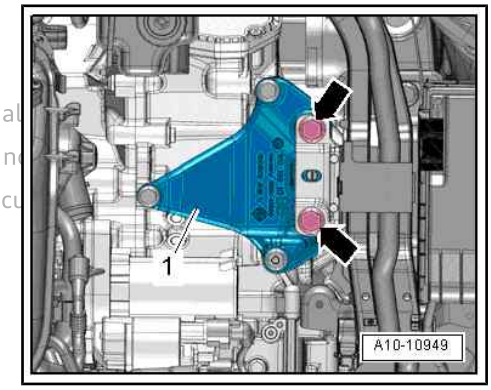

– Lower engine/gearbox assembly using spindle - 10 - 222 A / 11- until distance -a- is obtained between gearbox housing and gearbox mounting.

• Dimension -a- = 30 mm

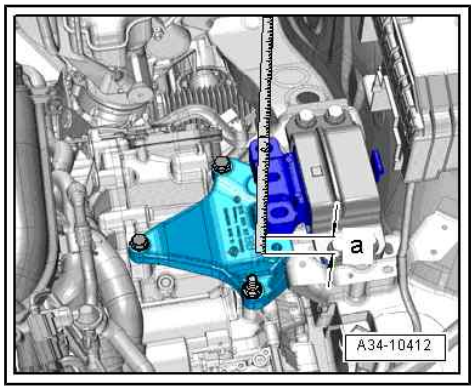

– Remove bolts -arrows- and detach gearbox support.

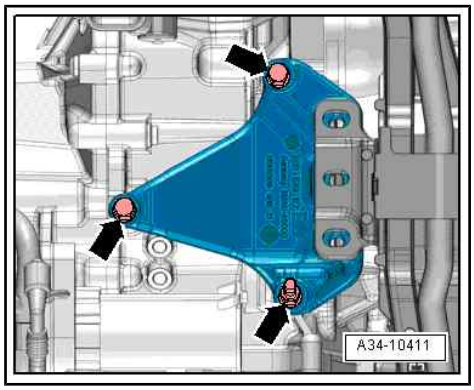

– Release hose clips -1, 2- and remove air hose.

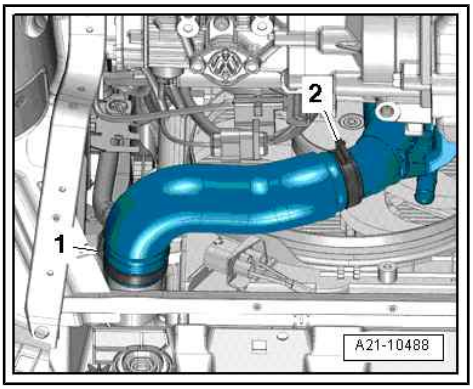

NOTICE

Risk of irreparable damage due to electrostatic discharge.

- **Do not touch connector contacts with your hands.**
- **Touch the lifting platform or other earthed object to discharge static electricity.**

– Touch vehicle earth with bare hands to eliminate any static charge.

– Pull catch upwards -arrow- and unplug electrical connector -1- for mechatronic unit for dual clutch gearbox - J743- .

– Remove nuts -2 and 3- and detach bracket for electrical wiring from gearbox.

– Unbolt drive shaft from gearbox on both sides and tie up to rear ⇒ Running gear, axles, steering; Rep. gr. 40 ; Drive shaft; Removing and installing drive shaft .

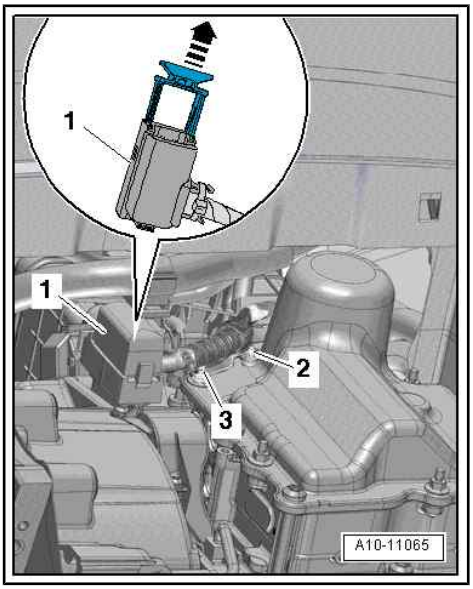

To remove dual clutch gearbox 0CW, set up gearbox support - 3282- with adjustment plate - 3282/59- .

– Set up gearbox support - 3282- on engine and gearbox jack - V.A.G 1383 A- .

– Align arms of gearbox support according to holes in adjustment plate - 3282/59- .

– Secure support elements as illustrated on adjustment plate - 3282/59- .

– Place engine and gearbox jack - V.A.G 1383 A- underneath vehicle.

• The “arrow symbol” on the adjustment plate - 3282/59- points in the direction of travel.

– Align gearbox support - 3282- parallel with gearbox.

– Screw pin - 3282/29- into gearbox.

– Insert last support element in gearbox as illustrated.

– Use tensioning strap - T10038- to secure gearbox.

– Support gearbox by lifting from underneath with engine and gearbox jack - V.A.G 1383 A- .

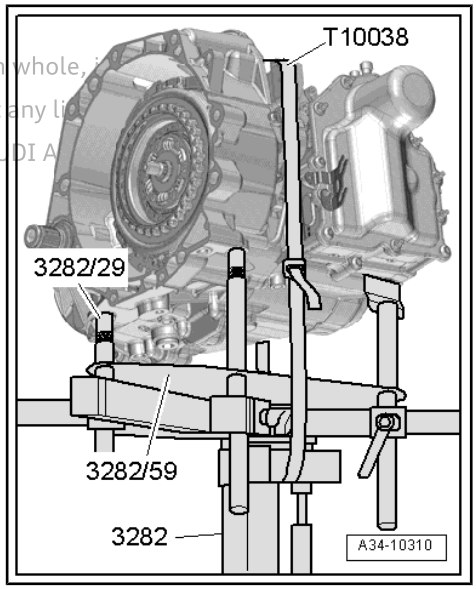

Protected by copyright. Copying for private or commercial purposes, in part or in whole, is not permitted unless authorised by AUDI AG. AUDI AG does not guarantee or accept any liability with respect to the correctness of information in this document. Copyright by AUDI AG.

– Remove remaining bolts -5, 6, 7, 8- securing gearbox to engine.
– Push gearbox off dowel sleeves -A-.
– Detach gearbox from engine.
– Carefully lower gearbox using engine and gearbox jack - V.A.G 1383 A- .
– While lowering gearbox, adjust position of gearbox using spindles on gearbox support - 3282- .

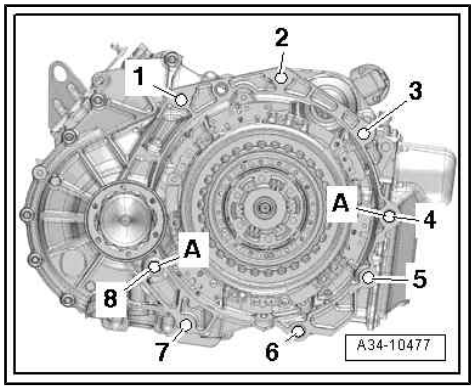

2.1.3 Removing gearbox - vehicles with 1.6 ltr. TDI engine

Protected by copyright. Copying for private or commercial purposes, in part or in whole, is not permitted unless authorised by AUDI AG. AUDI AG does not guarantee or accept any liability with respect to the correctness of information in this document. Copyright by AUDI AG.

Special tools and workshop equipment required

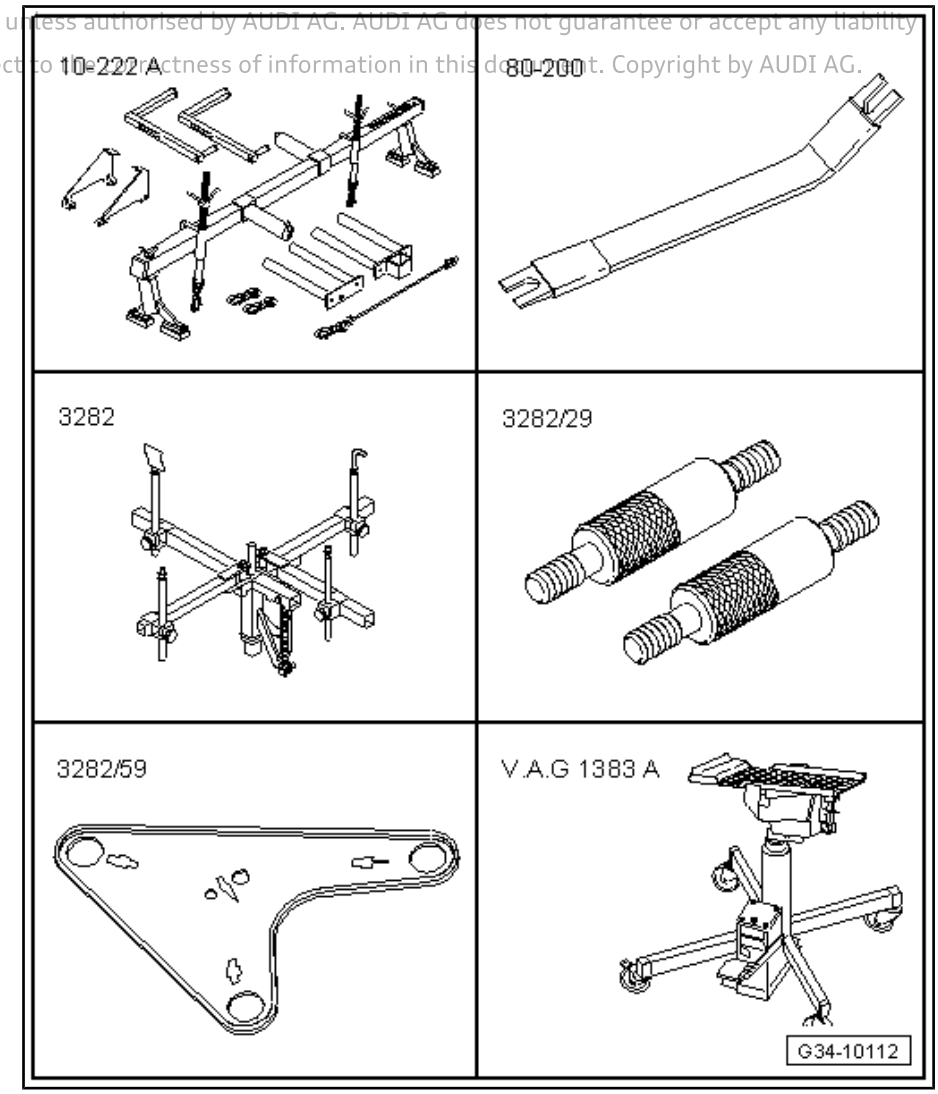

- Support bracket - 10 - 222 A- with -10 - 222 A /31-
- Removal lever - 80 - 200-
- Gearbox support - 3282-
- Pin - 3282/29-
- Adjustment plate - 3282/59-

- Engine and gearbox jack - V.A.G 1383 A-

Procedure

Protected by copyright. Copying for private or commercial purposes, in part or in whole, is not permitted unless authorised by AUDI AG. AUDI AG does not guarantee or accept any liability with respect to the correctness of information in this document. Copyright by AUDI AG.

- Observe ⇒ “4.1 General notes”, page 7 .
- Observe ⇒ “4.2 Rules for cleanliness”, page 10 .
- Observe ⇒ “4.3 General repair instructions”, page 11 .
- Fit all cable ties in the original positions when installing.

– Move selector lever to position “P”.

– Switch off ignition.

– Remove battery tray ⇒ Electrical system; Rep. gr. 27 ; Battery; Removing and installing battery tray .

– Remove starter ⇒ Electrical system; Rep. gr. 27 ; Starter; Removing and installing starter .

– Remove subframe without steering rack ⇒ Running gear, axles, steering; Rep. gr. 40 ; Subframe; Removing and installing subframe without steering rack .

– Remove wheel housing liner (front left) ⇒ General body repairs, exterior; Rep. gr. 66 ; Wheel housing liners; Removing and installing wheel housing liner (front) .

– Pry selector lever cable -1- off gearbox selector lever using removal lever - 80 - 200- .

– Remove bolts -2- and tie up selector lever cable together with support bracket.

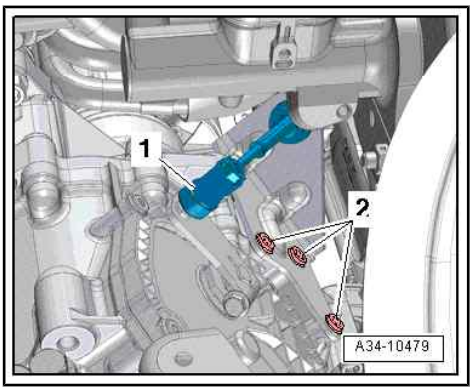

NOTICE

Risk of damage to operating cable (may become deformed).

– Operating cable must never be bent or kinked excessively.

– Support engine in installation position ⇒ Engine; Rep. gr. 10 ; Assembly mountings; Supporting engine in installation position .

– Remove bolts -1, 3, 4- securing gearbox to engine.

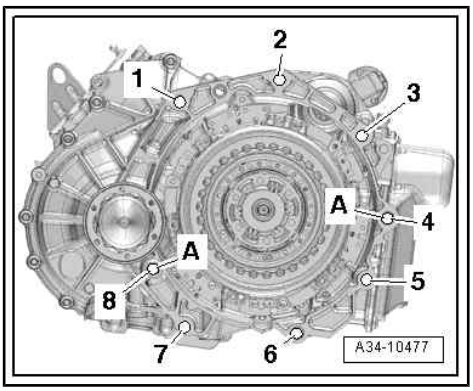

– If fitted, remove nut -arrow- and move earth wire clear.

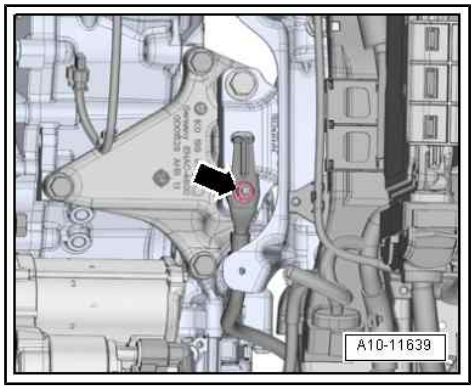

– Remove bolts -arrows- from gearbox mounting -1-.

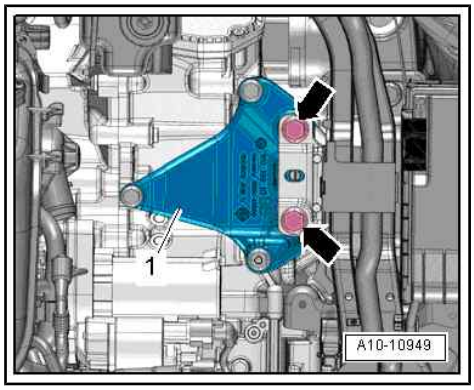

– Lower engine/gearbox assembly using spindle - 10 - 222 A / 11- until distance -a- is obtained between gearbox housing and gearbox mounting.

• Dimension -a- = 30 mm

Protected by copyright. Copying for private or commercial purposes, permitted unless authorised by AUDI AG. AUDI AG does not guarant with respect to the correctness of information in this document. Co

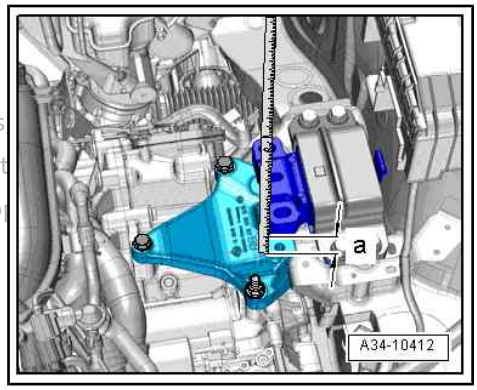

– Remove bolts -arrows- and detach gearbox support.

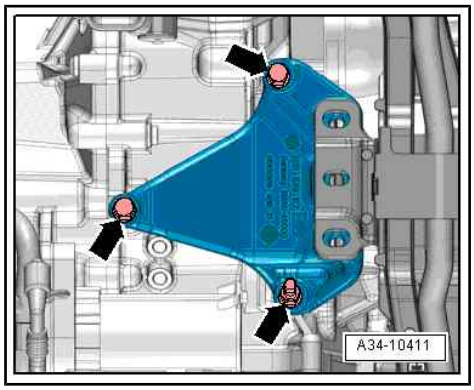

NOTICE

Risk of irreparable damage due to electrostatic discharge.

- **Do not touch connector contacts with your hands.**
- **Touch the lifting platform or other earthed object to discharge static electricity.**

Protected by copyright. Copying for private or commercial pu
permitted unless authorised by Audi AG. Audi AG does not g
with respect to the correctness of information in this docume

- Touch vehicle earth with bare hands to eliminate any static charge.
- Pull catch upwards -arrow- and unplug electrical connector -1- for mechatronic unit for dual clutch gearbox - J743- .
- Remove nuts -2 and 3- and detach bracket for electrical wiring from gearbox.
- Unbolt drive shaft from gearbox on both sides and tie up to rear ⇒ Running gear, axles, steering; Rep. gr. 40 ; Drive shaft; Removing and installing drive shaft .

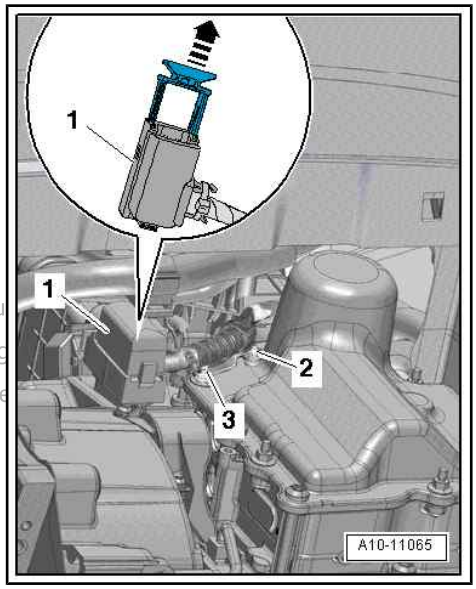

To remove dual clutch gearbox 0CW, set up gearbox support - 3282- with adjustment plate - 3282/59- .

- Set up gearbox support - 3282- on engine and gearbox jack - V.A.G 1383 A- .
- Align arms of gearbox support according to holes in adjustment plate - 3282/59- .
- Secure support elements as illustrated on adjustment plate - 3282/59- .
- Place engine and gearbox jack - V.A.G 1383 A- underneath vehicle.
- The “arrow symbol” on the adjustment plate - 3282/59- points in the direction of travel.
- Align gearbox support - 3282- parallel with gearbox.
- Screw pin - 3282/29- into gearbox.
- Insert last support element in gearbox as illustrated.
- Use tensioning strap - T10038- to secure gearbox.
- Support gearbox by lifting from underneath with engine and gearbox jack - V.A.G 1383 A- .

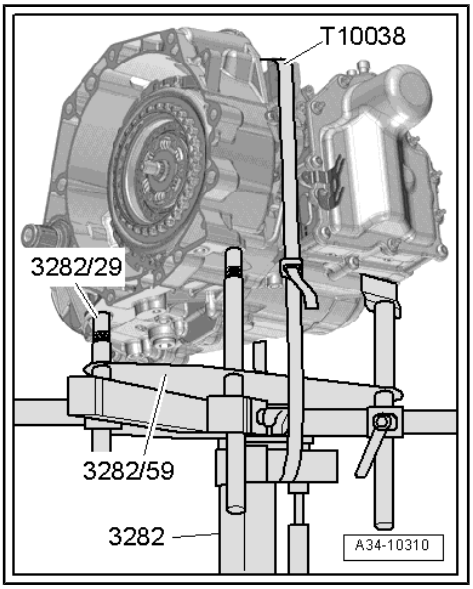

- Remove remaining bolts -5, 6, 7, 8- securing gearbox to engine.
- Push gearbox off dowel sleeves -A-.
- Detach gearbox from engine.
- Carefully lower gearbox using engine and gearbox jack - V.A.G 1383 A- .
- While lowering gearbox, adjust position of gearbox using spindles on gearbox support - 3282- .

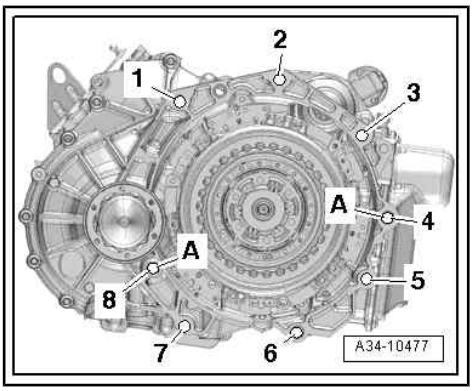

2.2 Installing gearbox

♦ Renew bolts tightened with specified tightening angle.

- Renew self-locking nuts and bolts as well as seals, gaskets and O-rings.
- Secure all hose connections with the correct type of hose clips (same as original equipment) ⇒ Electronic parts catalogue .
- Fit all cable ties in the original positions when installing.

Procedure

– Place gearbox on gearbox support - 3282- and secure in position.

– Clean input shaft splines and splines of torsion damper. Remove corrosion and lubricate splines with only a very thin coating of grease ⇒ Electronic parts catalogue . Remove any excess grease.

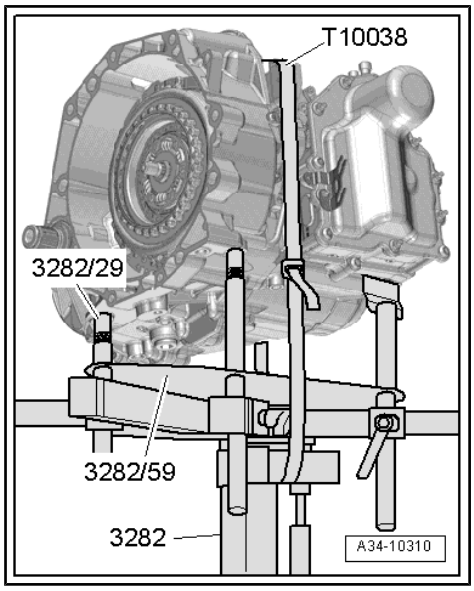

– Check whether dowel sleeves -A- for centring engine and gearbox are fitted in cylinder block; install missing dowel sleeves.

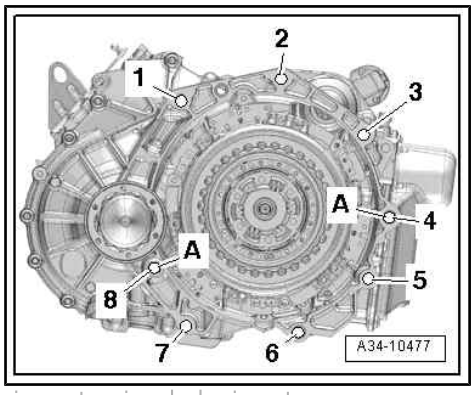

Protected by copyright. Copying for private or commercial purposes, in part or in whole, is not permitted unless authorised by AUDI AG. AUDI AG does not guarantee with respect to the correctness of information in this document. Copyright by AUDI AG.

– Check needle bearing -arrow- in crankshaft for damage; renew if necessary ⇒ Rep. gr. 13 ; Crankshaft; Renewing needle bearing in crankshaft .

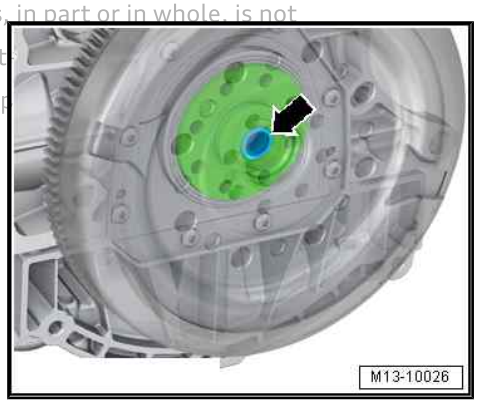

Note

- If the needle bearing in the crankshaft is damaged, the gears cannot be shifted correctly because the clutch is supported by this bearing.

– Ensure that intermediate plate -1- is engaged on sealing flange -2- -arrow B- and pushed onto dowel sleeves -arrows A-.

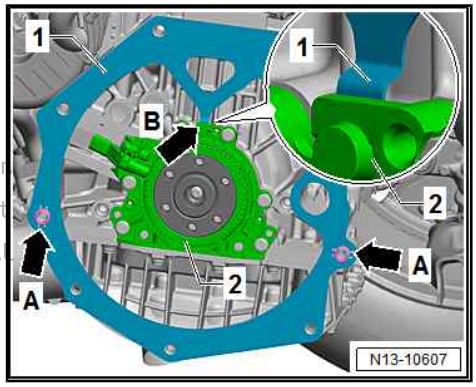

Protected by copyright. Copying for private or commercial purposes, in part or in
permitted unless authorised by AUDI AG. AUDI AG does not guarantee or accept
with respect to the correctness of information in this document. Copyright by AU

– Vehicles with 1.5 ltr. TFSI engine: Pre-tension splines in flywheel ⇒ Engine; Rep. gr. 13 ; Cylinder block (gearbox end); Removing and installing flywheel .
– Carefully raise gearbox using engine and gearbox jack - V.A.G 1383 A- and position correctly using gearbox support - 3282- .
– Secure gearbox to engine.

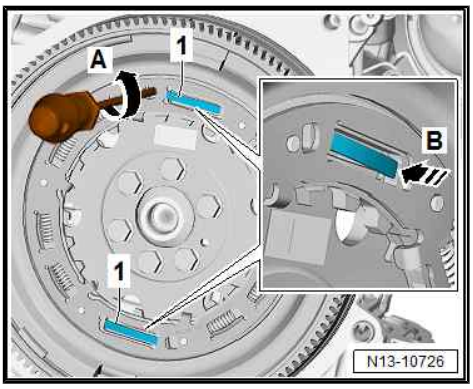

If the gearbox was sealed with oil-tight plugs, e.g. after a gearbox repair or when installing a replacement gearbox:

– Remove both plugs from breathers -arrows- and install breather caps (renew if necessary).

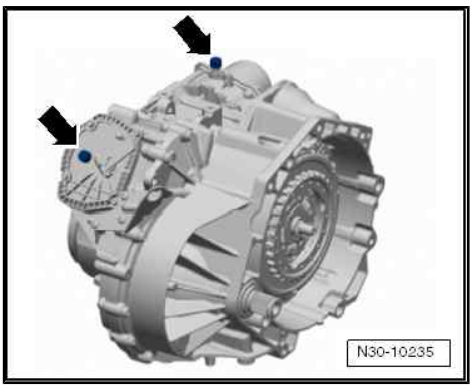

Install assembly mounting as follows:

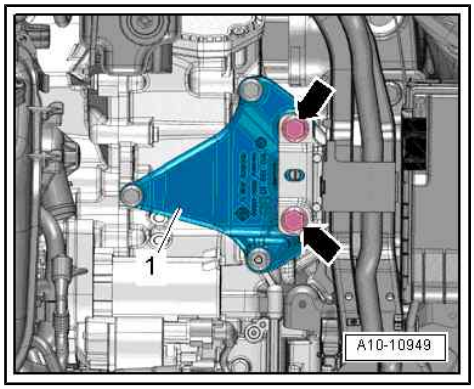

- Fit gearbox support -1- between gearbox and support arm of gearbox mounting.
- Bolt gearbox support -1- to gearbox; tightening torque ⇒ page 53 .
- Pull gearbox up to support arm of gearbox mounting using spindle - 10 - 222 A /11- of support bracket.
- Hand-tighten bolts -arrows- securing gearbox mounting to gearbox support initially.
- Detach gearbox support - 3282- from gearbox.
- Adjust assembly mountings ⇒ Rep. gr. 10 ; Assembly mountings; Adjusting assembly mountings .
- Detach support bracket - 10 - 222 A- from engine.
- Install starter ⇒ Electrical system; Rep. gr. 27 ; Starter; Removing and installing starter .
- If removed earlier, install subframe ⇒ Running gear, axles, steering; Rep. gr. 40 ; Subframe; Removing and installing subframe without steering rack .
- Install flange shaft (right-side) ⇒ page 70 .
- Install drive shafts ⇒ Running gear, axles, steering; Rep. gr. 40 ; Drive shaft; Removing and installing drive shaft .
- Install plenum chamber cover ⇒ General body repairs, exterior; Rep. gr. 50 ; Bulkhead; Removing and installing plenum chamber cover .
- Check adjustment of selector lever cable and adjust if necessary ⇒ page 27 .
- Install battery tray ⇒ Electrical system; Rep. gr. 27 ; Battery; Removing and installing battery tray .
- Observe steps required after re-connecting battery ⇒ Electrical system; Rep. gr. 27 ; Battery; Disconnecting and connecting battery .
- Vehicles with 1.8 ltr. TFSI engine: Install air intake hose ⇒ Rep. gr. 21 ; Charge air system; Exploded view - charge air system .
- Install radiator cowl ⇒ Rep. gr. 19 ; Radiator/radiator fans; Removing and installing radiator cowl .
- Install air cleaner housing ⇒ Rep. gr. 24 ; Air cleaner; Removing and installing air cleaner housing .
- If coolant was drained off earlier, fill it up again ⇒ Rep. gr. 19 ; Cooling system/coolant; Draining and filling cooling system .

Function “Replace mechatronics unit” must be performed with ⇒ Vehicle diagnostic tester if gearbox has been renewed.

- Select `Own test` on ⇒ Vehicle diagnostic tester.

◆ Dual clutch gearbox 0CW

◆ 01 - Self-diagnosis compatible systems

◆ 02 - Gearbox electronics

◆ 02 - Gearbox electronics, functions

◆ 02 - Replace mechatronics unit

Protected by copyright. Copying for private or commercial purposes, in part or in whole, is not permitted unless authorised by AUDI AG. AUDI AG does not guarantee or accept any liability with respect to the correctness of information in this document. Copyright by AUDI AG.

Tightening torques

- Tightening torques for gearbox
  ⇒ “2.3 Tightening torques for gearbox”, page 47

2.3 Tightening torques for gearbox

- Tightening torques apply only to lightly greased, oiled, phosphated or black-finished nuts and bolts.
- Additional lubricants such as engine or gear oil may be used, but do not use lubricants containing graphite.
- Do not use degreased parts.
- Tolerance for tightening torques is ± 15%.

Component		Nm
Bolts/nuts	M6	9
	M7	15
	M8	20
	M10	40
	M12	65

Dual clutch gearbox to 1.0 ltr./1.2 ltr./1.4 ltr. TFSI engine:

Item	Bolt	Nm
1, 5, 9	M12x70	80
2, 4	M12x50	80
3 1)2)	M12x165	80
6, 7, 8	M10x55	40
A	Dowel sleeves for centralising	

- 1) Also secures starter
- 2) Centre hex stud

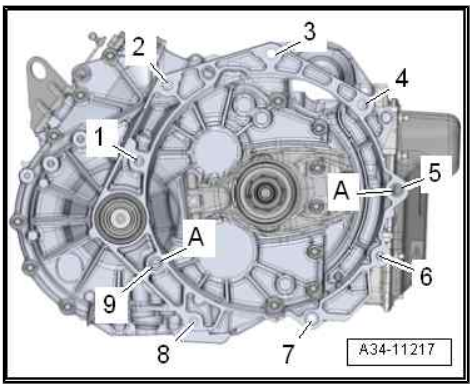

Dual clutch gearbox to 1.5 ltr. TFSI engine:

Item	Bolt	Nm
1, 5, 9	M12x80	80
2, 4	M12x60	80
3 1)2)	M12x175	80
6, 7, 8	M10x65	40
A	Dowel sleeves for centralising	

- 1) Also secures starter
- 2) Centre hex stud

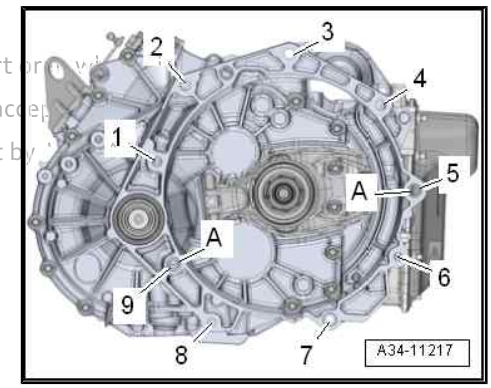

Protected by copyright. Copying for private or commercial purposes, in part or in whole, is not permitted unless authorised by AUDI AG. AUDI AG does not guarantee or accept any liability with respect to the correctness of information in this document. Copyright by AUDI AG.

Dual clutch gearbox to 1.8 ltr. TFSI engine:

Item	Bolt	Nm
1, 3	M12x55	80
2 1)2)	M12x165	80
4, 8	M12x65	80
5, 6, 7	M10x55	40
A	Dowel sleeves for centralising	

- 1) Also secures starter
- 2) Centre hex stud

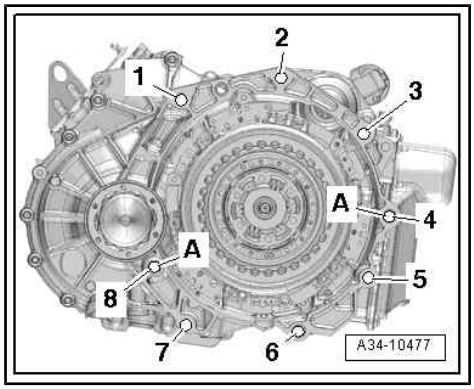

Dual clutch gearbox to 1.6 ltr. TDI engine:

Item	Bolt	Nm
1, 3	M12x55	80
2 1)2)	M12x150	80
4, 8	M12x65	80
5, 6, 7	M10x55	40
A	Dowel sleeves for centralising	

- 1) Also secures starter
- 2) Centre hex stud

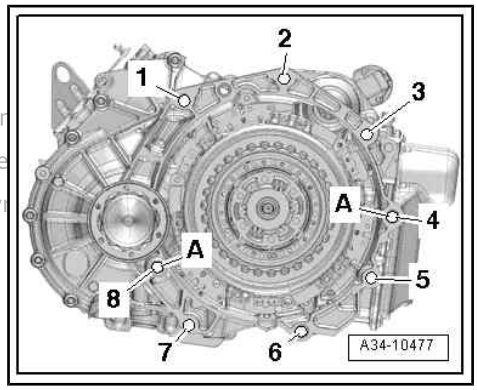

Protected by copyright. Copying for private or commercial purposes, in part is not permitted unless authorised by AUDI AG. AUDI AG does not guarantee the correctness of information in this document. Copyright by AUDI AG.

Tightening torques for assembly mountings ⇒ page 53

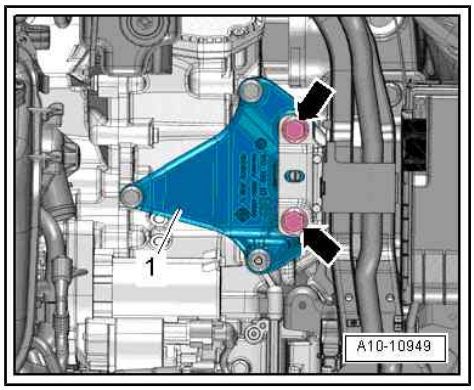

3 Transporting gearbox

Special tools and workshop equipment required

- Shackle - 10 - 222 A /12-

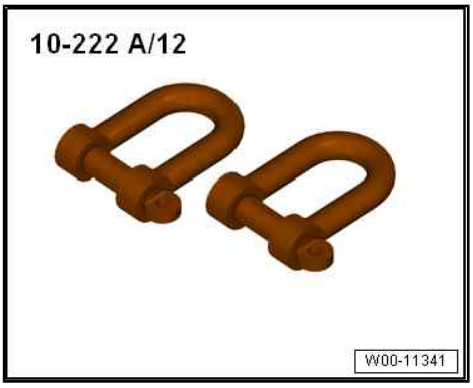

- Workshop hoist - VAS 6100-

- Engine bung set - VAS 6122-

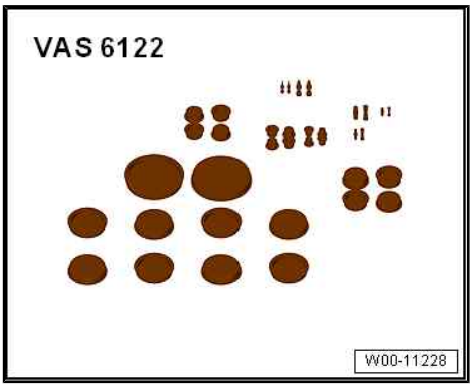

- Protective cap - 02M 409 120- (alternative to engine bung set - VAS 6122-)
- Protective cap - 0AM 325 120 A-

Protected by copyright. Copying for private or commercial purposes, in part or in whole, is not permitted unless authorised by AUDI AG. AUDI AG does not guarantee or accept any liability with respect to the correctness of information in this document. Copyright by AUDI AG.

Sealing gearbox

– Pull off both breather caps -arrows-.
– Seal off gearbox breather so it is oil-tight using clean plug from engine bung set - VAS 6122- or protective cap - 02M 409 120- .

• After installing gearbox in vehicle, remove plugs and renew breather caps.

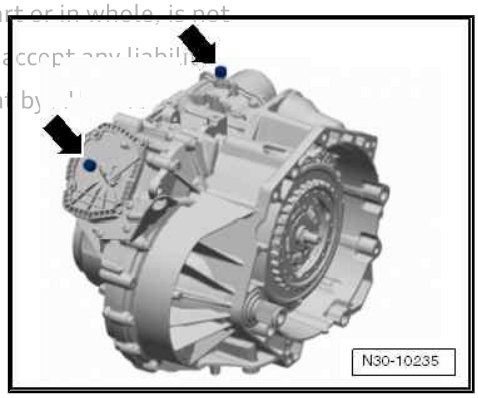

Transporting gearbox

Requirement:

- Gearbox is sealed ⇒ page 49 .

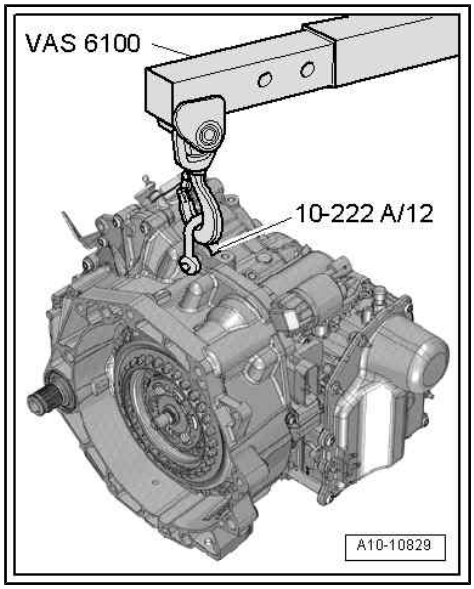

Protected by copyright. Copying for private or commercial purposes, in part or in whole, is not permitted unless authorised by AUDI AG. AUDI AG does not guarantee or accept any liability with respect to the correctness of information in this document. Copyright by AUDI AG.

4 Securing to engine and gearbox support

Special tools and workshop equipment required

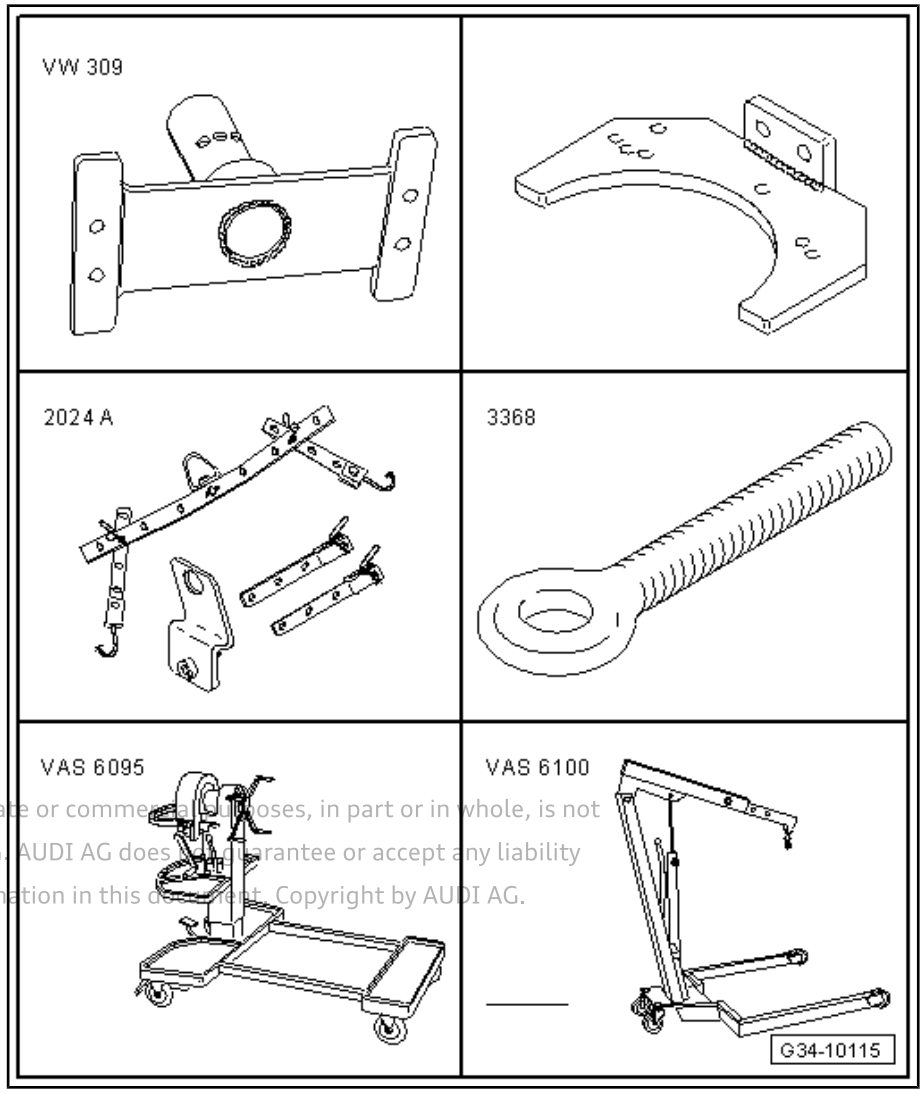

Protected by copyright. Copying for private or commercial purposes, in part or in whole, is not permitted unless authorised by AUDI AG. AUDI AG does not guarantee or accept any liability with respect to the correctness of information in this document. Copyright by AUDI AG.

- Support plate - VW 309-
- Gearbox support - VW 353-
- Lifting tackle - 2024 A-
- 2x eye-head bolt - 3368-
- Engine and gearbox support - VAS 6095-
- Workshop hoist - VAS 6100-

Securing gearbox on gearbox support - VW 353-

Requirement:

- Gearbox is sealed ⇒ page 49 .

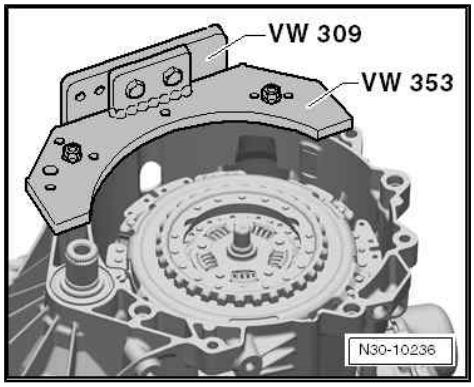

Lifting gearbox into engine and gearbox support

Requirement:

- Gearbox is sealed ⇒ page 49 .

Protected by copyright. Copying for private or commercial purposes, in part or in whole, is not permitted unless authorised by AUDI AG. AUDI AG does not guarantee or accept any liability with respect to the correctness of information in this document. Copyright by AUDI AG.

The gearbox is lifted onto the engine and gearbox support - VAS 6100- together with the gearbox support - VW 353- using the workshop hoist - VAS 6095- .

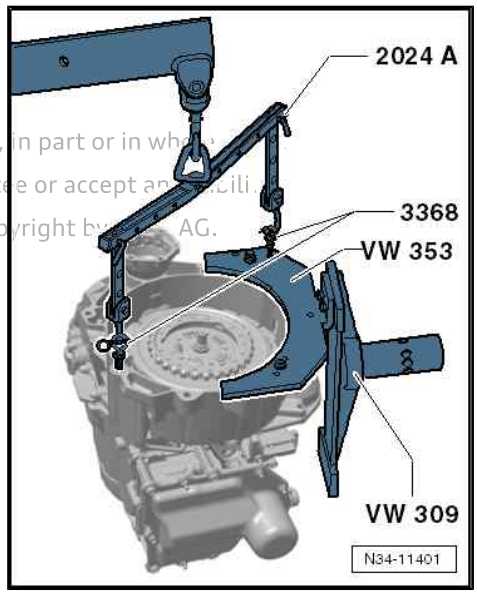

5 Assembly mountings

⇒ “5.1 Exploded view - assembly mountings”, page 53

⇒ “5.2 Removing and installing pendulum support”, page 53

5.1 Exploded view - assembly mountings

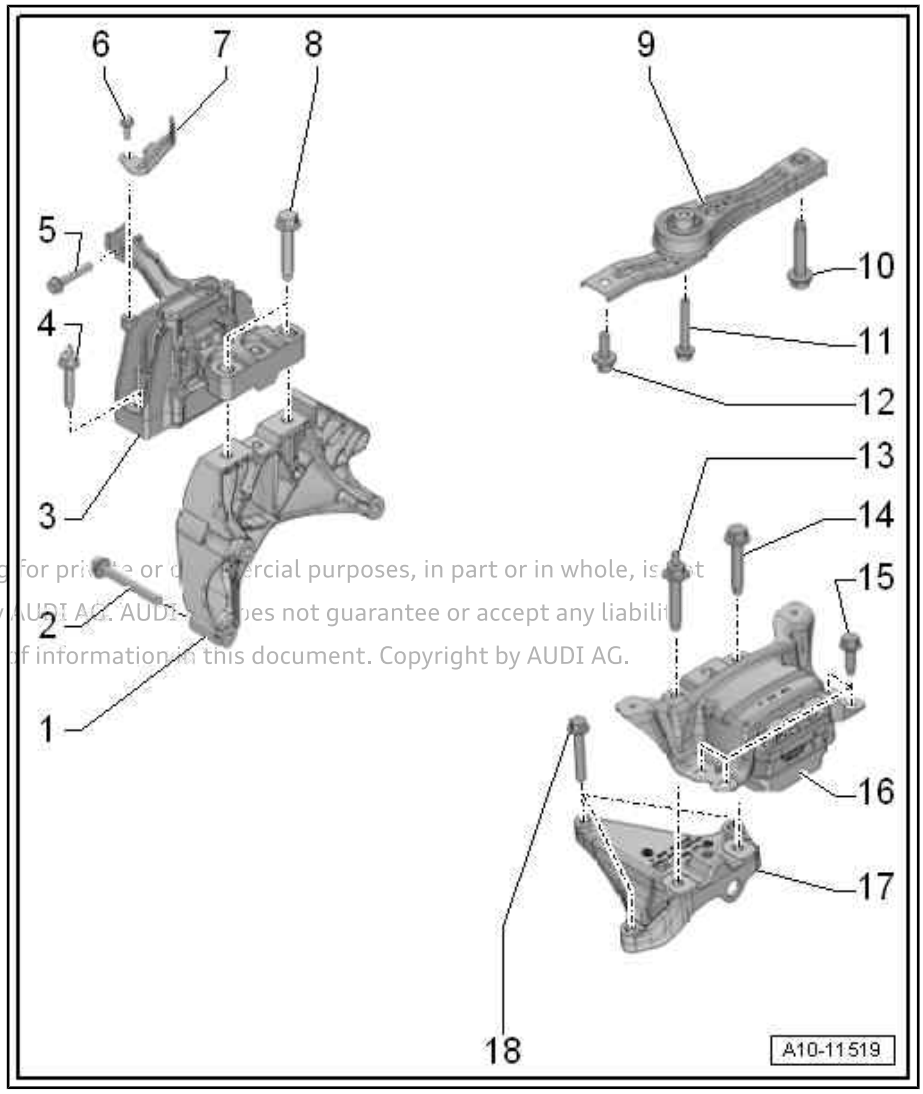

1–8 - Engine mounting

- ❑ Refer to ⇒ Rep. gr. 10 ; Assembly mountings; Exploded view - assembly mountings

9 - Pendulum support

- ❑ Removing and installing ⇒ page 53

10 - Bolt

- ❑ Renew
- ❑ 130 Nm +90°

11 - Bolt

- ❑ Renew
- ❑ 50 Nm +90°

12 - Bolt

- ❑ Renew
- ❑ 50 Nm +90°

13 - Bolt

- ❑ Renew
- ❑ 60 Nm +90°

14 - Bolt

- ❑ Renew
- ❑ 60 Nm +90°

15 - Bolt

- ❑ Renew
- ❑ 50 Nm +90°

16 - Gearbox mounting

- ❑ With support arm
- ❑ Removing and installing ⇒ Rep. gr. 10 ; Assembly mountings; Exploded view - assembly mountings

17 - Gearbox support

18 - Bolt

- ❑ Renew
- ❑ 40 Nm +90°

Protected by copyright. Copying for private or commercial purposes, in part or in whole, is not permitted unless authorised by AUDI AG. AUDI AG does not guarantee or accept any liability with respect to the correctness of information in this document. Copyright by AUDI AG.

5.2 Removing and installing pendulum support

Removing

– Remove noise insulation ⇒ General body repairs, exterior; Rep. gr. 66 ; Noise insulation; Removing and installing noise insulation .

– Remove bolts -1, 2, 3- and remove pendulum support -4-.

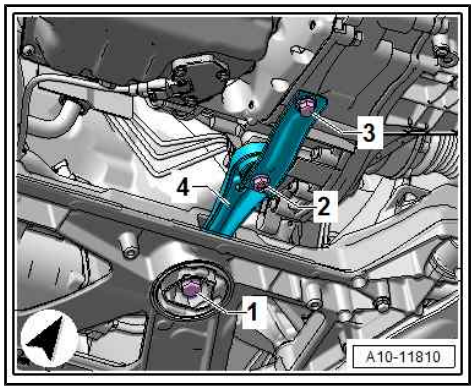

Installing

Installation is carried out in reverse order; note the following:

- After removing, renew bolts tightened with specified tightening angle.

– Secure pendulum support first onto gearbox, then onto sub-frame.

Tightening torques

♦ ⇒ page 53

♦ ⇒ General body repairs, exterior; Rep. gr. 66 ; Noise insulation; Exploded view - noise insulation

Protected by copyright. Copying for private or commercial purposes, in part or in whole, is not permitted unless authorised by AUDI AG. AUDI AG does not guarantee or accept any liability with respect to the correctness of information in this document. Copyright by AUDI AG.

6 Gear oil

⇒ “6.1 Draining and filling gear oil”, page 55

6.1 Draining and filling gear oil

Special tools and workshop equipment required

- Adapter for oil filling - VAS 6262 A- with -VAS 6262/4-

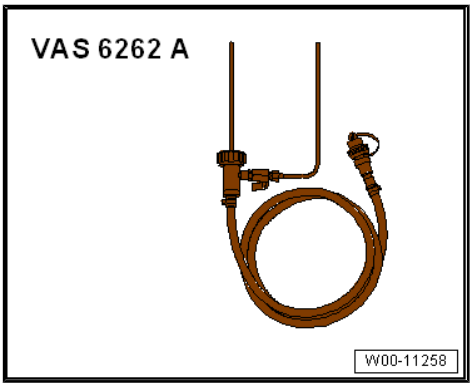

- If necessary, adapter -VAS 6262/6-
- Used oil collection and extraction unit - VAS 6622A-

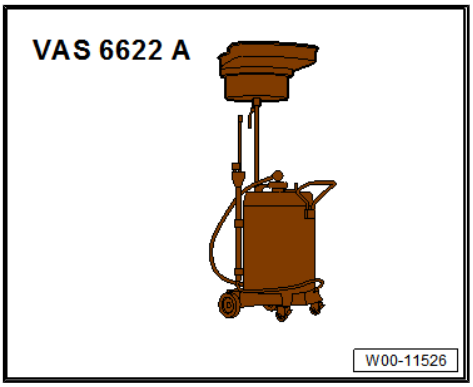

- Safety goggles
- Protective gloves (acid resistant)

Measure length of breather pipe on adapter for oil filling - VAS 6262 A- and shorten if necessary.

To ensure that breather pipe of adapter for oil filling -VAS 6262 A- does not make contact with bottom of oil container, breather pipe must be shortened to dimension -a-.

- Dimension -a- = 210 mm
- Dimension -a- is measured from stem (green area in magnified view) of adapter for oil filling -VAS 6262 A- .

If dimension -a- is greater than 210 mm:

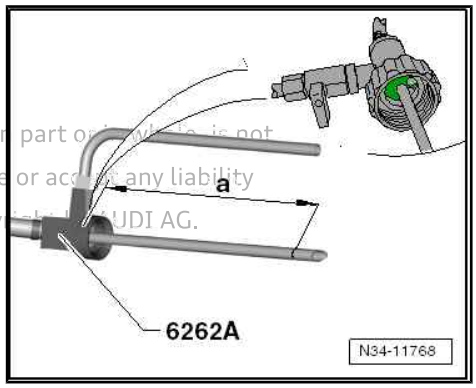

Protected by copyright. Copying for private or commercial purposes, in part or in whole, is not permitted unless authorised by AUDI AG. AUDI AG does not guarantee or accept any liability with respect to the correctness of information in this document. Copyright by AUDI AG.

– Mark length on breather pipe and shorten breather pipe using pipe cutter -VAS 6056/2- .

– Clean adapter for oil filling - VAS 6262 A- .

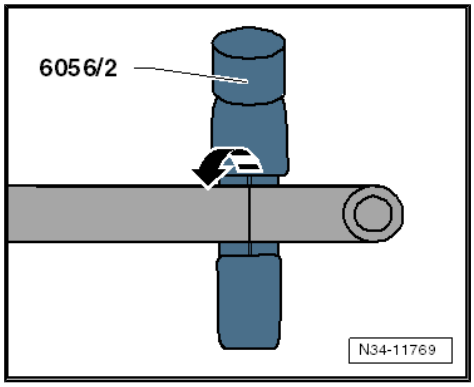

♦ Observe ⇒ “4.1 General notes”, page 7 .

♦ Observe ⇒ “4.2 Rules for cleanliness”, page 10 .

♦ Observe ⇒ “4.3 General repair instructions”, page 11 .

♦ The gear oil level cannot be checked.

♦ If the gearbox is leaking, trace the cause of the leak and repair as required.

♦ Then the gear oil must be completely drained off and the gearbox filled with new gear oil.

Procedure

• Engine switched off.

– Move selector lever to position “P”.

– Remove noise insulation ⇒ General body repairs, exterior; Rep. gr. 66 ; Noise insulation; Removing and installing noise insulation .

– Place used oil collection and extraction unit - VAS 6622- below gearbox.

– Remove oil drain plug from gearbox.

• Tightening torque: 40 Nm

– Allow oil to drain off, then retighten oil drain plug.

– Remove battery tray ⇒ Electrical system; Rep. gr. 27 ; Battery; Removing and installing battery tray .

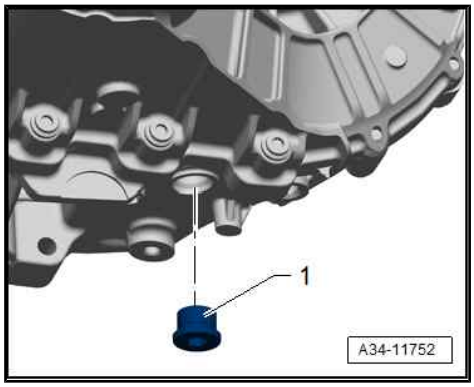

– Pull off breather cap -arrow- next to gearbox selector lever.

– Shake container before opening.

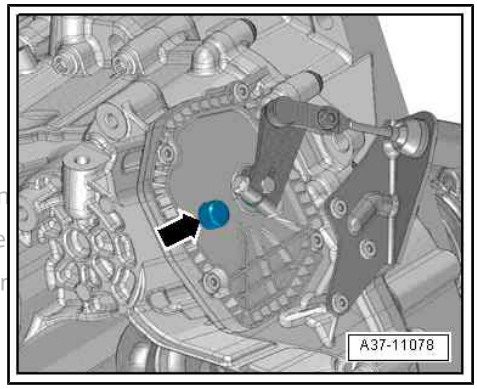

Protected by copyright. Copying for private or commercial purposes, in
permitted unless authorised by AUDI AG. AUDI AG does not guarantee
with respect to the correctness of information in this document. Copyr

– Screw container onto adapter for oil filling - VAS 6262 A- .

• The adapter for oil filling - VAS 6262 A- with -VAS 6262/4- must be clean; the gear oil must not be mixed with any other types of oil.

• If necessary, use adapter -VAS 6262/6- .

– Put down oil container so that oil does not run into filler hose.

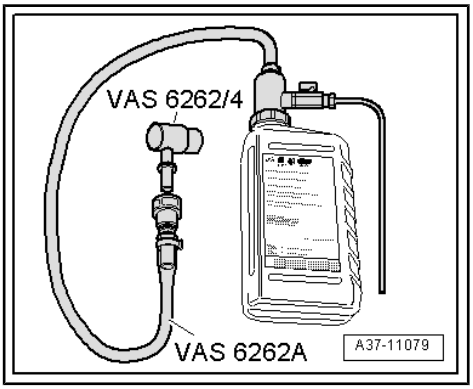

– Attach adapter -VAS 6262/4- to filler hose and connect to breather opening on gearbox.

– Turn oil container upside down and fill gearbox with the exact amount of oil required; see specified capacity ⇒ page 3 .

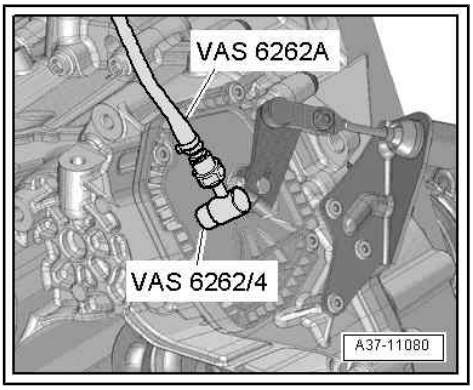

– Disconnect adapter -VAS 6262/4- and fit breather cap -arrow-.

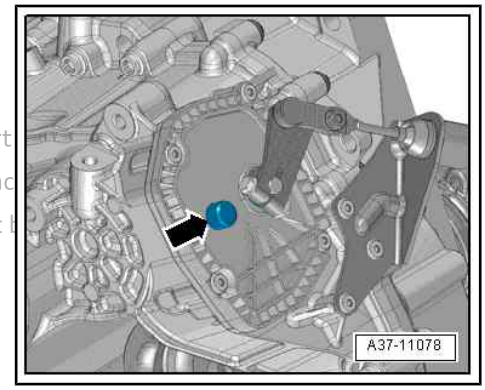

Protected by copyright. Copying for private or commercial purposes, in part
permitted unless authorised by AUDI AG. AUDI AG does not guarantee or ac
with respect to the correctness of information in this document. Copyright b

Protected by copyright. Copying for private or commercial purposes, in part or in whole, is not permitted unless authorised by AUDI AG. AUDI AG does not guarantee or accept any liability with respect to the correctness of information in this document. Copyright by AUDI AG.

7 Mechatronic unit

⇒ “7.1 Exploded view - mechatronic unit”, page 58
⇒ “7.2 Removing and installing mechatronic unit”, page 58

7.1 Exploded view - mechatronic unit

Refer to ⇒ Servicing 7-speed dual clutch gearbox 0CW; Rep. gr. 34 ; Mechatronic unit; Exploded view - mechatronic unit

7.2 Removing and installing mechatronic unit

- Observe ⇒ “4.1 General notes”, page 7 .
- Observe ⇒ “4.2 Rules for cleanliness”, page 10 .
- Observe ⇒ “4.3 General repair instructions”, page 11 .

Note

- The clutch is self-adjusting. Shocks can affect the adjusting mechanism. Even if the mechatronic unit has been removed, suddenly pulling out the assembly lever -T10407- from under the engaging levers can have a negative effect on the adjusting mechanism.
- A new mechatronic unit is supplied with the correct oil filling. Do not drain oil.
- After removal, the used mechatronic unit is sent back with its oil in. The mechatronic unit remains filled with oil.

Removing

– Move selector lever to position “P”.

Moving gear actuators into neutral position

– Connect to ⇒ Vehicle diagnostic tester and select `Own test`.

- Dual clutch gearbox 0CW
- 01 - Self-diagnosis compatible systems
- 02 - Gearbox electronics
- 02 - Gearbox electronics, functions
- 02 - Basic setting

– Follow instructions shown on display.

– Switch off ignition.

– Remove radiator cowl ⇒ Rep. gr. 19 ; Radiators/radiator fans; Removing and installing radiator cowl .

– Vehicles with 1.0 ltr./1.2 ltr./1.4 ltr./1.5 ltr. TFSI engine: Detach coolant hose (drain coolant to do so) ⇒ Rep. gr. 19 ; Cooling system/coolant; Draining and filling cooling system .

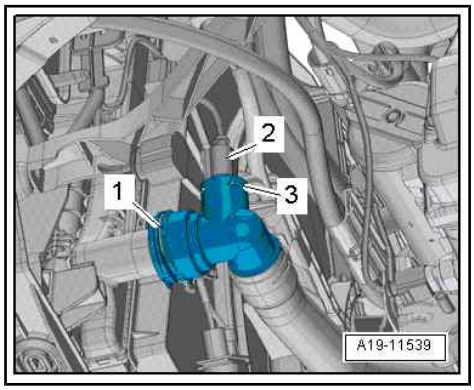

– Vehicles with 1.6 ltr. TDI engine: Detach coolant hose (drain coolant to do so) ⇒ Rep. gr. 19 ; Cooling system/coolant; Draining and filling cooling system .

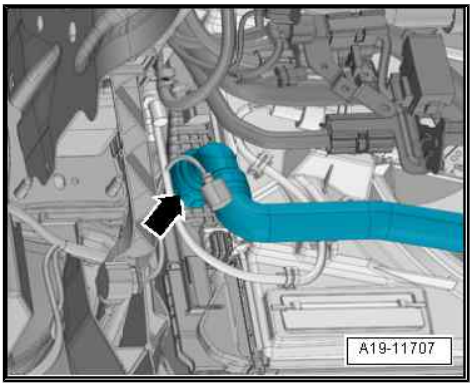

Protected by copyright. Copying for private or commercial purposes, in part
permitted unless authorised by AUDI AG. AUDI AG does not guarantee or a
with regard to the correctness of information in this document. Copyright

– Vehicles with 1.8 ltr. TFSI engine: Release hose clips -1 and 2- and detach air hose.

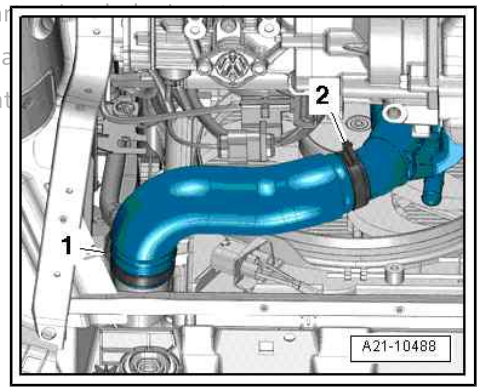

For additional work refer to ⇒ Servicing 7-speed dual clutch gearbox 0CW; Rep. gr. 34 ; Mechatronic unit; Removing and installing mechatronic unit .

Installing

For servicing work refer to ⇒ Servicing 7-speed dual clutch gearbox 0CW; Rep. gr. 34 ; Mechatronic unit; Removing and installing mechatronic unit .

Remaining assembly is carried out in reverse sequence; note the following:

– Install radiator cowl ⇒ Rep. gr. 19 ; Radiator/radiator fans; Removing and installing radiator cowl .

– If coolant was drained off earlier, fill it up again ⇒ Rep. gr. 19 ; Cooling system/coolant; Draining and filling cooling system .

– Fill up gear oil ⇒ page 55 .

– Check adjustment of selector lever cable and adjust if necessary ⇒ page 27 .

– After installing gearbox, run `Basic setting` function in `Guided Functions` ⇒ Vehicle diagnostic tester.

Performing basic setting

– Select `Own test` on ⇒ Vehicle diagnostic tester.

♦ Dual clutch gearbox 0CW

♦ 01 - Self-diagnosis compatible systems

♦ 02 - Gearbox electronics

♦ 02 - Gearbox electronics, functions

♦ 02 - Replace mechatronics unit

– Follow instructions shown on display.

Tightening torques

♦ ⇒ Servicing 7-speed dual clutch gearbox 0CW; Rep. gr. 34 ; Mechatronic unit; Exploded view - mechatronic unit

35 – Gears, shafts

1 Parking lock

⇒ “1.1 Removing and installing cover for parking lock”, page 60

⇒ “1.2 Removing and installing parking lock”, page 60

1.1 Removing and installing cover for parking lock

Removing

– Remove battery tray -1- ⇒ Electrical system; Rep. gr. 27 ; Battery; Removing and installing battery tray .

– Remove cover for parking lock ⇒ Servicing 7-speed dual clutch gearbox 0CW; Rep. gr. 35 ; Parking lock .

1.2 Removing and installing parking lock

– Remove parking lock ⇒ Servicing 7-speed dual clutch gearbox 0CW; Rep. gr. 35 ; Parking lock .

Protected by copyright. Copying for private or commercial purposes, in part or in whole, is not permitted unless authorised by AUDI AG. AUDI AG does not guarantee or accept any liability with respect to the correctness of information in this document. Copyright by AUDI AG.

39 – Final drive - differential

1 Gearbox control system

⇒ "1.1 Overview of fitting locations - gearbox control system", page 61

⇒ "1.2 Basic settings for dual clutch gearbox", page 62

1.1 Overview of fitting locations - gearbox control system

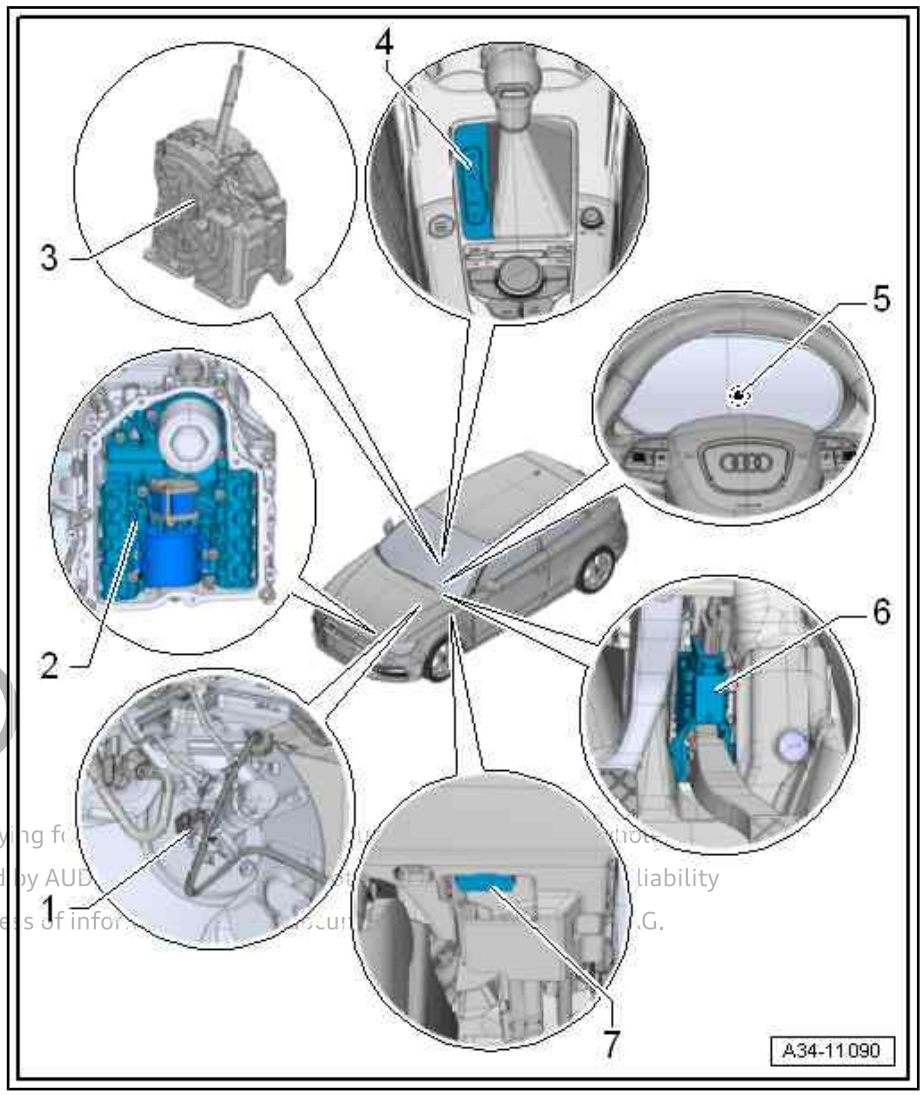

1 - Brake light switch - F- / brake pedal switch - F63-

- ❑ On brake master cylinder
- ❑ Exploded view ⇒ Brake system; Rep. gr. 45 ; Sensors; Exploded view - sensors and actuators

2 - Mechatronic unit for dual clutch gearbox - J743-

- ❑ Bolted onto front of gearbox housing
- ❑ Removing and installing ⇒ page 58

3 - Selector lever - E313-

- ❑ With selector lever sensors control unit - J587- , selector lever lock solenoid - N110- and selector lever locked in position P switch - F319-
- ❑ The components are integrated in the printed circuit of the shift unit; they cannot be renewed separately
- ❑ Removing and installing ⇒ "1.7 Removing and installing selector mechanism", page 23

Protected by copyright. Copying fo... ...hot... permitted unless authorised by AUD... ...liability with respect to the correctness of infor... ...G.

4 - Selector lever position display - Y26-

- ❑ Removing and installing ⇒ page 22

5 - Selector lever position display - Y6-

- ❑ Integrated into dash panel insert
- ❑ Cannot be renewed separately
- ❑ Exploded view of dash panel insert ⇒ Electrical system; Rep. gr. 90 ; Dash panel insert; Exploded view - dash panel insert

6 - Kick-down switch - F8-

- ❑ A programmed value from accelerator position sender - G79- / accelerator position sender 2 - G185- (integrated in accelerator pedal module) is stored in the engine control unit as the kickdown signal
- ❑ Signal transmission from engine control unit to gearbox control unit via CAN bus
- ❑ Exploded view of accelerator pedal module ⇒ Rep. gr. 20 ; Accelerator mechanism; Exploded view - accelerator pedal module

7 - Diagnostic connection

- ❑ For vehicle diagnostic tester
- ❑ In driver's footwell
- ❑ All components listed can be tested with the `Guided Fault Finding` function ⇒ Vehicle diagnostic tester

1.2 Basic settings for dual clutch gearbox

Special tools and workshop equipment required

- ♦ Vehicle diagnostic tester

Requirements for Basic setting:

- Vehicle diagnostic tester is connected.
- Selector lever is in position "P".

Protected by copyright. Copying for private or commercial purposes, in part or in whole, is not permitted unless authorised by AUDI AG. AUDI AG does not guarantee or accept any liability with respect to the correctness of information in this document. Copyright by AUDI AG.

– Using vehicle diagnostic tester in `Guided Functions` mode, select `02 - Gearbox electronics` and then select the appropriate basic setting function.

- It is important to follow all the instructions given by the vehicle diagnostic tester exactly in order to complete the basic setting successfully.

The following "basic settings" are currently available:

- ♦ 1. `Basic setting complete`
- ♦ 2. `Basic setting neutral`
- ♦ 3. `Basic setting removal position`

Description of basic settings:

1. Basic setting complete

`Basic setting complete` must be performed after the following operations:

- ♦ When the dual clutch has been removed
- ♦ When the mechatronic unit for dual clutch gearbox - J743- with control unit has been renewed
- ♦ When gearbox repairs have been performed

The `basic setting complete` function on the vehicle diagnostic tester achieves a fast and comprehensive self-adaption of the clutch system. The clutch and gear actuators are re-adapted. The current clutch engagement point, the current degree of wear, the synchronisation points and the end positions of the gear actuators with gears engaged are detected and stored.

Clutch self-adaption is performed regularly during normal driving, according to the amount of clutch wear. However, this adaption is only possible under specific driving conditions. For this reason the `Basic setting complete` must be performed after certain repairs, as listed above. This achieves optimum adjustment for gearshifts and clutch engagement when moving off.

2. Basic setting neutral

`Basic setting neutral` moves the gear actuators into the removal position. This ensures that the mechatronic unit does not "catch" during removal.

`Basic setting neutral` also attempts to shift out of all gears so that the vehicle can be pushed, e.g. if the clutch is defective.

3. Basic setting removal position

In the `Basic setting removal position` it is possible to check that the bellows of the clutch actuators -A- and -B- are correctly seated and not leaking or damaged.

- In the `Basic setting removal position` the two clutch actuators -A- and -B- are also moved all the way out in the direction of the -arrow-. The two clutch engaging levers -1- and -2- are thus pressed away from the mechatronic unit.
- The gear actuators are also moved to the removal position.
- When the ignition is switched off, the force is no longer applied to the two clutch actuators -A- and -B-. The clutch engaging levers -1- and -2- press the clutch actuators back into the mechatronic unit.

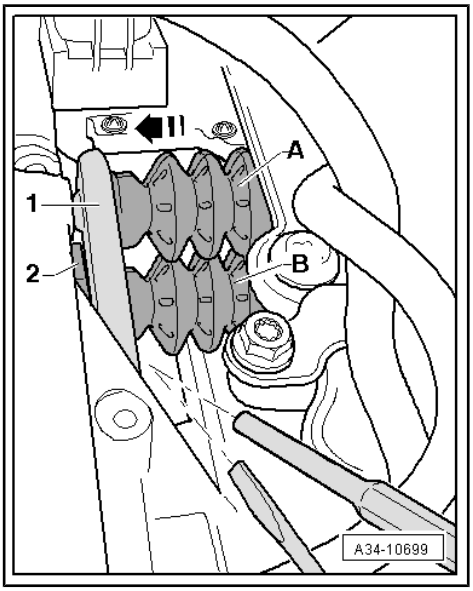

Protected by copyright. Copying for private or commercial purposes, in part or in whole, is not permitted unless authorised by AUDI AG. AUDI AG does not guarantee or accept any liability with respect to the correctness of information in this document. Copyright by AUDI AG.

2 Oil seals

⇒ “2.1 Overview of fitting locations - oil seals”, page 64

⇒ “2.2 Renewing oil seal (left-side)”, page 64

⇒ “2.3 Renewing oil seal (right-side)”, page 66

2.1 Overview of fitting locations - oil seals

1 - Oil seal for inner input shaft

- ❑ Renewing ⇒ Servicing 7-speed dual clutch gearbox 0CW; Rep. gr. 30 ; Clutch; Renewing oil seal for inner input shaft

2 - Input shaft oil seal

- ❑ Renewing ⇒ Servicing 7-speed dual clutch gearbox 0CW; Rep. gr. 30 ; Clutch; Renewing input shaft oil seal

3 - Oil seal (right-side)

- ❑ For flange shaft (right-side)
- ❑ Renewing ⇒ page 66

4 - Oil seal (left-side)

- ❑ For flange shaft (left-side)
- ❑ Renewing ⇒ page 64

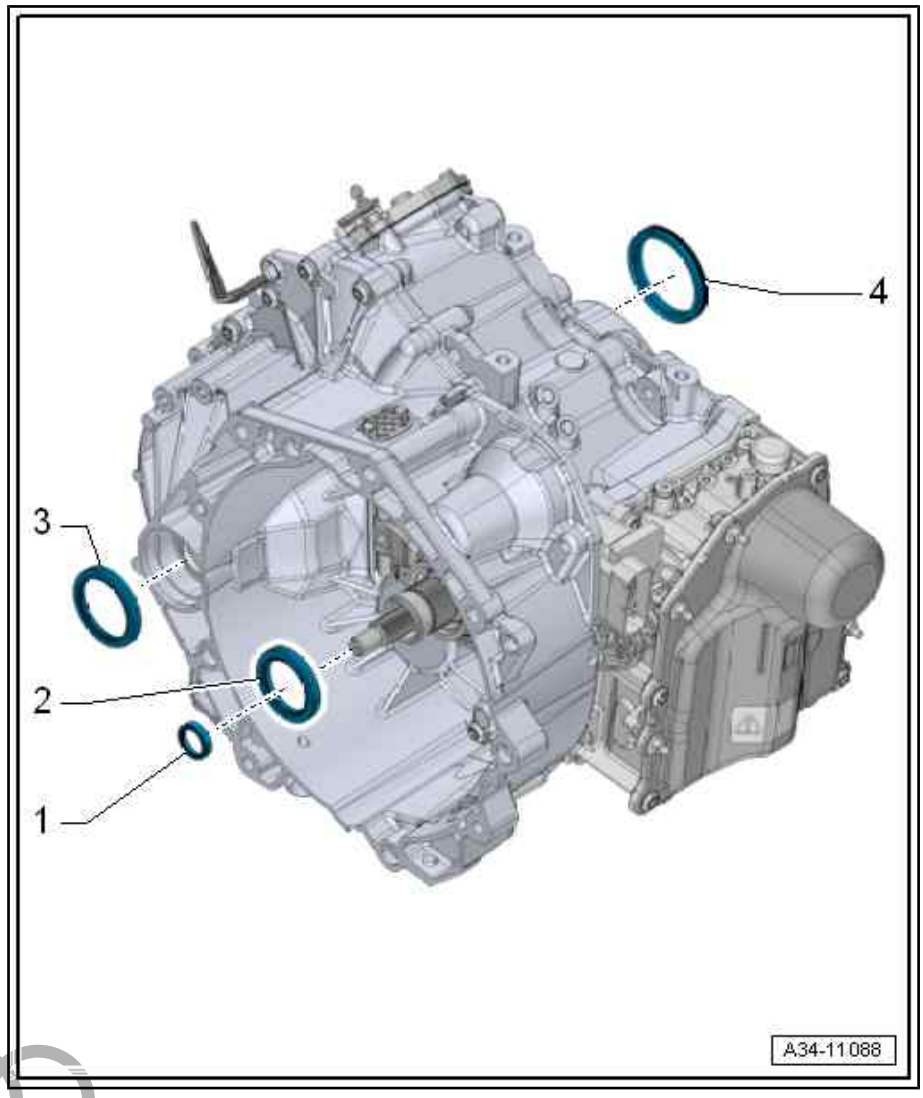

2.2 Renewing oil seal (left-side)

Special tools and workshop equipment required

Protected by copyright. Copying for private or commercial purposes, in part or in whole, is not permitted unless authorised by AUDI AG. AUDI AG does not guarantee or accept any liability with respect to the correctness of information in this document. Copyright by AUDI AG.

- Multi-purpose tool - VW 771-

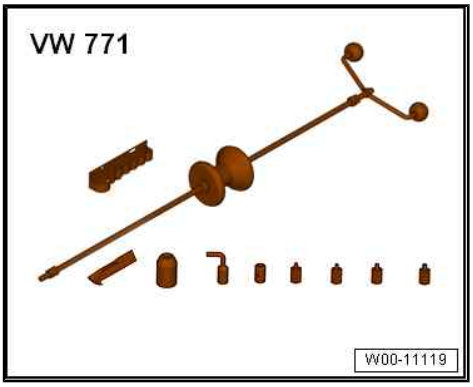

- Thrust piece - 3305-

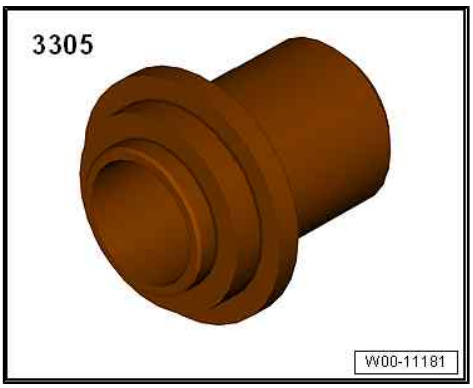

- Sealing grease ⇒ Electronic parts catalogue
- Observe ⇒ “4.1 General notes”, page 7 .
- Observe ⇒ “4.2 Rules for cleanliness”, page 10 .
- Observe ⇒ “4.3 General repair instructions”, page 11 .

Procedure

– Remove flange shaft (left-side) ⇒ page 68 .

– Pull out oil seal using multi-purpose tool - VW 771- and ex-tractor tool - VW 771/37- .

Protected by copyright. Copying for private or commercial purposes, in part, is not permitted unless authorised by AUDI AG. AUDI AG does not guarantee or assume liability with respect to the correctness of information in this document. Copyright by AUDI AG.

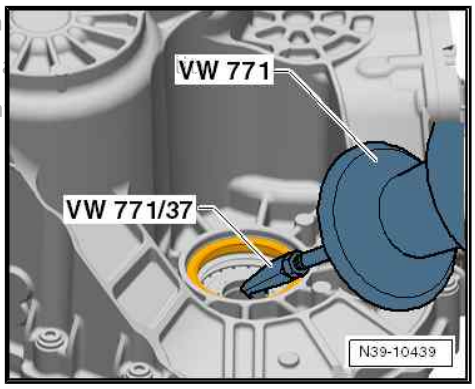

– Lubricate outer circumference of new oil seal with gear oil.
– Pack space between sealing lip and dust lip -arrow- half full with sealing grease ⇒ Electronic parts catalogue .

Protected by copyright. Copying for private or commercial purposes, in part or in whole is not permitted unless authorised by AUDI AG. AUDI AG does not guarantee the correctness of information in this document. Copyright by AUDI AG.

– Drive in oil seal onto stop (take care to keep seal straight).
– Install flange shaft (left-side) ⇒ page 68 .

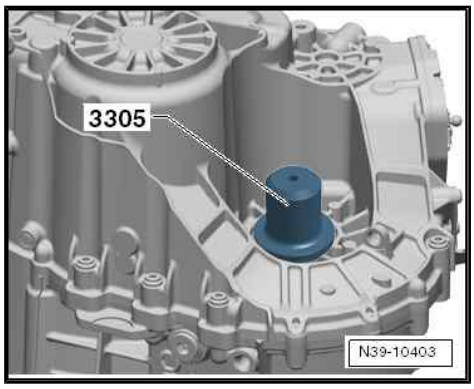

2.3 Renewing oil seal (right-side)

Special tools and workshop equipment required

♦ Thrust piece - 3305-

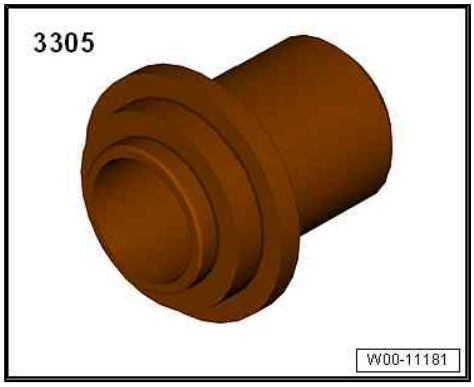

♦ Sealing grease ⇒ Electronic parts catalogue
♦ Observe ⇒ “4.1 General notes”, page 7 .
♦ Observe ⇒ “4.2 Rules for cleanliness”, page 10 .
♦ Observe ⇒ “4.3 General repair instructions”, page 11 .

Procedure

– Remove flange shaft (right-side) ⇒ page 70 .
– Pry out oil seal using assembly lever.
– Lubricate outer circumference of new oil seal with gear oil.

– Pack space between sealing lip and dust lip -arrow- half full with sealing grease ⇒ Electronic parts catalogue .

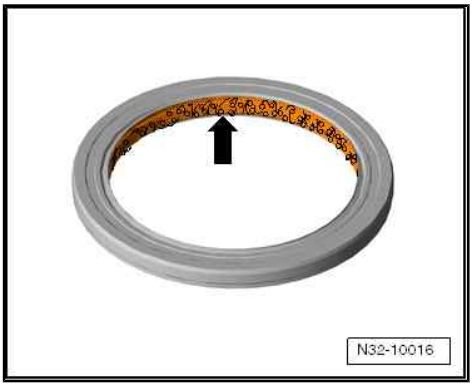

– Drive in oil seal onto stop using thrust piece - 3305- . Take care to keep seal straight when installing.

• If required, a new dust ring can be pressed onto flange shaft using tube - 2010- . Do not use a hammer.

– Install flange shaft (right-side) ⇒ page 70 .

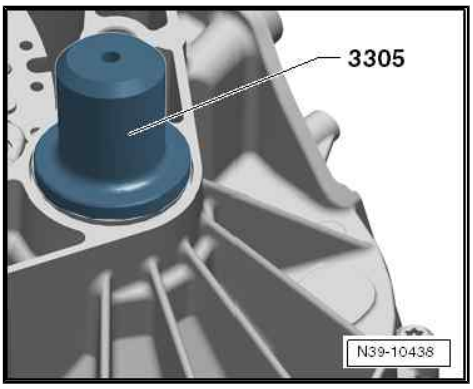

Protected by copyright. Copying for private or commercial purposes, in part or in whole, is not permitted unless authorised by AUDI AG. AUDI AG does not guarantee or accept any liability with respect to the correctness of information in this document. Copyright by AUDI AG.

3 Differential

⇒ “3.1 Exploded view - differential”, page 68

⇒ “3.2 Removing and installing flange shaft (left-side)”, page 68

⇒ “3.3 Removing and installing flange shaft (right-side)”, page 70

3.1 Exploded view - differential

1 - Bolt
- ❑ 30 Nm

2 - Flange shaft (right-side)
- ❑ Removing and installing ⇒ page 70

3 - Bolt
- ❑ 30 Nm

4 - Flange shaft (left-side)
- ❑ Removing and installing ⇒ page 68

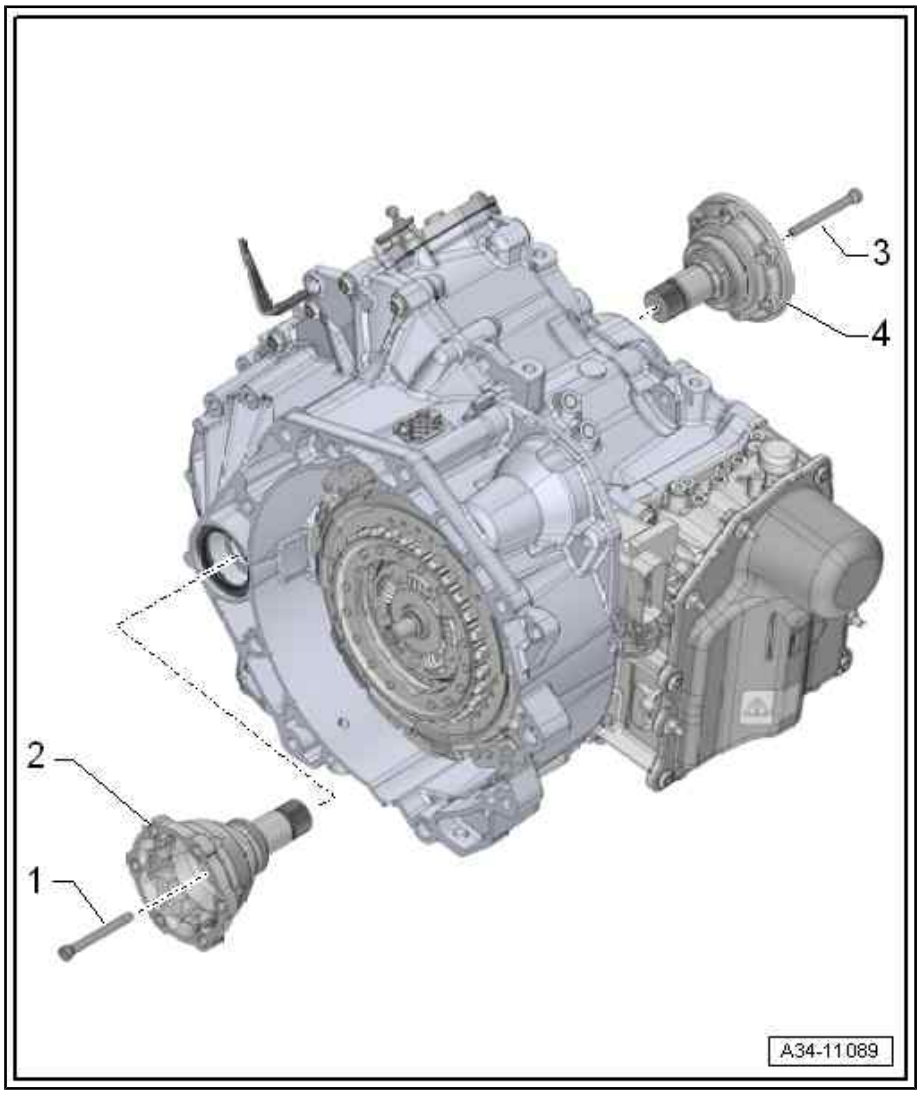

3.2 Removing and installing flange shaft (left-side)

Special tools and workshop equipment required

Protected by copyright. Copying for private or commercial purposes, in part or in whole, is not permitted unless authorised by AUDI AG. AUDI AG does not guarantee or accept any liability with respect to the correctness of information in this document. Copyright by AUDI AG.

- Hook -2024 A /1-

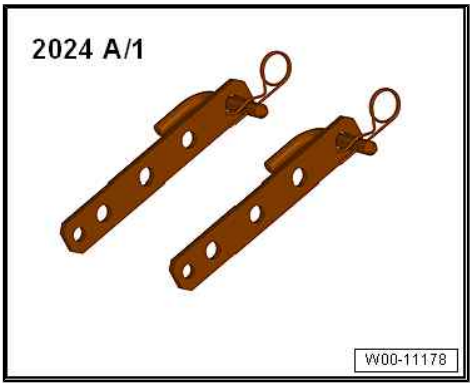

- Observe ⇒ “4.1 General notes”, page 7 .
- Observe ⇒ “4.2 Rules for cleanliness”, page 10 .
- Observe ⇒ “4.3 General repair instructions”, page 11 .

Removing

– Remove noise insulation ⇒ General body repairs, exterior; Rep. gr. 66 ; Noise insulation; Removing and installing noise insulation .

– Remove wheel housing liner (front left) ⇒ General body repairs, exterior; Rep. gr. 66 ; Wheel housing liners; Removing and installing wheel housing liner (front) .

– Remove nuts -arrows- securing swivel joint (left-side).

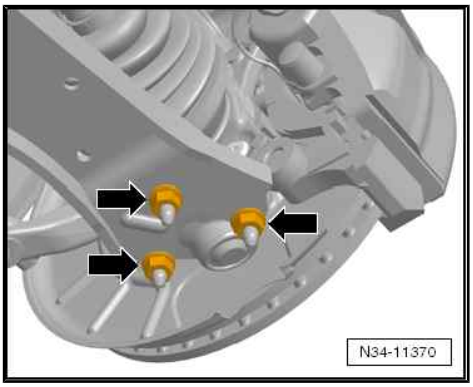

– If fitted, remove nut -4- and bolt -1- and move front left vehicle level sender - G78- -item 3- aside.

– Disengage swivel joint (left-side) from wishbone.

– Unbolt drive shaft (left-side) from gearbox ⇒ Running gear, axles, steering; Rep. gr. 40 ; Drive shaft; Removing and installing drive shaft .

Protected by copyright. Copying for private or commercial purposes, in part or in whole, is not permitted unless authorised by AUDI AG. AUDI AG does not guarantee or accept any liability with respect to the correctness of information in this docu

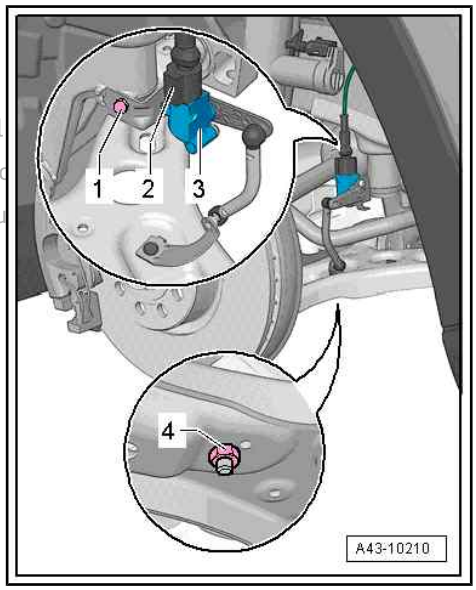

– Swivel suspension strut (left-side) outwards and support with hook -2024 A /1- as shown in illustration.

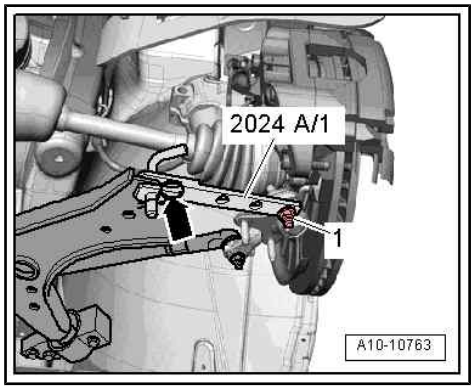

NOTICE

Risk of accidents if components of support are loose

– **Secure retaining pin and swivel joint with locking pin -arrow- and nut -1-.**

– Tie up drive shaft (left-side).

• Take care not to damage the surface coating of the drive shaft.

– Remove bolt securing flange shaft (left-side). To do so, screw two bolts into flange and counterhold flange shaft with suitable lever.

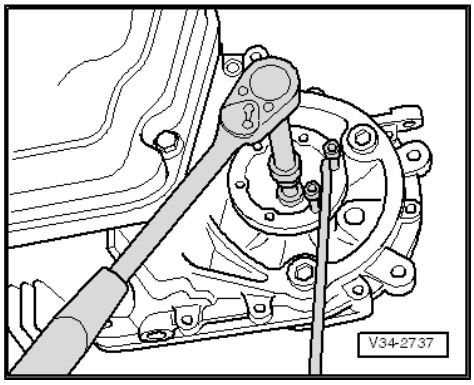

– Pull out flange shaft together with spring, thrust washer and tapered ring.

Installing

Installation is carried out in reverse order; note the following:

– Push flange shaft in against spring pressure and secure with bolt.

– Install swivel joint ⇒ Running gear, axles, steering; Rep. gr. 40 ; Lower wishbone, swivel joint; Exploded view - lower wishbone, swivel joint

– Install drive shaft ⇒ Running gear, axles, steering; Rep. gr. 40 ; Drive shaft; Removing and installing drive shaft .

– Install wheel housing liner (front left) ⇒ General body repairs, exterior; Rep. gr. 66 ; Wheel housing liners; Removing and installing wheel housing liner (front) .

– Install noise insulation ⇒ General body repairs, exterior; Rep. gr. 66 ; Noise insulation; Removing and installing noise insulation .

Protected by copyright. Copying for private or commercial purposes, in part or in whole, is not permitted unless authorised by AUDI AG. AUDI AG does not guarantee or accept any liability with respect to the correctness of information in this document. Copyright by AUDI AG.

– If gear oil has escaped during removal, renew gear oil ⇒ page 55 .

Tightening torques

♦ Exploded view - differential
⇒ “3.1 Exploded view - differential”, page 68

3.3 Removing and installing flange shaft (right-side)

♦ Observe ⇒ “4.1 General notes”, page 7 .

♦ Observe ⇒ “4.2 Rules for cleanliness”, page 10 .

♦ Observe ⇒ “4.3 General repair instructions”, page 11 .

Removing

– Remove noise insulation ⇒ General body repairs, exterior; Rep. gr. 66 ; Noise insulation; Removing and installing noise insulation .

– If fitted, remove bolts -arrows- and detach heat shield for drive shaft (right-side).
– Turn steering to left onto full lock.
– Unbolt drive shaft (right-side) from gearbox ⇒ Rep. gr. 40 ; Drive shaft; Removing and installing drive shaft .

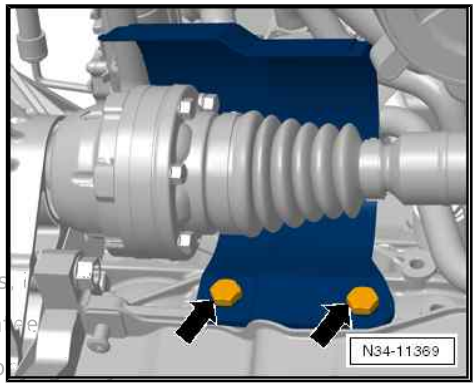

Protected by copyright. Copying for private or commercial purposes, i
permitted unless authorised by AUDI AG. AUDI AG does not guarante
with respect to the correctness of information in this document. Co

Vehicles with 1.8 ltr. TFSI/1.6 ltr. TDI engine:

– Unscrew nuts -arrows- for swivel joint (right-side).
– If fitted, unscrew nut on bracket for front right vehicle level sender - G289- .
– Disengage swivel joint (right-side) from wishbone.

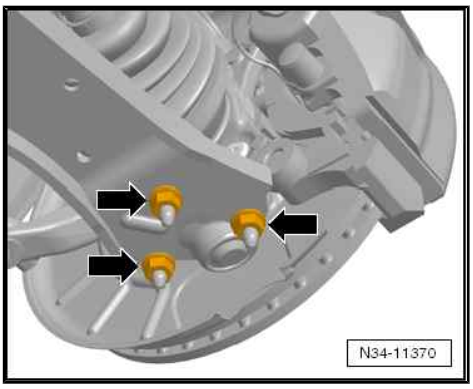

– Secure swivel joint -2- (right-side) to wishbone -1- with nut -arrow-, as shown in illustration.

All vehicles (continued):

– Tie up drive shaft (right-side) to rear.

• Take care not to damage the surface coating of the drive shaft.

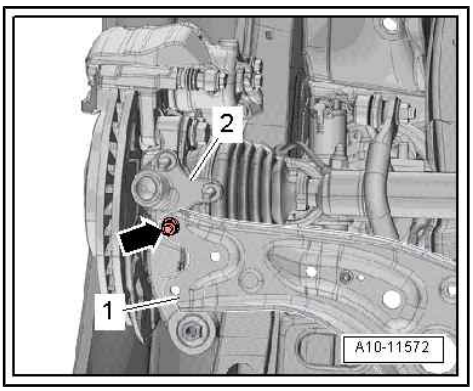

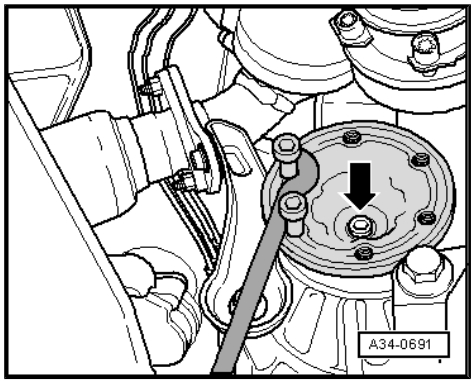

– Remove bolt -arrow- securing flange shaft (right-side). To do so, screw 2 bolts into flange and counterhold flange shaft with suitable lever.

– Pull out flange shaft together with spring, thrust washer and tapered ring.

Installing

Installation is carried out in reverse order; note the following:

– Push flange shaft in against spring pressure and secure with bolt.

– Install swivel joint ⇒ Running gear, axles, steering; Rep. gr. 40 ; Lower wishbone, swivel joint; Exploded view - lower wishbone, swivel joint

– Install drive shaft ⇒ Running gear, axles, steering; Rep. gr. 40 ; Drive shaft; Removing and installing drive shaft .

– If gear oil has escaped during removal, renew gear oil ⇒ page 55 .

– Install noise insulation ⇒ General body repairs, exterior; Rep. gr. 66 ; Noise insulation; Removing and installing noise insulation .

Tightening torques

♦ Exploded view - differential
⇒ “3.1 Exploded view - differential”, page 68

Protected by copyright. Copying for private or commercial purposes, in part or in whole, is not permitted unless authorised by AUDI AG. AUDI AG does not guarantee or accept any liability with respect to the correctness of information in this document. Copyright by AUDI AG.