2007 ENGINE

Engine Mechanical - 4.8L, 5.3L, 6.0L and 6.2L - Avalanche, Escalade, Suburban, Tahoe & Yukon

TIMING CHAIN AND SPROCKETS REPLACEMENT (LC9/LMG/LY2/LY5)

Tools Required

- **EN 46330** Timing Chain Tensioner Retaining Pin. See **Special Tools** .
- **J 8433** Puller Bar. See **Special Tools** .
- **J 41478** Crankshaft Front Oil Seal Installer. See **Special Tools** .
- **J 41558** Crankshaft Sprocket Remover. See **Special Tools** .
- **J 41665** Crankshaft Balancer and Sprocket Installer. See **Special Tools** .
- **J 41816-2** Crankshaft End Protector. See **Special Tools** .
- **J 42386-A** Flywheel Holding Tool. See **Special Tools** .
- **J 45059** Angle Meter. See **Special Tools** .

REMOVAL PROCEDURE

cardiagn.com

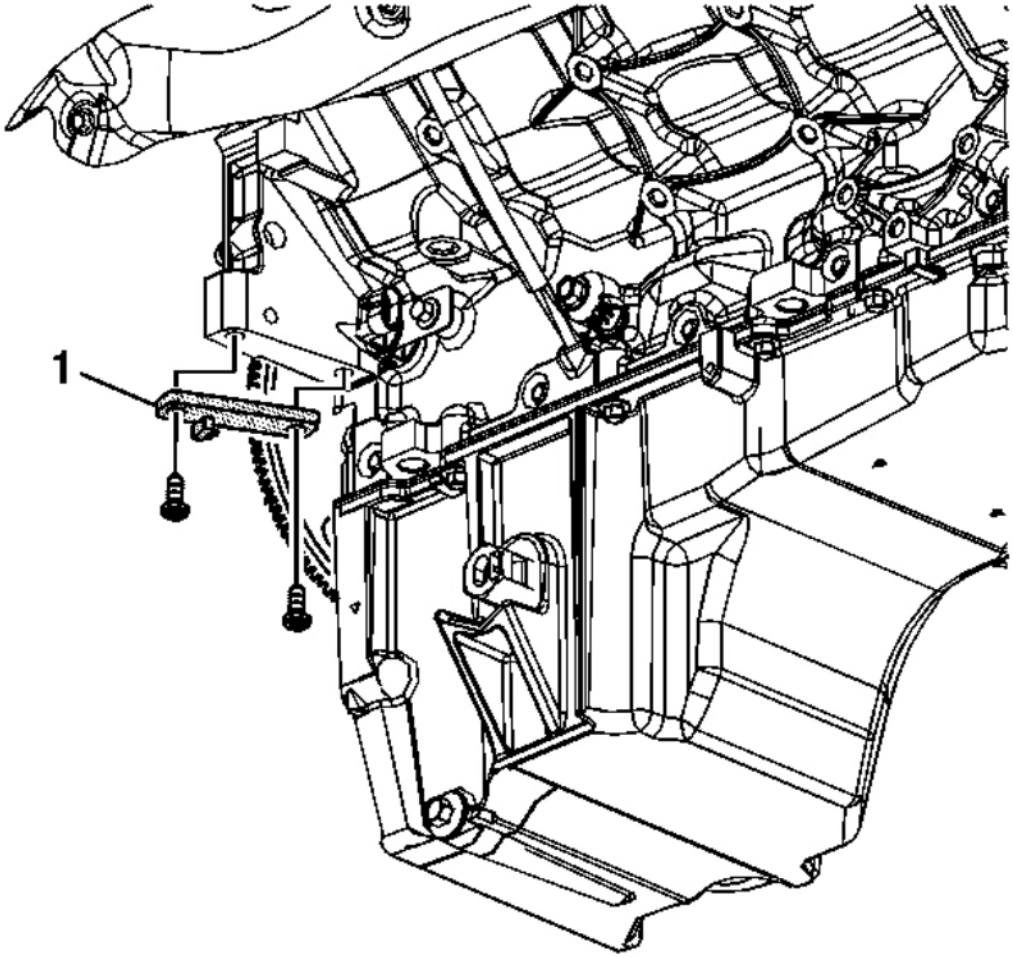

Fig. 1: View Of Special Tool & Bolts
Courtesy of GENERAL MOTORS CORP.

1. Remove the oil pump. Refer to **Oil Pump, Screen and Crankshaft Oil Deflector Replacement (RPOs LC9/LMG/LY2/LY5)** or **Oil Pump, Screen and Crankshaft Oil Deflector Replacement (RPOs LY6/L76/L92)** .
2. Remove the starter motor. Refer to **Starter Motor Replacement** .

NOTE: **Refer to Fastener Notice .**

IMPORTANT: **Ensure that the teeth of the J 42386-A mesh with the teeth of the engine flywheel. See Special Tools .**

cardiagn.com

3. Install the **J 42386-A** (1) and bolts. See **Special Tools** . Use one M10-1.5 x 120 mm and one M10-1.5 x 45 mm bolt for proper tool operation.

   Tighten: Tighten the **J 42386-A** bolts to 50 N. See **Special Tools** .m (37 lb ft).

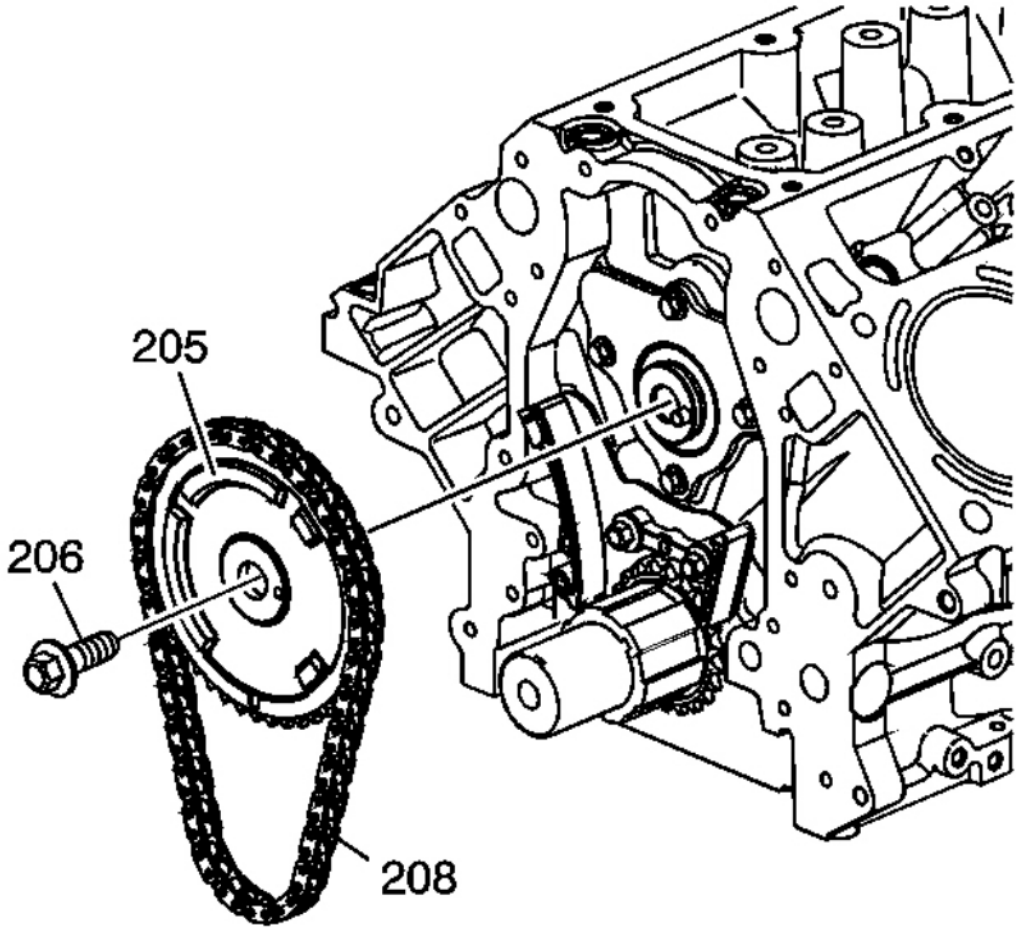

Fig. 2: View Of Camshaft Sprocket, Timing Chain & Sprocket Bolt
Courtesy of GENERAL MOTORS CORP.

NOTE: **Do not turn the crankshaft assembly after the timing chain has been removed in order to prevent damage to the piston assemblies or the valves.**

4. Rotate the crankshaft until the timing marks on the crankshaft and the camshaft sprockets are aligned.

cardiagn.com

5. Remove the camshaft sprocket bolt (206).
6. Remove the camshaft sprocket (205) and timing chain (208).

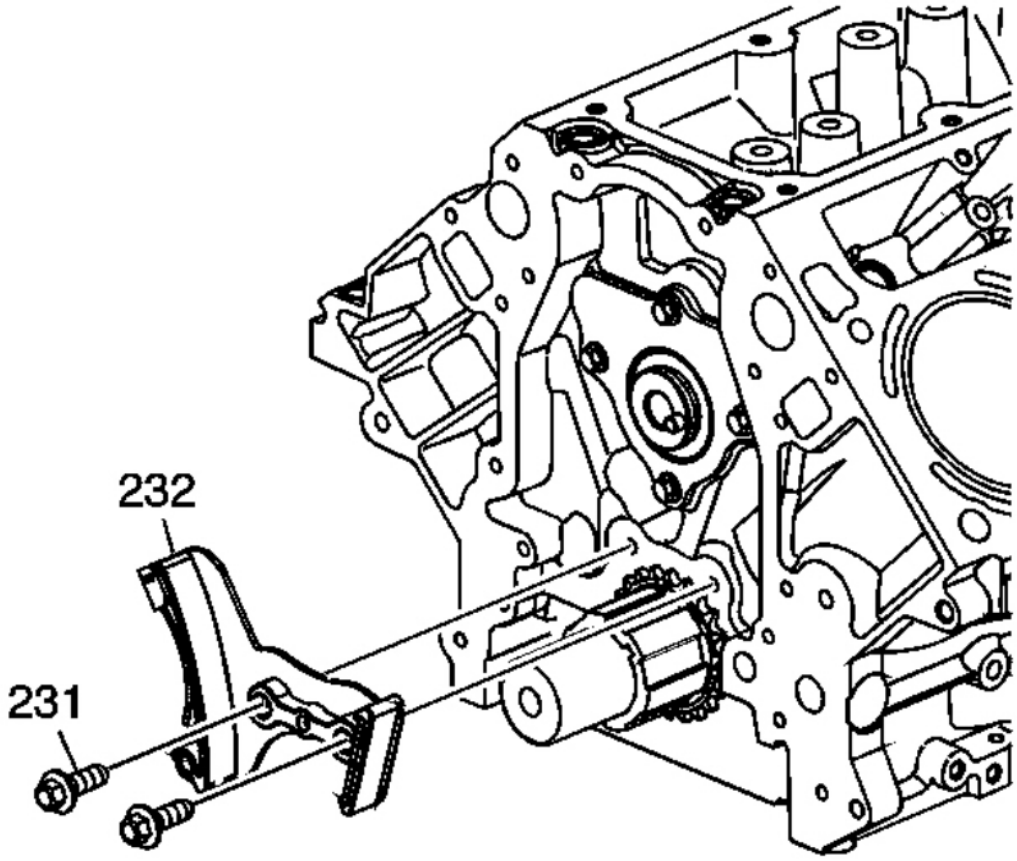

Fig. 3: View Of Timing Chain Tensioner & Bolts
Courtesy of GENERAL MOTORS CORP.

7. Remove the timing chain tension bolts (231) and tensioner (232).

cardiagn.com

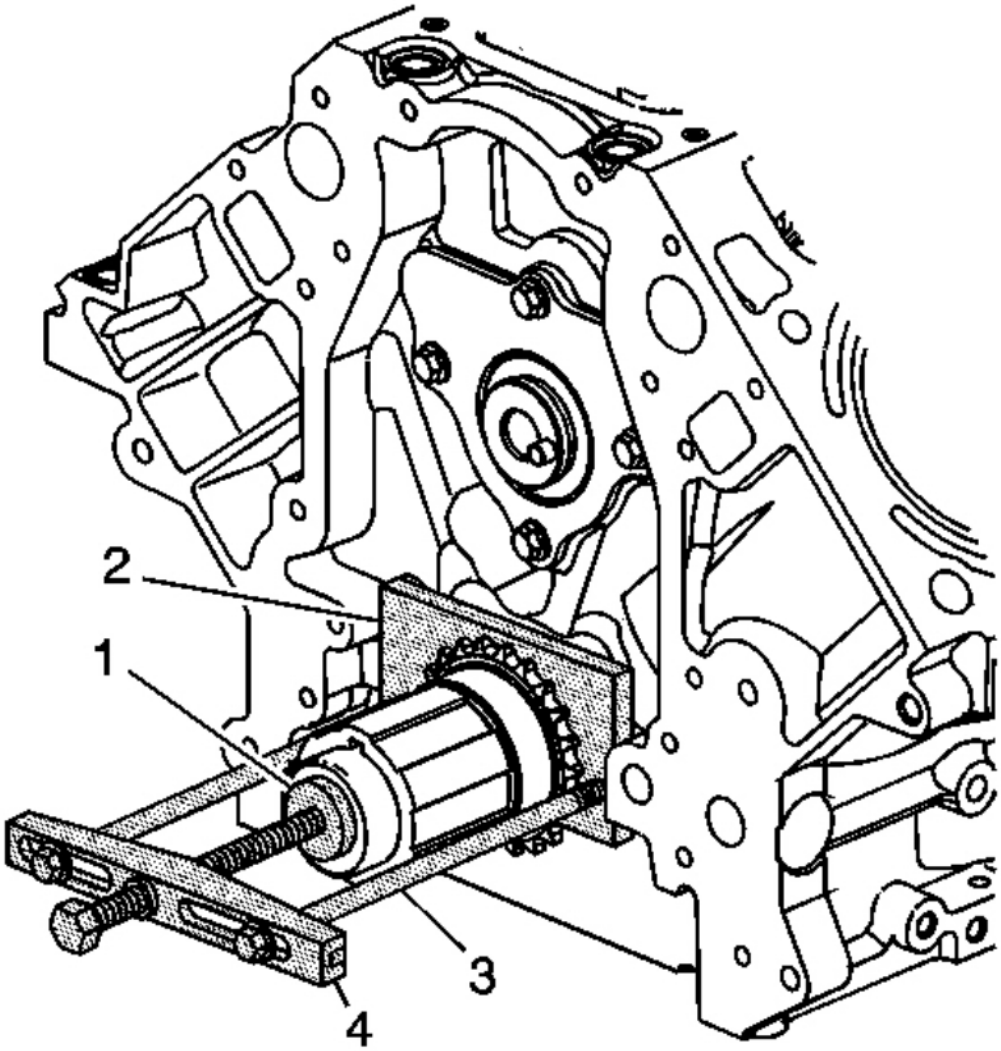

Fig. 4: View Of Crankshaft Sprocket Special Tools
Courtesy of GENERAL MOTORS CORP.

8. Using the **J 41816-2** (1), the **J 41558** (2), bolts (3) and the **J 8433** (4) in order to remove the crankshaft sprocket. See **Special Tools** .

cardiagn.com

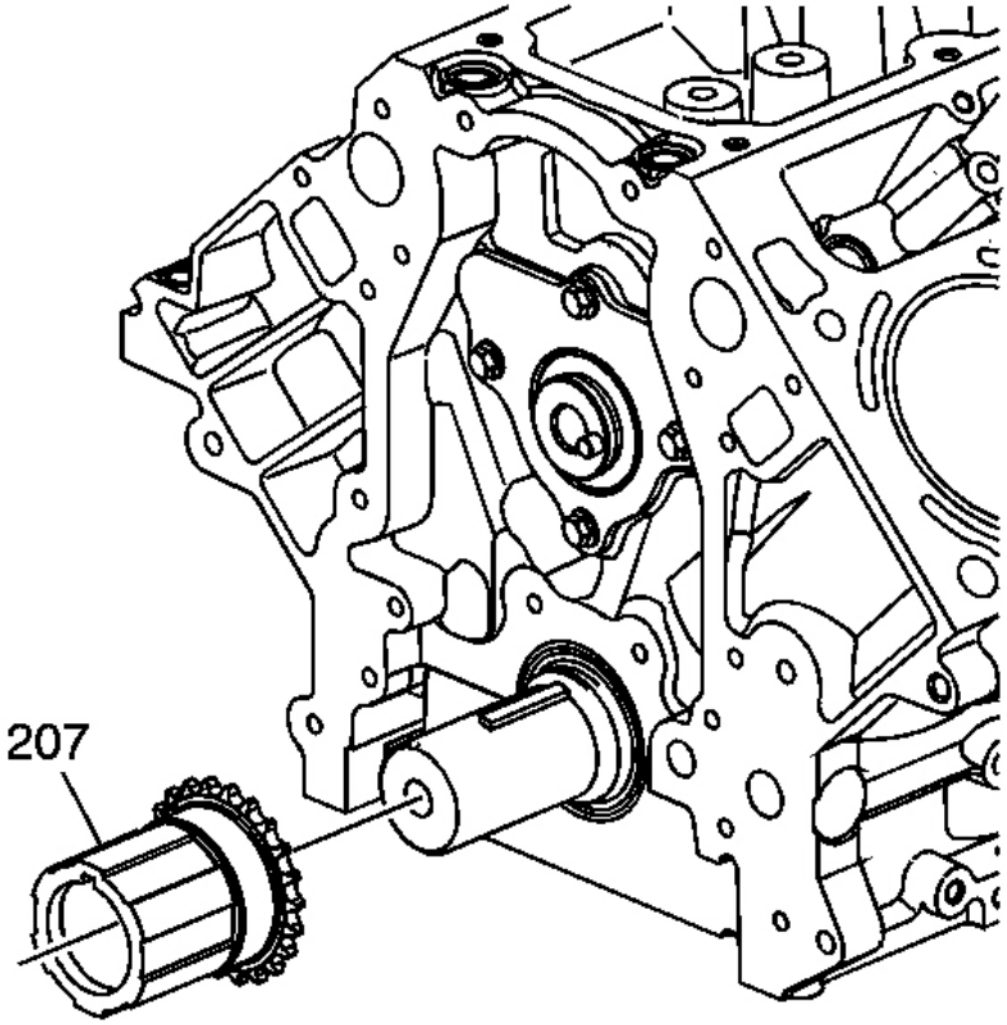

Fig. 5: View Of Crankshaft Sprocket
Courtesy of GENERAL MOTORS CORP.

9. Remove the crankshaft sprocket (207).

cardiagn.com

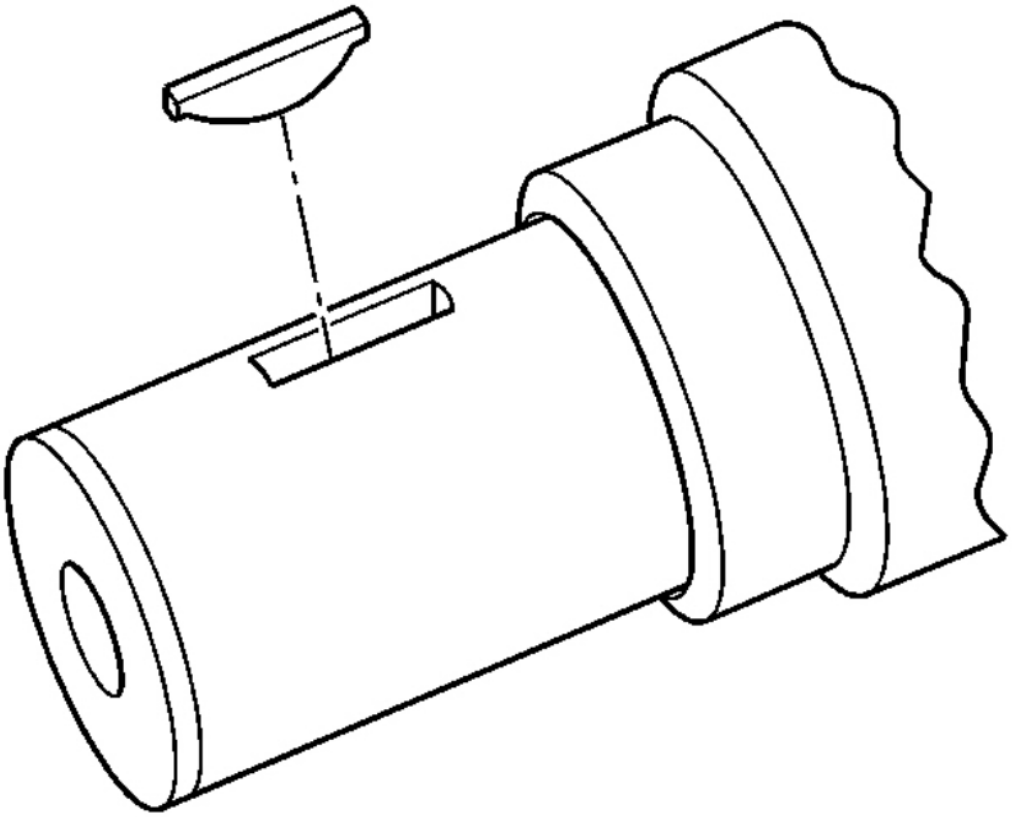

Fig. 6: View Of Crankshaft Key & Keyway
Courtesy of GENERAL MOTORS CORP.

10. Remove the crankshaft sprocket key, if required.

INSTALLATION PROCEDURE

cardiagn.com

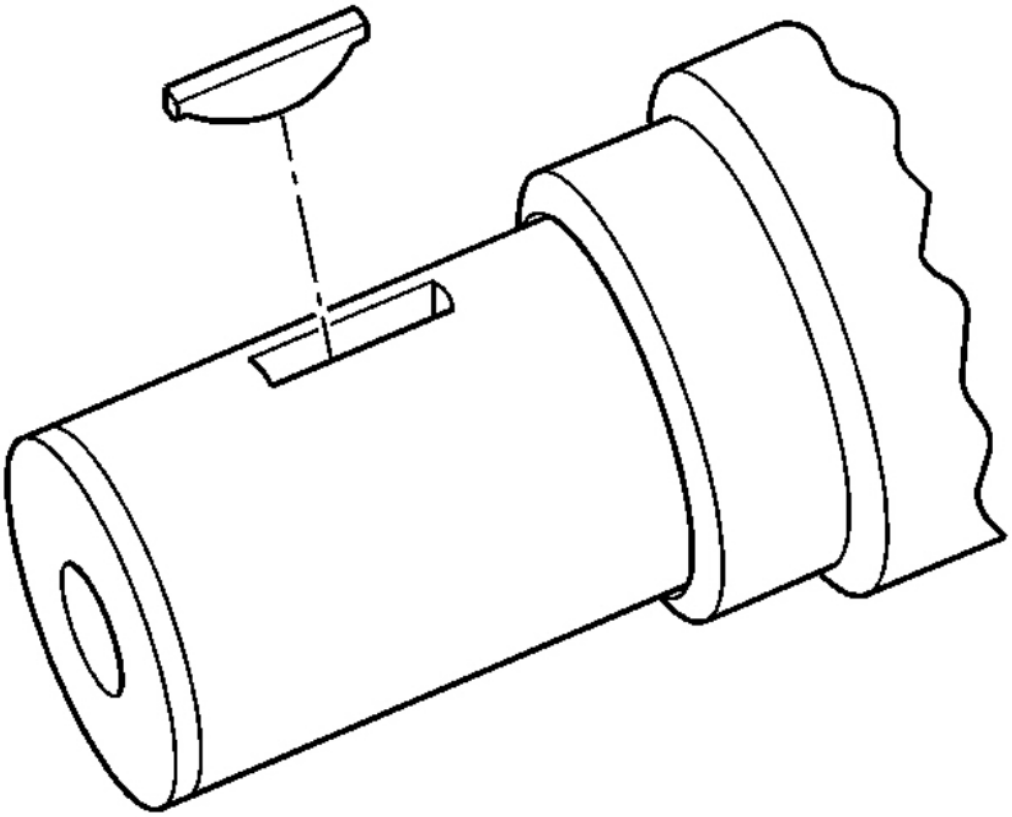

Fig. 7: View Of Crankshaft Key & Keyway
Courtesy of GENERAL MOTORS CORP.

1. Install the key into the crankshaft keyway, if previously removed.

cardiagn.com

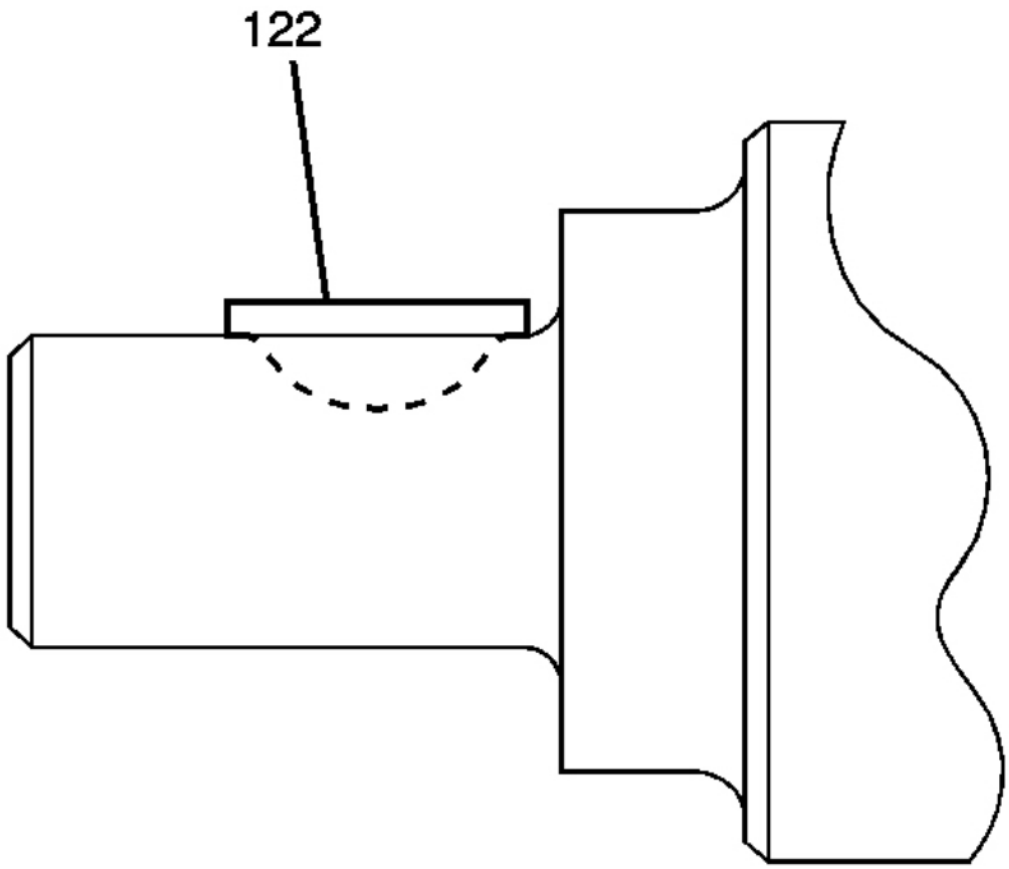

Fig. 8: View Of Installed Crankshaft Key
Courtesy of GENERAL MOTORS CORP.

2. Tap the key (122) into the keyway until both ends of the key bottom onto the crankshaft.

cardiagn.com

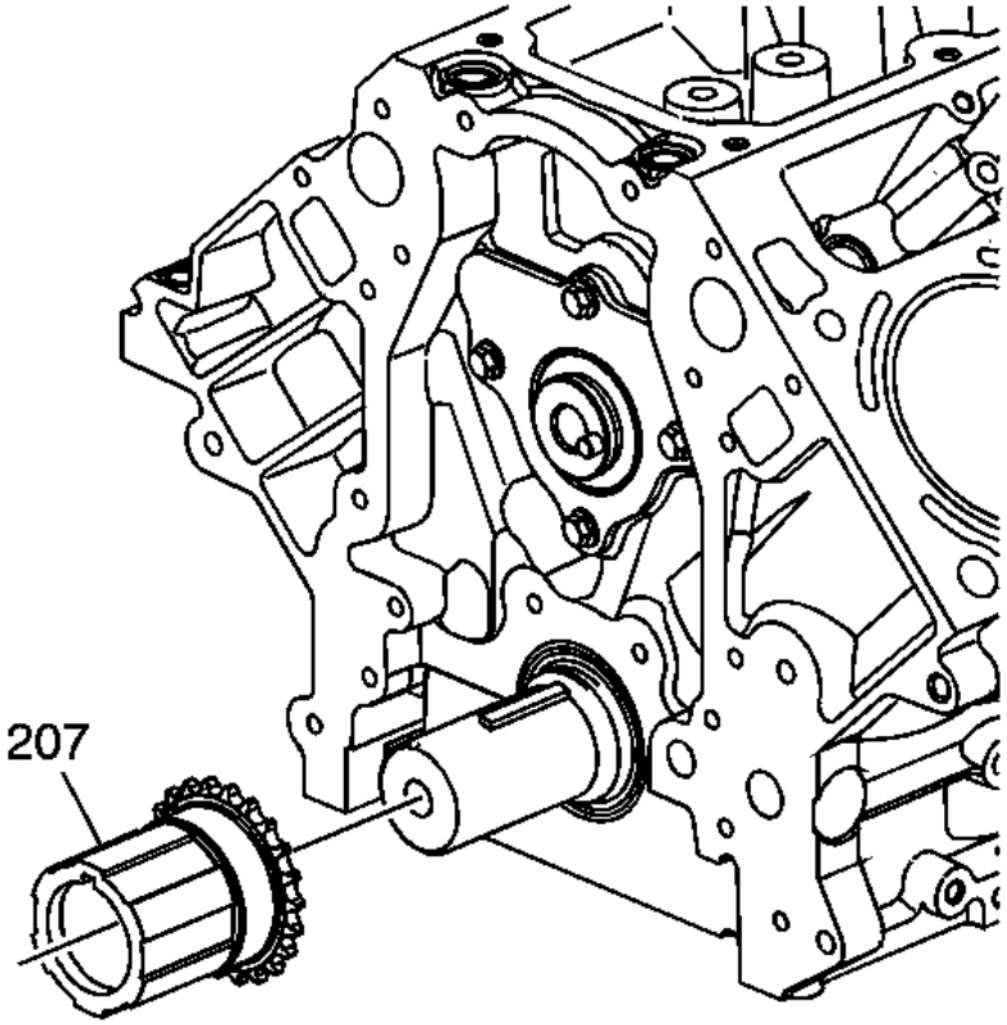

Fig. 9: View Of Crankshaft Sprocket
Courtesy of GENERAL MOTORS CORP.

3. Install the crankshaft sprocket (207) onto the front of the crankshaft. Align the crankshaft key with the crankshaft sprocket keyway.

cardiagn.com

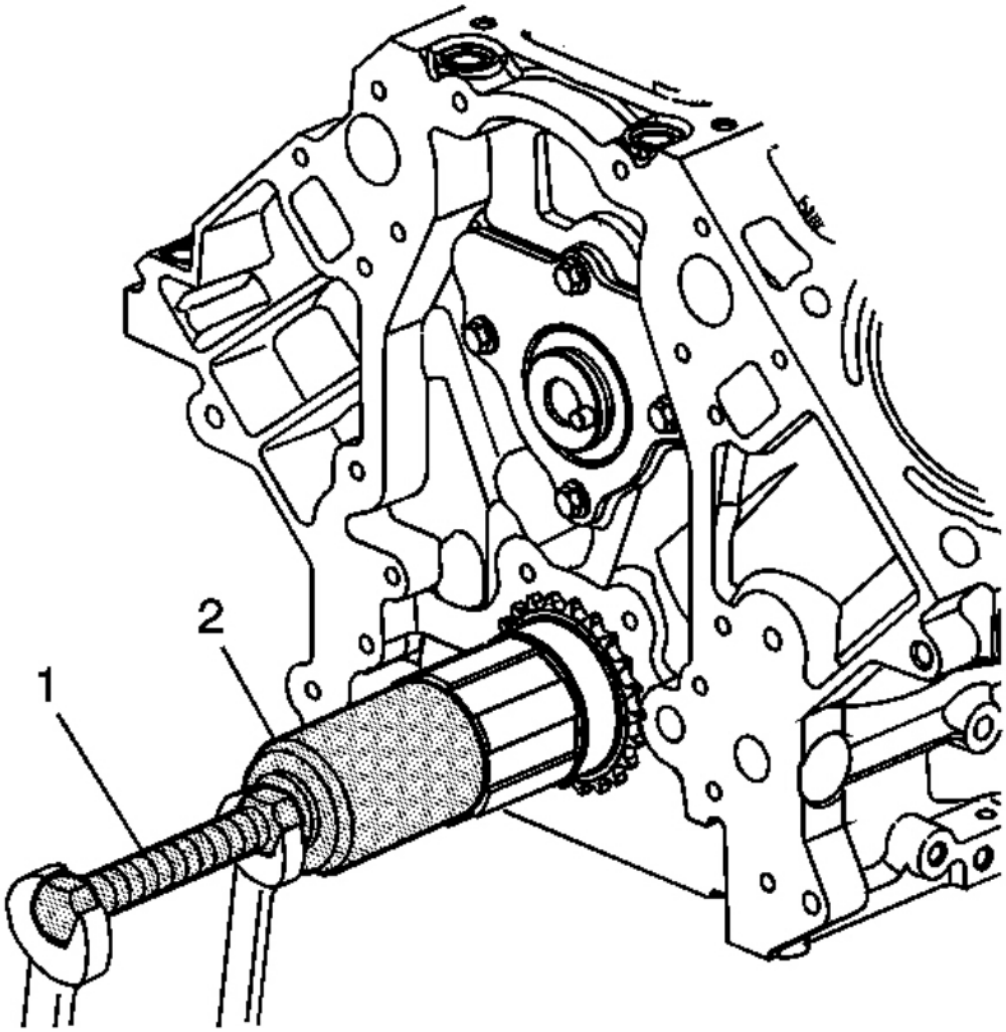

Fig. 10: View Of Crankshaft Sprocket & Installer
Courtesy of GENERAL MOTORS CORP.

4. Use the **J 41478** (1) and the **J 41665** (2) in order to install the crankshaft sprocket. See **Special Tools** . Install the sprocket onto the crankshaft until fully seated against the crankshaft flange.

cardiagn.com

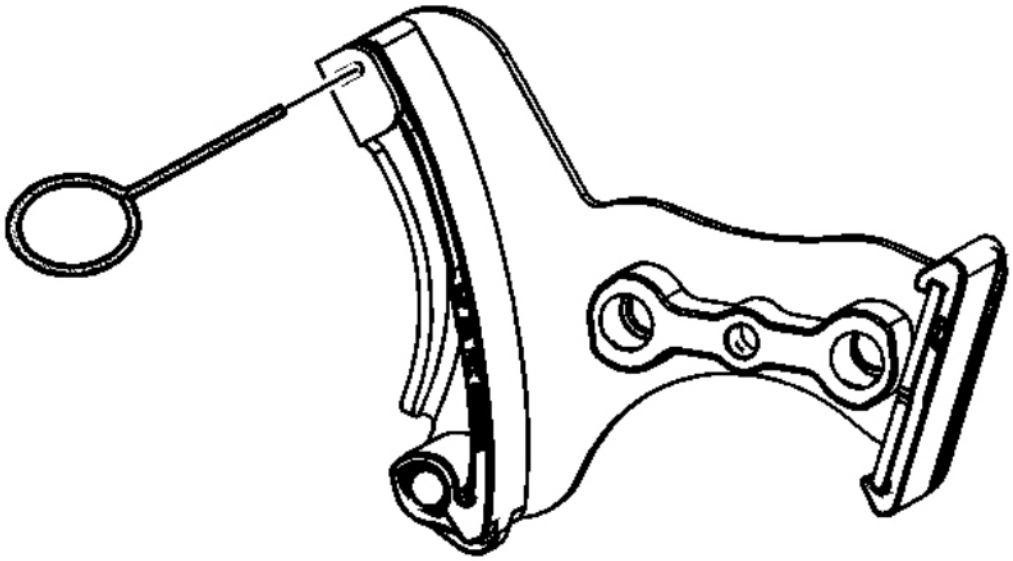

Fig. 11: Installing EN 46330 In Compressed Tensioner
Courtesy of GENERAL MOTORS CORP.

5. Compress the timing chain tensioner guide and install the **EN 46330** . See **Special Tools** .

cardiagn.com

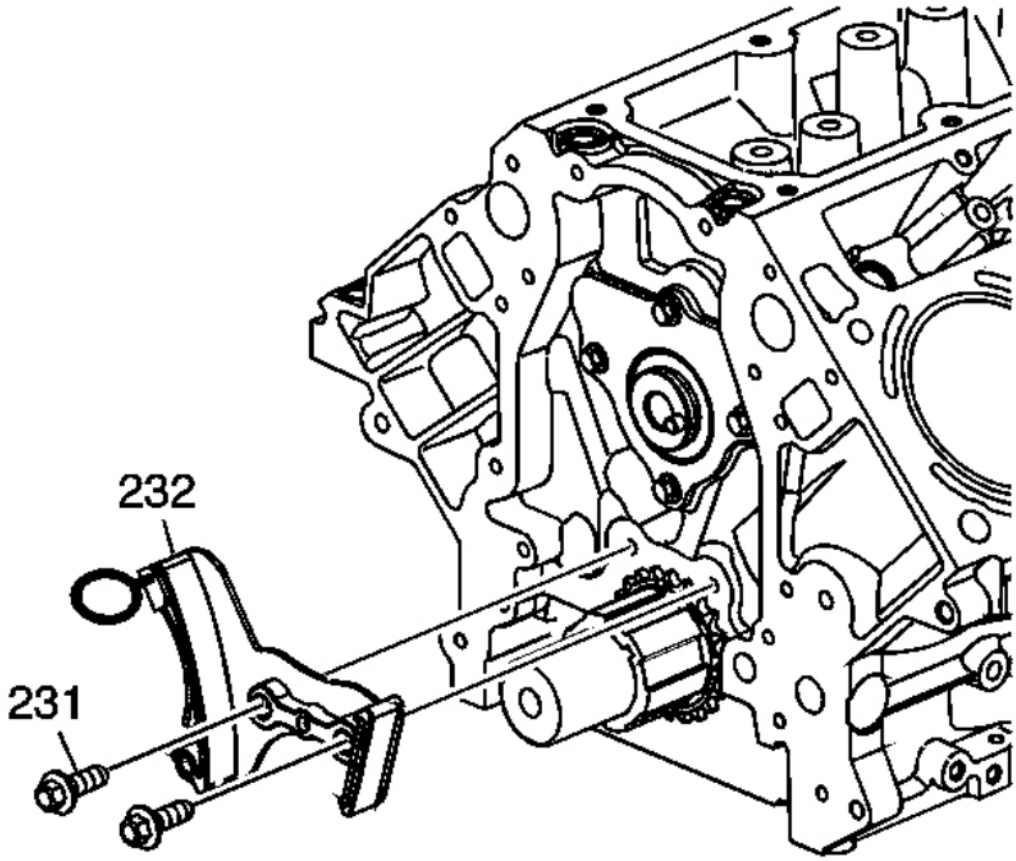

Fig. 12: View Of Timing Chain Tensioner
Courtesy of GENERAL MOTORS CORP.

6. Install the timing chain tensioner (232) and bolts (231).

   Tighten: Tighten the bolts to 25 N.m (18 lb ft).

cardiagn.com

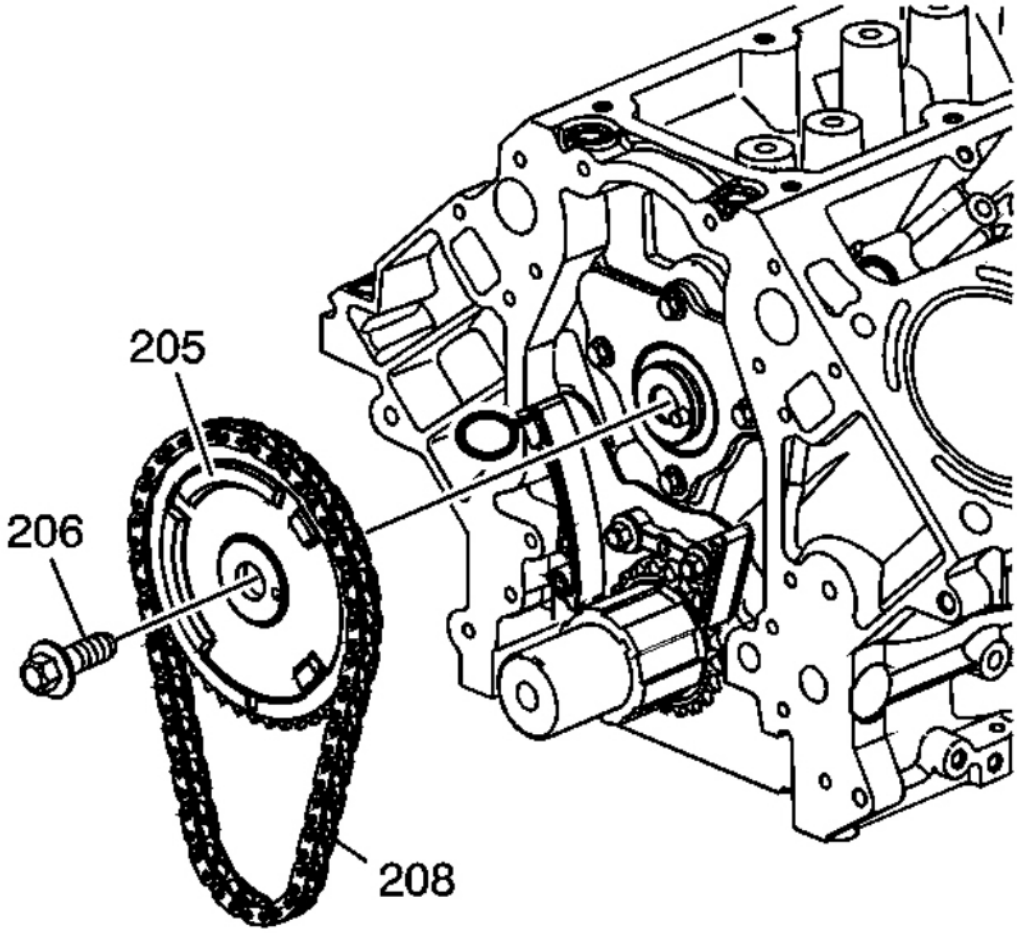

Fig. 13: View Of Camshaft Sprocket & Timing Chain
Courtesy of GENERAL MOTORS CORP.

IMPORTANT:

- **The sprocket teeth and timing chain must mesh.**
- **The camshaft and the crankshaft sprocket alignment marks MUST be aligned properly.**

7. Position the camshaft sprocket (205) so the timing mark is in the 6 o'clock position.
8. Install the camshaft sprocket (205), timing chain (208), and bolt (206).

cardiagn.com

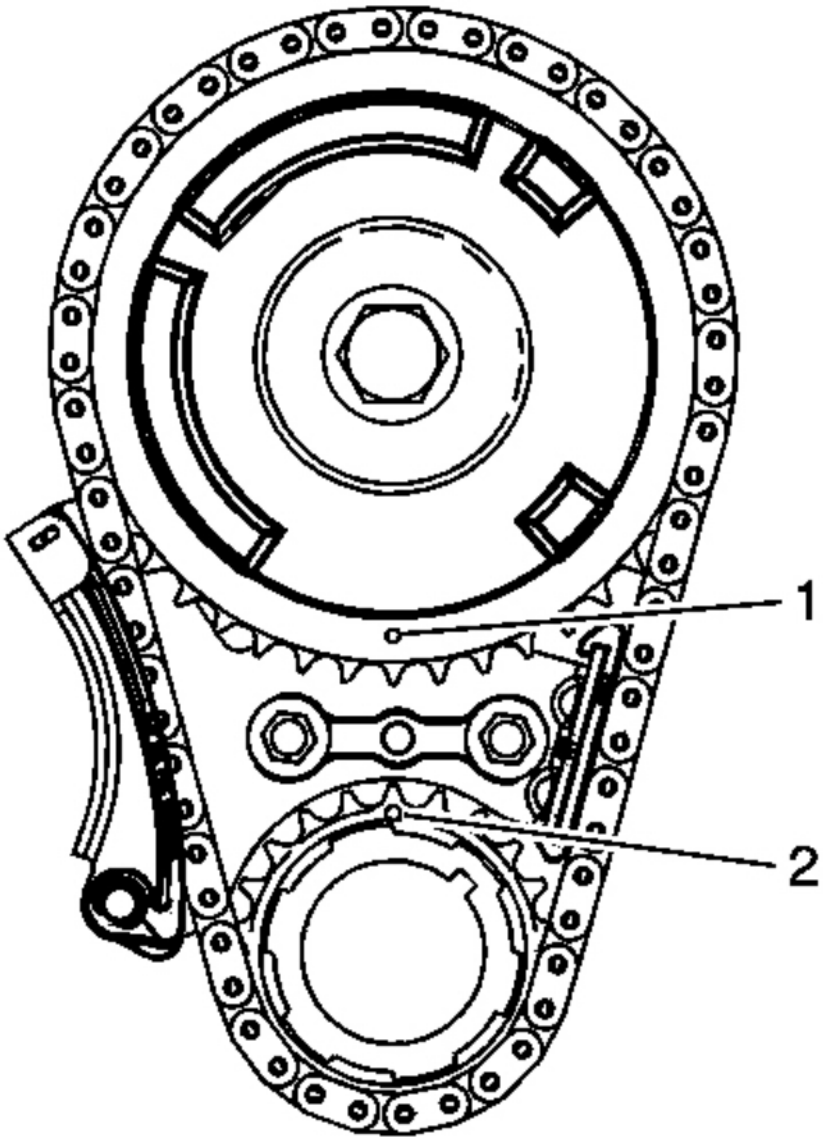

Fig. 14: Identifying Camshaft & Crankshaft Marks
Courtesy of GENERAL MOTORS CORP.

9. Inspect the sprockets for proper alignment. The mark on the camshaft sprocket (1) should be located in the 6 o'clock position and the mark on the crankshaft sprocket (2) should be located in the 12 o'clock position.

cardiagn.com

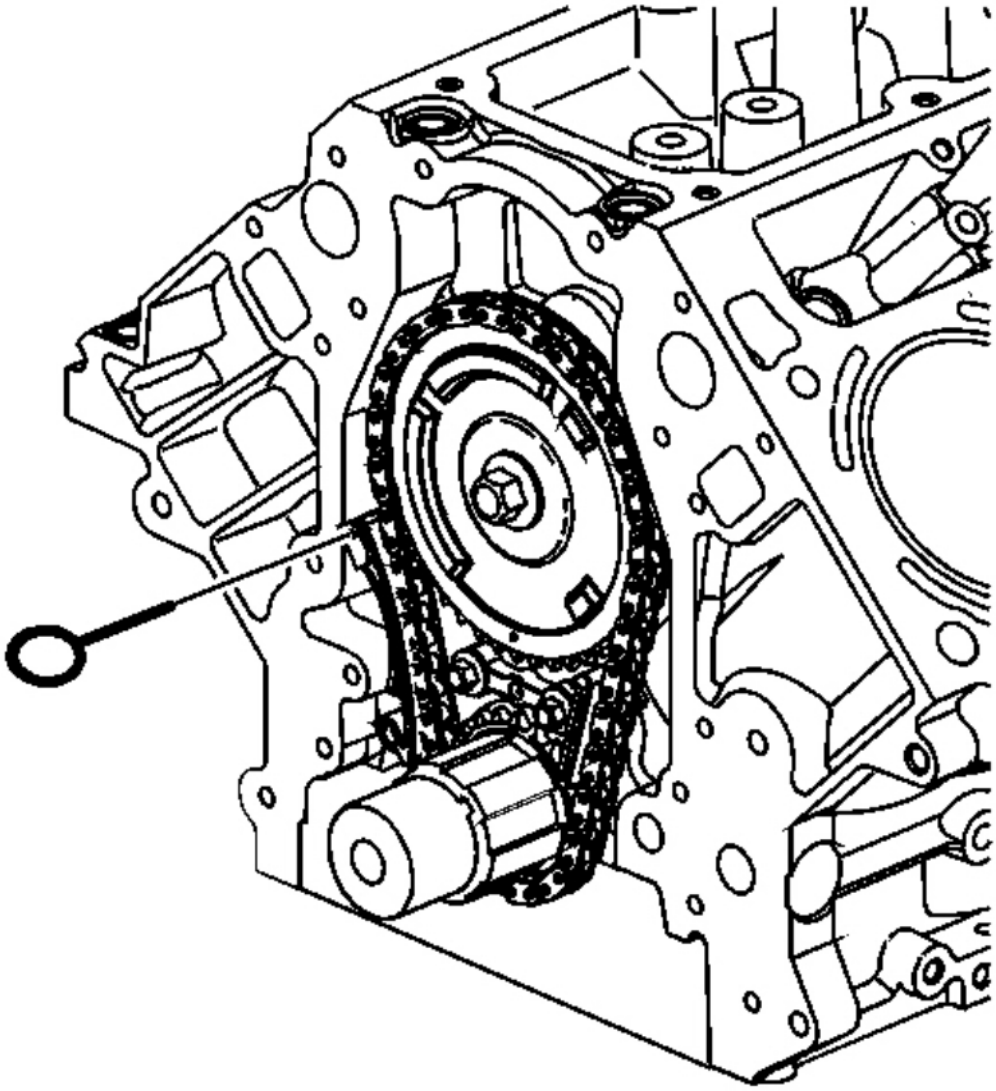

Fig. 15: Locating Tensioner Pin
Courtesy of GENERAL MOTORS CORP.

10. Remove the **EN 46330** . See **Special Tools** .

cardiagn.com

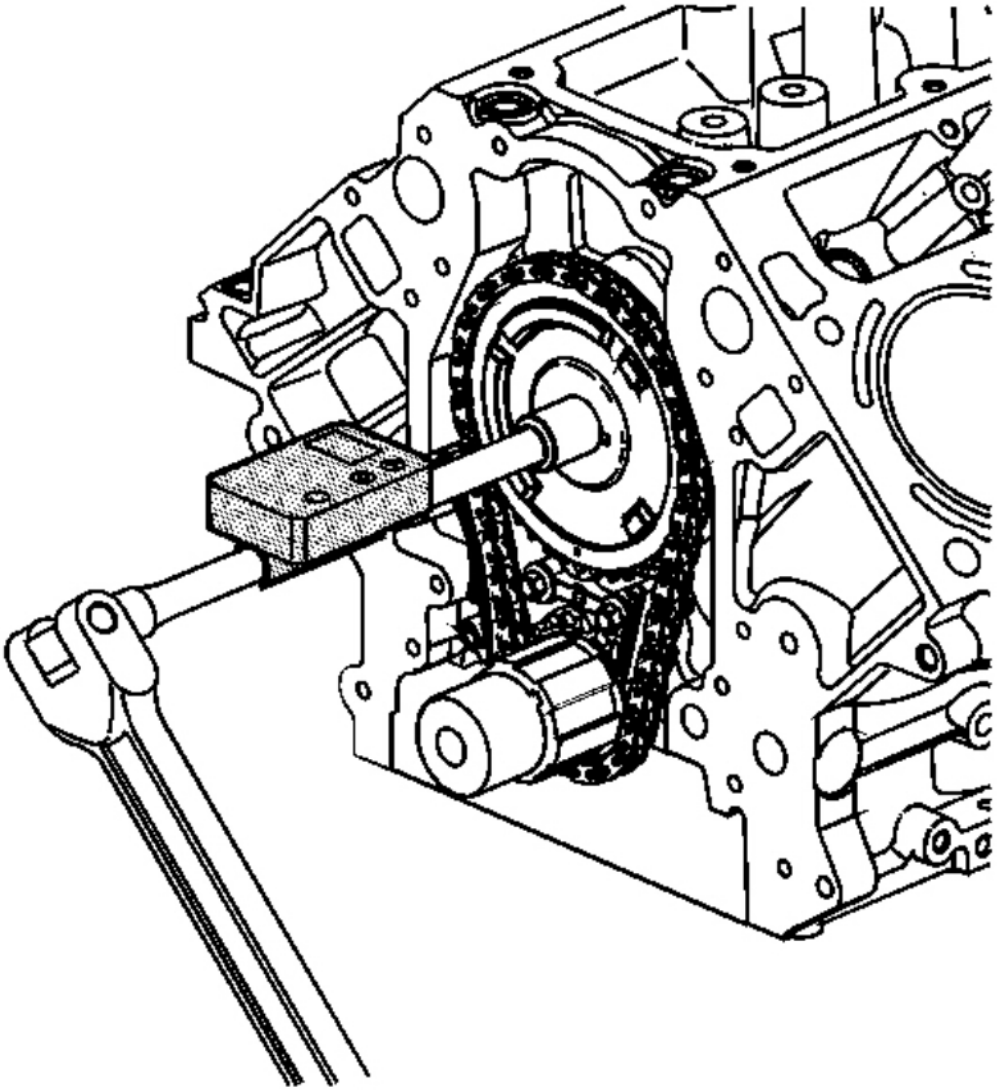

Fig. 16: Tightening Camshaft Sprocket Bolt
Courtesy of GENERAL MOTORS CORP.

11. Tighten the camshaft sprocket bolt

Tighten:

1. Tighten the bolt a first pass to 90 N.m (66 lb ft).
2. Tighten the bolt a final pass an additional 40 degrees using **J 45059** . See **Special Tools** .

cardiagn.com

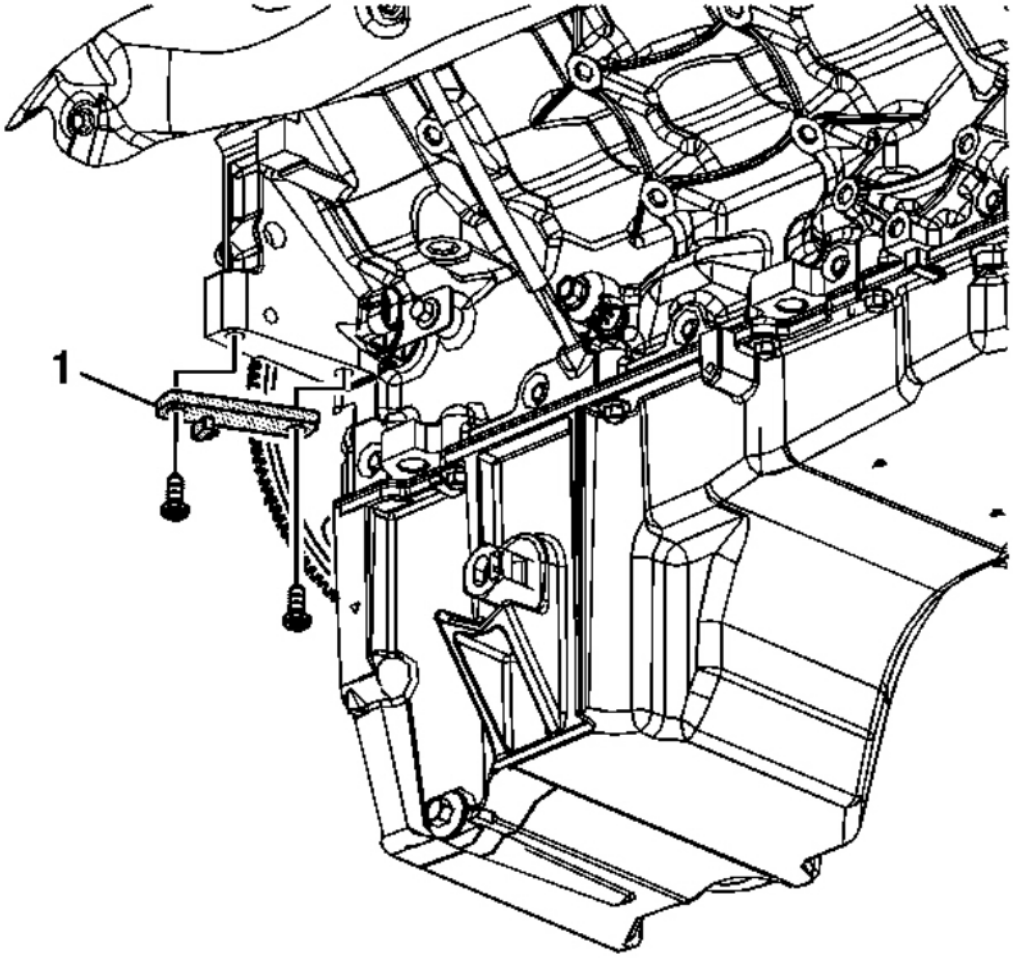

Fig. 17: View Of Special Tool & Bolts
Courtesy of GENERAL MOTORS CORP.

12. Remove the **J 42386-A** (1) and bolts. See **Special Tools** .
13. Install the starter motor. Refer to **Starter Motor Replacement** .
14. Install the oil pump. Refer to **Oil Pump, Screen and Crankshaft Oil Deflector Replacement (RPOs LC9/LMG/LY2/LY5)** or **Oil Pump, Screen and Crankshaft Oil Deflector Replacement (RPOs LY6/L76/L92)** .

TIMING CHAIN AND SPROCKETS REPLACEMENT (LY6/L76/L92)

Tools Required

cardiagn.com

- **EN 46330** Timing Chain Tensioner Retaining Pin. See **Special Tools** .
- **J 8433** Puller Bar. See **Special Tools** .
- **J 41478** Crankshaft Front Oil Seal Installer. See **Special Tools** .
- **J 41558** Crankshaft Sprocket Remover. See **Special Tools** .
- **J 41665** Crankshaft Balancer and Sprocket Installer. See **Special Tools** .
- **J 41816-2** Crankshaft End Protector. See **Special Tools** .
- **J 42386-A** Flywheel Holding Tool. See **Special Tools** .
- **J 45059** Angle Meter. See **Special Tools** .

REMOVAL PROCEDURE

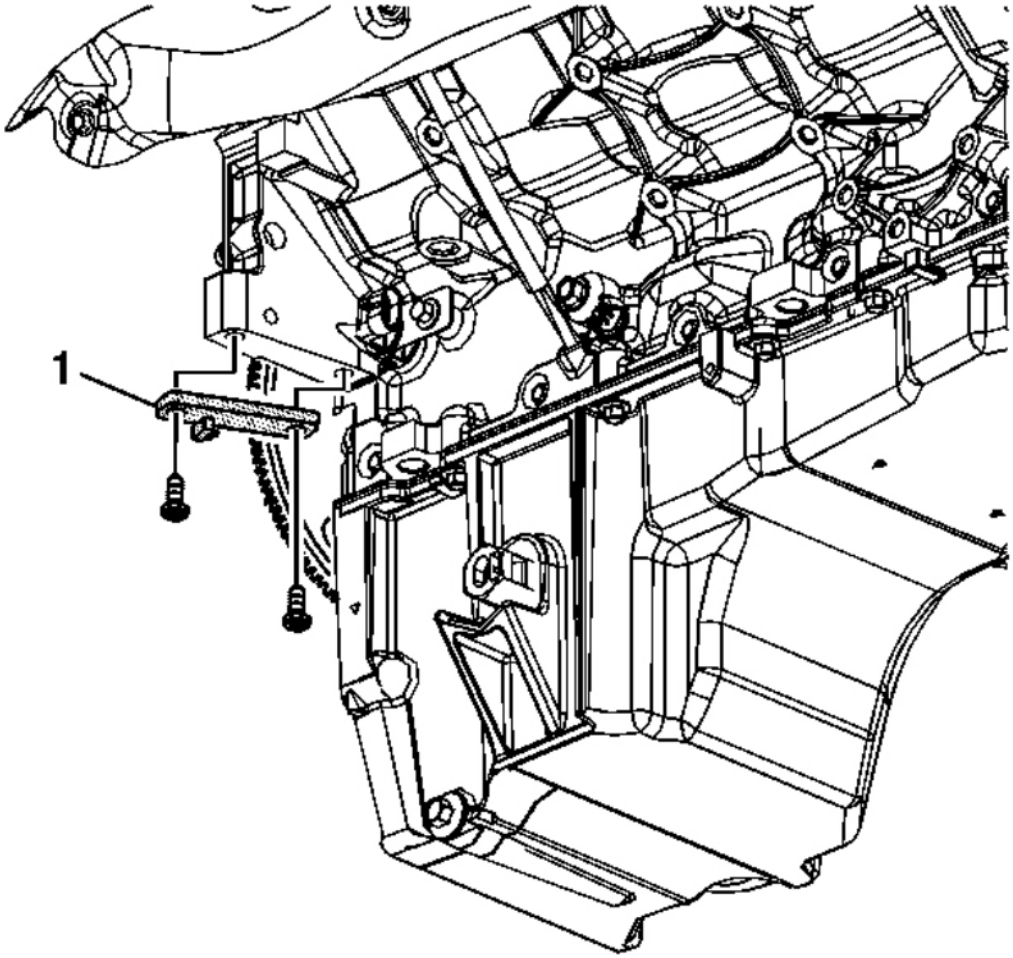

cardiagn.com

Fig. 18: View Of Special Tool & Bolts
Courtesy of GENERAL MOTORS CORP.

1. Remove the oil pump. Refer to **Oil Pump, Screen and Crankshaft Oil Deflector Replacement (RPOs LC9/LMG/LY2/LY5)** or **Oil Pump, Screen and Crankshaft Oil Deflector Replacement (RPOs LY6/L76/L92)** .
2. Remove the starter motor. Refer to **Starter Motor Replacement** .

NOTE: **Refer to Fastener Notice .**

IMPORTANT: Ensure that the teeth of the J 42386-A mesh with the teeth of the engine flywheel. See Special Tools .

3. Install the **J 42386-A** (1) and bolts. See **Special Tools** . Use one M10-1.5 x 120 mm and one M10-1.5 x 45 mm bolt for proper tool operation.

   Tighten: Tighten the **J 42386-A** bolts to 50 N. See **Special Tools** .m (37 lb ft).

cardiagn.com

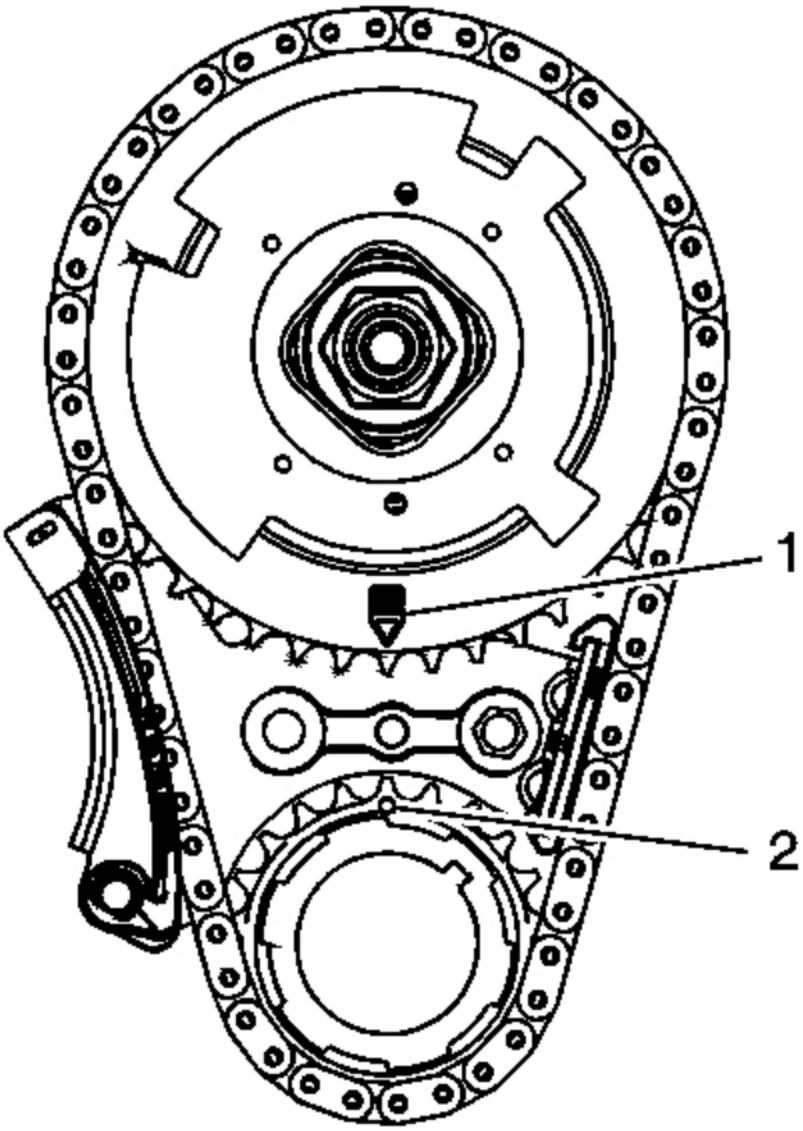

Fig. 19: View Of CMP Actuator Alignment Mark & Crankshaft Sprocket Alignment Mark
Courtesy of GENERAL MOTORS CORP.

4. Rotate the crankshaft sprocket until the camshaft position (CMP) actuator alignment mark (1) and the crankshaft sprocket alignment mark (2) are aligned.

cardiagn.com

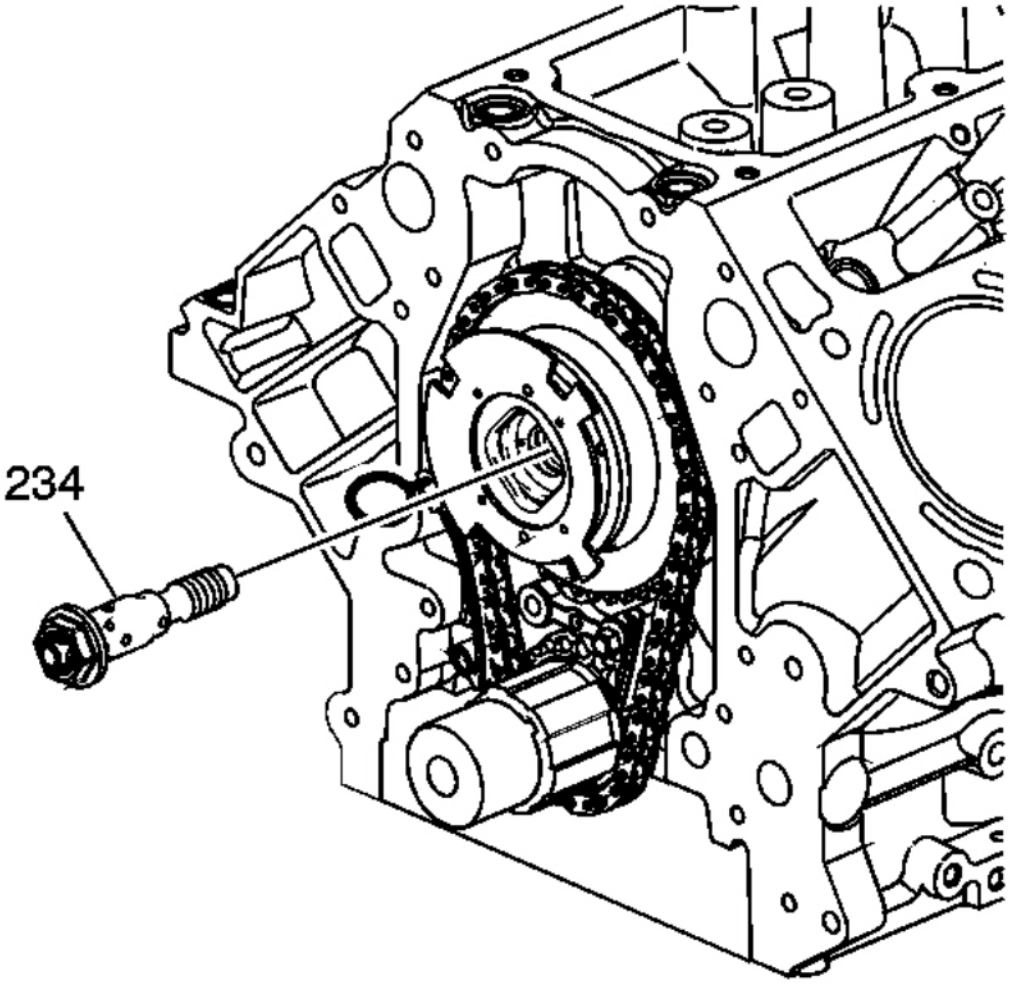

Fig. 20: View Of CMP Actuator Solenoid Valve
Courtesy of GENERAL MOTORS CORP.

5. Remove and discard the CMP actuator solenoid valve (234).

cardiagn.com

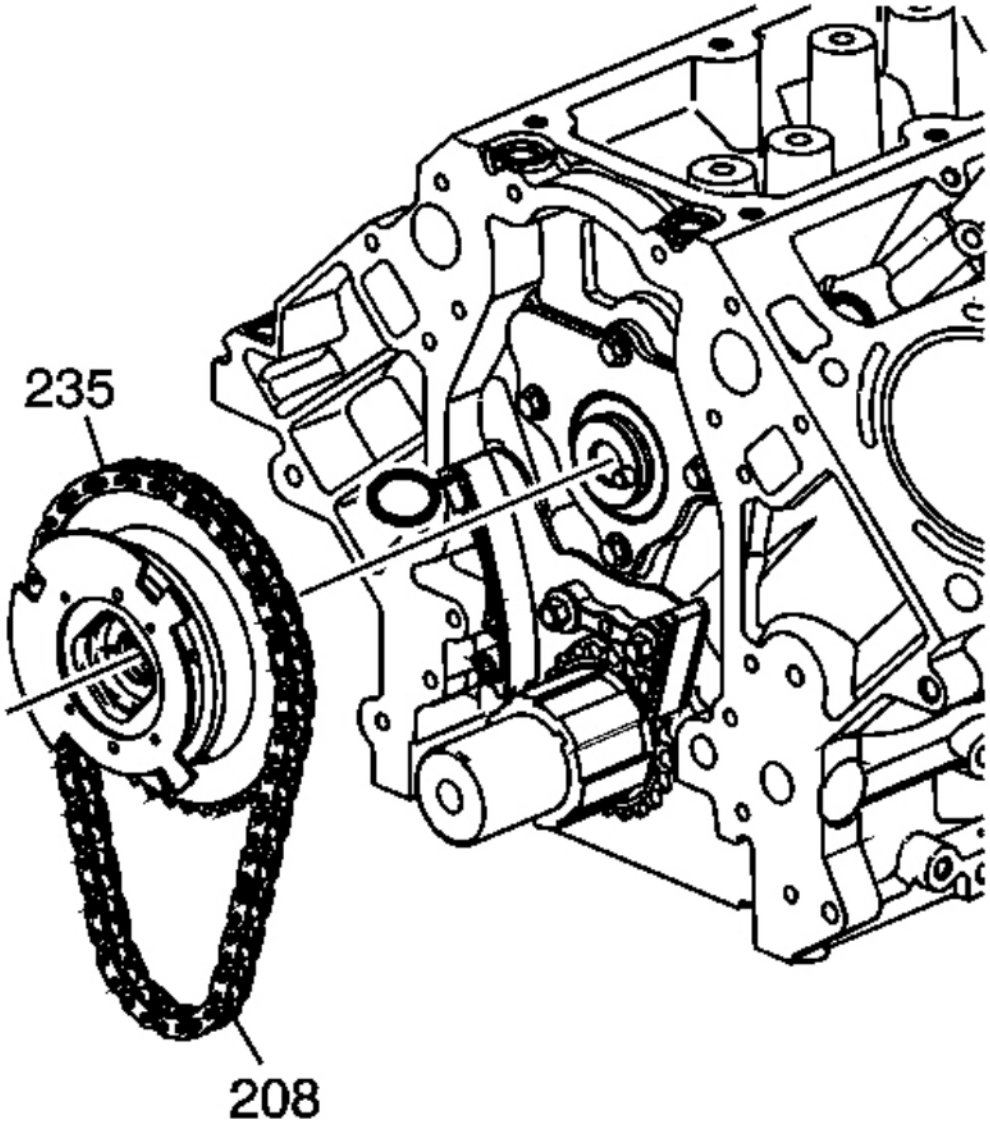

Fig. 21: View Of CMP Actuator & Timing Chain
Courtesy of GENERAL MOTORS CORP.

NOTE: **Do not turn the crankshaft assembly after the timing chain has been removed in order to prevent damage to the piston assemblies or the valves.**

cardiagn.com

6. Remove the CMP actuator (235) and timing chain (208).

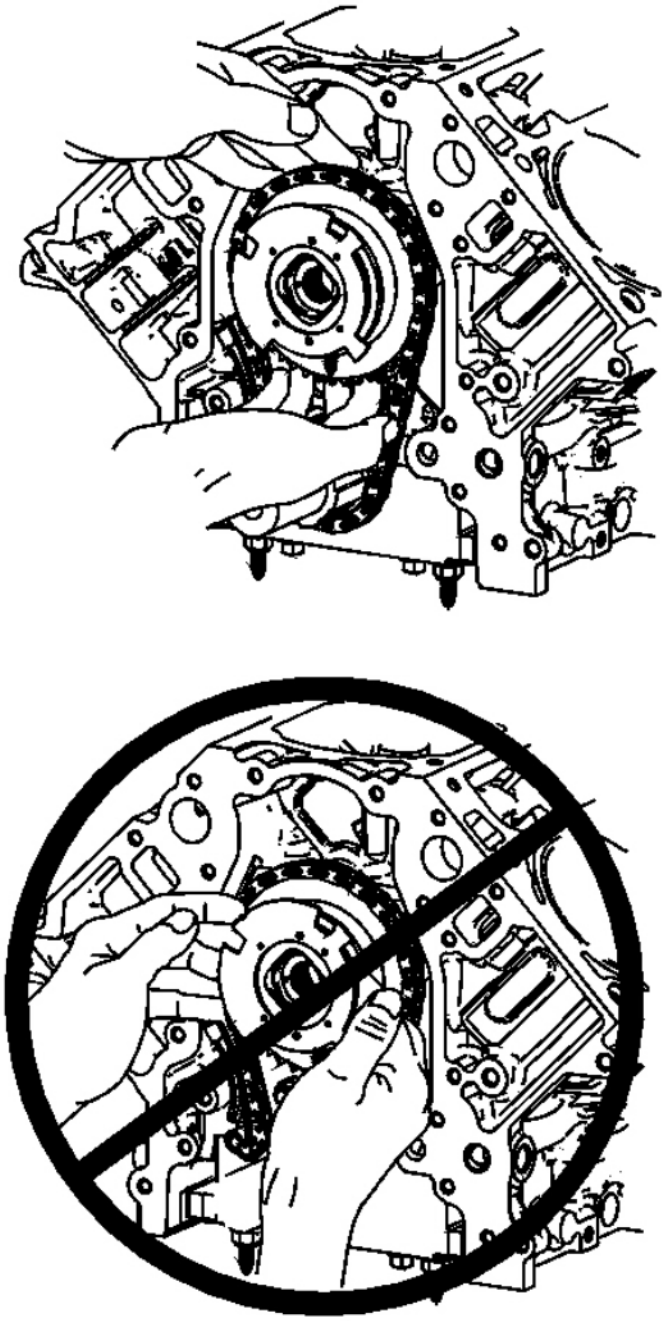

Fig. 22: View Of Proper CMP Actuator Removal
Courtesy of GENERAL MOTORS CORP.

cardiagn.com

CAUTION: Do not push or pull on the reluctor wheel of the camshaft position (CMP) actuator during removal or installation. The reluctor wheel is retained to the front of the CMP actuator by 3 roll pins. Pushing or pulling on the wheel may dislodge the wheel from the front of the actuator. The actuator return spring is under tension and may rotate the dislodged reluctor wheel, causing personal injury.

7. Loosen and separate the CMP actuator and timing chain from the camshaft. Position your fingers behind the actuator sprocket and pull the actuator away from the front of the camshaft. Never pull on the reluctor wheel when attempting to remove the actuator.

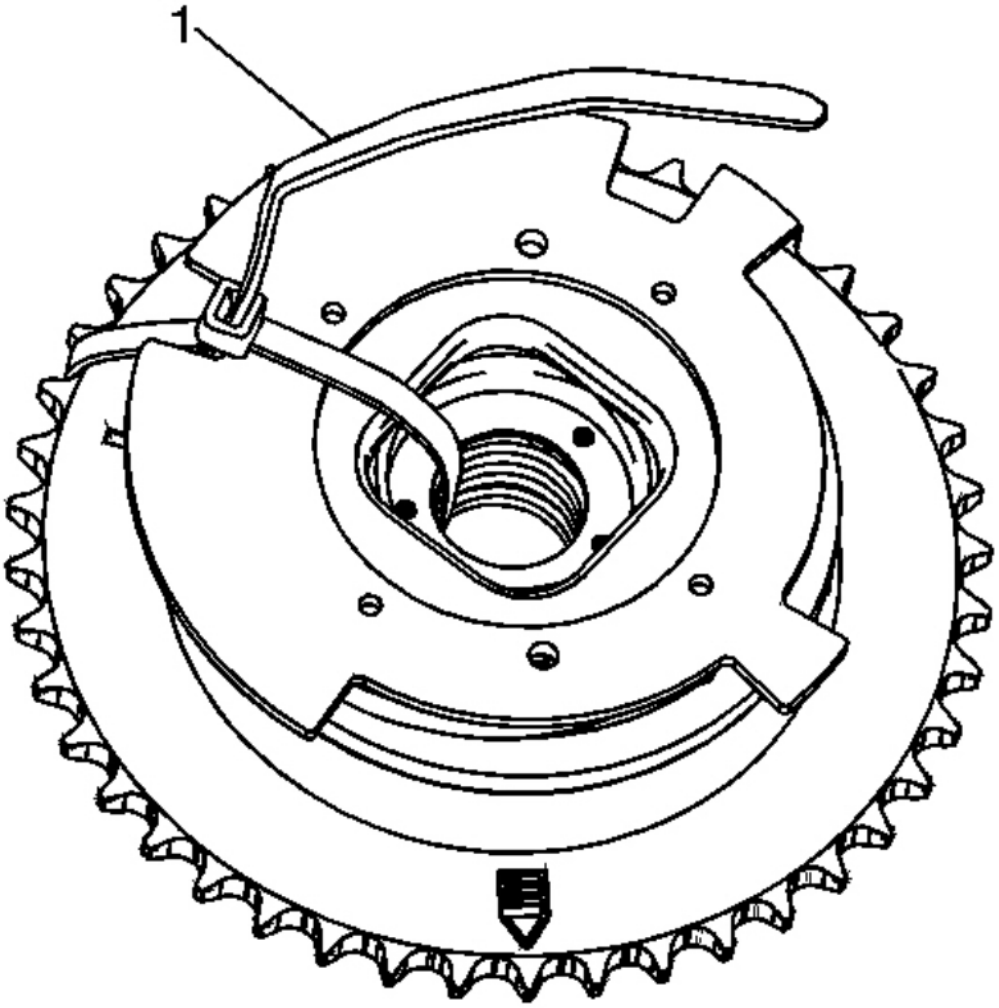

cardiagn.com

Fig. 23: View Of Tie Strap Through Center Of Actuator
Courtesy of GENERAL MOTORS CORP.

8. Insert and secure a tie strap (1) through the center of the actuator and over the reluctor wheel.

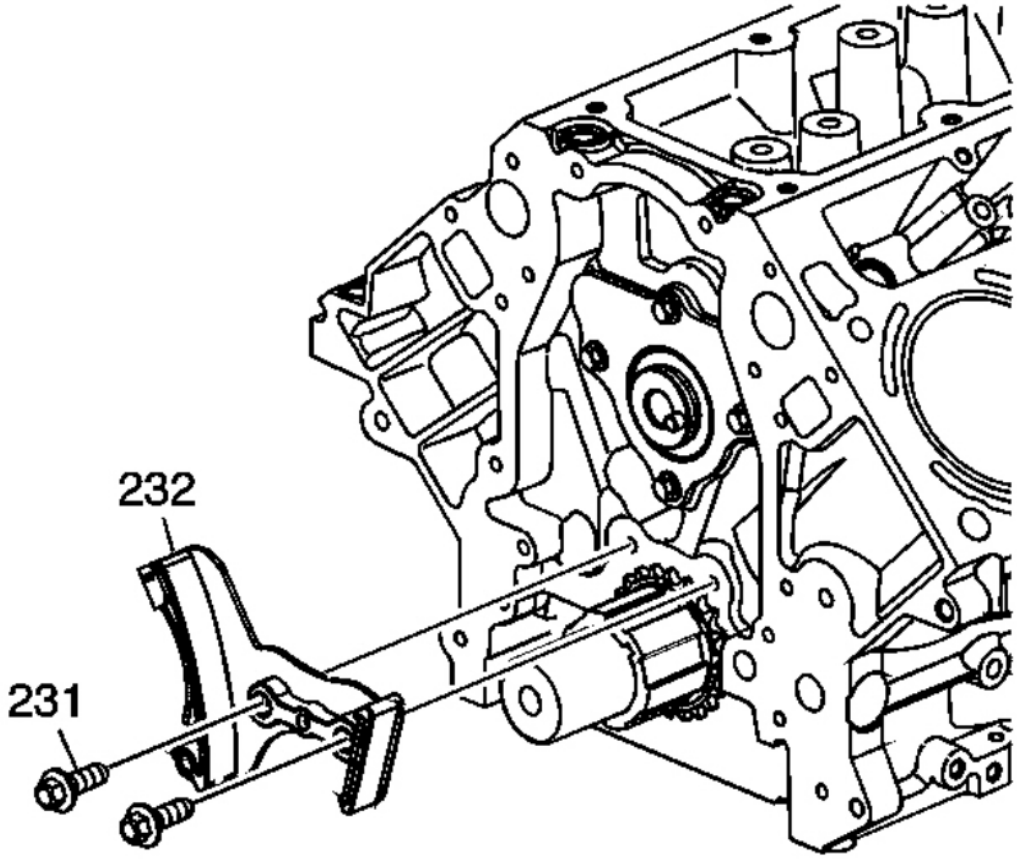

Fig. 24: View Of Timing Chain Tensioner & Bolts
Courtesy of GENERAL MOTORS CORP.

9. Remove the timing chain tension bolts (231) and tensioner (232).

cardiagn.com

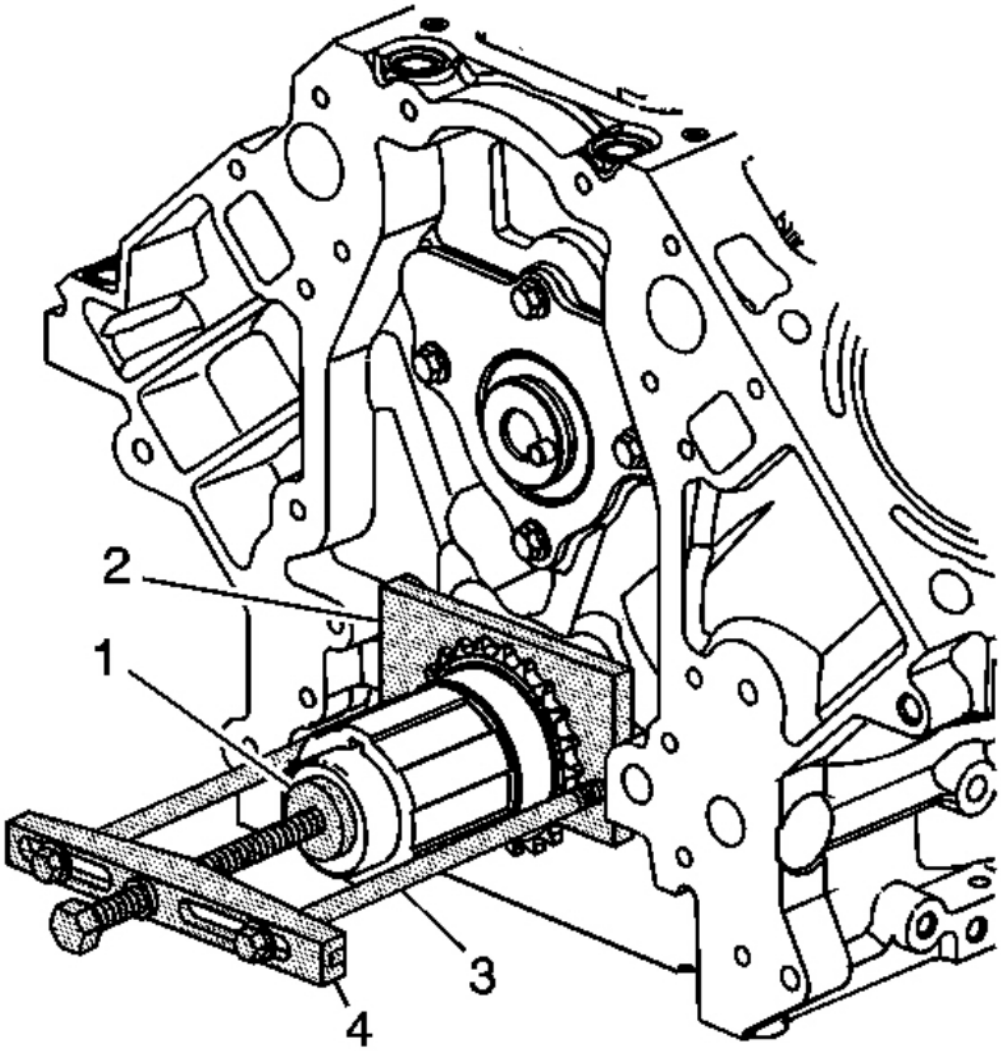

Fig. 25: View Of Crankshaft Sprocket Special Tools
Courtesy of GENERAL MOTORS CORP.

10. Using the **J 41816-2** (1), the **J 41558** (2), bolts (3) and the **J 8433** (4) in order to remove the crankshaft sprocket. See **Special Tools** .

cardiagn.com

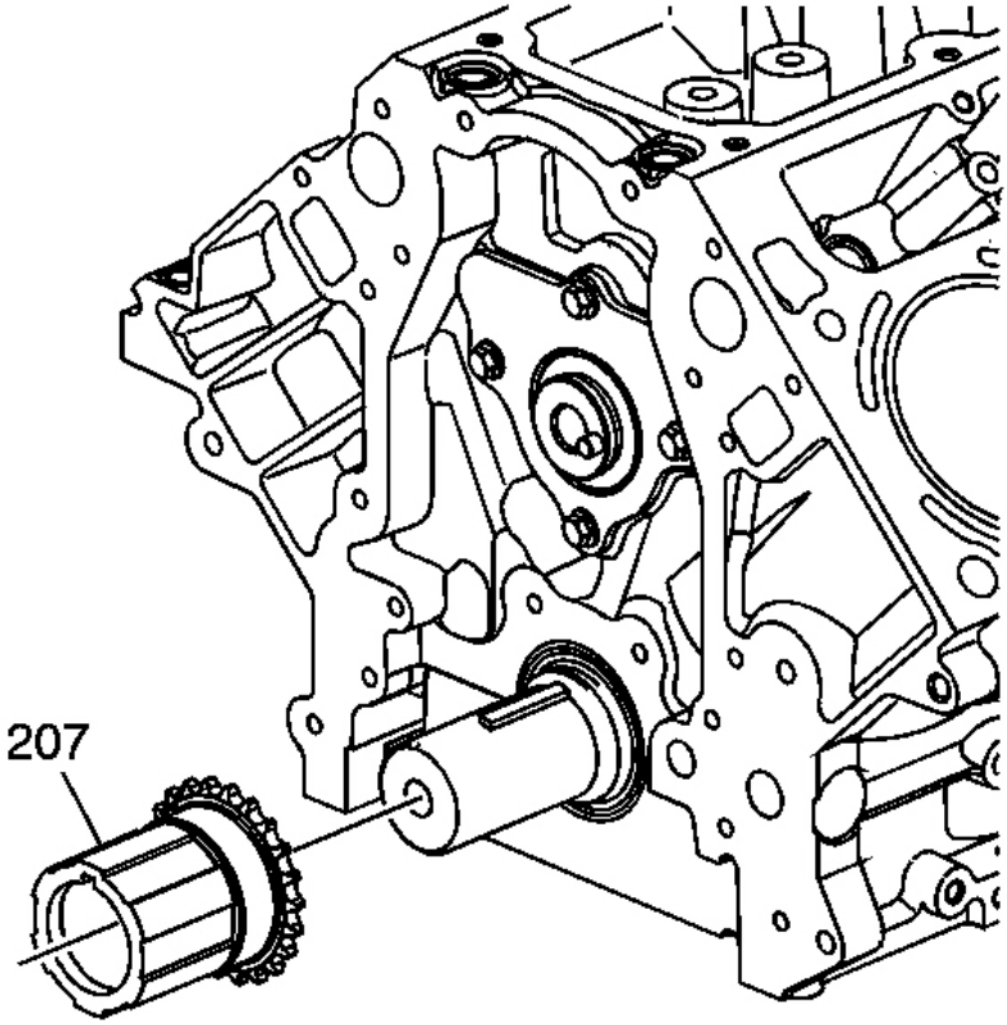

Fig. 26: View Of Crankshaft Sprocket
Courtesy of GENERAL MOTORS CORP.

11. Remove the crankshaft sprocket (207).

cardiagn.com

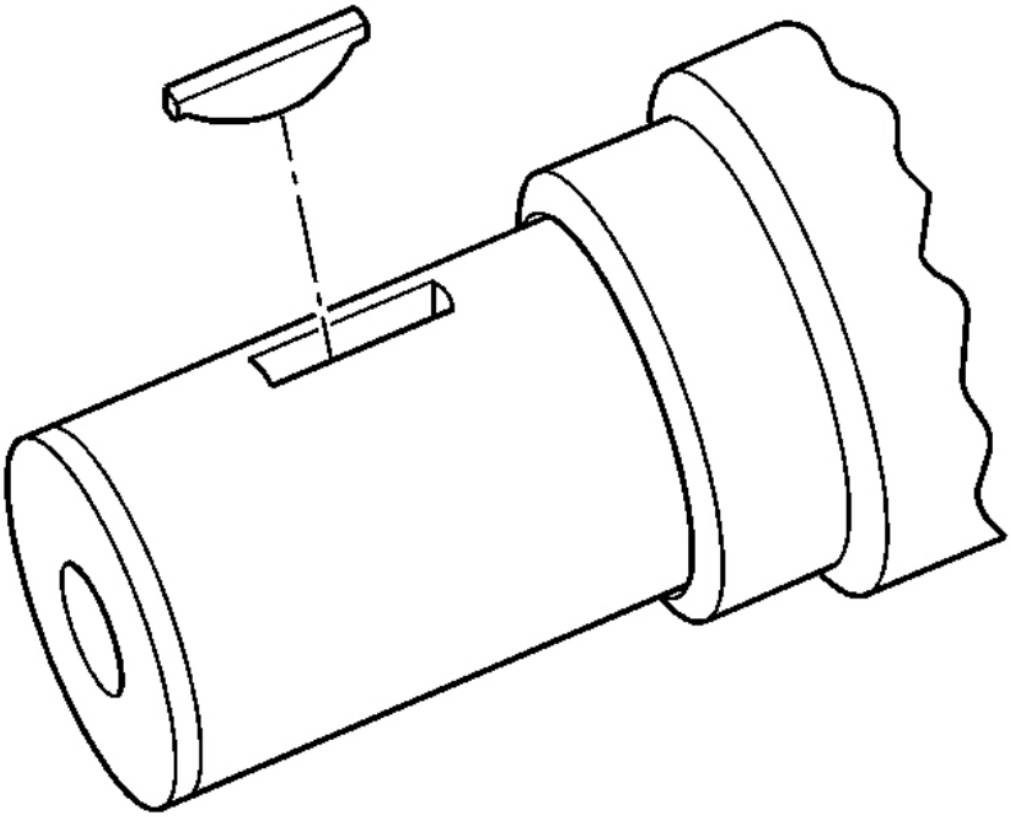

Fig. 27: View Of Crankshaft Key & Keyway
Courtesy of GENERAL MOTORS CORP.

12. Remove the crankshaft sprocket key, if required.

INSTALLATION PROCEDURE

cardiagn.com

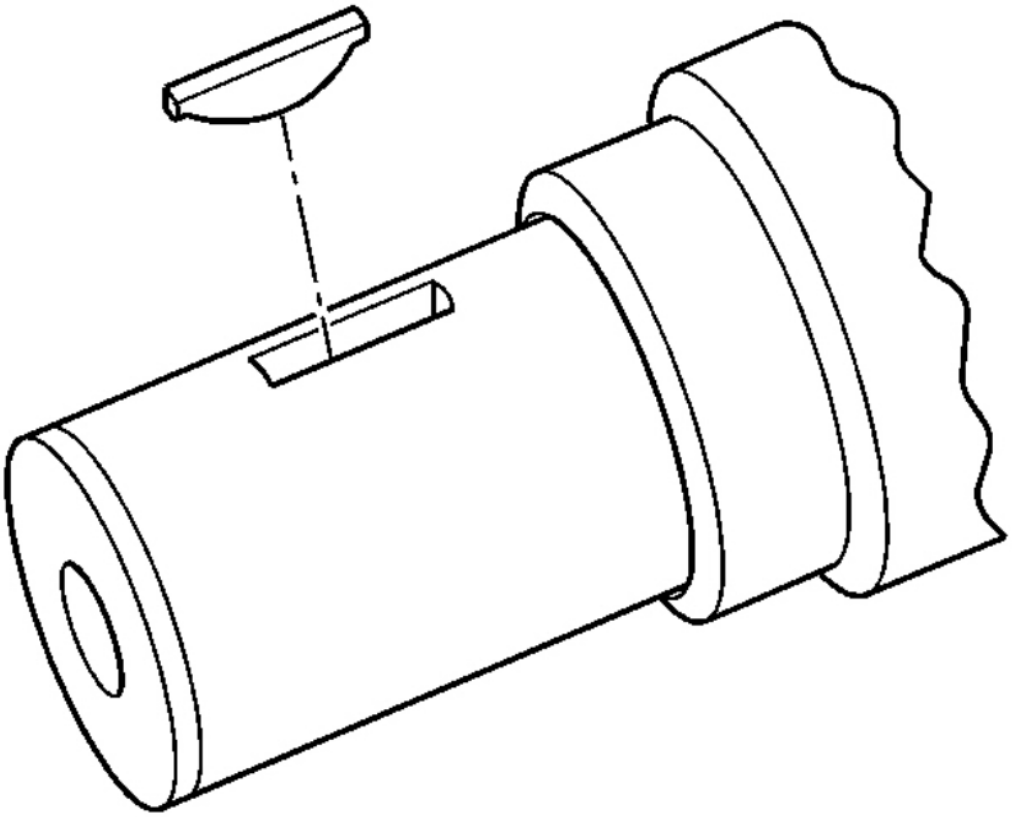

Fig. 28: View Of Crankshaft Key & Keyway
Courtesy of GENERAL MOTORS CORP.

1. Install the key into the crankshaft keyway, if previously removed.

cardiagn.com

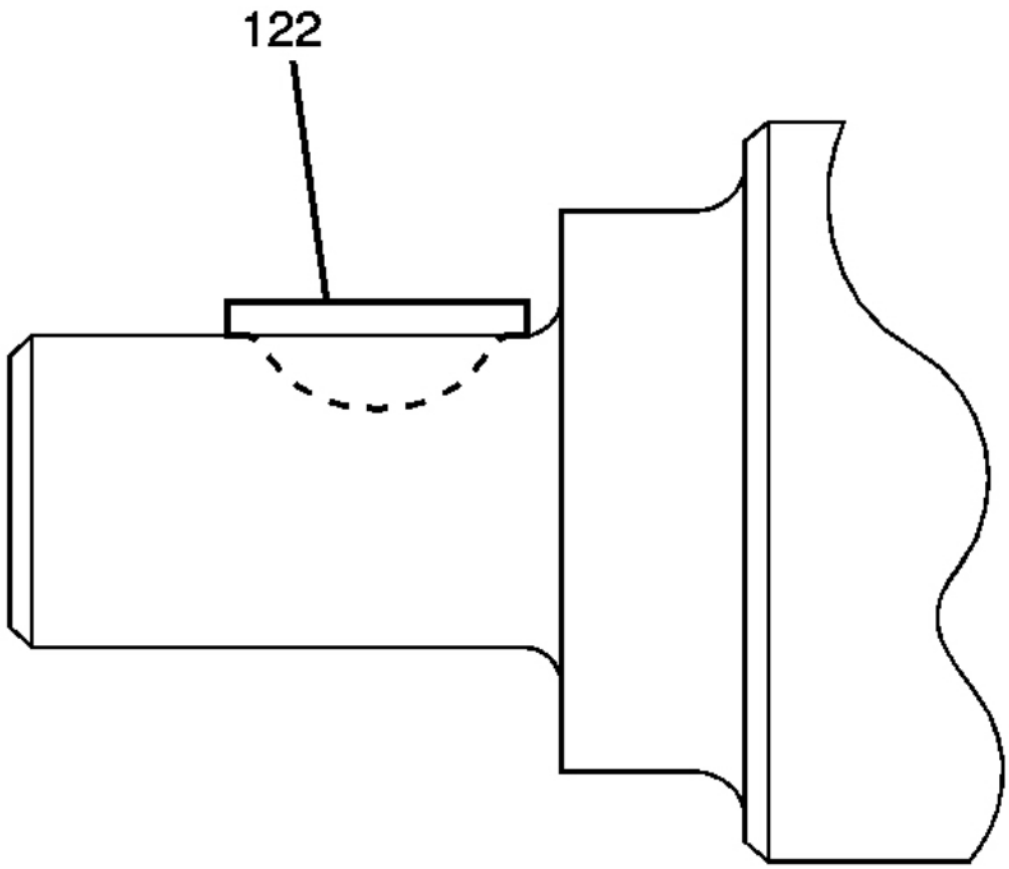

Fig. 29: View Of Installed Crankshaft Key
Courtesy of GENERAL MOTORS CORP.

2. Tap the key (122) into the keyway until both ends of the key bottom onto the crankshaft.

cardiagn.com

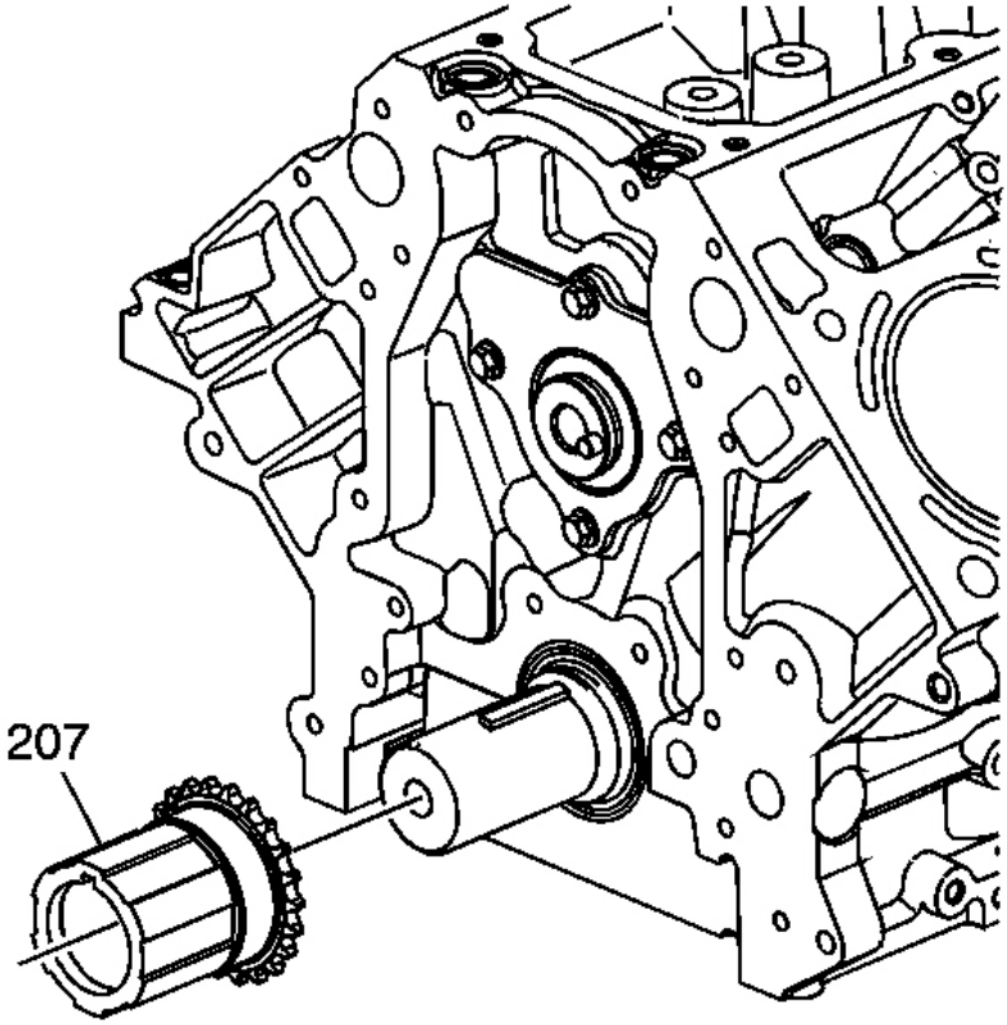

Fig. 30: View Of Crankshaft Sprocket
Courtesy of GENERAL MOTORS CORP.

3. Install the crankshaft sprocket (207) onto the front of the crankshaft. Align the crankshaft key with the crankshaft sprocket keyway.

cardiagn.com

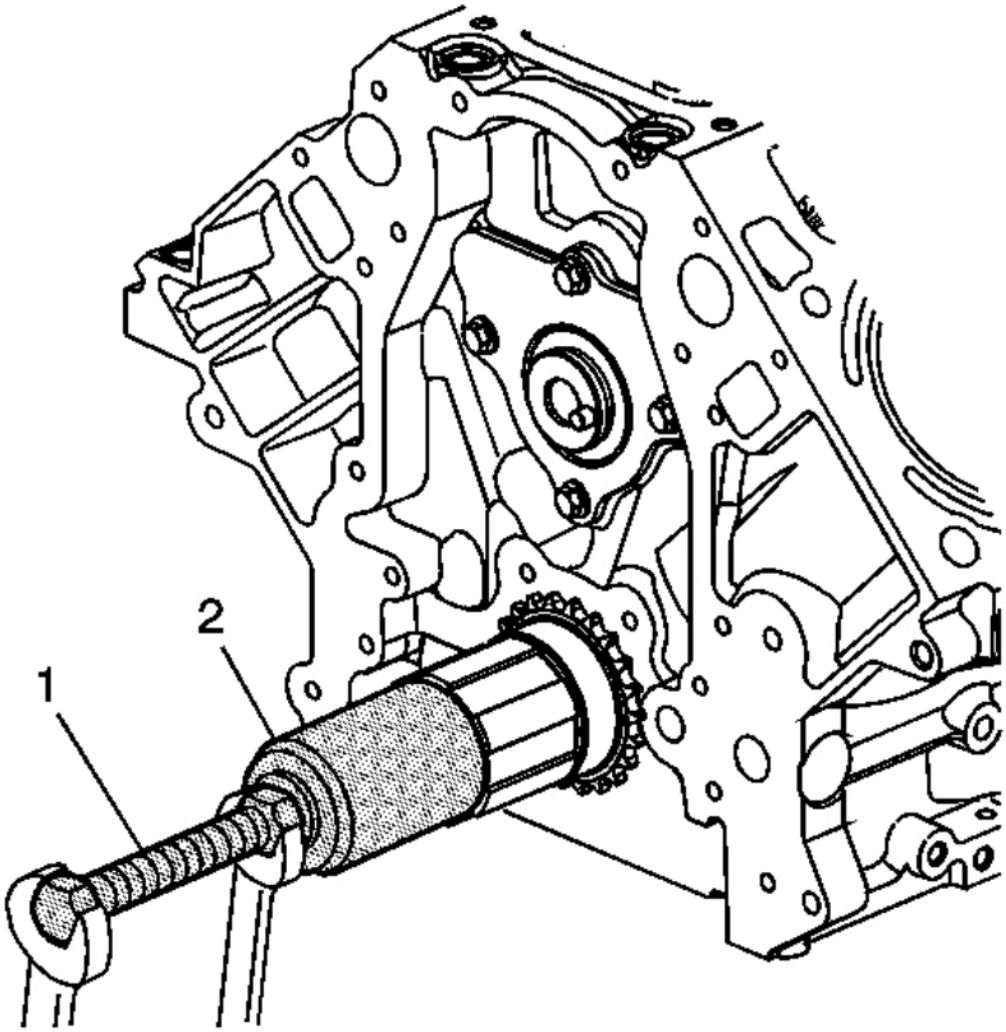

Fig. 31: View Of Crankshaft Sprocket & Installer
Courtesy of GENERAL MOTORS CORP.

4. Use the **J 41478** (1) and the **J 41665** (2) in order to install the crankshaft sprocket. See **Special Tools** . Install the sprocket onto the crankshaft until fully seated against the crankshaft flange.

cardiagn.com

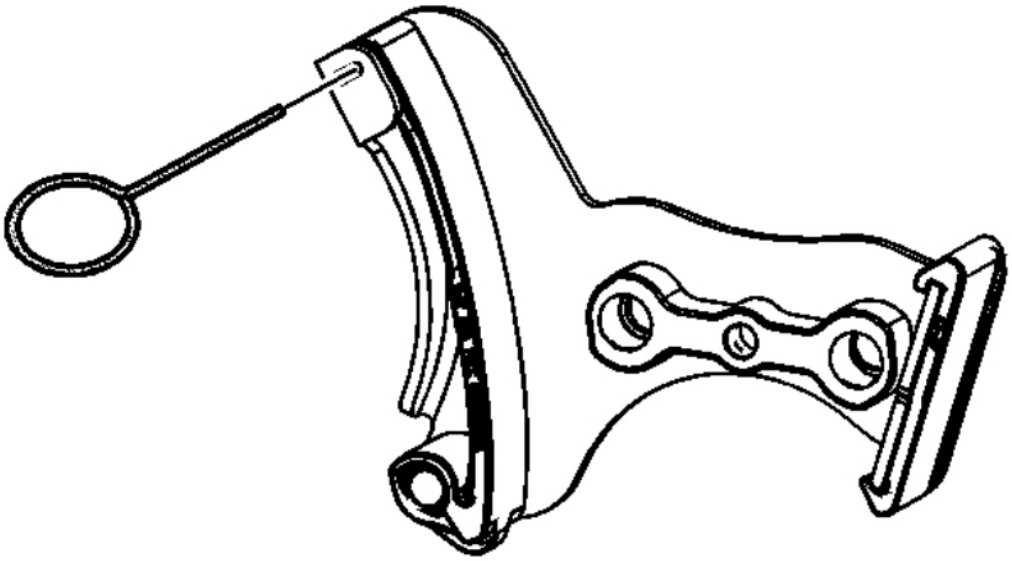

Fig. 32: Installing EN 46330 In Compressed Tensioner
Courtesy of GENERAL MOTORS CORP.

5. Compress the timing chain tensioner guide and install the **EN 46330** . See **Special Tools** .

cardiagn.com

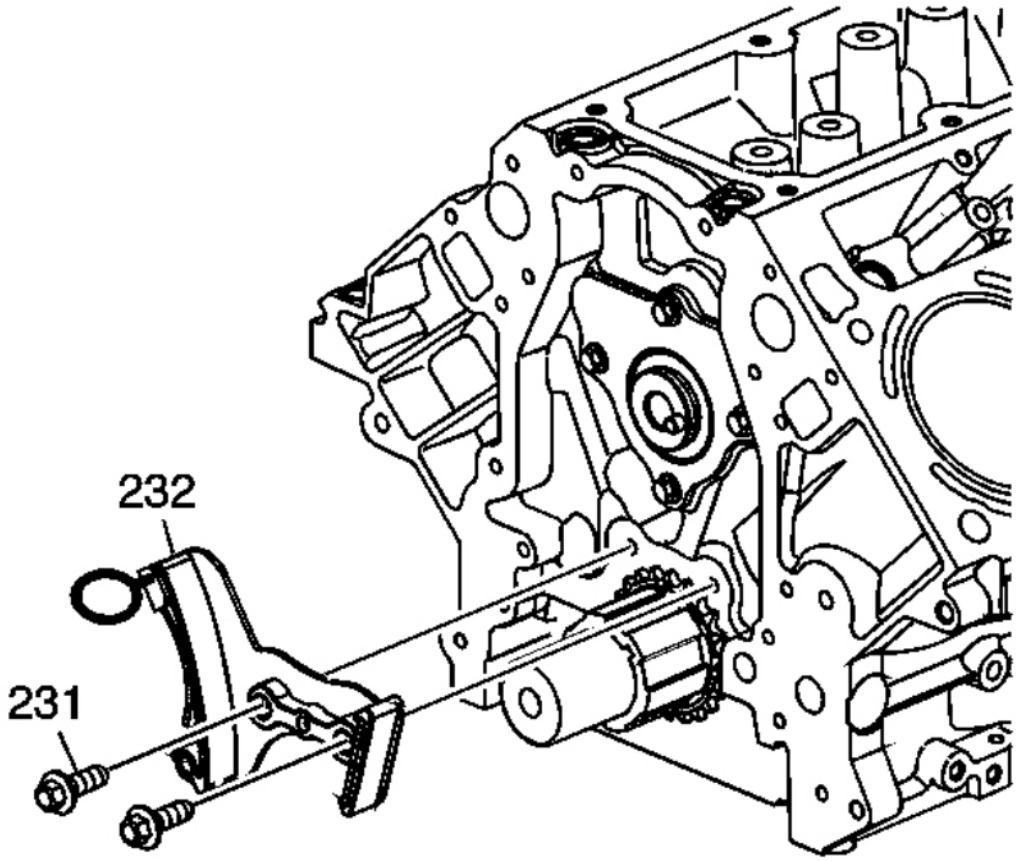

Fig. 33: View Of Timing Chain Tensioner
Courtesy of GENERAL MOTORS CORP.

6. Install the timing chain tensioner (232) and bolts (231).

   Tighten: Tighten the bolts to 25 N.m (18 lb ft).

cardiagn.com

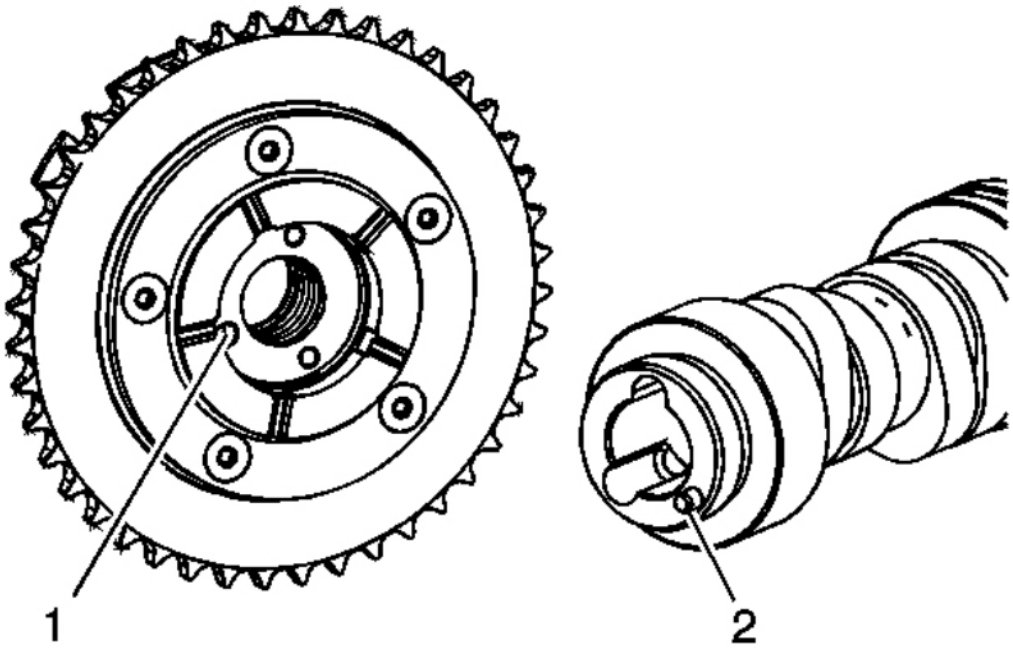

Fig. 34: Identifying Alignment Hole & Locating Pin
Courtesy of GENERAL MOTORS CORP.

IMPORTANT:

- **Properly locate the CMP actuator onto the locating pin of the camshaft.**
- **The sprocket teeth and timing chain teeth must mesh.**
- **The camshaft and the crankshaft sprocket alignment MUST be aligned properly.**
- **Do not use the CMP solenoid valve again. Install a NEW CMP valve during assembly.**

7. Identify the alignment hole (1) in the rear face of the CMP actuator and the locating pin (2) on the front face of he camshaft.

cardiagn.com

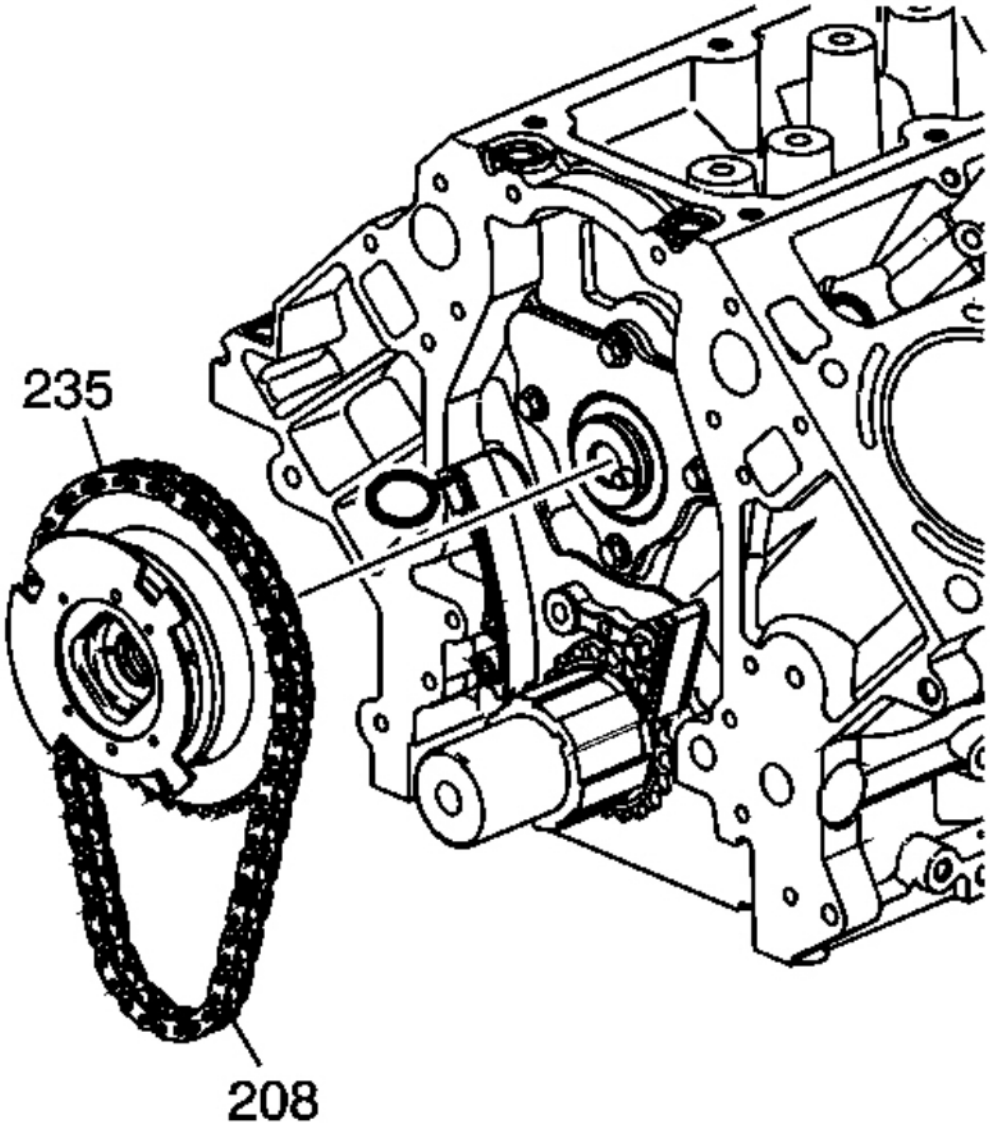

Fig. 35: View Of CMP Actuator & Timing Chain
Courtesy of GENERAL MOTORS CORP.

8. Align the CMP actuator so the timing mark is in the 6 o'clock position.
9. Install the CMP actuator (235) and timing chain (208). Align the hole in the face of the CMP actuator with the locating pin on the front face of the camshaft.

cardiagn.com

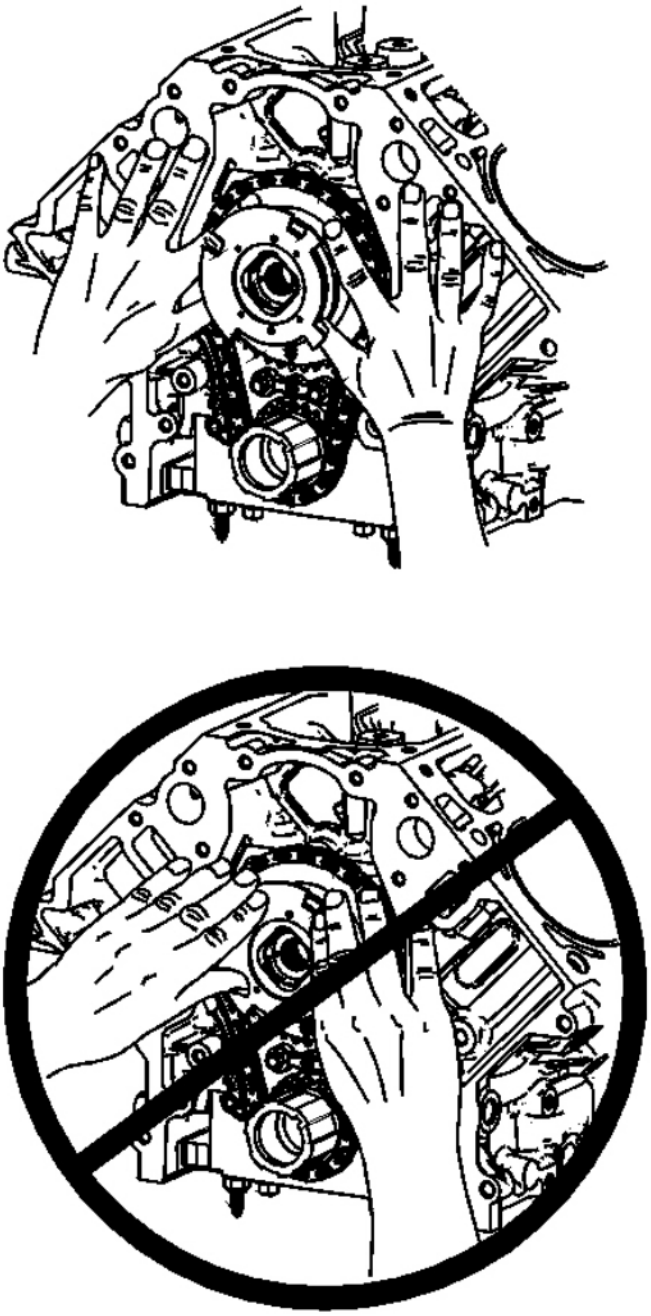

Fig. 36: Proper Installation Of CMP Actuator
Courtesy of GENERAL MOTORS CORP.

CAUTION: Do not push or pull on the reluctor wheel of the camshaft position

cardiagn.com

(CMP) actuator during removal or installation. The reluctor wheel is retained to the front of the CMP actuator by 3 roll pins. Pushing or pulling on the wheel may dislodge the wheel from the front of the actuator. The actuator return spring is under tension and may rotate the dislodged reluctor wheel, causing personal injury.

10. Use care to install the actuator completely onto the front of the camshaft. Position your fingers onto the face of the actuator sprocket and push the actuator onto the front of the camshaft. Never push on the reluctor wheel when attempting to install the actuator.

cardiagn.com

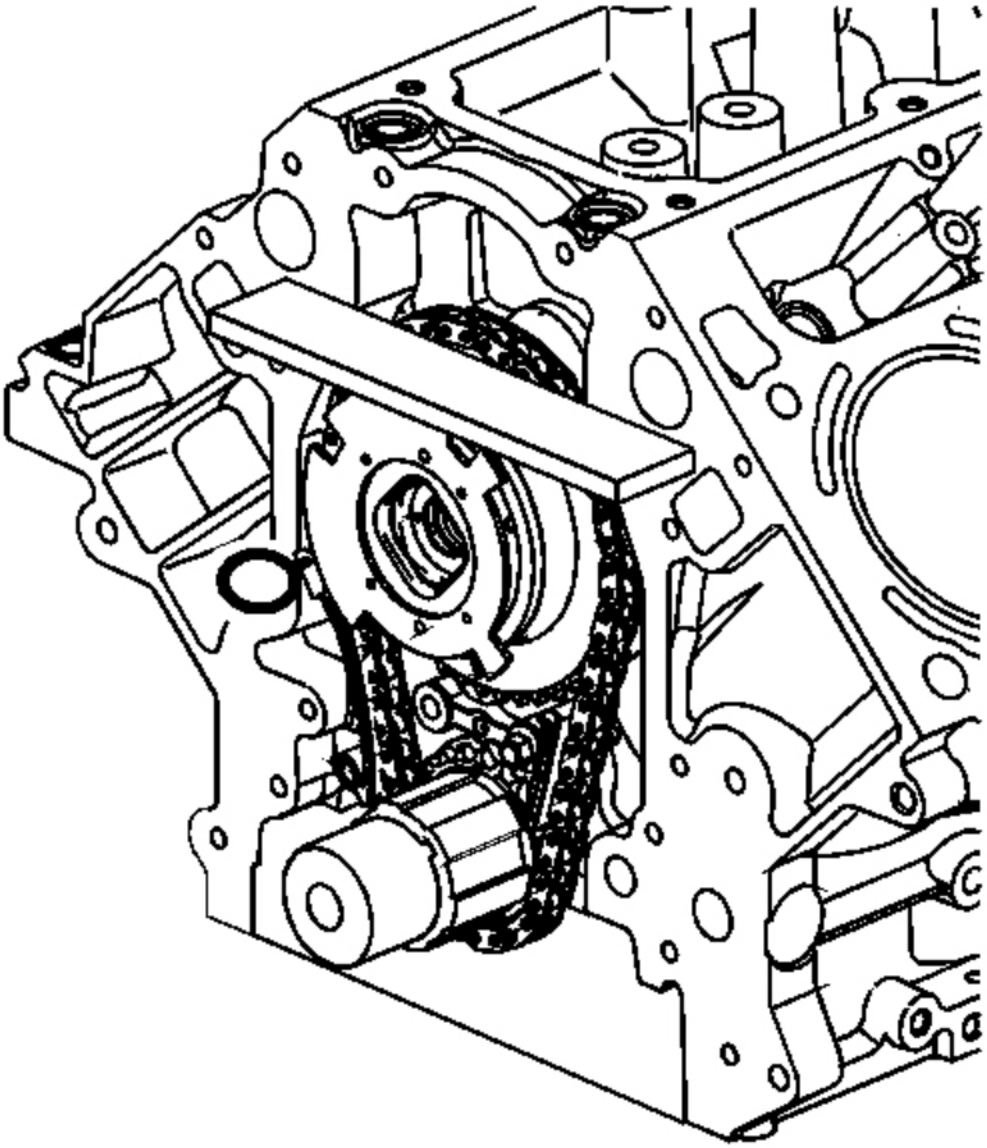

Fig. 37: Inspecting For Proper Installation Of CMP Actuator & Timing Chain
Courtesy of GENERAL MOTORS CORP.

11. Place a straight edge across the front face of the engine block and inspect for proper installation of the CMP actuator and timing chain. With the CMP actuator properly and completely installed onto the front of the camshaft, the timing chain will not protrude beyond the front face of the engine block.

cardiagn.com

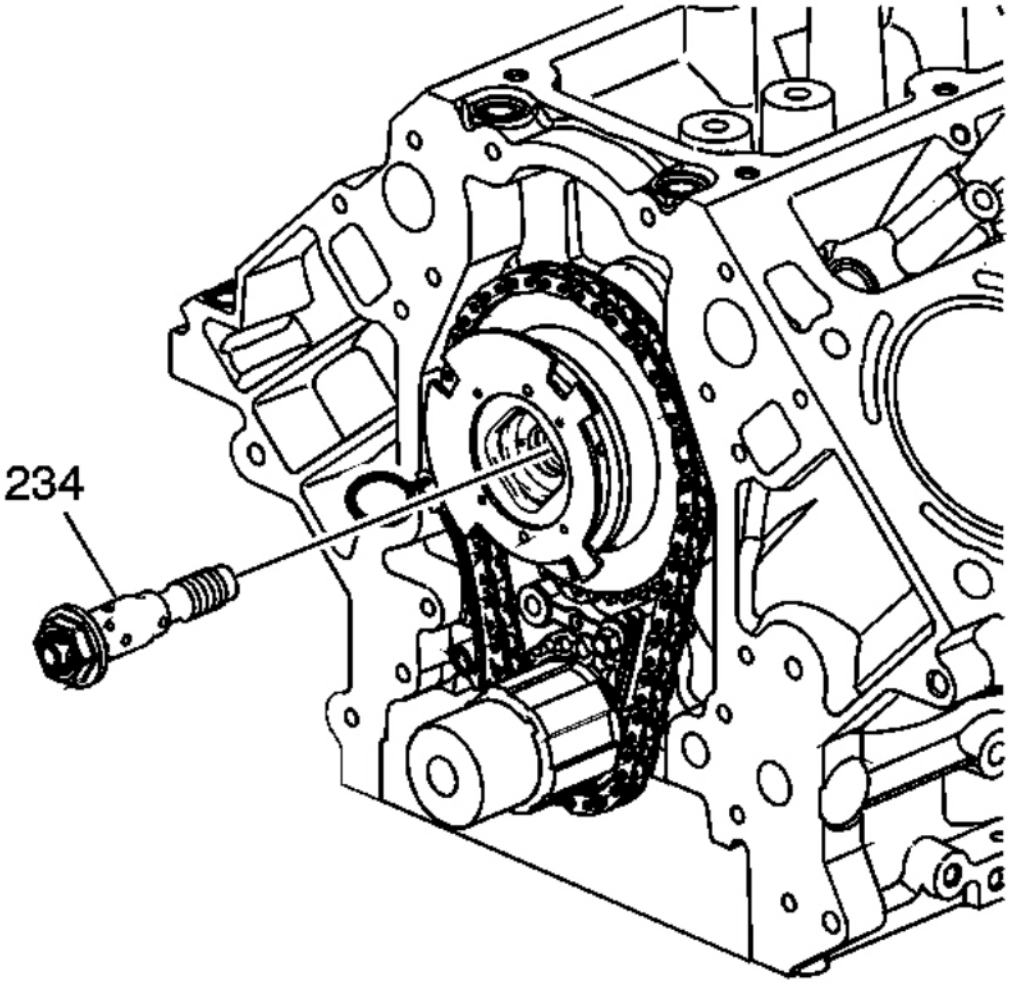

Fig. 38: View Of CMP Actuator Solenoid Valve
Courtesy of GENERAL MOTORS CORP.

12. Install a NEW CMP actuator valve (234). With the CMP actuator properly positioned onto the camshaft, the CMP actuator solenoid valve can be threaded completely into the camshaft using light hand pressure. Tighten by hand until snug.

cardiagn.com

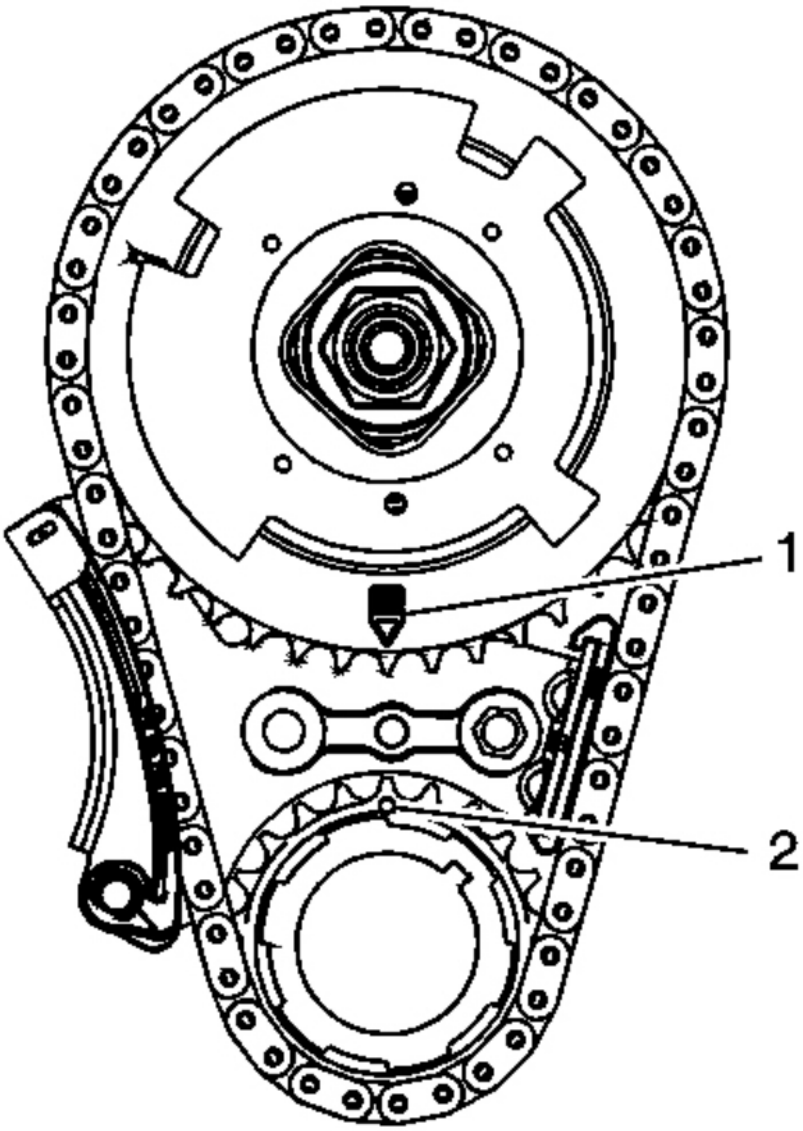

Fig. 39: View Of CMP Actuator Alignment Mark & Crankshaft Sprocket Alignment Mark
Courtesy of GENERAL MOTORS CORP.

13. Inspect the sprockets for proper alignment. The mark on the CMP (1) actuator sprocket should be located in the 6 o'clock position and the mark on the crankshaft sprocket (2) should be located in the 12 o'clock position.

cardiagn.com

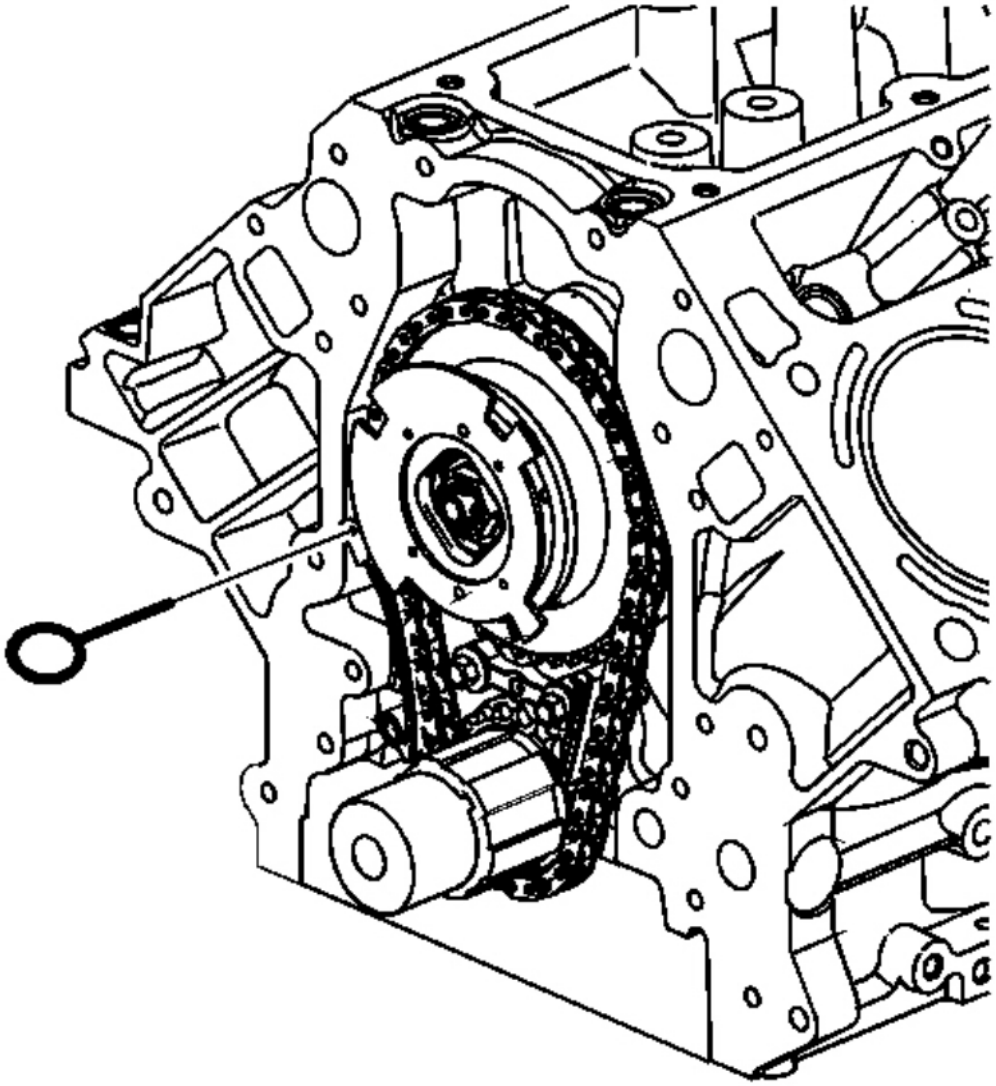

Fig. 40: View Of Special Tool EN 46330
Courtesy of GENERAL MOTORS CORP.

14. Remove the **EN 46330** . See **Special Tools** .

cardiagn.com

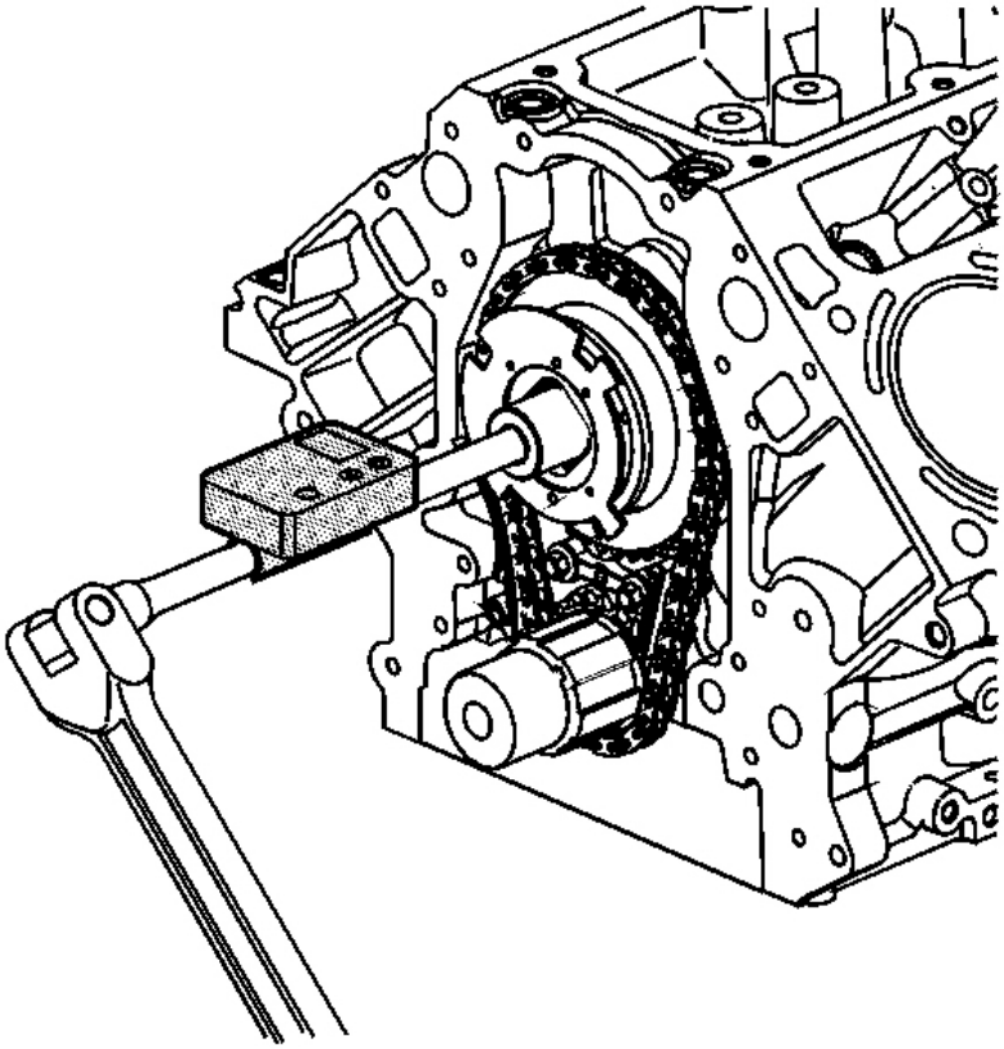

Fig. 41: Tightening The CMP Actuator Solenoid Valve
Courtesy of GENERAL MOTORS CORP.

15. Tighten the CMP actuator solenoid valve.

Tighten:

1. Tighten the bolt a first pass to 65 N.m (48 lb ft).
2. Tighten the bolt a final pass an additional 90 degrees using **J 45059** . See **Special Tools** .

cardiagn.com

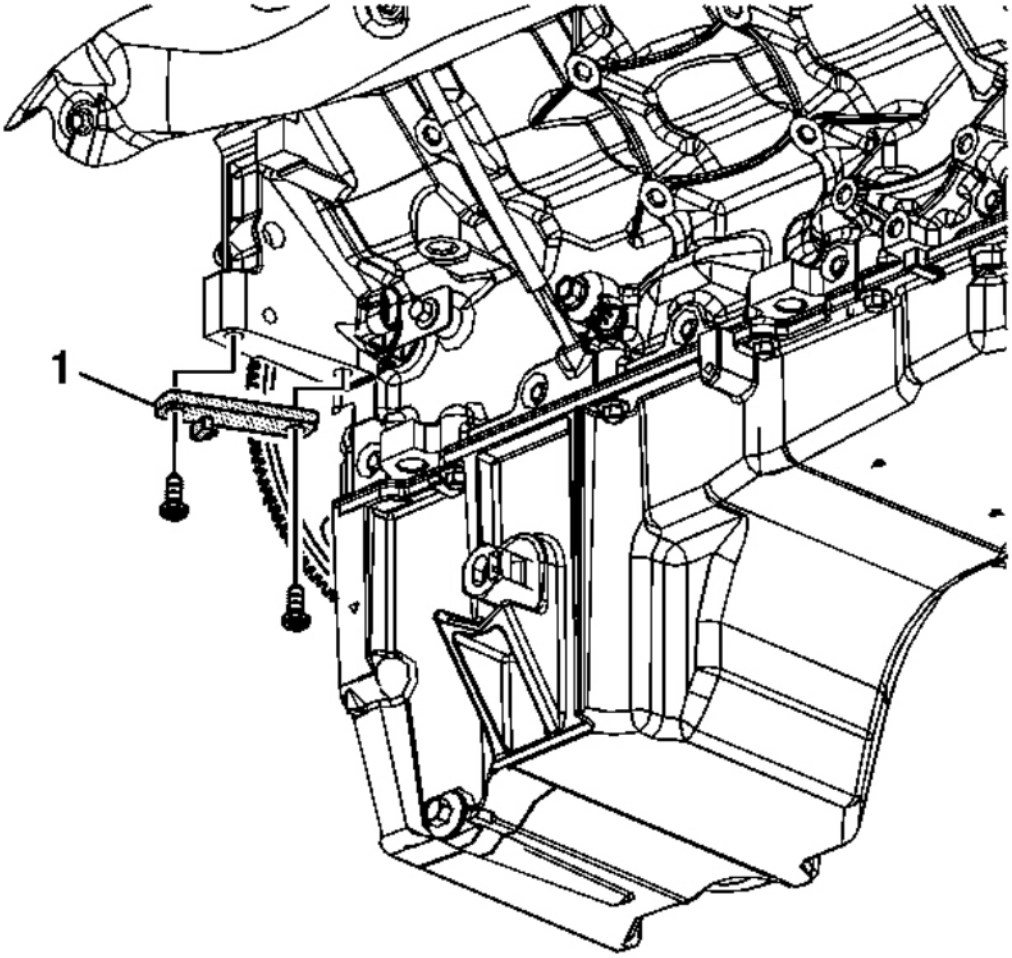

Fig. 42: View Of Special Tool & Bolts
Courtesy of GENERAL MOTORS CORP.

16. Remove the **J 42386-A** (1) and bolts. See **Special Tools** .
17. Install the starter motor. Refer to **Starter Motor Replacement** .
18. Install the oil pump. Refer to **Oil Pump, Screen and Crankshaft Oil Deflector Replacement (RPOs LC9/LMG/LY2/LY5)** or **Oil Pump, Screen and Crankshaft Oil Deflector Replacement (RPOs LY6/L76/L92)** .

CAMSHAFT REPLACEMENT (RPOS LC9/LMG/LY2/LY5)

- **EN 46330** Timing Belt Tensioner Retaining Pin. See **Special Tools** .

cardiagn.com

- **J 42386-A** Flywheel Holding Tool. See **Special Tools** .
- **J 45059** Angle Meter. See **Special Tools** .

REMOVAL PROCEDURE

IMPORTANT: If camshaft replacement is required, the valve lifters must also be replaced.

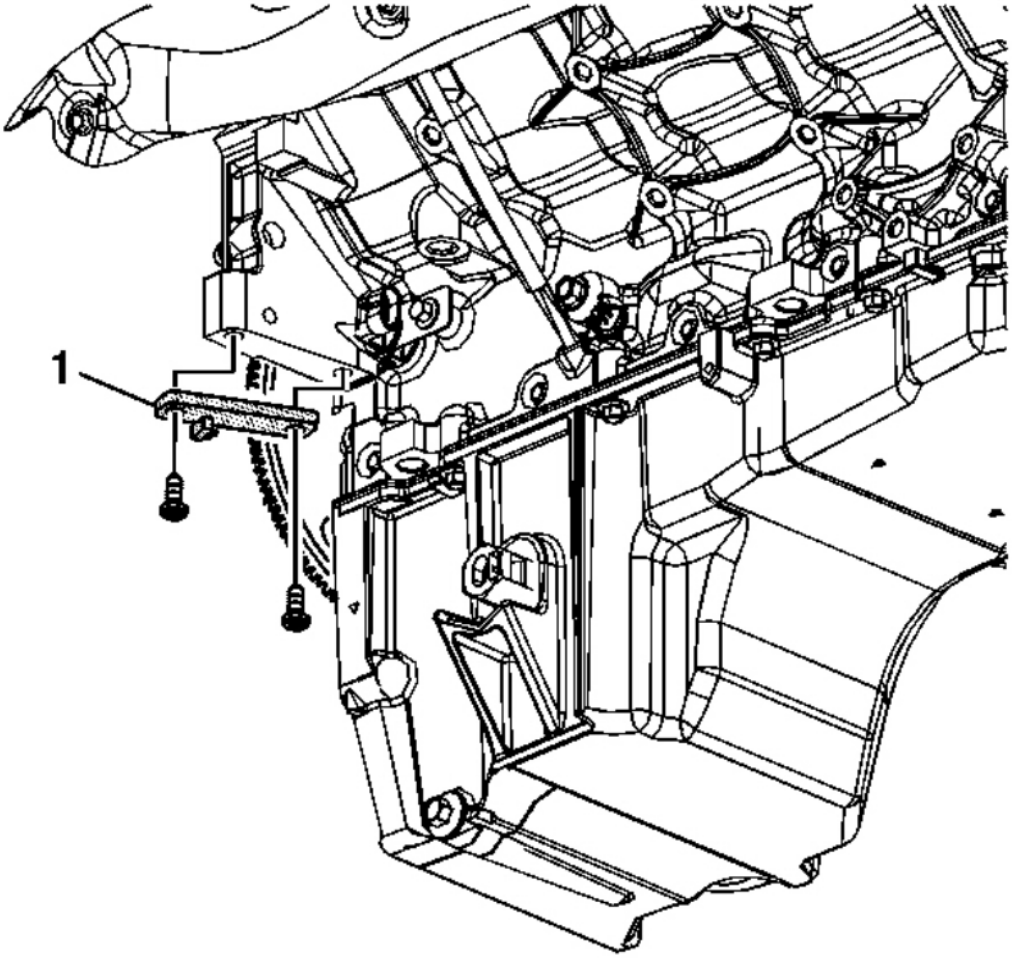

Fig. 43: View Of Special Tool & Bolts
Courtesy of GENERAL MOTORS CORP.

1. Remove the radiator support. Refer to **Radiator Support Replacement** .
2. Remove the valve lifters. Refer to **Valve Lifter Replacement (RPOs LC9/LMG/LY5/L76/L92)** or

cardiagn.com

Valve Lifter Replacement (RPOs LY2/LY6) .

3. Remove the engine front cover. Refer to **Engine Front Cover Replacement (RPOs LC9/LMG/LY2/LY5)** or **Engine Front Cover Replacement (RPOs LY6/L76/L92)** .
4. Remove the starter motor. Refer to **Starter Motor Replacement** .

NOTE: **Refer to Fastener Notice .**

IMPORTANT: Ensure that the teeth of the J 42386-A mesh with the teeth of the engine flywheel. See Special Tools .

5. Install the **J 42386-A** (1) and bolts. See **Special Tools** . Use one M10-1.5 x 120 mm and one M10-1.5 x 45 mm bolt for proper tool operation.

   Tighten: Tighten the **J 42386-A** bolts to 50 N. See **Special Tools** .m (37 lb ft).

cardiagn.com

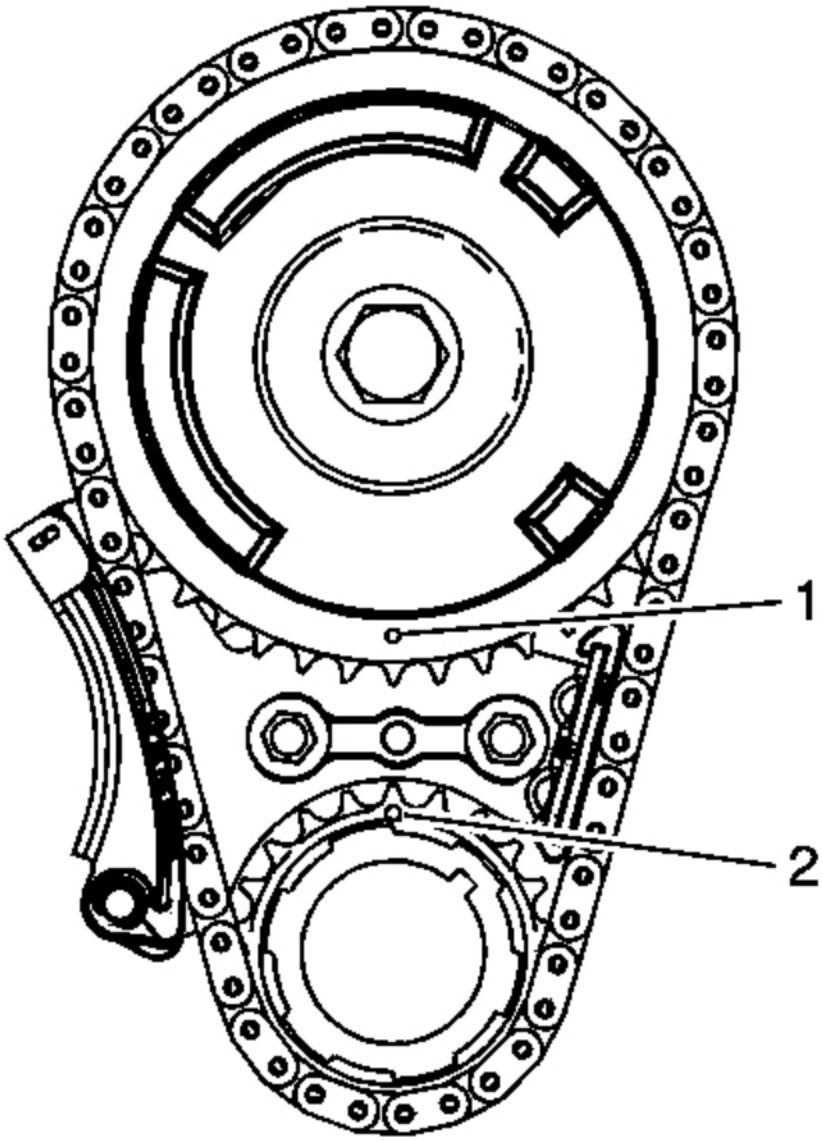

Fig. 44: Identifying Camshaft & Crankshaft Marks
Courtesy of GENERAL MOTORS CORP.

6. Rotate the crankshaft sprocket until the camshaft sprocket alignment mark (1) and the crankshaft sprocket alignment mark (2) are aligned.

cardiagn.com

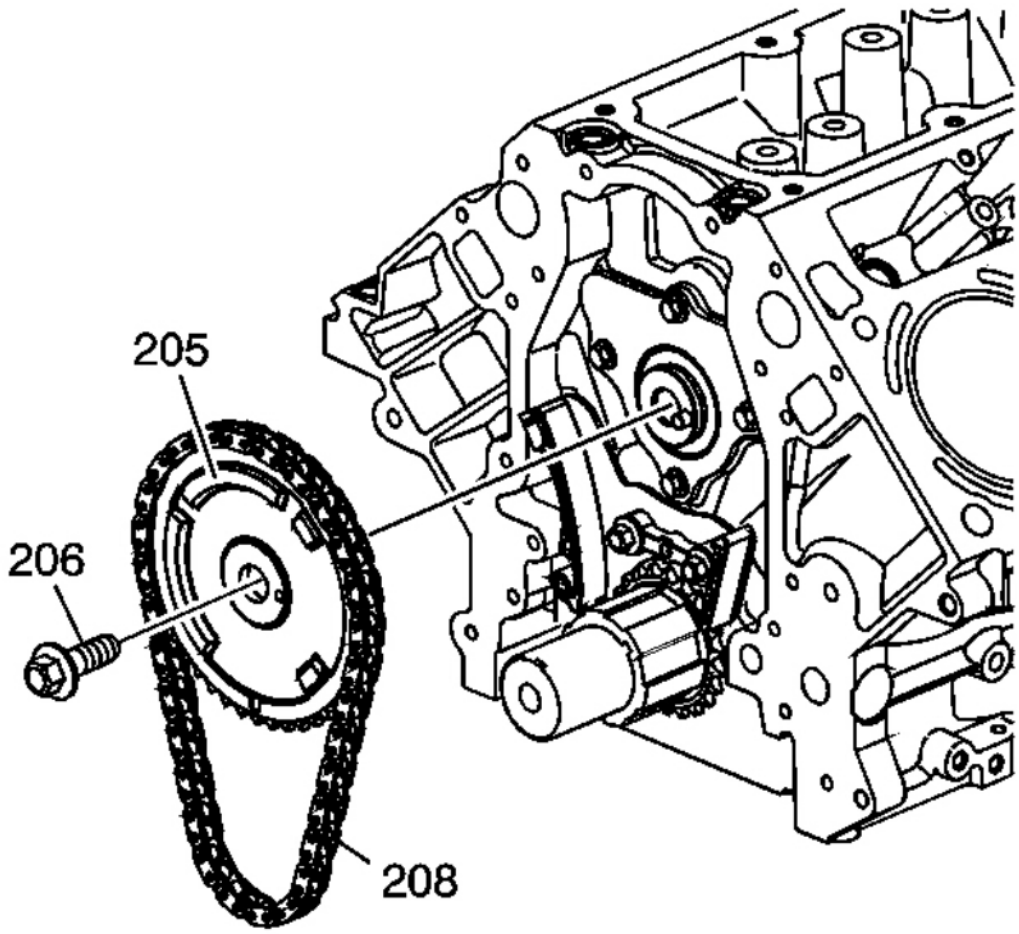

Fig. 45: View Of Camshaft Sprocket, Timing Chain & Sprocket Bolt
Courtesy of GENERAL MOTORS CORP.

NOTE: **Do not turn the crankshaft assembly after the timing chain has been removed in order to prevent damage to the piston assemblies or the valves.**

7. Remove the camshaft sprocket bolt (206).
8. Remove the camshaft sprocket (205) and timing chain (208).

cardiagn.com

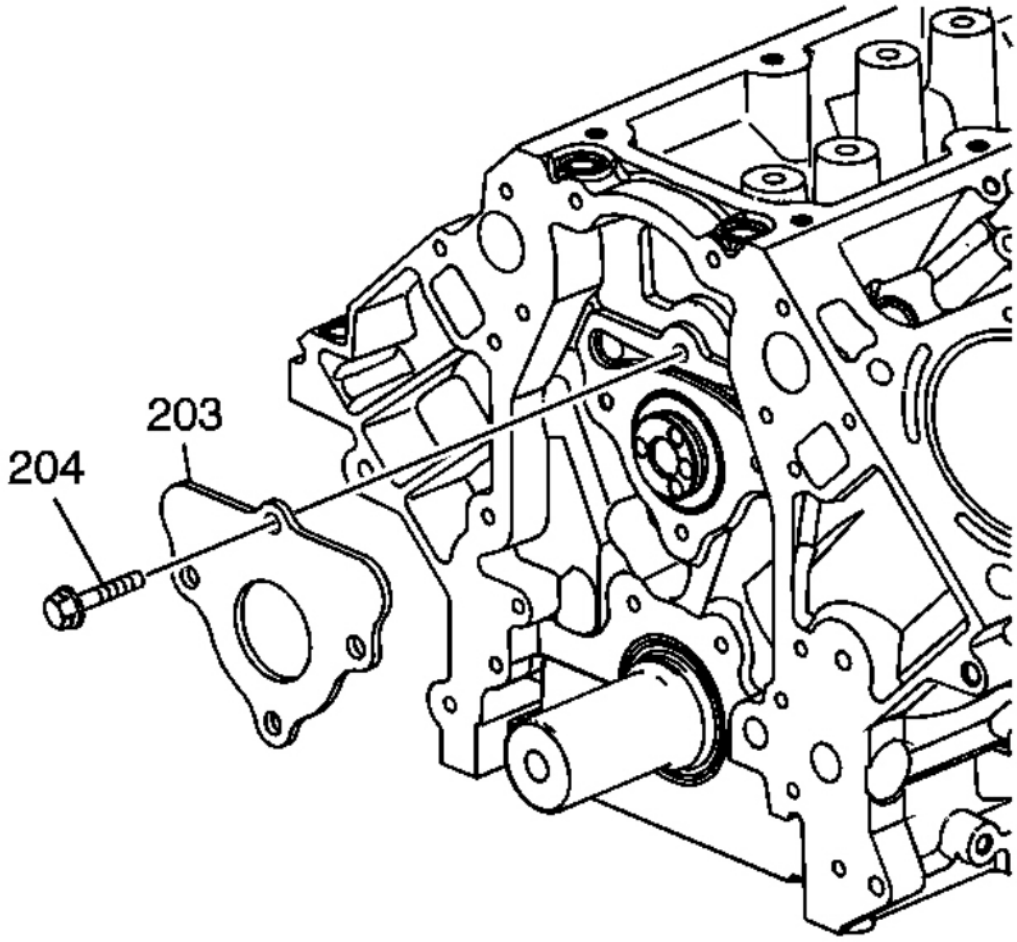

Fig. 46: Camshaft Retainer & Bolts
Courtesy of GENERAL MOTORS CORP.

9. Remove the camshaft retainer bolts (204) and retainer (203).

cardiagn.com

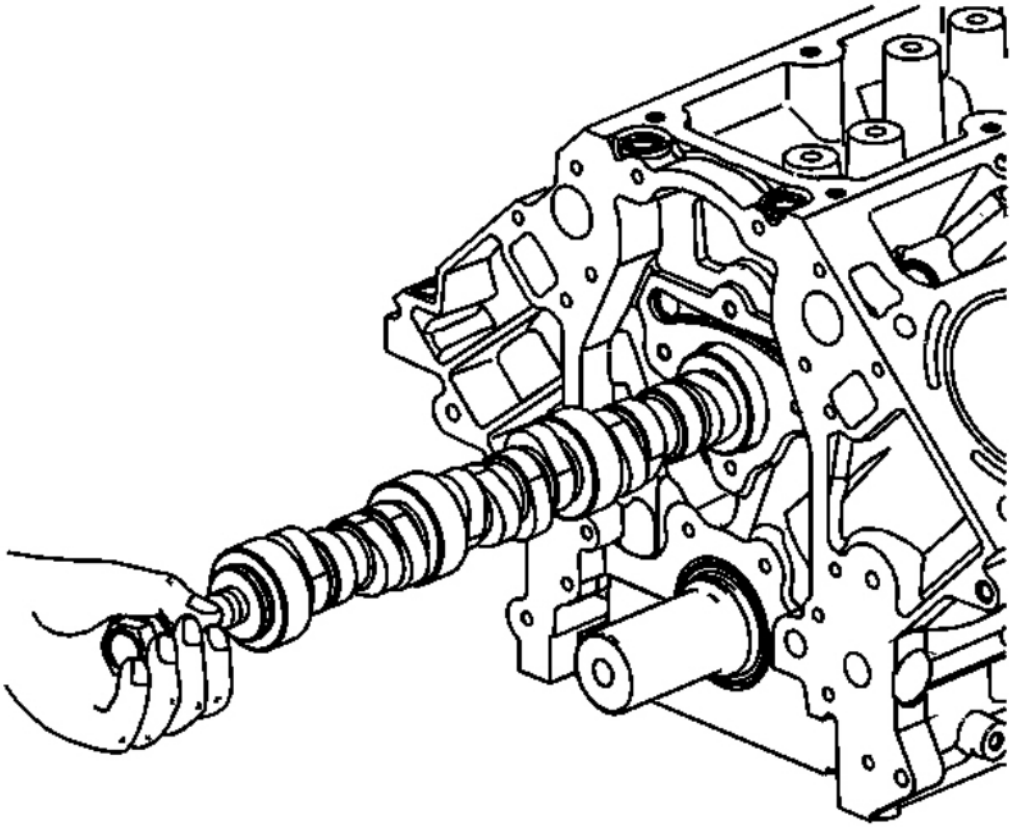

Fig. 47: View Of Camshaft
Courtesy of GENERAL MOTORS CORP.

NOTE: **All camshaft journals are the same diameter, so care must be used in removing or installing the camshaft to avoid damage to the camshaft bearings.**

10. Install the camshaft sprocket bolt into the camshaft front bolt hole.
11. Using the bolt as a handle, carefully rotate and remove the camshaft from the engine block.
12. Remove the bolt from the camshaft.

INSTALLATION PROCEDURE

cardiagn.com

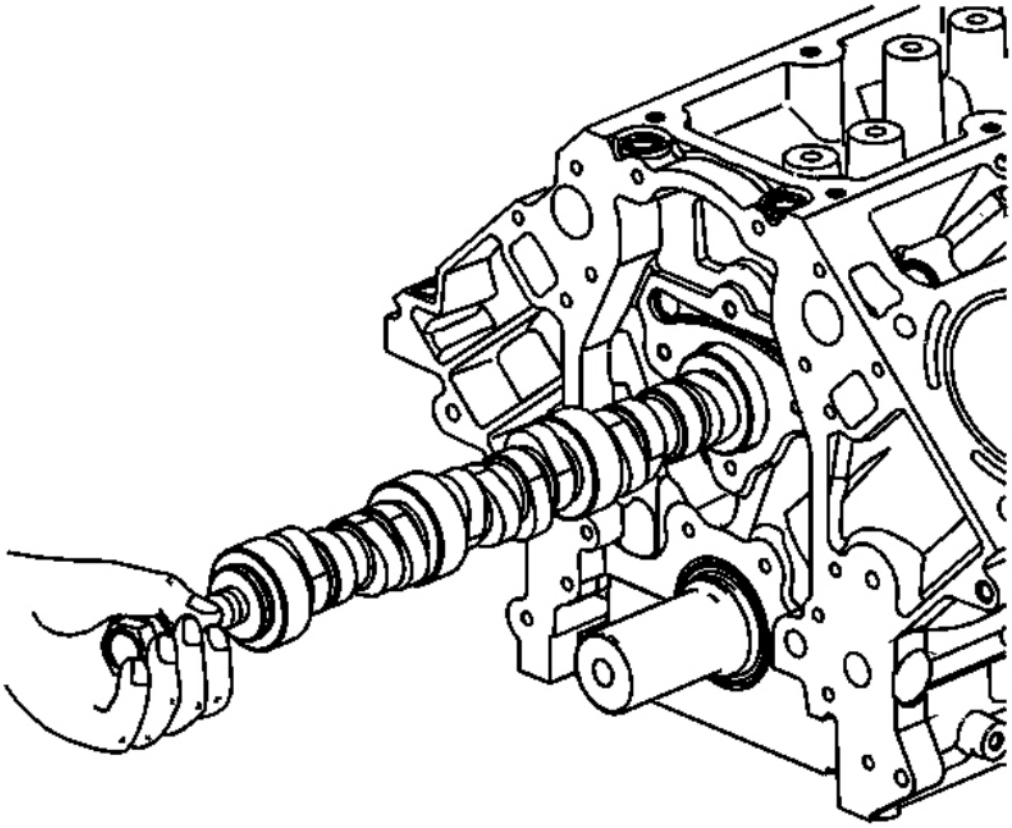

Fig. 48: View Of Camshaft
Courtesy of GENERAL MOTORS CORP.

1. Lubricate the camshaft journals and the bearings with clean engine oil.
2. Install the camshaft sprocket bolt into the camshaft front bolt hole.

NOTE: **All camshaft journals are the same diameter, so care must be used in removing or installing the camshaft to avoid damage to the camshaft bearings.**

3. Using the bolt as a handle, carefully install the camshaft into the engine block.
4. Remove the bolt from the front of the camshaft.

cardiagn.com

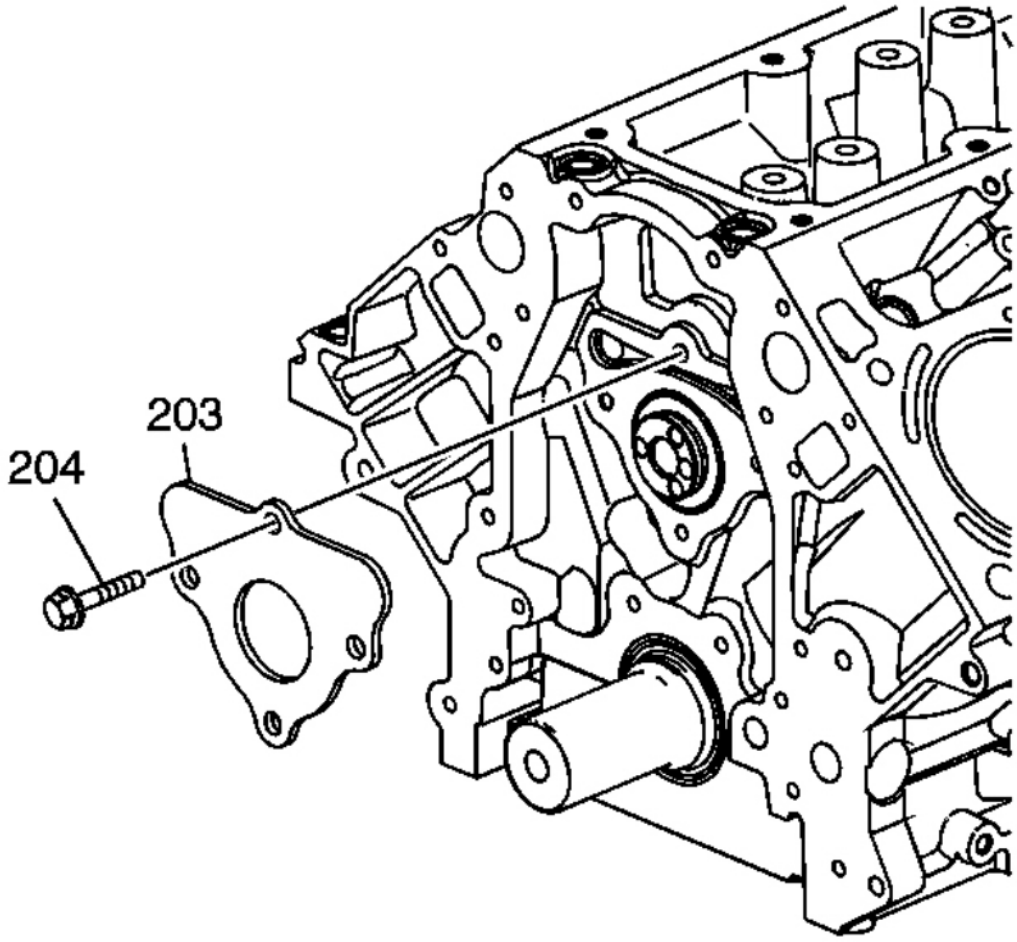

Fig. 49: Camshaft Retainer & Bolts
Courtesy of GENERAL MOTORS CORP.

IMPORTANT: The gasket surface on the engine block should be clean and free of dirt and/or debris.

5. Install the camshaft retainer (203) and bolts (204). Install the retainer with the sealing gasket facing the engine block.

cardiagn.com

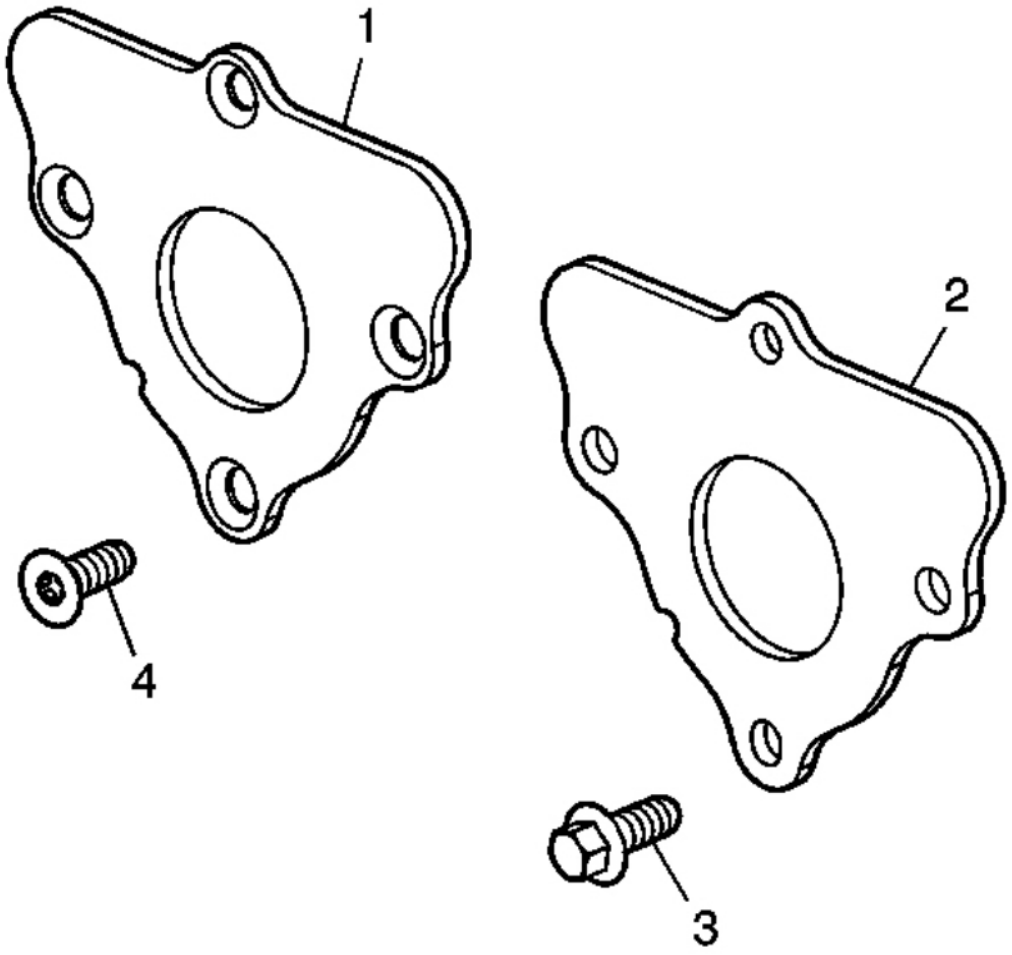

Fig. 50: First & Second Designs Of Retainers & Head Bolts
Courtesy of GENERAL MOTORS CORP.

6. Tighten the camshaft retainer bolts.

Tighten:

- Tighten the first design hex head bolts (3) to 25 N.m (18 lb ft).
- Tighten the second design TORX® head bolts (4) to 15 N.m (11 lb ft).

cardiagn.com

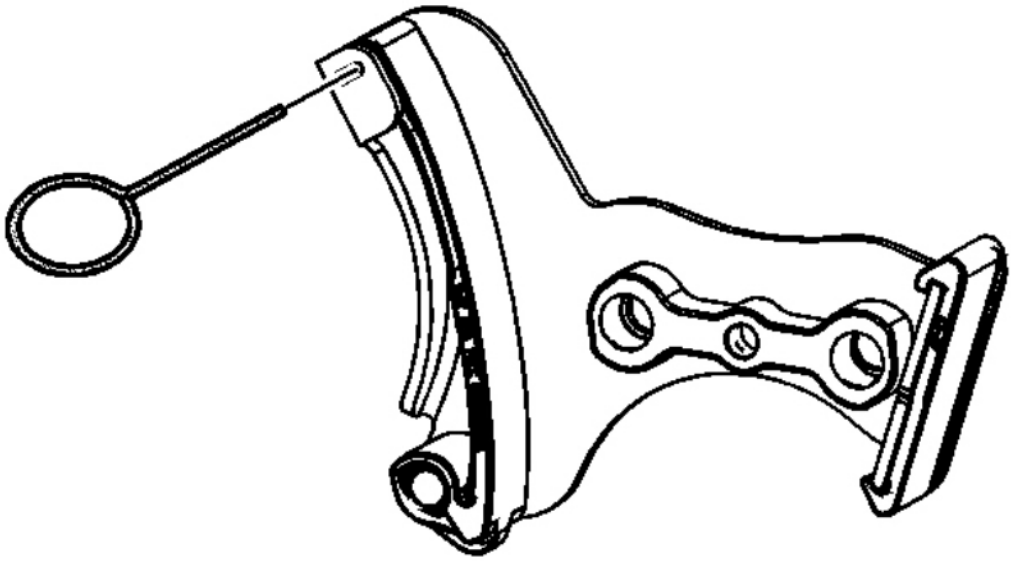

Fig. 51: Installing EN 46330 In Compressed Tensioner
Courtesy of GENERAL MOTORS CORP.

7. Compress the timing chain tensioner guide and install the **EN 46330** . See **Special Tools** .

cardiagn.com

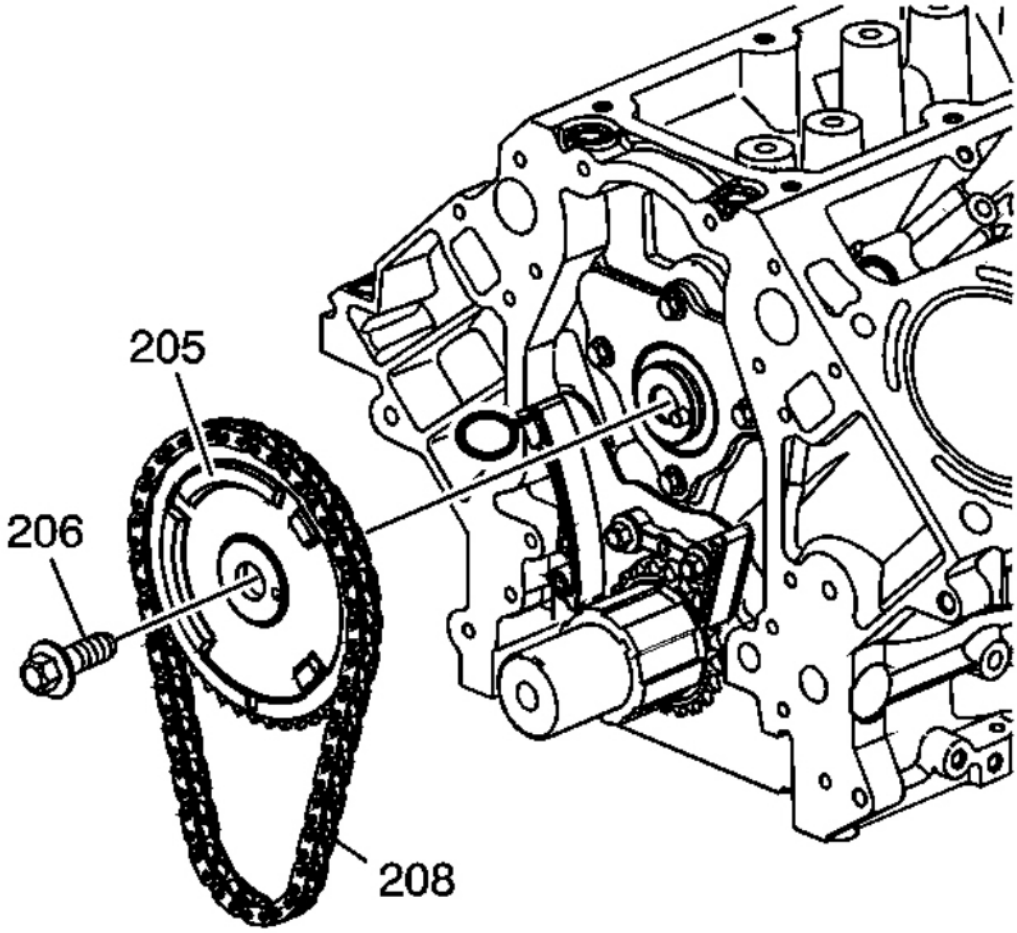

Fig. 52: View Of Camshaft Sprocket & Timing Chain
Courtesy of GENERAL MOTORS CORP.

8. Align the camshaft sprocket so the timing mark is in the 6 o'clock position.
9. Install the camshaft sprocket (205), timing chain (208), and bolt (206).

cardiagn.com

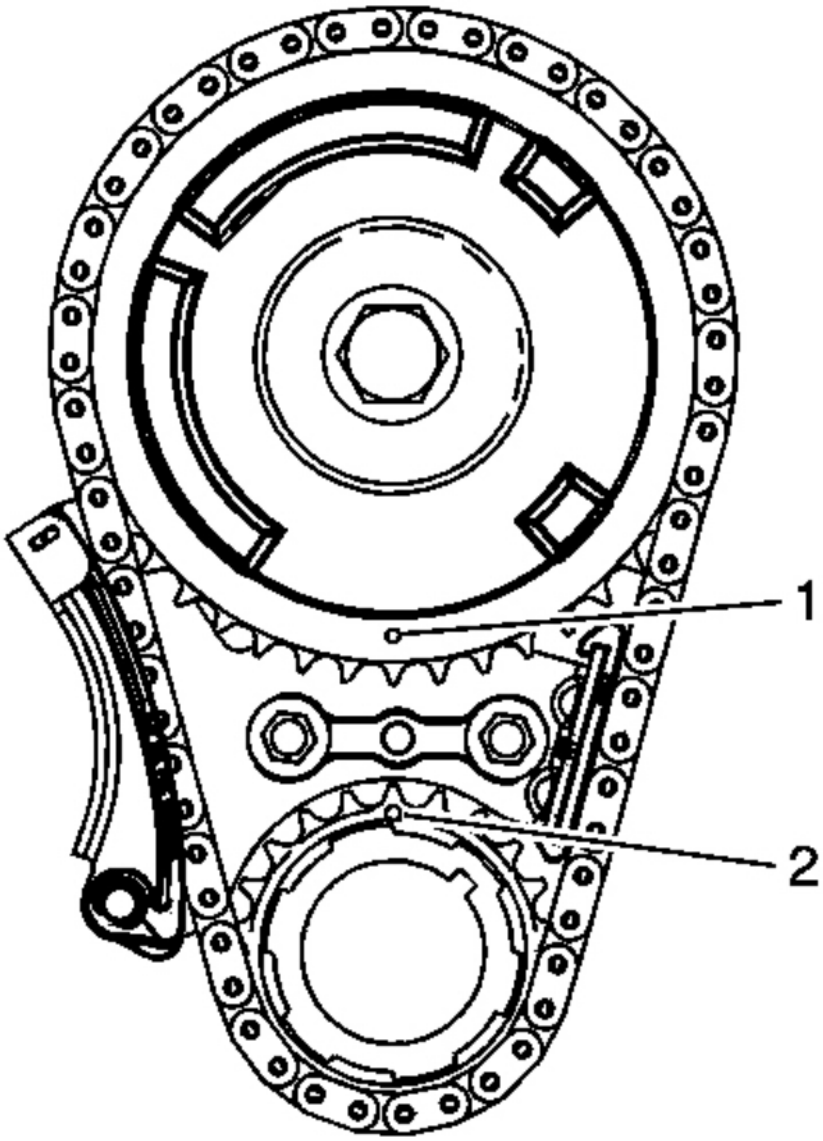

Fig. 53: Identifying Camshaft & Crankshaft Marks
Courtesy of GENERAL MOTORS CORP.

10. Inspect the sprockets for proper alignment. The marks on the camshaft sprocket (1) should be located in the 6 o'clock position and the mark on the crankshaft sprocket (2) should be located in the 12 o'clock position.

cardiagn.com

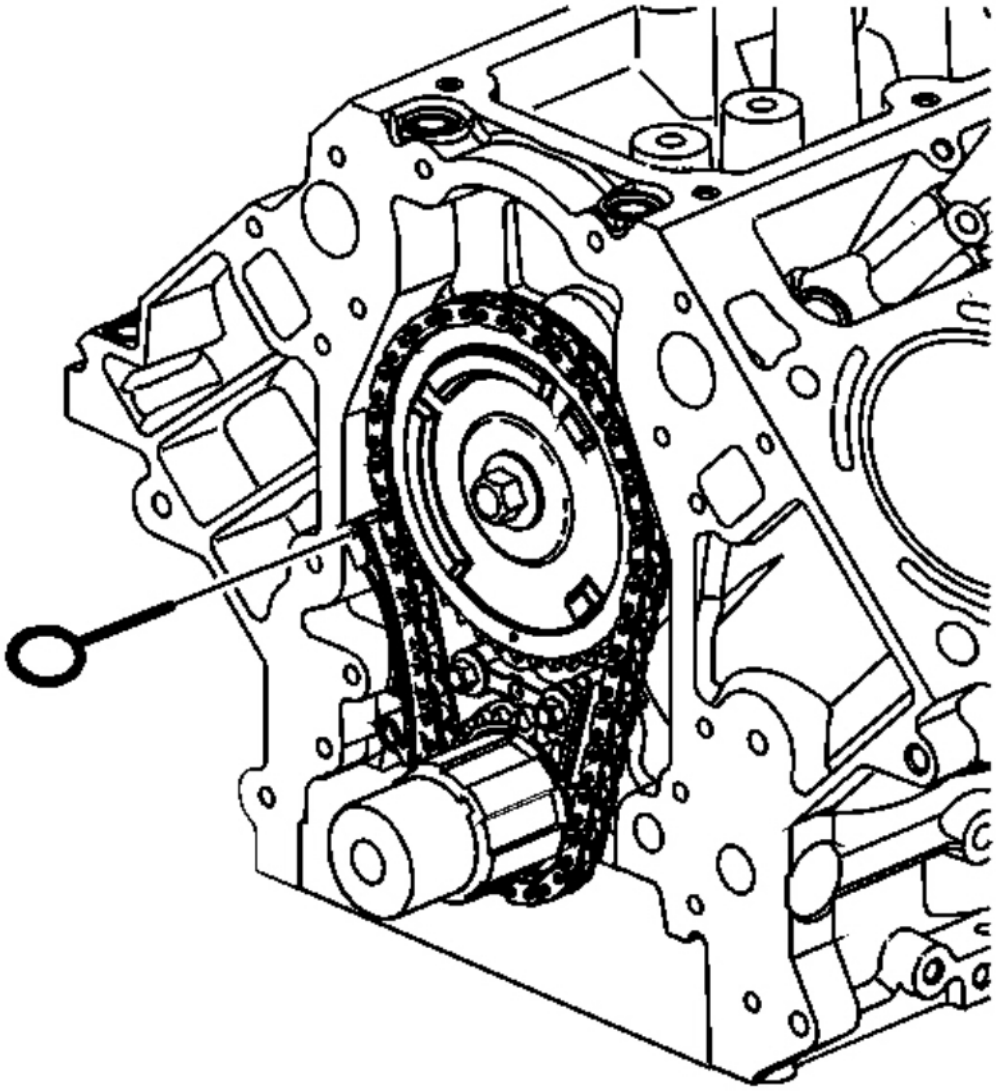

Fig. 54: Locating Tensioner Pin
Courtesy of GENERAL MOTORS CORP.

11. Remove the **EN 46330** . See **Special Tools** .

cardiagn.com

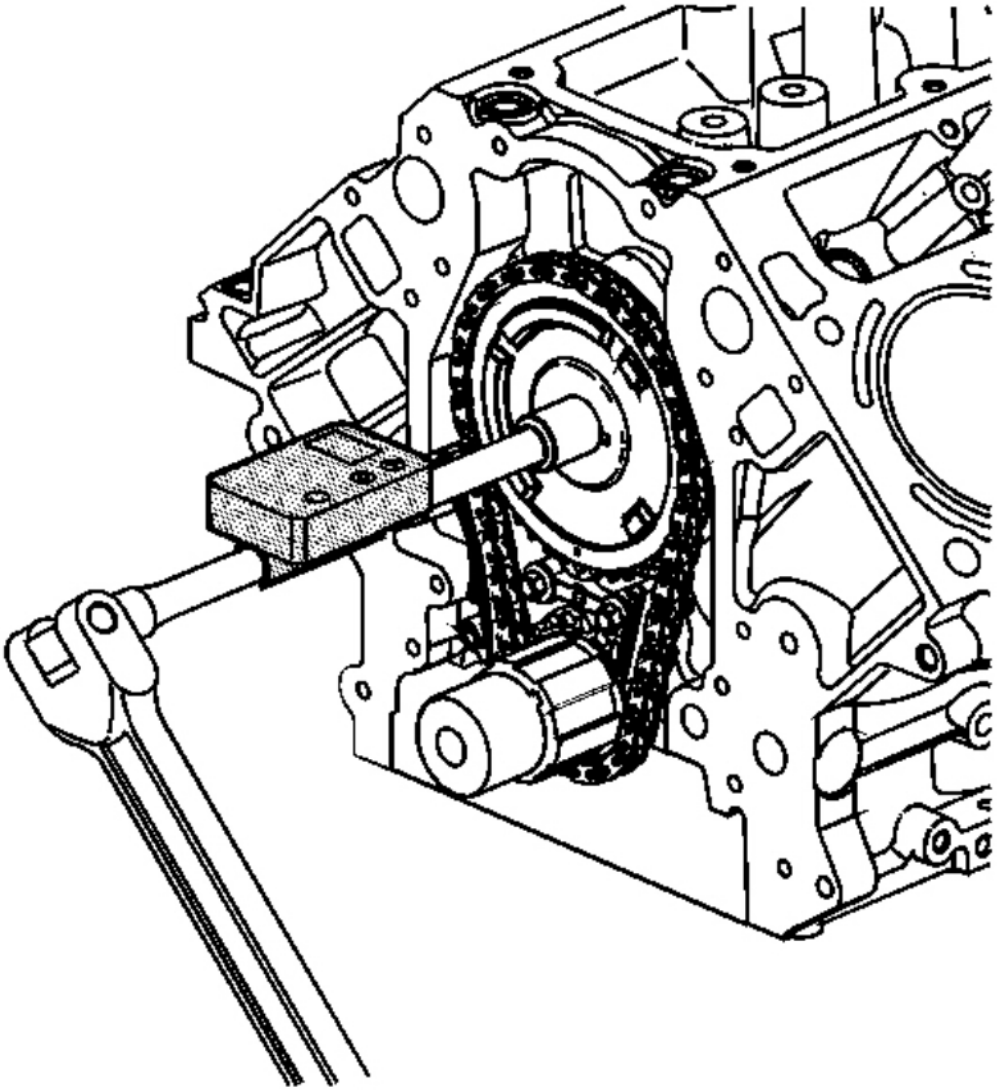

Fig. 55: Tightening Camshaft Sprocket Bolt
Courtesy of GENERAL MOTORS CORP.

12. Tighten the camshaft sprocket bolt.

Tighten:

1. Tighten the bolt a first pass to 90 N.m (66 lb ft).
2. Tighten the bolt a final pass to 40 degrees using **J 45059** . See **Special Tools** .

cardiagn.com

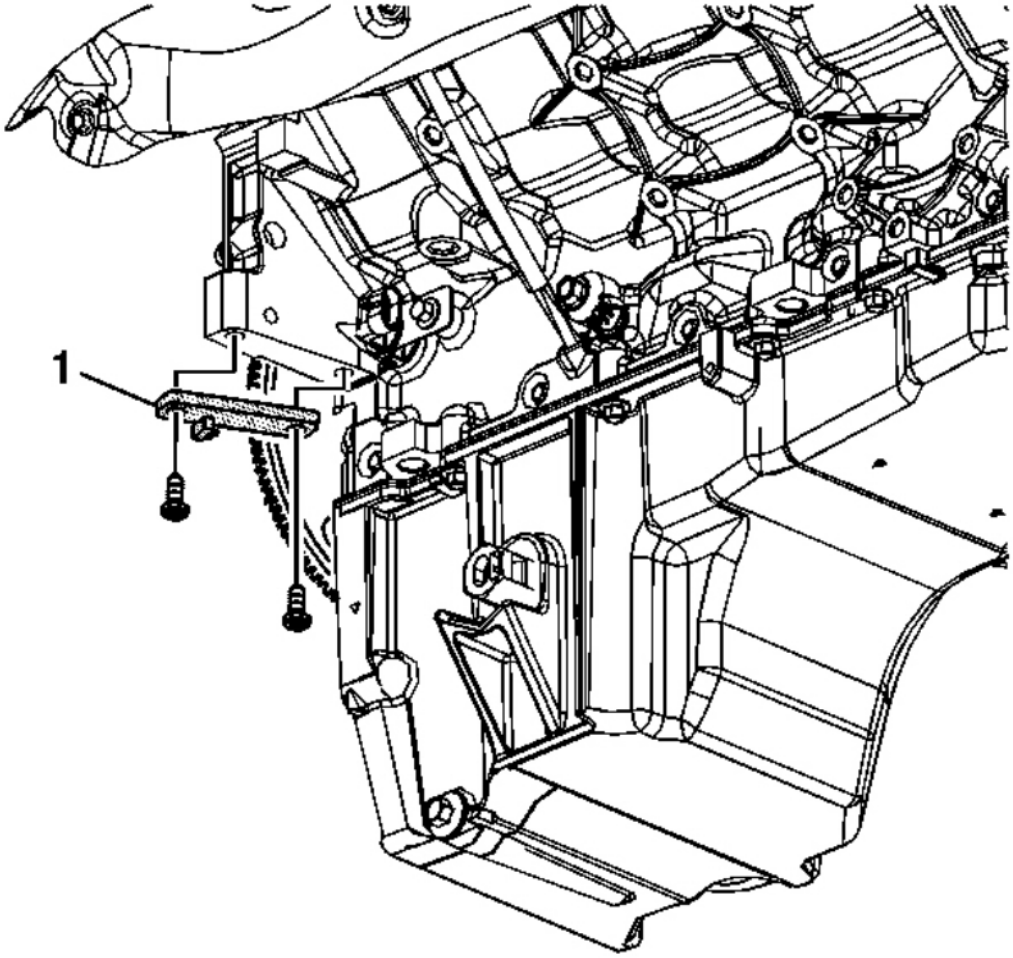

Fig. 56: View Of Special Tool & Bolts
Courtesy of GENERAL MOTORS CORP.

13. Remove the **J 42386-A** (1) and bolts. See **Special Tools** .
14. Install the starter motor. Refer to **Starter Motor Replacement** .
15. Install the engine front cover. Refer to **Engine Front Cover Replacement (RPOs LC9/LMG/LY2/LY5)** or **Engine Front Cover Replacement (RPOs LY6/L76/L92)** .
16. Install the valve lifters. Refer to **Valve Lifter Replacement (RPOs LC9/LMG/LY5/L76/L92)** or **Valve Lifter Replacement (RPOs LY2/LY6)** .
17. Install the radiator support. Refer to **Radiator Support Replacement** .

CAMSHAFT REPLACEMENT (RPOS LY6/L76/L92)

cardiagn.com

Tools Required

- **EN 46330** Timing Belt Tensioner Retaining Pin. See **Special Tools** .
- **J 42386-A** Flywheel Holding Tool. See **Special Tools** .
- **J 45059** Angle Meter. See **Special Tools** .

REMOVAL PROCEDURE

IMPORTANT: If camshaft replacement is required, the valve lifters must also be replaced.

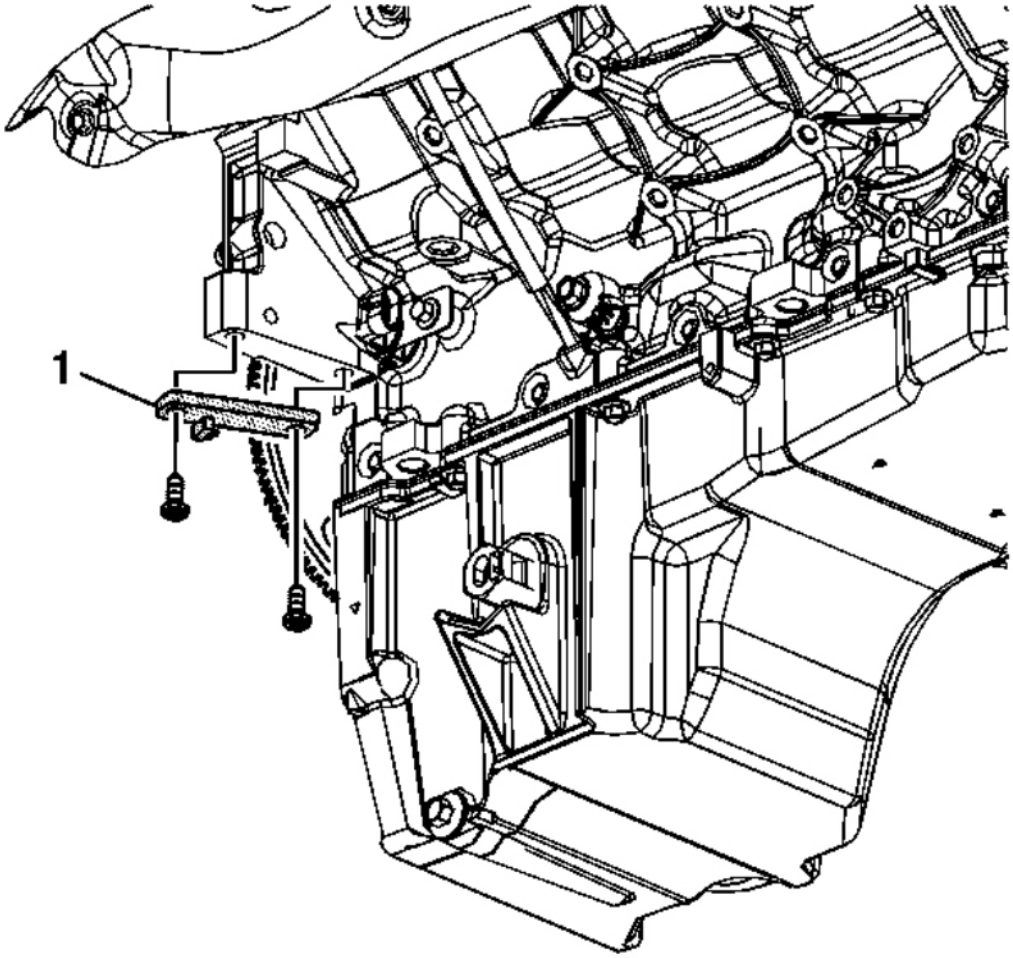

Fig. 57: View Of Special Tool & Bolts
Courtesy of GENERAL MOTORS CORP.

cardiagn.com

1. Remove the radiator support. Refer to **Radiator Support Replacement** .
2. Remove the valve lifters. Refer to **Valve Lifter Replacement (RPOs LC9/LMG/LY5/L76/L92)** or **Valve Lifter Replacement (RPOs LY2/LY6)** .
3. Remove the engine front cover. Refer to **Engine Front Cover Replacement (RPOs LC9/LMG/LY2/LY5)** or **Engine Front Cover Replacement (RPOs LY6/L76/L92)** .
4. Remove the starter motor. Refer to **Starter Motor Replacement** .

NOTE: **Refer to Fastener Notice .**

IMPORTANT: Ensure that the teeth of the J 42386-A mesh with the teeth of the engine flywheel. See Special Tools .

5. Install the **J 42386-A** (1) and bolts. See **Special Tools** . Use one M10-1.5 x 120 mm and one M10-1.5 x 45 mm bolt for proper tool operation.

   Tighten: Tighten the **J 42386-A** bolts to 50 N. See **Special Tools** .m (37 lb ft).

cardiagn.com

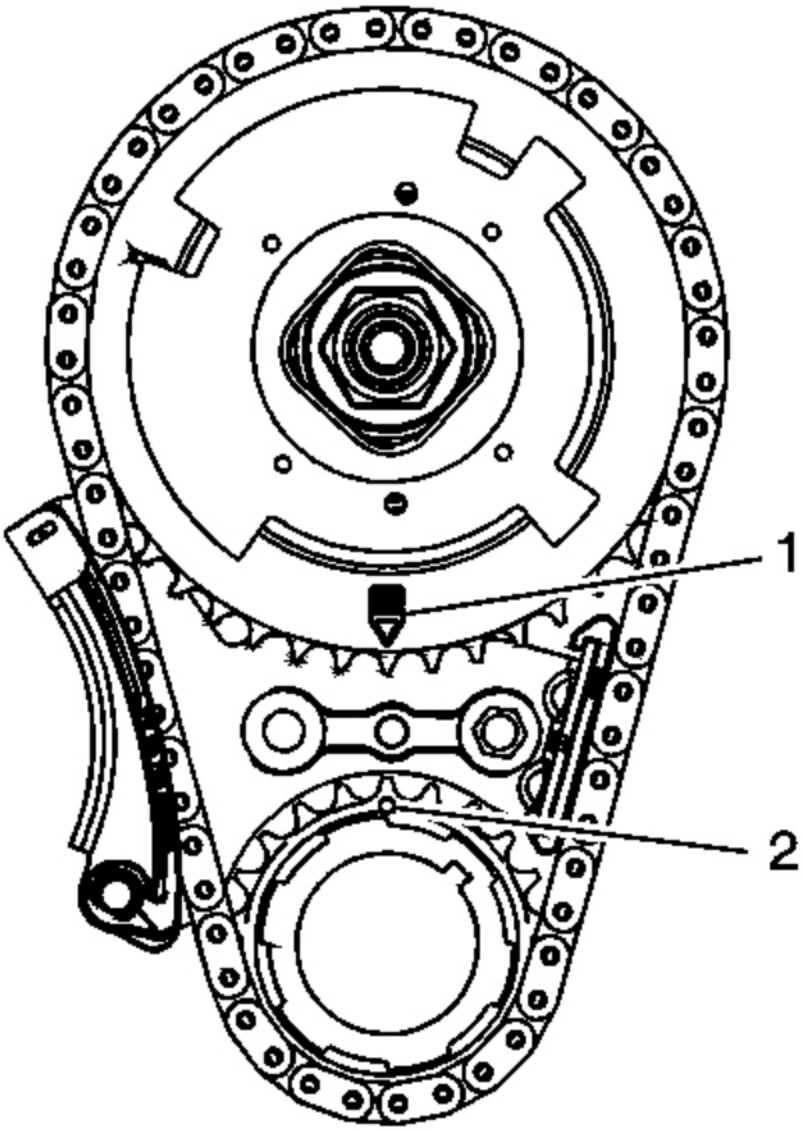

Fig. 58: View Of CMP Actuator Alignment Mark & Crankshaft Sprocket Alignment Mark
Courtesy of GENERAL MOTORS CORP.

6. Rotate the crankshaft sprocket until the camshaft position (CMP) actuator alignment mark (1) and the crankshaft sprocket alignment mark (2) are aligned.

cardiagn.com

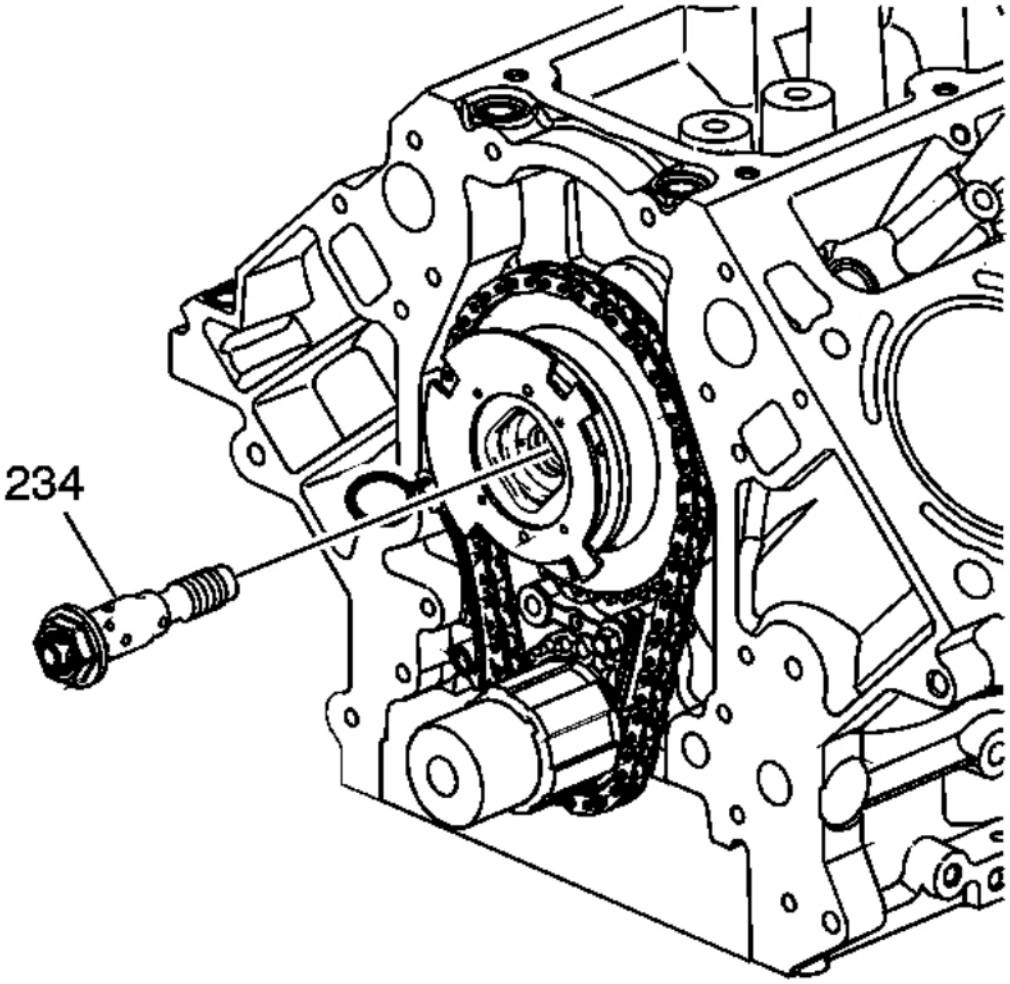

Fig. 59: View Of CMP Actuator Solenoid Valve
Courtesy of GENERAL MOTORS CORP.

7. Remove and discard the CMP actuator solenoid valve (234).

cardiagn.com

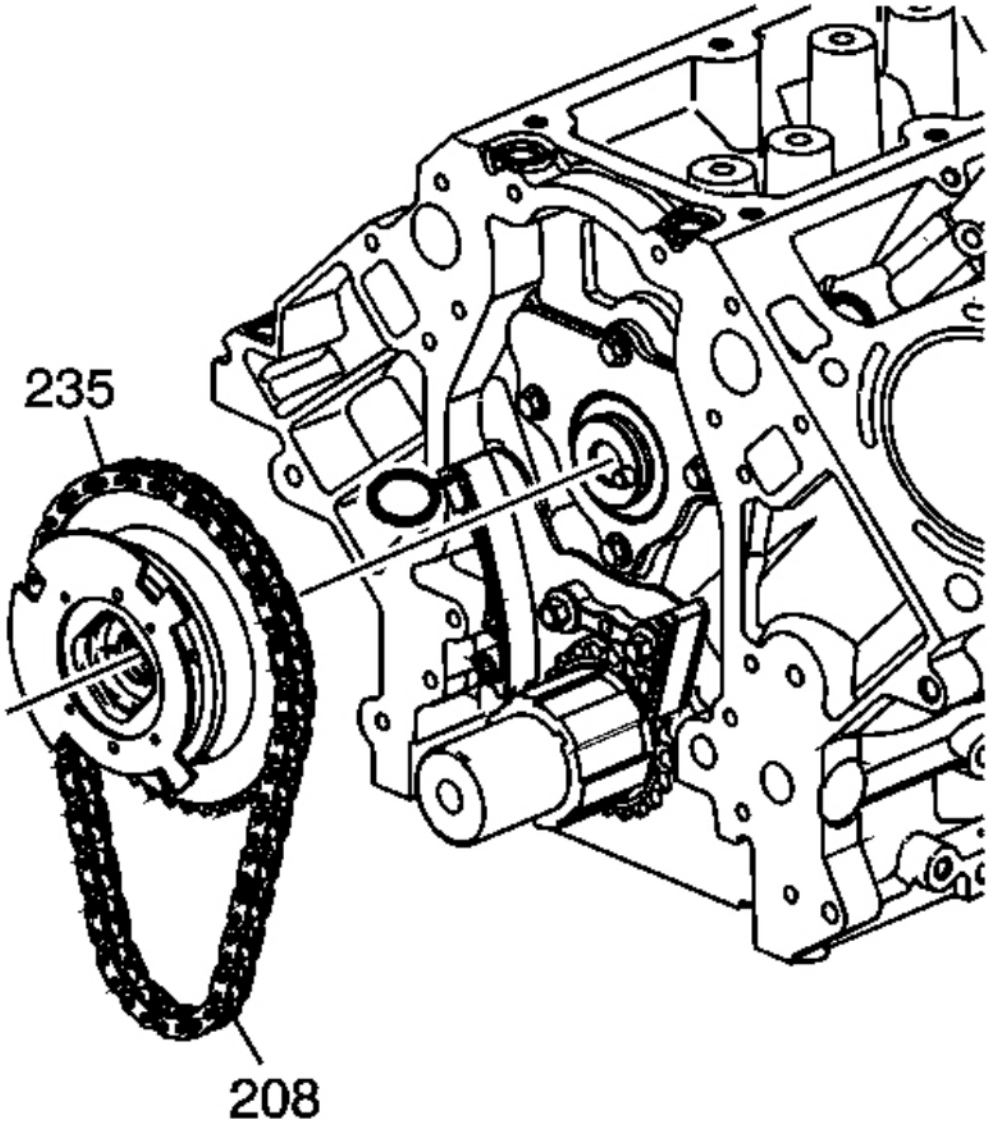

Fig. 60: View Of CMP Actuator & Timing Chain
Courtesy of GENERAL MOTORS CORP.

NOTE: **Do not turn the crankshaft assembly after the timing chain has been removed in order to prevent damage to the piston assemblies or the valves.**

cardiagn.com

8. Remove the CMP actuator (235) and timing chain (208).

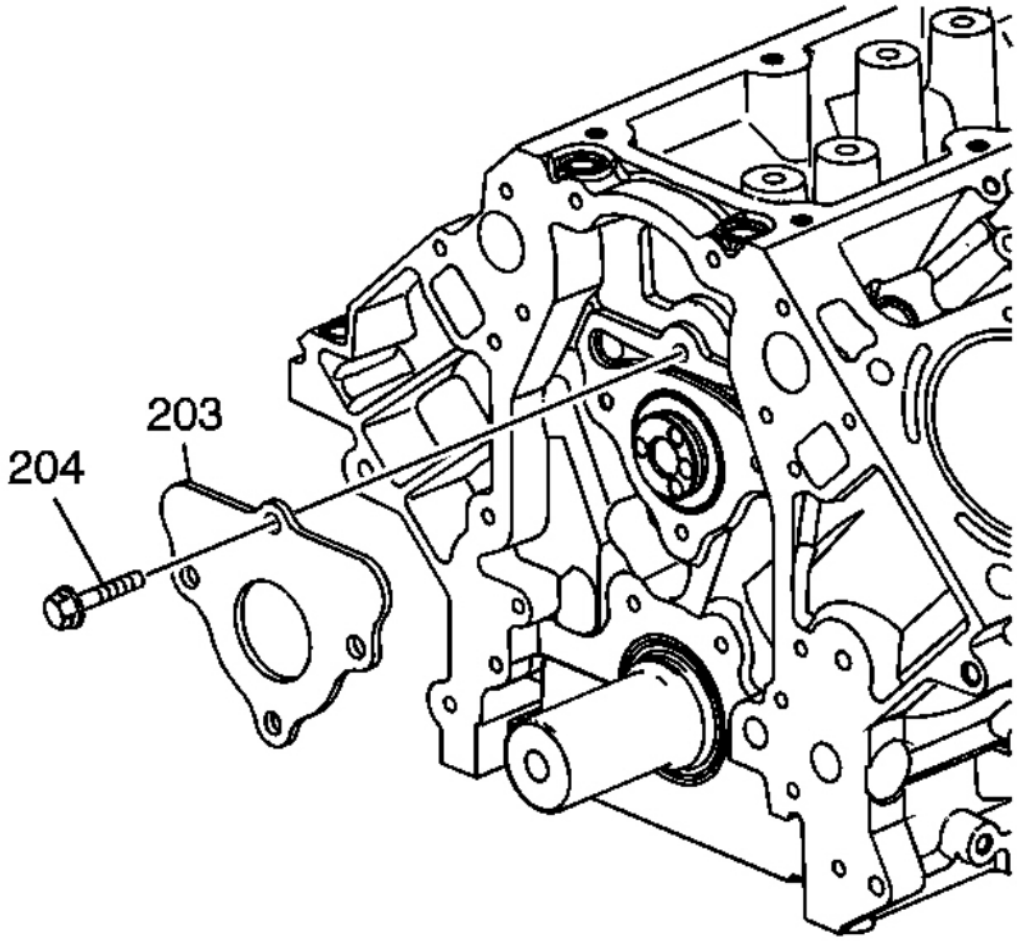

Fig. 61: Camshaft Retainer & Bolts
Courtesy of GENERAL MOTORS CORP.

9. Remove the camshaft retainer bolts (204) and retainer (203).

cardiagn.com

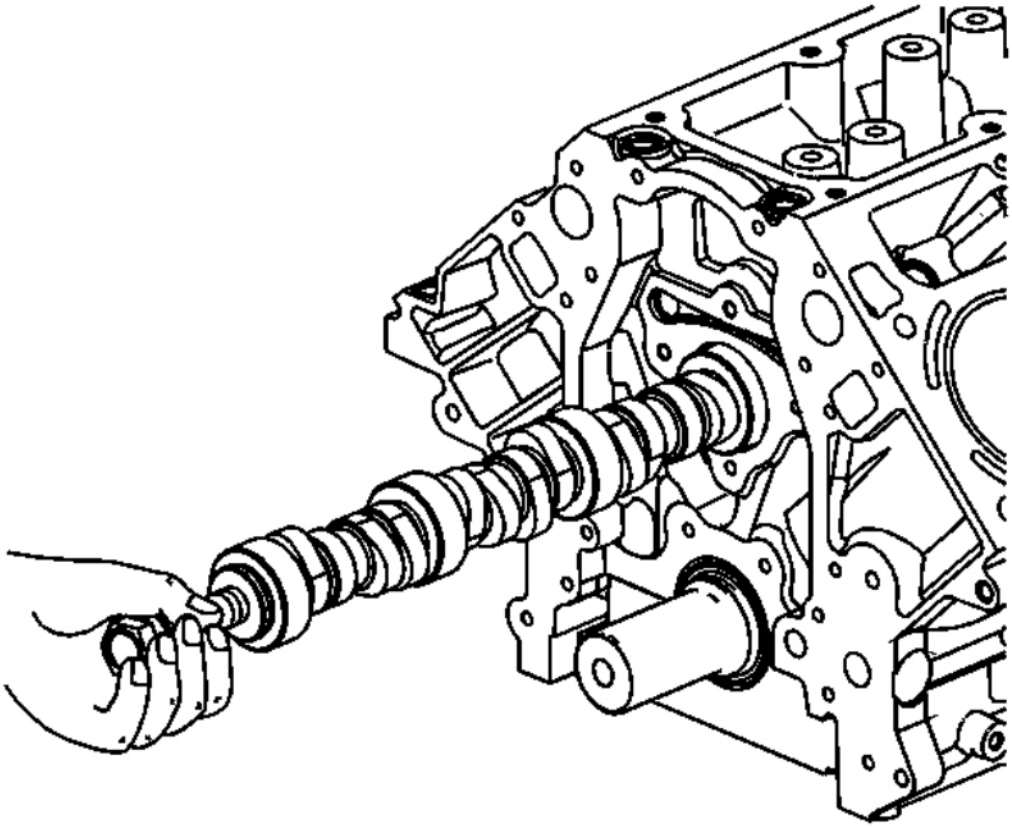

Fig. 62: View Of Camshaft
Courtesy of GENERAL MOTORS CORP.

NOTE: **All camshaft journals are the same diameter, so care must be used in removing or installing the camshaft to avoid damage to the camshaft bearings.**

10. Install the camshaft sprocket bolt into the camshaft front bolt hole.
11. Using the bolt as a handle, carefully rotate and remove the camshaft from the engine block.
12. Remove the bolt from the camshaft.

INSTALLATION PROCEDURE

cardiagn.com

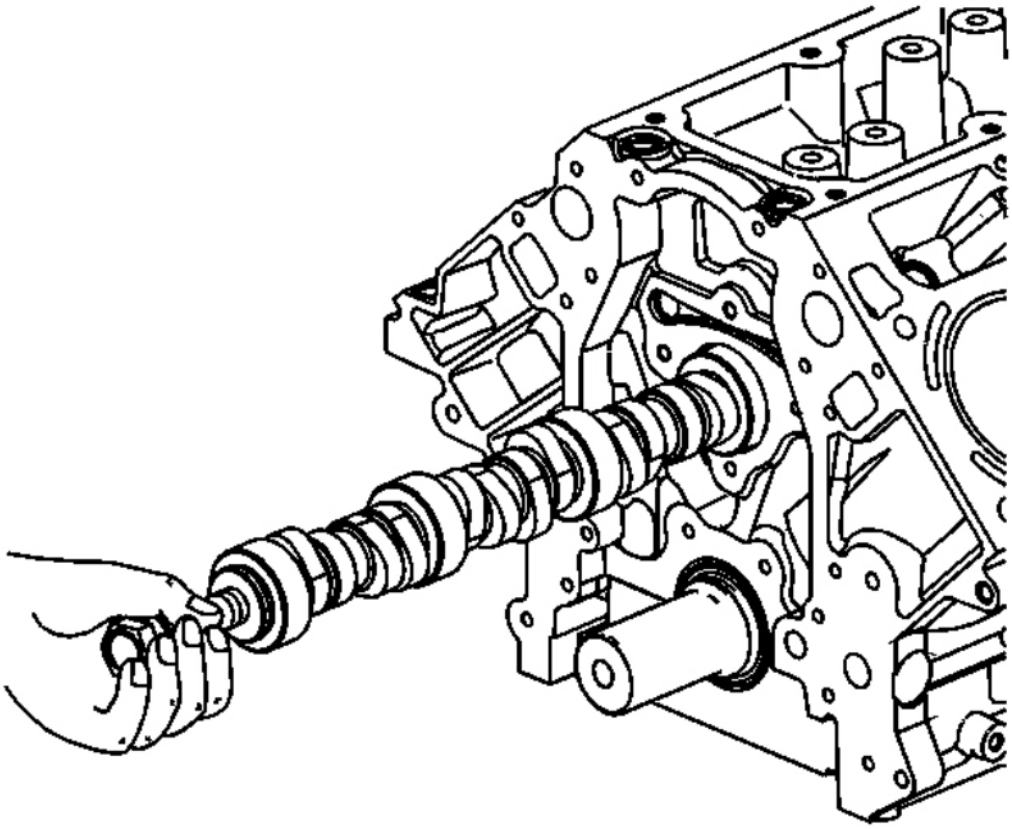

Fig. 63: View Of Camshaft
Courtesy of GENERAL MOTORS CORP.

1. Lubricate the camshaft journals and the bearings with clean engine oil.
2. Install the camshaft sprocket bolt into the camshaft front bolt hole.

NOTE: **All camshaft journals are the same diameter, so care must be used in removing or installing the camshaft to avoid damage to the camshaft bearings.**

3. Using the bolt as a handle, carefully install the camshaft into the engine block.
4. Remove the bolt from the front of the camshaft.

cardiagn.com

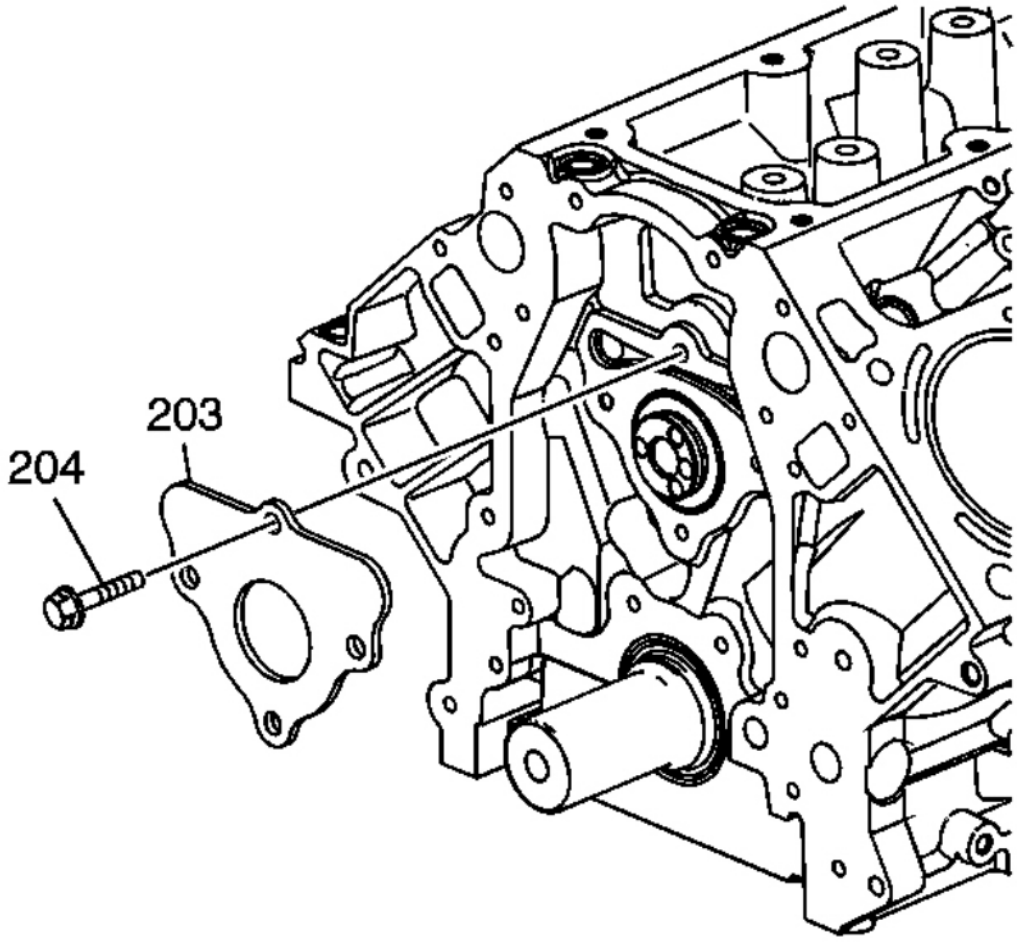

Fig. 64: Camshaft Retainer & Bolts
Courtesy of GENERAL MOTORS CORP.

IMPORTANT: The gasket surface on the engine block should be clean and free of dirt and/or debris.

5. Install the camshaft retainer (203) and bolts (204). Install the retainer with the sealing gasket facing the engine block.

cardiagn.com

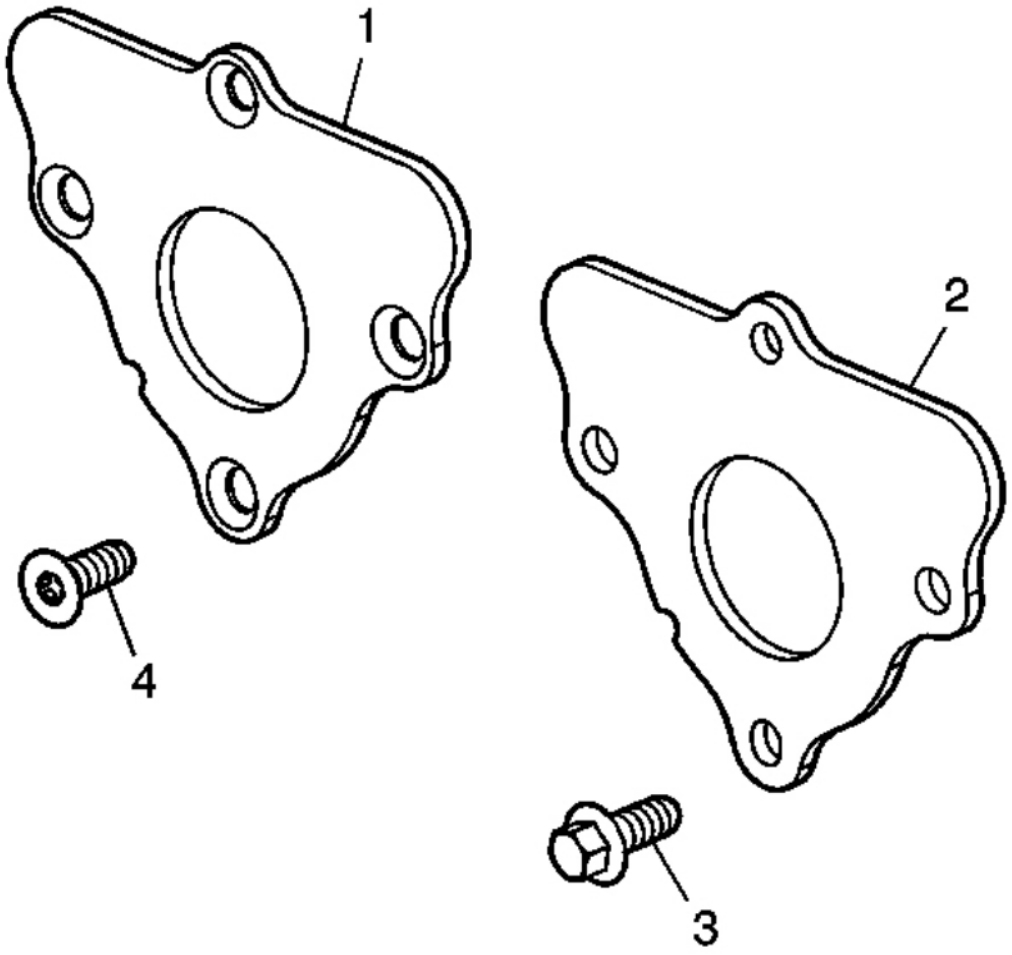

Fig. 65: First & Second Designs Of Head Bolts
Courtesy of GENERAL MOTORS CORP.

6. Tighten the camshaft retainer bolts.

Tighten:

- Tighten the first design hex head bolts (3) to 25 N.m (18 lb ft).
- Tighten the second design TORX® head bolts (4) to 15 N.m (11 lb ft).

cardiagn.com

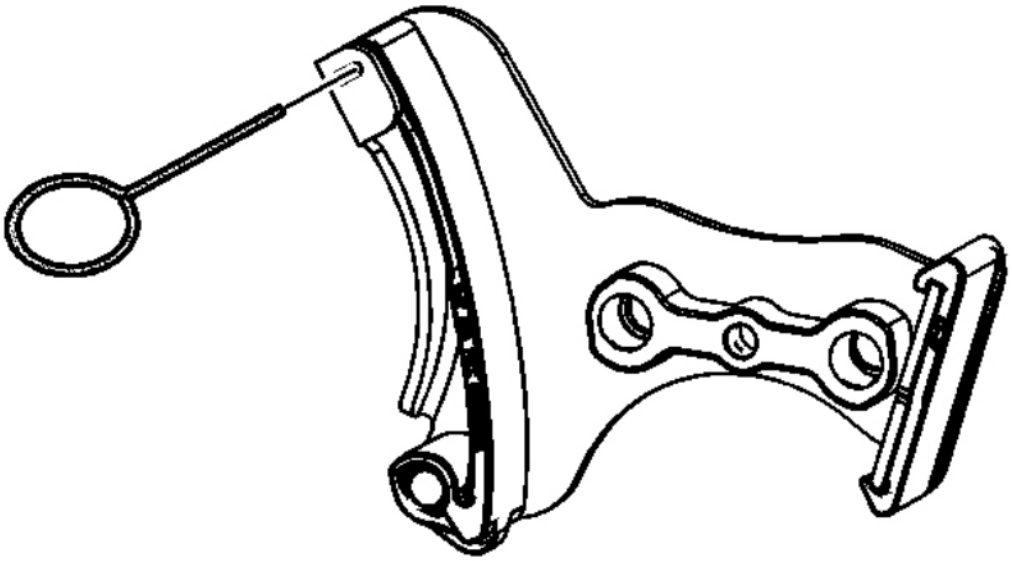

Fig. 66: Installing EN 46330 In Compressed Tensioner
Courtesy of GENERAL MOTORS CORP.

7. Compress the timing chain tensioner guide and install the **EN 46330** . See **Special Tools** .

cardiagn.com

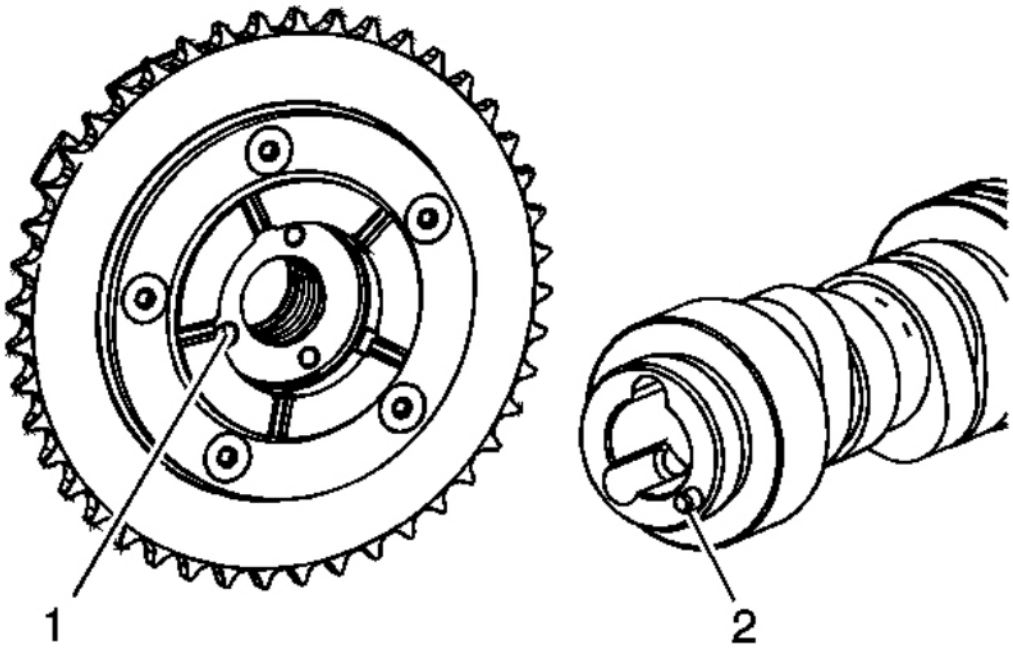

Fig. 67: Identifying Alignment Hole & Locating Pin
Courtesy of GENERAL MOTORS CORP.

IMPORTANT:

- **Properly locate the CMP actuator onto the locating pin of the camshaft.**
- **The sprocket teeth and timing chain teeth must mesh.**
- **The camshaft and the crankshaft sprocket alignment mark MUST be aligned properly.**
- **Do not use the CMP solenoid valve again. Install a NEW valve during assembly.**

8. Identify the alignment hole (1) in the rear face of the CMP actuator and the locating pin (2) on the front face of the camshaft.

cardiagn.com

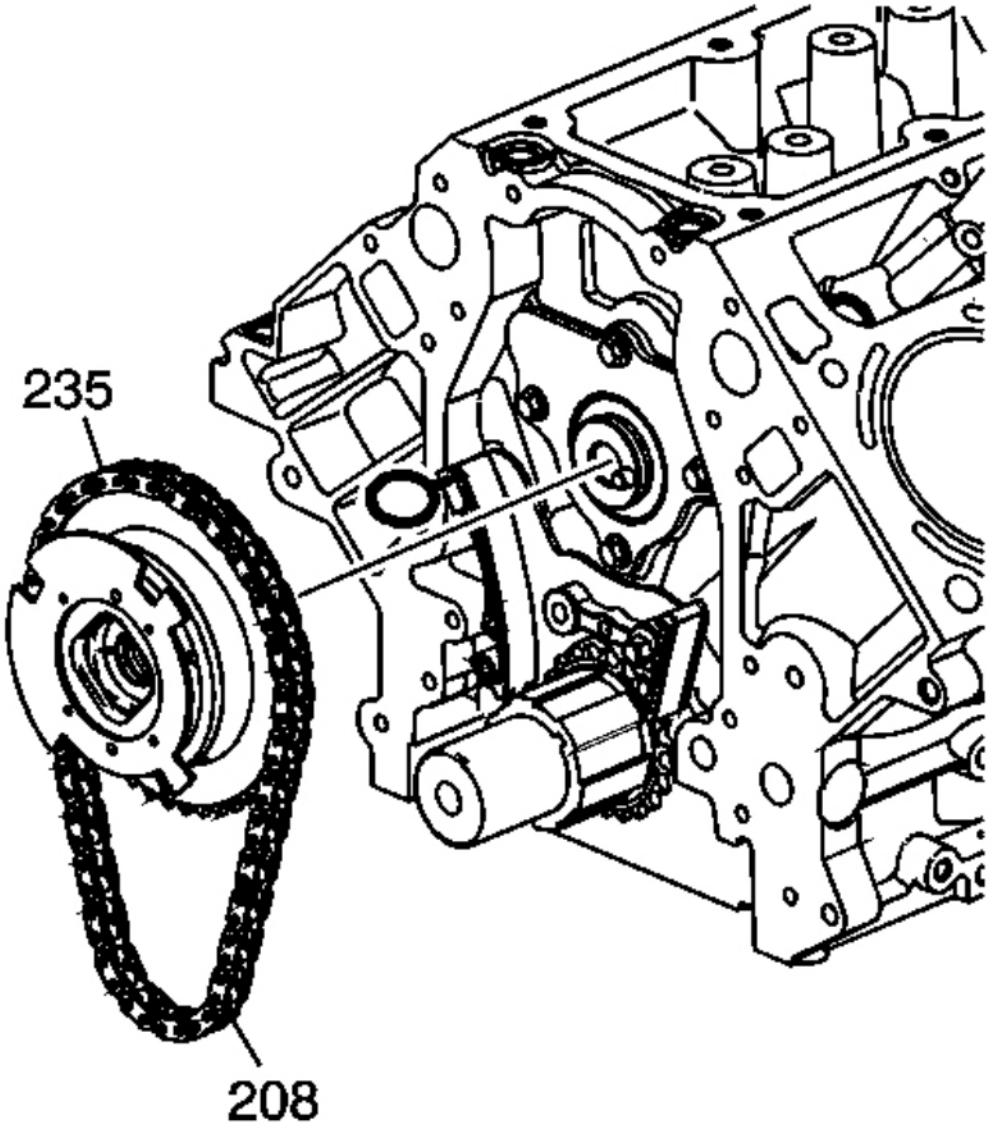

Fig. 68: View Of CMP Actuator & Timing Chain
Courtesy of GENERAL MOTORS CORP.

9. Align the CMP actuator so the timing mark is in the 6 o'clock position.
10. Install the CMP actuator (235) and timing chain (208). Align the hole in the face of the CMP actuator with the locating pin on the front face of the camshaft.

cardiagn.com

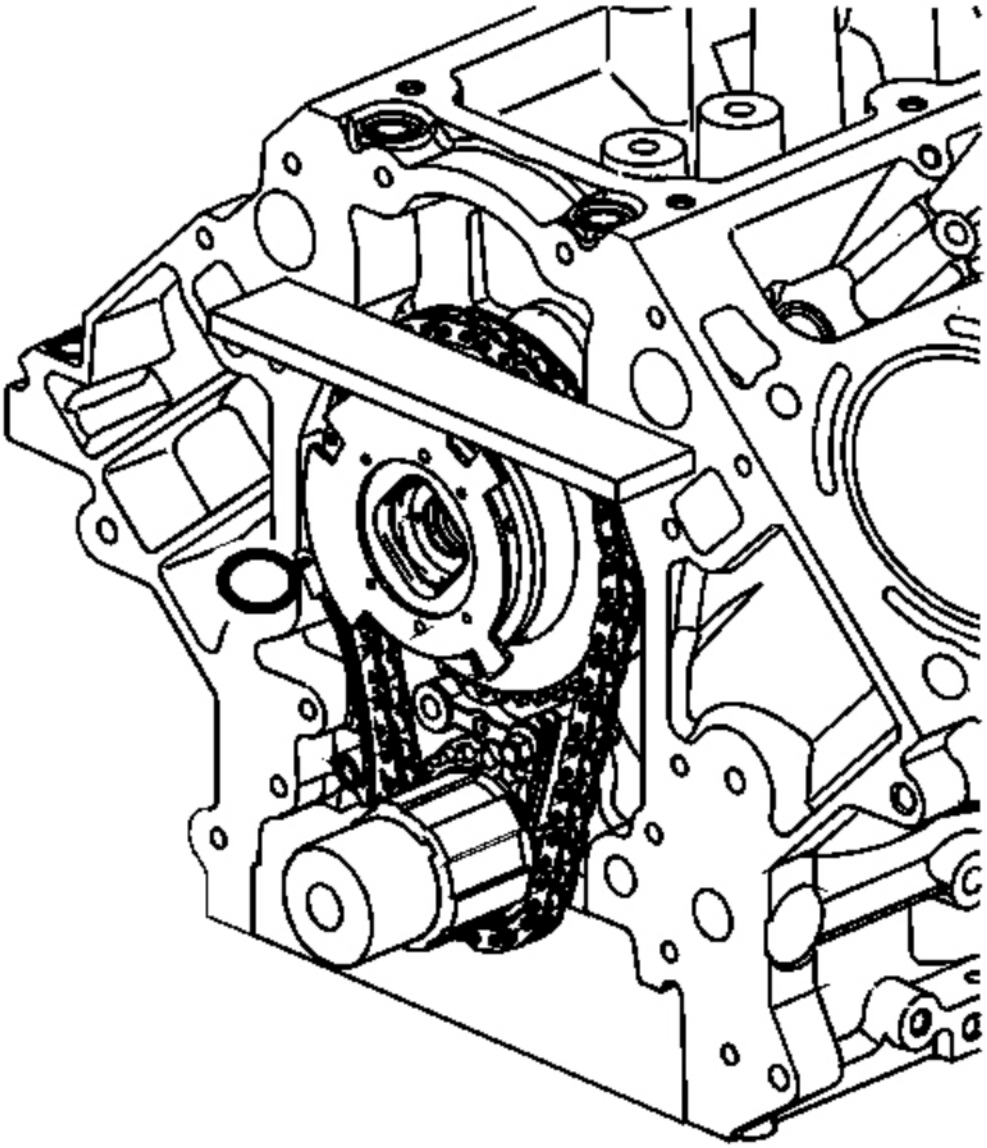

Fig. 69: Inspecting For Proper Installation Of CMP Actuator & Timing Chain
Courtesy of GENERAL MOTORS CORP.

11. Place a straight edge across the front face of the engine block and inspect for proper installation of the CMP actuator and timing chain. With the CMP actuator properly and completely installed onto the front of the camshaft, the timing chain will not protrude beyond the front face of the engine block.

cardiagn.com

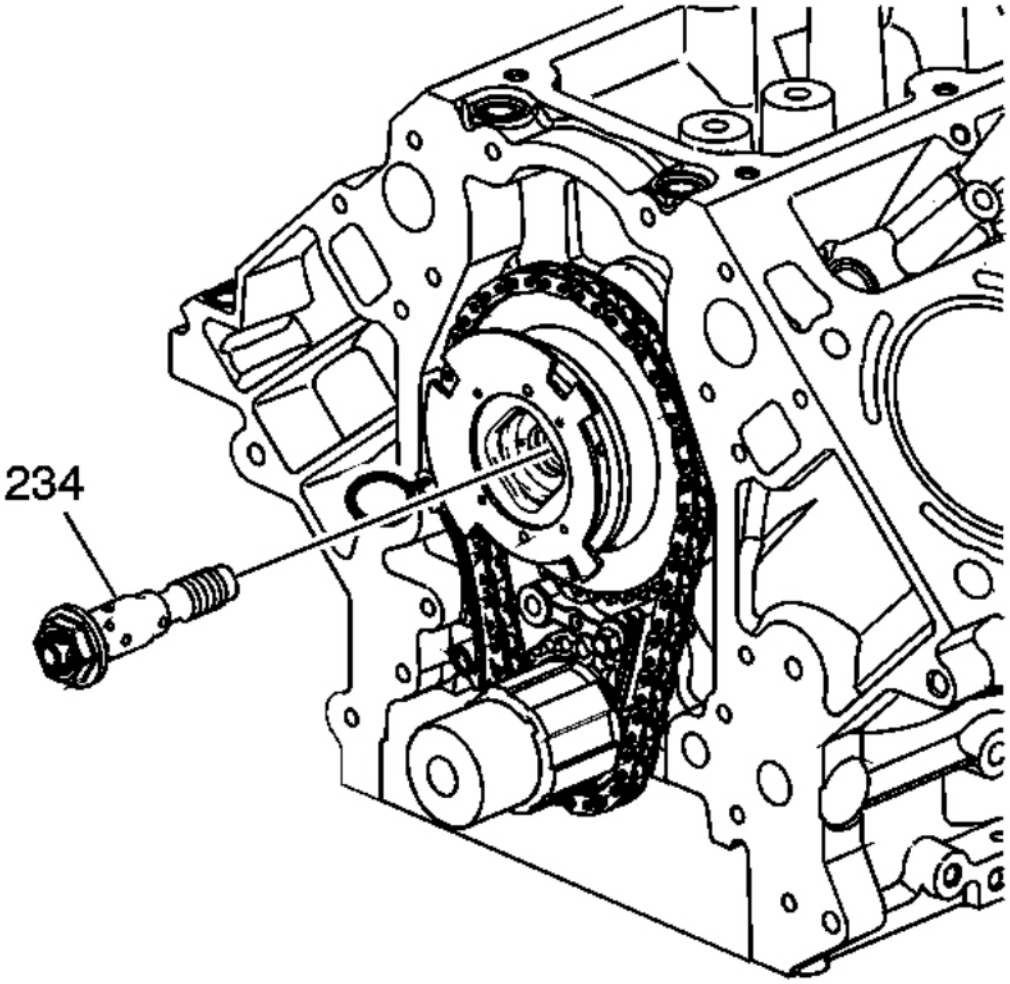

Fig. 70: View Of CMP Actuator Solenoid Valve
Courtesy of GENERAL MOTORS CORP.

12. Install a NEW CMP actuator solenoid valve (234). With the CMP actuator properly positioned onto the camshaft, the CMP actuator solenoid valve can be threaded completely into the camshaft using light hand pressure. Tighten by hand until snug.

cardiagn.com

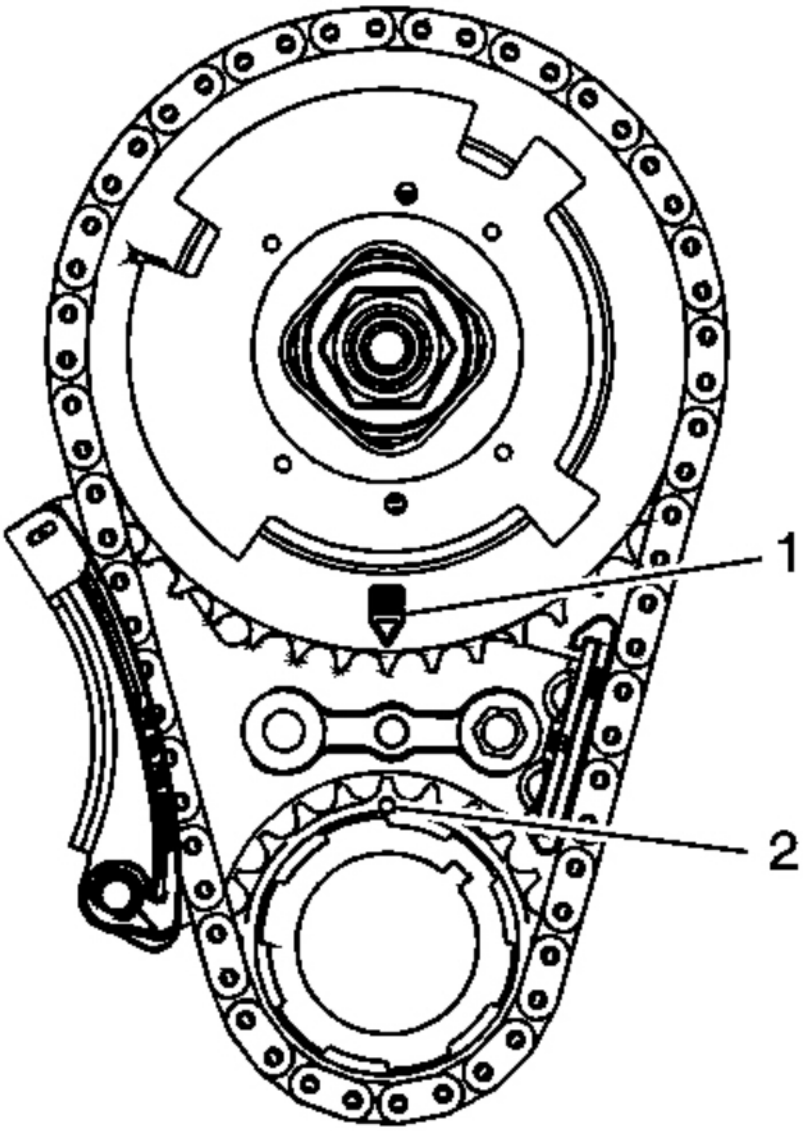

Fig. 71: View Of CMP Actuator Alignment Mark & Crankshaft Sprocket Alignment Mark
Courtesy of GENERAL MOTORS CORP.

13. Inspect the sprockets for proper alignment. The mark on the CMP actuator sprocket (1) should be located in the 6 o'clock position and the mark on the crankshaft sprocket (2) should be located in the 12 o'clock position.

cardiagn.com

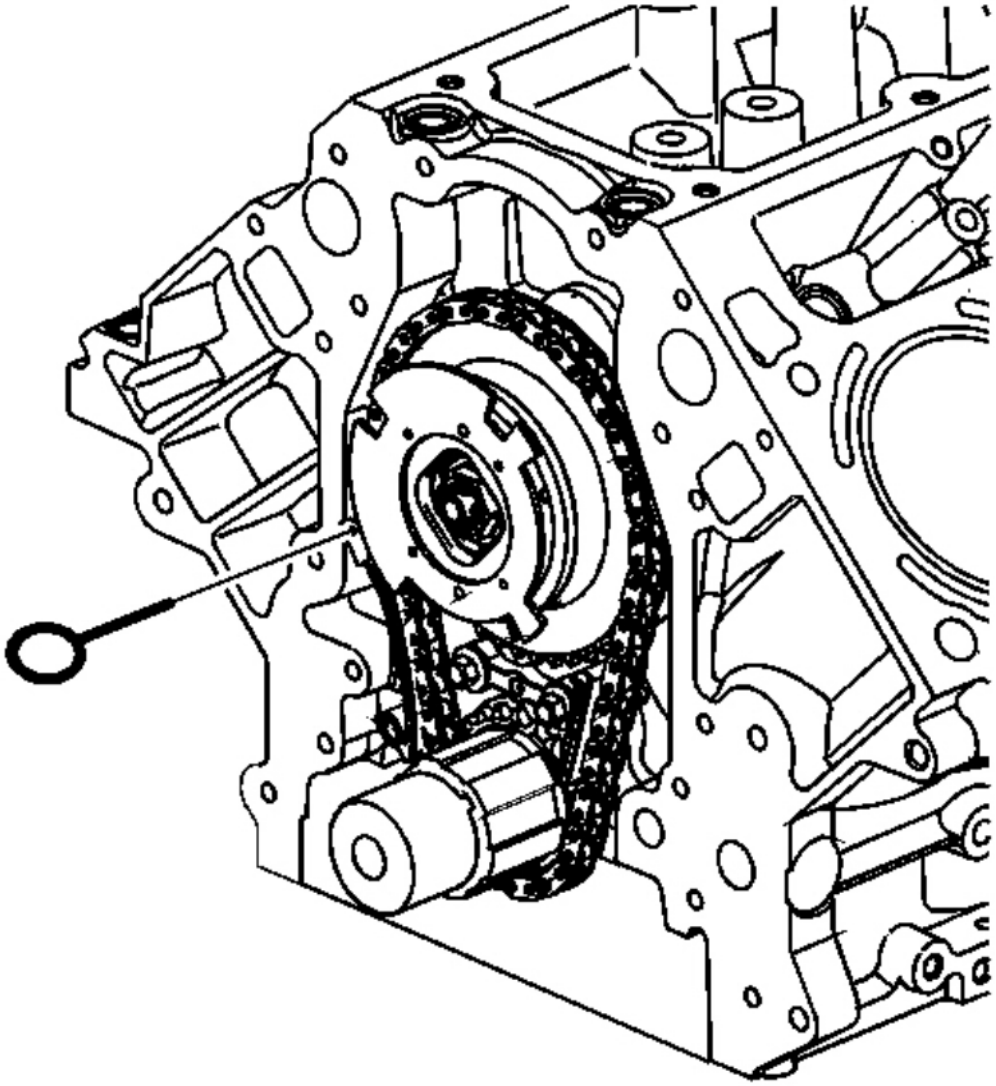

Fig. 72: View Of Special Tool EN 46330
Courtesy of GENERAL MOTORS CORP.

14. Remove the **EN 46330** . See **Special Tools** .

cardiagn.com

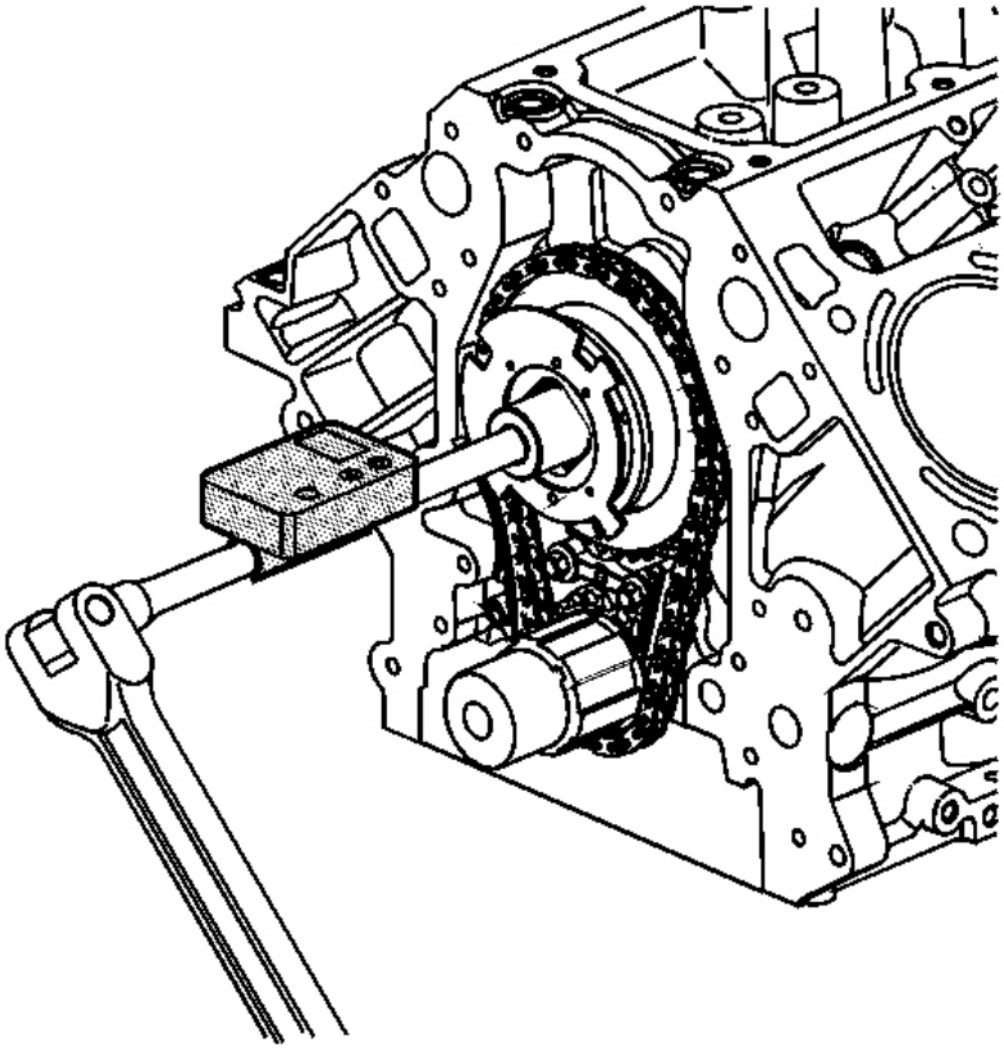

Fig. 73: Tightening The CMP Actuator Solenoid Valve
Courtesy of GENERAL MOTORS CORP.

15. Tighten the CMP actuator solenoid valve.

Tighten:

1. Tighten the valve a first pass to 65 N.m (48 lb ft).
2. Tighten the valve a final pass to 90 degrees using **J 45059** . See **Special Tools** .

cardiagn.com

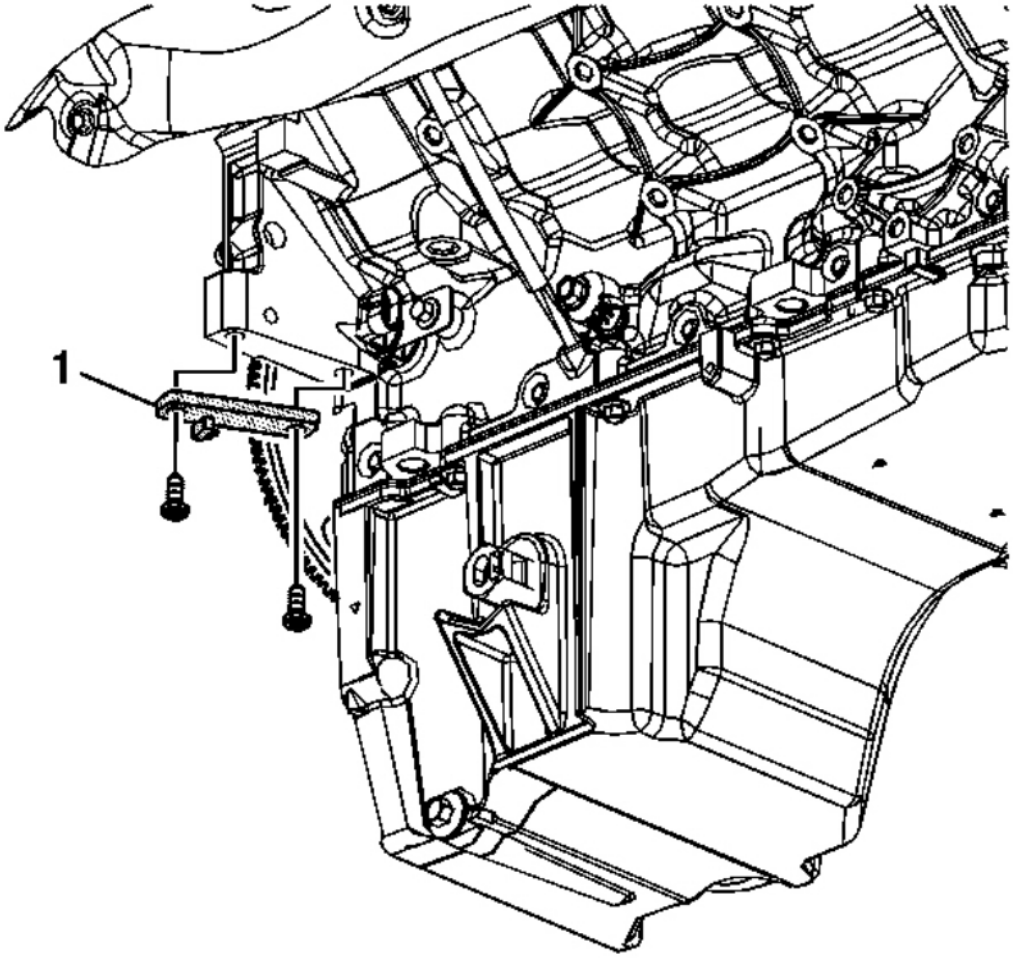

Fig. 74: View Of Special Tool & Bolts
Courtesy of GENERAL MOTORS CORP.

16. Remove the **J 42386-A** (1) and bolts. See **Special Tools** .
17. Install the starter motor. Refer to **Starter Motor Replacement** .
18. Install the engine front cover. Refer to **Engine Front Cover Replacement (RPOs LC9/LMG/LY2/LY5)** or **Engine Front Cover Replacement (RPOs LY6/L76/L92)** .
19. Install the valve lifters. Refer to **Valve Lifter Replacement (RPOs LC9/LMG/LY5/L76/L92)** or **Valve Lifter Replacement (RPOs LY2/LY6)** .
20. Install the radiator support. Refer to **Radiator Support Replacement** .

AUTOMATIC TRANSMISSION FLEX PLATE REPLACEMENT

cardiagn.com

REMOVAL PROCEDURE

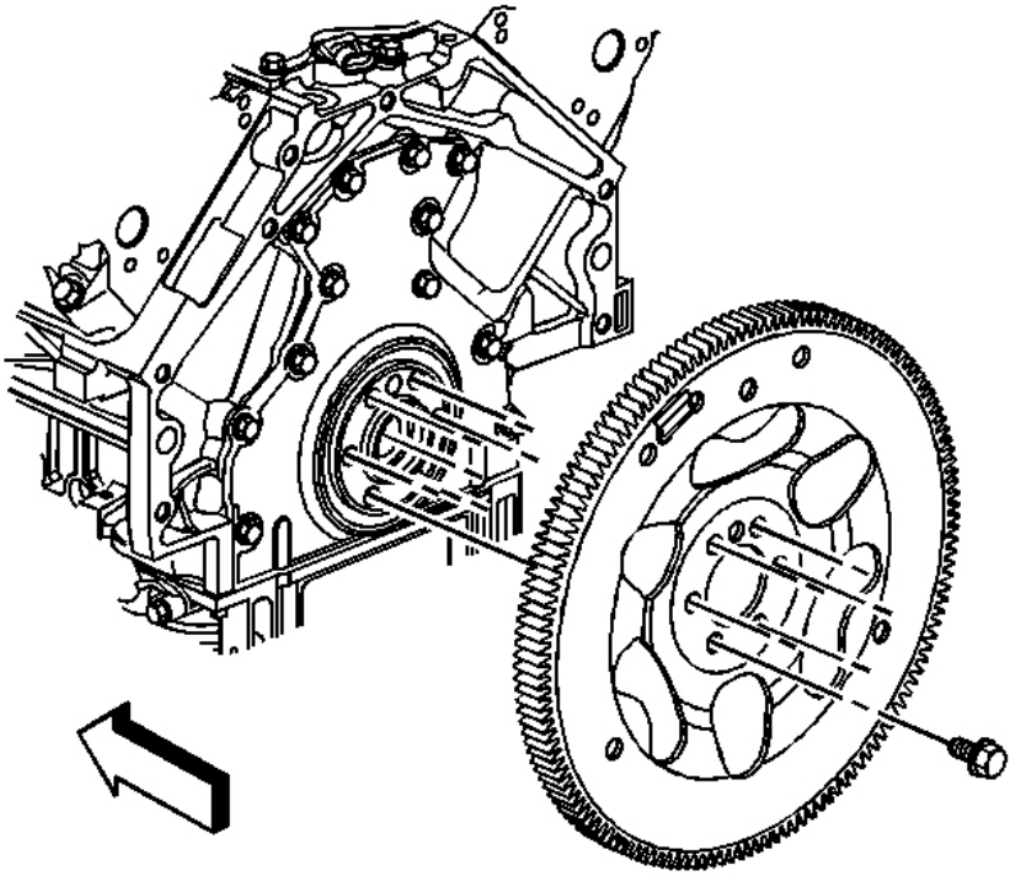

Fig. 75: View Of Engine Flywheel & Bolts
Courtesy of GENERAL MOTORS CORP.

1. Remove the automatic transmission. Refer to **Transmission Replacement** for the 4L60-E or **Transmission Replacement** for the 4L80-E.

IMPORTANT: Note the position and direction of the engine flywheel before removal.

2. Remove the flywheel bolts.
3. Remove the flywheel.

cardiagn.com

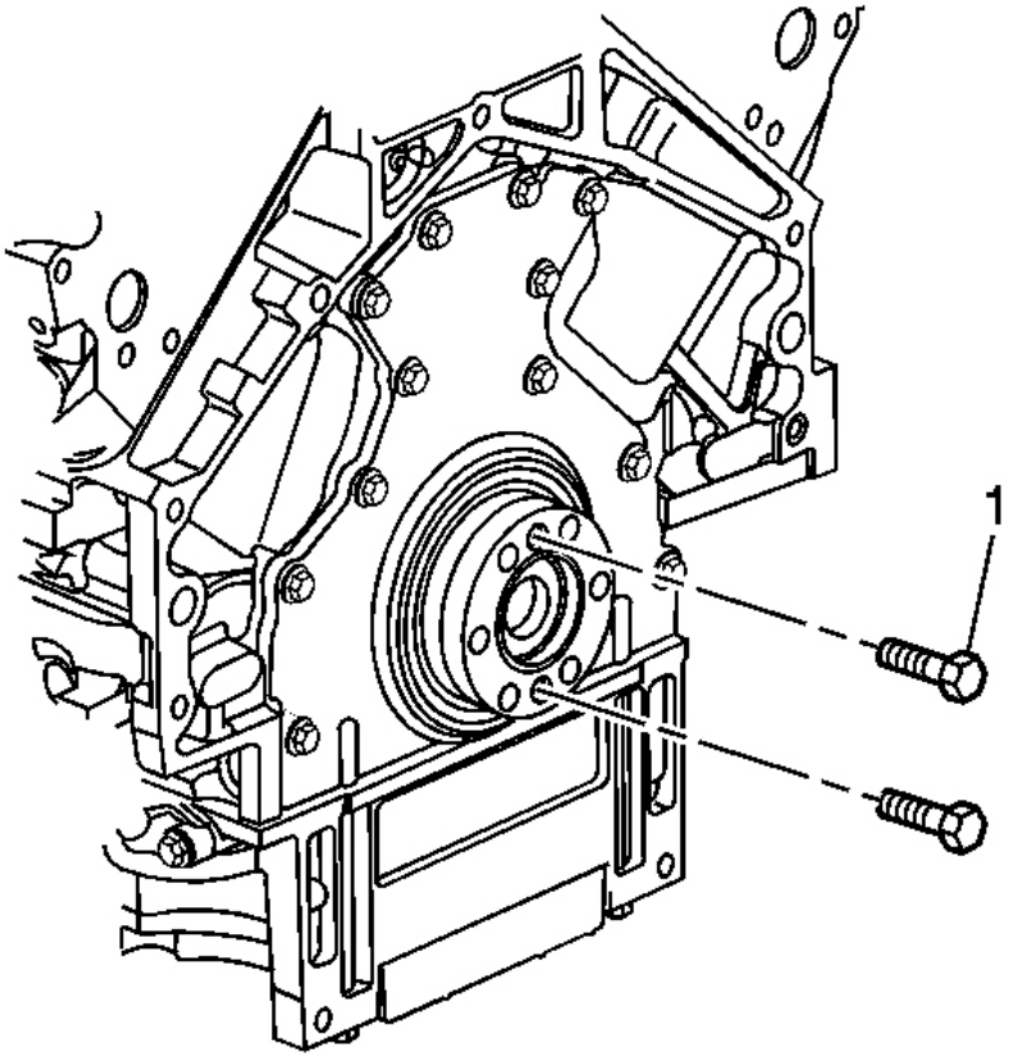

Fig. 76: View Of Bolts & Spacer
Courtesy of GENERAL MOTORS CORP.

4. Install two M11x1.5 mm bolts (1) to the threaded holes of the spacer, if applicable.
5. Rotate the bolts clockwise to remove the spacer.

cardiagn.com

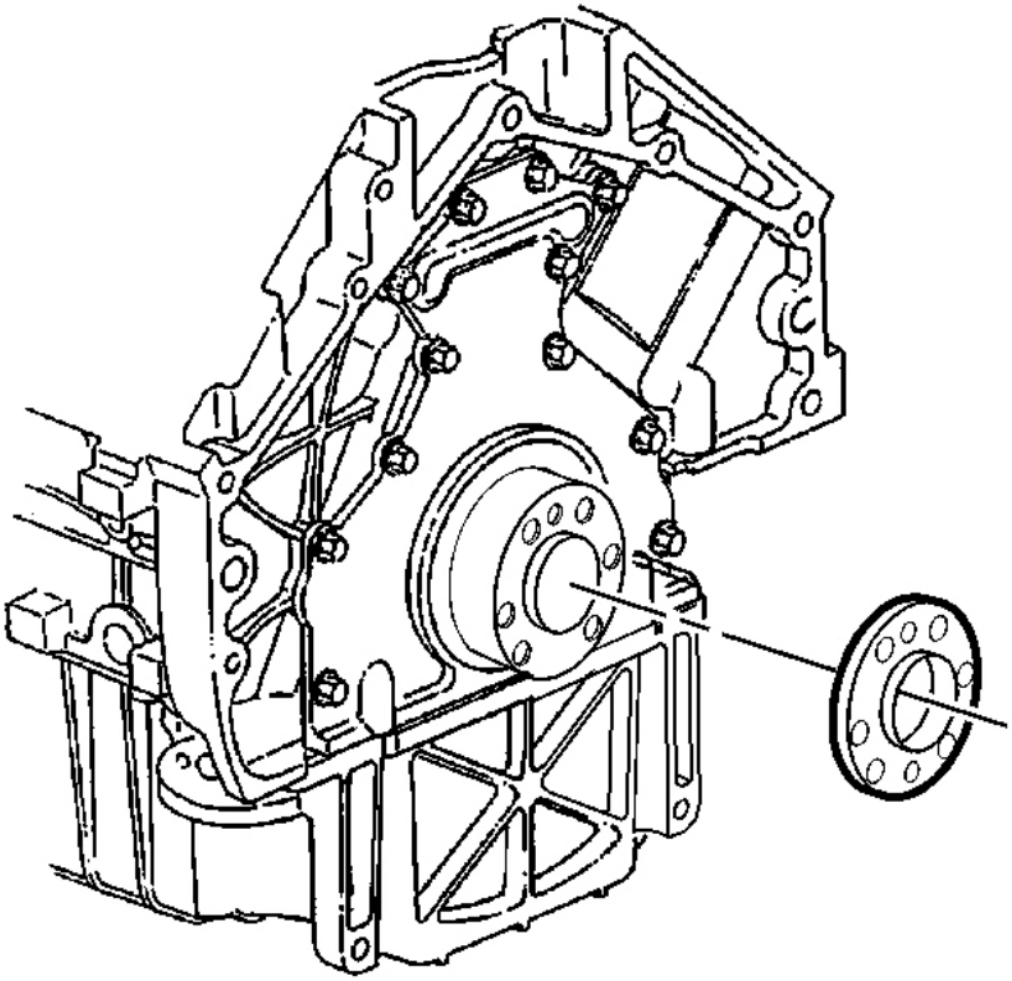

Fig. 77: View Of Spacer & Crankshaft Rear
Courtesy of GENERAL MOTORS CORP.

6. Remove the spacer from the rear of the crankshaft, if applicable.

INSTALLATION PROCEDURE

IMPORTANT:

- **The flywheel does not use a locating pin for alignment and will not initially seat against the crankshaft flange or spacer, if applicable, but will be pulled onto the crankshaft by the engine flywheel bolts. This procedure requires a three stage tightening process.**
- **Certain applications (6.0L) require a spacer and longer bolts for proper**

cardiagn.com

flywheel position.

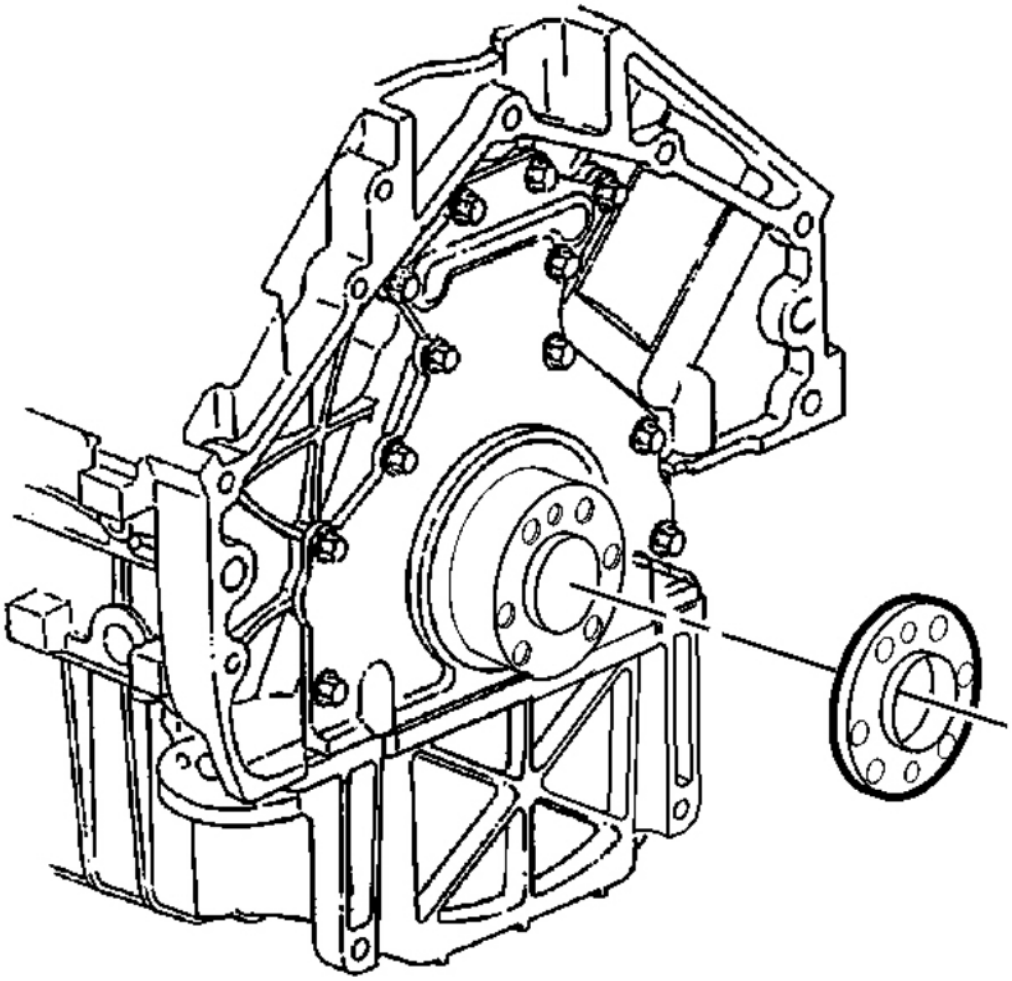

Fig. 78: View Of Spacer & Crankshaft Rear
Courtesy of GENERAL MOTORS CORP.

1. Install the spacer, if applicable, onto the rear of the crankshaft.

cardiagn.com

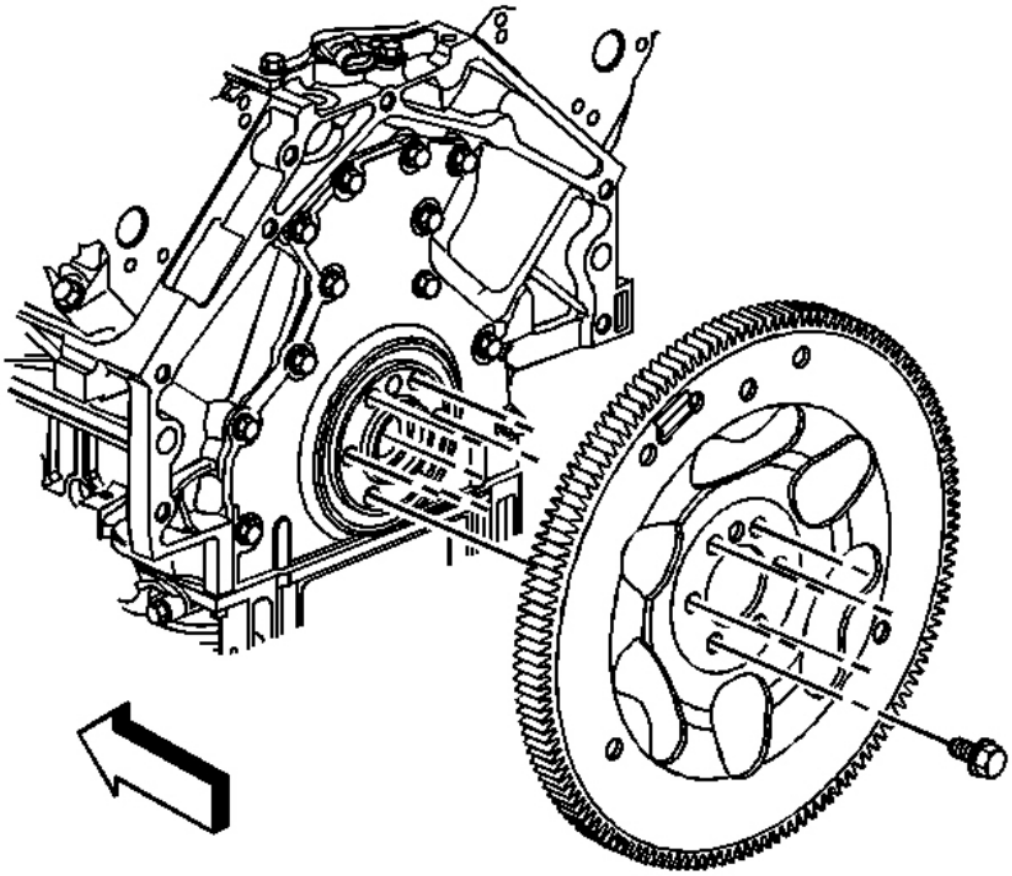

Fig. 79: View Of Engine Flywheel & Bolts
Courtesy of GENERAL MOTORS CORP.

IMPORTANT: Longer flywheel bolts must be used on applications using a flywheel spacer.

2. Install the flywheel and bolts to the crankshaft.
3. Apply threadlock to the threads of the flywheel bolts. Refer to **Sealers, Adhesives, and Lubricants** for the correct part number.

cardiagn.com

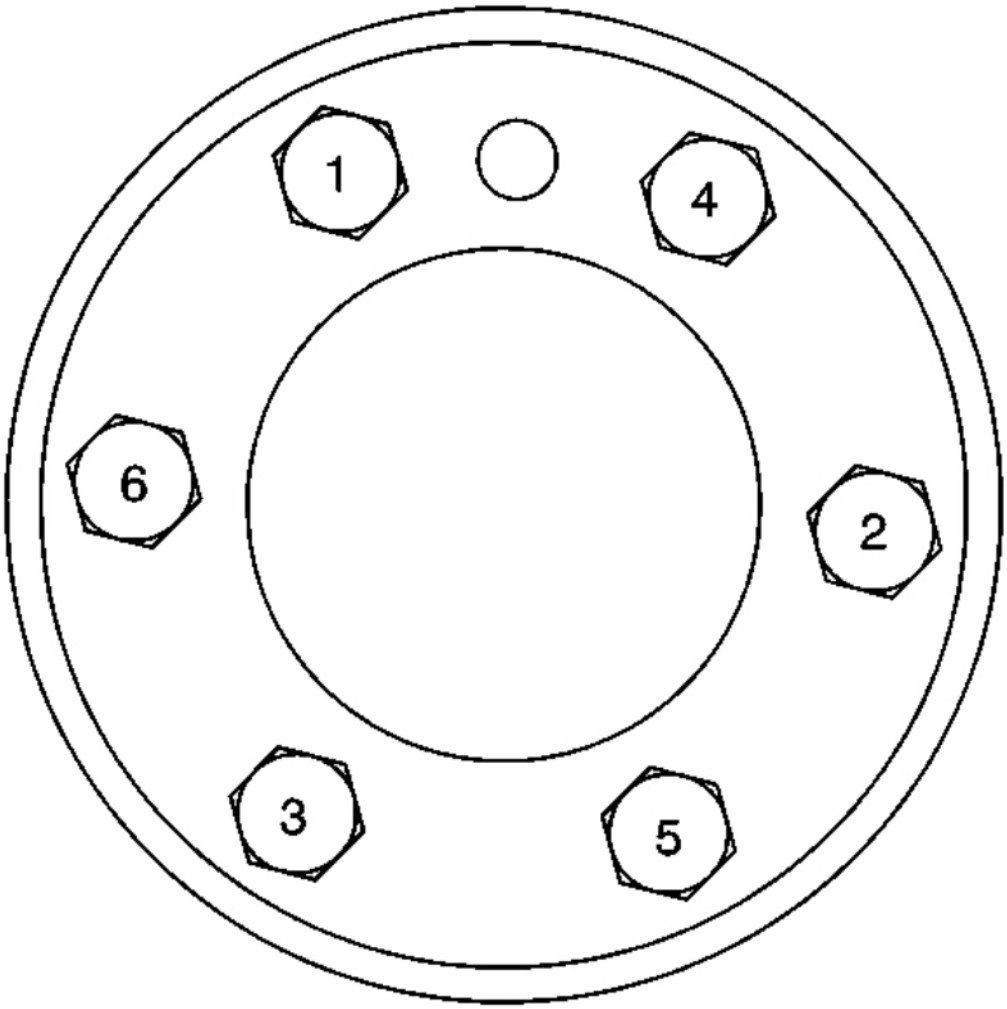

Fig. 80: Identifying Flywheel Bolt Tightening Sequence
Courtesy of GENERAL MOTORS CORP.

NOTE: **Refer to Fastener Notice .**

4. Tighten the flywheel bolts.

Tighten:

1. Tighten the bolts (1-6) a first pass in sequence to 20 N.m (15 lb ft).
2. Tighten the bolts (1-6) a second pass in sequence to 50 N.m (37 lb ft).
3. Tighten the bolts (1-6) a final pass in sequence to 100 N.m (74 lb ft).

cardiagn.com

5. Install the automatic transmission. Refer to **Transmission Replacement** for the 4L60-E or **Transmission Replacement** for the 4L80-E.

ENGINE REPLACEMENT

Tools Required

- **J 21366** Converter Holding Strap. See **Special Tools** .
- **J 41798** Engine Lifting Brackets. See **Special Tools** .

REMOVAL PROCEDURE

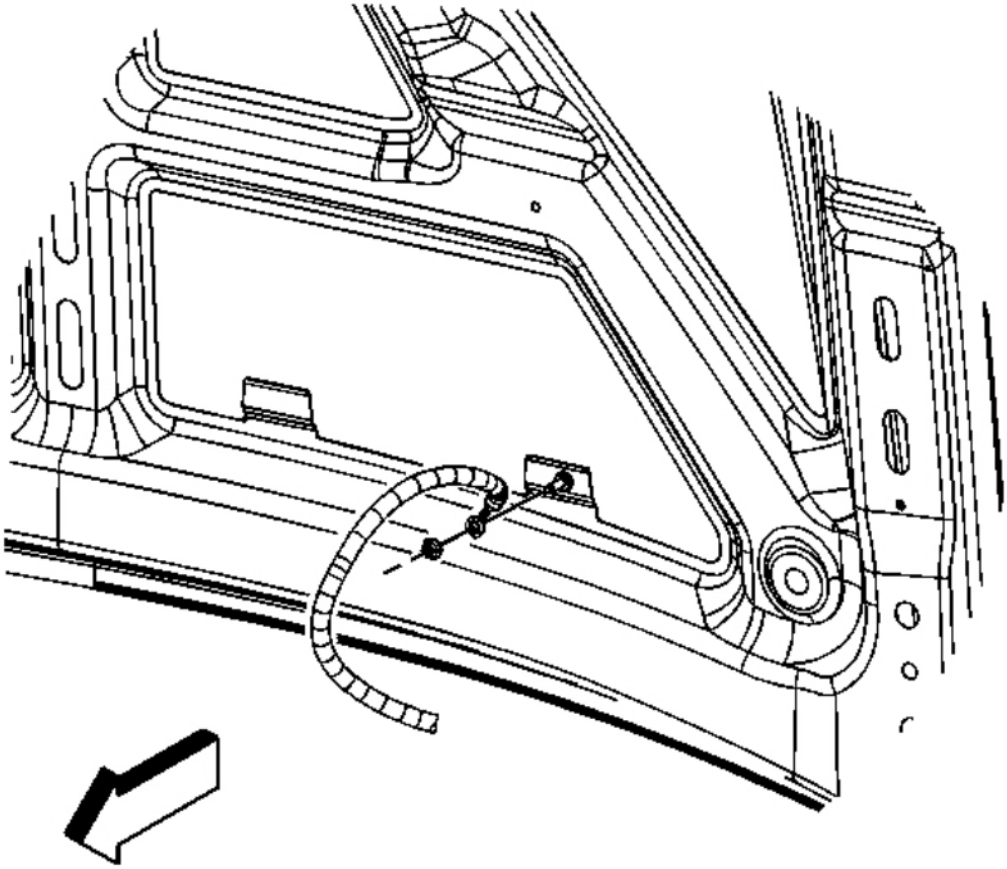

Fig. 81: View Of Ground Strap & Nut
Courtesy of GENERAL MOTORS CORP.

cardiagn.com

1. Open the hood.
2. Remove the ground strap nut at the hood stud.
3. Remove the ground strap from the stud.

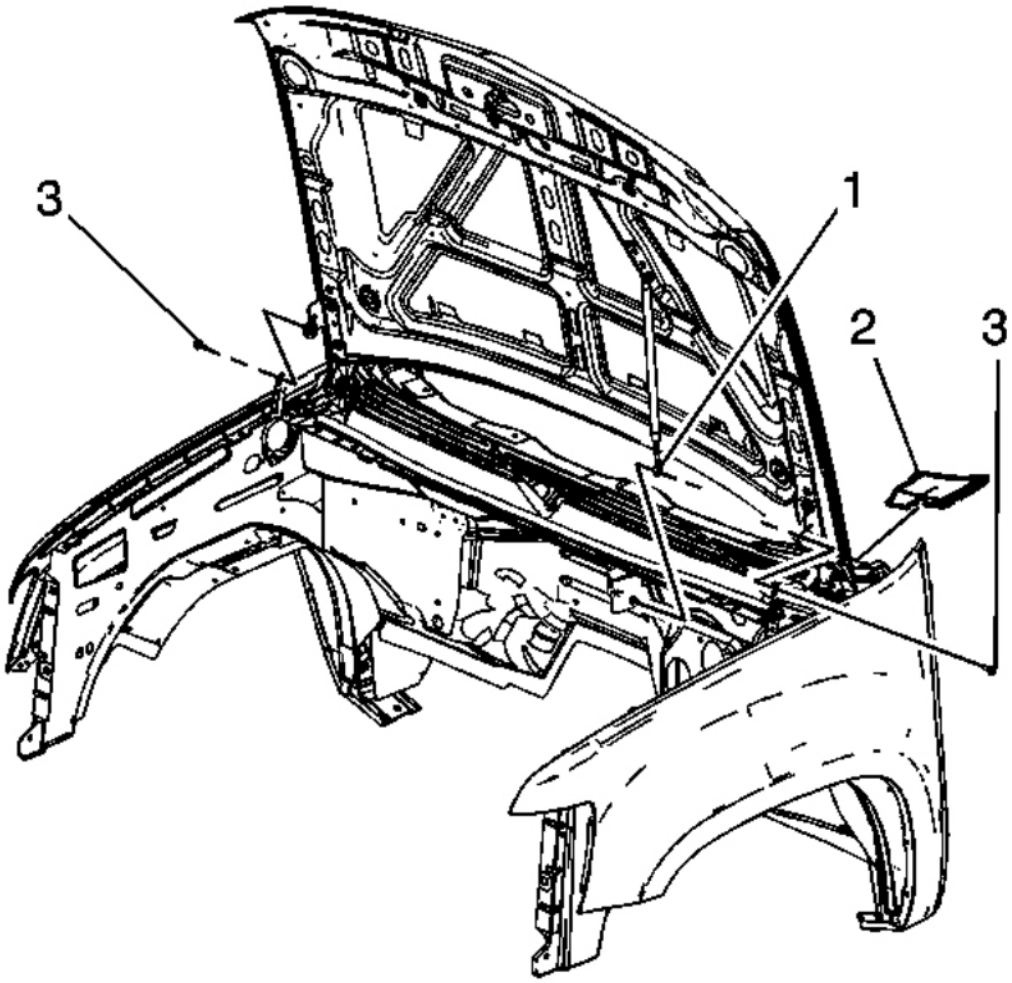

Fig. 82: View Of Hood Strut Rod, Grille End Caps & Hood Hinge Bolts
Courtesy of GENERAL MOTORS CORP.

4. Assemble 2 sets of the following: an M6 bolt, 2 each 19.05 mm (0.75 in) flat washers and an M6 nut.
5. Release the retainer securing the hood strut rod to the hood strut bracket stud.
6. Remove the hood strut rod (1) from the stud.
7. Remove the air inlet grille end caps (2), lift the end cap up in order to disengage the retainers. (left side

cardiagn.com

shown, right side similar).

8. Have an assistant support the hood.
9. Remove the hood hinge bolts (3) and set aside.

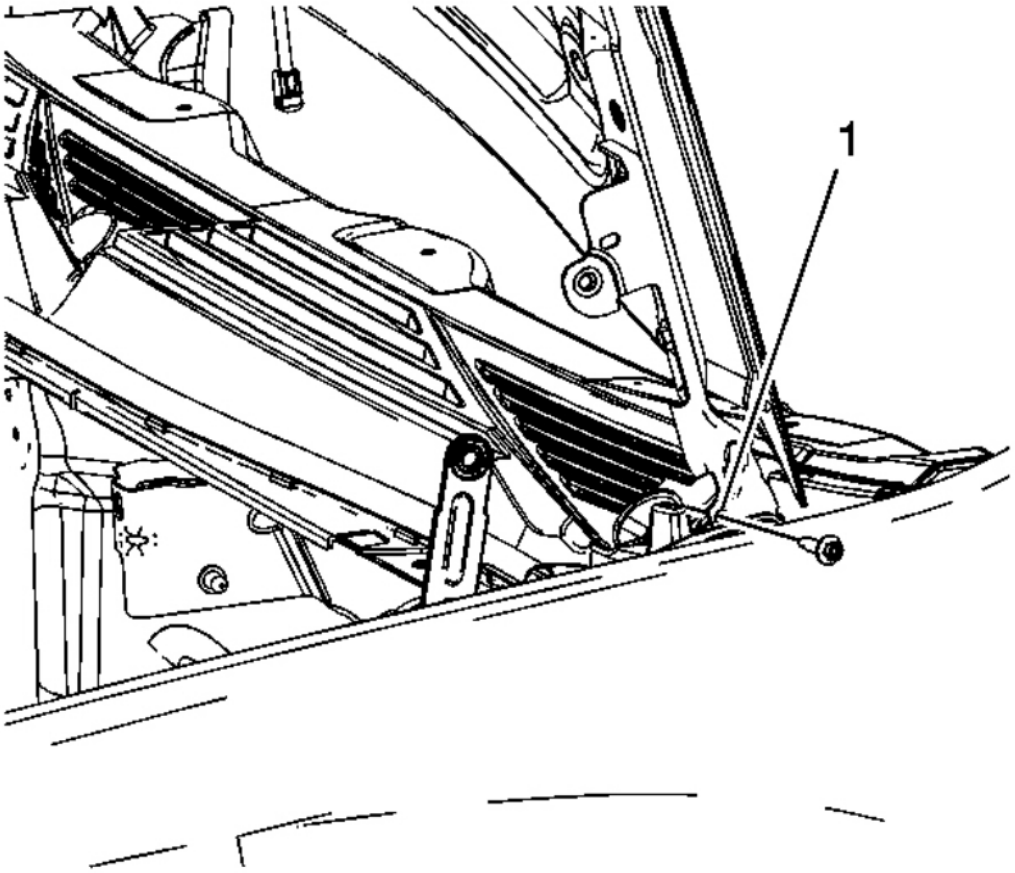

Fig. 83: View Of Service Piston Notch
Courtesy of GENERAL MOTORS CORP.

IMPORTANT: There is a positive stop which limits the hood from being opened too far.

10. Raise the hood until the service position notch (1) in the upper hinge is reached.
11. Install the 2 sets of the M6 bolts to both the left and right side service notches and tighten finger tight.

NOTE: Refer to Fastener Notice .

cardiagn.com

12. Lower the hood until the bolts rest against the lower hinge, tighten the bolts to secure the hood.

    Tighten: Tighten the bolts to 20 N.m (15 lb ft).

13. The hood is now set in the service position.

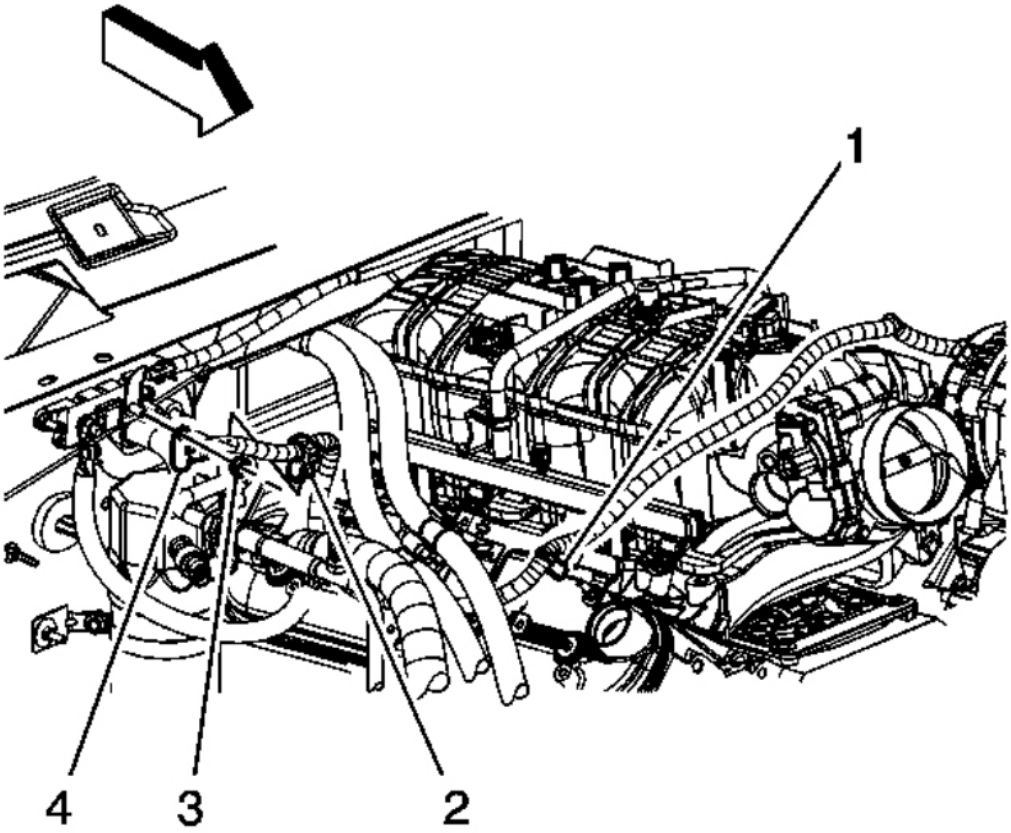

Fig. 84: View Of Generator Battery Jumper Cable & Components
Courtesy of GENERAL MOTORS CORP.

14. Remove the radiator support. Refer to **Radiator Support Replacement** .
15. Remove the air conditioning (A/C) compressor. Refer to **Compressor Replacement** .
16. Lower the vehicle.
17. Remove the intake manifold. Refer to **Intake Manifold Replacement (RPOs LC9/LMG/LY5/L76/L92)** or **Intake Manifold Replacement (RPOs LY2/LY6)** .
18. Remove the generator battery jumper clip (1) from the stud.

cardiagn.com

19. Reposition the generator battery jumper out of the way.

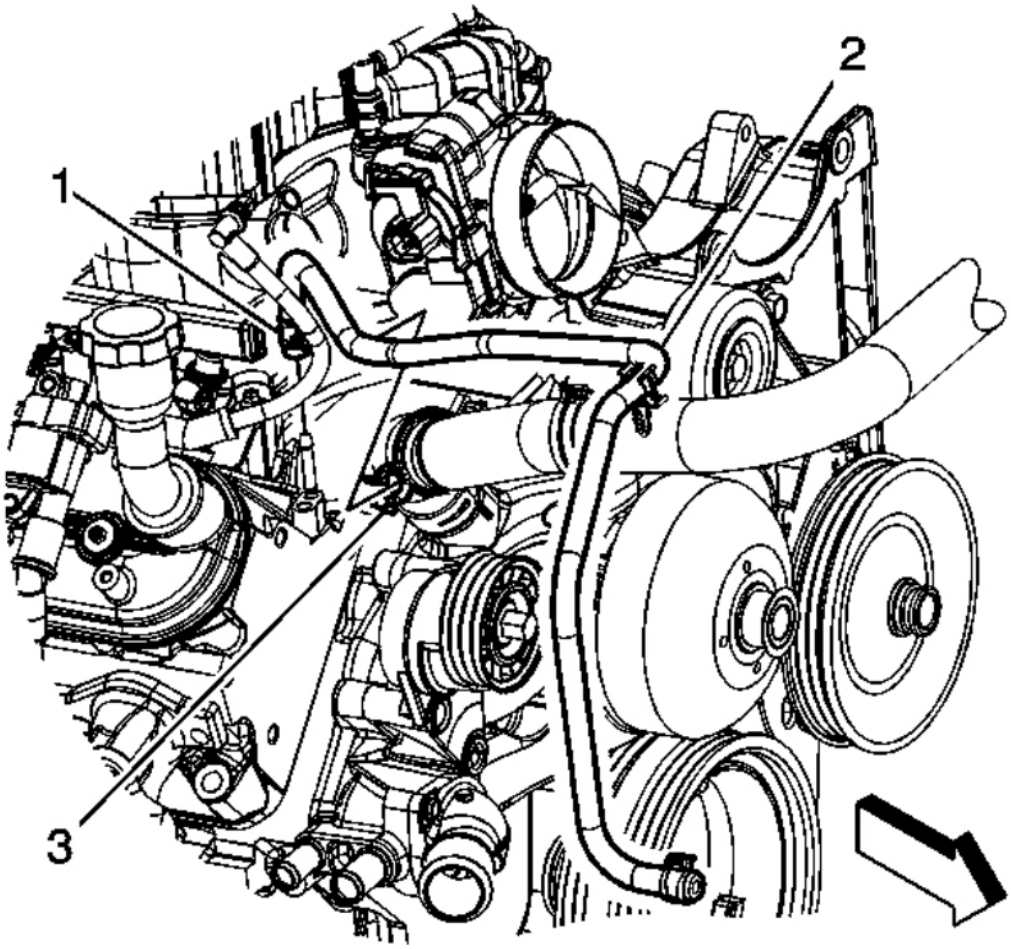

Fig. 85: View Of Radiator Vent Inlet Hose & Clamps
Courtesy of GENERAL MOTORS CORP.

20. Remove the radiator vent inlet hose (2) from the radiator inlet hose clip (3).
21. Reposition the radiator vent inlet hose clamp (1) at the air bleed pipe.
22. Remove the radiator vent inlet hose (2) from the air bleed pipe and reposition.

cardiagn.com

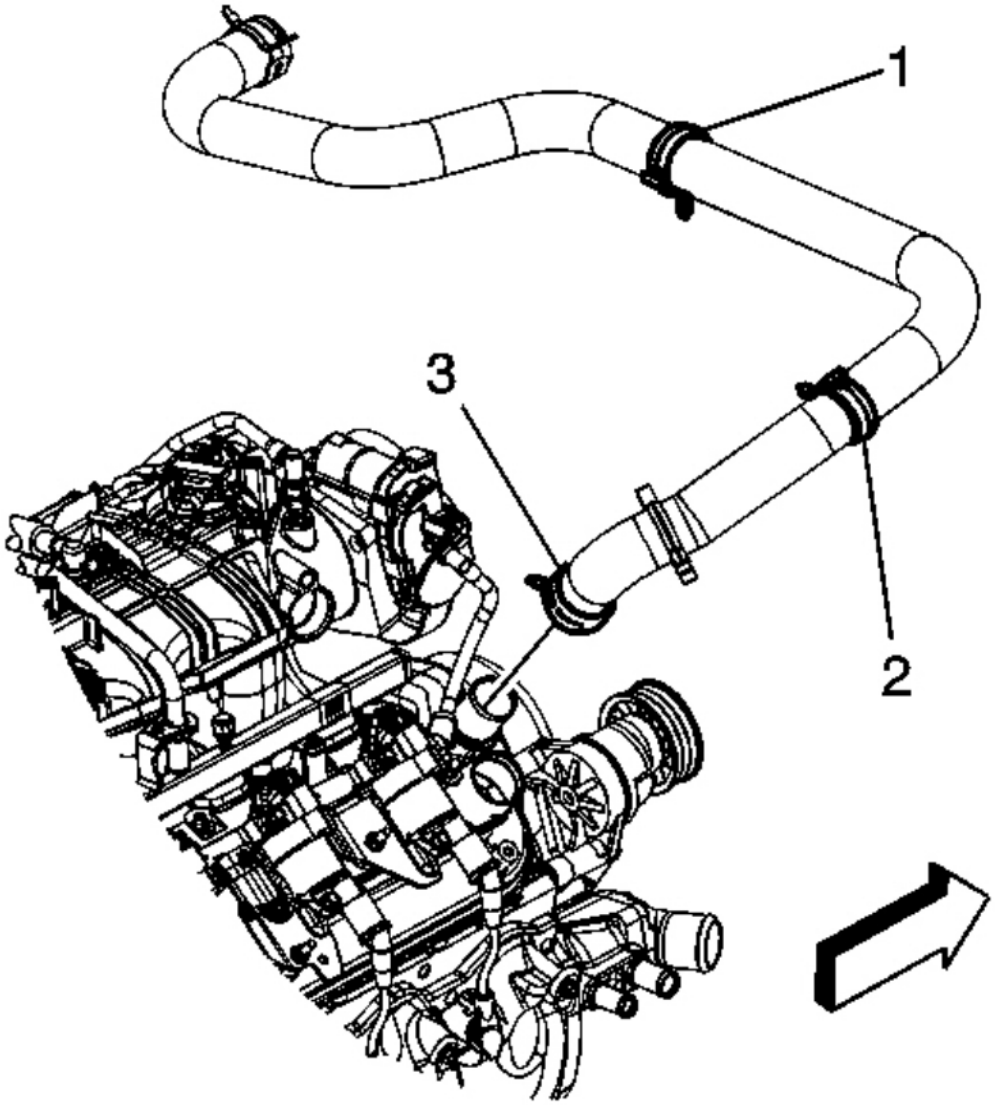

Fig. 86: View Of Radiator Vent Inlet Hose Clamp At Water Pump
Courtesy of GENERAL MOTORS CORP.

23. Reposition the radiator inlet hose clamp (3) at the water pump.
24. Remove the radiator inlet hose from the water pump.

cardiagn.com

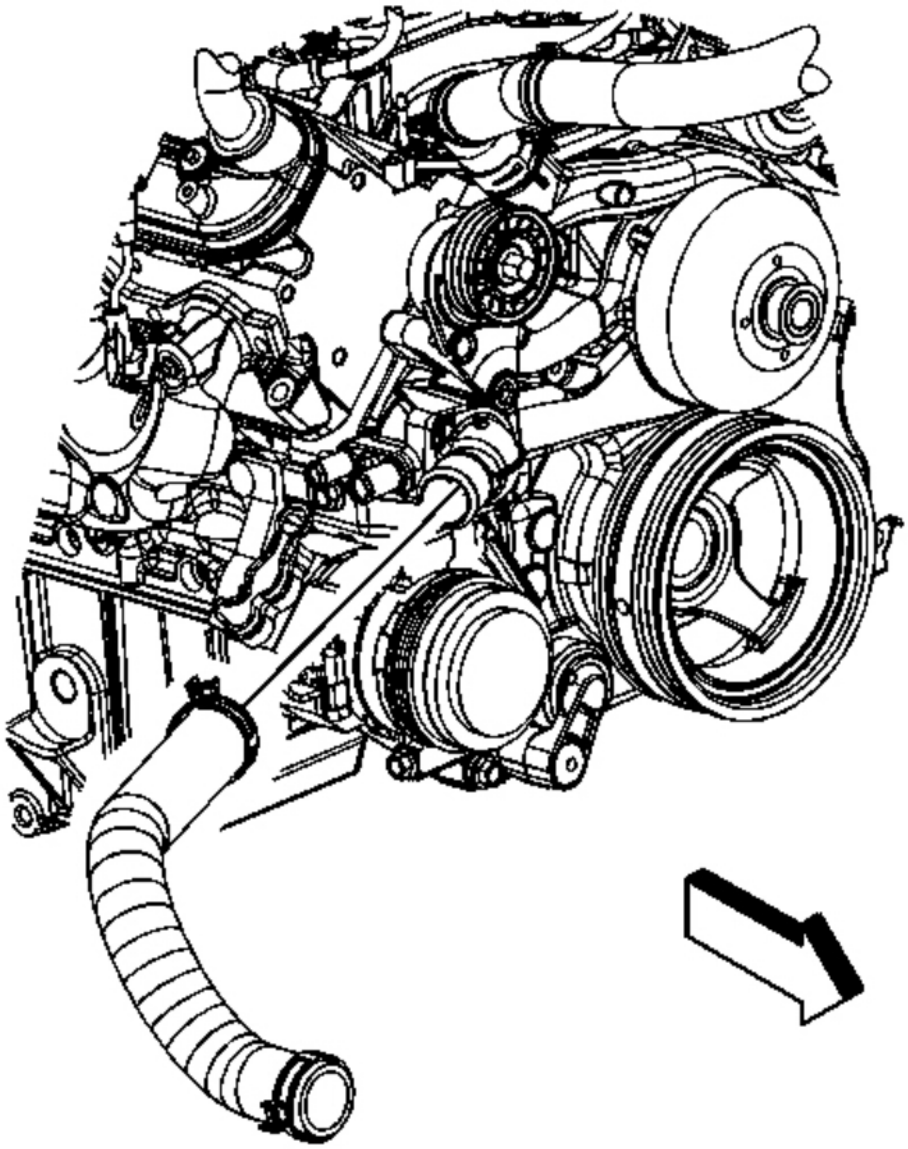

Fig. 87: View Of Radiator Outlet Hose
Courtesy of GENERAL MOTORS CORP.

25. Reposition the radiator outlet hose clamp at the water pump.
26. Remove the radiator outlet hose from the water pump.
27. Remove the heater hoses. Refer to **Heater Inlet Hose Replacement** and **Heater Hose Replacement -**

cardiagn.com

Outlet .

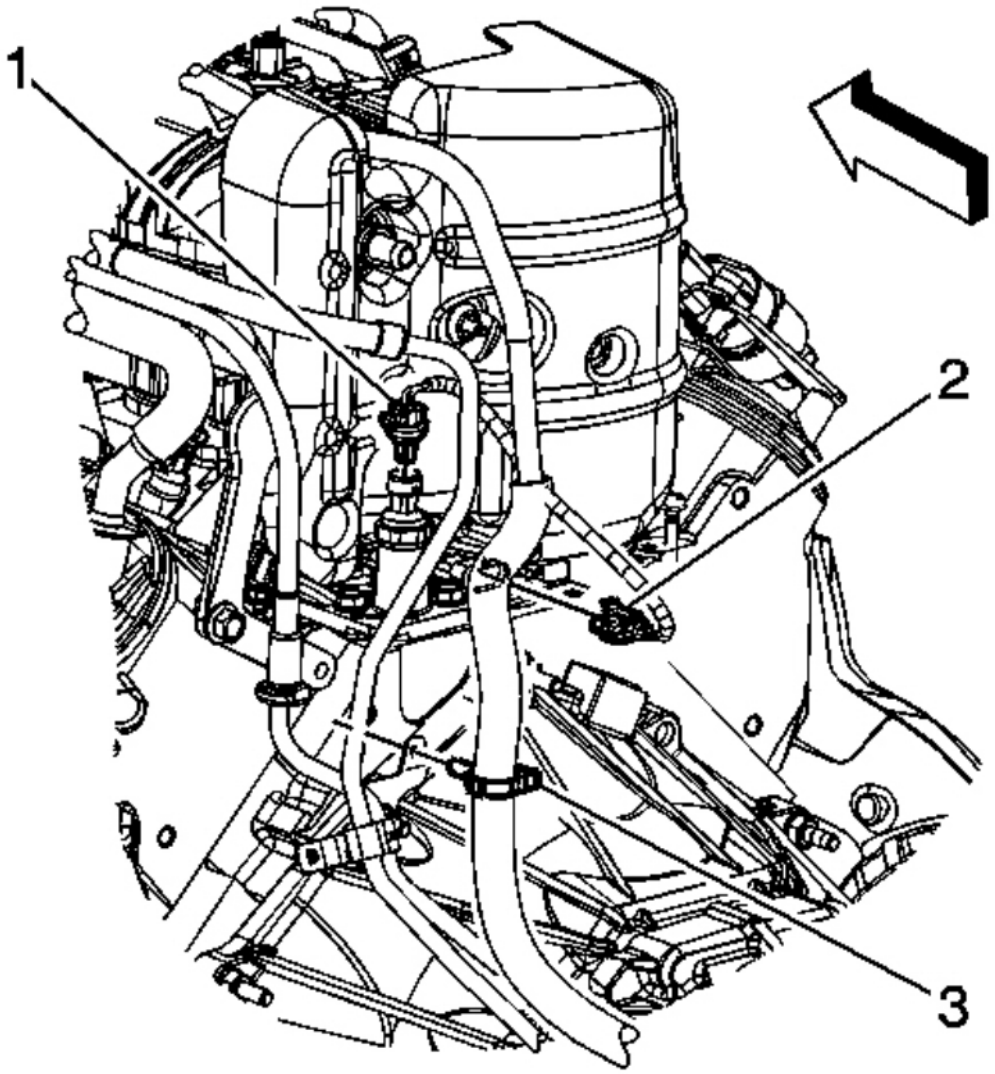

Fig. 88: View Of Engine Harness Electrical Connectors & Inlet Hose Clamp
Courtesy of GENERAL MOTORS CORP.

28. Disconnect the engine harness electrical connector (1) from the oil pressure sensor.
29. Disconnect the engine harness electrical connector (2) from the lifter oil manifold.

cardiagn.com

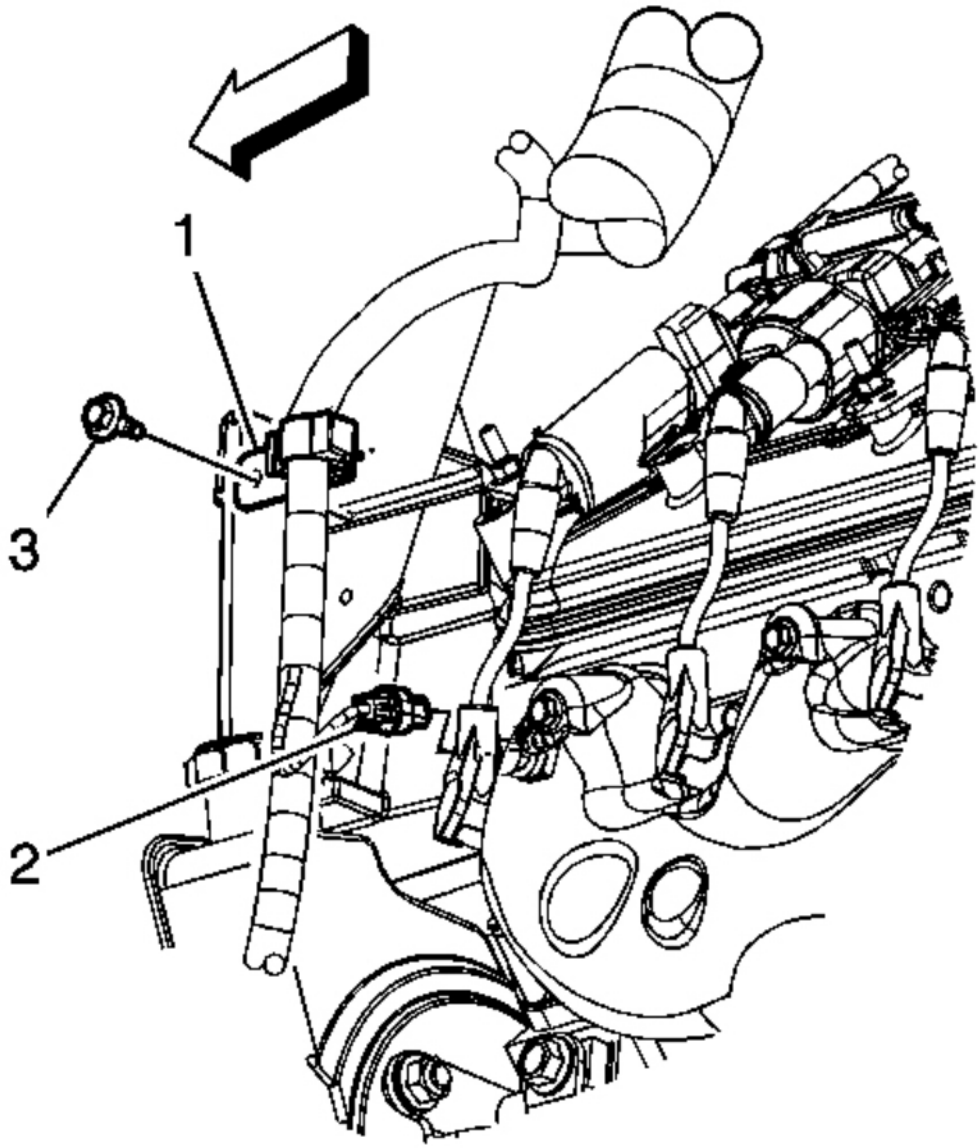

Fig. 89: View Of Engine Wiring Harness, Clip, Bolt & Connector
Courtesy of GENERAL MOTORS CORP.

30. Disconnect the engine harness electrical connector (2) from the engine coolant temperature (ECT) sensor.
31. Remove the engine harness clip bolt (1) from the generator/power steering pump bracket.

cardiagn.com

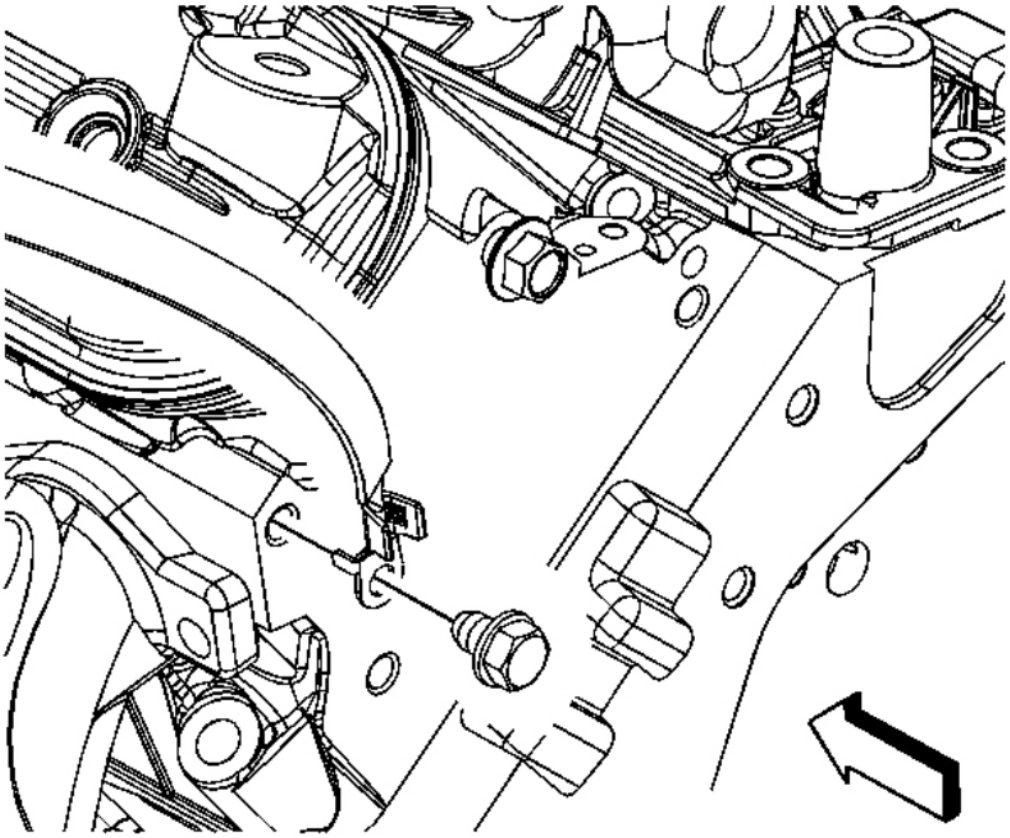

Fig. 90: View Of Engine Ground Strap & Bolt
Courtesy of GENERAL MOTORS CORP.

32. Remove the engine ground strap bolt from the rear of the left cylinder head.
33. Remove the engine ground strap from the cylinder head and reposition.

cardiagn.com

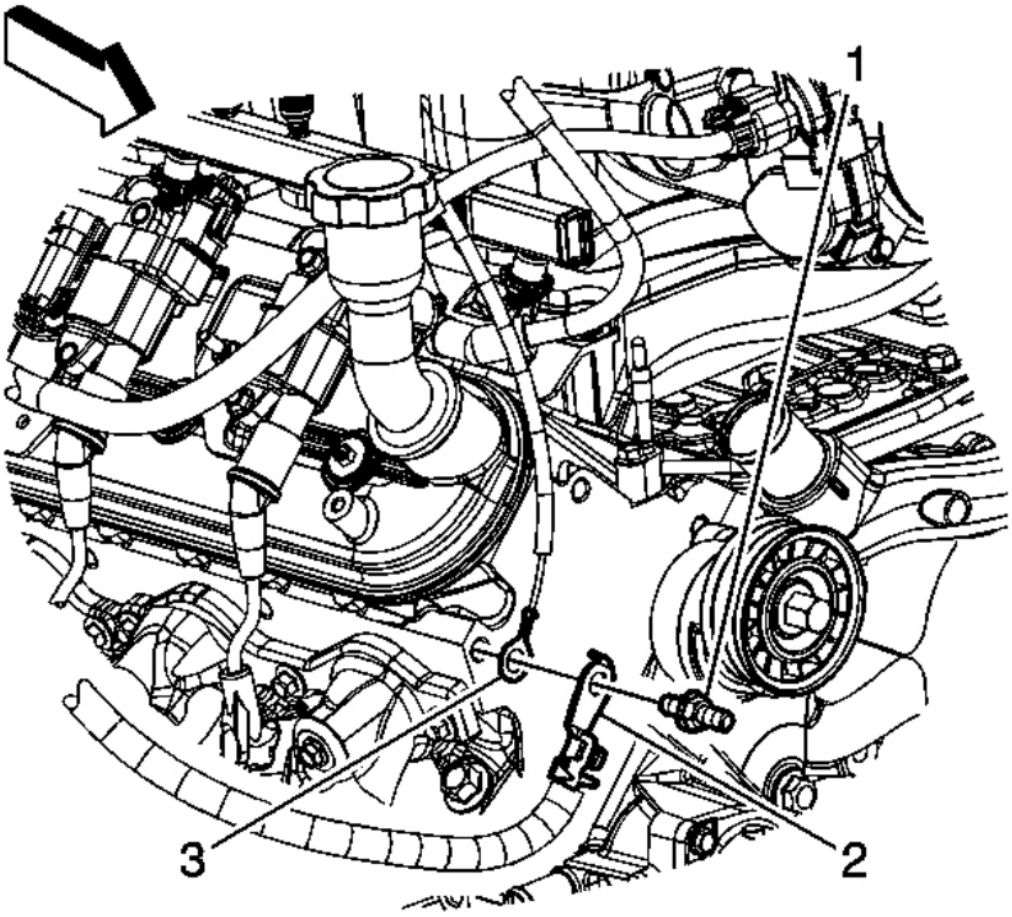

Fig. 91: View Of Battery Cable Terminals & Stud
Courtesy of GENERAL MOTORS CORP.

34. Remove the negative battery cable stud (1) from the right cylinder head.
35. Remove the negative battery cable terminal (2) and the engine harness ground (3) from the cylinder head.
36. Raise and support the vehicle. Refer to **Lifting and Jacking the Vehicle** .

cardiagn.com

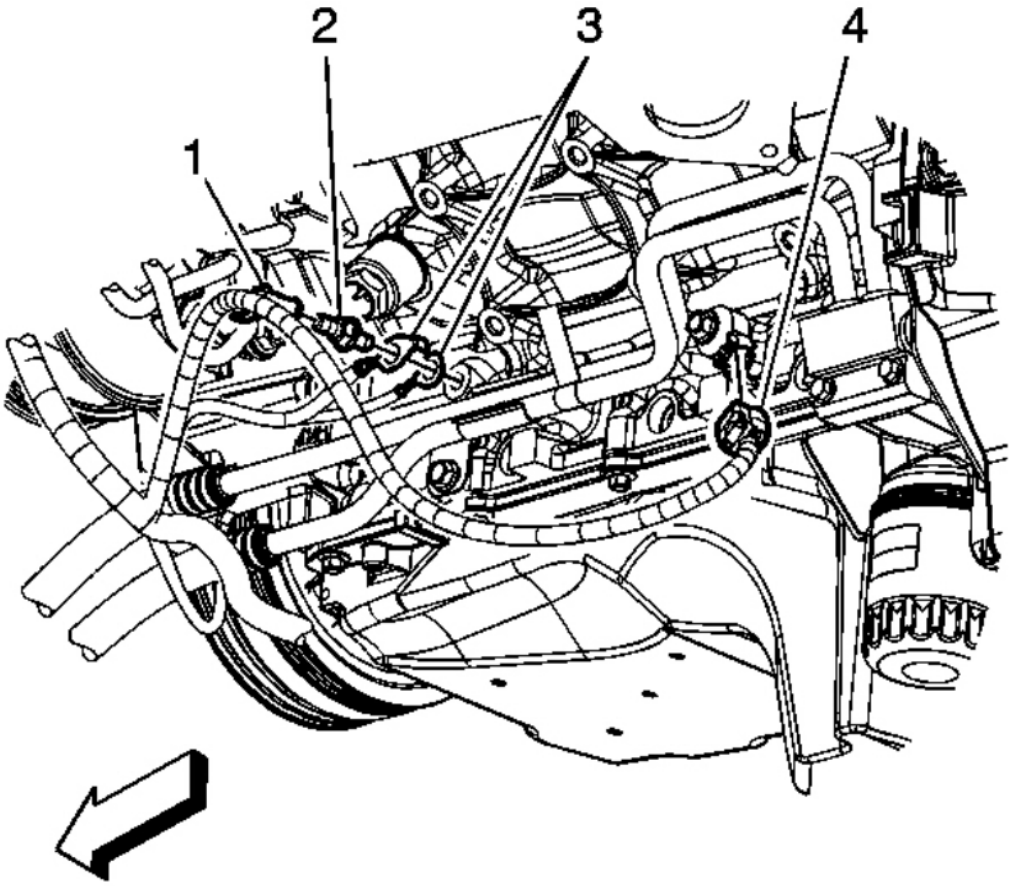

Fig. 92: View Of Engine Harness Components
Courtesy of GENERAL MOTORS CORP.

37. Remove the engine harness clip (1) from the ground stud.
38. Remove the engine harness ground stud (2) from the engine block.
39. Remove the engine harness grounds (3) from the engine block.
40. Disconnect the engine harness electrical connector (4) from the knock sensor.

cardiagn.com

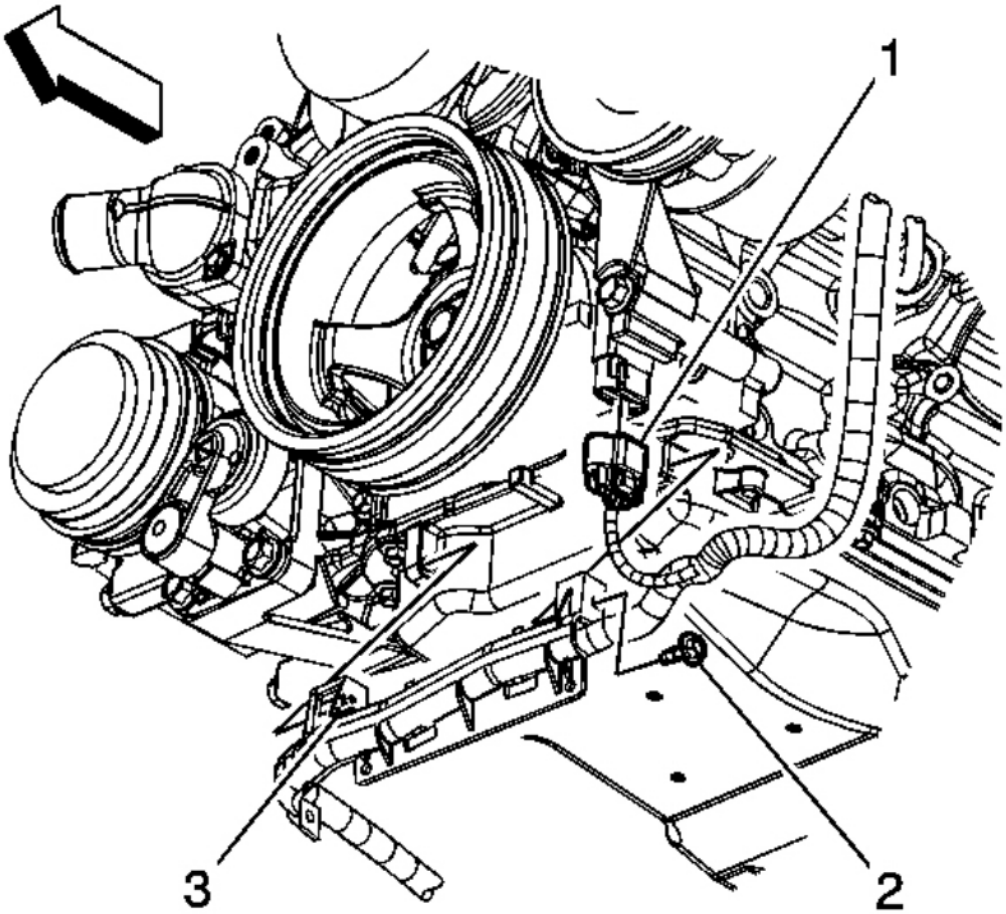

Fig. 93: View Of Electrical Connector, Cable Channel Bolt & Pin
Courtesy of GENERAL MOTORS CORP.

41. Disconnect the engine harness electrical connector (1) from the camshaft position (CMP) sensor wire harness.
42. Remove the battery cable channel bolt (2).
43. Slide the channel pin (3) out of the oil pan tab.

cardiagn.com

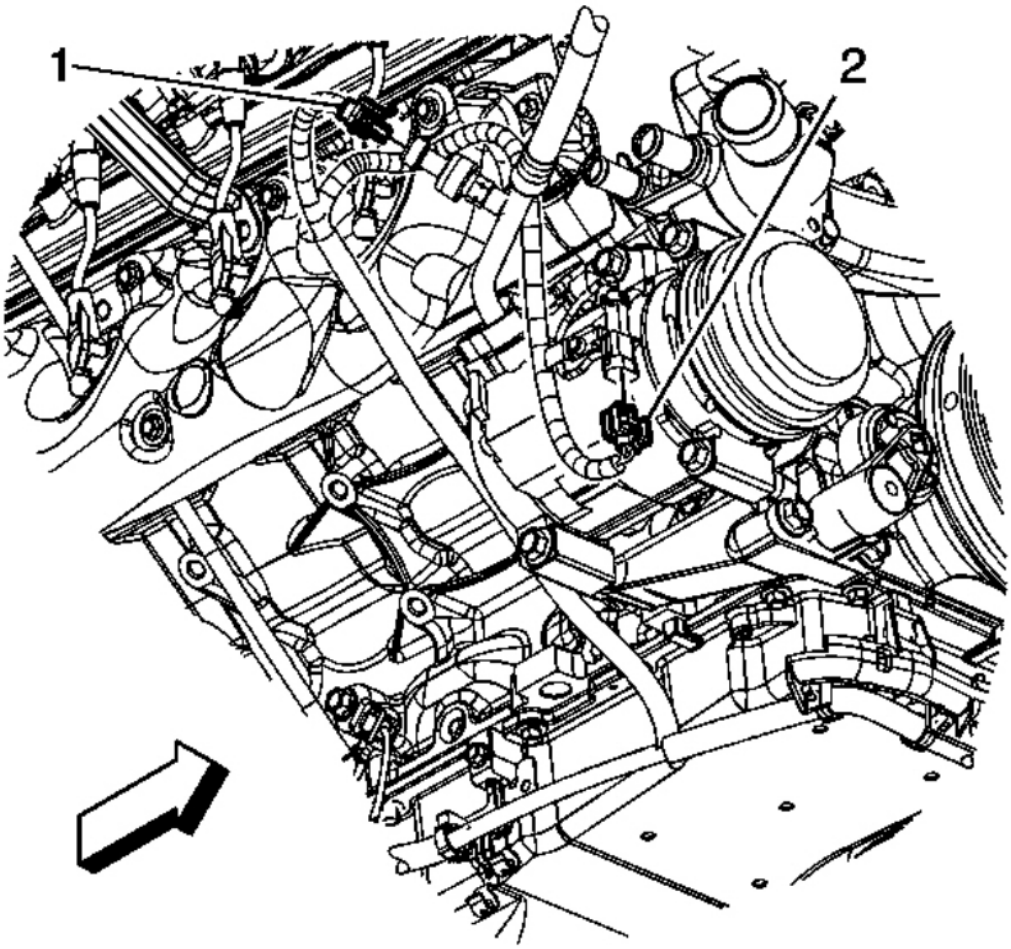

Fig. 94: View Of Electrical Connectors
Courtesy of GENERAL MOTORS CORP.

44. Disconnect the engine harness electrical connector (1) from the A/C refrigerant pressure sensor.
45. Remove the starter motor. Refer to **Starter Motor Replacement** .

cardiagn.com

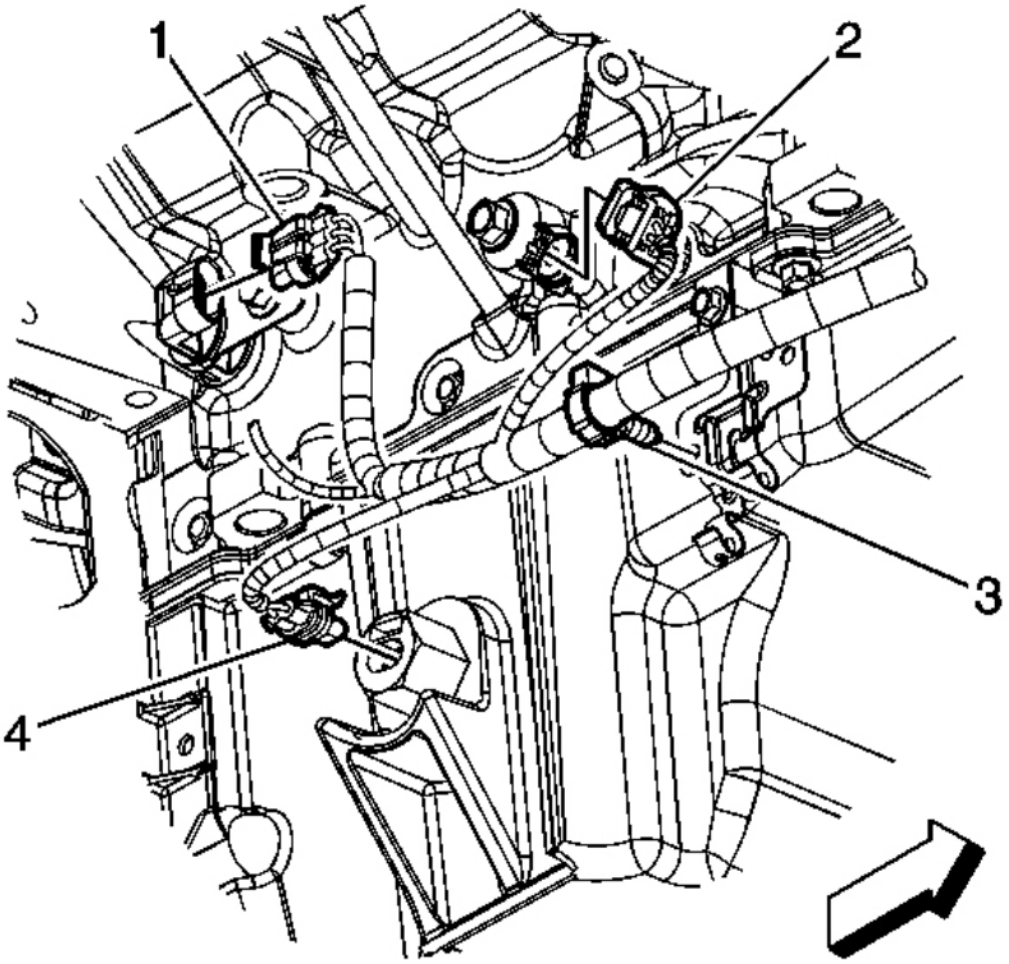

Fig. 95: View Of Electrical Connectors & Clips
Courtesy of GENERAL MOTORS CORP.

46. Disconnect the engine harness electrical connector (1) from the crankshaft position (CKP) sensor.
47. Disconnect the engine harness electrical connector (2) from the knock sensor.
48. Disconnect the engine harness electrical connector (4) from the oil level sensor.
49. Remove the engine harness clip (3) from the transmission oil cooler line bracket.

cardiagn.com

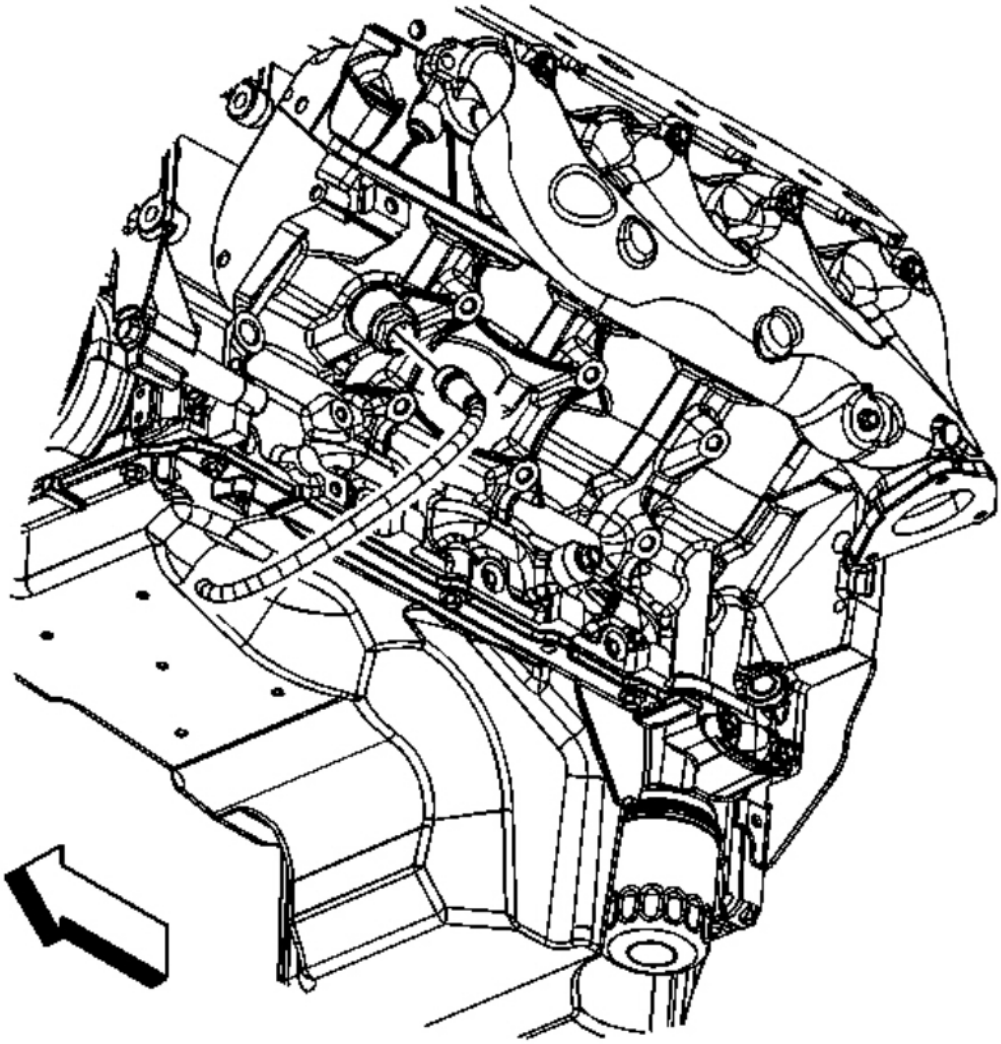

Fig. 96: View Of Coolant Heater Cord
Courtesy of GENERAL MOTORS CORP.

50. Disconnect the coolant heater cord from the coolant heater, if equipped.
51. Lower the vehicle.

cardiagn.com

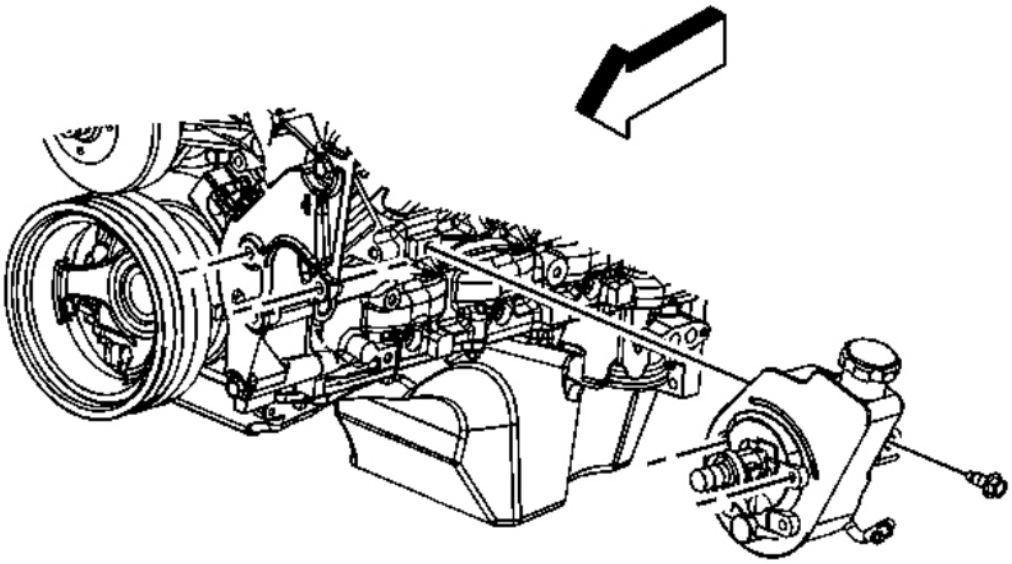

Fig. 97: View Of Power Steering Pump-To-Engine Block Bolt
Courtesy of GENERAL MOTORS CORP.

52. Remove the rear power steering pump-to-engine block bolt (1500 series shown, 2500 series similar).

cardiagn.com

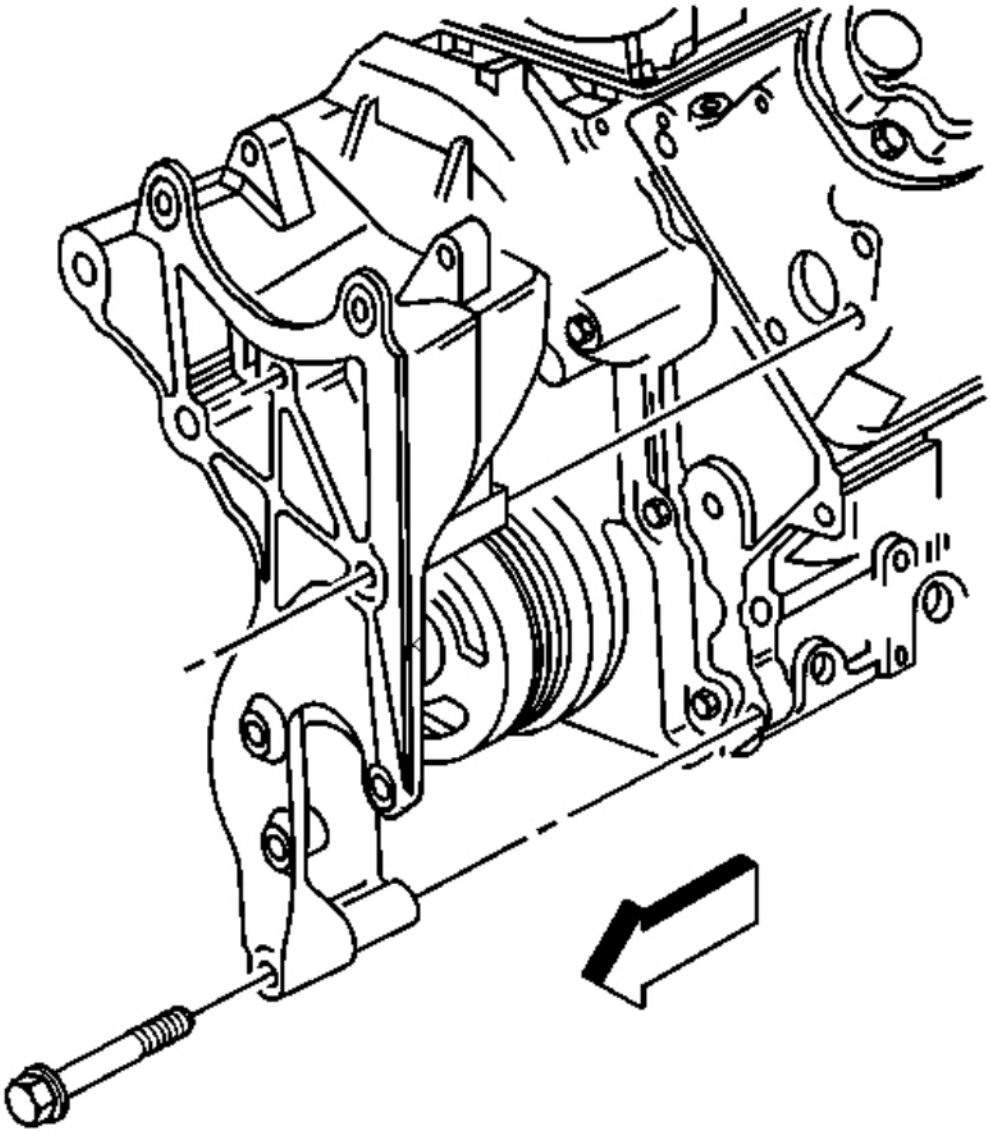

Fig. 98: View Of Generator Bracket & Bolts
Courtesy of GENERAL MOTORS CORP.

53. Remove the generator bracket bolts.
54. Position the generator bracket (with power steering pump) aside.
55. Remove the ignition coil, as required for the proper fit of the **J 41798** before lifting the engine. See **Special Tools** . Refer to **Ignition Coil Replacement** .

cardiagn.com

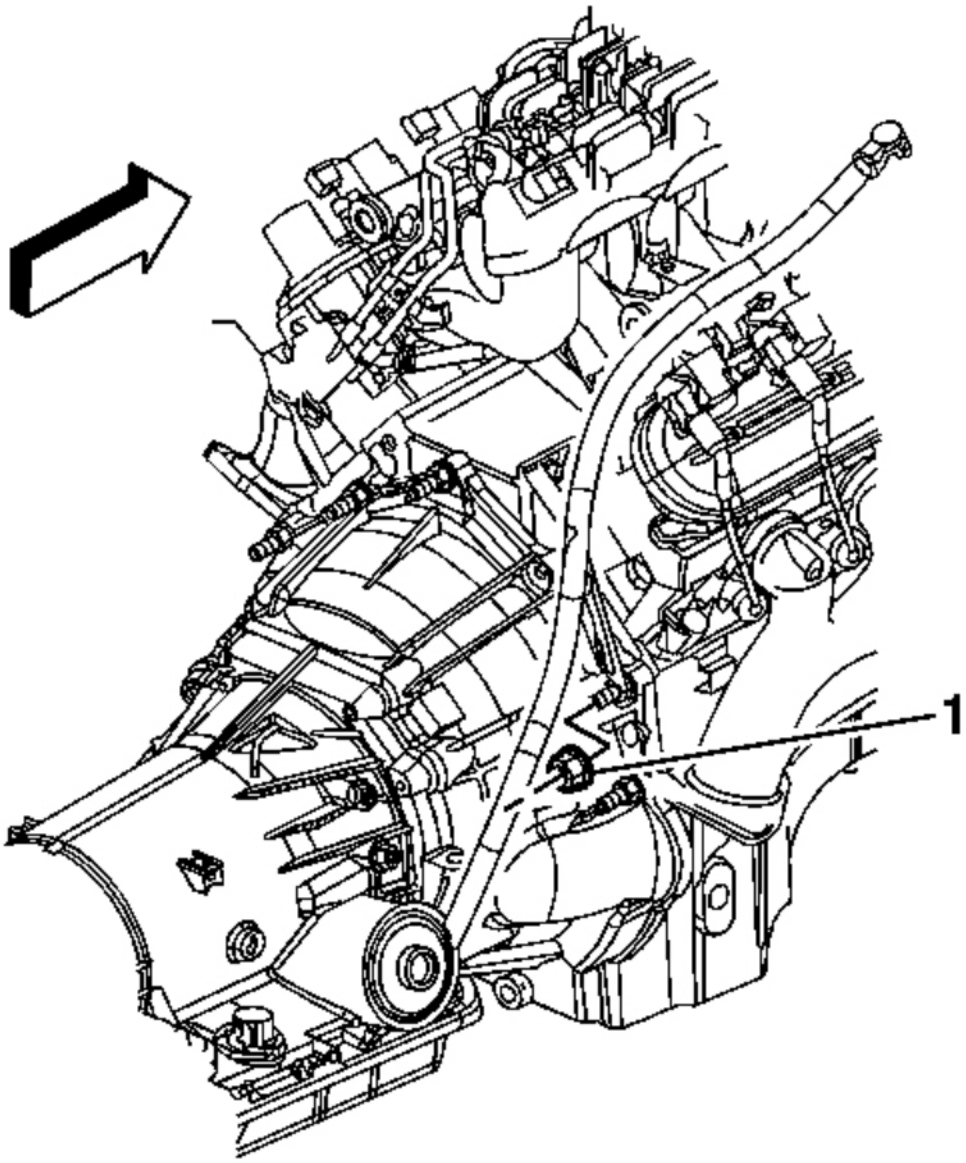

Fig. 99: View Of Transmission Oil Level Indicator Tube Nut
Courtesy of GENERAL MOTORS CORP.

56. Remove the transmission oil level indicator tube nut (1).

cardiagn.com

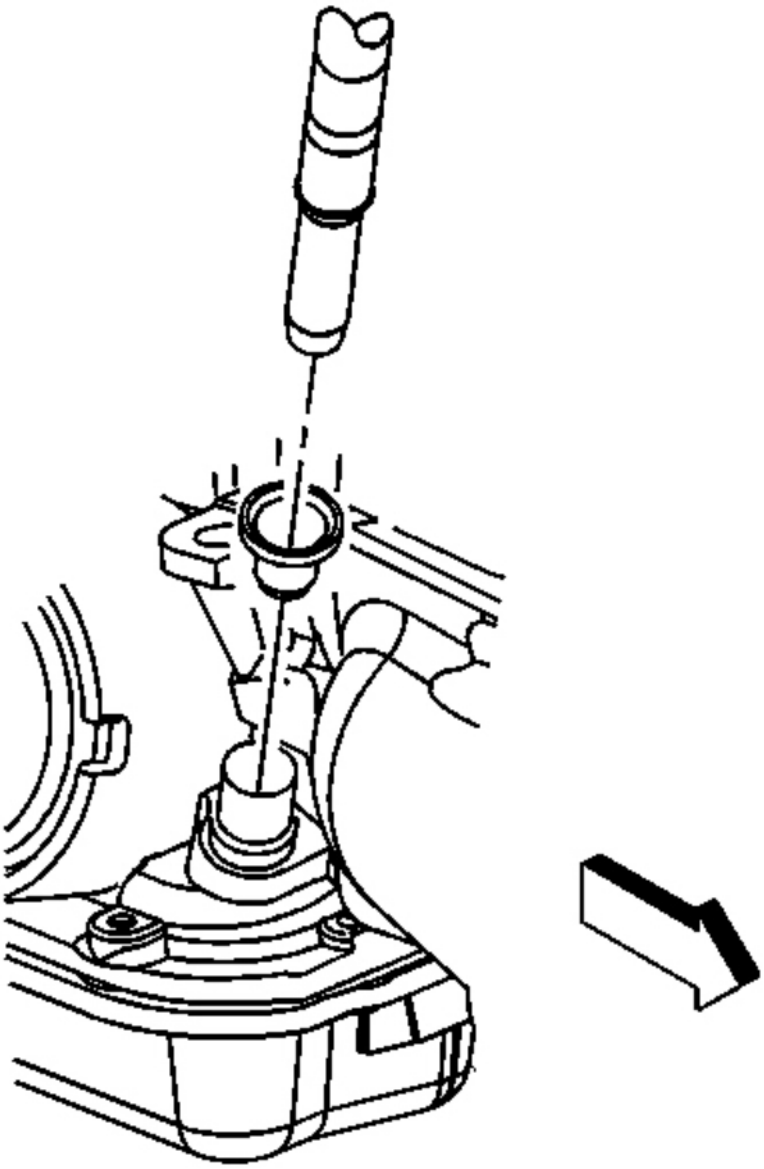

Fig. 100: View Of Oil Level Indicator Tube & Seal
Courtesy of GENERAL MOTORS CORP.

57. Remove the transmission oil level indicator tube.

cardiagn.com

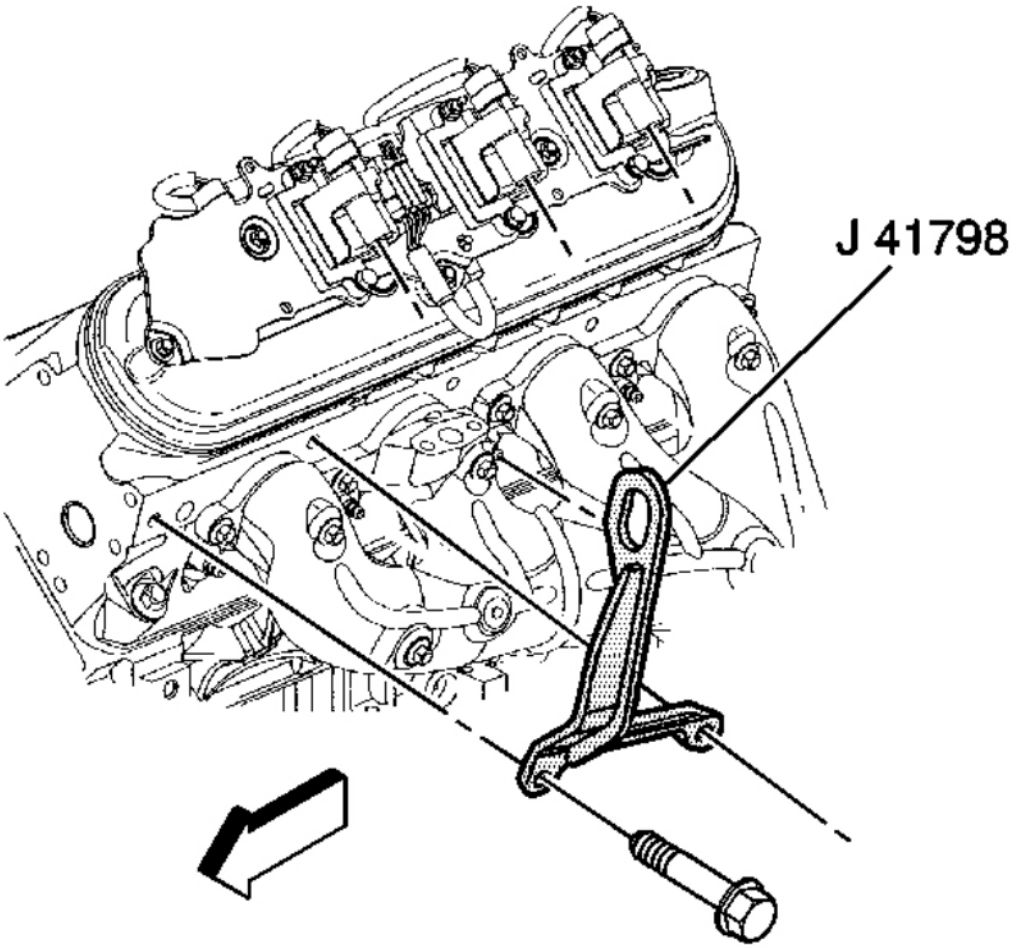

Fig. 101: View Of J 41798
Courtesy of GENERAL MOTORS CORP.

NOTE: **Refer to Fastener Notice .**

58. Install the **J 41798** to the cylinder heads. See **Special Tools** .

Tighten:

- Tighten the M8 engine lift bracket bolts to 25 N.m (18 lb ft).
- Tighten the M10 engine lift bracket bolts to 50 N.m (37 lb ft).

cardiagn.com

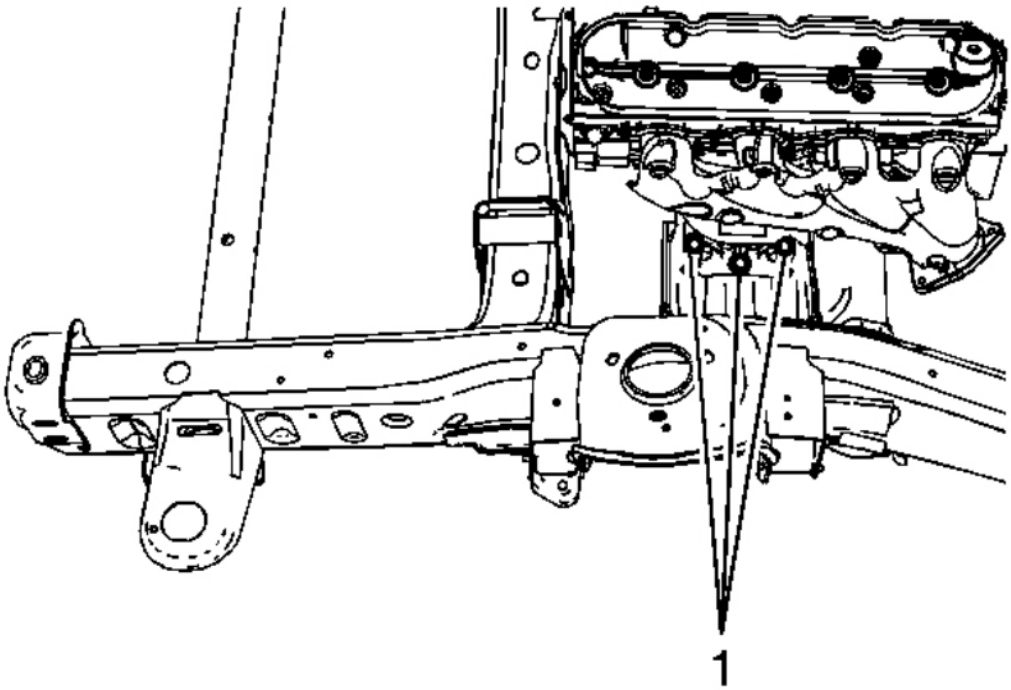

Fig. 102: View Of Engine Mount To Frame Bolts
Courtesy of GENERAL MOTORS CORP.

59. For 1500 series vehicles with a 4.8L engine, remove the left and right engine mount to frame bolts (1).

cardiagn.com

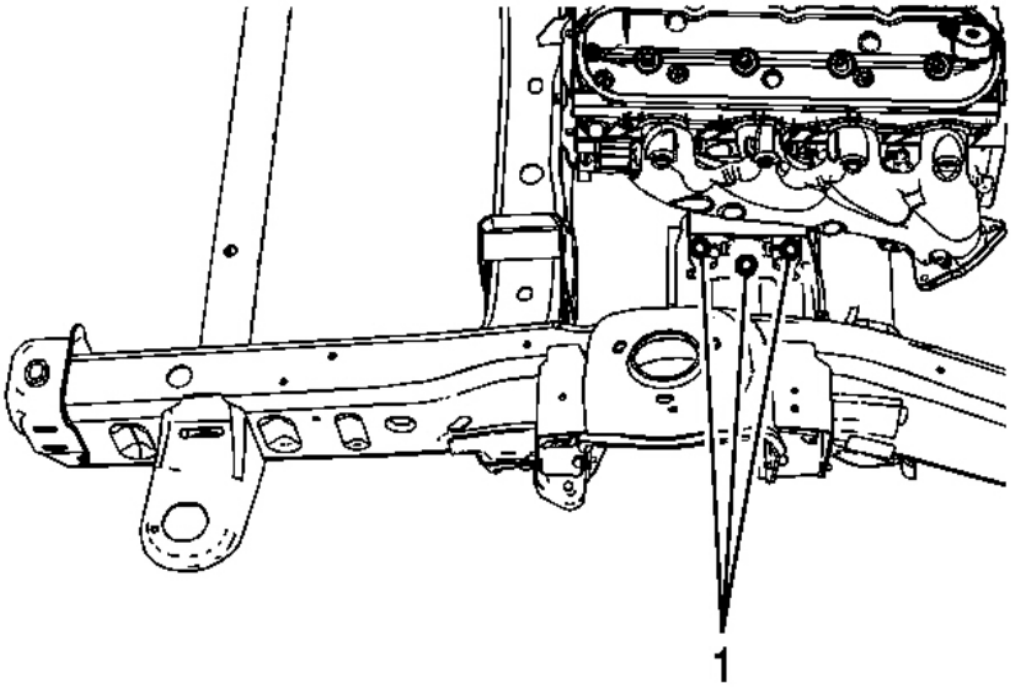

Fig. 103: View Of Engine Mount To Frame Bolts
Courtesy of GENERAL MOTORS CORP.

60. For 1500 series vehicles with a 5.3L, 6.0L, or 6.2L engines, remove the left and right engine mount to frame bolts (1).

cardiagn.com

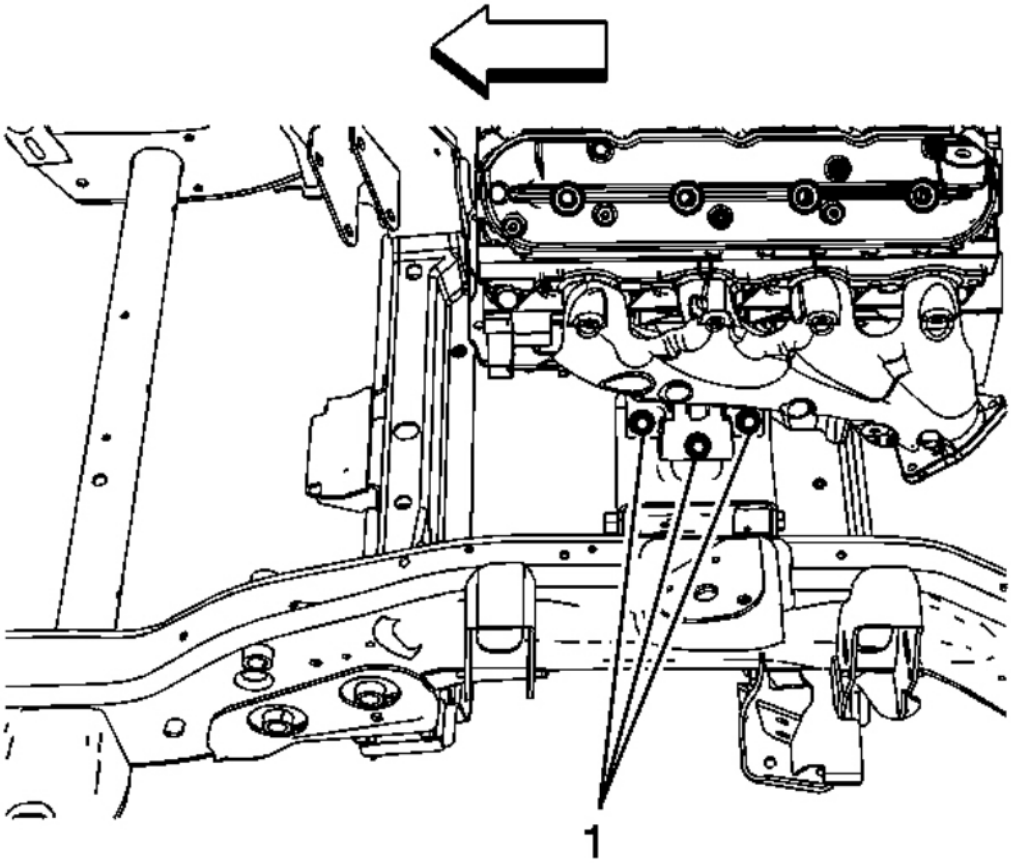

Fig. 104: View Of Engine Mount Bracket Bolts
Courtesy of GENERAL MOTORS CORP.

61. For 2500 series vehicles with a 5.3L, 6.0L, or 6.2L engines, remove the left and right engine mount to engine mount bracket bolts (1).
62. Raise the vehicle.

cardiagn.com

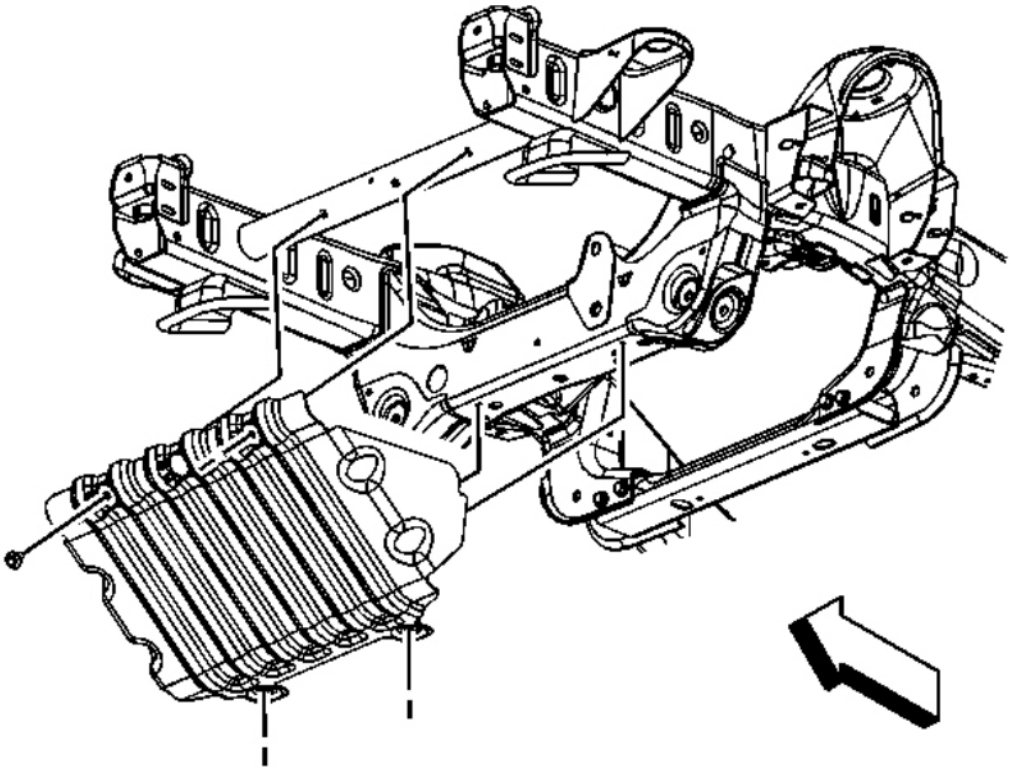

Fig. 105: View Of Engine Shield & Bolts
Courtesy of GENERAL MOTORS CORP.

63. Remove the engine shield bolts and shield.

cardiagn.com

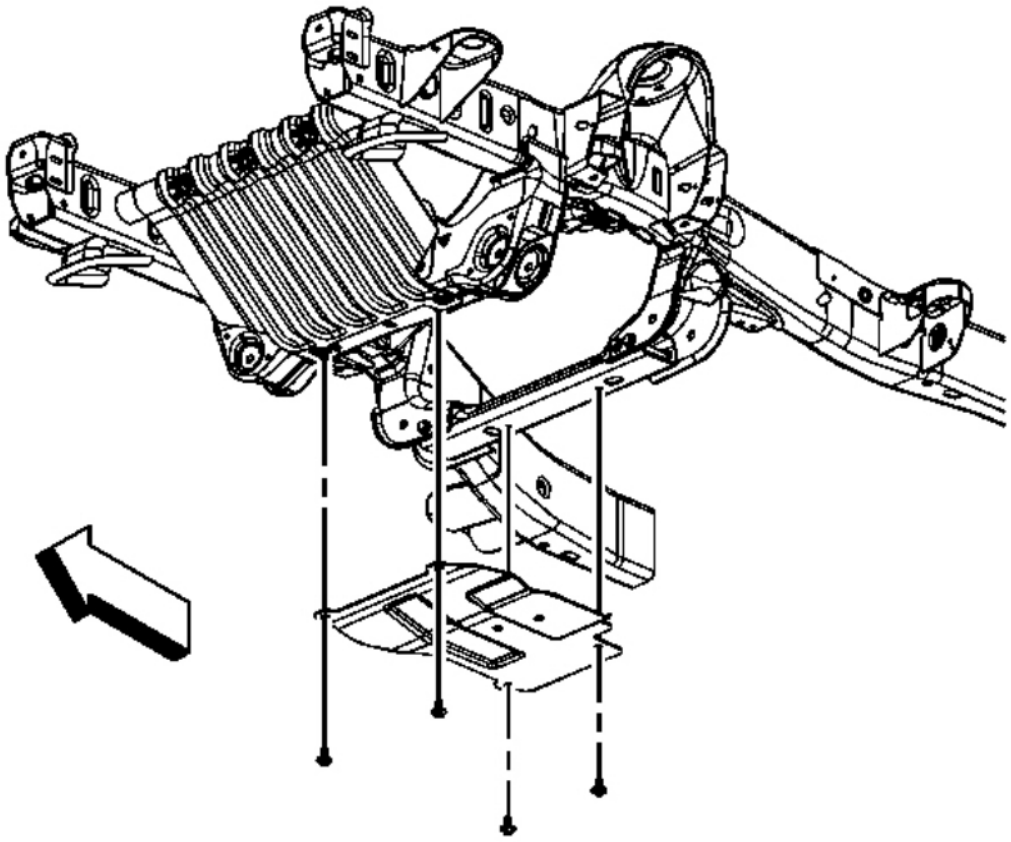

Fig. 106: View Of Oil Pan Skid Plate & Bolts
Courtesy of GENERAL MOTORS CORP.

64. For 1500 series vehicles, remove the oil pan skid plate bolts and plate, if equipped.

cardiagn.com

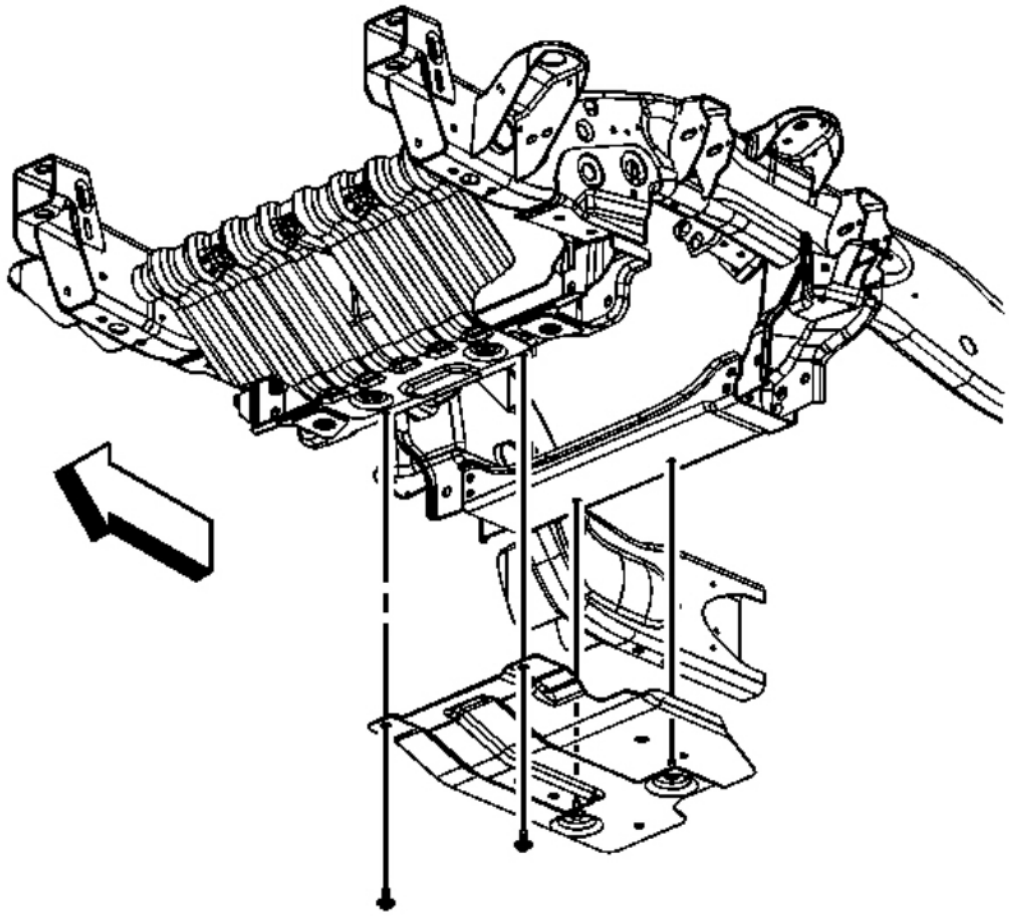

Fig. 107: View Of Oil Pan Skid Plate & Bolts
Courtesy of GENERAL MOTORS CORP.

65. For 2500 series vehicles, remove the oil pan skid plate bolts and plate, if equipped.

cardiagn.com

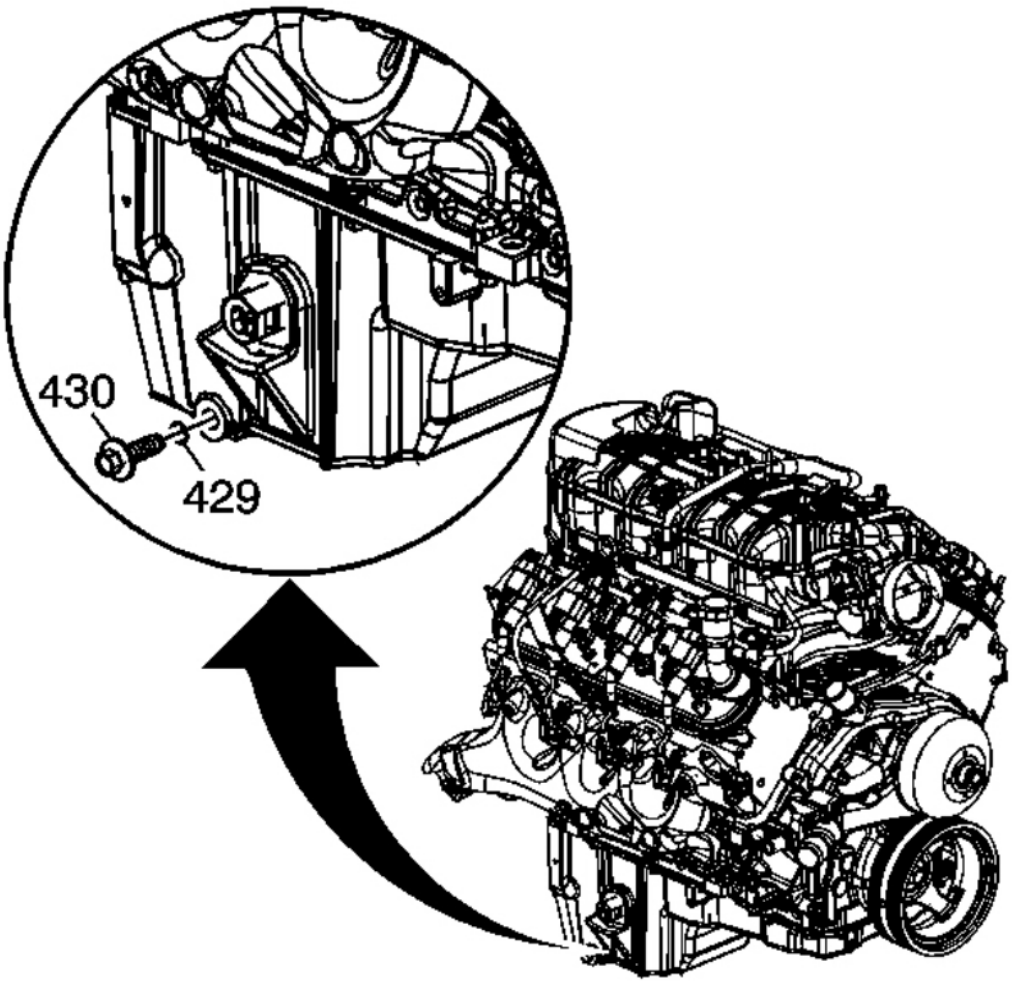

Fig. 108: View Of Oil Pan Drain Plug & Seal
Courtesy of GENERAL MOTORS CORP.

66. Place a suitable drain pan under the oil pan drain plug.
67. Remove the oil pan drain plug (430).
68. Allow the oil to drain completely.
69. Reinstall and tighten the oil pan drain plug.

    Tighten: Tighten the drain plug to 25 N.m (18 lb ft).

70. Remove the catalytic converter. Refer to one of the following:
    - **Catalytic Converter Replacement (1500 Series)** for 1500 series

cardiagn.com

- **Catalytic Converter Replacement - Left Side (2500 Series)** for the 2500 series
- **Catalytic Converter Replacement - Right Side (2500 Series)** for the 2500 series

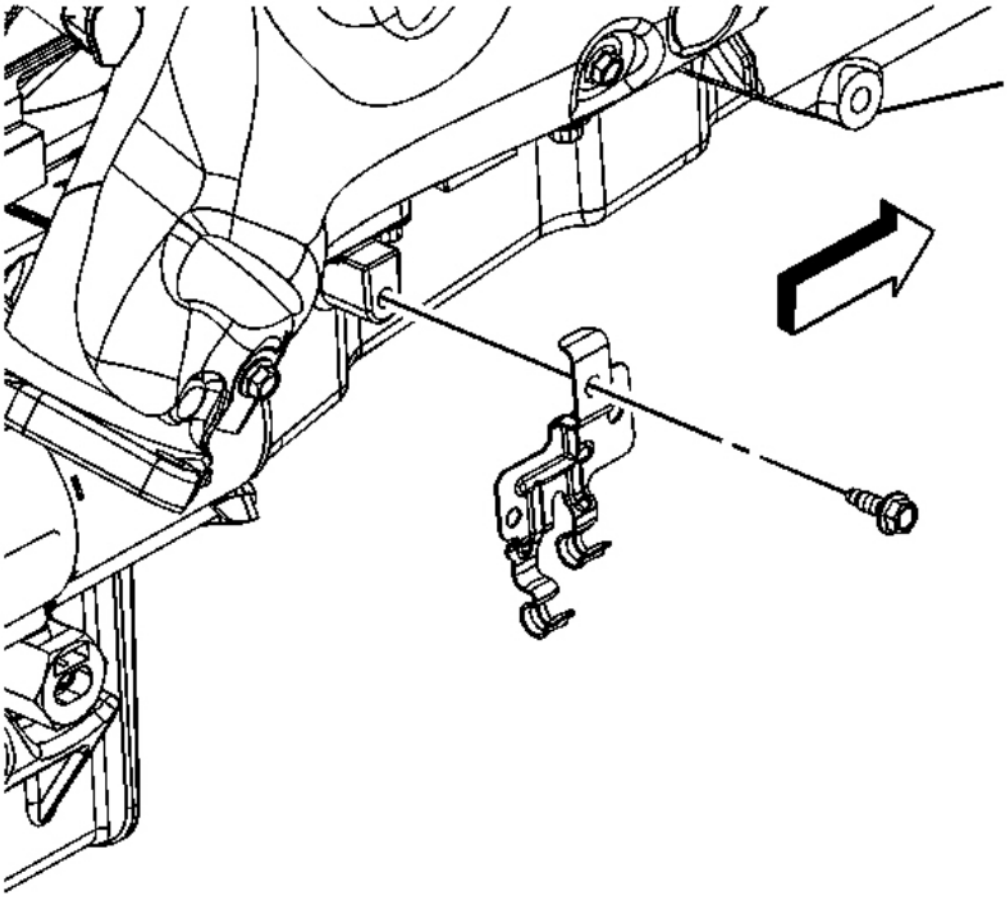

Fig. 109: View Of Oil Cooler Line Clip & Bolt
Courtesy of GENERAL MOTORS CORP.

71. Remove the transmission oil cooler line clip bolt from the oil pan, if equipped.

cardiagn.com

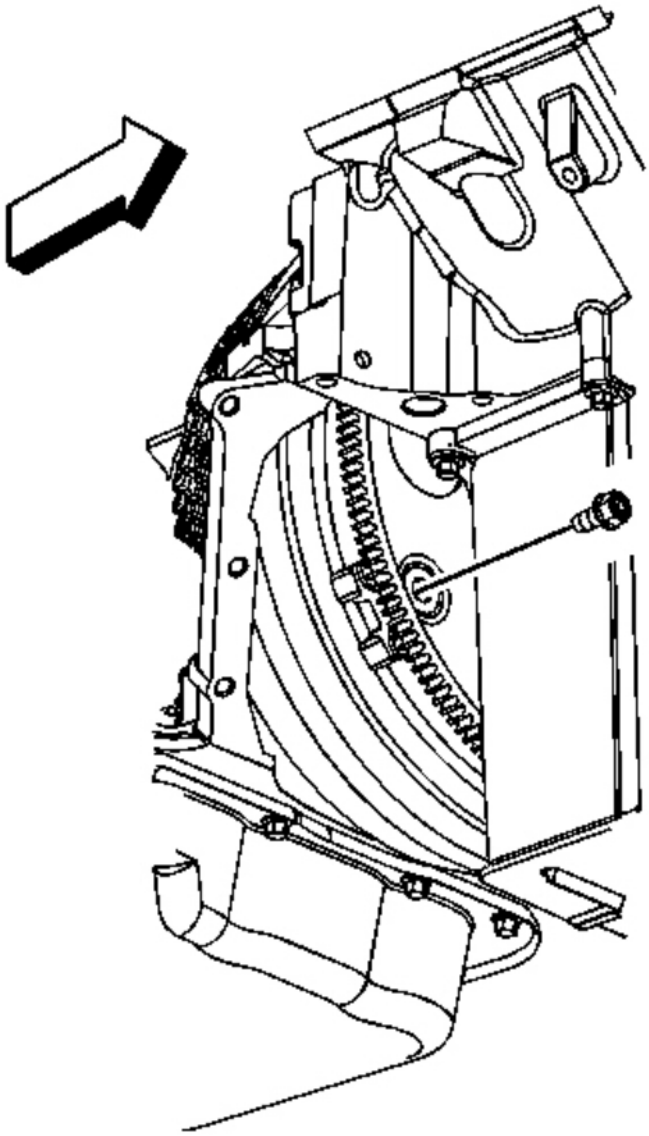

Fig. 110: View Of Flywheel To Torque Converter Bolts
Courtesy of GENERAL MOTORS CORP.

72. Remove the flywheel to torque converter bolts.

cardiagn.com

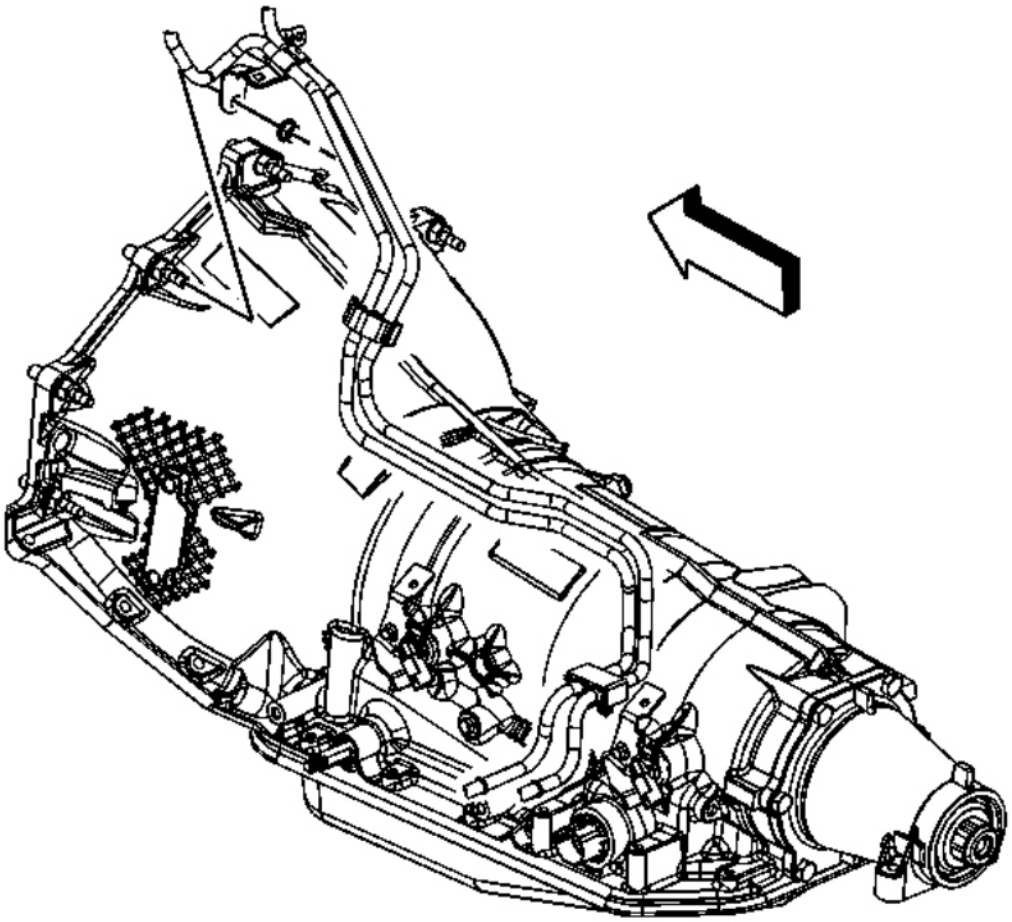

Fig. 111: View Of Fuel/Evaporative Emission Pipe & Bracket
Courtesy of GENERAL MOTORS CORP.

73. Remove the fuel/evaporative emission (EVAP) pipe bracket nut from the transmission stud (typical installation shown).
74. Remove the fuel/EVAP pipe bracket from the stud. Reposition the bracket out of the way.

cardiagn.com

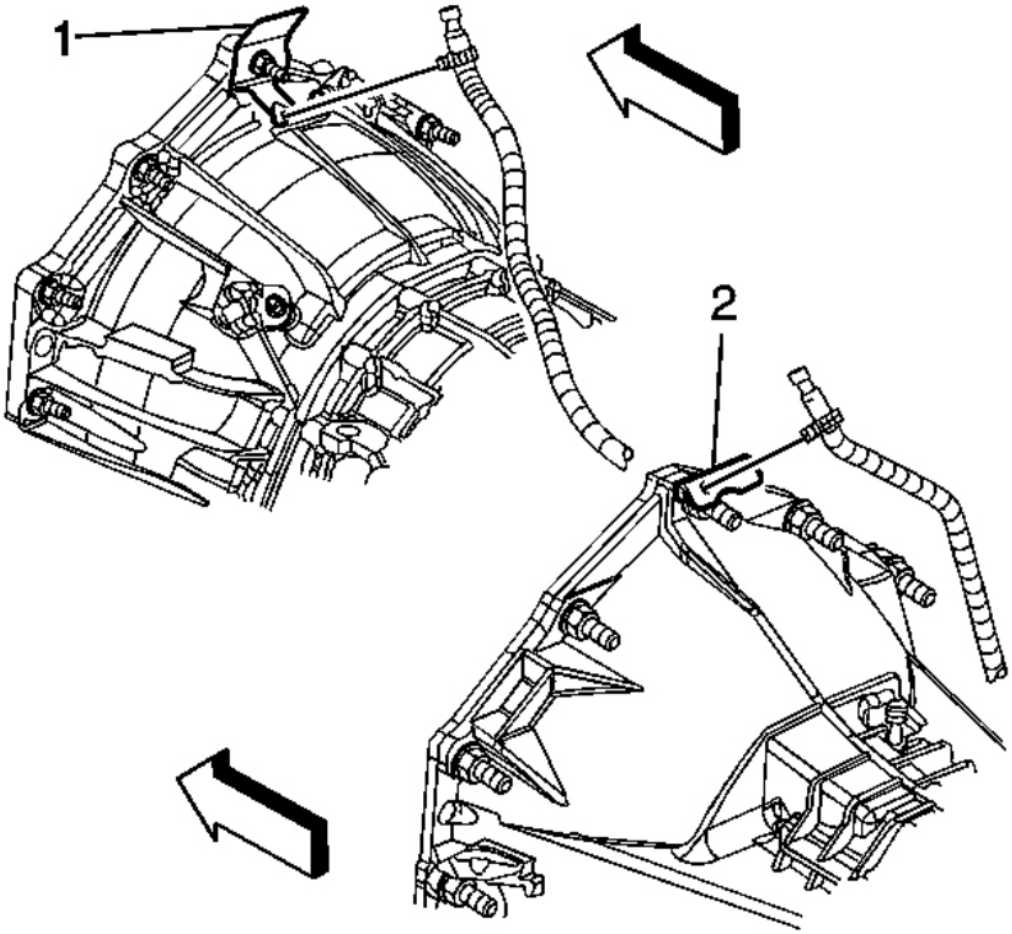

Fig. 112: View Of Transfer Case Vent Hose Bracket & Nut
Courtesy of GENERAL MOTORS CORP.

75. For the 4L80-E automatic transmission, remove the transfer case vent hose bracket (1) nut from the stud, if equipped.
76. For the 4L60-E/4L70-E/6L80-E automatic transmission, remove the transfer case vent hose bracket (2) nut from the stud, if equipped.
77. Reposition the transfer case vent hose bracket and hose out of the way, if equipped.

cardiagn.com

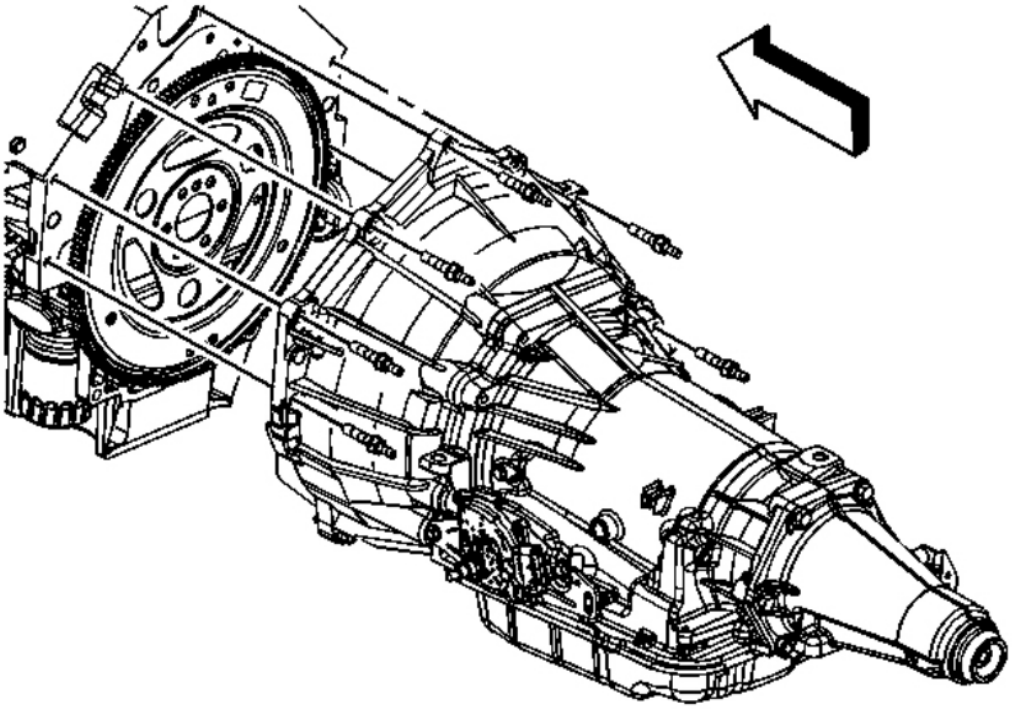

Fig. 113: View Of Transmission Bolts/Studs
Courtesy of GENERAL MOTORS CORP.

78. If equipped with the 4L60-E/4L70-E automatic transmission, remove the transmission bolts/studs.

cardiagn.com

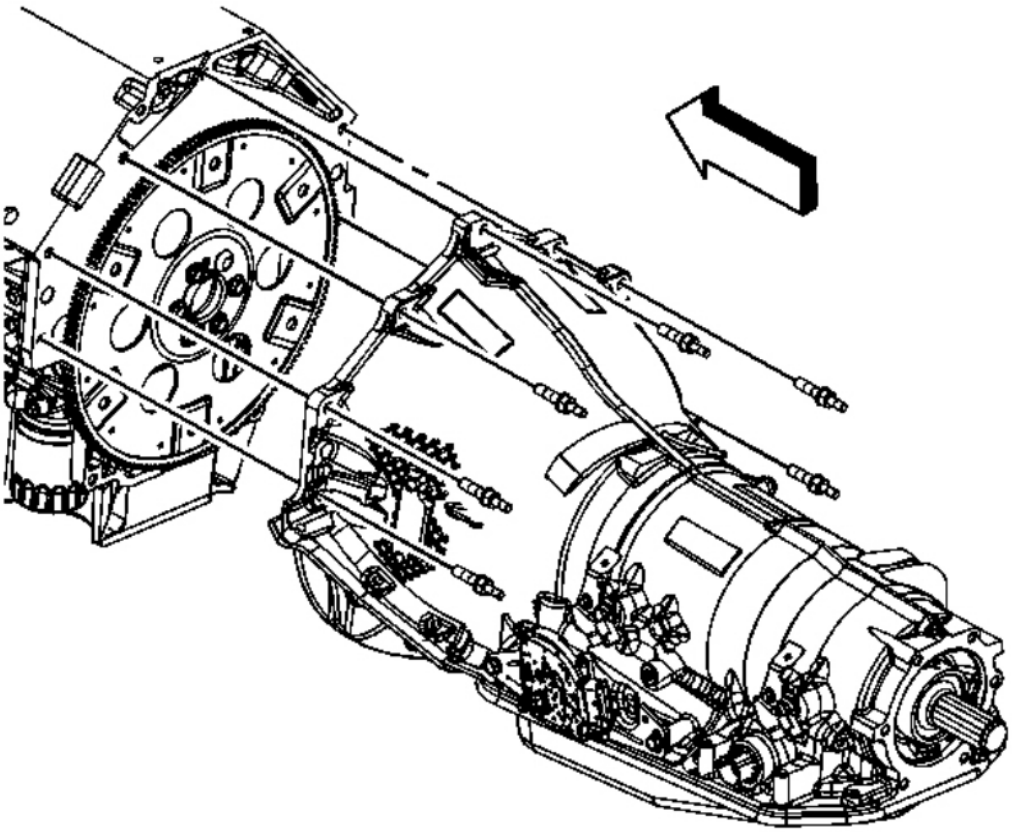

Fig. 114: View Of Transmission Bolts/Studs
Courtesy of GENERAL MOTORS CORP.

79. If equipped with the 4L80-E automatic transmission, remove the transmission bolts/studs.

cardiagn.com

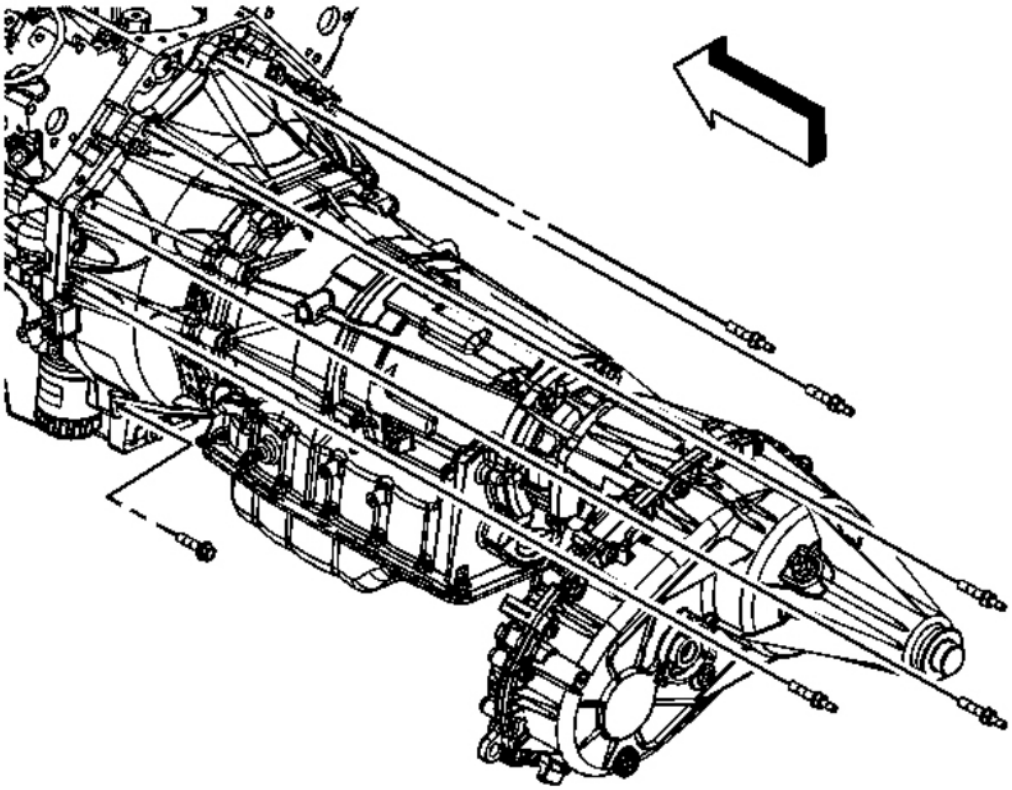

Fig. 115: View Of Transmission Bolts/Studs
Courtesy of GENERAL MOTORS CORP.

80. If equipped with the 6L80-E automatic transmission, remove the transmission bolts/studs.
81. Separate the engine from the automatic transmission.
82. Lower the vehicle.
83. Position and install an engine hoist to the **J 41798** . See **Special Tools** .
84. Install a floor jack under the transmission for support.
85. Remove the engine from the vehicle.
86. Install the **J 21366** to the transmission in order to hold the torque converter. See **Special Tools** .
87. Position and install the engine onto an engine stand.
88. Remove the engine hoist. from the **J 41798** . See **Special Tools** .

cardiagn.com

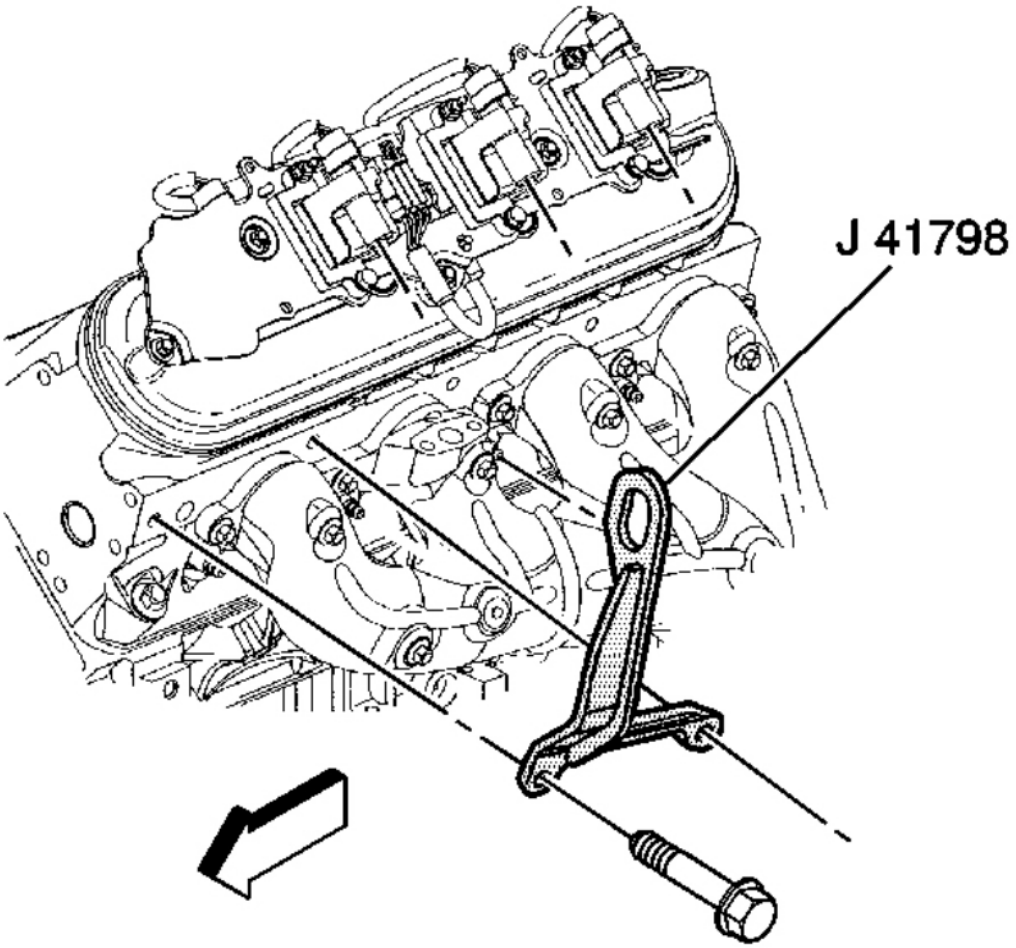

Fig. 116: View Of J 41798
Courtesy of GENERAL MOTORS CORP.

89. Remove the **J 41798** from the engine. See **Special Tools** .

INSTALLATION PROCEDURE

cardiagn.com

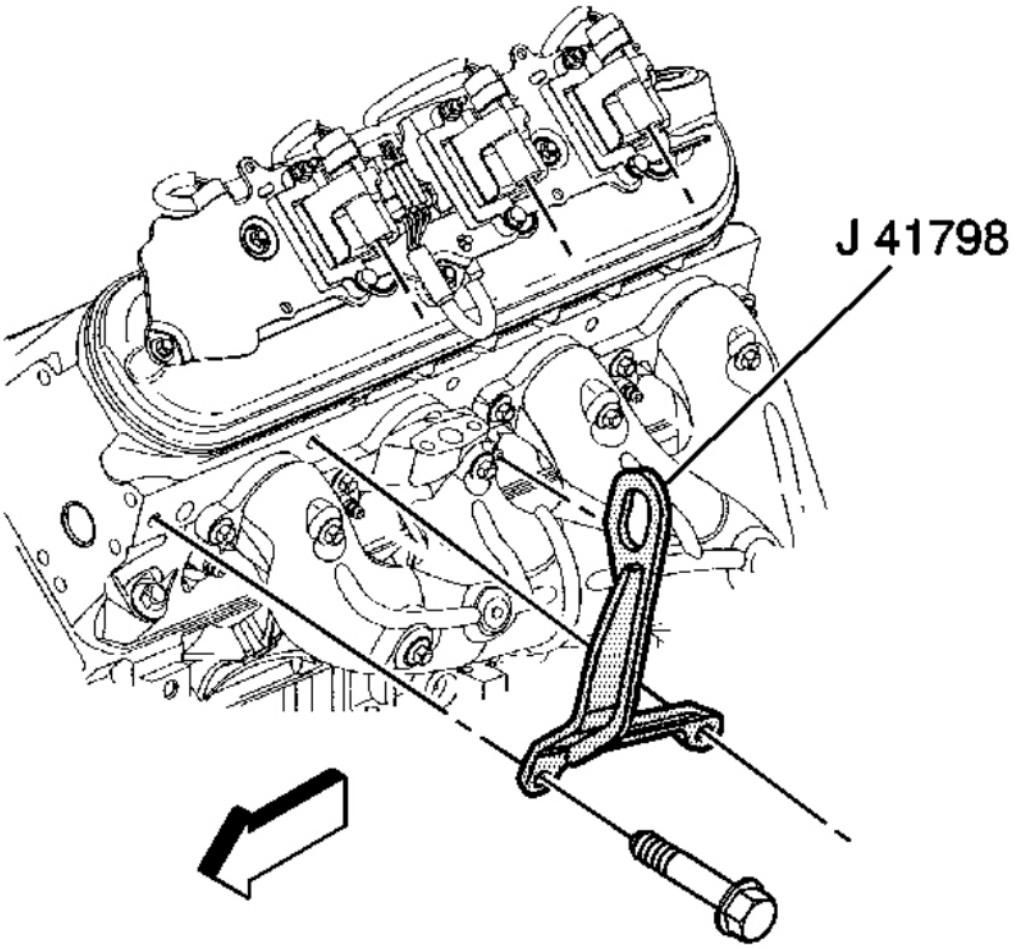

Fig. 117: View Of J 41798
Courtesy of GENERAL MOTORS CORP.

1. Install the **J 41798** to the engine. See **Special Tools** .

   Tighten:
   - Tighten the M8 engine lift bracket bolts to 25 N.m (18 lb ft).
   - Tighten the M10 engine lift bracket bolts to 50 N.m (37 lb ft).

2. Position and install the engine hoist to the **J 41798** . See **Special Tools** .
3. Remove the engine from the engine stand.
4. Remove the **J 21366** from the transmission. See **Special Tools** .

cardiagn.com

5. Install the engine to the vehicle.
6. Align and install the engine to the transmission. Raise or lower the transmission as required using the floor jack.
7. Once aligned and mated together completely lower and remove the engine hoist.

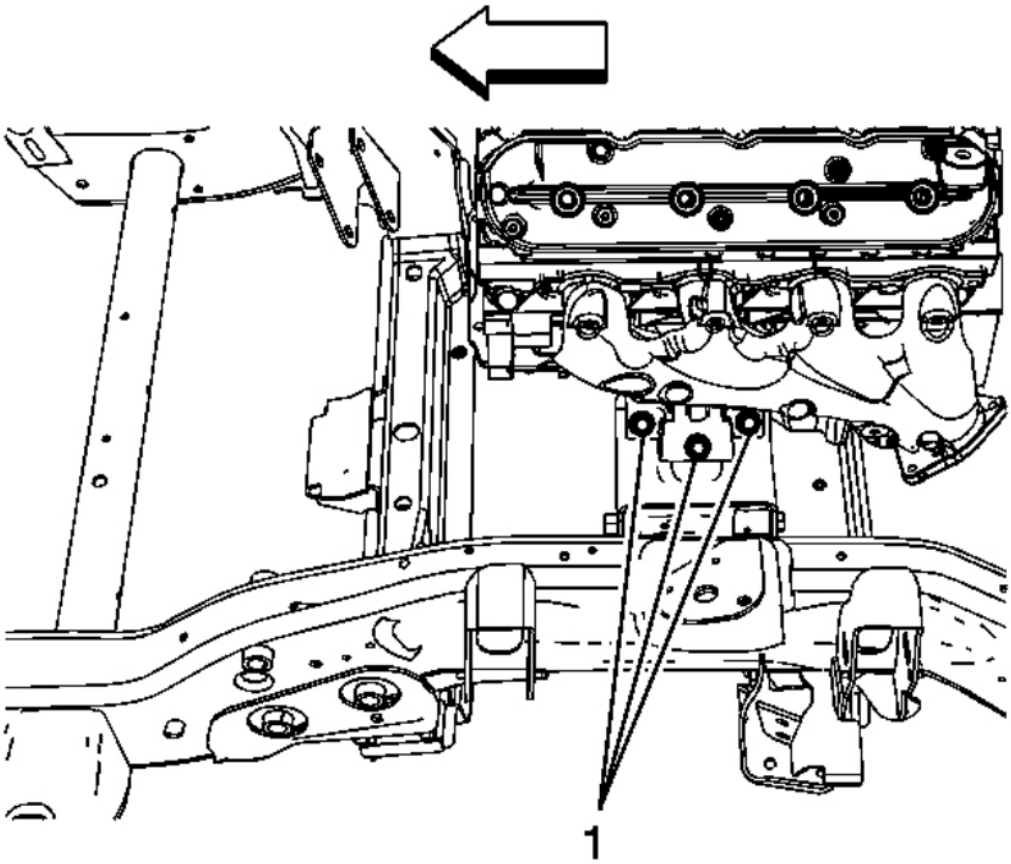

Fig. 118: View Of Engine Mount Bracket Bolts
Courtesy of GENERAL MOTORS CORP.

8. For 2500 series vehicles with a 5.3L, 6.0L, or 6.2L engine, install the left and right engine mount to engine mount bracket bolts (1).

   Tighten: Tighten the bolts to 65 N.m (48 lb ft) starting with the middle bolt then either side bolt.

cardiagn.com

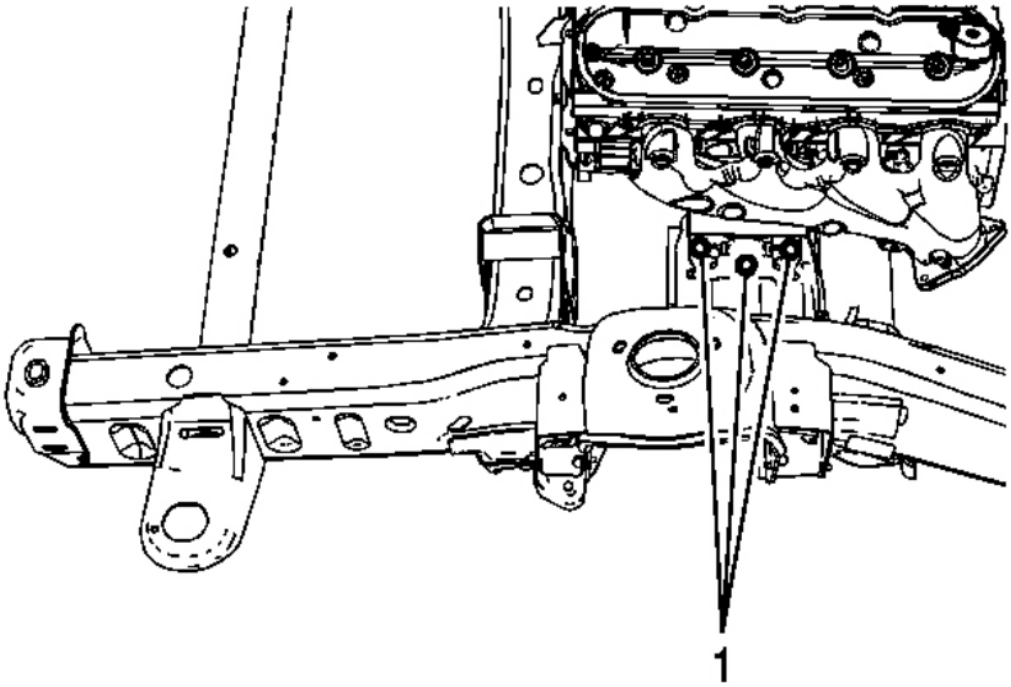

Fig. 119: View Of Engine Mount To Frame Bolts
Courtesy of GENERAL MOTORS CORP.

9. For 1500 series vehicles with a 5.3L, 6.0L, or 6.2L engine, install the left and right engine mount to frame bolts (1).

   Tighten: Tighten the bolts to 65 N.m (48 lb ft) starting with the middle bolt then either side bolt.

cardiagn.com

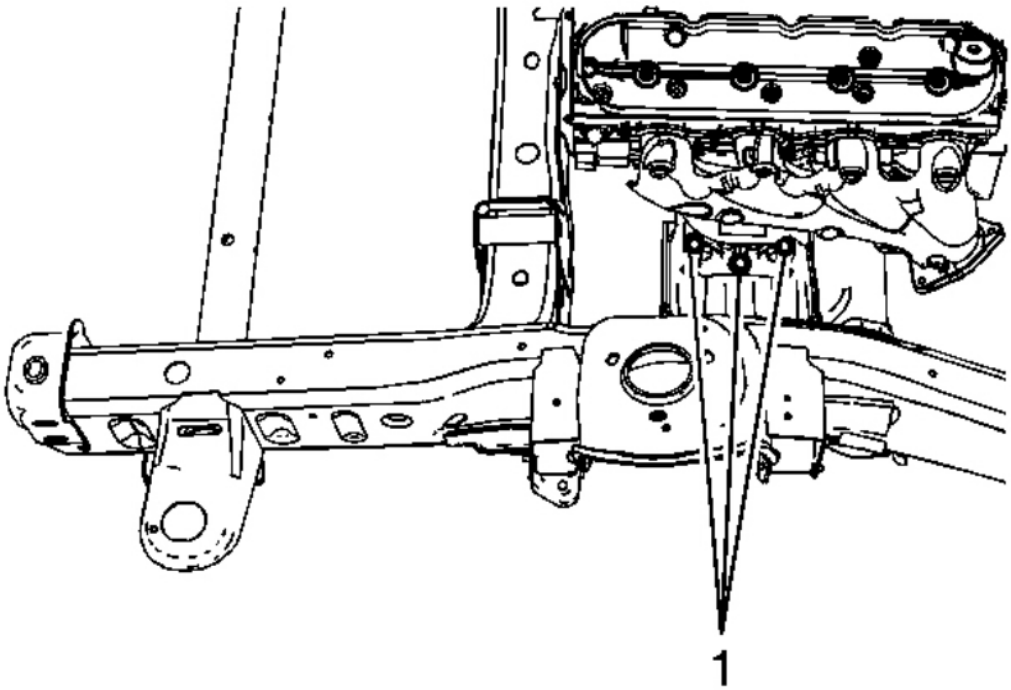

Fig. 120: View Of Engine Mount To Frame Bolts
Courtesy of GENERAL MOTORS CORP.

10. For 1500 series vehicles with a 4.8L engine, install the left and right engine mount to frame bolts (1).

    Tighten: Tighten the bolts to 65 N.m (48 lb ft) starting with the middle bolt then either side bolt.

11. Remove the floor jack from under the transmission.
12. Raise the vehicle.

cardiagn.com

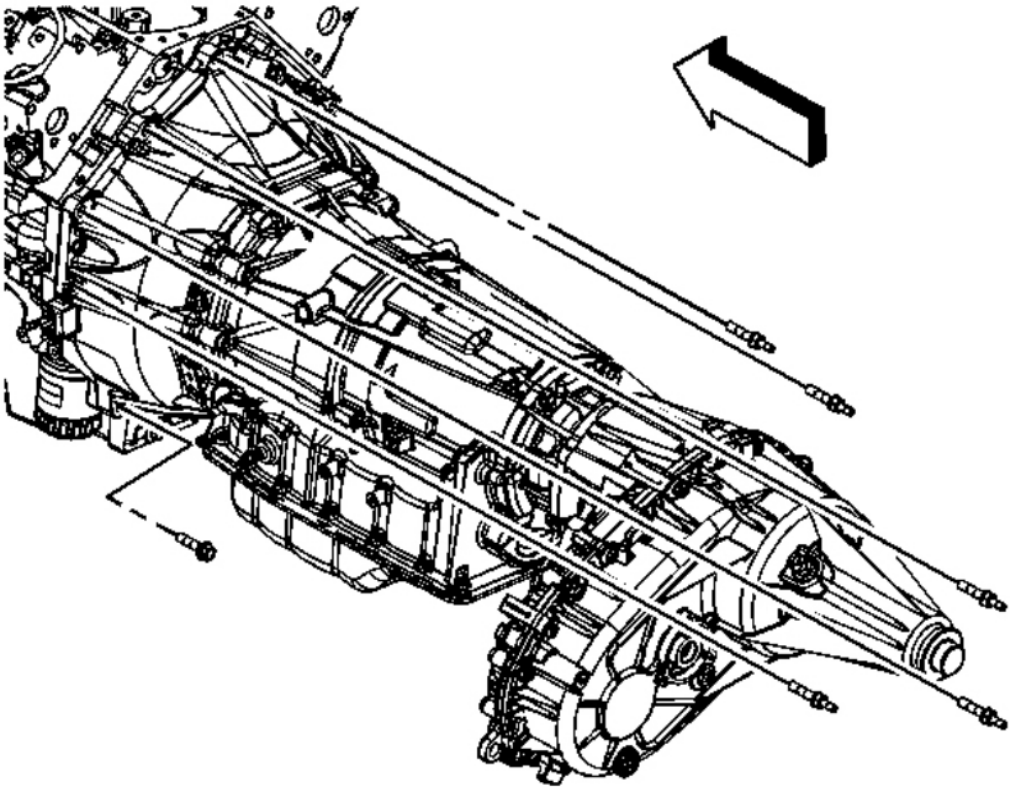

Fig. 121: View Of Transmission Bolts/Studs
Courtesy of GENERAL MOTORS CORP.

13. If equipped with the 6L80-E automatic transmission, install the transmission bolts/studs.

    Tighten: Tighten the bolts/studs to 50 N.m (37 lb ft).

cardiagn.com

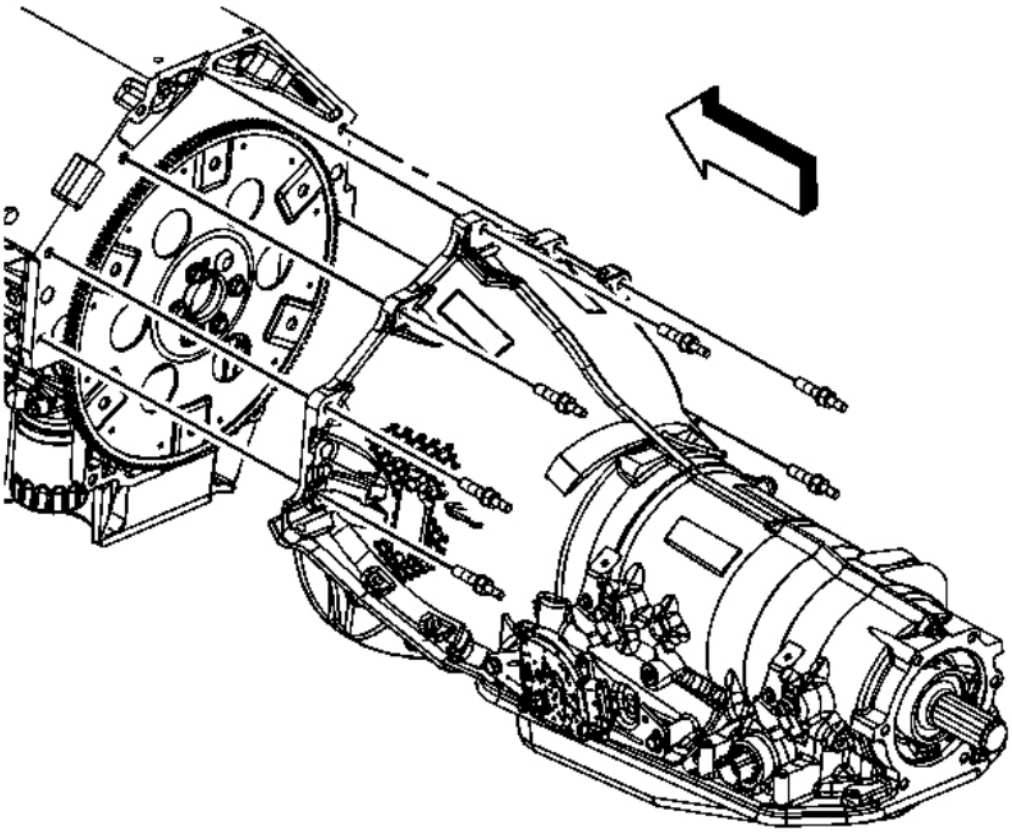

Fig. 122: View Of Transmission Bolts/Studs
Courtesy of GENERAL MOTORS CORP.

14. If equipped with the 4L80-E automatic transmission, install the transmission bolts/studs.

    Tighten: Tighten the bolts/studs to 50 N.m (37 lb ft).

cardiagn.com

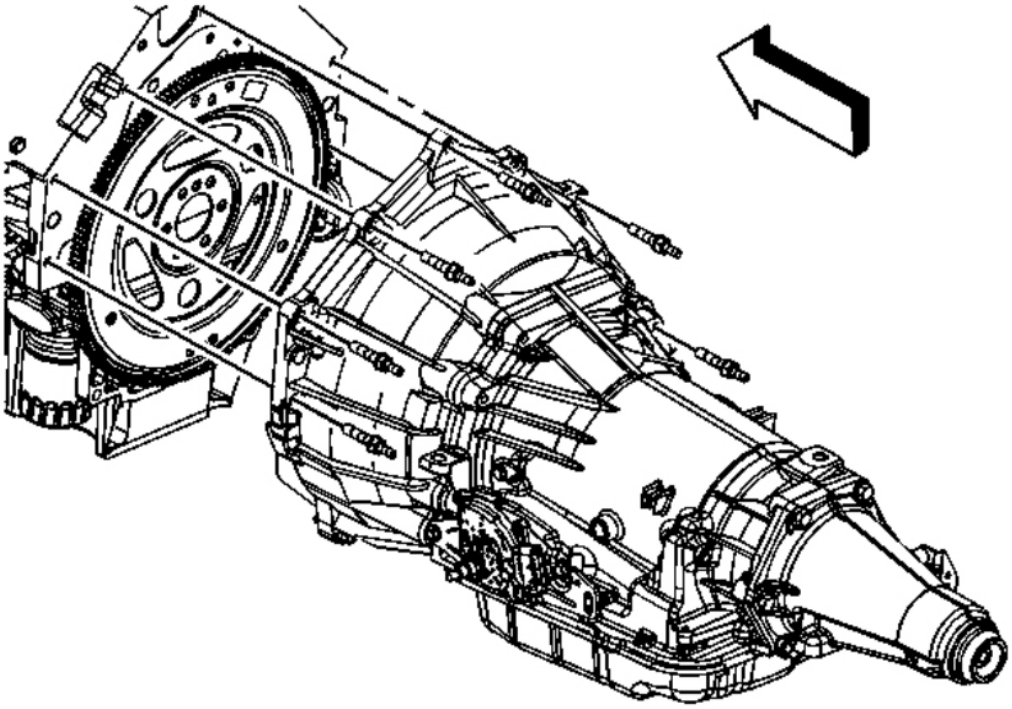

Fig. 123: View Of Transmission Bolts/Studs
Courtesy of GENERAL MOTORS CORP.

15. If equipped with the 4L60-E/4L70-E automatic transmission, install the transmission bolts/studs.

    Tighten: Tighten the bolts/studs to 50 N.m (37 lb ft).

cardiagn.com

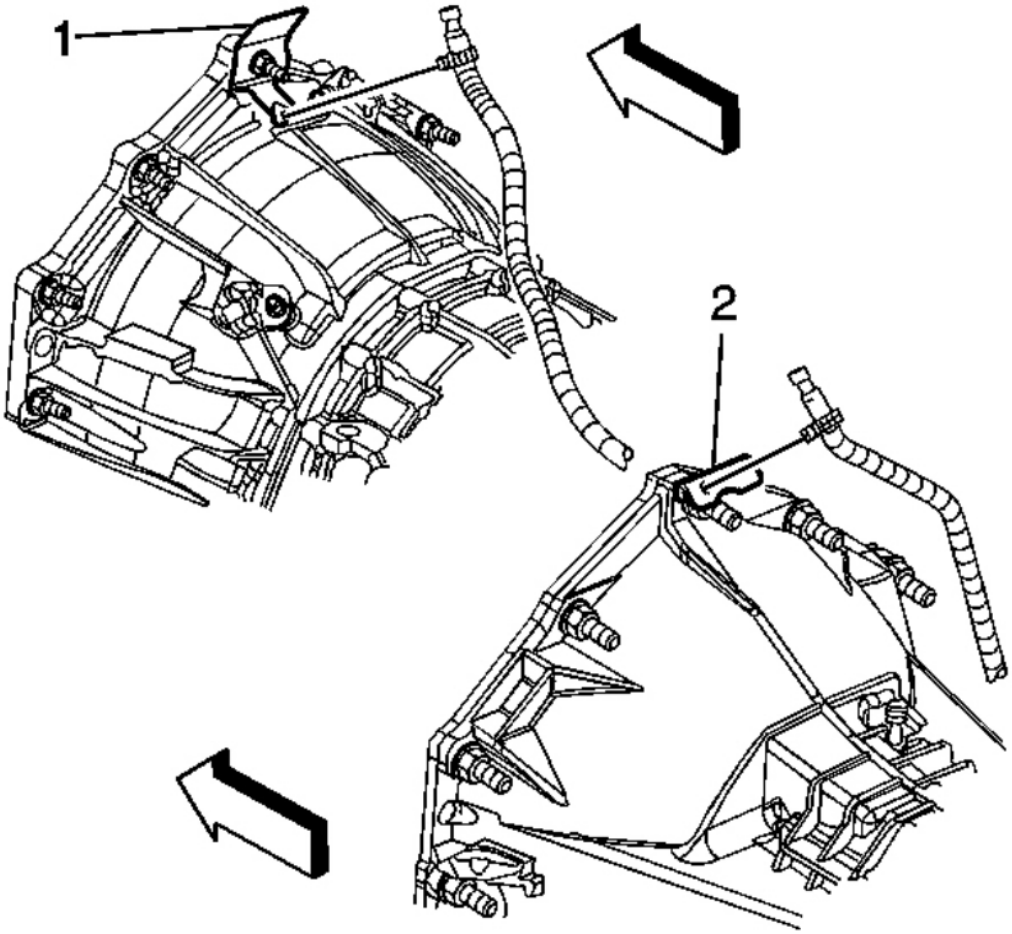

Fig. 124: View Of Transfer Case Vent Hose Bracket & Nut
Courtesy of GENERAL MOTORS CORP.

16. Position the transfer case vent hose bracket and hose and install the bracket to the stud, if equipped.
17. For the 4L60-E/4L70-E/6L80-E automatic transmission, install the transfer case vent hose bracket (2) nut to the stud, if equipped.

    Tighten: Tighten the nut to 20 N.m (15 lb ft).

18. For the 4L80-E automatic transmission, install the transfer case vent hose bracket (1) nut to the stud, if equipped.

    Tighten: Tighten the nut to 20 N.m (15 lb ft).

cardiagn.com

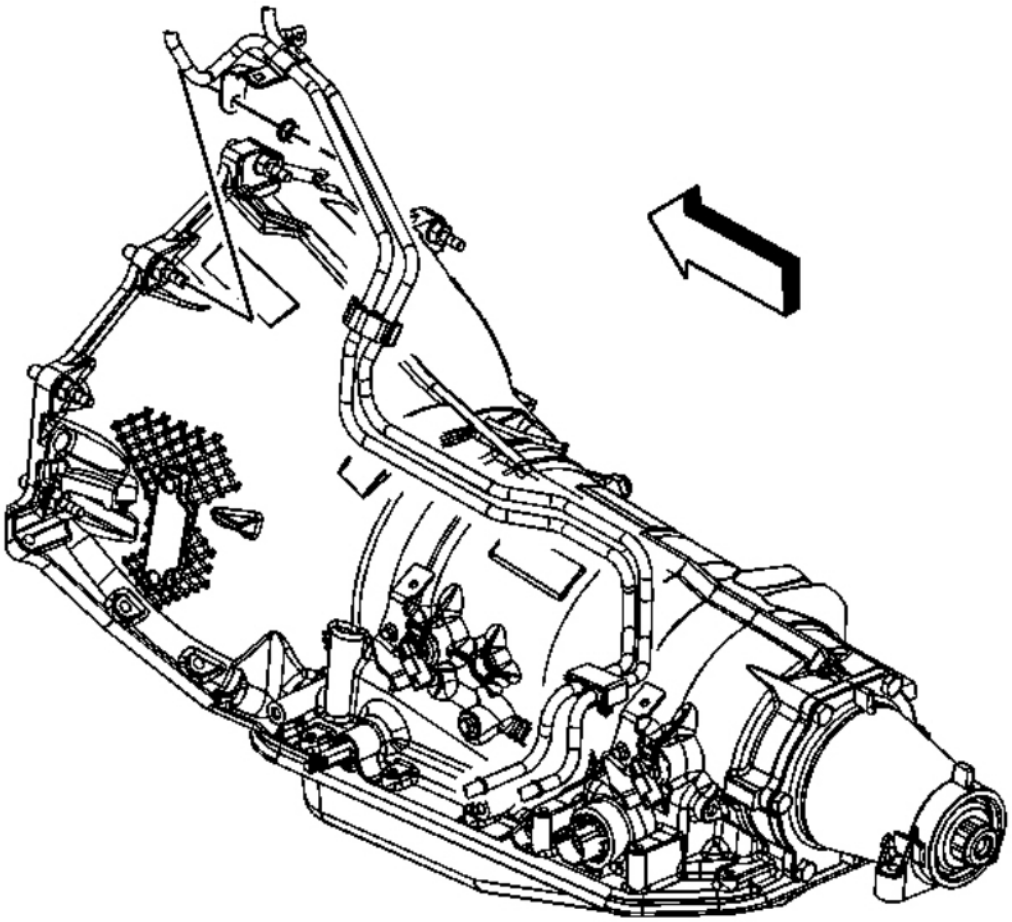

Fig. 125: View Of Fuel/Evaporative Emission Pipe & Bracket
Courtesy of GENERAL MOTORS CORP.

19. Position the fuel/EVAP pipe bracket and install the bracket to the stud. (typical installation shown).
20. Install the fuel/EVAP pipe bracket nut to the transmission stud

Tighten: Tighten the nut to 20 N.m (15 lb ft).

cardiagn.com

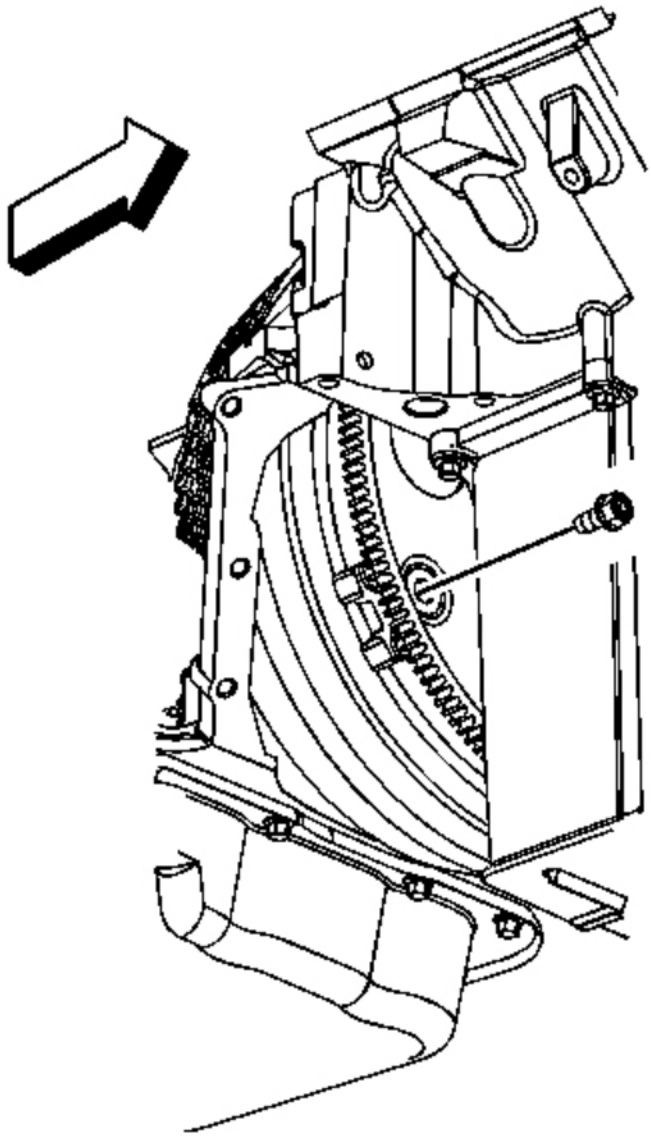

Fig. 126: View Of Flywheel To Torque Converter Bolts
Courtesy of GENERAL MOTORS CORP.

21. Align the torque converter bolt holes to the flywheel bolt holes.
22. Install the flywheel to torque converter bolts.

Tighten:

cardiagn.com

- For the 4L60-E/4L70-E/6L80-E automatic transmission, tighten the bolts to 63 N.m (47 lb ft).
- For the 4L80-E automatic transmission, tighten the bolts to 60 N.m (44 lb ft).

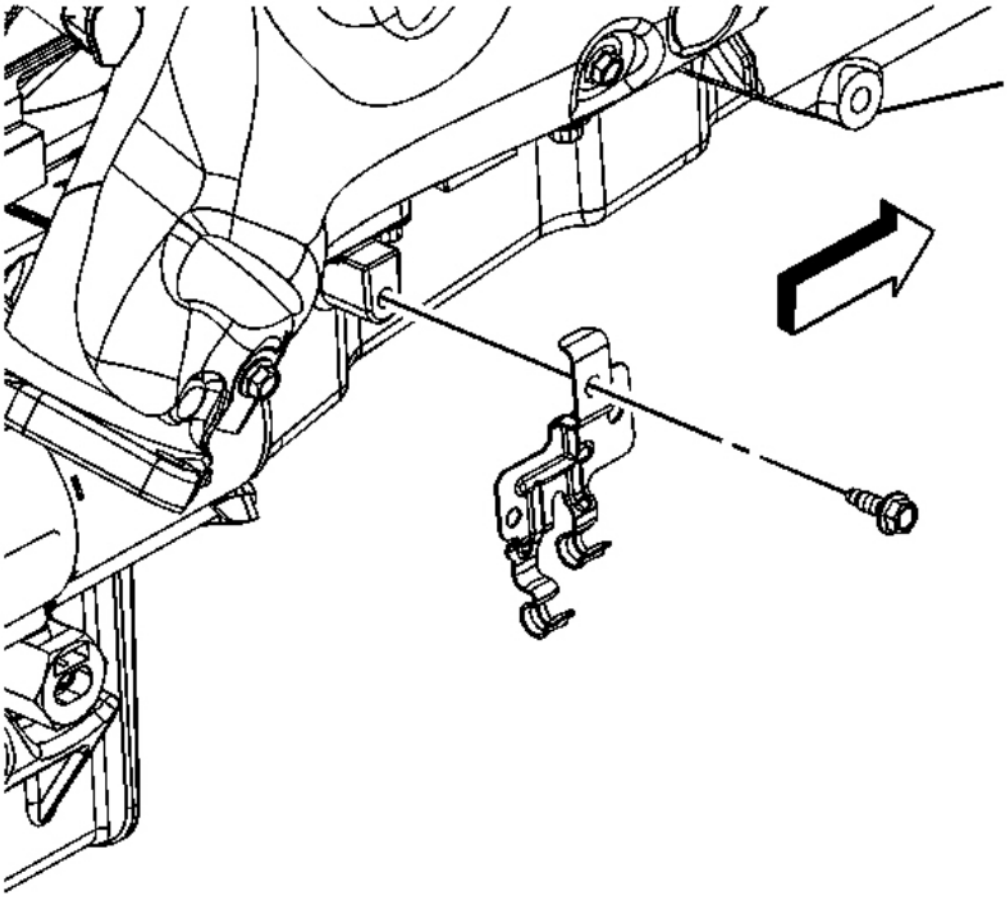

Fig. 127: View Of Oil Cooler Line Clip & Bolt
Courtesy of GENERAL MOTORS CORP.

23. Position the transmission oil cooler line clip to the oil pan and install the bolt, if equipped.

    Tighten: Tighten the bolt to 9 N.m (80 lb in).

24. Install the catalytic converter. Refer to one of the following:
    - **Catalytic Converter Replacement (1500 Series)** for 1500 series
    - **Catalytic Converter Replacement - Left Side (2500 Series)** for the 2500 series

cardiagn.com

- **Catalytic Converter Replacement - Right Side (2500 Series)** for the 2500 series

25. Lower the vehicle.

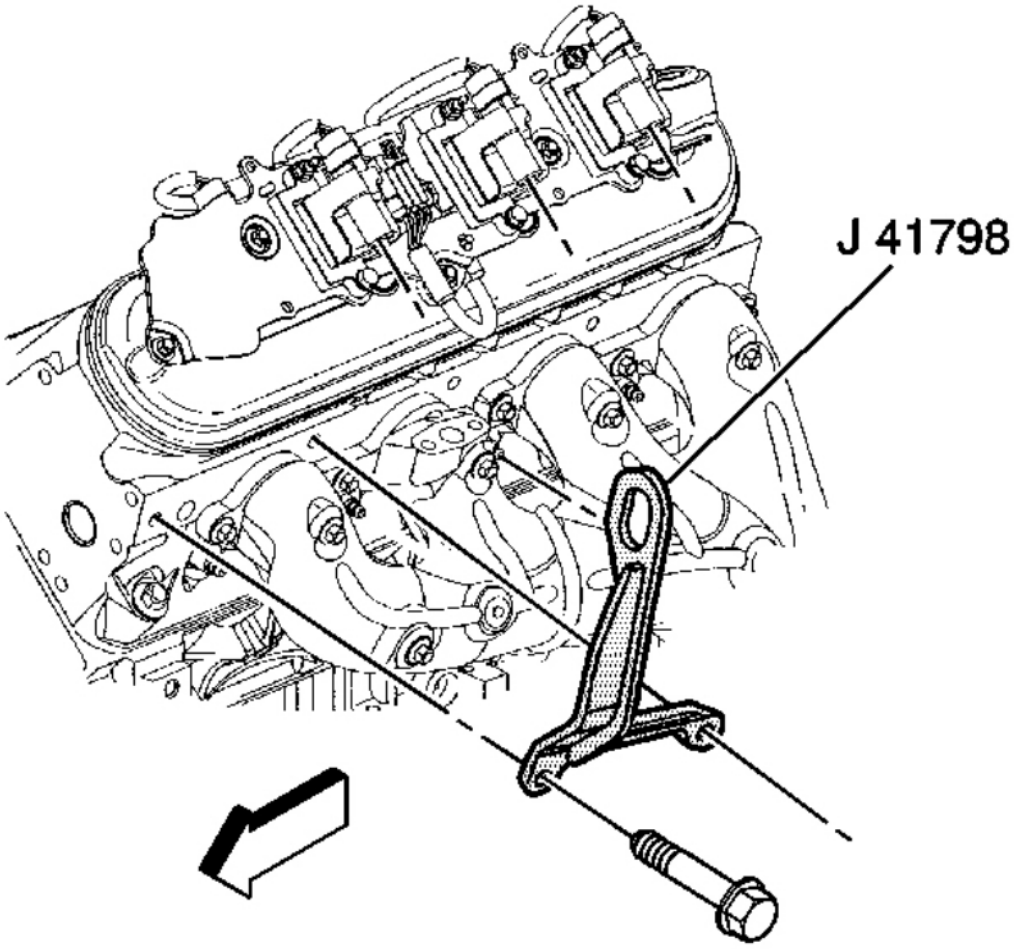

Fig. 128: View Of J 41798
Courtesy of GENERAL MOTORS CORP.

26. Remove the **J 41798** from the cylinder heads. See **Special Tools** .
27. Install the ignition coil(s) and spark plug wire(s), as required. Refer to **Ignition Coil Replacement** .

cardiagn.com

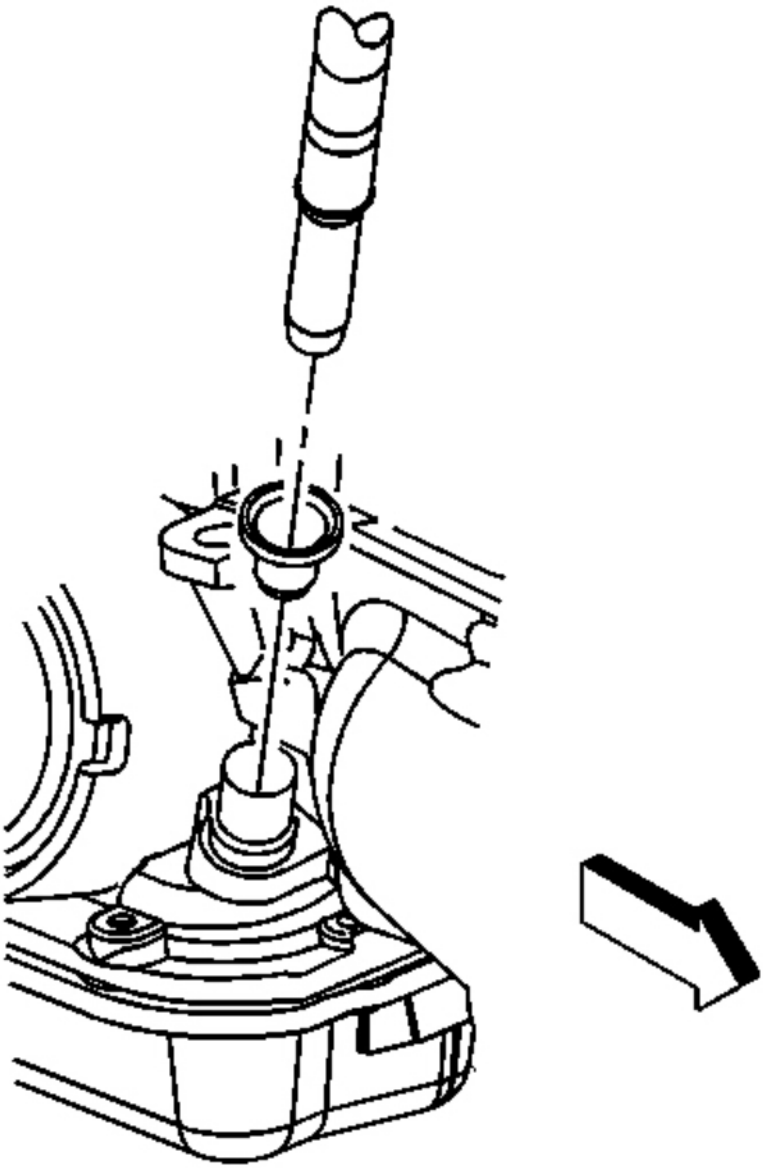

Fig. 129: View Of Oil Level Indicator Tube & Seal
Courtesy of GENERAL MOTORS CORP.

28. Install the transmission oil level indicator tube.

cardiagn.com

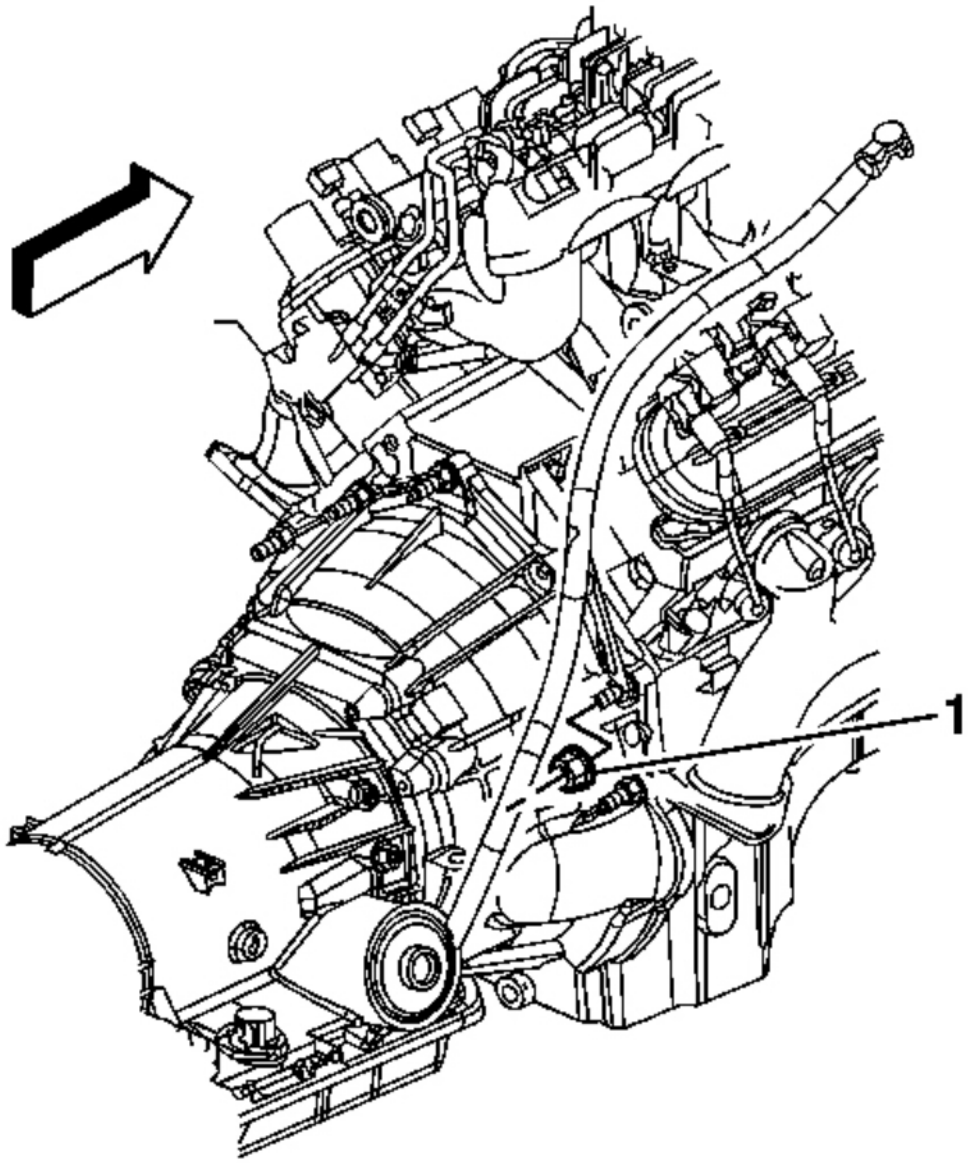

Fig. 130: View Of Transmission Oil Level Indicator Tube Nut
Courtesy of GENERAL MOTORS CORP.

29. Install the transmission oil level indicator tube nut (1).

    Tighten: Tighten the nut to 18 N.m (13 lb ft).

cardiagn.com

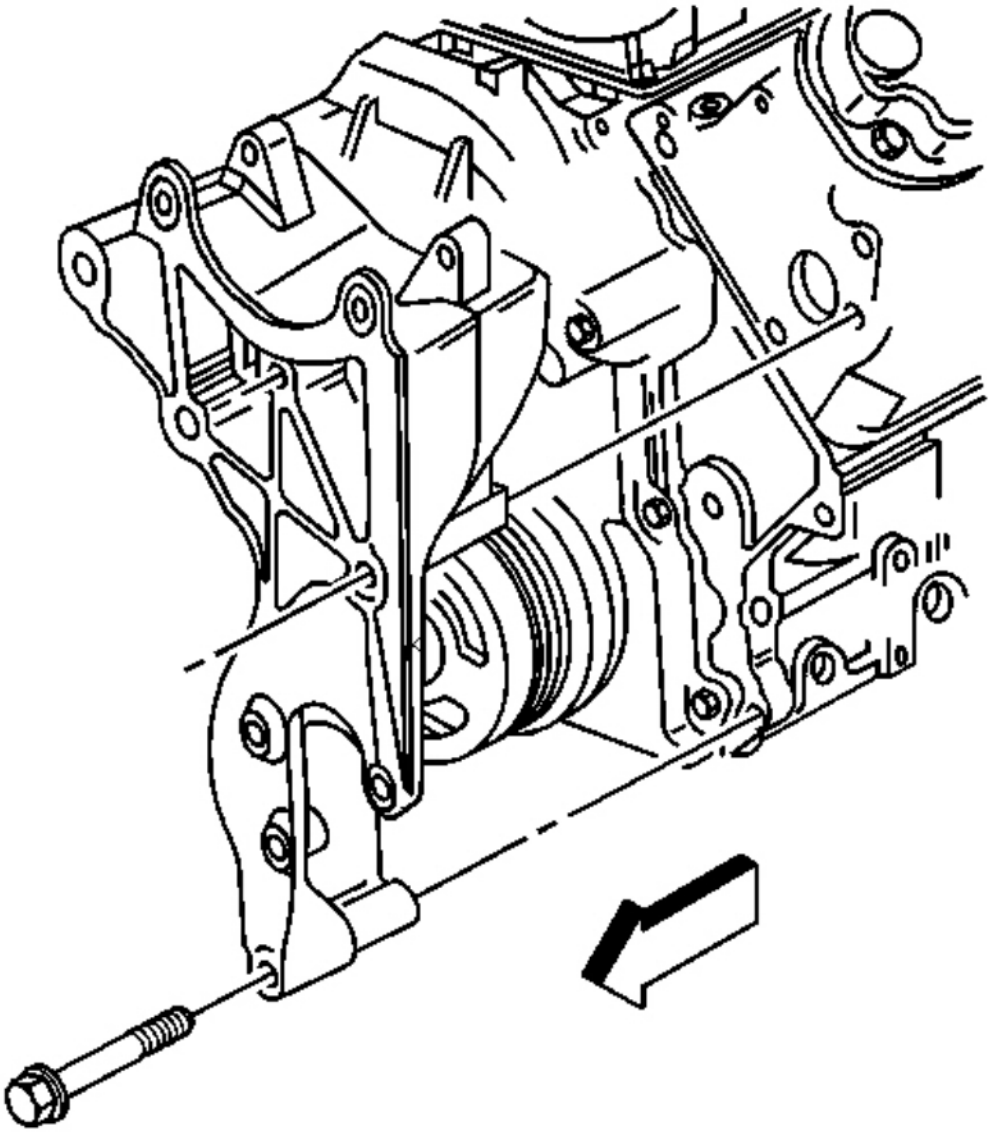

Fig. 131: View Of Generator Bracket & Bolts
Courtesy of GENERAL MOTORS CORP.

30. Position the generator bracket (with power steering pump) to the engine.
31. Install the generator bracket bolts.

Tighten: Tighten the bolts to 50 N.m (37 lb ft).

cardiagn.com

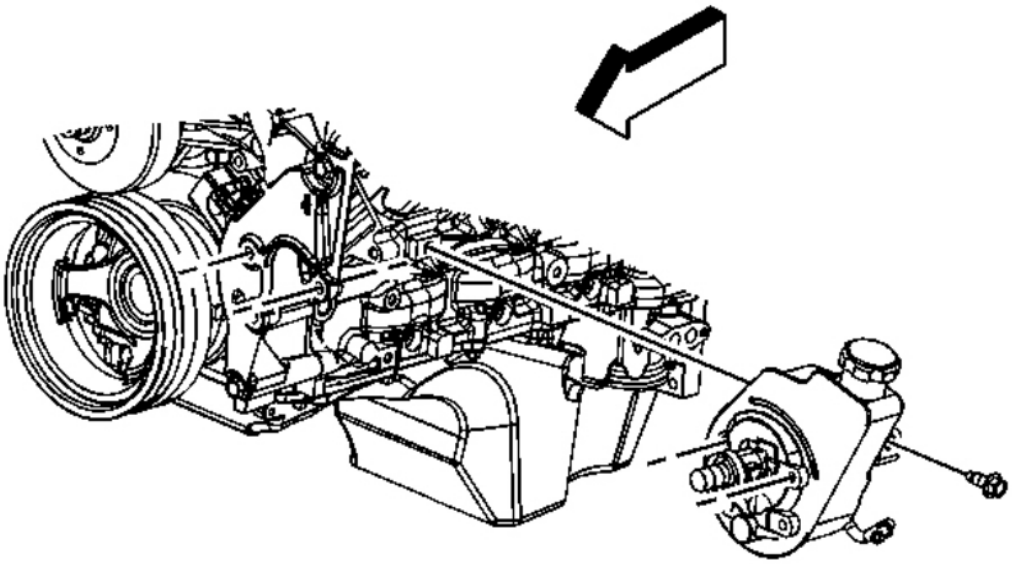

Fig. 132: View Of Power Steering Pump-To-Engine Block Bolt
Courtesy of GENERAL MOTORS CORP.

32. Install the rear power steering pump-to-engine block bolt (1500 series shown, 2500 series similar).

    Tighten: Tighten the bolt to 50 N.m (37 lb ft).

33. Raise the vehicle.

cardiagn.com

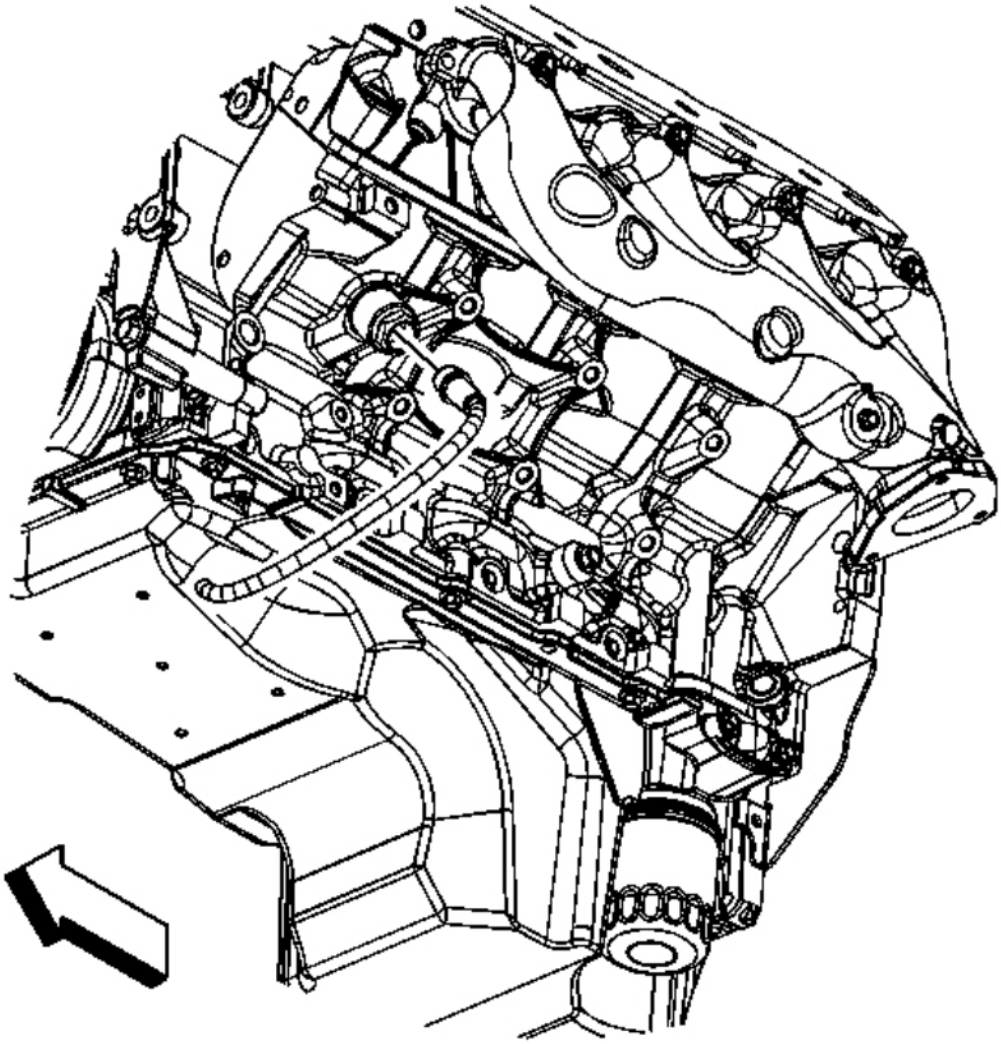

Fig. 133: View Of Coolant Heater Cord
Courtesy of GENERAL MOTORS CORP.

34. Connect the coolant heater cord to the coolant heater, if equipped.

cardiagn.com

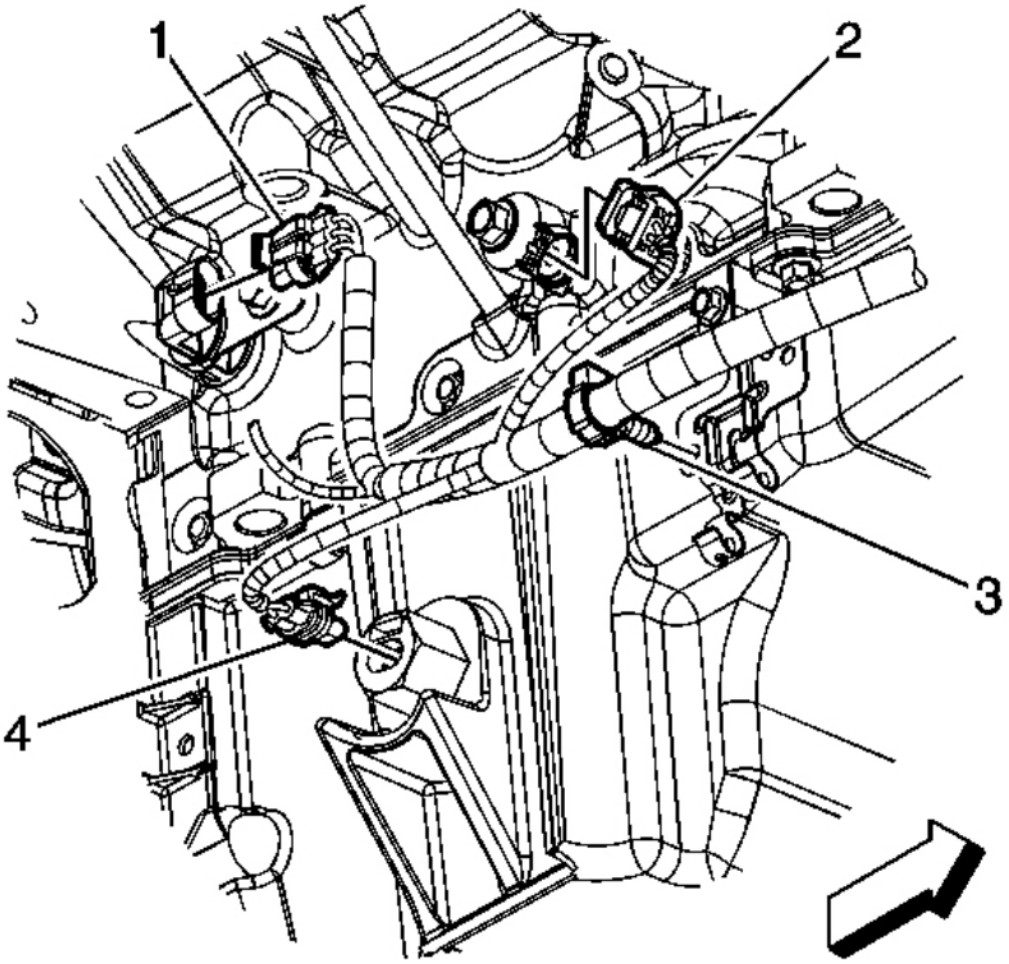

Fig. 134: View Of Electrical Connectors & Clips
Courtesy of GENERAL MOTORS CORP.

35. Connect the engine harness electrical connector (1) to the CKP sensor.
36. Connect the engine harness electrical connector (2) to the knock sensor.
37. Connect the engine harness electrical connector (4) to the oil level sensor.
38. Install the engine harness clip (3) to the transmission oil cooler line bracket.
39. Install the starter motor. Refer to **Starter Motor Replacement** .

cardiagn.com

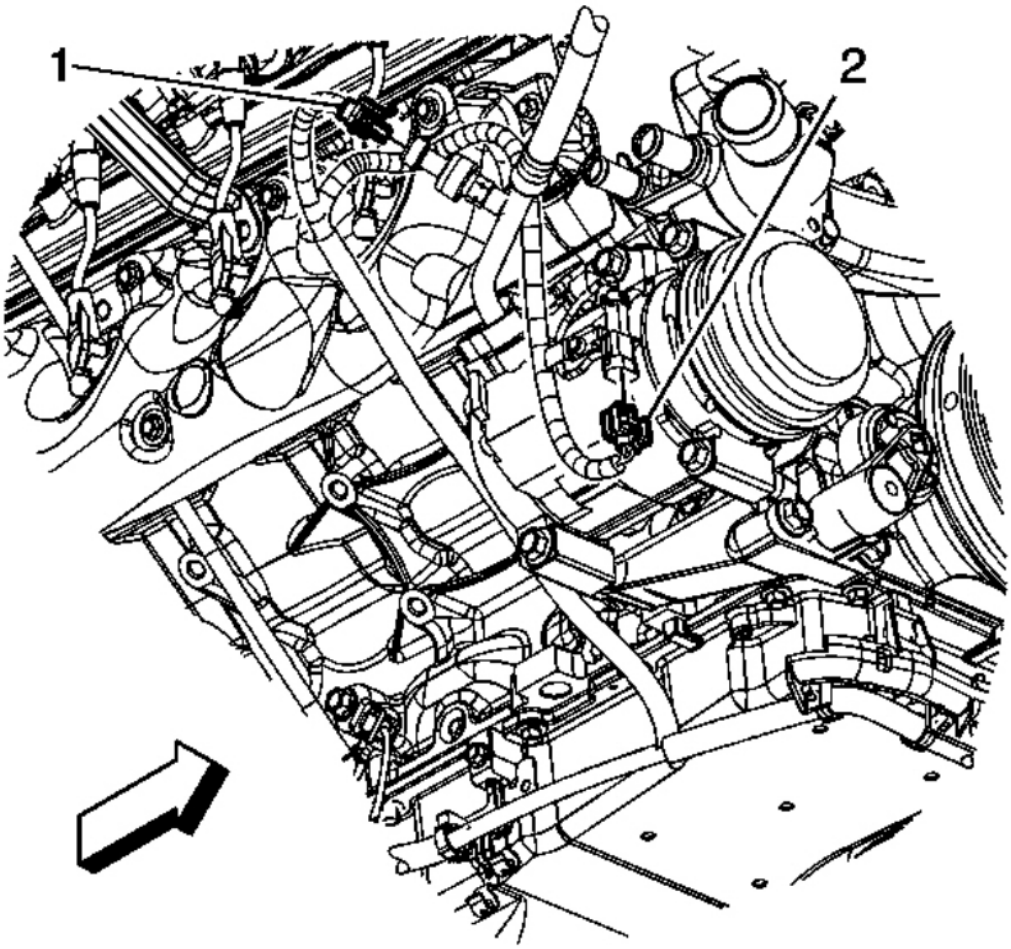

Fig. 135: View Of Electrical Connectors
Courtesy of GENERAL MOTORS CORP.

40. Connect the engine harness electrical connector (1) to the A/C refrigerant pressure sensor.

cardiagn.com

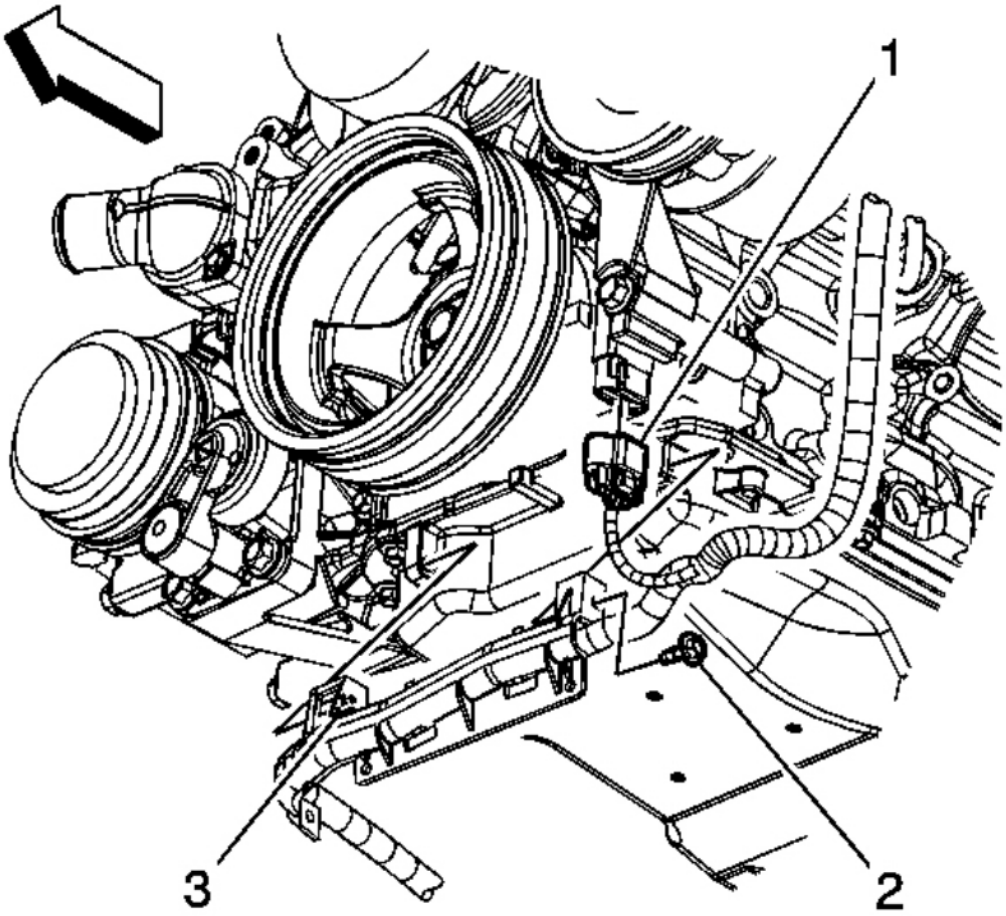

Fig. 136: View Of Electrical Connector, Cable Channel Bolt & Pin
Courtesy of GENERAL MOTORS CORP.

41. Slide the channel pin (3) into the oil pan tab.
42. Install the battery cable channel bolt (2).

    Tighten: Tighten the bolt to 12 N.m (106 lb in).

43. Connect the engine harness electrical connector (1) to the CMP sensor wire harness.

cardiagn.com

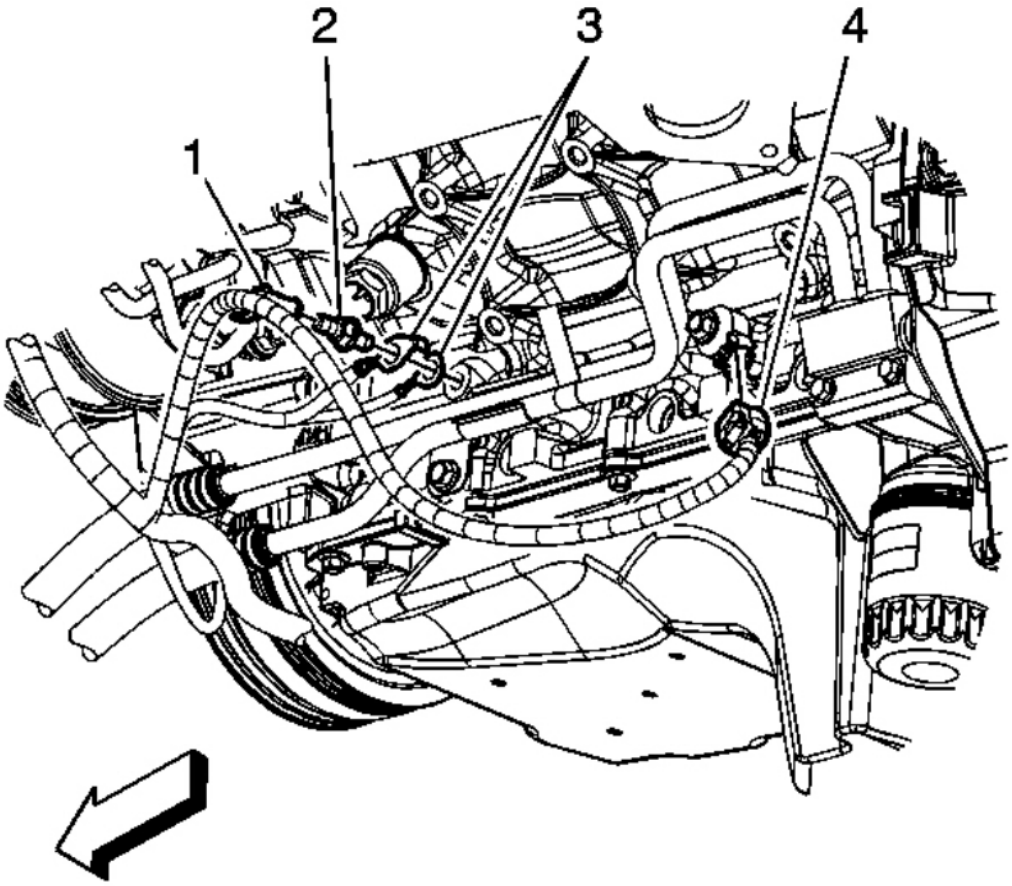

Fig. 137: View Of Engine Harness Components
Courtesy of GENERAL MOTORS CORP.

44. Connect the engine harness electrical connector (4) to the knock sensor.
45. Position the engine harness grounds (3) to the engine block.
46. Install the engine harness ground stud (2) to the engine block.

    Tighten: Tighten the stud to 16 N.m (12 lb ft).

47. Install the engine harness clip (1) to the ground stud.
48. Lower the vehicle.

cardiagn.com

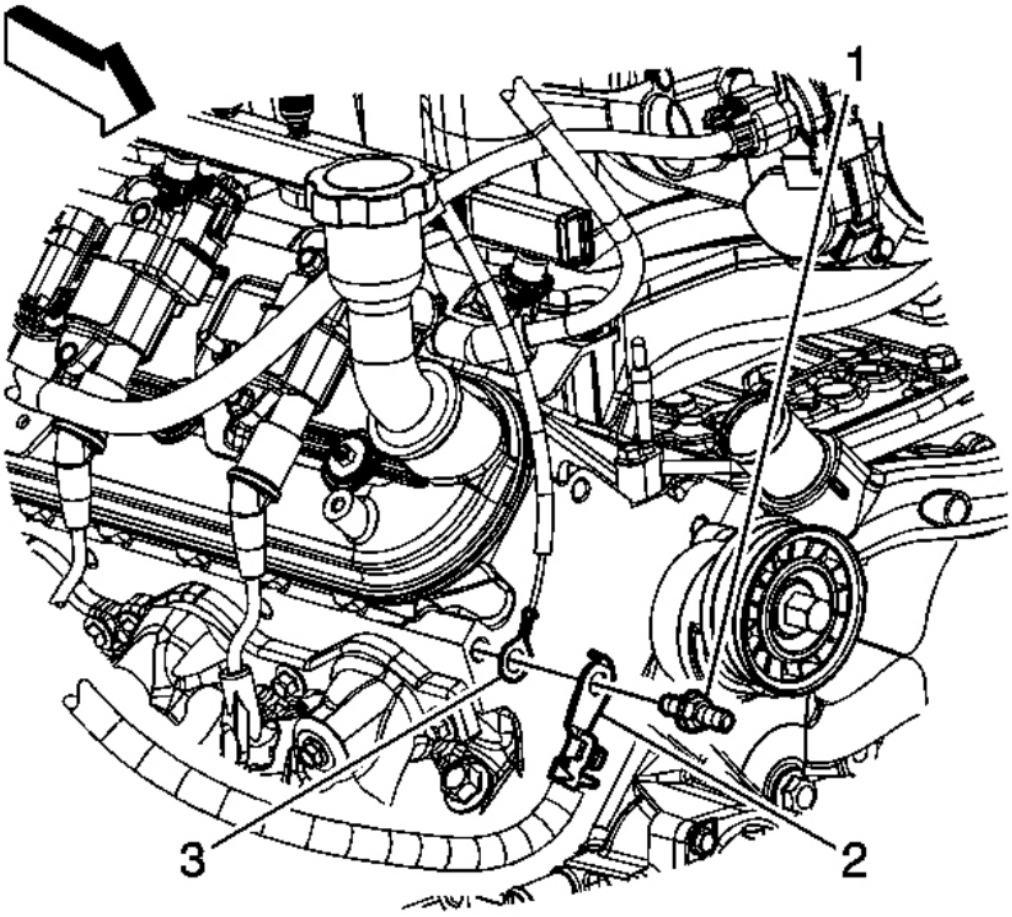

Fig. 138: View Of Battery Cable Terminals & Stud
Courtesy of GENERAL MOTORS CORP.

49. Position the negative battery cable terminal (2) and the engine harness ground (3) to the right cylinder head.
50. Install the negative battery cable stud (1) to the right cylinder head.

    Tighten: Tighten the stud to 25 N.m (18 lb ft).

cardiagn.com

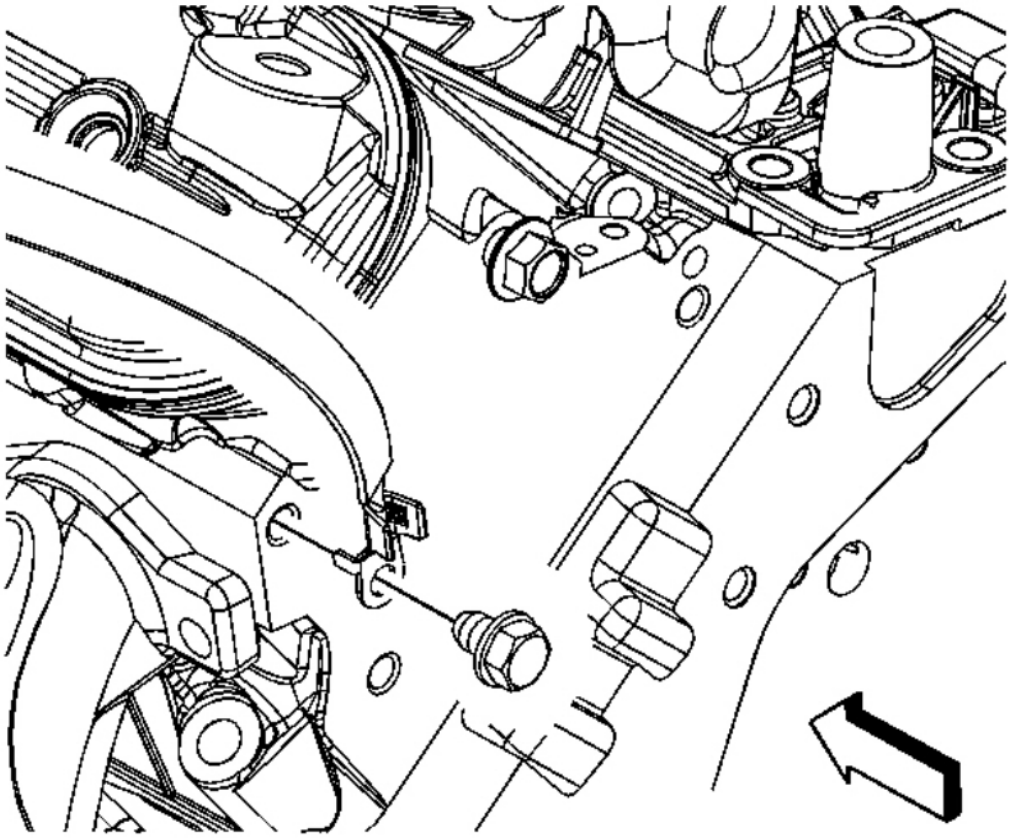

Fig. 139: View Of Engine Ground Strap & Bolt
Courtesy of GENERAL MOTORS CORP.

51. Position the engine ground strap to the cylinder head.
52. Install the engine ground strap bolt to the rear of the left cylinder head.

Tighten: Tighten the bolt to 16 N.m (12 lb ft).

cardiagn.com

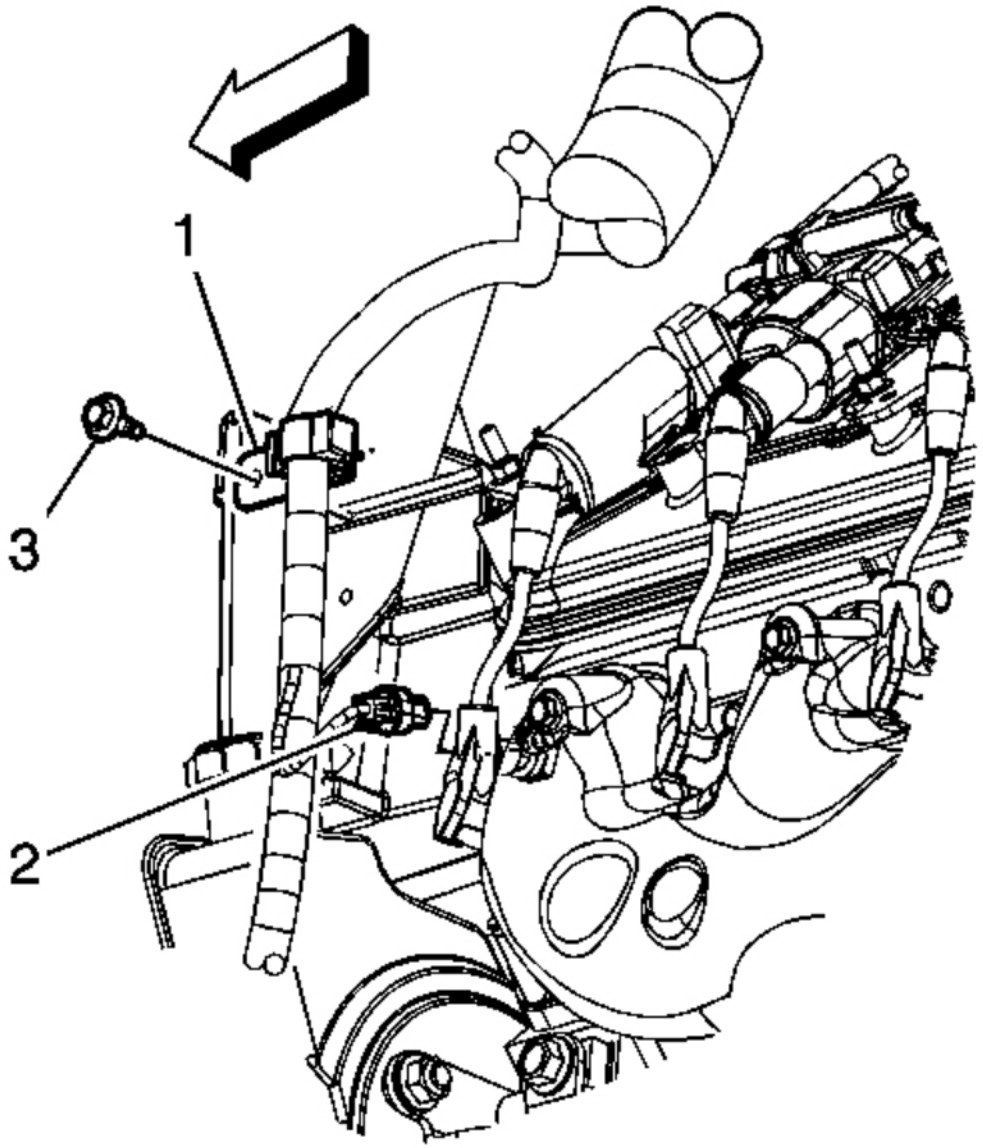

Fig. 140: View Of Engine Wiring Harness, Clip, Bolt & Connector
Courtesy of GENERAL MOTORS CORP.

53. Connect the engine harness electrical connector (2) to the ECT sensor.
54. Install the engine harness clip bolt (1) to the generator/power steering pump bracket.

Tighten: Tighten the bolt to 9 N.m (80 lb in).

cardiagn.com

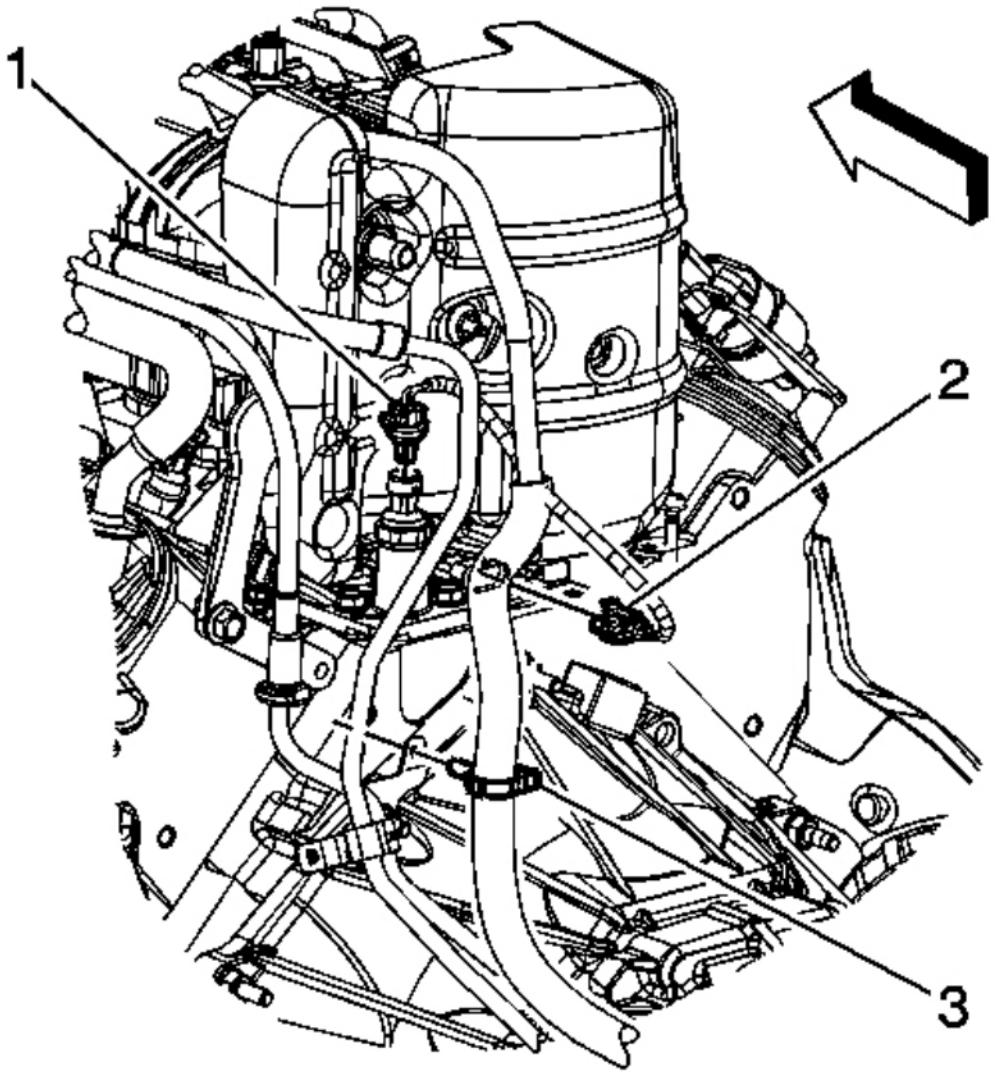

Fig. 141: View Of Engine Harness Electrical Connectors & Inlet Hose Clamp
Courtesy of GENERAL MOTORS CORP.

55. Connect the engine harness electrical connector (1) to the oil pressure sensor.
56. Connect the engine harness electrical connector (2) to the lifter oil manifold.
57. Install the heater hoses. Refer to **Heater Inlet Hose Replacement** and **Heater Hose Replacement - Outlet** .

cardiagn.com

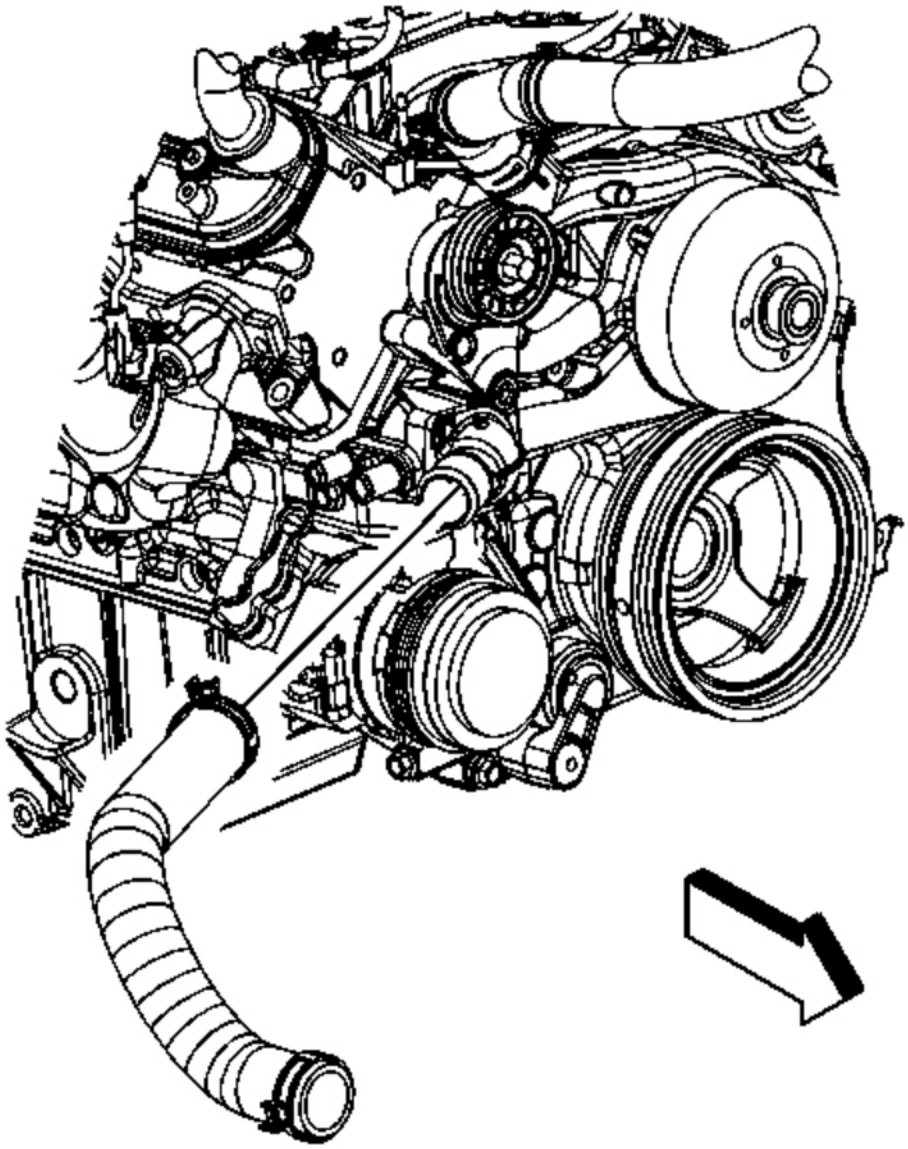

Fig. 142: View Of Radiator Outlet Hose
Courtesy of GENERAL MOTORS CORP.

58. Install the radiator outlet hose to the water pump.
59. Position the radiator outlet hose clamp at the water pump.

cardiagn.com

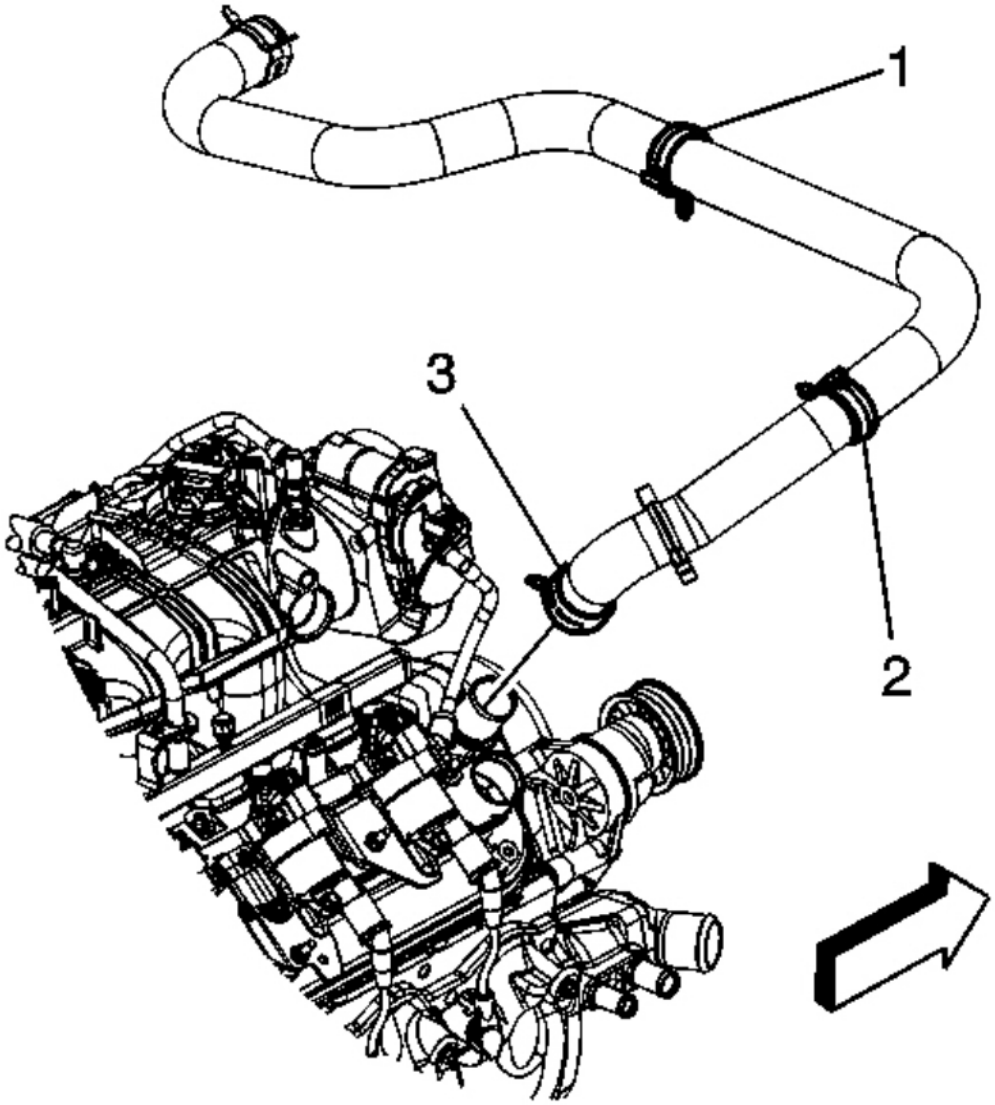

Fig. 143: View Of Radiator Vent Inlet Hose Clamp At Water Pump
Courtesy of GENERAL MOTORS CORP.

60. Install the radiator inlet hose to the water pump.
61. Position the radiator inlet hose clamp (3) at the water pump.

cardiagn.com

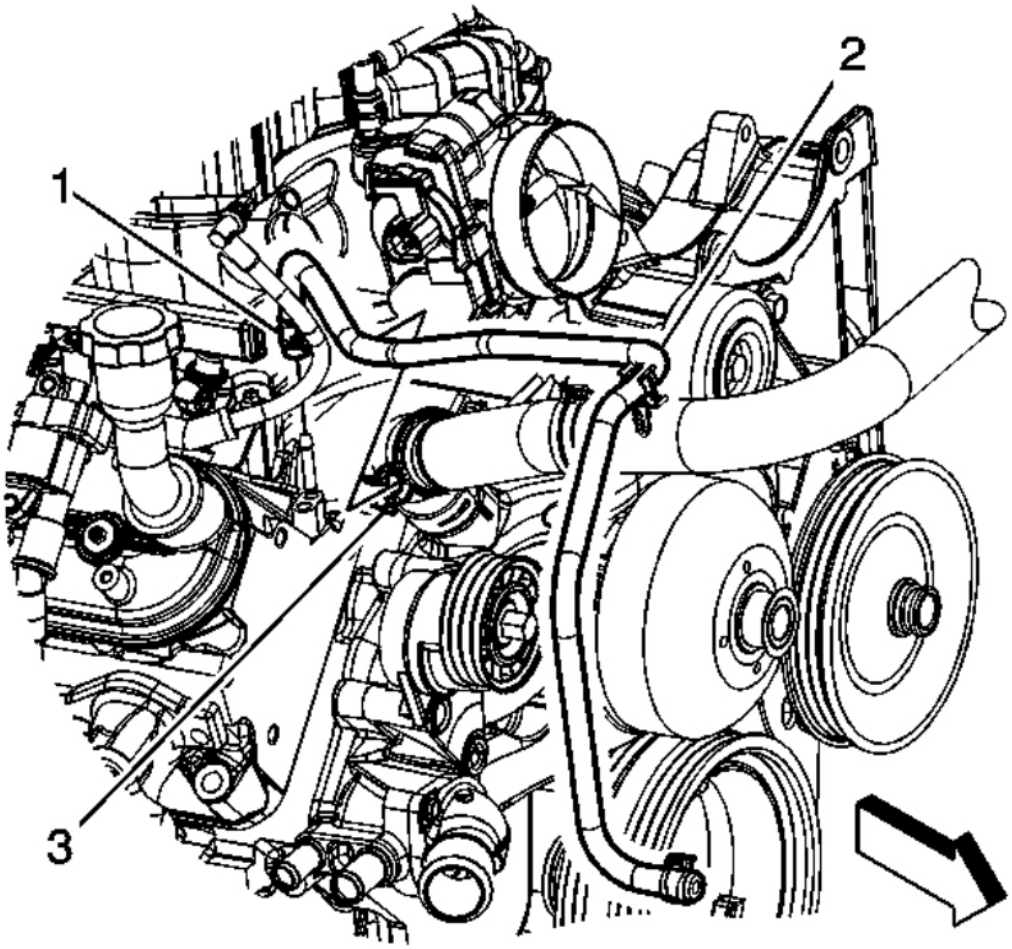

Fig. 144: View Of Radiator Vent Inlet Hose & Clamps
Courtesy of GENERAL MOTORS CORP.

62. Position and install the radiator vent inlet hose (2) to the air bleed pipe.
63. Position the radiator vent inlet hose clamp (1) at the air bleed pipe.
64. Install the radiator vent inlet hose (2) to the radiator inlet hose clip (3).

cardiagn.com

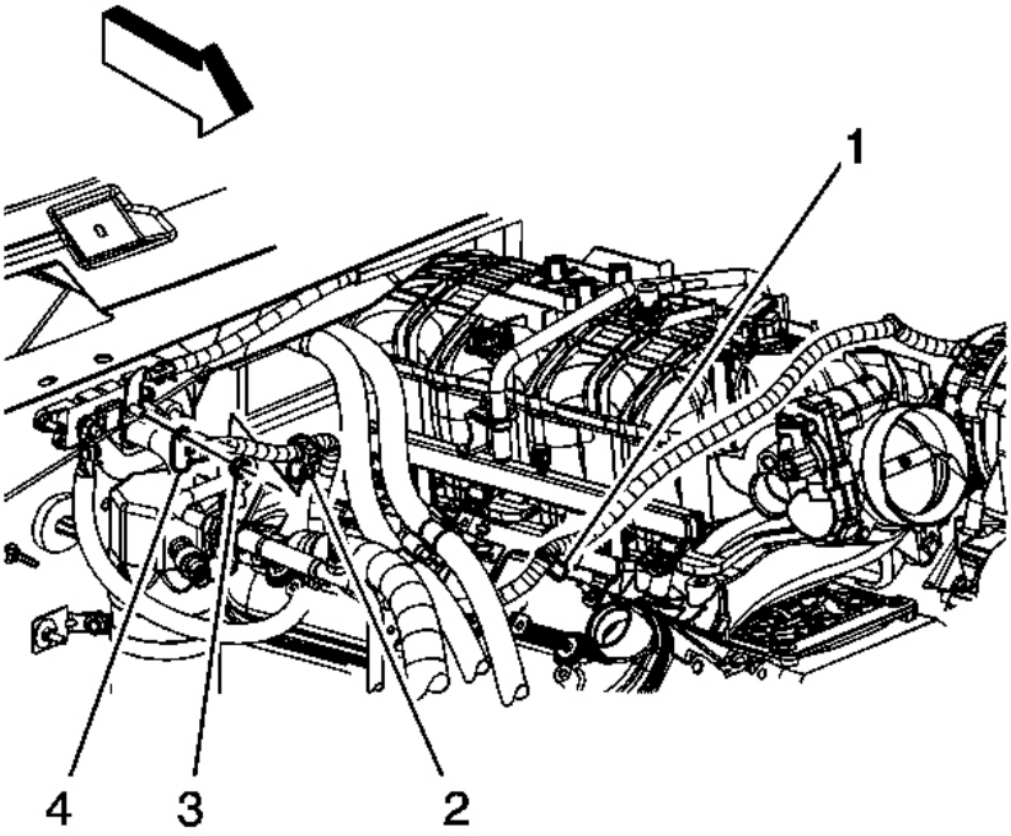

Fig. 145: View Of Generator Battery Jumper Cable & Components
Courtesy of GENERAL MOTORS CORP.

65. Position the generator battery jumper to the engine.
66. Install the generator battery jumper clip (1) to the stud.
67. Install the intake manifold. Refer to **Intake Manifold Replacement (RPOs LC9/LMG/LY5/L76/L92)** or **Intake Manifold Replacement (RPOs LY2/LY6)** .
68. Raise the vehicle.
69. Install the A/C compressor. Refer to **Compressor Replacement** .

cardiagn.com

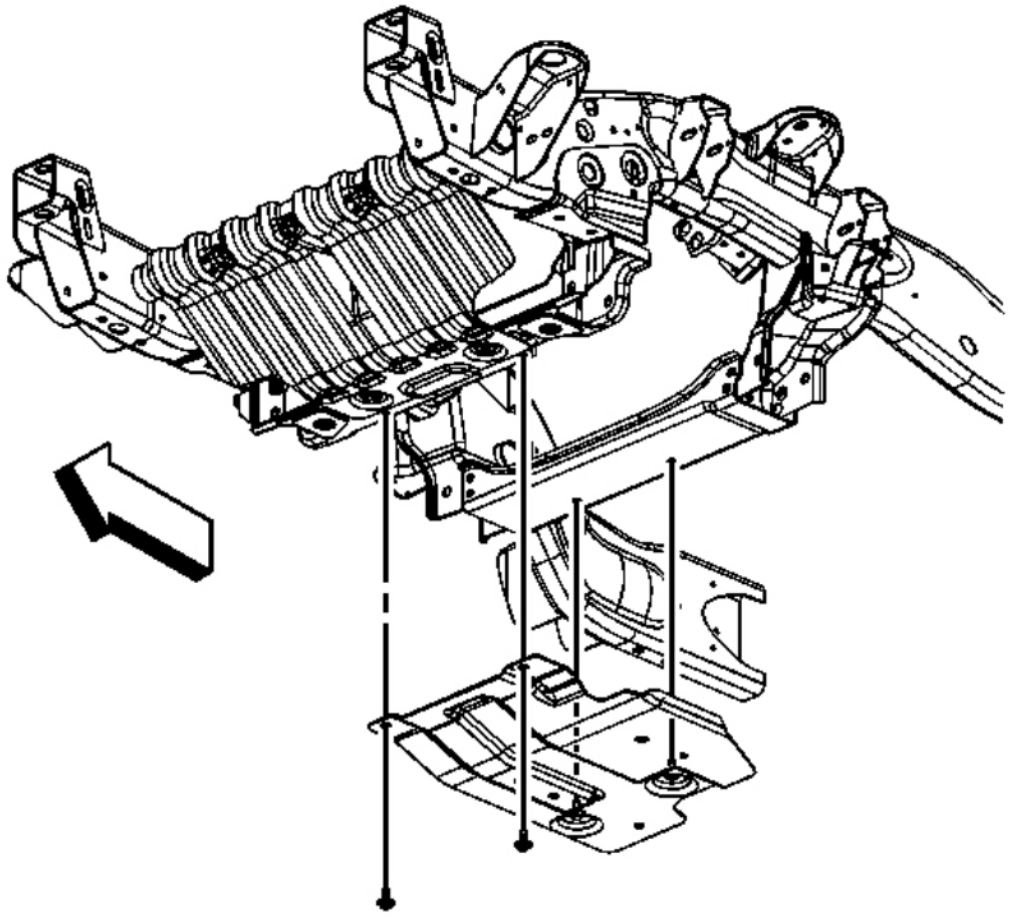

Fig. 146: View Of Oil Pan Skid Plate & Bolts
Courtesy of GENERAL MOTORS CORP.

70. For 2500 series vehicles, install the oil pan skid plate and bolts, if equipped.

    Tighten: Tighten the bolts to 28 N.m (21 lb ft).

cardiagn.com

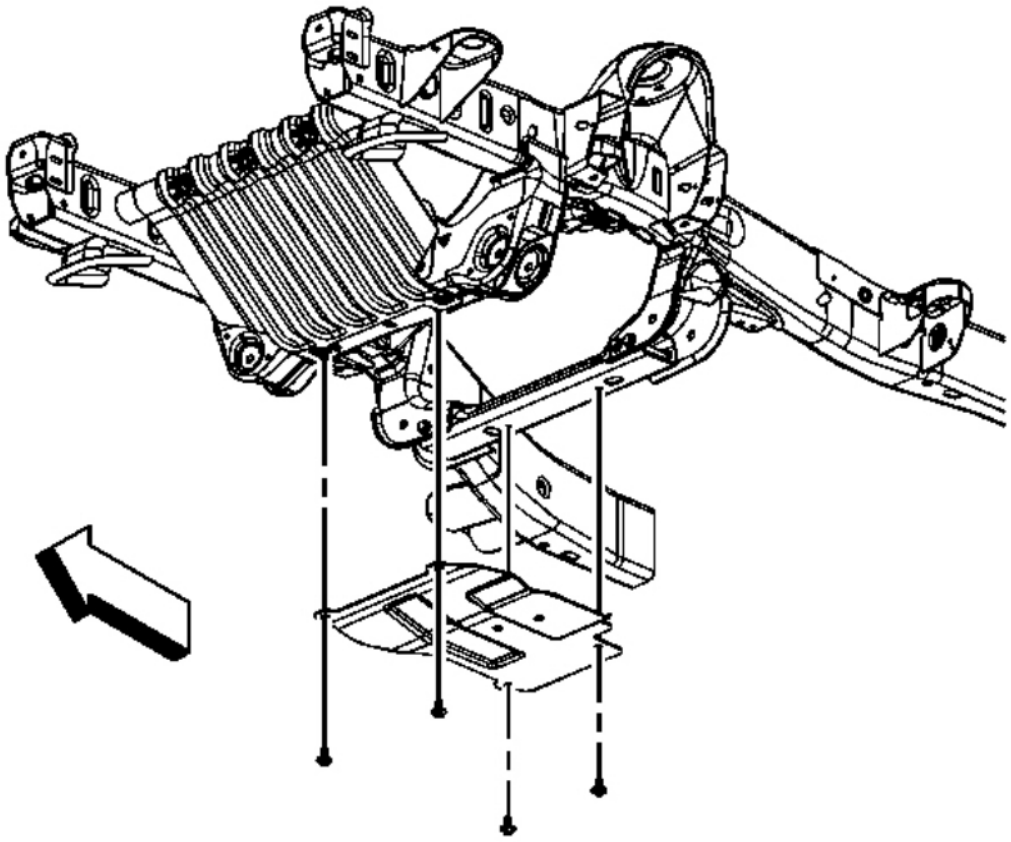

Fig. 147: View Of Oil Pan Skid Plate & Bolts
Courtesy of GENERAL MOTORS CORP.

71. For 1500 series vehicles, install the oil pan skid plate and bolts, if equipped.

    Tighten: Tighten the bolts to 28 N.m (21 lb ft).

cardiagn.com

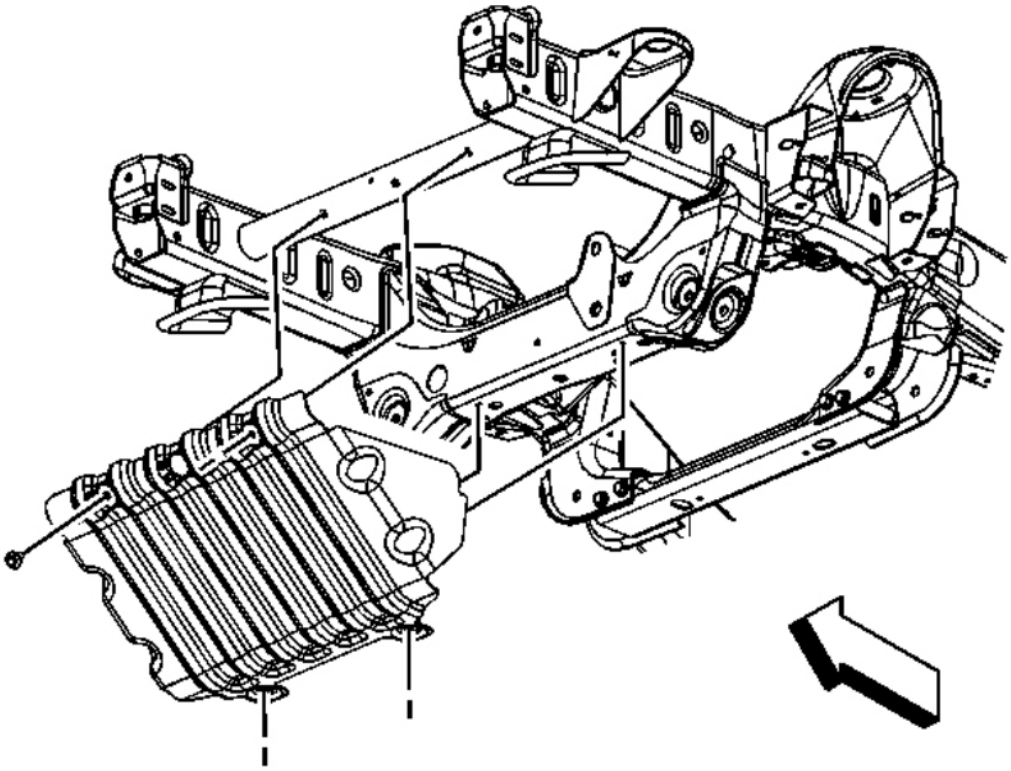

Fig. 148: View Of Engine Shield & Bolts
Courtesy of GENERAL MOTORS CORP.

72. Install the engine shield and bolts.

    Tighten: Tighten the bolts to 20 N.m (15 lb ft).

73. Lower the vehicle.
74. Install the radiator support. Refer to **Radiator Support Replacement** .

cardiagn.com

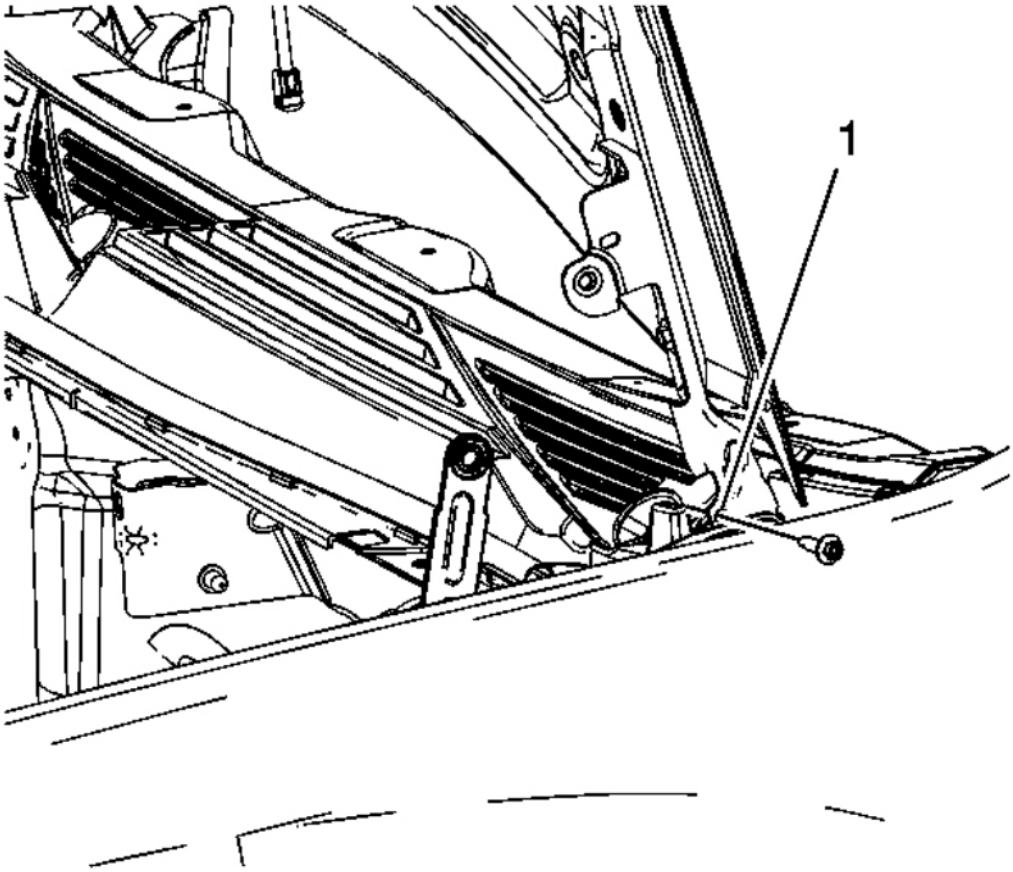

Fig. 149: View Of Service Piston Notch
Courtesy of GENERAL MOTORS CORP.

IMPORTANT: There is a positive stop which limits the hood from being opened too far.

75. With the aid of the assistant raise the hood slightly until the hood hinge bolts can be removed from the service position notch (1).

cardiagn.com

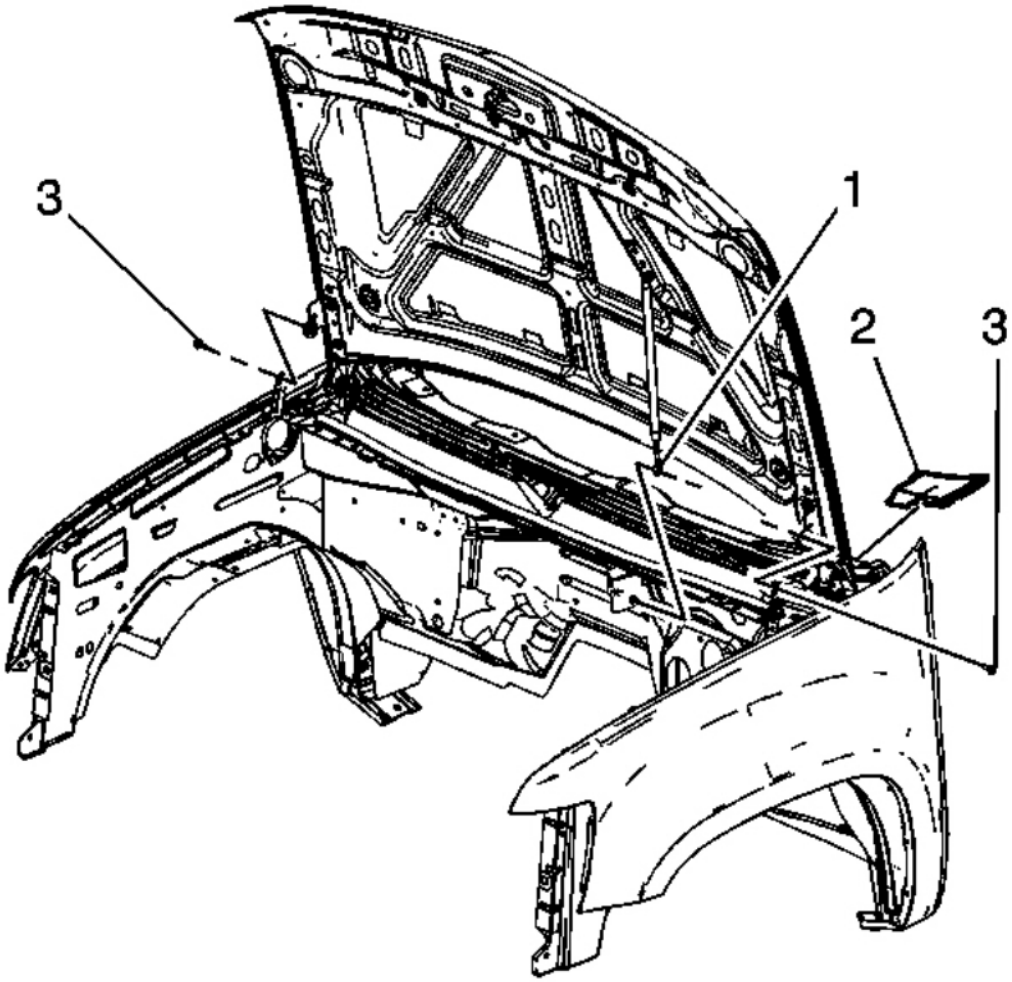

Fig. 150: View Of Hood Strut Rod, Grille End Caps & Hood Hinge Bolts
Courtesy of GENERAL MOTORS CORP.

76. With the aid of an assistant lower the hood and install the hood hinge bolts (3) to the hood hinges.

    Tighten: Tighten the bolts to 25 N.m (18 lb ft).

77. Install the hood strut rod (1) to the hood strut bracket stud.
78. Install the air inlet grille end caps (2), push down the end cap in order to engage the retainers. (left side shown, right side similar).

cardiagn.com

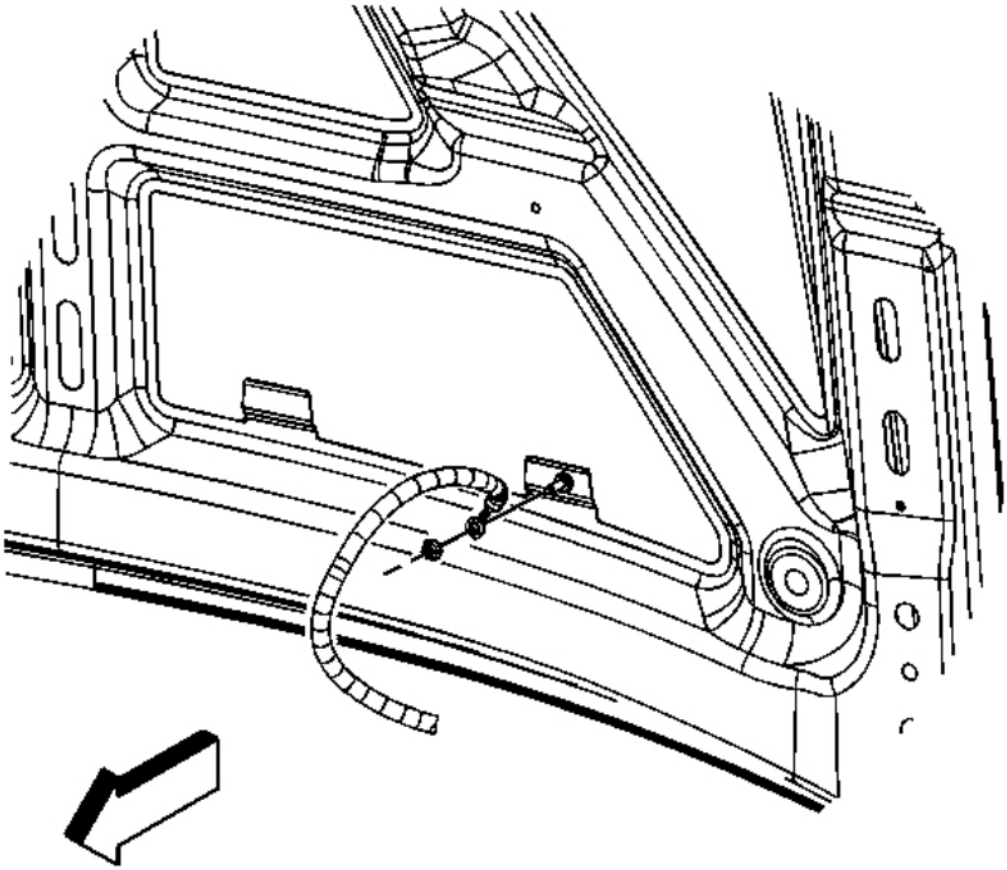

Fig. 151: View Of Ground Strap & Nut
Courtesy of GENERAL MOTORS CORP.

79. Install the ground strap to the hood stud.
80. Install the ground strap nut at the hood stud.

    Tighten: Tighten the nut to 9 N.m (80 lb in).

81. Prelube the engine. Refer to **Engine Prelubing** .
82. Perform the CKP system variation learn procedure. Refer to **Crankshaft Position System Variation Learn** .

IMPORTANT: After an overhaul the engine should be tested. Use the following procedure after the engine is installed in the vehicle.

cardiagn.com

- Disable the ignition system.
- Crank the engine several times. Listen for any unusual noises or evidence that parts are binding.
- Enable the ignition system.
- Start the engine and listen for unusual noises.
- Check the vehicle oil pressure gauge or light and confirm that the engine has acceptable oil pressure.
- Run the engine speed at about 1,000 RPM until the engine has reached normal operating temperature.
- Listen for sticking lifters or other unusual noises.
- Inspect for fuel, oil and/or coolant leaks while the engine is running.
- Perform a final inspection for the proper oil and coolant levels.

83. Close the hood.

ENGINE OIL AND OIL FILTER REPLACEMENT

REMOVAL PROCEDURE

cardiagn.com

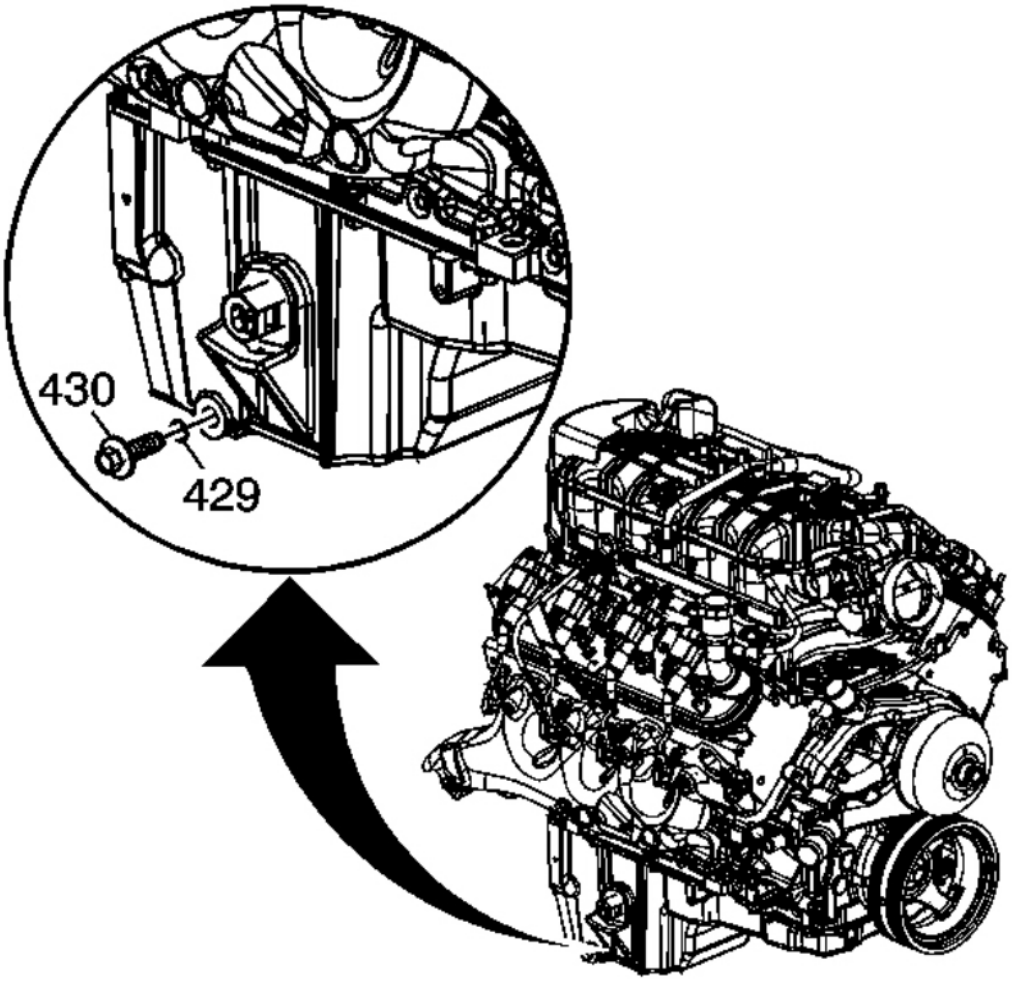

Fig. 152: View Of Oil Pan Drain Plug & Seal
Courtesy of GENERAL MOTORS CORP.

1. Open the hood.
2. Remove the oil fill cap.
3. Raise and suitably support the vehicle. Refer to **Lifting and Jacking the Vehicle** .
4. Place a oil drain pan under the oil pan drain plug.
5. Remove the oil pan drain plug (430).
6. Allow the oil to drain completely.
7. Clean and inspect the oil pan drain plug, replace if necessary.
8. Clean and inspect the oil pan sealing surface, replace the oil pan if necessary.

cardiagn.com

9. Wipe any remaining oil from the drain plug hole and reinstall the oil pan drain plug until snug.

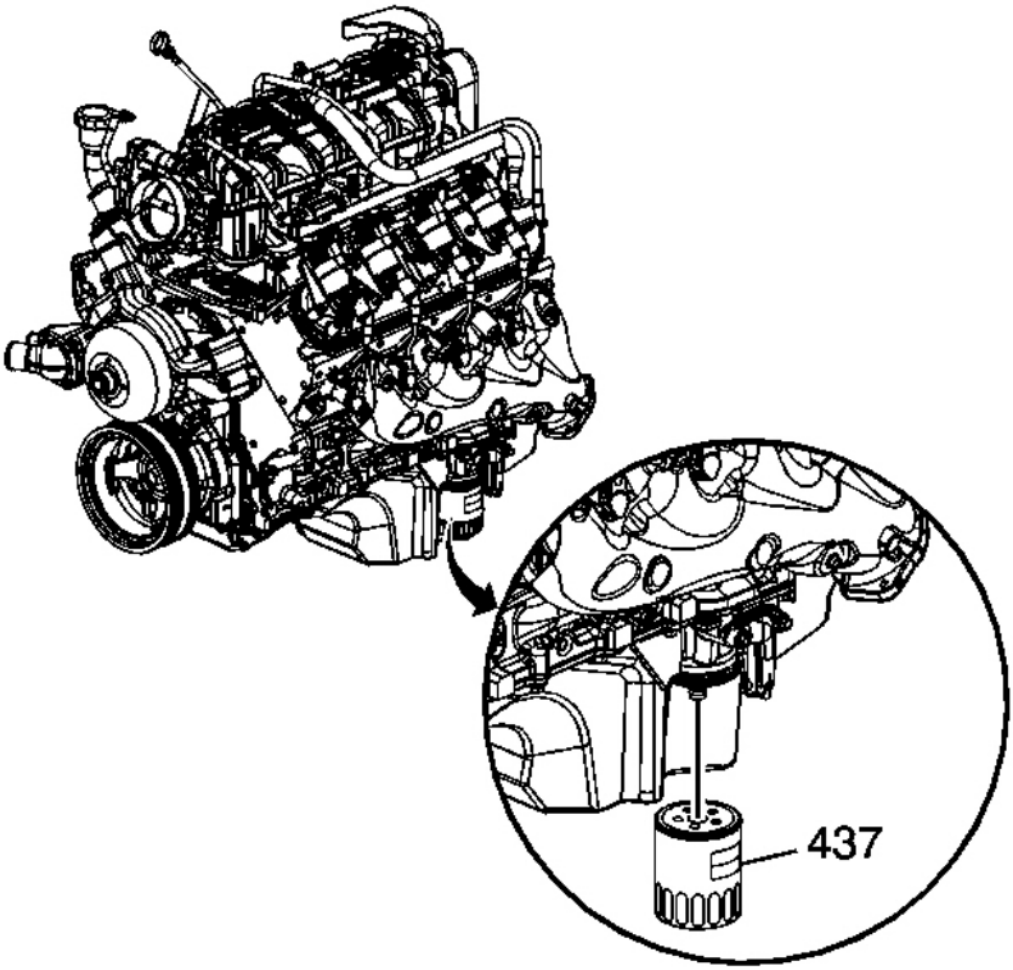

Fig. 153: View Of Engine Oil Filter
Courtesy of GENERAL MOTORS CORP.

10. Position the drain pan under the oil filter.
11. Remove the oil filter.
12. Ensure that the oil filter gasket is still on the old filter if not, remove the oil filter gasket from the oil pan.

INSTALLATION PROCEDURE

cardiagn.com

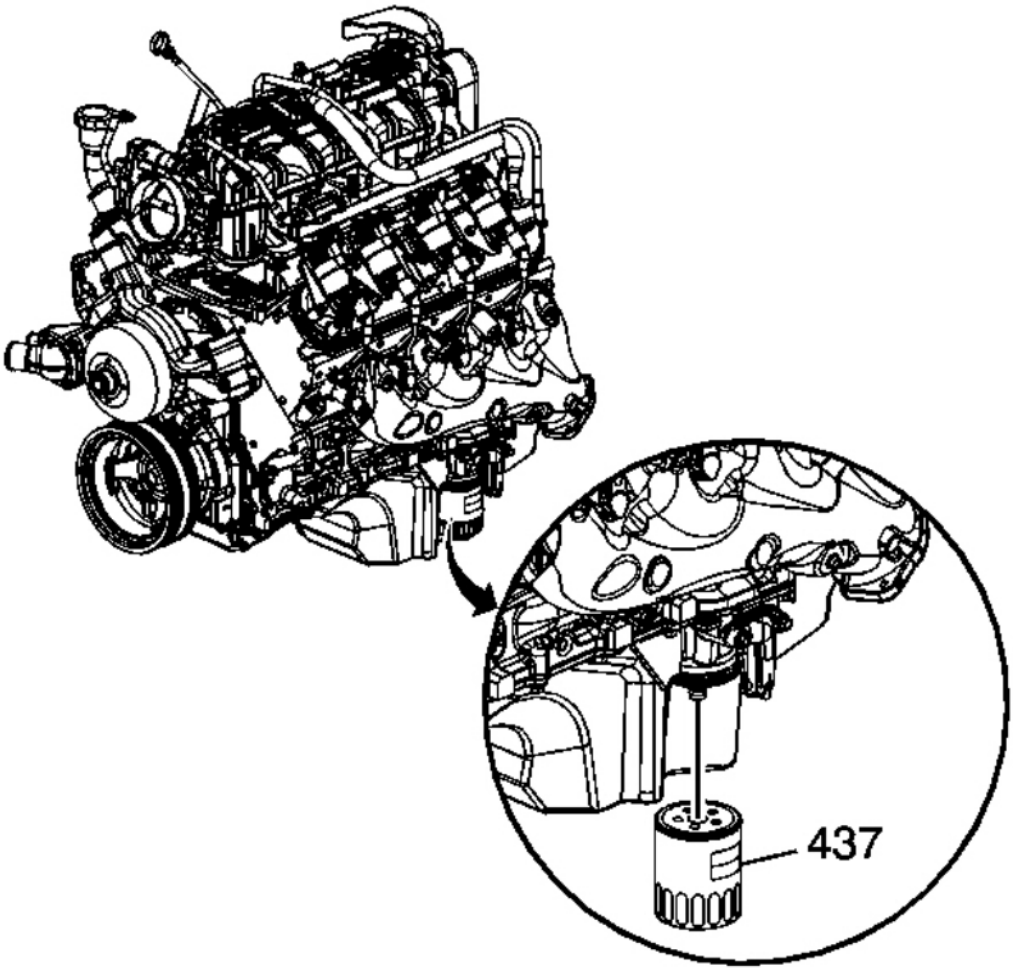

Fig. 154: View Of Engine Oil Filter
Courtesy of GENERAL MOTORS CORP.

1. Apply clean engine oil to the NEW oil filter seal.

   NOTE: **Refer to Fastener Notice .**

2. Install the NEW oil filter.

   Tighten: Tighten the oil filter to 30 N.m (22 lb ft).

cardiagn.com

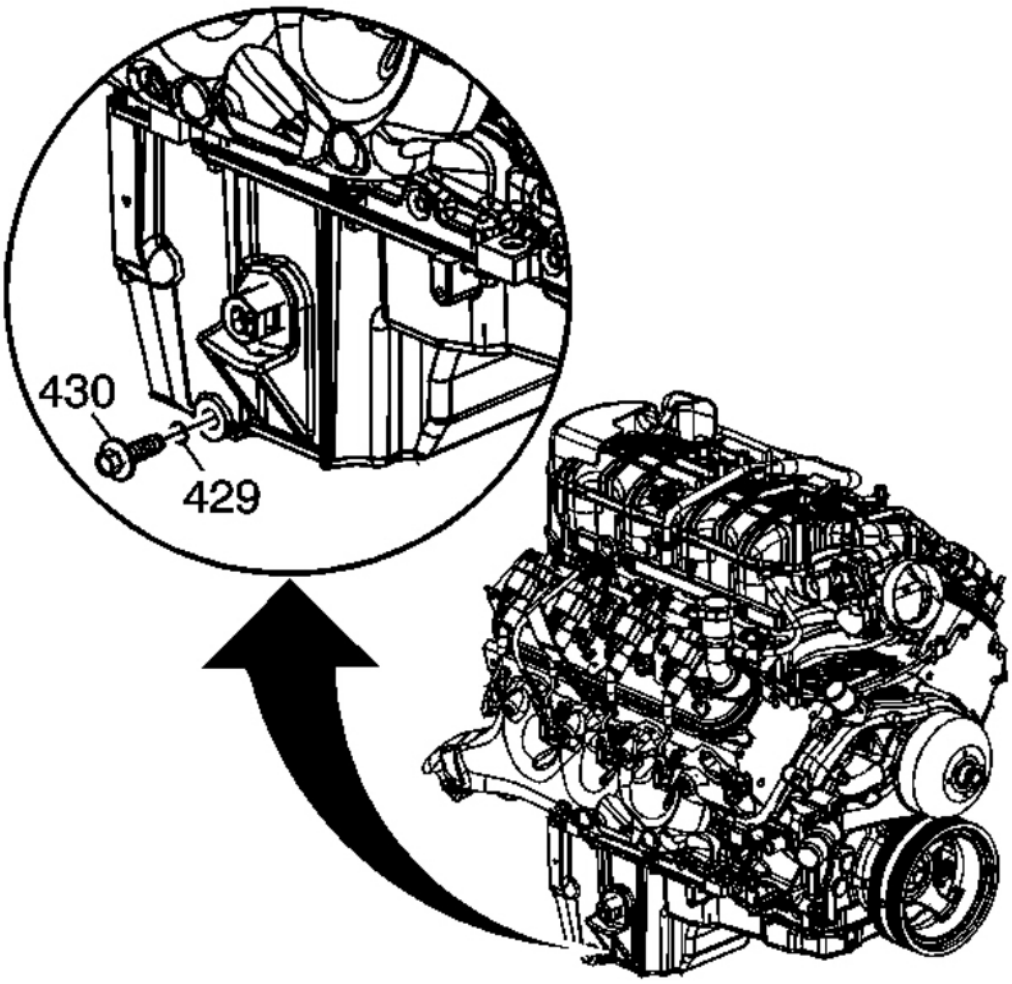

Fig. 155: View Of Oil Pan Drain Plug & Seal
Courtesy of GENERAL MOTORS CORP.

3. Tighten the oil pan drain plug.

   Tighten: Tighten the drain plug to 25 N.m (18 lb ft).

4. Remove the oil drain pan from under the vehicle.
5. Lower the vehicle.
6. Fill the engine with new engine oil. Refer to **Capacities - Approximate Fluid** and **Fluid and Lubricant Recommendations** .
7. Start the engine.

cardiagn.com

8. Inspect for oil leaks after engine start up.
9. Turn off the engine and allow the oil a few minutes to drain back into the oil pan.
10. Remove the oil level indicator from the indicator tube.
11. Clean off the indicator end of the oil level indicator with a clean paper towel or cloth.
12. Install the oil level indicator into the oil level indicator tube until the oil level indicator handle contacts the top of the oil level indicator tube.
13. Again, remove the oil level indicator from the oil level indicator tube keeping the tip of the oil level indicator down.
14. Check the level of the engine oil on the oil level indicator.
15. If necessary, adjust the oil level by adding or draining oil.
16. Check for oil leaks.
17. Close the hood.

DRAINING FLUIDS AND OIL FILTER REMOVAL

cardiagn.com

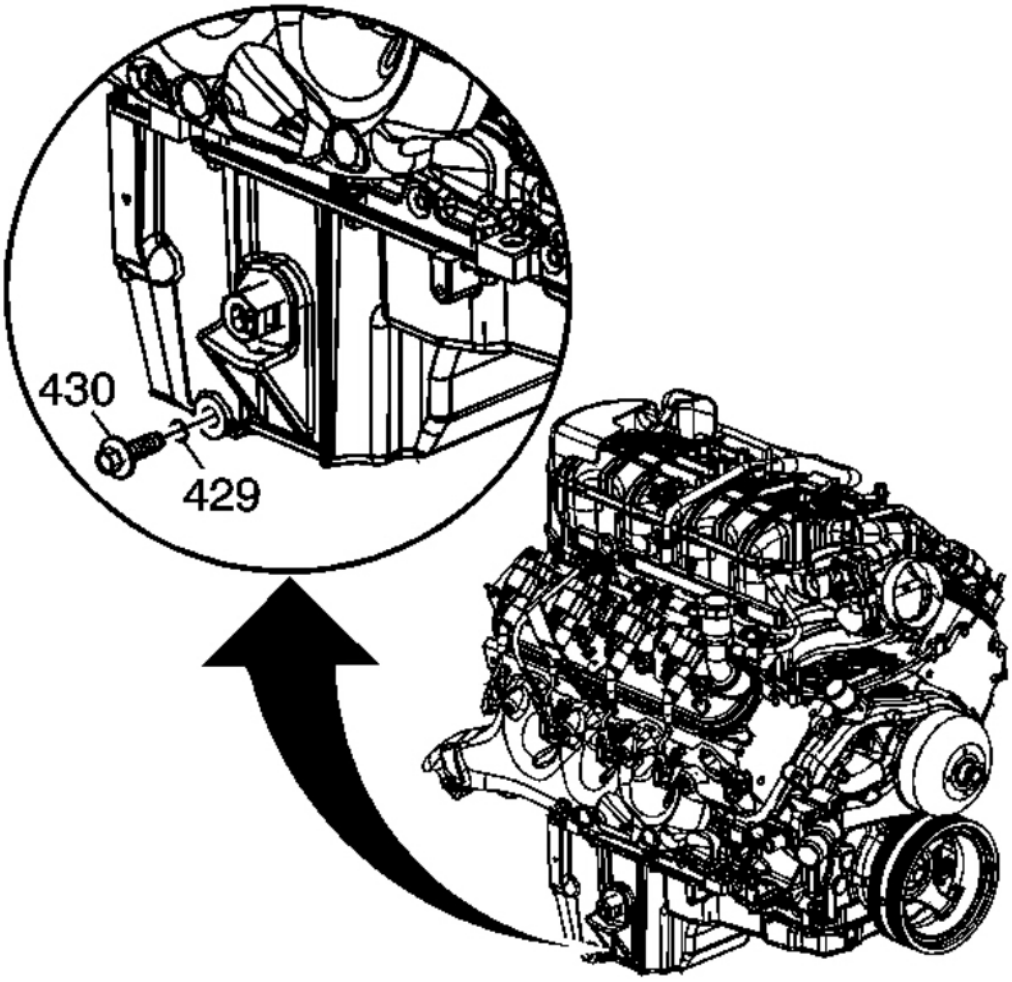

Fig. 156: View Of Oil Pan Drain Plug & Seal
Courtesy of GENERAL MOTORS CORP.

1. Remove the oil pan drain plug (430) and O-ring (429).

cardiagn.com

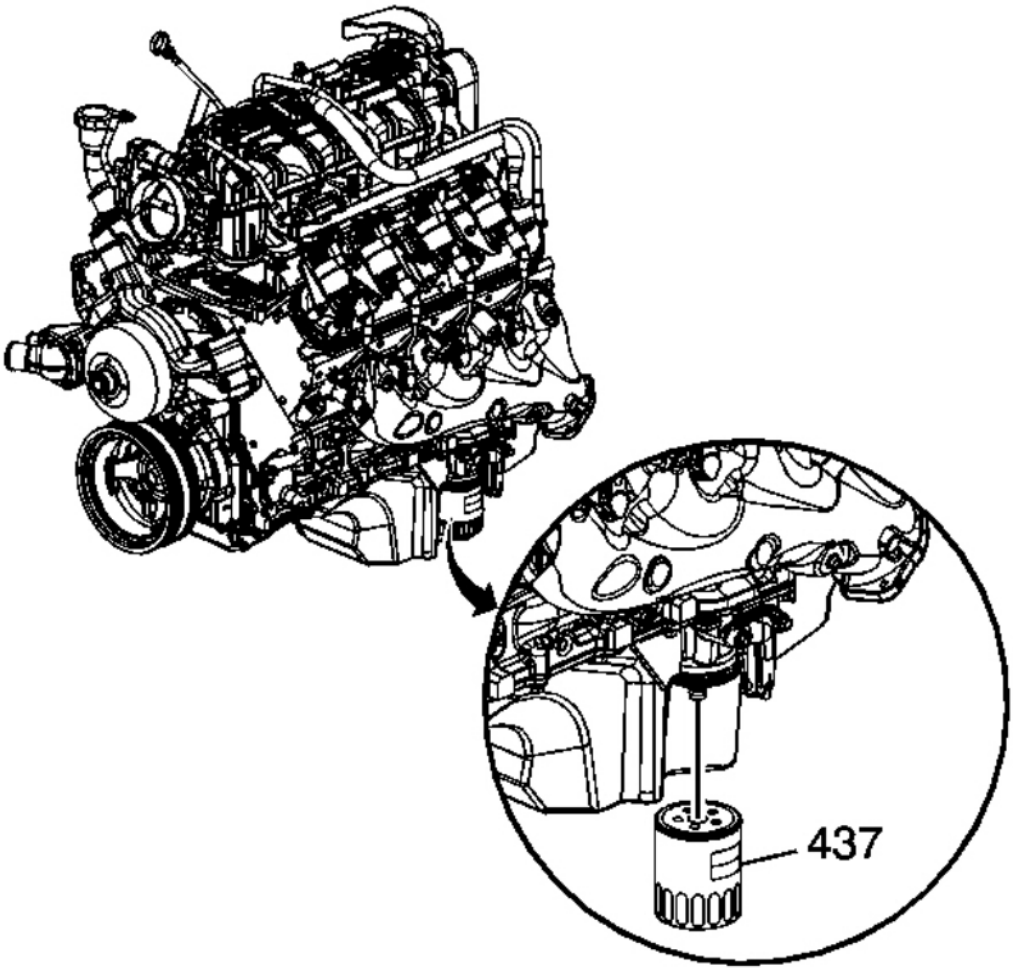

Fig. 157: View Of Engine Oil Filter
Courtesy of GENERAL MOTORS CORP.

2. Remove the engine oil filter (437).

cardiagn.com

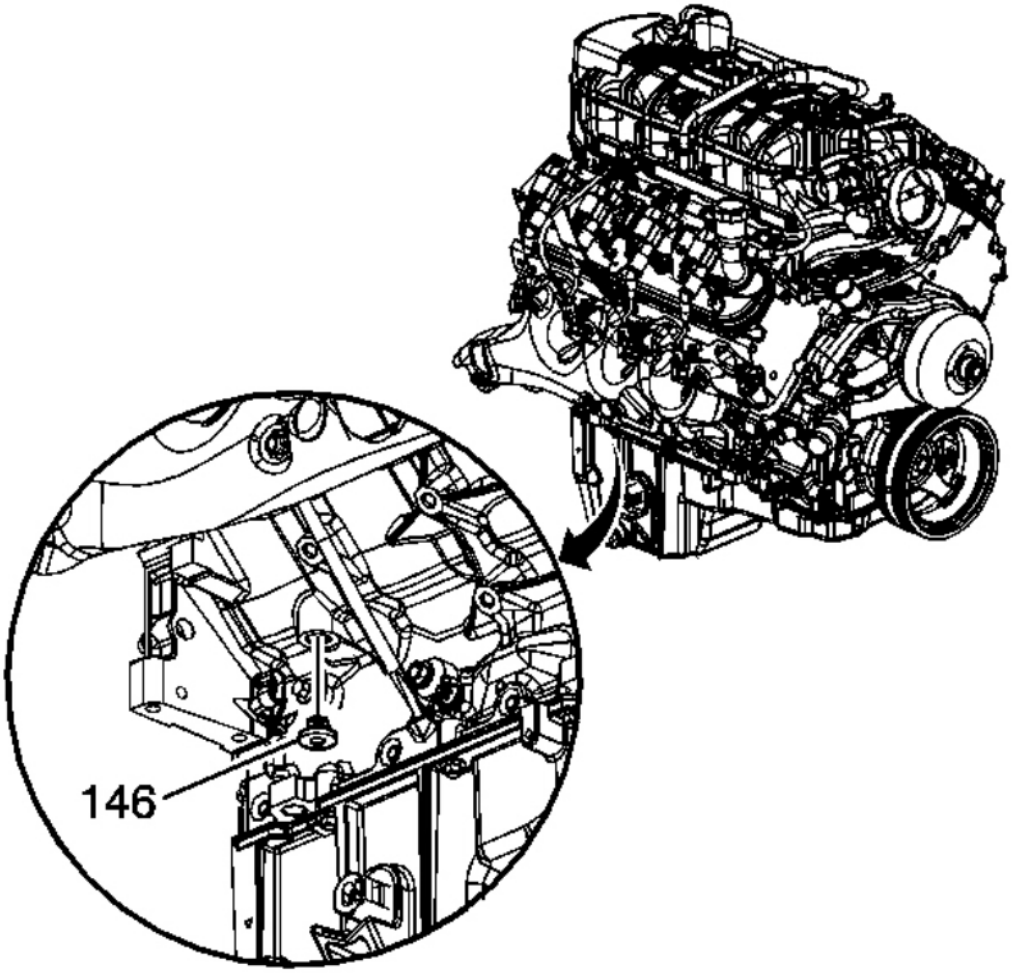

Fig. 158: View Of Engine Block Coolant Drain Hole Plug
Courtesy of GENERAL MOTORS CORP.

3. Remove the right side engine block coolant drain hole plug (146).

cardiagn.com

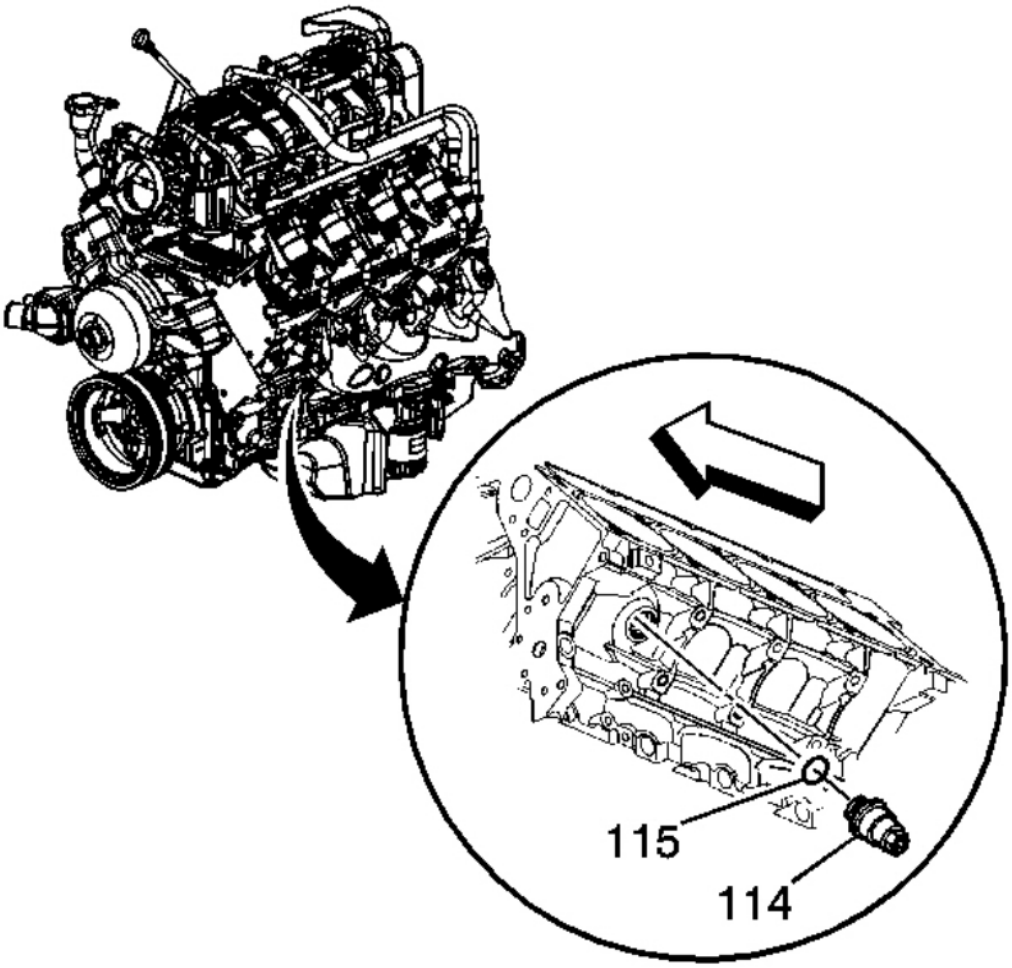

Fig. 159: View Of Engine Block Coolant Heater & Washer
Courtesy of GENERAL MOTORS CORP.

4. Remove the left side engine block coolant heater (114) and washer (115).

CRANKSHAFT BALANCER REMOVAL

Tools Required

- **J 41816-A** Crankshaft Balancer Remover. See **Special Tools** .
- **J 41816-2** Crankshaft End Protector. See **Special Tools** .
- **J 42386-A** Flywheel Holding Tool. See **Special Tools** .

cardiagn.com

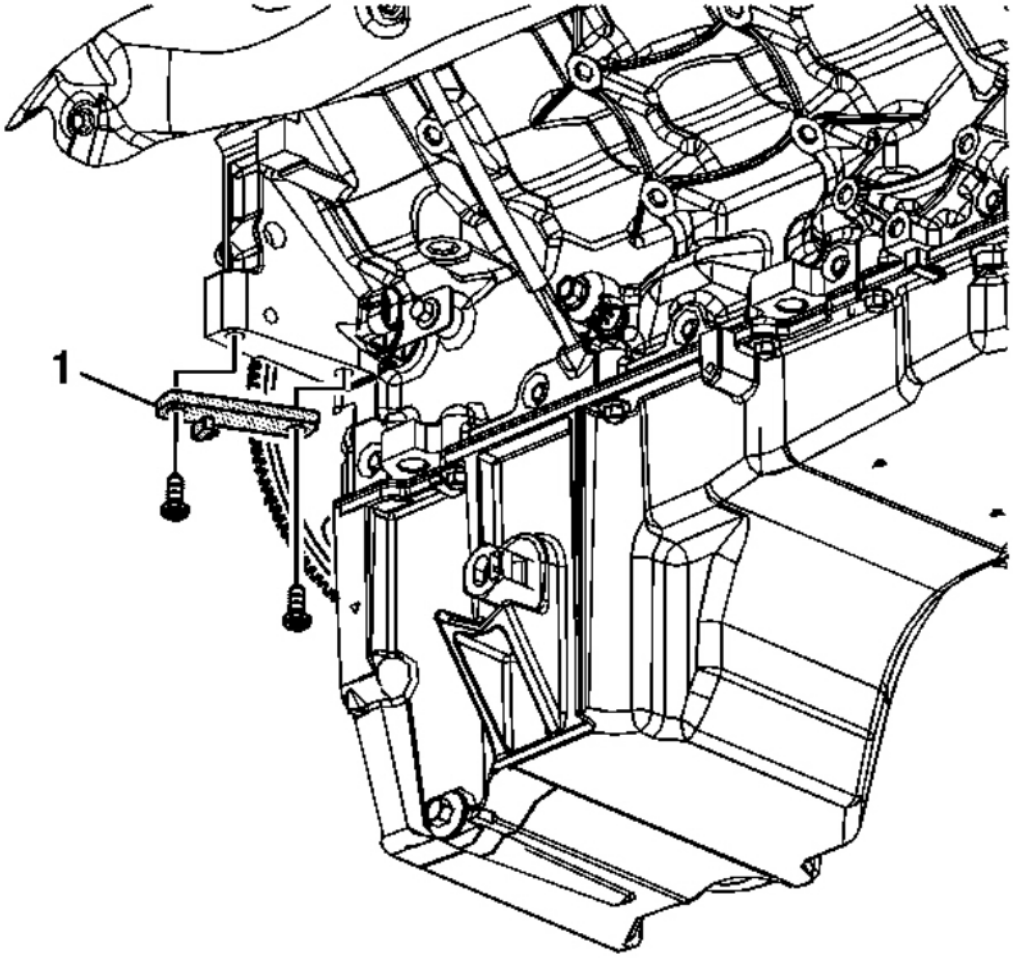

Fig. 160: View Of Special Tool & Bolts
Courtesy of GENERAL MOTORS CORP.

NOTE: **Refer to Fastener Notice .**

IMPORTANT: Do not use the crankshaft balancer bolt again. Install a NEW crankshaft balancer bolt during final assembly.

1. Install the **J 42386-A** (1) and bolts. See **Special Tools** .

   Use 1 M10 - 1.5 x 120 mm and 1 M10 - 1.5 x 45 mm bolt for proper tool operation.

   Tighten: Tighten the **J 42386-A** bolts to 50 N. See **Special Tools** .m (37 lb ft).

cardiagn.com

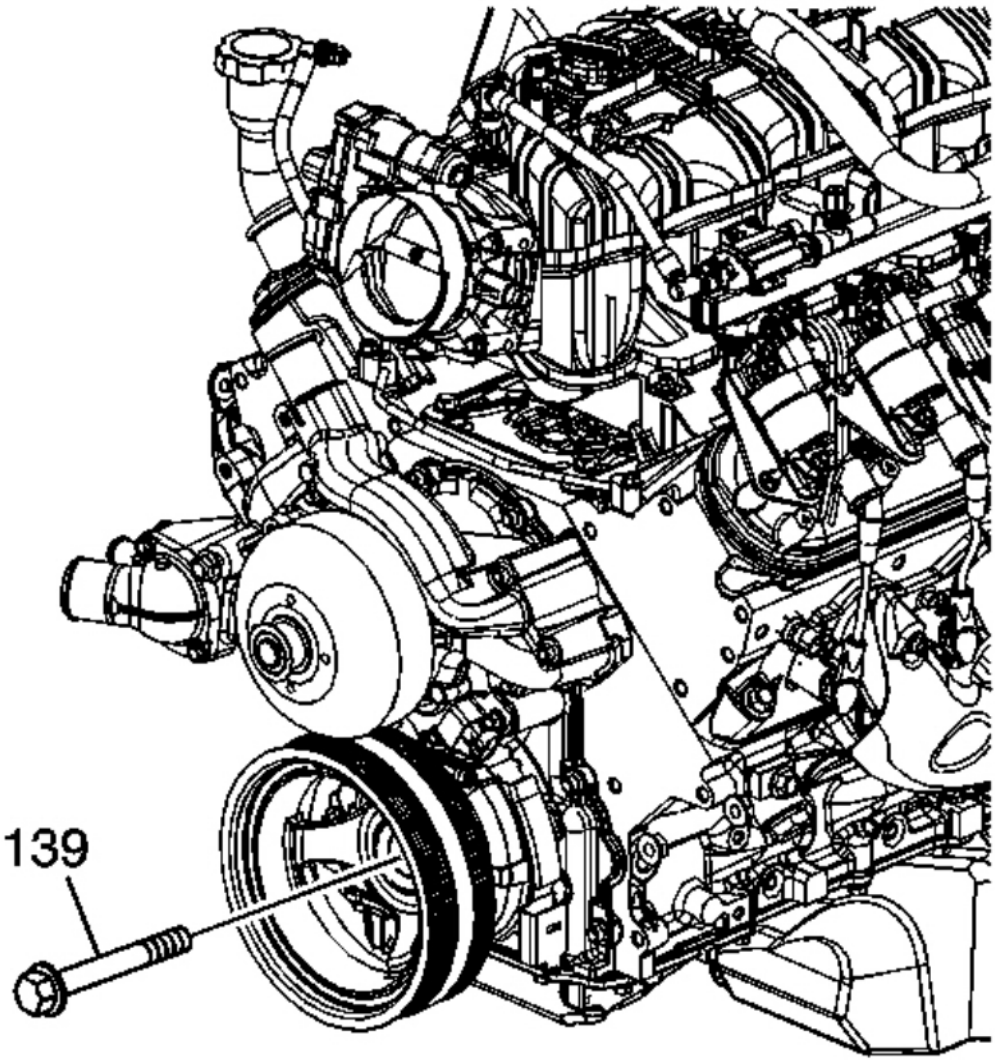

Fig. 161: View Of Crankshaft Balancer Bolt
Courtesy of GENERAL MOTORS CORP.

2. Remove the crankshaft balancer bolt (139).

   Do not discard the crankshaft balancer bolt. The balancer bolt is used during the balancer installation procedure.

cardiagn.com

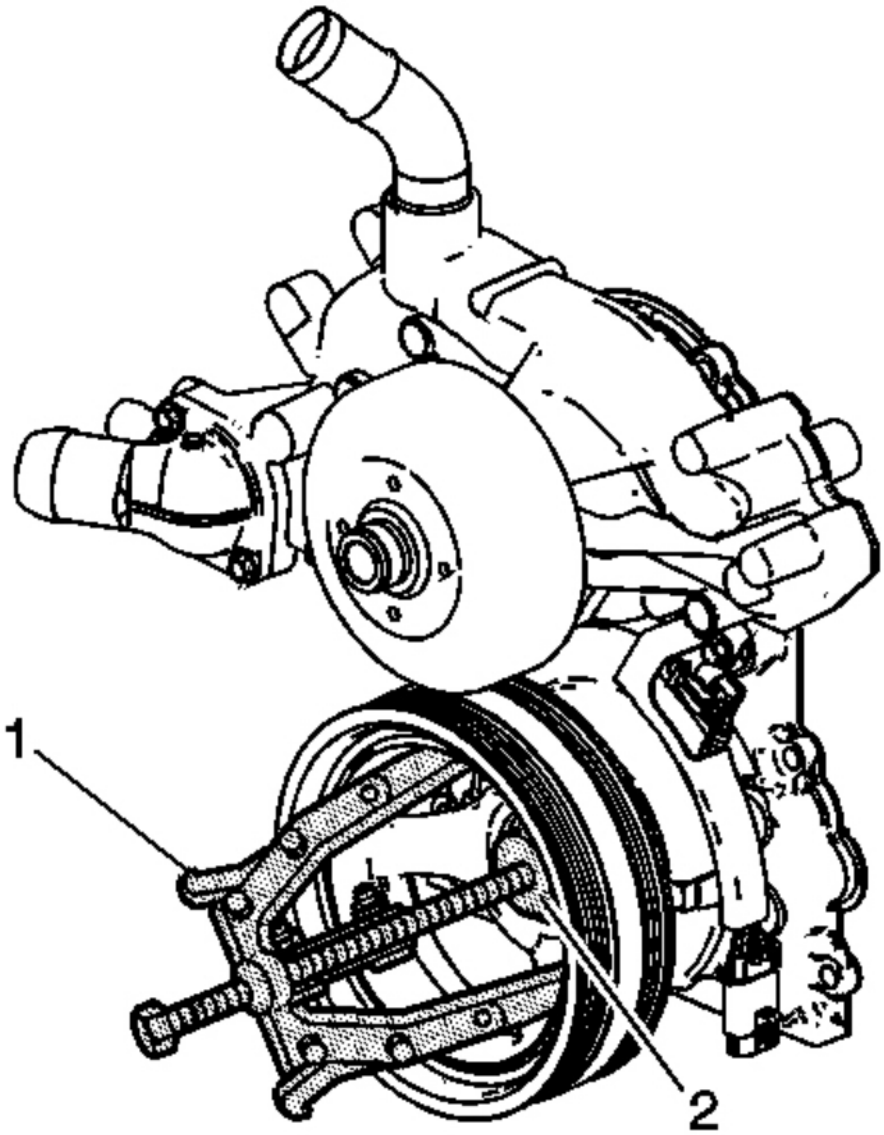

Fig. 162: View Of Crankshaft Balancer With J 41816 & J 41816-2 Removal Tools
Courtesy of GENERAL MOTORS CORP.

3. Use the **J 41816-A** (1) and the **J 41816-2** (2) in order to remove the crankshaft balancer. See **Special Tools** .

cardiagn.com

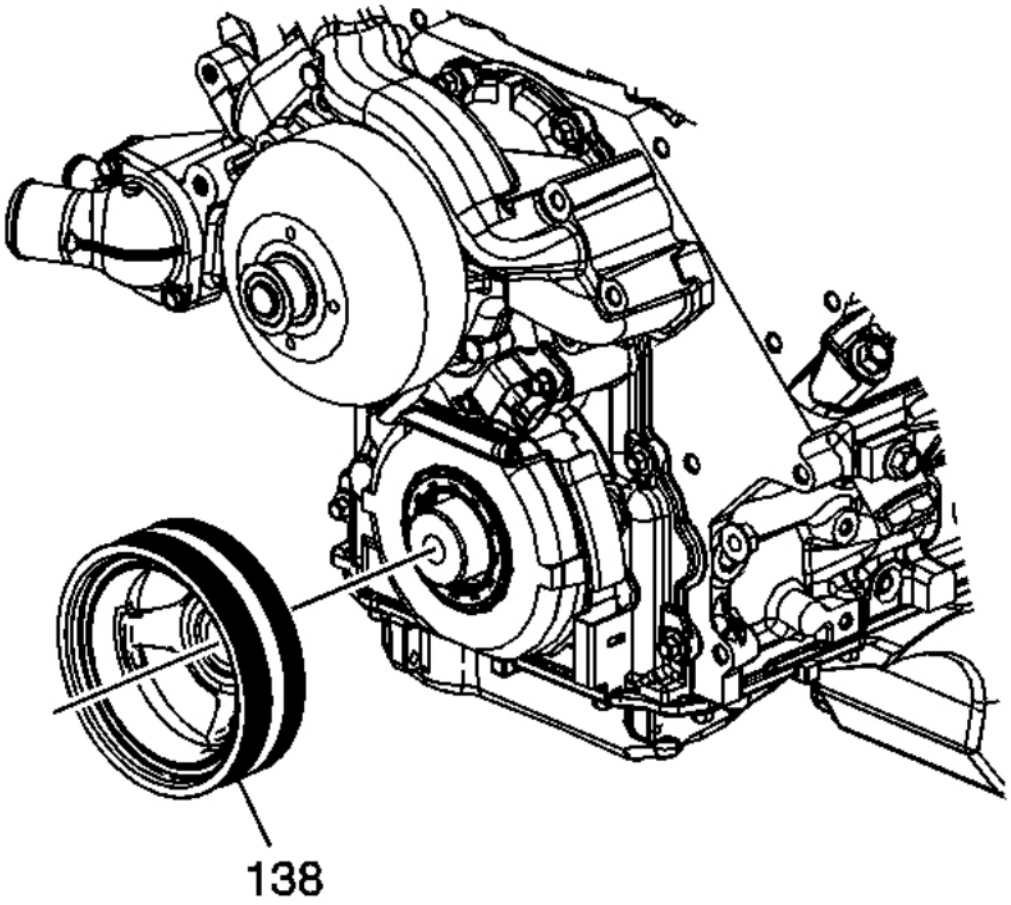

Fig. 163: View Of Crankshaft Balancer
Courtesy of GENERAL MOTORS CORP.

4. Remove the balancer (138).

cardiagn.com

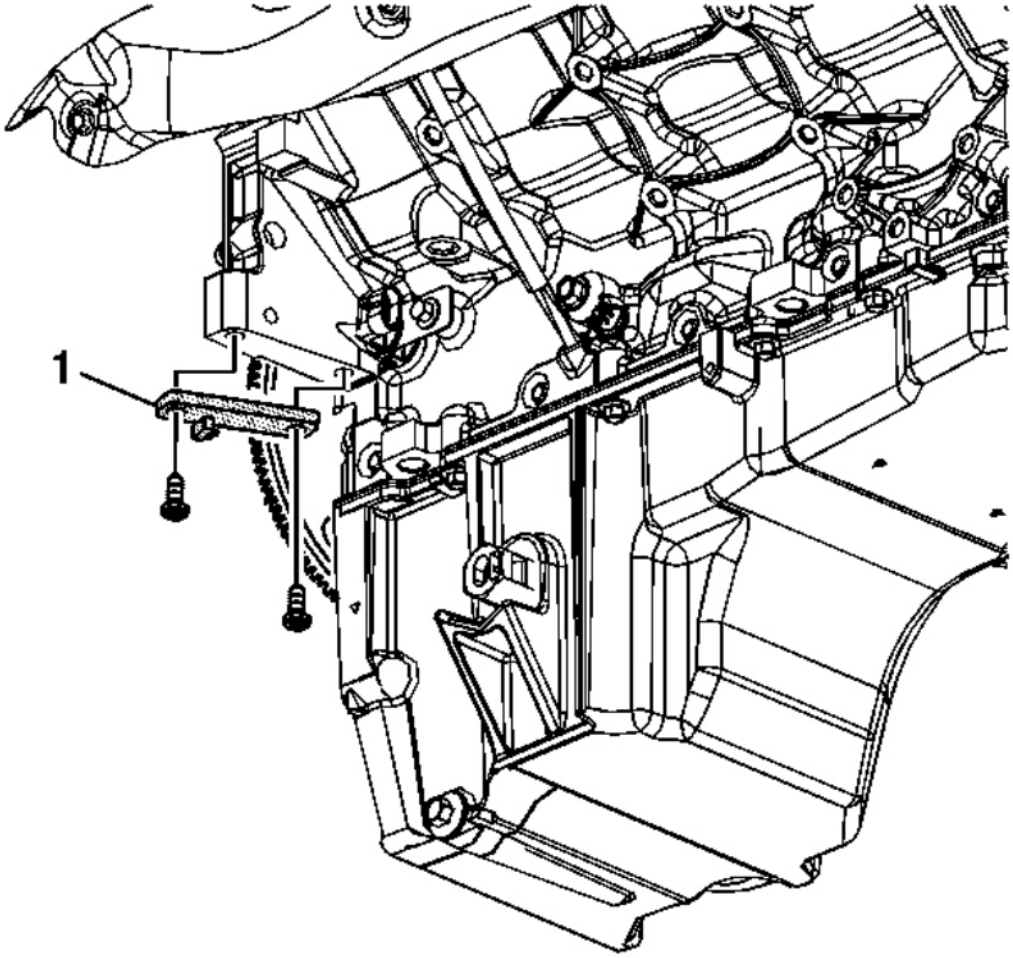

Fig. 164: View Of Special Tool & Bolts
Courtesy of GENERAL MOTORS CORP.

5. Remove the **J 42386-A** (1) and bolts. See **Special Tools** .

AUTOMATIC TRANSMISSION FLEX PLATE REMOVAL

cardiagn.com

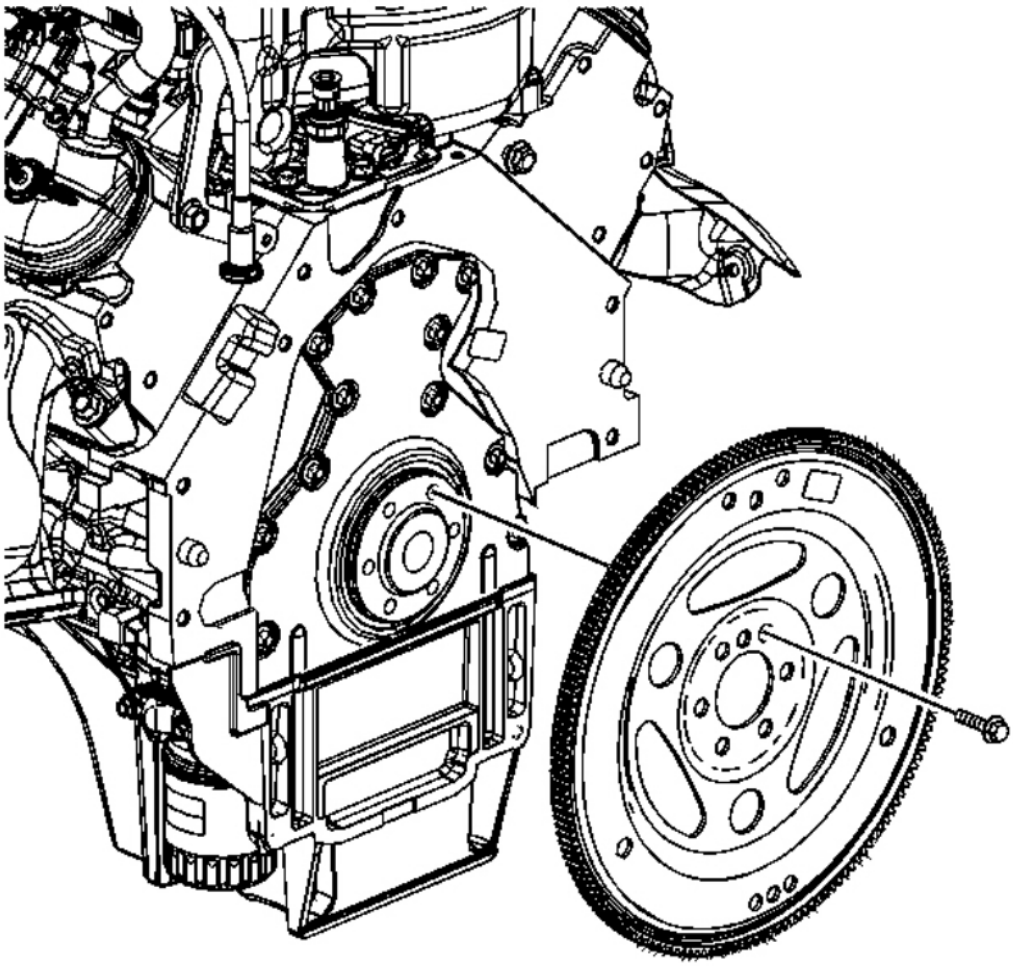

Fig. 165: View Of Flex Plate & Bolts
Courtesy of GENERAL MOTORS CORP.

IMPORTANT: The flex plate does not use a locating pin for alignment and will not initially seat against the crankshaft flange, but will be pulled onto the crankshaft by the engine flex plate bolts. This procedure requires a 3 stage tightening process.

1. Remove the engine flex plate bolts.
2. Remove the flex plate.

OIL LEVEL INDICATOR AND TUBE REMOVAL

cardiagn.com

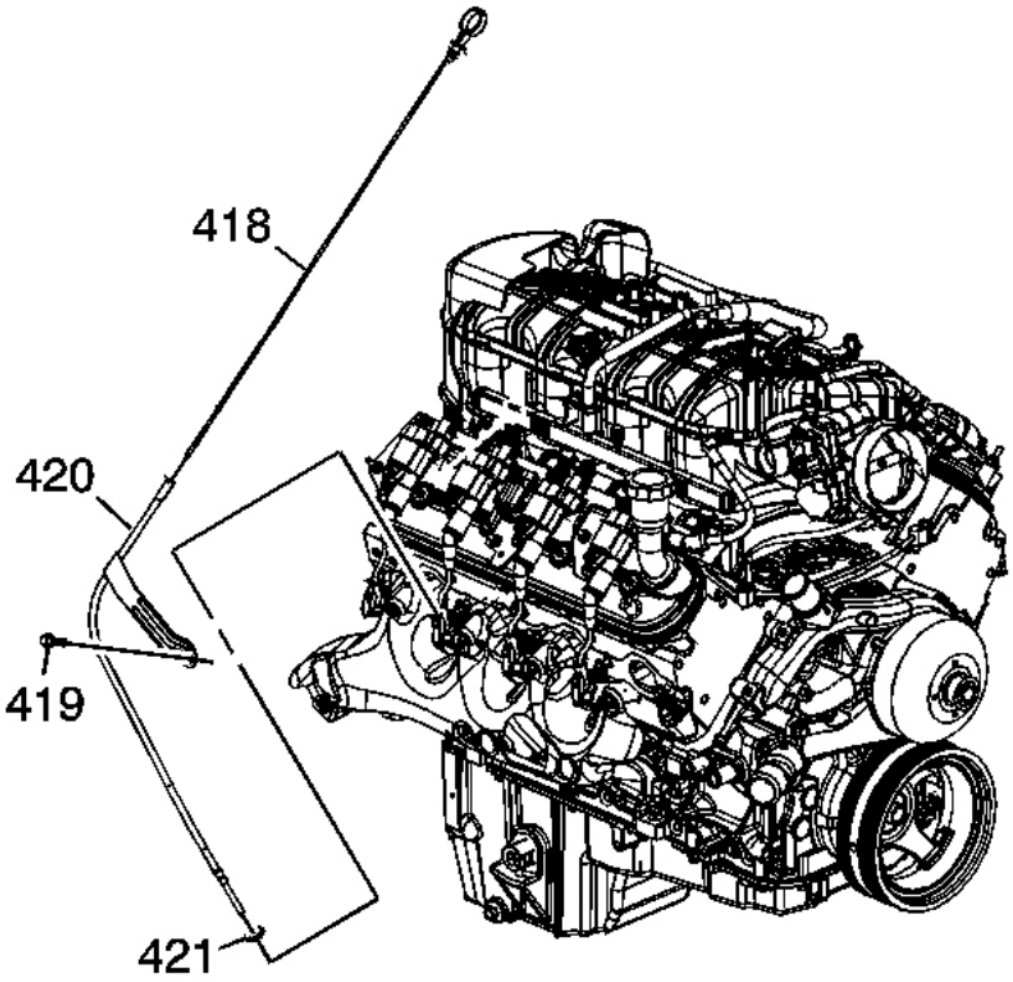

Fig. 166: View Of Oil Level Indicator, Tube Bolt, Indicator Tube & O-Ring Seal
Courtesy of GENERAL MOTORS CORP.

1. Remove the oil level indicator (418) from the tube.
2. Remove the oil level indicator tube bolt (419).
3. Remove the oil level indicator tube (420) from the engine block.

IMPORTANT: Inspect the O-ring for cuts or damage. The O-ring seal may be used again if it is not cut or damaged.

4. Remove the O-ring (421) from the tube, as required.

cardiagn.com

EXHAUST MANIFOLD REMOVAL - LEFT SIDE

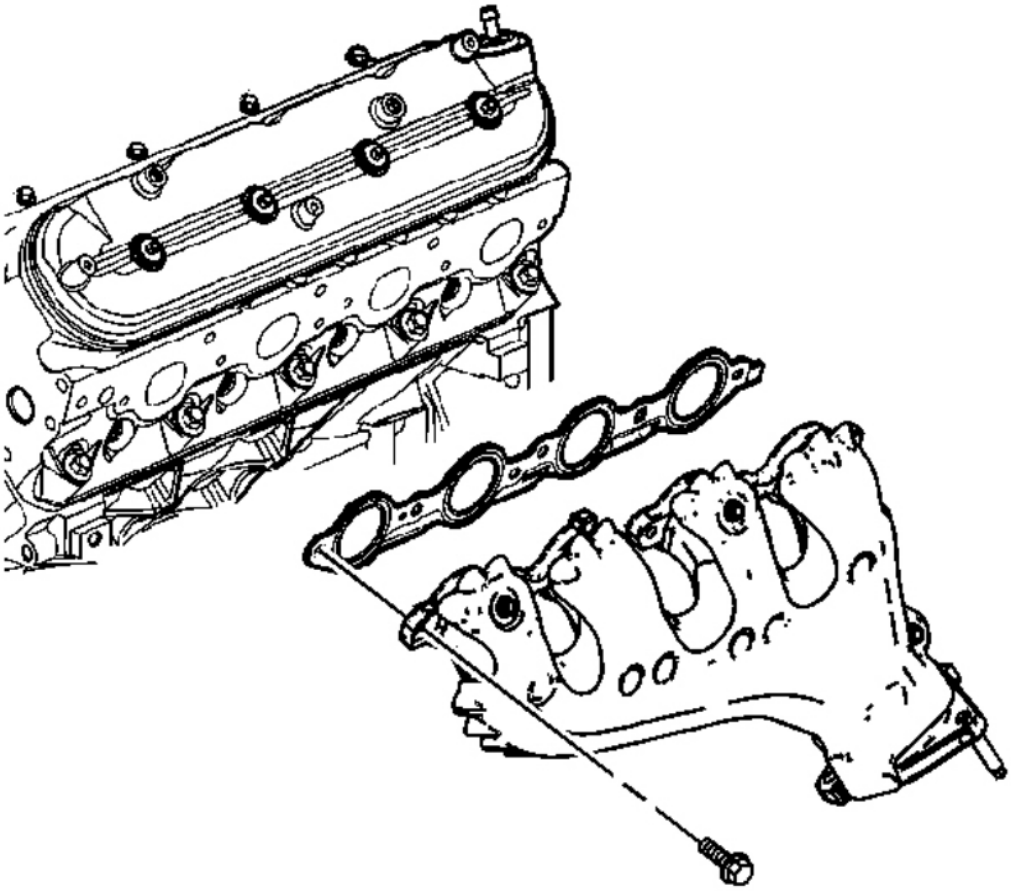

Fig. 167: Identifying Left Exhaust Manifold & Bolts
Courtesy of GENERAL MOTORS CORP.

1. Remove the spark plug wires from the spark plugs.
2. Remove the exhaust manifold, bolts, and gasket.
3. Discard the gasket.

cardiagn.com

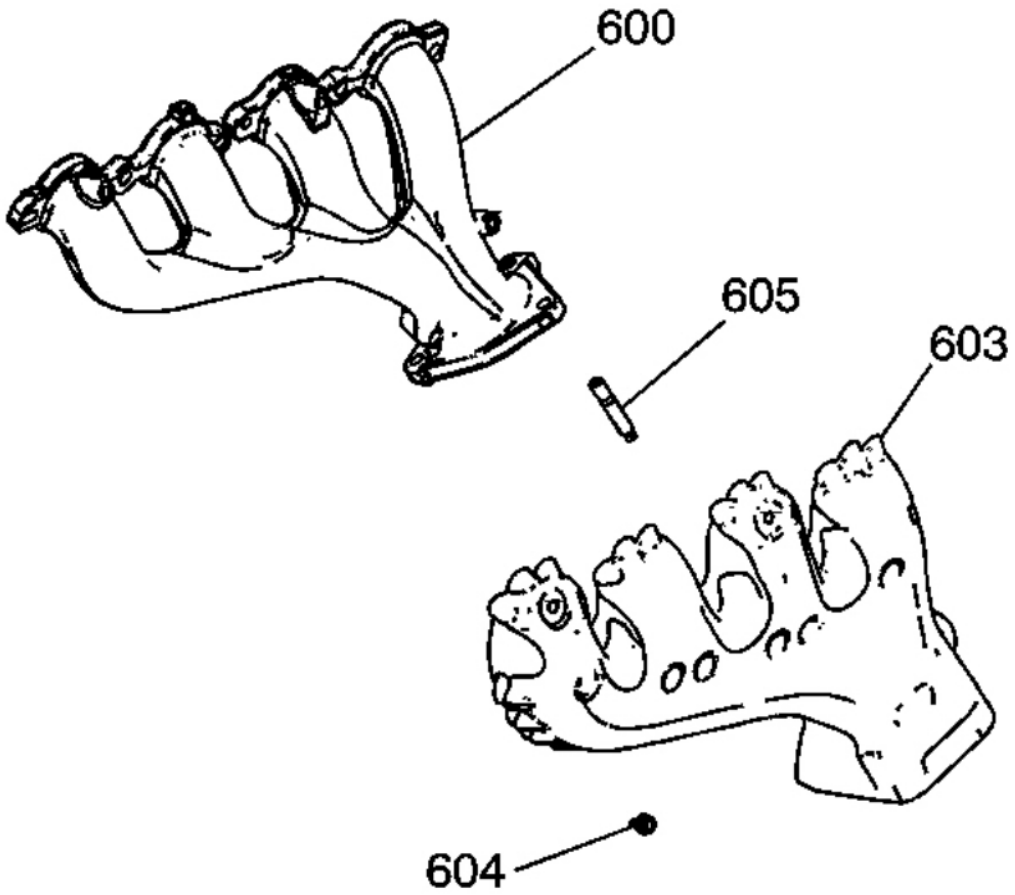

Fig. 168: View Of Left Exhaust Manifold & Heat Shield
Courtesy of GENERAL MOTORS CORP.

4. Remove the heat shield (603) and bolts (604) from the manifold (600), as required.
5. Remove the studs (605), as required.

EXHAUST MANIFOLD REMOVAL - RIGHT SIDE

cardiagn.com

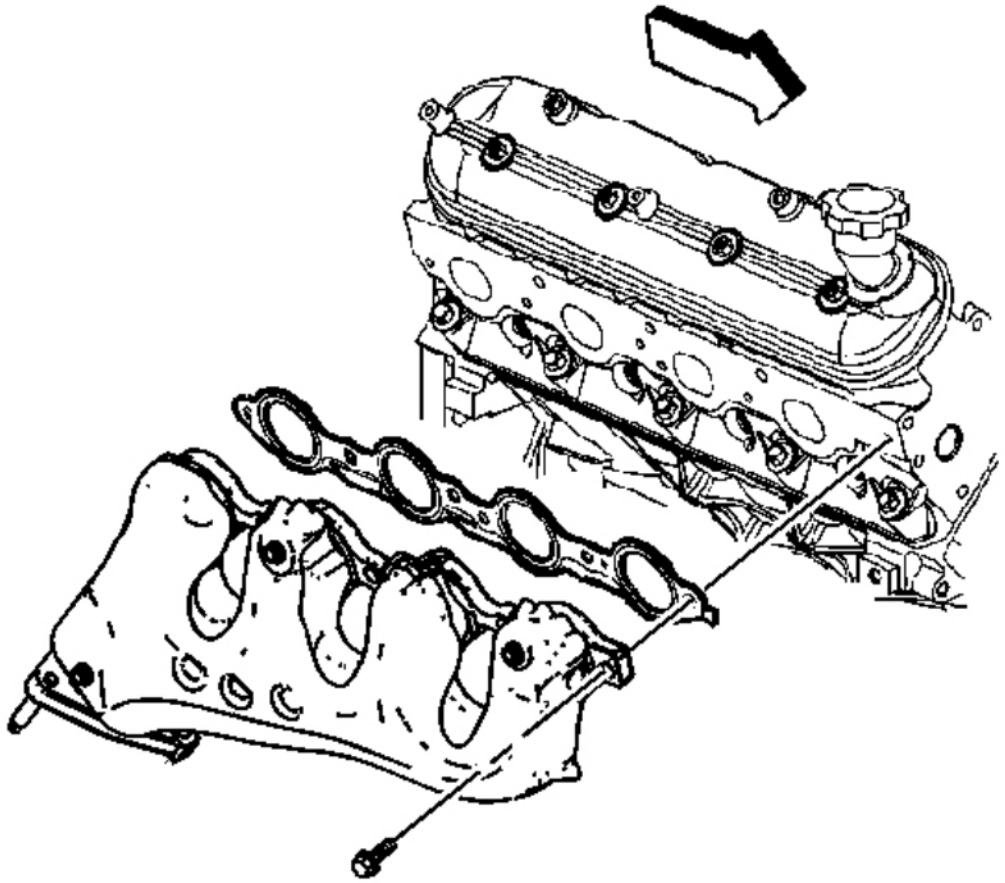

Fig. 169: View Of Right Exhaust Manifold & Gasket
Courtesy of GENERAL MOTORS CORP.

1. Remove the spark plug wires from the spark plugs.
2. Remove the exhaust manifold, bolts, and gasket.
3. Discard the gasket.

cardiagn.com

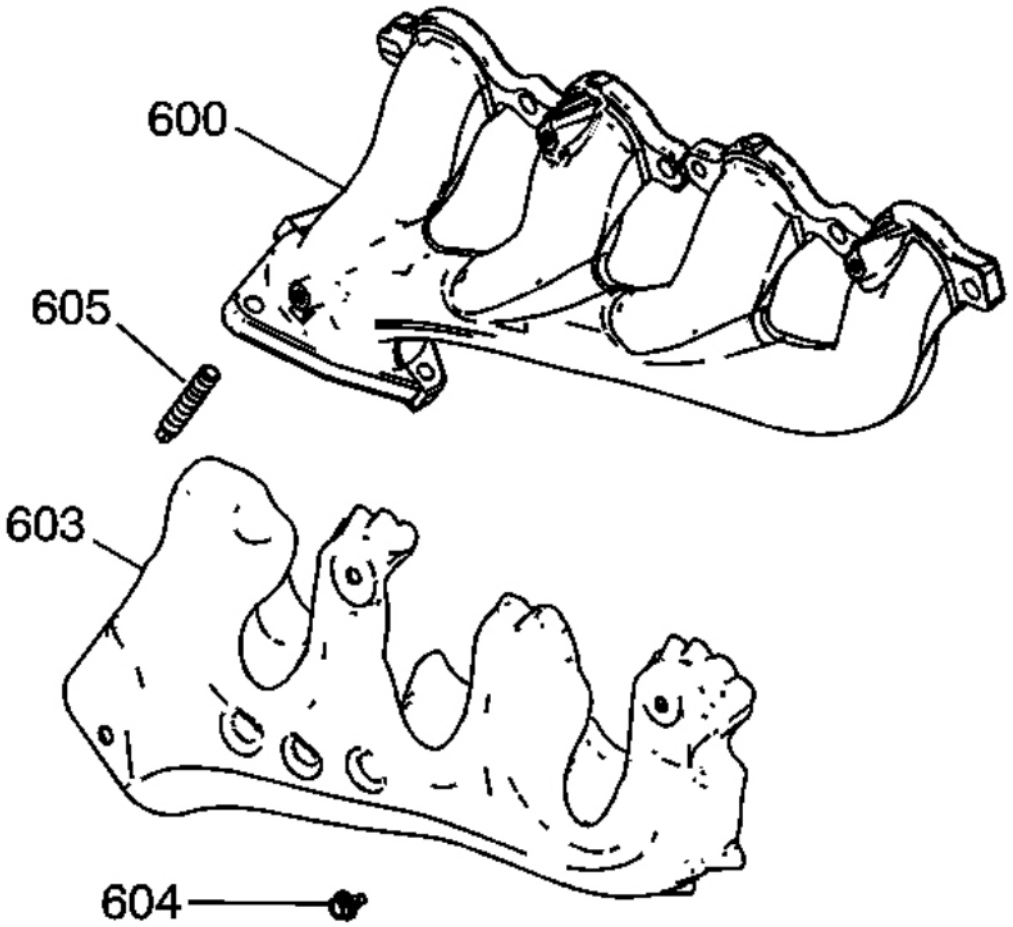

Fig. 170: View Of Right Exhaust Manifold & Heat Shield
Courtesy of GENERAL MOTORS CORP.

4. Remove the heat shield (603) and bolts (604) from the manifold (600), as required.
5. Remove the studs (605), as required.

WATER PUMP REMOVAL (RPO LY2/LC9/LY5/LMG)

cardiagn.com

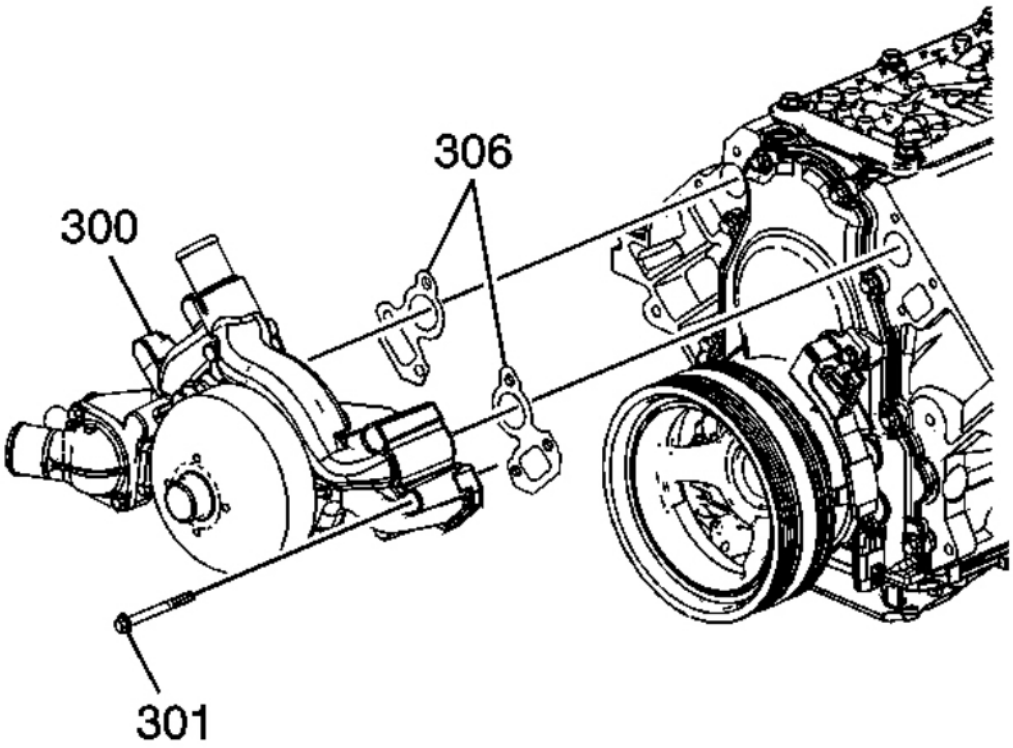

Fig. 171: View Of Water Pump, Bolts & Gaskets
Courtesy of GENERAL MOTORS CORP.

1. Remove the water pump bolts (301).
2. Remove the water pump (300) and gaskets (306).
3. Discard the water pump gaskets.

WATER PUMP REMOVAL (RPO LY6/L76/L92)

cardiagn.com

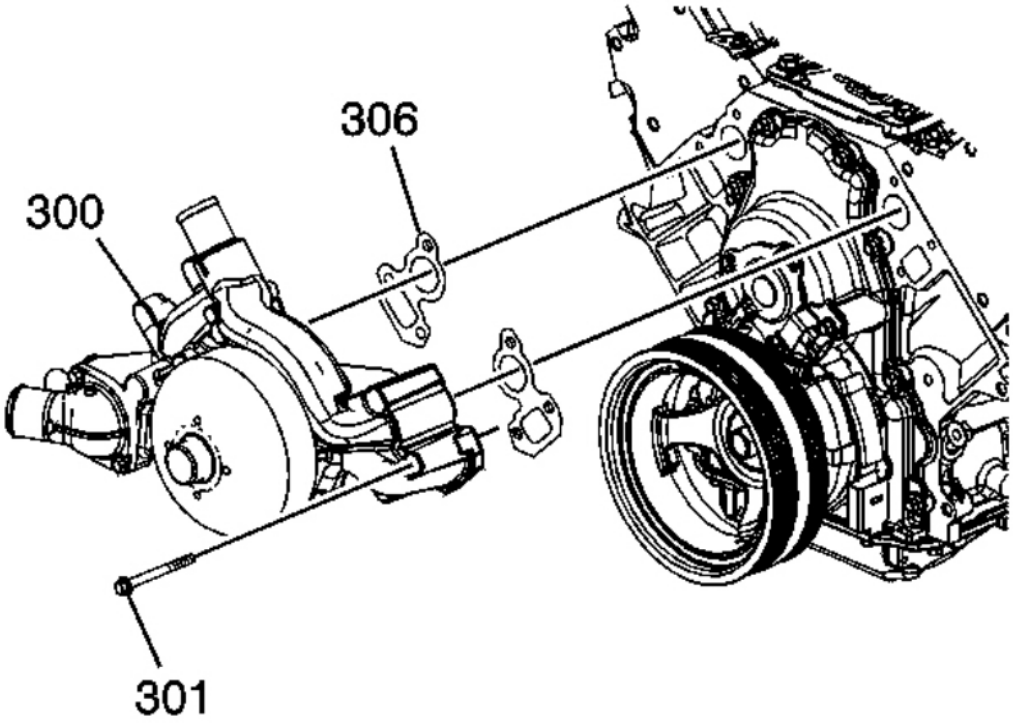

Fig. 172: View Of Water Pump, Bolts & Gaskets
Courtesy of GENERAL MOTORS CORP.

1. Remove the water pump bolts (301).
2. Remove the water pump (300) and gaskets (306).
3. Discard the water pump gaskets.

THROTTLE BODY REMOVAL

cardiagn.com

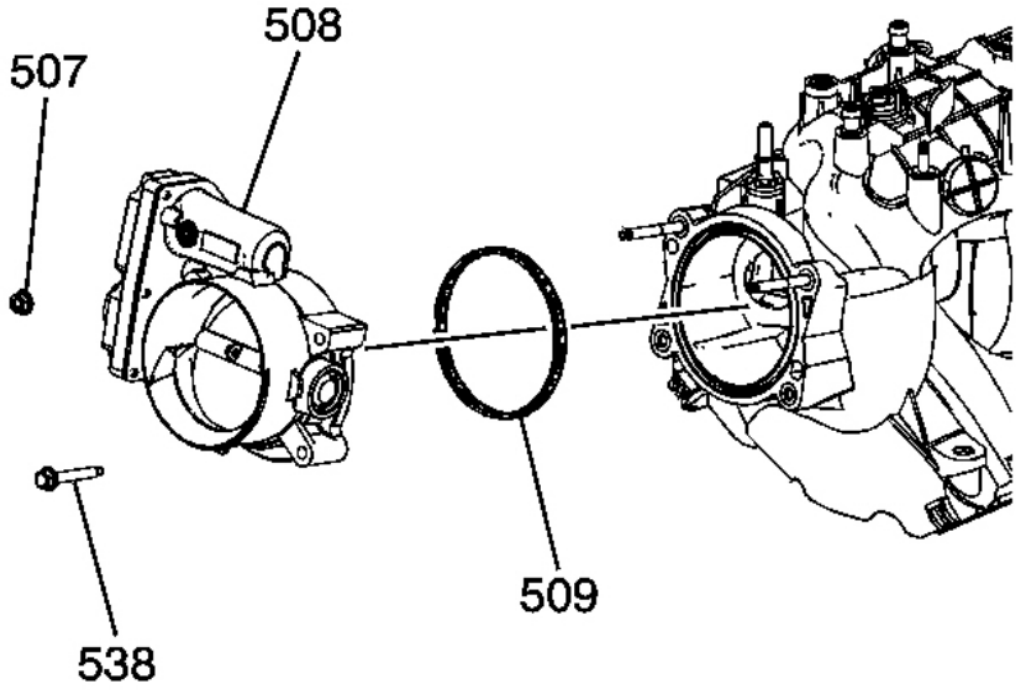

Fig. 173: Throttle Body Assembly
Courtesy of GENERAL MOTORS CORP.

IMPORTANT: The intake manifold, throttle body, fuel injection rail, and fuel injectors may be removed as an assembly. If not servicing the individual components, remove the manifold as a complete assembly.

1. Remove the electrical wire harness connectors from the throttle body.
2. Remove the throttle body nuts (507) and bolts (538).
3. Remove the throttle body (508).
4. Remove the throttle body gasket (509).
5. Discard the gasket.

FUEL RAIL AND INJECTORS REMOVAL

cardiagn.com

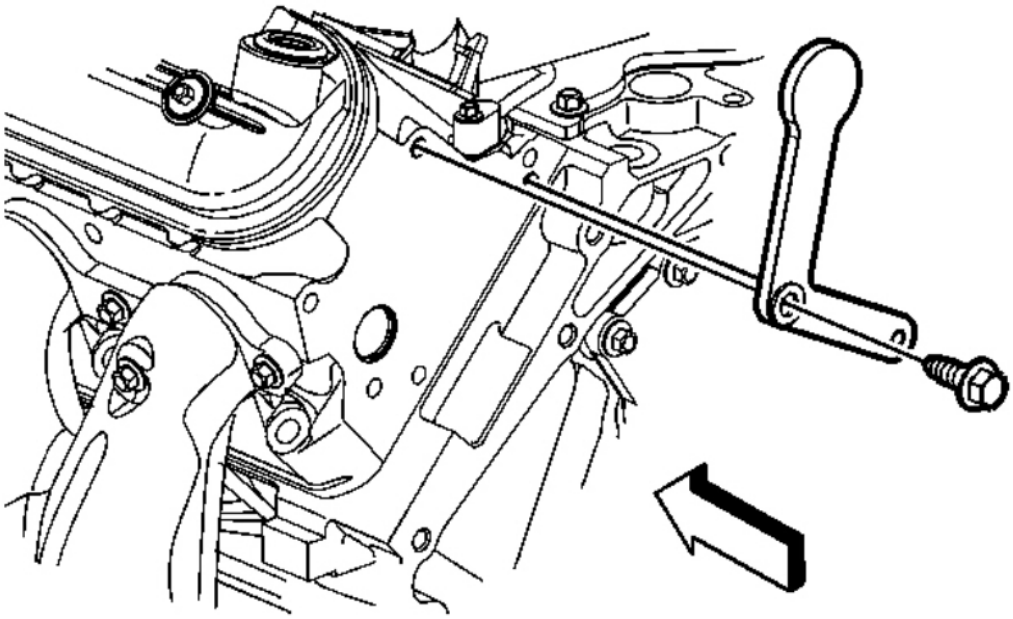

Fig. 174: View Of Fuel Rail Stop Bracket & Bolt
Courtesy of GENERAL MOTORS CORP.

CAUTION: Refer to Fuel Rail Stop Bracket Installation Caution in Cautions and Notices.

IMPORTANT: The intake manifold, throttle body, fuel injection rail and fuel injectors may be removed as an assembly. If not servicing the individual components, remove the intake manifold as a complete assembly.

1. Remove the fuel rail stop bracket and bolt, as required.

cardiagn.com

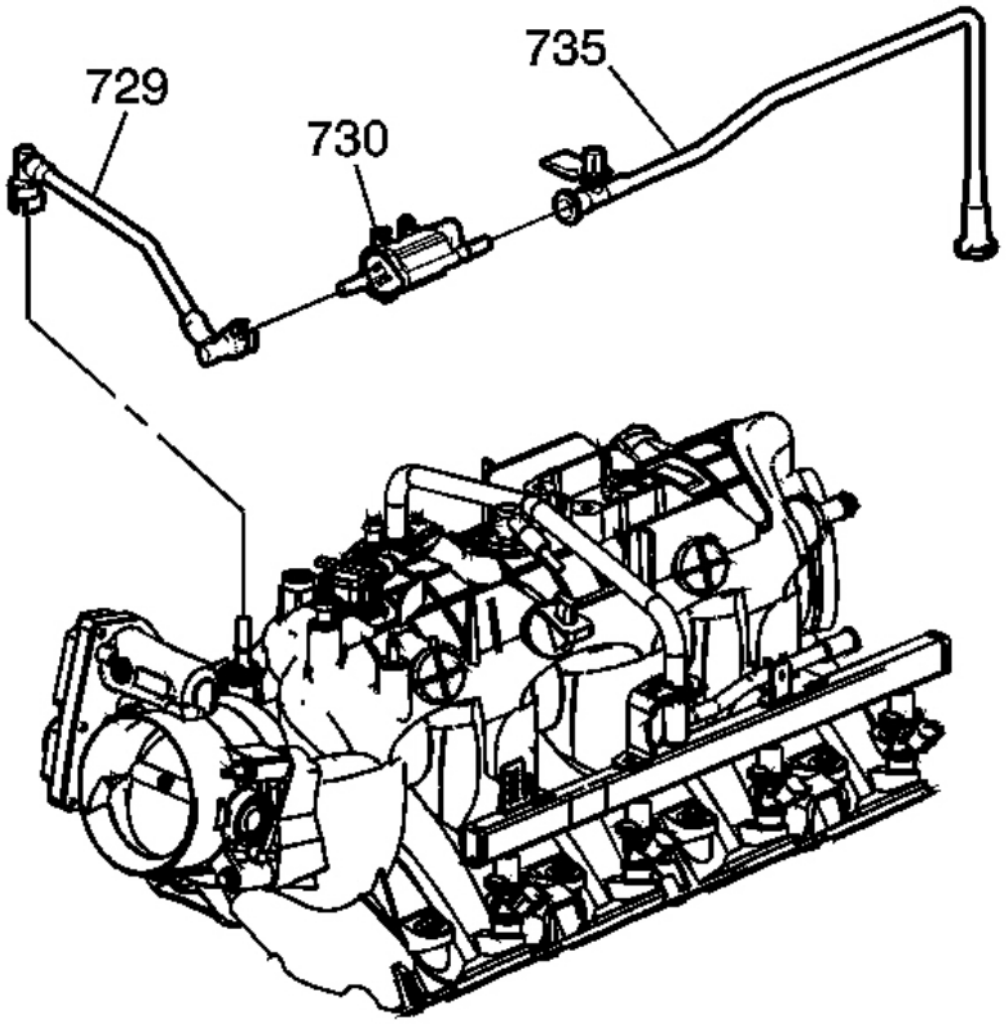

Fig. 175: EVAP Purge Valve & Tubes
Courtesy of GENERAL MOTORS CORP.

2. Remove the evaporative emission (EVAP) canister purge solenoid valve (730) and tubes (729, 735).

cardiagn.com

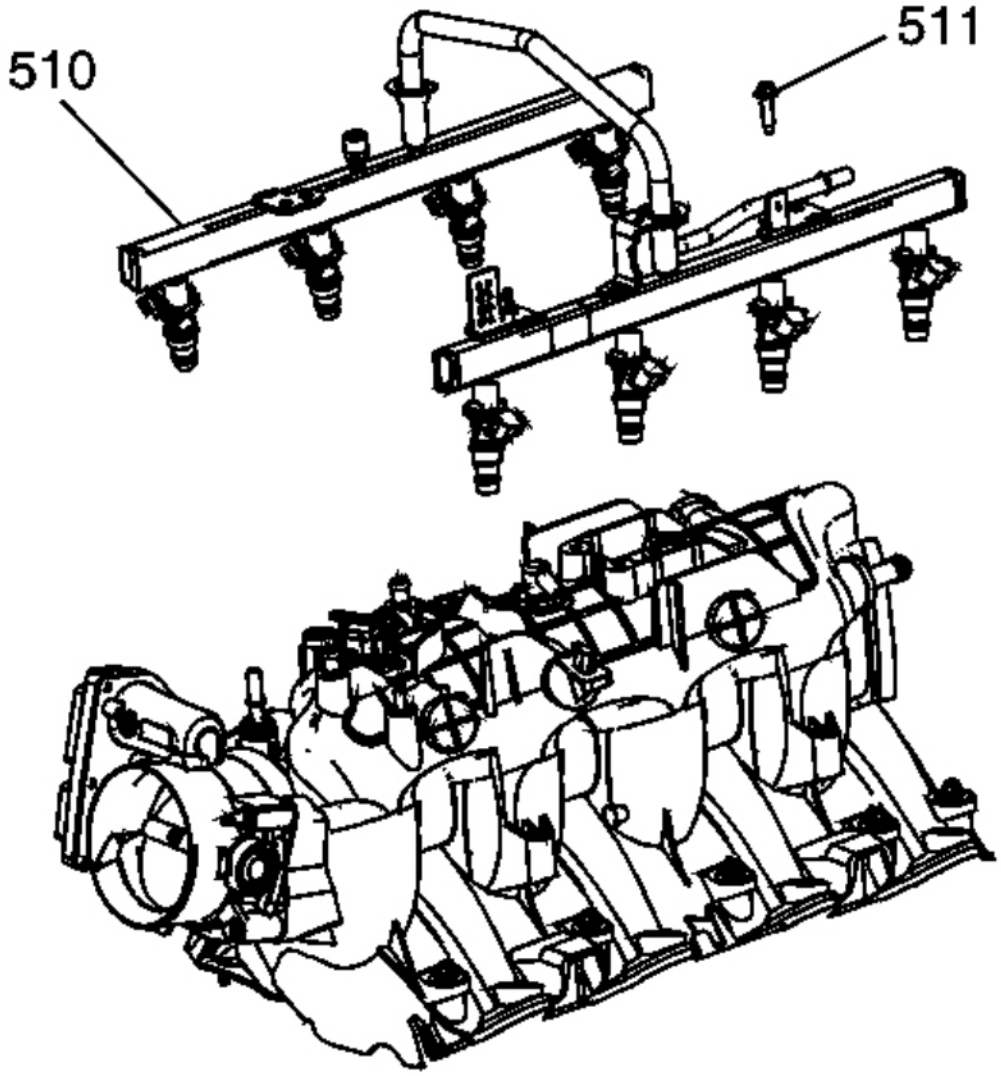

Fig. 176: Identifying Fuel Rail
Courtesy of GENERAL MOTORS CORP.

3. Remove the fuel rail bolts (511).

IMPORTANT:

- **Do not separate the fuel injectors from the fuel rail, unless component service is required.**
- **Use cleanliness and care when handling the fuel system**

cardiagn.com

components.

- **Do not allow dirt or debris to enter the fuel injectors or fuel rail components. Cap ends, as necessary.**

4. Remove the fuel rail (510) with injectors. Lift evenly on both sides of the fuel rail until all the injectors have left their bores.

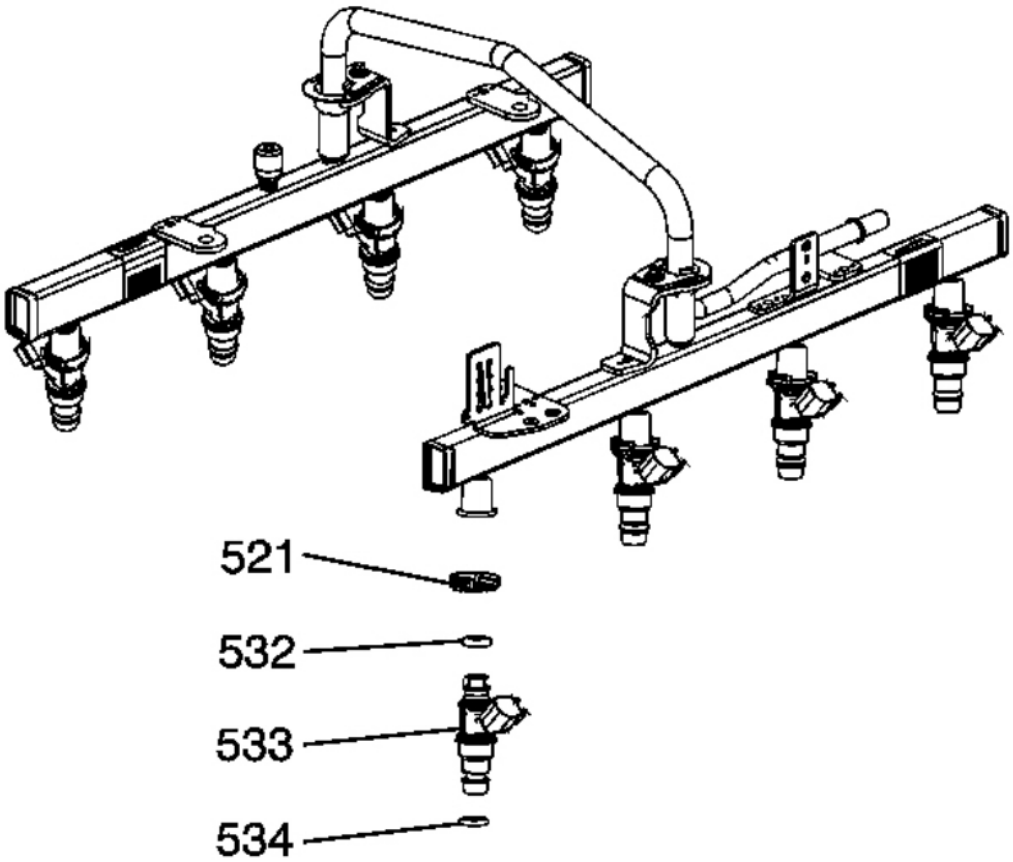

Fig. 177: Fuel Rail & Injectors
Courtesy of GENERAL MOTORS CORP.

5. Remove the fuel injector retainers (521) and fuel injectors (533), as required.
6. Remove the O-rings (532, 534) from the injectors, as required.

INTAKE MANIFOLD REMOVAL (RPO LY2/LY6)

cardiagn.com

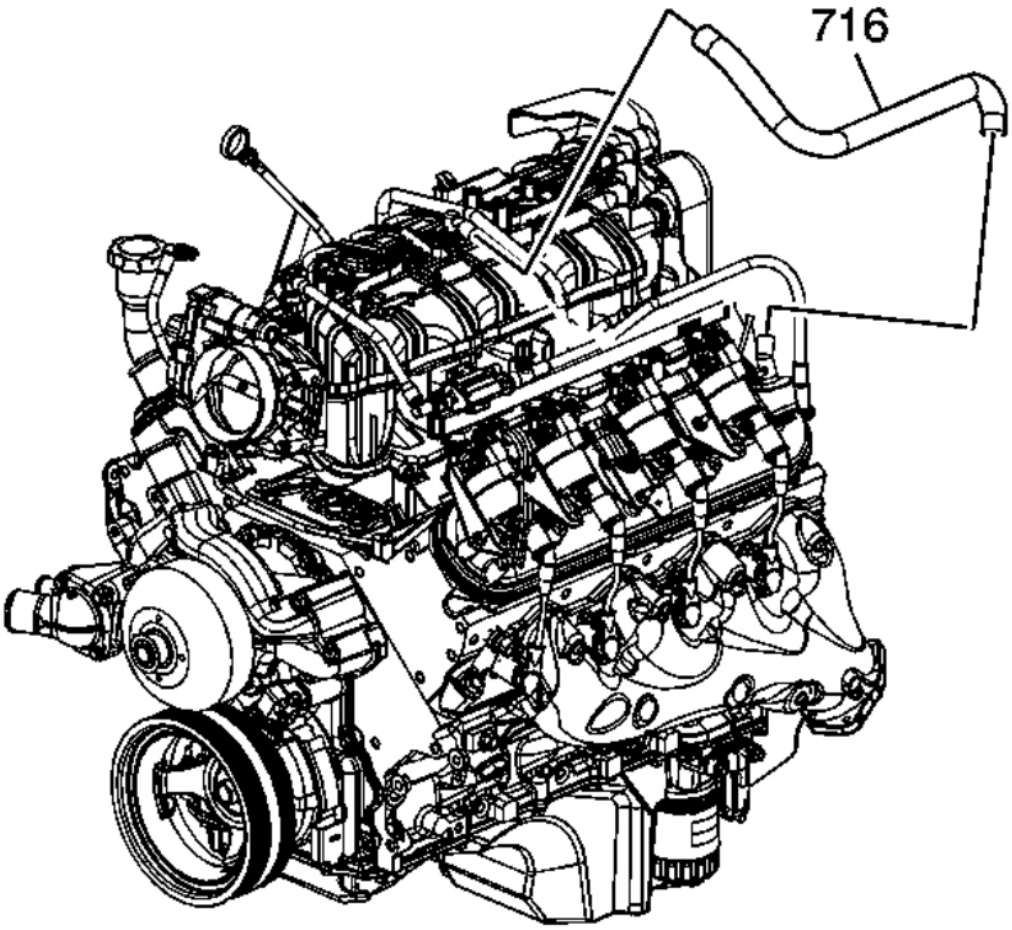

Fig. 178: View Of PCV Dirty-Air Hose
Courtesy of GENERAL MOTORS CORP.

IMPORTANT:

- **The intake manifold, throttle body, fuel injection rail, and fuel injectors may be removed as an assembly. If not servicing the individual components, remove the manifold as a complete assembly.**
- **DO NOT use the intake manifold-to-cylinder head gaskets again.**

1. Remove the positive crankcase ventilation (PCV) hose - dirty air (716).

cardiagn.com

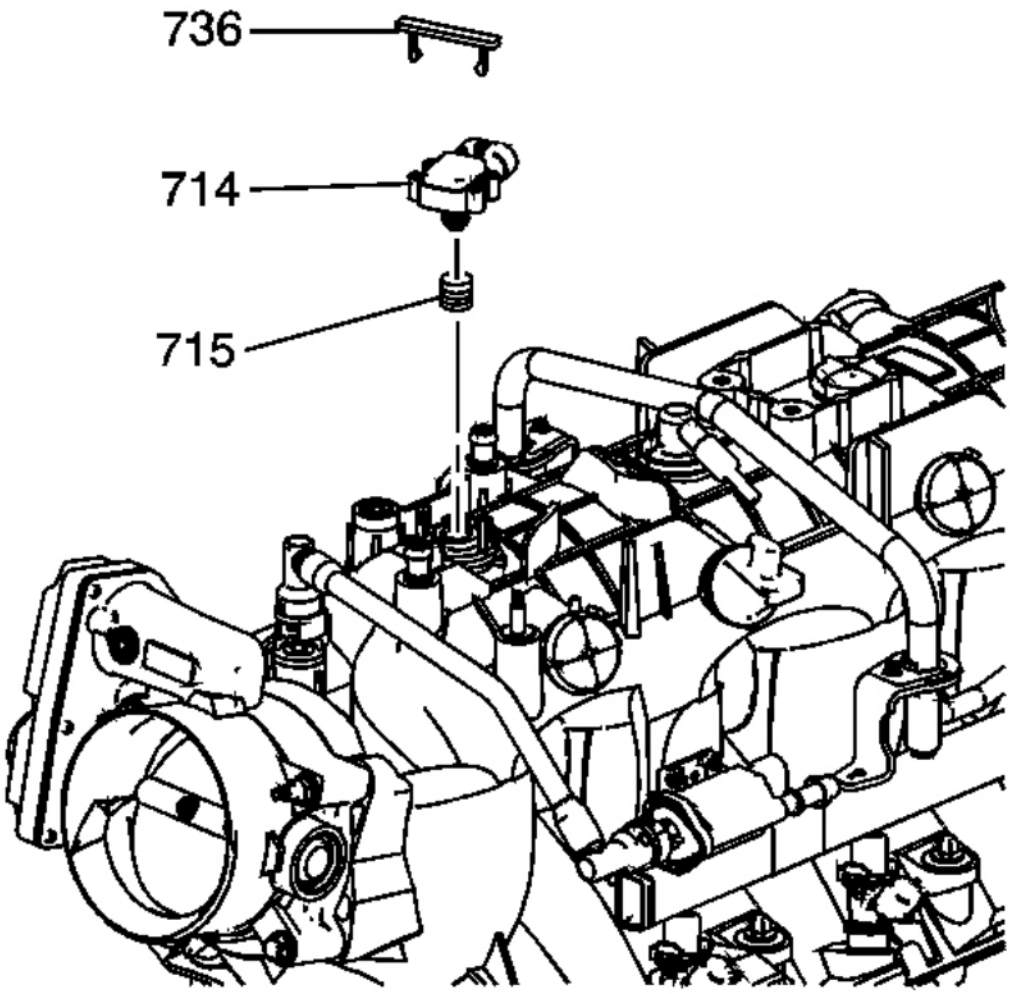

Fig. 179: View Of MAP Sensor
Courtesy of GENERAL MOTORS CORP.

2. Remove the manifold absolute pressure (MAP) sensor (714) and retainer (736), as required.
3. Remove the O-ring (715) from the sensor, as required.

cardiagn.com

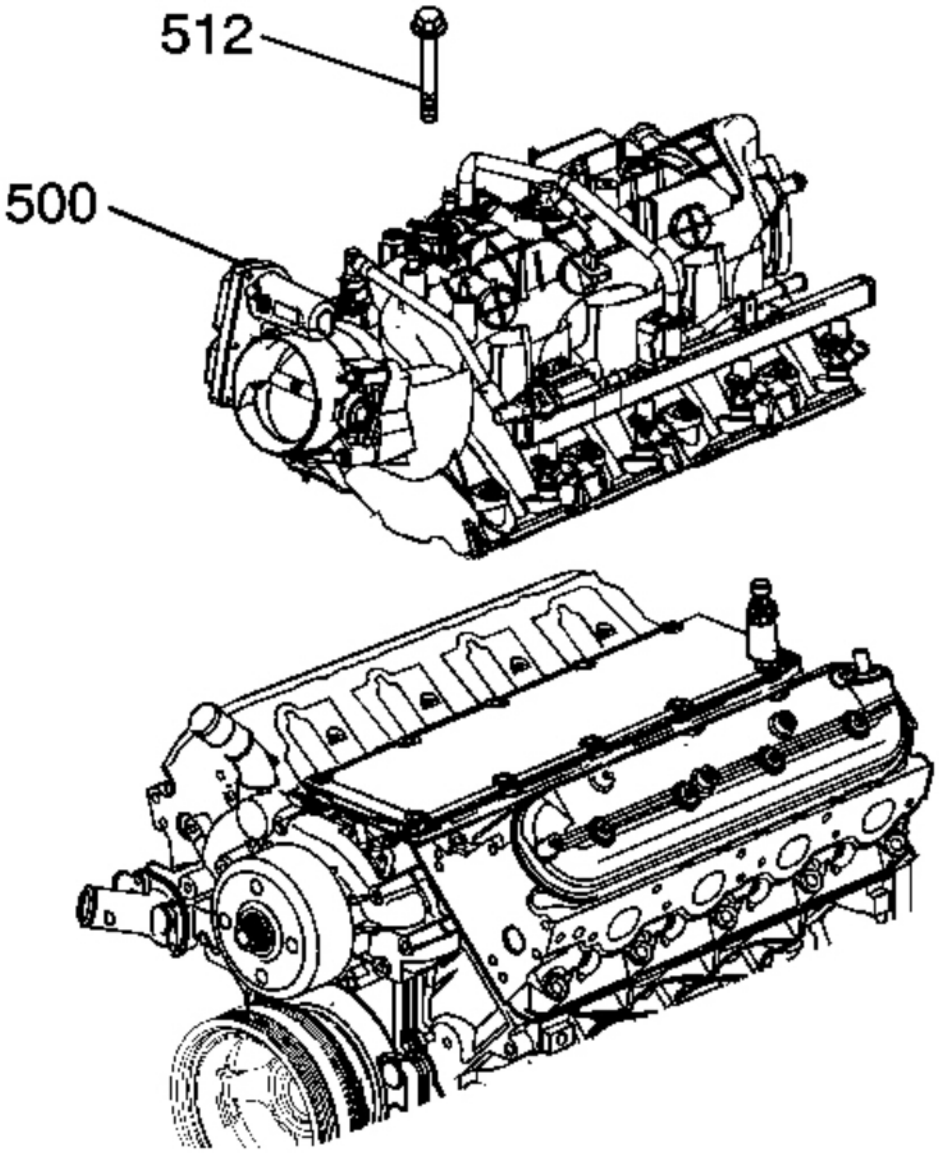

Fig. 180: View Of Intake Manifold & Bolts
Courtesy of GENERAL MOTORS CORP.

4. Remove the intake manifold bolts (512).
5. Remove the intake manifold (500) with gaskets.

cardiagn.com

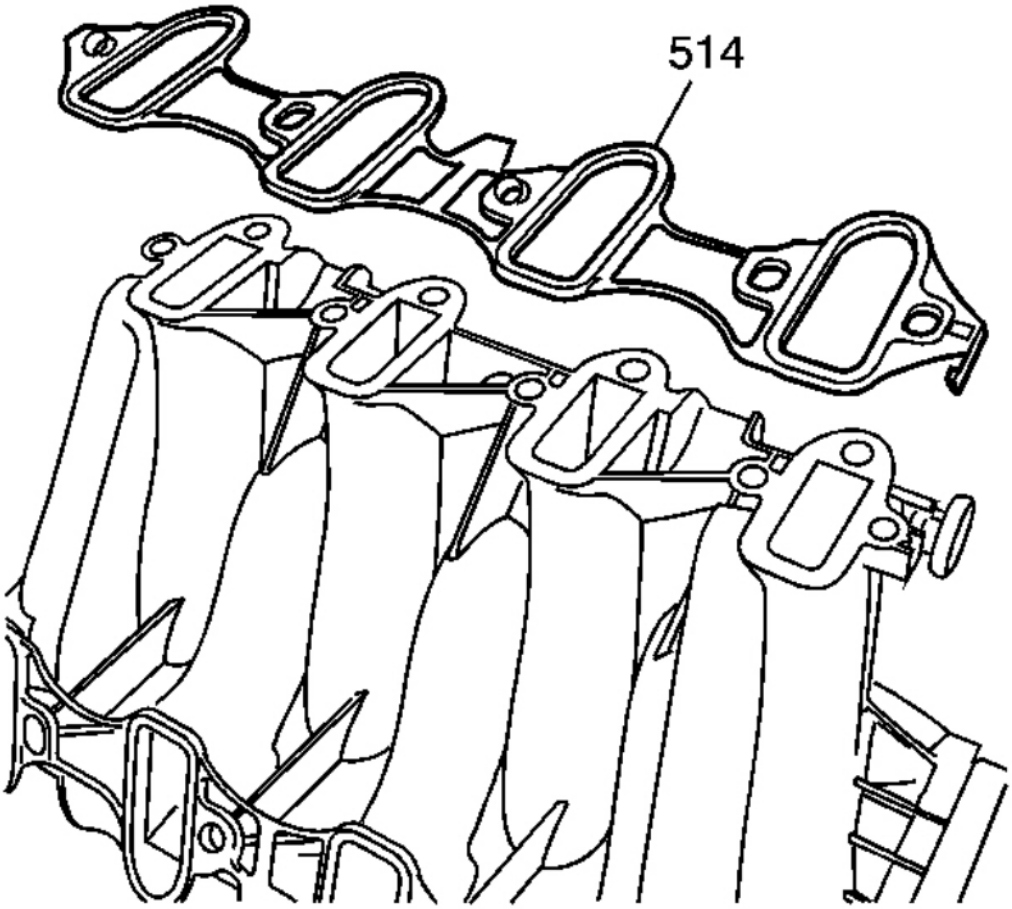

Fig. 181: View Of Intake Manifold-To-Cylinder Head Gasket
Courtesy of GENERAL MOTORS CORP.

6. Remove the intake manifold gaskets (514).
7. Discard the intake manifold gaskets.

INTAKE MANIFOLD REMOVAL (RPO LC9/LY5/LMG/L76)

cardiagn.com

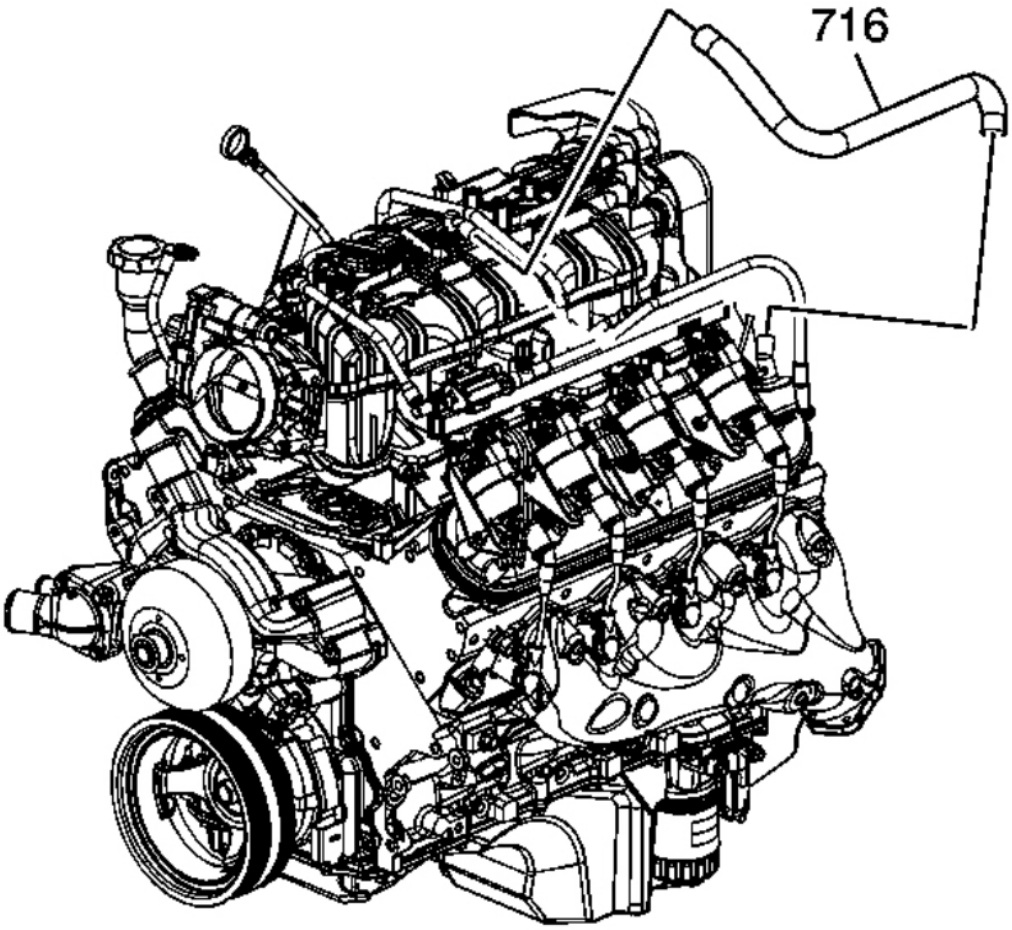

Fig. 182: View Of PCV Dirty-Air Hose
Courtesy of GENERAL MOTORS CORP.

IMPORTANT:

- **The intake manifold, throttle body, fuel injection rail, and fuel injectors may be removed as an assembly. If not servicing the individual components, remove the manifold as a complete assembly.**
- **DO NOT use the intake manifold-to-cylinder head gaskets again.**

1. Remove the positive crankcase ventilation (PCV) hose - dirty air (716).

cardiagn.com

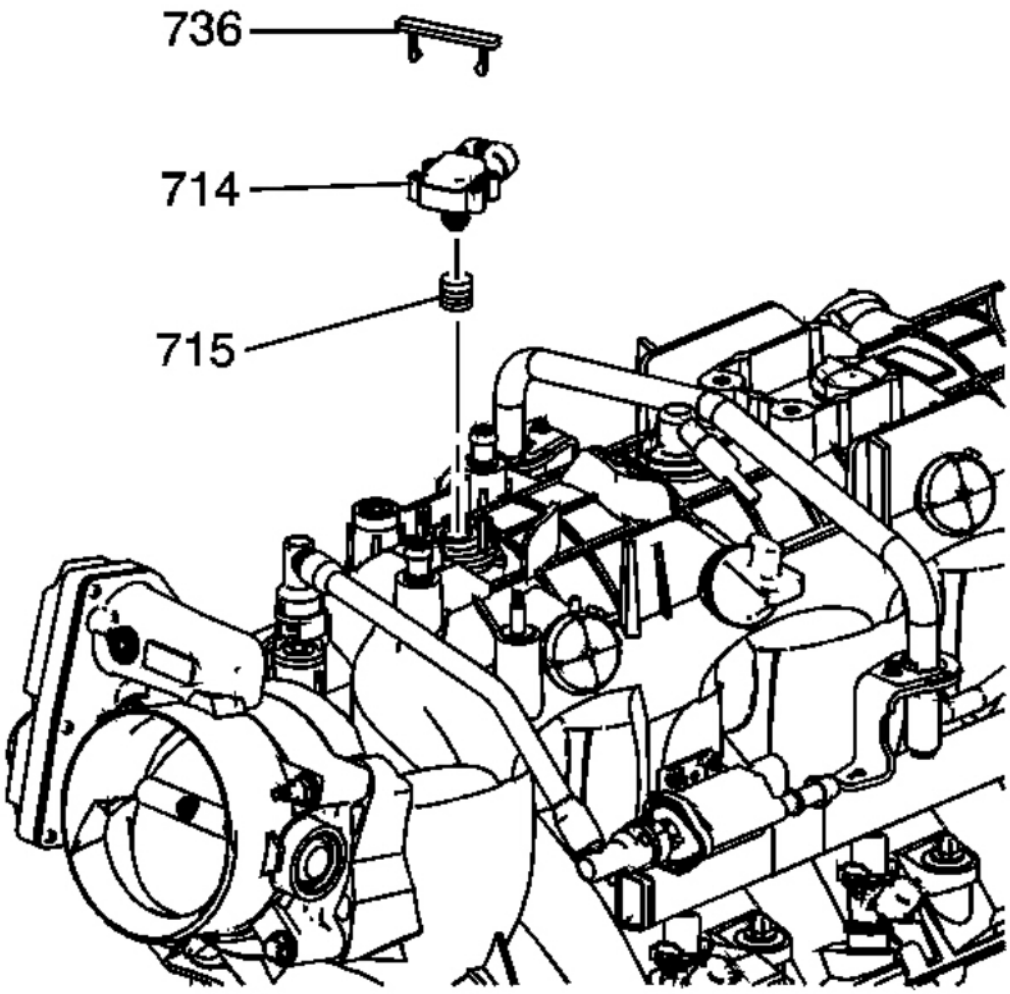

Fig. 183: View Of MAP Sensor
Courtesy of GENERAL MOTORS CORP.

2. Remove the manifold absolute pressure (MAP) sensor (714) and retainer (736), as required.
3. Remove the O-ring (715) from the sensor, as required.

cardiagn.com

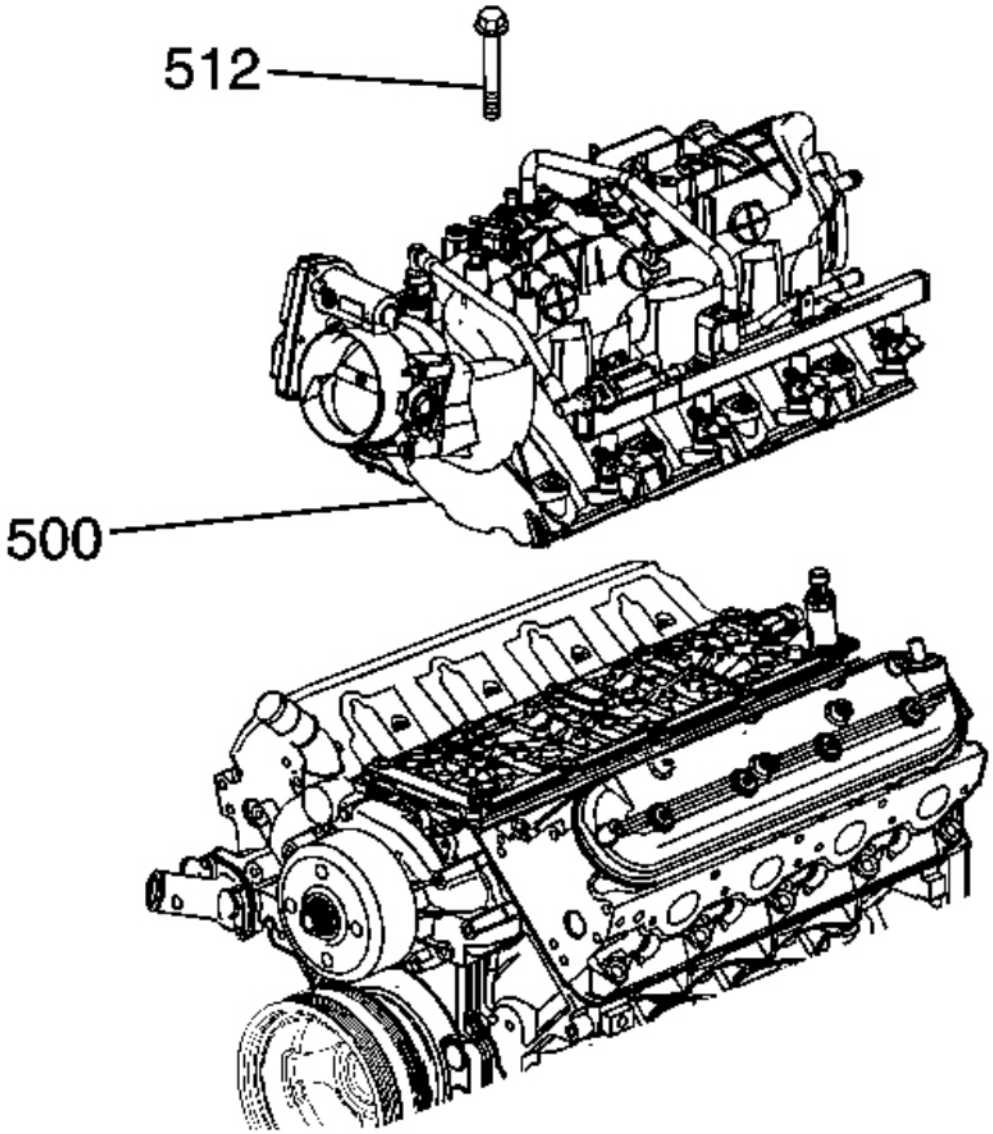

Fig. 184: View Of Intake Manifold
Courtesy of GENERAL MOTORS CORP.

4. Remove the intake manifold bolts (512).
5. Remove the intake manifold (500) with gaskets.

cardiagn.com

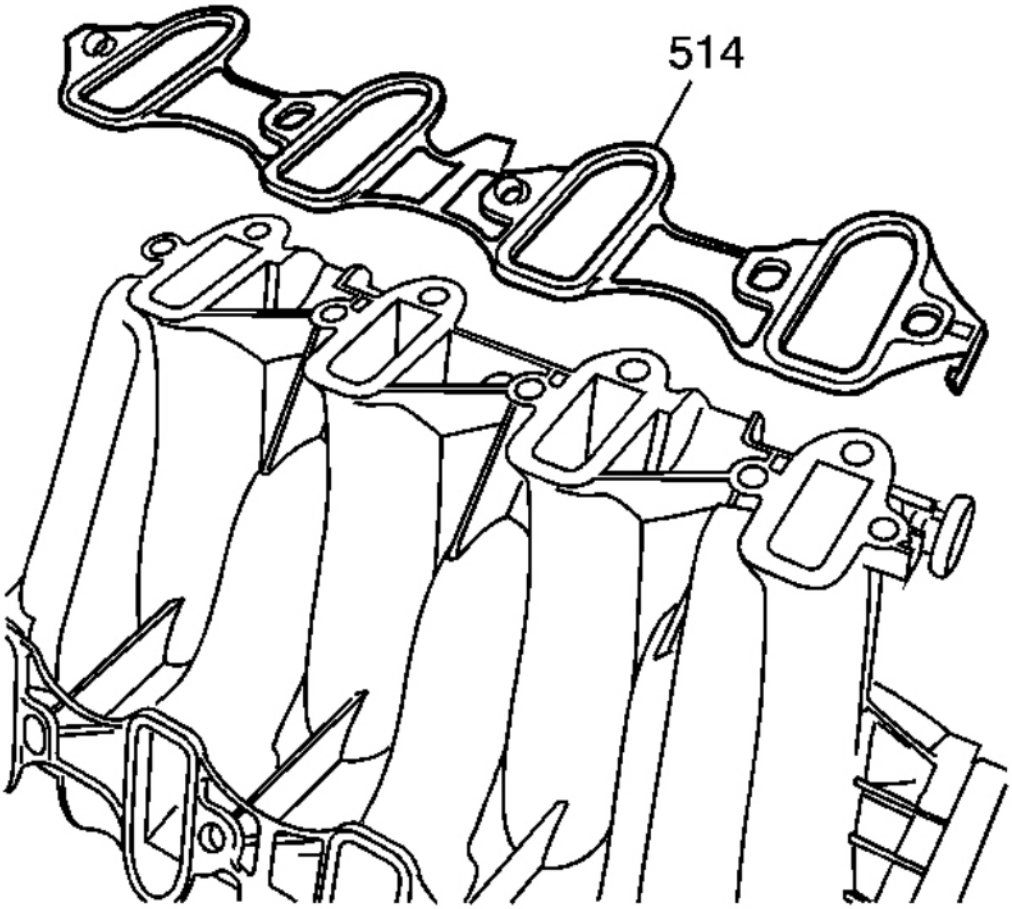

Fig. 185: View Of Intake Manifold-To-Cylinder Head Gasket
Courtesy of GENERAL MOTORS CORP.

6. Remove the intake manifold gaskets (514).
7. Discard the intake manifold gaskets.

INTAKE MANIFOLD REMOVAL (RPO L92)

cardiagn.com

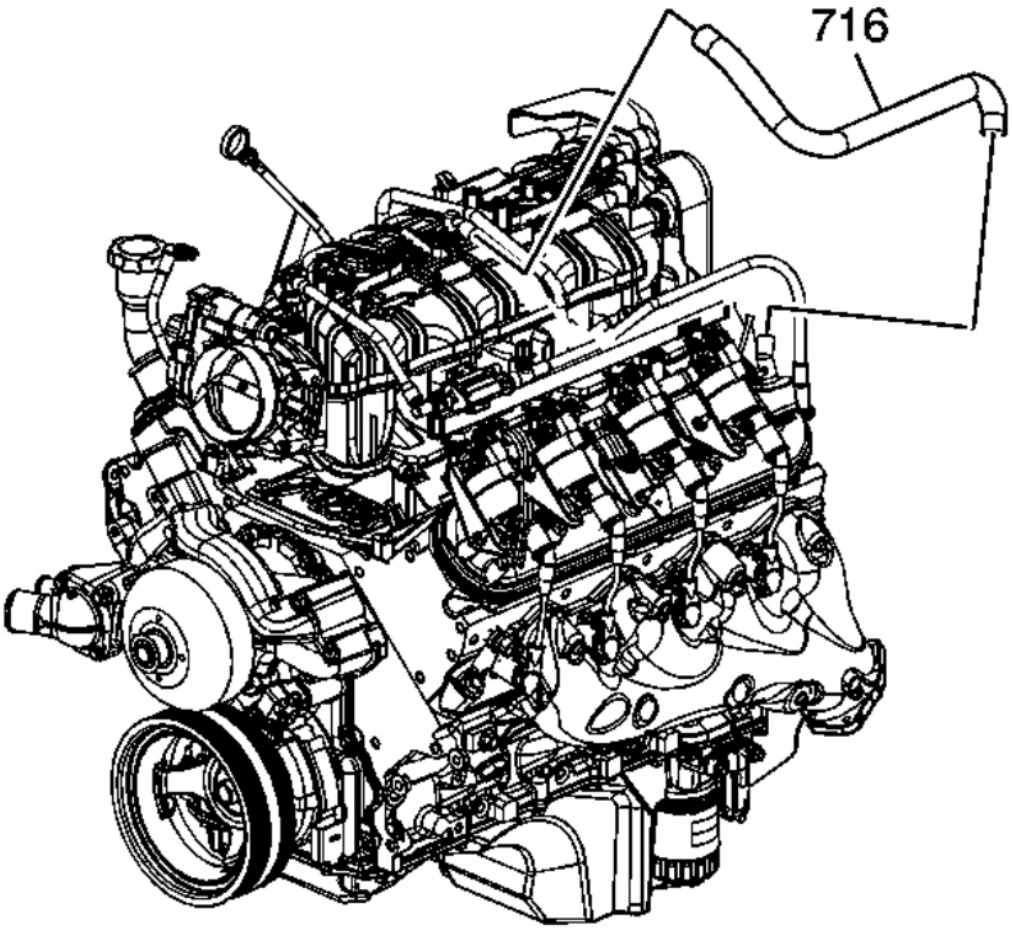

Fig. 186: View Of PCV Dirty-Air Hose
Courtesy of GENERAL MOTORS CORP.

IMPORTANT:

- **The intake manifold, throttle body, fuel injection rail, and fuel injectors may be removed as an assembly. If not servicing the individual components, remove the manifold as a complete assembly.**
- **DO NOT use the intake manifold-to-cylinder head gaskets again.**

1. Remove the positive crankcase ventilation (PCV) hose - dirty air (716).

cardiagn.com

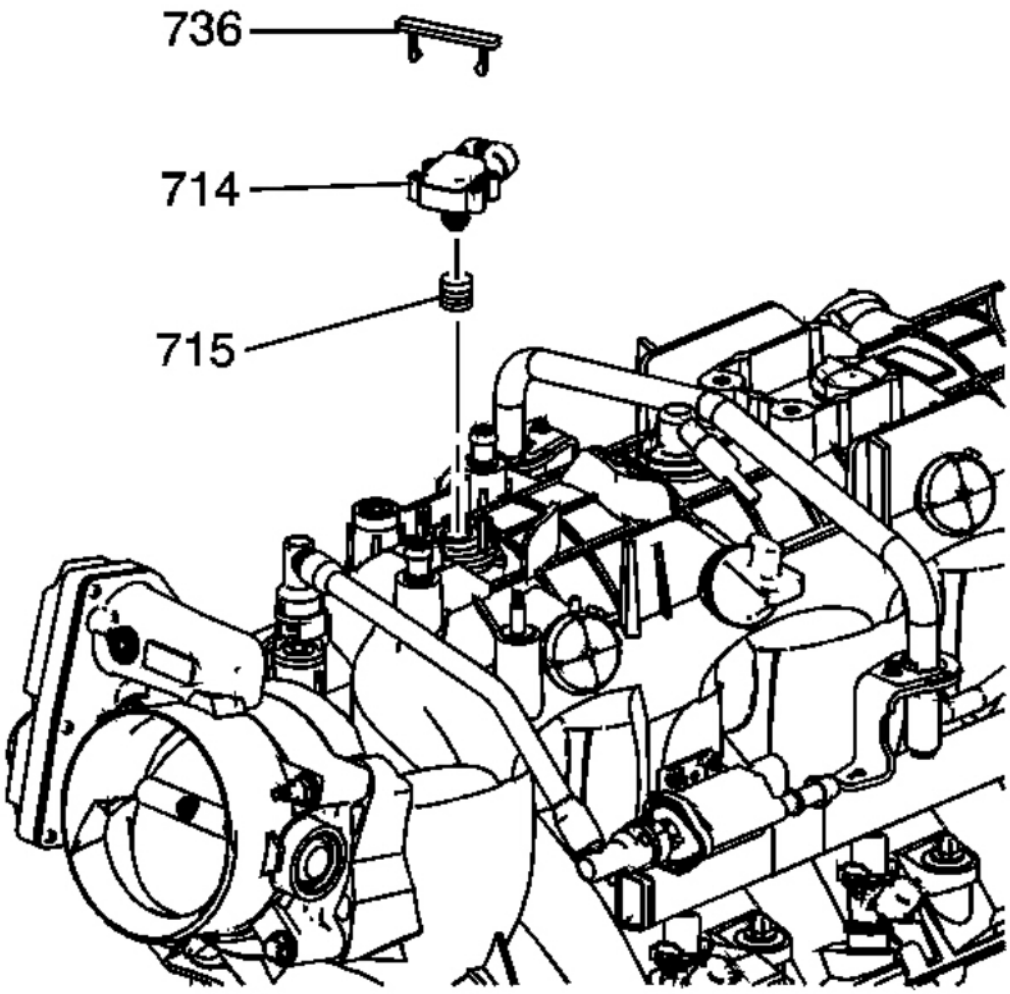

Fig. 187: View Of MAP Sensor
Courtesy of GENERAL MOTORS CORP.

2. Remove the manifold absolute pressure (MAP) sensor (714) and retainer (736), as required.
3. Remove the O-ring (715) from the sensor, as required.

cardiagn.com

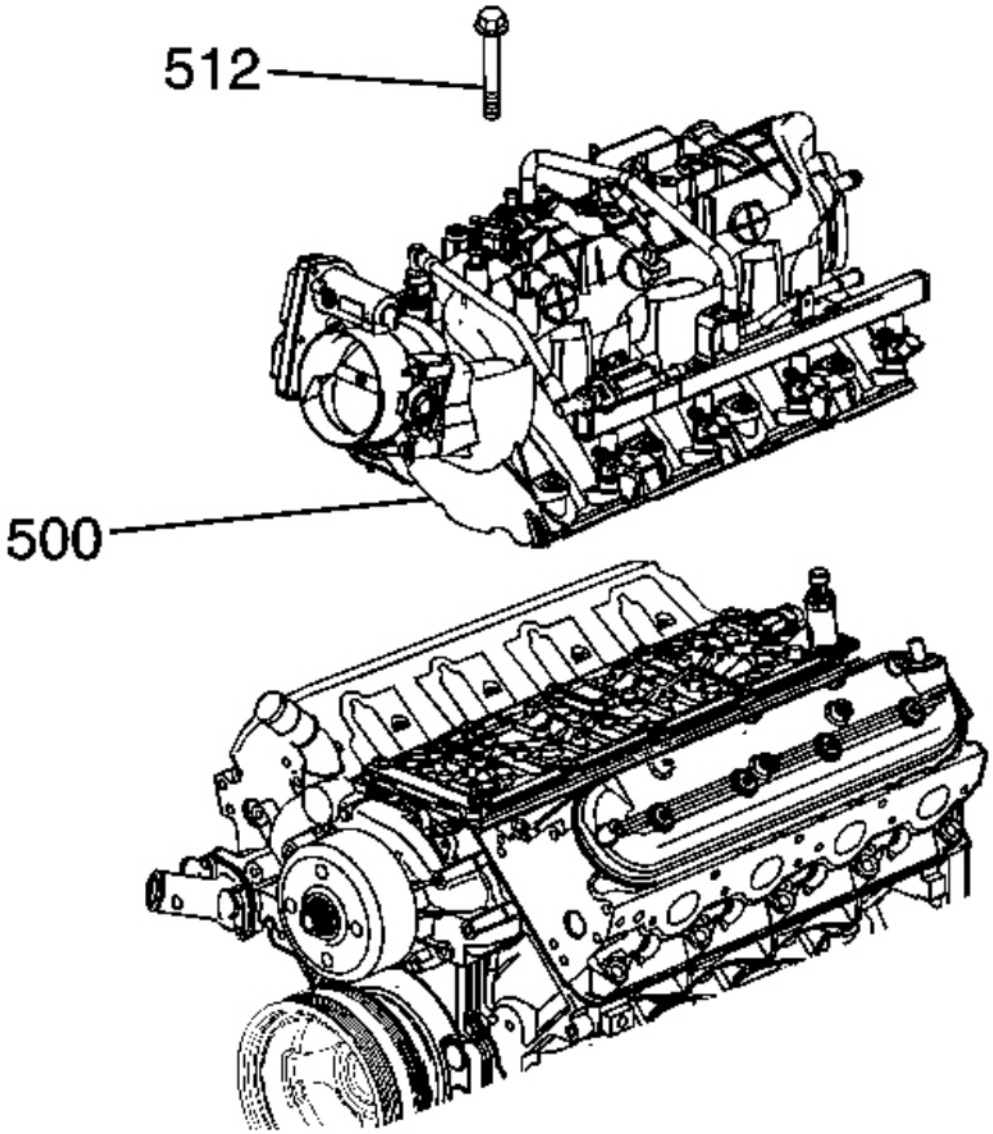

Fig. 188: View Of Intake Manifold
Courtesy of GENERAL MOTORS CORP.

4. Remove the intake manifold bolts (512).
5. Remove the intake manifold (500) with gaskets from the first design engine.

cardiagn.com

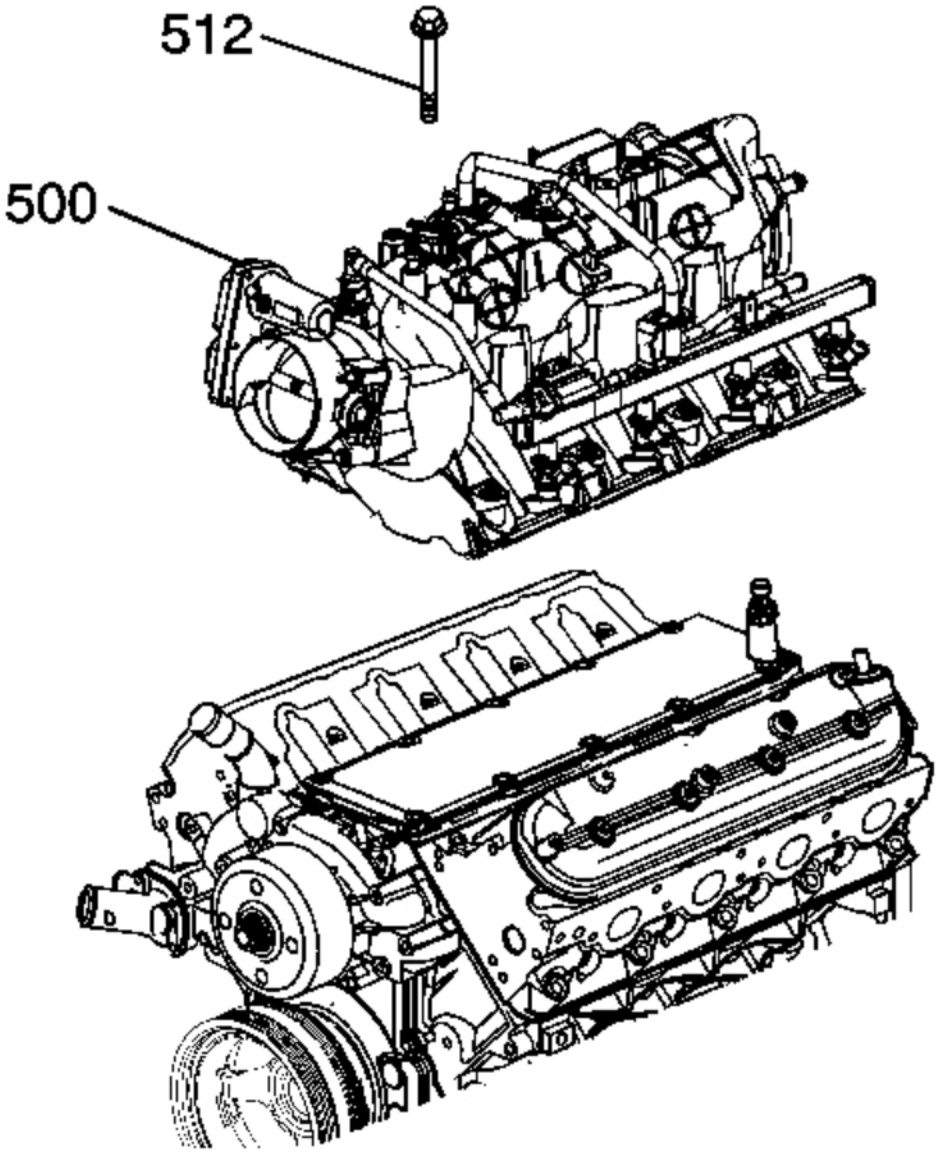

Fig. 189: View Of Intake Manifold & Bolts
Courtesy of GENERAL MOTORS CORP.

6. Remove the intake manifold bolts (512).
7. Remove the intake manifold (500) with gaskets from the second design engine.

cardiagn.com

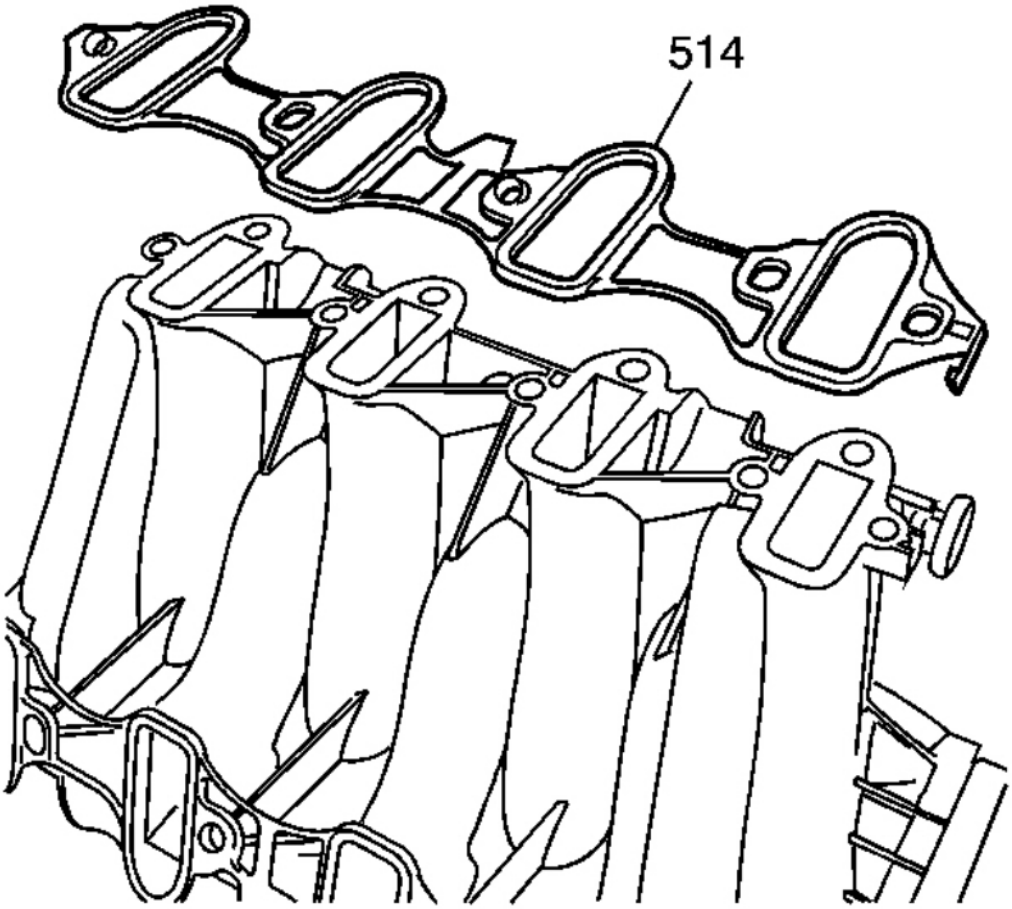

Fig. 190: View Of Intake Manifold-To-Cylinder Head Gasket
Courtesy of GENERAL MOTORS CORP.

8. Remove the intake manifold gaskets (514).
9. Discard the intake manifold gaskets.

ENGINE COOLANT AIR BLEED PIPE AND HOLE COVER REMOVAL (RPO LY2/LY6)

cardiagn.com

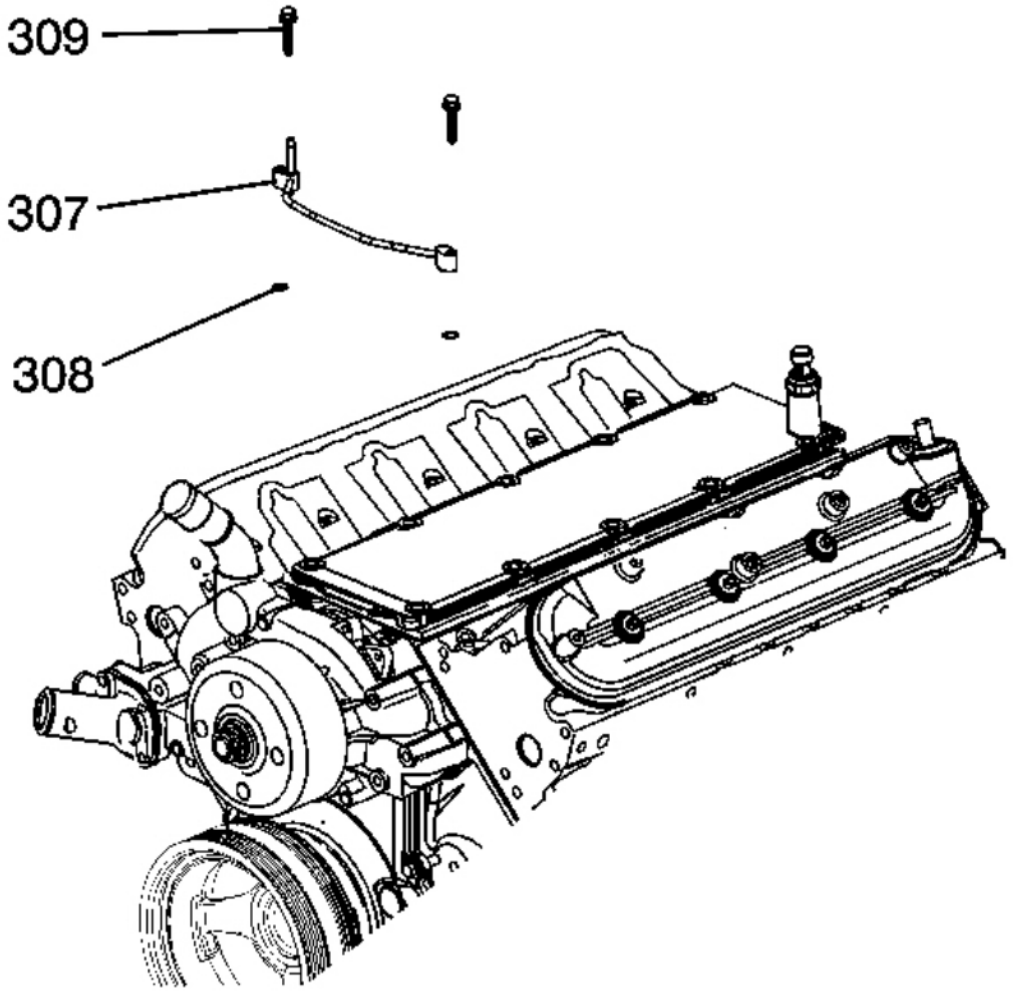

Fig. 191: View Of Engine Coolant Air Bleed Pipe
Courtesy of GENERAL MOTORS CORP.

1. Remove the engine coolant air bleed pipe bolts (309).
2. Remove the pipe (307) with seals (308).

cardiagn.com

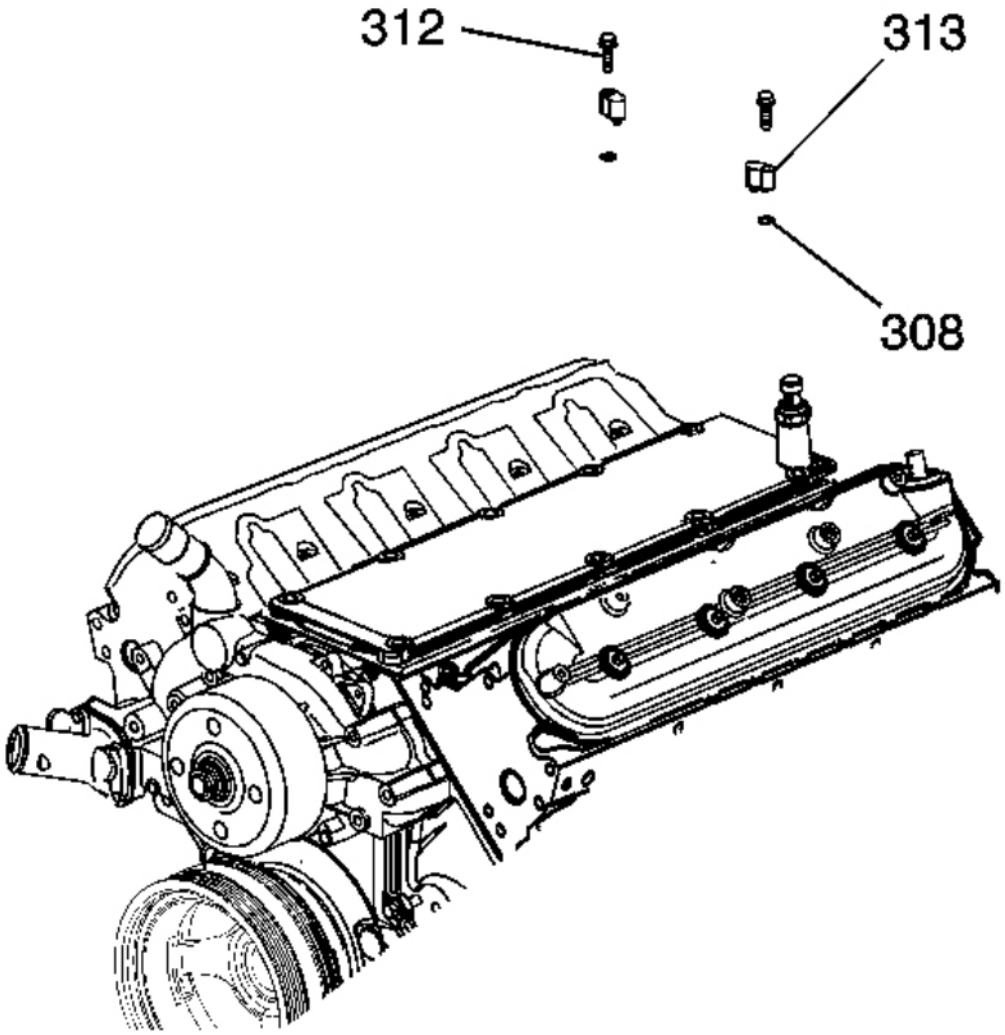

Fig. 192: View Of Coolant Air Bleed Cover Bolts
Courtesy of GENERAL MOTORS CORP.

3. Remove the engine coolant air bleed cover bolts (312).
4. Remove the covers (313) with seals (308).

cardiagn.com

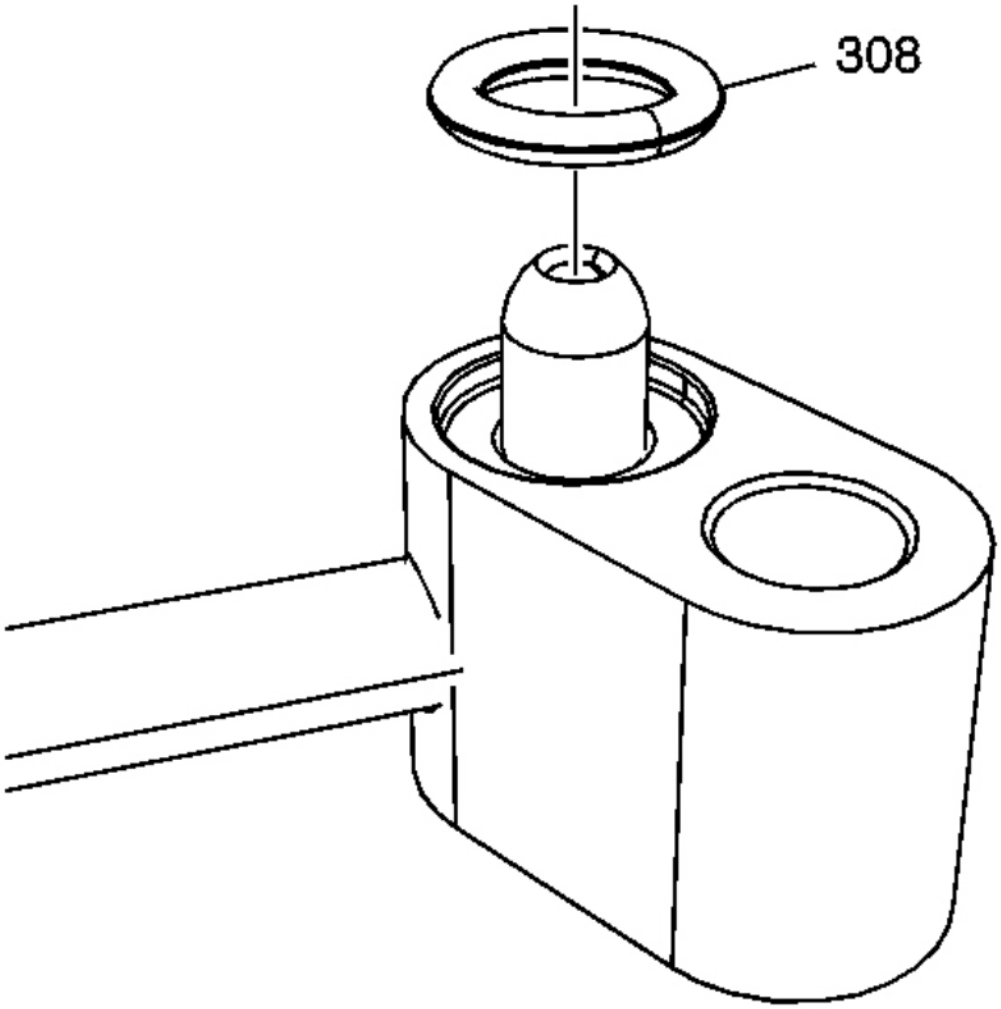

Fig. 193: View Of Coolant Air Bleed Pipe Seal
Courtesy of GENERAL MOTORS CORP.

5. Remove the seals (308) from the pipe and covers.
6. Discard the seals.

ENGINE COOLANT AIR BLEED PIPE AND HOLE COVER REMOVAL (RPO LC9/LY5/LMG/L76)

cardiagn.com

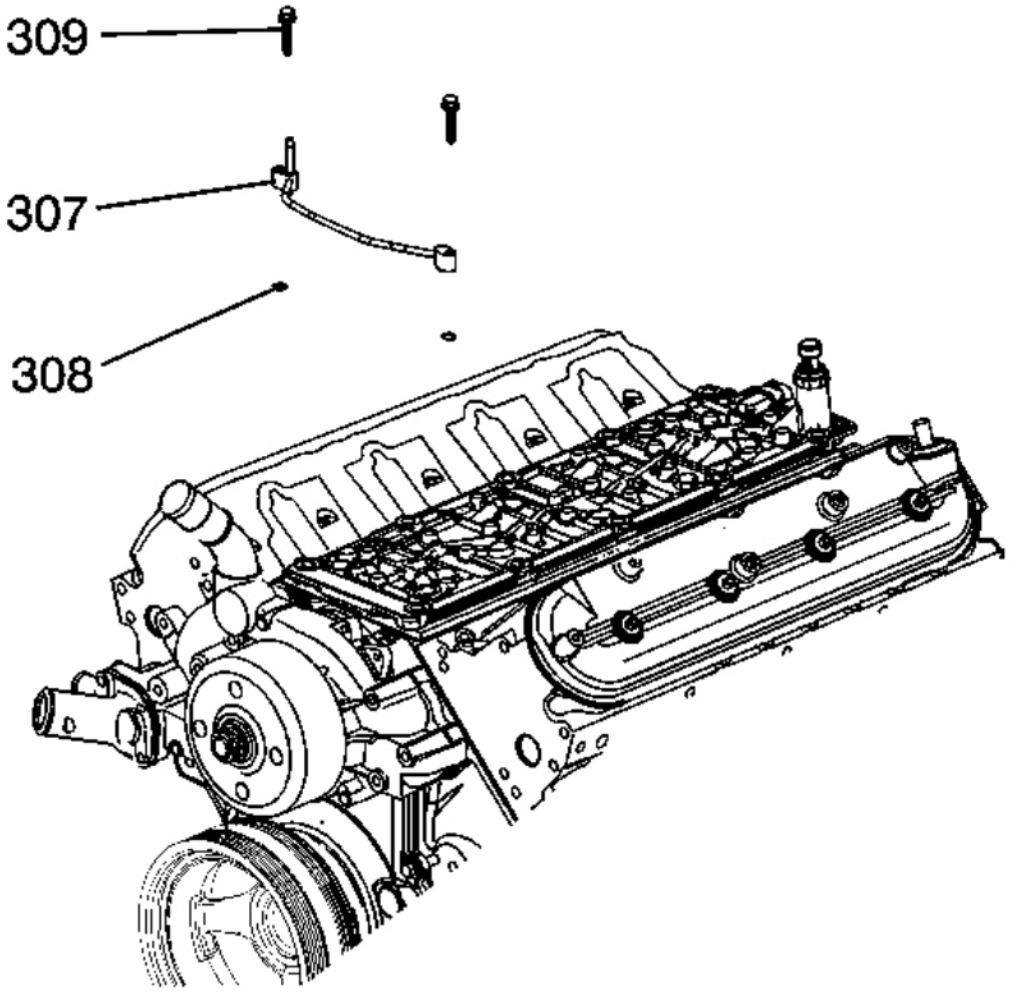

Fig. 194: View Of Engine Coolant Air Bleed Pipe
Courtesy of GENERAL MOTORS CORP.

1. Remove the engine coolant air bleed pipe bolts (309).
2. Remove the pipe (307) with seals (308).

cardiagn.com

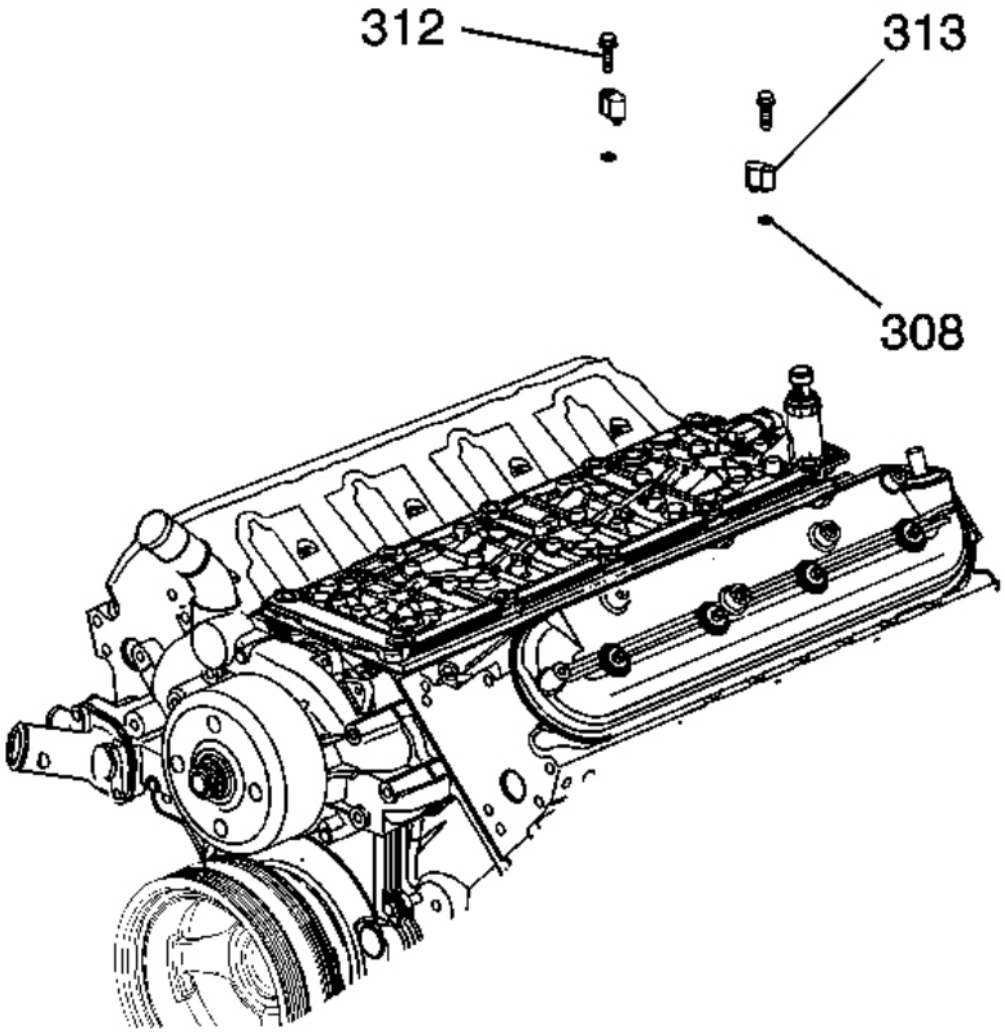

Fig. 195: View Of Engine Coolant Air Bleed Cover Bolts
Courtesy of GENERAL MOTORS CORP.

3. Remove the engine coolant air bleed cover bolts (312).
4. Remove the covers (313) with seals (308).

cardiagn.com

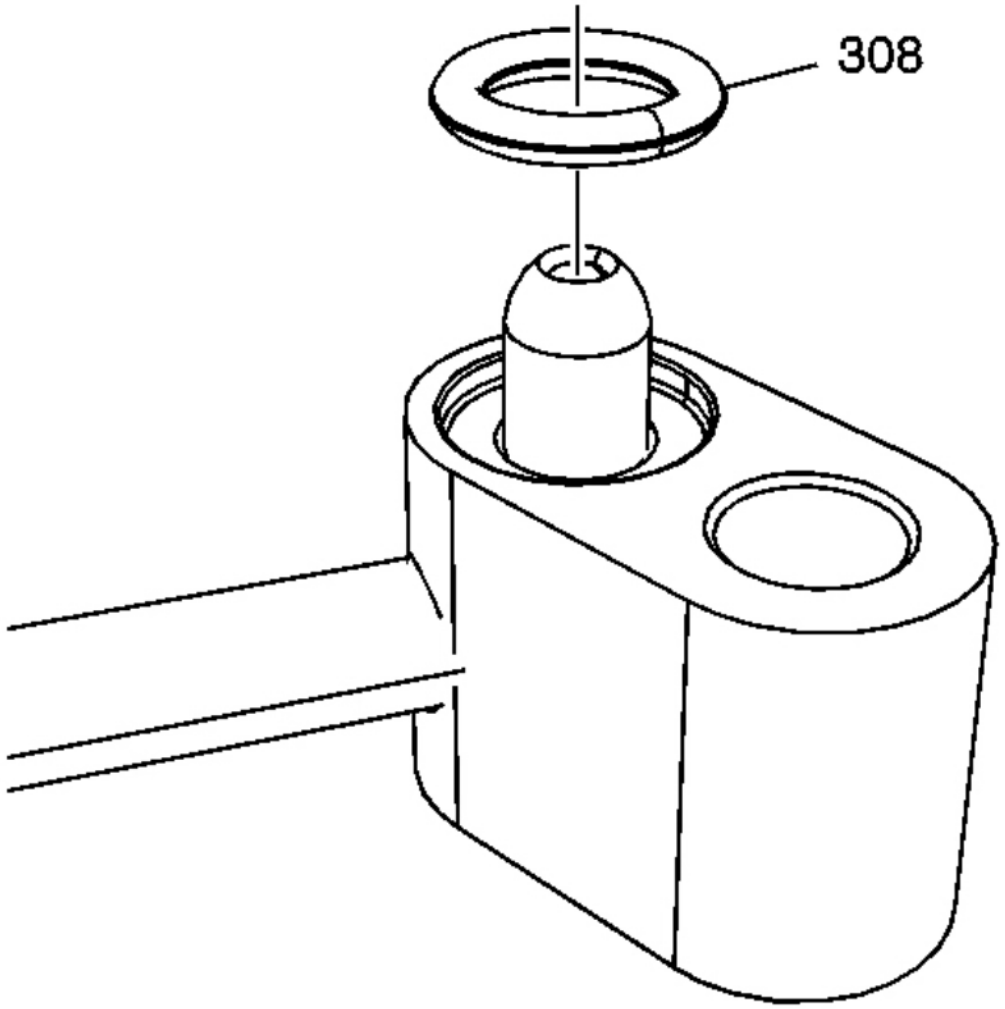

Fig. 196: View Of Coolant Air Bleed Pipe Seal
Courtesy of GENERAL MOTORS CORP.

5. Remove the seals (308) from the pipe and covers.
6. Discard the seals.

ENGINE COOLANT AIR BLEED PIPE AND HOLE COVER REMOVAL (RPO L92)

cardiagn.com

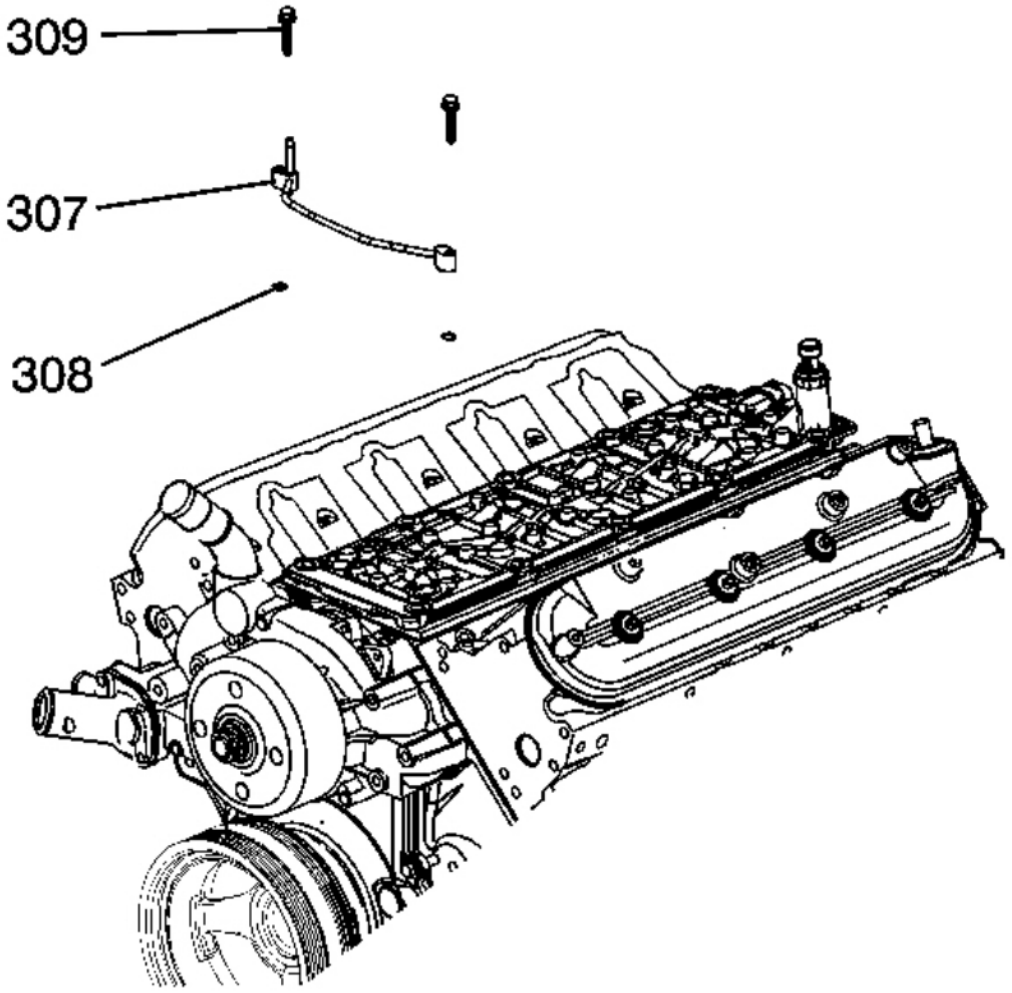

Fig. 197: View Of Engine Coolant Air Bleed Pipe
Courtesy of GENERAL MOTORS CORP.

1. Remove the engine coolant air bleed pipe bolts (309) from the first design engine.
2. Remove the pipe (307) with seals (308).

cardiagn.com

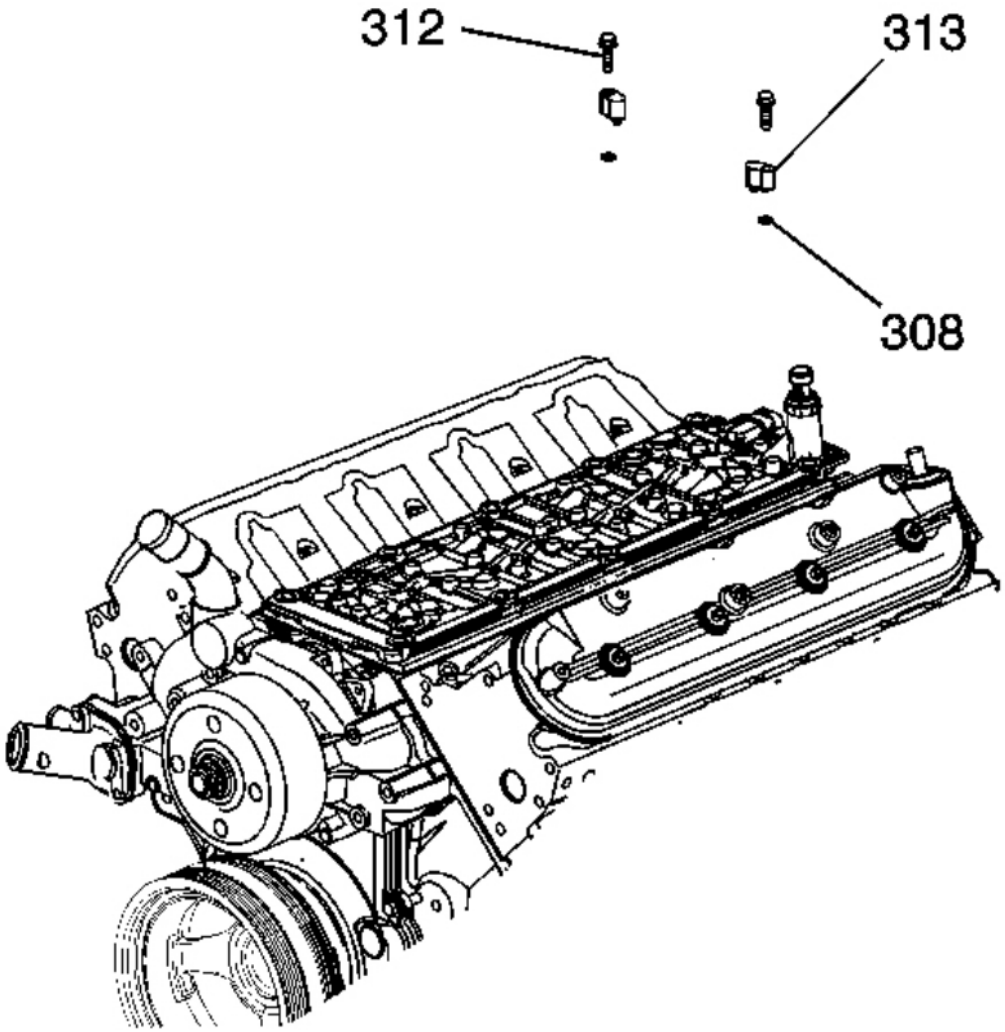

Fig. 198: View Of Engine Coolant Air Bleed Cover Bolts
Courtesy of GENERAL MOTORS CORP.

3. Remove the engine coolant air bleed cover bolts (312) from the first design engine.
4. Remove the covers (313) with seals (308).

cardiagn.com

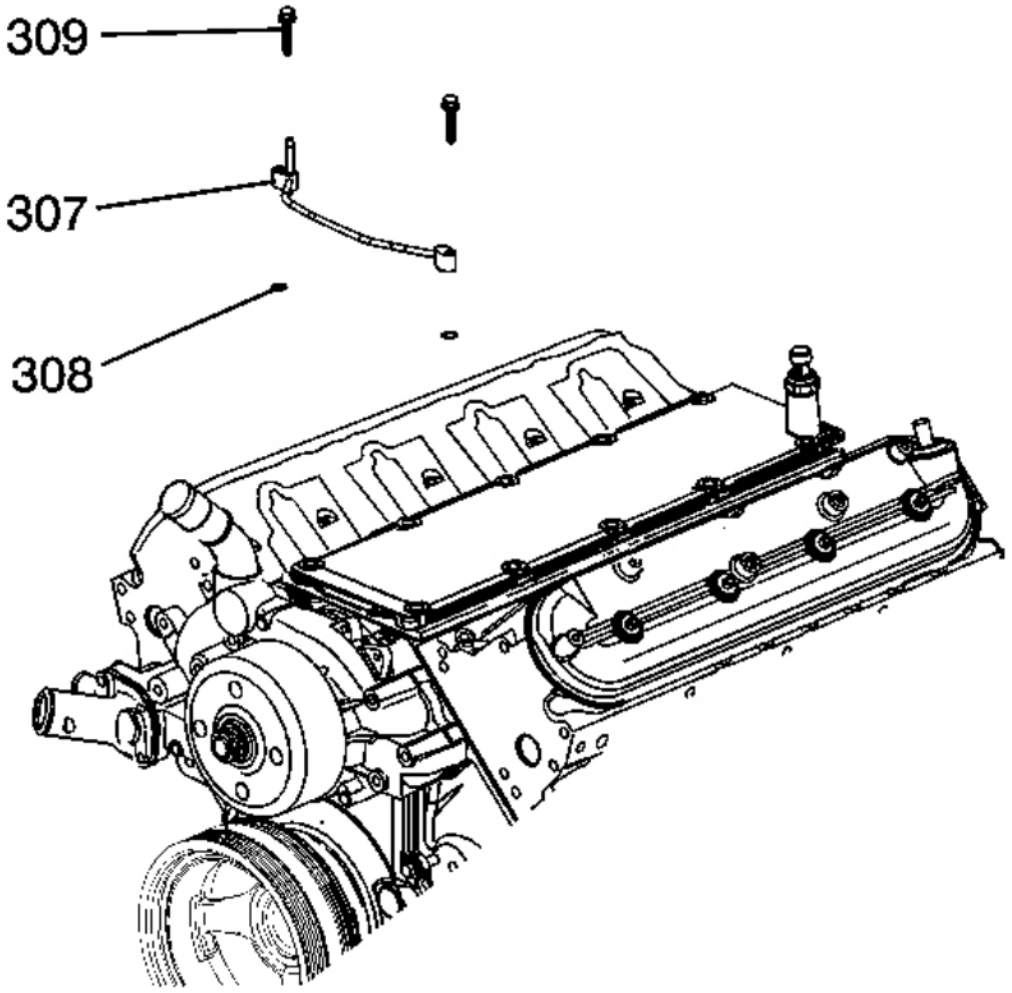

Fig. 199: View Of Engine Coolant Air Bleed Pipe
Courtesy of GENERAL MOTORS CORP.

5. Remove the engine coolant air bleed pipe bolts (309) from the second design engine.
6. Remove the pipe (307) with seals (308).

cardiagn.com

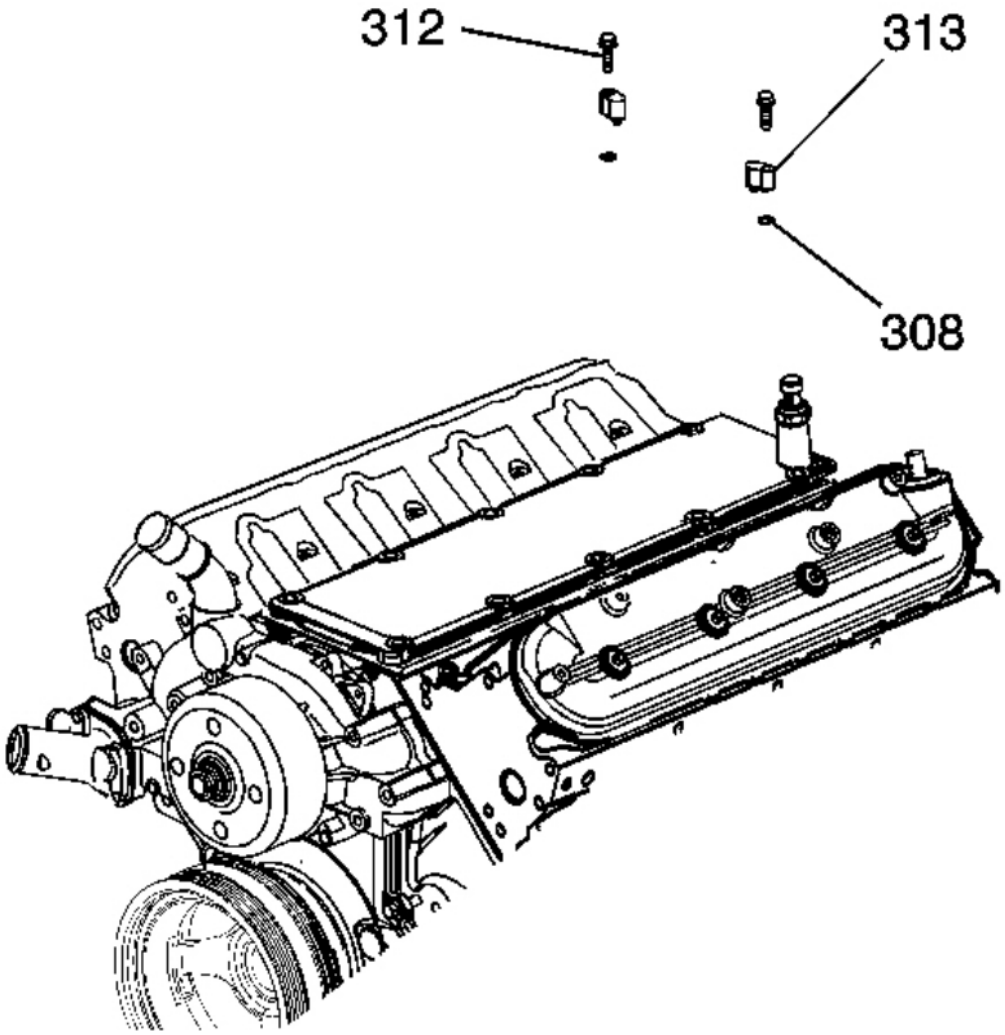

Fig. 200: View Of Coolant Air Bleed Cover Bolts
Courtesy of GENERAL MOTORS CORP.

7. Remove the engine coolant air bleed cover bolts (312) from the second design engine.
8. Remove the covers (313) with seals (308).

cardiagn.com

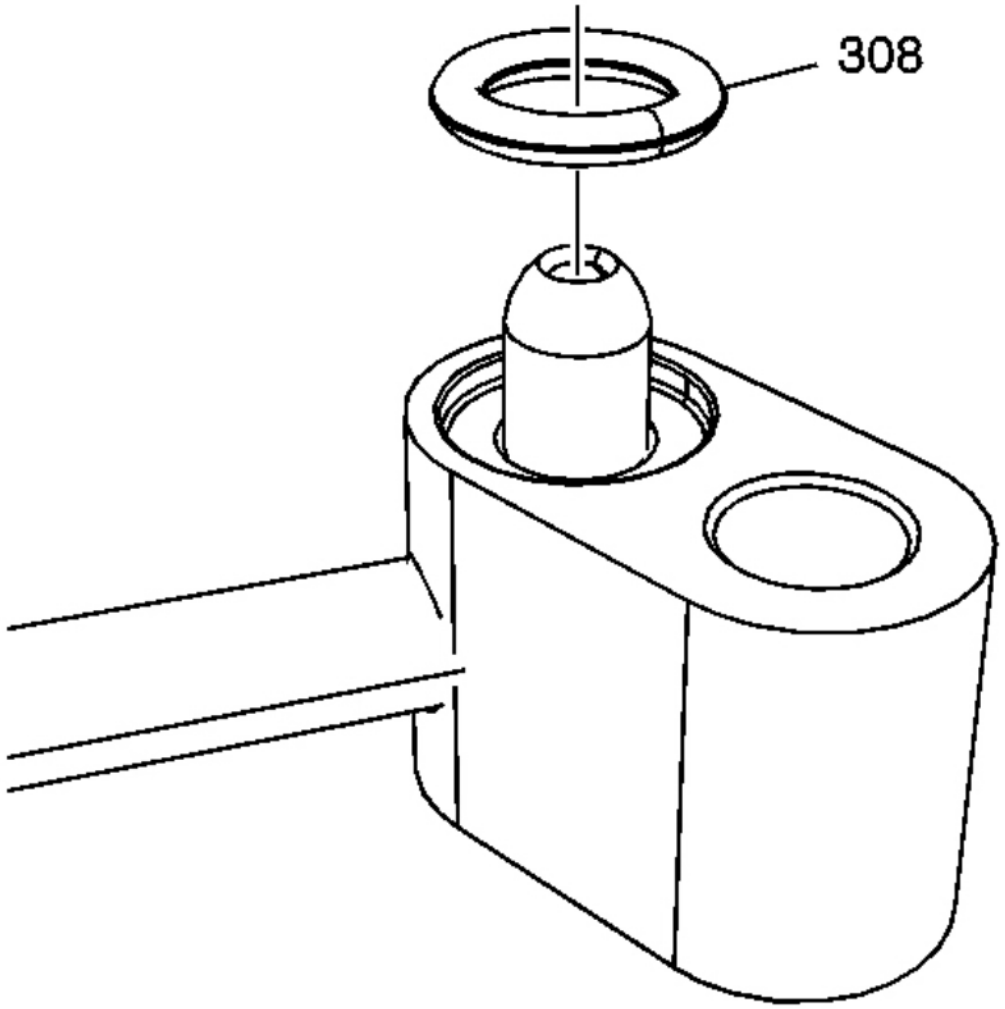

Fig. 201: View Of Coolant Air Bleed Pipe Seal
Courtesy of GENERAL MOTORS CORP.

9. Remove the seals (308) from the pipe and covers.
10. Discard the seals.

ENGINE VALLEY COVER REMOVAL

cardiagn.com

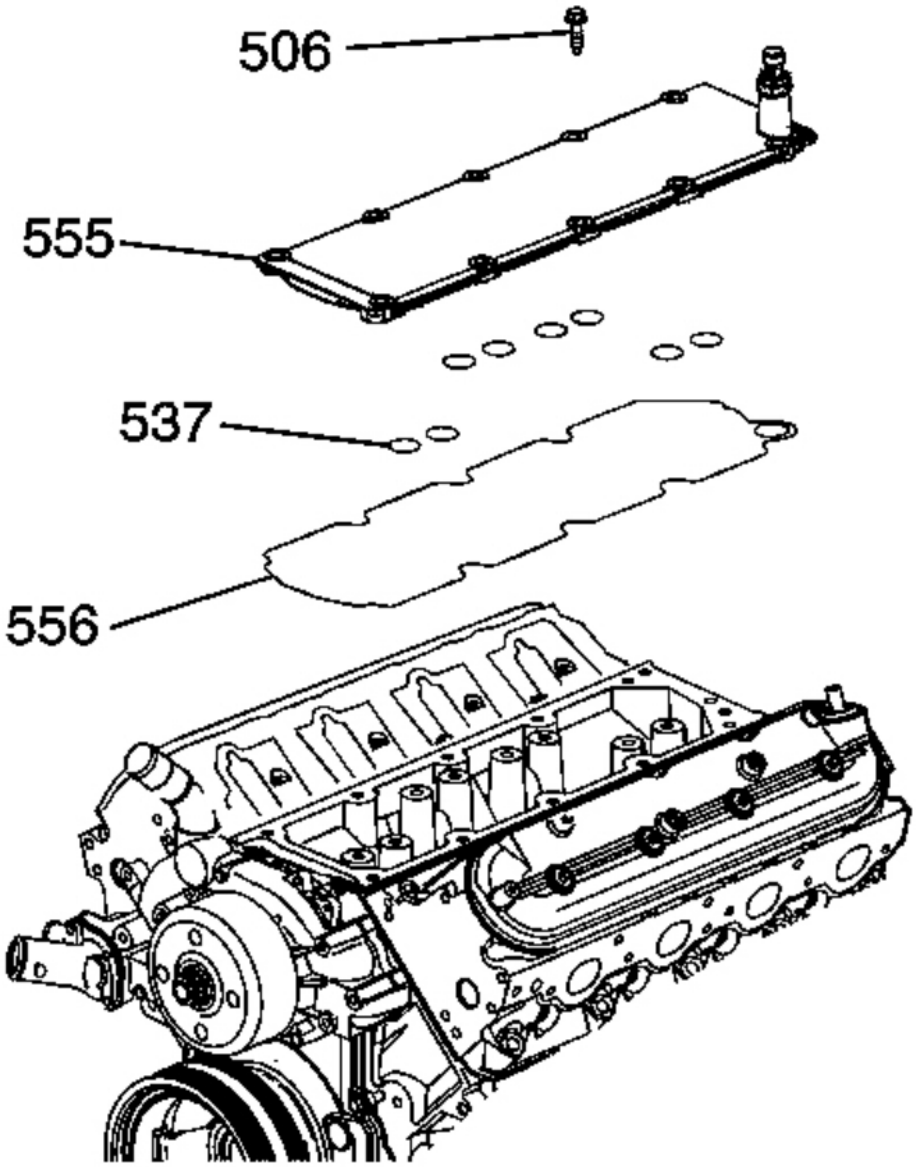

Fig. 202: View Of Engine Valley Cover Components
Courtesy of GENERAL MOTORS CORP.

1. Remove the valley cover bolts (506).
2. Remove the valley cover (555) and gasket (556).
3. Remove the O-ring seals (537) from the cover.

cardiagn.com

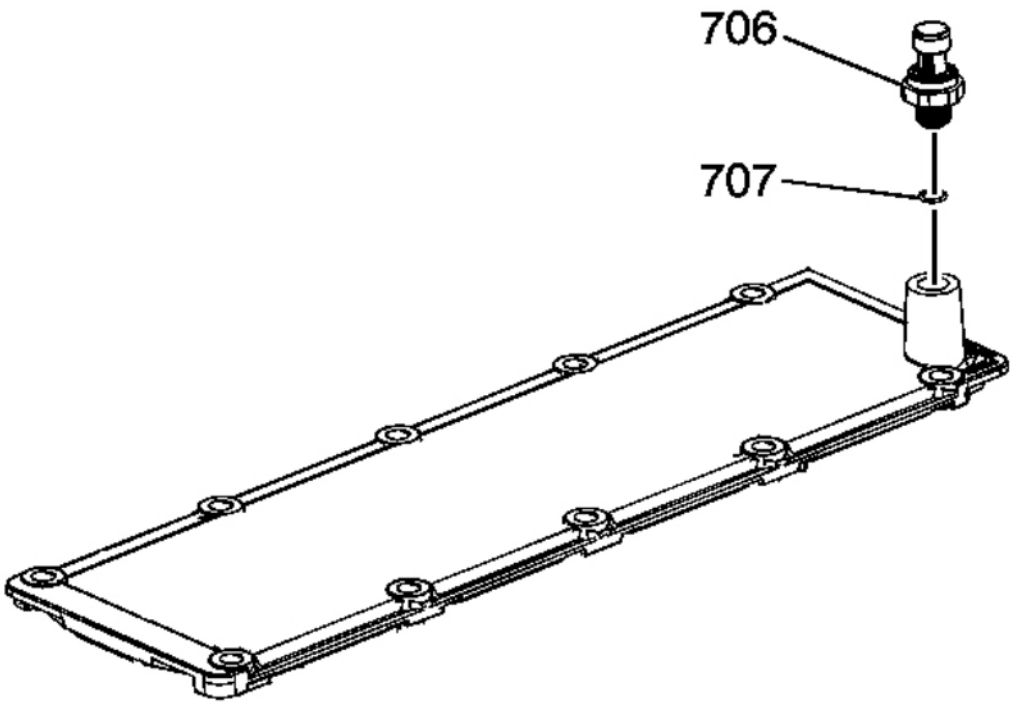

Fig. 203: View Of Oil Pressure Sensor & Washer
Courtesy of GENERAL MOTORS CORP.

4. Remove the oil pressure sensor (706) and washer (707), as required.

VALVE LIFTER OIL MANIFOLD REMOVAL

cardiagn.com

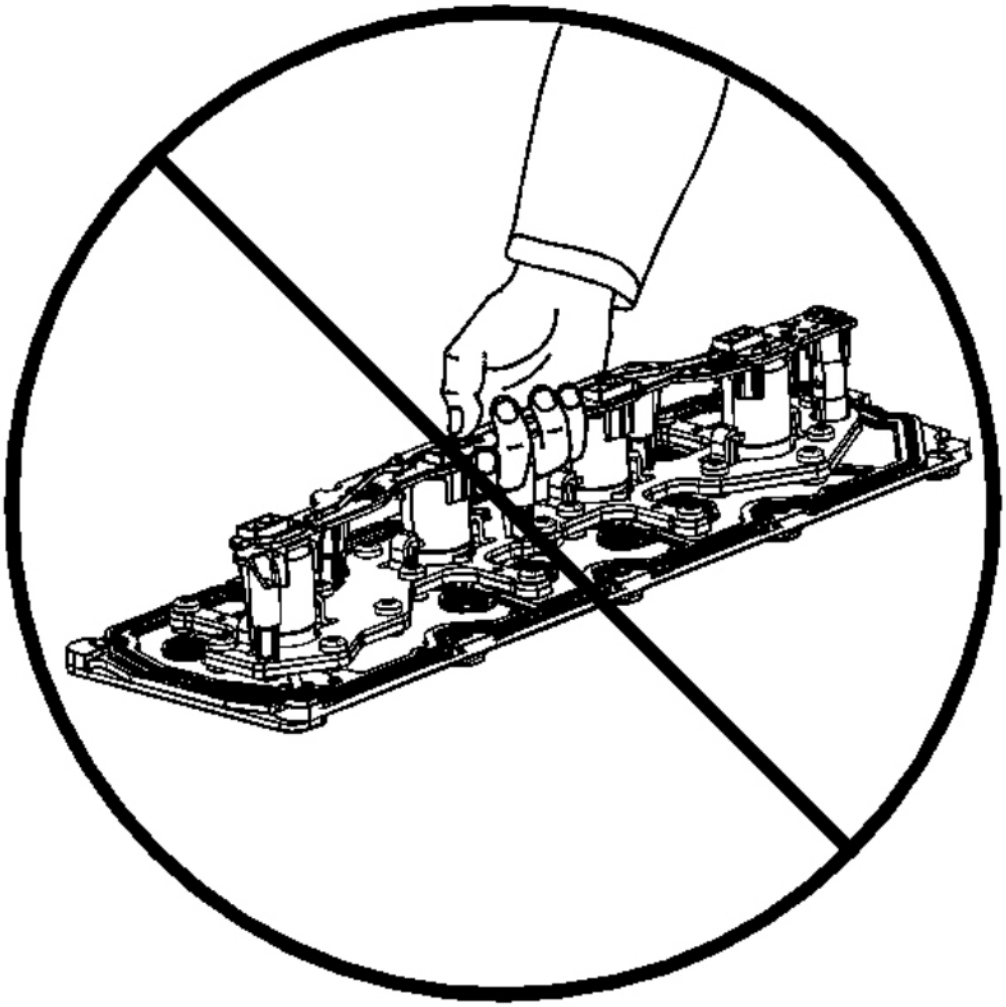

Fig. 204: Valve Lifter Oil Manifold
Courtesy of GENERAL MOTORS CORP.

1. Do not lift the manifold by the electrical lead frame.

cardiagn.com

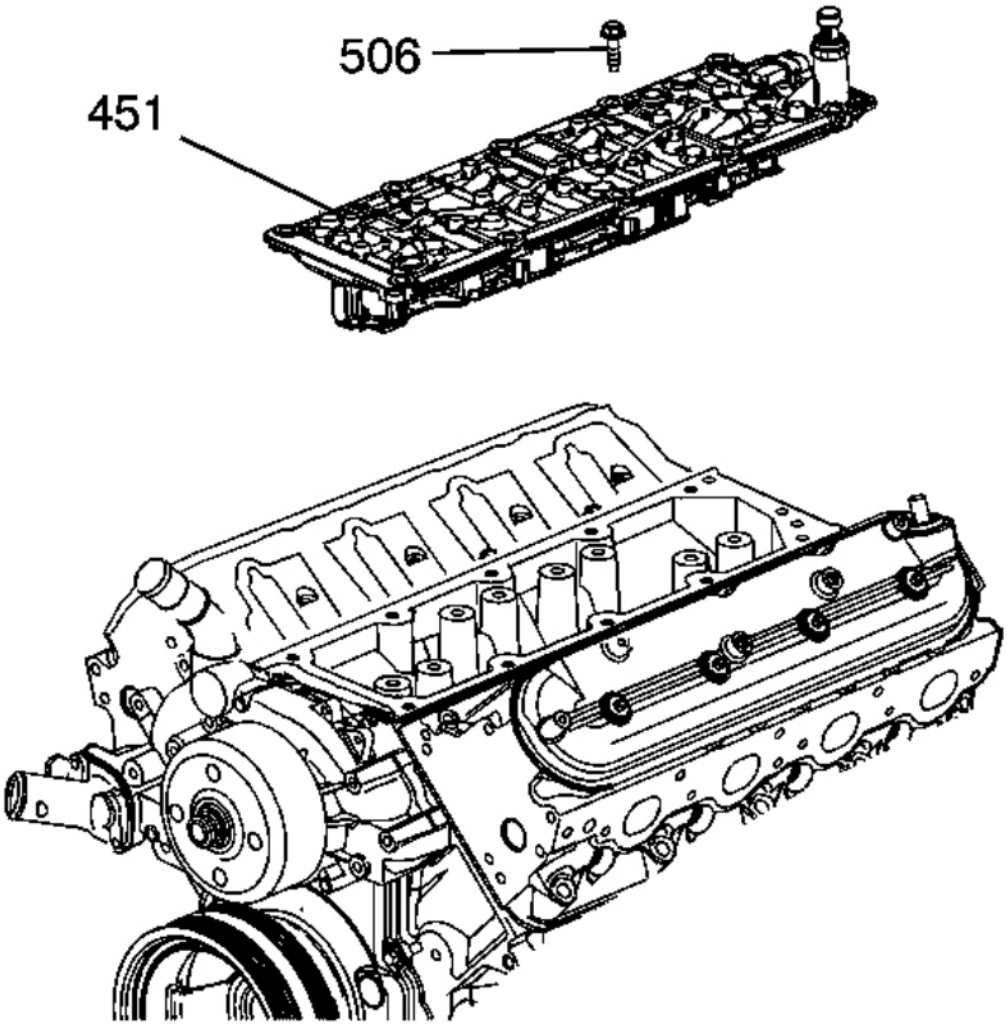

Fig. 205: View Of Valve Lifter Oil Manifold
Courtesy of GENERAL MOTORS CORP.

2. Remove the valve lifter oil manifold bolts (506).

IMPORTANT: Do not allow dirt or debris to enter the oil passages of the manifold. Plug, as required.

3. Remove the valve lifter oil manifold (451).

cardiagn.com

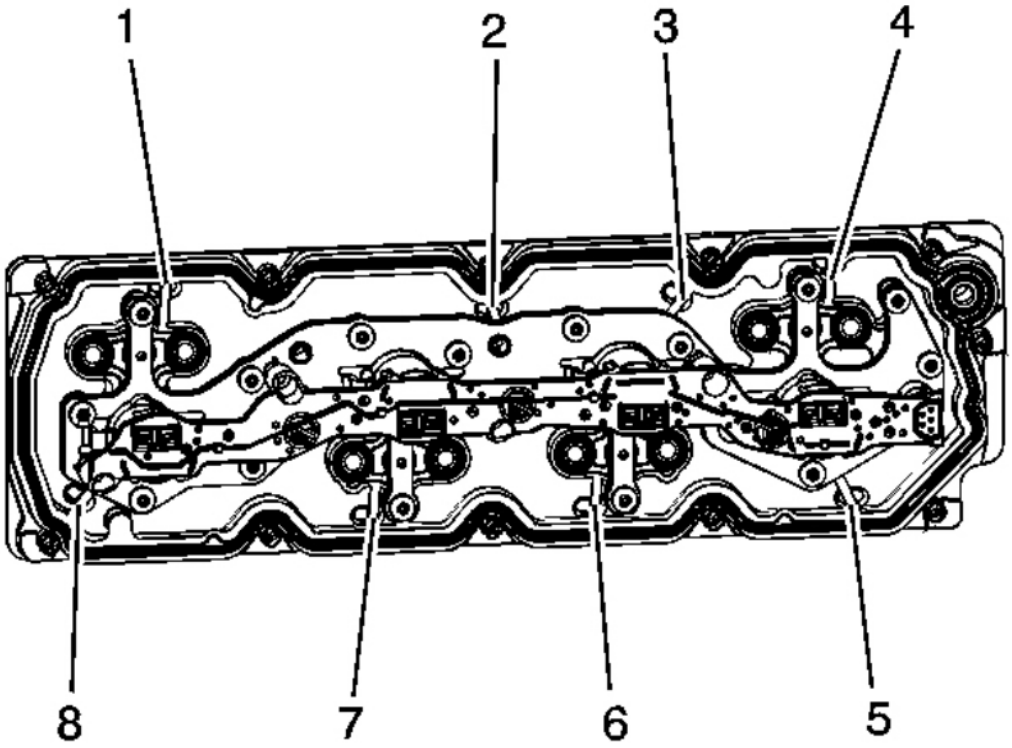

Fig. 206: Gasket Retaining Strap Locations
Courtesy of GENERAL MOTORS CORP.

IMPORTANT: Remove only the outer gasket from the manifold. Do not disassemble any of the internal components of the manifold in an attempt to remove the 8 inner sealing gaskets. If the inner gaskets are cut or damaged, replace the manifold as an assembly. Only use a wire-cutter type tool in order to minimize the amount of debris. Do not use a rotary-type cutting tool on the retaining straps.

4. Identify the 8 gasket retaining strap locations (1-8).

cardiagn.com

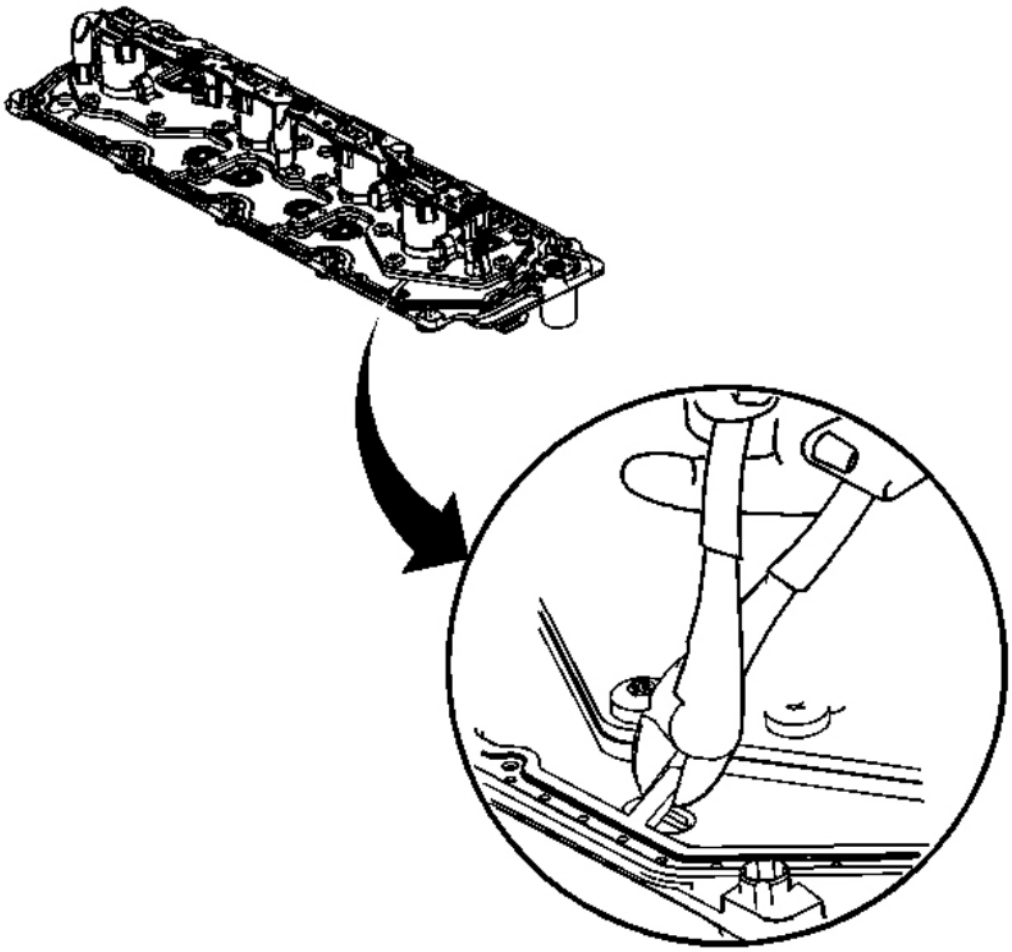

Fig. 207: Retaining Strap
Courtesy of GENERAL MOTORS CORP.

5. Using a wire-cutter type tool, cut the 8 retaining straps.

cardiagn.com

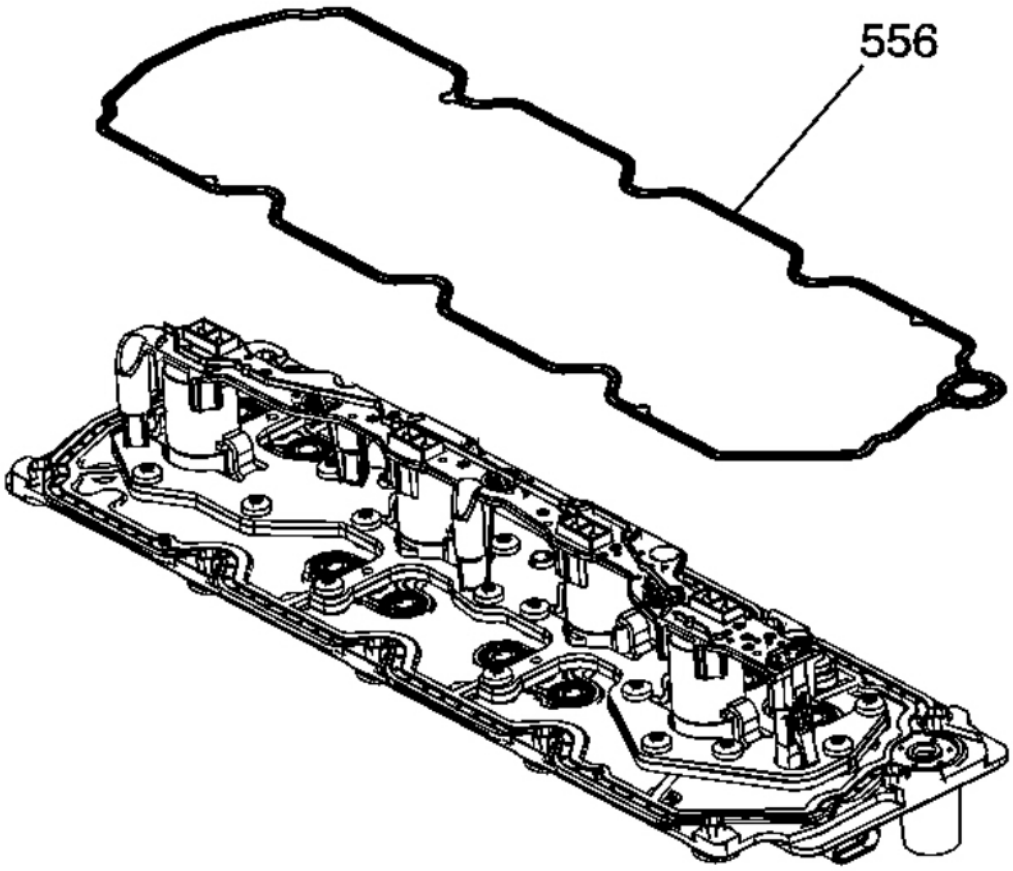

Fig. 208: View Of Outer Gasket
Courtesy of GENERAL MOTORS CORP.

6. Remove the outer gasket (556) from the manifold.

VALVE LIFTER OIL FILTER REMOVAL

cardiagn.com

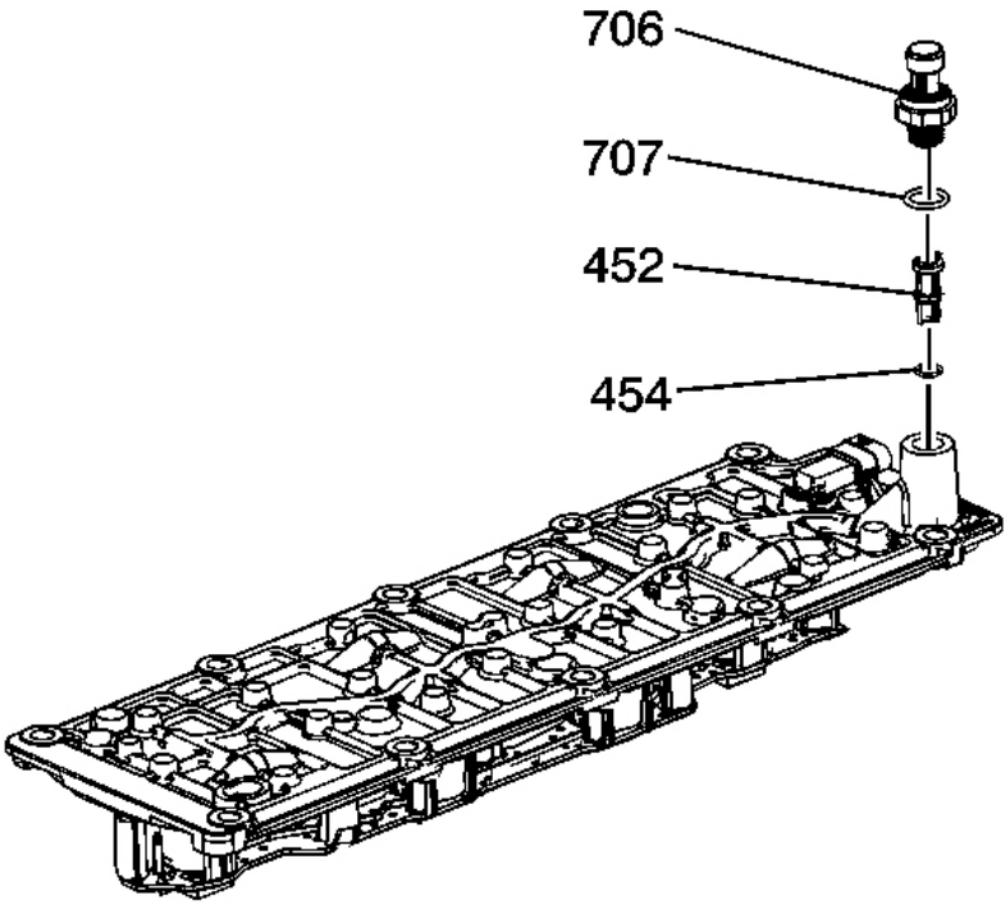

Fig. 209: View Of Oil Pressure Sensor, Washer & Valve Lifter Oil Filter
Courtesy of GENERAL MOTORS CORP.

IMPORTANT: Do not allow dirt or debris to enter the oil passages of the manifold. Plug, as required.

1. Remove the oil pressure sensor (706).
2. Remove the oil filter (452).
3. Inspect the O-ring (454) for cuts or damage. If the filter is plugged or the O-ring is cut or damaged, replace the filter and O-ring as an assembly.

VALVE ROCKER ARM COVER REMOVAL - LEFT SIDE

cardiagn.com

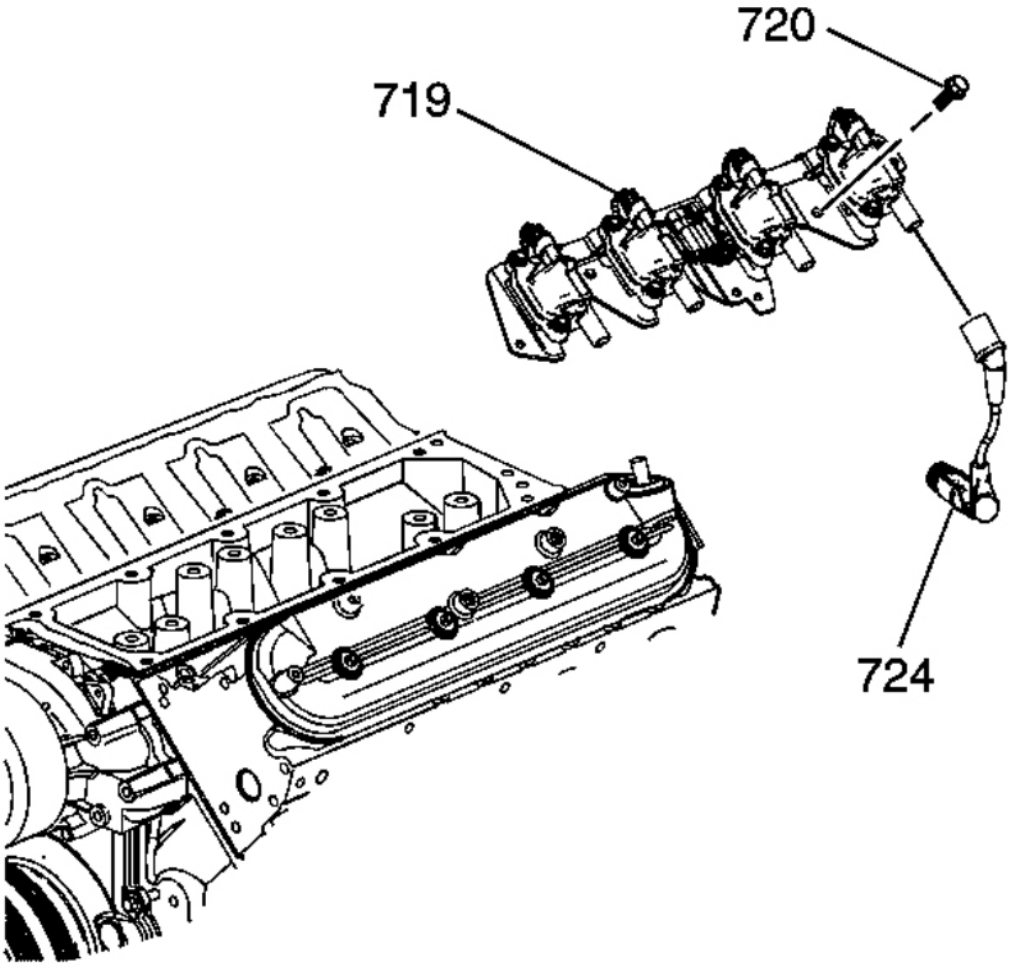

Fig. 210: Ignition Coils & Bracket
Courtesy of GENERAL MOTORS CORP.

1. Remove the spark plug wires (724).
2. Remove the ignition coil bracket studs (720).
3. Remove the ignition coil and bracket assembly (719).

cardiagn.com

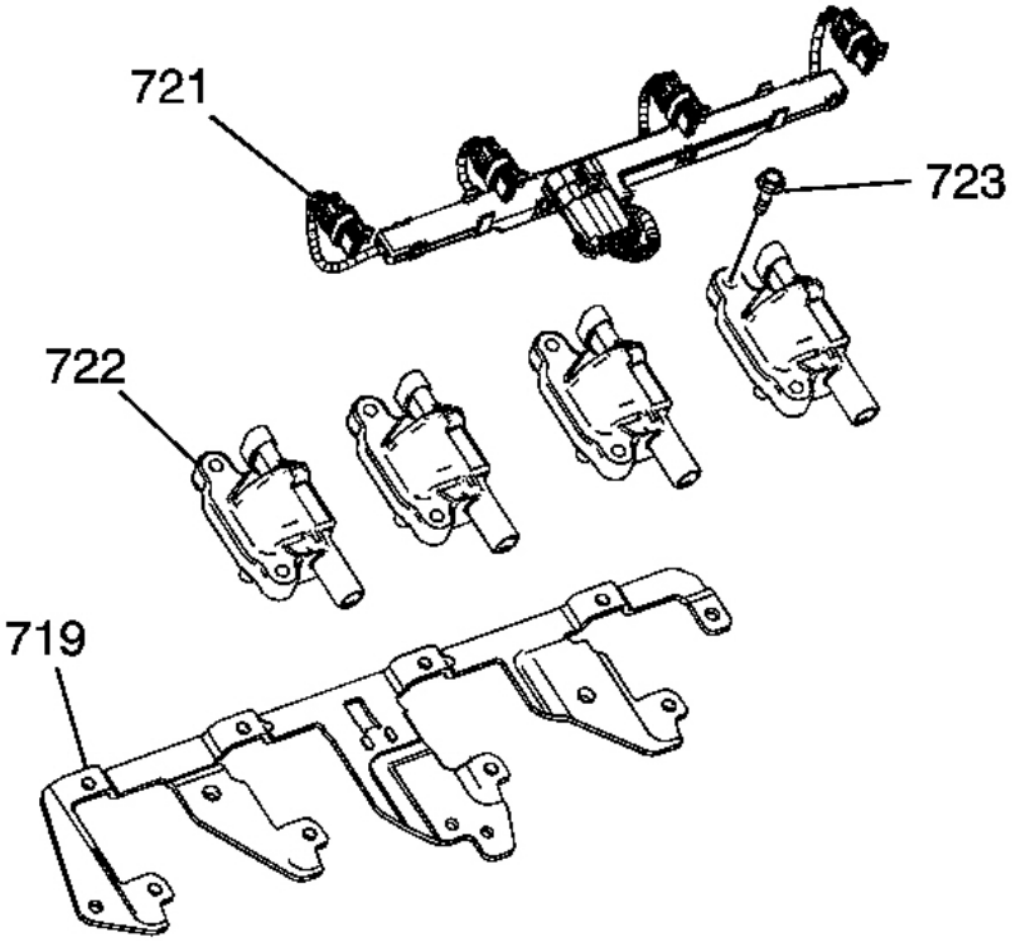

Fig. 211: View Of Bracket, Bolts, Coils & Wire Harness
Courtesy of GENERAL MOTORS CORP.

4. Disconnect the ignition coil electrical connectors.
5. Remove the bolts (723), coils (722), and wire harness (721) from the bracket (719), as required.

cardiagn.com

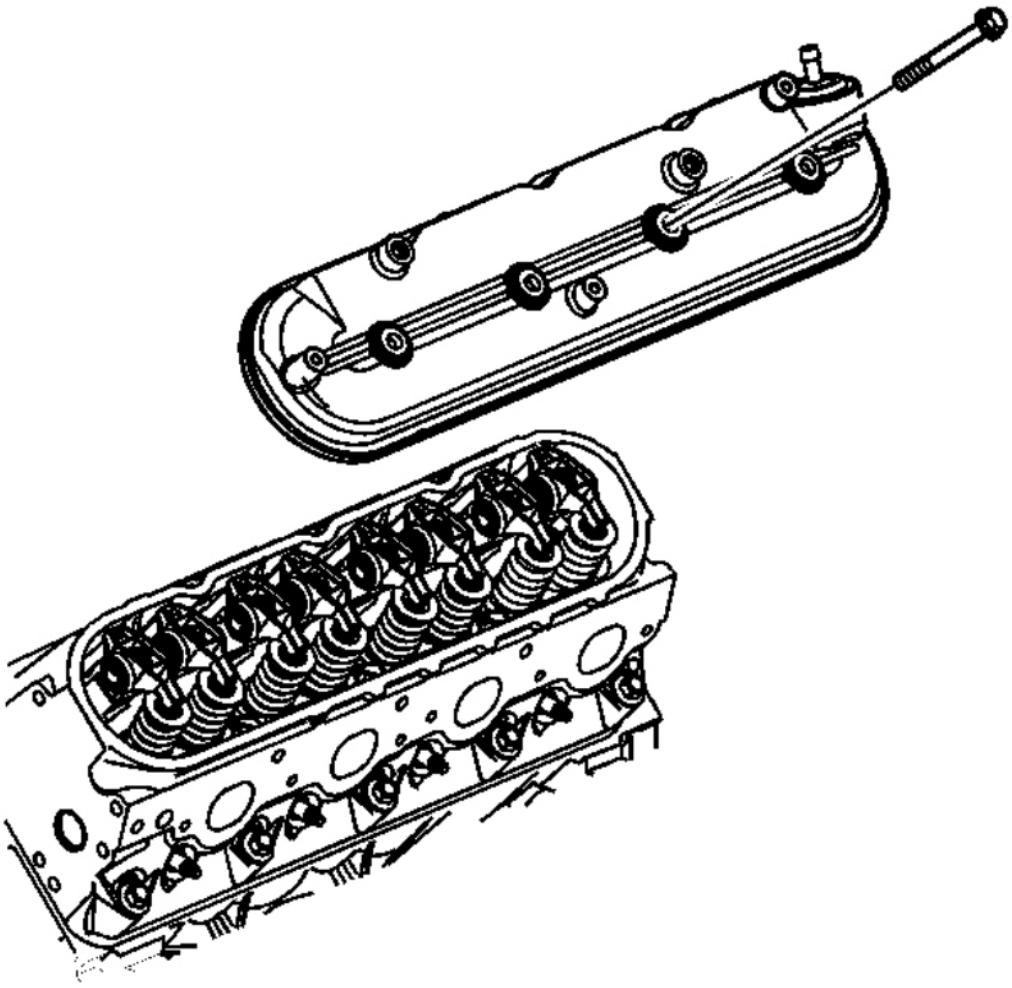

Fig. 212: View Of Valve Rocker Arm Cover
Courtesy of GENERAL MOTORS CORP.

6. Remove the valve rocker arm cover bolts and cover.

cardiagn.com

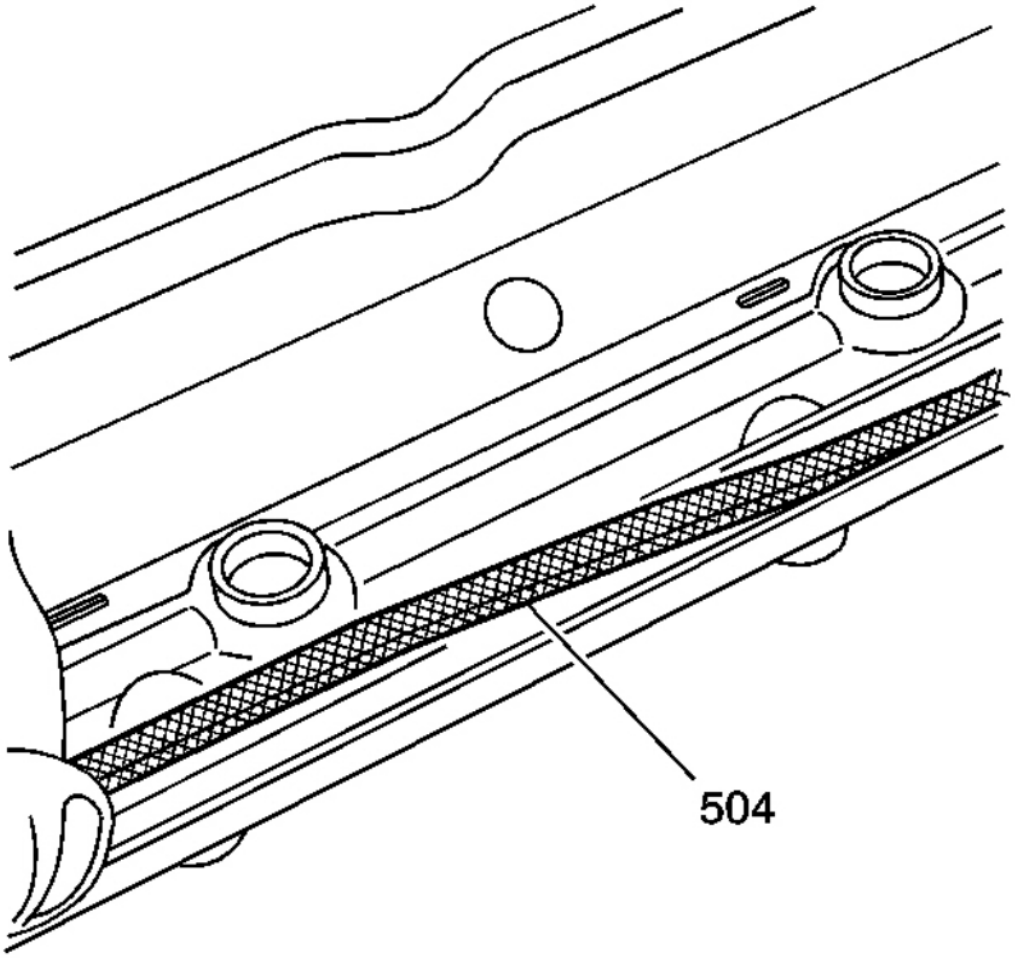

Fig. 213: View Of Valve Rocker Arm Cover Gasket
Courtesy of GENERAL MOTORS CORP.

7. Remove the gasket (504) from the cover.

VALVE ROCKER ARM COVER REMOVAL - RIGHT SIDE

cardiagn.com

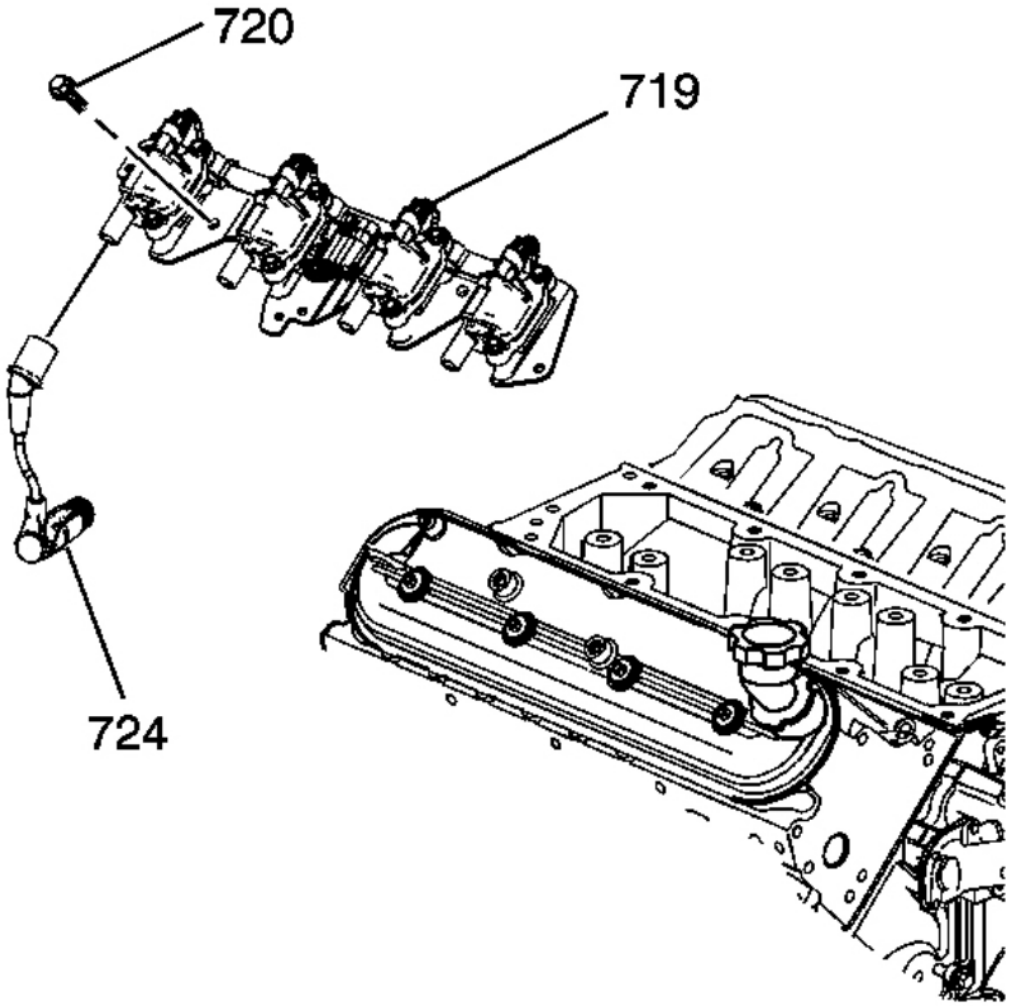

Fig. 214: Ignition Coils & Bracket
Courtesy of GENERAL MOTORS CORP.

IMPORTANT: Do not remove the oil fill tube from the cover, unless service is required. If the oil fill tube has been removed from the cover, install a NEW tube during assembly.

1. Remove the spark plug wires (724).
2. Remove the ignition coil bracket studs (720).
3. Remove the ignition coil and bracket assembly (719).

cardiagn.com

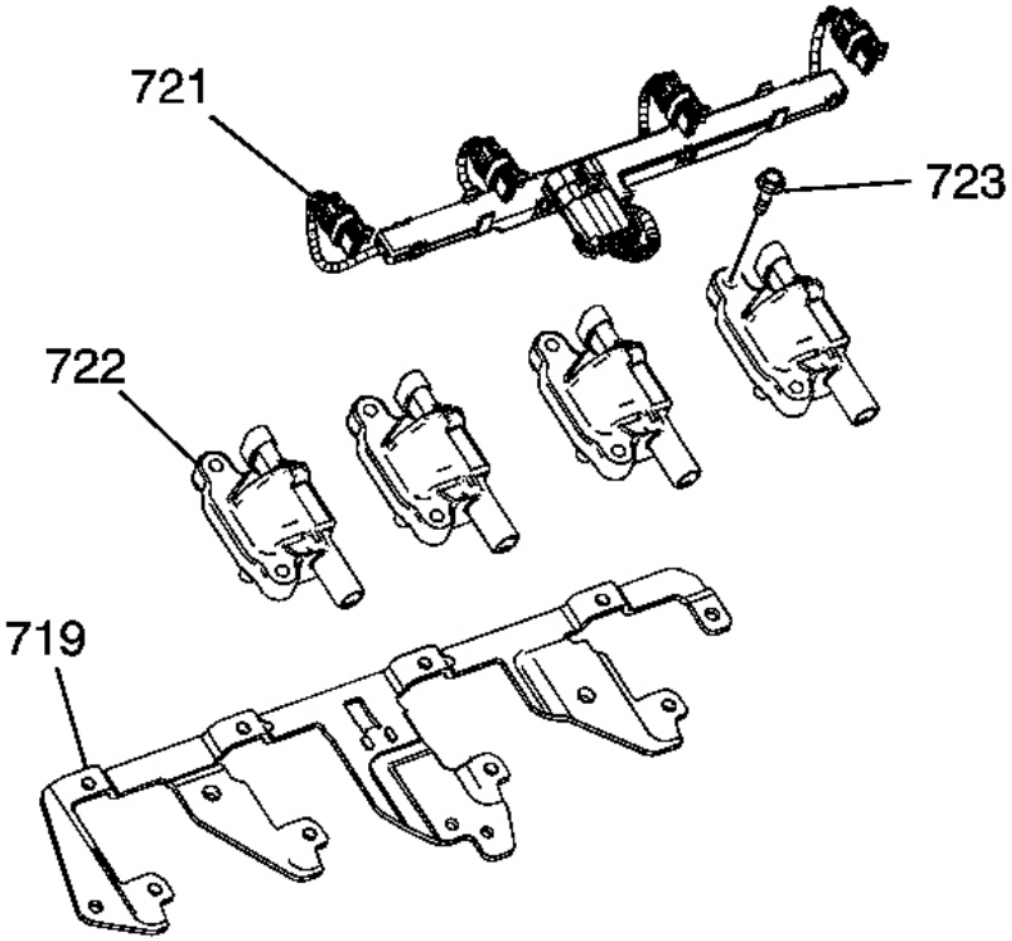

Fig. 215: View Of Bracket, Bolts, Coils & Wire Harness
Courtesy of GENERAL MOTORS CORP.

4. Disconnect the ignition coil electrical connectors.
5. Remove the bolts (723), coils (722), and wire harness (721) from the bracket (719), as required.

cardiagn.com

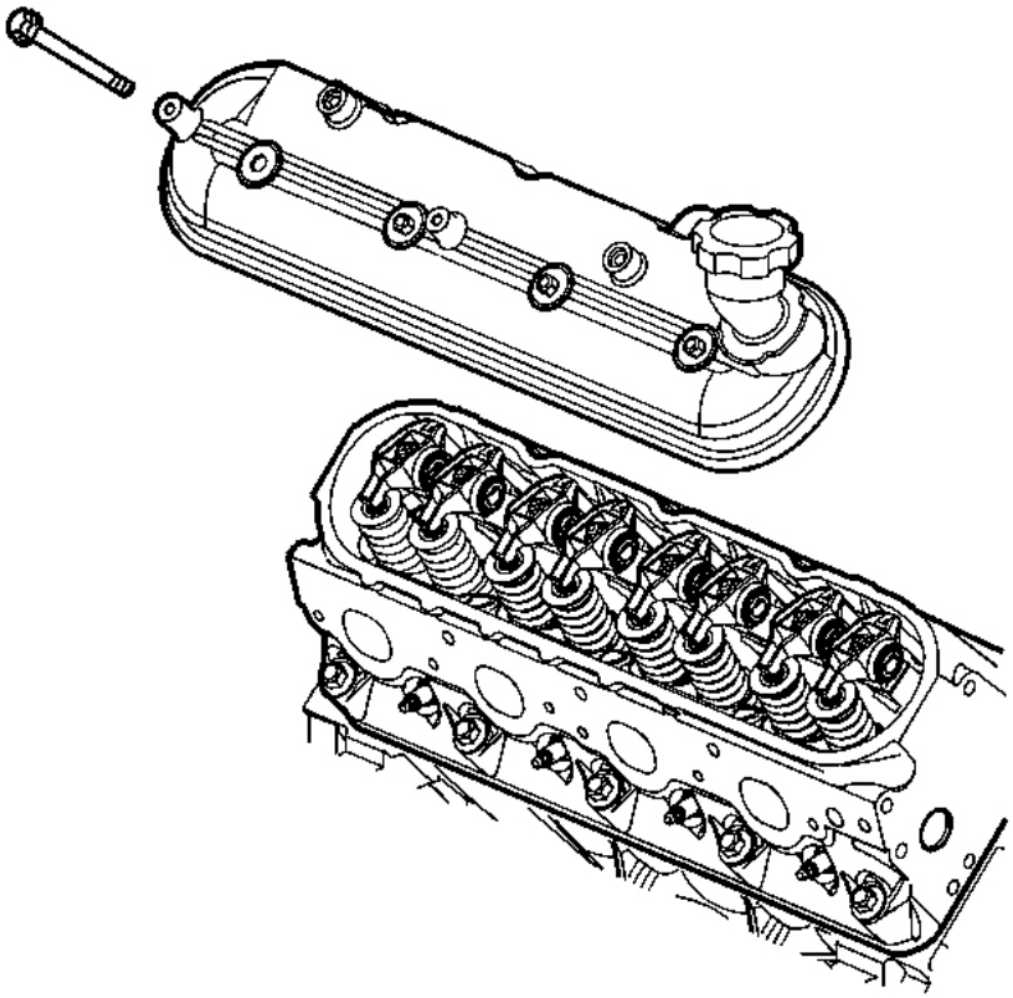

Fig. 216: View Of Valve Rocker Arm Cover & Bolts (Right)
Courtesy of GENERAL MOTORS CORP.

6. Remove the valve rocker arm cover bolts and cover.

cardiagn.com

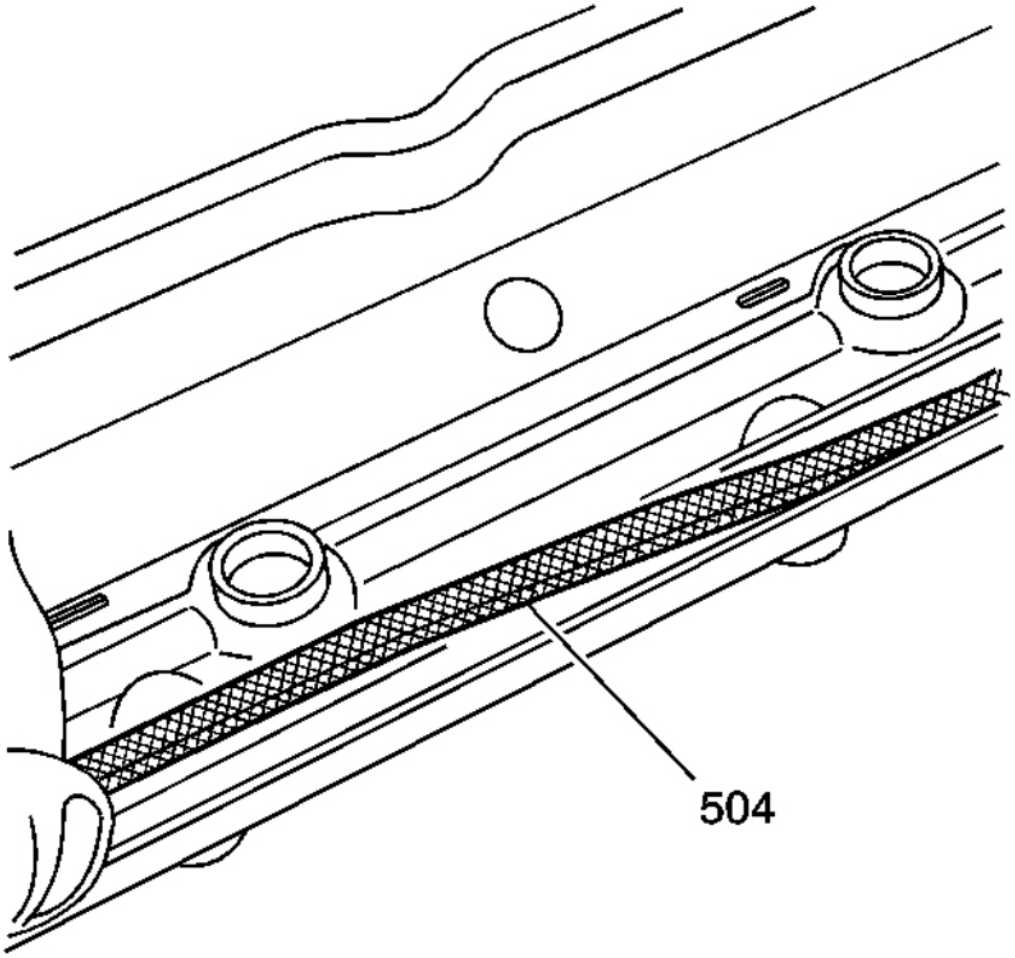

Fig. 217: View Of Valve Rocker Arm Cover Gasket
Courtesy of GENERAL MOTORS CORP.

7. Remove the gasket (504) from the cover.

cardiagn.com

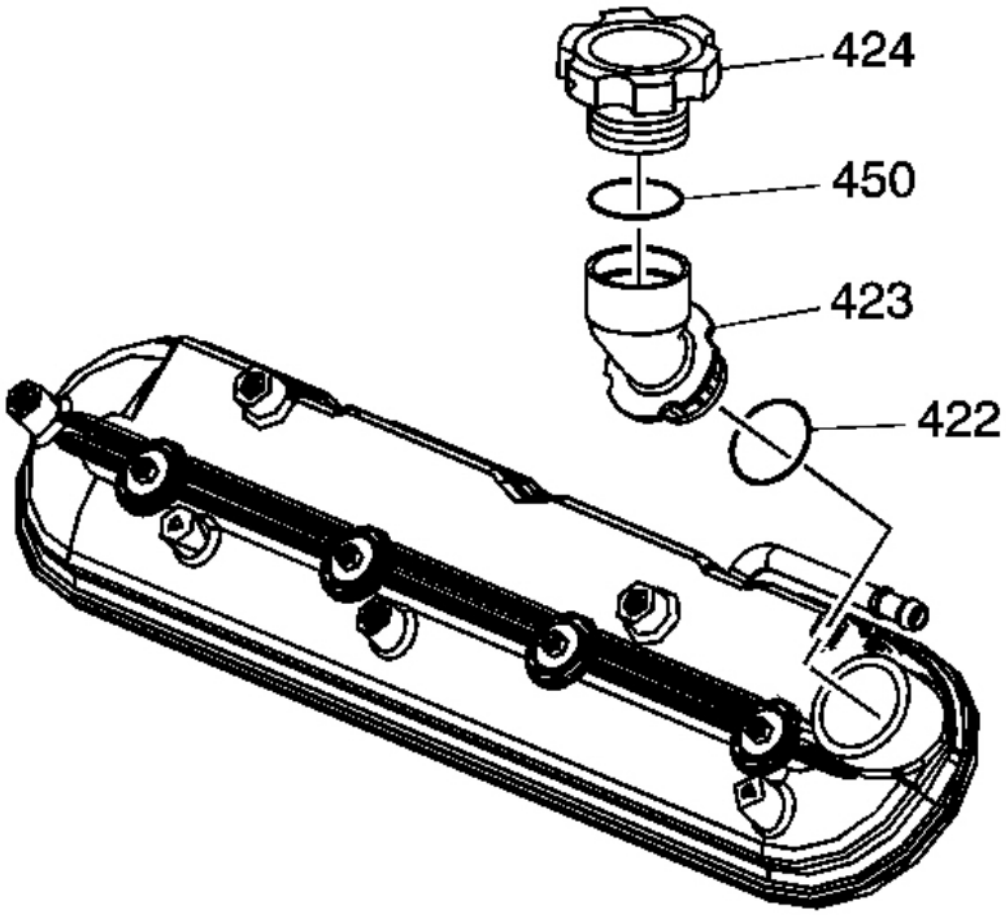

Fig. 218: Oil Fill Cap & Oil Fill Tube
Courtesy of GENERAL MOTORS CORP.

8. Remove the oil fill cap (424) from the oil fill tube (423).
9. Remove the oil fill tube, as required.
10. Discard the oil fill tube.

VALVE ROCKER ARM AND PUSH ROD REMOVAL (RPO LY2/LC9/LY5/LMG/LY6/L76)

cardiagn.com

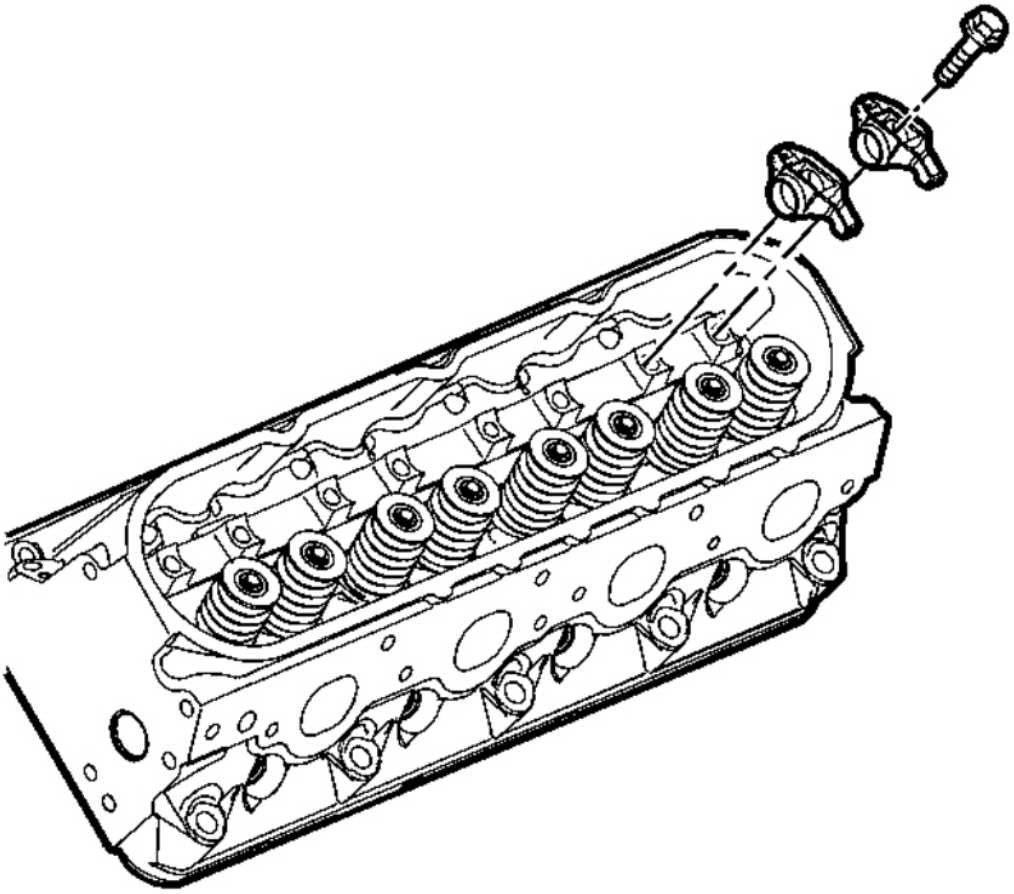

Fig. 219: View Of Rocker Arms & Bolts
Courtesy of GENERAL MOTORS CORP.

IMPORTANT: Place the valve rocker arms, valve pushrods, and pivot support, in a rack so they can be installed in the same location from which they were removed.

1. Remove the valve rocker arm bolts.
2. Remove the valve rocker arms.

cardiagn.com

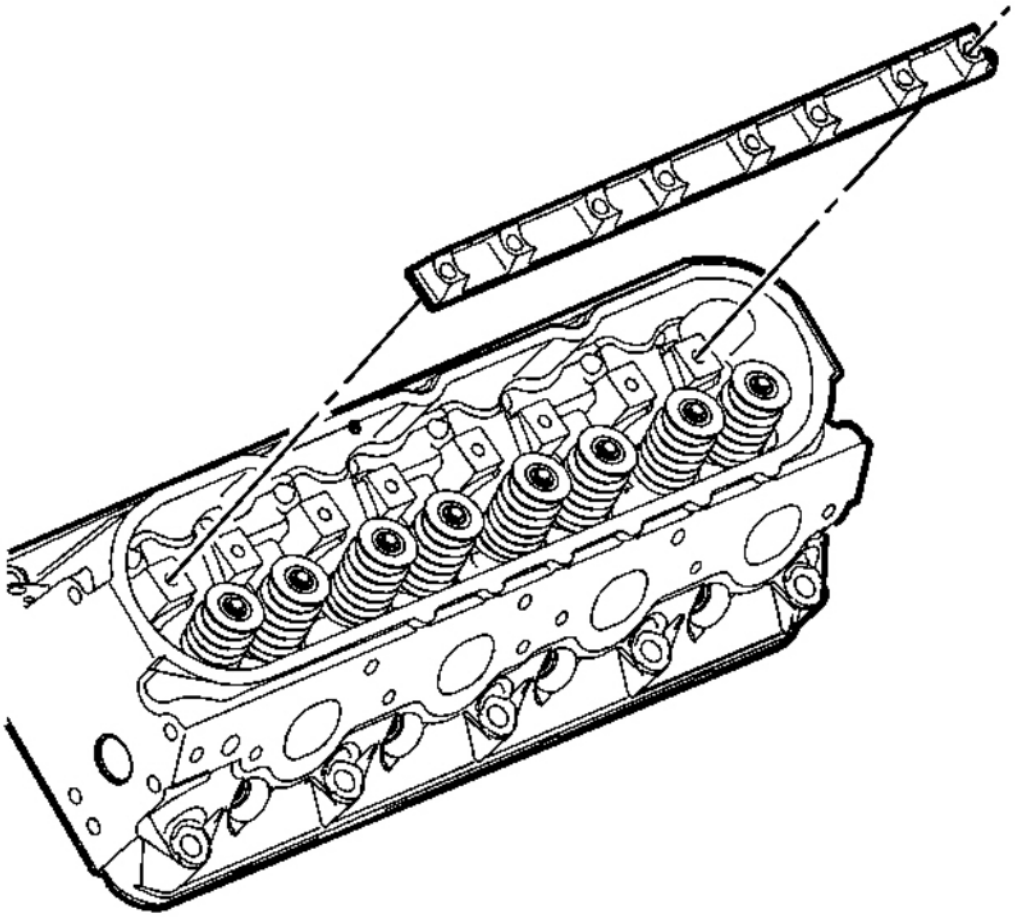

Fig. 220: View Of Valve Rocker Arm Pivot Support
Courtesy of GENERAL MOTORS CORP.

3. Remove the valve rocker arm pivot support.

cardiagn.com

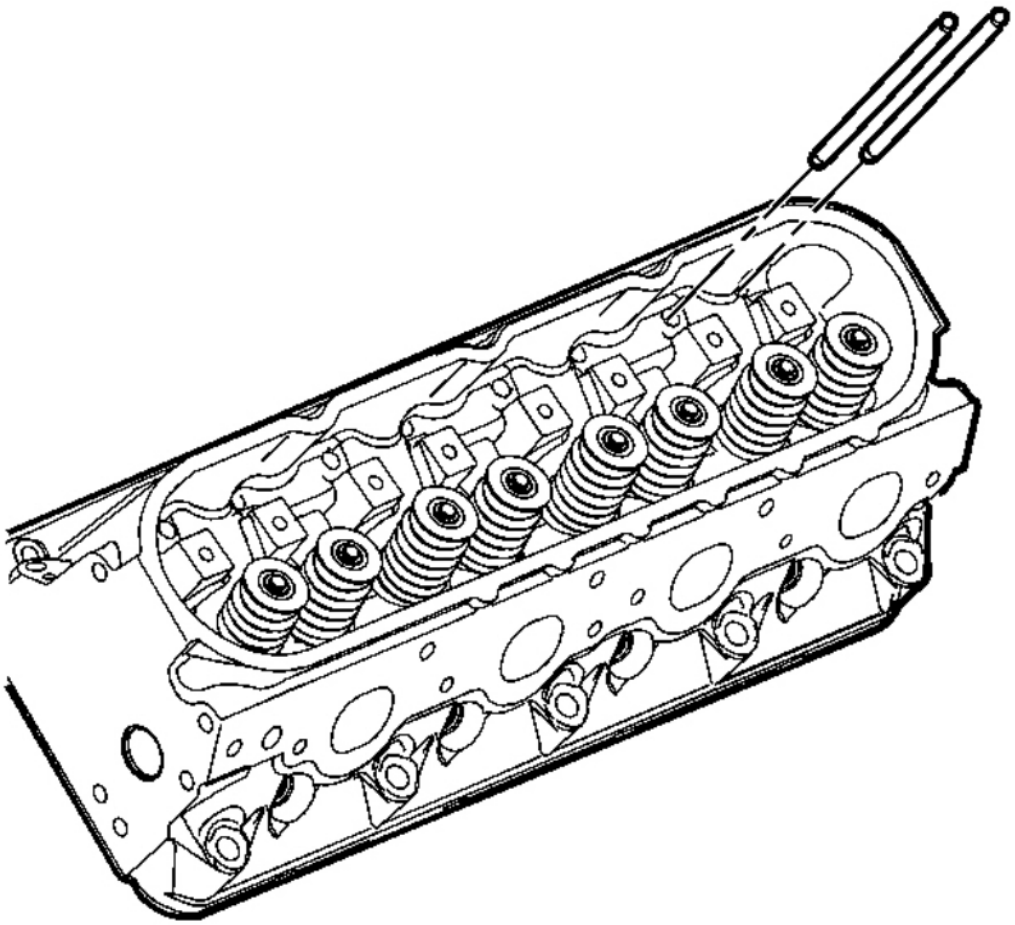

Fig. 221: View Of Pushrods
Courtesy of GENERAL MOTORS CORP.

4. Remove the pushrods.

VALVE ROCKER ARM AND PUSH ROD REMOVAL (RPO L92)

cardiagn.com

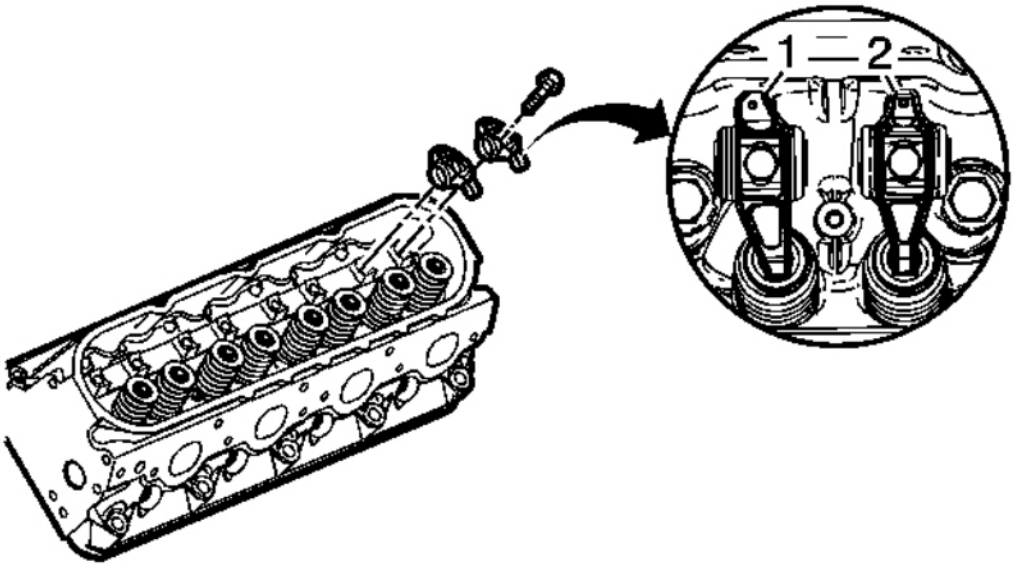

Fig. 222: View Of Offset Intake Rocker Arm & Intake Rocker Arm
Courtesy of GENERAL MOTORS CORP.

IMPORTANT: Place the valve rocker arms, valve pushrods, and pivot support, in a rack so they can be installed in the same location from which they were removed.

1. Remove the valve rocker arm bolts.
2. Remove the valve rocker arms.

The intake rocker arms (1) have an offset design.

cardiagn.com

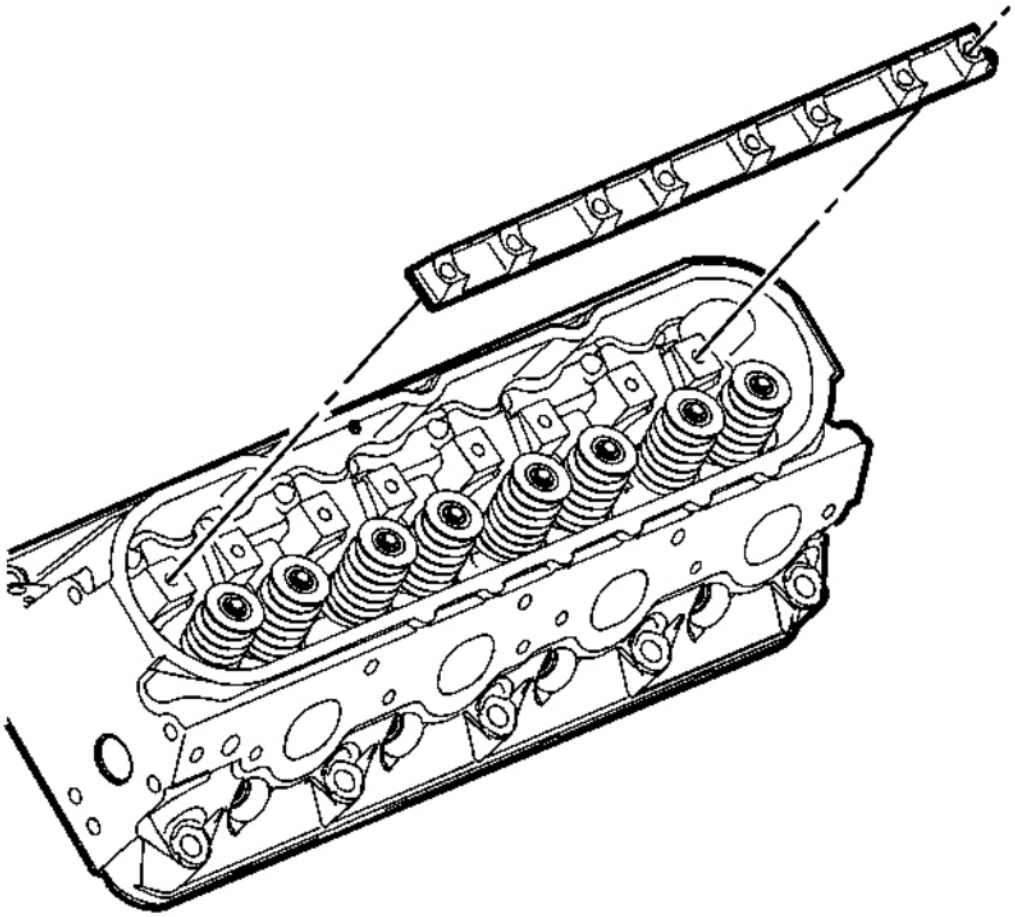

Fig. 223: View Of Valve Rocker Arm Pivot Support
Courtesy of GENERAL MOTORS CORP.

3. Remove the valve rocker arm pivot support.

cardiagn.com

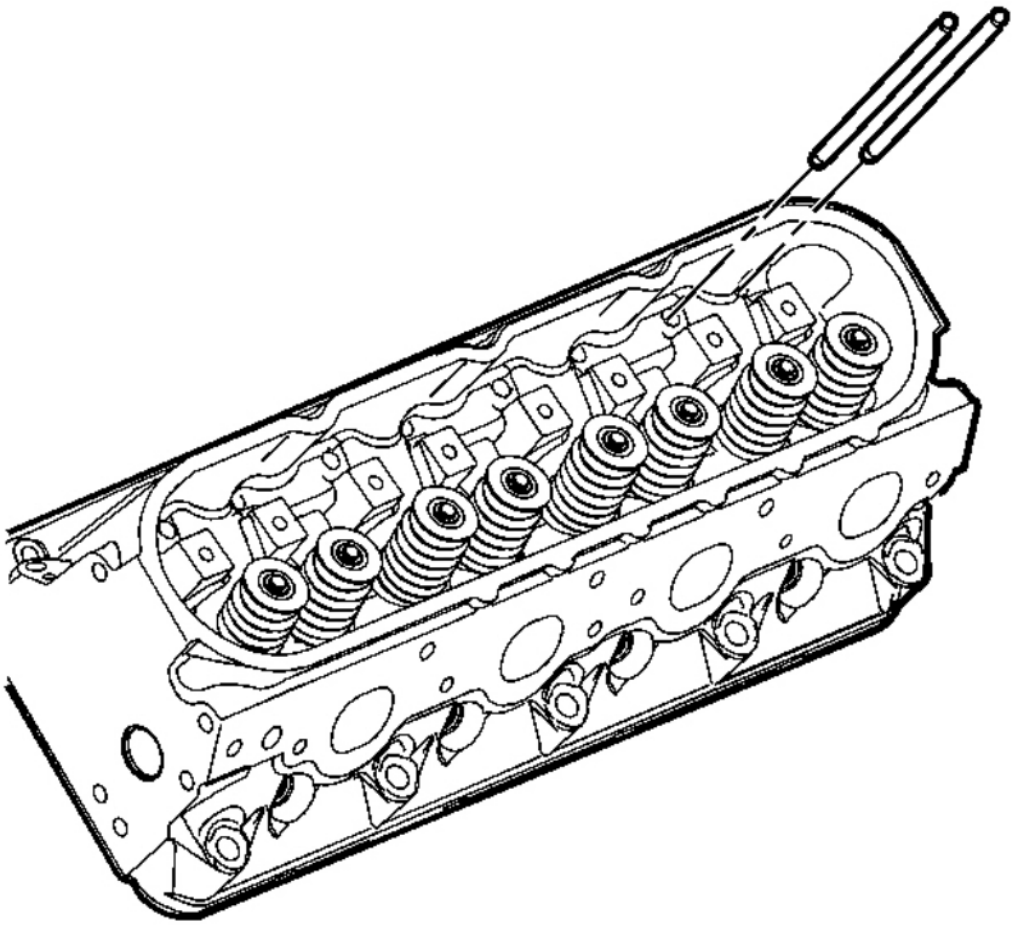

Fig. 224: View Of Pushrods
Courtesy of GENERAL MOTORS CORP.

4. Remove the pushrods.

CYLINDER HEAD REMOVAL - LEFT SIDE

cardiagn.com

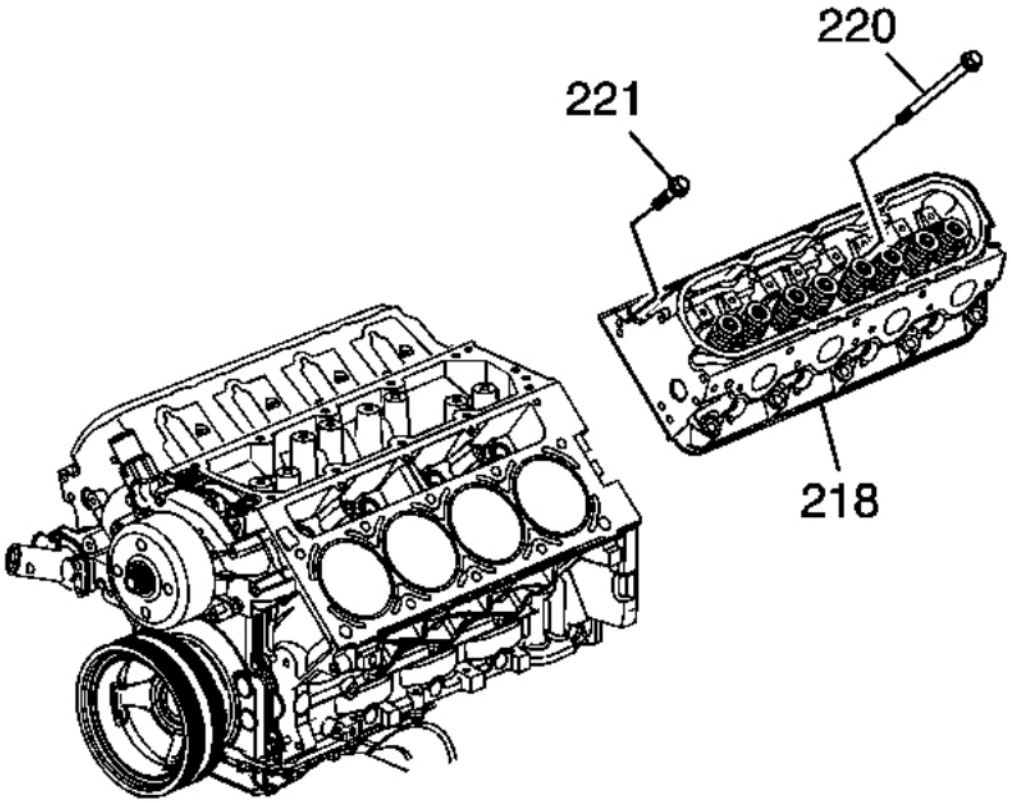

Fig. 225: View Of Cylinder Head & Bolts
Courtesy of GENERAL MOTORS CORP.

IMPORTANT: The cylinder head bolts are of a torque-to-yield design and are NOT to be used again. Install NEW cylinder head bolts during assembly.

1. Remove the cylinder head bolts (220, 221).

NOTE: After removal, place the cylinder head on 2 wood blocks in order to prevent damage to the sealing surfaces.

2. Remove the cylinder head (218).

cardiagn.com

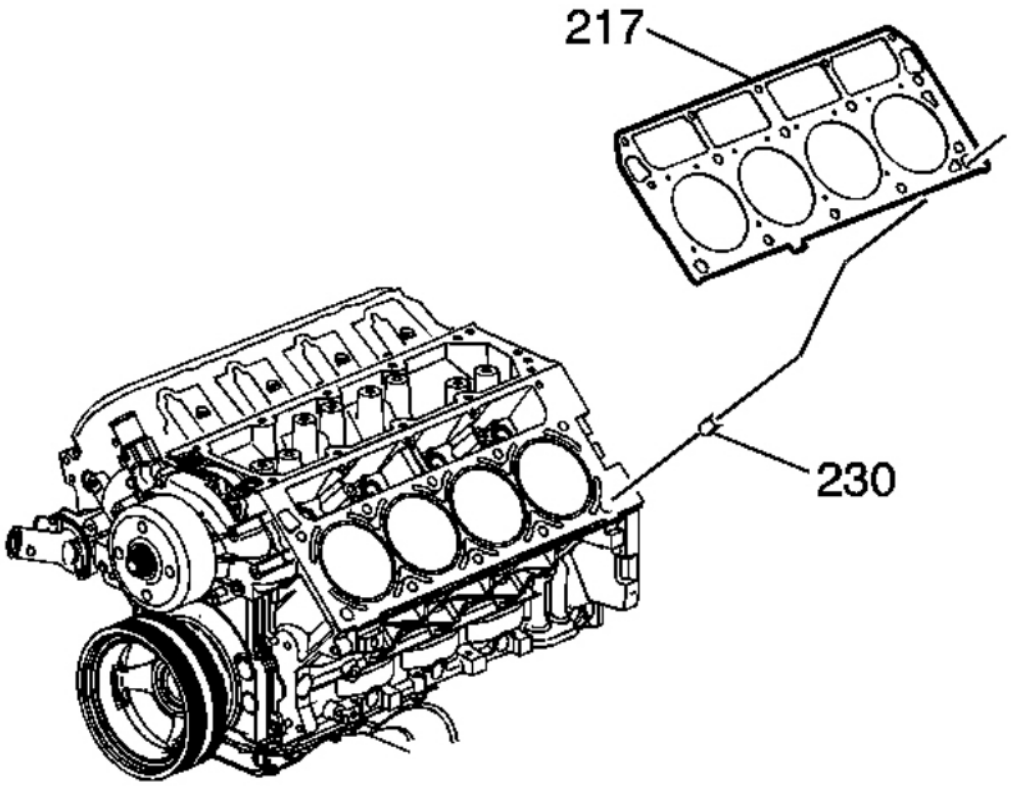

Fig. 226: View Of Cylinder Head Gasket & Locating Pins
Courtesy of GENERAL MOTORS CORP.

3. Remove the gasket (217) and locating pins (230).
4. Discard the gasket and cylinder head bolts.

CYLINDER HEAD REMOVAL - RIGHT SIDE

cardiagn.com

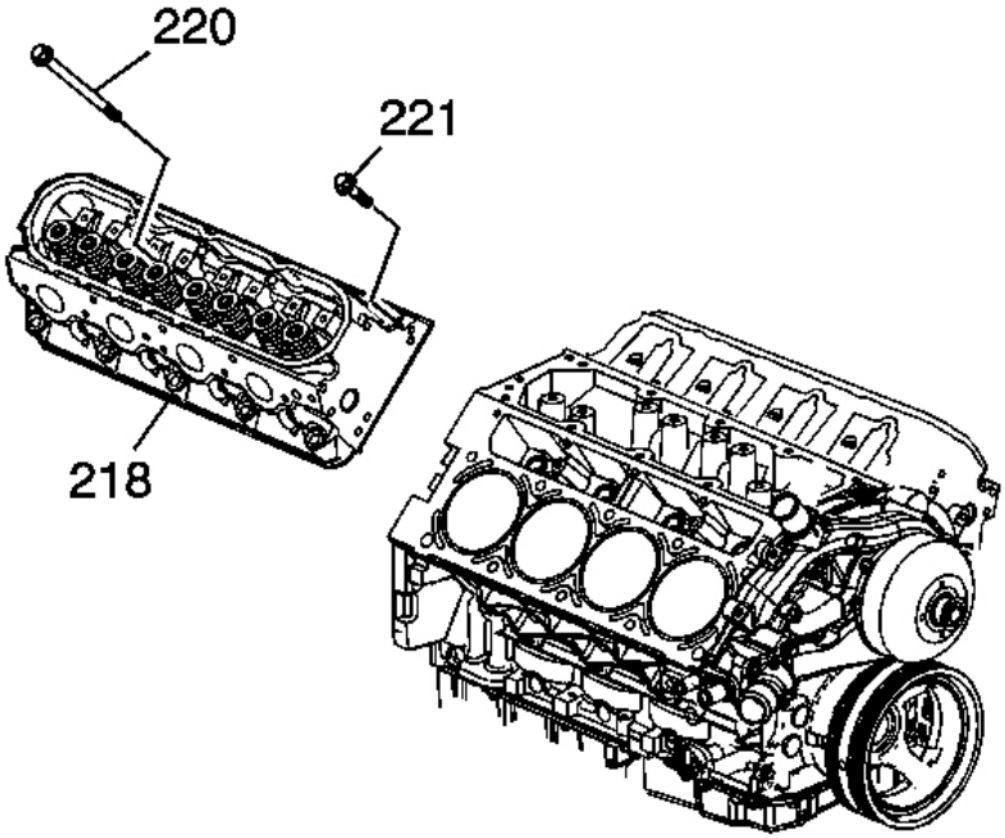

Fig. 227: View Of Cylinder Head & Bolts
Courtesy of GENERAL MOTORS CORP.

IMPORTANT: The cylinder head bolts are of a torque-to-yield design and are NOT to be used again. Install NEW cylinder head bolts during assembly.

1. Remove the cylinder head bolts (220, 221).

NOTE: After removal, place the cylinder head on 2 wood blocks in order to prevent damage to the sealing surfaces.

2. Remove the cylinder head (218).

cardiagn.com

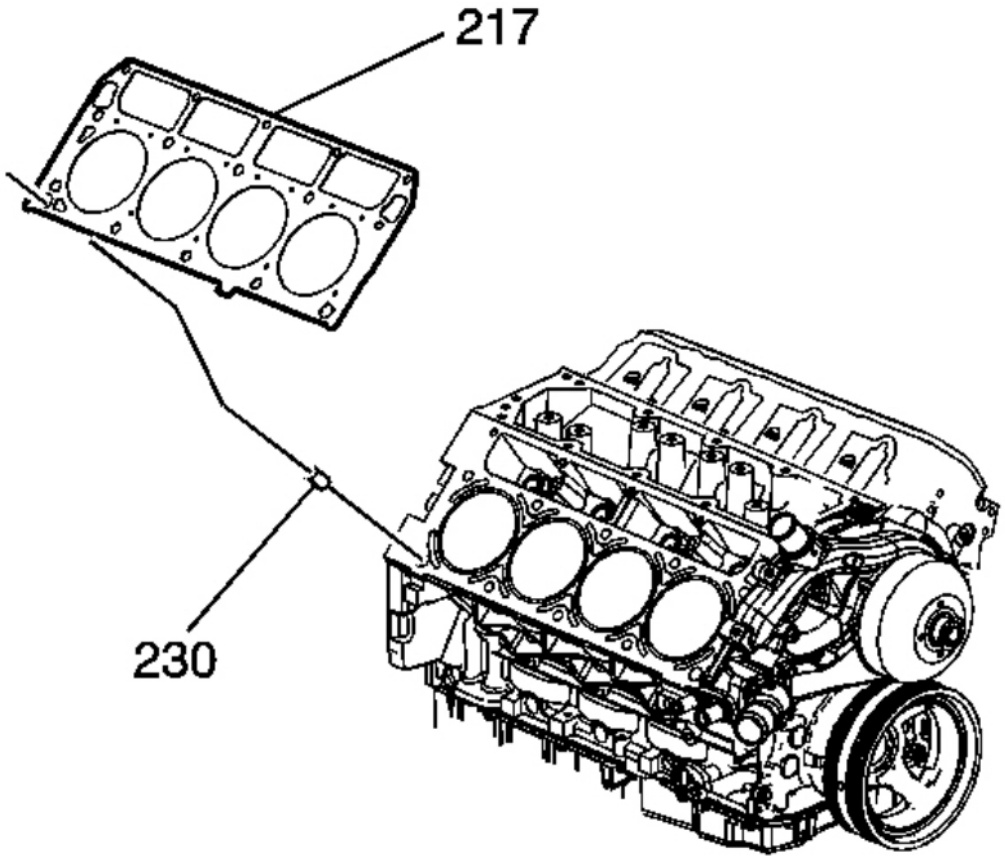

Fig. 228: View Of Cylinder Head Gasket & Locating Pins
Courtesy of GENERAL MOTORS CORP.

3. Remove the gasket (217) and locating pins (230).
4. Discard the gasket and cylinder head bolts.

VALVE LIFTER REMOVAL (RPO LY2/LY6)

cardiagn.com

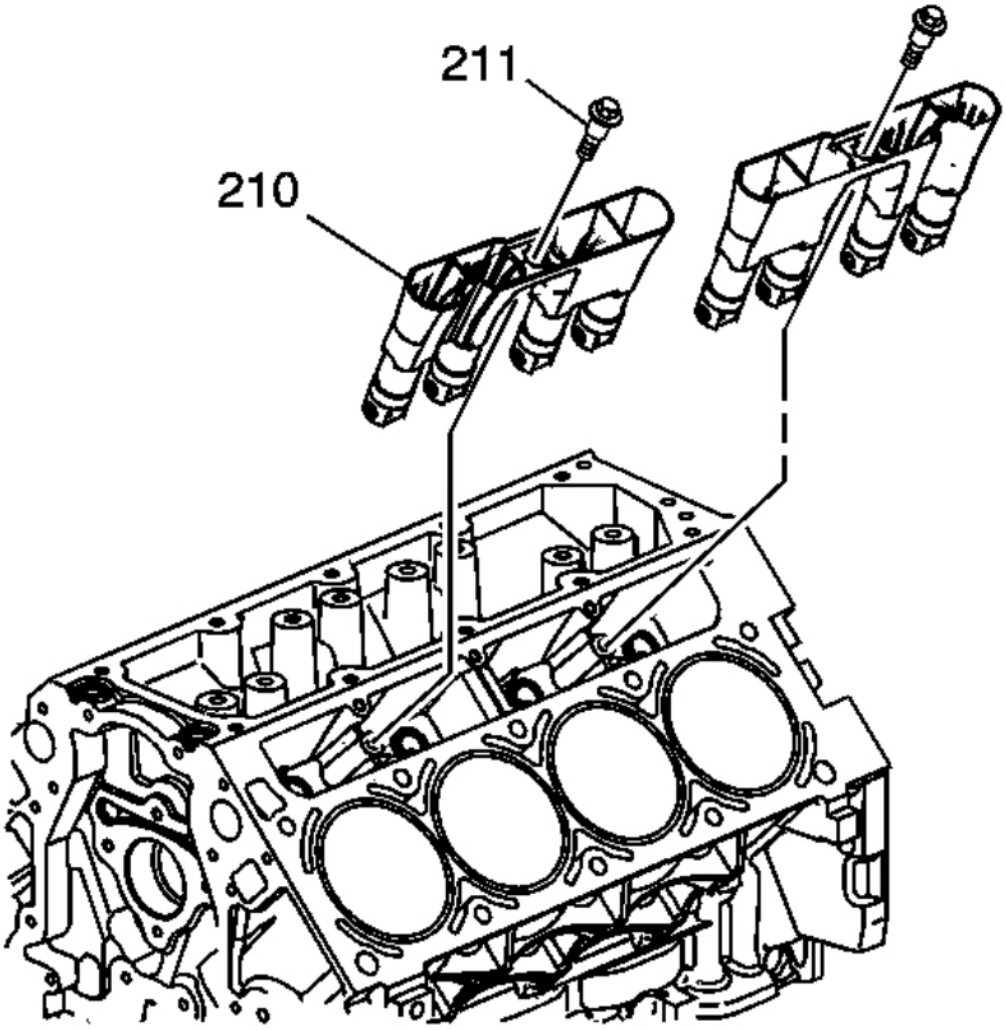

Fig. 229: Valve Lifter Guides, Cylinder Head & Bolts
Courtesy of GENERAL MOTORS CORP.

1. Remove the guide bolts (211).
2. Remove the guides (210) with lifters.

Note the installed position of the guides. The notched area of the guide is to align with the locating tab on the block.

cardiagn.com

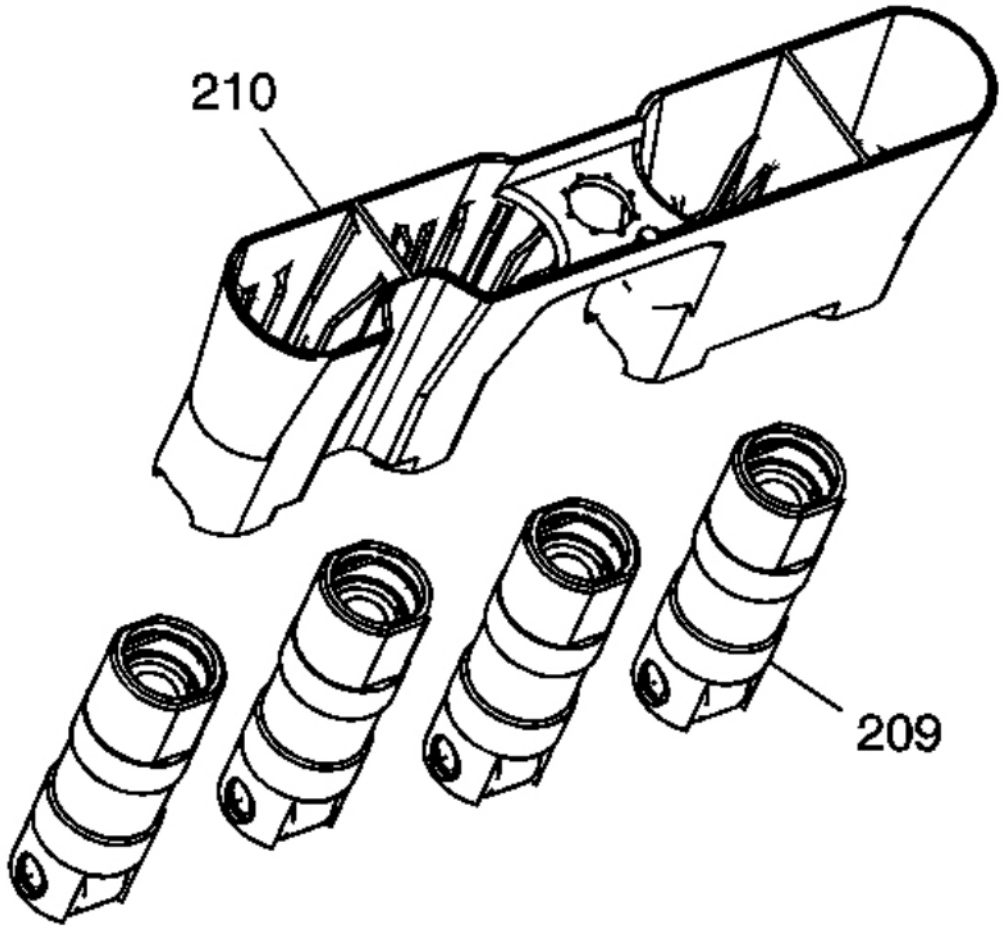

Fig. 230: Valve Lifter Guides & Bolts
Courtesy of GENERAL MOTORS CORP.

3. Remove the valve lifters (209) from the guide (210).
4. Organize or mark the components so they can be installed in the same location from which they were removed. Refer to **Separating Parts** .

VALVE LIFTER REMOVAL (RPO LC9/LY5/LMG/L76)

cardiagn.com

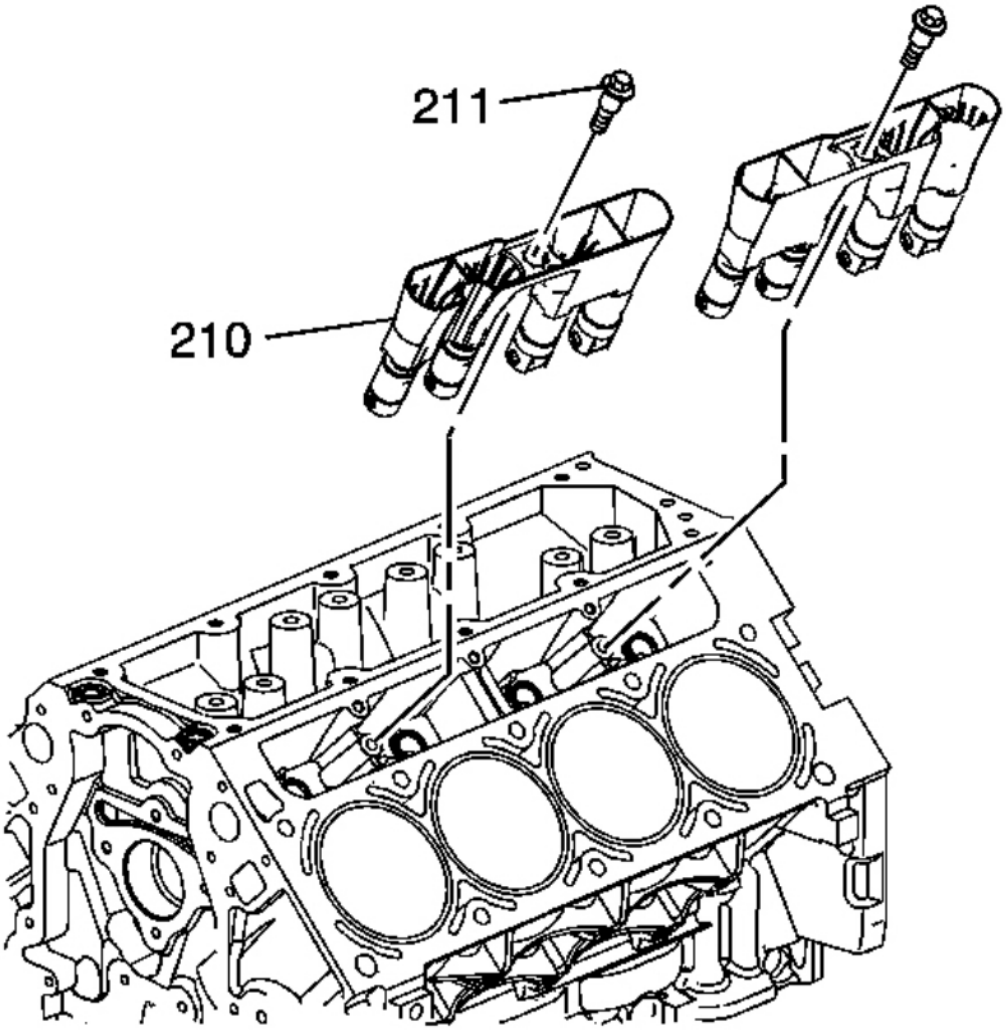

Fig. 231: View Of Lifter Guides & Lifters
Courtesy of GENERAL MOTORS CORP.

1. Remove the bolts (211).
2. Remove the guides (210) with lifters.

   Note the installed position of the guides. The notched area of the guide is to align with the locating tab of the block.

cardiagn.com

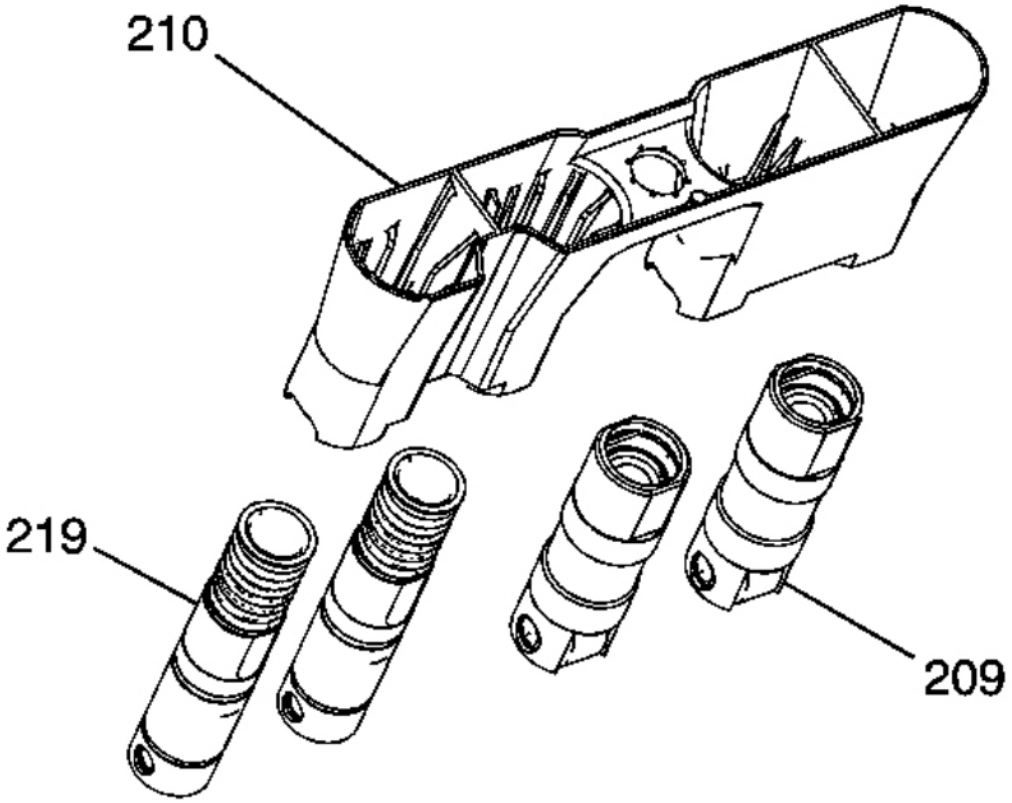

Fig. 232: Exploded View Of Lifter Guides & Lifters
Courtesy of GENERAL MOTORS CORP.

3. Remove the valve lifters (209, 219) from the guide (210).

cardiagn.com

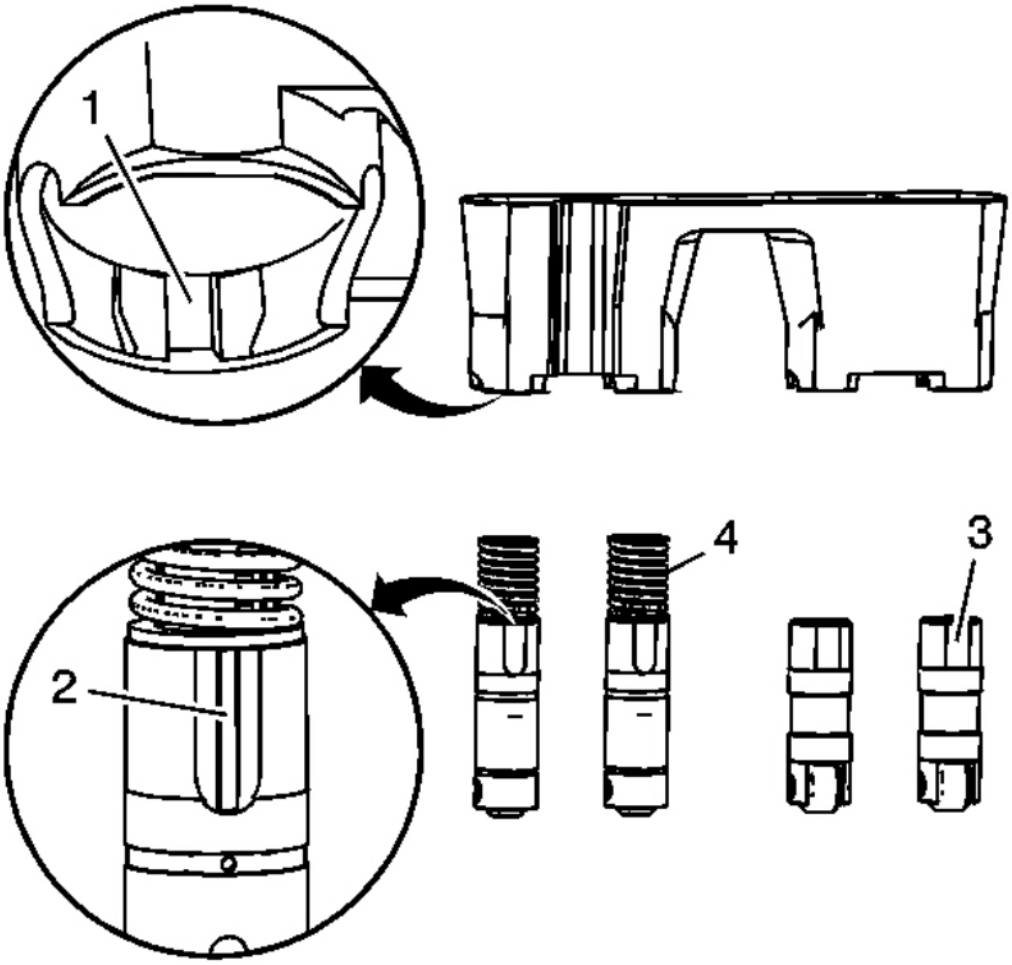

Fig. 233: Inserting Valve Lifters Into Lifter Guides
Courtesy of GENERAL MOTORS CORP.

4. Organize or mark the components so they can be installed in the same location from which they were removed. The active fuel management lifters (4) are installed into the guide by aligning the notched area of the guide (1) with the raised surface on the side of the lifter (2). Refer to **Separating Parts** .

VALVE LIFTER REMOVAL (RPO L92)

cardiagn.com

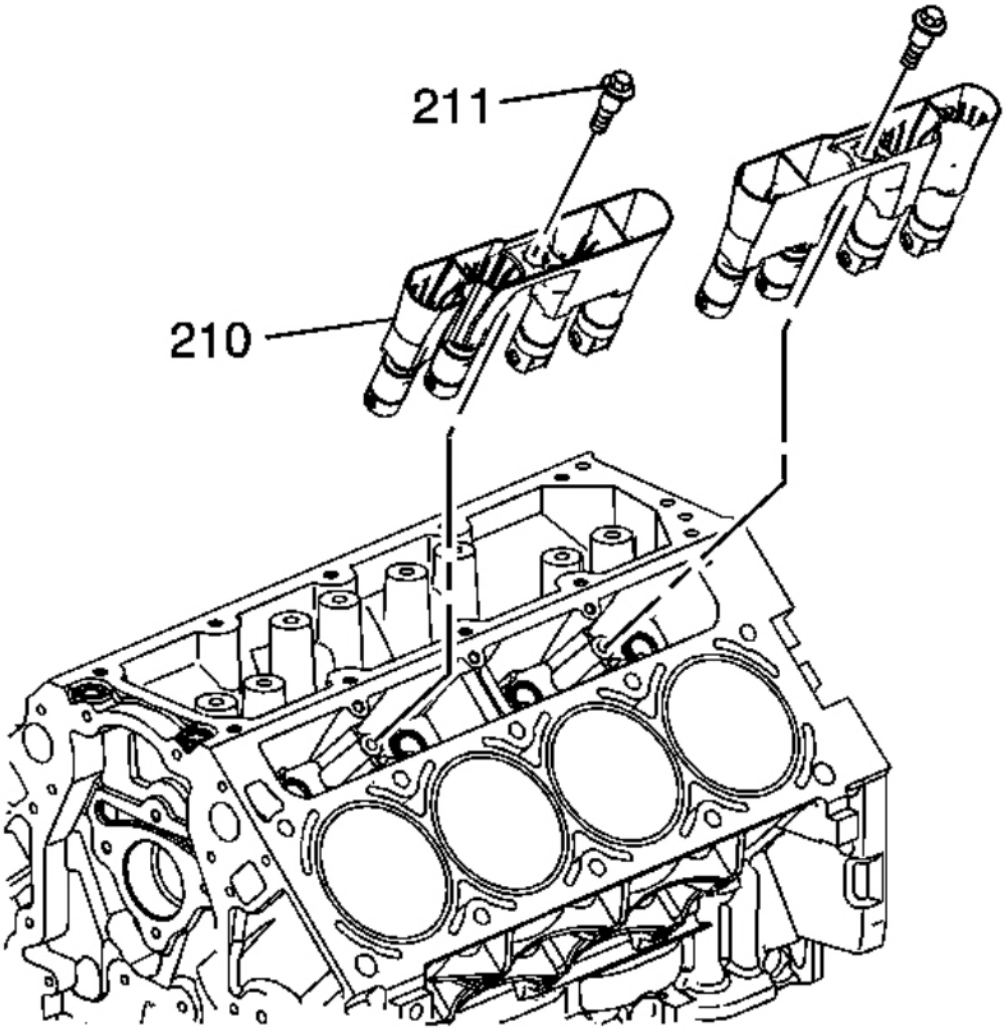

Fig. 234: View Of Lifter Guides & Lifters
Courtesy of GENERAL MOTORS CORP.

1. Remove the bolts (211).
2. Remove the guides (210) with lifters.

   Note the installed position of the guides. The notched area of the guide is to align with the locating tab of the block.

cardiagn.com

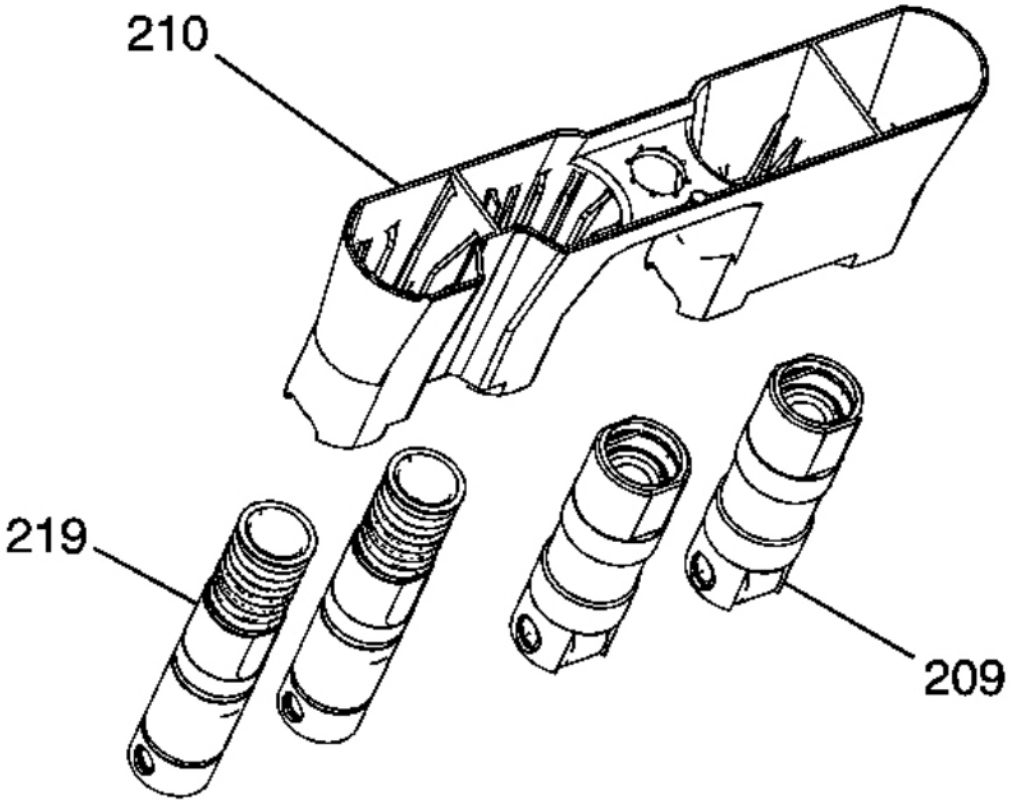

Fig. 235: Exploded View Of Lifter Guides & Lifters
Courtesy of GENERAL MOTORS CORP.

3. Remove the first design valve lifters (209, 219) from the guide (210).

cardiagn.com

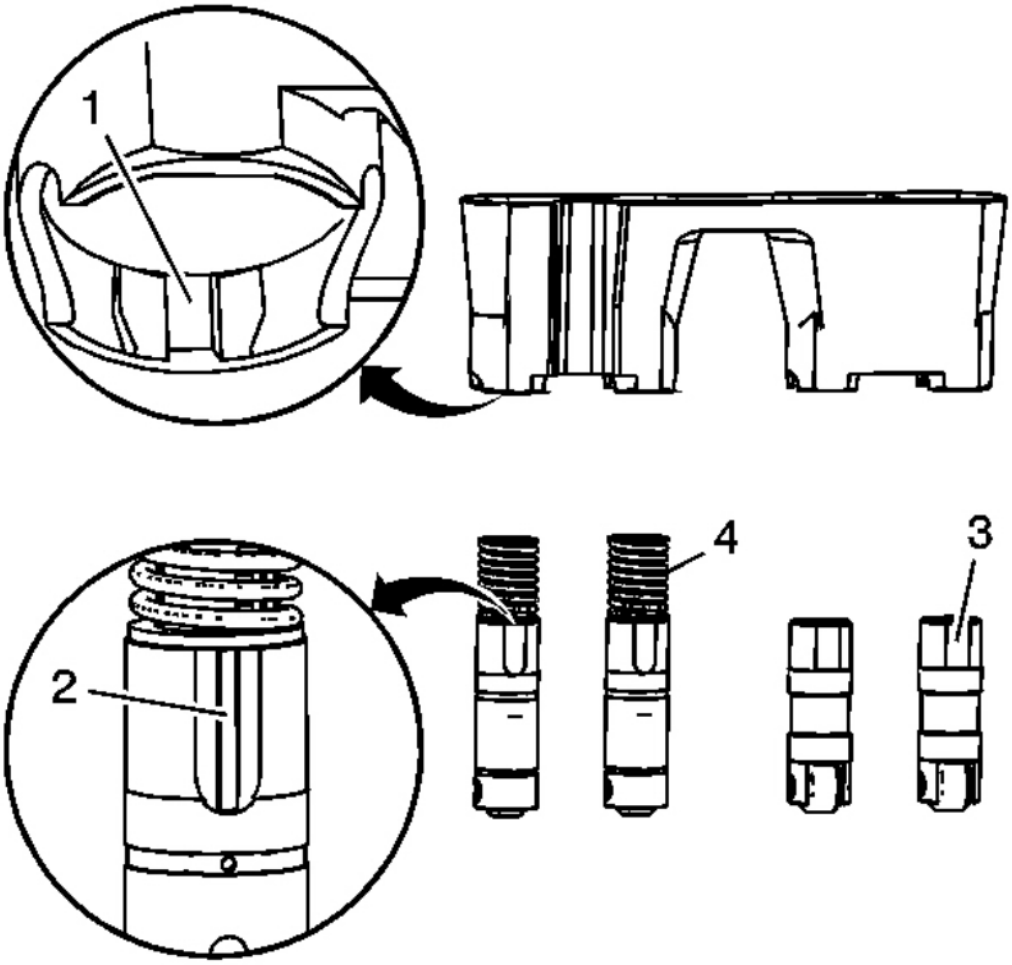

Fig. 236: Inserting Valve Lifters Into Lifter Guides
Courtesy of GENERAL MOTORS CORP.

4. Organize or mark the components so they can be installed in the same location from which they were removed. The active fuel management lifters (4) are installed into the guide by aligning the notched area of the guide (1) with the raised surface on the side of the lifter (2). Refer to **Separating Parts** .

cardiagn.com

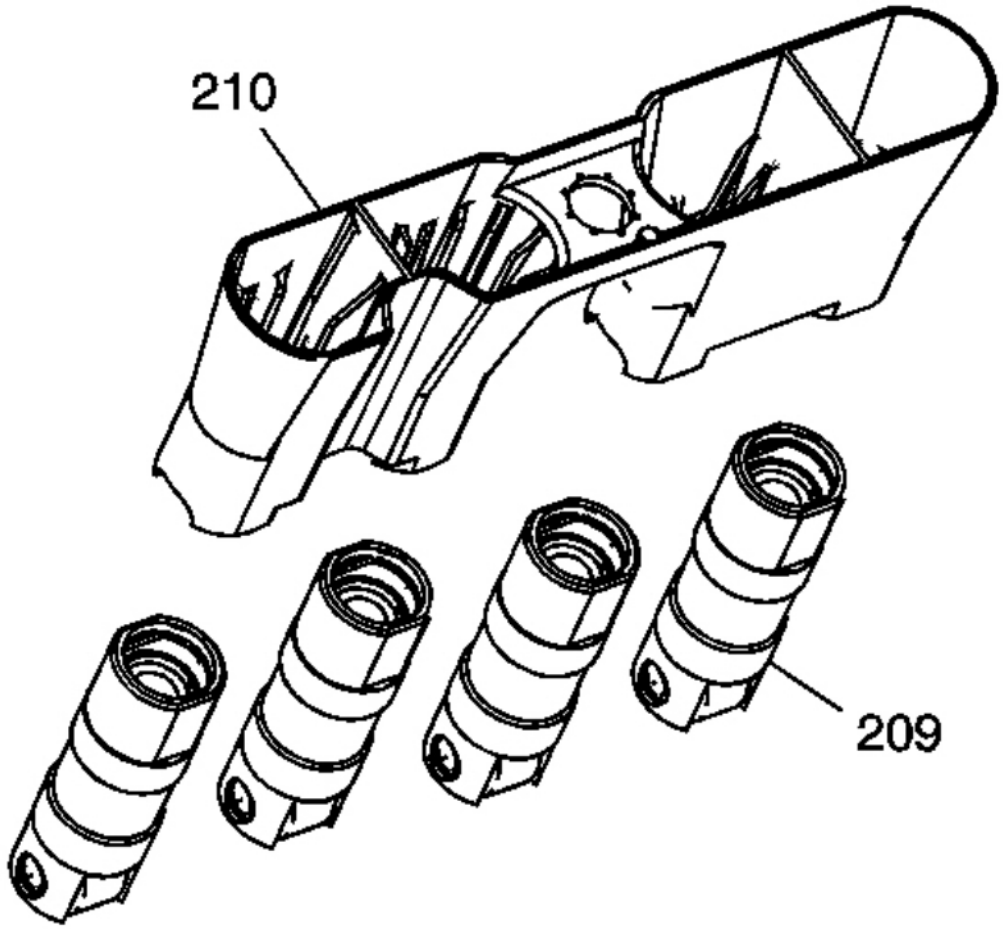

Fig. 237: Valve Lifter Guides & Bolts
Courtesy of GENERAL MOTORS CORP.

5. Remove the second design valve lifters (209) from the guide (210).
6. Organize or mark the components so they can be installed in the same location from which they were removed. Refer to **Separating Parts** .

OIL FILTER REMOVAL

cardiagn.com

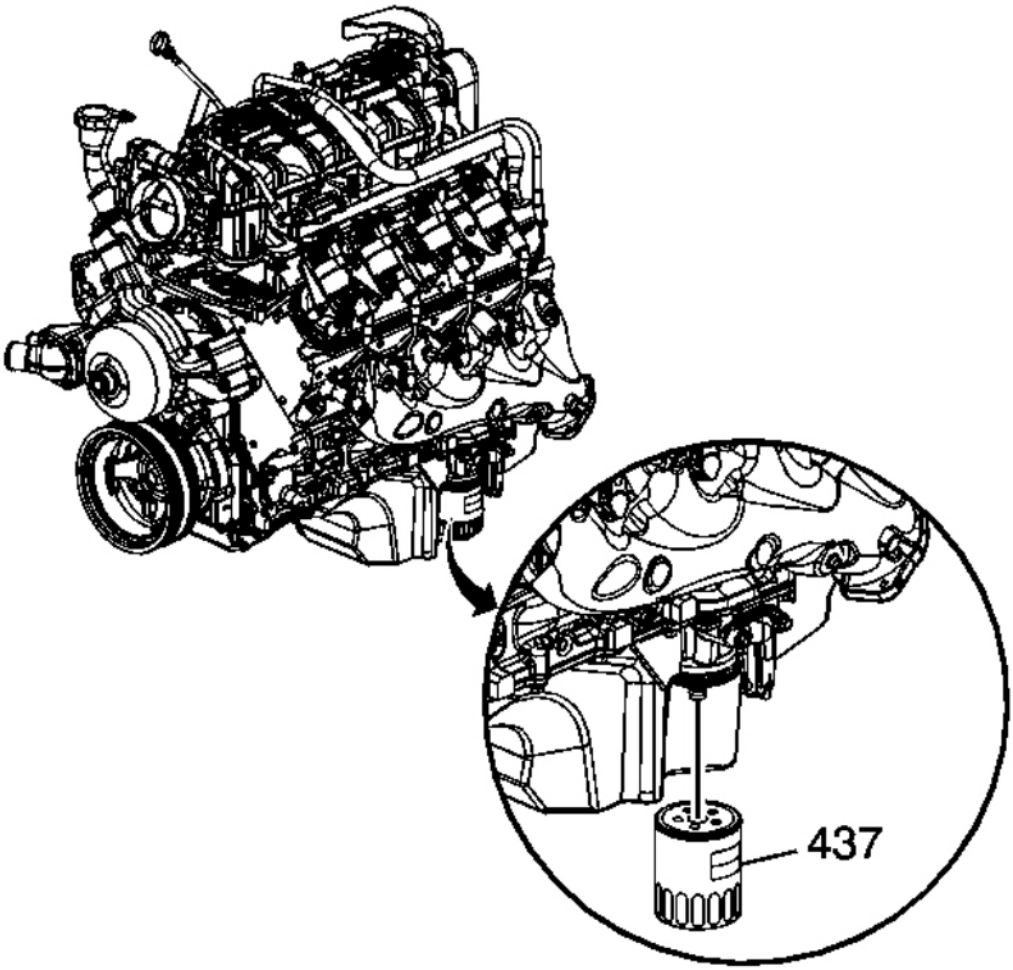

Fig. 238: View Of Engine Oil Filter
Courtesy of GENERAL MOTORS CORP.

1. Remove the oil filter (437).

cardiagn.com

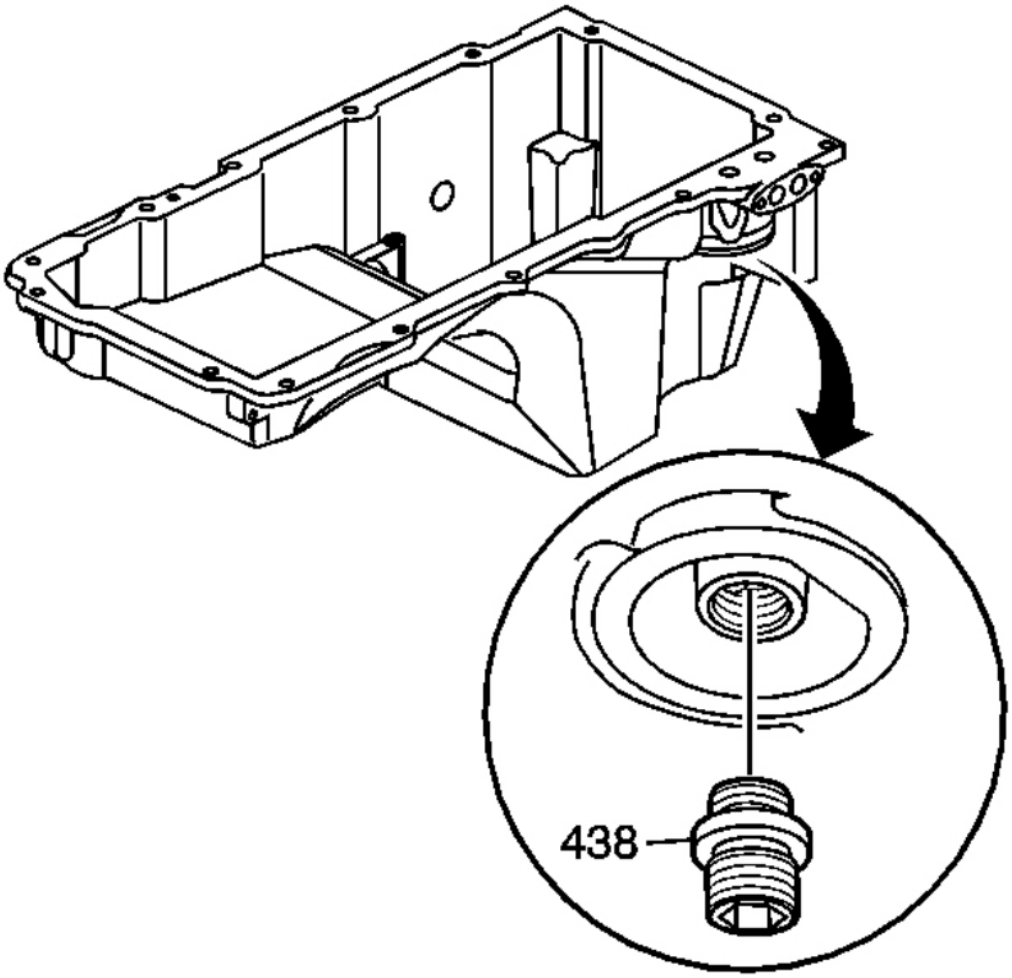

Fig. 239: View Of Oil Filter Fitting
Courtesy of GENERAL MOTORS CORP.

2. Remove the oil filter fitting (438).

OIL PAN REMOVAL

cardiagn.com

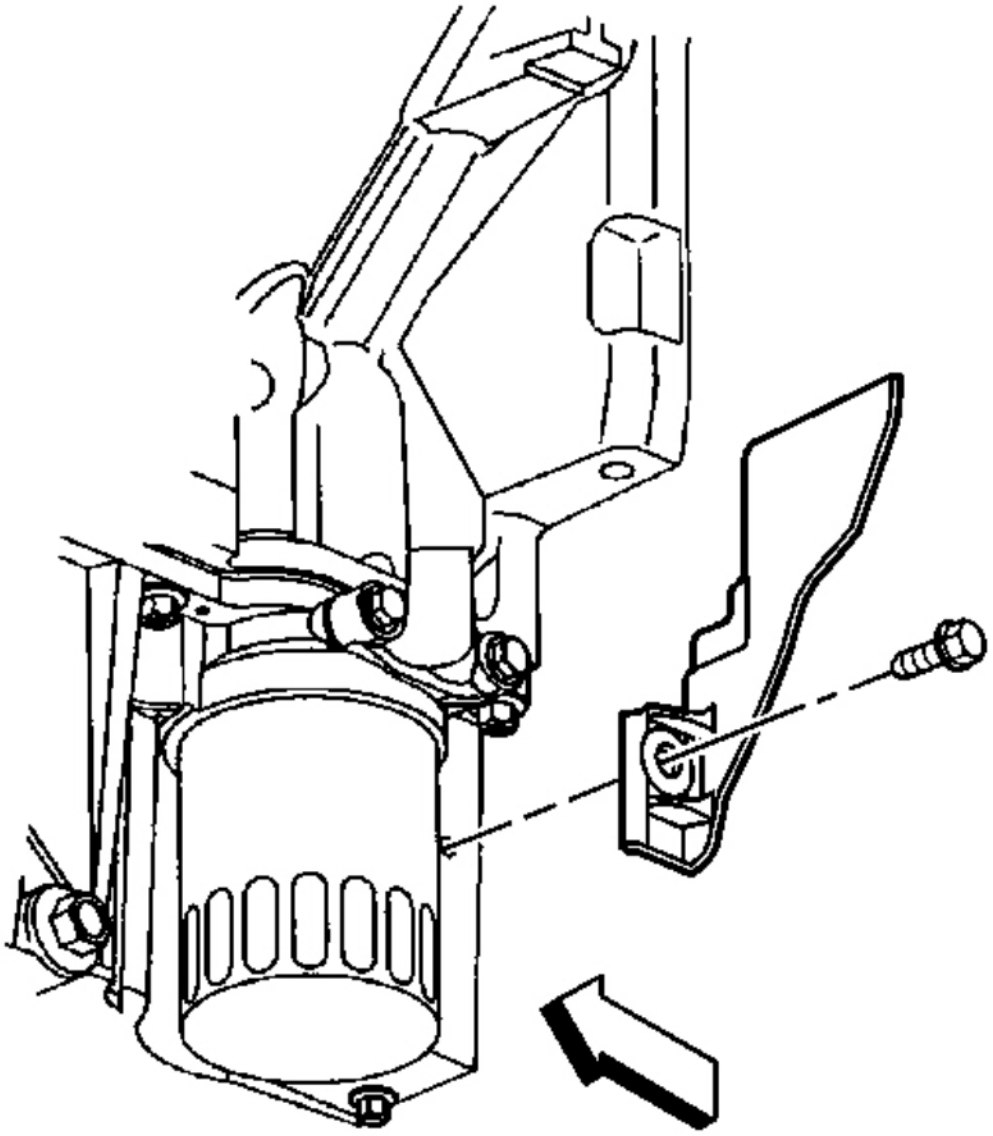

Fig. 240: View Of Left Closeout Cover & Bolt
Courtesy of GENERAL MOTORS CORP.

IMPORTANT:

- **The original oil pan gasket is retained and aligned to the oil pan by rivets. When installing a new gasket, it is not necessary to install new oil pan gasket rivets.**

cardiagn.com

- **DO NOT use the oil pan gasket again. When installing the oil pan, install a NEW oil pan gasket.**
- **It is not necessary to remove the oil level indicator switch prior to oil pan removal. Remove the oil level indicator switch, if service is required.**

1. Remove the left closeout cover and bolt.

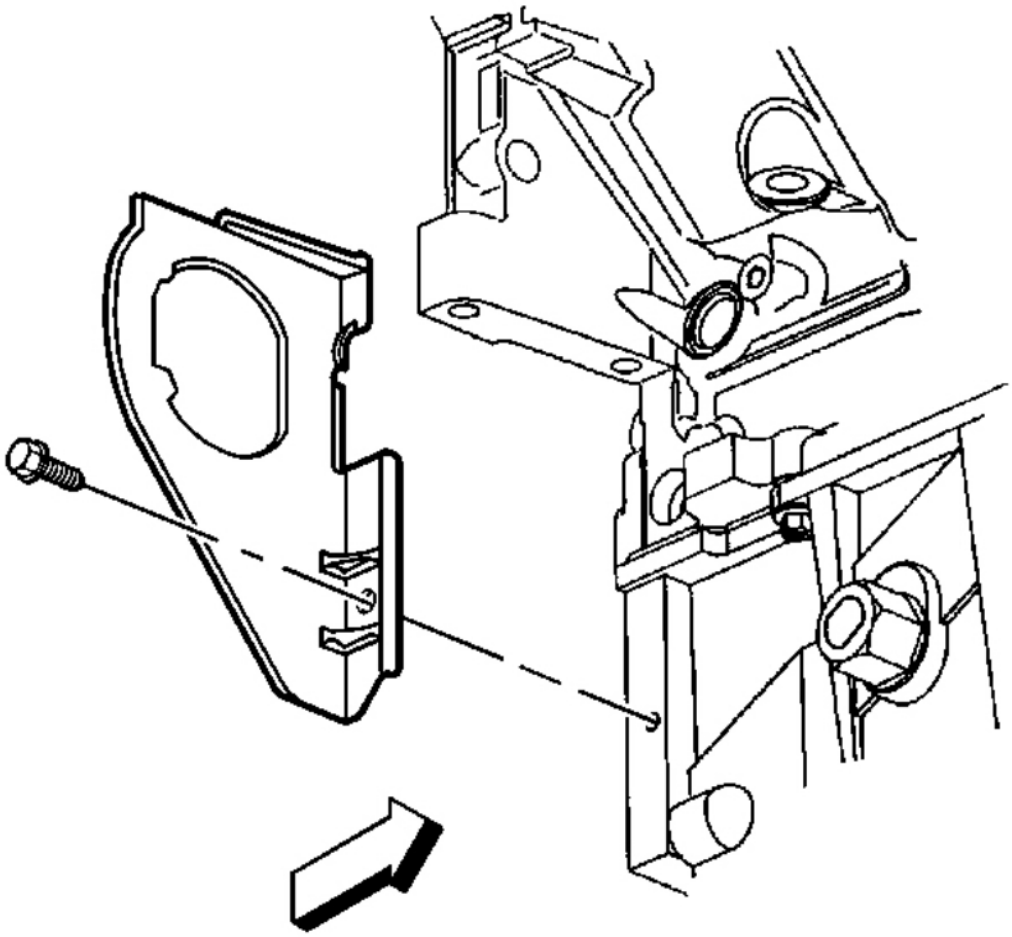

Fig. 241: View Of Right Closeout Cover & Bolt
Courtesy of GENERAL MOTORS CORP.

2. Remove the right closeout cover and bolt.

cardiagn.com

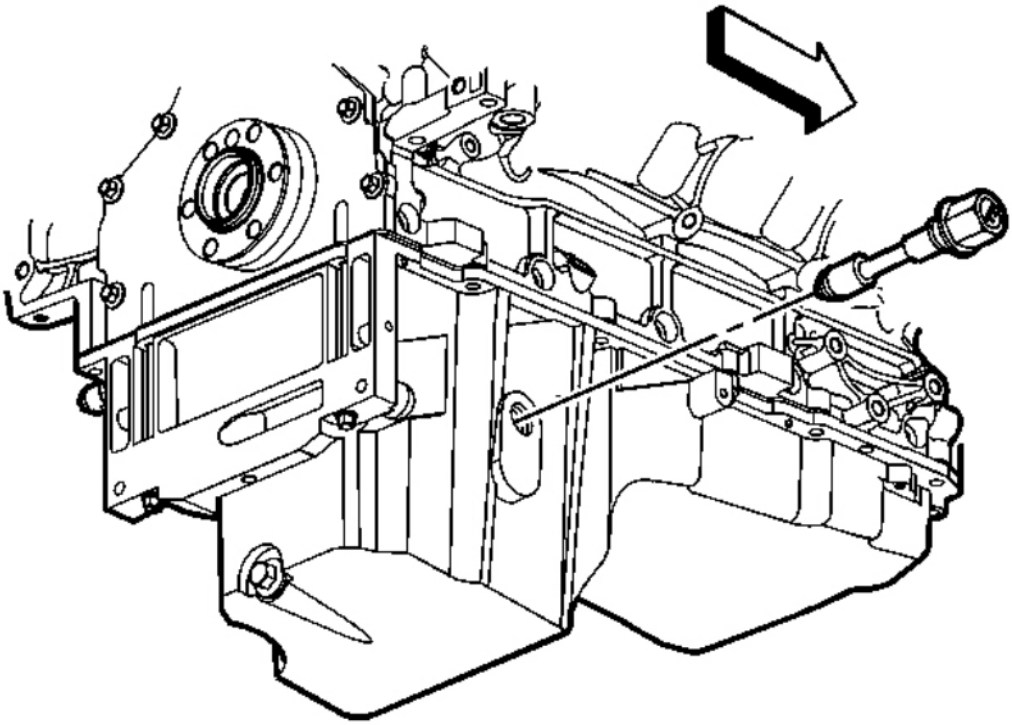

Fig. 242: View Of Oil Level Sensor
Courtesy of GENERAL MOTORS CORP.

3. Remove the oil indicator switch from the oil pan, if required.

cardiagn.com

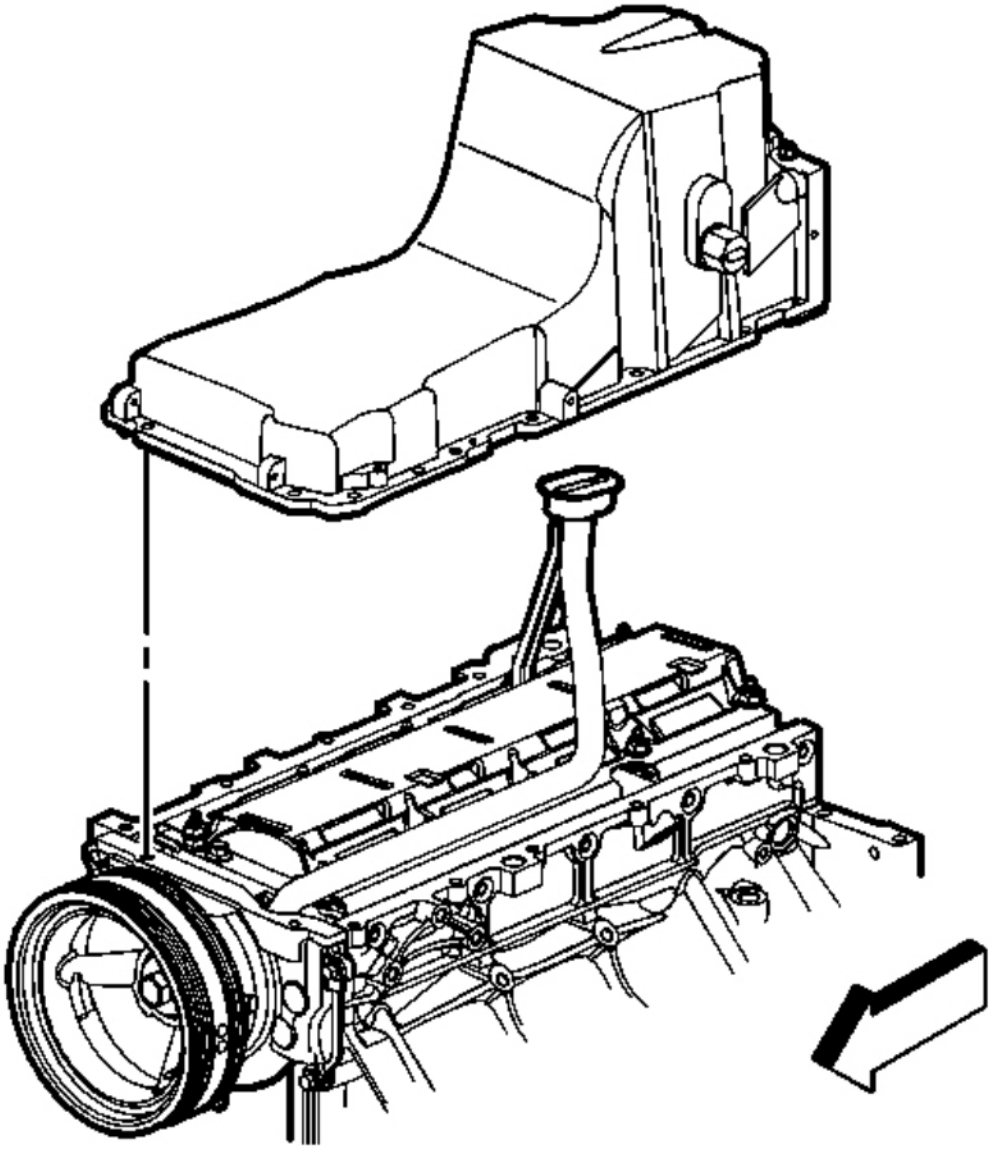

Fig. 243: View Of Oil Pan
Courtesy of GENERAL MOTORS CORP.

4. Remove the oil pan bolts.
5. Remove the oil pan.

cardiagn.com

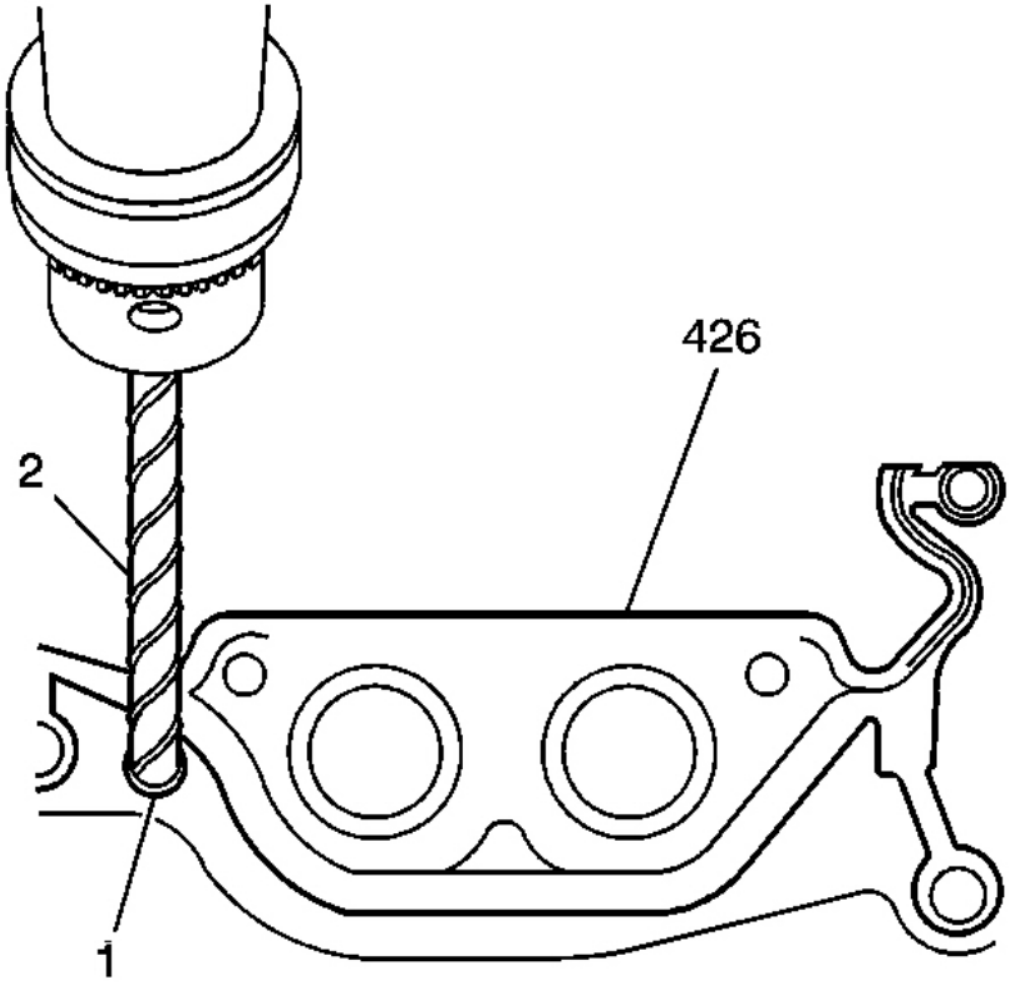

Fig. 244: Drilling Out Oil Pan Gasket Retaining Rivets
Courtesy of GENERAL MOTORS CORP.

IMPORTANT:

- **DO NOT allow foreign material to enter the oil passages of the oil pan. Cap or cover the openings, as required.**
- **Use care not to gouge, score, or damage the oil pan sealing surface.**

6. Drill (2) out the oil pan gasket retaining rivets (1), if required.
7. Remove the gasket (426) from the pan.
8. Discard the gasket and rivets.

cardiagn.com

ENGINE FRONT COVER REMOVAL (RPO LY2/LC9/LY5/LMG)

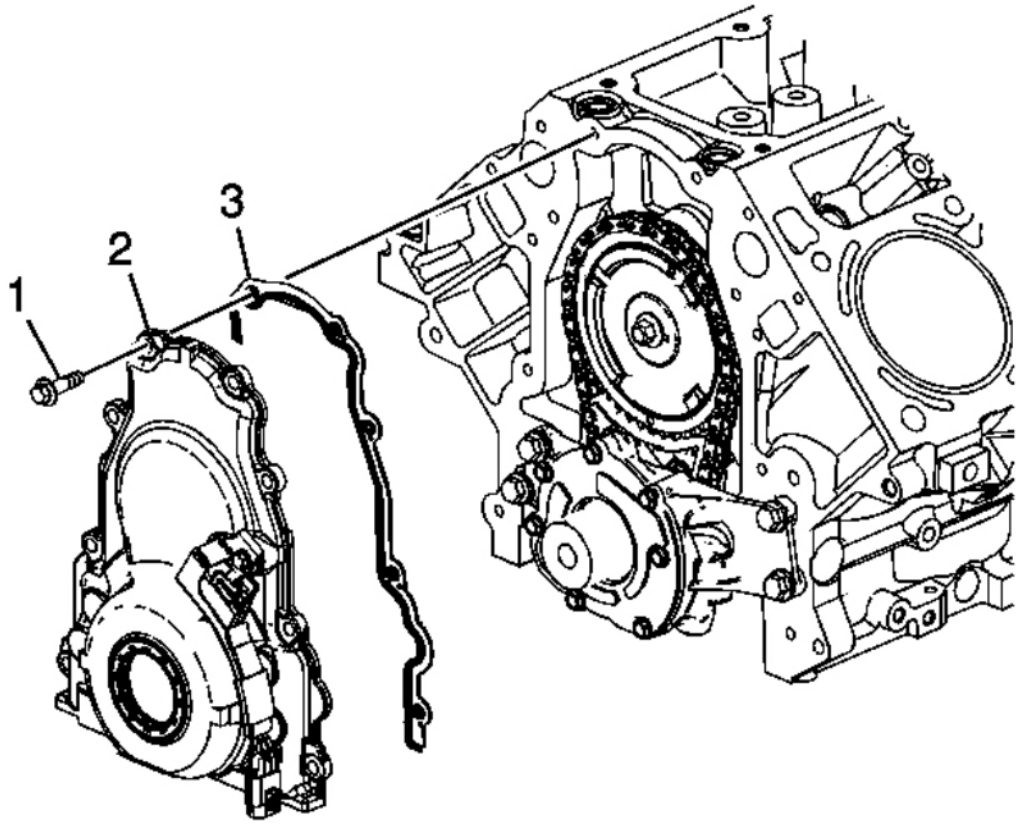

Fig. 245: View Of Front Cover & Gasket
Courtesy of GENERAL MOTORS CORP.

1. Remove the front cover bolts (1).
2. Remove the front cover (2) and gasket (3).
3. Discard the front cover gasket.

cardiagn.com

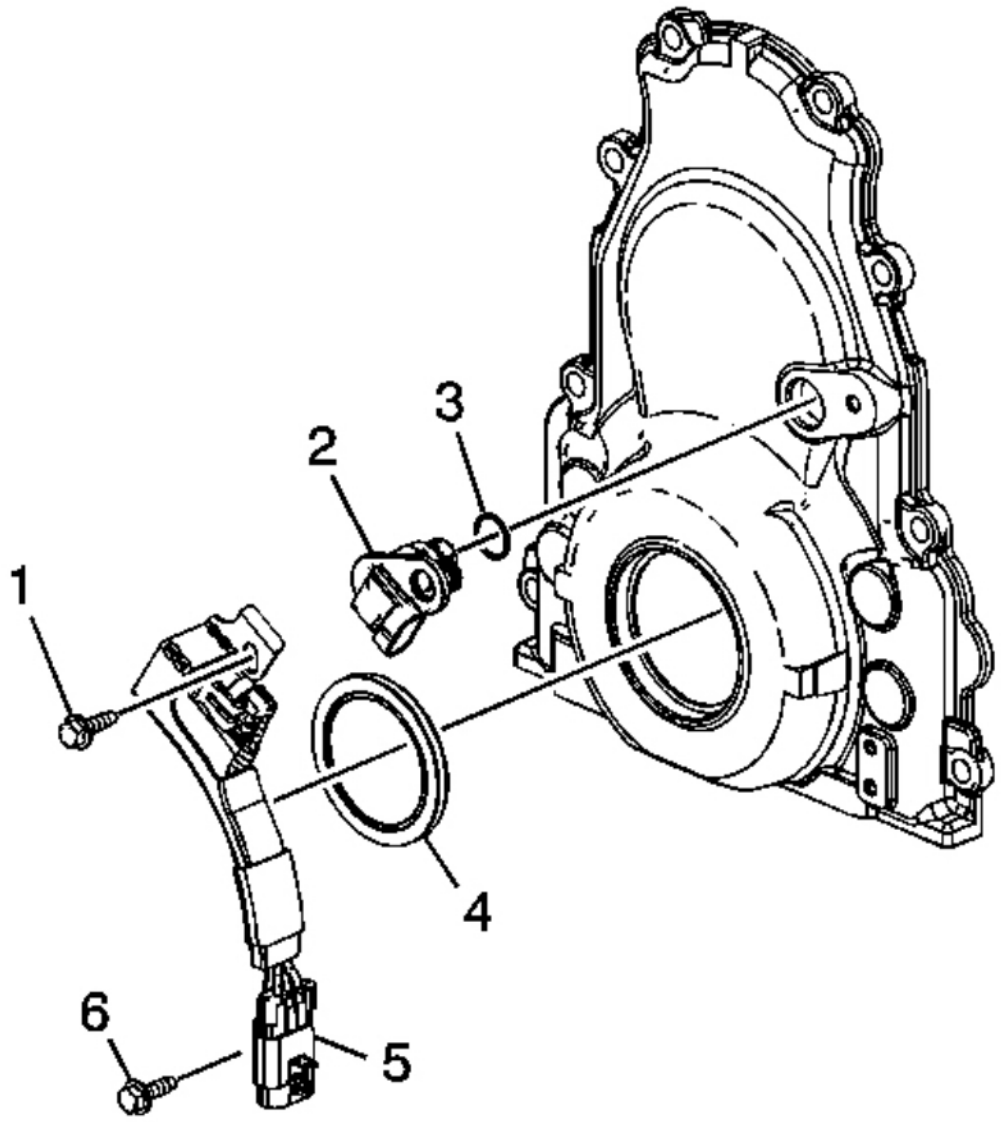

Fig. 246: View Of Front Cover, Oil Seal, Camshaft Position Sensor, Bracket & O Ring
Courtesy of GENERAL MOTORS CORP.

4. Remove the oil seal (4).
5. Remove the bolts (1, 6), camshaft position (CMP) sensor (2), and wire harness (5).
6. Remove the O-ring (3) from the sensor, as required.

cardiagn.com

ENGINE FRONT COVER REMOVAL (RPO LY6/L76/L92)

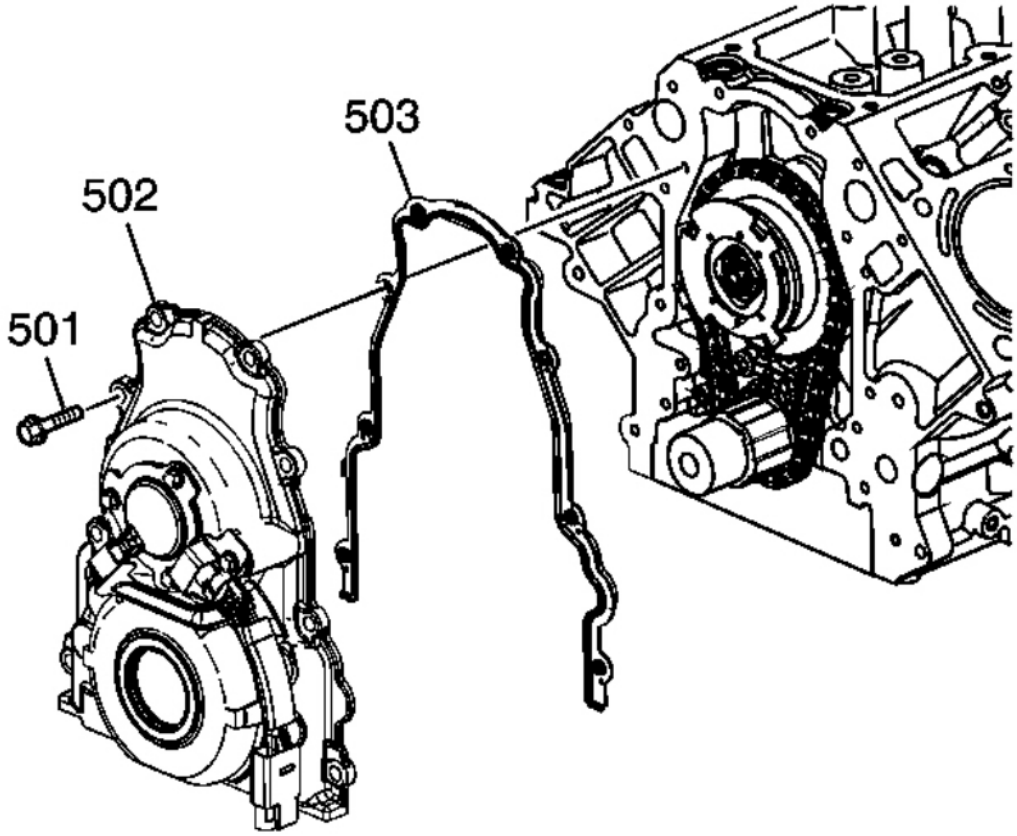

Fig. 247: View Of Front Cover, Bolts & Gasket
Courtesy of GENERAL MOTORS CORP.

1. Remove the front cover bolts (501).
2. Remove the front cover (502) and gasket (503).
3. Discard the front cover gasket.

cardiagn.com

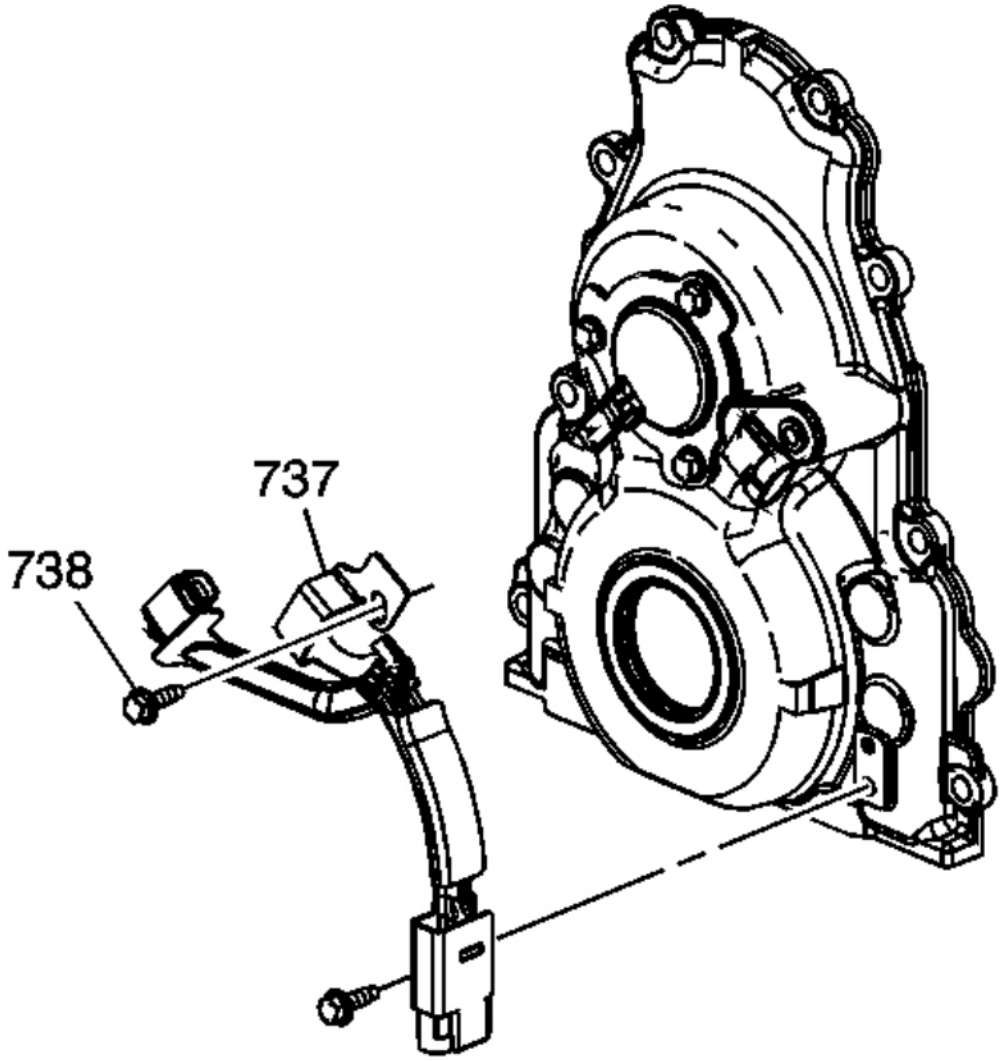

Fig. 248: View Of CMP Sensor Wire Harness & Bolts
Courtesy of GENERAL MOTORS CORP.

4. Remove the camshaft position (CMP) sensor wire harness (737) and bolts (738).

cardiagn.com

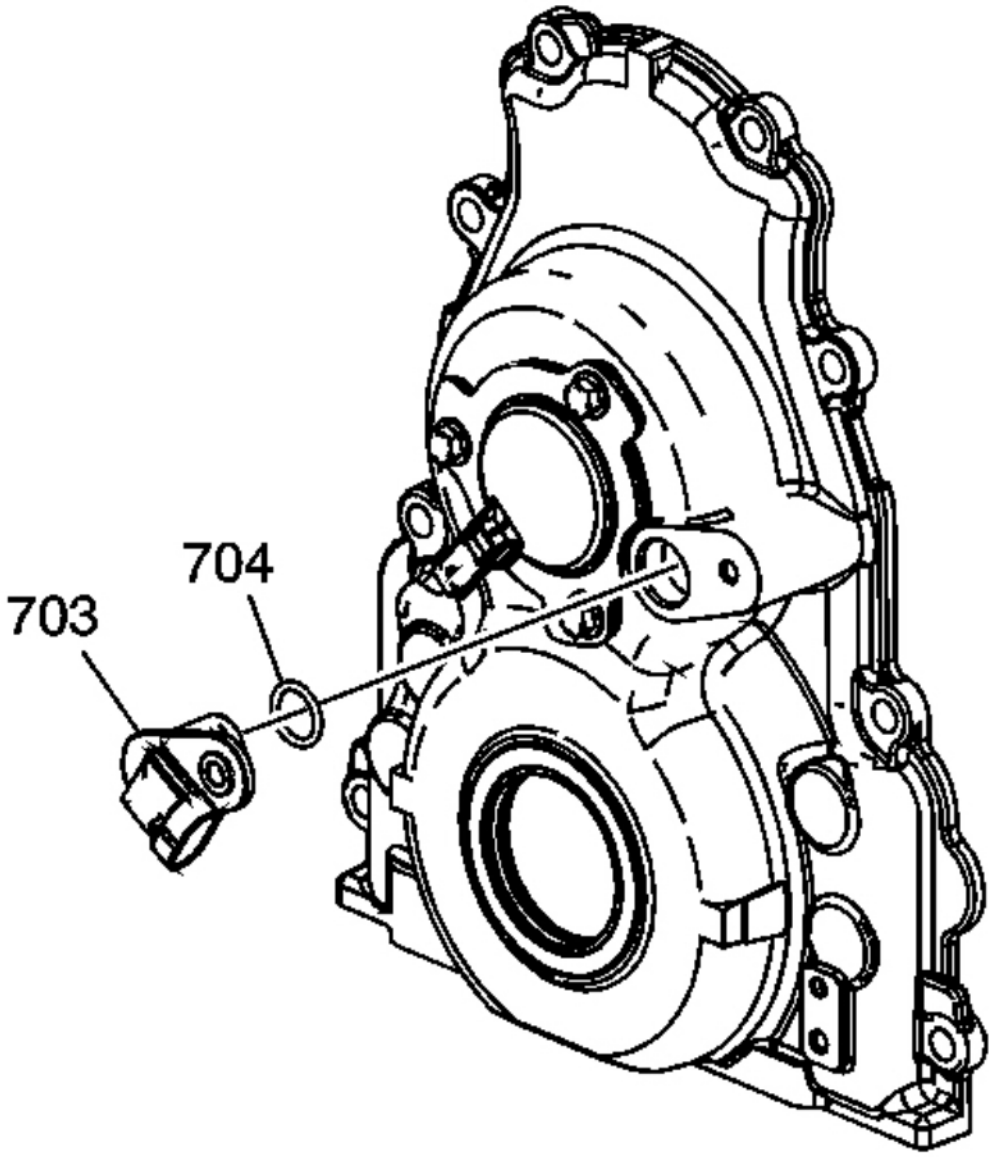

Fig. 249: View Of CMP Sensor & O-Ring
Courtesy of GENERAL MOTORS CORP.

5. Remove the CMP sensor (703).
6. Remove the O-ring (704) from the sensor, as required.

cardiagn.com

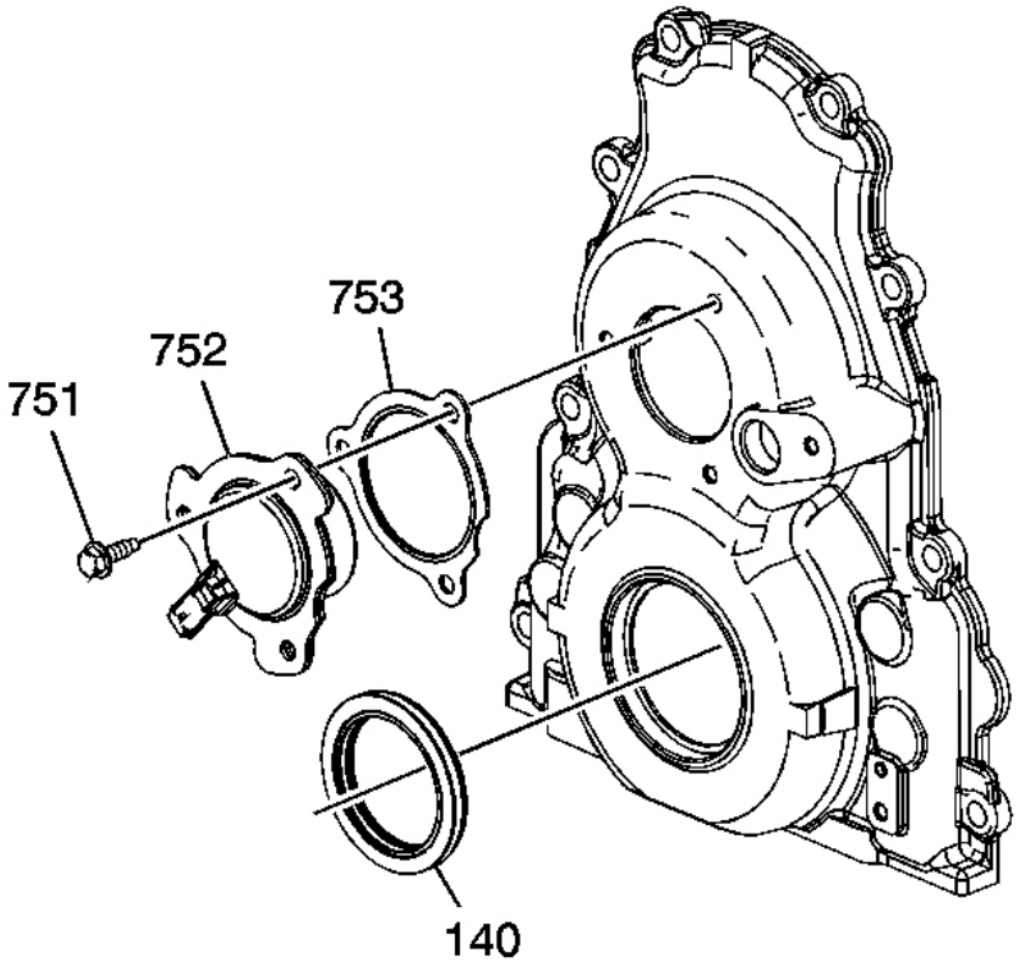

Fig. 250: View Of CMP Actuator Magnet, Bolts, Gasket & Oil Seal
Courtesy of GENERAL MOTORS CORP.

7. Remove the CMP actuator magnet (752), bolts (751), and gasket (753).
8. Remove the oil seal (140).

CRANKSHAFT REAR OIL SEAL HOUSING REMOVAL

cardiagn.com

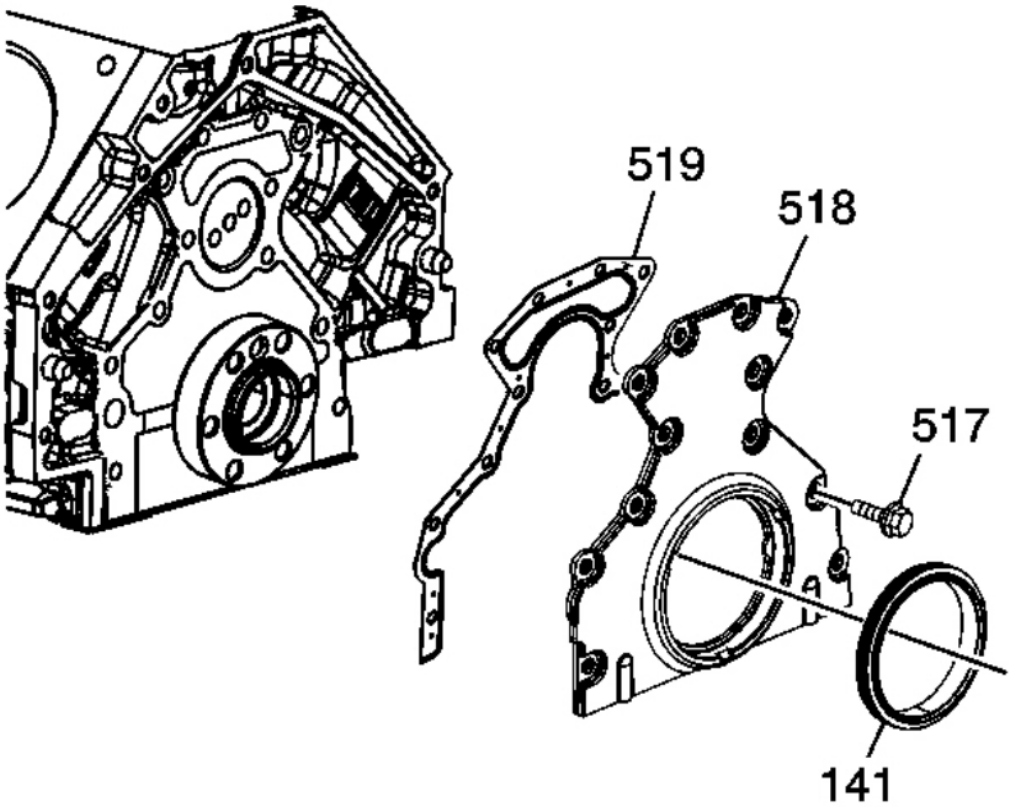

Fig. 251: View of Rear Housing, Gasket & Seal
Courtesy of GENERAL MOTORS CORP.

1. Remove the rear oil seal housing bolts (517).
2. Remove the housing (518) and gasket (519).
3. Remove the rear oil seal (141).

OIL PUMP, SCREEN AND CRANKSHAFT OIL DEFLECTOR REMOVAL (RPO LY2/LC9/LY5/LMG)

cardiagn.com

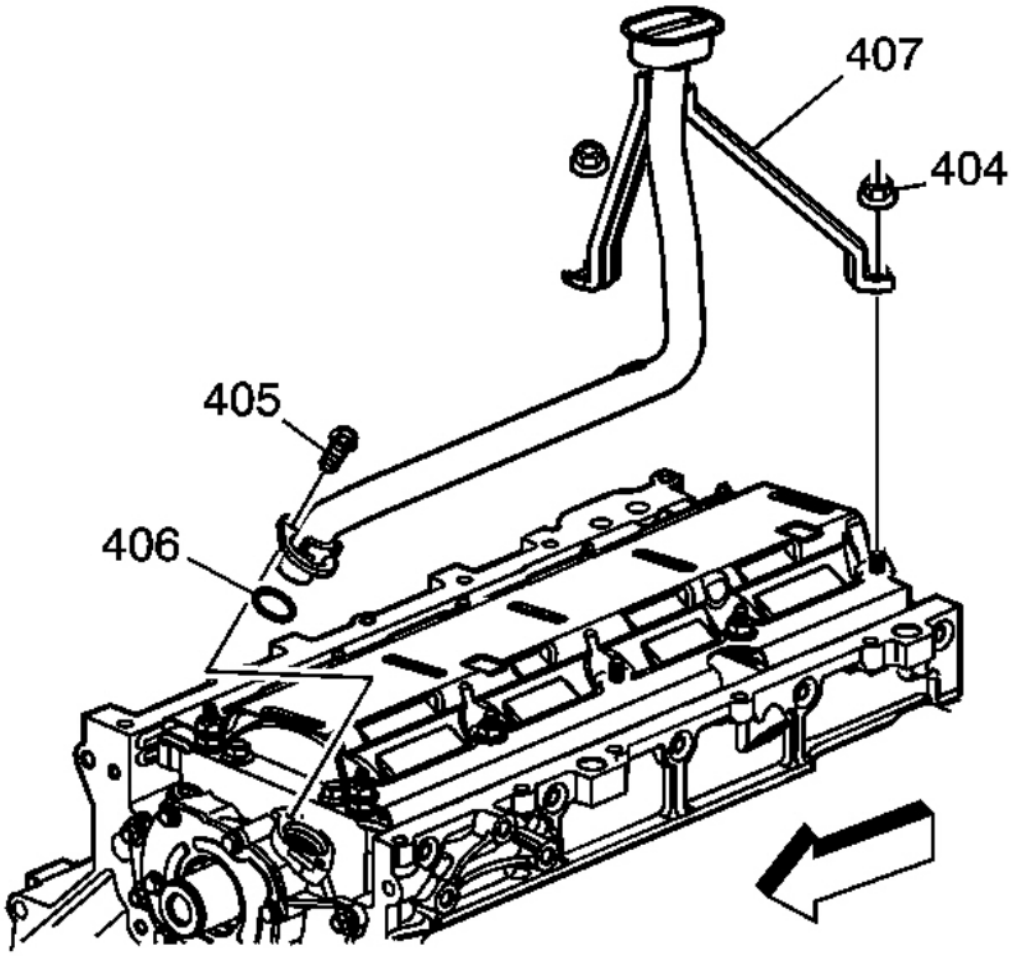

Fig. 252: View Of Oil Pump Screen, Bolt, Nuts, & O-Ring Seal
Courtesy of GENERAL MOTORS CORP.

1. Remove the oil pump screen bolt (405) and nuts (404).
2. Remove the oil pump screen (407) with O-ring seal (406).
3. Remove the O-ring seal from the pump screen.
4. Discard the O-ring seal.

cardiagn.com

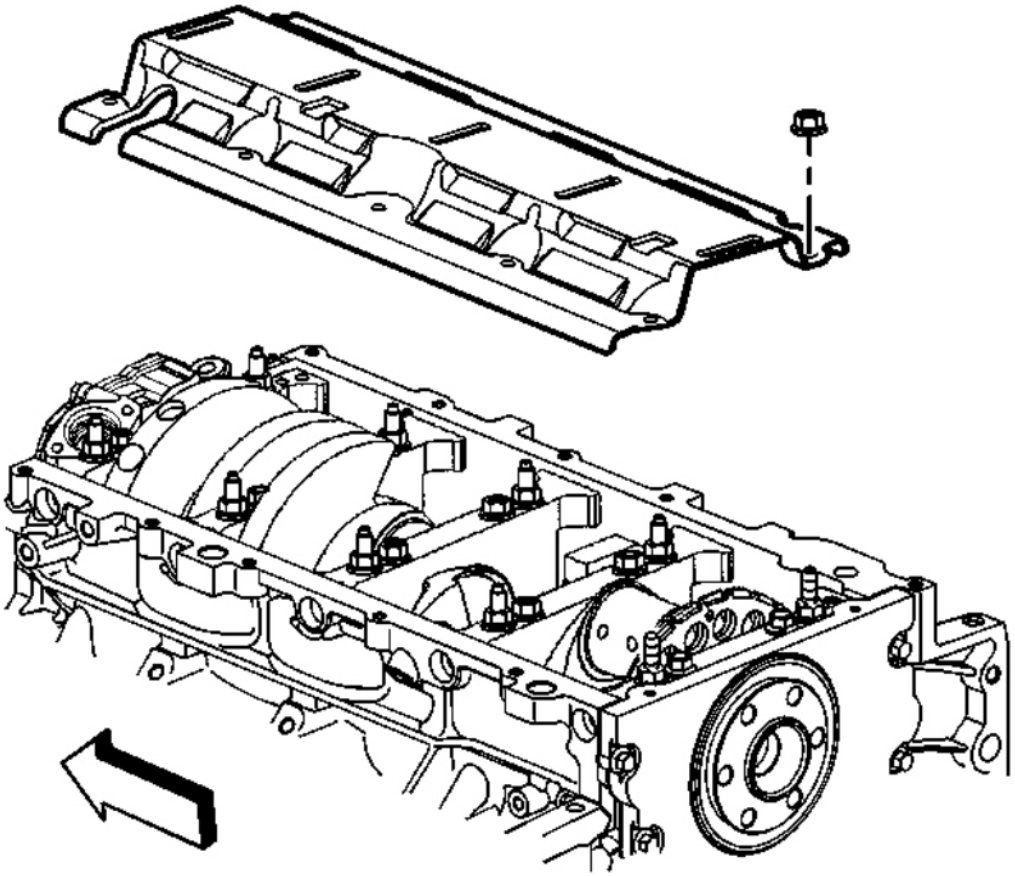

Fig. 253: View Of Crankshaft Oil Deflector
Courtesy of GENERAL MOTORS CORP.

5. Remove the remaining crankshaft oil deflector nuts.
6. Remove the crankshaft oil deflector.

cardiagn.com

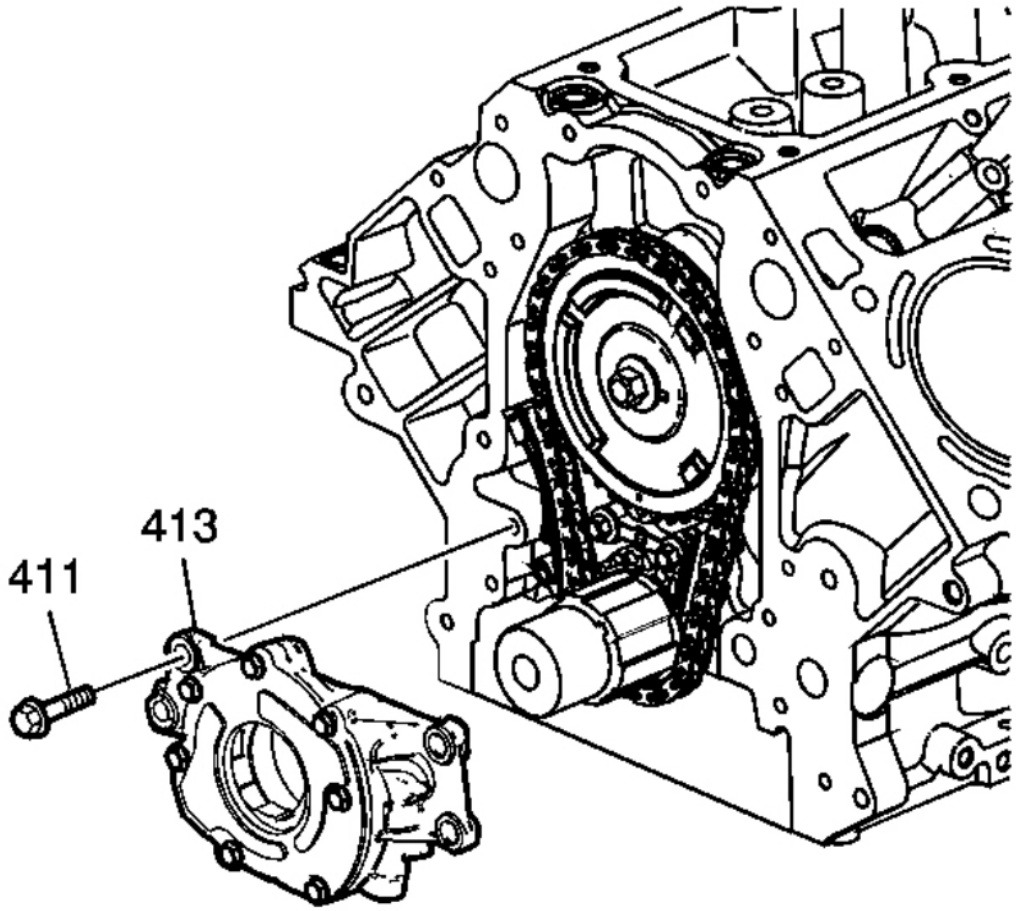

Fig. 254: View Of Oil Pump & Bolts
Courtesy of GENERAL MOTORS CORP.

7. Remove the oil pump bolts (411).

IMPORTANT: Do not allow dirt or debris to enter the oil pump assembly. Cap ends, as necessary.

8. Remove the oil pump (413).

OIL PUMP, SCREEN AND CRANKSHAFT OIL DEFLECTOR REMOVAL (RPO LY6/L76/L92)

cardiagn.com

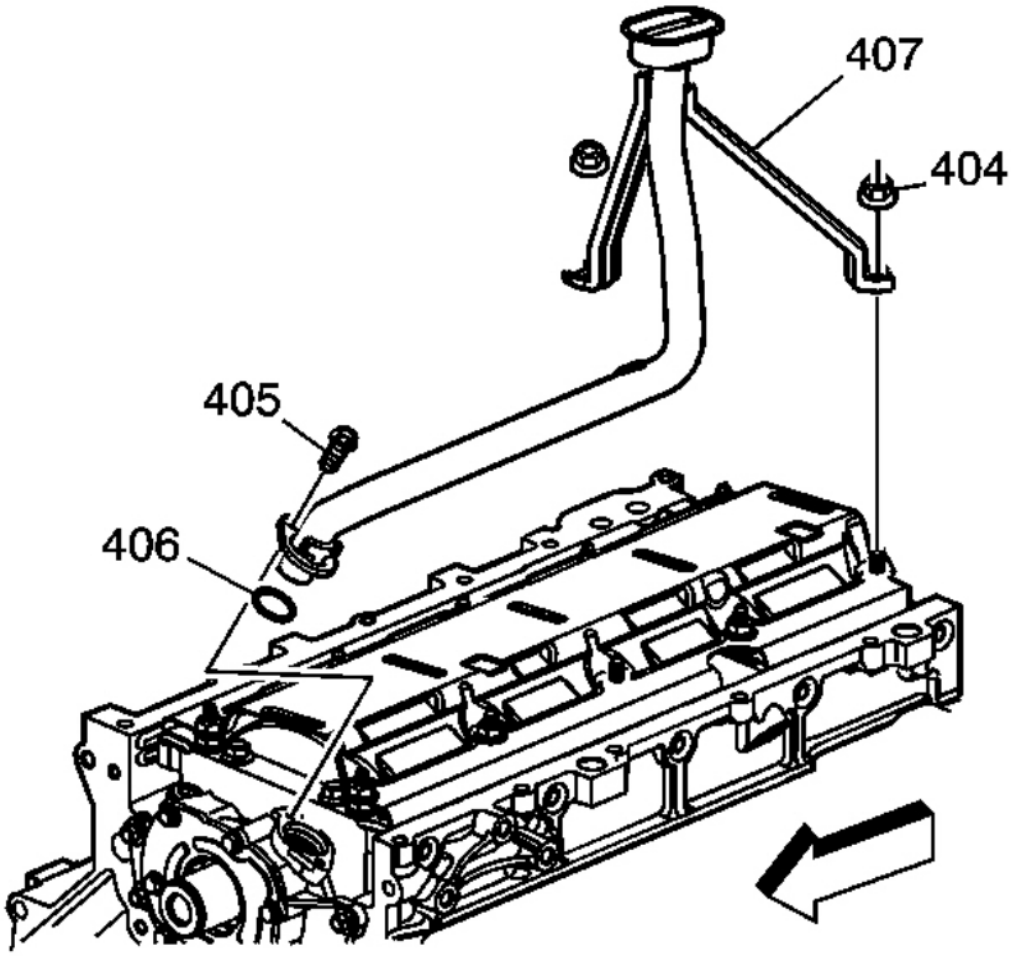

Fig. 255: View Of Oil Pump Screen, Bolt, Nuts, & O-Ring Seal
Courtesy of GENERAL MOTORS CORP.

1. Remove the oil pump screen bolt (405) and nuts (404).
2. Remove the oil pump screen (407) with O-ring seal (406).
3. Remove the O-ring seal from the pump screen.
4. Discard the O-ring seal.

cardiagn.com

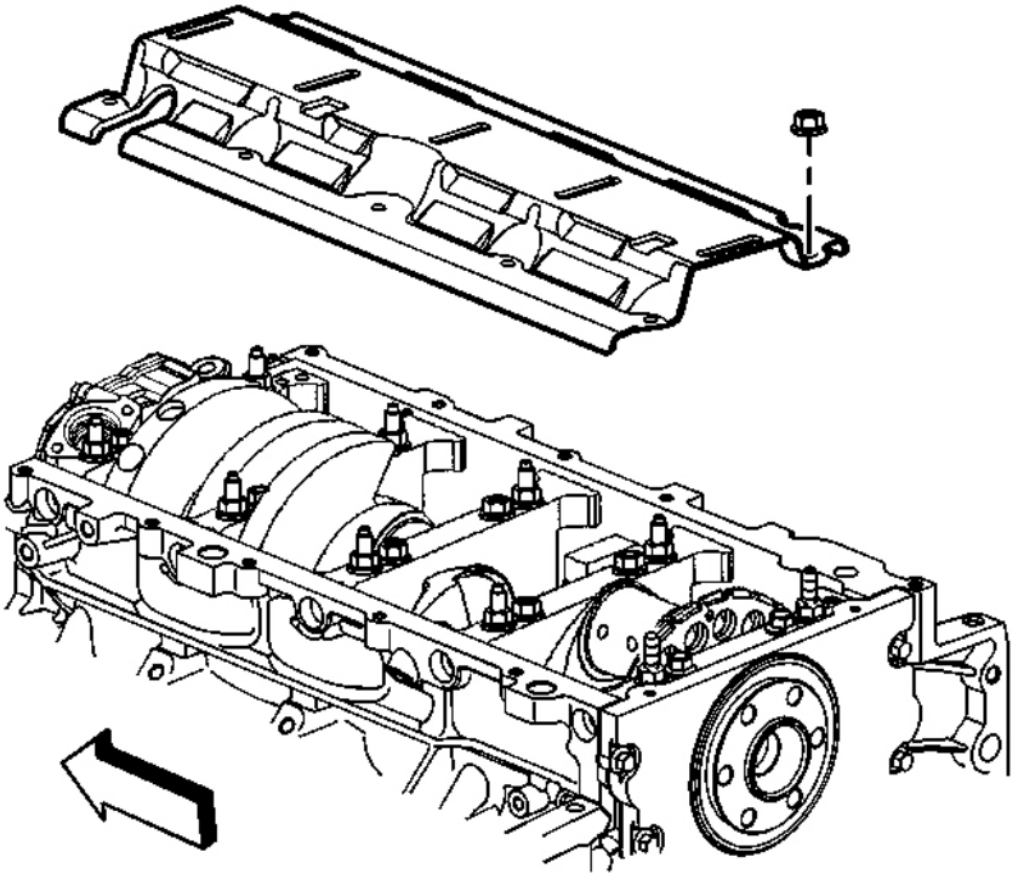

Fig. 256: View Of Crankshaft Oil Deflector
Courtesy of GENERAL MOTORS CORP.

5. Remove the remaining crankshaft oil deflector nuts.
6. Remove the crankshaft oil deflector.

cardiagn.com

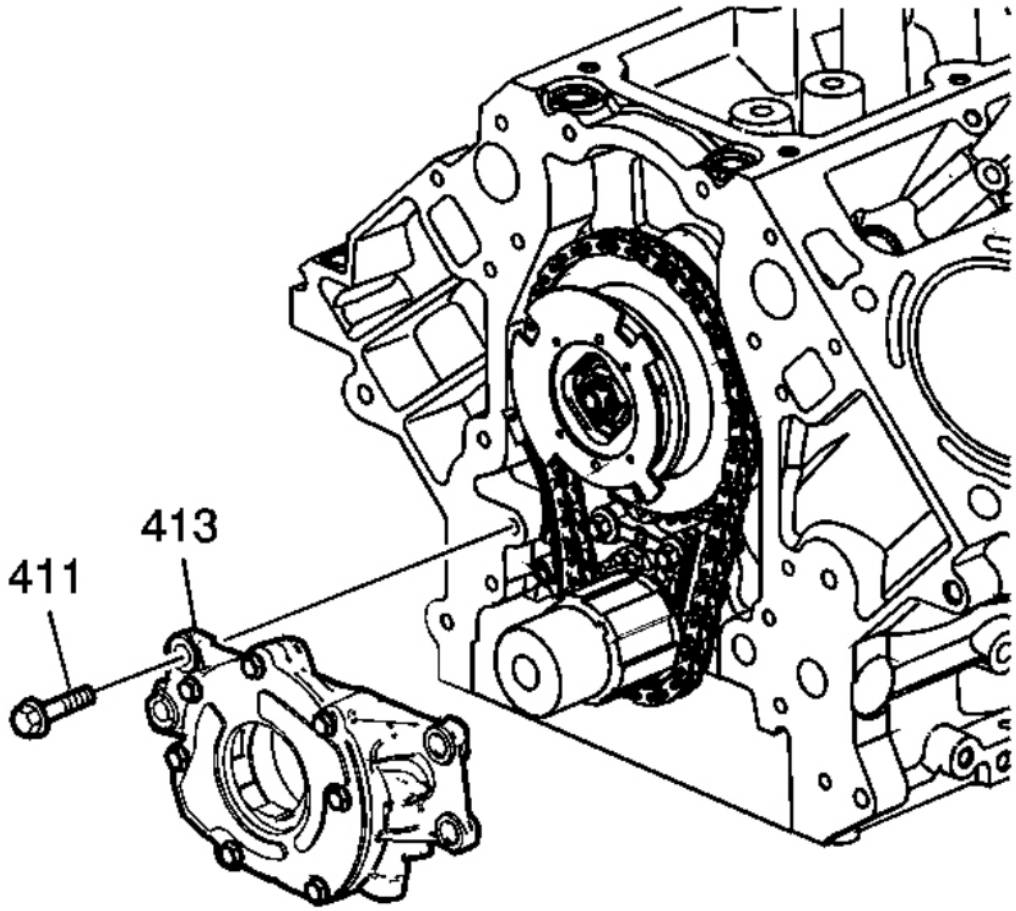

Fig. 257: View Of Oil Pump & Bolts
Courtesy of GENERAL MOTORS CORP.

7. Remove the oil pump bolts (411).

IMPORTANT: Do not allow dirt or debris to enter the oil pump assembly. Cap ends, as necessary.

8. Remove the oil pump (413).

TIMING CHAIN AND SPROCKETS REMOVAL

Tools Required

cardiagn.com

- **J 8433** Two Jaw Puller. See **Special Tools** .
- **J 41558** Crankshaft Sprocket Remover. See **Special Tools** .
- **J 41816-2** Crankshaft End Protector. See **Special Tools** .
- **J 42386-A** Flywheel Holding Tool. See **Special Tools** .

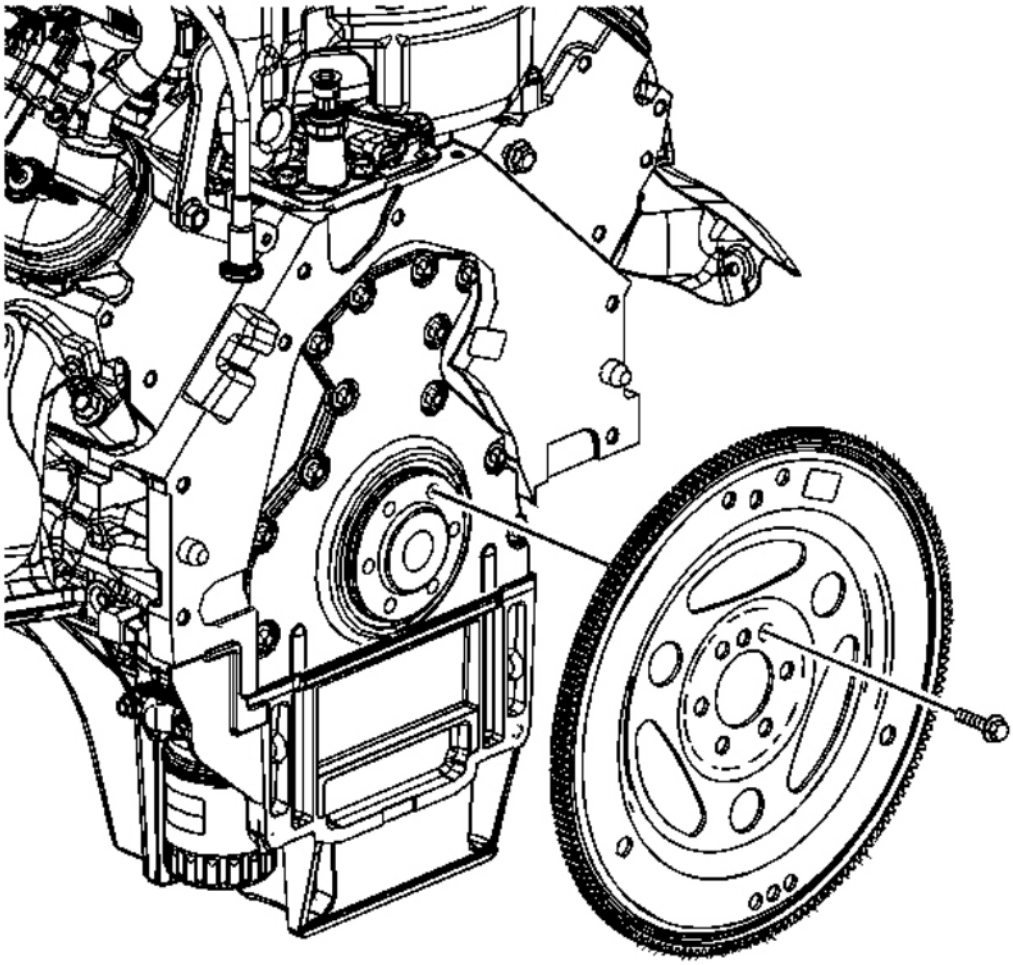

Fig. 258: View Of Flex Plate & Bolts
Courtesy of GENERAL MOTORS CORP.

IMPORTANT: Do not apply threadlock to the flex plate bolts at this time.

1. Temporarily install the automatic transmission flex plate and bolts. Refer to **Automatic Transmission Flex Plate Installation** .

cardiagn.com

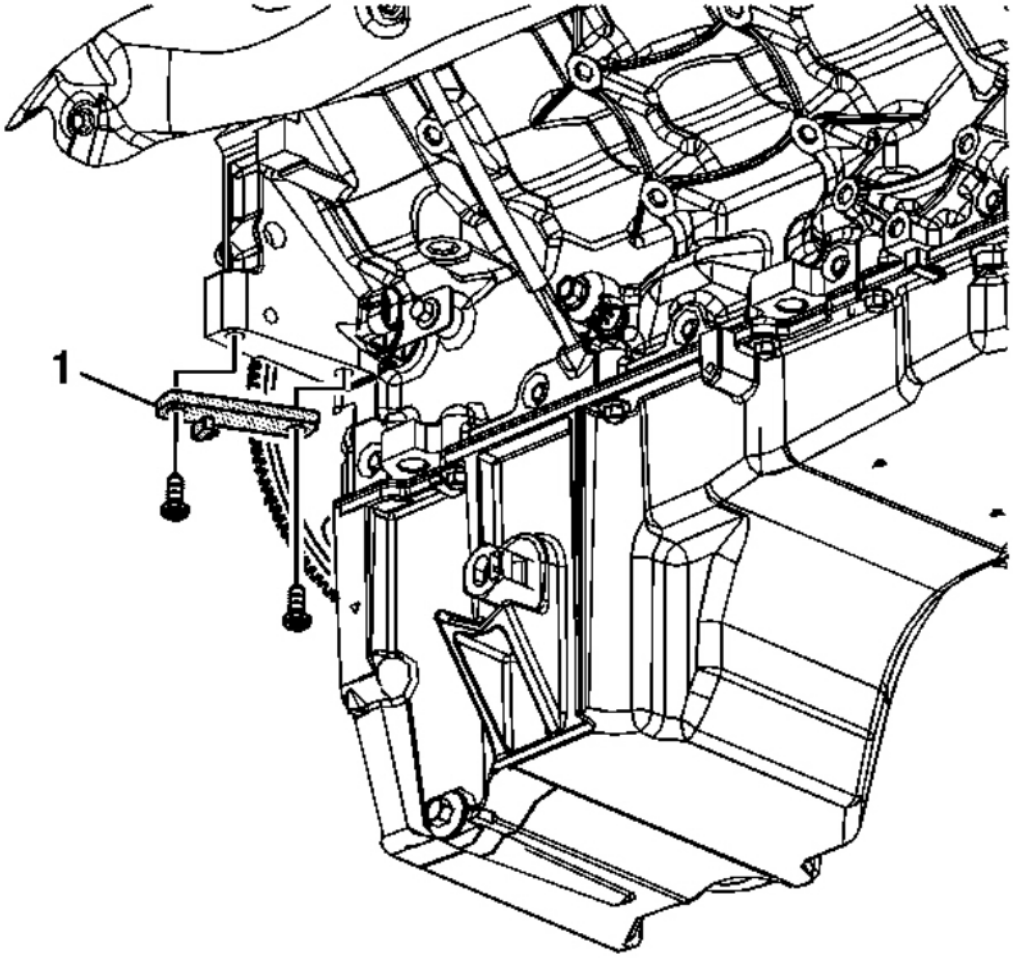

Fig. 259: View Of Special Tool & Bolts
Courtesy of GENERAL MOTORS CORP.

NOTE: **Refer to Fastener Notice .**

2. Install the **J 42386-A** (1) and bolts. See **Special Tools** . Use 1 M10 - 1.5 x 120 mm and 1 M10 - 1.5 x 45 mm bolt for proper tool operation.

   Tighten: Tighten the **J 42386-A** bolts to 50 N. See **Special Tools** .m (37 lb ft).

cardiagn.com

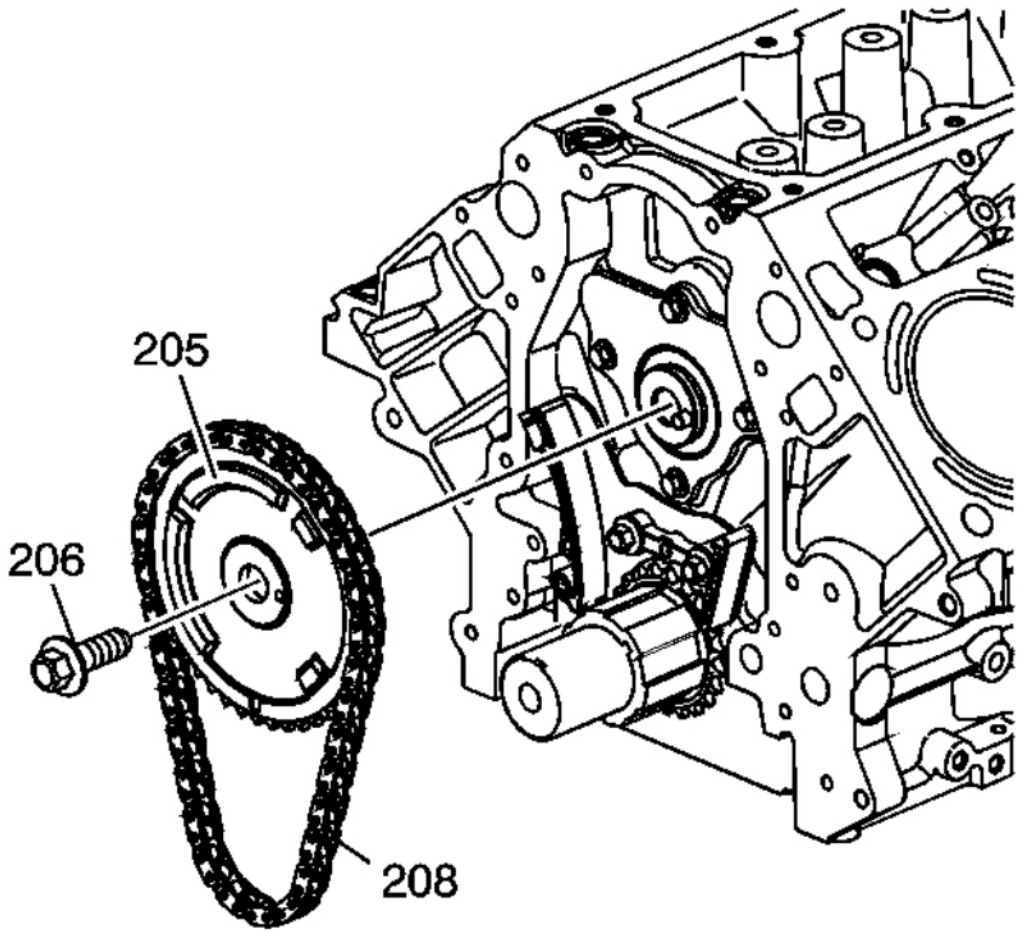

Fig. 260: View Of Camshaft Sprocket, Sprocket Bolt & Timing Chain
Courtesy of GENERAL MOTORS CORP.

NOTE: **Do not turn the crankshaft assembly after the timing chain has been removed in order to prevent damage to the piston assemblies or the valves.**

3. Remove and discard the camshaft sprocket bolt (206).
4. Remove the camshaft sprocket (205) and timing chain (208).

cardiagn.com

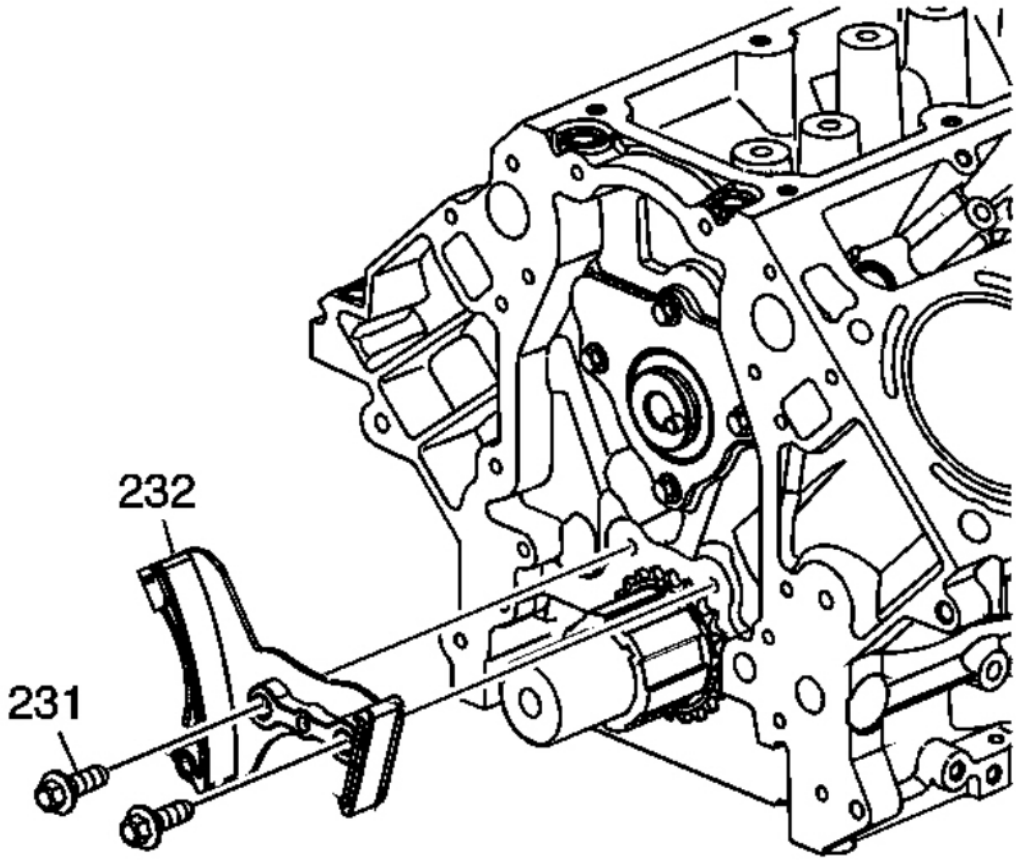

Fig. 261: View Of Timing Chain Tensioner & Bolts
Courtesy of GENERAL MOTORS CORP.

5. Remove the bolts (231) and timing chain tensioner (232).

cardiagn.com

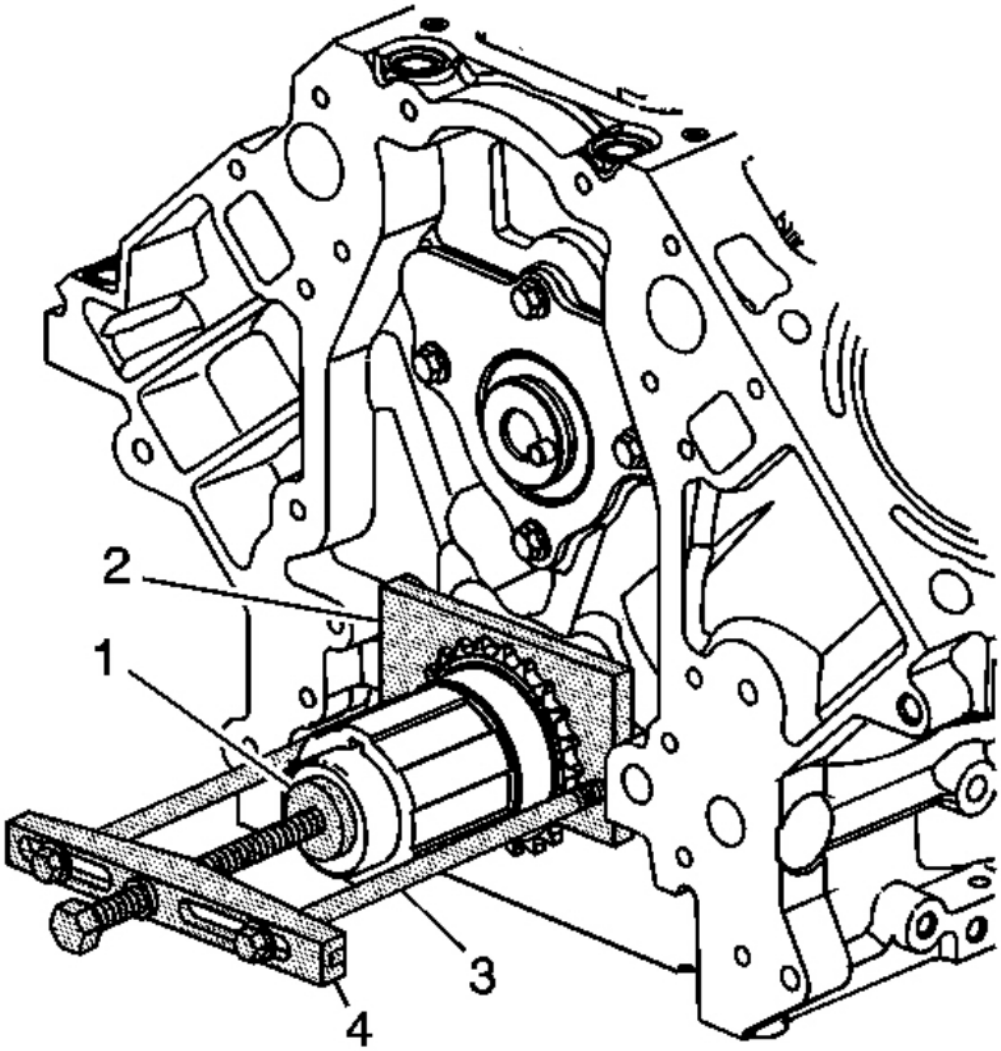

Fig. 262: View Of Crankshaft Sprocket Special Tools
Courtesy of GENERAL MOTORS CORP.

6. Use the **J 41816-2** (1), the **J 41558** (2), bolts (3), and the **J 8433** (4) in order to remove the crankshaft sprocket. See **Special Tools** .

cardiagn.com

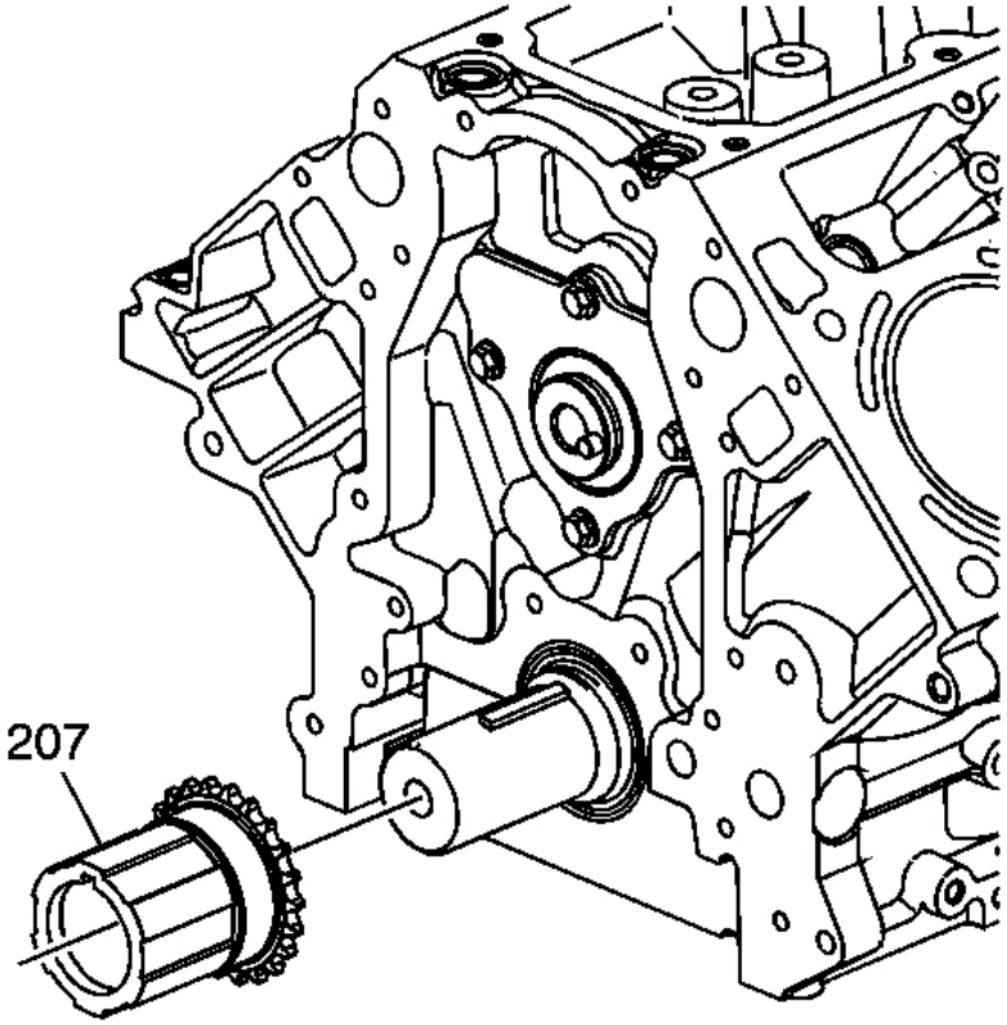

Fig. 263: View Of Crankshaft Sprocket
Courtesy of GENERAL MOTORS CORP.

7. Remove the crankshaft sprocket (207).

cardiagn.com

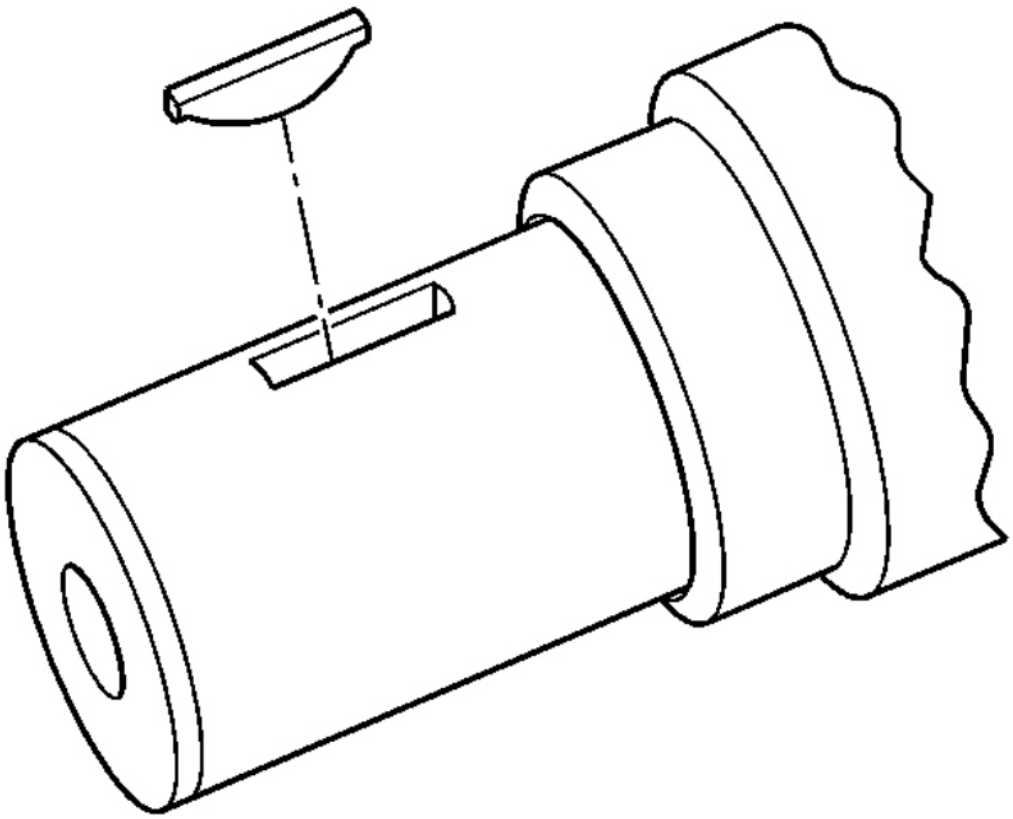

Fig. 264: View Of Crankshaft Key & Keyway
Courtesy of GENERAL MOTORS CORP.

8. Remove the crankshaft sprocket key, as required.
9. Remove the automatic transmission flex plate and bolts. Refer to **Automatic Transmission Flex Plate Removal**.
10. Remove the **J 42386-A** and bolts. See **Special Tools** .

CAMSHAFT POSITION ACTUATOR AND SOLENOID VALVE REMOVAL

Tools Required

- **J 8433** Two Jaw Puller. See **Special Tools** .
- **J 41558** Crankshaft Sprocket Remover. See **Special Tools** .
- **J 41816-2** Crankshaft End Protector. See **Special Tools** .
- **J 42386-A** Flywheel Holding Tool. See **Special Tools** .

cardiagn.com

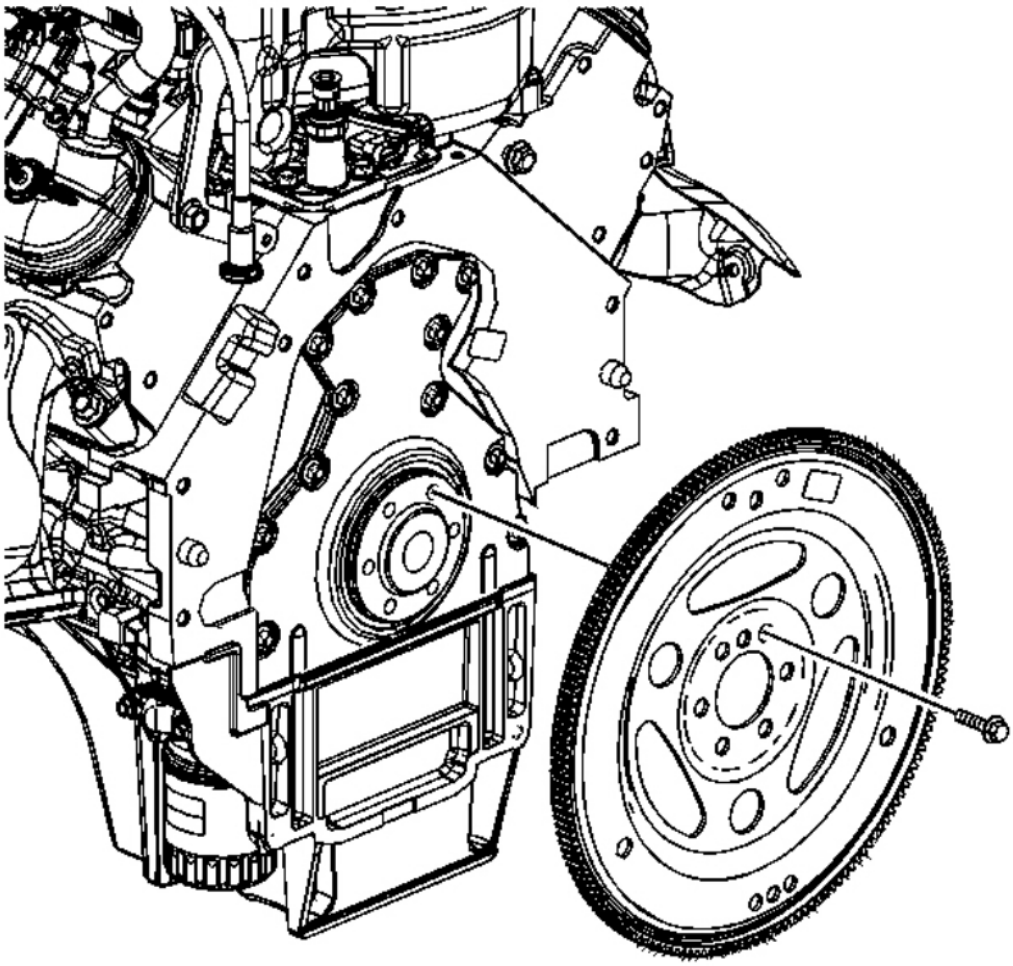

Fig. 265: View Of Flex Plate & Bolts
Courtesy of GENERAL MOTORS CORP.

IMPORTANT:

- **Do not use the camshaft position (CMP) actuator solenoid valve again. Upon installation of the CMP actuator and timing chain, install a NEW valve.**
- **Do not apply threadlock to the flex plate bolts at this time.**

1. Temporarily install the automatic transmission flex plate and bolts. Refer to **Automatic Transmission Flex Plate Installation** .

cardiagn.com

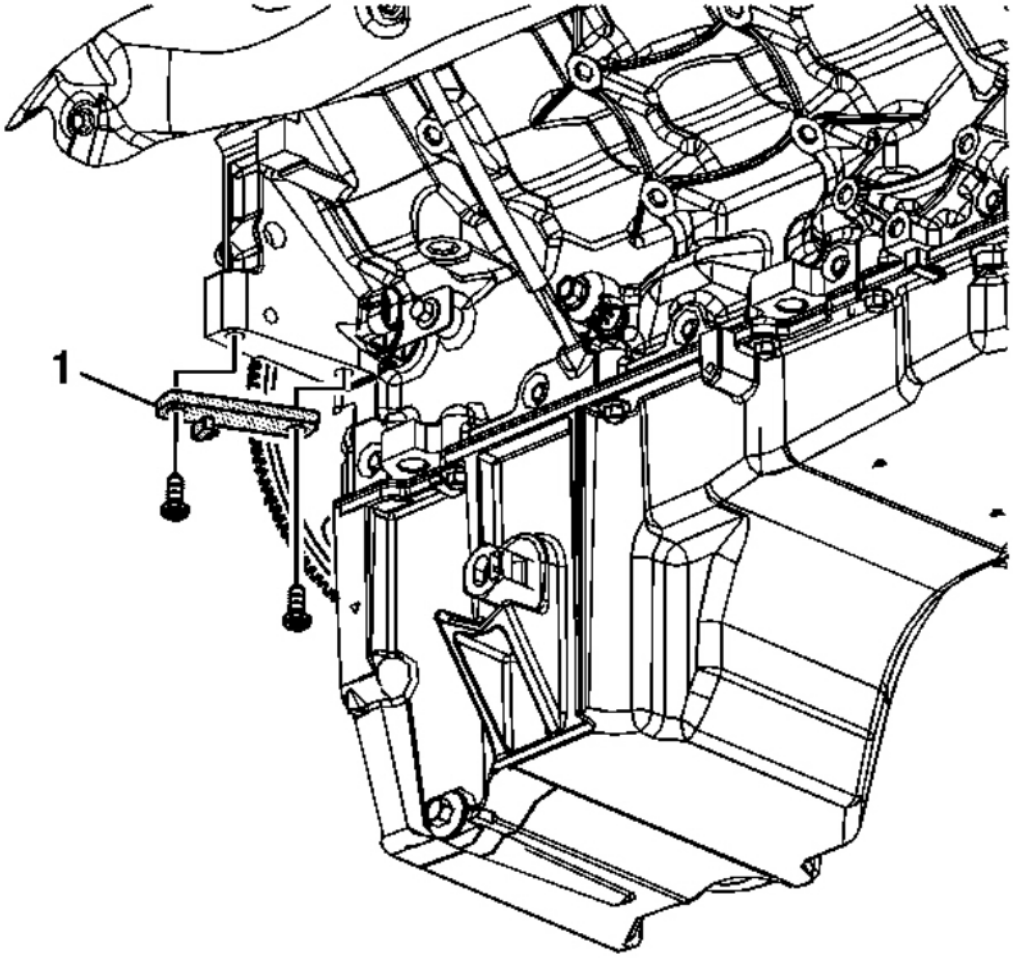

Fig. 266: View Of Special Tool & Bolts
Courtesy of GENERAL MOTORS CORP.

NOTE: **Refer to Fastener Notice .**

2. Install the **J 42386-A** (1) and bolts. See **Special Tools** . Use 1 M10 - 1.5 x 120 mm and 1 M10 - 1.5 x 45 mm bolt for proper tool operation.

   Tighten: Tighten the **J 42386-A** bolts to 50 N. See **Special Tools** .m (37 lb ft).

cardiagn.com

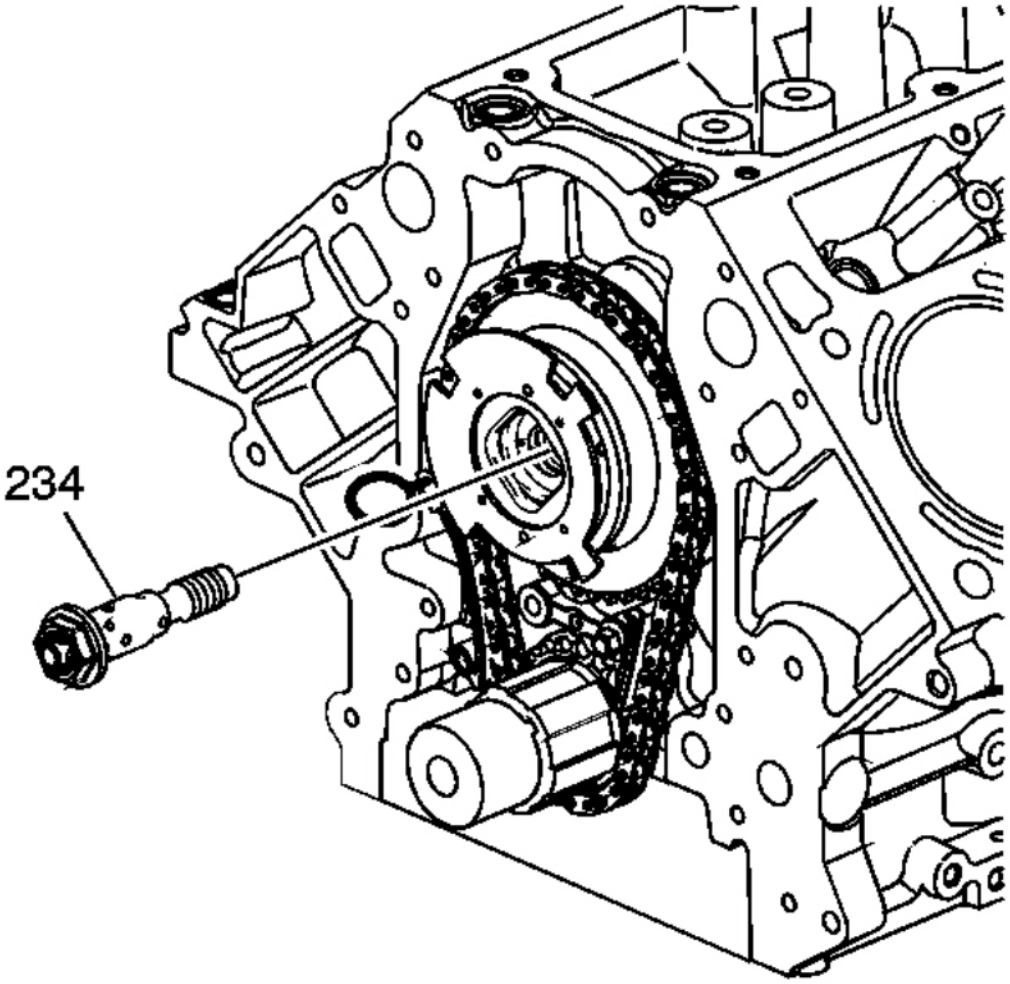

Fig. 267: View Of CMP Actuator Solenoid Valve
Courtesy of GENERAL MOTORS CORP.

3. Remove the CMP actuator solenoid valve (234).
4. Discard the solenoid valve.

cardiagn.com

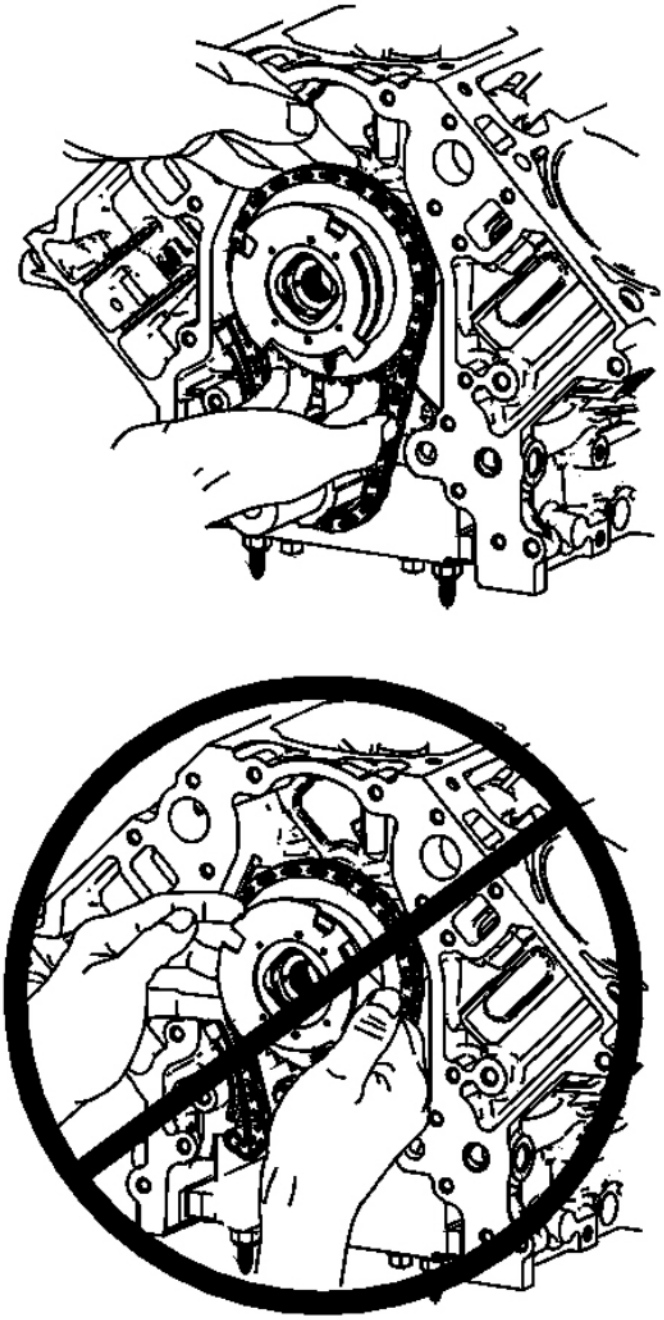

Fig. 268: View Of Proper CMP Actuator Removal
Courtesy of GENERAL MOTORS CORP.

CAUTION: Refer to Camshaft Position Actuator Removal and Installation

cardiagn.com

Caution .

5. Loosen and separate the CMP actuator and timing chain from the camshaft. Position fingers behind the actuator sprocket and pull the actuator away from the front of the camshaft. Never pull on the reluctor wheel when attempting to remove the actuator.

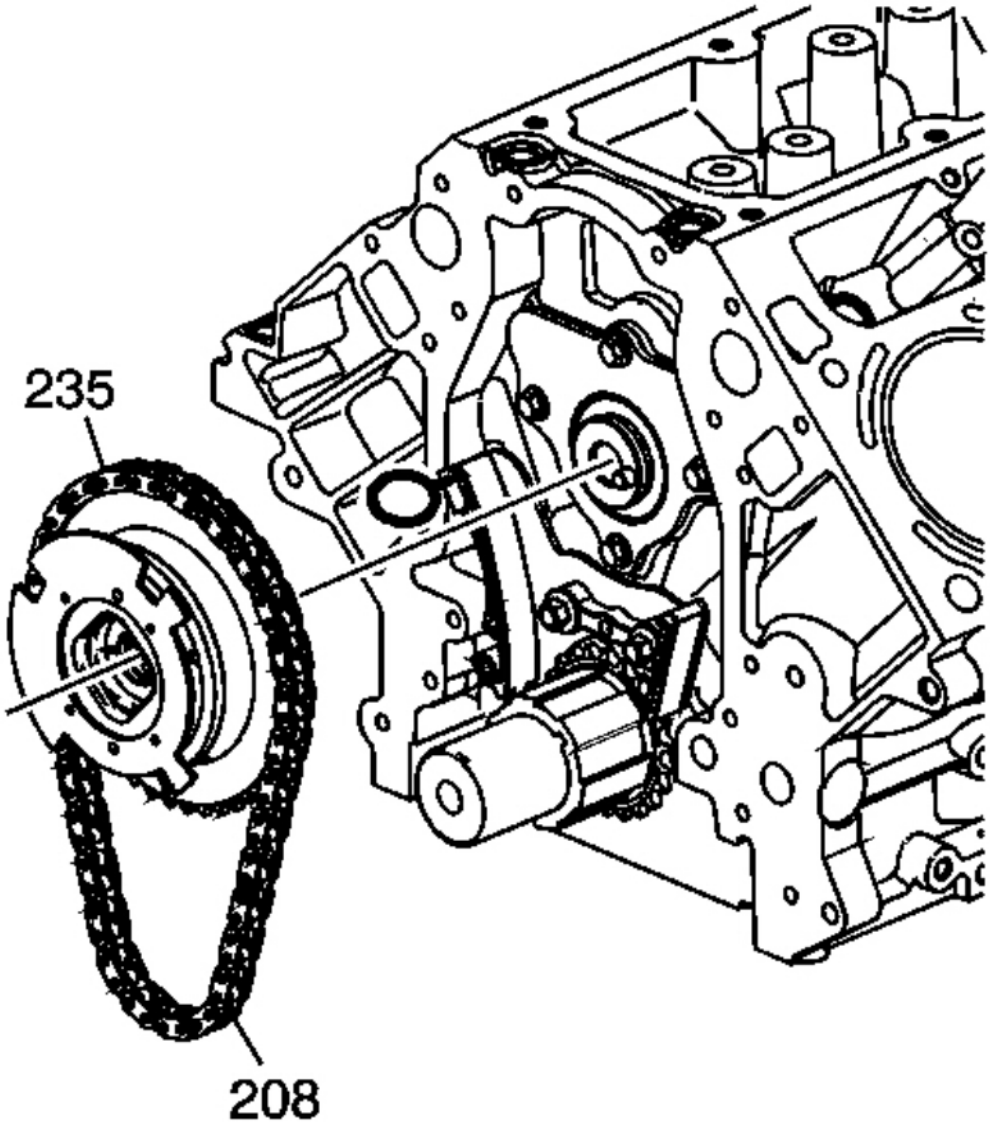

Fig. 269: View Of CMP Actuator & Timing Chain

cardiagn.com

Courtesy of GENERAL MOTORS CORP.

6. Remove the CMP actuator (235) and timing chain (208).

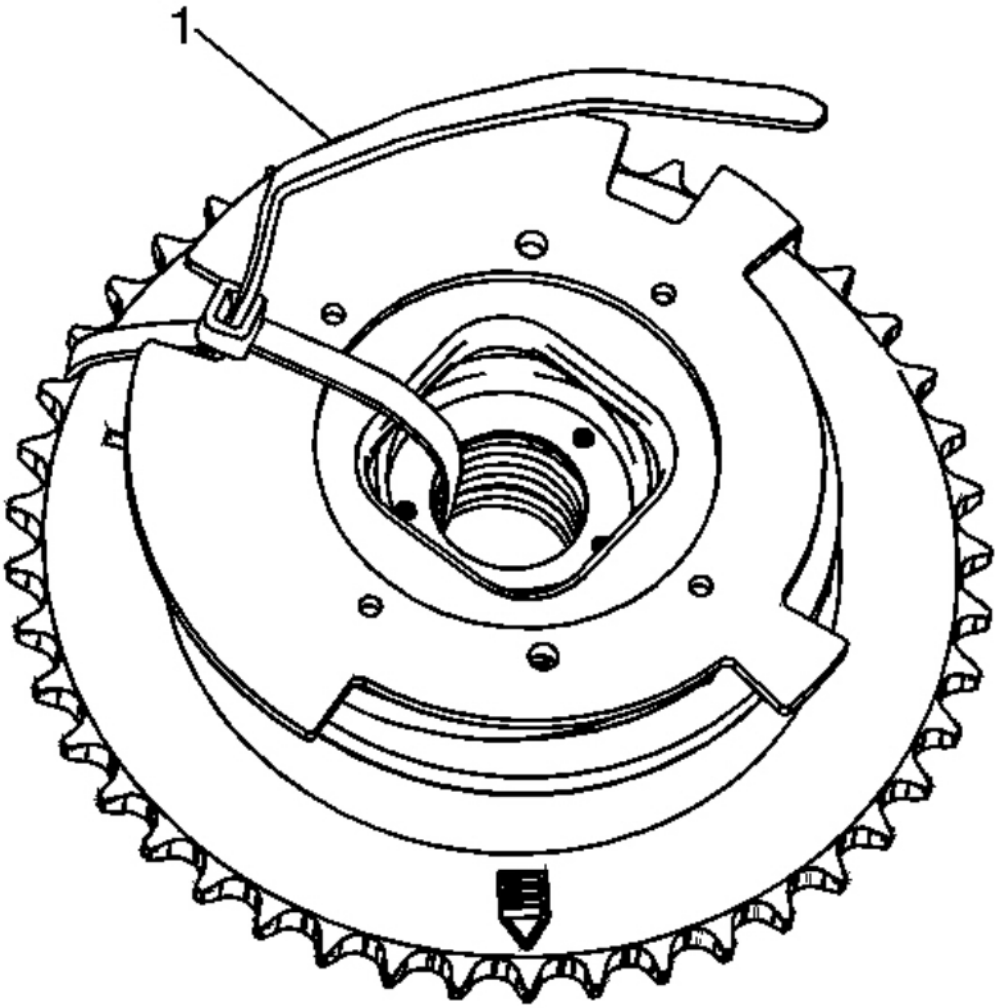

Fig. 270: View Of Tie Strap Through Center Of Actuator
Courtesy of GENERAL MOTORS CORP.

7. Insert a tie strap (1) through the center of the actuator and over the reluctor wheel.

cardiagn.com

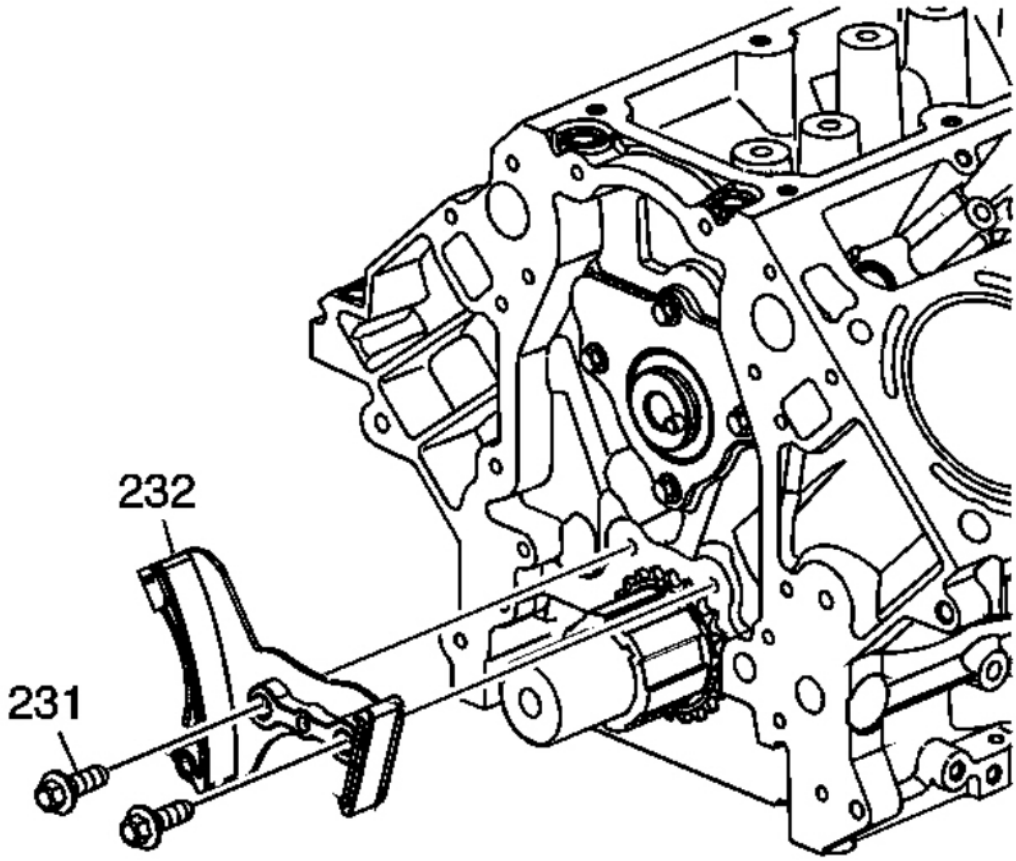

Fig. 271: View Of Timing Chain Tensioner & Bolts
Courtesy of GENERAL MOTORS CORP.

8. Remove the bolts (231) and timing chain tensioner (232).

cardiagn.com

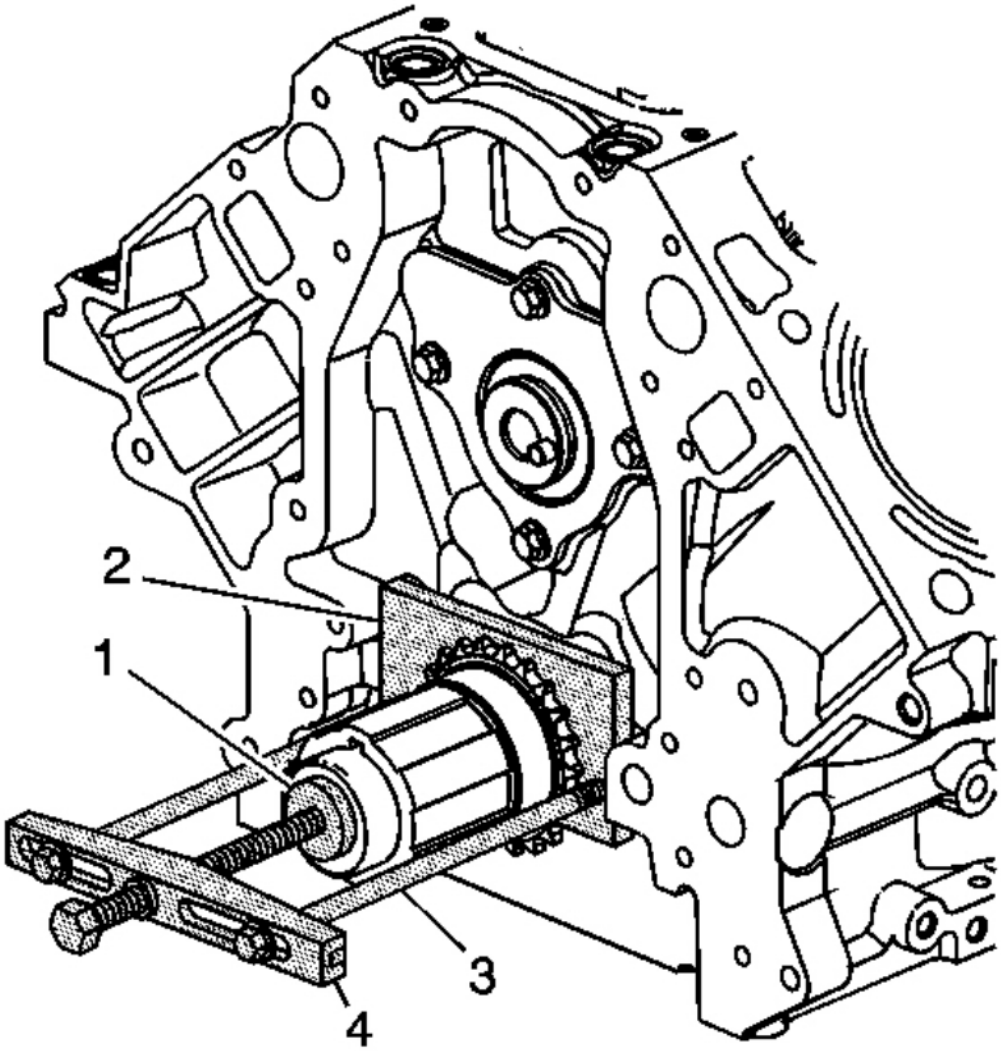

Fig. 272: View Of Crankshaft Sprocket Special Tools
Courtesy of GENERAL MOTORS CORP.

9. Use the **J 41816-2** (1), the **J 41558** (2), bolts (3), and the **J 8433** (4) in order to remove the crankshaft sprocket. See **Special Tools** .

cardiagn.com

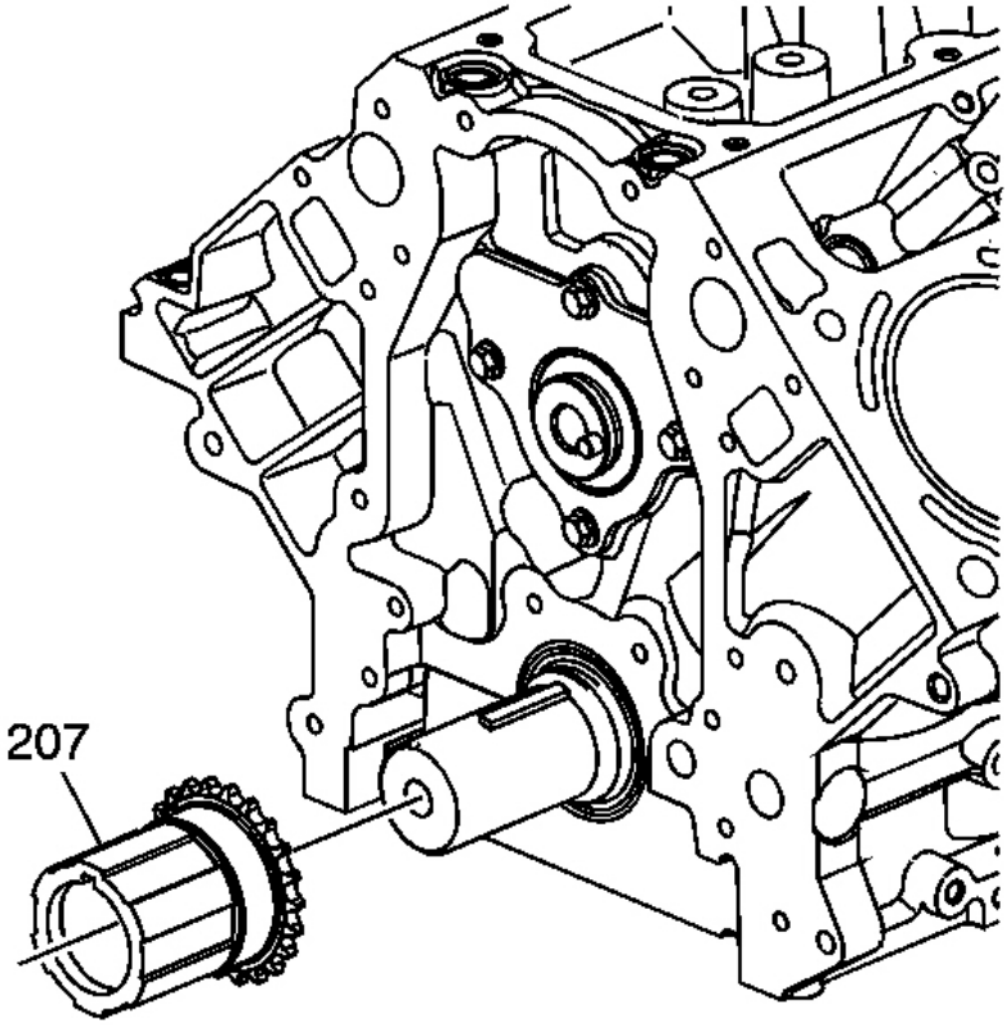

Fig. 273: View Of Crankshaft Sprocket
Courtesy of GENERAL MOTORS CORP.

10. Remove the crankshaft sprocket (207).

cardiagn.com

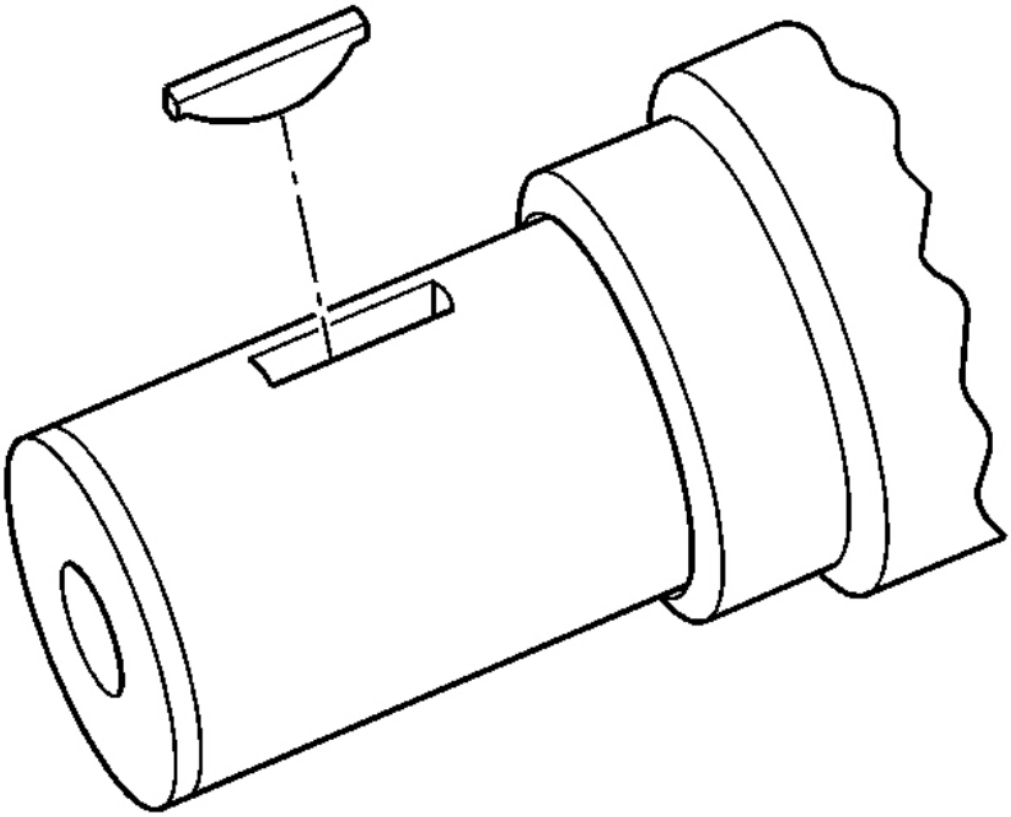

Fig. 274: View Of Crankshaft Key & Keyway
Courtesy of GENERAL MOTORS CORP.

11. Remove the crankshaft sprocket key, as required.
12. Remove the flex plate and bolts. Refer to **Automatic Transmission Flex Plate Removal**.
13. Remove the **J 42386-A** and bolts. See **Special Tools** .

CAMSHAFT REMOVAL

cardiagn.com

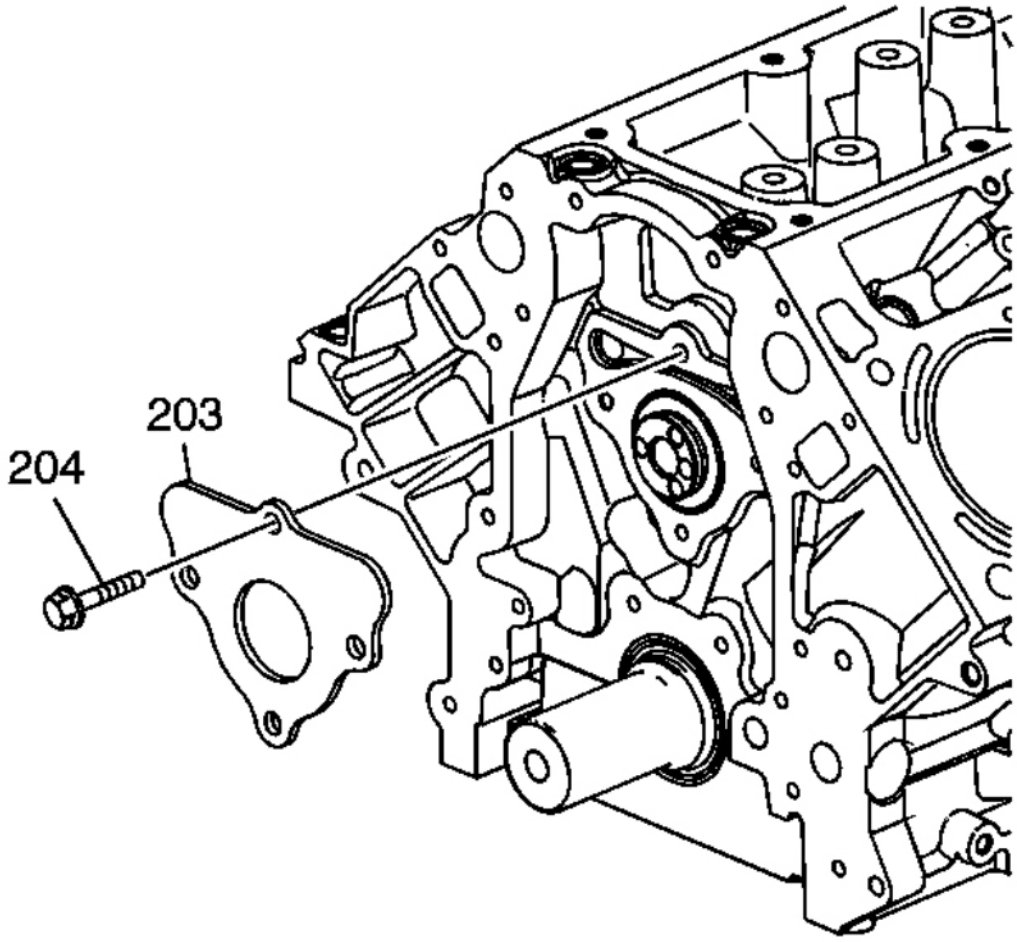

Fig. 275: Camshaft Retainer & Bolts
Courtesy of GENERAL MOTORS CORP.

1. Remove the camshaft retainer bolts (204) and retainer (203).

cardiagn.com

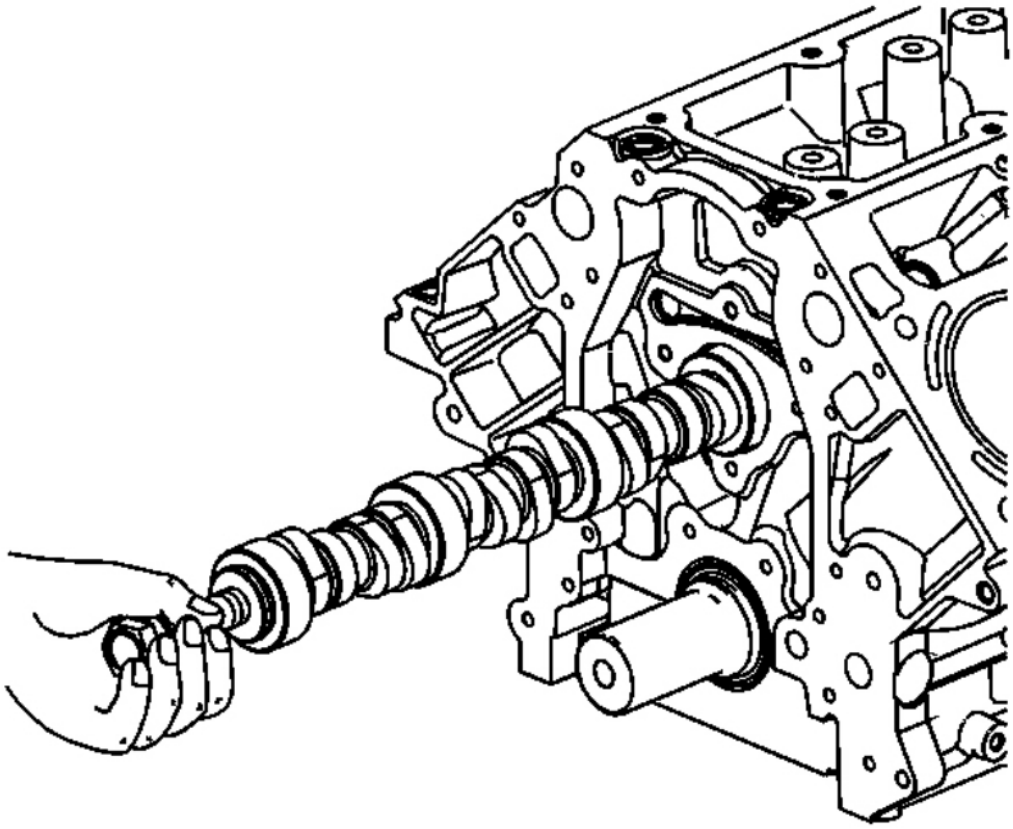

Fig. 276: View Of Camshaft
Courtesy of GENERAL MOTORS CORP.

NOTE: **All camshaft journals are the same diameter, so care must be used in removing or installing the camshaft to avoid damage to the camshaft bearings.**

2. Remove the camshaft.
    1. Install the camshaft sprocket bolt into the camshaft front bolt hole.
    2. Using the bolt as a handle, carefully rotate and pull the camshaft out of the engine block.
    3. Remove the bolt from the front of the camshaft.

PISTON, CONNECTING ROD, AND BEARING REMOVAL

Tools Required

cardiagn.com

- **J 24270** Cylinder Bore Ridge Reamer. See **Special Tools** .
- **J 41556** Connecting Rod Guide. See **Special Tools** .

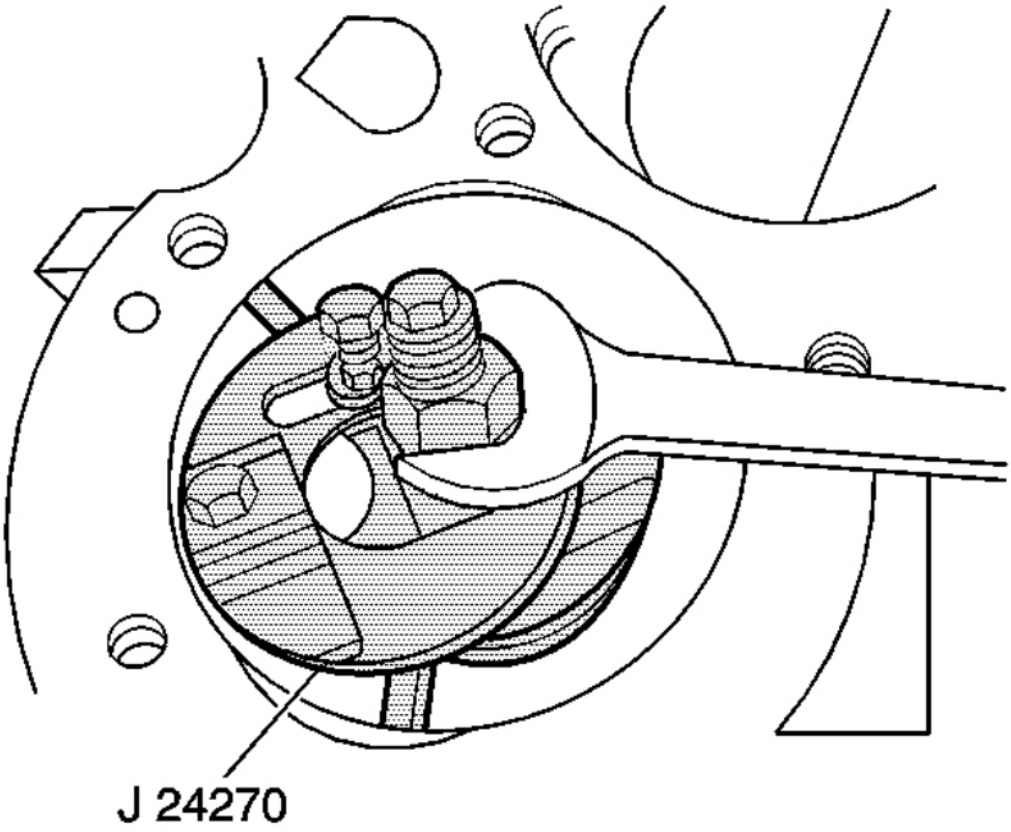

Fig. 277: Removing Cylinder Bore Ring Ridge
Courtesy of GENERAL MOTORS CORP.

1. Use the **J 24270** in order to remove the cylinder bore ring ridge, if required. See **Special Tools** .
    1. Turn the crankshaft until the piston is at the bottom of the stroke.
    2. Place a cloth on top of the piston.
    3. Use the **J 24270** , or equivalent, in order to remove a cylinder ring ridge. See **Special Tools** .
    4. Turn the crankshaft so the piston is at the top of the stroke.
    5. Remove the cloth.
    6. Remove the cutting debris from the cylinder and piston.

cardiagn.com

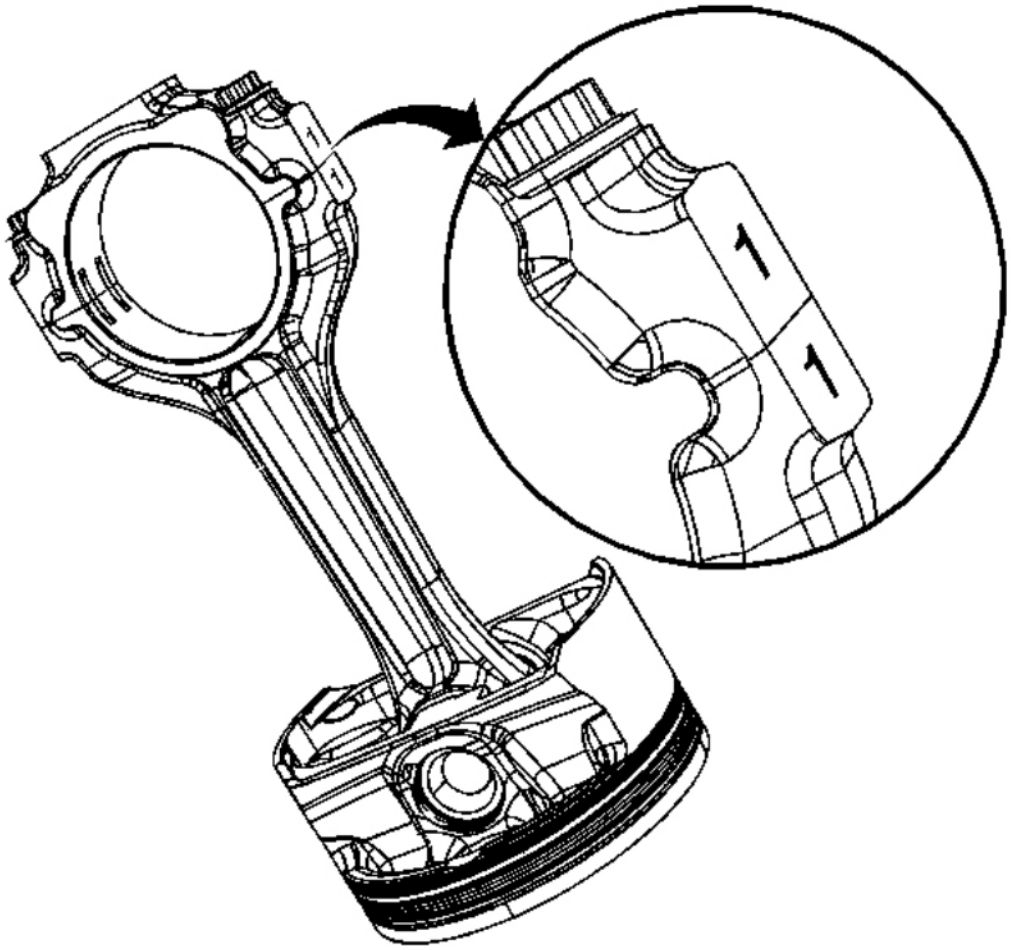

Fig. 278: Matchmarks On Connecting Rods & Caps
Courtesy of GENERAL MOTORS CORP.

2. Using a paint stick or etching tool, place matchmarks or numbers on the connecting rods and the connecting rod caps. The connecting rods and caps MUST be assembled to their original position and direction.
    - A stamping mark on the side of the connecting rod, at the crankshaft journal, may affect component geometry.
    - Mark the top of the piston to the specific cylinder bore.

cardiagn.com

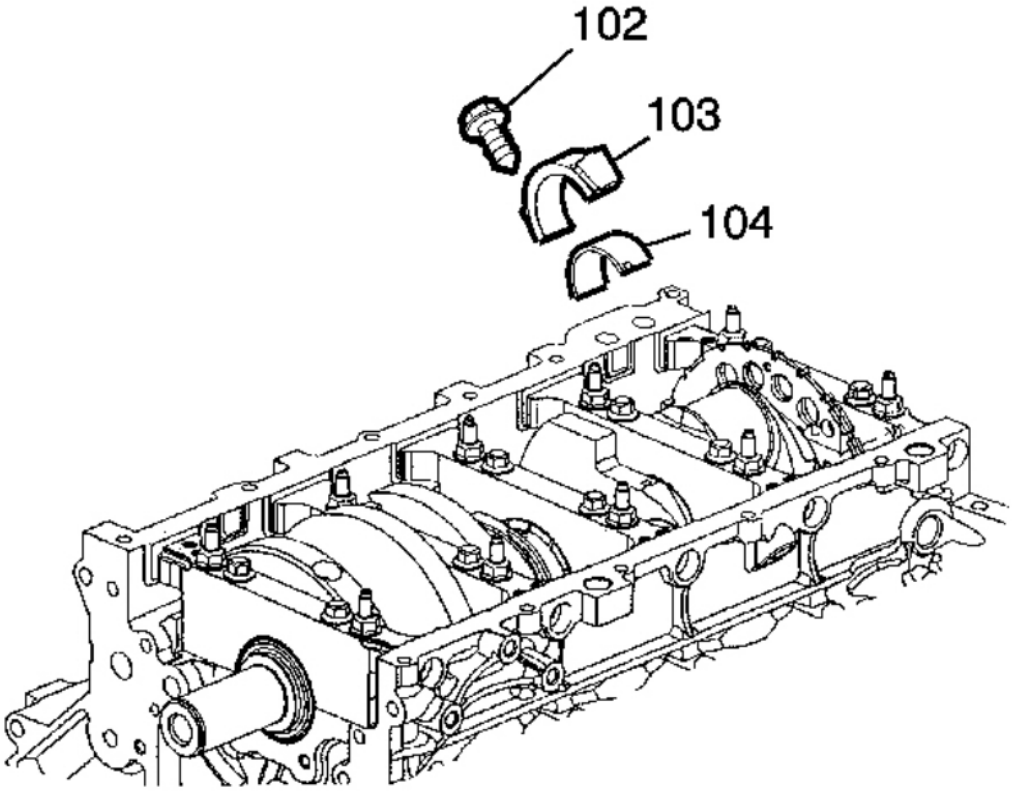

Fig. 279: Connecting Rod Bolt, Cap & Bearing
Courtesy of GENERAL MOTORS CORP.

IMPORTANT: Mark, sort, or organize the connecting rod bearings so they may be installed to their original position and location. The connecting rods and the bearing caps are NOT interchangeable. Refer to Separating Parts .

3. Remove the connecting rod bolts (102), cap (103) and bearing (104).

cardiagn.com

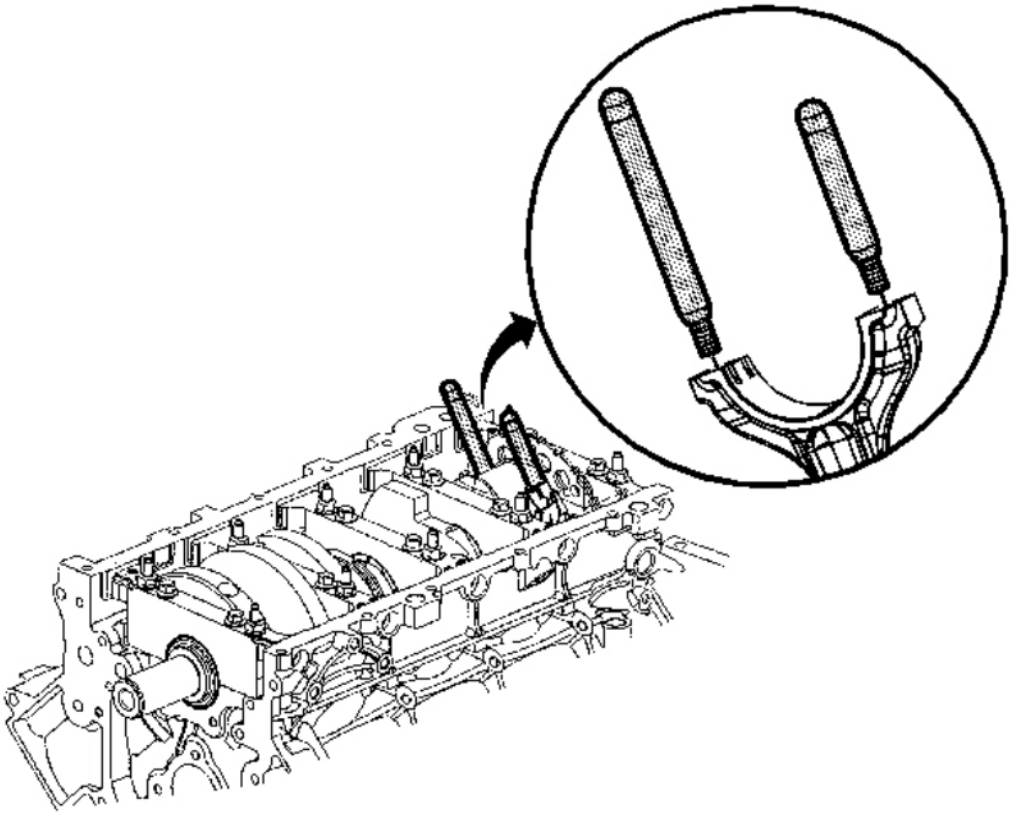

Fig. 280: View Of Piston & Connecting Rod Assembly
Courtesy of GENERAL MOTORS CORP.

4. Install the **J 41556** to the connecting rod. See **Special Tools** .

cardiagn.com

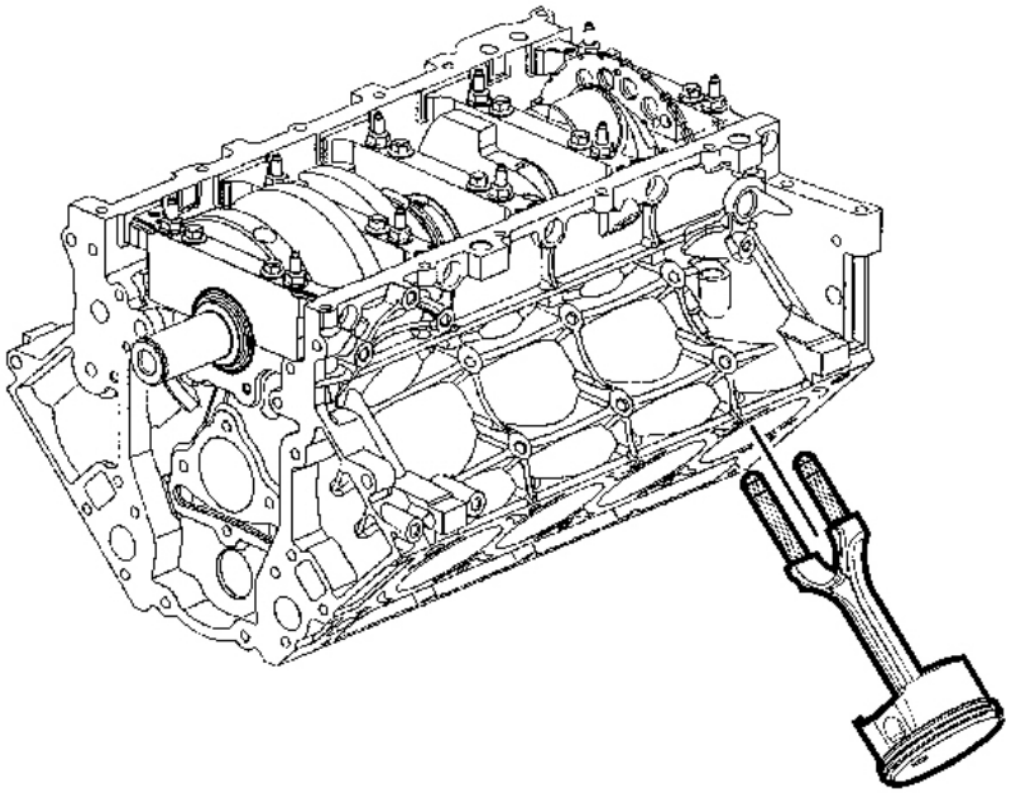

Fig. 281: Piston, Connecting Rod & Cylinder Bore
Courtesy of GENERAL MOTORS CORP.

5. Using a hammer, tap lightly on the end of the **J 41556** in order to remove the piston and connecting rod assembly from the cylinder bore. See **Special Tools** .
6. Remove the **J 41556** . See **Special Tools** .

cardiagn.com

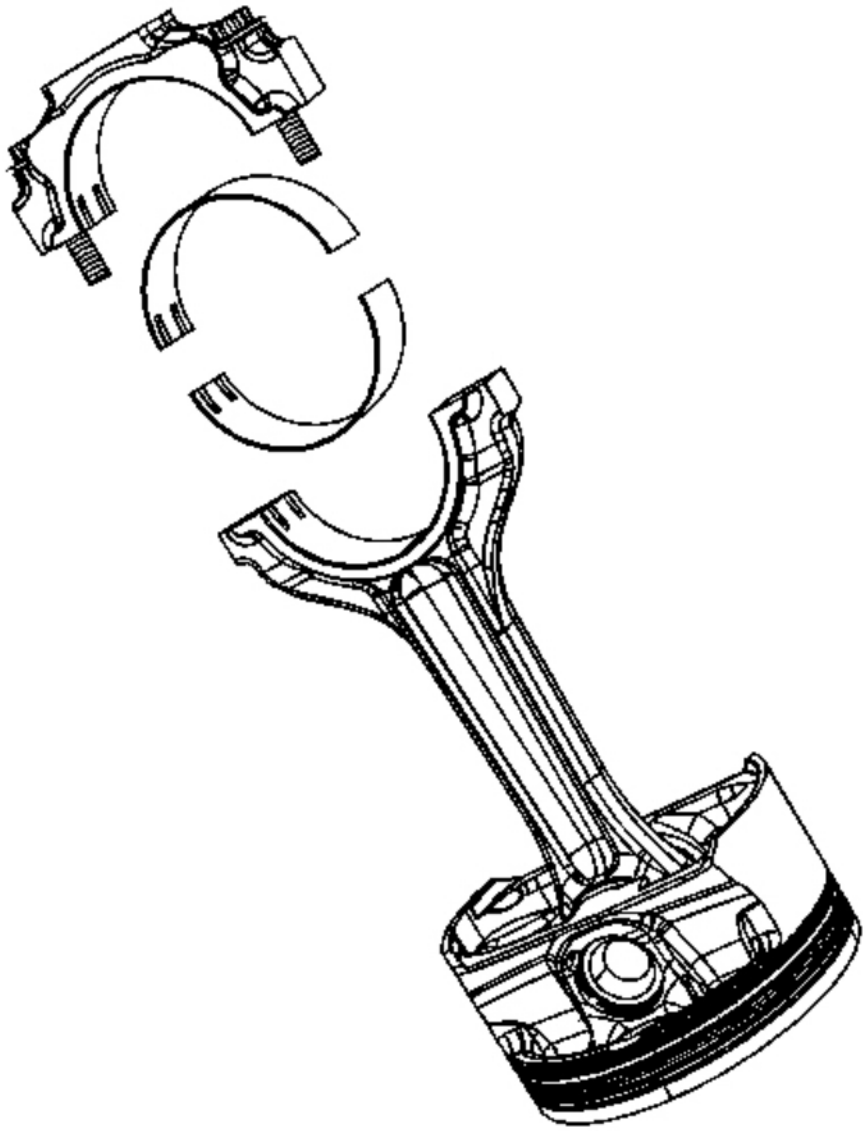

Fig. 282: View Of Piston, Connecting Rod & Bearing Assembly
Courtesy of GENERAL MOTORS CORP.

7. Upon removal of the piston and connecting rod assembly, assemble the connecting rod cap and bolts onto the matching connecting rod.

CRANKSHAFT AND BEARINGS REMOVAL

cardiagn.com

Tools Required

- **J 6125-1B** Slide Hammer
- **J 41818** Crankshaft Bearing Cap Remover. See **Special Tools** .

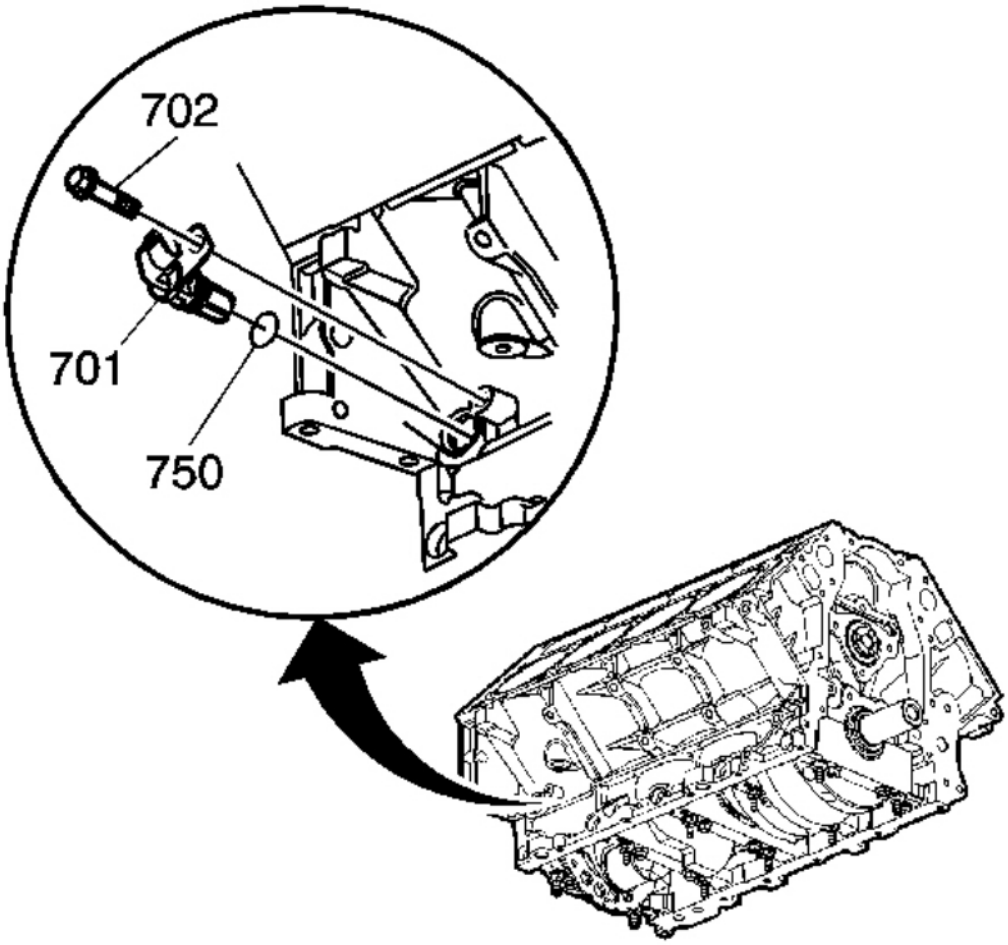

Fig. 283: CKP Sensor, Bolt & O-Ring
Courtesy of GENERAL MOTORS CORP.

IMPORTANT:

- **The crankshaft bearing caps are machined with the engine block, for the proper clearances. Mark or identify each crankshaft bearing cap location and direction before removal. The crankshaft bearing caps MUST be installed to their original position and direction.**

cardiagn.com

- **Do not use the bearing cap M8 side bolts again.**

1. Remove the crankshaft position (CKP) sensor bolt (702).
2. Remove the CKP sensor (701).
3. Remove the O-ring (750) from the sensor, as required.

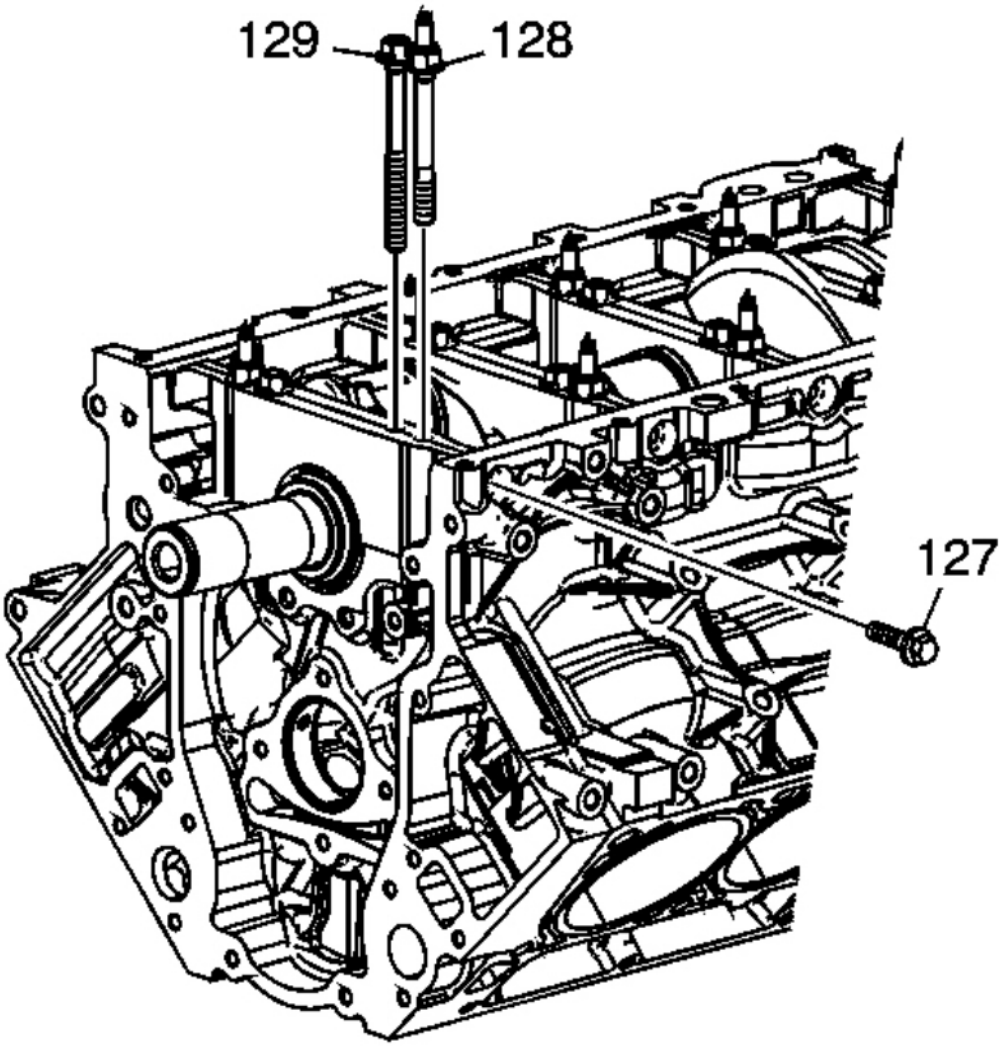

Fig. 284: Identifying Bearing Cap Bolts & Studs
Courtesy of GENERAL MOTORS CORP.

cardiagn.com

4. Remove the crankshaft bearing cap M8 bolts (127).
5. Remove the bearing cap M10 bolts (129) and studs (128).

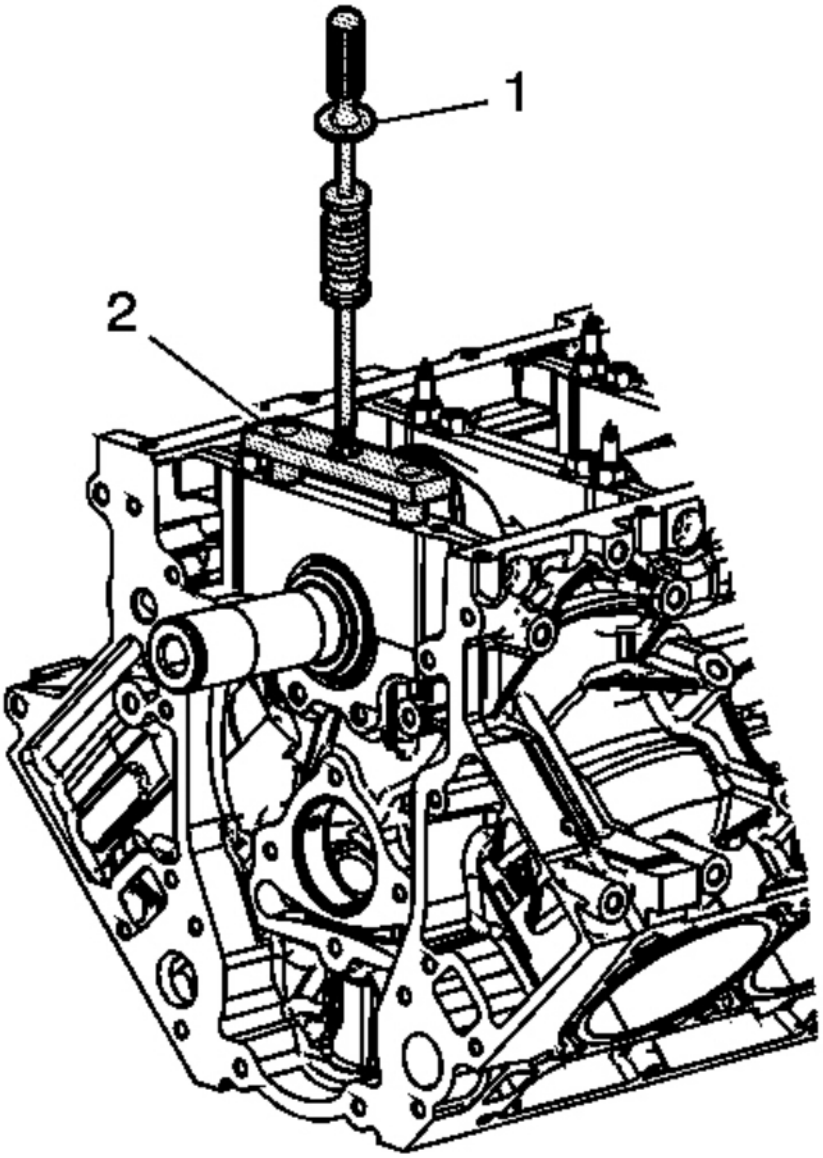

Fig. 285: View Of Crankshaft Bearing Cap Bolts (M10)
Courtesy of GENERAL MOTORS CORP.

cardiagn.com

NOTE: **Refer to Fastener Notice .**

6. Install the **J 41818** (2). See **Special Tools** .

   Tighten: Tighten the **J 41818** (2) bolts to 11 N. See **Special Tools** .m (100 lb in).

7. Install the **J 6125-1B** (1) to the **J 41818** (2) in order to remove the crankshaft bearing caps. See **Special Tools** .

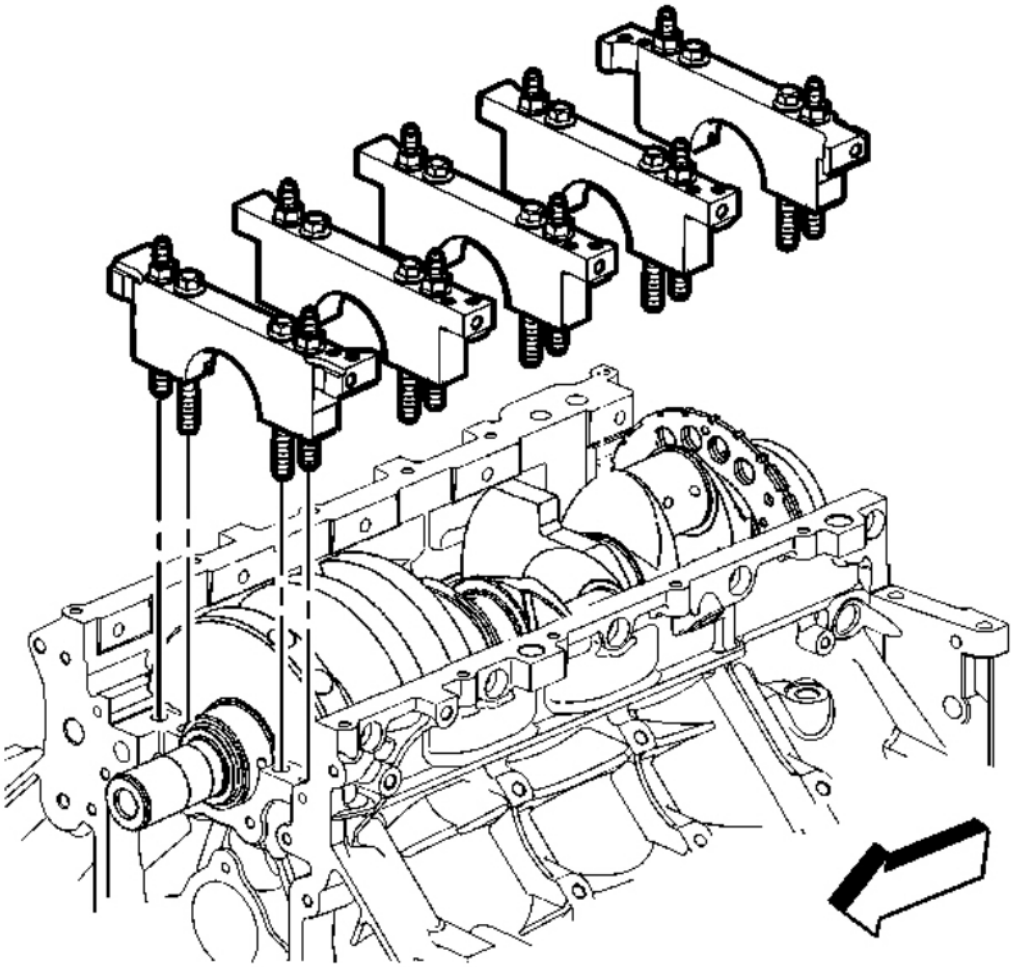

Fig. 286: View Of Crankshaft Main Bearing Caps
Courtesy of GENERAL MOTORS CORP.

8. Remove the bearing caps.

cardiagn.com

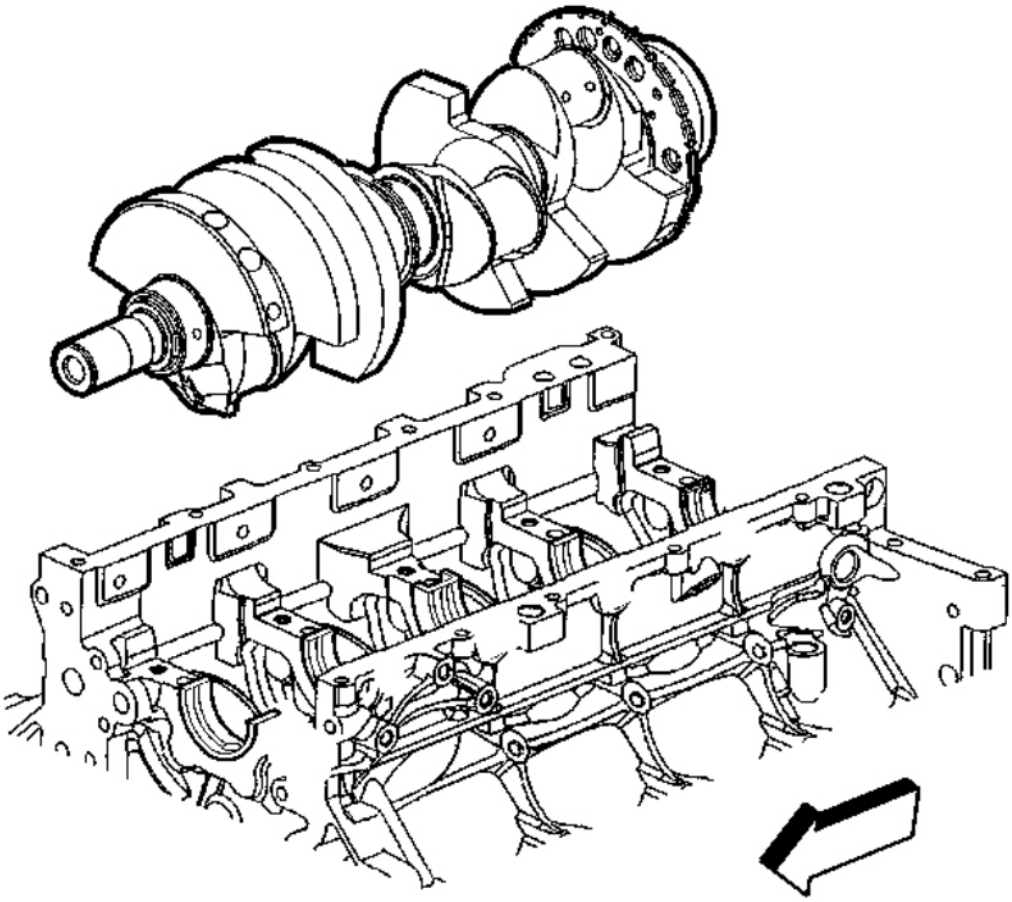

Fig. 287: View Of Crankshaft & Engine Block
Courtesy of GENERAL MOTORS CORP.

9. Remove the crankshaft.

cardiagn.com

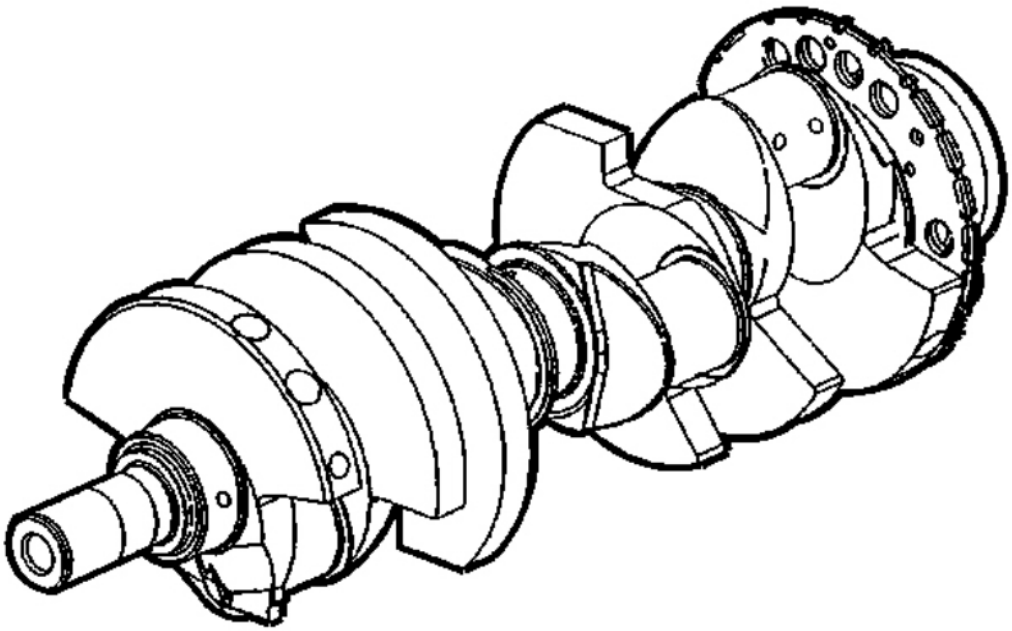

Fig. 288: View Of Camshaft
Courtesy of GENERAL MOTORS CORP.

IMPORTANT: Use care when handling the crankshaft. Avoid damage to the CKP sensor reluctor ring teeth. Nicks, burrs or other damage to the teeth may effect on-board diagnostics (OBD) II system performance.

10. Lay the crankshaft onto 2 wooden V-blocks or other protective surface.

cardiagn.com

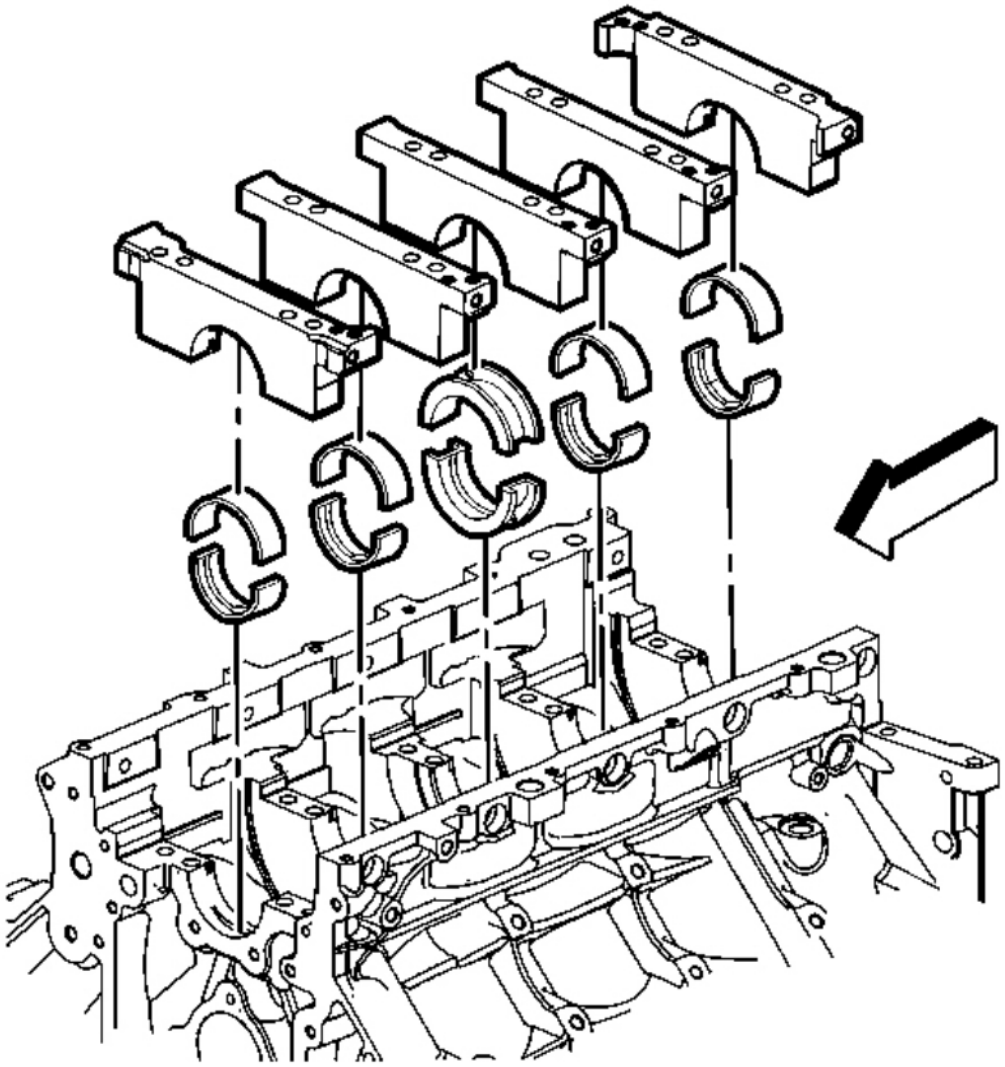

Fig. 289: View Of Crankshaft Bearings & Bearing Caps
Courtesy of GENERAL MOTORS CORP.

11. Remove the crankshaft bearings from the bearing caps and the engine block.
12. Mark, sort, or organize the crankshaft bearings so they may be installed to their original position and location. Refer to **Separating Parts** .

ENGINE BLOCK PLUG REMOVAL

cardiagn.com

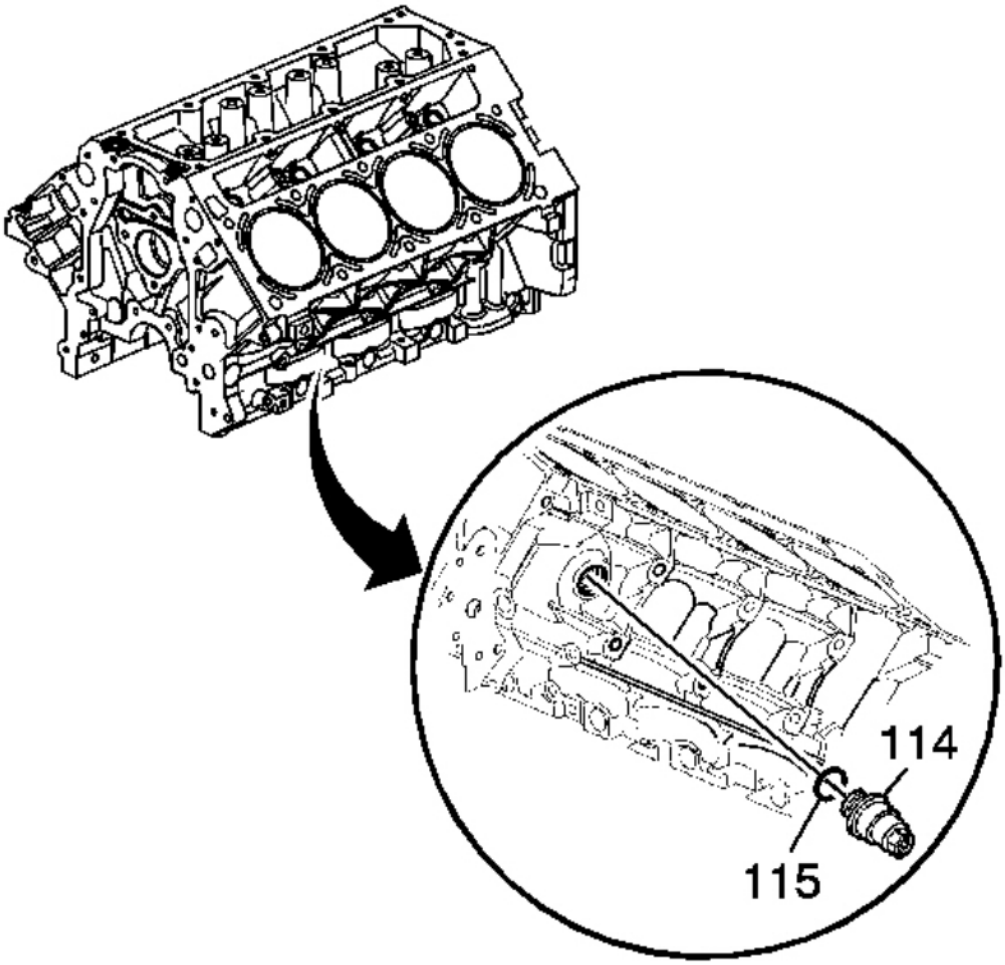

Fig. 290: Identifying Engine Block Coolant Heater
Courtesy of GENERAL MOTORS CORP.

1. Remove the engine block coolant heater (114) and seal (115).

cardiagn.com

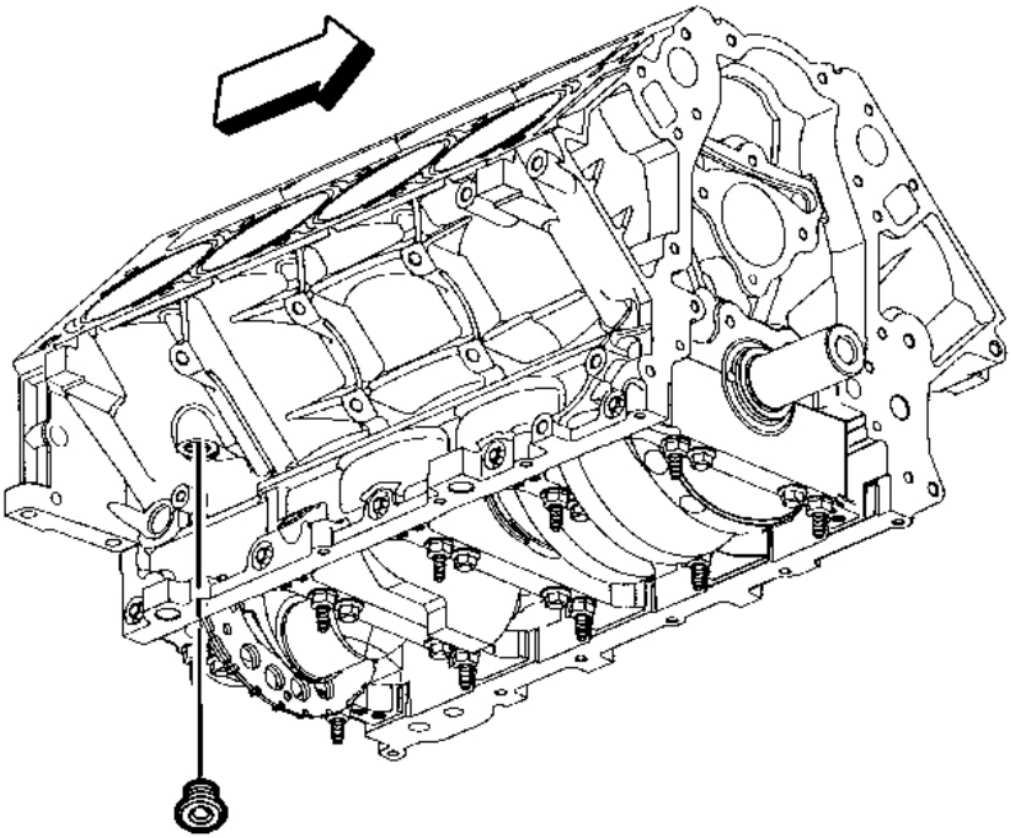

Fig. 291: Identifying Plug Location On Underside Of Block
Courtesy of GENERAL MOTORS CORP.

2. Remove the engine block right rear coolant drain hole plug and seal.

cardiagn.com

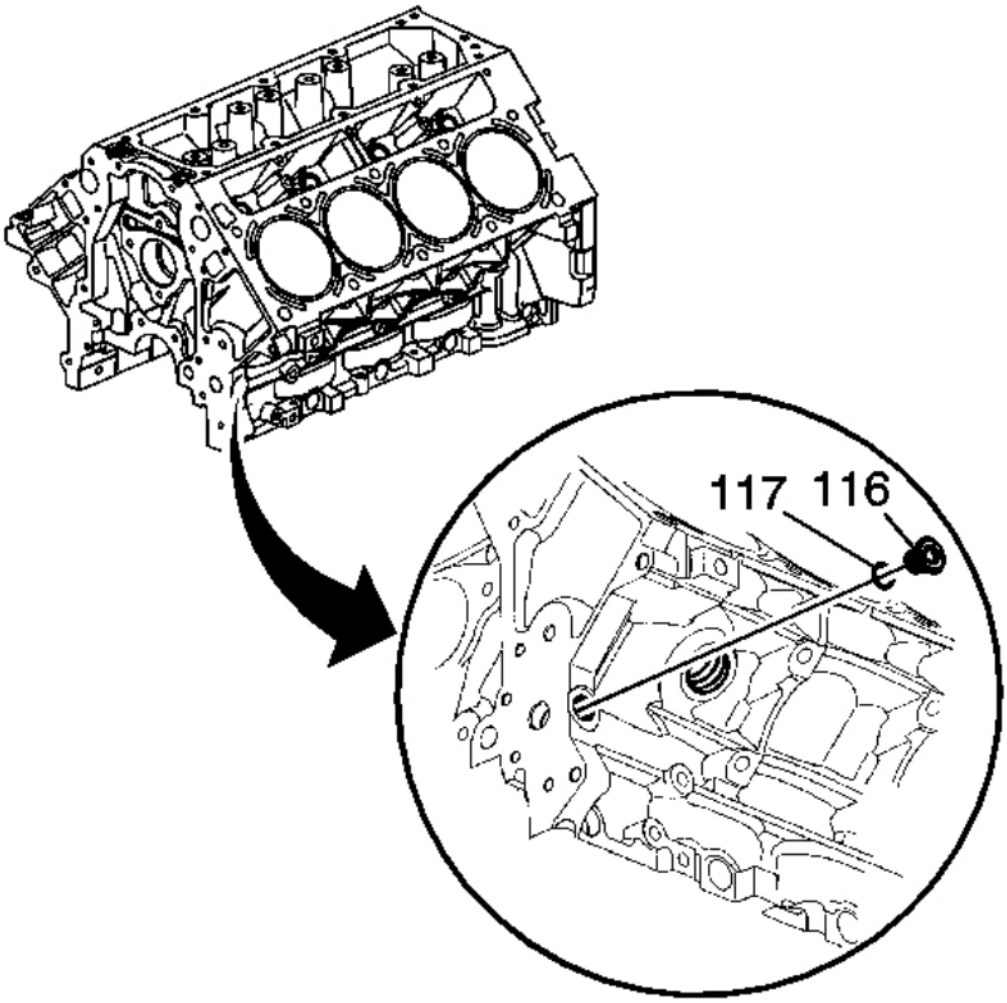

Fig. 292: Engine Block Left Front Oil Gallery Plug & Seal
Courtesy of GENERAL MOTORS CORP.

3. Remove the engine block left front oil gallery plug (116) and seal (117).

cardiagn.com

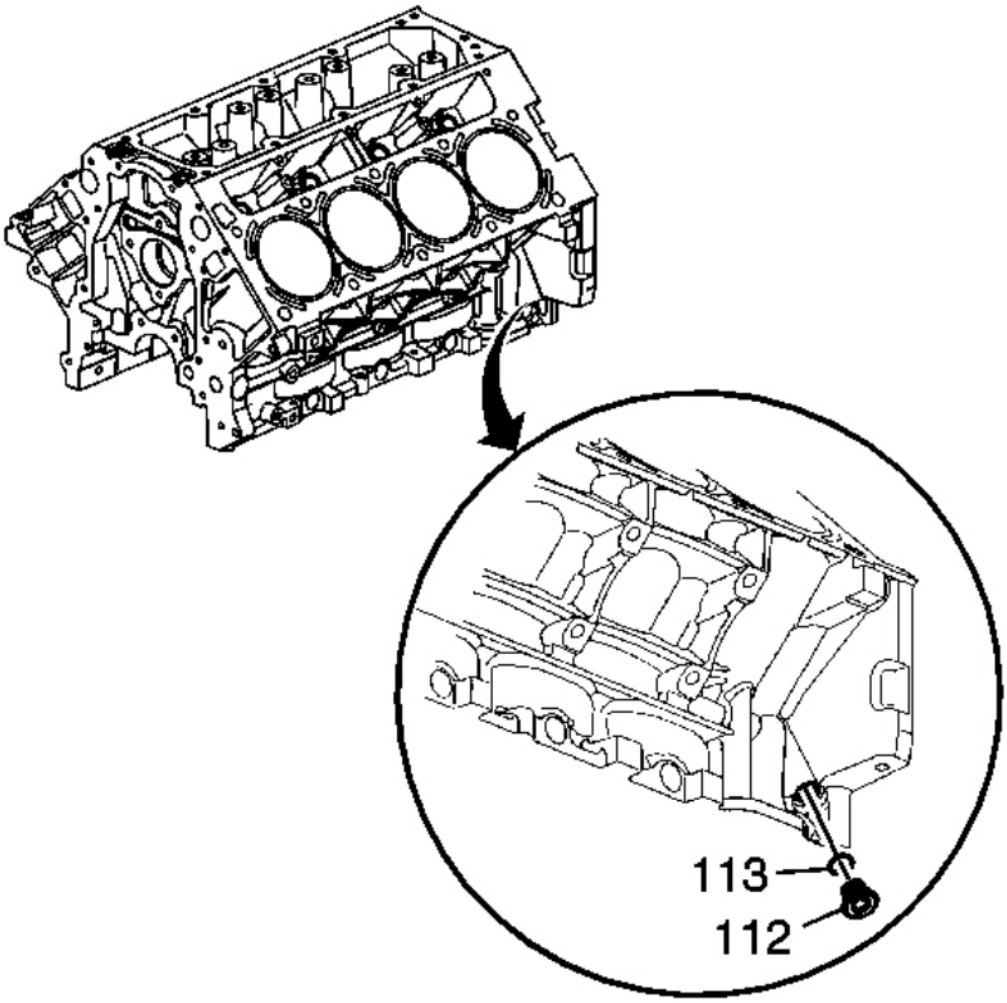

Fig. 293: Locating Engine Block Left Rear Oil Gallery Plug & Seal
Courtesy of GENERAL MOTORS CORP.

4. Remove the engine block left rear oil gallery plug (112) and seal (113).

   If the block plug and coolant heater sealing washers are not damaged, they may be used during assembly.

cardiagn.com

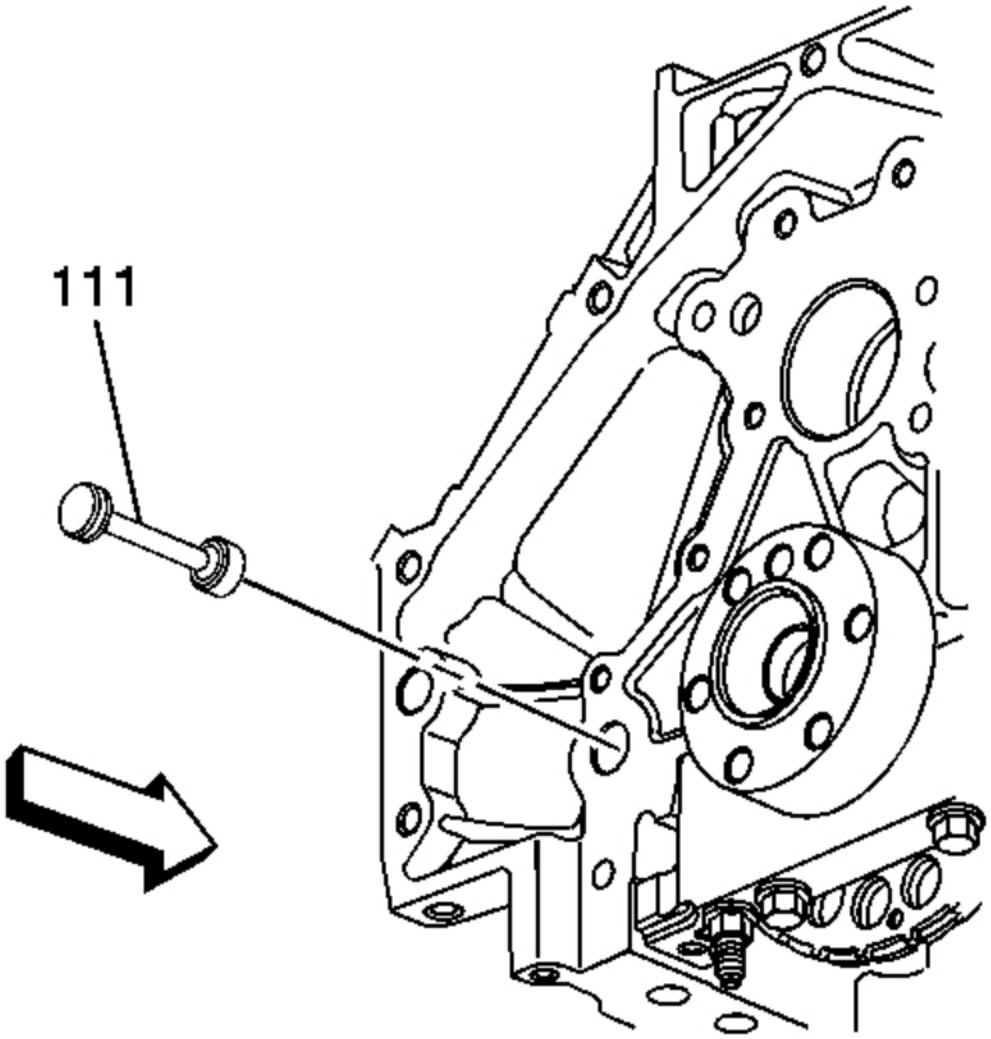

Fig. 294: Identifying Engine Block Rear Oil Gallery Plug & Seal
Courtesy of GENERAL MOTORS CORP.

5. Remove the engine block rear oil gallery plug (111) and seal.
6. Inspect the O-ring seal of the rear oil gallery plug.

   If the O-ring seal is not cut or damaged, the plug and O-ring seal may be used during assembly.

cardiagn.com

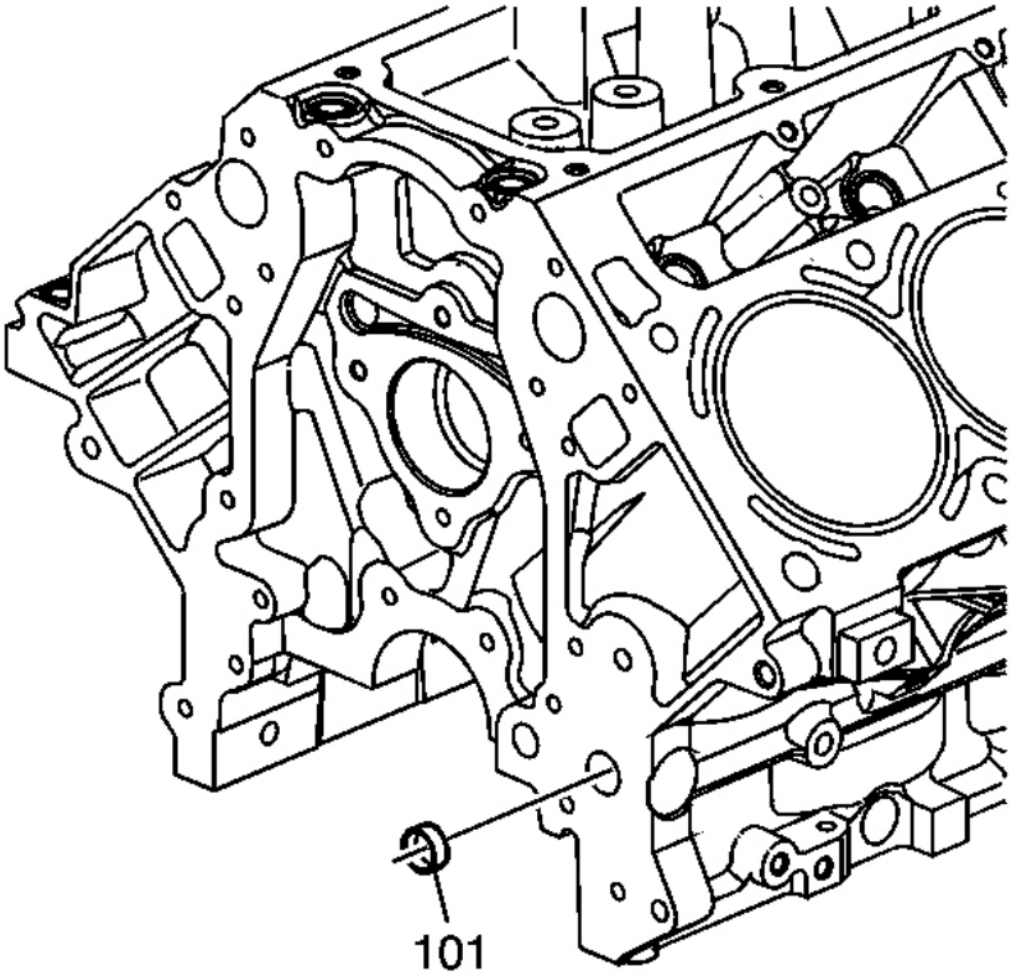

Fig. 295: View Of Engine Block Front Oil Gallery Plug
Courtesy of GENERAL MOTORS CORP.

IMPORTANT: Remove the front oil gallery plug, only if service is required. If the front oil gallery plug is removed, a NEW oil gallery plug must be installed.

7. Remove the engine block front oil gallery plug (101).

cardiagn.com

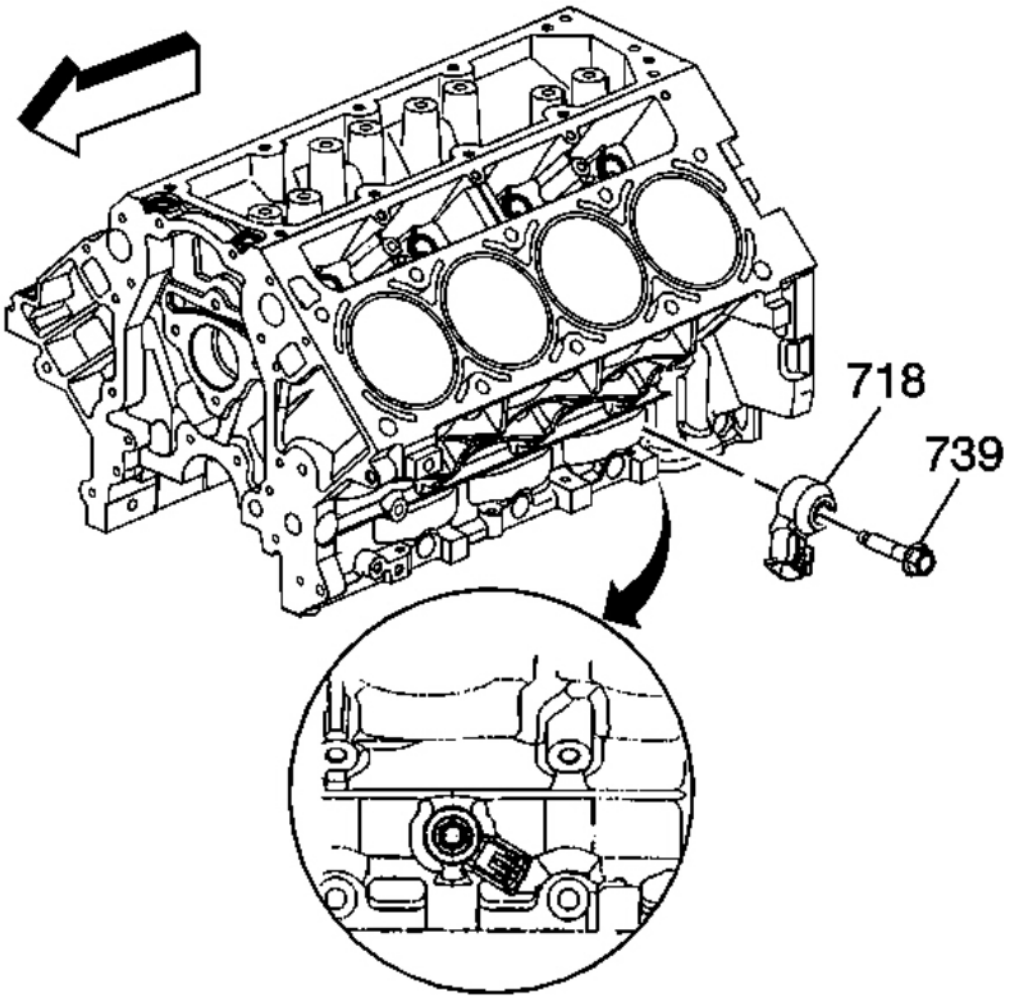

Fig. 296: Left Side Knock Sensor & Bolt
Courtesy of GENERAL MOTORS CORP.

8. Remove the left side knock sensor (718) and bolt (739).

cardiagn.com

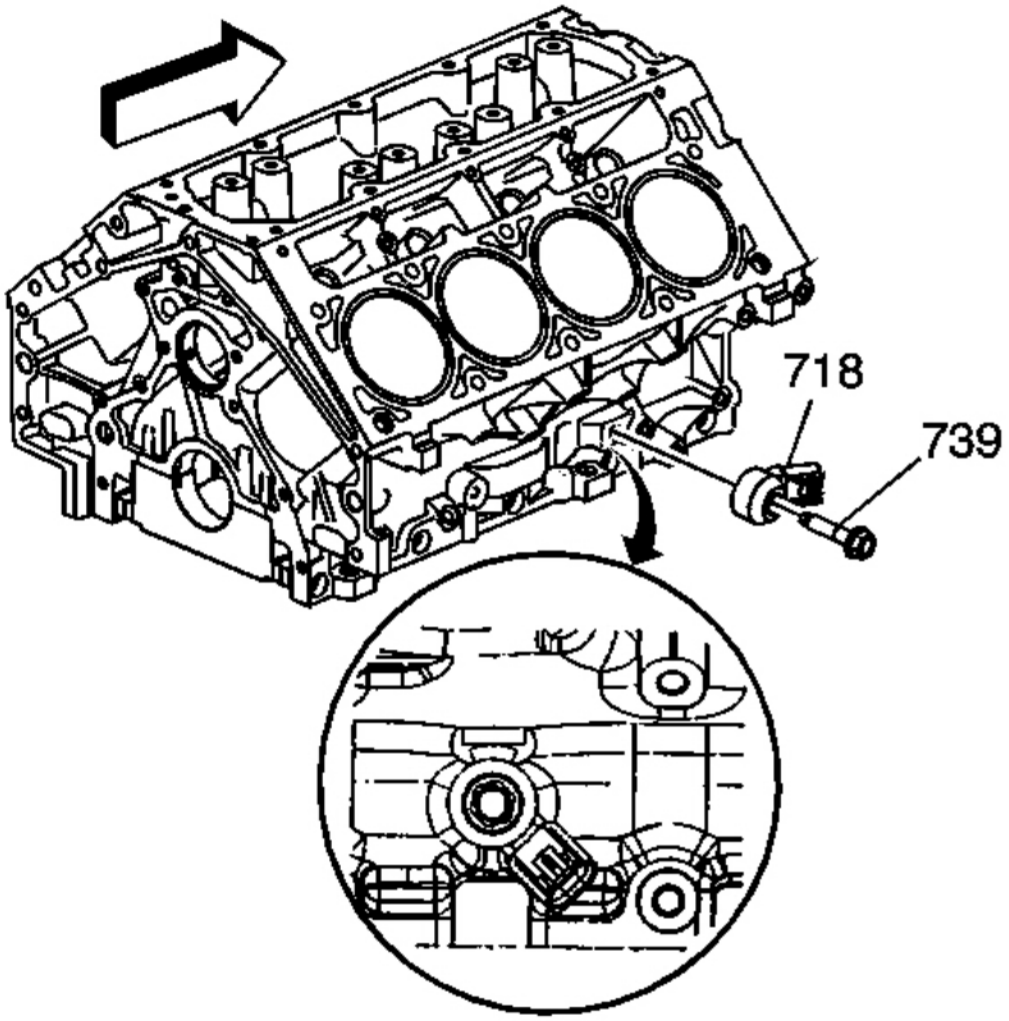

Fig. 297: Right Side Knock Sensor & Bolt
Courtesy of GENERAL MOTORS CORP.

9. Remove the right side knock sensor (718) and bolt (739).

ENGINE BLOCK CLEANING AND INSPECTION

Tools Required

- **J 8087** Cylinder Bore Gage. See **Special Tools** .
- **J 42385-100** Head/Main Bolt Thread Repair Kit. See **Special Tools** .

cardiagn.com

CLEANING PROCEDURE

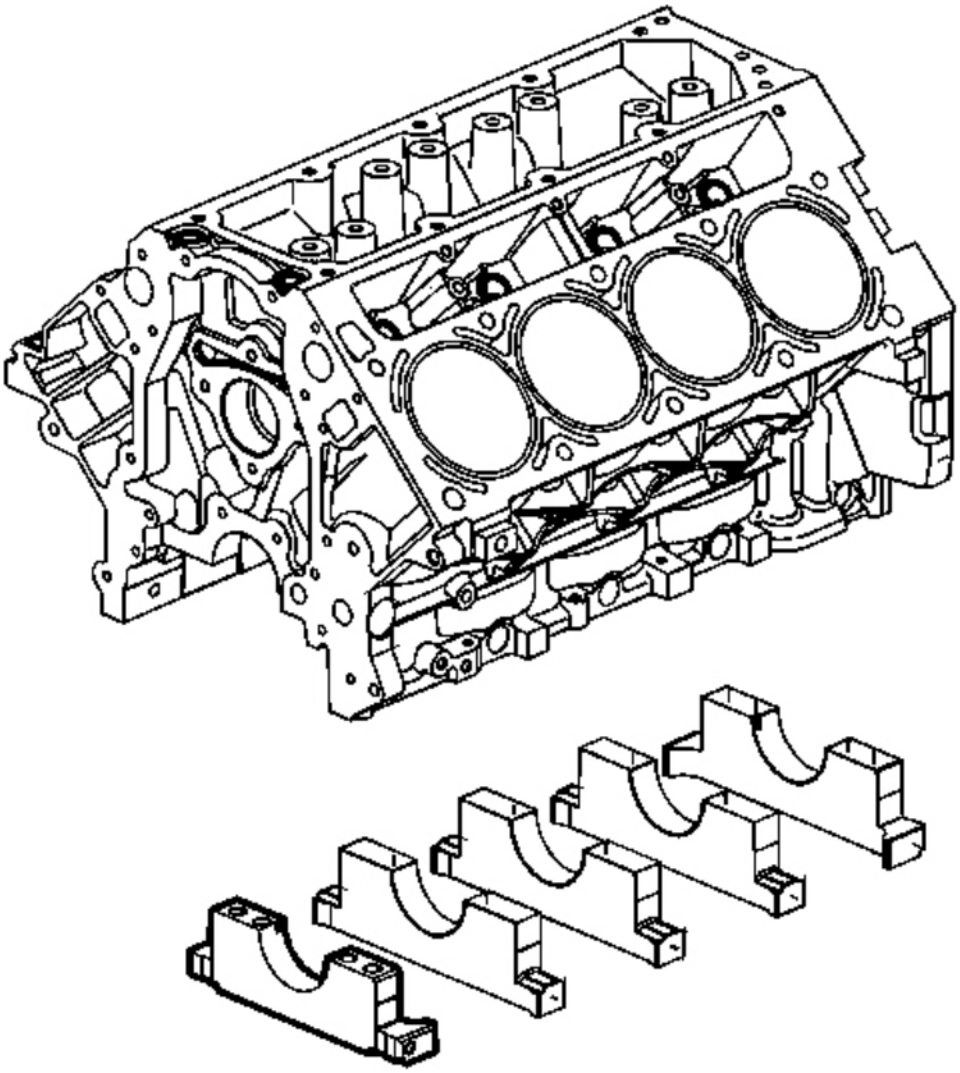

Fig. 298: Main Bearing Caps
Courtesy of GENERAL MOTORS CORP.

NOTE: **Do not use a caustic solution to clean the aluminum engine block.**

IMPORTANT: When cleaning the engine block in a thermal type oven, do not exceed 232°C

cardiagn.com

(450°F).

Clean the following components:

- Remove all sludge, dirt, or debris using a cleaning solvent or thermal type oven. Refer to **Cleanliness and Care** .
- Gasket surfaces

  Refer to **Replacing Engine Gaskets** .

- Coolant passages
- Oil galleries
- Main bearing caps
- Cylinder head bolt holes to remove threadlocking material

  Thread repair tool J 42385-107 may be used to clean the threads of any residual threadlocking material.

INSPECTION PROCEDURE

1. Inspect the following components:
   - Cylinder walls for excessive scratches, gouging, or ring ridge
   - Cylinder bores for excessive ring ridge at the top of the cylinder
   - Coolant jacket for cracks
   - Valve lifter bores for excessive scoring or wear
   - Crankshaft bearing webs for cracks
   - Gasket sealing surfaces for excessive scratches or gouging

     Refer to **Replacing Engine Gaskets** .

   - Oil galleries for restrictions
   - Threaded bolt holes for damaged threads
   - Cylinder bores for excessive ring ridge at the top of the cylinder
2. Measure the cylinder bores for an oversize condition:

MEASURING THE CYLINDER FOR OVERSIZE

cardiagn.com

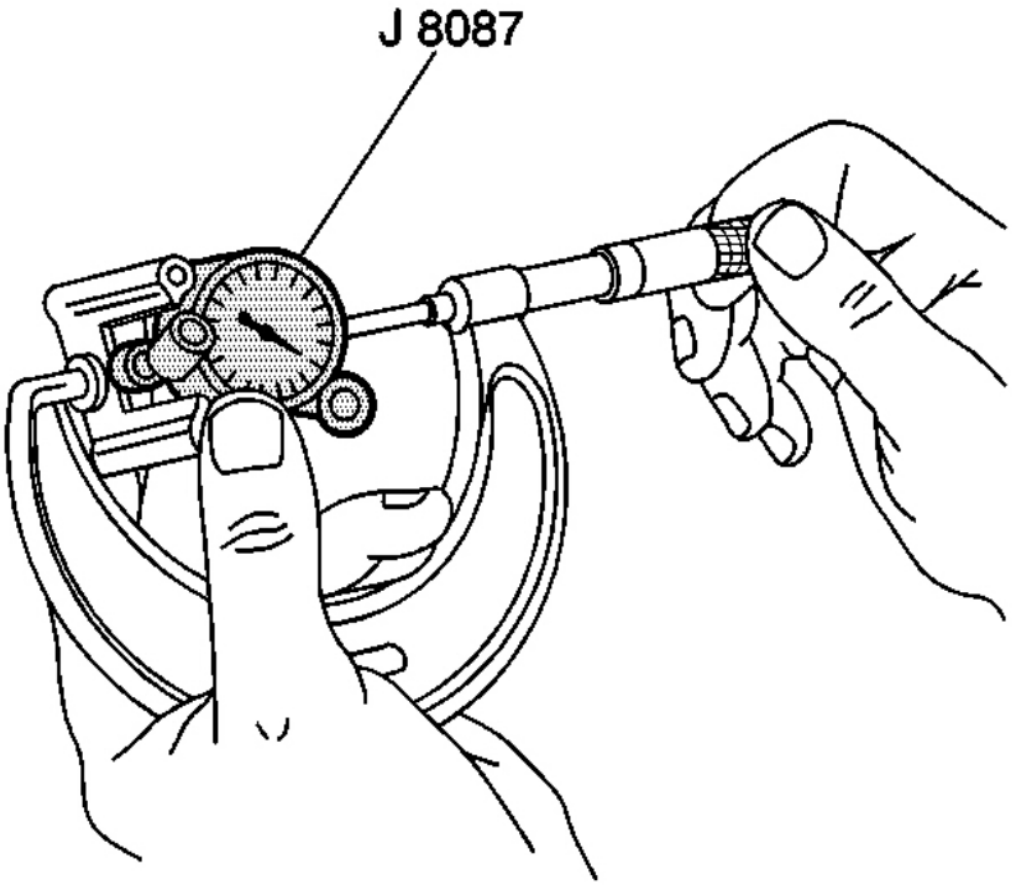

Fig. 299: Measuring Bore Gauge With Micrometer
Courtesy of GENERAL MOTORS CORP.

1. Adjust the micrometer to a dimension slightly smaller than the bore size. Refer to **Engine Mechanical Specifications (RPO LY2 VIN C)** or **Engine Mechanical Specifications (RPO LMG VIN 0)** or **Engine Mechanical Specifications (RPO LY5 VIN J)** or **Engine Mechanical Specifications (RPO LC9 VIN 3)** or **Engine Mechanical Specifications (RPO L76 VIN Y)** or **Engine Mechanical Specifications (RPO LY6 VIN K)** or **Engine Mechanical Specifications (RPO L92 VIN 8)** .
2. Insert the **J 8087** into the micrometer and zero the bore gage dial. See **Special Tools** .

cardiagn.com

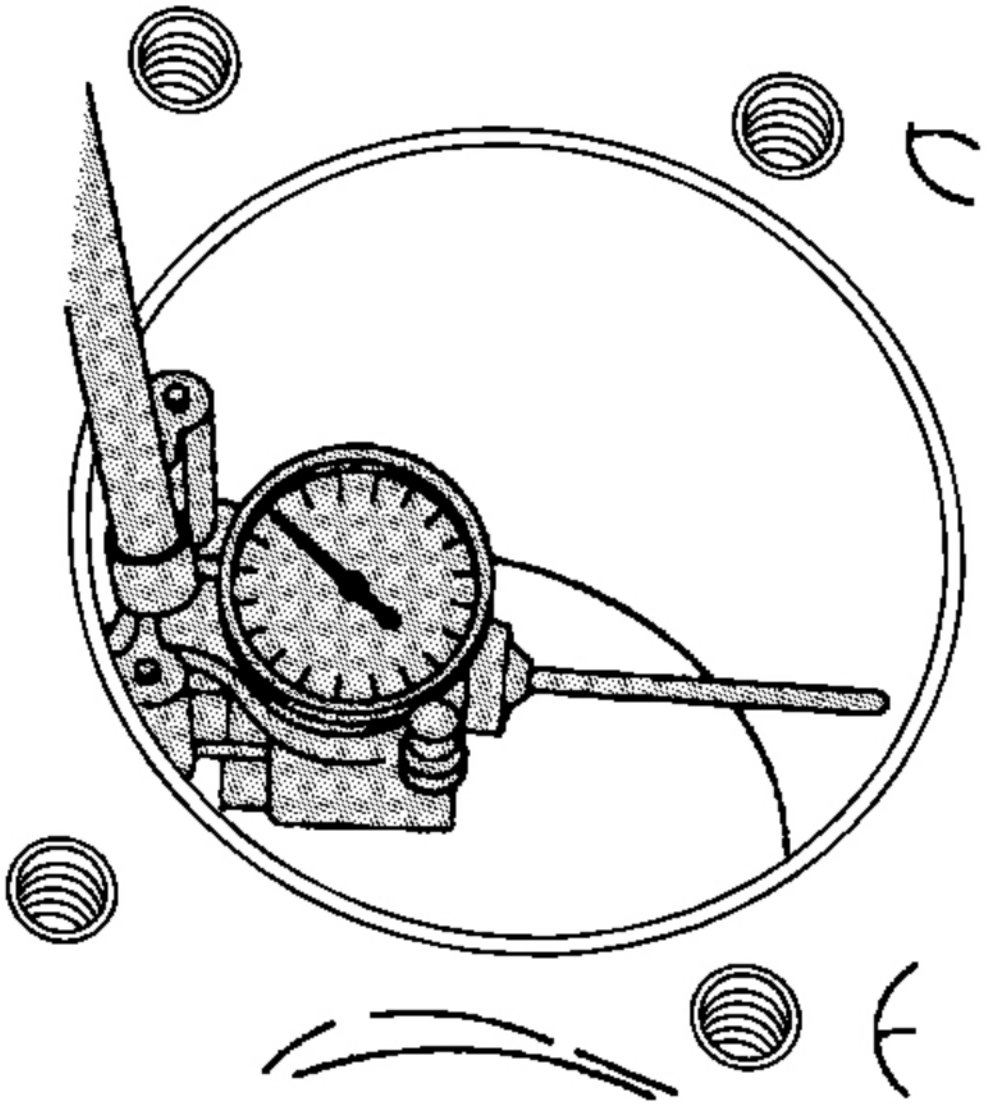

Fig. 300: Measuring Cylinder Bore
Courtesy of GENERAL MOTORS CORP.

3. Use the **J 8087** and measure the cylinder bore for oversize. See **Special Tools** .

   Slide the bore gage up and down throughout the length of the cylinder bore. Measure the bore, both parallel and perpendicular to the centerline of the crankshaft, at the top, center, and bottom of the bore. A cylinder bore that exceeds the maximum diameter must be serviced with an oversized piston. Refer to

cardiagn.com

Engine Mechanical Specifications (RPO LY2 VIN C) or **Engine Mechanical Specifications (RPO LMG VIN 0)** or **Engine Mechanical Specifications (RPO LY5 VIN J)** or **Engine Mechanical Specifications (RPO LC9 VIN 3)** or **Engine Mechanical Specifications (RPO L76 VIN Y)** or **Engine Mechanical Specifications (RPO LY6 VIN K)** or **Engine Mechanical Specifications (RPO L92 VIN 8)** .

CYLINDER BORING AND HONING

BORING PROCEDURE

IMPORTANT: A 0.5 mm (0.02 in) oversize service piston and a piston ring set are available.

1. Measure all pistons with a micrometer to determine the cylinder bore diameter.
2. Before you use any type of boring bar, use a fine file and clean the top of the cylinder block, removing any dirt or burrs. If you do not check the cylinder block, the boring bar may be improperly positioned or tilted and the cylinder bore could be bored at an incorrect angle.
3. Carefully follow the instructions furnished by the manufacturer regarding use of the equipment.
4. When you bore the cylinders, ensure all the crankshaft bearing caps are in place. Tighten the crankshaft bearing caps to the proper torque in order to avoid distortion of the cylinder bores during final assembly.
5. When you take the final cut with a boring bar, leave 0.03 mm (0.001 in) on the cylinder bore diameter for the finish honing and fit of the piston.

HONING PROCEDURE

cardiagn.com

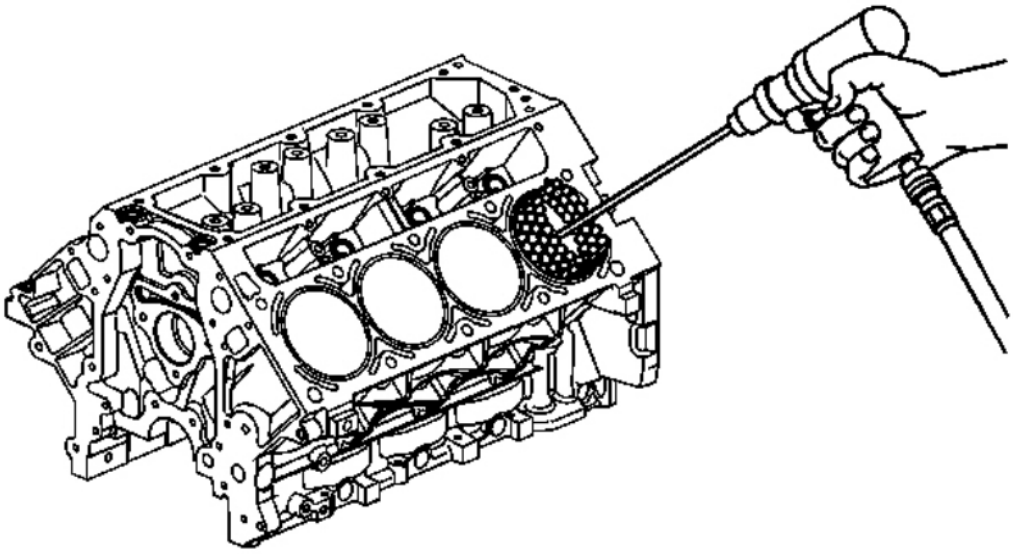

Fig. 301: Honing Cylinders
Courtesy of GENERAL MOTORS CORP.

1. When honing the cylinders, follow the manufacturer's recommendations for equipment use, cleaning, and lubrication. Use only clean, sharp stones of the proper grade for the amount of material you remove. Dull, dirty stones cut unevenly and generate excessive heat. Do not hone to final clearance with a coarse or medium-grade stone. Leave sufficient metal so that all stone marks may be removed with fine-grade stones. Perform final honing with a fine-grade stone, honing the cylinder to the proper clearance.
2. During the honing operation, thoroughly clean the cylinder bore. Repeatedly check the cylinder bore for fit with the selected piston.

   All measurements of the piston or the cylinder bore should be made with the components at normal room temperature.

3. When honing a cylinder for fit to an oversize piston, first perform the preliminary honing with a 100-grit stone.
4. Perform final cylinder honing with a 240-grit stone and obtain a 45 degree cross hatch pattern.

   A 240-grit stone is preferred for final honing. If a 240-grit stone is not available, a 220-grit stone may be used as a substitute.

5. The finish marks should be clean but not sharp. The finish marks should also be free from imbedded particles and torn or folded metal.
6. By measuring the selected piston at the sizing point and by adding the average of the clearance

cardiagn.com

specification, you can determine the final cylinder honing dimension required.

7. After final honing and before the piston is checked for fit, clean the cylinder bores with hot water and detergent. Scrub the bores with a stiff bristle brush and rinse the bores thoroughly with hot water. Do not allow any abrasive material to remain in the cylinder bores. This abrasive material may cause premature wear of the new piston rings and the cylinder bores. Abrasive material will also contaminate the engine oil and may cause premature wear of the bearings. After washing the cylinder bore, dry the bore with a clean rag.
8. Perform final measurements of the piston and the cylinder bore.
9. Permanently mark the top of the piston for the specific cylinder to which it has been fitted.
10. Apply clean engine oil to each cylinder bore in order to prevent rusting.

DEGLAZING PROCEDURE

cardiagn.com

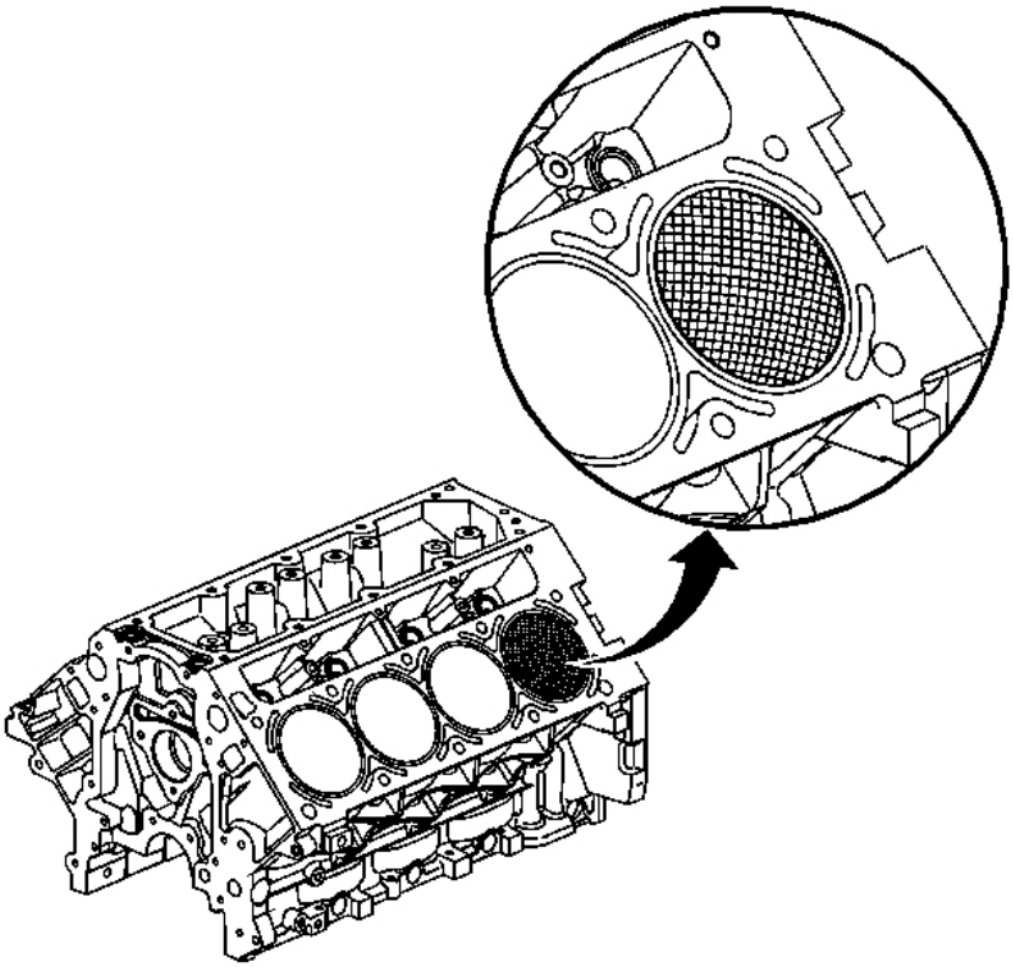

Fig. 302: Deglazing Cylinder Bore
Courtesy of GENERAL MOTORS CORP.

Using a ball type or self centering honing tool, deglaze the cylinder bore lightly. Deglazing should be done only to remove any deposits that may have formed. Use a 240-grit stone of silicone carbide, or equivalent, material when preforming the deglazing procedure.

A 240-grit stone is preferred for final honing. If a 240-grit stone is not available, a 220-grit stone may be used as a substitute.

cardiagn.com